NASA
National Aeronautics and
Space Administration

Lyndon B. Johnson Space Center
Houston, Texas 77058

DMS-DR-2403
NASA-CR-160,516

VOLUME 2 of 3

RESULTS OF TESTS USING A 0.02-SCALE MODEL (89-OTS) O
THE SPACE SHUTTLE INTEGRATED VEHICLE IN THE AEDC
16-FOOT TRANSONIC PROPULSION WIND TUNNEL (IA156A)

SPACE SHUTTLE AEROTHERMODYNAMIC DATA REPORT

Data Management SERVICES

HUNTSVILLE ELECTRONICS DIVISION CHRYSLER CORPORATION

September 1980

DMS-DR-2403
NASA-CR-160,516

VOLUME 2 of 3

RESULTS OF TESTS USING A 0.02-SCALE MODEL (89-OTS) OF THE SPACE SHUTTLE INTEGRATED VEHICLE IN THE AEDC 16-FOOT TRANSONIC PROPULSION WIND TUNNEL (IA156A)

by

J. J. Daileda and J. Marroquin
Shuttle Aerosciences
Rockwell International, Space Systems Group

Prepared under NASA Contract Number NAS9-13247

by

Data Management Services
Chrysler Huntsville Electronics Division
Slidell Engineering Office
New Orleans, Louisiana 70189

for

Engineering Analysis Division

Johnson Space Center
National Aeronautics and Space Administration
Houston, Texas

WIND TUNNEL TEST SPECIFICS:

Test Number:	AEDC PWT16T 470
NASA Series Number:	IA156A
Model Number:	89-OTS
Test Date:	November 1, 1977 through November 10, 1977
Occupancy Hours:	124

FACILITY COORDINATOR:

T. Perkins, ARO, Inc.
AEDC, PWT-16P
Arnold AFS, TN 37389

Phone: (615) 455-2611, x7640, 7693

PROJECT ENGINEER:

J. J. Daileda
Mail Code AD38
Rockwell International
Space Systems Group
12214 Lakewood Boulevard
Downey, CA 90241

Phone: (213) 922-3785

AERODYNAMIC ANALYSIS ENGINEER:

T. Hamilton
Mail Code AC07
Rockwell International
Space Systems Group
12214 Lakewood Boulevard
Downey, CA 90241

Phone: (213) 922-1558

DATA MANAGEMENT SERVICES:

Prepared by: Liaison--D. W. Hersey
Operations--M. M. Mann

Approved: J. L. Glynn, Manager
Data Operations

Concurrence: N. D. Kemp, Manager
Data Management Services

Chrysler Huntsville Electronics Division/Slidell Engineering Office assumes no responsibility for the data presented other than display characteristics.

RESULTS OF TESTS USING A 0.02-SCALE MODEL (89-OTS) OF THE SPACE SHUTTLE INTEGRATED VEHICLE IN THE AEDC 16-FOOT TRANSONIC PROPULSION WIND TUNNEL (IA156A)

by

J. J. Daileda and J. Marroquin
Rockwell International, Space Systems Group

ABSTRACT

An experimental investigation (Test IA156A) was conducted in the Arnold Engineering Development Center 16-Foot Transonic Propulsion Wind Tunnel from November 1, 1977 through November 10, 1977.

The objective of the test was to obtain force and moment data on all vehicle elements (orbiter, external tank, and each solid rocket booster), wing and vertical tail load indicators, elevon and rudder hinge moments, and base and body flap pressure data.

Data were obtained in the Mach number range from 0.3 to 1.55 with Reynolds numbers per foot of 2.7×10^6 to 3.5×10^6. The test was conducted using angle-of-sideslip sweeps at fixed angles-of-attack. Angles-of-attack and sideslip were both within a range of plus and minus ten degrees, with the maximum angle being dependent upon the requirements at a particular Mach number.

Configuration variations consisted of a series of differential inboard/outboard elevon angle settings at zero aileron angle, with and without the Shuttle Infrared Leeside Temperature Sensing (SILTS) pod on the orbiter.

Force data presented in this report were provided by the facility on April 9, 1980 (Reference 3). Angles of attack and sideslip were corrected for flow angularities by the ARO personnel. Elevon deflection angles were corrected by Data Management Services (DMS) per RI Internal Letter SAS/AERO/78-221 (Reference 4) dated April 25, 1978. This data was initially released by DMS under special request project identification SPRT8N.

TABLE OF CONTENTS

	Page
ABSTRACT	iii
INDEX OF MODEL FIGURES	2
INTRODUCTION	4
NOMENCLATURE	6
REMARKS	15
CONFIGURATIONS INVESTIGATED	17
TEST FACILITY DESCRIPTION	25
TEST PROCEDURE	27
DATA REDUCTION	30
REFERENCES	38
TABLES	
I. TEST CONDITIONS	39
II. DATA SET/RUN NUMBER COLLATION SUMMARY	40
III. ELEVON DEFLECTION ANGLES	52
FIGURES	
MODEL	53
APPENDIX	
TABULATED SOURCE DATA	76
FORCE DATA (VOL. 1 AND 2)	
PRESSURE DATA (VOL. 3, MICROFICHE)	

INDEX OF MODEL FIGURES

Figure	Title	Page
1.	Model axis systems, sign conventions and reference dimensions.	
	a. Axis Systems	53
	b. Definition of Deflection Angles and Wing Coefficients	54
	c. Wing Moment Reference Center	55
	d. Vertical Stabilizer Moment Reference Center	56
	e. Definition of Vertical Stabilizer Coefficients	57
	f. Definition of Elevon and Rudder Hinge Moment Coefficients	58
2.	Model sketches.	
	a. Major Model Component Dimensions	59
	b. Orbiter Base Pressure Orifice Locations	60
	c. Orbiter Body Flap Top Surface Pressure Orifice Locations	61
	d. Orbiter Body Flap Bottom Surface Pressure Orifice Locations	62
	e. External Tank Base Pressure Orifice Locations	63
	f. Solid Rocket Boosters Base Pressure Tap Locations	64
	g. Sketch Showing Location of 0.02-Scale Model in the 16T Test Section	65
	h. Pitch Plane and Cross-Flow Plane Flow Angularity Corrections for Hi-Pitch System	66
	i. Orbiter Nomenclature	67

INDEX OF MODEL FIGURES (Concluded)

Figure	Title	Page
2.	Model sketches. (Continued)	
	j. Orbiter Protuberance and Penetration Configuration	68
	k. External Tank (T_{39})	69
	l. Solid Rocket Booster (S_{27})	70
3.	Model photographs.	
	a. Model 89-OTS in the 16T Test Section	71
	b. Right-Forward Side of Model 89-OTS	72
	c. Right-Rear View of Model 89-OTS, SILTS Pod Installed	73
	d. Right-Rear Side View of Model 89-OTS	74
	e. Rear View of Model 89-OTS	75

INTRODUCTION

The 0.02-scale model (Model 89-OTS) of the space shuttle integrated vehicle was tested in the Arnold Engineering Development Center 16-Foot Transonic Wind Tunnel between November 1, 1977, and November 10, 1977. This test, designated IA156A, used a total of 124 occupancy hours in the facility.

Data were obtained at fixed angles-of-attack between -10 and +10 degrees with angle-of-sideslip sweeps between -10 and +10 degrees over a Mach number range of 0.3 to 1.55. Four six-component balances were used to obtain vehicle element forces and moments. Three single-component balances were used to measure elevon (right wing only) and rudder hinge moments. Two three-component balances were used to measure wing (left side) and vertical tail normal force, bending moment, and torsion.

Model configuration variables were elevon deflection angle and Shuttle Infrared Leeside Temperature Sensing (SILTS) pod on or off. The orbiter was instrumented with 19 base pressure taps and 32 body flap taps. The external tank had 45 base pressure taps, and each SRB was instrumented with five base pressure taps.

This report provides a description of the test consisting of remarks on the conduct of the test, descriptions of the model and the test facility, details on test procedure, information on data reduction, and tabulated test results.

The flow angularity corrections for alpha and beta were revised after completion of this test. The force data presented in this text contains the final flow angularity corrected alpha and beta data (Reference 3). Elevon deflection angles were corrected for loads as specified in Reference 4.

This report consists of 2 volumes of force data and 1 volume of tabulated pressure data on microfiche. The volumes are arranged in the following manner:

VOLUME NUMBER	CONTENTS	MICROFICHE PAGE NUMBERS
1	IA156A FORCE DATA TABULATIONS	-
2	IA156A FORCE DATA TABULATIONS	-
3	IA156A TABULATED PRESSURE DATA ORBITER BASE (E) D/S 01→E9	1-17
3	IA156A TABULATED PRESSURE DATA, BODY FLAP (BOTTOM)(F) D/S 01→E9	17-30
3	IA156A TABULATED PRESSURE DATA, BODY FLAP (TOP)(G) D/S 01→E9	30-43
3	IA156A TABULATED PRESSURE DATA, LEFT SRB BASE (L) D/S 01→E9	43-54
3	IA156A TABULATED PRESSURE DATA, RIGHT SRB BASE (R) D/S 01→E9	54-65
3	IA156A TABULATED PRESSURE DATA, ET BASE (T) D/S 01→E9	65-89

NOMENCLATURE

SYMBOL	MNEMONIC	DEFINITION
	Tunnel Parameters	
Part, Point		run identification
Project, Test		ARO, Inc. test identification
M	MACH	freestream Mach number
PT	PT	freestream total pressure, psfa
P	P	freestream static pressure, psfa
Q	Q	freestream dynamic pressure, psf
$Rex10^{-6}$	RN/L	Reynolds number per foot
TT		freestream total temperature, ^{o}F
TTR		freestream total temperature, ^{o}R
	0.02-Scale Model Test Parameters	
AFA		flow angularity in the tunnel pitch plane, positive up, degrees
ALFAL		launch vehicle angle-of-attack, degrees
ALFALS	ALPHAL	left hand side solid rocket booster angle-of-attack, degrees
ALFARS	ALPHAR	right hand side solid rocket booster angle-of-attack, degrees
ALFAT	ALPHAT	external tank angle-of-attack, degrees
BETAL		launch vehicle sideslip angle, degrees
BETALS	BETALS	left hand side solid rocket booster sideslip angle, degrees
BETARS	BETARS	right hand side solid rocket booster sideslip angle, degrees

NOMENCLATURE (Continued)

SYMBOL	MNEMONIC	DEFINITION
	0.02-Scale Model Test Parameters (Continued)	
BETAT	BETAT	external tank sideslip angle, degrees
BFA		flow angularity in the tunnel cross flow plane, positive from right to left looking upstream, degrees
	0.02-Scale Left Hand Side SRB Coefficients (Left Side SRB Balance)	
CABLS	CABLS	base axial-force coefficient
CAFLS	CAFLS	forebody axial-force coefficient, CALS-CABLS
CALS	CALS	total axial-force coefficient
CBLLS	CBLLS	rolling moment coefficient
CIMFLS	CIMFLS	pitching moment coefficient
CNFLS	CNFLS	normal force coefficient
CYFLS	CYFLS	side force coefficient
CYNBLS	CYNBLS	base yawing moment coefficient
CYNFLS	CYNFLS	forebody yawing moment coefficient, CYNLS-CYNBLS
CYNLS	CYNLS	total yawing moment coefficient
	0.02-Scale Right Hand SRB Coefficients (Right Side SRB Balance)	
CABRS	CABRS	base axial force coefficient
CAFRS	CAFRS	forebody axial force coefficient, CARS-CABRS
CARS	CARS	total axial force coefficient
CBLRS	CBLRS	rolling moment coefficient

SYMBOL	MNEMONIC	DEFINITION
	0.02-Scale Right Hand SRB Coefficients (Right Side SRB Balance) (Continued)	
CIMFRS	CIMFRS	pitching moment coefficient
CNFRS	CNFRS	normal force coefficient
CYFRS	CYFRS	side force coefficient
CYNBRS	CYNBRS	base yawing moment coefficient
CYNFRS	CYNFRS	forebody yawing moment coefficient CYNRS - CYNBRS
CYNRS	CYNRS	total yawing moment coefficient
	0.02-Scale External Tank + (SRB Right + SRB Left) Coefficients, (External Tank Balance)	
CABT	CABT	external tank base axial force coefficient
CAFTS	CAFTS	forebody axial force coefficient, CATS - (CABT + CABLS + CABRS)
CATS	CATS	total axial force coefficient
CBLFTS	CBLFTS	rolling moment coefficient
CIMTS	CIMFTS	pitching moment coefficient
CNFTS	CNFTS	normal force coefficient
CYFTS	CYFTS	side force coefficient
CYNFTS	CYNFTS	forebody yawing moment coefficient, CYNTS - (CYNBLS + CYNBRS)
CYNTS	CYNTS	total yawing moment coefficient
	0.02-Scale External Tank Forebody Coefficients	
CAFT	CAFT	forebody axial force coefficient, CAFTS - (CAFLS + CAFRS)

SYMBOL	MNEMONIC	DEFINITION
	0.02-Scale External Tank Forebody Coefficients (Continued)	
CBLFT	CBLFT	forebody rolling moment coefficient, CBLFTS - (CBLLS + CBLRS)
CIMFT	CIMFT	forebody pitching moment coefficient, CIMFTS - (CIMFLS + CIMFRS)
CNFT	CNFT	forebody normal force coefficient, CNFTS - (CNFLS + CNFRS)
CYFT	CYFT	forebody side force coefficient, CYFTS - (CYFLS + CYFRS)
CYNFT	CYNFT	forebody yawing moment coefficient, CYNFTS - (CYNFLS + CYNFRS)
	0.02-Scale Launch Vehicle Coefficients (Orbiter Balance)	
CABO	CABO	orbiter base axial force coefficient
CAFL	CAFL	forebody axial force coefficient, CAL - (CABO + CABT + CABLS + CABRS)
CAL	CAL	total axial force coefficient
CBLFL	CBLFL	rolling moment coefficient
CIMBO	CIMBO	orbiter base pitching moment coefficient
CIMFL	CIMFL	forebody pitching moment coefficient, CIML - CIMBO
CIML	CIML	total pitching moment coefficient
CNBO	CNBO	orbiter base normal force coefficient
CNFL	CNFL	forebody normal force coefficient, CNL - CNBO
CNL	CNL	total normal force coefficient
CYFL	CYFL	forebody side force coefficient

SYMBOL	MNEMONIC	DEFINITION
	0.02-Scale Launch Vehicle Coefficients (Orbiter Balance) (Continued)	
CYNFL	CYNFL	forebody yawing moment coefficient, CYNL - (CYNBLS + CYNBRS)
CYNL	CYNL	total yawing moment coefficient
	0.02-Scale Orbiter Forebody Coefficients	
CAFO	CAFO	axial force coefficient, CAFL - CAFTS
CBLFO	CBLFO	rolling moment coefficient, CBLFL - CBLFTS
CIMFO	CIMFO	pitching moment coefficient, CIMFL - CIMFTS
CNFO	CNFO	normal force coefficient, CNFL - CNFTS
CYFO	CYFO	side force coefficient, CYFL - CYFTS
CYNFO	CYNFO	yawing moment coefficient, CYNFL - CYNFTS
	0.02-Scale Vertical Tail Coefficients (See Figure 1e)	
CBVT	CBVT	bending moment coefficient
CSVT	CNVT	side force coefficient
CTVT	CTVT	torsional moment coefficient
	0.02-Scale Wing Coefficients (See Figure 1b)	
CBW	CBW	bending moment coefficient
CNW	CNW	normal force coefficient
CTW	CTW	torsional moment coefficient

NOMENCLATURE (Continued)

SYMBOL	MNEMONIC	DEFINITION
	0.02-Scale Elevon and Rudder Coefficients (See Figure 1f)	
CHEI	CHEI	inboard elevon hinge moment coefficient
CHEO	CHEO	outboard elevon hinge moment coefficient
CHR	CHR	rudder hinge moment coefficient
	Model Geometric Nomenclature	
CL		centerline
ET		external tank
HL		hinge line
MRC		moment reference center
SRB		solid rocket booster
X/C_{BF}		ratio of a station on the body flap to the body flap chord (See Figure 2c)
X_B		SRB station
X_O/L_O		ratio of a station on the orbiter to the orbiter length
X_T		body station on the external tank
Y_O		lateral station on the orbiter, positive to the right of the plane of symmetry (See Figure 2b)
Z_O		orbiter water line (Figures 2a and 2b)
α	ALPHAO	orbiter angle-of-attack, degrees
β	BETAO	orbiter sideslip angle, degrees
δ_{eI}	IB-ELV	inboard elevon deflection angle, degrees (See Figure 1b)

SYMBOL	MNEMONIC	DEFINITION
	Model Geometric Nomenclature (Continued)	
δ_{e_o}	OB-ELV	outboard elevon deflection angle, degrees (See Figure 1b)
ϕ	PHIO	rotational angle on model component surface (See Figure 2e), degrees
η		ratio of spanwise station on orbiter body flap to total span of body flap, positive from left to right (See Figure 2b)
ALFAØU	ALFAØU	orbiter angle-of-attack, (uncorrected for flow angularity), degrees
ALPATU	ALPATU	external tank angle-of-attack (uncorrected for flow angularity), degrees
ALFLSU	ALFLSU	left SRB angle-of-attack (uncorrected for flow angularity), degrees
ALFRSU	ALFRSU	right SRB angle-of-attack (uncorrected for flow angularity), degrees
ALPHAI	ALPHAI	tunnel instrumentation indicated pitch attitude, degrees
BETAØU	BETAØU	orbiter sideslip angle (uncorrected for flow angularity), degrees
BETATU	BETATU	external tank sideslip angle (uncorrected for flow angularity), degrees
BETLSU	BETLSU	left SRB sideslip (uncorrected for flow angularity), degrees
BETRSU	BETRSU	right SRB sideslip (uncorrected for flow angularity), degrees
DEINLR	DEINLR	right inboard elevon deflection (no load), degrees
DEØNLR	DEØNLR	right outboard elevon deflection (no load), degrees

NOMENCLATURE (Continued)

SYMBOL	MNEMONIC	DEFINITION
	Model Geometric Nomenclature (Continued)	
PHII	PHII	Tunnel Instrumentation indicated roll attitude, degrees
	Pressure Data	
CPBV	CPBV	vertical tail base pressure coefficient
CPTXXX	CPTXXX	pressure coefficient for tap XXX
CP1	CP1	See Data Reduction Section
CP2	CP2	See Data Reduction Section
CP3	CP3	See Data Reduction Section
CP4	CP4	See Data Reduction Section
CP5	CP5	See Data Reduction Section
CP6	CP6	See Data Reduction Section
CP7	CP7	See Data Reduction Section
CP8	CP8	See Data Reduction Section
CP9	CP9	See Data Reduction Section
CP10	CP10	See Data Reduction Section
	Terms Used in Data Reduction	
BW		wing bending moment about Y_o105, in-lbs.
NW		wing normal force, lbs.
TW		wing torsion moment about X_o1307, in-lbs.
BVT		vertical tail bending moment about Z_o503, in-lbs.
NVT		vertical tail normal force, lbs.

NOMENCLATURE (Concluded)

SYMBOL	MNEMONIC	DEFINITION
TVT		vertical tail torsion moment about X_o1414.3, in-lbs.
HEI		inboard elevon hinge moment, in-lbs.
HEO		outboard elevon hinge moment, in-lbs.

REMARKS

A preliminary calibration at the Los Angeles Division of Rockwell International of the three-component balance for the right wing indicated that the torsion gauge sensitivity was below the normally acceptable level for this type of balance. Therefore, prior to the AEDC calibration, the beam was regauged by AEDC to increase the torsion sensitivity. During the test large zero shifts were encountered. Check loads showed that there was fouling between the wing and the fuselage. Repeated attempts were made during the test to clear the fouling, but all sources of fouling were not identified until after the test. All wing data where zero shifts occurred were recomputed using post-run balance zeros. Because of the problems encountered during the test, extreme caution is recommended when using and interpreting wing coefficient data.

During the test various events occurred having a possible effect on the test results. These items are noted below.

1. On part numbers 801 through 889, there was tape over the elevon (inboard and outboard) beam/bracket joint line.

2. On part numbers 801 through 1121, a loose wire connection which could affect wing data was found on the wing torsion gauge.

3. On part number 1096, point 4 and part number 1097, point 1, the transducer constant for scanivalve number 5(KSV5) in the external tank was wrong. A value of 290 was substituted for these points.

4. On part numbers 1132 through 1188, 1201 through 1216, and 1224 through 1314, the transducer constant (KSV5) was intermittently out of tolerance (high by as much as 10 percent). The reason for this condition was never determined. CP7 data should be used with caution when KSV5 is out of tolerance.

5. On part numbers 1188 through 1200, base pressure instrumentation for the ET and SRB's was inoperative. Equivalent base correction terms (CP5, CP6, CP7, and CP9) from part numbers 1141 through 1153 were substituted.

6. On part numbers 1224 through 1233, there was tape across the vertical tail/rudder joint line.

7. On part numbers 1377 through 1396, the right hand inboard elevon deflection angle was set at 8 degrees rather than 10 degrees, as called for in the run schedule. These runs were repeated with the correct elevon angle (part numbers 1432 through 1451).

8. Data from several pressure taps were bad for various reasons at different times during the test. The data in question were eliminated from the average in the base pressure correction calculations. The part numbers, pressure tap numbers, and correction coefficients affected are given below.

Part Numbers	Pressure Tap Number	Term Affected
1042-1073	438	CP2
1042-1073	439	CP2
1042-1111	406	CP2
1042-1121	1521	CP7
1399-1419	311	CP1
1399-1419	312	CP1

CONFIGURATIONS INVESTIGATED

The model for the AEDC-PWT test period was an 0.02-scale replica of the Rockwell International first stage space shuttle vehicle consisting of orbiter, external oxygen/hydrogen tank (ET) and two solid boosters (SRB's). The vehicle is described by the VC70-000002 configuration control drawing. The integrated vehicle geometry is shown in Figure 2a. The model was mounted upright in the tunnel through the base of the orbiter using the AEDC 2.5-inch Task MK XXXI balance (AEDC 6-2.5-2.5-1.85-M-C balance). Photographs of the model in the tunnel and of model details are given in Figures 3a through 3e.

The external tank and boosters were supported from the orbiter/ET attach structure using the AEDC-PWT-6-1.50-1.80-1.12 M balance. Each SRB was supported from the ET/SRB attach structure using the AEDC-PWT-6-1.50-0.50-1.12 M-a and -b (one in each SRB) balances. The orbiter balance measured total vehicle loads; the external tank balance measured ET/SRB loads, exclusive of the attach structure between orbiter and external tank; each SRB balance measured only the forces and moments on the element in which it was mounted, exclusive of attach hardware.

The orbiter was fabricated to the OV102 Configuration Outer Mold Line Definition (March 15, 1976 OML configuration). Lines were derived from the design entry trajectory 14414.1, Revision C/C. The Thermal Protection System (TPS) for these lines is based on the useage of Silicon Reuseable Surface Insulation (SRSI). The orbiter model is of a blended wing/body design with a double delta planform ($81^{o}/45^{o}$ leading

edge) wing of 12 percent thickness and full span elevons with gaps between the outboard and inboard panels and between the inboard panel and the fuselage. A single centerline vertical tail with rudder/speed brake capability is mounted between the Orbital Maneuvering System (OMS) pods on the aft fuselage, and a body flap is fitted to the lower trailing edge of the fuselage. The Main Propulsion System (MPS) nozzles were simulated, but were trimmed to clear the sting support though the base. The OMS nozzles and all Reaction Control System (RCS) thruster ports in the forward fuselage and OMS pods were simulated.

Fuselage Outer Mold Line (OML) penetrations and protuberances which are simulated include:

- Recessed windshields, hatch, and observation windows
- Simulated forward and aft RCS nozzles
- Cargo bay door hinges
- T-zero umbilical panels
- Vents: cargo bay, wing, OMS RCS, and aft fuselage
- Spanwise steps: Vertical tail/rudder and body flap

The upper surface flipper door panels which blend the wing to the elevon at all deflections were not simulated. A smooth fairing between wing and elevon upper surfaces simulated the flipper door panel. The OV102 Shuttle Infrared Leeside Temperature Sensing (SILTS) pod was simulated on the vertical tail. The orbiter model was constructed primarily of Armco 17-4 stainless steel, with 7076-T6 aluminum used in

some non-load carrying components. The mid/aft upper fuselage is fabricated from a single block with a longitudinal bore into which balance adapters can be inserted. The OMS pods are an integral part of this block. The nose/forward fuselage was fabricated as a hollow shell and serves as a cover plate for model-mounted instrumentation.

The vertical tail was supported on the upper aft fuselage by means of a strain gauged beam (three-component balance). The rudder/speed brake, fixed at zero degrees deflection was mounted on a gauged beam to allow for measurement of hinge moments. A separate base plate/lower aft fuselage block incorporated the aft OMS/RCS pods, the simulated MPS and OMS nozzles, and the body flap bracket recesses. The base plate and MPS nozzles were cut out for sting clearance. The body flap was mounted at zero degrees deflection.

The right wing, right wing glove, and lower fuselage aft of station 520 was fabricated as a single piece. The left wing/wing-glove was cut off at butt plane 105 and was attached to the lower fuselage by a strain gauged beam (three-component balance). A labyrinth seal was used along the gap between the two parts to minimize leakage between upper and lower surfaces.

The elevons on both wings were mounted on individual beams to allow for measurement of hinge moments. Although the beams on the right and left wings were dimensionally similar, only those on the right wing were gauged. The elevon deflection angles were set by manually changing the

brackets to which the beams are attached. Measured deflection angles are given in Table III. Upper surface seal doors (flipper doors) were not simulated but a fairing was used between the wing and the elevon. A gap of from 0.005 to 0.020-inches was maintained between the fairing and the elevon.

The external tank was built in accordance with Rockwell International Interface Control Drawing ICD2-00001, Rev. C, plus Interface Revision Notices B and C. The external tank is of cylindrical cross-section with a nominal diameter of 333-inches and a maximum diameter of 336.2-inches. The forward portion of the external tank has a tangent ogive nose which terminates in a biconic nose cap over the LOX vent valve. The forward one-third of the external tank is filled with LOX, and the aft two-thirds with liquid hydrogen. Structural stiffeners between the two vessels result in an area with a slightly larger than nominal diameter. The aft end of the tank is basically an ellipsoid of revolution.

The entire external tank is covered with a spray-on foam insulation of varying thickness. Approximate thicknesses are 2.5-inches on the tangent ogive, 1.0-inch on the cylindrical sections, and 2.0-inches on the rear ellipsoid. Model dimensions included this insulation.

The external tank configuration included a number of protuberances consisting of electrical trays, fluid lines, and attach hardware. Electrical trays which run parallel to the external tank centerline were simulated; those which run up next to the aft orbiter/external tank

attach hardware were not. The LOX and LH_2 feed lines were simulated. The attach hardware that is considered as part of the external tank is the front and rear orbiter/external tank attach structure which remains with the external tank after separation.

The external tank model was constructed primarily of 6061-T651 aluminum alloy with the load carrying components made of Armco 17-4 stainless steel. The model was formed by three major pieces to which the external protuberances were mounted. The three major pieces consisted of the forward biconic nose, the central cylindrical shell and the aft closure. The external tank protuberances and simulated aft attach structures were fabricated from Armco 17-4 stainless steel and were secured to the tank by mounting buttons and silver solder.

The external tank was attached to the orbiter by the "wishbone" attach bracket on the forward end and the simulated LOX and LH_2 vertical feed lines on the aft end. These components were scaled to as great a degree as possible, but were sized for the anticipated loads. The orbiter/external tank attach structure was connected directly to the balance bridge inside the external tank. Instrumentation leads from the external tank to the orbiter were attached to the back of each feed line and were covered with a fairing. The external tank wall in the vicinity of the attach structure was cut away for clearance between the tank, and the structure and fairing. The resultant gap was filled with foam.

The Solid Rocket Boosters (SRB's) were built to the same Interface

Control Drawing (ICD2-00001, Rev. C) and Interface Revision Notices (B and C) as the external tank. The two SRB's are 146-inch diameter cylinders, each with an 18 degree semi-angle nose terminated by a 13.27-inch diameter sphere. An 18 degree flared skirt, 208.20-inches in diameter, protects the rocket nozzle. A flexible donut-shaped seal and thermal shield is provided between the skirt and the nozzle. SRB protuberances consist of a forward attach lug, front and rear separation motors, an aft attach ring, various stiffeners and a full-length electrical systems tunnel.

The Solid Rocket Boosters were made of Armco 17-4 PH stainless steel, except for the forward cylindrical shells which were made of 6061-T651 aluminum alloy. Each SRB was formed by five major pieces to which the external protuberances were mounted. The five major pieces were the nose, the forward and the center cylindrical shells, the aft cylindrical shell/skirt assembly and the nozzle. The center cylindrical shells were fabricated with a vertical split to facilitate assembly and disassembly of the SRB. The SRB protuberances were fabricated from aluminum alloy and stainless steel, and were secured to the SRB with screws or silver solder. Each SRB is attached to the ET at the full-scale attach points. Attach structure components were scaled to as great a degree as possible, but were sized for the anticipated loads. The SRB/ET attach structure was connected directly to the balance bridge inside the SRB. The SRB was supported on the balance mounted on this balance bridge.

Instrumentation leads from the SRB to the external tank were routed through a slot aft of the forward SRB/ET attach post. A fairing between the SRB and the ET protected the leads from the air flow. The SRB wall in the vicinity of the SRB/ET attach structure was relieved for clearance between the SRB, and the attach structure and fairing. The resultant gap was filled with foam.

The following nomenclature, illustrated in Figures 2i through 21, was used to designate model components:

Symbol	Description
B_{75}	OV102 fuselage including T-zero umbilical panels and crew hatch
C_{16}	Canopy including recessed windshields and observation windows
E_{64}	Elevons, including elevon/elevon and elevon/fuselage gaps
F_{16}	Body flap
FR_{22}	Fairings for the forward cargo bay door hinges, 6 per side
HG_{1}	Cargo bay door hinges, 13 per side
M_{52}	OMS pods
N_{108}	Forward RCS thruster nozzle ports
N_{109}	Main propulsion system nozzles (inner surfaces cut away for sting clearance)
N_{110}	OMS nozzles
N_{111}	Aft RCS thruster nozzles and ports
R_{20}	Rudder, split into left and right speed brake panels

CONFIGURATIONS INVESTIGATED (Concluded)

Symbol	Description
U_1	Umbilical doors
V_{27}	Vertical tail
V_{29}	Vertical Tail with OV102 SILTS pod
VT_{10}	Cargo bay vents, 4 per side
VT_{11}	Wing/landing gear bay vents, 1 per side
VT_{14}	Aft fuselage vents, 1 per side
VT_{17}	Miscellaneous vents, ports and penetrations
W_{131}	OV102 Wing
T_{39}	External tank, including all protuberances (See ICD2-00001, Rev. C)
S_{27}	Solid rocket booster, including all protuberances (See ICD2-00001, Rev. C)

TEST FACILITY DESCRIPTION

The AEDC PWT 16-Ft. Transonic Tunnel (Propulsion Wind Tunnel, Transonic 16T) is a continuous-flow closed-circuit tunnel capable of operation within a Mach number range of 0.20 to 1.60. The tunnel can be operated within a stagnation pressure range of 120 to 4000 psfa depending upon the Mach number. The stagnation temperature can be varied from an average minimum of about 80 to a maximum of 160°F as a function of cooling water temperature. Using a special cooling system of mineral spirits, liquid nitrogen, and liquid air, the stagnation temperature range can be varied from +30 to -30°F. Supersonic velocities are obtained by use of flexible-wall, Laval type nozzles.

The test section is 16-ft. square (in cross section) and 40-ft. long. The entire test section and supporting structure is constructed as a separate unit, called the test section cart, and is removable from the tunnel circuit. The test section carts may be moved to the model installation building where the test article and associated equipment are installed.

Two 40-ft. long test section carts are available for testing throughout the design temperature range. These carts are each 20-ft. long and are used in pairs to form the 40-ft. long test section. Each cart may be used in either the forward or aft position in the test section.

The test section is completely enclosed in a plenum chamber which can be evacuated, allowing part of the tunnel main flow to be removed

through the test section perforated walls, thereby unchoking the test section at near sonic speeds and alleviating wall interference effects.

TEST PROCEDURE

The Hi-Pitch model support system was used for the 0.02-scale force model test entry. This support system has the capability of pitch rates up to 8 deg/sec and roll rates exceeding 20 deg/sec. A pitch rate of approximately 1 deg/sec and a roll rate of 20 deg/sec was selected for this test. Sketches and photographs showing the 0.02-scale model supported on the Hi-Pitch system are shown in Figures 2g and 3a.

The Hi-Pitch support system was mounted into a dummy roll mechanism of the standard sting support system and utilized the vertical traverse feature of the latter system to maintain the model as close to tunnel centerline as possible within the physical constraints of ±36 inches vertical traverse of the standard sting support system. This limitation placed the orbiter approximately 9 inches below tunnel centerline at sting pitch angles of 0 degrees or greater and 32 inches below tunnel centerline at a sting pitch angle of -10 degrees. Model angles-of-attack and sideslip were established by computer control utilizing the hydraulic motors of the Hi-Pitch system to position the sting at appropriate pitch and roll angles.

The test of the 0.02-scale launch vehicle was concerned primarily with force and moment measurements and the only pressures measured were those located on the bases of the model components. These pressure locations are shown in Figures 2b through 2f and are categorized as follows:

Major Model Component	Model Component	No. of Orifices
Orbiter	Base	19
Orbiter	Body Flap	32
External Tank	Base	45
Solid Rocket Boosters	Base	10
	Total	106

The types of balances utilized, and the model forces and moments calculated from their measurements are given below. The balances are described in detail in Reference 1.

Balance Location	Type	Model Forces and Moments Measured or Calculated
Orbiter	6-component	Launch vehicle normal force, side force, axial force, pitching moment, yawing moment, and rolling moment
External Tank	6-component	ET and SRB's normal force, side force, axial force, pitching moment, rolling moment, and yawing moment
Left Hand Solid Rocket Booster	6-component	Left hand SRB normal force, side force, axial force, pitching moment, rolling moment, and yawing moment
Right Hand Solid Rocket Booster	6-component	Right hand SRB normal force, side force, axial force, pitching moment, rolling moment, and yawing moment
①Wing	3-component	Wing normal force, bending moment, and torsional moment
Vertical Stabilizer	3-component	Vertical stabilizer side force, bending moment, and torsional moment

①Wing balance data judged unreliable because of the model-balance fouling.

Balance Location	Type	Model Forces and Moments Measured or Calculated
Rudder	1-component	Rudder hinge moment
Inboard Elevon	1-component	Inboard elevon hinge moment
Outboard Elevon	1-component	Outboard elevon hinge moment

Pitch and roll angles of the Hi-Pitch Support System sting were calculated from the outputs of potentiometers. Electrical signals from all position measuring devices, balances, and Scanivalve ® transducers were digitized for data reduction. All coefficient data were tabulated on-line.

The desired tunnel conditions, given in Table I, were set and angle-of-sideslip was varied at a nominal constant angle-of-attack. During the acquisition of pressure data, computer evaluation of the pressure rate-of-change was utilized and the transducer output was not acquired for computational purposes until either the rate of change was within acceptable limits or a maximum time delay was reached. Force and moment data were acquired following the acquisition of the pressure data.

Check loads were placed on the gaged elevons prior to, and following each change in elevon deflection angles, and data were obtained through the computer to verify the calculation of the applied loads. The nominal and measured elevon deflection angles that were tested are given in Table III and a sketch showing the direction of positive elevon deflection is presented in Figure 1b.

DATA REDUCTION

All measured pressures were converted into standard pressure coefficient form and were tabulated "on-line" at the test facility. Base pressure corrections were made to normal force, axial force, and pitching moment coefficients. In addition, axial force of the external tank and axial force and yawing moment from both solid rocket boosters were corrected for base pressure effects.

Force and moment coefficient data were computed in the body axis coordinate system (See Figure 1a) from the balances located in the orbiter, external tank, and both solid rocket boosters using the projection of the orbiter nose on the external tank longitudinal centerline as the moment reference point location. Forces and moments from the wing, vertical stabilizer, and elevons were computed about moment reference points unique to the individual model components. The location of the moment reference points and directions of positive forces and moments are shown in the sketches of Figures 1b through 1f.

Flow angularity corrections were applied to all test data. The magnitude of these corrections is shown in Figure 2h. These corrections were determined from the testing accomplished on the Hi-Pitch model support system and indicate its dependence on vertical location in the test section. The flow angularity investigation was conducted only at sting pitch angles of -6, 0, and 6 degrees, and although a large change in pitch-plane flow angularity was determined between 0 and -6 degrees, it was felt that extrapolation of AFA at the same rate of change beyond

-6 degrees was not warranted. The values of BFA depicted in Figure 2h were those determined during a previous flow angularity calibration at $M = 0.90$ for the portion of the test section occupied by the model at the various sting pitch angles. The corrections of Figure 2h were input to the calculations of model angles-of-attack and sideslip as functions of model roll orientation.

Pressure coefficients required for base pressure adjustments were computed as follows:

$$CP1 = (1/10)\,(CPT302 + CPT306 + CPT308 + CPT311 + CPT312 + CPT314 + CPT315 + CPT316 + CPT317 + CPT318)$$

$$CP2 = (1/16)\,(CPT405 + CPT406 + CPT407 + CPT408 + CPT413 + CPT414 + CPT415 + CPT416 + CPT422 + CPT424 + CPT430 + CPT432 + CPT437 + CPT438 + CPT439 + CPT440)$$

$$CP3 = (1/6)\,(CPT319 + CPT320 + CPT321 + CPT322 + CPT323 + CPT324)$$

$$CP4 = (1/2)\,(CPT325 + CPT326)$$

$$CP5 = (1/4)\,(CPT2202 + CPT2204 + CPT2221 + CPT2222)$$

$$CP6 = CPT2225$$

$$CP7 = (0.1629)\,(7/12) \sum_{i=1501}^{1507} CPT_i + (0.1629/12)\,(CPT1509) + (0.1629)\,(4/12) \sum_{i=1511}^{1514} CPT_i + (0.0936)\,(6/11) \sum_{i=1516}^{1521} CPT_i$$

$$+ (0.0936/11)\,(CPT1523) + (0.0936)\,(4/11)\sum_{i=1525}^{1528} CPT_i$$

$$+ (0.2058)\,(4/13)\,(CPT1530 + CPT1531 + CPT1543 + CPT1544)$$

$$+ (0.2058)\,(9/13)\sum_{i=1533}^{1541} CPT_i$$

$$+ (0.2371/6)\,(CPT1546 + CPT1549 + CPT1551 + CPT1553 + CPT1555 + CPT1557) + (0.2465/2)(CPT1563 + CPT1571) + (0.0541)\,(CPT1574)$$

$$CP9 = (1/4)\,(CPT2218 + CPT2220 + CPT2223 + CPT2224)$$

$$CP10 = CPT2226$$

where

CPTi is the pressure coefficient for pressure tap i.

Base pressure adjustments to the force and moment coefficients were computed as follows from the pressure coefficients derived above.

For the Orbiter:

$$CNBO = (-1/SREF)\,[\tan 14.75^{\circ}(CP1)\,(A1) + (CP2)\,(A2)]$$

$$CIMBO = \{-1/[(SREF)\,(LREF)]\}\,[(-L1)\tan 14.75^{\circ}\,(CP1)\,(A1) - (L2)\,(CP2)\,(A2) + Z1\,\{(CP1)\,(A1-ACO) + (CP3)\,(A3) + (CP4)\,(ACO)\}]$$

$$CABO = (-1/SREF)\,[(CP1)\,(A1-ACO) + (CP3)\,(A3) + (CP4)\,(ACO)]$$

For the external tank:

$$CABT = (-1/SREF)\,(CP7)\,(A7)$$

For the left SRB:

$$CABLS = (-1/SREF)\ [(CP5)\ (A5) + (CP6)\ (A6)]$$

$$CYNBLS = -(YS/LREF)\ (CABLS)$$

For the right SRB:

$$CABRS = (-1/SREF)\ [(CP9)\ (A9) + (CP10)\ (A10)]$$

$$CYNBRS = (YS/LREF)\ (CABRS)$$

These adjustments were applied to the measured force and moment coefficients to give forebody coefficients.

For the launch vehicle (orbiter balance):

$$CNFL = CNL - CNBO$$

$$CLMFL = CLML - CLMBO$$

$$CYFL = CYL$$

$$CYNFL = CYNL - CYNBLS - CYNBRS$$

$$CAFL = CAL - CABO - CABT - CABLS - CABRS$$

$$CBLFL = CBLL$$

For the external tank and two SRB's (external tank balance):

$$CNFTS = CNTS$$

$$CLMFTS = CLMTS$$

$$CYFTS = CYTS$$

$$CYNFTS = CYNTS - CYNBLS - CYNBRS$$

$$CAFTS = CATS - CABT - CABLS - CABRS$$

$$CBLFTS = CBLTS$$

For the left SRB (left SRB balance):

CNFLS = CNLS

CLMFLS = CLMLS

CYFLS = CYLS

CYNFLS = CYNLS - CYNBLS

CAFLS = CALS - CABLS

CBLFLS = CBLLS

For the right SRB (right SRB balance):

CNFRS = CNRS

CLMFRS = CLMRS

CYFRS = CYRS

CYNFRS = CYNRS - CYNBRS

CAFRS = CARS - CABRS

CBLFRS = CBLRS

For orbiter alone forebody data:

CNFO = CNFL - CNFTS

CLMFO = CLMFL - CLMFTS

CYFO = CYFL - CYFTS

CYNFO = CYNFL - CYNFTS

CAFO = CAFL - CAFTS

CBLFO = CBLFL - CBLFTS

The external tank alone forebody coefficients were computed as:

$$CNFT = CNFTS - CNFLS - CNFRS$$

$$CLMFT = CLMFTS - CLMFLS - CLMFRS$$

$$CYFT = CYFTS - CYFLS - CYFRS$$

$$CYNFT = CYNFTS - CYNFLS - CYNFRS$$

$$CAFT = CAFTS - CAFLS - CAFRS$$

$$CBLFT = CBLFTS - CBLFLS - CBLFRS$$

The panel loads were reduced to force and moment coefficients in the following manner:

For wing bending and torsion:

$$CNW = NW/[(Q)\ (SREF)]$$

$$CBW = BW/[(Q)\ (SREF)\ (BREF)]$$

$$CTW = TW/[(Q)\ (SREF)\ (MAC)]$$

For vertical tail bending and torsion:

$$CNVT = NVT/[(Q)\ (SVT)]$$

$$CBVT = BVT/[(Q)\ (SVT)\ (CVT)]$$

$$CTVT = TVT/[(Q)\ (SVT)\ (CVT)]$$

For elevon hinge moments:

$$CHEI = HEI/[(Q)\ (SE)\ (CE)]$$

$$CHEO = HEO/[(Q)\ (SE)\ (CE)]$$

For rudder hinge moments:

$$CHR = HR/[(Q)\ (SR)\ (CR)]$$

Uncertainties (a statistical combination of systematic and random errors) of the tunnel freestream properties, aerodynamic coefficient uncertainties and pressure coefficient uncertainties are all presented in detail in Reference 2. A schedule of completed runs is given in Table II which is the Data Set/Run Number Collation Summary for the test.

Reference dimensions and constants used were:

Symbol	Value		Description
	Model Scale	Full Scale	
A1	0.12576 ft.^{2}	--	Base area #1 (orbiter, including sting cavity area).
A2	0.0572 ft.^{2}	--	Base area #2 (projected body flap).
A3	0.049048 ft.^{2}	--	Base area #3 (OMS pods).
A5, A9	0.04661 ft.^{2}	--	SRB Skirt base areas, each.
A6, A10	0.04795 ft.^{2}	--	SRB Nozzle base area, each.
A7	0.24192 ft.^{2}	--	Base area of the external tank.
ACO	0.0377 ft.^{2}	--	Orbiter sting cavity area.
BREF	18.734 in.	936.7 in.	Wing bending reference length.
CE	1.814 in.	90.7 in.	Elevon reference chord length.
CR	1.464 in.	73.2 in.	Rudder reference chord length.
CVT	3.996 in.	199.8 in.	Vertical tail reference chord length.
L1	25.260 in.	1263.0 in.	Horizontal transfer distance between the orbiter base and the integrated vehicle moment reference center.

DATA REDUCTION (Concluded)

Symbol	Value		Description
	Model Scale	Full Scale	
L2	26.594 in.	1329.7 in.	Horizontal transfer distance between the body flap and the integrated vehicle moment reference center.
LREF	25.806 in.	1290.3 in.	Reference length.
MAC	9.496 in.	474.8 in.	Mean aerodynamic chord.
SE	0.084 $ft.^2$	210. $ft.^2$	Elevon reference area.
SR	0.04006 $ft.^2$	100.15 $ft.^2$	Rudder reference area.
SREF	1.076 $ft.^2$	2690. $ft.^2$	Wing reference area.
SVT	0.1653 $ft.^2$	413.25 $ft.^2$	Vertical tail reference area.
YS	5.010 in.	250.5 in.	Lateral transfer distance between the SRB base and the integrated vehicle moment reference center.
Z1	6.730 in.	336.5 in.	Vertical transfer distance between the total orbiter base area and the integrated vehicle moment reference center.

REFERENCES

1. SD77-SH-0195, "Pretest Information for Test IA156A of the 0.02-Scale Model 89-OTS Space Shuttle Integrated Vehicle in the AEDC Propulsion Wind Tunnel (16T)," dated August 4, 1977.

2. AEDC-DR-78-25, "Documentation of Wind Tunnel Tests of the NASA Space Shuttle Launch Vehicle Models," dated March 16, 1978.

3. ARO, Inc. Letter of April 9, 1980 to D. E. Poucher from J. A. Black, subject, "Recomputed Space Shuttle Data from NASA/Rockwell Tests IA-105A, IA-156A, IA-105AR, IA-182, IA-183 (Project P43T-09)."

4. Rockwell International IL No. SAS/AERO/78-014, "Correction Requirements for IA105/156 Force and Moment Data," (April 25, 1978).

TABLE I. TEST CONDITIONS

Mach Number	Reynolds Number	Dynamic Pressure, psf	Stagnation Temperature, ^{o}F
0.3	2.7×10^6	180	100
0.6	3.5×10^6	440	
0.7		500	
0.8		550	
0.85		575	
0.90		600	
0.92		605	
0.94		615	
0.95		620	
0.96		622	
0.97		625	
0.98		630	
0.99		634	
1.1		643	
1.02		644	
1.03		647	
1.04		652	
1.05		655	
1.06		658	
1.08		662	
1.10		670	
1.15		684	
1.20		700	
1.25		710	
1.30		717	
1.40		735	
1.55	3.2×10^6	684	
1.40	3.0×10^6	630	
1.55	3.0×10^6	640	

TABLE II

TEST: IA156A — DATA SET/RUN NUMBER COLLATION SUMMARY — DATE:

DATA SET IDENTIFIER	CONFIGURATION	β	δ_{e_I}	δ_{e_O}	M	α: -10	-8	-6	-4	0	4	6	8	10	MACH NUMBERS	TEST RUN NUMBERS
R- 901	OTS F1	A	10	5	0.6					801						
02					0.7					803						
03					0.8					804						
04					.85					805						
05					.90					806						
06					.92					807						
07					.94					808						
08		0			.95					816*						
09		A			.95					820						
10					.96					818						
11					.97					821						
12					.98					822						
13					.99					823						
14					1.01					824						
15					1.02					825						
16					1.03					826						
17					1.04					827						
18					1.05					828						

1 7 13 19 25 31 37 43 49 55 61 67 75 76

IDVAR (1) IDVAR (2) NDV

α OR β SCHEDULES — COEFFICIENTS

A) $\beta = 0, \pm 6°$

B) $\beta = 0, \pm 6°, \pm 10°$

C) $\beta = 0, \pm 4°, \pm 6°, \pm 8°$

D) $\beta = 0, \pm 4°, \pm 6°$

E) $\beta = 0, \pm 6°, \pm 8°$

* $\alpha = -6°, -1°, 0°, 6°$

NASA-MSFC-MAF

TABLE II. (Continued)

TEST: IA156A

DATA SET/RUN NUMBER COLLATION SUMMARY

DATE:

DATA SET IDENTIFIER	CONFIGURATION	β	δ_{e_I}	δ_{e_o}	M	α -10	α -8	α -6	α -4	α 0	α 4	α 6	α 8	α 10	Z	TEST RUN NUMBERS
R$$ 19	OTS F1	A	10	5	1.06					829						
20					1.08					830						
21					1.10					831						
22					1.15					836						
23					1.20					837						
24					1.25					838						
25					1.30					839						
26					1.40					840						
27					1.55					841						
28	MODEL ϕ=+90°	E			0.6					846						
29					0.9					845						
30					1.10					844						
31					1.55					842						
34		A			1.10					835					4.5	
35					1.10					834					5.5	
36					1.10					832					6.5	

1 7 13 19 25 31 37 43 49 55 61 67 75 76

α OR β SCHEDULES

COEFFICIENTS

A) β = 0, ±6°
B) β = 0, ±6°, ±10°
C) β = 0, ±4°, ±6°, ±8°
D) β = 0, ±4°, ±6°
E) β = 0, ±6°, ±8°

IDVAR (1) IDVAR (2) NDV

NASA-MSFC-MAF

TABLE II. (Continued)

TEST: IA156A

DATA SET/RUN NUMBER COLLATION SUMMARY

DATE:

DATA SET IDENTIFIER	CONFIGURATION		β	δ_{e_1}	δ_{e_0}	M	-10	-8	-6	-4	0	4	6	8	10
R $9 $37	OTS	F1	0	10	5	1.55					843				
40	OTS+SILTS	F2	B			0.3			862		863		865		
41			A			0.3	861								866
42			C			0.6		867	868	869	870	871	872	873	
43			D			0.8		874	875	876	877	878	879		
44						0.9		880	881	882	883	884			
45						.95		885	886	887	888	889			
46						1.05		892	893	894	895	896			
47						1.10		897	898	899	900	901			
48						1.15		902	903	904	905	906			
49						1.25		907	908	909	910	911			
50						1.40		912	913	914	915	916			
51						1.55		917	918	919	920	921			
52		F3	B	10	9	0.3			928		929		930		
53			E			0.3	927								931
54			C			0.6		932	933	934	935	936	937	938	

TEST RUN NUMBERS

1 7 13 19 25 31 37 43 49 55 61 67 75 76

IDVAR (1) IDVAR (2) NDV

α OR β SCHEDULES — COEFFICIENTS

A) $\beta = 0, \pm 6°$

B) $\beta = 0, \pm 6°, \pm 10°$

C) $\beta = 0, \pm 4°, \pm 6°, \pm 8°$

D) $\beta = 0, \pm 4°, \pm 6°$

E) $\beta = 0, \pm 6°, \pm 8°$

NASA-MSFC-MAF

DMS CCL

TABLE II. (Continued)

TEST: IA156A — DATA SET/RUN NUMBER COLLATION SUMMARY — DATE:

DATA SET IDENTIFIER	CONFIGURATION	β	δ_{e_T}	δ_{e_0}	M	α = -10	-8	-6	-4	0	4	6	8	10	MACH NUMBERS
R ~~51~~ 55	OTS +SILTS F3	D	10	9	0.8		939	940	941	942	943	944			TEST RUN NUMBERS
56					0.9		952	953	954	955	956				
57					.95		957	959	958	960	961				
58					1.05		962	963	964	965	966				
59					1.10		967	968	969	970	971				
60					1.15		972	973	974	975	976				
61					1.25		977	978	979	980	981				
62	F4	B		11	0.3			985		986		987			
63		E			0.3	984								988	
64		C			0.6		989	990	991	992	993	994	995		
65		D			0.8		996	997	998	999	1000	1001			
66					0.9		1002	1003	1004	1005	1006				
67					.95		1007	1008	1009	1010	1011				
68					1.05		1012	1013	1014	1015	1016				
69					1.10		1017	1018	1019	1020	1021				
70					1.15		1022	1023	1024	1025	1026				
71	F5	C	12		0.6		1030	1031	1042	1043	1044	1045	1046		
72		D			0.8		1047	1048	1049	1050	1051	1052			

1 7 13 19 25 31 37 43 49 55 61 67 75 76

IDVAR (1) IDVAR (2) NDV

α OR β SCHEDULES — COEFFICIENTS

A) $\beta = 0, \pm 6°$
B) $\beta = 0, \pm 6°, \pm 10°$
C) $\beta = 0, \pm 4°, \pm 6°, \pm 8°$
D) $\beta = 0, \pm 4°, \pm 6°$
E) $\beta = 0, \pm 6°, \pm 8°$

NASA-MSFC-MAF

TABLE II. (Continued)

TEST: IA156A — DATA SET/RUN NUMBER COLLATION SUMMARY — DATE:

DATA SET IDENTIFIER	CONFIGURATION	β	δ_{e_1}	δ_{e_0}	M	α = -10	-8	-6	-4	0	4	6	8	10	MACH NUMBERS	TEST RUN NUMBERS
RUN 73	OTS+SILTS F5	D	12	11	0.9		1053	1054	1055	1056	1058					
74					.95		1059	1060	1061	1062	1063					
75					1.05		1064	1065	1066	1067	1068					
76					1.10		1069	1070	1071	1072	1073					
77	F6	C	8	11	0.6		1077	1078	1079	1080	1081	1082	1083			
78		D			0.8		1084	1085	1086	1087	1088	1089				
79					0.9		1090	1091	1092	1093	1094					
80					.95		1095	1096	1097	1098	1099					
81					1.05		1102	1103	1104	1105	1106					
82					1.10		1107	1108	1109	1110	1111					
83	F7	C		9	0.6		1114	1115	1117	1118	1119	1120	1121			
85		D			0.8		1132	1133	1134	1135	1136	1137				
86					0.9		1139	1140	1141	1142	1143					
87					.95		1144	1145	1146	1147	1148					
88					1.05		1149	1150	1151	1152	1153					
89					1.10		1154	1155	1156	1157	1158					
90					1.15		1159	1160	1161	1162	1163					

1 7 13 19 25 31 37 43 49 55 61 67 75 76

α OR β SCHEDULES — COEFFICIENTS — IDVAR (1) IDVAR (2) NDV

A) $\beta = 0, \pm 6°$
B) $\beta = 0, \pm 6°, \pm 10°$
C) $\beta = 0, \pm 4°, \pm 6°, \pm 8°$
D) $\beta = 0, \pm 4°, \pm 6°$
E) $\beta = 0, \pm 6°, \pm 8°$

NASA-MSFC-MAF

TABLE II. (Continued)

TEST: IA156A — DATA SET/RUN NUMBER COLLATION SUMMARY — DATE:

DATA SET IDENTIFIER	CONFIGURATION	β	δ_{e_2}	δ_{e_8}	M	α: -10	-8	-6	-4	0	4	6	8	10	MACH NUMBERS	TEST RUN NUMBERS
R$$ $91	OTS+SILTS F7	D	8	9	1.25		1164	1165	1166	1167	1168					
92	F8	C		5	0.6		1173	1174	1175	1176	1177	1178	1179			
93		D			0.8		1180	1181	1182	1183	1184	1185				
94					0.9		1186	1187	1188	1189	1190					
95					.95		1191	1192	1193	1194	1195					
96					1.05		1196	1197	1198	1199	1200					
97					1.10		1201	1202	1203	1204	1205					
98					1.15		1206	1207	1208	1210	1211					
A0					1.25		1224	1225	1226	1227	1228					
A1					1.40		1229	1230	1231	1232	1233					
A2					1.55		1212	1213	1214	1215	1216					
A3	F9	C	12		0.6		1240	1241	1242	1243	1244	1245	1246			
A4		D			0.8		1247	1248	1249	1250	1251	1252				
A5					0.9		1253	1254	1255	1256	1257					
A6					.95		1258	1259	1260	1261	1262					
A7					1.05		1263	1264	1265	1266	1267					
A8					1.10		1268	1269	1270	1271	1272					

1 7 13 19 25 31 37 43 49 55 61 67 75 76

IDVAR (1) IDVAR (2) NDV

α OR β SCHEDULES — COEFFICIENTS

A) β = 0, ±6°
B) β = 0, ±6°, ±10°
C) β = 0, ±4°, ±6°, ±8°
D) β = 0, ±4°, ±6°
E) β = 0, ±6°, ±8°

NASA-MSFC-MAF

TABLE II. (Continued)

TEST: IA156A — DATA SET/RUN NUMBER COLLATION SUMMARY — DATE:

DATA SET IDENTIFIER	CONFIGURATION	β	δ_{e_1}	δ_{e_2}	M	α: -10	-8	-6	-4	0	4	6	8	10	MACH NUMBERS	TEST RUN NUMBERS
RS: SA9	OTS+SLTS F9	D	12	5	1.15		1273	1274	1275	1276	1277					
B0					1.25		1278	1279	1280	1281	1282					
B1					1.40		1283	1284	1285	1286	1287					
B2					1.55		1288	1289	1290	1291	1292					
B3	F10	C		9	0.6		1295	1296	1297	1298	1299	1300	1301			
B4		D			0.8		1302	1303	1304	1306		1314				
B5					0.8					1313						
B6					0.9		1308	1309	1310	1311	1312					
B7	OTS F11				0.8						1324					
B8					.95		1325	1326	1327	1328	1329					
B9					1.05		1330	1331	1332	1333	1334					
C0					1.10		1335	1336	1337	1338	1339					
C1					1.15		1341	1342	1343	1344	1345					
C2					1.25		1346	1347	1348	1349	1350					
C3	F12			-2	1.15		1355	1356	1357	1358	1359					
C4					1.25		1360	1361	1362	1363	1364					
C5					1.40		1365	1366	1367	1368	1369					
C6					1.55		1370	1371	1372	1373	1374					

1 7 13 19 25 31 37 43 49 55 61 67 75 76

IDVAR (1) IDVAR (2) NDV

α OR β SCHEDULES — COEFFICIENTS

A) $\beta = 0, \pm 6°$
B) $\beta = 0, \pm 6°, \pm 10°$
C) $\beta = 0, \pm 4°, \pm 6°, \pm 8°$
D) $\beta = 0, \pm 4°, \pm 6°$
E) $\beta = 0, \pm 6°, \pm 8°$

NASA-MSFC-MAF

TABLE II. (Continued)

TEST: IA156A — DATA SET/RUN NUMBER COLLATION SUMMARY — DATE:

DATA SET IDENTIFIER	CONFIGURATION	β	δ_{e_s}	δ_{e_a}	M	MACH NUMBERS -10	-8	-6	-4	0	4	6	8	10	TEST RUN NUMBERS
R $I $C7	OTS + SILTS F13	D	9	-2	1.15		1377	1378	1379	1380	1381				
C8					1.25		1382	1383	1384	1385	1386				
C9					1.40		1387	1388	1389	1390	1391				
D0					1.55		1392	1393	1394	1395	1396				
D1	F14		8		1.15		1399	1400	1401	1402	1403				
D2					1.25		1404	1405	1406	1407	1408				
D3					1.40		1409	1410	1411	1412	1413				
D4					1.55		1414	1415	1416	1417	1418				
D5					1.55		1419								
D6	F15		10		1.15		1432	1433	1434	1435	1436				
D7					1.25		1437	1438	1439	1440	1441				
D8					1.40		1442	1443	1444	1445	1446				
D9				-7	1.55		1447	1448	1449	1450	1451				
E0	F16				1.40		1456	1457	1458	1459	1460				
E1					1.55		1461	1462	1463	1464	1465				
E2	F17		12		1.40		1469	1470	1471	1472	1473				
E3					1.55		1474	1475	1476	1477	1478				
E4	F18		8		1.40		1482	1483	1484	1485	1486				

1 7 13 19 25 31 37 43 49 55 61 67 75 76

IDVAR (1) IDVAR (2) NDV

α OR β SCHEDULES — COEFFICIENTS

A) $\beta = 0, \pm 6°$
B) $\beta = 0, \pm 6°, \pm 10°$
C) $\beta = 0, \pm 4°, \pm 6°, \pm 8°$
D) $\beta = 0, \pm 4°, \pm 6°$
E) $\beta = 0, \pm 6°, \pm 8°$

NASA-MSFC-MAF

DMS Col.

TABLE II. (Continued)

TEST: IA156A

DATA SET/RUN NUMBER COLLATION SUMMARY

DATE:

DATA SET IDENTIFIER	CONFIGURATION	β	δ_{e_1}	δ_{e_2}	M	α: -10	-8	-6	-4	0	4	6	8	10
RUN SE5	OTS + SILTS F18	↓	8	-7	1.55		1487	1488	1489	1490	1491			
E6	F19		10	2	1.05		1494	1495	1496	1497	1498			
E7					1.10		1499	1500	1501	1502	1503			
E8					1.15		1504	1505	1506	1507	1508			
E9					1.15					1509				

MACH NUMBERS

TEST RUN NUMBERS

1 7 13 19 25 31 37 43 49 55 61 67 75 76

IDVAR (1) IDVAR (2) NDV

α OR β SCHEDULES

COEFFICIENTS

A) $\beta = 0, \pm 6°$

B) $\beta = 0, \pm 6°, \pm 10°$

C) $\beta = 0, \pm 4°, \pm 6°, \pm 8°$

D) $\beta = 0, \pm 4°, \pm 6°$

E) $\beta = 0, \pm 6°, \pm 8°$

NASA-MSFC-MAF

TABLE II. (Continued)

FORCE DATASETS

R8NV$$ - Launch Vehicle Aerodynamic Coefficients
R8NØ$$ - Orbiter Aerodynamic Coefficients
R8NW$$ - Wing Data Coefficients
R8NF$$ - Pressure Data and Vertical Tail Data
R8NM$$ - Miscellaneous
R8NT$$ - ET Alone Aerodynamic Coefficients
R8NS$$ - ET + Left and Right SRB (ET balance)
R8NL$$ - Left SRB Aerodynamic Coefficients
R8NR$$ - Right SRB Aerodynamic Coefficients
R8NN$$ - Left SRB
R8NP$$ - Right SRB

PRESSURE DATASETS

P4CE$$ - Orbiter Base Coefficient of Pressure Data
P4CF$$ - Body Flap (Bottom) Coefficient of Pressure Data
P4CG$$ - Body Flap (Top) Coefficient of Pressure Data
P4CL$$ - Left SRB Base Coefficient of Pressure Data
P4CR$$ - Right SRB Base Coefficient of Pressure Data
P4CT$$ - ET Base Coefficient of Pressure Data

FORCE DATA - COEFFICIENT SCHEDULES

LAUNCH VEHICLE

Datasets R8NV01 thru 32, 34 thru 37, 40 thru 98, A0 thru E9

ALPHAØ BETAØ CNL CNFL CAL CAFL CLMFL CYFL CYNL CYNFL CBLFL

ORBITER

Datasets R8NØ01 thru 32, 34 thru 37, 40 thru 98, A0 thru E9

ALPHAØ BETAØ CNFØ CAPØ CLMFØ CYFØ CYNFØ CBLFØ CNBØ CABØ CLMBØ

WING

Datasets R8NW01 thru 32, 34 thru 37, 40 thru 98, A0 thru E9

ALPHAØ BETAØ CNW CBW CTW CHEI CHEØ IB-ELV ØB-ELV PHII ALPHAI MACH

TABLE II. (Continued)

FORCE DATA - COEFFICIENT SCHEDULES (Continued)

VERTICAL TAIL

Datasets R8NFO1 thru 32, 34 thru 37, 40 thru 98, AO thru E9

ALPHAØ BETAØ CP1 CP2 CP3 CP4 CPBV RUDDER CHR CNVT CBVT CTVT

MISCELLANEOUS

Datasets R8NMO1 thru 32, 34 thru 37, 40 thru 98, Ao thru E9

ALPHAØ BETAØ ALFAØU BETAØU PT P Q TT AFA BFA DEINLR DEØNLR

EXTERNAL TANK

Datasets R8NTO1 thru 32, 34 thru 37, 40 thru 98, AO thru E9

ALPHAT BETAT CNFT CAFT CLMFT CYFT CYNFT CBLFT CABT CP7 ALPHAØ BETAØ

(2) SOLID ROCKET BOOSTERS + EXTERNAL TANK

Datasets R8NSO1 thru 32, 34 thru 37, 40 thru 98, AO thru E9

ALPHAT BETAT CNFTS CATS CAFTS CLMFTS CYFTS CYNTS CYNFTS CBLFTS ALFATU BETATU

LEFT SRB

Datasets R8NLO1 thru 32, 34 thru 37, 40 thru 98, AO thru E9

ALPHAL BETAL CNFLS CAFLS CLMFLS CYFLS CYNFLS CBLLS CABLS CYNBLS CP5 CP6

RIGHT SRB

Datasets R8NRO1 thru 32, 34 thru 37, 40 thru 98, AO thru E9

ALPHAR BETAR CNFRS CAFRS CLMFRS CYFRS CYNFRS CBLRS CABRS CYNBRS CP9 CP10

TABLE II. (Concluded)

FORCE DATA - COEFFICIENT SCHEDULES (Concluded)

LEFT SRB

Datasets R8NNO1 thru 32, 34 thru 37, 40 thru 98, AO thru E9

ALPHAL BETAL CALS CYNLS ALFLSU BETLSU

RIGHT SRB

Datasets R8NPO1 thru 32, 34 thru 37, 40 thru 98, Ao thru E9

ALPHAR BETAR CARS CYNRS ALFRSU BETRSU

PRESSURE DATA - COMPONENTS

Datasets P4C$O1 thru 32, 34 thru 37, 40 thru 98, AO thru E9 contain CP for taps located in the following components:

$ = E ORBITER BASE

F BODY FLAP BOTTOM

G BODY FLAP TOP

L LEFT SRB BASE

R RIGHT SRB BASE

T ET BASE

TABLE III. ELEVON DEFLECTION ANGLES

δ_{e_I}, deg		
Nominal	Left Hand Measured	Right Hand Measured
12	11.88	12.12
10	9.90	10.02
8	7.82	8.10

δ_{e_O}, deg		
Nominal	Left Hand Measured	Right Hand Measured
-7	-6.95	-6.88
-2	-2.00	-2.30
2	2.00	1.88
5	5.00	5.00
9	9.00	8.92
11	11.07	11.25

Notes:

1. Positive directions of force coefficients, moment coefficients, and angles are indicated by arrows
2. For clarity, origins of wind and stability axes have been displaced from the center of gravity

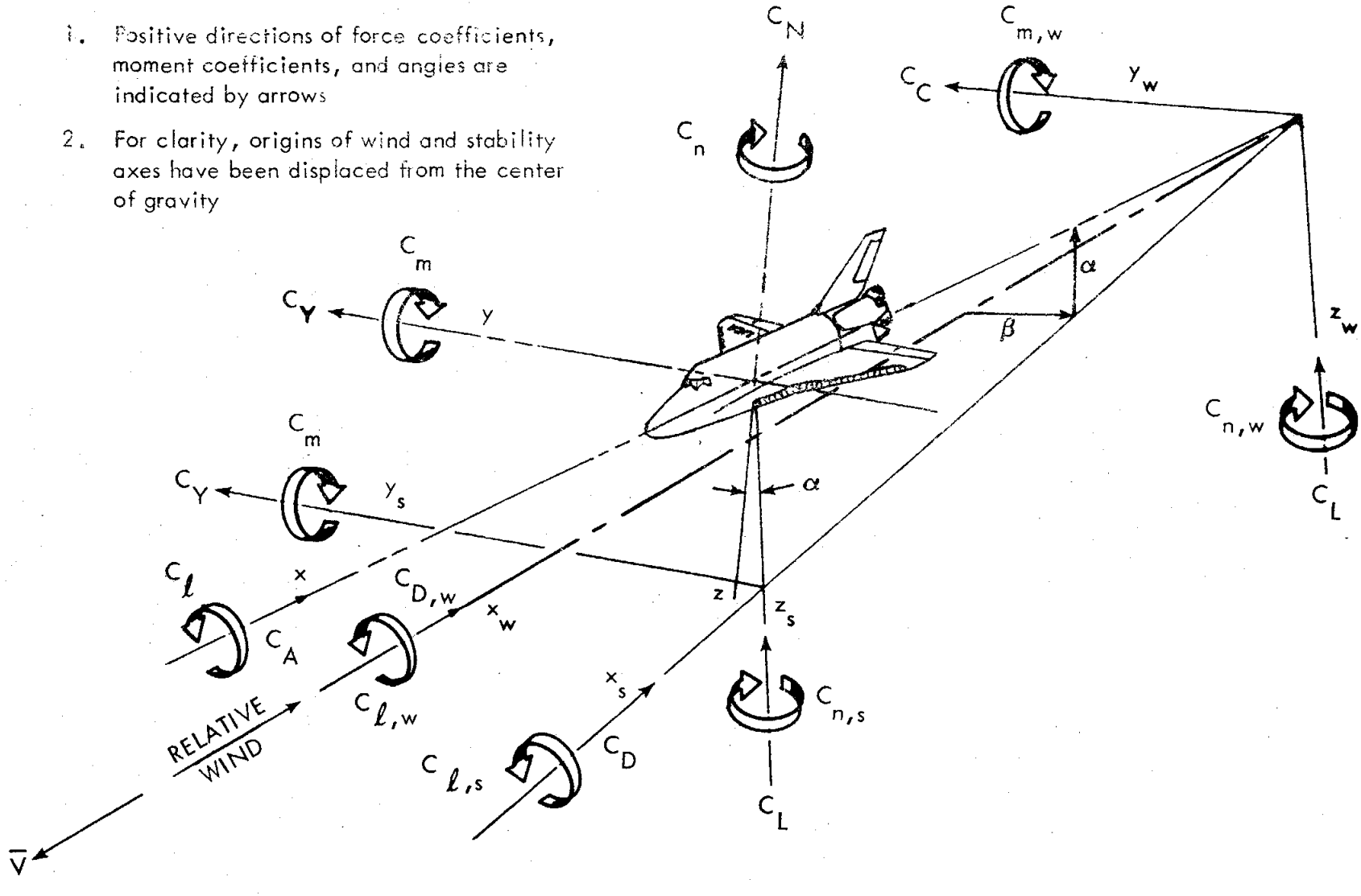

a. Axis Systems

Figure 1. Model axis systems, sign conventions and reference dimensions.

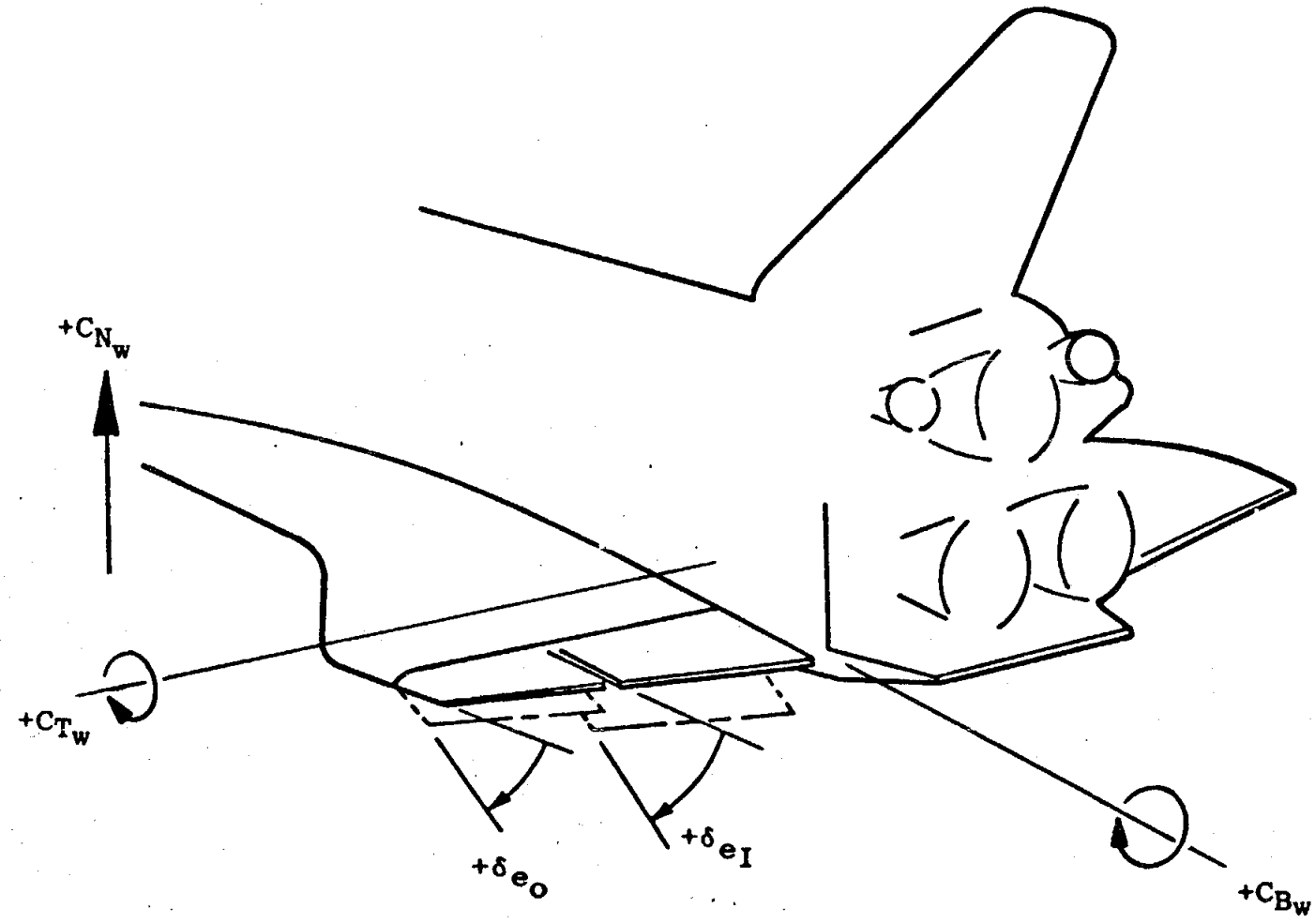

b. Definition of Deflection Angles and Wing Coefficients
Figure 1. Continued.

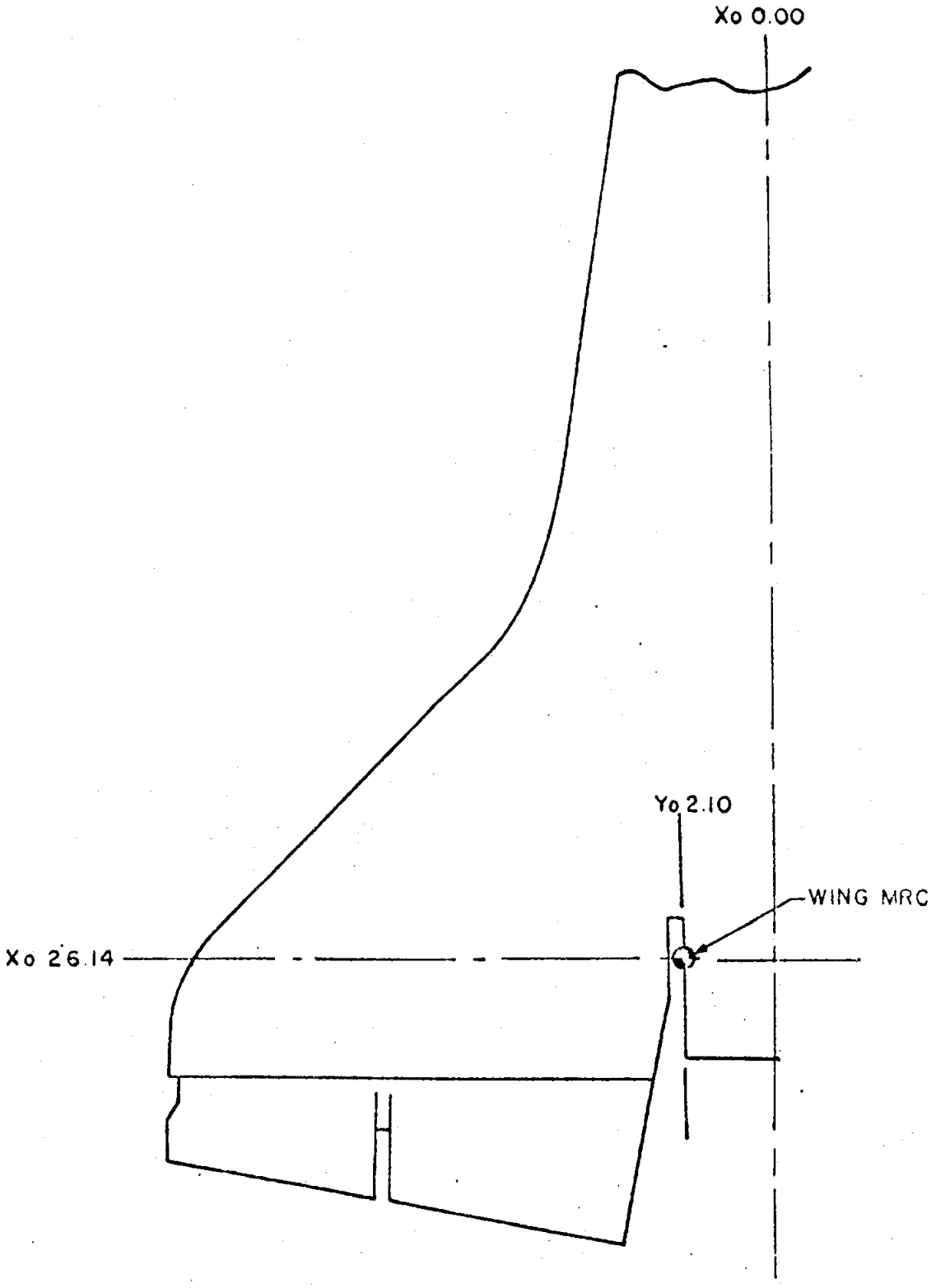

c. Wing Moment Reference Center
Figure 1. Continued.

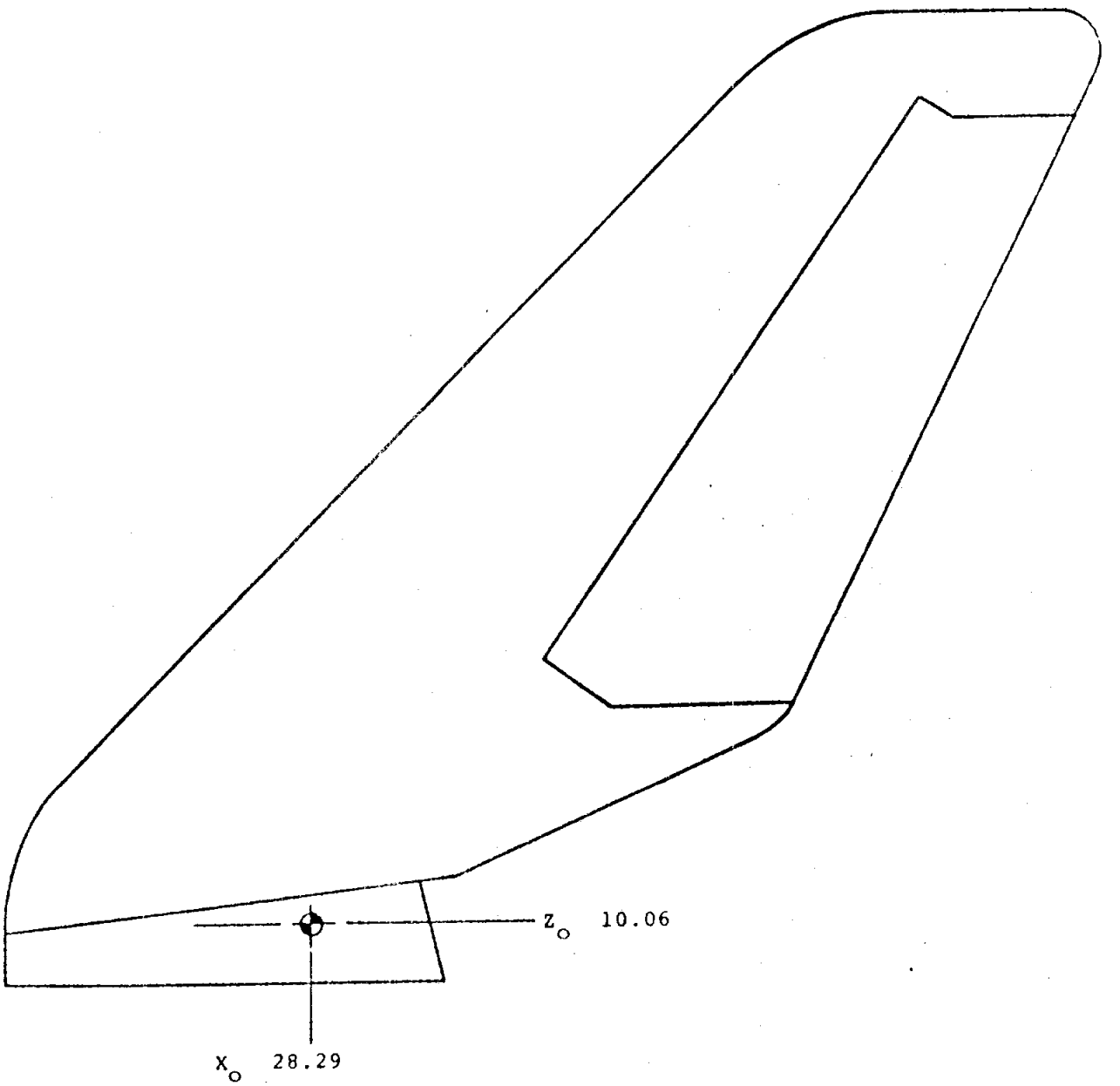

d. Vertical Stabilizer Moment Reference Center
Figure 1. Continued.

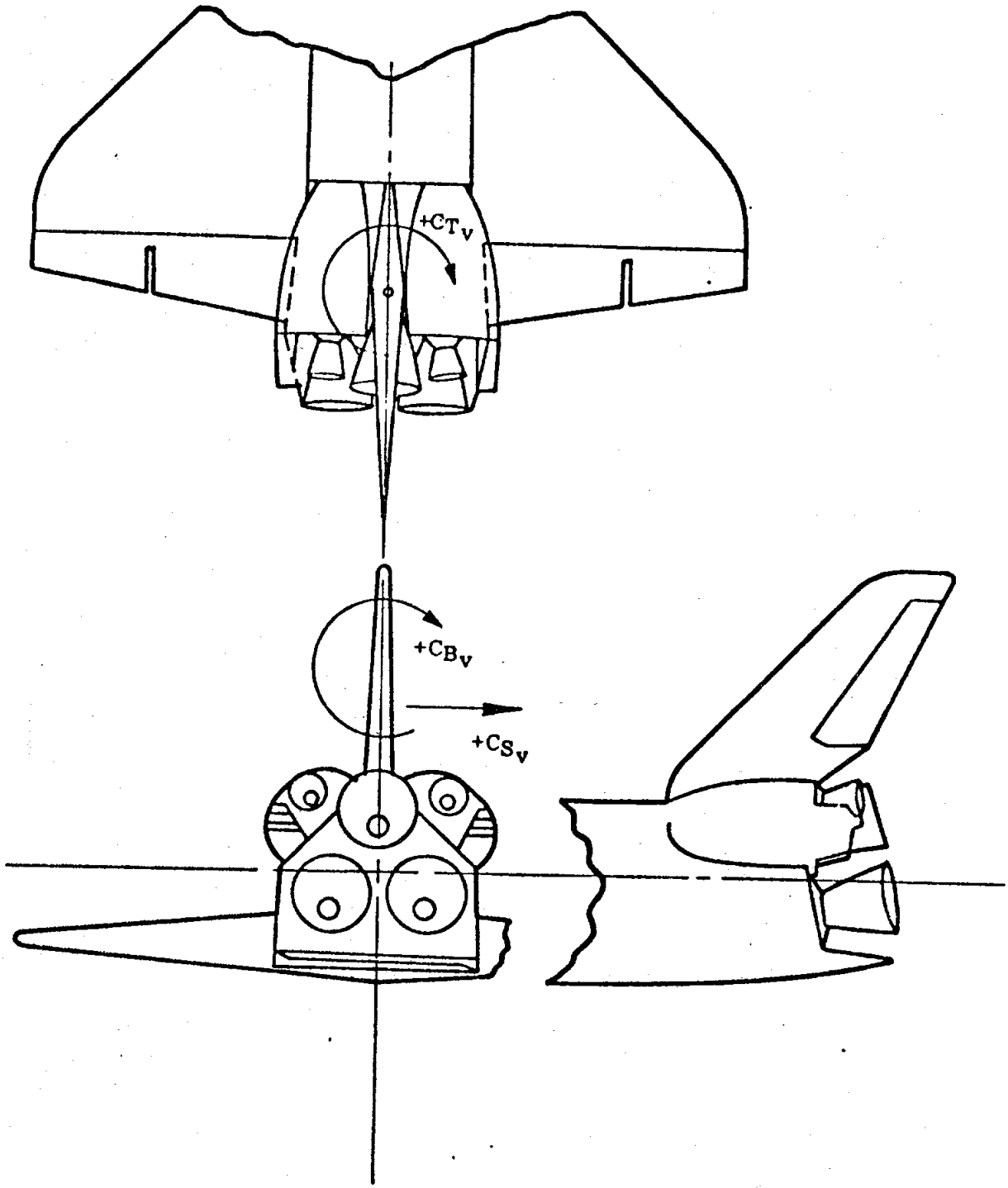

e. Definition of Vertical Stabilizer Coefficients
Figure 1. Continued.

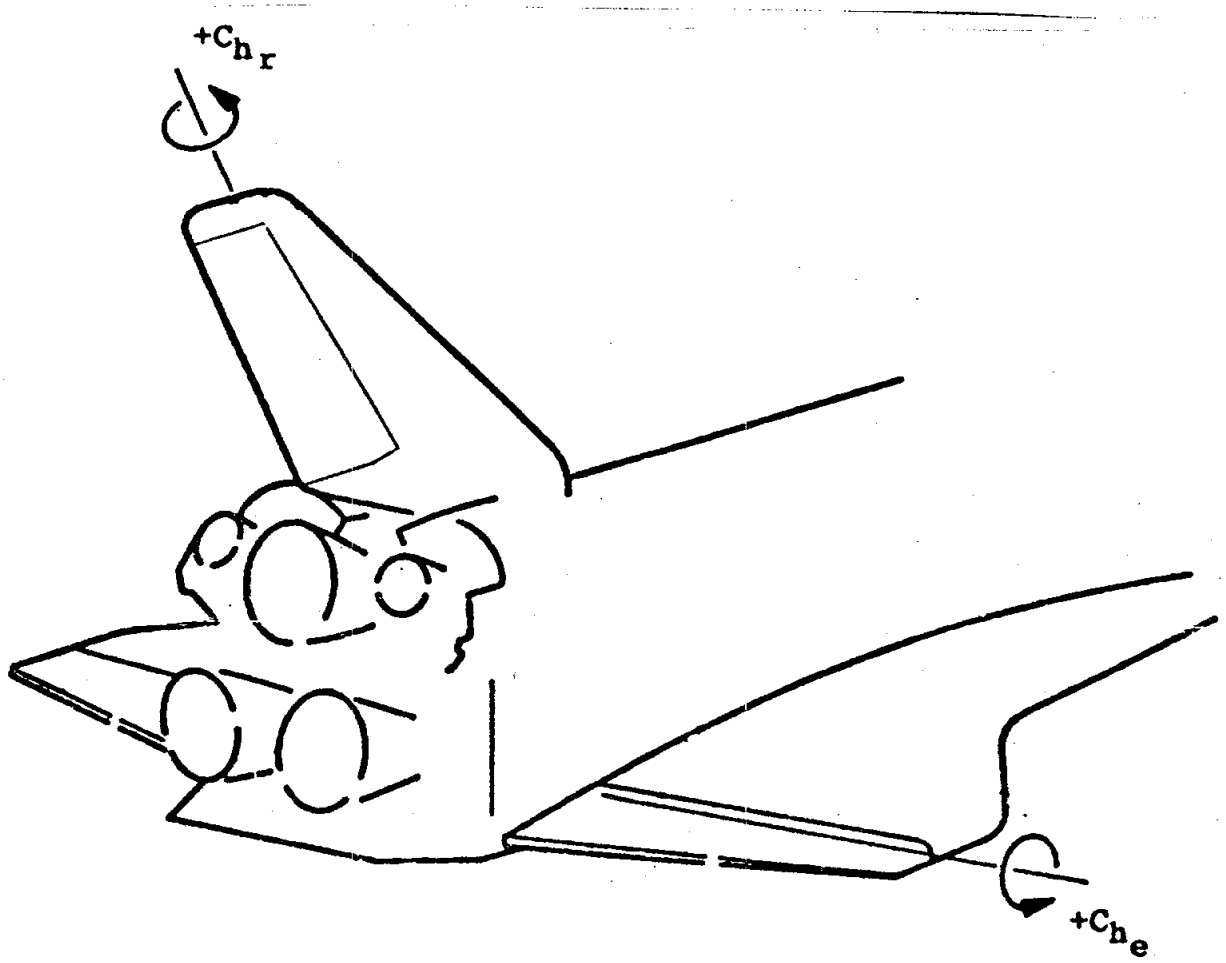

f. Definition of Elevon and Rudder Hinge Moment Coefficients
Figure 1. Concluded.

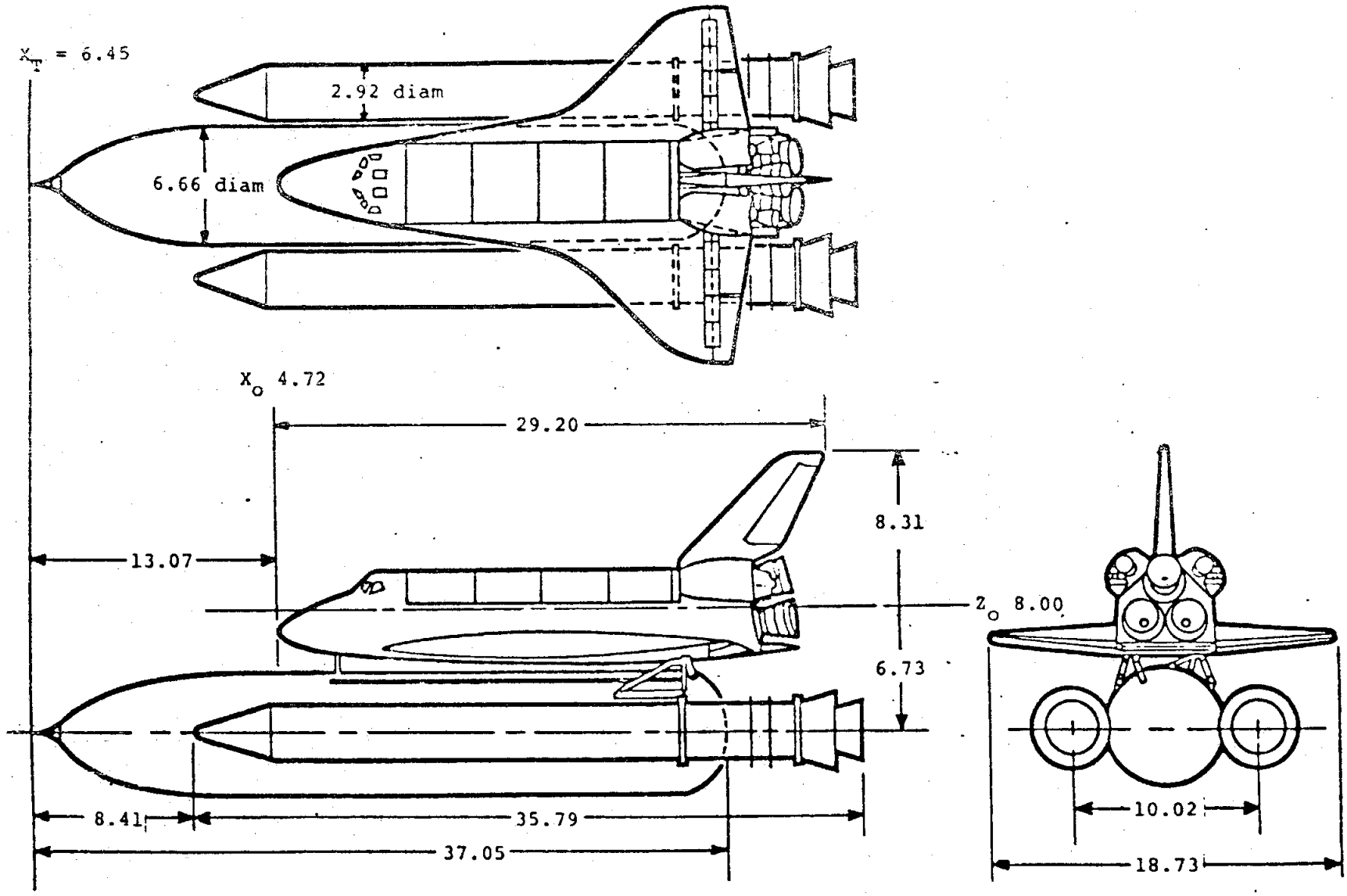

a. Major Model Component Dimensions

Figure 2. Model sketches.

Tap	Z_o	Y_o
301	10.64	0
302	10.1	0
306	6.04	0
308	9.56	-0.76
311	6.04	-0.76
312	8.78	-1.56
314	6.04	-1.56
315	8.28	-2.06
316	7.52	-2.06
317	6.8	-2.06

Tap	Z_o	Y_o
318	6.04	-2.06
319	10.28	-1.1
320	9.84	-1.76
321	10.44	-2.06
322	9.4	-1.92
323	8.78	-2.14
324	9.3	-2.6
325	CAV	0
326	CAV	0

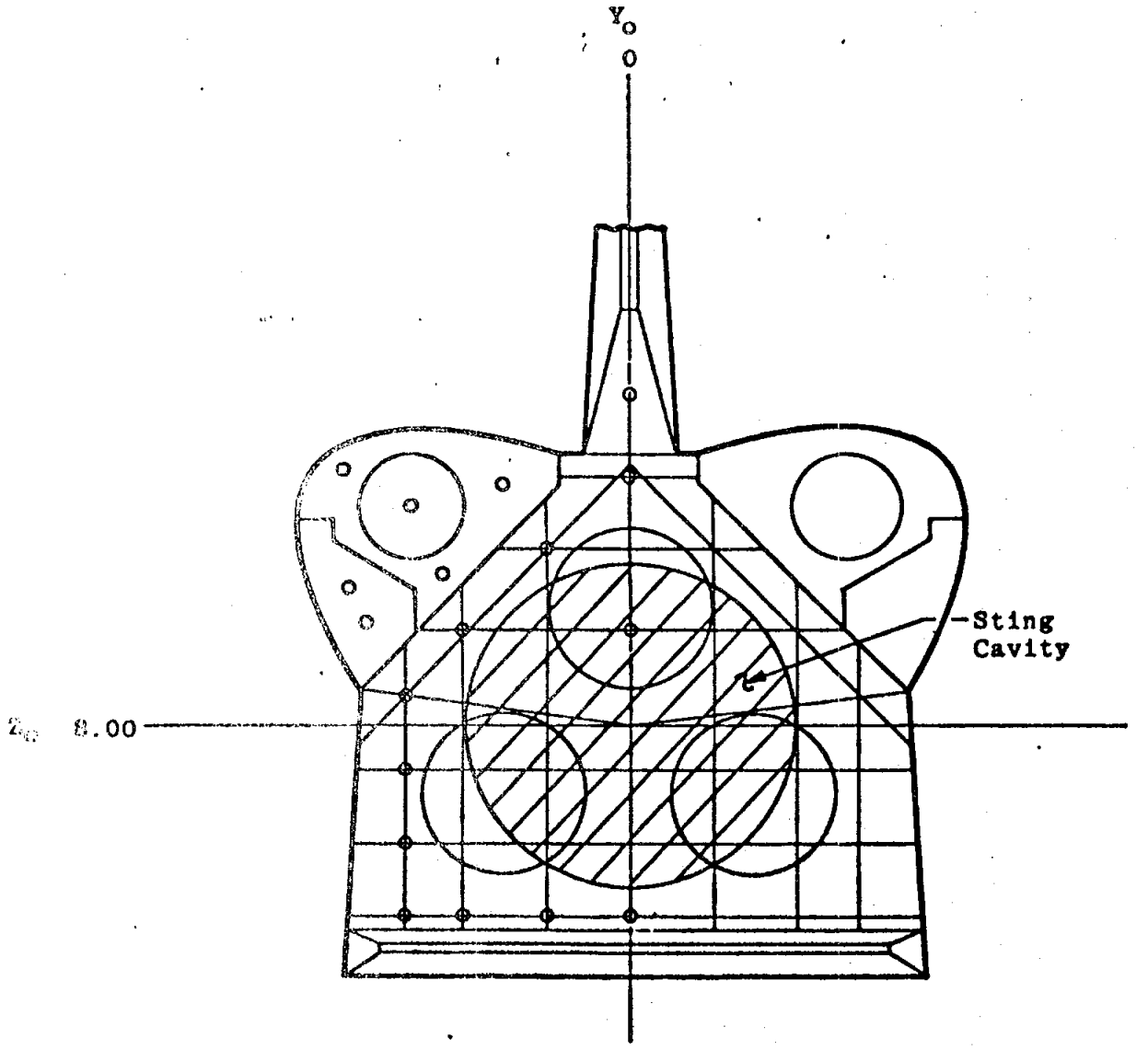

b. Orbiter Base Pressure Orifice Locations
Figure 2. Continued.

η	X/C_{BF}			
	-.10	.20	.60	.95
.10	405	406	407	408
.20				
.35				
.50	413	414	415	416
.65		422		424
.80		430		432
.90	437	438	439	440

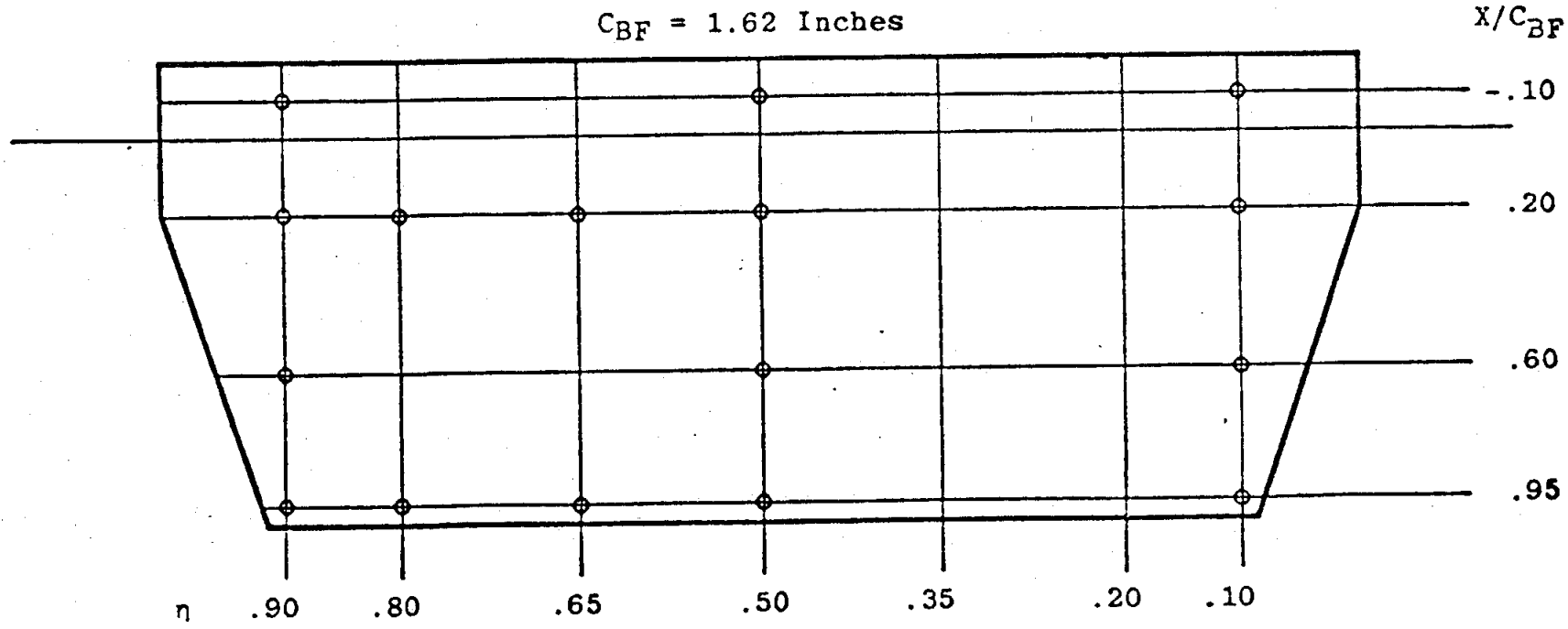

c. Orbiter Body Flap Top Surface Pressure Orifice Locations
Figure 2. Continued.

η	X/C_{BF}			
	-.10	.20	.60	.95
.10	401	402	403	404
.20				
.35				
.50	409	410	411	412
.65		418		420
.80		426		428
.90	433	434	435	436

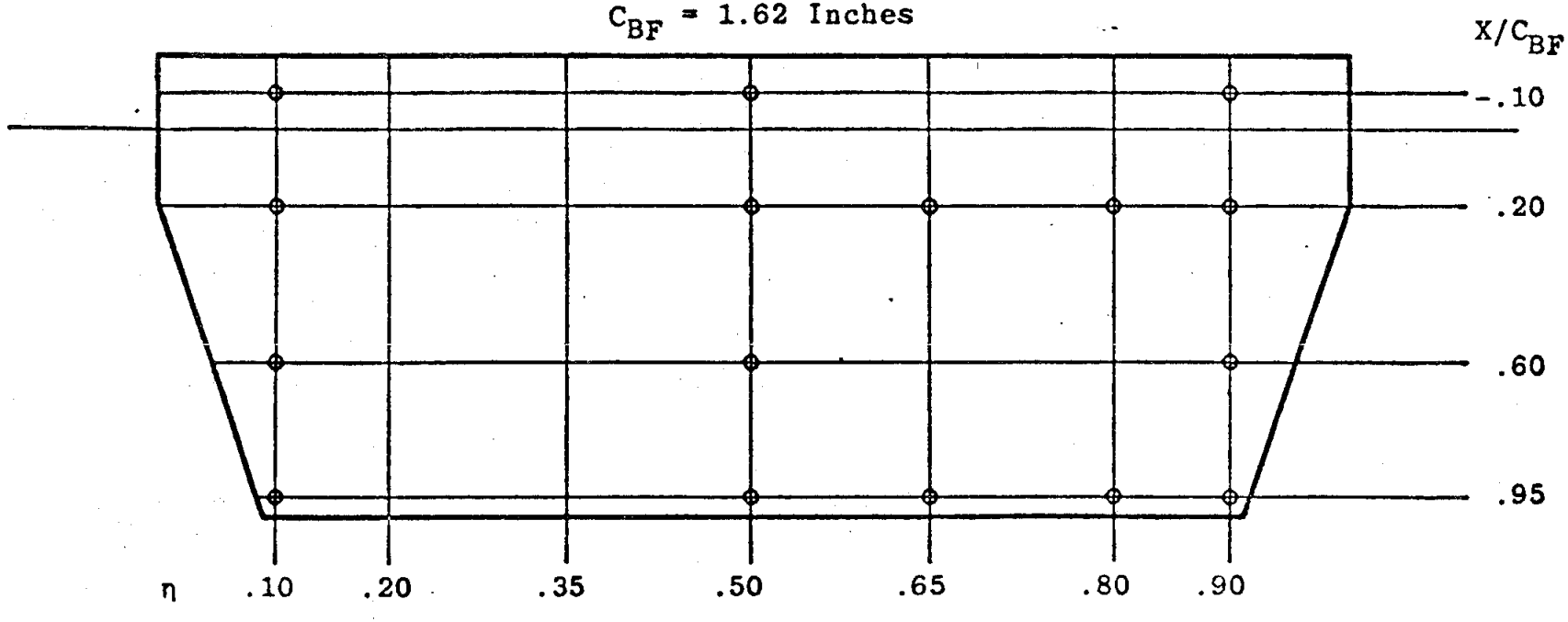

d. Orbiter Body Flap Bottom Surface Pressure Orifice Locations
Figure 2. Continued.

Radius Model Scale	ϕ, deg															
	0	15	30	45	60	90	1125	135	157.5	180	202.5	225	247.5	270	300	330
3.13	1502		1503	1501	1504	1505	1506	1507		1509		1511	1512	1513	1514	
2.96	1516		1517		1518	1519	1520	1521		1523		1525	1526	1527	1528	
2.78	1530	1531		1533	1534	1535	1536	1537	1538	1539	1540	1541		1543	1544	
2.10	1546					1549		1551		1553		1555		1557		
1.55						1563								1571		
0	1574															

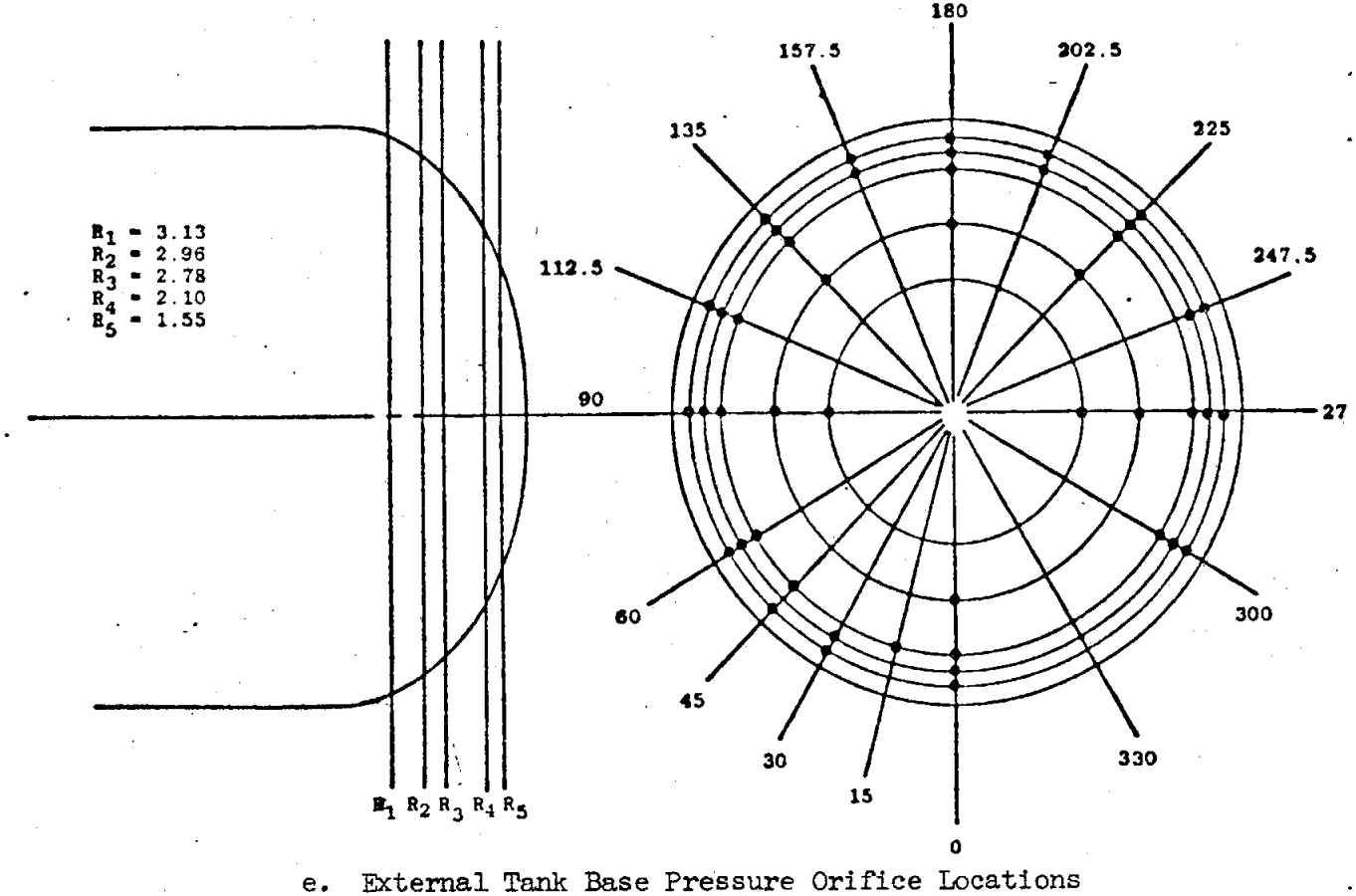

e. External Tank Base Pressure Orifice Locations
Figure 2. Continued.

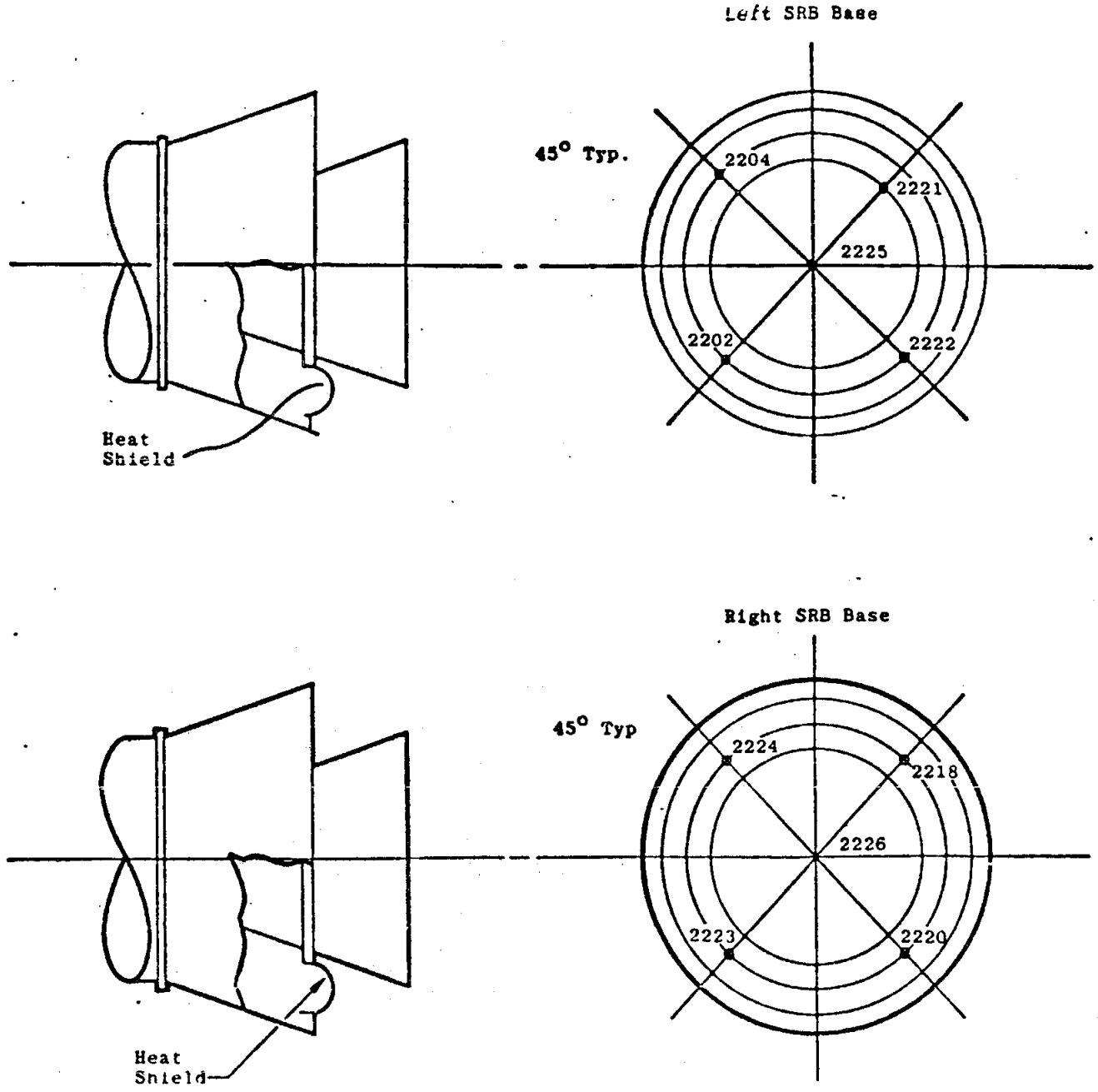

f. Solid Rocket Boosters Base Pressure Tap Locations
Figure 2. Continued.

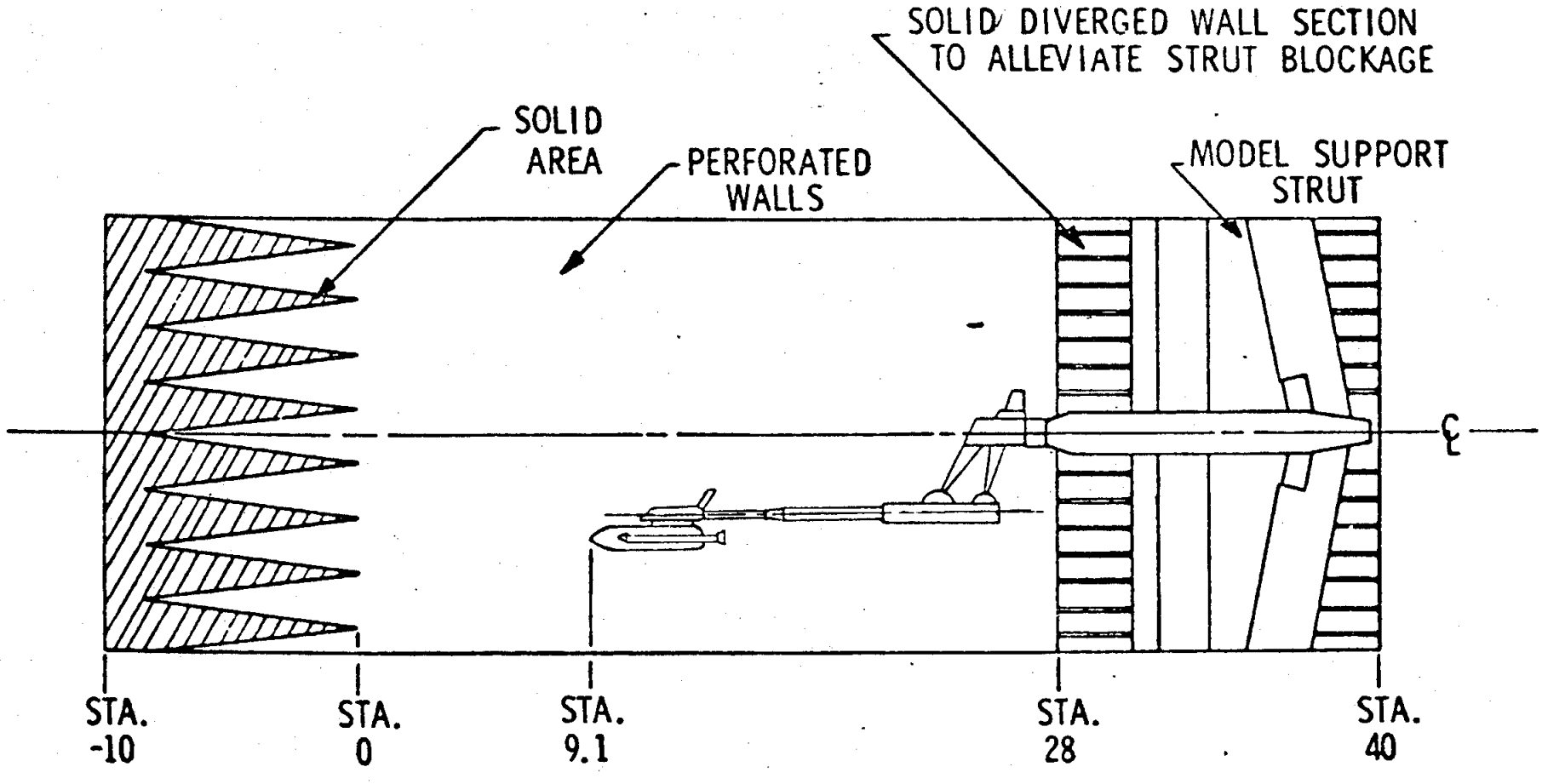

g. Sketch Showing Location of 0.02-Scale Model in the 16T Test Section
Figure 2. Continued.

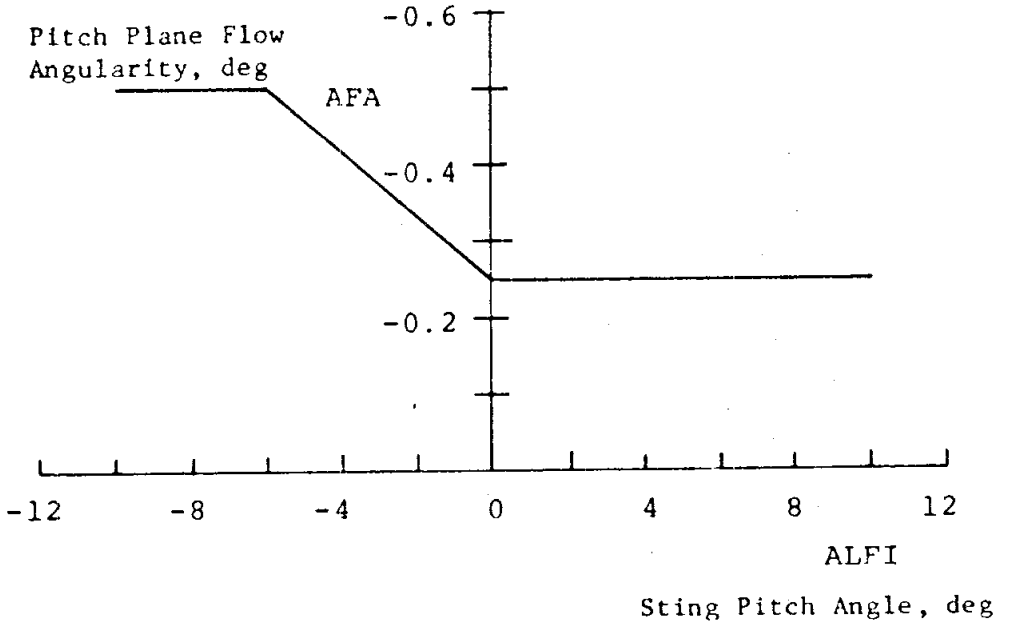

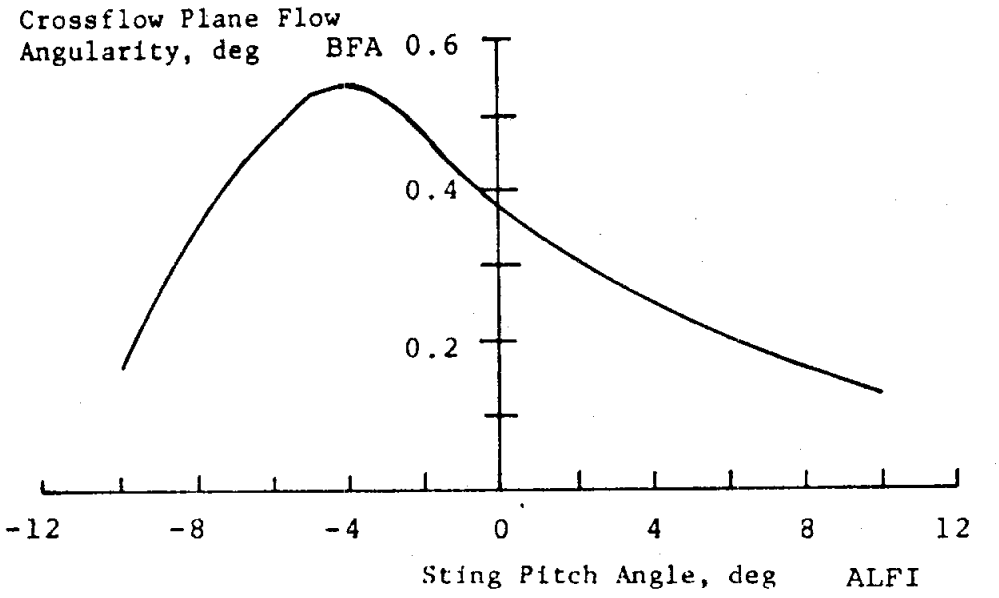

h. Pitch Plane and Cross-Flow Plane Flow Angularity Corrections for Hi-Pitch System
Figure 2. Continued.

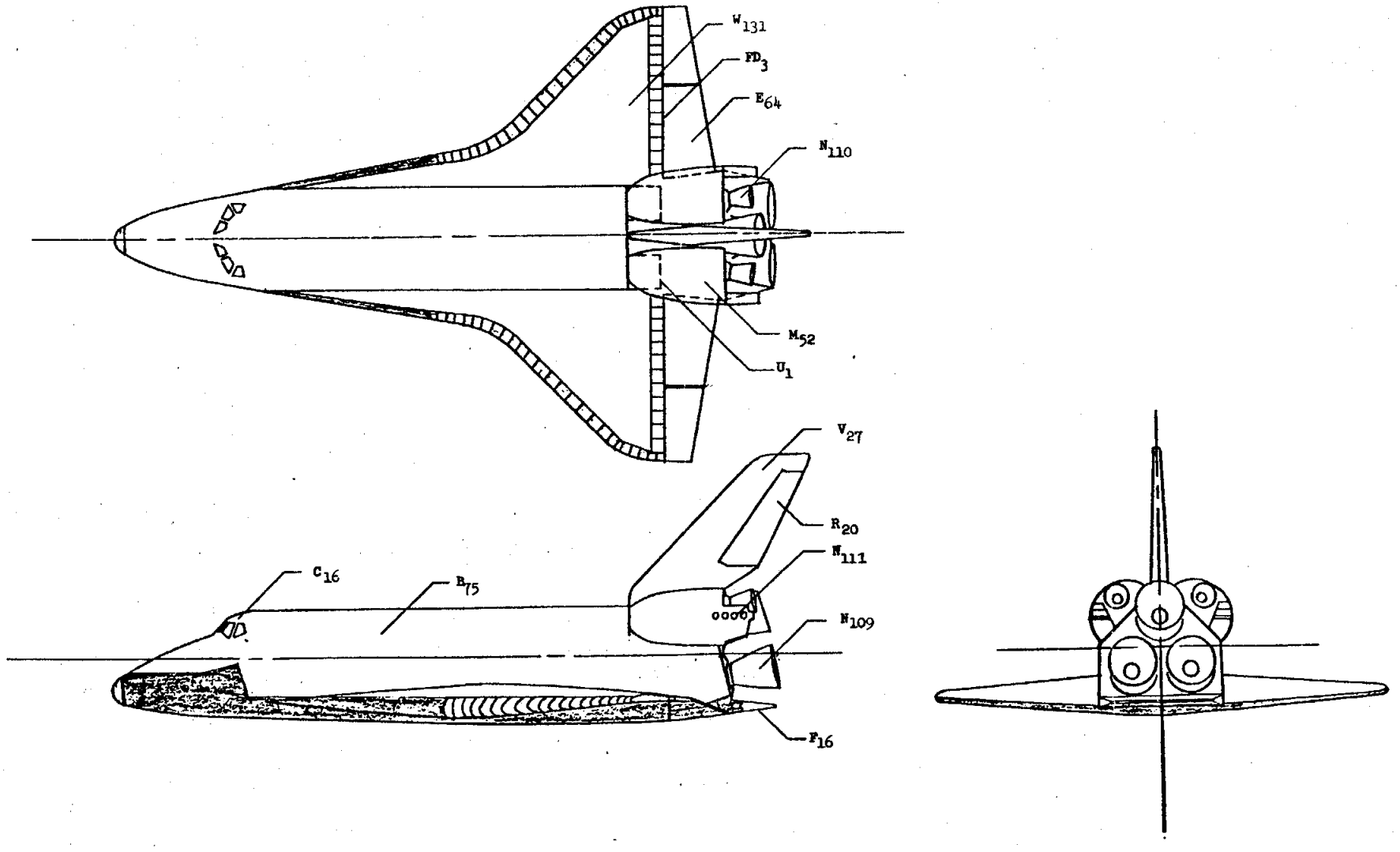

i. Orbiter Nomenclature
Figure 2. Continued.

j. Orbiter Protuberance and Penetration Configuration
Figure 2. Continued.

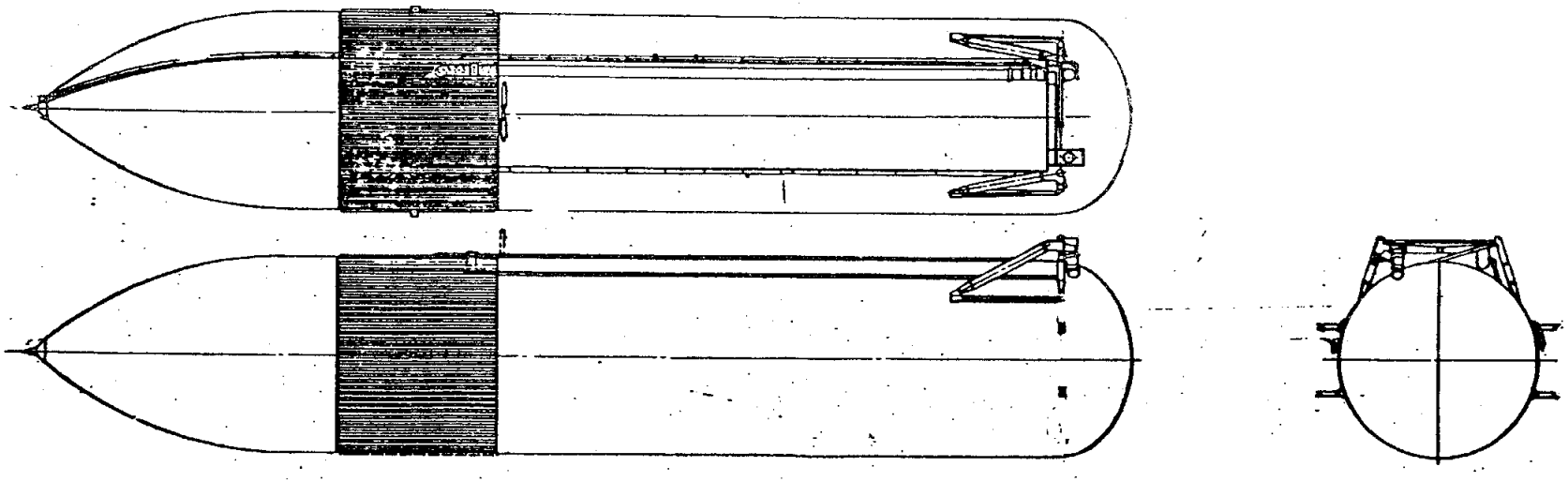

k. External Tank (T_{39})
Figure 2. Continued.

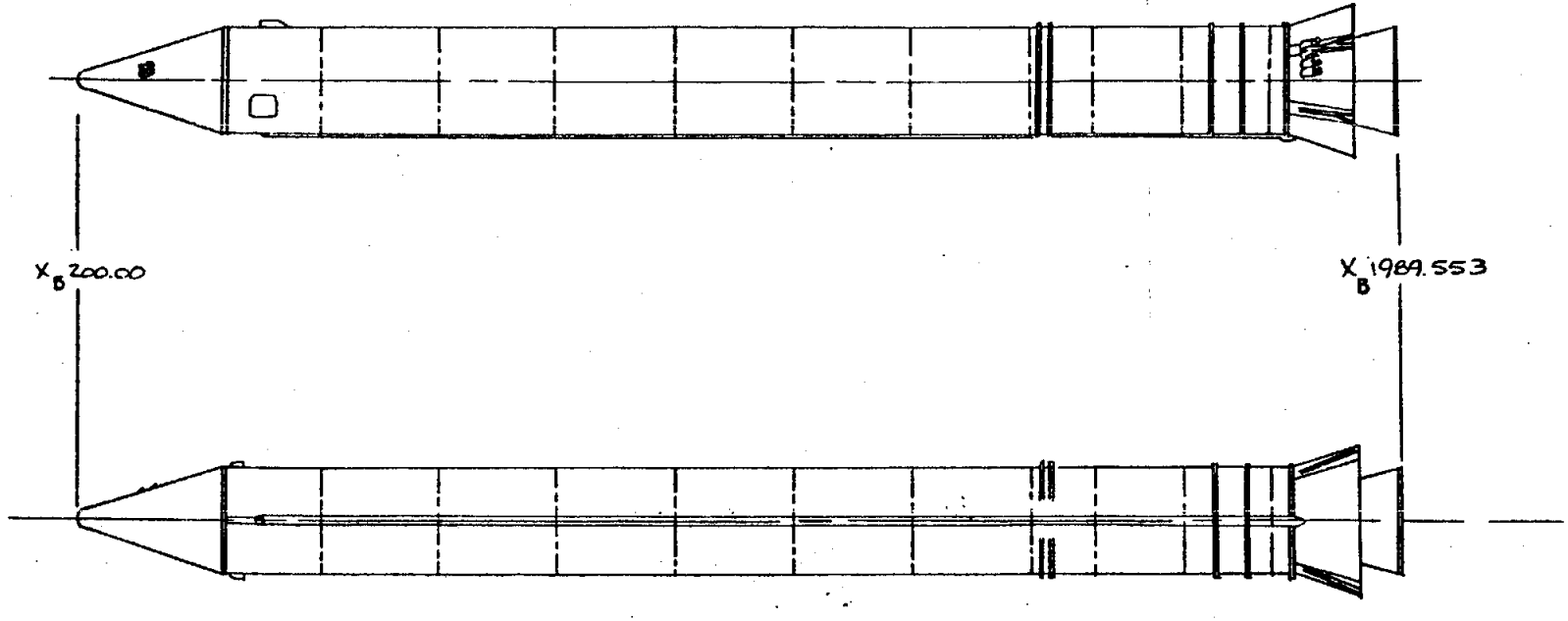

1. Solid Rocket Booster (S_{27})

Figure 2. Concluded.

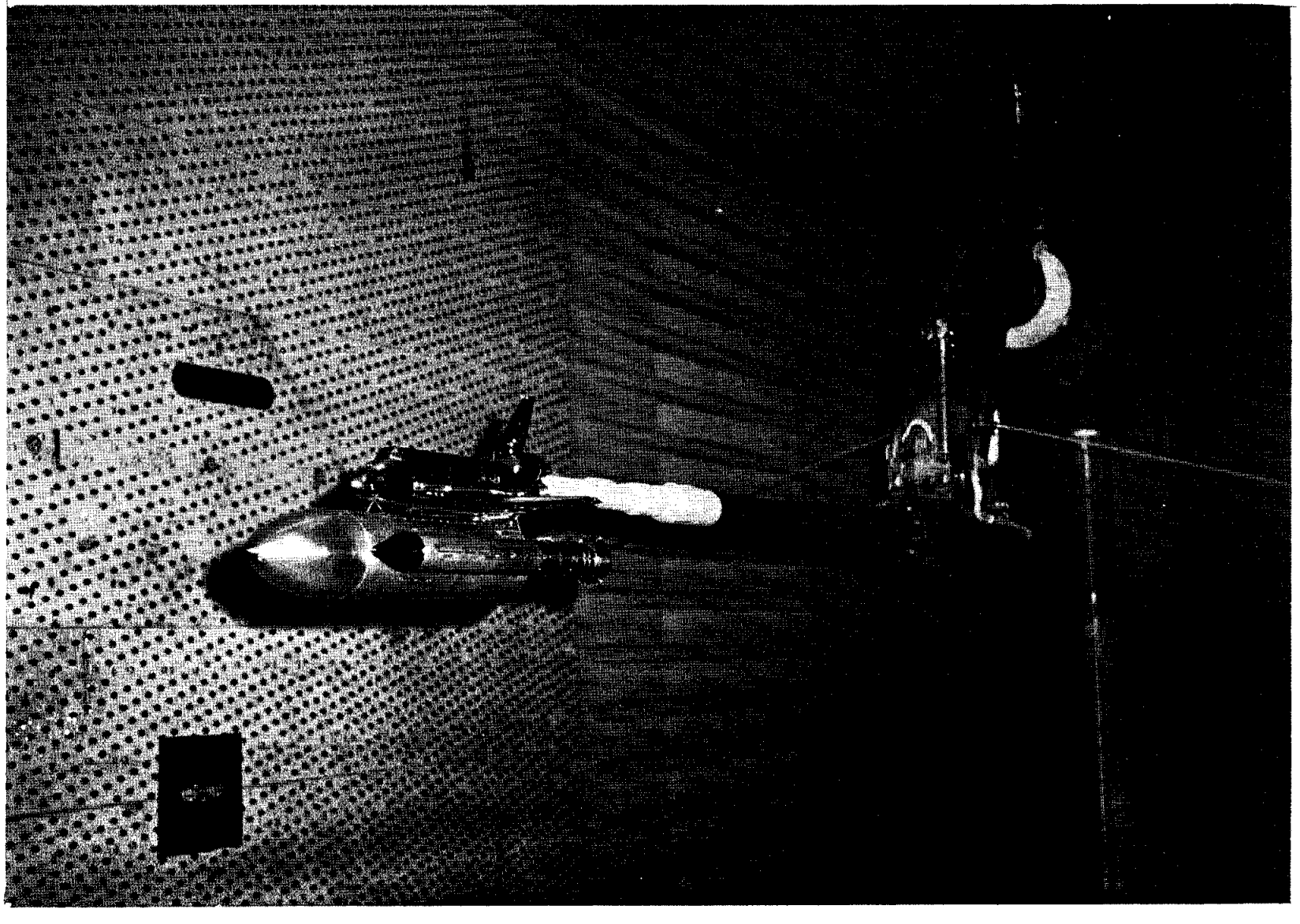

a. Model 89-OTS in the 16T Test Section

Figure 3. Model photographs.

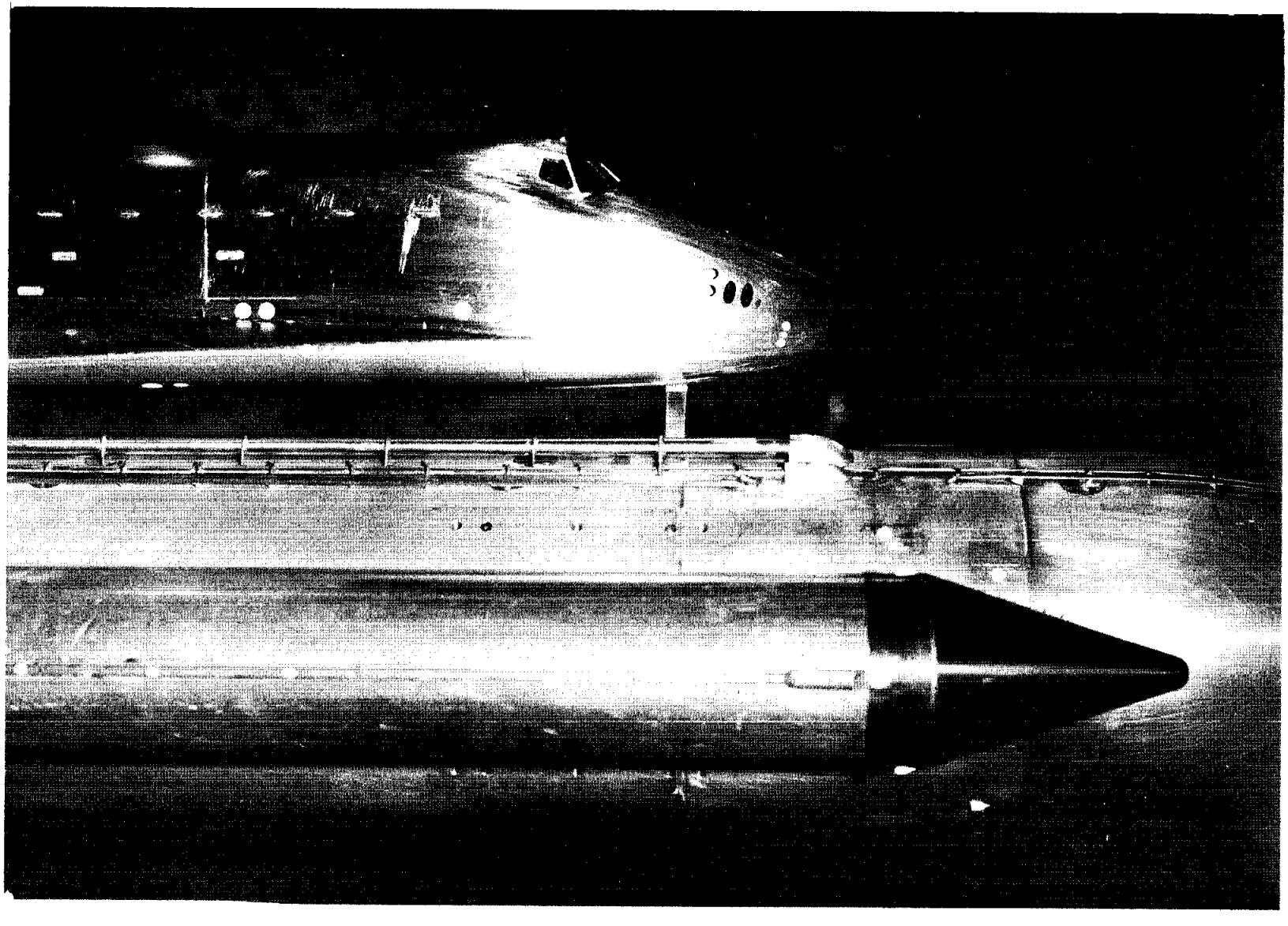

b. Right-Forward Side of Model 89-OTS. Note oversize Orbiter/External Tank
Figure 3. Continued.

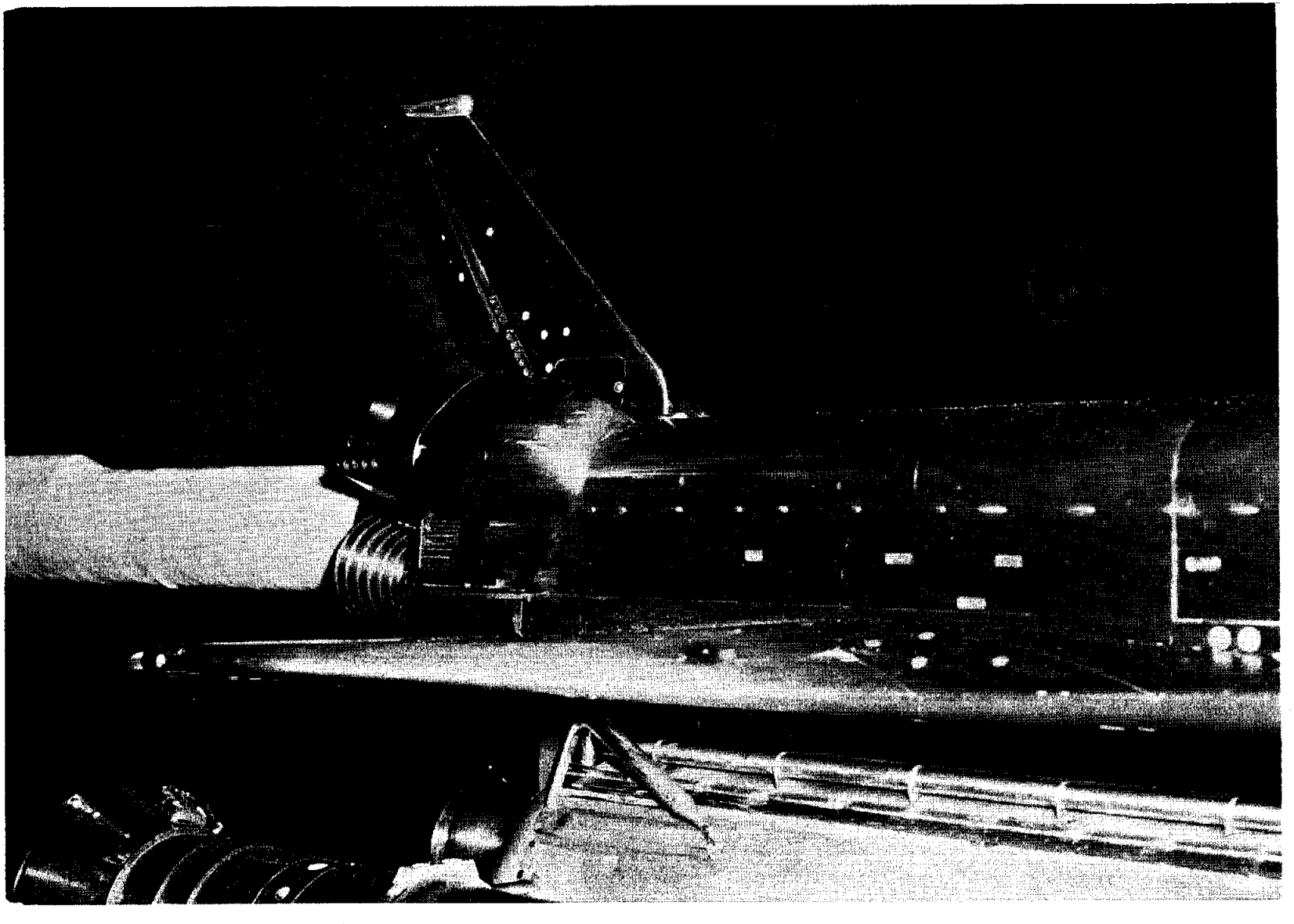

c. Right-Rear View of Model 89-OTS, SILTS Pod Installed
Figure 3. Continued.

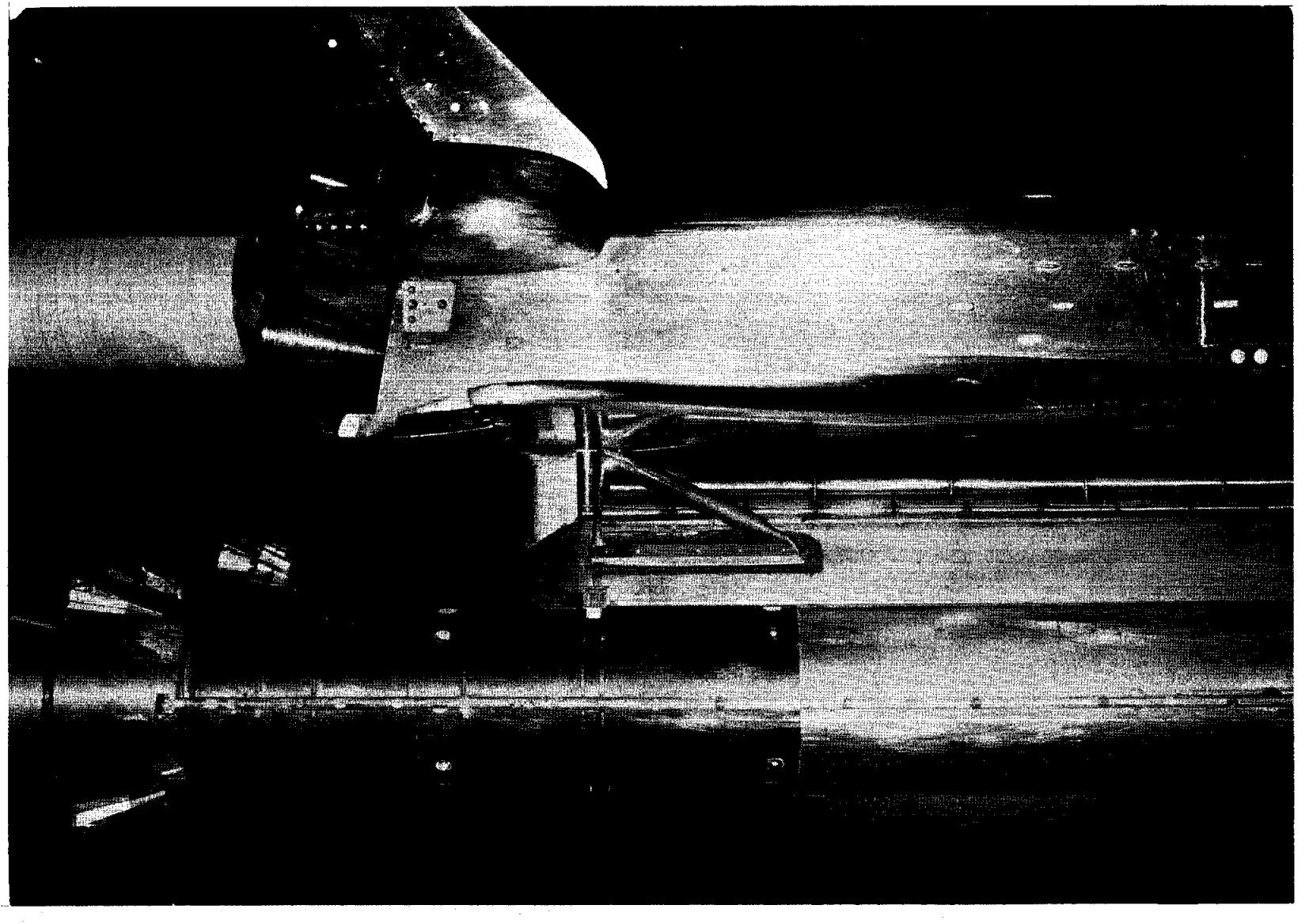

d. Right-Rear Side View of Model 89-OTS. Note Instrumentation Fairings Behind Vehicle Feed Lines and Foam under Attach Structure
Figure 3. Continued.

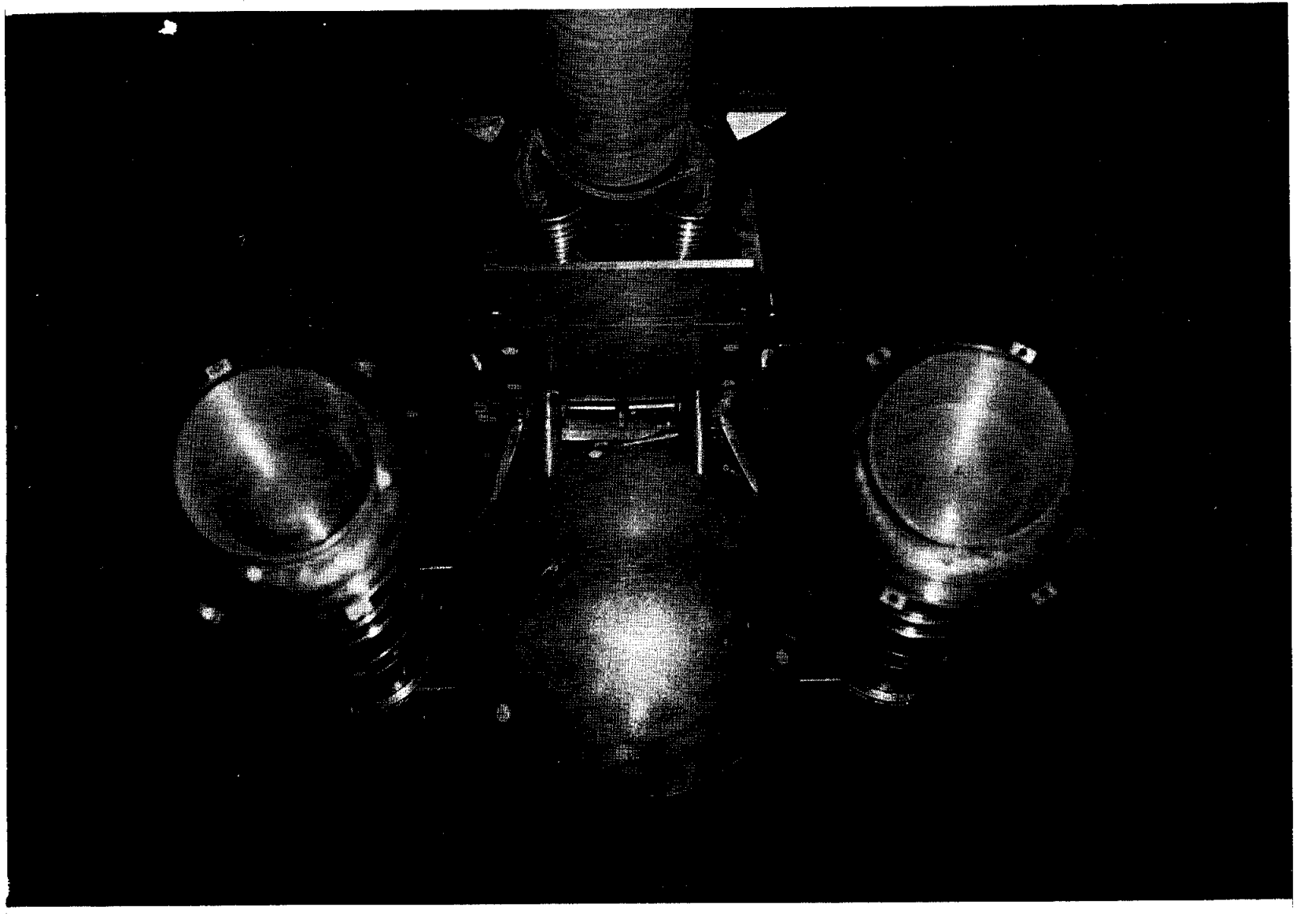

e. Rear View of Model 89-OTS
Figure 3. Concluded.

APPENDIX

TABULATED SOURCE DATA

IA156A, AEDC PWT 16T-470, 0 T S (R8NS01) (10 MAY 80)

REFERENCE DATA

SREF = 2690.0000 SQ.FT. XMRP = 976.0000 IN. XT
LREF = 1290.3000 INCHES YMRP = .0000 IN. YT
BREF = 1290.3000 INCHES ZMRP = 400.0000 IN. ZT
SCALE = .0200

PARAMETRIC DATA

IB-ELV =	10.000	OB-ELV =	5.000
BDFLAP =	.000	SPDBRK =	.000
RUDDER =	.000	SILTS =	.000
MACH =	.600	RN/L =	3.500

RUN NO. 801/ 0 RN/L = 3.51 GRADIENT INTERVAL = -5.00/ 5.00

ALPHAT	BETAT	CNFTS	CATS	CAFTS	CLMFTS	CYFTS	CYNTS	CYNFTS	CBLFTS	ALFATU	BETATU
-.170	-6.584	-.17540	.20960	.07190	.07500	.12130	-.02150	-.01930	-.01090	.02620	-6.66090
.186	-.302	-.15340	.20630	.07030	.06120	.00620	-.00100	-.00080	-.00110	.01040	-.37900
-.205	5.920	-.16140	.20880	.07250	.06110	-.09630	.01600	.01420	.00880	-.00880	5.84270
	GRADIENT	.00000	.00000	.00000	.00000	.00000	.00000	.00000	.00000	.00000	.00000

IA156A, AEDC PWT 16T-470, 0 T S (R8NS02) (10 MAY 80)

REFERENCE DATA

SREF = 2690.0000 SQ.FT. XMRP = 976.0000 IN. XT
LREF = 1290.3000 INCHES YMRP = .0000 IN. YT
BREF = 1290.3000 INCHES ZMRP = 400.0000 IN. ZT
SCALE = .0200

PARAMETRIC DATA

IB-ELV =	10.000	OB-ELV =	5.000
BDFLAP =	.000	SPDBRK =	.000
RUDDER =	.000	SILTS =	.000
MACH =	.700	RN/L =	3.500

RUN NO. 803/ 0 RN/L = 3.50 GRADIENT INTERVAL = -5.00/ 5.00

ALPHAT	BETAT	CNFTS	CATS	CAFTS	CLMFTS	CYFTS	CYNTS	CYNFTS	CBLFTS	ALFATU	BETATU
-.135	-6.750	-.18170	.21430	.07500	.07900	.12890	-.02370	-.02160	-.01130	.06900	-6.74480
-.178	-.391	-.15690	.20850	.07540	.06390	.00800	-.00160	-.00140	-.00170	.02610	-.38620
-.221	5.873	-.16630	.21350	.07490	.06380	-.09970	.01800	.01610	.00910	-.01670	5.87760
	GRADIENT	.00000	.00000	.00000	.00000	.00000	.00000	.00000	.00000	.00000	.00000

IA156A, AEDC PWT 16T-470, O T S (R8NS03) (10 MAY 80)

REFERENCE DATA

SREF = 2690.0000 SQ.FT. XMRP = 976.0000 IN. XT
LREF = 1290.3000 INCHES YMRP = .0000 IN. YT
BREF = 1290.3000 INCHES ZMRP = 400.0000 IN. ZT
SCALE = .0200

PARAMETRIC DATA

IB-ELV = 10.000 OB-ELV = 5.000
BDFLAP = .000 SPDBRK = .000
RUDDER = .000 SILTS = .000
MACH = .800 RN/L = 3.500

RUN NO. 804/ 0 RN/L = 3.50 GRADIENT INTERVAL = -5.00/ 5.00

ALPHAT	BETAT	CNFTS	CATS	CAFTS	CLMFTS	CYFTS	CYNTS	CYNFTS	CBLFTS	ALFATU	BETATU
-.130	-5.826	-.18820	.22320	.08250	.07950	.13490	-.02620	-.02410	-.01190	.07430	-6.78660
-.203	-.452	-.15730	.21530	.08260	.05830	.01130	-.00280	-.00250	-.00190	.00100	-.41290
-.241	5.869	-.16730	.22030	.08380	.06040	-.10580	.02130	.01940	.00980	-.03680	5.90780
	GRADIENT	.00000	.00000	.00000	.00000	.00000	.00000	.00000	.00000	.00000	.00000

IA156A, AEDC PWT 16T-470, O T S (R8NS04) (10 MAY 80)

REFERENCE DATA

SREF = 2690.0000 SQ.FT. XMRP = 976.0000 IN. XT
LREF = 1290.3000 INCHES YMRP = .0000 IN. YT
BREF = 1290.3000 INCHES ZMRP = 400.0000 IN. ZT
SCALE = .0200

PARAMETRIC DATA

IB-ELV = 10.000 OB-ELV = 5.000
BDFLAP = .000 SPDBRK = .000
RUDDER = .000 SILTS = .000
MACH = .850 RN/L = 3.500

RUN NO. 805/ 0 RN/L = 3.50 GRADIENT INTERVAL = -5.00/ 5.00

ALPHAT	BETAT	CNFTS	CATS	CAFTS	CLMFTS	CYFTS	CYNTS	CYNFTS	CBLFTS	ALFATU	BETATU
-.139	-6.729	-.19240	.23430	.08930	.07850	.13710	-.02700	-.02510	-.01200	.06360	-6.68220
-.226	-.469	-.15070	.22210	.08560	.05120	.01160	-.00310	-.00280	-.00200	-.02410	-.42200
-.265	5.743	-.16550	.22730	.08710	.05600	-.10560	.02140	.01950	.00980	-.06300	5.79070
	GRADIENT	.00000	.00000	.00000	.00000	.00000	.00000	.00000	.00000	.00000	.00000

IA156A, AEDC PWT 16T-470, 0 T S (R8NS05) (10 MAY 80)

REFERENCE DATA

SREF =	2690.0000 SQ.FT.	XMRP =	976.0000 IN. XT		
LREF =	1290.3000 INCHES	YMRP =	.0000 IN. YT		
BREF =	1290.3000 INCHES	ZMRP =	400.0000 IN. ZT		
SCALE =	.0200				

PARAMETRIC DATA

IB-ELV =	10.000	OB-ELV =	5.000
BDFLAP =	.000	SPDBRK =	.000
RUDDER =	.000	SILTS =	.000
MACH =	.900	RN/L =	3.500

RUN NO. 806/ 0 RN/L = 3.50 GRADIENT INTERVAL = -5.00/ 5.00

ALPHAT	BETAT	CNFTS	CATS	CAFTS	CLMFTS	CYFTS	CYNTS	CYNFTS	CBLFTS	ALFATU	BETATU
-.158	-6.741	-.19040	.24510	.09510	.07570	.13980	-.02890	-.02700	-.01170	.04220	-6.68880
-.260	-.469	-.14560	.23450	.09380	.04570	.01320	-.00390	-.00370	-.00210	-.05960	-.41650
-.297	5.768	-.16070	.23970	.09380	.05060	-.11010	.02350	.02180	.00980	-.09710	5.82090
	GRADIENT	.00000	.00000	.00000	.00000	.00000	.00000	.00000	.00000	.00000	.00000

IA156A, AEDC PWT 16T-470, 0 T S (R8NS06) (10 MAY 80)

REFERENCE DATA

SREF =	2690.0000 SQ.FT.	XMRP =	976.0000 IN. XT		
LREF =	1290.3000 INCHES	YMRP =	.0000 IN. YT		
BREF =	1290.3000 INCHES	ZMRP =	400.0000 IN. ZT		
SCALE =	.0200				

PARAMETRIC DATA

IB-ELV =	10.000	OB-ELV =	5.000
BDFLAP =	.000	SPDBRK =	.000
RUDDER =	.000	SILTS =	.000
MACH =	.920	RN/L =	3.500

RUN NO. 807/ 0 RN/L = 3.50 GRADIENT INTERVAL = -5.00/ 5.00

ALPHAT	BETAT	CNFTS	CATS	CAFTS	CLMFTS	CYFTS	CYNTS	CYNFTS	CBLFTS	ALFATU	BETATU
-.166	-6.744	-.19030	.25430	.10020	.07550	.14140	-.02960	-.02760	-.01160	.03330	-6.68970
-.255	-.495	-.14260	.24360	.09850	.04630	.01360	-.00430	-.00400	-.00220	-.05560	-.44120
-.292	5.752	-.16010	.24930	.09950	.05160	-.11180	.02390	.02210	.00960	-.09330	5.80560
	GRADIENT	.00000	.00000	.00000	.00000	.00000	.00000	.00000	.00000	.00000	.00000

IA156A, AEDC PWT 16T-470, 0 T S (R8NS07) (10 MAY 80)

REFERENCE DATA

SREF = 2690.0000 SQ.FT. XMRP = 976.0000 IN. XT
LREF = 1290.3000 INCHES YMRP = .0000 IN. YT
BREF = 1290.3000 INCHES ZMRP = 400.0000 IN. ZT
SCALE = .0200

PARAMETRIC DATA

IB-ELV = 10.000 OB-ELV = 5.000
BDFLAP = .000 SPDBRK = .000
RUDDER = .000 SILTS = .000
MACH = .940 RN/L = 3.500

RUN NO. 808/ 0 RN/L = 3.50 GRADIENT INTERVAL = -5.00/ 5.00

ALPHAT	BETAT	CNFTS	CATS	CAFTS	CLMFTS	CYFTS	CYNTS	CYNFTS	CBLFTS	ALFATU	BETATU
-.159	-6.724	-.18790	.26510	.10580	.07610	.14320	-.03100	-.02880	-.01150	.03860	-6.66820
-.234	-.521	-.14010	.25810	.10470	.05010	.01400	-.00460	-.00430	-.00220	-.03570	-.46610
-.287	5.852	-.15750	.26?>0	.10510	.05300	-.11530	.02560	.02360	.00960	-.08860	5.90790
	GRADIENT	.00000	.00000	.00000	.00000	.00000	.00000	.00000	.00000	.00000	.00000

IA156A, AEDC PWT 16T-470, 0 T S (R8NS08) (10 MAY 80)

REFERENCE DATA

SREF = 2690.0000 SQ.FT. XMRP = 976.0000 IN. XT
LREF = 1290.3000 INCHES YMRP = .0000 IN. YT
BREF = 1290.3000 INCHES ZMRP = 400.0000 IN. ZT
SCALE = .0200

PARAMETRIC DATA

IB-ELV = 10.000 OB-ELV = 5.000
BDFLAP = .000 SPDBRK = .000
RUDDER = .000 SILTS = .000
MACH = .950 RN/L = 3.500

RUN NO. 816/ 0 RN/L = 3.50 GRADIENT INTERVAL = -5.00/ 5.00

BETAT	ALPHAT	CNFTS	CATS	CAFTS	CLMFTS	CYFTS	CYNTS	CYNFTS	CBLFTS	ALFATU	BETATU
.567	-5.981	-.28020	.27360	.10360	.03190	-.00800	.00070	.00060	.00270	-5.93890	.36630
.267	-.968	-.14240	.26870	.11620	.03970	-.00730	.00050	.00050	.00050	-.92580	.06650
.197	.158	-.11810	.26130	.10430	.04380	-.00520	.00010	.00010	.00010	.20080	-.00360
-.165	6.027	.03060	.25570	.10020	.04610	.00720	-.00380	-.00370	-.00050	6.06940	-.36610
	GRADIENT	.02157	-.00657	-.01056	.00364	.00186	-.00036	-.00036	-.00036	1.00000	-.06222

IA156A, AEDC PWT 16T-470, O T S (R8NS09) (10 MAY 80)

REFERENCE DATA

SREF = 2690.0000 SQ.FT. XMRP = 976.0000 IN. XT
LREF = 1290.3000 INCHES YMRP = .0000 IN. YT
BREF = 1290.3000 INCHES ZMRP = 400.0000 IN. ZT
SCALE = .0200

PARAMETRIC DATA

IB-ELV = 10.000 OB-ELV = 5.000
BDFLAP = .000 SPDBRK = .000
RUDDER = .000 SILTS = .000
MACH = .950 RN/L = 3.500

RUN NO. 820/ 0 RN/L = 3.50 GRADIENT INTERVAL = -5.00/ 5.00

ALPHAT	BETAT	CNFTS	CATS	CAFTS	CLMFTS	CYFTS	CYNTS	CYNFTS	CBLFTS	ALFATU	BETATU
-.252	-6.864	-.19800	.27020	.10480	.07570	.14110	-.03060	-.02820	-.01230	-.05440	-6.80900
-.273	-.131	-.13630	.26340	.10530	.04500	.00280	-.00270	-.00250	-.00060	-.07480	-.07620
-.198	5.895	-.14970	.26860	.10730	.05640	-.11870	.02800	.02570	.00910	-.00030	5.95030
	GRADIENT	.00000	.00000	.00000	.00000	.00000	.00000	.00000	.00000	.00000	.00000

IA156A, AEDC PWT 16T-470, O T S (R8NS10) (10 MAY 80)

REFERENCE DATA

SREF = 2690.0000 SQ.FT. XMRP = 976.0000 IN. XT
LREF = 1290.3000 INCHES YMRP = .0000 IN. YT
BREF = 1290.3000 INCHES ZMRP = 400.0000 IN. ZT
SCALE = .0200

PARAMETRIC DATA

IB-ELV = 10.000 OB-ELV = 5.000
BDFLAP = .000 SPDBRK = .000
RUDDER = .000 SILTS = .000
MACH = .960 RN/L = 3.500

RUN NO. 818/ 0 PN/L = 3.50 GRADIENT INTERVAL = -5.00/ 5.00

ALPHAT	BETAT	CNFTS	CATS	CAFTS	CLMFTS	CYFTS	CYNTS	CYNFTS	CBLFTS	ALFATU	BETATU
-.253	-6.852	-.19680	.27800	.10930	.07500	.14190	-.03130	-.02870	-.01240	-.05580	-6.79580
-.279	-.469	-.13860	.27510	.11130	.04620	.01010	-.00510	-.00480	-.00150	-.08160	-.41330
-.211	5.890	-.14790	.27760	.11000	.05580	-.11930	.02830	.02580	.00920	-.01360	5.94600
	GRADIENT	.00000	.00000	.00000	.00000	.00000	.00000	.00000	.00000	.00000	.00000

IA156A, AEDC PWT 16T-470, 0 T S (R8NS11) (10 MAY 80)

REFERENCE DATA

SREF = 2690.0000 SQ.FT. XMRP = 976.0000 IN. XT
LREF = 1290.3000 INCHES YMRP = .0000 IN. YT
BREF = 1290.3000 INCHES ZMRP = 400.0000 IN. ZT
SCALE = .0200

PARAMETRIC DATA

IB-ELV = 10.000 OB-ELV = 5.000
BDFLAP = .000 SPDBRK = .000
RUDDER = .000 SILTS = .000
MACH = .970 RN/L = 3.500

RUN NO. 821/ 0 RN/L = 3.50 GRADIENT INTERVAL = -5.00/ 5.00

ALPHAT	BETAT	CNFTS	CATS	CAFTS	CLMFTS	CYFTS	CYNTS	CYNFTS	CBLFTS	ALFATU	BETATU
-.277	-6.683	-.19330	.28840	.11460	.07160	.13980	-.03060	-.02800	-.01240	-.07970	-6.62640
-.307	-.261	-.13090	.28270	.11800	.03980	.00530	-.00330	-.00320	-.00110	-.10970	-.20480
-.216	6.009	-.14590	.28040	.11190	.05430	-.12180	.02900	.02640	.00940	-.01880	6.06540
	GRADIENT	.00000	.00000	.00000	.00000	.00000	.00000	.00000	.00000	.00000	.00000

IA156A, AEDC PWT 16T-470, 0 T S (R8NS12) (10 MAY 80)

REFERENCE DATA

SREF = 2690.0000 SQ.FT. XMRP = 976.0000 IN. XT
LREF = 1290.3000 INCHES YMRP = .0000 IN. YT
BREF = 1290.3000 INCHES ZMRP = 400.0000 IN. ZT
SCALE = .0200

PARAMETRIC DATA

IB-ELV = 10.000 OB-ELV = 5.000
BDFLAP = .000 SPDBRK = .000
RUDDER = .000 SILTS = .000
MACH = .980 RN/L = 3.500

RUN NO. 822/ 0 RN/L = 3.51 GRADIENT INTERVAL = -5.00/ 5.00

ALPHAT	BETAT	CNFTS	CATS	CAFTS	CLMFTS	CYFTS	CYNTS	CYNFTS	CBLFTS	ALFATU	BETATU
.008	-6.136	-.17590	.29370	.11540	.06740	.12940	-.03000	-.02760	-.01100	.20140	-6.07070
-.318	.077	-.12500	.29280	.12020	.03350	-.00110	-.00120	-.00130	-.00040	-.11460	.05720
.120	5.988	-.13000	.29400	.11840	.05000	-.12510	.03090	.02840	.00900	.31870	6.03440
	GRADIENT	.00000	.00000	.00000	.00000	.00000	.00000	.00000	.00000	.00000	.00000

IA156A, AEDC PWT 16T-470, 0 T S (R8NS13) (10 MAY 80)

REFERENCE DATA

SREF = 2690.0000 SQ.FT. XMRP = 976.0000 IN. XT
LREF = 1290.3000 INCHES YMRP = .0000 IN. YT
BREF = 1290.3000 INCHES ZMRP = 400.0000 IN. ZT
SCALE = .0200

PARAMETRIC DATA

IB-ELV = 10.000 OB-ELV = 5.000
BDFLAP = .000 SPDBRK = .000
RUDDER = .000 SILTS = .000
MACH = .990 RN/L = 3.500

RUN NO. 823/ 0 RN/L = 3.50 GRADIENT INTERVAL = -5.00/ 5.00

ALPHAT	BETAT	CNFTS	CATS	CAFTS	CLMFTS	CYFTS	CYNTS	CYNFTS	CBLFTS	ALFATU	BETATU
.097	-6.148	-.17610	.30140	.12160	.06830	.13250	-.03020	-.02790	-.01120	.28940	-6.07990
-.282	.173	-.11890	.29560	.12270	.03020	-.00500	.00060	.00040	.00010	-.07920	.14820
.064	5.733	-.13260	.29990	.12250	.04990	-.11980	.02950	.02710	.00890	.26220	5.78110
	GRADIENT	.00000	.00000	.00000	.00000	.00000	.00000	.00000	.00000	.00000	.00000

IA156A, AEDC PWT 16T-470, 0 T S (R8NS14) (10 MAY 80)

REFERENCE DATA

SREF = 2690.0000 SQ.FT. XMRP = 976.0000 IN. XT
LREF = 1290.3000 INCHES YMRP = .0000 IN. YT
BREF = 1290.3000 INCHES ZMRP = 400.0000 IN. ZT
SCALE = .0200

PARAMETRIC DATA

IB-ELV = 10.000 OB-ELV = 5.000
BDFLAP = .000 SPDBRK = .000
RUDDER = .000 SILTS = .000
MACH = 1.010 RN/L = 3.500

RUN NO. 824/ 0 RN/L = 3.51 GRADIENT INTERVAL = -5.00/ 5.00

ALPHAT	BETAT	CNFTS	CATS	CAFTS	CLMFTS	CYFTS	CYNTS	CYNFTS	CBLFTS	ALFATU	BETATU
.235	-6.085	-.17730	.31750	.13210	.07380	.13380	-.03190	-.02950	-.01130	.42610	-6.01270
-.163	.352	-.12080	.31370	.12050	.03420	-.00680	.00100	.00070	.00040	.03680	.31080
.025	6.079	-.13840	.32090	.13150	.05380	-.12880	.03160	.02910	.00990	.22230	6.13000
	GRADIENT	.00000	.00000	.00000	.00000	.00000	.00000	.00000	.00000	.00000	.00000

IA156A, AEDC PWT 16T-470, O T S (R8NS15) (10 MAY 80)

REFERENCE DATA

SREF =	2690.0000 SQ.FT.	XMRP =	976.0000 IN. XT		
LREF =	1290.3000 INCHES	YMRP =	.0000 IN. YT		
BREF =	1290.3000 INCHES	ZMRP =	400.0000 IN. ZT		
SCALE =	.0200				

PARAMETRIC DATA

IB-ELV =	10.000	OB-ELV =	5.000
BDFLAP =	.000	SPDBRK =	.000
RUDDER =	.000	SILTS =	.000
MACH =	1.020	RN/L =	3.500

RUN NO. 825/ 0 RN/L = 3.51 GRADIENT INTERVAL = -5.00/ 5.00

ALPHAT	BETAT	CNFTS	CATS	CAFTS	CLMFTS	CYFTS	CYNTS	CYNFTS	CBLFTS	ALFATU	BETATU
.179	-6.152	-.17920	.32560	.13660	.07470	.13420	-.03180	-.02950	-.01160	.36970	-6.08040
-.273	.189	-.12650	.32980	.13450	.03560	-.00360	-.00050	-.00060	.00020	-.07080	.16130
.091	6.123	-.13780	.33060	.13690	.05490	-.13030	.03180	.02940	.01010	.28890	6.17250
	GRADIENT	.00000	.00000	.00000	.00000	.00000	.00000	.00000	.00000	.00000	.00000

IA156A, AEDC PWT 16T-470, O T S (R8NS16) (10 MAY 80)

REFERENCE DATA

SREF =	2690.0000 SQ.FT.	XMRP =	976.0000 IN. XT		
LREF =	1290.3000 INCHES	YMRP =	.0000 IN. YT		
BREF =	1290.3000 INCHES	ZMRP =	400.0000 IN. ZT		
SCALE =	.0200				

PARAMETRIC DATA

IB-ELV =	10.000	OB-ELV =	5.000
BDFLAP =	.000	SPDBRK =	.000
RUDDER =	.000	SILTS =	.000
MACH =	1.030	RN/L =	3.500

RUN NO. 826/ 0 RN/L = 3.51 GRADIENT INTERVAL = -5.00/ 5.00

ALPHAT	BETAT	CNFTS	CATS	CAFTS	CLMFTS	CYFTS	CYNTS	CYNFTS	CBLFTS	ALFATU	BETATU
.203	-6.443	-.18240	.33450	.14040	.07710	.14150	-.03300	-.03060	-.01230	.39390	-6.37130
-.234	.233	-.12760	.33800	.14050	.03810	-.00370	-.00010	-.00040	.00020	-.03280	.20130
.054	6.321	-.14230	.33990	.13900	.05770	-.13500	.03270	.03030	.01060	.25110	6.37320
	GRADIENT	.00000	.00000	.00000	.00000	.00000	.00000	.00000	.00000	.00000	.00000

IA156A, AEDC PWT 16T-470, O T S (R8NS17) (10 MAY 80)

REFERENCE DATA

SREF = 2690.0000 SQ.FT. XMRP = 976.0000 IN. XT
LREF = 1290.3000 INCHES YMRP = .0000 IN. YT
BREF = 1290.3000 INCHES ZMRP = 400.0000 IN. ZT
SCALE = .0200

PARAMETRIC DATA

IB-ELV = 10.000 OB-ELV = 5.000
BDFLAP = .000 SPDBRK = .000
RUDDER = .000 SILTS = .000
MACH = 1.040 RN/L = 3.500

RUN NO. 827/ 0 RN/L = 3.51 GRADIENT INTERVAL = -5.00/ 5.00

ALPHAT	BETAT	CNFTS	CATS	CAFTS	CLMFTS	CYFTS	CYNTS	CYNFTS	CBLFTS	ALFATU	BETATU
-.007	-6.331	-.19090	.34170	.14240	.07800	.14090	-.03430	-.03190	-.01280	.18570	-6.26450
-.264	.218	-.12860	.34750	.14170	.03910	-.00360	-.00060	-.00090	.00020	-.06000	.20880
.121	6.196	-.14070	.34900	.14400	.05870	-.13150	.03250	.03020	.01030	.31820	6.24600
	GRADIENT	.00000	.00000	.00000	.00000	.00000	.00000	.00000	.00000	.00000	.00000

IA156A, AEDC PWT 16T-470, O T S (R8NS18) (10 MAY 80)

REFERENCE DATA

SREF = 2690.0000 SQ.FT. XMRP = 976.0000 IN. XT
LREF = 1290.3000 INCHES YMRP = .0000 IN. YT
BREF = 1290.3000 INCHES ZMRP = 400.0000 IN. ZT
SCALE = .0200

PARAMETRIC DATA

IB-ELV = 10.000 OB-ELV = 5.000
BDFLAP = .000 SPDBRK = .000
RUDDER = .000 SILTS = .000
MACH = 1.050 RN/L = 3.500

RUN NO. 828/ 0 RN/L = 3.51 GRADIENT INTERVAL = -5.00/ 5.00

ALPHAT	BETAT	CNFTS	CATS	CAFTS	CLMFTS	CYFTS	CYNTS	CYNFTS	CBLFTS	ALFATU	BETATU
.089	-6.310	-.18370	.34250	.14100	.07830	.13930	-.03500	-.03280	-.01230	.28070	-6.24010
-.206	.323	-.12450	.34960	.14760	.03850	-.00470	-.00130	-.00150	.00050	-.00400	.30030
.010	6.263	-.14180	.35070	.14700	.05760	-.13180	.03180	.02950	.01070	.20600	6.31680
	GRADIENT	.00000	.00000	.00000	.00000	.00000	.00000	.00000	.00000	.00000	.00000

IA156A, AEDC PWT 16T-470, 0 T S (R8NS19) (10 MAY 80)

REFERENCE DATA

SREF = 2690.0000 SQ.FT. XMRP = 976.0000 IN. XT
LREF = 1290.3000 INCHES YMRP = .0000 IN. YT
BREF = 1290.3000 INCHES ZMRP = 400.0000 IN. ZT
SCALE = .0200

PARAMETRIC DATA

IB-ELV =	10.000	OB-ELV =	5.000
BDFLAP =	.000	SPDBRK =	.000
RUDDER =	.000	SILTS =	.000
MACH =	1.060	RN/L =	3.500

RUN NO. 829/ 0 RN/L = 3.50 GRADIENT INTERVAL = -5.00/ 5.00

ALPHAT	BETAT	CNFTS	CATS	CAFTS	CLMFTS	CYFTS	CYNTS	CYNFTS	CBLFTS	ALFATU	BETATU
.186	-6.280	-.17850	.34340	.14970	.07580	.14040	-.03650	-.03430	-.01210	.37610	-6.20660
-.205	.343	-.11960	.34660	.15100	.03470	-.00650	-.00050	-.00070	.00070	-.00250	.32150
-.025	6.252	-.13920	.34690	.15030	.05510	-.13150	.03180	.02960	.01070	.17120	6.30710
	GRADIENT	.00000	.00000	.00000	.00000	.00000	.00000	.00000	.00000	.00000	.00000

IA156A, AEDC PWT 16T-470, 0 T S (R8NS20) (10 MAY 80)

REFERENCE DATA

SREF = 2690.0000 SQ.FT. XMRP = 976.0000 IN. XT
LREF = 1290.3000 INCHES YMRP = .0000 IN. YT
BREF = 1290.3000 INCHES ZMRP = 400.0000 IN. ZT
SCALE = .0200

PARAMETRIC DATA

IB-ELV =	10.000	OB-ELV =	5.000
BDFLAP =	.000	SPDBRK =	.000
RUDDER =	.000	SILTS =	.000
MACH =	1.080	RN/L =	3.500

RUN NO. 830/ 0 RN/L = 3.48 GRADIENT INTERVAL = -5.00/ 5.00

ALPHAT	BETAT	CNFTS	CATS	CAFTS	CLMFTS	CYFTS	CYNTS	CYNFTS	CBLFTS	ALFATU	BETATU
.042	-6.408	-.18330	.33770	.15820	.07540	.13800	-.03360	-.03150	-.01250	.23330	-6.33840
-.239	.241	-.12360	.33660	.15080	.03600	-.00450	-.00100	-.00130	.00050	-.03660	.21870
-.067	6.249	-.13990	.33380	.15530	.05530	-.13050	.03080	.02850	.01070	.12840	6.30660
	GRADIENT	.00000	.00000	.00000	.00000	.00000	.00000	.00000	.00000	.00000	.00000

IA156A, AEDC PWT 16T-470, 0 T S (R8NS21) (10 MAY 80)

REFERENCE DATA

SREF = 2690.0000 SQ.FT. XMRP = 976.0000 IN. XT
LREF = 1290.3000 INCHES YMRP = .0000 IN. YT
BREF = 1290.3000 INCHES ZMRP = 400.0000 IN. ZT
SCALE = .0200

PARAMETRIC DATA

IB-ELV = 10.000 OB-ELV = 5.000
BDFLAP = .000 SPDBRK = .000
RUDDER = .000 SILTS = .000
MACH = 1.100 RN/L = 3.500

RUN NO. 831/ 0 RN/L = 3.50 GRADIENT INTERVAL = -5.00/ 5.00

ALPHAT	BETAT	CNFTS	CATS	CAFTS	CLMFTS	CYFTS	CYNTS	CYNFTS	CBLFTS	ALFATU	BETATU
-.007	-6.167	-.18900	.33590	.15720	.07830	.12880	-.02840	-.02650	-.01230	.18570	-6.09750
-.257	.192	-.13210	.33420	.15840	.04080	-.00480	-.00110	-.00130	.00040	-.05340	.16840
.156	6.142	-.14310	.33440	.15860	.06050	-.12760	.02950	.02730	.01030	.35390	6.19450
	GRADIENT	.00000	.00000	.00000	.00000	.00000	.00000	.00000	.00000	.00000	.00000

IA156A, AEDC PWT 16T-470, 0 T S (R8NS22) (10 MAY 80)

REFERENCE DATA

SREF = 2690.0000 SQ.FT. XMRP = 976.0000 IN. XT
LREF = 1290.3000 INCHES YMRP = .0000 IN. YT
BREF = 1290.3000 INCHES ZMRP = 400.0000 IN. ZT
SCALE = .0200

PARAMETRIC DATA

IB-ELV = 10.000 OB-ELV = 5.000
BDFLAP = .000 SPDBRK = .000
RUDDER = .000 SILTS = .000
MACH = 1.150 RN/L = 3.500

RUN NO. 836/ 0 RN/L = 3.50 GRADIENT INTERVAL = -5.00/ 5.00

ALPHAT	BETAT	CNFTS	CATS	CAFTS	CLMFTS	CYFTS	CYNTS	CYNFTS	CBLFTS	ALFATU	BETATU
.441	-6.001	-.17750	.33660	.16900	.08270	.13360	-.03240	-.03060	-.01120	.24710	-6.07190
-.233	.162	-.13310	.33770	.16930	.04360	-.00120	-.00340	-.00370	.00030	-.03380	.10540
-.008	6.024	-.14760	.33840	.17030	.06270	-.12460	.02690	.02490	.01040	.19030	6.08400
	GRADIENT	.00000	.00000	.00000	.00000	.00000	.00000	.00000	.00000	.00000	.00000

IA156A, AEDC PWT 16T-470, 0 T S

(R8NS23) (10 MAY 80)

REFERENCE DATA

SREF =	2690.0000 SQ.FT.	XMRP =	976.0000 IN. XT		
LREF =	1290.3000 INCHES	YMRP =	.0000 IN. YT		
BREF =	1290.3000 INCHES	ZMRP =	400.0000 IN. ZT		
SCALE =	.0200				

PARAMETRIC DATA

IB-ELV =	10.000	OB-ELV =	5.000
BDFLAP =	.000	SPDBRK =	.000
RUDDER =	.000	SILTS =	.000
MACH =	1.200	RN/L =	3.500

RUN NO. 837/ 0 RN/L = 3.50 GRADIENT INTERVAL = -5.00/ 5.00

ALPHAT	BETAT	CNFTS	CATS	CAFTS	CLMFTS	CYFTS	CYNTS	CYNFTS	CBLFTS	ALFATU	BETATU
.372	-5.979	-.18060	.33420	.17800	.08630	.13270	-.03210	-.03030	-.01100	.17310	-6.04880
-.049	.312	-.14060	.33470	.17540	.05380	-.00650	-.00100	-.00140	.00070	.14580	.23030
-.019	6.093	-.15760	.33360	.17370	.06960	-.12460	.02590	.02380	.01040	.18190	6.15610
	GRADIENT	.00000	.00000	.00000	.00000	.00000	.00000	.00000	.00000	.00000	.00000

IA156A, AEDC PWT 16T-470, 0 T S

(R8NS24) (10 MAY 80)

REFERENCE DATA

SREF =	2690.0000 SQ.FT.	XMRP =	976.0000 IN. XT		
LREF =	1290.3000 INCHES	YMRP =	.0000 IN. YT		
BREF =	1290.3000 INCHES	ZMRP =	400.0000 IN. ZT		
SCALE =	.0200				

PARAMETRIC DATA

IB-ELV =	10.000	OB-ELV =	5.000
BDFLAP =	.000	SPDBRK =	.000
RUDDER =	.000	SILTS =	.000
MACH =	1.250	RN/L =	3.500

RUN NO. 838/ 0 RN/L = 3.50 GRADIENT INTERVAL = -5.00/ 5.00

ALPHAT	BETAT	CNFTS	CATS	CAFTS	CLMFTS	CYFTS	CYNTS	CYNFTS	CBLFTS	ALFATU	BETATU
.149	-6.378	-.19880	.33090	.17430	.09470	.13170	-.02790	-.02620	-.01190	.35260	-6.29870
-.058	.329	-.15300	.33250	.18020	.06660	-.00650	-.00090	-.00130	.00040	.15900	.30460
.028	6.029	-.16140	.33160	.17610	.07590	-.12200	.02380	.02180	.00990	.23630	6.09390
	GRADIENT	.00000	.00000	.00000	.00000	.00000	.00000	.00000	.00000	.00000	.00000

IA156A, AEDC PWT 16T-470, 0 T S (R8NS25) (10 MAY 80)

REFERENCE DATA

SREF = 2690.0000 SQ.FT. XMRP = 976.0000 IN. XT
LREF = 1290.3000 INCHES YMRP = .0000 IN. YT
BREF = 1290.3000 INCHES ZMRP = 400.0000 IN. ZT
SCALE = .0200

PARAMETRIC DATA

IB-ELV = 10.000 OB-ELV = 5.000
BDFLAP = .000 SPDBRK = .000
RUDDER = .000 SILTS = .000
MACH = 1.300 RN/L = 3.500

RUN NO. 839/ 0 RN/L = 3.50 GRADIENT INTERVAL = -5.00/ 5.00

ALPHAT	BETAT	CNFTS	CATS	CAFTS	CLMFTS	CYFTS	CYNTS	CYNFTS	CBLFTS	ALFATU	BETATU
.136	-6.380	-.19530	.32680	.17870	.09550	.12970	-.02560	-.02390	-.01120	.34810	-6.29810
-.097	.226	-.15090	.32720	.18020	.06950	-.00370	-.00170	-.00190	.00000	.13050	.22610
.052	6.248	-.15520	.32750	.17850	.07740	-.12660	.02400	.02210	.00960	.26960	6.31560
	GRADIENT	.00000	.00000	.00000	.00000	.00000	.00000	.00000	.00000	.00000	.00000

IA156A, AEDC PWT 16T-470, 0 T S (R8NS26) (10 MAY 80)

REFERENCE DATA

SREF = 2690.0000 SQ.FT. XMRP = 976.0000 IN. XT
LREF = 1290.3000 INCHES YMRP = .0000 IN. YT
BREF = 1290.3000 INCHES ZMRP = 400.0000 IN. ZT
SCALE = .0200

PARAMETRIC DATA

IB-ELV = 10.000 OB-ELV = 5.000
BDFLAP = .000 SPDBRK = .000
RUDDER = .000 SILTS = .000
MACH = 1.400 RN/L = 3.500

RUN NO. 840/ 0 RN/L = 3.50 GRADIENT INTERVAL = -5.00/ 5.00

ALPHAT	BETAT	CNFTS	CATS	CAFTS	CLMFTS	CYFTS	CYNTS	CYNFTS	CBLFTS	ALFATU	BETATU
.147	-6.442	-.19630	.32210	.18410	.09670	.12910	-.02310	-.02160	-.01060	.38830	-6.34520
-.094	.308	-.15870	.32090	.18520	.07250	-.00700	-.00030	-.00050	.00030	.16480	.28480
.064	6.257	-.15830	.32320	.18310	.07830	-.12520	.02120	.01930	.00930	.31220	6.33280
	GRADIENT	.00000	.00000	.00000	.00000	.00000	.00000	.00000	.00000	.00000	.00000

IA156A, AEDC PWT 16T-470, 0 T S (R8NS27) (10 MAY 80)

REFERENCE DATA

SREF = 2690.0000 SQ.FT. XMRP = 976.0000 IN. XT
LREF = 1290.3000 INCHES YMRP = .0000 IN. YT
BREF = 1290.3000 INCHES ZMRP = 400.0000 IN. ZT
SCALE = .0200

PARAMETRIC DATA

IB-ELV = 10.000 OB-ELV = 5.000
BDFLAP = .000 SPDBRK = .000
RUDDER = .000 SILTS = .000
MACH = 1.550 RN/L = 3.200

RUN NO. 841/ 0 RN/L = 3.19 GRADIENT INTERVAL = -5.00/ 5.00

ALPHAT	BETAT	CNFTS	CATS	CAFTS	CLMFTS	CYFTS	CYNTS	CYNFTS	CBLFTS	ALFATU	BETATU
.140	-6.451	-.18620	.30360	.17780	.09440	.12610	-.02280	-.02130	-.00950	.45450	-6.28300
-.197	.305	-.15590	.30040	.18160	.07250	-.00620	-.00100	-.00110	.00060	.16000	.30700
-.088	6.186	-.14900	.30670	.18270	.06850	-.12590	.02350	.02180	.00860	.24090	6.32280
	GRADIENT	.00000	.00000	.00000	.00000	.00000	.00000	.00000	.00000	.00000	.00000

IA156A, AEDC PWT 16T-470, 0 T S (R8NS28) (10 MAY 80)

REFERENCE DATA

SREF = 2690.0000 SQ.FT. XMRP = 976.0000 IN. XT
LREF = 1290.3000 INCHES YMRP = .0000 IN. YT
BREF = 1290.3000 INCHES ZMRP = 400.0000 IN. ZT
SCALE = .0200

PARAMETRIC DATA

IB-ELV = 10.000 OB-ELV = 5.000
BDFLAP = .000 SPDBRK = .000
RUDDER = .000 SILTS = .000
MACH = .600 RN/L = 3.500

RUN NO. 846/ 0 RN/L = 3.50 GRADIENT INTERVAL = -5.00/ 5.00

ALPHAT	BETAT	CNFTS	CATS	CAFTS	CLMFTS	CYFTS	CYNTS	CYNFTS	CBLFTS	ALFATU	BETATU
-.210	-6.549	-.18060	.20920	.06430	.07120	.10900	-.01660	-.01440	-.01120	-.01360	-6.62680
.260	-5.946	-.16400	.20940	.07190	.07050	.10870	-.02240	-.02040	-.00900	.06350	-5.86910
.218	.038	-.13210	.20750	.07210	.05650	.00570	-.00350	-.00360	-.00020	.02210	.11440
-.154	5.945	-.15090	.21260	.07010	.06310	-.09860	.01720	.01520	.00810	.04230	5.86780
.238	6.517	-.13000	.21260	.07400	.06220	-.10370	.01840	.01640	.00730	.04160	6.59410
	GRADIENT	.00000	.00000	.00000	.00000	.00000	.00000	.00000	.00000	.00000	.00000

IA156A, AEDC PWT 16T-470, 0 T S (R8NS29) (10 MAY 80)

REFERENCE DATA

SREF = 2690.0000 SQ.FT. XMRP = 976.0000 IN. XT
LREF = 1290.3000 INCHES YMRP = .0000 IN. YT
BREF = 1290.3000 INCHES ZMRP = 400.0000 IN. ZT
SCALE = .0200

PARAMETRIC DATA

IB-ELV = 10.000 OB-ELV = 5.000
BDFLAP = .000 SPDBRK = .000
RUDDER = .000 SILTS = .000
MACH = .900 RN/L = 3.500

RUN NO. 845/ 0 RN/L = 3.51 GRADIENT INTERVAL = -5.00/ 5.00

ALPHAT	BETAT	CNFTS	CATS	CAFTS	CLMFTS	CYFTS	CYNTS	CYNFTS	CBLFTS	ALFATU	BETATU
-.232	-6.804	-.19700	.24560	.09230	.07290	.13330	-.02640	-.02450	-.01230	-.03230	-6.75260
.236	-5.888	-.17930	.24580	.08720	.06830	.12600	-.02920	-.02740	-.01040	.03620	-5.94010
-.304	-.206	-.14070	.23350	.09090	.03820	.00350	-.00280	-.00270	-.00060	-.10400	-.15560
.126	.221	-.12910	.23300	.09360	.03810	.00510	-.00460	-.00460	-.00030	-.07400	.16890
-.190	5.872	-.15370	.24260	.09040	.05330	-.11460	.02440	.02250	.00960	.01050	5.92290
.173	6.767	-.14310	.24360	.09250	.05540	-.12560	.02630	.02430	.00980	-.02740	6.71510
	GRADIENT	.02717	-.00117	.00632	-.00023	.00375	-.00422	-.00445	.00070	.07026	.75995

IA156A, AEDC PWT 16T-470, 0 T S (R8NS30) (10 MAY 80)

REFERENCE DATA

SREF = 2690.0000 SQ.FT. XMRP = 976.0000 IN. XT
LREF = 1290.3000 INCHES YMRP = .0000 IN. YT
BREF = 1290.3000 INCHES ZMRP = 400.0000 IN. ZT
SCALE = .0200

PARAMETRIC DATA

IB-ELV = 10.000 OB-ELV = 5.000
BDFLAP = .000 SPDBRK = .000
RUDDER = .000 SILTS = .000
MACH = 1.100 RN/L = 3.500

RUN NO. 844/ 0 RN/L = 3.50 GRADIENT INTERVAL = -5.00/ 5.00

ALPHAT	BETAT	CNFTS	CATS	CAFTS	CLMFTS	CYFTS	CYNTS	CYNFTS	CBLFTS	ALFATU	BETATU
-.308	-6.807	-.20170	.33820	.15920	.07810	.14270	-.02970	-.02770	-.01440	-.11340	-6.74550
.264	-5.904	-.17110	.33680	.15890	.07410	.13290	-.03370	-.03180	-.01130	.06960	-5.96770
-.324	-.129	-.13680	.33750	.15980	.04180	.00470	-.00410	-.00420	-.00060	-.12990	-.06650
.130	.145	-.11680	.33630	.16140	.04100	.00540	-.00500	-.00520	-.00030	-.06450	.08100
-.175	5.906	-.15220	.33660	.15930	.05930	-.12150	.02740	.02520	.01050	.01990	5.96830
.169	6.774	-.14090	.34110	.15950	.06300	-.13730	.03070	.02870	.01100	-.02560	6.70950
	GRADIENT	.07283	-.00437	.00583	-.00291	.00255	-.00328	-.00364	.00109	.23816	.53714

IA156A, AEDC PWT 16T-470, 0 T S (R8NS31) (10 MAY 80)

REFERENCE DATA

SREF = 2690.0000 SQ.FT. XMRP = 976.0000 IN. XT
LREF = 1290.3000 INCHES YMRP = .0000 IN. YT
BREF = 1290.3000 INCHES ZMRP = 400.0000 IN. ZT
SCALE = .0200

PARAMETRIC DATA

IB-ELV =	10.000	OB-ELV =	5.000
BDFLAP =	.000	SPDBRK =	.000
RUDDER =	.000	SILTS =	.000
MACH =	1.550	RN/L =	3.200

RUN NO. 842/ 0 RN/L = 3.20 GRADIENT INTERVAL = -5.00/ 5.00

ALPHAT	BETAT	CNFTS	CATS	CAFTS	CLMFTS	CYFTS	CYNTS	CYNFTS	CBLFTS	ALFATU	BETATU
-.327	-6.794	-.20320	.30380	.17730	.09330	.13150	-.02250	-.02080	-.01090	-.00160	-6.64570
.505	-6.123	-.17410	.30680	.18240	.09470	.13030	-.02720	-.02580	-.00810	.18120	-6.27300
-.311	-.263	-.16060	.29940	.17990	.07260	.00280	-.00160	-.00160	-.00050	.01460	-.11640
.439	.291	-.14210	.30760	.18520	.07800	.00120	-.00510	-.00510	.00000	.11540	.14070
-.268	5.908	-.15370	.30490	.18240	.06860	-.11820	.02160	.01990	.00840	.05730	6.05440
-.284	6.139	-.15650	.30780	.17990	.06870	-.12450	.02270	.02090	.00900	.04090	6.28580
.368	6.764	-.14480	.30810	.18120	.07830	-.13240	.02540	.02370	.00810	.04390	6.61390
	GRADIENT	.03338	.01479	.00956	.00974	-.00289	-.00631	-.00631	.00090	.18185	.46383

IA156A, AEDC PWT 16T-470, 0 T S (R8NS34) (10 MAY 80)

REFERENCE DATA

SREF = 2690.0000 SQ.FT. XMRP = 976.0000 IN. XT
LREF = 1290.3000 INCHES YMRP = .0000 IN. YT
BREF = 1290.3000 INCHES ZMRP = 400.0000 IN. ZT
SCALE = .0200

PARAMETRIC DATA

IB-ELV =	10.000	OB-ELV =	5.000
BDFLAP =	.000	SPDBRK =	.000
RUDDER =	.000	SILTS =	.000
MACH =	1.100	RN/L =	3.500
Z =	4.500		

RUN NO. 835/ 0 RN/L = 3.51 GRADIENT INTERVAL = -5.00/ 5.00

ALPHAT	BETAT	CNFTS	CATS	CAFTS	CLMFTS	CYFTS	CYNTS	CYNFTS	CBLFTS	ALFATU	BETATU
.377	-5.985	-.16010	.33610	.15960	.07760	.13620	-.03550	-.03360	-.01040	.18280	-6.05030
-.239	.234	-.12680	.34020	.15800	.03920	.00260	-.00550	-.00530	-.00050	-.03510	.21690
-.001	6.163	-.14880	.33570	.15740	.05560	-.12730	.02810	.02580	.01100	.19600	6.21810
	GRADIENT	.00000	.00000	.00000	.00000	.00000	.00000	.00000	.00000	.00000	.00000

IA156A, AEDC PWT 16T-470, O T S

(R8NS35) (10 MAY 80)

REFERENCE DATA

SREF =	2690.0000 SQ.FT.	XMRP =	976.0000 IN. XT		
LREF =	1290.3000 INCHES	YMRP =	.0000 IN. YT		
BREF =	1290.3000 INCHES	ZMRP =	400.0000 IN. ZT		
SCALE =	.0200				

PARAMETRIC DATA

IB-ELV =	10.000	OB-ELV =	5.000
BDFLAP =	.000	SPDBRK =	.000
RUDDER =	.000	SILTS =	.000
MACH =	1.100	RN/L =	3.500
Z =	5.500		

RUN NO. 834/ 0 RN/L = 3.51 GRADIENT INTERVAL = -5.00/ 5.00

ALPHAT	BETAT	CNFTS	CATS	CAFTS	CLMFTS	CYFTS	CYNTS	CYNFTS	CBLFTS	ALFATU	BETATU
.432	-6.019	-.16410	.33420	.15750	.07580	.13540	-.03510	-.03320	-.01070	.23900	-6.08700
-.136	.367	-.12650	.33780	.16080	.03720	-.00770	.00060	.00010	.00070	.06000	.30930
-.085	6.051	-.15030	.33420	.15860	.05770	-.12430	.02750	.02530	.01090	.11090	6.10940
	GRADIENT	.00000	.00000	.00000	.00000	.00000	.00000	.00000	.00000	.00000	.00000

IA156A, AEDC PWT 16T-470, O T S

(R8NS36) (10 MAY 80)

REFERENCE DATA

SREF =	2690.0000 SQ.FT.	XMRP =	976.0000 IN. XT		
LREF =	1290.3000 INCHES	YMRP =	.0000 IN. YT		
BREF =	1290.3000 INCHES	ZMRP =	400.0000 IN. ZT		
SCALE =	.0200				

PARAMETRIC DATA

IB-ELV =	10.000	OB-ELV =	5.000
BDFLAP =	.000	SPDBRK =	.000
RUDDER =	.000	SILTS =	.000
MACH =	1.100	RN/L =	3.500
Z =	6.500		

RUN NO. 832/ 0 RN/L = 3.50 GRADIENT INTERVAL = -5.00/ 5.00

ALPHAT	BETAT	CNFTS	CATS	CAFTS	CLMFTS	CYFTS	CYNTS	CYNFTS	CBLFTS	ALFATU	BETATU
.068	-6.368	-.18940	.33620	.15700	.07980	.13410	-.02950	-.02760	-.01270	.25930	-6.29700
-.214	.293	-.13130	.33480	.15870	.04040	-.00730	-.00030	-.00050	.00070	-.01050	.27130
.078	6.259	-.14440	.33570	.15890	.06120	-.12960	.02970	.02750	.01050	.27440	6.31400
	GRADIENT	.00000	.00000	.00000	.00000	.00000	.00000	.00000	.00000	.00000	.00000

IA156A, AEDC PWT 16T-470, 0 T S (R8NS37) (10 MAY 80)

REFERENCE DATA

SREF = 2690.0000 SQ.FT. XMRP = 976.0000 IN. XT
LREF = 1290.3000 INCHES YMRP = .0000 IN. YT
BREF = 1290.3000 INCHES ZMRP = 400.0000 IN. ZT
SCALE = .0200

PARAMETRIC DATA

IB-ELV = 10.000 OB-ELV = 5.000
BDFLAP = .000 SPDBRK = .000
RUDDER = .000 SILTS = .000
MACH = 1.550 RN/L = 3.200

RUN NO. 843/ 0 RN/L = 3.19 GRADIENT INTERVAL = -5.00/ 5.00

ALPHAT	BETAT	CNFTS	CATS	CAFTS	CLMFTS	CYFTS	CYNTS	CYNFTS	CBLFTS	ALFATU	BETATU
.444	.246	-.14120	.30660	.18440	.07830	.00350	-.00520	-.00530	.00000	.12030	.09600
-.315	-.209	-.16200	.30210	.18270	.07250	.00130	-.00150	-.00150	-.00040	.00880	-.06140
-.319	-.231	-.16180	.30270	.18250	.07180	.00300	-.00180	-.00170	-.00090	.00540	-.08260
.471	.223	-.13880	.30550	.18510	.08020	.00170	-.00250	-.00260	.00000	.14800	.07360
.430	.225	-.14300	.30640	.18550	.07740	.00000	-.00050	-.00060	.00000	.10620	.07530
-.289	-.222	-.15770	.30450	.18380	.07260	.00640	-.00450	-.00450	-.00090	.03510	-.07420
	GRADIENT	.04302	.00678	.00438	.01398	-.00400	-.00045	-.00074	.00164	.23896	.34277

IA156A, AEDC PWT 16T-470, 0 T S W/SILTS (R8NS40) (10 MAY 80)

REFERENCE DATA

SREF = 2690.0000 SQ.FT. XMRP = 976.0000 IN. XT
LREF = 1290.3000 INCHES YMRP = .0000 IN. YT
BREF = 1290.3000 INCHES ZMRP = 400.0000 IN. ZT
SCALE = .0200

PARAMETRIC DATA

IB-ELV = 10.000 OB-ELV = 5.000
BDFLAP = .000 SPDBRK = .000
RUDDER = .000 SILTS = 1.000
MACH = .300 RN/L = 3.500

RUN NO. 862/ 0 RN/L = 2.70 GRADIENT INTERVAL = -5.00/ 5.00

ALPHAT	BETAT	CNFTS	CATS	CAFTS	CLMFTS	CYFTS	CYNTS	CYNFTS	CBLFTS	ALFATU	BETATU
-5.897	-9.931	-.31310	.21440	.05470	.06790	.11960	.00150	.00440	-.02820	-5.75930	-10.09430
-6.140	-5.884	-.30740	.21250	.06310	.05720	.05670	.00450	.00660	-.01770	-6.04940	-6.07780
-6.256	.407	-.28140	.20780	.06150	.04840	-.02090	.00450	.00440	.00160	-6.33930	.20930
-5.791	6.183	-.26850	.21380	.06850	.04920	-.07370	.00210	.00010	.01600	-5.98870	6.10000
-5.900	10.159	-.27510	.21760	.05950	.05030	-.12250	.00250	-.00030	.02520	-6.11180	10.12410
	GRADIENT	.00000	.00000	.00000	.00000	.00000	.00000	.00000	.00000	.00000	.00000

RUN NO. 863/ 0 RN/L = 2.68 GRADIENT INTERVAL = -5.00/ 5.00

ALPHAT	BETAT	CNFTS	CATS	CAFTS	CLMFTS	CYFTS	CYNTS	CYNFTS	CBLFTS	ALFATU	BETATU
-.271	-10.530	-.18840	.21860	.06800	.07390	.17200	-.02440	-.02220	-.01750	-.07140	-10.60750
-.254	-6.453	-.17220	.20920	.06980	.06290	.08850	-.01000	-.00800	-.01030	-.05400	-6.52960
-.217	-.346	-.15390	.20530	.06770	.05630	-.00700	.00210	.00200	-.00050	-.01700	-.42280
-.171	5.736	-.15080	.20770	.07320	.06140	-.09790	.01710	.01520	.00770	.02860	5.65940
-.160	9.797	-.14130	.21420	.07020	.05740	-.16330	.02520	.02310	.01280	.03970	9.71980
	GRADIENT	.00000	.00000	.00000	.00000	.00000	.00000	.00000	.00000	.00000	.00000

IA156A, AEDC PWT 16T-470, 0 T S W/SILTS (R8NS40) (10 MAY 80)

REFERENCE DATA

SREF = 2690.0000 SQ.FT. XMRP = 976.0000 IN. XT
LREF = 1290.3000 INCHES YMRP = .0000 IN. YT
BREF = 1290.3000 INCHES ZMRP = 400.0000 IN. ZT
SCALE = .0200

PARAMETRIC DATA

IB-ELV = 10.000 OB-ELV = 5.000
BDFLAP = .000 SPDBRK = .000
RUDDER = .000 SILTS = 1.000
MACH = .300 RN/L = 3.500

RUN NO. 865/ 0 RN/L = 2.67 GRADIENT INTERVAL = -5.00/ 5.00

ALPHAT	BETAT	CNFTS	CATS	CAFTS	CLMFTS	CYFTS	CYNTS	CYNFTS	CBLFTS	ALFATU	BETATU
6.419	-10.017	-.00690	.20160	.06270	.06950	.21590	-.05610	-.05480	.00110	6.20780	-10.05380
6.097	-5.687	-.00780	.19640	.06130	.07020	.11810	-.03230	-.03130	.00130	5.90140	-5.77380
6.243	.063	.00320	.19760	.06720	.06690	-.00480	-.00060	-.00070	-.00060	6.16160	-.13490
5.780	6.089	-.00140	.19840	.06000	.06270	-.12700	.03160	.03010	-.00230	5.87010	5.89450
5.879	10.173	.01210	.20550	.06750	.05280	-.20800	.04790	.04630	-.00170	6.01310	10.00590
	GRADIENT	.00000	.00000	.00000	.00000	.00000	.00000	.00000	.00000	.00000	.00000

IA156A, AEDC PWT 16T-470, 0 T S W/SILTS (R8NS41) (10 MAY 80)

REFERENCE DATA

SREF = 2690.0000 SQ.FT. XMRP = 976.0000 IN. XT
LREF = 1290.3000 INCHES YMRP = .0000 IN. YT
BREF = 1290.3000 INCHES ZMRP = 400.0000 IN. ZT
SCALE = .0200

PARAMETRIC DATA

IB-ELV = 10.000 OB-ELV = 5.000
BDFLAP = .000 SPDBRK = .000
RUDDER = .000 SILTS = 1.000
MACH = .300 RN/L = 3.500

RUN NO. 861/ 0 RN/L = 2.74 GRADIENT INTERVAL = -5.00/ 5.00

ALPHAT	BETAT	CNFTS	CATS	CAFTS	CLMFTS	CYFTS	CYNTS	CYNFTS	CBLFTS	ALFATU	BETATU
-10.099	-6.027	-.41170	.21160	.05520	.05880	.06100	.00430	.00670	-.02330	-10.05650	-6.23650
-10.068	.357	-.41400	.21280	.03840	.06110	-.01750	.00470	.00470	.00150	-10.14760	.15850
-9.925	6.258	-.38540	.21360	.02350	.04930	-.07140	-.00070	-.00320	.02200	-10.09560	6.12930
	GRADIENT	.00000	.00000	.00000	.00000	.00000	.00000	.00000	.00000	.00000	.00000

RUN NO. 866/ 0 RN/L = 2.66 GRADIENT INTERVAL = -5.00/ 5.00

ALPHAT	BETAT	CNFTS	CATS	CAFTS	CLMFTS	CYFTS	CYNTS	CYNFTS	CBLFTS	ALFATU	BETATU
10.186	-5.865	.09780	.19160	.06510	.06740	.12700	-.03570	-.03460	.00560	10.01580	-5.99520
10.023	.225	.08720	.19320	.06100	.07250	-.00770	-.00070	-.00070	-.00060	9.94710	.02510
10.153	6.305	.10950	.19070	.05680	.06150	-.13600	.03540	.03430	-.00730	10.19260	6.09430
	GRADIENT	.00000	.00000	.00000	.00000	.00000	.00000	.00000	.00000	.00000	.00000

IA156A, AEDC PWT 16T-470, O T S W/SILTS (R8NS42) (10 MAY 80)

REFERENCE DATA

SREF = 2690.0000 SQ.FT. XMRP = 976.0000 IN. XT
LREF = 1290.3000 INCHES YMRP = .0000 IN. YT
BREF = 1290.3000 INCHES ZMRP = 400.0000 IN. ZT
SCALE = .0200

PARAMETRIC DATA

IB-ELV = 10.000 OB-ELV = 5.000
BDFLAP = .000 SPDBRK = .000
RUDDER = .000 SILTS = 1.000
MACH = .600 RN/L = 3.500

RUN NO. 867/ 0 RN/L = 3.50 GRADIENT INTERVAL = -5.00/ 5.00

ALPHAT	BETAT	CNFTS	CATS	CAFTS	CLMFTS	CYFTS	CYNTS	CYNFTS	CBLFTS	ALFATU	BETATU
-8.061	-7.751	-.38460	.21250	.04070	.06460	.09550	.00350	.00680	-.02780	-7.97180	-7.94130
-8.233	-5.845	-.37440	.20540	.05600	.05880	.06950	.00170	.00400	-.02140	-8.17330	-6.04730
-8.102	-3.786	-.36380	.20920	.05570	.05620	.04680	-.00090	.00040	-.01350	-8.07780	-3.99480
-8.229	.322	-.35960	.21180	.05550	.05360	-.00990	.00150	.00150	.00170	-8.30690	.12710
-7.899	4.160	-.34160	.21320	.06170	.04880	-.05220	.00110	-.00010	.01440	-8.05690	4.02090
-7.848	6.055	-.33770	.21060	.05860	.04850	-.07440	.00010	-.00200	.02060	-8.02700	5.94580
-8.088	8.277	-.34740	.21250	.05280	.05100	-.10120	-.00070	-.00360	.02740	-8.28180	8.19550
	GRADIENT	.00277	.00050	.00075	-.00093	-.01247	.00026	-.00006	.00351	.00195	1.00872

RUN NO. 868/ 0 RN/L = 3.50 GRADIENT INTERVAL = -5.00/ 5.00

ALPHAT	BETAT	CNFTS	CATS	CAFTS	CLMFTS	CYFTS	CYNTS	CYNFTS	CBLFTS	ALFATU	BETATU
-6.157	-7.964	-.32390	.20960	.05960	.06460	.10350	.00000	.00290	-.02440	-6.04090	-8.13940
-6.103	-5.796	-.31200	.20850	.06080	.05960	.07150	.00000	.00230	-.01780	-6.01380	-5.98660
-5.961	-3.843	-.30440	.20910	.06230	.05680	.04470	-.00080	.00050	-.01130	-5.90790	-4.04640
-6.100	.064	-.29110	.20960	.06280	.04950	-.00680	.00060	.00050	.00110	-6.17060	-.13440
-6.075	4.270	-.28700	.21180	.06430	.05040	-.05480	.00190	.00050	.01290	-6.24830	4.15120
-5.853	6.117	-.28330	.21170	.06340	.05110	-.07660	.00200	-.00020	.01750	-6.04720	6.03600
-5.834	8.319	-.28180	.21260	.06130	.05200	-.10710	.00390	.00130	.02260	-6.03790	8.26810
	GRADIENT	.00213	.00034	.00025	-.00078	-.01225	.00033	-.00000	.00298	-.04166	1.01053

RUN NO. 869/ 0 RN/L = 3.50 GRADIENT INTERVAL = -5.00/ 5.00

ALPHAT	BETAT	CNFTS	CATS	CAFTS	CLMFTS	CYFTS	CYNTS	CYNFTS	CBLFTS	ALFATU	BETATU
-4.115	-8.150	-.27270	.20960	.06310	.06740	.11280	-.00450	-.00190	-.02090	-3.96740	-8.29980
-4.206	-6.129	-.26770	.20810	.06550	.06350	.07950	-.00200	.00020	-.01590	-4.07870	-6.29670
-4.174	-3.902	-.25820	.20860	.06610	.05910	.04810	-.00300	-.00170	-.00980	-4.08440	-4.09240
-3.929	.214	-.22770	.20840	.06570	.05020	-.00800	.00040	.00020	.00120	-4.00390	.01800
-3.736	4.114	-.22450	.21220	.06910	.05570	-.05540	.00400	.00260	.00960	-3.93050	4.03440
-3.859	6.087	-.22690	.21160	.06800	.05540	-.08260	.00560	.00360	.01400	-4.06540	6.04470
-3.740	8.018	-.22300	.21320	.06890	.05350	-.11260	.00940	.00700	.01770	-3.95010	8.00300
	GRADIENT	.00423	.00044	.00037	-.00044	-.01292	.00087	.00054	.00242	.01920	1.01369

IA156A, AEDC PWT 16T-470, 0 T S W/SILTS (R8NS42) (10 MAY 80)

REFERENCE DATA

SREF = 2690.0000 SQ.FT. XMRP = 976.0000 IN. XT
LREF = 1290.3000 INCHES YMRP = .0000 IN. YT
BREF = 1290.3000 INCHES ZMRP = 400.0000 IN. ZT
SCALE = .0200

PARAMETRIC DATA

IB-ELV = 10.000 OB-ELV = 5.000
BDFLAP = .000 SPDBRK = .000
RUDDER = .000 SILTS = 1.000
MACH = .600 RN/L = 3.500

RUN NO. 870/ 0 RN/L = 3.50 GRADIENT INTERVAL = -5.00/ 5.00

ALPHAT	BETAT	CNFTS	CATS	CAFTS	CLMFTS	CYFTS	CYNTS	CYNFTS	CBLFTS	ALFATU	BETATU
-.235	-8.758	-.19160	.21310	.06830	.07660	.15090	-.02340	-.02120	-.01480	-.03910	-8.83430
-.223	-6.628	-.18500	.20930	.06860	.07450	.10720	-.01580	-.01360	-.01100	-.02710	-6.70350
-.214	-4.562	-.17980	.20780	.07110	.07200	.07130	-.01170	-.01000	-.00750	-.01720	-4.63760
-.206	-.334	-.15760	.20770	.07010	.06040	.00030	-.00080	-.00080	-.00030	-.00920	-.40890
-.150	3.786	-.15340	.20970	.07230	.06490	-.06410	.01170	.01030	.00520	.04650	3.71030
-.144	5.863	-.15160	.20930	.07090	.06460	-.09790	.01740	.01550	.00800	.05270	5.78620
-.149	7.959	-.14570	.21160	.07060	.06110	-.13320	.02220	.02000	.01090	.04700	7.88380
	GRADIENT	.00317	.00023	.00014	-.00086	-.01622	.00280	.00243	.00152	.00761	.99995

RUN NO. 871/ 0 RN/L = 3.50 GRADIENT INTERVAL = -5.00/ 5.00

ALPHAT	BETAT	CNFTS	CATS	CAFTS	CLMFTS	CYFTS	CYNTS	CYNFTS	CBLFTS	ALFATU	BETATU
4.363	-7.827	-.07160	.20560	.06870	.07750	.16490	-.04080	-.03920	-.00340	4.15330	-7.84680
4.464	-6.010	-.05970	.20150	.06990	.07530	.12250	-.03180	-.03030	-.00170	4.25870	-6.05580
4.184	-3.858	-.06190	.20110	.06660	.07350	.08010	-.02190	-.02090	-.00140	3.98920	-3.93810
4.319	.004	-.04070	.20010	.06930	.06380	.00050	-.00240	-.00240	-.00050	4.23330	-.18870
4.160	4.162	-.04300	.20330	.06970	.06640	-.08110	.01900	.01780	.00010	4.24240	3.96790
4.020	6.209	-.04030	.20330	.06860	.06470	-.12000	.02810	.02640	.00070	4.14310	6.03810
3.876	7.967	-.04270	.20580	.07000	.06190	-.15330	.03470	.03270	.00210	4.02000	7.81350
	GRADIENT	.00232	.00028	.00038	-.00087	-.02009	.00510	.00493	.00019	.03120	.98595

RUN NO. 872/ 0 RN/L = 3.50 GRADIENT INTERVAL = -5.00/ 5.00

ALPHAT	BETAT	CNFTS	CATS	CAFTS	CLMFTS	CYFTS	CYNTS	CYNFTS	CBLFTS	ALFATU	BETATU
6.541	-8.029	-.01110	.20090	.06620	.07440	.17660	-.04730	-.04590	.00100	6.33840	-8.08450
6.427	-5.985	-.01070	.19870	.06660	.07470	.13130	-.03580	-.03450	.00110	6.23290	-6.06680
6.545	-3.885	-.00180	.19760	.06530	.07490	.08320	-.02350	-.02260	.00110	6.37260	-4.00560
6.093	.207	.00410	.19920	.06610	.06540	-.00580	-.00050	-.00050	-.00040	6.01720	.01100
6.100	4.141	.00440	.19800	.06500	.06710	-.08220	.02020	.01920	-.00170	6.14730	3.93610
6.179	6.300	.01360	.19910	.06660	.06340	-.12750	.03200	.03050	-.00230	6.26700	6.10840
5.845	8.021	.01100	.20300	.06750	.06000	-.16090	.03950	.03780	-.00170	5.95990	7.84370
	GRADIENT	.00078	.00005	-.00004	-.00098	-.02062	.00545	.00521	-.00035	-.02846	.98942

IA156A, AEDC PWT 16T-470, O T S W/SILTS (R8NS42) (10 MAY 80)

REFERENCE DATA

SREF = 2690.0000 SQ.FT. XMRP = 976.0000 IN. XT
LREF = 1290.3000 INCHES YMRP = .0000 IN. YT
BREF = 1290.3000 INCHES ZMRP = 400.0000 IN. ZT
SCALE = .0200

PARAMETRIC DATA

IB-ELV =	10.000	OB-ELV =	5.000
BDFLAP =	.000	SPDBRK =	.000
RUDDER =	.000	SILTS =	1.000
MACH =	.600	RN/L =	3.500

RUN NO. 873/ 0 RN/L = 3.50 GRADIENT INTERVAL = -5.00/ 5.00

ALPHAT	BETAT	CNFTS	CATS	CAFTS	CLMFTS	CYFTS	CYNTS	CYNFTS	CBLFTS	ALFATU	BETATU
8.417	-7.987	.04660	.19590	.05870	.06950	.17910	-.04850	-.04720	.00430	8.22260	-8.06790
8.304	-5.705	.04600	.19340	.06410	.07120	.12470	-.03500	-.03370	.00360	8.12510	-5.81600
8.297	-3.741	.04550	.19390	.06340	.07320	.07770	-.02170	-.02080	.00260	8.13990	-3.88140
8.357	.167	.05110	.19740	.06340	.07150	-.00330	-.00020	-.00030	-.00030	8.27820	-.02870
8.137	4.179	.05680	.19570	.06430	.06700	-.08470	.02120	.02020	-.00310	8.15970	3.97010
8.249	6.252	.06520	.19630	.06260	.06290	-.12540	.03190	.03050	-.00430	8.30800	6.04970
8.106	8.242	.06870	.19870	.06160	.05710	-.17200	.04420	.04280	-.00460	8.19630	8.05160
	GRADIENT	.00143	.00022	.00011	-.00078	-.02050	.00542	.00518	-.00072	.00236	.99136

IA156A, AEDC PWT 16T-470, O T S W/SILTS (R8NS43) (10 MAY 80)

REFERENCE DATA

SREF = 2690.0000 SQ.FT. XMRP = 976.0000 IN. XT
LREF = 1290.3000 INCHES YMRP = .0000 IN. YT
BREF = 1290.3000 INCHES ZMRP = 400.0000 IN. ZT
SCALE = .0200

PARAMETRIC DATA

IB-ELV =	10.000	OB-ELV =	5.000
BDFLAP =	.000	SPDBRK =	.000
RUDDER =	.000	SILTS =	1.000
MACH =	.800	RN/L =	3.500

RUN NO. 874/ 0 RN/L = 3.50 GRADIENT INTERVAL = -5.00/ 5.00

ALPHAT	BETAT	CNFTS	CATS	CAFTS	CLMFTS	CYFTS	CYNTS	CYNFTS	CBLFTS	ALFATU	BETATU
-8.359	-6.143	-.40580	.21980	.06680	.06580	.08660	-.00550	-.00270	-.02330	-8.20010	-6.27740
-8.455	-3.880	-.39810	.22290	.06800	.06260	.05570	-.00590	-.00430	-.01480	-8.32720	-4.04370
-8.168	.250	-.37110	.22480	.07000	.05370	-.00460	-.00010	.00000	.00120	-8.13040	.04570
-8.096	4.310	-.36080	.22390	.06990	.04810	-.06120	.00500	.00360	.01550	-8.15880	4.11170
-8.032	6.230	-.36280	.22110	.06890	.04850	-.08470	.00420	.00200	.02190	-8.12920	6.04650
	GRADIENT	.00456	.00012	.00023	-.00177	-.01428	.00133	.00096	.00370	.02064	.99581

RUN NO. 875/ 0 RN/L = 3.50 GRADIENT INTERVAL = -5.00/ 5.00

ALPHAT	BETAT	CNFTS	CATS	CAFTS	CLMFTS	CYFTS	CYNTS	CYNFTS	CBLFTS	ALFATU	BETATU
-6.173	-5.898	-.33480	.22080	.07070	.06580	.08790	-.00810	-.00550	-.01940	-5.99810	-6.01010
-6.081	-3.854	-.32200	.22250	.07480	.06280	.05600	-.00720	-.00570	-.01220	-5.93120	-3.99770
-6.228	.140	-.30040	.22220	.07320	.04910	-.00590	.00020	.00030	.00100	-6.18680	-.06360
-5.914	4.133	-.29160	.22310	.07680	.05040	-.05780	.00530	.00400	.01220	-5.99900	3.94420
-5.943	6.374	-.29890	.22210	.07260	.05110	-.08850	.00670	.00440	.01870	-6.06790	6.20740
	GRADIENT	.00381	.00008	.00025	-.00155	-.01425	.00156	.00121	.00305	-.00849	.99429

IA156A, AEDC PWT 16T-470, 0 T S W/SILTS (R8NS43) (10 MAY 80)

REFERENCE DATA

SREF = 2690.0000 SQ.FT. XMRP = 976.0000 IN. XT
LREF = 1290.3000 INCHES YMRP = .0000 IN. YT
BREF = 1290.3000 INCHES ZMRP = 400.0000 IN. ZT
SCALE = .0200

PARAMETRIC DATA

IB-ELV = 10.000 OB-ELV = 5.000
BDFLAP = .000 SPDBRK = .000
RUDDER = .000 SILTS = 1.000
MACH = .800 RN/L = 3.500

RUN NO. 876/ 0 RN/L = 3.50 GRADIENT INTERVAL = -5.00/ 5.00

ALPHAT	BETAT	CNFTS	CATS	CAFTS	CLMFTS	CYFTS	CYNTS	CYNFTS	CBLFTS	ALFATU	BETATU
-4.040	-5.851	-.28000	.22050	.07540	.07030	.08830	-.00960	-.00720	-.01550	-3.84600	-5.92490
-4.098	-3.811	-.26740	.22100	.07760	.06520	.05640	-.00870	-.00720	-.00990	-3.92370	-3.92380
-4.263	.381	-.23760	.22010	.07820	.04750	-.01070	.00150	.00140	.00140	-4.23280	.17540
-3.734	4.092	-.22870	.22190	.07890	.05390	-.06090	.00750	.00610	.00970	-3.85690	3.92470
-3.804	6.119	-.23480	.22150	.07900	.05520	-.09180	.01060	.00850	.01440	-3.95600	5.97790
	GRADIENT	.00494	.00011	.00016	-.00149	-.01487	.00206	.00169	.00248	.00669	.99270

RUN NO. 877/ 0 RN/L = 3.50 GRADIENT INTERVAL = -5.00/ 5.00

ALPHAT	BETAT	CNFTS	CATS	CAFTS	CLMFTS	CYFTS	CYNTS	CYNFTS	CBLFTS	ALFATU	BETATU
-.234	-6.850	-.19690	.22240	.07910	.07790	.12410	-.02270	-.02050	-.01220	-.02930	-6.81240
-.224	-4.725	-.18850	.21870	.08160	.07360	.08420	-.01810	-.01640	-.00830	-.01990	-4.68730
-.226	-.493	-.16050	.21420	.07950	.05790	.00590	-.00330	-.00310	-.00100	-.02170	-.45550
-.159	3.742	-.15470	.21820	.08130	.06070	-.07030	.01470	.01330	.00590	.04570	3.77990
-.140	5.839	-.15640	.22020	.08270	.06340	-.10950	.02240	.02040	.00920	.06360	5.87620
	GRADIENT	.00399	-.00006	-.00004	-.00152	-.01825	.00387	.00351	.00168	.00775	1.00001

RUN NO. 878/ 0 RN/L = 3.50 GRADIENT INTERVAL = -5.00/ 5.00

ALPHAT	BETAT	CNFTS	CATS	CAFTS	CLMFTS	CYFTS	CYNTS	CYNFTS	CBLFTS	ALFATU	BETATU
4.356	-5.826	-.06350	.21240	.07740	.07450	.12980	-.03380	-.03230	-.00240	4.20640	-5.96940
4.309	-3.927	-.05690	.21140	.07750	.07310	.08850	-.02490	-.02380	-.00150	4.18660	-4.09470
4.014	.176	-.03270	.20860	.07810	.05640	.00060	-.00210	-.00210	-.00030	4.05060	-.02800
3.892	4.001	-.04330	.21230	.07860	.06240	-.07790	.01970	.01850	.00080	4.06550	3.88630
4.082	6.205	-.03720	.21420	.07740	.06120	-.12660	.03210	.03020	.00140	4.27400	6.12610
	GRADIENT	.00177	.00010	.00014	-.00138	-.02100	.00563	.00534	.00029	-.01549	1.00655

RUN NO. 879/ 0 RN/L = 3.50 GRADIENT INTERVAL = -5.00/ 5.00

ALPHAT	BETAT	CNFTS	CATS	CAFTS	CLMFTS	CYFTS	CYNTS	CYNFTS	CBLFTS	ALFATU	BETATU
6.448	-5.828	-.00090	.21020	.07350	.06900	.13530	-.03790	-.03650	.00070	6.32990	-5.99850
6.132	-3.681	-.00060	.20830	.07400	.06860	.08400	-.02490	-.02390	.00050	6.04830	-3.87130
5.991	.244	.02230	.20680	.07710	.05440	-.00370	-.00090	-.00090	-.00050	6.03060	.04010
6.128	4.152	.02100	.20810	.07600	.05910	-.08540	.02240	.02130	-.00170	6.27450	4.00530
6.000	5.985	.02310	.21060	.07670	.05580	-.12740	.03400	.03250	-.00170	6.17260	5.86950
	GRADIENT	.00276	-.00003	.00026	-.00121	-.02163	.00604	.00577	-.00028	.02885	1.00550

IA156A, AEDC PWT 16T-470, 0 T S W/SILTS (R8NS44) (10 MAY 80)

REFERENCE DATA

SREF = 2690.0000 SQ.FT. XMRP = 976.0000 IN. XT
LREF = 1290.3000 INCHES YMRP = .0000 IN. YT
BREF = 1290.3000 INCHES ZMRP = 400.0000 IN. ZT
SCALE = .0200

PARAMETRIC DATA

IB-ELV = 10.000 OB-ELV = 5.000
BDFLAP = .000 SPDBRK = .000
RUDDER = .000 SILTS = 1.000
MACH = .900 RN/L = 3.500

RUN NO. 880/ 0 RN/L = 3.50 GRADIENT INTERVAL = -5.00/ 5.00

ALPHAT	BETAT	CNFTS	CATS	CAFTS	CLMFTS	CYFTS	CYNTS	CYNFTS	CBLFTS	ALFATU	BETATU
-8.372	-6.093	-.41920	.24190	.07920	.06470	.10010	-.01360	-.01120	-.02310	-8.20560	-6.21510
-8.375	-3.809	-.40990	.24390	.07950	.06110	.06420	-.01130	-.01010	-.01460	-8.23630	-3.96270
-8.178	.302	-.38020	.24640	.08170	.05050	-.00680	.00000	.00020	.00160	-8.12870	.10110
-8.096	4.300	-.37210	.24300	.08290	.04590	-.06710	.00860	.00740	.01610	-8.14580	4.09950
-8.053	6.217	-.37570	.24230	.07980	.04630	-.09460	.01010	.00800	.02250	-8.13770	6.02870
	GRADIENT	.00467	-.00011	.00042	-.00188	-.01620	.00246	.00216	.00379	.01123	.99419

RUN NO. 881/ 0 RN/L = 3.50 GRADIENT INTERVAL = -5.00/ 5.00

ALPHAT	BETAT	CNFTS	CATS	CAFTS	CLMFTS	CYFTS	CYNTS	CYNFTS	CBLFTS	ALFATU	BETATU
-6.113	-5.805	-.34460	.24330	.08380	.06420	.10090	-.01590	-.01370	-.01940	-5.93150	-5.90360
-6.292	-3.970	-.34150	.24270	.08780	.06040	.06830	-.01330	-.01210	-.01310	-6.13280	-4.10190
-6.136	.050	-.30520	.24350	.08560	.04620	-.00270	-.00120	-.00090	.00040	-6.07880	-.14810
-6.078	4.333	-.30340	.24240	.08870	.04600	-.06930	.00950	.00820	.01390	-6.15300	4.14040
-6.166	6.353	-.31470	.24190	.08690	.04860	-.09850	.01130	.00910	.01990	-6.27630	6.17830
	GRADIENT	.00454	-.00004	.00012	-.00172	-.01656	.00274	.00244	.00325	-.00259	.99281

RUN NO. 882/ 0 RN/L = 3.50 GRADIENT INTERVAL = -5.00/ 5.00

ALPHAT	BETAT	CNFTS	CATS	CAFTS	CLMFTS	CYFTS	CYNTS	CYNFTS	CBLFTS	ALFATU	BETATU
-4.201	-6.175	-.29250	.24470	.08740	.06840	.10750	-.01630	-.01400	-.01730	-4.00240	-6.23350
-4.105	-3.849	-.27370	.24190	.08950	.06160	.06700	-.01360	-.01250	-.01060	-3.92300	-3.94680
-4.195	.253	-.23420	.23800	.08960	.04020	-.00660	-.00050	-.00040	.00090	-4.14490	.05250
-3.880	4.288	-.23500	.23990	.09140	.04870	-.07040	.00970	.00840	.01110	-3.99340	4.11530
-3.757	6.091	-.23900	.24090	.09070	.05180	-.09990	.01360	.01160	.01520	-3.90050	5.94200
	GRADIENT	.00477	-.00025	.00023	-.00160	-.01689	.00286	.00257	.00267	-.00878	.99069

RUN NO. 883/ 0 RN/L = 3.50 GRADIENT INTERVAL = -5.00/ 5.00

ALPHAT	BETAT	CNFTS	CATS	CAFTS	CLMFTS	CYFTS	CYNTS	CYNFTS	CBLFTS	ALFATU	BETATU
-.267	-6.894	-.20100	.24530	.09390	.07500	.13310	-.02590	-.02410	-.01230	-.06700	-6.84350
-.255	-4.777	-.19640	.24200	.09500	.06860	.09210	-.02090	-.01930	-.00880	-.05430	-4.72600
-.288	-.455	-.14540	.23260	.09220	.04300	.00690	-.00370	-.00350	-.00110	-.08810	-.40390
-.206	3.723	-.14810	.23630	.09350	.05000	-.07350	.01650	.01530	.00620	-.00600	3.77400
-.193	5.829	-.15340	.23850	.09320	.05410	-.11430	.02480	.02310	.00950	.00760	5.88010
	GRADIENT	.00453	-.00068	-.00018	-.00221	-.01948	.00440	.00407	.00176	.00560	1.00001

IA156A, AEDC PWT 16T-470, 0 T S W/SILTS (R8NS44) (10 MAY 80)

REFERENCE DATA

SREF = 2690.0000 SQ.FT. XMRP = 976.0000 IN. XT
LREF = 1290.3000 INCHES YMRP = .0000 IN. YT
BREF = 1290.3000 INCHES ZMRP = 400.0000 IN. ZT
SCALE = .0200

PARAMETRIC DATA

IB-ELV = 10.000 OB-ELV = 5.000
BDFLAP = .000 SPDBRK = .000
RUDDER = .000 SILTS = 1.000
MACH = .900 RN/L = 3.500

RUN NO. 884/ 0 RN/L = 3.50 GRADIENT INTERVAL = -5.00/ 5.00

ALPHAT	BETAT	CNFTS	CATS	CAFTS	CLMFTS	CYFTS	CYNTS	CYNFTS	CBLFTS	ALFATU	BETATU
4.299	-5.740	-.06550	.23520	.09100	.07110	.13550	-.03590	-.03450	-.00320	4.16010	-5.89270
4.163	-3.885	-.05920	.23470	.08970	.06720	.09210	-.02670	-.02580	-.00230	4.05120	-4.05860
4.012	.168	-.02920	.22980	.09000	.04510	.00110	-.00180	-.00170	-.00020	4.06260	-.03240
3.961	3.990	-.04170	.23290	.09080	.05580	-.08330	.02240	.02120	.00170	4.13980	3.88530
3.870	5.931	-.04600	.23530	.09020	.05630	-.12800	.03320	.03140	.00300	4.06620	5.86540
	GRADIENT	.00227	-.00024	.00014	-.00149	-.02228	.00623	.00597	.00051	.01117	1.00866

IA156A, AEDC PWT 16T-470, 0 T S W/SILTS (R8NS45) (10 MAY 80)

REFERENCE DATA

SREF = 2690.0000 SQ.FT. XMRP = 976.0000 IN. XT
LREF = 1290.3000 INCHES YMRP = .0000 IN. YT
BREF = 1290.3000 INCHES ZMRP = 400.0000 IN. ZT
SCALE = .0200

PARAMETRIC DATA

IB-ELV = 10.000 OB-ELV = 5.000
BDFLAP = .000 SPDBRK = .000
RUDDER = .000 SILTS = 1.000
MACH = .950 RN/L = 3.500

RUN NO. 885/ 0 RN/L = 3.50 GRADIENT INTERVAL = -5.00/ 5.00

ALPHAT	BETAT	CNFTS	CATS	CAFTS	CLMFTS	CYFTS	CYNTS	CYNFTS	CBLFTS	ALFATU	BETATU
-8.503	-6.134	-.42750	.26850	.09490	.05510	.11400	-.01760	-.01510	-.02420	-8.33450	-6.25190
-8.506	-3.839	-.41740	.26930	.09400	.04950	.07090	-.01290	-.01170	-.01560	-8.36530	-3.98820
-8.224	.205	-.37970	.27160	.09400	.03480	-.00160	-.00080	-.00090	.00110	-8.16820	.00750
-8.143	4.273	-.37620	.26850	.09420	.03530	-.07180	.01060	.00960	.01720	-8.18920	4.07260
-8.091	6.170	-.38510	.26620	.09310	.03830	-.10470	.01480	.01260	.02400	-8.17160	5.98090
	GRADIENT	.00508	-.00010	.00002	-.00175	-.01759	.00290	.00263	.00404	.02168	.99377

RUN NO. 886/ 0 RN/L = 3.50 GRADIENT INTERVAL = -5.00/ 5.00

ALPHAT	BETAT	CNFTS	CATS	CAFTS	CLMFTS	CYFTS	CYNTS	CYNFTS	CBLFTS	ALFATU	BETATU
-6.225	-5.872	-.34390	.26260	.08950	.05540	.10590	-.01790	-.01560	-.02000	-6.04240	-5.96590
-6.161	-3.842	-.33300	.26940	.10150	.04890	.06990	-.01420	-.01310	-.01310	-5.99970	-3.96900
-6.339	.093	-.30530	.27130	.09830	.03140	-.00290	-.00030	-.00030	.00070	-6.27980	-.10390
-5.972	4.164	-.30010	.26980	.10000	.03730	-.07220	.01180	.01050	.01440	-6.04170	3.97130
-6.039	6.368	-.31280	.26820	.09790	.04180	-.10760	.01520	.01290	.02080	-6.14830	6.19440
	GRADIENT	.00409	.00005	-.00018	-.00143	-.01775	.00325	.00295	.00343	-.00488	.99187

IA156A, AEDC PWT 16T-470, 0 T S W/SILTS (R8NS45) (10 MAY 80)

REFERENCE DATA

SREF = 2690.0000 SQ.FT. XMRP = 976.0000 IN. XT
LREF = 1290.3000 INCHES YMRP = .0000 IN. YT
BREF = 1290.3000 INCHES ZMRP = 400.0000 IN. ZT
SCALE = .0200

PARAMETRIC DATA

IB-ELV =	10.000	OB-ELV =	5.000
BDFLAP =	.000	SPDBRK =	.000
RUDDER =	.000	SILTS =	1.000
MACH =	.950	RN/L =	3.500

RUN NO. 887/ 0 RN/L = 3.50 GRADIENT INTERVAL = -5.00/ 5.00

ALPHAT	BETAT	CNFTS	CATS	CAFTS	CLMFTS	CYFTS	CYNTS	CYNFTS	CBLFTS	ALFATU	BETATU
-4.278	-6.250	-.29300	.26870	.10380	.06230	.11600	-.02000	-.01760	-.01800	-4.08010	-6.30320
-4.267	-3.971	-.27520	.27030	.10480	.05500	.07250	-.01510	-.01390	-.01160	-4.08390	-4.06360
-4.176	.400	-.22730	.26750	.10250	.03410	-.01010	.00070	.00060	.00170	-4.13030	.20010
-3.876	4.267	-.23540	.26960	.10450	.04470	-.07460	.01210	.01050	.01180	-3.98540	4.09370
-4.049	6.247	-.24810	.26960	.10310	.04770	-.10890	.01660	.01420	.01670	-4.18580	6.09450
	GRADIENT	.00496	-.00010	-.00005	-.00133	-.01788	.00331	.00297	.00284	.01147	.98990

RUN NO. 888/ 0 RN/L = 3.50 GRADIENT INTERVAL = -5.00/ 5.00

ALPHAT	BETAT	CNFTS	CATS	CAFTS	CLMFTS	CYFTS	CYNTS	CYNFTS	CBLFTS	ALFATU	BETATU
-.271	-6.931	-.19730	.27110	.10580	.07570	.14130	-.03030	-.02790	-.01220	-.07320	-6.87700
-.254	-4.765	-.18300	.26900	.10640	.07030	.09540	-.02390	-.02190	-.00820	-.05610	-4.71090
-.269	-.500	-.13890	.26560	.10780	.04710	.00850	-.00450	-.00420	-.00120	-.07110	-.44590
-.187	3.729	-.14280	.26680	.10660	.05400	-.07770	.02050	.01900	.00570	.01100	3.78340
-.181	5.841	-.14750	.26830	.10580	.05610	-.12030	.02850	.02620	.00900	.01720	5.89630
	GRADIENT	.00474	-.00026	.00002	-.00192	-.02038	.00523	.00481	.00164	.00788	1.00002

RUN NO. 889/ 0 RN/L = 3.50 GRADIENT INTERVAL = -5.00/ 5.00

ALPHAT	BETAT	CNFTS	CATS	CAFTS	CLMFTS	CYFTS	CYNTS	CYNFTS	CBLFTS	ALFATU	BETATU
4.348	-5.655	-.06780	.26510	.10280	.07530	.13900	-.03810	-.03630	-.00340	4.21450	-5.81110
4.165	-3.808	-.05880	.26290	.10380	.06650	.09460	-.02780	-.02660	-.00260	4.06030	-3.98450
3.891	.222	-.02770	.25750	.10220	.03890	-.00180	-.00010	-.00030	-.00010	3.94830	.02510
4.086	4.078	-.03640	.26030	.10270	.05610	-.08970	.02470	.02330	.00180	4.26450	3.97730
4.049	6.102	-.04190	.26260	.10250	.06050	-.13770	.03620	.03400	.00280	4.24500	6.04000
	GRADIENT	.00288	-.00034	-.00014	-.00136	-.02337	.00666	.00633	.00056	.02549	1.00945

IA156A, AEDC PWT 16T-470, 0 T S W/SILTS (R8NS46) (10 MAY 80)

REFERENCE DATA

SREF = 2690.0000 SQ.FT. XMRP = 976.0000 IN. XT
LREF = 1290.3000 INCHES YMRP = .0000 IN. YT
BREF = 1290.3000 INCHES ZMRP = 400.0000 IN. ZT
SCALE = .0200

PARAMETRIC DATA

IB-ELV = 10.000 OB-ELV = 5.000
BDFLAP = .000 SPDBRK = .000
RUDDER = .000 SILTS = 1.000
MACH = 1.050 RN/L = 3.500

RUN NO. 892/ 0 RN/L = 3.50 GRADIENT INTERVAL = -5.00/ 5.00

ALPHAT	BETAT	CNFTS	CATS	CAFTS	CLMFTS	CYFTS	CYNTS	CYNFTS	CBLFTS	ALFATU	BETATU
-8.534	-6.052	-.45060	.34030	.13130	.05690	.12190	-.01810	-.01530	-.02680	-8.36410	-6.16380
-8.544	-3.911	-.44230	.34430	.13230	.05420	.08130	-.01460	-.01300	-.01870	-8.39810	-4.05360
-8.409	.361	-.40120	.35170	.13600	.03340	-.00480	-.00020	-.00020	.00220	-8.35270	.16480
-8.290	4.348	-.40450	.34620	.13630	.03970	-.07430	.00910	.00770	.01920	-8.33100	4.14850
-8.217	6.260	-.41050	.34410	.13440	.04330	-.10870	.01310	.01060	.02580	-8.29290	6.07110
	GRADIENT	.00464	.00025	.00049	-.00179	-.01886	.00288	.00251	.00459	.00815	.99306

RUN NO. 893/ 0 RN/L = 3.50 GRADIENT INTERVAL = -5.00/ 5.00

ALPHAT	BETAT	CNFTS	CATS	CAFTS	CLMFTS	CYFTS	CYNTS	CYNFTS	CBLFTS	ALFATU	BETATU
-6.373	-6.101	-.36450	.34630	.13810	.05540	.12140	-.01970	-.01710	-.02370	-6.18760	-6.18550
-6.319	-3.967	-.35170	.34740	.13960	.05100	.07790	-.01380	-.01230	-.01560	-6.15440	-4.08730
-6.194	.176	-.31130	.34960	.13940	.03240	-.00200	-.00140	-.00140	.00100	-6.13260	-.01780
-6.232	4.327	-.32190	.34800	.13970	.03960	-.07730	.01130	.00990	.01630	-6.29750	4.13380
-5.900	6.210	-.31820	.34350	.13940	.04380	-.10890	.01600	.01360	.02160	-6.00480	6.03470
	GRADIENT	.00359	.00007	.00001	-.00137	-.01871	.00303	.00263	.00385	-.01726	.99125

RUN NO. 894/ 0 RN/L = 3.50 GRADIENT INTERVAL = -5.00/ 5.00

ALPHAT	BETAT	CNFTS	CATS	CAFTS	CLMFTS	CYFTS	CYNTS	CYNFTS	CBLFTS	ALFATU	BETATU
-4.159	-5.855	-.29540	.34560	.14280	.06140	.11770	-.02140	-.01910	-.01920	-3.96070	-5.90320
-4.424	-4.095	-.29080	.34640	.14440	.05540	.08310	-.01820	-.01660	-.01420	-4.23850	-4.17990
-4.396	.172	-.24580	.35030	.14200	.03310	-.00400	-.00100	-.00110	.00070	-4.33320	-.02150
-4.041	4.342	-.24840	.34990	.14410	.04460	-.07820	.01330	.01170	.01330	-4.14530	4.16720
-3.819	6.203	-.24960	.34620	.14460	.04890	-.11460	.01940	.01710	.01790	-3.95510	6.05220
	GRADIENT	.00505	.00042	-.00004	-.00130	-.01912	.00373	.00336	.00326	.01092	.98931

RUN NO. 895/ 0 RN/L = 3.50 GRADIENT INTERVAL = -5.00/ 5.00

ALPHAT	BETAT	CNFTS	CATS	CAFTS	CLMFTS	CYFTS	CYNTS	CYNFTS	CBLFTS	ALFATU	BETATU
-.290	-6.937	-.20160	.34450	.14550	.07950	.15260	-.03490	-.03250	-.01450	-.09510	-6.87770
-.278	-4.792	-.18310	.34430	.14670	.07200	.10480	-.02790	-.02600	-.00990	-.08290	-4.73230
-.323	-.516	-.13580	.34960	.14670	.04330	.01410	-.00800	-.00790	-.00150	-.12830	-.45580
-.223	3.700	-.13930	.35140	.14790	.05230	-.07700	.01990	.01820	.00670	-.02790	3.75960
-.201	5.843	-.14470	.35070	.14810	.05600	-.12310	.02960	.02740	.01040	-.00630	5.90290
	GRADIENT	.00517	.00084	.00014	-.00233	-.02141	.00563	.00520	.00195	.00644	1.00002

IA156A, AEDC PWT 16T-470, O T S W/SILTS (R8NS46) (10 MAY 80)

REFERENCE DATA

SREF = 2690.0000 SQ.FT. XMRP = 976.0000 IN. XT
LREF = 1290.3000 INCHES YMRP = .0000 IN. YT
BREF = 1290.3000 INCHES ZMRP = 400.0000 IN. ZT
SCALE = .0200

PARAMETRIC DATA

IB-ELV = 10.000 OB-ELV = 5.000
BDFLAP = .000 SPDBRK = .000
RUDDER = .000 SILTS = 1.000
MACH = 1.050 RN/L = 3.500

RUN NO. 896/ 0 RN/L = 3.50 GRADIENT INTERVAL = -5.00/ 5.00

ALPHAT	BETAT	CNFTS	CATS	CAFTS	CLMFTS	CYFTS	CYNTS	CYNFTS	CBLFTS	ALFATU	BETATU
4.306	-5.881	-.07210	.34240	.14390	.07800	.14920	-.04270	-.04140	-.00470	4.17520	-6.03720
4.358	-3.831	-.05210	.34070	.14280	.06720	.10040	-.03130	-.03060	-.00350	4.26290	-4.01100
3.919	.168	-.02560	.34050	.14600	.04360	.00300	-.00270	-.00270	-.00050	3.97890	-.02650
3.903	3.961	-.03800	.34170	.14650	.05500	-.08780	.02460	.02360	.00250	4.08350	3.86690
4.149	6.140	-.03640	.34010	.14130	.05890	-.14000	.03650	.03500	.00350	4.34410	6.08270
	GRADIENT	.00185	.00013	.00048	-.00161	-.02416	.00717	.00696	.00077	-.02346	1.01097

IA156A, AEDC PWT 16T-470, O T S W/SILTS (R8NS47) (10 MAY 80)

REFERENCE DATA

SREF = 2690.0000 SQ.FT. XMRP = 976.0000 IN. XT
LREF = 1290.3000 INCHES YMRP = .0000 IN. YT
BREF = 1290.3000 INCHES ZMRP = 400.0000 IN. ZT
SCALE = .0200

PARAMETRIC DATA

IB-ELV = 10.000 OB-ELV = 5.000
BDFLAP = .000 SPDBRK = .000
RUDDER = .000 SILTS = 1.000
MACH = 1.100 RN/L = 3.500

RUN NO. 897/ 0 RN/L = 3.49 GRADIENT INTERVAL = -5.00/ 5.00

ALPHAT	BETAT	CNFTS	CATS	CAFTS	CLMFTS	CYFTS	CYNTS	CYNFTS	CBLFTS	ALFATU	BETATU
-8.520	-6.140	-.44830	.34400	.14590	.05280	.12510	-.01990	-.01720	-.02740	-8.34730	-6.24850
-8.599	-3.917	-.43780	.34450	.14640	.04940	.07790	-.01270	-.01120	-.01830	-8.45130	-4.05860
-8.479	.223	-.39700	.34910	.14880	.02920	-.00240	-.00150	-.00150	.00200	-8.41660	.02850
-8.360	4.355	-.40340	.34660	.14940	.03710	-.07220	.00720	.00570	.01950	-8.39910	4.15480
-8.322	6.298	-.41110	.34300	.14530	.04140	-.11030	.01390	.01150	.02630	-8.39530	6.10710
	GRADIENT	.00416	.00025	.00036	-.00149	-.01814	.00241	.00204	.00457	.00631	.99285

RUN NO. 898/ 0 RN/L = 3.50 GRADIENT INTERVAL = -5.00/ 5.00

ALPHAT	BETAT	CNFTS	CATS	CAFTS	CLMFTS	CYFTS	CYNTS	CYNFTS	CBLFTS	ALFATU	BETATU
-6.321	-5.970	-.36060	.34080	.15090	.05080	.11230	-.01730	-.01490	-.02280	-6.13410	-6.05410
-6.565	-4.019	-.35670	.34250	.15230	.04540	.07470	-.01280	-.01140	-.01590	-6.40010	-4.13940
-6.368	.128	-.31310	.34380	.15060	.02760	-.00340	-.00200	-.00200	.00130	-6.30160	-.06500
-6.268	4.342	-.31650	.34390	.15280	.03650	-.07350	.00770	.00630	.01640	-6.33130	4.14710
-5.968	6.252	-.31890	.34070	.14880	.04180	-.10760	.01370	.01130	.02230	-6.07010	6.07450
	GRADIENT	.00479	.00017	.00006	-.00106	-.01772	.00245	.00212	.00386	.00819	.99116

IA156A, AEDC PWT 16T-470, 0 T S W/SILTS (R8NS47) (10 MAY 80)

REFERENCE DATA

SREF = 2690.0000 SQ.FT. XMRP = 976.0000 IN. XT
LREF = 1290.3000 INCHES YMRP = .0000 IN. YT
BREF = 1290.3000 INCHES ZMRP = 400.0000 IN. ZT
SCALE = .0200

PARAMETRIC DATA

IB-ELV = 10.000 OB-ELV = 5.000
BDFLAP = .000 SPDBRK = .000
RUDDER = .000 SILTS = 1.000
MACH = 1.100 RN/L = 3.500

RUN NO. 899/ 0 RN/L = 3.50 GRADIENT INTERVAL = -5.00/ 5.00

ALPHAT	BETAT	CNFTS	CATS	CAFTS	CLMFTS	CYFTS	CYNTS	CYNFTS	CBLFTS	ALFATU	BETATU
-4.113	-6.032	-.29230	.33870	.15400	.05860	.11210	-.01760	-.01560	-.01950	-3.91350	-6.07440
-4.271	-3.951	-.28100	.33760	.15510	.05060	.07330	-.01410	-.01280	-.01330	-4.08480	-4.03410
-4.183	.396	-.23470	.33810	.15420	.03030	-.00840	-.00110	-.00140	.00190	-4.12890	.19910
-3.855	4.235	-.23830	.34070	.15700	.04270	-.07220	.00920	.00790	.01300	-3.95890	4.05850
-4.012	6.203	-.25380	.34100	.15420	.04740	-.10930	.01560	.01350	.01830	-4.14390	6.04640
	GRADIENT	.00534	.00037	.00022	-.00105	-.01780	.00285	.00253	.00322	.01482	.98831

RUN NO. 900/ 0 RN/L = 3.50 GRADIENT INTERVAL = -5.00/ 5.00

ALPHAT	BETAT	CNFTS	CATS	CAFTS	CLMFTS	CYFTS	CYNTS	CYNFTS	CBLFTS	ALFATU	BETATU
-.169	-7.030	-.20160	.33640	.15640	.08010	.14610	-.03000	-.02800	-.01440	.02530	-6.96510
-.226	-4.924	-.18580	.33290	.15830	.07320	.10120	-.02360	-.02190	-.01000	-.03150	-4.86050
-.306	-.574	-.[illegible]	.33440	.15800	.04510	.01400	-.00730	-.00720	-.00170	-.11190	-.51070
-.249	3.519	-.[illegible]	.33551	.15730	.05390	-.07190	.01700	.01550	.00650	-.05500	3.58260
-.197	6.033	-.15110	.33520	.15660	.05820	-.12530	.02780	.02560	.01160	-.00260	6.09550
	GRADIENT	.00490	.00[illegible]	-.00012	-.00233	-.02050	.00480	.00442	.00195	-.00295	1.00004

RUN NO. 901/ 0 RN/L = 3.50 GRADIENT INTERVAL = -5.00/ 5.00

ALPHAT	BETAT	CNFTS	CATS	CAFTS	CLMFTS	CYFTS	CYNTS	CYNFTS	CBLFTS	ALFATU	BETATU
4.573	-5.925	-.06410	.32640	.15460	.08110	.14600	-.04080	-.03950	-.00430	4.44640	-6.08620
4.208	-3.730	-.05470	.32650	.15520	.07160	.09340	-.02910	-.02850	-.00340	4.11250	-3.91060
3.922	.212	-.02990	.32660	.15610	.04980	-.00150	-.00160	-.00160	-.00030	3.98560	.01770
4.127	4.062	-.03800	.32700	.15470	.06190	-.09070	.02420	.02320	.00250	4.30930	3.96850
4.090	6.095	-.04520	.32560	.15340	.06470	-.13910	.03480	.03330	.00380	4.28740	6.04100
	GRADIENT	.00216	.00006	-.00006	-.00126	-.02363	.00684	.00664	.00076	.02503	1.01111

IA156A, AEDC PWT 16T-470, O T S W/SILTS (R8NS48) (10 MAY 80)

REFERENCE DATA

SREF = 2690.0000 SQ.FT. XMRP = 976.0000 IN. XT
LREF = 1290.3000 INCHES YMRP = .0000 IN. YT
BREF = 1290.3000 INCHES ZMRP = 400.0000 IN. ZT
SCALE = .0200

PARAMETRIC DATA

IB-ELV = 10.000 OB-ELV = 5.000
BDFLAP = .000 SPDBRK = .000
RUDDER = .000 SILTS = 1.000
MACH = 1.150 RN/L = 3.500

RUN NO. 902/ 0 RN/L = 3.50 GRADIENT INTERVAL = -5.00/ 5.00

ALPHAT	BETAT	CNFTS	CATS	CAFTS	CLMFTS	CYFTS	CYNTS	CYNFTS	CBLFTS	ALFATU	BETATU
-8.577	-6.025	-.45360	.34140	.15490	.05570	.12140	-.01690	-.01470	-.02740	-8.40250	-6.13590
-8.594	-3.894	-.44730	.34210	.15590	.05310	.07920	-.01250	-.01100	-.01900	-8.44390	-4.03610
-8.451	.380	-.41210	.34710	.15950	.03520	-.00190	-.00240	-.00250	.00210	-8.39070	.18250
-8.376	4.349	-.42140	.34410	.15690	.04410	-.06860	.00420	.00280	.02010	-8.41310	4.14610
-8.308	6.270	-.42590	.33980	.15520	.04750	-.10410	.01010	.00800	.02650	-8.38110	6.07680
	GRADIENT	.00321	.00025	.00013	-.00113	-.01794	.00203	.00168	.00475	.00385	.99255

RUN NO. 903/ 0 RN/L = 3.49 GRADIENT INTERVAL = -5.00/ 5.00

ALPHAT	BETAT	CNFTS	CATS	CAFTS	CLMFTS	CYFTS	CYNTS	CYNFTS	CBLFTS	ALFATU	BETATU
-6.509	-6.113	-.37240	.33920	.15820	.05510	.11820	-.01710	-.01460	-.02430	-6.32060	-6.19740
-6.154	-3.823	-.34710	.33940	.16200	.05060	.07250	-.01250	-.01120	-.01520	-5.98510	-3.94270
-6.327	.139	-.32150	.34240	.15900	.03510	.00130	-.00410	-.00420	.00090	-6.25950	-.05630
-6.248	4.351	-.32880	.34270	.16360	.04200	-.07060	.00520	.00390	.01660	-6.31080	4.15390
-6.019	6.339	-.33090	.33870	.16120	.04640	-.10640	.01120	.00890	.02280	-6.12150	6.15910
	GRADIENT	.00220	.00040	.00021	-.00102	-.01750	.00217	.00185	.00389	-.03956	.99060

RUN NO. 904/ 0 RN/L = 3.50 GRADIENT INTERVAL = -5.00/ 5.00

ALPHAT	BETAT	CNFTS	CATS	CAFTS	CLMFTS	CYFTS	CYNTS	CYNFTS	CBLFTS	ALFATU	BETATU
-4.251	-6.216	-.30260	.33720	.16180	.06280	.11930	-.01910	-.01700	-.02060	-4.04900	-6.25860
-4.296	-3.900	-.28500	.33630	.16540	.05470	.07500	-.01530	-.01400	-.01350	-4.10780	-3.98550
-4.041	.251	-.24020	.33830	.16320	.03810	-.00260	-.00350	-.00370	.00090	-3.97780	.05460
-3.746	4.155	-.24470	.34070	.16560	.05020	-.06980	.00800	.00670	.01270	-3.84990	3.97560
-3.925	6.120	-.25920	.33940	.16440	.05390	-.10600	.01290	.01090	.01820	-4.05680	5.96060
	GRADIENT	.00506	.00055	.00002	-.00060	-.01798	.00289	.00257	.00325	.03201	.98818

RUN NO. 905/ 0 RN/L = 3.50 GRADIENT INTERVAL = -5.00/ 5.00

ALPHAT	BETAT	CNFTS	CATS	CAFTS	CLMFTS	CYFTS	CYNTS	CYNFTS	CBLFTS	ALFATU	BETATU
-.138	-7.029	-.19910	.33620	.16600	.08270	.15000	-.03300	-.03090	-.01420	.05740	-6.96170
-.200	-4.656	-.18270	.33380	.16670	.07420	.09640	-.02360	-.02210	-.00940	-.00380	-4.58990
-.275	-.604	-.14210	.33790	.16800	.04860	.01450	-.00780	-.00780	-.00170	-.07830	-.53950
-.206	3.536	-.14380	.33840	.16830	.05630	- 07130	.01650	.01500	.00640	-.01030	3.60150
-.200	5.781	-.15080	.33730	.16650	.06140	-.11850	.02550	.02340	.01030	-.00400	5.84750
	GRADIENT	.00473	.00056	.00019	-.00217	-.02047	.00490	.00453	.00193	-.00073	1.00003

IA156A, AEDC PWT 16T-470, 0 T S W/SILTS (R8NS48) (10 MAY 80)

REFERENCE DATA

SREF = 2690.0000 SQ.FT. XMRP = 976.0000 IN. XT
LREF = 1290.3000 INCHES YMRP = .0000 IN. YT
BREF = 1290.3000 INCHES ZMRP = 400.0000 IN. ZT
SCALE = .0200

PARAMETRIC DATA

IB-ELV = 10.000 OB-ELV = 5.000
BDFLAP = .000 SPDBRK = .000
RUDDER = .000 SILTS = 1.000
MACH = 1.150 RN/L = 3.500

RUN NO. 906/ 0 RN/L = 3.50 GRADIENT INTERVAL = -5.00/ 5.00

ALPHAT	BETAT	CNFTS	CATS	CAFTS	CLMFTS	CYFTS	CYNTS	CYNFTS	CBLFTS	ALFATU	BETATU
4.507	-5.741	-.07310	.32930	.16470	.08710	.14410	-.04150	-.04030	-.00490	4.38080	-5.90540
4.247	-3.569	-.06180	.32920	.16550	.07820	.09480	-.03150	-.03080	-.00370	4.15590	-3.75450
4.080	.209	-.03970	.32980	.16660	.06140	.00430	-.00570	-.00570	-.00050	4.14520	.01340
4.247	4.221	-.03610	.32990	.16620	.06450	-.09100	.02340	.02240	.00230	4.43220	4.12980
4.029	5.933	-.04580	.32960	.16450	.06680	-.13150	.03200	.03060	.00370	4.22810	5.87890
	GRADIENT	.00327	.00009	.00009	-.00173	-.02385	.00705	.00683	.00077	.03584	1.01225

IA156A, AEDC PWT 16T-470, 0 T S W/SILTS (R8NS49) (10 MAY 80)

REFERENCE DATA

SREF = 2690.0000 SQ.FT. XMRP = 976.0000 IN. XT
LREF = 1290.3000 INCHES YMRP = .0000 IN. YT
BREF = 1290.3000 INCHES ZMRP = 400.0000 IN. ZT
SCALE = .0200

PARAMETRIC DATA

IB-ELV = 10.000 OB-ELV = 5.000
BDFLAP = .000 SPDBRK = .000
RUDDER = .000 SILTS = 1.000
MACH = 1.250 RN/L = 3.500

RUN NO. 907/ 0 RN/L = 3.50 GRADIENT INTERVAL = -5.00/ 5.00

ALPHAT	BETAT	CNFTS	CATS	CAFTS	CLMFTS	CYFTS	CYNTS	CYNFTS	CBLFTS	ALFATU	BETATU
-8.267	-5.880	-.46050	.33640	.16580	.06870	.11160	-.01260	-.01070	-.02620	-8.08150	-5.99420
-8.574	-3.960	-.46260	.33710	.16710	.06640	.07290	-.00700	-.00560	-.01850	-8.41460	-4.10820
-8.439	.361	-.42640	.34170	.16890	.04840	-.00370	-.00100	-.00100	.00230	-8.37240	.15290
-8.321	4.406	-.42880	.33660	.16780	.05220	-.07140	.00410	.00290	.01970	-8.35980	4.19210
-8.252	6.334	-.43470	.33440	.16690	.05490	-.10640	.00840	.00650	.02660	-8.32830	6.13040
	GRADIENT	.00409	-.00005	.00009	-.00173	-.01725	.00133	.00102	.00457	.00659	.99202

RUN NO. 908/ 0 RN/L = 3.50 GRADIENT INTERVAL = -5.00/ 5.00

ALPHAT	BETAT	CNFTS	CATS	CAFTS	CLMFTS	CYFTS	CYNTS	CYNFTS	CBLFTS	ALFATU	BETATU
-6.245	-5.945	-.37690	.33290	.16850	.06660	.10780	-.01210	-.01020	-.02270	-6.04510	-6.03110
-6.494	-4.037	-.37720	.33460	.16980	.06410	.07100	-.00780	-.00660	-.01600	-6.31550	-4.16270
-6.283	.105	-.33550	.33730	.16970	.04830	-.00350	-.00100	-.00100	.00070	-6.20870	-.09940
-6.214	4.377	-.33860	.33640	.17220	.05000	-.07210	.00560	.00440	.01650	-6.27940	4.16950
-5.924	6.292	-.33350	.33400	.16900	.05030	-.10610	.00960	.00770	.02230	-6.03170	6.10220
	GRADIENT	.00456	.00021	.00029	-.00166	-.01700	.00159	.00131	.00386	.00418	.99024

IA156A, AEDC PWT 16T-470, O T S W/SILTS (R8NS49) (10 MAY 80)

REFERENCE DATA

SREF = 2690.0000 SQ.FT. XMRP = 976.0000 IN. XT
LREF = 1290.3000 INCHES YMRP = .0000 IN. YT
BREF = 1290.3000 INCHES ZMRP = 400.0000 IN. ZT
SCALE = .0200

PARAMETRIC DATA

IB-ELV = 10.000 OB-ELV = 5.000
BDFLAP = .000 SPDBRK = .000
RUDDER = .000 SILTS = 1.000
MACH = 1.250 RN/L = 3.500

RUN NO. 909/ 0 RN/L = 3.50 GRADIENT INTERVAL = -5.00/ 5.00

ALPHAT	BETAT	CNFTS	CATS	CAFTS	CLMFTS	CYFTS	CYNTS	CYNFTS	CBLFTS	ALFATU	BETATU
-4.312	-6.237	-.31760	.33280	.16990	.07240	.11210	-.01460	-.01260	-.02010	-4.09830	-6.28120
-4.223	-4.007	-.30050	.33280	.17240	.06870	.06930	-.01060	-.00950	-.01280	-4.02190	-4.09230
-4.148	.388	-.25790	.33480	.17320	.04940	-.00830	-.00050	-.00050	.00140	-4.08720	.17920
-3.859	4.253	-.25870	.33650	.17580	.05640	-.06960	.00730	.00620	.01260	-3.96580	4.06290
-3.976	6.286	-.26710	.33420	.17380	.05720	-.10620	.01150	.00970	.01830	-4.11480	6.11800
	GRADIENT	.00517	.00045	.00041	-.00156	-.01683	.00217	.00190	.00308	.00630	.98692

RUN NO. 910/ 0 RN/L = 3.50 GRADIENT INTERVAL = -5.00/ 5.00

ALPHAT	BETAT	CNFTS	CATS	CAFTS	CLMFTS	CYFTS	CYNTS	CYNFTS	CBLFTS	ALFATU	BETATU
-.111	-7.091	-.21210	.33180	.17670	.09540	.14650	-.02960	-.02770	-.01370	.09480	-7.01920
-.161	-4.764	-.19940	.32930	.17660	.08890	.09470	-.02120	-.01970	-.00930	.04510	-4.69370
-.192	-.574	-.16490	.33210	.17760	.06970	.01330	-.00690	-.00690	-.00140	.01380	-.50320
-.126	3.884	-.16310	.33170	.17710	.07620	-.07740	.01600	.01450	.00660	.07990	3.95480
-.103	5.807	-.16540	.33090	.17530	.07640	-.11620	.02200	.02000	.00990	.10350	5.87560
	GRADIENT	.00416	.00027	.00006	-.00144	-.01990	.00431	.00396	.00184	.00414	1.00000

RUN NO. 911/ 0 RN/L = 3.50 GRADIENT INTERVAL = -5.00/ 5.00

ALPHAT	BETAT	CNFTS	CATS	CAFTS	CLMFTS	CYFTS	CYNTS	CYNFTS	CBLFTS	ALFATU	BETATU
4.552	-5.777	-.07820	.32420	.17290	.09550	.14060	-.03910	-.03800	-.00470	4.41890	-5.94970
4.428	-3.856	-.06510	.32480	.17320	.08670	.09460	-.02880	-.02820	-.00360	4.32830	-4.04950
4.113	.150	-.05350	.32340	.17310	.07630	.00630	-.00270	-.00280	-.00040	4.18000	-.05790
3.992	3.853	-.06070	.32460	.17340	.08140	-.08520	.02320	.02230	.00250	4.18660	3.75560
4.212	6.160	-.05740	.32380	.17100	.08160	-.13890	.03460	.03310	.00370	4.42310	6.10460
	GRADIENT	.00060	-.00003	.00003	-.00071	-.02333	.00674	.00655	.00079	-.01864	1.01229

IA156A, AEDC PWT 16T-470, 0 T S W/SILTS (R8NS50) (10 MAY 80)

REFERENCE DATA

SREF = 2690.0000 SQ.FT. XMRP = 976.0000 IN. XT
LREF = 1290.3000 INCHES YMRP = .0000 IN. YT
BREF = 1290.3000 INCHES ZMRP = 400.0000 IN. ZT
SCALE = .0200

PARAMETRIC DATA

IB-ELV = 10.000 OB-ELV = 5.000
BDFLAP = .000 SPDBRK = .000
RUDDER = .000 SILTS = 1.000
MACH = 1.400 RN/L = 3.500

RUN NO. 912/ 0 RN/L = 3.50 GRADIENT INTERVAL = -5.00/ 5.00

ALPHAT	BETAT	CNFTS	CATS	CAFTS	CLMFTS	CYFTS	CYNTS	CYNFTS	CBLFTS	ALFATU	BETATU
-8.476	-6.114	-.49660	.32350	.17040	.08800	.11510	-.00790	-.00620	-.02700	-8.25350	-6.24810
-8.507	-3.971	-.48020	.32520	.17180	.08110	.06700	-.00020	.00110	-.01870	-8.31420	-4.14630
-8.251	.288	-.43200	.32830	.17510	.06100	-.00580	-.00100	-.00100	.00190	-8.16660	.04190
-8.115	4.404	-.44020	.32870	.17610	.06870	-.06690	-.00380	-.00490	.01990	-8.15970	4.14760
-8.076	6.309	-.44810	.32560	.17450	.07180	-.10510	.00120	-.00040	.02580	-8.16510	6.06490
	GRADIENT	.00481	.00042	.00051	-.00150	-.01599	-.00043	-.00072	.00461	.01854	.99024

RUN NO. 913/ 0 RN/L = 3.51 GRADIENT INTERVAL = -5.00/ 5.00

ALPHAT	BETAT	CNFTS	CATS	CAFTS	CLMFTS	CYFTS	CYNTS	CYNFTS	CBLFTS	ALFATU	BETATU
-6.338	-5.949	-.39270	.32270	.17510	.07480	.10190	-.00270	-.00100	-.02240	-6.09970	-6.05220
-6.206	-3.959	-.37480	.32440	.17490	.06860	.06130	.00100	.00200	-.01490	-5.99010	-4.10330
-6.356	.238	-.35070	.32550	.17820	.05540	-.00730	.00020	.00030	.00110	-6.26940	-.00670
-6.079	4.367	-.33980	.32640	.17990	.05640	-.06770	-.00280	-.00360	.01580	-6.15500	4.11840
-5.947	6.558	-.34520	.32400	.17800	.05940	-.10780	.00120	-.00050	.02230	-6.07640	6.[illegible]240
	GRADIENT	.00421	.00024	.00060	-.00147	-.01550	-.00046	-.00067	.00369	-.01994	.93752

RUN NO. 914/ 0 RN/L = 3.50 GRADIENT INTERVAL = -5.00/ 5.00

ALPHAT	BETAT	CNFTS	CATS	CAFTS	CLMFTS	CYFTS	CYNTS	CYNFTS	CBLFTS	ALFATU	BETATU
-4.112	-5.926	-.31000	.32270	.17900	.07440	.10280	-.00630	-.00480	-.01780	-3.85720	-5.97670
-4.107	-3.873	-.29460	.32240	.18080	.06880	.06210	-.00290	-.00210	-.01170	-3.86670	-3.97190
-4.171	.310	-.26870	.32380	.18230	.05520	-.00820	-.00020	-.00020	.00120	-4.08920	.06400
-3.793	4.353	-.25950	.32720	.18090	.06250	-.06650	-.00040	-.00110	.01190	-3.92050	4.12560
-3.943	6.427	-.26630	.32480	.18130	.06110	-.10560	.00430	.00270	.01710	-4.10840	6.22710
	GRADIENT	.00428	.00058	.00001	-.00078	-.01564	.00031	.00012	.00287	-.00681	.98430

RUN NO. 915/ 0 RN/L = 3.50 GRADIENT INTERVAL = -5.00/ 5.00

ALPHAT	BETAT	CNFTS	CATS	CAFTS	CLMFTS	CYFTS	CYNTS	CYNFTS	CBLFTS	ALFATU	BETATU
-.273	-7.114	-.21370	.32240	.18240	.09660	.14340	-.02400	-.02230	-.01270	-.02680	-7.03090
-.204	-4.666	-.19150	.31850	.18140	.08760	.08780	-.01520	-.01390	-.00830	.04170	-4.58080
-.212	-.678	-.16610	.31970	.18370	.07400	.01250	-.00510	-.00490	-.00150	.03410	-.59230
-.159	3.908	-.16630	.31950	.18170	.08050	-.07550	.01190	.01070	.00600	.08620	3.99370
-.202	5.829	-.16680	.32290	.18180	.07770	-.11520	.01790	.01620	.00930	.04330	5.91490
	GRADIENT	.00287	.00011	.00002	-.00077	-.01905	.00317	.00288	.00167	.00534	1.00003

IA156A, AEDC PWT 16T-470, 0 T S W/SILTS (R8NS50) (10 MAY 80)

REFERENCE DATA

SREF = 2690.0000 SQ.FT. XMRP = 976.0000 IN. XT
LREF = 1290.3000 INCHES YMRP = .0000 IN. YT
BREF = 1290.3000 INCHES ZMRP = 400.0000 IN. ZT
SCALE = .0200

PARAMETRIC DATA

IB-ELV = 10.000 OB-ELV = 5.000
BDFLAP = .000 SPDBRK = .000
RUDDER = .000 SILTS = 1.000
MACH = 1.400 RN/L = 3.500

RUN NO. 916/ 0 RN/L = 3.50 GRADIENT INTERVAL = -5.00/ 5.00

ALPHAT	BETAT	CNFTS	CATS	CAFTS	CLMFTS	CYFTS	CYNTS	CYNFTS	CBLFTS	ALFATU	BETATU
4.634	-5.776	-.08090	.31320	.17740	.10830	.13960	-.03910	-.03780	-.00440	4.47600	-5.98190
4.535	-3.799	-.06560	.31340	.17930	.09610	.09310	-.02960	-.02870	-.00330	4.41830	-4.03140
4.166	.177	-.06070	.31430	.18070	.08770	.00320	-.00610	-.00620	-.00060	4.24570	-.07030
4.083	3.975	-.05850	.31460	.17810	.08700	-.08340	.01980	.01900	.00200	4.31660	3.86140
4.024	5.920	-.06250	.31660	.17920	.08850	-.13080	.03140	.03000	.00350	4.27540	5.85670
	GRADIENT	.00092	.00015	-.00015	-.00118	-.02270	.00635	.00613	.00068	-.01332	1.01508

IA156A, AEDC PWT 16T-470, 0 T S W/SILTS (R8NS51) (10 MAY 80)

REFERENCE DATA

SREF = 2690.0000 SQ.FT. XMRP = 976.0000 IN. XT
LREF = 1290.3000 INCHES YMRP = .0000 IN. YT
BREF = 1290.3000 INCHES ZMRP = 400.0000 IN. ZT
SCALE = .0200

PARAMETRIC DATA

IB-ELV = 10.000 OB-ELV = 5.000
BDFLAP = .000 SPDBRK = .000
RUDDER = .000 SILTS = 1.000
MACH = 1.550 RN/L = 3.200

RUN NO. 917/ 0 RN/L = 3.19 GRADIENT INTERVAL = -5.00/ 5.00

ALPHAT	BETAT	CNFTS	CATS	CAFTS	CLMFTS	CYFTS	CYNTS	CYNFTS	CBLFTS	ALFATU	BETATU
-8.518	-6.062	-.49250	.30120	.16650	.09930	.11650	-.01080	-.00900	-.02540	-8.19880	-6.21760
-8.552	-3.906	-.48080	.30240	.16880	.09250	.07070	-.00400	-.00270	-.01820	-8.26780	-4.12070
-8.240	.429	-.44640	.30760	.17090	.07940	-.00370	-.00310	-.00300	.00190	-8.09480	.10310
-8.055	4.539	-.44780	.30720	.17410	.08290	-.07120	-.00130	-.00250	.01950	-8.08270	4.18340
-8.060	6.373	-.45080	.30380	.17240	.08230	-.10890	.00370	.00220	.02500	-8.14710	6.02820
	GRADIENT	.00394	.00057	.00063	-.00115	-.01681	.00032	.00002	.00447	.02208	.98328

RUN NO. 918/ 0 RN/L = 3.19 GRADIENT INTERVAL = -5.00/ 5.00

ALPHAT	BETAT	CNFTS	CATS	CAFTS	CLMFTS	CYFTS	CYNTS	CYNFTS	CBLFTS	ALFATU	BETATU
-6.215	-5.852	-.38420	.30320	.17020	.08100	.10560	-.00790	-.00630	-.02070	-5.87380	-5.95950
-6.388	-3.994	-.37890	.30310	.17150	.07720	.06590	-.00290	-.00200	-.01470	-6.07600	-4.16520
-6.184	.231	-.34940	.30440	.17380	.06780	-.00530	-.00170	-.00170	.00100	-6.02800	-.08960
-6.048	4.515	-.34890	.30840	.17530	.06880	-.07110	-.00060	-.00150	.01530	-6.11930	4.16570
-5.964	6.657	-.35570	.30880	.17580	.07140	-.11390	.00560	.00390	.02160	-6.10760	6.33110
	GRADIENT	.00352	.00062	.00045	-.00098	-.01610	.00027	.00006	.00353	-.00513	.97912

IA156A, AEDC PWT 16T-470, O T S W/SILTS (R8NS51) (10 MAY 80)

REFERENCE DATA

SREF = 2690.0000 SQ.FT. XMRP = 976.0000 IN. XT
LREF = 1290.3000 INCHES YMRP = .0000 IN. YT
BREF = 1290.3000 INCHES ZMRP = 400.0000 IN. ZT
SCALE = .0200

PARAMETRIC DATA

IB-ELV = 10.000 OB-ELV = 5.000
BDFLAP = .000 SPDBRK = .000
RUDDER = .000 SILTS = 1.000
MACH = 1.550 RN/L = 3.200

RUN NO. 919/ 0 RN/L = 3.20 GRADIENT INTERVAL = -5.00/ 5.00

ALPHAT	BETAT	CNFTS	CATS	CAFTS	CLMFTS	CYFTS	CYNTS	CYNFTS	CBLFTS	ALFATU	BETATU
-4.217	-5.932	-.30520	.30180	.17480	.07530	.10510	-.01020	-.00870	-.01670	-3.86240	-5.96880
-4.475	-4.137	-.30140	.30140	.17420	.07030	.06940	-.00570	-.00480	-.01170	-4.13440	-4.24230
-4.016	.334	-.26400	.30350	.17580	.06120	-.00790	-.00110	-.00110	.00100	-3.86580	.01170
-3.711	4.621	-.25970	.30780	.17800	.06580	-.07340	.00260	.00180	.01140	-3.86300	4.29860
-3.687	6.280	-.26520	.30790	.17860	.06780	-.10560	.00780	.00630	.01530	-3.88770	5.98510
	GRADIENT	.00479	.00073	.00043	-.00052	-.01631	.00095	.00075	.00264	.03120	.97496

RUN NO. 920/ 0 RN/L = 3.19 GRADIENT INTERVAL = -5.00/ 5.00

ALPHAT	BETAT	CNFTS	CATS	CAFTS	CLMFTS	CYFTS	CYNTS	CYNFTS	CBLFTS	ALFATU	BETATU
-.364	-7.104	-.20500	.30260	.17700	.09330	.14040	-.02500	-.02340	-.01160	-.03920	-6.95860
-.331	-4.702	-.18610	.29900	.17580	.08640	.08690	-.01510	-.01400	-.00740	-.00650	-4.55610
-.298	-.634	-.16270	.30060	.17900	.07480	.00960	-.00300	-.00290	-.00110	.02590	-.48490
-.297	3.510	-.15780	.30480	.18070	.07240	-.06870	.01170	.01080	.00510	.02670	3.65890
-.330	5.655	-.15720	.30580	.18060	.06930	-.11260	.01980	.01810	.00830	-.00580	5.80480
	GRADIENT	.00344	.00071	.00060	-.00170	-.01895	.00326	.00302	.00152	.00403	1.00034

RUN NO. 921/ 0 RN/L = 3.19 GRADIENT INTERVAL = -5.00/ 5.00

ALPHAT	BETAT	CNFTS	CATS	CAFTS	CLMFTS	CYFTS	CYNTS	CYNFTS	CBLFTS	ALFATU	BETATU
4.520	-5.512	-.07250	.30200	.17760	.10520	.13350	-.03860	-.03730	-.00350	4.33200	-5.81410
4.373	-3.554	-.06030	.30050	.17890	.09260	.08610	-.02750	-.02660	-.00260	4.24550	-3.88640
4.004	.342	-.05820	.29830	.17790	.08530	-.00160	-.00450	-.00470	-.00040	4.15280	.01730
4.082	4.102	-.05040	.30010	.17600	.08280	-.08360	.01830	.01730	.00160	4.41620	3.97500
3.967	6.145	-.05050	.30010	.17740	.08180	-.13330	.03030	.02890	.00310	4.31950	6.09300
	GRADIENT	.00129	-.00006	-.00038	-.00128	-.02217	.00598	.00573	.00055	.02202	1.02675

IA156A, AEDC PWT 16T-470, 0 T S W/SILTS (R8NS52) (10 MAY 80)

REFERENCE DATA

SREF = 2690.0000 SQ.FT. XMRP = 976.0000 IN. XT
LREF = 1290.3000 INCHES YMRP = .0000 IN. YT
BREF = 1290.3000 INCHES ZMRP = 400.0000 IN. ZT
SCALE = .0200

PARAMETRIC DATA

IB-ELV = 10.000 OB-ELV = 9.000
BDFLAP = .000 SPDBRK = .000
RUDDER = .000 SILTS = 1.000
MACH = .300 RN/L = 3.500

RUN NO. 928/ 0 RN/L = 2.68 GRADIENT INTERVAL = -5.00/ 5.00

ALPHAT	BETAT	CNFTS	CATS	CAFTS	CLMFTS	CYFTS	CYNTS	CYNFTS	CBLFTS	ALFATU	BETATU
-5.977	-10.055	-.30860	.21370	.06210	.06600	.13280	.00110	.00420	-.02810	-5.83870	-10.21880
-6.318	-6.035	-.30670	.21070	.05790	.05700	.06090	.00410	.00630	-.01800	-6.22810	-6.22950
-6.180	.353	-.27720	.20930	.06840	.04850	-.01380	.00150	.00130	.00210	-6.26150	.15480
-5.727	6.132	-.26310	.21380	.07230	.05040	-.06650	-.00220	-.00420	.01600	-5.92480	6.04960
-5.843	10.069	-.26200	.21580	.06090	.04990	-.12060	.00150	-.00150	.02430	-6.05460	10.03470
	GRADIENT	.00000	.00000	.00000	.00000	.00000	.00000	.00000	.00000	.00000	.00000

RUN NO. 929/ 0 RN/L = 2.68 GRADIENT INTERVAL = -5.00/ 5.00

ALPHAT	BETAT	CNFTS	CATS	CAFTS	CLMFTS	CYFTS	CYNTS	CYNFTS	CBLFTS	ALFATU	BETATU
-.285	-10.514	-.18060	.21780	.07140	.06950	.17010	-.02420	-.02190	-.01680	-.08550	-10.59160
-.258	-6.432	-.17260	.20870	.07560	.06410	.09030	-.01120	-.00920	-.01010	-.05840	-6.50940
-.210	-.468	-.15420	.21000	.07500	.05820	-.00240	-.00060	-.00050	-.00060	-.01010	-.54480
-.185	5.615	-.14520	.20910	.07120	.06160	-.09380	.01600	.01410	.00670	.01470	5.53880
-.137	9.980	-.13600	.21490	.07340	.05850	-.16610	.02640	.02420	.01160	.06290	9.90350
	GRADIENT	.00000	.00000	.00000	.00000	.00000	.00000	.00000	.00000	.00000	.00000

RUN NO. 930/ 0 RN/L = 2.68 GRADIENT INTERVAL = -5.00/ 5.00

ALPHAT	BETAT	CNFTS	CATS	CAFTS	CLMFTS	CYFTS	CYNTS	CYNFTS	CBLFTS	ALFATU	BETATU
6.232	-10.003	-.02060	.20210	.06710	.07060	.22000	-.05710	-.05560	-.00020	6.02050	-10.03720
6.064	-5.890	-.01850	.19730	.07060	.07090	.12750	-.03410	-.03280	.00070	5.86630	-5.97330
5.920	.243	-.00690	.19780	.06760	.06680	-.00300	-.00090	-.00090	-.00060	5.84500	.04220
6.129	6.257	.00700	.20140	.06870	.06340	-.12780	.03220	.03070	-.00290	6.21710	6.06210
5.897	10.123	.01380	.20470	.06930	.05350	-.20280	.04700	.04540	-.00200	6.03060	9.95570
	GRADIENT	.00000	.00000	.00000	.00000	.00000	.00000	.00000	.00000	.00000	.00000

IA156A, AEDC PWT 16T-470, O T S W/SILTS (R8NS53) (10 MAY 80)

REFERENCE DATA

SREF = 2690.0000 SQ.FT. XMRP = 976.0000 IN. XT
LREF = 1290.3000 INCHES YMRP = .0000 IN. YT
BREF = 1290.3000 INCHES ZMRP = 400.0000 IN. ZT
SCALE = .0200

PARAMETRIC DATA

IB-ELV = 10.000 OB-ELV = 9.000
BDFLAP = .000 SPDBRK = .000
RUDDER = .000 SILTS = 1.000
MACH = .300 RN/L = 3.500

RUN NO. 927/ 0 RN/L = 2.67 GRADIENT INTERVAL = -5.00/ 5.00

ALPHAT	BETAT	CNFTS	CATS	CAFTS	CLMFTS	CYFTS	CYNTS	CYNFTS	CBLFTS	ALFATU	BETATU
-10.110	-7.893	-.42560	.21070	.05300	.06580	.07890	.00820	.01140	-.03000	-10.04080	-8.09560
-10.111	-5.737	-.41280	.21070	.04390	.05860	.06070	.00380	.00610	-.02200	-10.07230	-5.94740
-9.855	.238	-.40440	.21010	.05160	.05960	-.01050	.00310	.00300	.00150	-9.93260	.03810
-9.991	6.301	-.38850	.21500	.05690	.05100	-.06490	-.00380	-.00600	.02270	-10.16170	6.17230
-10.000	8.102	-.38880	.21510	.04850	.05240	-.08140	-.00690	-.01010	.02870	-10.18500	7.99440
	GRADIENT	.00000	.00000	.00000	.00000	.00000	.00000	.00000	.00000	.00000	.00000

RUN NO. 931/ 0 RN/L = 2.68 GRADIENT INTERVAL = -5.00/ 5.00

ALPHAT	BETAT	CNFTS	CATS	CAFTS	CLMFTS	CYFTS	CYNTS	CYNFTS	CBLFTS	ALFATU	BETATU
10.066	-7.976	.08720	.19090	.05910	.06740	.18060	-.04930	-.04800	.00660	9.87820	-8.07930
10.136	-5.647	.09090	.18980	.06140	.06630	.12740	-.03550	-.03430	.00530	9.96830	-5.78000
10.019	.283	.08420	.19350	.06490	.07350	.00210	-.00400	-.00390	-.00060	9.94430	.08210
10.093	6.311	.10650	.19200	.06330	.06170	-.12740	.03130	.03000	-.00660	10.13340	6.10040
9.861	8.152	.10730	.19170	.05880	.05560	-.16690	.04140	.04010	-.00790	9.92940	7.94870
	GRADIENT	.00000	.00000	.00000	.00000	.00000	.00000	.00000	.00000	.00000	.00000

IA156A, AEDC PWT 16T-470, O T S W/SILTS (R8NS54) (10 MAY 80)

REFERENCE DATA

SREF = 2690.0000 SQ.FT. XMRP = 976.0000 IN. XT
LREF = 1290.3000 INCHES YMRP = .0000 IN. YT
BREF = 1290.3000 INCHES ZMRP = 400.0000 IN. ZT
SCALE = .0200

PARAMETRIC DATA

IB-ELV = 10.000 OB-ELV = 9.000
BDFLAP = .000 SPDBRK = .000
RUDDER = .000 SILTS = 1.000
MACH = .600 RN/L = 3.500

RUN NO. 932/ 0 RN/L = 3.50 GRADIENT INTERVAL = -5.00/ 5.00

ALPHAT	BETAT	CNFTS	CATS	CAFTS	CLMFTS	CYFTS	CYNTS	CYNFTS	CBLFTS	ALFATU	BETATU
-8.151	-7.887	-.38060	.20760	.05540	.06560	.09500	.00310	.00620	-.02770	-8.06030	-8.07730
-8.109	-5.781	-.37330	.20970	.05670	.06070	.06770	.00210	.00450	-.02090	-8.04820	-5.98280
-7.988	-3.711	-.36100	.21030	.06040	.05760	.04500	-.00080	.00060	-.01320	-7.96450	-3.91990
-7.989	.271	-.35640	.21370	.05980	.05410	-.00680	.00010	.00010	.00150	-8.06820	.07510
-7.963	4.204	-.34230	.21420	.06280	.04980	-.05410	.00150	.00020	.01440	-8.12130	4.06530
-7.906	6.113	-.34190	.21320	.06050	.05040	-.07520	-.00010	-.00230	.02080	-8.08720	6.00500
-7.816	8.197	-.34110	.21350	.05810	.05250	-.10110	-.00030	-.00320	.02660	-8.01150	8.11810
	GRADIENT	.00236	.00049	.00030	-.00099	-.01252	.00029	-.00005	.00349	-.01982	1.00886

IA156A, AEDC PWT 16T-470, 0 T S W/SILTS (R8NS54) (10 MAY 80)

REFERENCE DATA

SREF = 2690.0000 SQ.FT. XMRP = 976.0000 IN. XT
LREF = 1290.3000 INCHES YMRP = .0000 IN. YT
BREF = 1290.3000 INCHES ZMRP = 400.0000 IN. ZT
SCALE = .0200

PARAMETRIC DATA

18-ELV =	10.000	OB-ELV =	9.000
BDFLAP =	.000	SPDBRK =	.000
RUDDER =	.000	SILTS =	1.000
MACH =	.600	RN/L =	3.500

RUN NO. 933/ 0 RN/L = 3.51 GRADIENT INTERVAL = -5.00/ 5.00

ALPHAT	BETAT	CNFTS	CATS	CAFTS	CLMFTS	CYFTS	CYNTS	CYNFTS	CBLFTS	ALFATU	BETATU
-5.985	-7.774	-.31960	.20990	.06130	.06580	.09970	.00000	.00290	-.02350	-5.86910	-7.94910
-6.142	-5.871	-.31540	.21010	.06410	.06130	.07190	.00000	.00230	-.01820	-6.05310	-6.06230
-6.068	-3.841	-.31010	.21070	.06480	.05860	.04410	-.00050	.00080	-.01160	-6.01750	-4.04560
-6.182	.117	-.29290	.21090	.06460	.05060	-.00920	.00070	.00070	.00140	-6.25410	-.08090
-5.958	4.214	-.28300	.21370	.06710	.05190	-.05440	.00150	.00010	.01250	-6.13230	4.09650
-5.754	6.043	-.28050	.21310	.06620	.05290	-.07710	.00160	-.00040	.01730	-5.94880	5.96220
-5.760	8.353	-.27950	.21480	.06510	.05300	-.10990	.00410	.00140	.02250	-5.96550	8.30480
	GRADIENT	.00336	.00037	.00029	-.00082	-.01222	.00025	-.00009	.00299	-.01399	1.01080

RUN NO. 934/ 0 RN/L = 3.51 GRADIENT INTERVAL = -5.00/ 5.00

ALPHAT	BETAT	CNFTS	CATS	CAFTS	CLMFTS	CYFTS	CYNTS	CYNFTS	CBLFTS	ALFATU	BETATU
-4.059	-7.913	-.27560	.21050	.06620	.06910	.10850	-.00430	-.00160	-.02030	-3.91230	-8.06480
-4.030	-5.803	-.26470	.20970	.06590	.06470	.07320	-.00220	-.00010	-.01480	-3.90460	-5.97130
-4.089	-3.796	-.25780	.20970	.06950	.06030	.04670	-.00310	-.00180	-.00950	-3.99950	-3.98620
-3.835	.210	-.22970	.20940	.06860	.05150	-.00860	.00020	-.00010	.00130	-3.91040	.01380
-3.896	4.287	-.23140	.21270	.07050	.05690	-.05780	.00360	.00220	.01030	-4.09110	4.20760
-3.796	6.010	-.22660	.21280	.06940	.05690	-.08280	.00560	.00350	.01380	-4.00290	5.96720
-3.695	7.939	-.22540	.21390	.06710	.05520	-.11180	.00890	.00640	.01760	-3.90550	7.92340
	GRADIENT	.00326	.00037	.00012	-.00042	-.01293	.00083	.00050	.00245	-.01143	1.01380

RUN NO. 935/ 0 RN/L = 3.51 GRADIENT INTERVAL = -5.00/ 5.00

ALPHAT	BETAT	CNFTS	CATS	CAFTS	CLMFTS	CYFTS	CYNTS	CYNFTS	CBLFTS	ALFATU	BETATU
-.133	-8.770	-.18800	.21360	.06960	.07590	.14970	-.02340	-.02130	-.01440	.06390	-8.84480
-.189	-6.758	-.18430	.21000	.07180	.07490	.11010	-.01690	-.01470	-.01100	.00760	-6.83410
-.184	-4.427	-.17510	.20710	.07040	.07120	.06960	-.01230	-.01060	-.00700	.01290	-4.50200
-.179	-.164	-.15520	.20970	.07300	.06200	.00010	-.00200	-.00200	-.00010	.01750	-.23950
-.139	3.871	-.15170	.20970	.07350	.06620	-.06570	.01150	.01000	.00510	.05710	3.79530
-.089	5.722	-.14700	.20980	.07420	.06550	-.09650	.01740	.01550	.00730	.10660	5.64470
-.163	7.863	-.14650	.21160	.07100	.06180	-.13210	.02170	.01950	.01070	.03420	7.79040
	GRADIENT	.00284	.00032	.00038	-.00062	-.01630	.00286	.00243	.00146	.00529	.99988

IA156A, AEDC PWT 16T-470, 0 T S W/SILTS (R8NS54) (10 MAY 80)

REFERENCE DATA

SREF = 2690.0000 SQ.FT. XMRP = 976.0000 IN. XT
LREF = 1290.3000 INCHES YMRP = .0000 IN. YT
BREF = 1290.3000 INCHES ZMRP = 400.0000 IN. ZT
SCALE = .0200

PARAMETRIC DATA

IB-ELV = 10.000 OB-ELV = 9.000
BDFLAP = .000 SPDBRK = .000
RUDDER = .000 SILTS = 1.000
MACH = .600 RN/L = 3.500

RUN NO. 936/ 0 RN/L = 3.51 GRADIENT INTERVAL = -5.00/ 5.00

ALPHAT	BETAT	CNFTS	CATS	CAFTS	CLMFTS	CYFTS	CYNTS	CYNFTS	CBLFTS	ALFATU	BETATU
4.277	-7.800	-.07490	.20560	.07180	.07700	.16370	-.04050	-.03880	-.00350	4.06710	-7.81840
4.314	-5.713	-.06270	.20210	.07080	.07470	.11800	-.03070	-.02920	-.00180	4.10900	-5.76010
4.279	-3.756	-.05830	.20100	.07130	.07260	.07770	-.02120	-.02020	-.00110	4.08570	-3.84120
4.078	.207	-.05000	.20160	.06900	.06400	-.00260	-.00120	-.00130	-.00030	4.00100	.01100
4.108	4.189	-.04820	.20300	.06990	.06630	-.07740	.01830	.01710	.00020	4.19370	3.99650
4.044	6.128	-.04620	.20350	.06990	.06500	-.11820	.02800	.02630	.00100	4.16640	5.95730
3.936	7.973	-.04370	.20670	.07000	.06180	-.15430	.03540	.03340	.00210	4.07940	7.81850
	GRADIENT	.00127	.00025	-.00018	-.00079	-.01952	.00497	.00469	.00016	.01362	.98643

RUN NO. 937/ 0 RN/L = 3.51 GRADIENT INTERVAL = -5.00/ 5.00

ALPHAT	BETAT	CNFTS	CATS	CAFTS	CLMFTS	CYFTS	CYNTS	CYNFTS	CBLFTS	ALFATU	BETATU
6.445	-7.973	-.01600	.20020	.06740	.07320	.17340	-.04580	-.04440	.00060	6.24290	-8.02960
6.283	-5.801	-.01930	.19810	.06940	.07420	.12380	-.03330	-.03200	.00060	6.08960	-5.88490
6.405	-3.859	-.01370	.19720	.06640	.07580	.07990	-.02220	-.02130	.00070	6.23250	-3.97920
6.195	.214	-.00890	.20070	.06790	.07100	-.00610	.00040	.00040	-.00040	6.11920	.01740
5.979	4.071	-.00590	.19960	.06850	.06820	-.08090	.01940	.01830	-.00120	6.02640	3.86580
6.133	6.136	.00030	.20050	.06800	.06570	-.12350	.03050	.02890	-.00160	6.22150	5.94510
5.972	8.217	.00860	.20400	.06820	.06060	-.16550	.04050	.03870	-.00140	6.08850	8.04190
	GRADIENT	.00099	.00031	.00027	-.00096	-.02029	.00525	.00500	-.00024	-.02601	.98928

RUN NO. 938/ 0 RN/L = 3.51 GRADIENT INTERVAL = -5.00/ 5.00

ALPHAT	BETAT	CNFTS	CATS	CAFTS	CLMFTS	CYFTS	CYNTS	CYNFTS	CBLFTS	ALFATU	BETATU
8.337	-8.047	.03570	.19600	.06330	.07020	.18170	-.04900	-.04760	.00350	8.14270	-8.12760
8.255	-5.775	.03680	.19350	.06540	.07270	.12630	-.03490	-.03360	.00320	8.07660	-5.88570
8.470	-3.949	.04150	.19380	.06530	.07520	.08230	-.02290	-.02190	.00250	8.31360	-4.08890
8.151	.177	.03990	.19830	.06500	.07350	-.00350	-.00030	-.00030	-.00030	8.07580	-.01920
8.318	4.174	.05700	.19560	.06460	.06770	-.08190	.01990	.01880	-.00290	8.33890	3.96390
7.989	6.092	.05200	.19660	.06320	.06480	-.12340	.03120	.02980	-.00380	8.05080	5.89170
8.254	8.227	.07100	.19860	.06400	.05780	-.16920	.04340	.04190	-.00490	8.34310	8.03700
	GRADIENT	.00190	.00023	-.00009	-.00092	-.02022	.00527	.00501	-.00066	.00279	.99139

IA156A, AEDC PWT 16T-470, 0 T S W/SILTS (R8NS55) (10 MAY 80)

REFERENCE DATA

SREF = 2690.0000 SQ.FT. XMRP = 976.0000 IN. XT
LREF = 1290.3000 INCHES YMRP = .0000 IN. YT
BREF = 1290.3000 INCHES ZMRP = 400.0000 IN. ZT
SCALE = .0200

PARAMETRIC DATA

IB-ELV = 10.000 OB-ELV = 9.000
BDFLAP = .000 SPDBRK = .000
RUDDER = .000 SILTS = 1.000
MACH = .800 RN/L = 3.500

RUN NO. 939/ 0 RN/L = 3.51 GRADIENT INTERVAL = -5.00/ 5.00

ALPHAT	BETAT	CNFTS	CATS	CAFTS	CLMFTS	CYFTS	CYNTS	CYNFTS	CBLFTS	ALFATU	BETATU
-8.449	-6.025	-.40590	.21900	.06990	.06700	.08400	-.00590	-.00320	-.02250	-8.29180	-6.16110
-8.354	-3.889	-.40040	.22710	.06690	.06470	.05760	-.00640	-.00470	-.01520	-8.22500	-4.05210
-8.184	.371	-.37210	.22680	.07280	.05480	-.00850	.00030	.00040	.00210	-8.14910	.16590
-8.146	4.291	-.36920	.22540	.07150	.05100	-.05750	.00360	.00230	.01530	-8.20830	4.09270
-8.062	6.220	-.36500	.22210	.06960	.05150	-.08140	.00320	.00080	.02150	-8.15860	6.03570
	GRADIENT	.00385	-.00021	.00057	-.00168	-.01409	.00123	.00086	.00373	.00227	.99562

RUN NO. 940/ 0 RN/L = 3.50 GRADIENT INTERVAL = -5.00/ 5.00

ALPHAT	BETAT	CNFTS	CATS	CAFTS	CLMFTS	CYFTS	CYNTS	CYNFTS	CBLFTS	ALFATU	BETATU
-6.305	-6.043	-.33850	.22250	.07370	.06740	.08920	-.00840	-.00570	-.02000	-6.13030	-6.15510
-6.210	-3.950	-.33030	.22410	.07590	.06480	.05590	-.00680	-.00530	-.01280	-6.06010	-4.09340
-6.047	.153	-.29630	.22400	.07590	.05020	-.00790	.00040	.00050	.00110	-6.00650	-.05070
-6.117	4.309	-.29980	.22460	.07660	.05170	-.06080	.00540	.00400	.01290	-6.20260	4.12020
-5.816	6.224	-.29520	.22300	.07600	.05270	-.08660	.00710	.00480	.01780	-5.94000	6.05730
	GRADIENT	.00368	.00006	.00008	-.00158	-.01413	.00148	.00113	.00311	-.01732	.99452

RUN NO. 941/ 0 RN/L = 3.50 GRADIENT INTERVAL = -5.00/ 5.00

ALPHAT	BETAT	CNFTS	CATS	CAFTS	CLMFTS	CYFTS	CYNTS	CYNFTS	CBLFTS	ALFATU	BETATU
-4.237	-6.163	-.28750	.22200	.07720	.07170	.09230	-.00980	-.00730	-.01670	-4.04290	-6.23740
-4.205	-3.920	-.27360	.22260	.08020	.06700	.05710	-.00840	-.00690	-.01040	-4.03070	-4.03260
-3.964	.253	-.23120	.22100	.07910	.04920	-.00750	.00040	.00030	.00100	-3.92770	.04850
-3.715	4.160	-.23090	.22340	.08030	.05610	-.06120	.00710	.00580	.00980	-3.83940	3.99310
-3.911	6.123	-.23850	.22240	.08000	.05700	-.09080	.01010	.00790	.01460	-4.06120	5.97980
	GRADIENT	.00534	.00009	.00001	-.00138	-.01465	.00192	.00157	.00250	.02369	.99317

RUN NO. 942/ 0 RN/L = 3.51 GRADIENT INTERVAL = -5.00/ 5.00

ALPHAT	BETAT	CNFTS	CATS	CAFTS	CLMFTS	CYFTS	CYNTS	CYNFTS	CBLFTS	ALFATU	BETATU
-.163	-6.703	-.19670	.22370	.08130	.07900	.12030	-.02250	-.02040	-.01190	.04080	-6.66370
-.206	-4.755	-.19060	.22080	.08220	.07530	.08370	-.01750	-.01580	-.00860	-.00150	-4.71770
-.207	-.321	-.15990	.21520	.08020	.05820	.00300	-.00230	-.00220	-.00080	-.00290	-.28300
-.167	3.764	-.15640	.21900	.08230	.06190	-.06990	.01470	.01320	.00590	.03690	3.80280
-.172	5.622	-.16000	.22040	.08170	.06410	-.10480	.02170	.01970	.00900	.03190	5.66130
	GRADIENT	.00406	-.00023	.00001	-.00161	-.01803	.00377	.00340	.00170	.00444	1.00018

IA156A, AEDC PWT 16T-470, O T S W/SILTS (R8NS55) (10 MAY 80)

REFERENCE DATA

SREF = 2690.0000 SQ.FT. XMRP = 976.0000 IN. XT
LREF = 1290.3000 INCHES YMRP = .0000 IN. YT
BREF = 1290.3000 INCHES ZMRP = 400.0000 IN. ZT
SCALE = .0200

PARAMETRIC DATA

IB-ELV = 10.000 OB-ELV = 9.000
BDFLAP = .000 SPDBRK = .000
RUDDER = .000 SILTS = 1.000
MACH = .800 RN/L = 3.500

RUN NO. 943/ 0 RN/L = 3.50 GRADIENT INTERVAL = -5.00/ 5.00

ALPHAT	BETAT	CNFTS	CATS	CAFTS	CLMFTS	CYFTS	CYNTS	CYNFTS	CBLFTS	ALFATU	BETATU
4.218	-5.682	-.06830	.21350	.07920	.07440	.12780	-.03350	-.03190	-.00260	4.06740	-5.82520
4.207	-3.684	-.05970	.21270	.07880	.07300	.08240	-.02360	-.02250	-.00150	4.08770	-3.85350
4.196	.116	-.03050	.20930	.07850	.05720	.00130	-.00230	-.00230	-.00030	4.23020	-.08900
4.055	4.101	-.03870	.21310	.07830	.06250	-.08210	.02130	.02000	.00060	4.22740	3.98580
3.966	6.101	-.04140	.21530	.08000	.06100	-.12600	.03200	.03010	.00170	4.15820	6.02380
	GRADIENT	.00266	.00006	-.00006	-.00133	-.02113	.00577	.00546	.00027	.01779	1.00714

RUN NO. 944/ 0 RN/L = 3.51 GRADIENT INTERVAL = -5.00/ 5.00

ALPHAT	BETAT	CNFTS	CATS	CAFTS	CLMFTS	CYFTS	CYNTS	CYNFTS	CBLFTS	ALFATU	BETATU
6.398	-5.860	-.00490	.21040	.07680	.06780	.13430	-.03730	-.03590	.00060	6.27840	-6.02970
6.456	-3.853	.00380	.20890	.07670	.06700	.08833	-.02600	-.02490	.00080	6.37280	-4.04290
6.212	.186	.01500	.20880	.07690	.05620	-.00090	-.00260	-.00260	-.00040	6.24920	-.01840
6.048	4.009	.01160	.20970	.07630	.05850	-.08050	.02070	.01950	-.00120	6.19370	3.86060
6.170	6.140	.02510	.21220	.07650	.05440	-.12680	.03340	.03170	-.00170	6.34260	6.02420
	GRADIENT	.00101	.00010	-.00005	-.00110	-.02148	.00594	.00565	-.00025	-.02286	1.00525

IA156A, AEDC PWT 16T-470, O T S W/SILTS (R8NS56) (10 MAY 80)

REFERENCE DATA

SREF = 2690.0000 SQ.FT. XMRP = 976.0000 IN. XT
LREF = 1290.3000 INCHES YMRP = .0000 IN. YT
BREF = 1290.3000 INCHES ZMRP = 400.0000 IN. ZT
SCALE = .0200

PARAMETRIC DATA

IB-ELV = 10.000 OB-ELV = 9.000
BDFLAP = .000 SPDBRK = .000
RUDDER = .000 SILTS = 1.000
MACH = .900 RN/L = 3.500

RUN NO. 952/ 0 RN/L = 3.51 GRADIENT INTERVAL = -5.00/ 5.00

ALPHAT	BETAT	CNFTS	CATS	CAFTS	CLMFTS	CYFTS	CYNTS	CYNFTS	CBLFTS	ALFATU	BETATU
-8.323	-5.928	-.42010	.24330	.08060	.06560	.09860	-.01380	-.01150	-.02280	-8.15800	-6.05230
-8.108	-3.741	-.40270	.24490	.08220	.06310	.06340	-.01130	-.01010	-.01410	-7.96870	-3.89420
-8.263	.267	-.38600	.24790	.08240	.05320	-.00480	-.00060	-.00040	.00160	-8.21270	.06640
-8.210	4.361	-.37980	.24270	.08140	.04750	-.06460	.00750	.00630	.01640	-8.26050	4.16060
-8.217	6.210	-.38010	.24050	.08110	.04660	-.09240	.00910	.00700	.02280	-8.30010	6.02040
	GRADIENT	.00282	-.00028	-.00010	-.00192	-.01579	.00232	.00202	.00376	-.03593	.99416

IA156A FORCE DATA WITH FLOW ANGULARITY CORRECTION

IA156A, AEDC PWT 16T-470, 0 T S W/SILTS (R8NS56) (10 MAY 80)

REFERENCE DATA

SREF = 2690.0000 SQ.FT. XMRP = 976.0000 IN. XT
LREF = 1290.3000 INCHES YMRP = .0000 IN. YT
BREF = 1290.3000 INCHES ZMRP = 400.0000 IN. ZT
SCALE = .0200

PARAMETRIC DATA

IB-ELV =	10.000	OB-ELV =	9.000
BDFLAP =	.000	SPDBRK =	.000
RUDDER =	.000	SILTS =	1.000
MACH =	.900	RN/L =	3.500

RUN NO. 953/ 0 RN/L = 3.50 GRADIENT INTERVAL = -5.00/ 5.00

ALPHAT	BETAT	CNFTS	CATS	CAFTS	CLMFTS	CYFTS	CYNTS	CYNFTS	CBLFTS	ALFATU	BETATU
-6.224	-6.029	-.35160	.24390	.08580	.06520	.10250	-.01500	-.01270	-.02020	-6.04180	-6.12610
-6.110	-3.982	-.33360	.24400	.08770	.06160	.06810	-.01290	-.01170	-.01290	-5.94870	-4.11180
-6.060	.154	-.30280	.24340	.08540	.04650	-.00440	-.00080	-.00060	.00080	-6.00640	-.04520
-6.069	4.205	-.30390	.24220	.08680	.04750	-.06670	.00900	.00780	.01350	-6.14140	4.01140
-5.886	6.189	-.30640	.24190	.08250	.04930	-.09740	.01130	.00910	.01930	-5.99750	6.01530
	GRADIENT	.00364	-.00022	-.00011	-.00173	-.01647	.00268	.00238	.00322	-.02350	.99218

RUN NO. 954/ 0 RN/L = 3.50 GRADIENT INTERVAL = -5.00/ 5.00

ALPHAT	BETAT	CNFTS	CATS	CAFTS	CLMFTS	CYFTS	CYNTS	CYNFTS	CBLFTS	ALFATU	BETATU
-4.172	-6.206	-.29150	.24490	.09040	.06910	.10590	-.01540	-.01310	-.01720	-3.97310	-6.26360
-4.168	-3.946	-.27760	.24390	.09090	.06280	.06650	-.01290	-.01170	-.01100	-3.98580	-4.04320
-3.971	.240	-.22960	.23870	.08910	.04190	-.00630	-.00010	.00000	.00070	-3.92050	.04010
-4.030	4.392	-.24390	.24080	.09050	.05040	-.07020	.00920	.00780	.01170	-4.14230	4.21800
-3.838	6.285	-.24250	.24130	.08610	.05230	-.10260	.01410	.01190	.01580	-3.98230	6.13700
	GRADIENT	.00405	-.00037	-.00005	-.00149	-.01640	.00265	.00234	.00272	-.01872	.99080

RUN NO. 955/ 0 RN/L = 3.50 GRADIENT INTERVAL = -5.00/ 5.00

ALPHAT	BETAT	CNFTS	CATS	CAFTS	CLMFTS	CYFTS	CYNTS	CYNFTS	CBLFTS	ALFATU	BETATU
-.244	-6.947	-.20540	.24530	.09370	.07650	.13430	-.02530	-.02340	-.01270	-.04400	-6.89620
-.232	-4.875	-.18900	.24290	.09300	.07010	.09120	-.01990	-.01830	-.00890	-.03140	-4.82340
-.267	-.548	-.14850	.23370	.09090	.04590	.00790	-.00380	-.00360	-.00120	-.06700	-.49620
-.202	3.535	-.14900	.23680	.09180	.05170	-.07170	.01680	.01550	.00600	-.00170	3.58650
-.188	5.760	-.15520	.24020	.09220	.05680	-.11500	.02550	.02370	.00950	.01230	5.81210
	GRADIENT	.00480	-.00074	-.00015	-.00222	-.01937	.00436	.00401	.00177	.00341	1.00002

RUN NO. 956/ 0 RN/L = 3.50 GRADIENT INTERVAL = -5.00/ 5.00

ALPHAT	BETAT	CNFTS	CATS	CAFTS	CLMFTS	CYFTS	CYNTS	CYNFTS	CBLFTS	ALFATU	BETATU
4.407	-5.958	-.06590	.23640	.09010	.07360	.14260	-.03730	-.03570	-.00310	4.26680	-6.11000
4.478	-3.946	-.05280	.23480	.09040	.07060	.09510	-.02720	-.02610	-.00200	4.37070	-4.12250
3.951	.185	-.03140	.22990	.08960	.04770	.00020	-.00110	-.00110	-.00020	4.00180	-.01530
4.149	4.030	-.03610	.23220	.08940	.05810	-.08590	.02360	.02230	.00140	4.32630	3.92330
3.950	6.138	-.04270	.23540	.09020	.05690	-.13420	.03490	.03290	.00300	4.14650	6.07400
	GRADIENT	.00213	-.00034	-.00013	-.00162	-.02270	.00637	.00607	.00043	-.00660	1.00860

IA156A, AEDC PWT 16T-470, O T S W/SILTS (R8NS57) (10 MAY 80)

REFERENCE DATA

SREF = 2690.0000 SQ.FT. XMRP = 976.0000 IN. XT
LREF = 1290.3000 INCHES YMRP = .0000 IN. YT
BREF = 1290.3000 INCHES ZMRP = 400.0000 IN. ZT
SCALE = .0200

PARAMETRIC DATA

IB-ELV = 10.000 OB-ELV = 9.000
BDFLAP = .000 SPDBRK = .000
RUDDER = .000 SILTS = 1.000
MACH = .950 RN/L = 3.500

RUN NO. 957/ 0 RN/L = 3.50 GRADIENT INTERVAL = -5.00/ 5.00

ALPHAT	BETAT	CNFTS	CATS	CAFTS	CLMFTS	CYFTS	CYNTS	CYNFTS	CBLFTS	ALFATU	BETATU
-8.287	-6.025	-.41750	.26720	.09250	.05300	.10890	-.01670	-.01430	-.02370	-8.11840	-6.14190
-8.363	-3.814	-.40920	.26890	.09470	.04900	.06700	-.01130	-.01020	-.01530	-8.22140	-3.96280
-8.192	.267	-.37830	.27300	.09430	.03620	-.00510	.00000	.00000	.00140	-8.13860	.06850
-8.081	4.229	-.37780	.26900	.09480	.03670	-.07170	.01050	.00950	.01700	-8.12620	4.02870
-8.023	6.132	-.38030	.26720	.09230	.03900	-.10210	.01360	.01150	.02330	-8.10390	5.94340
	GRADIENT	.00392	.00002	.00001	-.00154	-.01725	.00271	.00245	.00402	.01188	.99362

RUN NO. 959/ 0 RN/L = 3.49 GRADIENT INTERVAL = -5.00/ 5.00

ALPHAT	BETAT	CNFTS	CATS	CAFTS	CLMFTS	CYFTS	CYNTS	CYNFTS	CBLFTS	ALFATU	BETATU
-6.254	-5.980	-.34680	.26810	.09890	.05440	.10820	-.01800	-.01570	-.02050	-6.07120	-6.07230
-6.232	-4.032	-.33740	.27250	.10490	.04950	.07340	-.01430	-.01320	-.01400	-6.06870	-4.15710
-6.358	.140	-.30570	.27080	.09940	.03340	-.00440	.00010	.00010	.00090	-6.30070	-.05740
-6.133	4.272	-.30420	.26990	.09930	.04010	-.07220	.01130	.01000	.01450	-6.20330	4.07860
-5.880	6.391	-.30510	.26860	.09900	.04510	-.10820	.01550	.01300	.02020	-5.99100	6.21870
	GRADIENT	.00400	-.00031	-.00068	-.00114	-.01754	.00308	.00279	.00343	-.01627	.99178

RUN NO. 958/ 0 RN/L = 3.49 GRADIENT INTERVAL = -5.00/ 5.00

ALPHAT	BETAT	CNFTS	CATS	CAFTS	CLMFTS	CYFTS	CYNTS	CYNFTS	CBLFTS	ALFATU	BETATU
-4.232	-6.166	-.29170	.26950	.10210	.06260	.11300	-.01980	-.01740	-.01760	-4.03360	-6.21950
-4.304	-3.975	-.27780	.26950	.10330	.05540	.07120	-.01480	-.01360	-.01160	-4.12180	-4.06840
-4.271	.378	-.23440	.26910	.10200	.03670	-.01020	.00110	.00100	.00140	-4.22390	.17800
-3.786	4.332	-.23120	.26980	.10480	.04680	-.07500	.01210	.01060	.01150	-3.89800	4.16050
-3.840	6.152	-.24420	.27140	.10000	.05000	-.10750	.01650	.01410	.01610	-3.97950	6.00180
	GRADIENT	.00568	.00003	.00017	-.00109	-.01762	.00325	.00292	.00278	.02610	.99036

RUN NO. 960/ 0 RN/L = 3.50 GRADIENT INTERVAL = -5.00/ 5.00

ALPHAT	BETAT	CNFTS	CATS	CAFTS	CLMFTS	CYFTS	CYNTS	CYNFTS	CBLFTS	ALFATU	BETATU
-.237	-6.830	-.19780	.27000	.10540	.07620	.13770	-.02940	-.02700	-.01210	-.03890	-6.77440
-.224	-4.797	-.18340	.27010	.10750	.07130	.09500	-.02350	-.02150	-.00830	-.02630	-4.74130
-.256	-.613	-.14340	.26640	.10680	.04990	.00960	-.00470	-.00430	-.00140	-.05790	-.55830
-.187	3.565	-.14440	.26750	.10760	.05560	-.07550	.02010	.01860	.00560	.01070	3.61990
-.184	5.772	-.14760	.26860	.10510	.05750	-.12010	.02900	.02670	.00900	.01330	5.82800
	GRADIENT	.00467	-.00031	.00001	-.00188	-.02039	.00521	.00480	.00166	.00442	1.00001

IA156A, AEDC PWT 16T-470, O T S W/SILTS (R8NS57) (10 MAY 80)

REFERENCE DATA

SREF = 2690.0000 SQ.FT. XMRP = 976.0000 IN. XT
LREF = 1290.3000 INCHES YMRP = .0000 IN. YT
BREF = 1290.3000 INCHES ZMRP = 400.0000 IN. ZT
SCALE = .0200

PARAMETRIC DATA

IB-ELV = 10.000 OB-ELV = 9.000
BDFLAP = .000 SPDBRK = .000
RUDDER = .000 SILTS = 1.000
MACH = .950 RN/L = 3.500

RUN NO. 961/ 0 RN/L = 3.49 GRADIENT INTERVAL = -5.00/ 5.00

ALPHAT	BETAT	CNFTS	CATS	CAFTS	CLMFTS	CYFTS	CYNTS	CYNFTS	CBLFTS	ALFATU	BETATU
4.233	-5.802	-.07390	.26580	.10130	.07600	.14300	-.03840	-.03670	-.00380	4.09590	-5.95460
4.253	-3.756	-.05880	.26260	.10340	.06680	.09320	-.02730	-.02620	-.00260	4.15030	-3.93390
3.898	.018	-.03410	.25890	.10210	.04400	.00270	-.00110	-.00120	-.00030	3.94350	-.18240
4.086	3.951	-.03860	.26110	.10340	.05910	-.08680	.02410	.02280	.00190	4.26380	3.84780
4.049	6.095	-.04430	.26250	.10110	.06360	-.13710	.03650	.03420	.00290	4.24540	6.03380
	GRADIENT	.00259	-.00019	.00000	-.00096	-.02335	.00667	.00636	.00058	.01520	1.00981

IA156A, AEDC PWT 16T-470, O T S W/SILTS (R8NS58) (10 MAY 80)

REFERENCE DATA

SREF = 2690.0000 SQ.FT. XMRP = 976.0000 IN. XT
LREF = 1290.3000 INCHES YMRP = .0000 IN. YT
BREF = 1290.3000 INCHES ZMRP = 400.0000 IN. ZT
SCALE = .0200

PARAMETRIC DATA

IB-ELV = 10.000 OB-ELV = 9.000
BDFLAP = .000 SPDBRK = .000
RUDDER = .000 SILTS = 1.000
MACH = 1.050 RN/L = 3.500

RUN NO. 962/ 0 RN/L = 3.50 GRADIENT INTERVAL = -5.00/ 5.00

ALPHAT	BETAT	CNFTS	CATS	CAFTS	CLMFTS	CYFTS	CYNTS	CYNFTS	CBLFTS	ALFATU	BETATU
-8.277	-6.016	-.43710	.34670	.13560	.05360	.11930	-.01710	-.01430	-.02730	-8.10530	-6.12560
-8.447	-3.789	-.43730	.35150	.13620	.05290	.07640	-.01280	-.01140	-.01850	-8.30240	-3.93270
-8.390	.181	-.40380	.35700	.13680	.03420	-.00260	.00010	.00010	.00120	-8.32880	-.01360
-8.191	4.371	-.40060	.35180	.13640	.03720	-.07780	.01010	.00870	.01950	-8.23400	4.17210
-8.197	6.273	-.41070	.34940	.13460	.04130	-.11050	.01330	.01080	.02650	-8.27320	6.08420
	GRADIENT	.00446	.00002	.00002	-.00190	-.01889	.00280	.00246	.00465	.00851	.99328

RUN NO. 963/ 0 RN/L = 3.50 GRADIENT INTERVAL = -5.00/ 5.00

ALPHAT	BETAT	CNFTS	CATS	CAFTS	CLMFTS	CYFTS	CYNTS	CYNFTS	CBLFTS	ALFATU	BETATU
-6.289	-6.003	-.36030	.34850	.13900	.05370	.11760	-.01850	-.01580	-.02340	-6.10430	-6.08870
-6.218	-4.067	-.34610	.35060	.14190	.04980	.07830	-.01350	-.01200	-.01590	-6.05130	-4.18370
-6.387	.108	-.31750	.35440	.13990	.03190	-.00310	-.00020	-.00020	.00090	-6.32260	-.08540
-6.177	4.266	-.31920	.35360	.14040	.03860	-.07600	.01070	.00930	.01610	-6.24110	4.07300
-5.859	6.383	-.31580	.34830	.14040	.04310	-.11550	.01740	.01480	.02230	-5.96640	6.20990
	GRADIENT	.00323	.00036	-.00018	-.00135	-.01852	.00290	.00256	.00384	-.02281	.99086

IA156A, AEDC PWT 16T-470, 0 T S W/SILTS (R8NS58) (10 MAY 80)

REFERENCE DATA

SREF = 2690.0000 SQ.FT. XMRP = 976.0000 IN. XT
LREF = 1290.3000 INCHES YMRP = .0000 IN. YT
BREF = 1290.3000 INCHES ZMRP = 400.0000 IN. ZT
SCALE = .0200

PARAMETRIC DATA

IB-ELV = 10.000 OB-ELV = 9.000
BDFLAP = .000 SPDBRK = .000
RUDDER = .000 SILTS = 1.000
MACH = 1.050 RN/L = 3.500

RUN NO. 964/ 0 RN/L = 3.50 GRADIENT INTERVAL = -5.00/ 5.00

ALPHAT	BETAT	CNFTS	CATS	CAFTS	CLMFTS	CYFTS	CYNTS	CYNFTS	CBLFTS	ALFATU	BETATU
-4.101	-6.125	-.29120	.34750	.14190	.06140	.12030	-.02000	-.01760	-.01960	-3.90200	-6.16840
-4.334	-3.984	-.28430	.34890	.14340	.05430	.07660	-.01540	-.01390	-.01350	-4.14960	-4.06990
-4.313	.380	-.24160	.35150	.14090	.03340	-.00900	.00060	.00040	.00150	-4.26050	.18270
-3.778	4.313	-.23690	.35110	.14540	.04460	-.07890	.01370	.01210	.01290	-3.88690	4.14100
-3.876	6.162	-.25030	.34810	.14270	.04800	-.11420	.01910	.01680	.01790	-4.01110	6.00910
	GRADIENT	.00579	.00027	.00023	-.00123	-.01876	.00351	.00314	.00319	.03063	.98934

RUN NO. 965/ 0 RN/L = 3.50 GRADIENT INTERVAL = -5.00/ 5.00

ALPHAT	BETAT	CNFTS	CATS	CAFTS	CLMFTS	CYFTS	CYNTS	CYNFTS	CBLFTS	ALFATU	BETATU
-.254	-6.914	-.20010	.34460	.14330	.07990	.14880	-.03360	-.03120	-.01410	-.05970	-6.85340
-.255	-4.776	-.18240	.34500	.14610	.07210	.10160	-.02670	-.02480	-.00970	-.06060	-4.71590
-.311	-.553	-.13400	.34990	.14660	.04350	.01290	-.00730	-.00720	-.00150	-.11670	-.49310
-.228	3.703	-.13880	.35110	.14590	.05260	-.08000	.02100	.01940	.00680	-.03340	3.76310
-.215	5.847	-.14410	.35030	.14520	.05600	-.12580	.03060	.02830	.01060	-.02070	5.90720
	GRADIENT	.00513	.00072	-.00002	-.00229	-.02142	.00563	.00521	.00195	.00323	1.00001

RUN NO. 966/ 0 RN/L = 3.50 GRADIENT INTERVAL = -5.00/ 5.00

ALPHAT	BETAT	CNFTS	CATS	CAFTS	CLMFTS	CYFTS	CYNTS	CYNFTS	CBLFTS	ALFATU	BETATU
4.289	-5.829	-.07060	.34090	.14280	.07710	.14630	-.04150	-.04020	-.00470	4.15880	-5.98570
4.249	-3.664	-.05120	.33900	.14330	.06610	.09500	-.02950	-.02880	-.00330	4.15550	-3.84510
3.945	.170	-.02520	.34000	.14560	.04570	.00210	-.00220	-.00220	-.00050	4.00490	-.02500
4.073	4.051	-.03120	.34120	.14470	.05040	-.03230	.02620	.02520	.00230	4.25370	3.95620
4.057	6.107	-.03720	.33940	.14080	.05980	-.14130	.03670	.03520	.00340	4.25320	6.05130
	GRADIENT	.00258	.00029	.00018	-.00138	-.02428	.00722	.00700	.00073	.01283	1.01116

IA156A, AEDC PWT 16T-470, 0 T S W/SILTS (R8NS59) (10 MAY 80)

REFERENCE DATA

SREF = 2690.0000 SQ.FT. XMRP = 976.0000 IN. XT
LREF = 1290.3000 INCHES YMRP = .0000 IN. YT
BREF = 1290.3000 INCHES ZMRP = 400.0000 IN. ZT
SCALE = .0200

PARAMETRIC DATA

IB-ELV = 10.000 OB-ELV = 9.000
BDFLAP = .000 SPDBRK = .000
RUDDER = .000 SILTS = 1.000
MACH = 1.100 RN/L = 3.500

RUN NO. 967/ 0 RN/L = 3.49 GRADIENT INTERVAL = -5.00/ 5.00

ALPHAT	BETAT	CNFTS	CATS	CAFTS	CLMFTS	CYFTS	CYNTS	CYNFTS	CBLFTS	ALFATU	BETATU
-8.314	-5.997	-.43890	.34150	.14430	.05230	.11640	-.01790	-.01540	-.02650	-8.14110	-6.10520
-8.428	-3.772	-.43110	.34490	.14500	.04850	.07080	-.01090	-.00950	-.01750	-8.28140	-3.91430
-8.408	.183	-.39790	.34900	.14910	.02970	-.00280	-.00150	-.00160	.00160	-8.34400	-.01160
-8.192	4.399	-.39790	.34680	.14640	.03620	-.07490	.00790	.00640	.01960	-8.23370	4.19900
-8.191	6.294	-.40360	.34360	.14760	.04100	-.11040	.01330	.01080	.02600	-8.26540	6.10370
	GRADIENT	.00402	.00022	.00016	-.00147	-.01782	.00230	.00195	.00454	.00606	.99301

RUN NO. 968/ 0 RN/L = 3.49 GRADIENT INTERVAL = -5.00/ 5.00

ALPHAT	BETAT	CNFTS	CATS	CAFTS	CLMFTS	CYFTS	CYNTS	CYNFTS	CBLFTS	ALFATU	BETATU
-6.298	-6.000	-.35760	.34040	.15040	.05050	.11090	-.01660	-.01420	-.02280	-6.11120	-6.08320
-6.264	-4.064	-.34410	.34190	.15140	.04550	.07390	-.01200	-.01060	-.01560	-6.09580	-4.17960
-6.423	.100	-.31520	.34430	.15090	.02820	-.00290	-.00210	-.00210	.00120	-6.35590	-.09300
-6.177	4.287	-.31280	.34430	.15250	.03630	-.07340	.00800	.00660	.01620	-6.24020	4.09210
-6.095	6.271	-.31980	.34120	.15140	.04110	-.10840	.01420	.01170	.02230	-6.19530	6.09310
	GRADIENT	.00375	.00029	.00013	-.00110	-.01764	.00240	.00206	.00381	-.01725	.99058

RUN NO. 969/ 0 RN/L = 3.49 GRADIENT INTERVAL = -5.00/ 5.00

ALPHAT	BETAT	CNFTS	CATS	CAFTS	CLMFTS	CYFTS	CYNTS	CYNFTS	CBLFTS	ALFATU	BETATU
-4.108	-6.133	-.29070	.33800	.15390	.05850	.11370	-.01700	-.01490	-.01960	-3.90810	-6.17400
-4.351	-3.992	-.28360	.33850	.15340	.05060	.07050	-.01260	-.01130	-.01330	-4.16490	-4.07590
-4.305	.378	-.23860	.33800	.15300	.03170	-.00880	-.00080	-.00100	.00200	-4.24960	.18160
-3.776	4.329	-.23450	.34040	.15590	.04420	-.07630	.01040	.00900	.01300	-3.88290	4.15430
-3.862	6.161	-.24750	.34040	.15390	.04870	-.10950	.01580	.01380	.01780	-3.99520	6.00670
	GRADIENT	.00598	.00022	.00029	-.00083	-.01765	.00276	.00244	.00317	.03295	.98888

RUN NO. 970/ 0 RN/L = 3.49 GRADIENT INTERVAL = -5.00/ 5.00

ALPHAT	BETAT	CNFTS	CATS	CAFTS	CLMFTS	CYFTS	CYNTS	CYNFTS	CBLFTS	ALFATU	BETATU
-.255	-7.044	-.20360	.33610	.15750	.08060	.14440	-.02850	-.02640	-.01450	-.06060	-6.98120
-.245	-4.813	-.18440	.33130	.15510	.07250	.09580	-.02190	-.02030	-.00970	-.05060	-4.75010
-.298	-.464	-.13980	.33420	.15900	.04560	.00920	-.00540	-.00540	-.00130	-.10340	-.40140
-.211	3.649	-.14500	.33530	.15640	.05590	-.07650	.01840	.01680	.00680	-.01600	3.71220
-.197	5.838	-.15000	.33350	.15720	.05900	-.12240	.02790	.02570	.01060	-.00230	5.90110
	GRADIENT	.00471	.00047	.00016	-.00200	-.02036	.00475	.00438	.00195	.00393	1.00001

IA156A, AEDC PWT 16T-470, O T S W/SILTS (R8NS59) (10 MAY 80)

REFERENCE DATA

SREF = 2690.0000 SQ.FT. XMRP = 976.0000 IN. XT
LREF = 1290.3000 INCHES YMRP = .0000 IN. YT
BREF = 1290.3000 INCHES ZMRP = 400.0000 IN. ZT
SCALE = .0200

PARAMETRIC DATA

IB-ELV = 10.000 OB-ELV = 9.000
BDFLAP = .000 SPDBRK = .000
RUDDER = .000 SILTS = 1.000
MACH = 1.100 RN/L = 3.500

RUN NO. 971/ 0 RN/L = 3.49 GRADIENT INTERVAL = -5.00/ 5.00

ALPHAT	BETAT	CNFTS	CATS	CAFTS	CLMFTS	CYFTS	CYNTS	CYNFTS	CBLFTS	ALFATU	BETATU
4.439	-5.769	-.06540	.32520	.15500	.07960	.14120	-.03950	-.03830	-.00450	4.31220	-5.92970
4.289	-3.685	-.05170	.32550	.15480	.07100	.09320	-.02870	-.02810	-.00330	4.19560	-3.86740
3.967	.124	-.03190	.32560	.15420	.05270	-.00010	-.00210	-.00210	-.00040	4.02550	-.07160
4.104	3.996	-.03850	.32580	.15570	.06250	-.09060	.02420	.02320	.00250	4.28490	3.90110
4.076	6.090	-.04330	.32500	.15400	.06420	-.13940	.03440	.03290	.00380	4.27300	6.03530
	GRADIENT	.00171	.00004	.00012	-.00110	-.02393	.00689	.00668	.00076	.01178	1.01142

IA156A, AEDC PWT 16T-470, O T S W/SILTS (R8NS60) (10 MAY 80)

REFERENCE DATA

SREF = 2690.0000 SQ.FT. XMRP = 976.0000 IN. XT
LREF = 1290.3000 INCHES YMRP = .0000 IN. YT
BREF = 1290.3000 INCHES ZMRP = 400.0000 IN. ZT
SCALE = .0200

PARAMETRIC DATA

IB-ELV = 10.000 OB-ELV = 9.000
BDFLAP = .000 SPDBRK = .000
RUDDER = .000 SILTS = 1.000
MACH = 1.150 RN/L = 3.500

RUN NO. 972/ 0 RN/L = 3.49 GRADIENT INTERVAL = -5.00/ 5.00

ALPHAT	BETAT	CNFTS	CATS	CAFTS	CLMFTS	CYFTS	CYNTS	CYNFTS	CBLFTS	ALFATU	BETATU
-8.293	-6.018	-.44230	.33850	.15400	.05490	.11690	-.01520	-.01300	-.02740	-8.11630	-6.12660
-8.437	-3.784	-.44000	.34230	.15520	.05340	.07360	-.01060	-.00920	-.01820	-8.28790	-3.92720
-8.399	.203	-.40860	.34530	.15780	.03570	.00010	-.00230	-.00230	.00120	-8.33360	.00630
-8.186	4.412	-.41070	.34230	.15640	.04370	-.07270	.00610	.00480	.01990	-8.22590	4.20970
-8.179	6.290	-.41940	.34000	.15300	.04780	-.10780	.01090	.00880	.02650	-8.25290	6.09750
	GRADIENT	.00354	-.00001	.00014	-.00115	-.01784	.00204	.00171	.00465	.00773	.99277

RUN NO. 973/ 0 RN/L = 3.49 GRADIENT INTERVAL = -5.00/ 5.00

ALPHAT	BETAT	CNFTS	CATS	CAFTS	CLMFTS	CYFTS	CYNTS	CYNFTS	CBLFTS	ALFATU	BETATU
-6.286	-6.025	-.36190	.33780	.15960	.05580	.11290	-.01550	-.01320	-.02340	-6.09640	-6.10740
-6.215	-4.069	-.35020	.33890	.16170	.05170	.07540	-.01190	-.01050	-.01620	-6.04290	-4.18440
-6.395	.125	-.32570	.34160	.15890	.03590	.00000	-.00360	-.00360	.00090	-6.32680	-.07040
-6.152	4.295	-.32550	.34090	.16140	.04290	-.07080	.00550	.00420	.01620	-6.21440	4.09750
-6.084	6.285	-.33350	.33770	.16250	.04630	-.10850	.01170	.00940	.02300	-6.18500	6.10480
	GRADIENT	.00296	.00024	-.00004	-.00105	-.01748	.00208	.00176	.00387	-.02055	.99023

IA156A, AEDC PWT 16T-470, 0 T S W/SILTS (R8NS60) (10 MAY 80)

REFERENCE DATA

SREF = 2690.0000 SQ.FT. XMRP = 976.0000 IN. XT
LREF = 1290.3000 INCHES YMRP = .0000 IN. YT
BREF = 1290.3000 INCHES ZMRP = 400.0000 IN. ZT
SCALE = .0200

PARAMETRIC DATA

IB-ELV = 10.000 OB-ELV = 9.000
BDFLAP = .000 SPDBRK = .000
RUDDER = .000 SILTS = 1.000
MACH = 1.150 RN/L = 3.500

RUN NO. 974/ 0 RN/L = 3.49 GRADIENT INTERVAL = -5.00/ 5.00

ALPHAT	BETAT	CNFTS	CATS	CAFTS	CLMFTS	CYFTS	CYNTS	CYNFTS	CBLFTS	ALFATU	BETATU
-4.092	-6.127	-.29590	.33590	.16200	.06370	.11580	-.01770	-.01570	-.01990	-3.88910	-6.16780
-4.324	-4.000	-.28670	.33630	.16280	.05580	.07470	-.01410	-.01290	-.01370	-4.13450	-4.08330
-4.291	.384	-.24990	.33810	.16150	.04000	-.00590	-.00260	-.00270	.00160	-4.23430	.18540
-3.747	4.331	-.24400	.33840	.16710	.05160	-.07430	.00910	.00780	.01300	-3.85380	4.15380
-3.863	6.188	-.25790	.33830	.16420	.05490	-.10730	.01340	.01140	.01800	-3.99690	6.03090
	GRADIENT	.00519	.00026	.00050	-.00056	-.01790	.00278	.00248	.00321	.03266	.98852

RUN NO. 975/ 0 RN/L = 3.49 GRADIENT INTERVAL = -5.00/ 5.00

ALPHAT	BETAT	CNFTS	CATS	CAFTS	CLMFTS	CYFTS	CYNTS	CYNFTS	CBLFTS	ALFATU	BETATU
-.222	-6.923	-.20210	.33580	.16540	.08300	.14460	-.03030	-.02830	-.01410	-.02580	-6.85830
-.210	-4.814	-.18480	.33240	.16700	.07570	.09690	-.02260	-.02110	-.00960	-.01400	-4.74910
-.252	-.553	-.14200	.33750	.16760	.05040	.01130	-.00650	-.00640	-.00140	-.05550	-.48750
-.175	3.639	-.14400	.33780	.16790	.05800	-.07660	.01790	.01630	.00670	.02130	3.70360
-.158	5.842	-.14870	.33670	.16780	.06240	-.12270	.02660	.02460	.01040	.03830	5.90700
	GRADIENT	.00484	.00064	.00011	-.00210	-.02053	.00479	.00442	.00193	.00414	1.00002

RUN NO. 976/ 0 RN/L = 3.49 GRADIENT INTERVAL = -5.00/ 5.00

ALPHAT	BETAT	CNFTS	CATS	CAFTS	CLMFTS	CYFTS	CYNTS	CYNFTS	CBLFTS	ALFATU	BETATU
4.340	-5.818	-.07720	.32870	.16470	.08810	.14490	-.04100	-.03980	-.00510	4.20970	-5.97920
4.339	-3.751	-.05800	.32680	.16550	.07800	.09760	-.03190	-.03110	-.00360	4.24520	-3.93520
4.158	.204	-.03850	.32780	.16680	.06320	.00350	-.00520	-.00520	-.00060	4.22310	.00820
4.119	3.968	-.03840	.32950	.16510	.06480	-.08610	.02220	.02120	.00240	4.30270	3.87340
4.086	6.097	-.04350	.32760	.16430	.06630	-.13600	.03310	.03170	.00380	4.28630	6.04410
	GRADIENT	.00256	.00035	-.00005	-.00173	-.02380	.00701	.00677	.00078	.00734	1.01150

IA156A, AEDC PWT 16T-470, 0 T S W/SILTS (R8NS61) (10 MAY 80)

REFERENCE DATA

SREF = 2690.0000 SQ.FT. XMRP = 976.0000 IN. XT
LREF = 1290.3000 INCHES YMRP = .0000 IN. YT
BREF = 1290.3000 INCHES ZMRP = 400.0000 IN. ZT
SCALE = .0200

PARAMETRIC DATA

IB-ELV = 10.000 OB-ELV = 9.000
BDFLAP = .000 SPDBRK = .000
RUDDER = .000 SILTS = 1.000
MACH = 1.250 RN/L = 3.500

RUN NO. 977/ 0 RN/L = 3.51 GRADIENT INTERVAL = -5.00/ 5.00

ALPHAT	BETAT	CNFTS	CATS	CAFTS	CLMFTS	CYFTS	CYNTS	CYNFTS	CBLFTS	ALFATU	BETATU
-8.230	-6.026	-.45760	.33290	.16470	.07030	.11240	-.01160	-.00970	-.02630	-8.04320	-6.13870
-8.394	-3.805	-.44970	.33360	.16580	.06650	.06610	-.00520	-.00390	-.01730	-8.23510	-3.95490
-8.339	.207	-.41750	.33860	.16830	.04920	-.00340	-.00050	-.00050	.00150	-8.26880	.00130
-8.148	4.399	-.41590	.33460	.16880	.05240	-.07280	.00490	.00370	.01890	-8.18860	4.18470
-8.167	6.329	-.42580	.33130	.16550	.05440	-.10880	.00910	.00720	.02600	-8.24440	6.12530
	GRADIENT	.00409	.00011	.00036	-.00170	-.01693	.00123	.00093	.00441	.00577	.99218

RUN NO. 978/ 0 RN/L = 3.51 GRADIENT INTERVAL = -5.00/ 5.00

ALPHAT	BETAT	CNFTS	CATS	CAFTS	CLMFTS	CYFTS	CYNTS	CYNFTS	CBLFTS	ALFATU	BETATU
-6.240	-6.025	-.37540	.33120	.16880	.06850	.10670	-.01130	-.00930	-.02250	-6.03960	-6.11010
-6.180	-4.089	-.36390	.33330	.16950	.06590	.06760	-.00630	-.00510	-.01540	-5.99850	-4.20930
-6.333	.126	-.33470	.33480	.16950	.04950	-.00600	.00000	.00000	.00090	-6.25870	-.07880
-6.109	4.318	-.33180	.33410	.17220	.05090	-.07270	.00590	.00480	.01600	-6.17370	4.10970
-6.058	6.296	-.33580	.33160	.17130	.05040	-.10780	.01080	.00890	.02220	-6.16280	6.10500
	GRADIENT	.00382	.00010	.00032	-.00179	-.01669	.00145	.00118	.00374	-.02088	.98955

RUN NO. 979/ 0 RN/L = 3.52 GRADIENT INTERVAL = -5.00/ 5.00

ALPHAT	BETAT	CNFTS	CATS	CAFTS	CLMFTS	CYFTS	CYNTS	CYNFTS	CBLFTS	ALFATU	BETATU
-4.057	-6.155	-.30520	.32970	.17130	.07410	.10930	-.01410	-.01220	-.01910	-3.84270	-6.19570
-4.269	-4.003	-.30120	.33150	.17150	.06960	.06740	-.00960	-.00860	-.01270	-4.06910	-4.08940
-4.227	.386	-.25850	.33070	.17360	.05050	-.01020	.00060	.00050	.00130	-4.16550	.17670
-3.727	4.348	-.25060	.33330	.17620	.05780	-.07310	.00830	.00730	.01240	-3.83840	4.16030
-3.821	6.189	-.26120	.33520	.17250	.05900	-.10630	.01200	.01020	.01760	-3.96110	6.02270
	GRADIENT	.00613	.00021	.00056	-.00147	-.01684	.00215	.00191	.00301	.02674	.98763

RUN NO. 980/ 0 RN/L = 3.50 GRADIENT INTERVAL = -5.00/ 5.00

ALPHAT	BETAT	CNFTS	CATS	CAFTS	CLMFTS	CYFTS	CYNTS	CYNFTS	CBLFTS	ALFATU	BETATU
-.172	-6.947	-.21250	.32890	.17380	.09560	.13900	-.02670	-.02480	-.01330	.03420	-6.87700
-.161	-4.838	-.19790	.32740	.17500	.08950	.09360	-.02000	-.01860	-.00930	.04530	-4.76780
-.188	-.552	-.16400	.32980	.17670	.06990	.01010	-.00570	-.00570	-.00120	.01880	-.48210
-.115	3.642	-.16190	.33000	.17560	.07620	-.07400	.01530	.01390	.00630	.09150	3.71230
-.136	5.870	-.16460	.32900	.17540	.07580	-.11950	.02280	.02080	.01010	.07060	5.94000
	GRADIENT	.00426	.00031	.00007	-.00158	-.01976	.00416	.00383	.00184	.00541	1.00002

IA156A, AEDC PWT 16T-470, O T S W/SILTS (R8NS61) (10 MAY 80)

REFERENCE DATA

SREF = 2690.0000 SQ.FT. XMRP = 976.0000 IN. XT
LREF = 1290.3000 INCHES YMRP = .0000 IN. YT
BREF = 1290.3000 INCHES ZMRP = 400.0000 IN. ZT
SCALE = .0200

PARAMETRIC DATA

IB-ELV = 10.000 OB-ELV = 9.000
BDFLAP = .000 SPDBRK = .000
RUDDER = .000 SILTS = 1.000
MACH = 1.250 RN/L = 3.500

RUN NO. 981/ 0 RN/L = 3.50 GRADIENT INTERVAL = -5.00/ 5.00

ALPHAT	BETAT	CNFTS	CATS	CAFTS	CLMFTS	CYFTS	CYNTS	CYNFTS	CBLFTS	ALFATU	BETATU
4.409	-5.822	-.08230	.32330	.17280	.09640	.14080	-.03840	-.03730	-.00500	4.27280	-5.99250
4.378	-3.743	-.06470	.32190	.17360	.08600	.09180	-.02750	-.02690	-.00350	4.27960	-3.93780
4.219	.206	-.05020	.32150	.17180	.07620	-.00080	-.00270	-.00270	-.00040	4.28850	-.00030
4.168	3.956	-.05370	.32260	.17230	.08030	-.08830	.02400	.02310	.00230	4.36190	3.85680
4.152	6.098	-.05920	.32240	.17250	.08180	-.13860	.03450	.03300	.00390	4.36270	6.04280
	GRADIENT	.00145	.00009	-.00017	-.00076	-.02339	.00669	.00649	.00075	.01061	1.01231

IA156A, AEDC PWT 16T-470, O T S W/SILTS (R8NS62) (10 MAY 80)

REFERENCE DATA

SREF = 2690.0000 SQ.FT. XMRP = 976.0000 IN. XT
LREF = 1290.3000 INCHES YMRP = .0000 IN. YT
BREF = 1290.3000 INCHES ZMRP = 400.0000 IN. ZT
SCALE = .0200

PARAMETRIC DATA

IB-ELV = 10.000 OB-ELV = 11.000
BDFLAP = .000 SPDBRK = .000
RUDDER = .000 SILTS = 1.000
MACH = .300 RN/L = 3.500

RUN NO. 985/ 0 RN/L = 2.62 GRADIENT INTERVAL = -5.00/ 5.00

ALPHAT	BETAT	CNFTS	CATS	CAFTS	CLMFTS	CYFTS	CYNTS	CYNFTS	CBLFTS	ALFATU	BETATU
-6.167	-9.908	-.32240	.21200	.05860	.06980	.11220	.00500	.00810	-.02830	-6.03220	-10.07490
-6.121	-5.780	-.30400	.20760	.06290	.05870	.05250	.00530	.00730	-.01660	-6.03250	-5.97450
-6.022	.189	-.27610	.20750	.06310	.05100	-.01180	.00210	.00200	.00140	-6.09790	-.01170
-5.749	6.270	-.25970	.20930	.06540	.04970	-.07230	-.00110	-.00330	.01650	-5.94740	6.18860
-5.894	10.158	-.26640	.21450	.06490	.05100	-.11990	.00020	-.00280	.02470	-6.10570	10.12290
	GRADIENT	.00000	.00000	.00000	.00000	.00000	.00000	.00000	.00000	.00000	.00000

RUN NO. 986/ 0 RN/L = 2.62 GRADIENT INTERVAL = -5.00/ 5.00

ALPHAT	BETAT	CNFTS	CATS	CAFTS	CLMFTS	CYFTS	CYNTS	CYNFTS	CBLFTS	ALFATU	BETATU
-.225	-10.540	-.18440	.21500	.06440	.07200	.17130	-.02330	-.02080	-.01700	-.02450	-10.61650
-.223	-6.488	-.17310	.20500	.07020	.06620	.08840	-.01020	-.00810	-.00980	-.02290	-6.56470
-.202	-.306	-.15840	.20570	.06930	.06120	-.00780	.00130	.00130	-.00020	-.00210	-.38290
-.169	5.677	-.15230	.20640	.07700	.06560	-.09960	.01700	.01520	.00730	.03070	5.60060
-.163	9.843	-.13970	.21340	.07010	.06050	-.16840	.02590	.02360	.01240	.03650	9.76630
	GRADIENT	.00000	.00000	.00000	.00000	.00000	.00000	.00000	.00000	.00000	.00000

IA156A, AEDC PWT 16T-470, 0 T S W/SILTS (R8NS62) (10 MAY 80)

REFERENCE DATA

SREF = 2690.0000 SQ.FT. XMRP = 976.0000 IN. XT
LREF = 1290.3000 INCHES YMRP = .0000 IN. YT
BREF = 1290.3000 INCHES ZMRP = 400.0000 IN. ZT
SCALE = .0200

PARAMETRIC DATA

IB-ELV = 10.000 OB-ELV = 11.000
BDFLAP = .000 SPDBRK = .000
RUDDER = .000 SILTS = 1.000
MACH = .300 RN/L = 3.500

RUN NO. 987/ 0 RN/L = 2.62 GRADIENT INTERVAL = -5.00/ 5.00

ALPHAT	BETAT	CNFTS	CATS	CAFTS	CLMFTS	CYFTS	CYNTS	CYNFTS	CBLFTS	ALFATU	BETATU
6.269	-9.917	-.01860	.20160	.06620	.07100	.21750	-.05610	-.0547C	.00010	6.05770	-9.95240
6.038	-5.705	-.01160	.19470	.06660	.07160	.11870	-.03190	-.03070	.00110	5.84130	-5.79060
5.919	.132	-.00940	.19670	.06940	.06870	-.00710	.00050	.00050	-.00060	5.84020	-.06690
5.996	6.183	-.00120	.19750	.06970	.06540	-.13230	.03390	.03240	-.00240	6.08470	5.98830
5.862	10.064	.00430	.20390	.06810	.05720	-.21130	.05030	.04870	-.00150	5.99560	9.89650
	GRADIENT	.00000	.00000	.00000	.00000	.00000	.00000	.00000	.00000	.00000	.00000

IA156A, AEDC PWT 16T-470, 0 T S W/SILTS (R8NS63) (10 MAY 80)

REFERENCE DATA

SREF = 2690.0000 SQ.FT. XMRP = 976.0000 IN. XT
LREF = 1290.3000 INCHES YMRP = .0000 IN. YT
BREF = 1290.3000 INCHES ZMRP = 400.0000 IN. ZT
SCALE = .0200

PARAMETRIC DATA

IB-ELV = 10.000 OB-ELV = 11.000
BDFLAP = .000 SPDBRK = .000
RUDDER = .000 SILTS = 1.000
MACH = .300 RN/L = 3.500

RUN NO. 984/ 0 RN/L = 2.64 GRADIENT INTERVAL = -5.00/ 5.00

ALPHAT	BETAT	CNFTS	CATS	CAFTS	CLMFTS	CYFTS	CYNTS	CYNFTS	CBLFTS	ALFATU	BETATU
-10.341	-7.901	-.43040	.20880	.04620	.06770	.07580	.00910	.01240	-.03000	-10.27390	-8.10410
-10.015	-5.737	-.41070	.20770	.05400	.06050	.05340	.00630	.00840	-.02170	-9.97590	-5.94750
-9.962	.318	-.40550	.20800	.05290	.06110	-.01770	.00490	.00490	.00140	-10.04100	.11930
-9.988	6.290	-.38750	.20960	.05360	.05140	-.06850	-.00290	-.00520	.02270	-10.15910	6.16040
-10.035	8.246	-.38580	.21260	.05350	.05250	-.08480	-.00680	-.00990	.02890	-10.22110	8.14000
	GRADIENT	.00000	.00000	.00000	.00000	.00000	.00000	.00000	.00000	.00000	.00000

RUN NO. 988/ 0 RN/L = 2.63 GRADIENT INTERVAL = -5.00/ 5.00

ALPHAT	BETAT	CNFTS	CATS	CAFTS	CLMFTS	CYFTS	CYNTS	CYNFTS	CBLFTS	ALFATU	BETATU
10.202	-7.824	.09910	.18760	.05730	.06750	.16990	-.04510	-.04380	.00670	10.01630	-7.93030
10.081	-5.750	.09320	.18630	.05970	.06680	.12070	-.03320	-.03200	.00530	9.91200	-5.88050
9.927	.234	.08100	.19040	.06170	.07480	-.00620	-.00140	-.00130	-.00050	9.85160	.03320
10.114	6.313	.11040	.18840	.06100	.06220	-.13490	.03430	.03300	-.00720	10.15410	6.10260
10.063	8.291	.11510	.19110	.05940	.05590	-.18240	.04650	.04530	-.00850	10.13120	8.08770
	GRADIENT	.00000	.00000	.00000	.00000	.00000	.00000	.00000	.00000	.00000	.00000

IA156A, AEDC PWT 16T-470, 0 T S W/SILTS (R8NS64) (10 MAY 80)

REFERENCE DATA

SREF = 2690.0000 SQ.FT. XMRP = 976.0000 IN. XT
LREF = 1290.3000 INCHES YMRP = .0000 IN. YT
BREF = 1290.3000 INCHES ZMRP = 400.0000 IN. ZT
SCALE = .0200

PARAMETRIC DATA

IB-ELV = 10.000 OB-ELV = 11.000
BDFLAP = .000 SPDBRK = .000
RUDDER = .000 SILTS = 1.000
MACH = .600 RN/L = 3.500

RUN NO. 989/ 0 RN/L = 3.51 GRADIENT INTERVAL = -5.00/ 5.00

ALPHAT	BETAT	CNFTS	CATS	CAFTS	CLMFTS	CYFTS	CYNTS	CYNFTS	CBLFTS	ALFATU	BETATU
-8.125	-7.835	-.38350	.20920	.04880	.06710	.09420	.00370	.00680	-.02770	-8.03480	-8.02550
-8.150	-5.769	-.37760	.20890	.06070	.06220	.06860	.00190	.00420	-.02110	-8.09060	-5.97080
-8.179	-3.752	-.36810	.20980	.05780	.05910	.04360	.00030	.00160	-.01340	-8.15640	-3.96050
-8.061	.182	-.35940	.21400	.05450	.05580	-.00710	.00070	.00070	.00110	-8.13710	-.01450
-7.938	4.323	-.34560	.21440	.06140	.05160	-.05650	.00140	.00010	.01510	-8.09940	4.18630
-7.937	6.197	-.34380	.21200	.05710	.05130	-.07640	-.00050	-.00270	.02120	-8.11810	6.08930
-7.965	8.213	-.34720	.21250	.05790	.05340	-.10120	-.00090	-.00380	.02710	-8.16010	8.13290
	GRADIENT	.00279	.00057	.00046	-.00093	-.01239	.00014	-.00019	.00353	.00708	1.00905

RUN NO. 990/ 0 RN/L = 3.50 GRADIENT INTERVAL = -5.00/ 5.00

ALPHAT	BETAT	CNFTS	CATS	CAFTS	CLMFTS	CYFTS	CYNTS	CYNFTS	CBLFTS	ALFATU	BETATU
-6.124	-7.942	-.32490	.20870	.05950	.06690	.10240	.00020	.00320	-.02420	-6.00740	-8.11700
-6.113	-5.917	-.31900	.20890	.06290	.06270	.07200	.00030	.00260	-.01840	-6.02260	-6.10800
-6.033	-4.002	-.30690	.21010	.06400	.05910	.04760	-.00130	.00020	-.01180	-5.97760	-4.20540
-6.105	.066	-.29290	.21020	.06520	.05190	-.00800	.00070	.00070	.00120	-6.17650	-.13170
-5.934	4.185	-.28330	.21280	.06600	.05350	-.05500	.00160	.00030	.01240	-6.10870	4.06660
-5.862	6.180	-.28290	.21200	.06580	.05380	-.07790	.00150	-.00070	.01750	-6.05720	6.10060
-5.879	8.161	-.28520	.21240	.06250	.05370	-.10540	.00280	.00010	.02250	-6.08350	8.10820
	GRADIENT	.00288	.00033	.00024	-.00068	-.01253	.00035	.00001	.00296	-.01595	1.01043

RUN NO. 991/ 0 RN/L = 3.50 GRADIENT INTERVAL = -5.00/ 5.00

ALPHAT	BETAT	CNFTS	CATS	CAFTS	CLMFTS	CYFTS	CYNTS	CYNFTS	CBLFTS	ALFATU	BETATU
-3.930	-8.062	-.26920	.21000	.06490	.07040	.11040	-.00470	-.00200	-.02010	-3.78140	-8.21190
-4.181	-5.953	-.27040	.20760	.06380	.06570	.07540	-.00190	.00030	-.01550	-4.05590	-6.12250
-4.098	-3.944	-.25790	.20850	.06810	.06160	.04590	-.00250	-.00110	-.00980	-4.00620	-4.13340
-4.075	.333	-.23250	.20910	.06910	.05240	-.01140	.00080	.00060	.00170	-4.15630	.13930
-3.671	4.196	-.22420	.21190	.07140	.05830	-.05860	.00430	.00290	.00990	-3.86750	4.11990
-3.743	6.047	-.22760	.21160	.06940	.05780	-.08310	.00560	.00350	.01390	-3.95000	6.00630
-3.776	8.036	-.22700	.21260	.06590	.05600	-.11290	.00860	.00610	.01800	-3.98580	8.02080
	GRADIENT	.00417	.00041	.00040	-.00044	-.01297	.00083	.00049	.00242	.01611	1.01364

IA156A, AEDC PWT 16T-470, 0 T S W/SILTS (R8NS64) (10 MAY 80)

REFERENCE DATA

SREF = 2690.0000 SQ.FT. XMRP = 976.0000 IN. XT
LREF = 1290.3000 INCHES YMRP = .0000 IN. YT
BREF = 1290.3000 INCHES ZMRP = 400.0000 IN. ZT
SCALE = .0200

PARAMETRIC DATA

IB-ELV = 10.000 OB-ELV = 11.000
BDFLAP = .000 SPDBRK = .000
RUDDER = .000 SILTS = 1.000
MACH = .600 RN/L = 3.500

RUN NO. 992/ 0 RN/L = 3.50 GRADIENT INTERVAL = -5.00/ 5.00

ALPHAT	BETAT	CNFTS	CATS	CAFTS	CLMFTS	CYFTS	CYNTS	CYNFTS	CBLFTS	ALFATU	BETATU
-.193	-8.742	-.19100	.21230	.06870	.07770	.14850	-.02250	-.02030	-.01450	.00330	-8.81880
-.183	-6.655	-.18690	.20870	.07040	.07700	.10770	-.01620	-.01410	-.01090	.01330	-6.73220
-.175	-4.406	-.17780	.20750	.07090	.07340	.06820	-.01200	-.01040	-.00690	.02110	-4.48350
-.170	-.327	-.15680	.20830	.07280	.06340	.00070	-.00170	-.00170	-.00020	.02620	-.40280
-.122	3.755	-.15270	.20860	.07270	.06760	-.06470	.01150	.01010	.00490	.07470	3.67930
-.123	5.857	-.15180	.20880	.07250	.06690	-.10040	.01740	.01540	.00790	.07320	5.78210
-.119	7.948	-.14370	.21180	.07340	.06390	-.13650	.02330	.02100	.01040	.07750	7.87270
	GRADIENT	.00308	.00013	.00022	-.00071	-.01628	.00288	.00251	.00145	.00657	1.00017

RUN NO. 993/ 0 RN/L = 3.50 GRADIENT INTERVAL = -5.00/ 5.00

ALPHAT	BETAT	CNFTS	CATS	CAFTS	CLMFTS	CYFTS	CYNTS	CYNFTS	CBLFTS	ALFATU	BETATU
4.403	-7.930	-.07170	.20530	.06970	.07820	.16820	-.04170	-.04010	-.00320	4.19300	-7.94860
4.327	-5.823	-.06400	.20070	.06980	.07600	.11740	-.03020	-.02880	-.00180	4.12090	-5.86680
4.275	-3.835	-.06050	.19870	.06980	.07380	.07820	-.02100	-.02000	-.00120	4.08100	-3.91800
4.061	.081	-.05380	.20020	.06930	.06700	-.00020	-.00140	-.00140	-.00040	3.97690	-.11300
4.116	4.098	-.04780	.20180	.07020	.06720	-.07950	.01910	.01790	.00030	4.19860	3.90380
4.057	6.210	-.04740	.20270	.07140	.06500	-.12220	.02880	.02710	.00110	4.18010	6.03940
4.039	8.208	-.04080	.20620	.06980	.06240	-.16120	.03720	.03520	.00210	4.18270	8.05440
	GRADIENT	.00160	.00039	.00005	-.00083	-.01988	.00505	.00478	.00019	.01500	.98599

RUN NO. 994/ 0 RN/L = 3.50 GRADIENT INTERVAL = -5.00/ 5.00

ALPHAT	BETAT	CNFTS	CATS	CAFTS	CLMFTS	CYFTS	CYNTS	CYNFTS	CBLFTS	ALFATU	BETATU
6.460	-7.987	-.01770	.20000	.06720	.07440	.17670	-.04650	-.04500	.00050	6.25630	-8.04230
6.439	-5.907	-.01170	.19660	.06740	.07520	.12680	-.03410	-.03280	.00110	6.24670	-5.99100
6.438	-3.849	-.01130	.19640	.06830	.07680	.08270	-.02240	-.02150	.00080	6.26390	-3.96810
6.134	.185	-.01230	.19970	.06830	.07250	-.00430	.00030	.00020	-.00040	6.05700	-.01120
6.054	4.100	-.00670	.19850	.06830	.06900	-.08310	.02020	.01900	-.00110	6.10140	3.89450
6.027	6.017	-.00090	.19900	.06820	.06760	-.12070	.03010	.02850	-.00150	6.11460	5.82520
6.041	8.260	.00880	.20250	.06630	.06170	-.16790	.04130	.03950	-.00130	6.15740	8.08490
	GRADIENT	.00057	.00027	.00000	-.00098	-.02086	.00536	.00510	-.00024	-.02060	.98918

IA156A, AEDC PWT 16T-470, O T S W/SILTS (R8NS64) (10 MAY 80)

REFERENCE DATA

SREF = 2690.0000 SQ.FT. XMRP = 976.0000 IN. XT
LREF = 1290.3000 INCHES YMRP = .0000 IN. YT
BREF = 1290.3000 INCHES ZMRP = 400.0000 IN. ZT
SCALE = .0200

PARAMETRIC DATA

IB-ELV = 10.000 OB-ELV = 11.000
BDFLAP = .000 SPDBRK = .000
RUDDER = .000 SILTS = 1.000
MACH = .600 RN/L = 3.500

RUN NO. 995/ 0 RN/L = 3.50 GRADIENT INTERVAL = -5.00/ 5.00

ALPHAT	BETAT	CNFTS	CATS	CAFTS	CLMFTS	CYFTS	CYNTS	CYNFTS	CBLFTS	ALFATU	BETATU
8.398	-7.839	.04010	.19250	.06360	.07020	.17260	-.04650	-.04510	.00370	8.20410	-7.92190
8.299	-5.751	.03940	.19220	.06380	.07350	.12190	-.03330	-.03200	.00330	8.11810	-5.85990
8.285	-3.789	.03570	.19210	.06240	.07660	.07790	-.02130	-.02040	.00240	8.12740	-3.92850
8.196	.181	.04000	.19820	.06540	.07380	-.00630	.00050	.00040	-.00020	8.11810	-.01550
8.120	4.127	.04840	.19480	.06480	.06900	-.08280	.02020	.01910	-.00260	8.14100	3.91760
8.191	6.252	.06130	.19530	.06370	.06420	-.12760	.03240	.03090	-.00410	8.25150	6.05030
8.155	8.252	.06750	.19730	.06210	.05820	-.17380	.04460	.04310	-.00460	8.24470	8.06120
	GRADIENT	.00160	.00034	.00030	-.00096	-.02030	.00524	.00499	-.00063	.00171	.99116

IA156A, AEDC PWT 16T-470, O T S W/SILTS (R8NS65) (10 MAY 80)

REFERENCE DATA

SREF = 2690.0000 SQ.FT. XMRP = 976.0000 IN. XT
LREF = 1290.3000 INCHES YMRP = .0000 IN. YT
BREF = 1290.3000 INCHES ZMRP = 400.0000 IN. ZT
SCALE = .0200

PARAMETRIC DATA

IB-ELV = 10.000 OB-ELV = 11.000
BDFLAP = .000 SPDBRK = .000
RUDDER = .000 SILTS = 1.000
MACH = .800 RN/L = 3.500

RUN NO. 996/ 0 RN/L = 3.50 GRADIENT INTERVAL = -5.00/ 5.00

ALPHAT	BETAT	CNFTS	CATS	CAFTS	CLMFTS	CYFTS	CYNTS	CYNFTS	CBLFTS	ALFATU	BETATU
-8.214	-6.002	-.40140	.22090	.06590	.06830	.08370	-.00580	-.00290	-.02260	-8.05600	-6.13710
-8.271	-3.758	-.39150	.22360	.07040	.06480	.05420	-.00600	-.00450	-.01430	-8.14400	-3.92190
-8.208	.186	-.37440	.22690	.07010	.05690	-.00600	.00000	.00020	.00090	-8.16870	-.01770
-8.072	4.435	-.36010	.22410	.07170	.05020	-.06380	.00520	.00390	.01590	-8.13680	4.23790
-8.036	6.263	-.36440	.22240	.06850	.05090	-.08640	.00450	.00220	.02210	-8.13340	6.07950
	GRADIENT	.00383	.00005	.00016	-.00178	-.01439	.00137	.00102	.00368	.00096	.99606

RUN NO. 997/ 0 RN/L = 3.50 GRADIENT INTERVAL = -5.00/ 5.00

ALPHAT	BETAT	CNFTS	CATS	CAFTS	CLMFTS	CYFTS	CYNTS	CYNFTS	CBLFTS	ALFATU	BETATU
-6.176	-5.982	-.33690	.22140	.07380	.06890	.08770	-.00810	-.00550	-.01940	-6.00120	-6.09320
-6.128	-4.057	-.32790	.22320	.07510	.06590	.05940	-.00760	-.00600	-.01320	-5.97530	-4.19840
-6.231	.122	-.30390	.22380	.07510	.05200	-.00720	.00040	.00050	.00080	-6.18980	-.08110
-6.063	4.258	-.29900	.22480	.07710	.05290	-.06010	.00530	.00400	.01270	-6.14830	4.06850
-5.750	6.401	-.29200	.22310	.07630	.05390	-.09030	.00750	.00510	.01820	-5.87680	6.23690
	GRADIENT	.00348	.00019	.00024	-.00157	-.01437	.00155	.00120	.00312	-.02086	.99420

IA156A, AEDC PWT 16T-470, O T S W/SILTS (R8NS65) (10 MAY 80)

REFERENCE DATA

SREF = 2690.0000 SQ.FT. XMRP = 976.0000 IN. XT
LREF = 1290.3000 INCHES YMRP = .0000 IN. YT
BREF = 1290.3000 INCHES ZMRP = 400.0000 IN. ZT
SCALE = .0200

PARAMETRIC DATA

IB-ELV = 10.000 OB-ELV = 11.000
BDFLAP = .000 SPDBRK = .000
RUDDER = .000 SILTS = 1.000
MACH = .800 RN/L = 3.500

RUN NO. 998/ 0 RN/L = 3.50 GRADIENT INTERVAL = -5.00/ 5.00

ALPHAT	BETAT	CNFTS	CATS	CAFTS	CLMFTS	CYFTS	CYNTS	CYNFTS	CBLFTS	ALFATU	BETATU
-3.990	-6.123	-.27980	.22170	.07790	.07320	.09200	-.01010	-.00760	-.01610	-3.79450	-6.19270
-4.248	-3.955	-.27670	.22240	.07980	.06880	.05580	-.00790	-.00630	-.01050	-4.07420	-4.06770
-4.190	.377	-.23700	.22100	.07840	.05020	-.01020	.00100	.00090	.00130	-4.16010	.17200
-3.733	4.319	-.23230	.22270	.08090	.05730	-.06460	.00740	.00600	.01030	-3.85950	4.15410
-3.797	6.149	-.23800	.22170	.07990	.05860	-.09180	.01010	.00790	.01460	-3.94900	6.00730
	GRADIENT	.00543	.00003	.00013	-.00144	-.01456	.00185	.00149	.00252	.02520	.99351

RUN NO. 999/ 0 RN/L = 3.50 GRADIENT INTERVAL = -5.00/ 5.00

ALPHAT	BETAT	CNFTS	CATS	CAFTS	CLMFTS	CYFTS	CYNTS	CYNFTS	CBLFTS	ALFATU	BETATU
-.165	-6.877	-.19820	.22290	.08020	.08120	.12500	-.02270	-.02050	-.01230	.03940	-6.83860
-.173	-4.730	-.19120	.22010	.08240	.07700	.08420	-.01750	-.01580	-.00860	.03150	-4.69140
-.193	-.460	-.16340	.21480	.08150	.06060	.00490	-.00220	-.00210	-.00100	.01090	-.42140
-.136	3.646	-.15710	.21840	.08300	.06380	-.06970	.01480	.01350	.00580	.06840	3.68420
-.130	5.794	-.15960	.22020	.08250	.06590	-.11020	.02310	.02100	.00920	.07390	5.83260
	GRADIENT	.00409	-.00021	.00007	-.00159	-.01838	.00385	.00350	.00172	.00434	1.00000

RUN NO. 1000/ 0 RN/L = 3.51 GRADIENT INTERVAL = -5.00/ 5.00

ALPHAT	BETAT	CNFTS	CATS	CAFTS	CLMFTS	CYFTS	CYNTS	CYNFTS	CBLFTS	ALFATU	BETATU
4.389	-5.811	-.06360	.21270	.07800	.07520	.13040	-.03380	-.03230	-.00230	4.23900	-5.95520
4.244	-3.687	-.05800	.21160	.07840	.07340	.08130	-.02280	-.02170	-.00130	4.12570	-3.85760
3.967	.128	-.03910	.20910	.08010	.05850	.00050	-.00180	-.00180	-.00030	4.00060	-.07650
4.083	4.040	-.03800	.21220	.07970	.06320	-.08150	.02130	.02010	.00060	4.25440	3.92350
4.019	6.121	-.03970	.21440	.07980	.06210	-.12780	.03280	.03090	.00170	4.21130	6.04330
	GRADIENT	.00258	.00008	.00017	-.00131	-.02107	.00571	.00541	.00025	.01686	1.00695

RUN NO. 1001/ 0 RN/L = 3.51 GRADIENT INTERVAL = -5.00/ 5.00

ALPHAT	BETAT	CNFTS	CATS	CAFTS	CLMFTS	CYFTS	CYNTS	CYNFTS	CBLFTS	ALFATU	BETATU
6.395	-5.842	-.00480	.21010	.07660	.06870	.13550	-.03710	-.03560	.00070	6.27540	-6.01210
6.383	-3.794	.00050	.20780	.07740	.06850	.08520	-.02460	-.02350	.00070	6.29950	-3.98410
6.032	.166	.01000	.20770	.07630	.05670	-.00170	-.00170	-.00170	-.00030	6.06850	-.03860
5.967	3.995	.00800	.20960	.07710	.06010	-.08080	.02100	.01980	-.00100	6.11350	3.84790
6.083	6.166	.02040	.21140	.07680	.05610	-.12700	.03350	.03180	-.00150	6.25640	6.05230
	GRADIENT	.00097	.00023	-.00004	-.00109	-.02131	.00585	.00556	-.00022	-.02407	1.00540

IA156A, AEDC PWT 16T-470, 0 T S W/SILTS (R8NS66) (10 MAY 80)

REFERENCE DATA

SREF = 2690.0000 SQ.FT. XMRP = 976.0000 IN. XT
LREF = 1290.3000 INCHES YMRP = .0000 IN. YT
BREF = 1290.3000 INCHES ZMRP = 400.0000 IN. ZT
SCALE = .0200

PARAMETRIC DATA

IB-ELV = 10.000 OB-ELV = 11.000
BDFLAP = .000 SPDBRK = .000
RUDDER = .000 SILTS = 1.000
MACH = .900 RN/L = 3.500

RUN NO. 1002/ 0 RN/L = 3.50 GRADIENT INTERVAL = -5.00/ 5.00

ALPHAT	BETAT	CNFTS	CATS	CAFTS	CLMFTS	CYFTS	CYNTS	CYNFTS	CBLFTS	ALFATU	BETATU
-8.189	-6.011	-.41190	.24390	.08380	.06540	.09880	-.01380	-.01150	-.02270	-8.02230	-6.13270
-8.319	-3.755	-.41030	.24600	.08360	.06400	.06190	-.01080	-.00970	-.01440	-8.18150	-3.90940
-8.243	.184	-.38720	.24920	.08390	.05440	-.00350	-.00090	-.00060	.00100	-8.19090	-.01570
-8.095	4.398	-.37120	.24340	.08550	.04710	-.07030	.00910	.00790	.01660	-8.14730	4.19780
-8.140	6.291	-.37910	.24210	.08040	.04750	-.09750	.01030	.00820	.02320	-8.22500	6.10290
	GRADIENT	.00478	-.00033	.00023	-.00207	-.01621	.00244	.00216	.00380	.00427	.99444

RUN NO. 1003/ 0 RN/L = 3.50 GRADIENT INTERVAL = -5.00/ 5.00

ALPHAT	BETAT	CNFTS	CATS	CAFTS	CLMFTS	CYFTS	CYNTS	CYNFTS	CBLFTS	ALFATU	BETATU
-6.206	-5.977	-.35210	.24490	.08620	.06630	.10140	-.01480	-.01240	-.02010	-6.02440	-6.07450
-6.155	-4.051	-.34210	.24540	.08870	.06310	.07090	-.01320	-.01190	-.01360	-5.99320	-4.18030
-6.281	.110	-.31230	.24530	.08660	.04890	-.00520	-.00040	-.00020	.00070	-6.22620	-.08920
-6.079	4.265	-.30570	.24410	.08880	.04850	-.06810	.00920	.00790	.01370	-6.15300	4.07220
-6.013	6.254	-.30940	.24260	.08650	.05010	-.09750	.01110	.00890	.01950	-6.12390	6.07930
	GRADIENT	.00438	-.00016	.00001	-.00176	-.01671	.00269	.00238	.00328	-.01922	.99230

RUN NO. 1004/ 0 RN/L = 3.49 GRADIENT INTERVAL = -5.00/ 5.00

ALPHAT	BETAT	CNFTS	CATS	CAFTS	CLMFTS	CYFTS	CYNTS	CYNFTS	CBLFTS	ALFATU	BETATU
-3.986	-6.127	-.28660	.24460	.09240	.07000	.10330	-.01510	-.01280	-.01660	-3.78670	-6.18160
-4.285	-3.977	-.28160	.24470	.09110	.06340	.06680	-.01270	-.01140	-.01120	-4.10410	-4.07640
-4.231	.381	-.23890	.24090	.08700	.04300	-.01120	.00110	.00110	.00130	-4.18800	.17860
-3.759	4.316	-.23440	.24160	.09190	.05180	-.07030	.00970	.00830	.01100	-3.87450	4.14510
-3.835	6.153	-.24340	.24120	.09140	.05370	-.10070	.01370	.01160	.01550	-3.97700	6.00320
	GRADIENT	.00576	-.00038	.00008	-.00146	-.01656	.00271	.00238	.00268	.02685	.99107

RUN NO. 1005/ 0 RN/L = 3.49 GRADIENT INTERVAL = -5.00/ 5.00

ALPHAT	BETAT	CNFTS	CATS	CAFTS	CLMFTS	CYFTS	CYNTS	CYNFTS	CBLFTS	ALFATU	BETATU
-.206	-6.944	-.20410	.24550	.09470	.07780	.13440	-.02560	-.02360	-.01260	-.00590	-6.89240
-.210	-4.783	-.19050	.24340	.09440	.07140	.09030	-.01980	-.01810	-.00890	-.00950	-4.73130
-.252	-.469	-.14950	.23420	.09400	.04710	.00600	-.00320	-.00300	-.00110	-.05170	-.41680
-.189	3.649	-.15180	.23740	.09320	.05380	-.07430	.01720	.01590	.00620	.01140	3.70040
-.173	5.797	-.15590	.24070	.09290	.05840	-.11600	.02590	.02400	.00960	.02690	5.84890
	GRADIENT	.00463	-.00072	-.00014	-.00212	-.01952	.00438	.00403	.00179	.00238	1.00001

IA156A, AEDC PWT 16T-470, 0 T S W/SILTS (R8NS66) (10 MAY 80)

REFERENCE DATA

SREF = 2690.0000 SQ.FT. XMRP = 976.0000 IN. XT
LREF = 1290.3000 INCHES YMRP = .0000 IN. YT
BREF = 1290.3000 INCHES ZMRP = 400.0000 IN. ZT
SCALE = .0200

PARAMETRIC DATA

IB-ELV = 10.000 OB-ELV = 11.000
BDFLAP = .000 SPDBRK = .000
RUDDER = .000 SILTS = 1.000
MACH = .900 RN/L = 3.500

RUN NO. 1006/ 0 RN/L = 3.50 GRADIENT INTERVAL = -5.00/ 5.00

ALPHAT	BETAT	CNFTS	CATS	CAFTS	CLMFTS	CYFTS	CYNTS	CYNFTS	CBLFTS	ALFATU	BETATU
4.397	-5.801	-.06660	.23660	.09140	.07410	.13610	-.03550	-.03390	-.00300	4.25890	-5.95470
4.237	-3.688	-.06120	.23530	.09210	.07000	.08730	-.02490	-.02390	-.00220	4.13110	-3.86550
3.932	.129	-.03720	.23030	.08970	.04920	.00060	-.00110	-.00100	-.00020	3.98050	-.07200
4.072	4.020	-.03970	.23390	.09170	.05920	-.08590	.02370	.02240	.00160	4.24950	3.91510
4.000	6.106	-.04340	.23650	.09020	.05780	-.13280	.03470	.03270	.00300	4.19660	6.04110
	GRADIENT	.00278	-.00018	-.00005	-.00139	-.02247	.00631	.00601	.00049	.01553	1.00943

IA156A, AEDC PWT 16T-470, 0 T S W/SILTS (R8NS67) (10 MAY 80)

REFERENCE DATA

SREF = 2690.0000 SQ.FT. XMRP = 976.0000 IN. XT
LREF = 1290.3000 INCHES YMRP = .0000 IN. YT
BREF = 1290.3000 INCHES ZMRP = 400.0000 IN. ZT
SCALE = .0200

PARAMETRIC DATA

IB-ELV = 10.000 OB-ELV = 11.000
BDFLAP = .000 SPDBRK = .000
RUDDER = .000 SILTS = 1.000
MACH = .950 RN/L = 3.500

RUN NO. 1007/ 0 RN/L = 3.49 GRADIENT INTERVAL = -5.00/ 5.00

ALPHAT	BETAT	CNFTS	CATS	CAFTS	CLMFTS	CYFTS	CYNTS	CYNFTS	CBLFTS	ALFATU	BETATU
-8.291	-5.994	-.42100	.26690	.09300	.05410	.10730	-.01620	-.01370	-.02390	-8.12260	-6.11210
-8.398	-3.759	-.41200	.27000	.09680	.05000	.06480	-.01100	-.01000	-.01510	-8.25770	-3.90930
-8.331	.178	-.38470	.27290	.09750	.03800	-.00300	-.00070	-.00070	.00090	-8.27480	-.01970
-8.156	4.396	-.38090	.27000	.09380	.03720	-.07340	.00990	.00890	.01760	-8.20450	4.19670
-8.170	6.279	-.38930	.26780	.09400	.04000	-.10530	.01340	.01120	.02410	-8.25130	6.09080
	GRADIENT	.00378	-.00001	-.00037	-.00155	-.01694	.00256	.00232	.00401	.00664	.99400

RUN NO. 1008/ 0 RN/L = 3.50 GRADIENT INTERVAL = -5.00/ 5.00

ALPHAT	BETAT	CNFTS	CATS	CAFTS	CLMFTS	CYFTS	CYNTS	CYNFTS	CBLFTS	ALFATU	BETATU
-6.270	-5.989	-.35230	.26930	.09820	.05520	.10960	-.01800	-.01570	-.02090	-6.08680	-6.08170
-6.216	-4.052	-.33850	.26970	.10220	.05110	.07310	-.01400	-.01280	-.01420	-6.05260	-4.17680
-6.348	.105	-.30770	.27270	.10160	.03420	-.00520	.00010	.00020	.00090	-6.28920	-.09130
-6.154	4.256	-.30900	.27140	.10100	.03990	-.07230	.01070	.00940	.01470	-6.22350	4.06260
-5.822	6.404	-.30390	.26830	.10360	.04520	-.10810	.01500	.01260	.02010	-5.93450	6.23240
	GRADIENT	.00355	.00020	-.00014	-.00135	-.01750	.00297	.00267	.00348	-.02058	.99170

IA156A, AEDC PWT 16T-470, 0 T S W/SILTS (R8NS67) (10 MAY 80)

REFERENCE DATA

SREF = 2690.0000 SQ.FT. XMRP = 976.0000 IN. XT
LREF = 1290.3000 INCHES YMRP = .0000 IN. YT
BREF = 1290.3000 INCHES ZMRP = 400.0000 IN. ZT
SCALE = .0200

PARAMETRIC DATA

IB-ELV = 10.000 OB-ELV = 11.000
BDFLAP = .000 SPDBRK = .000
RUDDER = .000 SILTS = 1.000
MACH = .950 RN/L = 3.500

RUN NO. 1009/ 0 RN/L = 3.50 GRADIENT INTERVAL = -5.00/ 5.00

ALPHAT	BETAT	CNFTS	CATS	CAFTS	CLMFTS	CYFTS	CYNTS	CYNFTS	CBLFTS	ALFATU	BETATU
-4.039	-6.129	-.28750	.27170	.10410	.06370	.11240	-.01950	-.01710	-.01720	-3.84040	-6.17970
-4.313	-3.968	-.27920	.27060	.10670	.05540	.07080	-.01460	-.01340	-.01160	-4.13010	-4.06180
-4.271	.375	-.23650	.26950	.10490	.03710	-.01110	.00120	.00120	.00150	-4.22370	.17520
-3.775	4.319	-.23200	.27090	.10770	.04760	-.07540	.01210	.01060	.01140	-3.88740	4.14670
-3.859	6.145	-.24620	.27140	.10270	.05020	-.10790	.01620	.01380	.01620	-3.99790	5.99430
	GRADIENT	.00577	.00003	.00011	-.00100	-.01766	.00323	.00290	.00278	.02843	.99036

RUN NO. 1010/ 0 RN/L = 3.50 GRADIENT INTERVAL = -5.00/ 5.00

ALPHAT	BETAT	CNFTS	CATS	CAFTS	CLMFTS	CYFTS	CYNTS	CYNFTS	CBLFTS	ALFATU	BETATU
-.216	-6.945	-.20000	.27110	.10870	.07740	.14150	-.02980	-.02720	-.01250	-.01830	-6.88990
-.208	-4.758	-.18580	.26960	.10910	.07230	.09570	-.02380	-.02180	-.00840	-.01060	-4.70230
-.246	-.513	-.14470	.26740	.10890	.05060	.00760	-.00430	-.00400	-.00120	-.04830	-.45770
-.177	3.685	-.14640	.26900	.10850	.05740	-.07890	.02080	.01920	.00580	.02100	3.74070
-.167	5.826	-.15040	.26990	.10660	.05950	-.12220	.02960	.02720	.00920	.03060	5.88110
	GRADIENT	.00468	-.00007	-.00007	-.00177	-.02068	.00528	.00485	.00168	.00372	1.00000

RUN NO. 1011/ 0 RN/L = 3.49 GRADIENT INTERVAL = -5.00/ 5.00

ALPHAT	BETAT	CNFTS	CATS	CAFTS	CLMFTS	CYFTS	CYNTS	CYNFTS	CBLFTS	ALFATU	BETATU
4.421	-5.961	-.07060	.26540	.10280	.07660	.14430	-.03800	-.03620	-.00350	4.28530	-6.11530
4.219	-3.628	-.05930	.26330	.10470	.06760	.08950	-.02570	-.02470	-.00240	4.11880	-3.80760
3.916	.195	-.03610	.25910	.10150	.04470	-.00180	.00020	.00010	.00000	3.97160	-.00310
4.085	4.081	-.04010	.26150	.10400	.05830	-.08970	.02450	.02310	.00200	4.26460	3.98090
4.042	6.118	-.04410	.26320	.10360	.06190	-.13730	.03570	.03350	.00290	4.23770	6.05650
	GRADIENT	.00248	-.00023	-.00009	-.00119	-.02324	.00651	.00620	.00057	.01907	1.01030

IA156A, AEDC PWT 16T-470, 0 T S W/SILTS (R8NS68) (10 MAY 80)

REFERENCE DATA

SREF = 2690.0000 SQ.FT. XMRP = 976.0000 IN. XT
LREF = 1290.3000 INCHES YMRP = .0000 IN. YT
BREF = 1290.3000 INCHES ZMRP = 400.0000 IN. ZT
SCALE = .0200

PARAMETRIC DATA

IB-ELV = 10.000 OB-ELV = 11.000
BDFLAP = .000 SPDBRK = .000
RUDDER = .000 SILTS = 1.000
MACH = 1.050 RN/L = 3.500

RUN NO. 1012/ 0 RN/L = 3.52 GRADIENT INTERVAL = -5.00/ 5.00

ALPHAT	BETAT	CNFTS	CATS	CAFTS	CLMFTS	CYFTS	CYNTS	CYNFTS	CBLFTS	ALFATU	BETATU
-8.293	-6.010	-.43850	.34640	.13750	.05410	.11820	-.01680	-.01410	-.02730	-8.12130	-6.12030
-8.445	-3.773	-.43390	.34710	.14280	.05280	.07380	-.01240	-.01100	-.01810	-8.30140	-3.91680
-8.388	.174	-.41000	.36200	.13160	.03540	-.00300	.00000	.00000	.00120	-8.32640	-.01990
-8.161	4.405	-.40060	.35310	.13740	.03770	-.07850	.00980	.00830	.01970	-8.20400	4.20590
-8.196	6.283	-.40970	.34950	.13500	.04160	-.11180	.01340	.01080	.02650	-8.27260	6.09390
	GRADIENT	.00405	.00070	-.00064	-.00182	-.01861	.00271	.00236	.00462	.01211	.99335

RUN NO. 1013/ 0 RN/L = 3.50 GRADIENT INTERVAL = -5.00/ 5.00

ALPHAT	BETAT	CNFTS	CATS	CAFTS	CLMFTS	CYFTS	CYNTS	CYNFTS	CBLFTS	ALFATU	BETATU
-6.285	-6.002	-.36230	.34960	.14010	.05480	.11590	-.01800	-.01540	-.02340	-6.10020	-6.08740
-6.221	-4.071	-.34800	.35120	.14190	.05060	.07730	-.01310	-.01160	-.01600	-6.05400	-4.18850
-6.384	.113	-.31910	.35470	.14160	.03250	-.00470	.00010	.00010	.00080	-6.31960	-.08050
-6.161	4.274	-.32040	.35380	.14170	.03870	-.07650	.01070	.00920	.01620	-6.22580	4.08130
-6.094	6.257	-.32880	.34980	.13940	.04230	-.11470	.01690	.01430	.02290	-6.19600	6.08080
	GRADIENT	.00331	.00031	-.00002	-.00143	-.01843	.00285	.00249	.00386	-.02062	.99090

RUN NO. 1014/ 0 RN/L = 3.50 GRADIENT INTERVAL = -5.00/ 5.00

ALPHAT	BETAT	CNFTS	CATS	CAFTS	CLMFTS	CYFTS	CYNTS	CYNFTS	CBLFTS	ALFATU	BETATU
-4.064	-6.146	-.29250	.34780	.14400	.06230	.12010	-.01980	-.01730	-.01960	-3.86510	-6.18810
-4.334	-3.995	-.28370	.34880	.14600	.05460	.07690	-.01570	-.01420	-.01350	-4.14930	-4.08110
-4.177	.198	-.23690	.35210	.14620	.03390	-.00670	.00020	.00010	.00080	-4.11510	.00340
-4.011	4.241	-.24460	.35170	.14690	.04380	-.07810	.01320	.01160	.01310	-4.11290	4.06430
-3.854	6.150	-.25000	.34910	.14580	.04850	-.11440	.01910	.01680	.01790	-3.98970	5.99760
	GRADIENT	.00479	.00035	.00011	-.00133	-.01883	.00351	.00313	.00323	.00444	.98898

RUN NO. 1015/ 0 RN/L = 3.50 GRADIENT INTERVAL = -5.00/ 5.00

ALPHAT	BETAT	CNFTS	CATS	CAFTS	CLMFTS	CYFTS	CYNTS	CYNFTS	CBLFTS	ALFATU	BETATU
-.224	-6.947	-.20030	.34470	.14610	.08050	.15010	-.03380	-.03130	-.01410	-.03000	-6.88580
-.228	-4.771	-.18370	.34490	.14800	.07340	.10130	-.02630	-.02450	-.00970	-.03410	-4.71030
-.299	-.552	-.13560	.35000	.14770	.04480	.01310	-.00740	-.00730	-.00150	-.10430	-.49110
-.225	3.617	-.13940	.35130	.15000	.05340	-.07910	.02100	.01940	.00670	-.03060	3.67760
-.211	5.812	-.14586	.35120	.14830	.05730	-.12570	.03070	.02850	.01050	-.01670	5.87230
	GRADIENT	.00529	.00076	.00024	-.00239	-.02151	.00564	.00523	.00196	.00038	1.00001

IA156A, AEDC PWT 16T-470, O T S W/SILTS (R8NS68) (10 MAY 80)

REFERENCE DATA

SREF = 2690.0000 SQ.FT. XMRP = 976.0000 IN. XT
LREF = 1290.3000 INCHES YMRP = .0000 IN. YT
BREF = 1290.3000 INCHES ZMRP = 400.0000 IN. ZT
SCALE = .0200

PARAMETRIC DATA

IB-ELV =	10.000	OB-ELV =	11.000
BDFLAP =	.000	SPDBRK =	.000
RUDDER =	.000	SILTS =	1.000
MACH =	1.050	RN/L =	3.500

RUN NO. 1016/ 0 RN/L = 3.50 GRADIENT INTERVAL = -5.00/ 5.00

ALPHAT	BETAT	CNFTS	CATS	CAFTS	CLMFTS	CYFTS	CYNTS	CYNFTS	CBLFTS	ALFATU	BETATU
4.413	-5.767	-.06810	.34000	.14540	.07690	.14360	-.03980	-.03850	-.00430	4.28530	-5.92590
4.258	-3.701	-.05330	.33940	.14630	.06570	.09440	-.02880	-.02810	-.00340	4.16390	-3.88110
3.924	.150	-.02760	.34020	.14890	.04630	.00200	-.00190	-.00190	-.00040	3.98310	-.04490
4.081	4.106	-.03220	.34110	.14370	.05520	-.09310	.02640	.02540	.00240	4.26210	4.01200
4.030	6.098	-.03860	.33970	.14250	.05960	-.14100	.03650	.03490	.00350	4.22640	6.04300
	GRADIENT	.00269	.00022	-.00034	-.00133	-.02402	.00707	.00685	.00074	.01284	1.01120

IA156A, AEDC PWT 16T-470, O T S W/SILTS (R8NS69) (10 MAY 80)

REFERENCE DATA

SREF = 2690.0000 SQ.FT. XMRP = 976.0000 IN. XT
LREF = 1290.3000 INCHES YMRP = .0000 IN. YT
BREF = 1290.3000 INCHES ZMRP = 400.0000 IN. ZT
SCALE = .0200

PARAMETRIC DATA

IB-ELV =	10.000	OB-ELV =	11.000
BDFLAP =	.000	SPDBRK =	.000
RUDDER =	.000	SILTS =	1.000
MACH =	1.100	RN/L =	3.500

RUN NO. 1017/ 0 RN/L = 3.50 GRADIENT INTERVAL = -5.00/ 5.00

ALPHAT	BETAT	CNFTS	CATS	CAFTS	CLMFTS	CYFTS	CYNTS	CYNFTS	CBLFTS	ALFATU	BETATU
-8.251	-5.931	-.43210	.34150	.14690	.05140	.11190	-.01660	-.01410	-.02600	-8.07760	-6.04010
-8.448	-3.759	-.43160	.34600	.14840	.04810	.07120	-.01130	-.00990	-.01740	-8.30160	-3.90250
-8.415	.170	-.39920	.34870	.15140	.03030	-.00220	-.00150	-.00160	.00150	-8.35110	-.02370
-8.204	4.436	-.39890	.34690	.14780	.03610	-.07540	.00790	.00640	.01980	-8.24520	4.23580
-8.176	6.286	-.40490	.34580	.14840	.04100	-.11010	.01290	.01030	.02600	-8.25100	6.09540
	GRADIENT	.00393	.00010	-.00008	-.00142	-.01788	.00234	.00199	.00454	.00714	.99310

RUN NO. 1018/ 0 RN/L = 3.50 GRADIENT INTERVAL = -5.00/ 5.00

ALPHAT	BETAT	CNFTS	CATS	CAFTS	CLMFTS	CYFTS	CYNTS	CYNFTS	CBLFTS	ALFATU	BETATU
-6.277	-5.998	-.35800	.34110	.15260	.05160	.10950	-.01600	-.01360	-.02270	-6.09060	-6.08120
-6.265	-4.084	-.34780	.34310	.15310	.04660	.07300	-.01170	-.01030	-.01570	-6.09580	-4.19990
-6.425	.133	-.31650	.34490	.15300	.02870	-.00610	-.00120	-.00120	.00150	-6.35900	-.06000
-6.172	4.286	-.31350	.34370	.15570	.03650	-.07370	.00790	.00650	.01620	-6.23520	4.09120
-5.978	6.407	-.31910	.34280	.14960	.04160	-.11340	.01570	.01320	.02280	-6.08200	6.23140
	GRADIENT	.00411	.00007	.00031	-.00121	-.01753	.00234	.00201	.00381	-.01677	.99054

IA156A, AEDC PWT 16T-470, 0 T S W/SILTS (R8NS69) (10 MAY 80)

REFERENCE DATA

SREF = 2690.0000 SQ.FT. XMRP = 976.0000 IN. XT
LREF = 1290.3000 INCHES YMRP = .0000 IN. YT
BREF = 1290.3000 INCHES ZMRP = 400.0000 IN. ZT
SCALE = .0200

PARAMETRIC DATA

IB-ELV = 10.000 OB-ELV = 11.000
BDFLAP = .000 SPDBRK = .000
RUDDER = .000 SILTS = 1.000
MACH = 1.100 RN/L = 3.500

RUN NO. 1019/ 0 RN/L = 3.50 GRADIENT INTERVAL = -5.00/ 5.00

ALPHAT	BETAT	CNFTS	CATS	CAFTS	CLMFTS	CYFTS	CYNTS	CYNFTS	CBLFTS	ALFATU	BETATU
-4.219	-6.141	-.29810	.33950	.15470	.05910	.11240	-.01650	-.01440	-.01990	-4.01930	-6.18430
-4.339	-4.000	-.28300	.33830	.15410	.05100	.07070	-.01250	-.01130	-.01330	-4.15280	-4.08380
-4.307	.266	-.23950	.33850	.15530	.03140	-.00910	-.00040	-.00050	.00160	-4.24570	.07050
-3.783	4.271	-.23560	.34060	.16090	.04410	-.07530	.00970	.00840	.01290	-3.88840	4.09570
-3.851	6.143	-.24950	.34100	.15470	.04930	-.11040	.01620	.01410	.01780	-3.98430	5.98840
	GRADIENT	.00578	.00028	.00082	-.00087	-.01766	.00269	.00238	.00317	.03139	.98881

RUN NO. 1020/ 0 RN/L = 3.50 GRADIENT INTERVAL = -5.00/ 5.00

ALPHAT	BETAT	CNFTS	CATS	CAFTS	CLMFTS	CYFTS	CYNTS	CYNFTS	CBLFTS	ALFATU	BETATU
-.223	-6.972	-.20330	.33540	.15730	.08100	.14240	-.02820	-.02620	-.01420	-.02860	-6.90920
-.229	-4.796	-.18640	.33210	.15990	.07320	.09460	-.02160	-.02000	-.00970	-.03500	-4.73290
-.287	-.439	-.14200	.33420	.16040	.04680	.00770	-.00490	-.00490	-.00110	-.09270	-.37580
-.205	3.725	-.14550	.33490	.15450	.05670	-.07890	.01920	.01750	.00690	-.01040	3.78820
-.203	5.851	-.15220	.33420	.15740	.05960	-.12370	.02820	.02590	.01070	-.00840	5.91420
	GRADIENT	.00484	.00033	-.00063	-.00197	-.02036	.00478	.00439	.00195	.00276	1.00000

RUN NO. 1021/ 0 RN/L = 3.50 GRADIENT INTERVAL = -5.00/ 5.00

ALPHAT	BETAT	CNFTS	CATS	CAFTS	CLMFTS	CYFTS	CYNTS	CYNFTS	CBLFTS	ALFATU	BETATU
4.427	-5.955	-.07030	.32910	.15450	.08320	.14640	-.03930	-.03790	-.00450	4.29740	-6.11280
4.247	-3.616	-.05380	.32510	.15850	.07080	.09010	-.02730	-.02670	-.00330	4.15510	-3.79900
3.964	.199	-.03240	.32620	.15620	.05260	-.00260	-.00110	-.00110	-.00040	4.02680	.00480
4.102	4.068	-.03990	.32560	.15360	.06220	-.09100	.02430	.02330	.00250	4.28380	3.97480
4.067	6.093	-.04370	.32430	.15550	.06400	-.13940	.03460	.03300	.00360	4.26460	6.03920
	GRADIENT	.00180	.00006	-.00064	-.00111	-.02357	.00671	.00651	.00075	.01686	1.01171

IA156A, AEDC PWT 16T-470, 0 T S W/SILTS (R8NS70) (10 MAY 80)

REFERENCE DATA

SREF = 2690.0000 SQ.FT. XMRP = 976.0000 IN. XT
LREF = 1290.3000 INCHES YMRP = .0000 IN. YT
BREF = 1290.3000 INCHES ZMRP = 400.0000 IN. ZT
SCALE = .0200

PARAMETRIC DATA

IB-ELV = 10.000 OB-ELV = 11.000
BDFLAP = .000 SPDBRK = .000
RUDDER = .000 SILTS = 1.000
MACH = 1.150 RN/L = 3.500

RUN NO. 1022/ 0 RN/L = 3.50 GRADIENT INTERVAL = -5.00/ 5.00

ALPHAT	BETAT	CNFTS	CATS	CAFTS	CLMFTS	CYFTS	CYNTS	CYNFTS	CBLFTS	ALFATU	BETATU
-8.282	-5.950	-.44050	.33990	.15750	.05490	.11430	-.01470	-.01240	-.02690	-8.10610	-6.05940
-8.441	-3.767	-.43940	.34320	.15600	.05270	.07080	-.01010	-.00870	-.01820	-8.29250	-3.91040
-8.396	.198	-.41000	.34660	.16080	.03580	-.00010	-.00200	-.00200	.00110	-8.33050	.00190
-8.188	4.438	-.40930	.34300	.15730	.04320	-.07210	.00560	.00420	.01990	-8.22900	4.23520
-8.195	6.312	-.41700	.33940	.15500	.04640	-.10700	.01090	.00870	.02640	-8.26900	6.11890
	GRADIENT	.00363	-.00003	.00015	-.00112	-.01741	.00191	.00157	.00464	.00793	.99283

RUN NO. 1023/ 0 RN/L = 3.50 GRADIENT INTERVAL = -5.00/ 5.00

ALPHAT	BETAT	CNFTS	CATS	CAFTS	CLMFTS	CYFTS	CYNTS	CYNFTS	CBLFTS	ALFATU	BETATU
-6.271	-6.005	-.36330	.33800	.16120	.05580	.11180	-.01520	-.01290	-.02340	-6.08110	-6.08760
-6.214	-4.073	-.35070	.33950	.16140	.05190	.07510	-.01170	-.01030	-.01610	-6.04200	-4.18830
-6.401	.128	-.32710	.34210	.16060	.03610	-.00150	-.00290	-.00290	.00090	-6.33260	-.06710
-6.154	4.295	-.32660	.34280	.16270	.04300	-.07190	.00560	.00420	.01640	-6.21630	4.09780
-5.954	6.427	-.32800	.33920	.16270	.04690	-.11100	.01250	.01020	.02310	-6.05820	6.24880
	GRADIENT	.00288	.00039	.00015	-.00107	-.01757	.00207	.00173	.00388	-.02090	.99021

RUN NO. 1024/ 0 RN/L = 3.50 GRADIENT INTERVAL = -5.00/ 5.00

ALPHAT	BETAT	CNFTS	CATS	CAFTS	CLMFTS	CYFTS	CYNTS	CYNFTS	CBLFTS	ALFATU	BETATU
-4.208	-6.145	-.30060	.33710	.16240	.06300	.11640	-.01780	-.01570	-.02030	-4.00550	-6.18800
-4.325	-3.999	-.28930	.33820	.16490	.05630	.07460	-.01430	-.01300	-.01380	-4.13580	-4.08260
-4.290	.385	-.24930	.33890	.16490	.03950	-.00730	-.00170	-.00190	.00150	-4.23310	.18660
-3.762	4.322	-.24540	.33970	.16830	.05150	-.07440	.00900	.00770	.01310	-3.86790	4.14500
-3 850	6.179	-.25980	.34030	.16620	.05550	-.10820	.01350	.01150	.01820	-3.98390	6.02180
	GRADIENT	.00535	.00018	.00040	-.00064	-.01792	.00280	.00249	.00324	.03117	.98848

RUN NO. 1025/ 0 RN/L = 3.50 GRADIENT INTERVAL = -5.00/ 5.00

ALPHAT	BETAT	CNFTS	CATS	CAFTS	CLMFTS	CYFTS	CYNTS	CYNFTS	CBLFTS	ALFATU	BETATU
-.192	-7.009	-.20190	.33520	.16650	.08360	.14590	-.03040	-.02830	-.01420	.00420	-6.94340
-.189	-4.836	-.18580	.33370	.16760	.07630	.09780	-.02280	-.02130	-.00970	.00710	-4.77030
-.249	-.482	-.14390	.33830	.16930	.05050	.00950	-.00590	-.00590	-.00130	-.05260	-.41660
-.172	3.653	-.14440	.33810	.16560	.05880	-.07700	.01810	.01660	.00660	.02390	3.71880
-.167	5.854	-.15100	.33700	.16980	.06290	-.12360	.02680	.02470	.01050	.02930	5.92010
	GRADIENT	.00492	.00052	-.00023	-.00210	-.02059	.00481	.00446	.00192	.00184	1.00001

IA156A, AEDC PWT 16T-470, O T S W/SILTS (R8NS70) (10 MAY 80)

REFERENCE DATA

SREF = 2690.0000 SQ.FT. XMRP = 976.0000 IN. XT
LREF = 1290.3000 INCHES YMRP = .0000 IN. YT
BREF = 1290.3000 INCHES ZMRP = 400.0000 IN. ZT
SCALE = .0200

PARAMETRIC DATA

IB-ELV = 10.000 OB-ELV = 11.000
BDFLAP = .000 SPDBRK = .000
RUDDER = .000 SILTS = 1.000
MACH = 1.150 RN/L = 3.500

RUN NO. 1026/ 0 RN/L = 3.50 GRADIENT INTERVAL = -5.00/ 5.00

ALPHAT	BETAT	CNFTS	CATS	CAFTS	CLMFTS	CYFTS	CYNTS	CYNFTS	CBLFTS	ALFATU	BETATU
4.488	-5.770	-.07480	.32840	.16420	.08860	.14290	-.03980	-.03860	-.00480	4.36160	-5.93380
4.309	-3.660	-.06150	.32840	.16630	.07910	.09590	-.03110	-.03040	-.00360	4.21680	-3.84530
4.031	.137	-.04390	.32910	.16680	.06420	.00510	-.00590	-.00580	-.00060	4.09310	-.06040
4.134	4.017	-.04020	.32960	.16610	.06510	-.08650	.02220	.02120	.00230	4.31830	3.92360
4.083	6.090	-.04560	.32880	.16440	.06720	-.13570	.03310	.03170	.00380	4.28280	6.03720
	GRADIENT	.00277	.00016	-.00003	-.00182	-.02376	.00694	.00672	.00077	.01338	1.01200

IA156A, AEDC PWT 16T-470, O T S W/SILTS (R8NS71) (10 MAY 80)

REFERENCE DATA

SREF = 2690.0000 SQ.FT. XMRP = 976.0000 IN. XT
LREF = 1290.3000 INCHES YMRP = .0000 IN. YT
BREF = 1290.3000 INCHES ZMRP = 400.0000 IN. ZT
SCALE = .0200

PARAMETRIC DATA

IB-ELV = 12.000 OB-ELV = 11.000
BDFLAP = .000 SPDBRK = .000
RUDDER = .000 SILTS = 1.000
MACH = .600 RN/L = 3.500

RUN NO. 1030/ 0 RN/L = 3.50 GRADIENT INTERVAL = -5.00/ 5.00

ALPHAT	BETAT	CNFTS	CATS	CAFTS	CLMFTS	CYFTS	CYNTS	CYNFTS	CBLFTS	ALFATU	BETATU
-8.243	-7.865	-.38930	.20720	.05420	.06840	.09410	.00420	.00740	-.02820	-8.15470	-8.05690
-8.129	-5.835	-.37440	.20780	.05690	.06280	.06860	.00210	.00450	-.02090	-8.06920	-6.03720
-8.157	-3.808	-.36950	.20980	.06010	.06030	.04460	.00010	.00150	-.01360	-8.13590	-4.01830
-8.065	.304	-.35500	.21140	.06010	.05620	-.01010	.00120	.00110	.00180	-8.14470	.10830
-7.945	4.251	-.34430	.21200	.05960	.05210	-.05530	.00130	-.00010	.01470	-8.10440	4.11290
-7.803	6.306	-.33850	.21120	.06240	.05240	-.07720	-.00020	-.00250	.02110	-7.98680	6.20290
-7.817	8.345	-.34160	.21090	.05760	.05430	-.10180	-.00070	-.00360	.02680	-8.01390	8.26850
	GRADIENT	.00313	.00027	-.00006	-.00102	-.01240	.00015	-.00020	.00351	.00387	1.00895

RUN NO. 1031/ 0 RN/L = 3.49 GRADIENT INTERVAL = -5.00/ 5.00

ALPHAT	BETAT	CNFTS	CATS	CAFTS	CLMFTS	CYFTS	CYNTS	CYNFTS	CBLFTS	ALFATU	BETATU
-6.136	-7.956	-.32710	.20830	.06190	.06810	.10210	.00060	.00350	-.02440	-6.01980	-8.13170
-6.100	-5.916	-.31780	.20820	.06230	.06350	.07200	.00060	.00290	-.01840	-6.00990	-6.10690
-6.032	-3.997	-.31050	.20860	.06290	.06040	.04750	-.00060	.00080	-.01220	-5.97900	-4.20090
-6.099	.078	-.29280	.20890	.06280	.05330	-.00580	-.00020	-.00020	.00100	-6.17100	-.11970
-5.929	4.188	-.28260	.21130	.06590	.05430	-.05370	.00140	.00010	.01220	-6.10320	4.06970
-5.871	6.175	-.28330	.21030	.06320	.05430	-.07690	.00140	-.00080	.01750	-6.06580	6.09500
-5.672	8.332	-.27720	.21140	.06350	.05480	-.10810	.00350	.00070	.02220	-5.87780	8.28500
	GRADIENT	.00341	.00033	.00037	-.00074	-.01236	.00024	-.00009	.00298	-.01513	1.01050

IA156A FORCE DATA WITH FLOW ANGULARITY CORRECTION

IA156A, AEDC PWT 16T-470, O T S W/SILTS

(R8NS71) (10 MAY 80)

REFERENCE DATA

SREF = 2690.0000 SQ.FT. XMRP = 976.0000 IN. XT
LREF = 1290.3000 INCHES YMRP = .0000 IN. YT
BREF = 1290.3000 INCHES ZMRP = 400.0000 IN. ZT
SCALE = .0200

PARAMETRIC DATA

IB-ELV =	12.000	OB-ELV =	11.000
BDFLAP =	.000	SPDBRK =	.000
RUDDER =	.000	SILTS =	1.000
MACH =	.600	RN/L =	3.500

RUN NO. 1042/ 0 RN/L = 3.50 GRADIENT INTERVAL = -5.00/ 5.00

ALPHAT	BETAT	CNFTS	CATS	CAFTS	CLMFTS	CYFTS	CYNTS	CYNFTS	CBLFTS	ALFATU	BETATU
-4.066	-7.858	-.27970	.20920	.06300	.07220	.10960	-.00450	-.00180	-.02010	-3.92140	-8.01200
-4.138	-5.939	-.27200	.20770	.06560	.06750	.07590	-.00170	.00040	-.01540	-4.01480	-6.11080
-4.173	-3.902	-.25940	.20610	.06520	.06250	.04710	-.00240	-.00100	-.00970	-4.08290	-4.09190
-4.072	.374	-.23470	.20850	.06770	.05380	-.01010	.00060	.00030	.00170	-4.15500	.18060
-3.666	4.214	-.22500	.21080	.07050	.05950	-.05810	.00390	.00250	.01000	-3.86200	4.13820
-3.739	6.059	-.22640	.21000	.06830	.05850	-.08120	.00480	.00270	.01380	-3.94540	6.01740
-3.777	8.044	-.22760	.21180	.06620	.05700	-.11120	.00800	.00540	.01780	-3.98740	8.02940
	GRADIENT	.00427	.00058	.00065	-.00040	-.01297	.00077	.00043	.00243	.02639	1.01377

RUN NO. 1043/ 0 RN/L = 3.50 GRADIENT INTERVAL = -5.00/ 5.00

ALPHAT	BETAT	CNFTS	CATS	CAFTS	CLMFTS	CYFTS	CYNTS	CYNFTS	CBLFTS	ALFATU	BETATU
-.188	-8.745	-.18820	.21120	.06750	.07830	.15150	-.02340	-.02120	-.01430	.00870	-8.82110
-.176	-6.540	-.18430	.20790	.06920	.07690	.10590	-.01600	-.01380	-.01050	.02020	-6.61750
-.167	-4.499	-.17590	.20640	.07080	.07370	.07100	-.01230	-.01070	-.00700	.02900	-4.57530
-.162	-.329	-.15610	.20690	.07200	.06380	.00240	-.00230	-.00230	-.00020	.03400	-.40500
-.111	3.754	-.15180	.20780	.07420	.06840	-.06330	.01120	.00980	.00490	.08500	3.67730
-.115	5.855	-.15240	.20770	.07290	.06800	-.09840	.01670	.01470	.00780	.08170	5.77950
-.116	7.958	-.14480	.21010	.06990	.06490	-.13470	.02250	.02020	.01050	.08030	7.88290
	GRADIENT	.00293	.00017	.00041	-.00065	-.01627	.00285	.00248	.00144	.00677	.99998

RUN NO. 1044/ 0 RN/L = 3.50 GRADIENT INTERVAL = -5.00/ 5.00

ALPHAT	BETAT	CNFTS	CATS	CAFTS	CLMFTS	CYFTS	CYNTS	CYNFTS	CBLFTS	ALFATU	BETATU
4.254	-8.047	-.07710	.20390	.06770	.07990	.16950	-.04160	-.03990	-.00360	4.04470	-8.06310
4.323	-5.866	-.06690	.20010	.07080	.07730	.11980	-.03040	-.02900	-.00200	4.11810	-5.91090
4.289	-3.872	-.05920	.19830	.06970	.07520	.07770	-.02070	-.01970	-.00110	4.09590	-3.95440
4.193	.185	-.04920	.19890	.06580	.06800	-.00210	-.00070	-.00090	-.00040	4.11640	-.01080
4.115	4.165	-.04680	.20000	.06750	.06790	-.07880	.01890	.01770	.00020	4.20170	3.97350
4.061	6.220	-.04730	.20140	.07030	.06680	-.12060	.02880	.02710	.00100	4.18520	6.05090
4.045	8.206	-.04180	.20530	.06820	.06410	-.15940	.03710	.03510	.00200	4.18940	8.05240
	GRADIENT	.00155	.00021	-.00028	-.00091	-.01947	.00493	.00465	.00016	.01314	.98637

IA156A, AEDC PWT 16T-470, O T S W/SILTS (R8NS71) (10 MAY 80)

REFERENCE DATA

SREF =	2690.0000 SQ.FT.	XMRP =	976.0000 IN. XT		
LREF =	1290.3000 INCHES	YMRP =	.0000 IN. YT		
BREF =	1290.3000 INCHES	ZMRP =	400.0000 IN. ZT		
SCALE =	.0200				

PARAMETRIC DATA

IB-ELV =	12.000	OB-ELV =	11.000
BDFLAP =	.000	SPDBRK =	.000
RUDDER =	.000	SILTS =	1.000
MACH =	.600	RN/L =	3.500

RUN NO. 1045/ 0 RN/L = 3.51 GRADIENT INTERVAL = -5.00/ 5.00

ALPHAT	BETAT	CNFTS	CATS	CAFTS	CLMFTS	CYFTS	CYNTS	CYNFTS	CBLFTS	ALFATU	BETATU
6.461	-7.971	-.01540	.19820	.06730	.07490	.17540	-.04620	-.04470	.00070	6.25940	-8.02910
6.455	-5.913	-.01090	.19580	.06940	.07630	.12620	-.03380	-.03260	.00120	6.26240	-5.99790
6.430	-3.851	-.01040	.19500	.06520	.07690	.08270	-.02220	-.02130	.00080	6.25790	-3.97210
6.134	.190	-.01260	.19840	.06750	.07380	-.00440	.00060	.00060	-.00040	6.05890	-.00600
6.058	4.098	-.00690	.19690	.06610	.07070	-.08280	.02040	.01930	-.00110	6.10610	3.89400
5.988	6.179	-.00260	.19820	.06810	.06820	-.12340	.03100	.02940	-.00150	6.07870	5.98950
6.033	8.201	.00670	.20150	.06610	.06320	-.16580	.04110	.03940	-.00140	6.14960	8.02600
	GRADIENT	.00043	.00024	.00012	-.00078	-.02082	.00536	.00511	-.00024	-.01927	.98945

RUN NO. 1046/ 0 RN/L = 3.51 GRADIENT INTERVAL = -5.00/ 5.00

ALPHAT	BETAT	CNFTS	CATS	CAFTS	CLMFTS	CYFTS	CYNTS	CYNFTS	CBLFTS	ALFATU	BETATU
8.366	-7.820	.04080	.19280	.06250	.07140	.17350	-.04680	-.04540	.00400	8.17410	-7.90460
8.289	-5.751	.03970	.19060	.06250	.07360	.12440	-.03420	-.03310	.00330	8.11050	-5.86210
8.292	-3.780	.03800	.19150	.06570	.07670	.07670	-.02080	-.01990	.00240	8.13590	-3.92020
8.194	.178	.04000	.19630	.06560	.07450	-.00390	-.00020	-.00040	-.00020	8.11810	-.01870
8.230	4.220	.05360	.19280	.06260	.06960	-.08280	.02040	.01930	-.00290	8.25320	4.01040
8.179	6.224	.06060	.19420	.06240	.06600	-.12450	.03180	.03030	-.00410	8.24060	6.02230
8.171	8.269	.06880	.19630	.05750	.05950	-.17340	.04460	.04310	-.00470	8.26220	8.07960
	GRADIENT	.00196	.00016	-.00039	-.00089	-.01994	.00515	.00490	-.00066	.01473	.99147

IA156A, AEDC PWT 16T-470, O T S W/SILTS (R8NS72) (10 MAY 80)

REFERENCE DATA

SREF = 2690.0000 SQ.FT. XMRP = 976.0000 IN. XT
LREF = 1290.3000 INCHES YMRP = .0000 IN. YT
BREF = 1290.3000 INCHES ZMRP = 400.0000 IN. ZT
SCALE = .0200

PARAMETRIC DATA

IB-ELV = 12.000 OB-ELV = 11.000
BDFLAP = .000 SPDBRK = .000
RUDDER = .000 SILTS = 1.000
MACH = .800 RN/L = 3.500

RUN NO. 1047/ 0 . RN/L = 3.50 GRADIENT INTERVAL = -5.00/ 5.00

ALPHAT	BETAT	CNFTS	CATS	CAFTS	CLMFTS	CYFTS	CYNTS	CYNFTS	CBLFTS	ALFATU	BETATU
-8.325	-5.885	-.40420	.22040	.06630	.06930	.08170	-.00510	-.00230	-.02210	-8.16900	-6.02180
-8.276	-3.830	-.39570	.22330	.06900	.06610	.05420	-.00530	-.00360	-.01470	-8.14820	-3.99380
-8.204	.344	-.37420	.22680	.07300	.05750	-.00900	.00110	.00120	.00170	-8.16880	.13940
-8.061	4.341	-.36160	.22490	.07230	.05160	-.06100	.00470	.00340	.01540	-8.12480	4.14320
-8.052	6.274	-.36530	.22140	.06970	.05250	-.08350	.00360	.00120	.02180	-8.14920	6.09010
	GRADIENT	.00418	.00020	.00041	-.00178	-.01411	.00123	.00086	.00369	.00281	.99576

RUN NO. 1048/ 0 RN/L = 3.50 GRADIENT INTERVAL = -5.00/ 5.00

ALPHAT	BETAT	CNFTS	CATS	CAFTS	CLMFTS	CYFTS	CYNTS	CYNFTS	CBLFTS	ALFATU	BETATU
-6.167	-5.980	-.33530	.22160	.07300	.06950	.08870	-.00830	-.00560	-.01950	-5.99190	-6.09100
-6.107	-4.048	-.32580	.22340	.07500	.06650	.06070	-.00770	-.00600	-.01320	-5.95490	-4.18920
-6.235	.119	-.30620	.22420	.07620	.05350	-.00600	.00010	.00030	.00080	-6.19360	-.08450
-6.050	4.259	-.29650	.22440	.07840	.05290	-.06100	.00550	.00410	.01290	-6.13540	4.06940
-5.781	6.358	-.29190	.22260	.07550	.05430	-.08990	.00720	.00490	.01840	-5.90710	6.19300
	GRADIENT	.00353	.00012	.00041	-.00164	-.01465	.00159	.00122	.00314	-.02177	.99421

RUN NO. 1049/ 0 RN/L = 3.50 GRADIENT INTERVAL = -5.00/ 5.00

ALPHAT	BETAT	CNFTS	CATS	CAFTS	CLMFTS	CYFTS	CYNTS	CYNFTS	CBLFTS	ALFATU	BETATU
-4.038	-6.068	-.28090	.22080	.07670	.07380	.09120	-.00960	-.00700	-.01620	-3.84340	-6.13980
-4.247	-3.965	-.27740	.22220	.07910	.06970	.05770	-.00810	-.00650	-.01070	-4.07330	-4.07810
-4.188	.375	-.24000	.22170	.07930	.05180	-.01000	.00130	.00120	.00130	-4.15750	.16940
-3.715	4.303	-.23170	.22270	.08000	.05780	-.06450	.00820	.00670	.01010	-3.84140	4.13790
-3.797	6.152	-.23800	.22170	.07860	.05900	-.09200	.01080	.00850	.01460	-3.94900	6.01140
-3.752	6.360	-.23750	.22050	.07900	.06010	-.09520	.01130	.00890	.01510	-3.90660	6.22150
	GRADIENT	.00558	.00006	.00011	-.00149	-.01479	.00197	.00160	.00252	.02722	.99350

RUN NO. 1050/ 0 RN/L = 3.50 GRADIENT INTERVAL = -5.00/ 5.00

ALPHAT	BETAT	CNFTS	CATS	CAFTS	CLMFTS	CYFTS	CYNTS	CYNFTS	CBLFTS	ALFATU	BETATU
-.165	-6.832	-.19850	.22200	.07540	.08160	.12250	-.02180	-.01960	-.01210	.03890	-6.79340
-.163	-4.711	-.19030	.21880	.08010	.07750	.08300	-.01720	-.01540	-.00840	.04060	-4.67300
-.185	-.488	-.16320	.21420	.07890	.06170	.00580	-.00260	-.00240	-.00120	.01900	-.44960
-.130	3.683	-.15550	.21740	.08090	.06410	-.06830	.01430	.01290	.00570	.07420	3.72130
-.117	5.794	-.15780	.21910	.08170	.06690	-.10760	.02240	.02030	.00900	.08720	5.83270
	GRADIENT	.00415	-.00017	.00009	-.00160	-.01802	.00375	.00337	.00168	.00398	1.00001

IA156A, AEDC PWT 16T-470, O T S W/SILTS (R8NS72) (10 MAY 80)

REFERENCE DATA

SREF = 2690.0000 SQ.FT. XMRP = 976.0000 IN. XT
LREF = 1290.3000 INCHES YMRP = .0000 IN. YT
BREF = 1290.3000 INCHES ZMRP = 400.0000 IN. ZT
SCALE = .0200

PARAMETRIC DATA

IB-ELV = 12.000 OB-ELV = 11.000
BDFLAP = .000 SPDBRK = .000
RUDDER = .000 SILTS = 1.000
MACH = .800 RN/L = 3.500

RUN NO. 1051/ 0 RN/L = 3.49 GRADIENT INTERVAL = -5.00/ 5.00

ALPHAT	BETAT	CNFTS	CATS	CAFTS	CLMFTS	CYFTS	CYNTS	CYNFTS	CBLFTS	ALFATU	BETATU
4.383	-5.781	-.06300	.21190	.07790	.07690	.12940	-.03360	-.03200	-.00220	4.23360	-5.92470
4.260	-3.761	-.05840	.21040	.07770	.07440	.08120	-.02250	-.02140	-.00140	4.14010	-3.92970
4.121	.193	-.03400	.20820	.07930	.05960	.00040	-.00150	-.00040	.00040	4.15830	-.01170
4.060	4.002	-.03960	.21190	.06670	.06400	-.07930	.02070	.01950	.00060	4.23080	3.88430
4.024	6.122	-.04040	.21380	.07900	.06280	-.12620	.03230	.03040	.00170	4.21640	6.04370
	GRADIENT	.00245	.00019	-.00141	-.00135	-.02068	.00556	.00527	.00026	.01164	1.00659

RUN NO. 1052/ 0 RN/L = 3.50 GRADIENT INTERVAL = -5.00/ 5.00

ALPHAT	BETAT	CNFTS	CATS	CAFTS	CLMFTS	CYFTS	CYNTS	CYNFTS	CBLFTS	ALFATU	BETATU
6.416	-5.833	-.00520	.20880	.07590	.07050	.13190	-.03590	-.03440	.00070	6.29620	-6.00280
6.380	-3.791	-.00110	.20690	.07690	.07070	.08790	-.02450	-.02350	.00070	6.29710	-3.98120
6.044	.166	.00920	.20700	.07690	.05910	.00040	-.00190	-.00180	-.00040	6.08110	-.03840
5.972	4.089	.00910	.20810	.07560	.06030	-.08200	.02150	.02030	-.00110	6.11980	3.94340
6.044	6.039	.02080	.21020	.07580	.05700	-.12440	.03300	.03120	-.00160	6.21700	5.92390
	GRADIENT	.00130	.00015	-.00016	-.00132	-.02156	.00584	.00556	-.00023	-.02254	1.00560

IA156A, AEDC PWT 16T-470, O T S W/SILTS (R8NS73) (10 MAY 80)

REFERENCE DATA

SREF = 2690.0000 SQ.FT. XMRP = 976.0000 IN. XT
LREF = 1290.3000 INCHES YMRP = .0000 IN. YT
BREF = 1290.3000 INCHES ZMRP = 400.0000 IN. ZT
SCALE = .0200

PARAMETRIC DATA

IB-ELV = 12.000 OB-ELV = 11.000
BDFLAP = .000 SPDBRK = .000
RUDDER = .000 SILTS = 1.000
MACH = .900 RN/L = 3.500

RUN NO. 1053/ 0 RN/L = 3.50 GRADIENT INTERVAL = -5.00/ 5.00

ALPHAT	BETAT	CNFTS	CATS	CAFTS	CLMFTS	CYFTS	CYNTS	CYNFTS	CBLFTS	ALFATU	BETATU
-8.316	-5.907	-.42070	.24500	.07730	.06680	.09800	-.01330	-.01090	-.02280	-8.15130	-6.03100
-8.285	-3.800	-.40940	.24650	.08460	.06490	.06390	-.01110	-.00980	-.01480	-8.14680	-3.95350
-8.263	.343	-.38610	.24930	.08470	.05380	-.00850	.00040	.00060	.00210	-8.21520	.14190
-8.087	4.304	-.37130	.24530	.08440	.04760	-.06900	.00880	.00750	.01640	-8.13690	4.10310
	GRADIENT	.00471	-.00014	-.00002	-.00214	-.01641	.00246	.00214	.00385	.00109	.99416

IA156A, AEDC PWT 16T-470, 0 T S W/SILTS (R8NS73) (10 MAY 80)

REFERENCE DATA

SREF = 2690.0000 SQ.FT. XMRP = 976.0000 IN. XT
LREF = 1290.3000 INCHES YMRP = .0000 IN. YT
BREF = 1290.3000 INCHES ZMRP = 400.0000 IN. ZT
SCALE = .0200

PARAMETRIC DATA

IB-ELV = 12.000 OB-ELV = 11.000
BDFLAP = .000 SPDBRK = .000
RUDDER = .000 SILTS = 1.000
MACH = .900 RN/L = 3.500

RUN NO. 1054/ 0 RN/L = 3.50 GRADIENT INTERVAL = -5.00/ 5.00

ALPHAT	BETAT	CNFTS	CATS	CAFTS	CLMFTS	CYFTS	CYNTS	CYNFTS	CBLFTS	ALFATU	BETATU
-6.193	-5.969	-.35110	.24470	.08510	.06650	.10170	-.01430	-.01190	-.02030	-6.01130	-6.06630
-6.164	-4.050	-.33920	.24520	.08040	.06350	.07100	-.01310	-.01170	-.01370	-6.00290	-4.17900
-6.281	.126	-.31210	.24510	.08640	.04910	-.00290	-.00110	-.00090	.00080	-6.22640	-.07310
-6.085	4.270	-.30600	.24290	.08970	.04910	-.06670	.00860	.00720	.01370	-6.15830	4.07710
-5.867	6.367	-.30500	.24360	.08670	.05060	-.10040	.01150	.00930	.01970	-5.98110	6.19490
	GRADIENT	.00399	-.00028	.00112	-.00173	-.01655	.00261	.00227	.00329	-.01872	.99232

RUN NO. 1055/ 0 RN/L = 3.50 GRADIENT INTERVAL = -5.00/ 5.00

ALPHAT	BETAT	CNFTS	CATS	CAFTS	CLMFTS	CYFTS	CYNTS	CYNFTS	CBLFTS	ALFATU	BETATU
-4.080	-6.081	-.28920	.24540	.09020	.07060	.10370	-.01500	-.01270	-.01690	-3.88110	-6.13890
-4.272	-3.977	-.28030	.24470	.09330	.06400	.06770	-.01280	-.01140	-.01130	-4.09070	-4.07640
-4.234	.379	-.23860	.24120	.08860	.04400	-.00970	.00060	.00070	.00130	-4.19030	.17680
-3.753	4.310	-.23560	.24220	.09250	.05200	-.07110	.00970	.00830	.01130	-3.86860	4.13840
-3.836	6.163	-.24220	.24260	.09080	.05370	-.10060	.01350	.01140	.01560	-3.97870	6.01300
	GRADIENT	.00547	-.00031	-.00011	-.00150	-.01677	.00272	.00238	.00273	.02591	.99103

RUN NO. 1056/ 0 RN/L = 3.50 GRADIENT INTERVAL = -5.00/ 5.00

ALPHAT	BETAT	CNFTS	CATS	CAFTS	CLMFTS	CYFTS	CYNTS	CYNFTS	CBLFTS	ALFATU	BETATU
-.201	-6.969	-.20410	.24560	.09020	.07860	.13520	-.02510	-.02310	-.01280	-.00050	-6.31730
-.198	-4.765	-.19030	.24290	.08790	.07240	.09240	-.01970	-.01790	-.00910	.00190	-4.71370
-.241	-.447	-.14920	.23450	.09140	.04850	.00770	-.00370	-.00350	-.00110	-.04140	-.39480
-.176	3.640	-.15050	.23690	.09280	.05510	-.07190	.01670	.01530	.00600	.02370	3.69220
-.163	5.807	-.15430	.24030	.09190	.05940	-.11440	.02540	.02340	.00940	.03680	5.85900
	GRADIENT	.00478	-.00073	.00059	-.00209	-.01955	.00432	.00394	.00180	.00247	1.00002

RUN NO. 1058/ 0 RN/L = 3.51 GRADIENT INTERVAL = -5.00/ 5.00

ALPHAT	BETAT	CNFTS	CATS	CAFTS	CLMFTS	CYFTS	CYNTS	CYNFTS	CBLFTS	ALFATU	BETATU
4.408	-5.805	06600	.23570	.08990	.07480	.13700	-.03560	-.03400	-.00310	4.26900	-5.95880
4.254	-3.706	-.25930	.23480	.08970	.07010	.08710	-.02480	-.02380	-.00230	4.14760	-3.88300
3.925	.104	-.03630	.23090	.08430	.05060	.00220	-.00140	-.00130	-.00030	3.97160	-.09740
4.070	4.013	-.03950	.23310	.09090	.05920	-.08370	.02320	.02190	.00160	4.24750	3.90820
4.008	6.095	-.04120	.23690	.08640	.05820	-.13190	.03470	.03260	.00290	4.20390	6.02900
	GRADIENT	.00255	-.00022	.00016	-.00140	-.02213	.00622	.00592	.00051	.01319	1.00938

IA156A, AEDC PWT 16T-470, 0 T S W/SILTS (R8NS74) (10 MAY 80)

REFERENCE DATA

SREF = 2690.0000 SQ.FT. XMRP = 976.0000 IN. XT
LREF = 1290.3000 INCHES YMRP = .0000 IN. YT
BREF = 1290.3000 INCHES ZMRP = 400.0000 IN. ZT
SCALE = .0200

PARAMETRIC DATA

IB-ELV = 12.000 OB-ELV = 11.000
BDFLAP = .000 SPDBRK = .000
RUDDER = .000 SILTS = 1.000
MACH = .950 RN/L = 3.500

RUN NO. 1059/ 0 RN/L = 3.50 GRADIENT INTERVAL = -5.00/ 5.00

ALPHAT	BETAT	CNFTS	CATS	CAFTS	CLMFTS	CYFTS	CYNTS	CYNFTS	CBLFTS	ALFATU	BETATU
-8.358	-5.882	-.42470	.26820	.08520	.05490	.10740	-.01580	-.01340	-.02360	-8.19120	-6.00140
-8.393	-3.806	-.41540	.27000	.09700	.05160	.06800	-.01140	-.01020	-.01550	-8.25230	-3.95530
-8.326	.402	-.38550	.27360	.09570	.03810	-.00740	.00080	.00090	.00210	-8.27620	.20320
-8.153	4.355	-.38020	.27030	.09540	.03930	-.07120	.00970	.00860	.01740	-8.20080	4.15530
-8.181	6.280	-.38960	.26760	.09390	.04140	-.10350	.01300	.01070	.02420	-8.26160	6.09150
	GRADIENT	.00434	.00005	-.00020	-.00153	-.01707	.00259	.00231	.00403	.00618	.99378

RUN NO. 1060/ 0 RN/L = 3.50 GRADIENT INTERVAL = -5.00/ 5.00

ALPHAT	BETAT	CNFTS	CATS	CAFTS	CLMFTS	CYFTS	CYNTS	CYNFTS	CBLFTS	ALFATU	BETATU
-6.264	-5.987	-.35280	.26900	.09420	.05600	.11000	-.01760	-.01510	-.02100	-6.08090	-6.07970
-6.213	-4.052	-.33930	.27060	.10140	.05300	.07510	-.01460	-.01320	-.01430	-6.05020	-4.17660
-6.336	.107	-.30990	.27320	.10080	.03650	-.00320	-.00030	-.00020	.00060	-6.27770	-.09010
-6.142	4.258	-.30720	.27170	.10040	.04050	-.07170	.01060	.00930	.01470	-6.21120	4.06440
-5.830	6.368	-.30520	.27130	.09860	.04580	-.10840	.01490	.01240	.02040	-5.94120	6.19580
	GRADIENT	.00386	.00013	-.00012	-.00151	-.01767	.00303	.00271	.00349	-.01939	.99175

RUN NO. 1061/ 0 RN/L = 3.50 GRADIENT INTERVAL = -5.00/ 5.00

ALPHAT	BETAT	CNFTS	CATS	CAFTS	CLMFTS	CYFTS	CYNTS	CYNFTS	CBLFTS	ALFATU	BETATU
-4.067	-6.078	-.28710	.27110	.10360	.06430	.11080	-.01870	-.01620	-.01730	-3.86820	-6.12940
-4.306	-3.974	-.29000	.27160	.10570	.05700	.07210	-.01460	-.01310	-.01190	-4.12330	-4.06790
-4.260	.378	-.23790	.27080	.10290	.03880	-.01020	.00100	.00100	.00150	-4.21300	.17830
-3.773	4.323	-.23360	.27190	.10440	.04850	-.07580	.01170	.01020	.01180	-3.88550	4.15130
-3.845	6.148	-.24360	.27090	.10420	.05110	-.10730	.01610	.01370	.01630	-3.98360	5.99690
	GRADIENT	.00566	.00003	-.00017	-.00108	-.01784	.00318	.00282	.00286	.02782	.99037

RUN NO. 1062/ 0 RN/L = 3.50 GRADIENT INTERVAL = -5.00/ 5.00

ALPHAT	BETAT	CNFTS	CATS	CAFTS	CLMFTS	CYFTS	CYNTS	CYNFTS	CBLFTS	ALFATU	BETATU
-.207	-6.949	-.19790	.27100	.09860	.07790	.14090	-.02950	-.02680	-.01240	-.00920	-6.89340
-.196	-4.783	-.18470	.27020	.10790	.07360	.09680	-.02350	-.02140	-.00860	.00150	-4.72730
-.228	-.468	-.14340	.26740	.10570	.05250	.00800	-.00410	-.00380	-.00120	-.03070	-.41270
-.155	3.632	-.14600	.26850	.10600	.05980	-.07660	.02040	.01870	.00560	.04250	3.68760
-.150	5.800	-.15000	.26720	.10160	.06160	-.11820	.02830	.02590	.00890	.04760	5.85530
	GRADIENT	.00464	-.00021	-.00023	-.00167	-.02061	.00521	.00476	.00169	.00477	1.00001

IA156A, AEDC PWT 16T-470, 0 T S W/SILTS (R8NS74) (10 MAY 80)

REFERENCE DATA

SREF = 2690.0000 SQ.FT. XMRP = 976.0000 IN. XT
LREF = 1290.3000 INCHES YMRP = .0000 IN. YT
BREF = 1290.3000 INCHES ZMRP = 400.0000 IN. ZT
SCALE = .0200

PARAMETRIC DATA

IB-ELV = 12.000 OB-ELV = 11.000
BDFLAP = .000 SPDBRK = .000
RUDDER = .000 SILTS = 1.000
MACH = .950 RN/L = 3.500

RUN NO. 1063/ 0 RN/L = 3.50 GRADIENT INTERVAL = -5.00/ 5.00

ALPHAT	BETAT	CNFTS	CATS	CAFTS	CLMFTS	CYFTS	CYNTS	CYNFTS	CBLFTS	ALFATU	BETATU
4.300	-5.872	-.07440	.26260	.10230	.07890	.14240	-.03750	-.03560	-.00380	4.16290	-6.02490
4.268	-3.774	-.05900	.26240	.10450	.07000	.09440	-.02680	-.02560	-.00260	4.16480	-3.95190
4.092	.184	-.03200	.25750	.10040	.04650	-.00010	-.00020	-.00030	-.00010	4.14700	-.01400
4.053	3.956	-.03910	.26030	.10270	.05810	-.08600	.02370	.02230	.00190	4.23160	3.85340
4.036	6.094	-.04170	.26050	.10080	.06160	-.13620	.03550	.03340	.00280	4.23230	6.03290
	GRADIENT	.00261	-.00028	-.00024	-.00158	-.02334	.00653	.00620	.00058	.00853	1.00963

IA156A, AEDC PWT 16T-470, 0 T S W/SILTS (R8NS75) (10 MAY 80)

REFERENCE DATA

SREF = 2690.0000 SQ.FT. XMRP = 976.0000 IN. XT
LREF = 1290.3000 INCHES YMRP = .0000 IN. YT
BREF = 1290.3000 INCHES ZMRP = 400.0000 IN. ZT
SCALE = .0200

PARAMETRIC DATA

IB-ELV = 12.000 OB-ELV = 11.000
BDFLAP = .000 SPDBRK = .000
RUDDER = .000 SILTS = 1.000
MACH = 1.050 RN/L = 3.500

RUN NO. 1064/ 0 RN/L = 3.50 GRADIENT INTERVAL = -5.00/ 5.00

ALPHAT	BETAT	CNFTS	CATS	CAFTS	CLMFTS	CYFTS	CYNTS	CYNFTS	CBLFTS	ALFATU	BETATU
-8.378	-5.900	-.44520	.34850	.12470	.05500	.11730	-.01680	-.01400	-.02680	-8.20860	-6.01280
-8.410	-3.816	-.44080	.34980	.12880	.05330	.07720	-.01260	-.01120	-.01860	-8.26540	-3.95950
-8.379	.395	-.40440	.35630	.14030	.03540	-.00700	.00130	.00120	.00220	-8.32380	.19890
-8.193	4.345	-.40770	.35430	.15450	.04230	-.07780	.01220	.01090	.01940	-8.23500	4.14550
-8.207	6.289	-.41290	.35070	.13440	.04180	-.11180	.01380	.01120	.02680	-8.28320	6.10020
	GRADIENT	.00411	.00056	.00314	-.00138	-.01900	.00304	.00271	.00466	.00353	.99306

RUN NO. 1065/ 0 RN/L = 3.51 GRADIENT INTERVAL = -5.00/ 5.00

ALPHAT	BETAT	CNFTS	CATS	CAFTS	CLMFTS	CYFTS	CYNTS	CYNFTS	CBLFTS	ALFATU	BETATU
-6.284	-6.013	-.36310	.34860	.13970	.05530	.11890	-.01800	-.01540	-.02380	-6.09840	-6.09860
-6.216	-4.059	-.35140	.35090	.14050	.05170	.07880	-.01290	-.01140	-.01630	-6.04900	-4.17630
-6.384	.106	-.32060	.35480	.14020	.03440	-.00360	.00020	.00030	.00080	-6.31970	-.08690
-6.134	4.265	-.31900	.35350	.14280	.03990	-.07580	.01110	.00970	.01610	-6.19880	4.07210
-6.109	6.269	-.32830	.34930	.13900	.04290	-.11360	.01690	.01430	.02270	-6.21140	6.09270
	GRADIENT	.00389	.00031	.00028	-.00142	-.01857	.00288	.00253	.00389	-.01801	.99090

IA156A, AEDC PWT 16T-470, O T S W/SILTS (R8NS75) (10 MAY 80)

REFERENCE DATA

SREF = 2690.0000 SQ.FT. XMRP = 976.0000 IN. XT
LREF = 1290.3000 INCHES YMRP = .0000 IN. YT
BREF = 1290.3000 INCHES ZMRP = 400.0000 IN. ZT
SCALE = .0200

PARAMETRIC DATA

IB-ELV = 12.000 OB-ELV = 11.000
BDFLAP = .000 SPDBRK = .000
RUDDER = .000 SILTS = 1.000
MACH = 1.050 RN/L = 3.500

RUN NO. 1066/ 0 RN/L = 3.50 GRADIENT INTERVAL = -5.00/ 5.00

ALPHAT	BETAT	CNFTS	CATS	CAFTS	CLMFTS	CYFTS	CYNTS	CYNFTS	CBLFTS	ALFATU	BETATU
-4.095	-6.103	-.29330	.34710	.14290	.06320	.12050	-.01920	-.01680	-.01970	-3.89590	-6.14710
-4.320	-3.992	-.28390	.34900	.14390	.05630	.07710	-.01500	-.01360	-.01350	-4.13570	-4.07870
-4.301	.365	-.24150	.35200	.14350	.03570	-.00680	.00040	.00030	.00130	-4.24860	.16780
-3.779	4.325	-.23920	.35130	.14630	.04630	-.08080	.01400	.01250	.01310	-3.88700	4.15220
-3.866	6.164	-.25140	.34790	.14500	.04930	-.11470	.01900	.01670	.01800	-4.00070	6.01190
	GRADIENT	.00545	.00028	.00028	-.00126	-.01899	.00349	.00314	.00320	.02897	.98940

RUN NO. 1067/ 0 RN/L = 3.50 GRADIENT INTERVAL = -5.00/ 5.00

ALPHAT	BETAT	CNFTS	CATS	CAFTS	CLMFTS	CYFTS	CYNTS	CYNFTS	CBLFTS	ALFATU	BETATU
-.215	-6.991	-.20090	.34350	.14450	.08180	.15440	-.03390	-.03150	-.01450	-.02050	-6.92980
-.216	-4.816	-.18410	.34370	.14450	.07490	.10480	-.02660	-.02470	-.00990	-.02110	-4.75540
-.291	-.466	-.13590	.34960	.14550	.04590	.01120	-.00630	-.00620	-.00140	-.09620	-.40530
-.212	3.642	-.13710	.35060	.14630	.05410	-.07870	.02070	.01920	.00660	-.01780	3.70300
-.196	5.813	-.14440	.35010	.14410	.05850	-.12400	.03020	.02800	.01020	-.00200	5.87410
	GRADIENT	.00561	.00082	.00021	-.00250	-.02169	.00558	.00518	.00195	.00022	1.00001

RUN NO. 1068/ 0 RN/L = 3.50 GRADIENT INTERVAL = -5.00/ 5.00

ALPHAT	BETAT	CNFTS	CATS	CAFTS	CLMFTS	CYFTS	CYNTS	CYNFTS	CBLFTS	ALFATU	BETATU
4.315	-5.857	-.07350	.34000	.14180	.08040	.14600	-.03980	-.03840	-.00450	4.18390	-6.01330
4.261	-3.758	-.05450	.33880	.14450	.06830	.09660	-.02890	-.02810	-.00350	4.16530	-3.93790
4.075	.190	-.02450	.33920	.13780	.04780	.00120	-.00160	-.00160	-.00050	4.13580	-.00480
4.072	3.960	-.03250	.34090	.14260	.05550	-.08850	.02510	.02420	.00230	4.25130	3.86320
4.057	6.093	-.03910	.33880	.14180	.06010	-.13810	.03610	.03460	.00350	4.25260	6.03720
	GRADIENT	.00289	.00027	-.00026	-.00169	-.02398	.00700	.00678	.00075	.01100	1.01061

IA156A, AEDC PWT 16T-470, O T S W/SILTS (R8NS76) (10 MAY 80)

REFERENCE DATA

SREF = 2690.0000 SQ.FT. XMRP = 976.0000 IN. XT
LREF = 1290.3000 INCHES YMRP = .0000 IN. YT
BREF = 1290.3000 INCHES ZMRP = 400.0000 IN. ZT
SCALE = .0200

PARAMETRIC DATA

IB-ELV = 12.000 OB-ELV = 11.000
BDFLAP = .000 SPDBRK = .000
RUDDER = .000 SILTS = 1.000
MACH = 1.100 RN/L = 3.500

RUN NO. 1069/ 0 RN/L = 3.50 GRADIENT INTERVAL = -5.00/ 5.00

ALPHAT	BETAT	CNFTS	CATS	CAFTS	CLMFTS	CYFTS	CYNTS	CYNFTS	CBLFTS	ALFATU	BETATU
-8.379	-6.012	-.44130	.34160	.14510	.05270	.11670	-.01670	-.01410	-.02680	-8.20610	-6.12110
-8.435	-3.867	-.43260	.34440	.14740	.04910	.07230	-.01050	-.00910	-.01770	-8.28690	-4.00830
-8.414	.291	-.40040	.34920	.14990	.03140	-.00550	-.00040	-.00050	.00230	-8.35270	.09560
-8.210	4.314	-.39930	.34720	.14650	.03740	-.07330	.00810	.00670	.01940	-8.24860	4.11330
-8.184	6.265	-.40450	.34420	.14700	.04050	-.11010	.01340	.01090	.02610	-8.25800	6.07450
	GRADIENT	.00409	.00035	-.00011	-.00145	-.01780	.00227	.00193	.00454	.00457	.99271

RUN NO. 1070/ 0 RN/L = 3.50 GRADIENT INTERVAL = -5.00/ 5.00

ALPHAT	BETAT	CNFTS	CATS	CAFTS	CLMFTS	CYFTS	CYNTS	CYNFTS	CBLFTS	ALFATU	BETATU
-6.290	-6.017	-.35980	.34040	.14950	.05280	.11180	-.01580	-.01330	-.02290	-6.10360	-6.09970
-6.239	-4.082	-.34690	.34190	.15170	.04780	.07400	-.01140	-.01010	-.01570	-6.07010	-4.19710
-6.429	.126	-.32050	.34420	.15510	.03000	-.00590	-.00040	-.00040	.00140	-6.36290	-.06740
-6.170	4.278	-.31490	.34420	.15390	.03760	-.07320	.00840	.00710	.01620	-6.23270	4.08350
-5.942	6.379	-.31630	.34170	.15140	.04200	-.11290	.01580	.01330	.02270	-6.04570	6.20280
	GRADIENT	.00383	.00028	.00026	-.00123	-.01761	.00237	.00206	.00382	-.01956	.99051

RUN NO. 1071/ 0 RN/L = 3.50 GRADIENT INTERVAL = -5.00/ 5.00

ALPHAT	BETAT	CNFTS	CATS	CAFTS	CLMFTS	CYFTS	CYNTS	CYNFTS	CBLFTS	ALFATU	BETATU
-4.118	-6.111	-.29370	.33800	.15290	.05960	.11430	-.01660	-.01450	-.01980	-3.91830	-6.15310
-4.342	-4.003	-.28410	.33770	.15370	.05250	.07220	-.01220	-.01090	-.01350	-4.15620	-4.08780
-4.310	.381	-.23910	.33830	.15380	.03240	-.00940	-.00030	-.00040	.00190	-4.25510	.18440
-3.782	4.331	-.23710	.34080	.15750	.04550	-.07620	.00990	.00860	.01320	-3.88830	4.15600
-3.851	6.161	-.24860	.33990	.15570	.04970	-.11070	.01600	.01400	.01790	-3.98470	6.00630
	GRADIENT	.00572	.00037	.00045	-.00091	-.01782	.00265	.00234	.00321	.03114	.98890

RUN NO. 1072/ 0 RN/L = 3.50 GRADIENT INTERVAL = -5.00/ 5.00

ALPHAT	BETAT	CNFTS	CATS	CAFTS	CLMFTS	CYFTS	CYNTS	CYNFTS	CBLFTS	ALFATU	BETATU
-.210	-7.013	-.20170	.33380	.15510	.08150	.14380	-.02800	-.02030	-.01440	-.01530	-6.94990
-.217	-4.837	-.18790	.33150	.15780	.07530	.09920	-.02210	-.02040	-.01000	-.02290	-4.77400
-.271	-.468	-.14130	.33460	.15790	.04850	.00870	-.00490	-.00480	-.00140	-.07690	-.40500
-.198	3.648	-.14430	.33500	.15170	.05740	-.07620	.01820	.01670	.00660	-.00390	3.71160
-.183	5.845	-.15010	.33420	.15690	.06100	-.12180	.02730	.02510	.01040	.01100	5.90780
	GRADIENT	.00519	.00042	-.00071	-.00215	-.02067	.00474	.00436	.00196	.00209	1.00004

IA156A, AEDC PWT 16T-470, O T S W/SILTS (R8NS76) (10 MAY 80)

REFERENCE DATA

SREF = 2690.0000 SQ.FT. XMRP = 976.0000 IN. XT
LREF = 1290.3000 INCHES YMRP = .0000 IN. YT
BREF = 1290.3000 INCHES ZMRP = 400.0000 IN. ZT
SCALE = .0200

PARAMETRIC DATA

IB-ELV = 12.000 OB-ELV = 11.000
BDFLAP = .000 SPDBRK = .000
RUDDER = .000 SILTS = 1.000
MACH = 1.100 RN/L = 3.500

RUN NO. 1073/ 0 RN/L = 3.51 GRADIENT INTERVAL = -5.00/ 5.00

ALPHAT	BETAT	CNFTS	CATS	CAFTS	CLMFTS	CYFTS	CYNTS	CYNFTS	CBLFTS	ALFATU	BETATU
4.465	-5.752	-.06530	.32420	.15430	.08240	.13910	-.03780	-.03650	-.00420	4.33830	-5.91300
4.274	-3.748	-.05380	.32490	.15310	.07330	.09180	-.02720	-.02650	-.00330	4.17880	-3.92920
4.110	.188	-.03060	.32490	.15510	.05480	-.00220	-.00120	-.00120	-.00050	4.17250	-.00670
4.108	3.935	-.03860	.32570	.15460	.06250	-.08860	.02370	.02280	.00240	4.28810	3.83870
4.071	6.074	-.04560	.32400	.15250	.06510	-.13780	.03450	.03300	.00380	4.26810	6.02010
	GRADIENT	.00201	.00010	.00020	-.00143	-.02348	.00652	.00642	.00074	.01409	1.01091

IA156A, AEDC PWT 16T-470, O T S W/SILTS (R8NS77) (10 MAY 80)

REFERENCE DATA

SREF = 2690.0000 SQ.FT. XMRP = 976.0000 IN. XT
LREF = 1290.3000 INCHES YMRP = .0000 IN. YT
BREF = 1290.3000 INCHES ZMRP = 400.0000 IN. ZT
SCALE = .0200

PARAMETRIC DATA

IB-ELV = 8.000 OB-ELV = 11.000
BDFLAP = .000 SPDBRK = .000
RUDDER = .000 SILTS = 1.000
MACH = .600 RN/L = 3.500

RUN NO. 1077/ 0 RN/L = 3.50 GRADIENT INTERVAL = -5.00/ 5.00

ALPHAT	BETAT	CNFTS	CATS	CAFTS	CLMFTS	CYFTS	CYNTS	CYNFTS	CBLFTS	ALFATU	BETATU
-8.256	-7.887	-.38920	.21020	.05390	.06520	.09750	.00340	.00640	-.02850	-8.16920	-8.07970
-8.132	-5.827	-.37320	.20900	.05740	.05930	.06980	.00130	.00360	-.02110	-8.07130	-6.02960
-8.165	-3.808	-.37360	.21370	.04740	.05740	.04690	-.00050	.00100	-.01390	-8.14540	-4.01850
-8.071	.296	-.35120	.21030	.06460	.05260	-.00710	.00060	.00050	.00170	-8.14940	.10070
-7.958	4.256	-.34500	.21500	.04700	.04910	-.05340	.00030	-.00110	.01500	-8.11550	4.11750
-7.942	6.193	-.34470	.21310	.06330	.04980	-.07410	-.00130	-.00350	.02140	-8.12560	6.08760
-7.958	8.209	-.34420	.21120	.05720	.05110	-.09760	-.00220	-.00510	.02700	-8.15490	8.13130
	GRADIENT	.00356	.00016	-.00002	-.00103	-.01244	.00010	-.00026	.00359	.00368	1.00887

RUN NO. 1078/ 0 RN/L = 3.50 GRADIENT INTERVAL = -5.00/ 5.00

ALPHAT	BETAT	CNFTS	CATS	CAFTS	CLMFTS	CYFTS	CYNTS	CYNFTS	CBLFTS	ALFATU	BETATU
-6.139	-7.950	-.32440	.20940	.05990	.06520	.10400	.00020	.00300	-.02440	-6.02250	-8.12590
-6.112	-5.915	-.31690	.20910	.06160	.06020	.07570	-.00050	.00190	-.01870	-6.02150	-6.10540
-6.037	-3.998	-.30840	.21030	.06420	.05710	.05050	-.00160	-.00030	-.01230	-5.98300	-4.20170
-6.111	.081	-.29280	.21100	.06270	.04970	-.00530	-.00020	-.00030	.00120	-6.18380	-.11670
-5.949	4.186	-.28320	.21310	.06670	.05150	-.05110	.00040	-.00100	.01240	-6.12430	4.06810
-5.874	6.175	-.28120	.21120	.06550	.05160	-.07420	.00020	-.00190	.01750	-6.06890	6.09490
-5.679	8.315	-.27620	.21280	.06440	.05170	-.10670	.00300	.00030	.02230	-5.88430	8.26850
	GRADIENT	.00308	.00034	.00031	-.00068	-.01241	.00024	-.00009	.00302	-.01723	1.01052

IA156A, AEDC PWT 16T-470, O T S W/SILTS (R8NS77) (10 MAY 80)

REFERENCE DATA

SREF = 2690.0000 SQ.FT. XMRP = 976.0000 IN. XT
LREF = 1290.3000 INCHES YMRP = .0000 IN. YT
BREF = 1290.3000 INCHES ZMRP = 400.0000 IN. ZT
SCALE = .0200

PARAMETRIC DATA

IB-ELV =	8.000	OB-ELV =	11.000
BDFLAP =	.000	SPDBRK =	.000
RUDDER =	.000	SILTS =	1.000
MACH =	.600	RN/L =	3.500

RUN NO. 1079/ 0 RN/L = 3.50 GRADIENT INTERVAL = -5.00/ 5.00

ALPHAT	BETAT	CNFTS	CATS	CAFTS	CLMFTS	CYFTS	CYNTS	CYNFTS	CBLFTS	ALFATU	BETATU
-3.945	-8.044	-.26910	.21090	.06230	.06840	.11360	-.00550	-.00280	-.02020	-3.79750	-8.19440
-4.175	-5.943	-.26870	.20910	.06510	.06380	.07730	-.00260	-.00040	-.01550	-4.05050	-6.11370
-4.187	-3.888	-.25820	.20850	.06770	.05920	.04740	-.00310	-.00180	-.00970	-4.09850	-4.07880
-4.001	.186	-.23060	.20960	.06800	.05080	-.00670	-.00030	-.00060	.00130	-4.07720	-.01040
-3.657	4.251	-.22260	.21330	.07020	.05650	-.05780	.00330	.00190	.01010	-3.85540	4.17840
-3.748	6.052	-.22480	.21150	.07010	.05560	-.08130	.00450	.00240	.01390	-3.95570	6.01280
-3.794	8.045	-.22600	.21320	.06690	.05380	-.11200	.00800	.00550	.01800	-4.00430	8.03100
	GRADIENT	.00437	.00059	.00031	-.00033	-.01293	.00079	.00045	.00243	.02986	1.01449

RUN NO. 1080/ 0 RN/L = 3.50 GRADIENT INTERVAL = -5.00/ 5.00

ALPHAT	BETAT	CNFTS	CATS	CAFTS	CLMFTS	CYFTS	CYNTS	CYNFTS	CBLFTS	ALFATU	BETATU
-.206	-8.703	-.19030	.21260	.06960	.07640	.14890	-.02290	-.02070	-.01450	-.00920	-8.77950
-.203	-6.476	-.18470	.20940	.07020	.07440	.10530	-.01590	-.01370	-.01060	-.00640	-6.55400
-.194	-4.492	-.17670	.20840	.06950	.07140	.07130	-.01240	-.01080	-.00710	.00210	-4.56980
-.190	-.355	-.15680	.20880	.07200	.06160	.00290	-.00250	-.00250	-.00020	.00670	-.43220
-.144	3.755	-.15150	.20930	.07320	.06540	-.06330	.01080	.00930	.00500	.05210	3.67810
-.139	5.855	-.14930	.20830	.07190	.06470	-.09770	.01660	.01460	.00790	.05790	5.77960
-.139	7.957	-.14300	.21230	.07240	.06180	-.13370	.02240	.02010	.01050	.05710	7.88040
	GRADIENT	.00306	.00011	.00045	-.00073	-.01632	.00281	.00244	.00147	.00606	1.00007

RUN NO. 1081/ 0 RN/L = 3.50 GRADIENT INTERVAL = -5.00/ 5.00

ALPHAT	BETAT	CNFTS	CATS	CAFTS	CLMFTS	CYFTS	CYNTS	CYNFTS	CBLFTS	ALFATU	BETATU
4.400	-7.928	-.07150	.20530	.06970	.07690	.16890	-.04200	-.04040	-.00340	4.19040	-7.94880
4.326	-5.828	-.06320	.20120	.06970	.07430	.11910	-.03100	- 02960	-.00190	4.12070	-5.87470
4.265	-3.826	-.06000	.20050	.06820	.07240	.08020	-.02160	-.02060	-.00130	4.07160	-3.90960
4.067	.084	-.05290	.20110	.06920	.06580	.00080	-.00160	-.00160	-.00050	3.98540	-.11030
4.109	4.097	-.04570	.20240	.07170	.06520	-.07650	.01800	.01690	.00030	4.19270	3.90400
4.053	6.210	-.04550	.20380	.07080	.06430	-.12070	.02840	.02670	.00120	4.17660	6.03930
4.038	8.202	-.03890	.20670	.06910	.06100	-.15700	.03610	.03420	.00190	4.18130	8.04790
	GRADIENT	.00180	.00024	.00044	-.00091	-.01978	.00500	.00473	.00020	.01544	.98627

IA156A, AEDC PWT 16T-470, 0 T S W/SILTS (R8NS77) (10 MAY 80)

REFERENCE DATA

SREF = 2690.0000 SQ.FT. XMRP = 976.0000 IN. XT
LREF = 1290.3000 INCHES YMRP = .0000 IN. YT
BREF = 1290.3000 INCHES ZMRP = 400.0000 IN. ZT
SCALE = .0200

PARAMETRIC DATA

IB-ELV = 8.000 OB-ELV = 11.000
BDFLAP = .000 SPDBRK = .000
RUDDER = .000 SILTS = 1.000
MACH = .600 RN/L = 3.500

RUN NO. 1082/ 0 RN/L = 3.50 GRADIENT INTERVAL = -5.00/ 5.00

ALPHAT	BETAT	CNFTS	CATS	CAFTS	CLMFTS	CYFTS	CYNTS	CYNFTS	CBLFTS	ALFATU	BETATU
6.444	-7.976	-.01530	.20120	.06680	.07320	.17850	-.04730	-.04580	.00060	6.24110	-8.03120
6.442	-5.913	-.01170	.19820	.06710	.07380	.12970	-.03530	-.03410	.00090	6.24920	-5.99720
6.416	-3.840	-.01170	.19720	.06790	.07510	.08380	-.02290	-.02200	.00070	6.24430	-3.96070
6.127	.190	-.00910	.20000	.06920	.07040	-.00250	-.00050	-.00050	-.00040	6.05070	-.00670
6.057	4.104	-.00470	.19960	.06820	.06820	-.08030	.01910	.01810	-.00120	6.10380	3.89870
6.008	6.020	.00180	.19960	.06880	.06610	-.11830	.02900	.02760	-.00160	6.09550	5.82880
6.071	8.286	.01360	.20280	.06510	.06050	-.16610	.04010	.03840	-.00170	6.18750	8.11110
	GRADIENT	.00088	.00030	.00004	-.00087	-.02066	.00529	.00505	-.00024	-.01784	.98939

RUN NO. 1083/ 0 RN/L = 3.50 GRADIENT INTERVAL = -5.00/ 5.00

ALPHAT	BETAT	CNFTS	CATS	CAFTS	CLMFTS	CYFTS	CYNTS	CYNFTS	CBLFTS	ALFATU	BETATU
8.372	-7.817	.04180	.19610	.06150	.06960	.17470	-.04750	-.04610	.00380	8.17960	-7.90150
8.288	-5.754	.03820	.19350	.06300	.07230	.12510	-.03480	-.03350	.00310	8.10920	-5.86450
8.287	-3.777	.03670	.19340	.06400	.07500	.07760	-.02130	-.02040	.00220	8.13230	-3.91860
8.182	.182	.04320	.19940	.06570	.07050	-.00160	-.00210	-.00210	-.00020	8.10650	-.01440
8.227	4.223	.05470	.19550	.06430	.06690	-.08120	.01920	.01810	-.00280	8.25100	4.01350
8.160	6.219	.06250	.19540	.06370	.06290	-.12270	.03060	.02920	-.00420	8.22220	6.01840
8.166	8.259	.07170	.19870	.06370	.05740	-.17060	.04330	.04180	-.00490	8.25650	8.06940
	GRADIENT	.00225	.00026	.00004	-.00101	-.01985	.00506	.00481	-.00063	.01491	.99159

IA156A, AEDC PWT 16T-470, 0 T S W/SILTS (R8NS78) (10 MAY 80)

REFERENCE DATA

SREF = 2690.0000 SQ.FT. XMRP = 976.0000 IN. XT
LREF = 1290.3000 INCHES YMRP = .0000 IN. YT
BREF = 1290.3000 INCHES ZMRP = 400.0000 IN. ZT
SCALE = .0200

PARAMETRIC DATA

IB-ELV = 8.000 OB-ELV = 11.000
BDFLAP = .000 SPDBRK = .000
RUDDER = .000 SILTS = 1.000
MACH = .800 RN/L = 3.500

RUN NO. 1084/ 0 RN/L = 3.50 GRADIENT INTERVAL = -5.00/ 5.00

ALPHAT	BETAT	CNFTS	CATS	CAFTS	CLMFTS	CYFTS	CYNTS	CYNFTS	CBLFTS	ALFATU	BETATU
-8.240	-5.841	-.40310	.22070	.06040	.06660	.08240	-.00580	-.00310	-.02200	-8.08400	-5.97760
-8.295	-3.795	-.39200	.22300	.07010	.06270	.05390	-.00540	-.00390	-.01440	-8.16790	-3.95860
-8.207	.193	-.37360	.22610	.07020	.05430	-.00390	-.00080	-.00060	.00090	-8.16850	-.01120
-8.058	4.373	-.36080	.22360	.07240	.04830	-.06140	.00370	.00250	.01580	-8.12210	4.17540
-8.067	6.277	-.36380	.22000	.07000	.04940	-.08220	.00250	.00020	.02180	-8.16380	6.09330
	GRADIENT	.00381	.00007	.00028	-.00176	-.01411	.00111	.00078	.00370	.00565	.99594

RUN NO. 1085/ 0 RN/L = 3.50 GRADIENT INTERVAL = -5.00/ 5.00

ALPHAT	BETAT	CNFTS	CATS	CAFTS	CLMFTS	CYFTS	CYNTS	CYNFTS	CBLFTS	ALFATU	BETATU
-6.203	-5.999	-.33820	.22130	.07320	.06730	.08710	-.00770	-.00500	-.01940	-6.02760	-6.10980
-6.133	-4.043	-.32820	.22320	.07710	.06460	.05960	-.00750	-.00590	-.01310	-5.98100	-4.18370
-6.237	.113	-.30210	.22300	.07680	.05010	-.00490	-.00070	-.00060	.00070	-6.19490	-.09060
-6.042	4.271	-.29590	.22320	.07490	.05070	-.05940	.00460	.00330	.01270	-6.12810	4.08190
-5.995	6.261	-.29930	.22080	.07520	.05120	-.08740	.00580	.00350	.01860	-6.11670	6.09300
	GRADIENT	.00389	.00000	-.00026	-.00167	-.01431	.00146	.00111	.00310	-.01769	.99426

RUN NO. 1086/ 0 RN/L = 3.50 GRADIENT INTERVAL = -5.00/ 5.00

ALPHAT	BETAT	CNFTS	CATS	CAFTS	CLMFTS	CYFTS	CYNTS	CYNFTS	CBLFTS	ALFATU	BETATU
-4.118	-6.095	-.28080	.22130	.07160	.07090	.09280	-.01020	-.00780	-.01630	-3.92380	-6.16780
-4.251	-3.972	-.27410	.22200	.07440	.06650	.05880	-.00880	-.00730	-.01070	-4.07700	-4.08490
-4.196	.363	-.23640	.22070	.07750	.04850	-.00920	.00070	.00060	.00130	-4.16560	.15710
-3.736	4.301	-.23030	.22210	.08200	.05530	-.06380	.00700	.00560	.01030	-3.86220	4.13640
-3.790	6.161	-.23620	.22040	.07910	.05730	-.09140	.00960	.00740	.01460	-3.94310	6.02050
	GRADIENT	.00535	.00001	.00092	-.00140	-.01483	.00191	.00156	.00254	.02519	.99345

RUN NO. 1087/ 0 RN/L = 3.50 GRADIENT INTERVAL = -5.00/ 5.00

ALPHAT	BETAT	CNFTS	CATS	CAFTS	CLMFTS	CYFTS	CYNTS	CYNFTS	CBLFTS	ALFATU	BETATU
-.191	-6.852	-.19890	.22310	.07460	.07950	.12530	-.02300	-.02080	-.01240	.01300	-6.81390
-.191	-4.723	-.18970	.21950	.07690	.07530	.08510	-.01820	-.01640	-.00860	.01340	-4.68490
-.205	-.425	-.16300	.21430	.08130	.06000	.00590	-.00350	-.00330	-.00110	-.00130	-.38650
-.155	3.664	-.15590	.21780	.07760	.06190	-.06640	.01350	.01210	.00550	.04940	3.70260
-.148	5.771	-.15830	.21890	.07850	.06420	-.10460	.02130	.01930	.00890	.05560	5.80930
	GRADIENT	.00405	-.00021	.00009	-.00161	-.01807	.00378	.00339	.00168	.00423	1.00001

IA156A, AEDC PWT 16T-470, 0 T S W/SILTS (R8NS78) (10 MAY 80)

REFERENCE DATA

SREF = 2690.0000 SQ.FT. XMRP = 976.0000 IN. XT
LREF = 1290.3000 INCHES YMRP = .0000 IN. YT
BREF = 1290.3000 INCHES ZMRP = 400.0000 IN. ZT
SCALE = .0200

PARAMETRIC DATA

IB-ELV = 6.000 OB-ELV = 11.000
BDFLAP = .000 SPDBRK = .000
RUDDER = .000 SILTS = 1.000
MACH = .800 RN/L = 3.500

RUN NO. 1088/ 0 RN/L = 3.50 GRADIENT INTERVAL = -5.00/ 5.00

ALPHAT	BETAT	CNFTS	CATS	CAFTS	CLMFTS	CYFTS	CYNTS	CYNFTS	CBLFTS	ALFATU	BETATU
4.390	-5.806	-.06420	.21310	.07870	.07510	.13110	-.03470	-.03310	-.00240	4.24040	-5.95050
4.244	-3.691	-.05960	.21220	.07800	.07330	.08210	-.02320	-.02220	-.00160	4.12560	-3.86180
3.976	.135	-.04020	.20890	.07770	.05900	.00260	-.00310	-.00310	-.00050	4.01050	-.06930
4.077	4.038	-.03710	.21230	.07840	.06280	-.07820	.01960	.01840	.00030	4.24820	3.92110
4.003	6.124	-.04210	.21410	.07680	.06090	-.12360	.03120	.02940	.00170	4.19560	6.04620
	GRADIENT	.00290	.00002	.00005	-.00135	-.02074	.00554	.00525	.00025	.01601	1.00697

RUN NO. 1089/ 0 RN/L = 3.50 GRADIENT INTERVAL = -5.00/ 5.00

ALPHAT	BETAT	CNFTS	CATS	CAFTS	CLMFTS	CYFTS	CYNTS	CYNFTS	CBLFTS	ALFATU	BETATU
6.332	-5.739	-.00690	.21020	.07490	.06850	.13260	-.03680	-.03540	.00050	6.21370	-5.90960
6.379	-3.777	.00160	.20830	.07610	.06770	.08570	-.02520	-.02420	.00060	6.29580	-3.96750
6.025	.173	.01120	.20890	.07800	.05680	-.00130	-.00130	-.00130	-.00040	6.06210	-.03110
5.974	4.003	.01060	.20870	.07700	.05840	-.07970	.02050	.01940	-.00110	6.12000	3.85560
5.999	6.190	.02100	.21100	.07030	.05400	-.12690	.03340	.03170	-.00140	6.17370	6.07720
	GRADIENT	.00116	.00005	.00012	-.00120	-.02126	.00587	.00560	-.00022	-.02279	1.00545

IA156A, AEDC PWT 16T-470, 0 T S W/SILTS (R8NS79) (10 MAY 80)

REFERENCE DATA

SREF = 2690.0000 SQ.FT. XMRP = 976.0000 IN. XT
LREF = 1290.3000 INCHES YMRP = .0000 IN. YT
BREF = 1290.3000 INCHES ZMRP = 400.0000 IN. ZT
SCALE = .0200

PARAMETRIC DATA

IB-ELV = 8.000 OB-ELV = 11.000
BDFLAP = .000 SPDBRK = .000
RUDDER = .000 SILTS = 1.000
MACH = .900 RN/L = 3.500

RUN NO. 1090/ 0 RN/L = 3.50 GRADIENT INTERVAL = -5.00/ 5.00

ALPHAT	BETAT	CNFTS	CATS	CAFTS	CLMFTS	CYFTS	CYNTS	CYNFTS	CBLFTS	ALFATU	BETATU
-8.216	-5.981	-.41360	.24350	.07230	.06520	.09950	-.01370	-.01130	-.02280	-8.04890	-6.10350
-8.314	-3.754	-.41100	.24560	.08220	.06290	.06270	-.01090	-.00970	-.01460	-8.17630	-3.90770
-8.248	.189	-.38370	.24860	.08000	.05290	-.00390	-.00080	-.00060	.00100	-8.19560	-.01070
-8.097	4.392	-.37340	.24390	.08360	.04730	-.06750	.00790	.00670	.01640	-8.14900	4.19240
-8.120	6.285	-.37820	.24220	.07980	.04740	-.09600	.00920	.00700	.02300	-8.20460	6.09720
	GRADIENT	.00459	-.00022	.00018	-.00191	-.01597	.00231	.00201	.00380	.00344	.99443

IA156A, AEDC PWT 16T-470, 0 T S W/SILTS (R8NS79) (10 MAY 80)

REFERENCE DATA

SREF = 2690.0000 SQ.FT. XMRP = 976.0000 IN. XT
LREF = 1290.3000 INCHES YMRP = .0000 IN. YT
BREF = 1290.3000 INCHES ZMRP = 400.0000 IN. ZT
SCALE = .0200

PARAMETRIC DATA

IB-ELV = 8.000 OB-ELV = 11.000
BDFLAP = .000 SPDBRK = .000
RUDDER = .000 SILTS = 1.000
MACH = .900 RN/L = 3.500

RUN NO. 1091/ 0 RN/L = 3.50 GRADIENT INTERVAL = -5.00/ 5.00

ALPHAT	BETAT	CNFTS	CATS	CAFTS	CLMFTS	CYFTS	CYNTS	CYNFTS	CBLFTS	ALFATU	BETATU
-6.204	-5.974	-.35210	.24450	.08400	.06570	.10370	-.01570	-.01340	-.02030	-6.02170	-6.07150
-6.159	-4.044	-.33960	.24520	.08110	.06190	.07130	-.01380	-.01250	-.01350	-5.99750	-4.17290
-6.281	.109	-.31140	.24570	.08470	.04770	-.00290	-.00160	-.00130	.00050	-6.22530	-.09040
-6.085	4.264	-.30590	.24390	.08870	.04820	-.06680	.00820	.00690	.01370	-6.15820	4.07120
-6.022	6.250	-.31090	.24330	.08310	.04940	-.09760	.01080	.00860	.01950	-6.13260	6.07580
	GRADIENT	.00406	-.00016	.00091	-.00165	-.01662	.00265	.00234	.00327	-.01934	.99231

RUN NO. 1092/ 0 RN/L = 3.50 GRADIENT INTERVAL = -5.00/ 5.00

ALPHAT	BETAT	CNFTS	CATS	CAFTS	CLMFTS	CYFTS	CYNTS	CYNFTS	CBLFTS	ALFATU	BETATU
-3.993	-6.098	-.28640	.24600	.09220	.07000	.10480	-.01650	-.01410	-.01660	-3.79420	-6.15330
-4.273	-3.967	-.28030	.24470	.09250	.06350	.06800	-.01380	-.01250	-.01110	-4.09140	-4.06570
-4.249	.381	-.23780	.24050	.08560	.04220	-.00980	.00040	.00050	.00110	-4.20530	.17860
-3.744	4.312	-.23380	.24160	.09110	.05140	-.06960	.00930	.00800	.01090	-3.85980	4.14050
-3.839	6.164	-.24350	.24230	.08970	.05330	-.10050	.01340	.01140	.01530	-3.98140	6.01440
	GRADIENT	.00569	-.00038	-.00019	-.00152	-.01664	.00280	.00249	.00266	.02702	.99106

RUN NO. 1093/ 0 RN/L = 3.50 GRADIENT INTERVAL = -5.00/ 5.00

ALPHAT	BETAT	CNFTS	CATS	CAFTS	CLMFTS	CYFTS	CYNTS	CYNFTS	CBLFTS	ALFATU	BETATU
-.208	-6.946	-.20430	.24540	.08730	.07840	.13630	-.02650	-.02450	-.01270	-.00760	-6.89360
-.207	-4.783	-.19070	.24350	.09010	.07270	.09260	-.02100	-.01930	-.00900	-.00670	-4.73140
-.256	-.468	-.14860	.23340	.08830	.04740	.00830	-.00450	-.00430	-.00120	-.05610	-.41640
-.191	3.631	-.14960	.23690	.08810	.05390	-.07260	.01670	.01550	.00590	.00880	3.68300
-.179	5.809	-.15410	.23970	.08670	.05780	-.11500	.02550	.02350	.00920	.02070	5.86100
	GRADIENT	.00493	-.00060	-.00024	-.00227	-.01963	.00447	.00413	.00177	.00173	1.00002

RUN NO. 1094/ 0 RN/L = 3.50 GRADIENT INTERVAL = -5.00/ 5.00

ALPHAT	BETAT	CNFTS	CATS	CAFTS	CLMFTS	CYFTS	CYNTS	CYNFTS	CBLFTS	ALFATU	BETATU
4.383	-5.790	-.06690	.23630	.08530	.07310	.13770	-.03610	-.03460	-.00310	4.24420	-5.94350
4.229	-3.683	-.06100	.23410	.08440	.06810	.08700	-.02490	-.02400	-.00230	4.12290	-3.86070
3.921	.128	-.03710	.23040	.08610	.04700	.00240	-.00210	-.00210	-.00030	3.96850	-.07310
4.063	4.018	-.03890	.23290	.09020	.05690	-.08370	.02250	.02130	.00150	4.24050	3.91240
4.000	6.121	-.04320	.23550	.08450	.05620	-.13040	.03370	.03180	.00290	4.19570	6.05530
	GRADIENT	.00286	-.00015	.00075	-.00144	-.02217	.00616	.00588	.00049	.01546	1.00943

IA156A, AEDC PWT 16T-470, 0 T S W/SILTS (R8NS80) (10 MAY 80)

REFERENCE DATA

SREF = 2690.0000 SQ.FT. XMRP = 976.0000 IN. XT
LREF = 1290.3000 INCHES YMRP = .0000 IN. YT
BREF = 1290.3000 INCHES ZMRP = 400.0000 IN. ZT
SCALE = .0200

PARAMETRIC DATA

IB-ELV = 8.000 OB-ELV = 11.000
BDFLAP = .000 SPDBRK = .000
RUDDER = .000 SILTS = 1.000
MACH = .950 RN/L = 3.500

RUN NO. 1095/ 0 RN/L = 3.50 GRADIENT INTERVAL = -5.00/ 5.00

ALPHAT	BETAT	CNFTS	CATS	CAFTS	CLMFTS	CYFTS	CYNTS	CYNFTS	CBLFTS	ALFATU	BETATU
-8.418	-6.045	-.42900	.26840	.09210	.05420	.11150	-.01770	-.01510	-.02440	-8.24960	-6.16310
-8.327	-3.760	-.40920	.26920	.09730	.04970	.06880	-.01250	-.01140	-.01520	-8.18640	-3.90940
-8.345	.179	-.38670	.27340	.09450	.03700	-.00150	-.00130	-.00120	.00090	-8.28960	-.01820
-8.159	4.456	-.38100	.26920	.09440	.03740	-.07390	.00990	.00890	.01770	-8.20840	4.25640
-8.164	6.280	-.38940	.26690	.09170	.04000	-.10470	.01340	.01120	.02410	-8.24570	6.09150
	GRADIENT	.00340	-.00001	-.00035	-.00147	-.01736	.00273	.00247	.00400	-.00237	.99404

RUN NO. 1096/ 0 RN/L = 3.50 GRADIENT INTERVAL = -5.00/ 5.00

ALPHAT	BETAT	CNFTS	CATS	CAFTS	CLMFTS	CYFTS	CYNTS	CYNFTS	CBLFTS	ALFATU	BETATU
-6.267	-5.988	-.35100	.26890	.09880	.05520	.11190	-.01930	-.01690	-.02110	-6.08400	-6.08100
-6.215	-4.041	-.34010	.26950	.10010	.05130	.07620	-.01550	-.01430	-.01440	-6.05230	-4.16540
-6.353	.119	-.30850	.27240	.10090	.03350	-.00260	-.00120	-.00110	.00050	-6.29450	-.07750
-6.117	4.259	-.30420	.27050	.09690	.03810	-.07130	.01000	.00880	.01440	-6.18700	4.06630
-6.078	6.274	-.31440	.26780	.09110	.04280	-.10540	.01430	.01200	.02030	-6.18570	6.09910
	GRADIENT	.00433	.00012	-.00039	-.00159	-.01777	.00307	.00278	.00347	-.01626	.99176

RUN NO. 1097/ 0 RN/L = 3.50 GRADIENT INTERVAL = -5.00/ 5.00

ALPHAT	BETAT	CNFTS	CATS	CAFTS	CLMFTS	CYFTS	CYNTS	CYNFTS	CBLFTS	ALFATU	BETATU
-4.018	-6.148	-.28670	.27140	.10510	.06310	.11390	-.02050	-.01800	-.01750	-3.81900	-6.19700
-4.305	-3.962	-.27880	.27000	.09940	.05580	.07240	-.01570	-.01440	-.01190	-4.12260	-4.05630
-4.281	.383	-.23720	.27010	.09960	.03650	-.00910	-.00020	-.00010	.00120	-4.23390	.18310
-3.771	4.322	-.23210	.26990	.10620	.04590	-.07510	.01140	.01000	.01150	-3.88420	4.15050
-3.865	6.160	-.24290	.26910	.10020	.04850	-.10720	.01600	.01370	.01600	-4.00460	6.00960
	GRADIENT	.00570	-.00001	.00081	-.00125	-.01782	.00328	.00295	.00283	.02785	.99039

RUN NO. 1098/ 0 RN/L = 3.51 GRADIENT INTERVAL = -5.00/ 5.00

ALPHAT	BETAT	CNFTS	CATS	CAFTS	CLMFTS	CYFTS	CYNTS	CYNFTS	CBLFTS	ALFATU	BETATU
-.227	-6.983	-.19840	.27060	.12490	.07650	.14230	-.03090	-.02830	-.01250	-.02930	-6.92760
-.215	-4.771	-.18470	.26970	.09890	.07230	.09820	-.02500	-.02290	-.00860	-.01750	-4.71510
-.253	-.495	-.14170	.26680	.10690	.04930	.01040	-.00620	-.00590	-.00150	-.05510	-.43950
-.184	3.633	-.14460	.26820	.10770	.05630	-.07670	.01950	.01810	.00540	.01340	3.68850
-.184	5.812	-.14780	.26950	.10620	.05800	-.11890	.02820	.02600	.00870	.01360	5.86780
	GRADIENT	.00480	-.00018	.00105	-.00192	-.02081	.00529	.00487	.00167	.00360	1.00001

IA156A, AEDC PWT 16T-470, O T S W/SILTS (R8NS80) (10 MAY 80)

REFERENCE DATA

SREF = 2690.0000 SQ.FT. XMRP = 976.0000 IN. XT
LREF = 1290.3000 INCHES YMRP = .0000 IN. YT
BREF = 1290.3000 INCHES ZMRP = 400.0000 IN. ZT
SCALE = .0200

PARAMETRIC DATA

IB-ELV = 8.000 OB-ELV = 11.000
BDFLAP = .000 SPDBRK = .000
RUDDER = .000 SILTS = 1.000
MACH = .950 RN/L = 3.500

RUN NO. 1099/ 0 RN/L = 3.50 GRADIENT INTERVAL = -5.00/ 5.00

ALPHAT	BETAT	CNFTS	CATS	CAFTS	CLMFTS	CYFTS	CYNTS	CYNFTS	CBLFTS	ALFATU	BETATU
4.397	-5.751	-.06810	.26480	.10230	.07630	.13960	-.03730	-.03550	-.00340	4.26300	-5.90720
4.241	-3.766	-.05770	.26260	.10310	.06700	.09180	-.02640	-.02540	-.00260	4.13820	-3.94360
4.053	.187	-.02840	.25820	.10390	.04250	.00060	-.00130	-.00140	-.00020	4.10850	-.01050
4.055	3.961	-.04070	.26160	.10480	.05660	-.08440	.02230	.02100	.00180	4.23280	3.85850
4.035	6.088	-.04300	.26320	.10070	.06070	-.13570	.03460	.03240	.00260	4.23130	6.02630
	GRADIENT	.00224	-.00014	.00022	-.00138	-.02280	.00630	.00601	.00057	.01209	1.00959

IA156A, AEDC PWT 16T-470, O T S W/SILTS (R8NS81) (10 MAY 80)

REFERENCE DATA

SREF = 2690.0000 SQ.FT. XMRP = 976.0000 IN. XT
LREF = 1290.3000 INCHES YMRP = .0000 IN. YT
BREF = 1290.3000 INCHES ZMRP = 400.0000 IN. ZT
SCALE = .0200

PARAMETRIC DATA

IB-ELV = 8.000 OB-ELV = 11.000
BDFLAP = .000 SPDBRK = .000
RUDDER = .000 SILTS = 1.000
MACH = 1.050 RN/L = 3.500

RUN NO. 1102/ 0 RN/L = 3.50 GRADIENT INTERVAL = -5.00/ 5.00

ALPHAT	BETAT	CNFTS	CATS	CAFTS	CLMFTS	CYFTS	CYNTS	CYNFTS	CBLFTS	ALFATU	BETATU
-8.357	-5.993	-.44040	.34250	.13090	.05460	.11880	-.01750	-.01490	-.02660	-8.18590	-6.10400
-8.415	-3.866	-.43370	.34880	.12640	.05170	.07850	-.01370	-.01230	-.01840	-8.26950	-4.00850
-8.400	.284	-.40240	.35320	.13290	.03220	-.00490	.00030	.00030	.00160	-8.34170	.08930
-8.218	4.304	-.40390	.35000	.13640	.03720	-.07630	.00940	.00800	.01930	-8.25880	4.10410
-8.187	6.282	-.41110	.34790	.13510	.04050	-.11280	.01370	.01110	.02640	-8.26410	6.09310
	GRADIENT	.00367	.00015	.00123	-.00179	-.01895	.00283	.00249	.00462	.00121	.99296

RUN NO. 1103/ 0 RN/L = 3.50 GRADIENT INTERVAL = -5.00/ 5.00

ALPHAT	BETAT	CNFTS	CATS	CAFTS	CLMFTS	CYFTS	CYNTS	CYNFTS	CBLFTS	ALFATU	BETATU
-6.275	-5.993	-.36180	.34840	.13070	.05370	.11890	-.01860	-.01600	-.02380	-6.09000	-6.07780
-6.240	-4.072	-.35090	.35040	.13970	.04970	.08000	-.01410	-.01260	-.01650	-6.07360	-4.18920
-6.401	.109	-.32030	.35330	.13570	.03190	-.00380	-.00020	-.00030	.00070	-6.33730	-.08410
-6.172	4.273	-.31900	.35080	.14300	.03800	-.07600	.01090	.00950	.01600	-6.23690	4.08020
-5.948	6.379	-.32070	.34910	.13880	.04210	-.11690	.01810	.01550	.02260	-6.05460	6.20520
	GRADIENT	.00382	.00005	.00039	-.00140	-.01869	.00300	.00265	.00389	-.01960	.99091

IA156A, AEDC PWT 16T-470, O T S W/SILTS (R8NS81) (10 MAY 80)

REFERENCE DATA

SREF = 2690.0000 SQ.FT. XMRP = 976.0000 IN. XT
LREF = 1290.3000 INCHES YMRP = .0000 IN. YT
BREF = 1290.3000 INCHES ZMRP = 400.0000 IN. ZT
SCALE = .0200

PARAMETRIC DATA

IB-ELV = 8.000 OB-ELV = 11.000
BDFLAP = .000 SPDBRK = .000
RUDDER = .000 SILTS = 1.000
MACH = 1.050 RN/L = 3.500

RUN NO. 1104/ 0 RN/L = 3.50 GRADIENT INTERVAL = -5.00/ 5.00

ALPHAT	BETAT	CNFTS	CATS	CAFTS	CLMFTS	CYFTS	CYNTS	CYNFTS	CBLFTS	ALFATU	BETATU
-4.089	-6.115	-.29120	.34660	.14190	.06080	.12090	-.02040	-.01800	-.01970	-3.88980	-6.15800
-4.336	-3.985	-.28430	.34800	.14440	.05350	.07790	-.01600	-.01450	-.01360	-4.15180	-4.07190
-4.316	.375	-.24290	.35310	.14100	.03280	-.00820	.00040	.00020	.00130	-4.26420	.17830
-3.789	4.320	-.24010	.35220	.14170	.04410	-.08060	.01400	.01230	.01330	-3.89760	4.14790
-3.866	6.144	-.25030	.34690	.14610	.04650	-.11580	.01980	.01750	.01820	-4.00130	5.99130
	GRADIENT	.00539	.00052	-.00033	-.00120	-.01909	.00361	.00323	.00324	.02962	.98937

RUN NO. 1105/ 0 RN/L = 3.49 GRADIENT INTERVAL = -5.00/ 5.00

ALPHAT	BETAT	CNFTS	CATS	CAFTS	CLMFTS	CYFTS	CYNTS	CYNFTS	CBLFTS	ALFATU	BETATU
-.241	-7.001	-.20100	.34440	.13720	.07980	.15500	-.03460	-.03220	-.01470	-.04690	-6.93980
-.240	-4.826	-.18350	.34480	.13810	.07290	.10590	-.02740	-.02560	-.01010	-.04600	-4.76530
-.314	-.481	-.13470	.34990	.14830	.04340	.01270	-.00740	-.00730	-.00150	-.11930	-.42060
-.244	3.635	-.13830	.35110	.14470	.05170	-.07800	.02030	.01870	.00670	-.04990	3.69600
-.228	5.819	-.14420	.35070	.14150	.05590	-.12370	.03010	.02790	.01030	-.03410	5.88020
	GRADIENT	.00540	.00075	.00079	-.00255	-.02173	.00563	.00523	.00199	-.00061	1.00001

RUN NO. 1106/ 0 RN/L = 3.49 GRADIENT INTERVAL = -5.00/ 5.00

ALPHAT	BETAT	CNFTS	CATS	CAFTS	CLMFTS	CYFTS	CYNTS	CYNFTS	CBLFTS	ALFATU	BETATU
4.425	-5.762	-.06840	.34070	.14730	.07700	.14460	-.04080	-.03950	-.00450	4.29820	-5.92100
4.214	-3.658	-.05560	.33960	.14360	.06630	.09360	-.02880	-.02820	-.00350	4.11990	-3.83830
3.974	.122	-.02620	.33980	.14460	.04540	.00390	-.00330	-.00330	-.00070	4.03080	-.07400
4.069	4.009	-.03180	.34160	.14390	.05410	-.08900	.02450	.02350	.00220	4.24890	3.91320
4.044	6.087	-.03830	.33990	.14250	.05890	-.13840	.03570	.03420	.00340	4.23970	6.03140
	GRADIENT	.00308	.00026	.00004	-.00157	-.02382	.00695	.00674	.00074	.01701	1.01110

IA156A, AEDC PWT 16T-470, 0 T S W/SILTS (R8NS82) (10 MAY 80)

REFERENCE DATA

SREF = 2690.0000 SQ.FT. XMRP = 976.0000 IN. XT
LREF = 1290.3000 INCHES YMRP = .0000 IN. YT
BREF = 1290.3000 INCHES ZMRP = 400.0000 IN. ZT
SCALE = .0200

PARAMETRIC DATA

IB-ELV = 8.000 OB-ELV = 11.000
BDFLAP = .000 SPDBRK = .000
RUDDER = .000 SILTS = 1.000
MACH = 1.100 RN/L = 3.500

RUN NO. 1107/ 0 RN/L = 3.51 GRADIENT INTERVAL = -5.00/ 5.00

ALPHAT	BETAT	CNFTS	CATS	CAFTS	CLMFTS	CYFTS	CYNTS	CYNFTS	CBLFTS	ALFATU	BETATU
-8.402	-5.908	-.43980	.34240	.14560	.05000	.11380	-.01710	-.01460	-.02630	-8.22980	-6.01850
-8.429	-3.822	-.42820	.34530	.14700	.04620	.07400	-.01190	-.01050	-.01770	-8.28210	-3.96370
-8.424	.200	-.39840	.34870	.14920	.02790	-.00350	-.00100	-.00110	.00190	-8.36100	.00530
-8.215	4.363	-.39480	.34610	.14620	.03420	-.07220	.00730	.00580	.01940	-8.25510	4.16300
-8.210	6.287	-.40280	.34230	.14920	.03840	-.10930	.01320	.01070	.02600	-8.28480	6.09650
	GRADIENT	.00406	.00009	-.00010	-.00145	-.01785	.00234	.00199	.00453	.00343	.99287

RUN NO. 1108/ 0 RN/L = 3.50 GRADIENT INTERVAL = -5.00/ 5.00

ALPHAT	BETAT	CNFTS	CATS	CAFTS	CLMFTS	CYFTS	CYNTS	CYNFTS	CBLFTS	ALFATU	BETATU
-6.303	-6.002	-.35850	.34070	.15150	.04960	.11220	-.01680	-.01440	-.02310	-6.11650	-6.08550
-6.266	-4.075	-.34710	.34290	.15130	.04470	.07430	-.01210	-.01080	-.01590	-6.09750	-4.19020
-6.440	.132	-.31550	.34390	.14950	.02670	-.00360	-.00210	-.00210	.00130	-6.37400	-.06120
-6.157	4.267	-.31160	.34330	.15230	.03490	-.07310	.00820	.00680	.01610	-6.22020	4.07240
-6.120	6.268	-.32010	.34120	.15260	.03860	-.10990	.01550	.01310	.02250	-6.22020	6.08960
	GRADIENT	.00427	.00005	.00012	-.00118	-.01767	.00243	.00211	.00384	-.01486	.99049

RUN NO. 1109/ 0 RN/L = 3.51 GRADIENT INTERVAL = -5.00/ 5.00

ALPHAT	BETAT	CNFTS	CATS	CAFTS	CLMFTS	CYFTS	CYNTS	CYNFTS	CBLFTS	ALFATU	BETATU
-4.289	-6.040	-.29900	.33850	.15280	.05650	.11270	-.01680	-.01480	-.02020	-4.09020	-6.08590
-4.328	-3.999	-.29210	.33740	.15640	.04950	.07150	-.01300	-.01170	-.01340	-4.14120	-4.08210
-4.320	.356	-.23840	.33940	.15270	.02940	-.00950	-.00050	-.00070	.00180	-4.26350	.15910
-3.774	4.310	-.23680	.34130	.15620	.04330	-.07630	.01010	.00870	.01330	-3.88060	4.13570
-3.886	6.167	-.24850	.34040	.15490	.04710	-.11060	.01610	.01400	.01820	-4.01930	6.01240
	GRADIENT	.00553	.00047	-.00004	-.00081	-.01780	.00278	.00246	.00322	.03036	.98877

RUN NO. 1110/ 0 RN/L = 3.50 GRADIENT INTERVAL = -5.00/ 5.00

ALPHAT	BETAT	CNFTS	CATS	CAFTS	CLMFTS	CYFTS	CYNTS	CYNFTS	CBLFTS	ALFATU	BETATU
-.242	-7.023	-.20340	.33650	.15950	.07980	.14820	-.02940	-.02730	-.01490	-.04740	-6.96010
-.243	-4.840	-.18730	.33170	.14650	.07290	.09910	-.02230	-.02070	-.01010	-.04910	-4.77690
-.307	-.418	-.14230	.33560	.15750	.04560	.00900	-.00550	-.00540	-.00120	-.11250	-.35470
-.223	3.659	-.14440	.33470	.15500	.05530	-.07600	.01790	.01640	.00670	-.02810	3.72230
-.212	5.833	-.15030	.33460	.15100	.05880	-.12160	.02730	.02500	.01040	-.01730	5.89650
	GRADIENT	.00512	.00036	.00102	-.00213	-.02060	.00472	.00435	.00198	.00223	1.00001

IA156A, AEDC PWT 16T-470, 0 T S W/SILTS (R8NS82) (10 MAY 80)

REFERENCE DATA

SREF = 2690.0000 SQ.FT. XMRP = 976.0000 IN. XT
LREF = 1290.3000 INCHES YMRP = .0000 IN. YT
BREF = 1290.3000 INCHES ZMRP = 400.0000 IN. ZT
SCALE = .0200

PARAMETRIC DATA

IB-ELV = 8.000 OB-ELV = 11.000
BDFLAP = .000 SPDBRK = .000
RUDDER = .000 SILTS = 1.000
MACH = 1.100 RN/L = 3.500

RUN NO. 1111/ 0 RN/L = 3.50 GRADIENT INTERVAL = -5.00/ 5.00

ALPHAT	BETAT	CNFTS	CATS	CAFTS	CLMFTS	CYFTS	CYNTS	CYNFTS	CBLFTS	ALFATU	BETATU
4.443	-5.768	-.06550	.32510	.15120	.07920	.14140	-.03920	-.03790	-.00440	4.31670	-5.92830
4.284	-3.687	-.05360	.32550	.15560	.07080	.09150	-.02800	-.02740	-.00330	4.19060	-3.86960
3.946	.133	-.03260	.32530	.15520	.05140	-.00030	-.00280	-.00280	-.00060	4.00560	-.06260
4.089	4.002	-.03910	.32690	.15390	.06090	-.08900	.02310	.02210	.00240	4.27080	3.90800
4.072	6.100	-.04400	.32470	.15440	.06330	-.13780	.03380	.03230	.00370	4.26890	6.04630
	GRADIENT	.00188	.00018	-.00022	-.00128	-.02347	.00665	.00644	.00074	.01055	1.01144

IA156A, AEDC PWT 16T-470, 0 T S W/SILTS (R8NS83) (10 MAY 80)

REFERENCE DATA

SREF = 2690.0000 SQ.FT. XMRP = 976.0000 IN. XT
LREF = 1290.3000 INCHES YMRP = .0000 IN. YT
BREF = 1290.3000 INCHES ZMRP = 400.0000 IN. ZT
SCALE = .0200

PARAMETRIC DATA

IB-ELV = 8.000 OB-ELV = 9.000
BDFLAP = .000 SPDBRK = .000
RUDDER = .000 SILTS = 1.000
MACH = .600 RN/L = 3.500

RUN NO. 1114/ 0 RN/L = 3.51 GRADIENT INTERVAL = -5.00/ 5.00

ALPHAT	BETAT	CNFTS	CATS	CAFTS	CLMFTS	CYFTS	CYNTS	CYNFTS	CBLFTS	ALFATU	BETATU
-8.240	-7.868	-.38920	.21020	.04720	.06460	.09590	.00400	.00710	-.02850	-8.15200	-8.05920
-8.128	-5.909	-.37150	.20910	.05590	.05820	.07250	.00150	.00400	-.02170	-8.06530	-6.11040
-8.172	-3.796	-.36530	.21050	.05890	.05540	.04550	-.00020	.00120	-.01350	-8.14880	-4.00470
-8.083	.305	-.35310	.21250	.05840	.05190	-.00800	.00020	.00020	.00180	-8.16030	.10930
-7.952	4.252	-.34220	.21410	.06170	.04800	-.05270	.00020	-.00120	.01500	-8.11170	4.11430
-7.940	6.203	-.34020	.21160	.05820	.04830	-.07470	-.00110	-.00330	.02120	-8.12080	6.09530
-7.974	8.208	-.34460	.21270	.05670	.05060	-.09890	-.00170	-.00460	.02710	-8.16900	8.12840
	GRADIENT	.00287	.00045	.00034	-.00092	-.01221	.00005	-.00030	.00354	.00456	1.00887

RUN NO. 1115/ 0 RN/L = 3.51 GRADIENT INTERVAL = -5.00/ 5.00

ALPHAT	BETAT	CNFTS	CATS	CAFTS	CLMFTS	CYFTS	CYNTS	CYNFTS	CBLFTS	ALFATU	BETATU
-6.137	-7.947	-.32450	.21010	.06140	.06450	.10450	.00010	.00300	-.02440	-6.02010	-8.12310
-6.117	-5.919	-.31650	.20960	.06220	.05960	.07450	.00000	.00230	-.01860	-6.02570	-6.10870
-6.043	-4.004	-.30850	.20990	.06480	.05640	.04990	-.00150	-.00020	-.01220	-5.98790	-4.20690
-6.113	.081	-.29170	.21130	.06820	.04890	-.00440	-.00060	-.00060	.00110	-6.18430	-.11750
-5.938	4.193	-.28090	.21380	.06690	.05050	-.05060	-.00010	-.00130	.01240	-6.11050	4.07330
-5.884	6.175	-.28270	.21320	.05590	.05070	-.07530	.00050	-.00180	.01770	-6.07750	6.09340
-5.685	8.322	-.27500	.21260	.06390	.05100	-.10650	.00320	.00050	.02220	-5.88980	8.27400
	GRADIENT	.00337	.00048	.00026	-.00072	-.01226	.00017	-.00013	.00300	-.01492	1.01021

IA156A, AEDC PWT 16T-470, O T S W/SILTS (R8NS83) (10 MAY 80)

REFERENCE DATA

SREF =	2690.0000 SQ.FT.	XMRP =	976.0000 IN. XT		
LREF =	1290.3000 INCHES	YMRP =	.0000 IN. YT		
BREF =	1290.3000 INCHES	ZMRP =	400.0000 IN. ZT		
SCALE =	.0200				

PARAMETRIC DATA

IB-ELV =	8.000	OB-ELV =	9.000
BDFLAP =	.000	SPDBRK =	.000
RUDDER =	.000	SILTS =	1.000
MACH =	.600	RN/L =	3.500

RUN NO. 1117/ 0 RN/L = 3.49 GRADIENT INTERVAL = -5.00/ 5.00

ALPHAT	BETAT	CNFTS	CATS	CAFTS	CLMFTS	CYFTS	CYNTS	CYNFTS	CBLFTS	ALFATU	BETATU
-3.942	-7.960	-.26770	.21090	.06510	.06740	.11380	-.00550	-.00280	-.02010	-3.79440	-8.11060
-4.178	-5.938	-.26700	.20920	.06530	.06310	.07610	-.00260	-.00040	-.01520	-4.05230	-6.10730
-4.187	-3.875	-.25830	.20890	.06710	.05850	.04720	-.00310	-.00180	-.00970	-4.09750	-4.06550
-4.005	.181	-.22960	.20930	.06820	.04960	-.00570	-.00090	-.00110	.00130	-4.07910	-.01570
-3.657	4.252	-.22030	.21300	.07210	.05540	-.05720	.00300	.00160	.01000	-3.85490	4.17930
-3.738	6.049	-.22180	.21140	.06980	.05460	-.08020	.00410	.00200	.01380	-3.94460	6.00880
-3.786	8.049	-.22360	.21370	.06840	.05330	-.11020	.00740	.00490	.01790	-3.99660	8.03470
	GRADIENT	.00467	.00050	.00062	-.00038	-.01285	.00075	.00042	.00242	.02987	1.01450

RUN NO. 1118/ 0 RN/L = 3.50 GRADIENT INTERVAL = -5.00/ 5.00

ALPHAT	BETAT	CNFTS	CATS	CAFTS	CLMFTS	CYFTS	CYNTS	CYNFTS	CBLFTS	ALFATU	BETATU
-.211	-8.747	-.18770	.21300	.06820	.07520	.15180	-.02350	-.02140	-.01460	-.01420	-8.82310
-.208	-6.666	-.18220	.20940	.06950	.07340	.11020	-.01700	-.01480	-.01090	-.01160	-6.74260
-.203	-4.378	-.17490	.20860	.07280	.06990	.07000	-.01250	-.01090	-.00690	-.00690	-4.45460
-.195	-.323	-.15410	.20930	.07120	.06020	.00310	-.00280	-.00280	-.00020	.00130	-.39860
-.150	3.754	-.15010	.20950	.07250	.06450	-.06180	.01040	.00900	.00490	.04630	3.67820
-.145	5.843	-.14840	.20940	.06760	.06390	-.09550	.01600	.01400	.00760	.05140	5.76790
-.145	7.944	-.14080	.21250	.07140	.06070	-.13170	.02180	.01960	.01030	.05110	7.86830
	GRADIENT	.00305	.00011	-.00004	-.00066	-.01621	.00282	.00245	.00145	.00655	1.00011

RUN NO. 1119/ 0 RN/L = 3.49 GRADIENT INTERVAL = -5.00/ 5.00

ALPHAT	BETAT	CNFTS	CATS	CAFTS	CLMFTS	CYFTS	CYNTS	CYNFTS	CBLFTS	ALFATU	BETATU
4.288	-8.106	-.07520	.20730	.07170	.07700	.17230	-.04290	-.04130	-.00370	4.07840	-8.12140
4.299	-5.790	-.06590	.20260	.06960	.07330	.12050	-.03140	-.02990	-.00210	4.09230	-5.83360
4.277	-3.794	-.05770	.20080	.06970	.07130	.07640	-.02110	-.02010	-.00110	4.08340	-3.87840
4.034	.150	-.04900	.20240	.06990	.06160	-.00050	-.00200	-.00200	-.00020	3.95410	-.04550
4.108	4.147	-.04450	.20340	.07070	.06480	-.07720	.01800	.01690	.00020	4.19040	3.95250
4.055	6.225	-.04200	.20490	.07220	.06360	-.11980	.02730	.02550	.00090	4.17670	6.05290
4.030	8.209	-.03690	.20780	.07060	.06050	-.15760	.03530	.03330	.00180	4.17320	8.05350
	GRADIENT	.00166	.00033	.00013	-.00081	-.01934	.00492	.00466	.00016	.01358	.98614

IA156A, AEDC PWT 16T-470, O T S W/SILTS (R8NS03) (10 MAY 80)

REFERENCE DATA

SREF = 2690.0000 SQ.FT. XMRP = 976.0000 IN. XT
LREF = 1290.3000 INCHES YMRP = .0000 IN. YT
BREF = 1290.3000 INCHES ZMRP = 400.0000 IN. ZT
SCALE = .0200

PARAMETRIC DATA

IB-ELV = 8.000 OB-ELV = 9.000
BDFLAP = .000 SPDBRK = .000
RUDDER = .000 SILTS = 1.000
MACH = .600 RN/L = 3.500

RUN NO. 1120/ 0 RN/L = 3.49 GRADIENT INTERVAL = -5.00/ 5.00

ALPHAT	BETAT	CNFTS	CATS	CAFTS	CLMFTS	CYFTS	CYNTS	CYNFTS	CBLFTS	ALFATU	BETATU
6.457	-7.983	-.01580	.20130	.06600	.07260	.17820	-.04730	-.04580	.00040	6.25320	-8.03770
6.431	-5.924	-.01090	.19870	.06750	.07290	.12980	-.03570	-.03440	.00100	6.23770	-6.00750
6.418	-3.895	-.01020	.19820	.06910	.07410	.08590	-.02390	-.02300	.00080	6.24370	-4.01360
6.159	.138	-.00830	.20100	.06850	.06950	-.00190	-.00100	-.00100	-.00040	6.07800	-.05770
6.055	4.104	-.00310	.20100	.06930	.06690	-.08060	.01900	.01810	-.00130	6.10090	3.89800
6.004	6.021	.00230	.20100	.06870	.06510	-.11050	.02860	.02710	-.00170	6.08920	5.82780
6.055	8.296	.01360	.20450	.06760	.05980	-.16630	.03960	.03790	-.00160	6.17010	8.11920
	GRADIENT	.00089	.00035	.00002	-.00090	-.02082	.00536	.00514	-.00026	-.01792	.98910

RUN NO. 1121/ 0 RN/L = 3.50 GRADIENT INTERVAL = -5.00/ 5.00

ALPHAT	BETAT	CNFTS	CATS	CAFTS	CLMFTS	CYFTS	CYNTS	CYNFTS	CBLFTS	ALFATU	BETATU
8.372	-7.821	.03930	.19610	.06160	.06880	.17540	-.04770	-.04630	.00350	8.17800	-7.90420
8.289	-5.757	.03790	.19430	.06490	.07200	.12510	-.03500	-.03380	.00310	8.10970	-5.86680
8.283	-3.775	.03580	.19420	.06430	.07450	.07850	-.02220	-.02130	.00220	8.12660	-3.91570
8.180	.174	.04230	.19960	.06410	.06970	-.00120	-.00210	-.00210	-.00020	8.10350	-.02250
8.216	4.223	.05430	.19750	.06470	.06660	-.08190	.01940	.01830	-.00280	8.23690	4.01270
8.173	6.231	.06310	.19720	.06550	.06240	-.12250	.03020	.02880	-.00420	8.23270	6.02890
8.148	8.257	.07020	.20020	.06300	.05640	-.17300	.04370	.04220	-.00470	8.23780	8.06630
	GRADIENT	.00232	.00041	.00005	-.00099	-.02006	.00520	.00495	-.00063	.01387	.99142

IA156A, AEDC PWT 16T-470, 0 T S W/SILTS (R8NS85) (10 MAY 80)

REFERENCE DATA

SREF = 2690.0000 SQ.FT. XMRP = 976.0000 IN. XT
LREF = 1290.3000 INCHES YMRP = .0000 IN. YT
BREF = 1290.3000 INCHES ZMRP = 400.0000 IN. ZT
SCALE = .0200

PARAMETRIC DATA

IB-ELV = 8.000 OB-ELV = 9.000
BDFLAP = .000 SPDBRK = .000
RUDDER = .000 SILTS = 1.000
MACH = .800 RN/L = 3.500

RUN NO. 1132/ 0 RN/L = 3.51 GRADIENT INTERVAL = -5.00/ 5.00

ALPHAT	BETAT	CNFTS	CATS	CAFTS	CLMFTS	CYFTS	CYNTS	CYNFTS	CBLFTS	ALFATU	BETATU
-8.262	-5.867	-.40630	.22100	.06420	.06690	.08100	-.00470	-.00200	-.02240	-8.10540	-6.00380
-8.269	-3.852	-.39460	.22360	.06440	.06310	.05280	-.00430	-.00280	-.01450	-8.14070	-4.01490
-8.221	.282	-.37540	.22630	.07170	.05450	-.00760	.00050	.00070	.00160	-8.18450	.07730
-8.070	4.302	-.36520	.22260	.07140	.04950	-.05810	.00350	.00210	.01530	-8.13260	4.10450
-8.087	6.280	-.36770	.22090	.06900	.04930	-.08300	.00330	.00100	.02180	-8.18390	6.09700
	GRADIENT	.00361	-.00012	.00086	-.00167	-.01360	.00096	.00060	.00366	.00094	.99568

RUN NO. 1133/ 0 RN/L = 3.50 GRADIENT INTERVAL = -5.00/ 5.00

ALPHAT	BETAT	CNFTS	CATS	CAFTS	CLMFTS	CYFTS	CYNTS	CYNFTS	CBLFTS	ALFATU	BETATU
-6.194	-5.997	-.33550	.22250	.07410	.06640	.08790	-.00750	-.00500	-.01950	-6.01880	-6.10850
-6.131	-4.036	-.32870	.22300	.07660	.06370	.05990	-.00700	-.00540	-.01320	-5.97870	-4.17730
-6.245	.137	-.30510	.22290	.07620	.05010	-.00460	-.00030	-.00020	.00080	-6.20400	-.06650
-6.033	4.269	-.29810	.22290	.07540	.05070	-.05890	.00520	.00380	.01250	-6.11970	4.08010
-5.997	6.248	-.30430	.22240	.07640	.05130	-.08560	.00640	.00410	.01840	-6.11880	6.07990
	GRADIENT	.00369	-.00001	-.00014	-.00157	-.01431	.00147	.00111	.00309	-.01704	.99425

RUN NO. 1134/ 0 RN/L = 3.50 GRADIENT INTERVAL = -5.00/ 5.00

ALPHAT	BETAT	CNFTS	CATS	CAFTS	CLMFTS	CYFTS	CYNTS	CYNFTS	CBLFTS	ALFATU	BETATU
-4.036	-6.077	-.28120	.22220	.07620	.07120	.09190	-.00990	-.00740	-.01610	-3.84110	-6.14790
-4.260	-3.967	-.27590	.22260	.07270	.06630	.05860	-.00840	-.00690	-.01060	-4.08510	-4.07940
-4.198	.372	-.24000	.22130	.07860	.04850	-.00990	.00150	.00130	.00120	-4.16780	.16680
-3.753	4.310	-.23440	.22290	.07930	.05310	-.06710	.00970	.00830	.01050	-3.87980	4.14580
-3.816	6.136	-.24240	.22230	.07840	.05420	-.09490	.01240	.01020	.01520	-3.96860	5.99480
	GRADIENT	.00507	.00003	.00081	-.00164	-.01520	.00219	.00184	.00255	.02406	.99350

RUN NO. 1135/ 0 RN/L = 3.50 GRADIENT INTERVAL = -5.00/ 5.00

ALPHAT	BETAT	CNFTS	CATS	CAFTS	CLMFTS	CYFTS	CYNTS	CYNFTS	CBLFTS	ALFATU	BETATU
-.202	-6.830	-.20020	.22420	.08120	.07880	.12340	-.02270	-.02050	-.01240	.00190	-6.79150
-.205	-4.516	-.19100	.21990	.08130	.07320	.07960	-.01640	-.01470	-.00830	-.00100	-4.47720
-.227	-.410	-.16230	.21560	.07970	.05650	.00470	-.00230	-.00220	-.00100	-.02310	-.37140
-.174	3.651	-.15710	.21940	.08440	.05970	-.06850	.01420	.01280	.00580	.02960	3.68940
-.157	5.790	-.15970	.22100	.08180	.06350	-.10800	.02220	.02030	.00920	.04730	5.82870
	GRADIENT	.00416	-.00006	.00038	-.00166	-.01813	.00375	.00337	.00173	.00373	.99999

IA156A, AEDC PWT 16T-470, 0 T S W/SILTS (R8NS85) (10 MAY 80)

REFERENCE DATA

SREF = 2690.0000 SQ.FT. XMRP = 976.0000 IN. XT
LREF = 1290.3000 INCHES YMRP = .0000 IN. YT
BREF = 1290.3000 INCHES ZMRP = 400.0000 IN. ZT
SCALE = .0200

PARAMETRIC DATA

IB-ELV = 8.000 OB-ELV = 9.000
BDFLAP = .000 SPDBRK = .000
RUDDER = .000 SILTS = 1.000
MACH = .800 RN/L = 3.500

RUN NO. 1136/ 0 RN/L = 3.50 GRADIENT INTERVAL = -5.00/ 5.00

ALPHAT	BETAT	CNFTS	CATS	CAFTS	CLMFTS	CYFTS	CYNTS	CYNFTS	CBLFTS	ALFATU	BETATU
4.274	-5.889	-.06730	.21410	.07930	.07540	.13270	-.03500	-.03350	-.00250	4.12220	-6.03010
4.264	-3.768	-.05720	.21290	.07790	.07310	.08460	-.02450	-.02350	-.00150	4.14420	-3.93780
4.116	.199	-.03110	.21000	.07530	.05610	.00040	-.00220	-.00230	-.00030	4.15430	-.00530
4.053	3.992	-.03960	.21320	.07920	.06290	-.07980	.02030	.01910	.00040	4.22350	3.87390
4.025	6.123	-.03920	.21580	.07920	.06190	-.12590	.03180	.02990	.00130	4.21710	6.04470
	GRADIENT	.00243	.00003	.00017	-.00134	-.02119	.00577	.00549	.00025	.01016	1.00654

RUN NO. 1137/ 0 RN/L = 3.50 GRADIENT INTERVAL = -5.00/ 5.00

ALPHAT	BETAT	CNFTS	CATS	CAFTS	CLMFTS	CYFTS	CYNTS	CYNFTS	CBLFTS	ALFATU	BETATU
6.396	-5.839	-.00330	.21120	.07520	.06860	.13580	-.03790	-.03650	.00070	6.27710	-6.00890
6.376	-3.792	.00210	.20900	.07470	.06890	.08580	-.02490	-.02380	.00080	6.29270	-3.98170
6.041	.163	.01590	.20840	.07630	.05590	-.00250	-.00110	-.00110	-.00050	6.07790	-.04140
5.983	4.092	.01200	.21020	.07580	.06050	-.08350	.02160	.02040	-.00150	6.13020	3.94590
6.043	6.056	.02220	.21120	.07780	.05680	-.12490	.03260	.03100	-.00200	6.21630	5.94130
	GRADIENT	.00126	.00015	.00014	-.00107	-.02148	.00590	.00561	-.00029	-.02065	1.00558

IA156A, AEDC PWT 16T-470, 0 T S W/SILTS (R8NS86) (10 MAY 80)

REFERENCE DATA

SREF = 2690.0000 SQ.FT. XMRP = 976.0000 IN. XT
LREF = 1290.3000 INCHES YMRP = .0000 IN. YT
BREF = 1290.3000 INCHES ZMRP = 400.0000 IN. ZT
SCALE = .0200

PARAMETRIC DATA

IB-ELV = 8.000 OB-ELV = 9.000
BDFLAP = .000 SPDBRK = .000
RUDDER = .000 SILTS = 1.000
MACH = .900 RN/L = 3.500

RUN NO. 1139/ 0 RN/L = 3.50 GRADIENT INTERVAL = -5.00/ 5.00

ALPHAT	BETAT	CNFTS	CATS	CAFTS	CLMFTS	CYFTS	CYNTS	CYNFTS	CBLFTS	ALFATU	BETATU
-8.158	-5.988	-.41220	.24340	.08270	.06510	.10180	-.01480	-.01250	-.02260	-7.99090	-6.10960
-8.329	-3.760	-.40790	.24490	.08290	.06180	.06450	-.01150	-.01030	-.01430	-8.19170	-3.91400
-8.260	.188	-.38350	.24740	.08330	.05160	-.00140	-.00170	-.00150	.00120	-8.20760	-.01240
-8.099	4.391	-.37570	.24350	.08360	.04640	-.06650	.00770	.00650	.01660	-8.15120	4.19130
-8.123	6.285	-.37870	.24180	.07980	.04600	-.09370	.00880	.00680	.02300	-8.20820	6.09500
	GRADIENT	.00393	-.00018	.00009	-.00188	-.01606	.00235	.00206	.00379	.00506	.99443

IA156A, AEDC PWT 16T-470, 0 T S W/SILTS (R8NS86) (10 MAY 80)

REFERENCE DATA

SREF = 2690.0000 SQ.FT. XMRP = 976.0000 IN. XT
LREF = 1290.3000 INCHES YMRP = .0000 IN. YT
BREF = 1290.3000 INCHES ZMRP = 400.0000 IN. ZT
SCALE = .0200

PARAMETRIC DATA

IB-ELV = 8.000 OB-ELV = 9.000
BDFLAP = .000 SPDBRK = .000
RUDDER = .000 SILTS = 1.000
MACH = .900 RN/L = 3.500

RUN NO. 1140/ 0 RN/L = 3.50 GRADIENT INTERVAL = -5.00/ 5.00

ALPHAT	BETAT	CNFTS	CATS	CAFTS	CLMFTS	CYFTS	CYNTS	CYNFTS	CBLFTS	ALFATU	BETATU
-6.212	-5.981	-.35060	.24470	.08770	.06500	.10420	-.01600	-.01380	-.02020	-6.03040	-6.07840
-6.165	-4.049	-.33920	.24480	.08850	.06130	.07150	-.01390	-.01260	-.01340	-6.00340	-4.17860
-6.295	.110	-.30930	.24370	.08720	.04550	-.00200	-.00170	-.00150	.00080	-6.24000	-.08950
-6.102	4.255	-.30510	.24270	.09030	.04660	-.06620	.00850	.00730	.01350	-6.17490	4.06130
-5.808	6.364	-.29980	.24230	.08770	.04820	-.09930	.01130	.00920	.01920	-5.92270	6.19260
	GRADIENT	.00411	-.00025	.00022	-.00177	-.01658	.00270	.00240	.00324	-.02067	.99226

RUN NO. 1141/ 0 RN/L = 3.50 GRADIENT INTERVAL = -5.00/ 5.00

ALPHAT	BETAT	CNFTS	CATS	CAFTS	CLMFTS	CYFTS	CYNTS	CYNFTS	CBLFTS	ALFATU	BETATU
-4.050	-6.076	-.28790	.24560	.09180	.06860	.10560	-.01640	-.01410	-.01670	-3.85170	-6.13270
-4.285	-3.972	-.28140	.24440	.09290	.06260	.06860	-.01360	-.01230	-.01130	-4.10340	-4.07070
-4.251	.383	-.23790	.23890	.08890	.04070	-.00820	.00000	.00010	.00120	-4.20810	.18070
-3.767	4.317	-.23510	.24010	.09090	.04900	-.06980	.00960	.00830	.01110	-3.88320	4.14550
-3.840	6.146	-.24350	.24140	.09220	.05070	-.09910	.01340	.01150	.01560	-3.98230	5.99660
	GRADIENT	.00566	-.00053	-.00025	-.00170	-.01672	.00280	.00249	.00271	.02567	.99106

RUN NO. 1142/ 0 RN/L = 3.50 GRADIENT INTERVAL = -5.00/ 5.00

ALPHAT	BETAT	CNFTS	CATS	CAFTS	CLMFTS	CYFTS	CYNTS	CYNFTS	CBLFTS	ALFATU	BETATU
-.234	-6.927	-.20420	.24610	.09440	.07610	.13710	-.02670	-.02470	-.01280	-.03350	-6.87490
-.230	-4.774	-.19110	.24320	.09540	.07030	.09500	-.02110	-.01950	-.00920	-.03030	-4.72210
-.290	-.473	-.14970	.23310	.09140	.04300	.00850	-.00420	-.00410	-.00110	-.08960	-.42120
-.227	3.643	-.15040	.23730	.08920	.04890	-.07090	.01570	.01460	.00610	-.02680	3.69440
-.208	5.803	-.15540	.24030	.09380	.05400	-.11350	.02460	.02280	.00950	-.00780	5.85500
	GRADIENT	.00487	-.00071	-.00074	-.00257	-.01971	.00437	.00405	.00182	.00031	1.00002

RUN NO. 1143/ 0 RN/L = 3.50 GRADIENT INTERVAL = -5.00/ 5.00

ALPHAT	BETAT	CNFTS	CATS	CAFTS	CLMFTS	CYFTS	CYNTS	CYNFTS	CBLFTS	ALFATU	BETATU
4.377	-5.749	-.06420	.23630	.09280	.07180	.13690	-.03690	-.03550	-.00290	4.23860	-5.90350
4.245	-3.793	-.05850	.23450	.09120	.06780	.09060	-.02680	-.02590	-.00220	4.13720	-3.96910
4.080	.187	-.02820	.22980	.09060	.04670	.00170	-.00230	-.00230	-.00030	4.13070	-.01280
4.026	3.924	-.04040	.23380	.09180	.05780	-.08160	.02160	.02040	.00140	4.20300	3.81690
4.003	6.096	-.04170	.23640	.09020	.05710	-.13050	.03340	.03150	.00260	4.19910	6.03010
	GRADIENT	.00240	-.00010	.00008	-.00134	-.02232	.00627	.00600	.00047	.00842	1.00880

IA156A, AEDC PWT 16T-470, O T S W/SILTS (R8NS87) (10 MAY 80)

REFERENCE DATA

SREF = 2690.0000 SQ.FT. XMRP = 976.0000 IN. XT
LREF = 1290.3000 INCHES YMRP = .0000 IN. YT
BREF = 1290.3000 INCHES ZMRP = 400.0000 IN. ZT
SCALE = .0200

PARAMETRIC DATA

IB-ELV = 8.000 OB-ELV = 9.000
BDFLAP = .000 SPDBRK = .000
RUDDER = .000 SILTS = 1.000
MACH = .950 RN/L = 3.500

RUN NO. 1144/ 0 RN/L = 3.50 GRADIENT INTERVAL = -5.00/ 5.00

ALPHAT	BETAT	CNFTS	CATS	CAFTS	CLMFTS	CYFTS	CYNTS	CYNFTS	CBLFTS	ALFATU	BETATU
-8.379	-5.898	-.42640	.26840	.09160	.05450	.10870	-.01750	-.01510	-.02370	-8.21200	-6.01800
-8.378	-3.808	-.41060	.26770	.09810	.05030	.07130	-.01320	-.01210	-.01540	-8.23700	-3.95770
-8.341	.394	-.38340	.27310	.09530	.03510	-.00630	-.00010	-.00010	.00210	-8.29050	.19510
-8.178	4.353	-.37870	.26900	.09490	.03610	-.07330	.01040	.00940	.01750	-8.22460	4.15340
-8.159	6.255	-.38830	.26630	.09400	.03910	-.10600	.01440	.01220	.02430	-8.23990	6.06610
	GRADIENT	.00393	.00017	-.00039	-.00176	-.01772	.00289	.00264	.00403	.00137	.99375

RUN NO. 1145/ 0 RN/L = 3.50 GRADIENT INTERVAL = -5.00/ 5.00

ALPHAT	BETAT	CNFTS	CATS	CAFTS	CLMFTS	CYFTS	CYNTS	CYNFTS	CBLFTS	ALFATU	BETATU
-6.260	-5.979	-.35200	.26980	.10030	.05590	.11280	-.01930	-.01690	-.02090	-6.07690	-6.07210
-6.213	-4.048	-.33760	.27030	.10250	.05120	.07690	-.01580	-.01450	-.01410	-6.04940	-4.17240
-6.350	.117	-.30570	.27230	.10320	.03350	-.00140	-.00190	-.00180	.00090	-6.29150	-.08020
-6.160	4.258	-.30610	.27000	.09770	.03780	-.07110	.01050	.00940	.01450	-6.22930	4.06440
-5.834	6.359	-.30220	.26830	.09970	.04280	-.10810	.01540	.01310	.02000	-5.94560	6.18710
	GRADIENT	.00380	-.00004	-.00058	-.00162	-.01782	.00317	.00288	.00344	-.02169	.99172

RUN NO. 1146/ 0 RN/L = 3.49 GRADIENT INTERVAL = -5.00/ 5.00

ALPHAT	BETAT	CNFTS	CATS	CAFTS	CLMFTS	CYFTS	CYNTS	CYNFTS	CBLFTS	ALFATU	BETATU
-4.073	-6.072	-.28740	.27050	.10440	.06180	.11420	-.02060	-.01820	-.01730	-3.87440	-6.12310
-4.310	-3.970	-.27810	.27050	.10530	.05520	.07360	-.01560	-.01420	-.01180	-4.12740	-4.06440
-4.276	.379	-.23720	.26950	.10060	.03630	-.00820	-.00010	-.00010	.00150	-4.22880	.17950
-3.786	4.322	-.23170	.26930	.10740	.04550	-.07430	.01220	.01090	.01130	-3.89860	4.14980
-3.860	6.142	-.24310	.26880	.10280	.04780	-.10680	.01670	.01440	.01590	-3.99900	5.99080
	GRADIENT	.00566	-.00015	.00023	-.00122	-.01785	.00336	.00303	.00279	.02672	.99036

RUN NO. 1147/ 0 RN/L = 3.49 GRADIENT INTERVAL = -5.00/ 5.00

ALPHAT	BETAT	CNFTS	CATS	CAFTS	CLMFTS	CYFTS	CYNTS	CYNFTS	CBLFTS	ALFATU	BETATU
-.240	-6.938	-.19840	.27090	.10740	.07510	.14390	-.03110	-.02870	-.01250	-.04240	-6.88260
-.230	-4.775	-.18500	.27020	.10850	.07060	.09920	-.02510	-.02320	-.00860	-.03230	-4.72000
-.273	-.475	-.14190	.26650	.10070	.04710	.01000	-.00540	-.00510	-.00130	-.07490	-.41960
-.214	3.628	-.14470	.26780	.10790	.05240	-.07480	.01930	.01780	.00560	-.01640	3.68320
-.205	5.812	-.14980	.26950	.10550	.05530	-.11920	.02830	.02610	.00910	-.00750	5.86770
	GRADIENT	.00484	-.00029	-.00007	-.00219	-.02071	.00528	.00487	.00169	.00180	1.00000

IA156A, AEDC PWT 16T-470, O T S W/SILTS (R8NS87) (10 MAY 80)

REFERENCE DATA

SREF = 2690.0000 SQ.FT. XMRP = 976.0000 IN. XT
LREF = 1290.3000 INCHES YMRP = .0000 IN. YT
BREF = 1290.3000 INCHES ZMRP = 400.0000 IN. ZT
SCALE = .0200

PARAMETRIC DATA

IB-ELV = 8.000 OB-ELV = 9.000
BDFLAP = .000 SPDBRK = .000
RUDDER = .000 SILTS = 1.000
MACH = .950 RN/L = 3.500

RUN NO. 1148/ 0 RN/L = 3.49 GRADIENT INTERVAL = -5.00/ 5.00

ALPHAT	BETAT	CNFTS	CATS	CAFTS	CLMFTS	CYFTS	CYNTS	CYNFTS	CBLFTS	ALFATU	BETATU
4.291	-5.874	-.07220	.26670	.10340	.07560	.14530	-.03970	-.03700	-.00370	4.15400	-6.02740
4.250	-3.767	-.05800	.26280	.10300	.06600	.09420	-.02800	-.02690	-.00260	4.14750	-3.94490
4.056	.189	-.02950	.25840	.10550	.04200	.00180	-.00170	-.00170	-.00010	4.11110	-.00900
4.050	3.973	-.03850	.25970	.10380	.05590	-.08490	.02220	.02090	.00170	4.22760	3.87050
4.034	6.104	-.04180	.26260	.10450	.06000	-.13510	.03450	.03230	.00270	4.22940	6.04180
	GRADIENT	.00255	-.00041	.00011	-.00134	-.02314	.00649	.00618	.00056	.01020	1.00964

IA156A, AEDC PWT 16T-470, O T S W/SILTS (R8NS88) (10 MAY 80)

REFERENCE DATA

SREF = 2690.0000 SQ.FT. XMRP = 976.0000 IN. XT
LREF = 1290.3000 INCHES YMRP = .0000 IN. YT
BREF = 1290.3000 INCHES ZMRP = 400.0000 IN. ZT
SCALE = .0200

PARAMETRIC DATA

IB-ELV = 8.000 OB-ELV = 9.000
BDFLAP = .000 SPDBRK = .000
RUDDER = .000 SILTS = 1.000
MACH = 1.050 RN/L = 3.500

RUN NO. 1149/ 0 RN/L = 3.50 GRADIENT INTERVAL = -5.00/ 5.00

ALPHAT	BETAT	CNFTS	CATS	CAFTS	CLMFTS	CYFTS	CYNTS	CYNFTS	CBLFTS	ALFATU	BETATU
-8.419	-5.926	-.44510	.34830	.13410	.05290	.11800	-.01750	-.01480	-.02710	-8.24900	-6.03870
-8.440	-3.826	-.43640	.35130	.13480	.05110	.07700	-.01310	-.01160	-.01850	-8.29500	-3.96910
-8.402	.400	-.40300	.35710	.13800	.03150	-.00620	.00030	.00020	.00240	-8.34670	.20410
-8.212	4.350	-.40440	.35320	.13590	.03560	-.07740	.00960	.00830	.01970	-8.25390	4.15120
-8.211	6.283	-.41000	.34980	.13420	.03850	-.11100	.01290	.01040	.02670	-8.28790	6.09380
	GRADIENT	.00396	.00025	.00014	-.00193	-.01889	.00278	.00244	.00468	.00483	.99306

RUN NO. 1150/ 0 RN/L = 3.50 GRADIENT INTERVAL = -5.00/ 5.00

ALPHAT	BETAT	CNFTS	CATS	CAFTS	CLMFTS	CYFTS	CYNTS	CYNFTS	CBLFTS	ALFATU	BETATU
-6.288	-5.995	-.35870	.34910	.13990	.05290	.11910	-.01900	-.01630	-.02340	-6.10260	-6.08060
-6.215	-4.057	-.34490	.35110	.14250	.04930	.08010	-.01400	-.01250	-.01600	-6.04820	-4.17390
-6.396	.108	-.31840	.35470	.13990	.03110	-.00220	-.00080	-.00080	.00100	-6.33160	-.08520
-6.156	4.274	-.31750	.35350	.14060	.03710	-.07600	.01040	.00900	.01620	-6.22140	4.08090
-6.112	6.262	-.32510	.34950	.14250	.04000	-.11370	.01630	.01380	.02270	-6.21440	6.08630
	GRADIENT	.00329	.00029	-.00023	-.00146	-.01874	.00293	.00258	.00387	-.02079	.99091

IA156A, AEDC PWT 16T-470, 0 T S W/SILTS (R8NS88) (10 MAY 80)

REFERENCE DATA

SREF = 2690.0000 SQ.FT. XMRP = 976.0000 IN. XT
LREF = 1290.3000 INCHES YMRP = .0000 IN. YT
BREF = 1290.3000 INCHES ZMRP = 400.0000 IN. ZT
SCALE = .0200

PARAMETRIC DATA

IB-ELV = 8.000 OB-ELV = 9.000
BDFLAP = .000 SPDBRK = .000
RUDDER = .000 SILTS = 1.000
MACH = 1.050 RN/L = 3.500

RUN NO. 1151/ 0 RN/L = 3.50 GRADIENT INTERVAL = -5.00/ 5.00

ALPHAT	BETAT	CNFTS	CATS	CAFTS	CLMFTS	CYFTS	CYNTS	CYNFTS	CBLFTS	ALFATU	BETATU
-4.096	-6.088	-.29220	.34840	.14380	.05950	.12240	-.02090	-.01850	-.01980	-3.89700	-6.13150
-4.343	-3.991	-.28370	.34880	.14450	.05270	.07920	-.01640	-.01480	-.01360	-4.15790	-4.07660
-4.313	.375	-.23990	.35140	.14050	.03200	-.00760	.00020	.00010	.00150	-4.26130	.17850
-3.793	4.315	-.23860	.35070	.14800	.04370	-.07870	.01330	.01170	.01310	-3.90190	4.14220
-3.882	6.158	-.25090	.34920	.14540	.04680	-.11510	.01900	.01680	.01820	-4.01710	6.00510
	GRADIENT	.00551	.00024	.00040	-.00115	-.01903	.00358	.00319	.00322	.02984	.98934

RUN NO. 1152/ 0 RN/L = 3.50 GRADIENT INTERVAL = -5.00/ 5.00

ALPHAT	BETAT	CNFTS	CATS	CAFTS	CLMFTS	CYFTS	CYNTS	CYNFTS	CBLFTS	ALFATU	BETATU
-.247	-7.004	-.20010	.34520	.14770	.07880	.15530	-.03520	-.03280	-.01460	-.05250	-6.94310
-.251	-4.821	-.18390	.34540	.14260	.07160	.10650	-.02800	-.02610	-.01010	-.05690	-4.76020
-.329	-.462	-.13550	.35050	.14390	.04210	.01440	-.00840	-.00830	-.00140	-.13460	-.40160
-.254	3.637	-.13930	.35150	.14730	.05090	-.07630	.01960	.01800	.00670	-.05930	3.69840
-.232	5.819	-.14550	.35190	.14650	.05570	-.12310	.02980	.02760	.01040	-.03780	5.88020
	GRADIENT	.00533	.00073	.00055	-.00249	-.02161	.00562	.00520	.00199	-.00047	1.00000

RUN NO. 1153/ 0 RN/L = 3.50 GRADIENT INTERVAL = -5.00/ 5.00

ALPHAT	BETAT	CNFTS	CATS	CAFTS	CLMFTS	CYFTS	CYNTS	CYNFTS	CBLFTS	ALFATU	BETATU
4.386	-5.746	-.06620	.34020	.14140	.07260	.14400	-.04110	-.03980	-.00460	4.25860	-5.90450
4.239	-3.728	-.05350	.34040	.14540	.06440	.09630	-.02980	-.02920	-.00360	4.14380	-3.90840
3.954	.031	-.02660	.34030	.14710	.04570	.00760	-.00570	-.00560	-.00080	4.00590	-.16560
4.065	3.968	-.03350	.34250	.14350	.05490	-.08600	.02290	.02200	.00220	4.24410	3.87110
4.052	6.092	-.03810	.34070	.14320	.05980	-.13680	.03460	.03310	.00330	4.24760	6.03610
	GRADIENT	.00256	.00028	-.00025	-.00121	-.02369	.00685	.00666	.00075	.01341	1.01091

IA156A, AEDC PWT 16T-470, O T S W/SILTS (R8NS89) (10 MAY 80)

REFERENCE DATA

SREF = 2690.0000 SQ.FT. XMRP = 976.0000 IN. XT
LREF = 1290.3000 INCHES YMRP = .0000 IN. YT
BREF = 1290.3000 INCHES ZMRP = 400.0000 IN. ZT
SCALE = .0200

PARAMETRIC DATA

IB-ELV = 8.000 OB-ELV = 9.000
BDFLAP = .000 SPDBRK = .000
RUDDER = .000 SILTS = 1.000
MACH = 1.100 RN/L = 3.500

RUN NO. 1154/ 0 RN/L = 3.50 GRADIENT INTERVAL = -5.00/ 5.00

ALPHAT	BETAT	CNFTS	CATS	CAFTS	CLMFTS	CYFTS	CYNTS	CYNFTS	CBLFTS	ALFATU	BETATU
-8.401	-5.911	-.43760	.34160	.14820	.05140	.11650	-.01960	-.01710	-.02600	-8.22930	-6.02200
-8.428	-3.814	-.42820	.34450	.14930	.04670	.07410	-.01210	-.01060	-.01760	-8.28120	-3.95600
-8.421	.188	-.39690	.34860	.14880	.02730	-.00250	-.00140	-.00140	.00180	-8.35720	-.00590
-8.217	4.371	-.39830	.34640	.14950	.03440	-.07440	.00780	.00640	.01960	-8.25740	4.17050
-8.205	6.275	-.40530	.34360	.14730	.03870	-.11040	.01330	.01080	.02610	-8.27930	6.08520
	GRADIENT	.00362	.00023	.00003	-.00148	-.01814	.00243	.00208	.00454	.00306	.99288

RUN NO. 1155/ 0 RN/L = 3.50 GRADIENT INTERVAL = -5.00/ 5.00

ALPHAT	BETAT	CNFTS	CATS	CAFTS	CLMFTS	CYFTS	CYNTS	CYNFTS	CBLFTS	ALFATU	BETATU
-6.294	-5.992	-.36130	.34120	.15240	.04980	.11520	-.01770	-.01530	-.02330	-6.10660	-6.07470
-6.277	-4.070	-.34720	.34210	.15260	.04520	.07520	-.01220	-.01080	-.01570	-6.10850	-4.18560
-6.429	.113	-.31440	.34260	.15180	.02680	-.00200	-.00230	-.00220	.00140	-6.36280	-.08040
-6.178	4.288	-.31510	.34440	.15260	.03570	-.07240	.00750	.00620	.01620	-6.24160	4.09340
-6.109	6.262	-.32160	.34010	.14470	.03940	-.10950	.01400	.01160	.02260	-6.20950	6.08370
	GRADIENT	.00334	.00028	-.00000	-.00114	-.01766	.00236	.00203	.00382	-.01594	.99057

RUN NO. 1156/ 0 RN/L = 3.50 GRADIENT INTERVAL = -5.00/ 5.00

ALPHAT	BETAT	CNFTS	CATS	CAFTS	CLMFTS	CYFTS	CYNTS	CYNFTS	CBLFTS	ALFATU	BETATU
-4.109	-6.094	-.29240	.33910	.15510	.05720	.11480	-.01790	-.01590	-.01970	-3.90870	-6.13550
-4.361	-3.993	-.28370	.33770	.15550	.04910	.07190	-.01340	-.01210	-.01330	-4.17460	-4.07680
-4.317	.372	-.23760	.33820	.15650	.02990	-.00820	-.00070	-.00090	.00190	-4.26130	.17560
-3.781	4.327	-.23610	.34020	.15860	.04350	-.07520	.00980	.00840	.01320	-3.88770	4.15240
-3.875	6.165	-.24940	.34020	.15770	.04750	-.11120	.01590	.01390	.01820	-4.00820	6.01020
	GRADIENT	.00580	.00030	.00037	-.00074	-.01769	.00279	.00247	.00319	.03355	.98888

RUN NO. 1157/ 0 RN/L = 3.50 GRADIENT INTERVAL = -5.00/ 5.00

ALPHAT	BETAT	CNFTS	CATS	CAFTS	CLMFTS	CYFTS	CYNTS	CYNFTS	CBLFTS	ALFATU	BETATU
-.250	-7.000	-.20340	.33620	.15540	.07890	.14780	-.02980	-.02770	-.01480	-.05540	-6.93720
-.249	-4.850	-.18690	.33180	.15760	.07210	.09900	-.02280	-.02110	-.01000	-.05490	-4.78670
-.311	-.443	-.14180	.33520	.15490	.04500	.01050	-.00640	-.00630	-.00120	-.11630	-.37920
-.237	3.647	-.14550	.33560	.16150	.05420	-.07450	.01730	.01570	.00690	-.04290	3.71070
-.221	5.831	-.15020	.33550	.15810	.05760	-.12070	.02700	.02480	.01060	-.02620	5.89440
	GRADIENT	.00494	.00045	.00045	-.00216	-.02041	.00471	.00432	.00199	.00121	1.00001

IA156A, AEDC PWT 16T-470, O T S W/SILTS (R8NS89) (10 MAY 80)

REFERENCE DATA

SREF = 2690.0000 SQ.FT. XMRP = 975.0000 IN. XT
LREF = 1290.3000 INCHES YMRP = .0000 IN. YT
BREF = 1290.3000 INCHES ZMRP = 400.0000 IN. ZT
SCALE = .0200

PARAMETRIC DATA

IB-ELV = 8.000 OB-ELV = 9.000
BDFLAP = .000 SPDBRK = .000
RUDDER = .000 SILTS = 1.000
MACH = 1.100 RN/L = 3.500

RUN NO. 1158/ 0 RN/L = 3.50 GRADIENT INTERVAL = -5.00/ 5.00

ALPHAT	BETAT	CNFTS	CATS	CAFTS	CLMFTS	CYFTS	CYNTS	CYNFTS	CBLFTS	ALFATU	BETATU
4.314	-5.859	-.07010	.32600	.15600	.07780	.14480	-.04030	-.03900	-.00480	4.18420	-6.01720
4.274	-3.749	-.05550	.32660	.15770	.06970	.09640	-.03000	-.02940	-.00360	4.17990	-3.93060
4.090	.201	-.02740	.32630	.15650	.05080	-.00010	-.00370	-.00370	-.00060	4.15260	.00600
4.087	3.961	-.03840	.32700	.15310	.06170	-.08690	.02190	.02100	.00230	4.26760	3.86570
4.081	6.105	-.04380	.32700	.15700	.06440	-.13670	.03300	.03160	.00360	4.27790	6.05140
	GRADIENT	.00223	.00005	-.00059	-.00107	-.02378	.00673	.00654	.00077	.01122	1.01105

IA156A, AEDC PWT 16T-470, O T S W/SILTS (R8NS90) (10 MAY 80)

REFERENCE DATA

SREF = 2690.0000 SQ.FT. XMRP = 976.0000 IN. XT
LREF = 1290.3000 INCHES YMRP = .0000 IN. YT
BREF = 1290.3000 INCHES ZMRP = 400.0000 IN. ZT
SCALE = .0200

PARAMETRIC DATA

IB-ELV = 8.000 OB-ELV = 9.000
BDFLAP = .000 SPDBRK = .000
RUDDER = .000 SILTS = 1.000
MACH = 1.150 RN/L = 3.500

RUN NO. 1159/ 0 RN/L = 3.49 GRADIENT INTERVAL = -5.00/ 5.00

ALPHAT	BETAT	CNFTS	CATS	CAFTS	CLMFTS	CYFTS	CYNTS	CYNFTS	CBLFTS	ALFATU	BETATU
-8.399	-5.939	-.44500	.33990	.15640	.05470	.11750	-.01600	-.01380	-.02710	-8.22370	-6.04940
-8.431	-3.823	-.43740	.34120	.15610	.05190	.07540	-.01120	-.00970	-.01830	-8.28060	-3.96540
-8.421	.407	-.40750	.34450	.16010	.03310	-.00300	-.00220	-.00230	.00230	-8.36100	.20870
-8.194	4.363	-.41120	.34320	.15810	.04220	-.06990	.00540	.00400	.01950	-8.23360	4.16010
-8.187	6.293	-.41680	.33850	.15580	.04520	-.10560	.01040	.00840	.02630	-8.26190	6.09990
	GRADIENT	.00324	.00025	.00025	-.00122	-.01776	.00203	.00167	.00462	.00546	.99253

RUN NO. 1160/ 0 RN/L = 3.50 GRADIENT INTERVAL = -5.00/ 5.00

ALPHAT	BETAT	CNFTS	CATS	CAFTS	CLMFTS	CYFTS	CYNTS	CYNFTS	CBLFTS	ALFATU	BETATU
-6.284	-6.005	-.36320	.33770	.15890	.05410	.11610	-.01670	-.01440	-.02370	-6.09400	-6.08720
-6.235	-4.070	-.35240	.33910	.16180	.05030	.07750	-.01250	-.01110	-.01640	-6.06360	-4.18560
-6.408	.117	-.32480	.34040	.15910	.03410	.00090	-.00350	-.00350	.00090	-6.33870	-.07770
-6.149	4.299	-.32420	.34100	.16250	.04240	-.07140	.00570	.00440	.01630	-6.21130	4.10190
-6.089	6.272	-.32940	.33820	.16210	.04440	-.10840	.01170	.00950	.02290	-6.18970	6.09150
	GRADIENT	.00337	.00023	.00008	-.00094	-.01779	.00217	.00185	.00391	-.01766	.99024

IA156A, AEDC PWT 16T-470, 0 T S W/SILTS (R8NS90) (10 MAY 80)

REFERENCE DATA

SREF = 2690.0000 SQ.FT. XMRP = 976.0000 IN. XT
LREF = 1290.3000 INCHES YMRP = .0000 IN. YT
BREF = 1290.3000 INCHES ZMRP = 400.0000 IN. ZT
SCALE = .0200

PARAMETRIC DATA

IB-ELV = 8.000 OB-ELV = 9.000
BDFLAP = .000 SPDBRK = .000
RUDDER = .000 SILTS = 1.000
MACH = 1.150 RN/L = 3.500

RUN NO. 1161/ 0 RN/L = 3.50 GRADIENT INTERVAL = -5.00/ 5.00

ALPHAT	BETAT	CNFTS	CATS	CAFTS	CLMFTS	CYFTS	CYNTS	CYNFTS	CBLFTS	ALFATU	BETATU
-4.080	-6.104	-.29580	.33700	.16410	.06260	.11770	-.01860	-.01660	-.02000	-3.87680	-6.14440
-4.328	-3.995	-.28620	.33580	.16470	.05470	.07670	-.01520	-.01390	-.01380	-4.13910	-4.07850
-4.310	.387	-.24910	.33720	.16440	.03770	-.00520	-.00250	-.00260	.00170	-4.25300	.18870
-3.763	4.327	-.24740	.33970	.16800	.05080	-.07390	.00870	.00730	.01340	-3.87010	4.15040
-3.861	6.183	-.25780	.33820	.16610	.05370	-.10810	.01350	.01150	.01820	-3.99550	6.02540
	GRADIENT	.00473	.00047	.00039	-.00053	-.01811	.00287	.00255	.00327	.03124	.98851

RUN NO. 1162/ 0 RN/L = 3.49 GRADIENT INTERVAL = -5.00/ 5.00

ALPHAT	BETAT	CNFTS	CATS	CAFTS	CLMFTS	CYFTS	CYNTS	CYNFTS	CBLFTS	ALFATU	BETATU
-.220	-7.028	-.20180	.33550	.16220	.08180	.14940	-.03150	-.02930	-.01450	-.02420	-6.96240
-.205	-4.871	-.18410	.33320	.16790	.07480	.10030	-.02380	-.02220	-.00990	-.00840	-4.80560
-.266	-.430	-.14210	.33710	.16930	.04850	.01110	-.00690	-.00690	-.00120	-.07030	-.36430
-.194	3.652	-.14330	.33660	.16850	.05660	-.07350	.01660	.01500	.00660	.00150	3.71720
-.189	5.844	-.15040	.33700	.16900	.06080	-.11980	.02520	.02310	.01060	.00720	5.90960
	GRADIENT	.00486	.00041	.00007	-.00219	-.02039	.00473	.00435	.00194	.00094	1.00000

RUN NO. 1163/ 0 RN/L = 3.50 GRADIENT INTERVAL = -5.00/ 5.00

ALPHAT	BETAT	CNFTS	CATS	CAFTS	CLMFTS	CYFTS	CYNTS	CYNFTS	CBLFTS	ALFATU	BETATU
4.360	-5.855	-.07730	.32860	.16530	.08490	.14730	-.04190	-.04060	-.00530	4.23070	-5.81600
4.308	-3.725	-.06210	.32920	.16420	.07730	.09820	-.03300	-.03230	-.00390	4.21410	-3.80970
4.141	.216	-.03840	.32910	.16360	.06180	.00560	-.00800	-.00790	-.00070	4.20670	.02000
4.152	4.000	-.03920	.33000	.16760	.06440	-.08270	.02000	.01910	.00210	4.33570	3.90520
4.057	6.047	-.04510	.33000	.16620	.06730	-.13120	.03120	.02990	.00350	4.25700	5.99390
	GRADIENT	.00299	.00010	.00044	-.00169	-.02342	.00686	.00665	.00078	.01562	1.01151

IA156A, AEDC PWT 16T-470, 0 T S W/SILTS (R8NS91) (10 MAY 80)

REFERENCE DATA

SREF = 2690.0000 SQ.FT. XMRP = 976.0000 IN. XT
LREF = 1290.3000 INCHES YMRP = .0000 IN. YT
BREF = 1290.3000 INCHES ZMRP = 400.0000 IN. ZT
SCALE = .0200

PARAMETRIC DATA

IB-ELV = 8.000 OB-ELV = 9.000
BDFLAP = .000 SPDBRK = .000
RUDDER = .000 SILTS = 1.000
MACH = 1.250 RN/L = 3.500

RUN NO. 1164/ 0 RN/L = 3.50 GRADIENT INTERVAL = -5.00/ 5.00

ALPHAT	BETAT	CNFTS	CATS	CAFTS	CLMFTS	CYFTS	CYNTS	CYNFTS	CBLFTS	ALFATU	BETATU
-8.347	-5.939	-.45740	.33110	.16440	.06890	.11210	-.01240	-.01060	-.02600	-8.16130	-6.05440
-8.367	-3.827	-.44560	.33320	.16560	.06480	.06800	-.00570	-.00430	-.01720	-8.20790	-3.97580
-8.365	.411	-.41710	.33770	.16800	.04660	-.00480	-.00090	-.00100	.00240	-8.30030	.20340
-8.149	4.395	-.41410	.33340	.16910	.05150	-.07100	.00370	.00250	.01890	-8.18970	4.18040
-8.169	6.315	-.42380	.33140	.16610	.05260	-.10570	.00800	.00610	.02580	-8.24560	6.11120
	GRADIENT	.00386	.00004	.00043	-.00165	-.01691	.00114	.00083	.00439	.00196	.99199

RUN NO. 1165/ 0 RN/L = 3.50 GRADIENT INTERVAL = -5.00/ 5.00

ALPHAT	BETAT	CNFTS	CATS	CAFTS	CLMFTS	CYFTS	CYNTS	CYNFTS	CBLFTS	ALFATU	BETATU
-6.267	-6.034	-.37450	.33130	.17020	.06590	.10820	-.01170	-.00980	-.02280	-6.06610	-6.11960
-6.203	-4.083	-.36280	.33250	.16950	.06340	.06970	-.00740	-.00620	-.01550	-6.02170	-4.20390
-6.354	.126	-.33560	.33470	.17080	.04690	-.00380	-.00080	-.00070	.00080	-6.28040	-.07960
-6.111	4.313	-.33020	.33350	.17130	.04970	-.07100	.00510	.00400	.01590	-6.17590	4.10480
-6.071	6.300	-.33490	.33180	.16920	.04960	-.10690	.00950	.00760	.02230	-6.17550	6.10900
	GRADIENT	.00388	.00012	.00021	-.00163	-.01676	.00149	.00121	.00374	-.01840	.98956

RUN NO. 1166/ 0 RN/L = 3.49 GRADIENT INTERVAL = -5.00/ 5.00

ALPHAT	BETAT	CNFTS	CATS	CAFTS	CLMFTS	CYFTS	CYNTS	CYNFTS	CBLFTS	ALFATU	BETATU
-4.049	-6.132	-.30650	.33160	.17150	.07290	.11020	-.01430	-.01250	-.01920	-3.83450	-6.17240
-4.273	-3.990	-.29870	.33020	.16910	.06690	.06630	-.00910	-.00810	-.01280	-4.07280	-4.07660
-4.252	.386	-.25910	.33130	.17290	.04790	-.00990	.00050	.00040	.00150	-4.19020	.17710
-3.734	4.340	-.25220	.33430	.17670	.05650	-.07130	.00730	.00620	.01260	-3.84570	4.15230
-3.840	6.205	-.26030	.33330	.17400	.05710	-.10500	.01130	.00950	.01760	-3.98030	6.03800
	GRADIENT	.00564	.00049	.00091	-.00130	-.01653	.00197	.00172	.00305	.02630	.98758

RUN NO. 1167/ 0 RN/L = 3.50 GRADIENT INTERVAL = -5.00/ 5.00

ALPHAT	BETAT	CNFTS	CATS	CAFTS	CLMFTS	CYFTS	CYNTS	CYNFTS	CBLFTS	ALFATU	BETATU
-.187	-7.050	-.21480	.32980	.17270	.09420	.14520	-.02840	-.02650	-.01390	.01930	-6.97960
-.169	-4.847	-.19720	.32850	.17300	.08790	.09520	-.02070	-.01930	-.00940	.03760	-4.77700
-.201	-.479	-.16050	.32930	.17770	.06690	.01060	-.00600	-.00600	-.00110	.00540	-.40860
-.145	3.659	-.16120	.32950	.16910	.07290	-.07240	.01460	.01310	.00640	.06100	3.72920
-.147	5.879	-.16440	.32990	.17380	.07470	-.11700	.02160	.01970	.01000	.05960	5.94930
	GRADIENT	.00427	.00012	-.00044	-.00179	-.01970	.00414	.00380	.00186	.00266	1.00002

IA156A, AEDC PWT 16T-470, 0 T S W/SILTS (R8NS91) (10 MAY 80)

REFERENCE DATA

SREF = 2690.0000 SQ.FT. XMRP = 976.0000 IN. XT
LREF = 1290.3000 INCHES YMRP = .0000 IN. YT
BREF = 1290.3000 INCHES ZMRP = 400.0000 IN. ZT
SCALE = .0200

PARAMETRIC DATA

IB-ELV = 8.000 OB-ELV = 9.000
BDFLAP = .000 SPDBRK = .000
RUDDER = .000 SILTS = 1.000
MACH = 1.250 RN/L = 3.500

RUN NO. 1168/ 0 RN/L = 3.49 GRADIENT INTERVAL = -5.00/ 5.00

ALPHAT	BETAT	CNFTS	CATS	CAFTS	CLMFTS	CYFTS	CYNTS	CYNFTS	CBLFTS	ALFATU	BETATU
4.521	-5.714	-.07460	.32360	.17480	.09150	.13840	-.03880	-.03770	-.00470	4.38850	-5.88770
4.377	-3.769	-.06530	.32370	.17480	.08530	.09320	-.02940	-.02870	-.00350	4.27790	-3.96310
4.205	.201	-.05040	.32210	.17230	.07620	.00090	-.00500	-.00500	-.00060	4.27390	-.00540
4.148	3.900	-.05510	.32300	.17320	.07960	-.08450	.02220	.02130	.00230	4.34140	3.79970
4.175	6.124	-.05900	.32260	.17330	.08130	-.13660	.03360	.03220	.00370	4.38600	6.06900
	GRADIENT	.00136	-.00010	-.00021	-.00076	-.02317	.00672	.00651	.00076	.00817	1.01211

IA156A, AEDC PWT 16T-470, 0 T S W/SILTS (R8NS92) (10 MAY 80)

REFERENCE DATA

SREF = 2690.0000 SQ.FT. XMRP = 976.0000 IN. XT
LREF = 1290.3000 INCHES YMRP = .0000 IN. YT
BREF = 1290.3000 INCHES ZMRP = 400.0000 IN. ZT
SCALE = .0200

PARAMETRIC DATA

IB-ELV = 8.000 OB-ELV = 5.000
BDFLAP = .000 SPDBRK = .000
RUDDER = .000 SILTS = 1.000
MACH = .600 RN/L = 3.500

RUN NO. 1173/ 0 RN/L = 3.50 GRADIENT INTERVAL = -5.00/ 5.00

ALPHAT	BETAT	CNFTS	CATS	CAFTS	CLMFTS	CYFTS	CYNTS	CYNFTS	CBLFTS	ALFATU	BETATU
-8.046	-7.941	-.37890	.21110	.05420	.06290	.09940	.00270	.00580	-.02810	-7.95650	-8.13300
-8.150	-5.802	-.37660	.21050	.05560	.05790	.07080	.00150	.00380	-.02130	-8.09060	-6.00430
-8.156	-3.808	-.36350	.21030	.06150	.05430	.04640	-.00050	.00080	-.01370	-8.13440	-4.01770
-8.083	.279	-.35370	.21200	.06050	.05110	-.00740	.00010	.00010	.00170	-8.16330	.08370
-7.946	4.233	-.33910	.21200	.06360	.04630	-.05230	.00070	-.00050	.01460	-8.10590	4.09620
-7.945	6.181	-.33900	.21140	.06120	.04670	-.07430	-.00050	-.00270	.02110	-8.12700	6.07470
-7.766	8.258	-.33680	.21430	.06100	.04880	-.10110	-.00050	-.00330	.02670	-7.96340	8.18260
	GRADIENT	.00303	.00021	.00026	-.00099	-.01228	.00015	-.00016	.00352	.00349	1.00904

RUN NO. 1174/ 0 RN/L = 3.49 GRADIENT INTERVAL = -5.00/ 5.00

ALPHAT	BETAT	CNFTS	CATS	CAFTS	CLMFTS	CYFTS	CYNTS	CYNFTS	CBLFTS	ALFATU	BETATU
-6.133	-7.937	-.32430	.21140	.06030	.06330	.10510	-.00030	.00260	-.02470	-6.01870	-8.11510
-6.104	-5.941	-.31730	.21160	.06000	.05840	.07470	-.00030	.00210	-.01880	-6.01510	-6.13270
-6.062	-3.983	-.30810	.21150	.06630	.05490	.04910	-.00160	-.00030	-.01230	-6.01000	-4.18760
-6.116	.112	-.29010	.21050	.06570	.04710	-.00470	-.00060	-.00060	.00100	-6.19010	-.08490
-5.962	4.197	-.28080	.21370	.06810	.04830	-.05300	.00100	-.00030	.01240	-6.13790	4.08050
-5.735	6.246	-.27420	.21330	.06950	.04880	-.07980	.00220	.00010	.01760	-5.93280	6.17100
-5.882	8.163	-.28340	.21360	.06500	.04890	-.10510	.00270	.00020	.02260	-6.08750	8.11290
	GRADIENT	.00334	.00027	.00022	-.00081	-.01248	.00032	-.00000	.00302	-.01565	1.01078

IA156A, AEDC PWT 16T-470, 0 T S W/SILTS (R8NS92) (10 MAY 80)

REFERENCE DATA

SREF = 2690.0000 SQ.FT. XMRP = 976.0000 IN. XT
LREF = 1290.3000 INCHES YMRP = .0000 IN. YT
BREF = 1290.3000 INCHES ZMRP = 400.0000 IN. ZT
SCALE = .0200

PARAMETRIC DATA

IB-ELV = 8.000 OB-ELV = 5.000
BDFLAP = .000 SPDBRK = .000
RUDDER = .000 SILTS = 1.000
MACH = .600 RN/L = 3.500

RUN NO. 1175/ 0 RN/L = 3.49 GRADIENT INTERVAL = -5.00/ 5.00

ALPHAT	BETAT	CNFTS	CATS	CAFTS	CLMFTS	CYFTS	CYNTS	CYNFTS	CBLFTS	ALFATU	BETATU
-3.969	-8.046	-.27040	.21270	.06460	.06620	.11370	-.00540	-.00280	-.02060	-3.82160	-8.19750
-4.182	-5.932	-.26690	.21030	.06780	.06150	.07740	-.00250	-.00040	-.01550	-4.05740	-6.10240
-4.200	-3.884	-.25840	.21050	.06630	.05700	.04820	-.00340	-.00200	-.00980	-4.11090	-4.07530
-4.005	.181	-.23050	.21050	.07080	.04790	-.00650	-.00030	-.00060	.00120	-4.08040	-.01610
-3.652	4.264	-.21800	.21330	.07410	.05260	-.05740	.00380	.00240	.00990	-3.85000	4.19130
-3.609	6.053	-.21930	.21340	.07260	.05270	-.08160	.00510	.00320	.01360	-3.81690	6.01670
-3.787	8.032	-.22450	.21550	.06970	.05120	-.11150	.00800	.00570	.01800	-3.99750	8.01850
	GRADIENT	.00496	.00034	.00096	-.00054	-.01296	.00088	.00054	.00242	.03204	1.01453

RUN NO. 1176/ 0 RN/L = 3.49 GRADIENT INTERVAL = -5.00/ 5.00

ALPHAT	BETAT	CNFTS	CATS	CAFTS	CLMFTS	CYFTS	CYNTS	CYNFTS	CBLFTS	ALFATU	BETATU
-.238	-8.738	-.19660	.21520	.07100	.07720	.15150	-.02280	-.02070	-.01540	-.04200	-8.81540
-.226	-6.555	-.18850	.21160	.07260	.07450	.10580	-.01560	-.01340	-.01110	-.02980	-6.63180
-.224	-4.493	-.18050	.20910	.07300	.07030	.07060	-.01180	-.01020	-.00750	-.02710	-4.56920
-.222	-.339	-.15860	.21000	.07330	.05900	.00180	-.00120	-.00130	-.00050	-.02610	-.41620
-.177	3.746	-.15250	.21020	.07580	.06200	-.06280	.01120	.00980	.00510	.01990	3.67020
-.174	5.861	-.15210	.21080	.07410	.06210	-.09760	.01690	.01510	.00810	.02250	5.78570
-.166	7.946	-.14290	.21410	.07380	.05940	-.13320	.02220	.02000	.01060	.03060	7.86950
	GRADIENT	.00340	.00013	.00034	-.00101	-.01619	.00279	.00243	.00153	.00569	1.00001

RUN NO. 1177/ 0 RN/L = 3.50 GRADIENT INTERVAL = -5.00/ 5.00

ALPHAT	BETAT	CNFTS	CATS	CAFTS	CLMFTS	CYFTS	CYNTS	CYNFTS	CBLFTS	ALFATU	BETATU
4.316	-8.043	-.07650	.20680	.07010	.07700	.16770	-.04200	-.04050	-.00370	4.10590	-8.05960
4.311	-5.813	-.06530	.20360	.07060	.07390	.12150	-.03210	-.03070	-.00210	4.10420	-5.85700
4.279	-3.825	-.05710	.20250	.07010	.07150	.07870	-.02230	-.02130	-.00120	4.08450	-3.90690
4.048	.090	-.05040	.20240	.07010	.06290	.00200	-.00330	-.00340	-.00050	3.96530	-.10420
4.117	4.097	-.04370	.20510	.06930	.06520	-.07490	.01660	.01550	.00000	4.19930	3.90220
4.053	6.212	-.04130	.20580	.07260	.06370	-.11860	.02660	.02480	.00070	4.17530	6.04080
4.031	8.214	-.03410	.20810	.07290	.05960	-.15650	.03470	.03270	.00140	4.17470	8.05970
	GRADIENT	.00169	.00033	-.00010	-.00079	-.01939	.00491	.00465	.00015	.01466	.98585

IA156A, AEDC PWT 16T-470, O T S W/SILTS (R8NS92) (10 MAY 80)

REFERENCE DATA

SREF = 2690.0000 SQ.FT. XMRP = 976.0000 IN. XT
LREF = 1290.3000 INCHES YMRP = .0000 IN. YT
BREF = 1290.3000 INCHES ZMRP = 400.0000 IN. ZT
SCALE = .0200

PARAMETRIC DATA

IB-ELV = 8.000 OB-ELV = 5.000
BDFLAP = .000 SPDBRK = .000
RUDDER = .000 SILTS = 1.000
MACH = .600 RN/L = 3.500

RUN NO. 1178/ 0 RN/L = 3.51 GRADIENT INTERVAL = -5.00/ 5.00

ALPHAT	BETAT	CNFTS	CATS	CAFTS	CLMFTS	CYFTS	CYNTS	CYNFTS	CBLFTS	ALFATU	BETATU
6.457	-7.975	-.01670	.20390	.06840	.07390	.17790	-.04760	-.04630	.00050	6.25410	-8.03180
6.431	-5.901	-.00870	.20140	.07030	.07240	.12800	-.03550	-.03430	.00110	6.23850	-5.98540
6.415	-3.840	-.00650	.19960	.06800	.07200	.08460	-.02410	-.02320	.00080	6.24260	-3.96150
6.122	.193	-.00040	.20280	.07080	.06520	-.00270	-.00130	-.00130	-.00040	6.04520	-.00330
6.052	4.099	-.00110	.20180	.07020	.06670	-.08080	.01920	.01830	-.00150	6.09990	3.89400
5.999	6.020	.00410	.20250	.07050	.06450	-.11910	.02880	.02740	-.00180	6.08570	5.82820
6.055	8.311	.01490	.20560	.07080	.05870	-.16710	.04010	.03840	-.00170	6.17100	8.13520
	GRADIENT	.00068	.00028	.00028	-.00067	-.02084	.00546	.00523	-.00029	-.01814	.98946

RUN NO. 1179/ 0 RN/L = 3.50 GRADIENT INTERVAL = -5.00/ 5.00

ALPHAT	BETAT	CNFTS	CATS	CAFTS	CLMFTS	CYFTS	CYNTS	CYNFTS	CBLFTS	ALFATU	BETATU
8.366	-7.818	.04380	.19890	.06320	.06720	.17460	-.04790	-.04660	.00390	8.17330	-7.90200
8.291	-5.764	.04230	.19710	.06570	.06920	.12610	-.03530	-.03410	.00340	8.11130	-5.87450
8.265	-3.765	.04310	.19650	.06620	.07070	.07780	-.02180	-.02100	.00240	8.10930	-3.90640
8.179	.177	.04600	.20010	.06740	.06970	-.00320	-.00010	-.00010	-.00020	8.10340	-.01950
8.216	4.219	.05760	.19930	.06890	.06560	-.09250	.02020	.01920	-.00300	8.23920	4.01010
8.168	6.231	.06400	.19950	.06770	.06120	-.12330	.03070	.02930	-.00420	8.22930	6.02990
8.144	8.252	.06760	.20230	.06650	.05620	-.17260	.04370	.04230	-.00450	8.23290	8.06160
	GRADIENT	.00182	.00035	.00034	-.00064	-.02008	.00526	.00503	-.00068	.01634	.99154

IA156A, AEDC PWT 16T-470, 0 T S W/SILTS (R8NS93) (10 MAY 80)

REFERENCE DATA

SREF = 2690.0000 SQ.FT. XMRP = 976.0000 IN. XT
LREF = 1290.3000 INCHES YMRP = .0000 IN. YT
BREF = 1290.3000 INCHES ZMRP = 400.0000 IN. ZT
SCALE = .0200

PARAMETRIC DATA

IB-ELV = 8.000 OB-ELV = 5.000
BDFLAP = .000 SPDBRK = .000
RUDDER = .000 SILTS = 1.000
MACH = .800 RN/L = 3.500

RUN NO. 1180/ 0 RN/L = 3.49 GRADIENT INTERVAL = -5.00/ 5.00

ALPHAT	BETAT	CNFTS	CATS	CAFTS	CLMFTS	CYFTS	CYNTS	CYNFTS	CBLFTS	ALFATU	BETATU
-8.269	-5.894	-.40220	.22180	.06710	.06490	.08250	-.00570	-.00300	-.02220	-8.11200	-6.02990
-8.301	-3.820	-.39330	.22410	.07200	.06170	.05430	-.00520	-.00370	-.01450	-8.17280	-3.98340
-8.224	.385	-.37320	.22620	.07300	.05290	-.00830	.00060	.00070	.00210	-8.19050	.18020
-8.062	4.372	-.36270	.22350	.07170	.04790	-.05820	.00310	.00190	.01560	-8.12680	4.17470
-8.084	6.289	-.36460	.22140	.07170	.04780	-.08220	.00310	.00090	.02170	-8.18100	6.10600
	GRADIENT	.00374	-.00007	-.00003	-.00169	-.01374	.00102	.00069	.00368	.00553	.99582

RUN NO. 1181/ 0 RN/L = 3.50 GRADIENT INTERVAL = -5.00/ 5.00

ALPHAT	BETAT	CNFTS	CATS	CAFTS	CLMFTS	CYFTS	CYNTS	CYNFTS	CBLFTS	ALFATU	BETATU
-6.190	-5.986	-.33690	.22250	.07410	.06520	.09030	-.00890	-.00630	-.01950	-6.01440	-6.09720
-6.133	-4.050	-.32770	.22300	.07520	.06260	.06040	-.00770	-.00610	-.01310	-5.98030	-4.19060
-6.256	.113	-.30440	.22290	.07320	.04870	-.00440	-.00060	-.00050	.00080	-6.21400	-.08990
-6.072	4.262	-.29690	.22350	.07650	.04910	-.05930	.00450	.00320	.01280	-6.15830	4.07340
-5.775	6.351	-.29100	.22270	.07780	.04980	-.08850	.00680	.00460	.01800	-5.90130	6.18610
	GRADIENT	.00371	.00006	.00016	-.00163	-.01440	.00147	.00112	.00312	-.02143	.99420

RUN NO. 1182/ 0 RN/L = 3.50 GRADIENT INTERVAL = -5.00/ 5.00

ALPHAT	BETAT	CNFTS	CATS	CAFTS	CLMFTS	CYFTS	CYNTS	CYNFTS	CBLFTS	ALFATU	BETATU
-4.210	-6.013	-.28640	.22220	.07730	.06940	.09140	-.01000	-.00760	-.01640	-4.01670	-6.08860
-4.248	-3.961	-.27520	.22240	.08020	.06490	.05830	-.00870	-.00720	-.01050	-4.07380	-4.07360
-4.203	.383	-.23790	.22140	.08000	.04660	-.01000	.00110	.00100	.00130	-4.17300	.17720
-3.750	4.321	-.23260	.22340	.08190	.05290	-.06510	.00810	.00680	.01030	-3.87670	4.15730
-3.816	6.145	-.24030	.22200	.08000	.05420	-.09380	.01110	.00910	.01500	-3.96840	6.00380
	GRADIENT	.00520	.00011	.00020	-.00150	-.01491	.00203	.00169	.00251	.02300	.99349

RUN NO. 1183/ 0 RN/L = 3.50 GRADIENT INTERVAL = -5.00/ 5.00

ALPHAT	BETAT	CNFTS	CATS	CAFTS	CLMFTS	CYFTS	CYNTS	CYNFTS	CBLFTS	ALFATU	BETATU
-.220	-6.894	-.19810	.22450	.08350	.07680	.12540	-.02330	-.02120	-.01240	-.01650	-6.85560
-.227	-4.740	-.19210	.22070	.08220	.07310	.08600	-.01780	-.01620	-.00870	-.02280	-4.70150
-.245	-.458	-.16160	.21550	.08230	.05520	.00600	-.00300	-.00290	-.00100	-.04120	-.41960
-.197	3.646	-.15760	.21940	.08450	.05830	-.06800	.01400	.01280	.00580	.00680	3.68390
-.182	5.785	-.16060	.22180	.08410	.06210	-.10800	.02200	.02020	.00930	.02240	5.82350
	GRADIENT	.00414	-.00016	.00027	-.00178	-.01837	.00379	.00346	.00173	.00347	1.00004

IA156A, AEDC PWT 16T-470, O T S W/SILTS (R8NS93) (10 MAY 80)

REFERENCE DATA

SREF = 2690.0000 SQ.FT. XMRP = 976.0000 IN. XT
LREF = 1290.3000 INCHES YMRP = .0000 IN. YT
BREF = 1290.3000 INCHES ZMRP = 400.0000 IN. ZT
SCALE = .0200

PARAMETRIC DATA

IB-ELV = 8.000 OB-ELV = 5.000
BDFLAP = .000 SPDBRK = .000
RUDDER = .000 SILTS = 1.000
MACH = .800 RN/L = 3.500

RUN NO. 1184/ 0 RN/L = 3.50 GRADIENT INTERVAL = -5.00/ 5.00

ALPHAT	BETAT	CNFTS	CATS	CAFTS	CLMFTS	CYFTS	CYNTS	CYNFTS	CBLFTS	ALFATU	BETATU
4.374	-5.798	-.06270	.21500	.08040	.07300	.13220	-.03550	-.03400	-.00230	4.22500	-5.94250
4.244	-3.699	-.05830	.21320	.08040	.07110	.08280	-.02410	-.02310	-.00140	4.12610	-3.86950
3.961	.127	-.03720	.21030	.07980	.05480	.00250	-.00290	-.00290	-.00030	3.99570	-.07740
4.066	4.036	-.03790	.21390	.08200	.06140	-.08010	.02030	.01910	.00050	4.23680	3.91820
4.014	6.119	-.03850	.21610	.08000	.06030	-.12610	.03160	.02980	.00140	4.20560	6.03990
	GRADIENT	.00263	.00009	.00021	-.00124	-.02106	.00574	.00546	.00025	.01448	1.00695

RUN NO. 1185/ 0 RN/L = 3.50 GRADIENT INTERVAL = -5.00/ 5.00

ALPHAT	BETAT	CNFTS	CATS	CAFTS	CLMFTS	CYFTS	CYNTS	CYNFTS	CBLFTS	ALFATU	BETATU
6.401	-5.830	-.00230	.21130	.07490	.06660	.13420	-.03810	-.03670	.00070	6.28260	-6.00030
6.358	-3.793	.00080	.21030	.07770	.06680	.08940	-.02640	-.02540	.00070	6.27490	-3.98340
6.025	.165	.01590	.20870	.07590	.05410	-.00190	-.00130	-.00130	-.00040	6.06180	-.03910
5.980	4.006	.01220	.21070	.07930	.05890	-.08210	.02160	.02050	-.00140	6.12620	3.85840
6.112	6.183	.02520	.21260	.07810	.05470	-.12740	.03370	.03210	-.00200	6.28500	6.06810
	GRADIENT	.00147	.00005	.00020	-.00102	-.02199	.00616	.00589	-.00027	-.01924	1.00542

IA156A, AEDC PWT 16T-470, O T S W/SILTS (R8NS94) (10 MAY 80)

REFERENCE DATA

SREF = 2690.0000 SQ.FT. XMRP = 976.0000 IN. XT
LREF = 1290.3000 INCHES YMRP = .0000 IN. YT
BREF = 1290.3000 INCHES ZMRP = 400.0000 IN. ZT
SCALE = .0200

PARAMETRIC DATA

IB-ELV = 8.000 OB-ELV = 5.000
BDFLAP = .000 SPDBRK = .000
RUDDER = .000 SILTS = 1.000
MACH = .900 RN/L = 3.500

RUN NO. 1186/ 0 RN/L = 3.50 GRADIENT INTERVAL = -5.00/ 5.00

ALPHAT	BETAT	CNFTS	CATS	CAFTS	CLMFTS	CYFTS	CYNTS	CYNFTS	CBLFTS	ALFATU	BETATU
-8.251	-5.913	-.41400	.24300	.07650	.06360	.10000	-.01500	-.01270	-.02250	-8.08480	-6.03660
-8.326	-3.746	-.41100	.24510	.08200	.06150	.06350	-.01120	-.01010	-.01450	-8.18840	-3.89590
-8.251	.183	-.38400	.24670	.08330	.05130	-.00270	-.00120	-.00100	.00110	-8.19840	-.01670
-8.108	4.420	-.37380	.24300	.07210	.04540	-.07010	.00860	.00740	.01680	-8.16080	4.22000
-8.117	6.277	-.37690	.24260	.08340	.04520	-.09590	.00980	.00780	.02310	-8.20190	6.08890
	GRADIENT	.00453	-.00027	-.00123	-.00196	-.01636	.00242	.00214	.00383	.00345	.99448

IA156A, AEDC PWT 16T-470, 0 T S W/SILTS (R8NS94) (10 MAY 80)

REFERENCE DATA

SREF = 2690.0000 SQ.FT. XMRP = 976.0000 IN. XT
LREF = 1290.3000 INCHES YMRP = .0000 IN. YT
BREF = 1290.3000 INCHES ZMRP = 400.0000 IN. ZT
SCALE = .0200

PARAMETRIC DATA

IB-ELV = 8.000 OB-ELV = 5.000
BDFLAP = .000 SPDBRK = .000
RUDDER = .000 SILTS = 1.000
MACH = .900 RN/L = 3.500

RUN NO. 1187/ 0 RN/L = 3.50 GRADIENT INTERVAL = -5.00/ 5.00

ALPHAT	BETAT	CNFTS	CATS	CAFTS	CLMFTS	CYFTS	CYNTS	CYNFTS	CBLFTS	ALFATU	BETATU
-6.215	-5.971	-.35200	.24380	.08670	.06410	.10370	-.01630	-.01410	-.02020	-6.03320	-6.06900
-6.179	-4.049	-.34060	.24410	.08990	.06050	.07100	-.01400	-.01270	-.01360	-6.01790	-4.17860
-6.296	.100	-.31030	.24370	.08300	.04580	-.00380	-.00120	-.00100	.00070	-6.24040	-.09870
-6.079	4.260	-.30420	.24230	.09020	.04630	-.06780	.00920	.00800	.01360	-6.15230	4.06650
-6.035	6.253	-.30990	.24150	.08610	.04730	-.09810	.01120	.00920	.01960	-6.14550	6.07820
	GRADIENT	.00438	-.00022	.00004	-.00171	-.01670	.00279	.00249	.00327	-.01616	.99230

RUN NO. 1188/ 0 RN/L = 3.50 GRADIENT INTERVAL = -5.00/ 5.00

ALPHAT	BETAT	CNFTS	CATS	CAFTS	CLMFTS	CYFTS	CYNTS	CYNFTS	CBLFTS	ALFATU	BETATU
-3.999	-6.095	-.28640	.24550	.08750	.06780	.10510	-.01670	-.01450	-.01670	-3.79980	-6.15000
-4.285	-3.970	-.28000	.24330	.09280	.06150	.06820	-.01360	-.01240	-.01110	-4.10360	-4.06830
-4.247	.383	-.23730	.23920	.08890	.04040	-.01040	.00080	.00080	.00130	-4.20390	.18070
-3.760	4.302	-.23580	.24030	.09330	.04900	-.07080	.00980	.00850	.01130	-3.87580	4.13070
-3.857	6.236	-.24380	.24010	.09110	.04930	-.10180	.01350	.01150	.01590	-4.00080	6.08730
	GRADIENT	.00543	-.00037	.00004	-.00157	-.01683	.00284	.00254	.00271	.02661	.99100

RUN NO. 1189/ 0 RN/L = 3.50 GRADIENT INTERVAL = -5.00/ 5.00

ALPHAT	BETAT	CNFTS	CATS	CAFTS	CLMFTS	CYFTS	CYNTS	CYNFTS	CBLFTS	ALFATU	BETATU
-.254	-6.961	-.20360	.24620	.09450	.07470	.13750	-.02670	-.02470	-.01270	-.05420	-6.90960
-.251	-4.797	-.19170	.24280	.09500	.06930	.09440	-.02080	-.01920	-.00920	-.05050	-4.74550
-.308	-.409	-.14980	.23250	.09080	.04160	.00860	-.00420	-.00410	-.00110	-.10770	-.35750
-.253	3.650	-.15060	.23620	.08810	.04690	-.07030	.01510	.01400	.00610	-.05260	3.70240
-.235	5.800	-.15590	.23900	.09250	.05190	-.11190	.02390	.02210	.00940	-.03450	5.85140
	GRADIENT	.00493	-.00080	-.00082	-.00270	-.01950	.00424	.00392	.00181	-.00042	1.00002

RUN NO. 1190/ 0 RN/L = 3.50 GRADIENT INTERVAL = -5.00/ 5.00

ALPHAT	BETAT	CNFTS	CATS	CAFTS	CLMFTS	CYFTS	CYNTS	CYNFTS	CBLFTS	ALFATU	BETATU
4.337	-5.737	-.06490	.23700	.09350	.07070	.13450	-.03670	-.03530	-.00290	4.19910	-5.89030
4.227	-3.723	-.05960	.23440	.09100	.06650	.08980	-.02650	-.02560	-.00230	4.12120	-3.90070
3.912	.086	-.03530	.22940	.09010	.04420	.00360	-.00290	-.00290	-.00040	3.95780	-.11540
4.051	3.979	-.03890	.23310	.09110	.05610	-.08320	.02230	.02110	.00130	4.22770	3.87280
4.000	6.102	-.03960	.23600	.08980	.05520	-.13230	.03420	.03230	.00250	4.19550	6.03600
	GRADIENT	.00267	-.00016	.00001	-.00133	-.02246	.00634	.00606	.00047	.01403	1.00923

IA156A, AEDC PWT 16T-470, 0 T S W/SILTS (R8NS95) (10 MAY 80)

REFERENCE DATA

SREF = 2690.0000 SQ.FT. XMRP = 976.0000 IN. XT
LREF = 1290.3000 INCHES YMRP = .0000 IN. YT
BREF = 1290.3000 INCHES ZMRP = 400.0000 IN. ZT
SCALE = .0200

PARAMETRIC DATA

IB-ELV = 8.000 OB-ELV = 5.000
BDFLAP = .000 SPDBRK = .000
RUDDER = .000 SILTS = 1.000
MACH = .950 RN/L = 3.500

RUN NO. 1191/ 0 RN/L = 3.50 GRADIENT INTERVAL = -5.00/ 5.00

ALPHAT	BETAT	CNFTS	CATS	CAFTS	CLMFTS	CYFTS	CYNTS	CYNFTS	CBLFTS	ALFATU	BETATU
-8.252	-5.917	-.41860	.26790	.09120	.05300	.10920	-.01780	-.01540	-.02350	-8.08370	-6.03470
-8.405	-3.751	-.41220	.26750	.09800	.04910	.06880	-.01280	-.01170	-.01520	-8.26520	-3.90080
-8.340	.175	-.38400	.27160	.09380	.03520	-.00190	-.00110	-.00110	.00100	-8.28450	-.02220
-8.179	4.433	-.38120	.26780	.09360	.03480	-.07500	.01080	.00970	.01790	-8.22800	4.23410
-8.161	6.267	-.38830	.26490	.09260	.03780	-.10590	.01430	.01210	.02430	-8.24290	6.07840
	GRADIENT	.00374	.00002	-.00053	-.00172	-.01756	.00288	.00261	.00404	.00467	.99407

RUN NO. 1192/ 0 RN/L = 3.49 GRADIENT INTERVAL = -5.00/ 5.00

ALPHAT	BETAT	CNFTS	CATS	CAFTS	CLMFTS	CYFTS	CYNTS	CYNFTS	CBLFTS	ALFATU	BETATU
-6.292	-5.993	-.35210	.26900	.09950	.05400	.11140	-.01910	-.01670	-.02100	-6.10910	-6.08610
-6.207	-4.035	-.33550	.26890	.10110	.04950	.07420	-.01500	-.01380	-.01400	-6.04430	-4.15900
-6.358	.105	-.30670	.27150	.10250	.03210	-.00240	-.00110	-.00100	.00080	-6.29930	-.09180
-6.135	4.265	-.30410	.26810	.09580	.03610	-.07220	.01090	.00980	.01460	-6.20520	4.07200
-6.083	6.255	-.31380	.26600	.09740	.04070	-.10600	.01500	.01270	.02060	-6.19020	6.07960
	GRADIENT	.00378	-.00010	-.00064	-.00161	-.01764	.00312	.00284	.00345	-.01935	.99175

RUN NO. 1193/ 0 RN/L = 3.49 GRADIENT INTERVAL = -5.00/ 5.00

ALPHAT	BETAT	CNFTS	CATS	CAFTS	CLMFTS	CYFTS	CYNTS	CYNFTS	CBLFTS	ALFATU	BETATU
-4.032	-6.084	-.28620	.27090	.10480	.06120	.11310	-.02040	-.01800	-.01730	-3.83320	-6.13420
-4.319	-3.970	-.27770	.26960	.10430	.05370	.07240	-.01530	-.01400	-.01170	-4.13650	-4.06410
-4.286	.378	-.23610	.26910	.10020	.03480	-.00900	.00000	.00000	.00150	-4.23940	.17860
-3.782	4.317	-.23140	.26820	.10630	.04470	-.07510	.01230	.01100	.01140	-3.89510	4.14520
-3.868	6.141	-.24360	.26750	.10150	.04720	-.10700	.01660	.01440	.01600	-4.00730	5.98970
	GRADIENT	.00566	-.00017	.00022	-.00114	-.01781	.00333	.00302	.00279	.02822	.99036

RUN NO. 1194/ 0 RN/L = 3.48 GRADIENT INTERVAL = -5.00/ 5.00

ALPHAT	BETAT	CNFTS	CATS	CAFTS	CLMFTS	CYFTS	CYNTS	CYNFTS	CBLFTS	ALFATU	BETATU
-.263	-6.967	-.19950	.27130	.10780	.07380	.14400	-.03110	-.02860	-.01260	-.06540	-6.91150
-.251	-4.787	-.18500	.26790	.10610	.06910	.09860	-.02470	-.02280	-.00860	-.05370	-4.73120
-.290	-.475	-.14390	.26780	.10810	.04650	.00930	-.00510	-.00480	-.00140	-.09270	-.41930
-.234	3.625	-.14500	.26670	.10670	.05110	-.07480	.01910	.01760	.00550	-.03610	3.68050
-.224	5.813	-.14950	.26690	.10290	.05370	-.11770	.02770	.02560	.00890	-.02660	5.86880
	GRADIENT	.00480	-.00014	.00007	-.00217	-.02061	.00520	.00480	.00168	.00200	.99999

IA156A, AEDC PWT 16T-470, O T S W/SILTS (R8NS95) (10 MAY 80)

REFERENCE DATA

SREF = 2690.0000 SQ.FT. XMRP = 976.0000 IN. XT
LREF = 1290.3000 INCHES YMRP = .0000 IN. YT
BREF = 1290.3000 INCHES ZMRP = 400.0000 IN. ZT
SCALE = .0200

PARAMETRIC DATA

IB-ELV = 8.000 OB-ELV = 5.000
BDFLAP = .000 SPDBRK = .000
RUDDER = .000 SILTS = 1.000
MACH = .950 RN/L = 3.500

RUN NO. 1195/ 0 RN/L = 3.49 GRADIENT INTERVAL = -5.00/ 5.00

ALPHAT	BETAT	CNFTS	CATS	CAFTS	CLMFTS	CYFTS	CYNTS	CYNFTS	CBLFTS	ALFATU	BETATU
4.386	-5.779	-.06790	.26590	.10270	.07340	.14330	-.03960	-.03780	-.00340	4.25220	-5.93510
4.210	-3.671	-.05980	.26190	.10210	.06450	.09200	-.02800	-.02700	-.00260	4.10980	-3.85030
3.893	.128	-.03240	.25740	.10440	.03970	.00170	-.00180	-.00190	-.00030	3.94440	-.07070
4.068	4.020	-.03880	.26120	.10530	.05560	-.08780	.02340	.02210	.00160	4.24630	3.91780
4.027	6.102	-.04310	.26430	.10610	.05960	-.13680	.03540	.03320	.00260	4.22250	6.04030
	GRADIENT	.00271	-.00009	.00042	-.00114	-.02338	.00668	.00638	.00055	.01799	1.01006

IA156A, AEDC PWT 16T-470, O T S W/SILTS (R8NS96) (10 MAY 80)

REFERENCE DATA

SREF = 2690.0000 SQ.FT. XMRP = 976.0000 IN. XT
LREF = 1290.3000 INCHES YMRP = .0000 IN. YT
BREF = 1290.3000 INCHES ZMRP = 400.0000 IN. ZT
SCALE = .0200

PARAMETRIC DATA

IB-ELV = 8.000 OB-ELV = 5.000
BDFLAP = .000 SPDBRK = .000
RUDDER = .000 SILTS = 1.000
MACH = 1.050 RN/L = 3.500

RUN NO. 1196/ 0 RN/L = 3.50 GRADIENT INTERVAL = -5.00/ 5.00

ALPHAT	BETAT	CNFTS	CATS	CAFTS	CLMFTS	CYFTS	CYNTS	CYNFTS	CBLFTS	ALFATU	BETATU
-8.310	-5.988	-.43780	.34730	.13310	.05130	.12010	-.01800	-.01530	-.02730	-8.13880	-6.09800
-8.448	-3.788	-.43420	.34860	.13210	.04980	.07490	-.01280	-.01130	-.01830	-8.30370	-3.93130
-8.426	.189	-.40760	.35760	.13850	.03090	-.00370	.00000	.00000	.00140	-8.36510	-.00540
-8.206	4.342	-.40240	.35250	.13520	.03470	-.07690	.00980	.00840	.01960	-8.24810	4.14290
-8.212	6.267	-.41300	.34940	.13390	.03780	-.11110	.01330	.01080	.02680	-8.28820	6.07810
	GRADIENT	.00389	.00047	.00037	-.00184	-.01866	.00278	.00242	.00466	.00700	.99322

RUN NO. 1197/ 0 RN/L = 3.50 GRADIENT INTERVAL = -5.00/ 5.00

ALPHAT	BETAT	CNFTS	CATS	CAFTS	CLMFTS	CYFTS	CYNTS	CYNFTS	CBLFTS	ALFATU	BETATU
-6.294	-5.992	-.36120	.34900	.13980	.05180	.12000	-.01950	-.01680	-.02360	-6.10830	-6.07670
-6.238	-4.045	-.34770	.35080	.14220	.04790	.08060	-.01430	-.01280	-.01620	-6.07200	-4.16210
-6.405	.167	-.31830	.35440	.13960	.02920	-.00430	-.00040	-.00040	.00120	-6.34250	-.02670
-6.179	4.288	-.31970	.35350	.14070	.03580	-.07700	.01070	.00930	.01640	-6.24510	4.09480
-5.914	6.341	-.31700	.34880	.14180	.03920	-.11660	.01740	.01490	.02250	-6.02020	6.16760
	GRADIENT	.00337	.00033	-.00018	-.00146	-.01892	.00300	.00265	.00391	-.02094	.99092

IA156A, AEDC PWT 16T-470, 0 T S W/SILTS (R8NS96) (10 MAY 80)

REFERENCE DATA

SREF = 2690.0000 SQ.FT. XMRP = 976.0000 IN. XT
LREF = 1290.3000 INCHES YMRP = .0000 IN. YT
BREF = 1290.3000 INCHES ZMRP = 400.0000 IN. ZT
SCALE = .0200

PARAMETRIC DATA

IB-ELV = 8.000 OB-ELV = 5.000
BDFLAP = .000 SPDBRK = .000
RUDDER = .000 SILTS = 1.000
MACH = 1.050 RN/L = 3.500

RUN NO. 1198/ 0 RN/L = 3.50 GRADIENT INTERVAL = -5.00/ 5.00

ALPHAT	BETAT	CNFTS	CATS	CAFTS	CLMFTS	CYFTS	CYNTS	CYNFTS	CBLFTS	ALFATU	BETATU
-4.102	-6.092	-.29180	.34820	.14370	.05850	.12110	-.02080	-.01840	-.01980	-3.90240	-6.13530
-4.349	-3.991	-.28460	.34910	.14480	.05170	.07750	-.01600	-.01450	-.01360	-4.16400	-4.07680
-4.320	.363	-.24000	.35150	.14070	.03080	-.00780	.00030	.00010	.00140	-4.26690	.16600
-3.790	4.307	-.23890	.35160	.14890	.04240	-.07880	.01350	.01200	.01300	-3.89970	4.13530
-3.876	6.143	-.24820	.34740	.14350	.04540	-.11340	.01880	.01650	.01790	-4.01160	5.99050
	GRADIENT	.00559	.00031	.00047	-.00118	-.01885	.00356	.00320	.00321	.03089	.98933

RUN NO. 1199/ 0 RN/L = 3.50 GRADIENT INTERVAL = -5.00/ 5.00

ALPHAT	BETAT	CNFTS	CATS	CAFTS	CLMFTS	CYFTS	CYNTS	CYNFTS	CBLFTS	ALFATU	BETATU
-.271	-7.024	-.20000	.34550	.14810	.07710	.15430	-.03520	-.03270	-.01470	-.07640	-6.96270
-.273	-4.824	-.18300	.34480	.14200	.06990	.10530	-.02760	-.02570	-.01010	-.07840	-4.76280
-.352	-.462	-.13480	.34930	.14270	.04020	.01360	-.00820	-.00810	-.00140	-.15790	-.40110
-.270	3.631	-.14030	.35180	.14760	.05050	-.07630	.01980	.01820	.00670	-.07530	3.69200
-.253	5.813	-.14670	.35280	.14740	.05480	-.12270	.02980	.02760	.01040	-.05810	5.87370
	GRADIENT	.00512	.00083	.00066	-.00234	-.02147	.00559	.00518	.00199	.00016	1.00001

RUN NO. 1200/ 0 RN/L = 3.50 GRADIENT INTERVAL = -5.00/ 5.00

ALPHAT	BETAT	CNFTS	CATS	CAFTS	CLMFTS	CYFTS	CYNTS	CYNFTS	CBLFTS	ALFATU	BETATU
4.393	-5.761	-.06870	.34250	.14370	.07310	.14680	-.04240	-.04110	-.00480	4.26560	-5.91970
4.234	-3.676	-.05680	.34030	.14520	.06430	.09430	-.03010	-.02940	-.00370	4.14040	-3.85660
3.935	.127	-.02660	.34100	.14790	.04440	.00410	-.00440	-.00430	-.00070	3.99250	-.06890
4.074	4.011	-.03130	.34340	.14440	.05490	-.08850	.02380	.02290	.00220	4.25350	3.91510
4.054	6.094	-.03780	.34030	.14290	.05980	-.13820	.03530	.03390	.00320	4.24980	6.03730
	GRADIENT	.00330	.00040	-.00011	-.00121	-.02378	.00701	.00680	.00077	.01490	1.01108

IA156A, AEDC PWT 16T-470, 0 T S W/SILTS (R8NS97) (10 MAY 80)

REFERENCE DATA

SREF = 2690.0000 SQ.FT. XMRP = 976.0000 IN. XT
LREF = 1290.3000 INCHES YMRP = .0000 IN. YT
BREF = 1290.3000 INCHES ZMRP = 400.0000 IN. ZT
SCALE = .0200

PARAMETRIC DATA

IB-ELV = 8.000 OB-ELV = 5.000
BDFLAP = .000 SPDBRK = .000
RUDDER = .000 SILTS = 1.000
MACH = 1.100 RN/L = 3.500

RUN NO. 1201/ 0 RN/L = 3.50 GRADIENT INTERVAL = -5.00/ 5.00

ALPHAT	BETAT	CNFTS	CATS	CAFTS	CLMFTS	CYFTS	CYNTS	CYNFTS	CBLFTS	ALFATU	BETATU
-8.344	-5.985	-.44090	.34240	.14620	.05010	.11700	-.01850	-.01600	-.02680	-8.17120	-6.09370
-8.453	-3.792	-.43190	.34500	.15020	.04620	.07170	-.01170	-.01010	-.01760	-8.30580	-3.93470
-8.426	.198	-.39450	.34780	.14960	.02540	-.00390	-.00100	-.00100	.00200	-8.36230	.00350
-8.232	4.344	-.39990	.34820	.14220	.03310	-.07580	.00820	.00680	.01970	-8.27160	4.14400
-8.204	6.272	-.40320	.34290	.14690	.03750	-.11110	.01360	.01120	.02620	-8.27850	6.08160
	GRADIENT	.00390	.00039	-.00099	-.00159	-.01812	.00244	.00208	.00458	.00432	.99288

RUN NO. 1202/ 0 RN/L = 3.50 GRADIENT INTERVAL = -5.00/ 5.00

ALPHAT	BETAT	CNFTS	CATS	CAFTS	CLMFTS	CYFTS	CYNTS	CYNFTS	CBLFTS	ALFATU	BETATU
-6.305	-5.992	-.35610	.33920	.14980	.04830	.11250	-.01780	-.01540	-.02260	-6.11840	-6.07500
-6.273	-4.033	-.34650	.34300	.15100	.04400	.07450	-.01250	-.01100	-.01570	-6.10430	-4.14940
-6.457	.166	-.31670	.34470	.15130	.02550	-.00400	-.00200	-.00200	.00160	-6.39260	-.02750
-6.186	4.297	-.31210	.34270	.15520	.03390	-.07370	.00820	.00690	.01620	-6.24990	4.10280
-5.895	6.338	-.31370	.34130	.14610	.03870	-.11310	.01560	.01320	.02240	-5.99980	6.16270
	GRADIENT	.00414	-.00003	.00050	-.00122	-.01779	.00248	.00215	.00383	-.01762	.99059

RUN NO. 1203/ 0 RN/L = 3.50 GRADIENT INTERVAL = -5.00/ 5.00

ALPHAT	BETAT	CNFTS	CATS	CAFTS	CLMFTS	CYFTS	CYNTS	CYNFTS	CBLFTS	ALFATU	BETATU
-4.102	-6.107	-.29220	.33910	.15230	.05620	.11500	-.01800	-.01590	-.01980	-3.90140	-5.14730
-4.367	-3.997	-.29210	.33700	.15270	.04780	.07240	-.01360	-.01230	-.01340	-4.18040	-4.08040
-4.323	.375	-.23840	.33850	.15470	.02880	-.01000	-.00010	-.00030	.00200	-4.26820	.17780
-3.790	4.317	-.23580	.34020	.15810	.04190	-.07580	.00970	.00840	.01320	-3.89730	4.14310
-3.876	6.163	-.24820	.33970	.15450	.04650	-.11050	.01580	.01380	.01800	-4.00950	6.00880
	GRADIENT	.00565	.00038	.00065	-.00078	-.01784	.00281	.00249	.00321	.03307	.98883

RUN NO. 1204/ 0 RN/L = 3.50 GRADIENT INTERVAL = -5.00/ 5.00

ALPHAT	BETAT	CNFTS	CATS	CAFTS	CLMFTS	CYFTS	CYNTS	CYNFTS	CBLFTS	ALFATU	BETATU
-.272	-7.025	-.20300	.33600	.15790	.07750	.14550	-.02950	-.02740	-.01470	-.07780	-6.96190
-.260	-4.846	-.18410	.33280	.15510	.07040	.09870	-.02310	-.02140	-.01000	-.06540	-4.78240
-.334	-.462	-.14050	.33340	.15670	.04290	.01050	-.00640	-.00630	-.00130	-.13920	-.39900
-.246	3.646	-.14640	.33590	.15980	.05470	-.07500	.01770	.01620	.00680	-.05130	3.70970
-.236	5.850	-.15120	.33560	.15800	.05740	-.12180	.02730	.02520	.01070	-.04170	5.91320
	GRADIENT	.00450	.00036	.00055	-.00190	-.02045	.00479	.00442	.00198	.00145	1.00000

IA156A, AEDC PWT 16T-470, O T S W/SILTS (R8NS97) (10 MAY 80)

REFERENCE DATA

SREF = 2690.0000 SQ.FT. XMRP = 976.0000 IN. XT
LREF = 1290.3000 INCHES YMRP = .0000 IN. YT
BREF = 1290.3000 INCHES ZMRP = 400.0000 IN. ZT
SCALE = .0200

PARAMETRIC DATA

IB-ELV = 8.000 OB-ELV = 5.000
BDFLAP = .000 SPDBRK = .000
RUDDER = .000 SILTS = 1.000
MACH = 1.100 RN/L = 3.500

RUN NO. 1205/ 0 RN/L = 3.50 GRADIENT INTERVAL = -5.00/ 5.00

ALPHAT	BETAT	CNFTS	CATS	CAFTS	CLMFTS	CYFTS	CYNTS	CYNFTS	CBLFTS	ALFATU	BETATU
4.436	-5.776	-.06760	.32590	.15770	.07700	.14340	-.04100	-.03970	-.00480	4.30970	-5.93680
4.257	-3.667	-.05620	.32540	.15620	.06950	.09270	-.02950	-.02890	-.00360	4.16480	-3.84910
3.963	.136	-.03190	.32690	.14580	.05080	.00130	-.00430	-.00430	-.00060	4.02230	-.05960
4.095	4.014	-.03960	.32760	.15020	.06160	-.08930	.02260	.02170	.00230	4.27690	3.91910
4.081	6.101	-.04480	.32740	.15090	.06500	-.13780	.03370	.03220	.00360	4.27790	6.04720
	GRADIENT	.00215	.00029	-.00077	-.00102	-.02370	.00678	.00659	.00077	.01476	1.01147

IA156A, AEDC PWT 16T-470, O T S W/SILTS (R8NS98) (28 MAY 80)

REFERENCE DATA

SREF = 2690.0000 SQ.FT. XMRP = 976.0000 IN. XT
LREF = 1290.3000 INCHES YMRP = .0000 IN. YT
BREF = 1290.3000 INCHES ZMRP = 400.0000 IN. ZT
SCALE = .0200

PARAMETRIC DATA

IB-ELV = 8.000 OB-ELV = 5.000
BDFLAP = .000 SPDBRK = .000
RUDDER = .000 SILTS = 1.000
MACH = 1.150 RN/L = 3.500

RUN NO. 1206/ 0 RN/L = 3.50 GRADIENT INTERVAL = -5.00/ 5.00

ALPHAT	BETAT	CNFTS	CATS	CAFTS	CLMFTS	CYFTS	CYNTS	CYNFTS	CBLFTS	ALFATU	BETATU
-8.273	-5.952	-.44020	.34020	.15260	.05320	.11750	-.01600	-.01370	-.02690	-8.09660	-6.06060
-8.451	-3.757	-.44000	.34100	.15120	.05060	.07260	-.01090	-.00940	-.01810	-8.30150	-3.90070
-8.417	.190	-.40870	.34530	.16000	.03270	-.00120	-.00200	-.00210	.00140	-8.35100	-.00650
-8.188	4.427	-.41000	.34330	.15640	.04040	-.07320	.00670	.00530	.01980	-8.22900	4.22400
-8.209	6.310	-.41950	.33920	.15490	.04400	-.10790	.01130	.00910	.02690	-8.28350	6.11700
	GRADIENT	.00362	.00027	.00062	-.00121	-.01780	.00215	.00180	.00463	.00910	.99281

RUN NO. 1207/ 0 RN/L = 3.50 GRADIENT INTERVAL = -5.00/ 5.00

ALPHAT	BETAT	CNFTS	CATS	CAFTS	CLMFTS	CYFTS	CYNTS	CYNFTS	CBLFTS	ALFATU	BETATU
-6.294	-6.008	-.36450	.34010	.15620	.05360	.11610	-.01710	-.01470	-.02380	-6.10400	-6.09020
-6.220	-4.054	-.34920	.33800	.15670	.04940	.07580	-.01250	-.01100	-.01610	-6.04800	-4.16910
-6.418	.104	-.32760	.34290	.15990	.03290	.00180	-.00400	-.00410	.00080	-6.34860	-.09050
-6.137	4.290	-.32310	.34080	.16140	.04050	-.07170	.00550	.00420	.01640	-6.19970	4.09290
-6.108	6.286	-.33170	.33780	.15950	.04400	-.10820	.01210	.00980	.02300	-6.20880	6.10540
	GRADIENT	.00313	.00033	.00056	-.00106	-.01768	.00216	.00182	.00390	-.01812	.99023

IA156A, AEDC PWT 16T-470, 0 T S W/SILTS (R8NS98) (28 MAY 80)

REFERENCE DATA

SREF = 2690.0000 SQ.FT. XMRP = 976.0000 IN. XT
LREF = 1290.3000 INCHES YMRP = .0000 IN. YT
BREF = 1290.3000 INCHES ZMRP = 400.0000 IN. ZT
SCALE = .0200

PARAMETRIC DATA

IB-ELV =	8.000	OB-ELV =	5.000
BDFLAP =	.000	SPDBRK =	.000
RUDDER =	.000	SILTS =	1.000
MACH =	1.150	RN/L =	3.500

RUN NO. 1208/ 0 RN/L = 3.50 GRADIENT INTERVAL = -5.00/ 5.00

ALPHAT	BETAT	CNFTS	CATS	CAFTS	CLMFTS	CYFTS	CYNTS	CYNFTS	CBLFTS	ALFATU	BETATU
-4.064	-6.117	-.29540	.33710	.15810	.06170	.11760	-.01860	-.01660	-.02000	-3.86090	-6.15630
-4.335	-3.986	-.28740	.33470	.16260	.05380	.07510	-.01470	-.01330	-.01370	-4.14540	-4.06920
-4.316	.379	-.24990	.33830	.15910	.03700	-.00490	-.00240	-.00250	.00150	-4.25940	.18060
-3.761	4.339	-.24810	.34230	.16760	.05040	-.07510	.00900	.00770	.01350	-3.86830	4.16240
-3.856	6.171	-.25540	.33720	.16220	.05240	-.10740	.01390	.01180	.01800	-3.99060	6.01350
	GRADIENT	.00479	.00091	.00058	-.00047	-.01805	.00285	.00252	.00327	.03227	.98854

RUN NO. 1210/ 0 RN/L = 3.51 GRADIENT INTERVAL = -5.00/ 5.00

ALPHAT	BETAT	CNFTS	CATS	CAFTS	CLMFTS	CYFTS	CYNTS	CYNFTS	CBLFTS	ALFATU	BETATU
-.238	-6.990	-.20220	.33520	.16630	.08040	.14640	-.03100	-.02880	-.01440	-.04130	-6.92400
-.235	-4.744	-.18660	.33460	.16670	.07350	.09720	-.02330	-.02170	-.00970	-.03860	-4.67870
-.289	-.439	-.14480	.33720	.17160	.04820	.01050	-.00670	-.00660	-.00130	-.09270	-.37380
-.210	3.724	-.14620	.33800	.16410	.05710	-.07630	.01750	.01600	.00680	-.01410	3.78920
-.197	5.850	-.15170	.33680	.16600	.06120	-.12120	.02590	.02390	.01060	-.00070	5.91590
	GRADIENT	.00480	.00040	-.00030	-.00196	-.02049	.00481	.00445	.00195	.00281	1.00000

RUN NO. 1211/ 0 RN/L = 3.50 GRADIENT INTERVAL = -5.00/ 5.00

ALPHAT	BETAT	CNFTS	CATS	CAFTS	CLMFTS	CYFTS	CYNTS	CYNFTS	CBLFTS	ALFATU	BETATU
4.452	-5.760	-.07490	.32900	.16420	.08420	.14510	-.04250	-.04120	-.00530	4.32530	-5.92360
4.318	-3.638	-.06150	.32790	.16580	.07690	.09570	-.03270	-.03190	-.00380	4.22730	-3.82350
4.013	.195	-.04290	.33060	.16050	.06170	.00580	-.00800	-.00790	-.00070	4.07770	-.00180
4.117	4.036	-.04310	.33030	.16110	.06540	-.08510	.02090	.02000	.00230	4.30120	3.94310
4.097	6.103	-.04620	.33040	.16670	.06800	-.13580	.03250	.03120	.00360	4.29730	6.04960
	GRADIENT	.00240	.00031	-.00061	-.00150	-.02356	.00698	.00676	.00079	.00965	1.01207

IA156A, AEDC PWT 16T-470, O T S W/SILTS (R8NSA0) (10 MAY 80)

REFERENCE DATA

SREF = 2690.0000 SQ.FT. XMRP = 976.0000 IN. XT
LREF = 1290.3000 INCHES YMRP = .0000 IN. YT
BREF = 1290.3000 INCHES ZMRP = 400.0000 IN. ZT
SCALE = .0200

PARAMETRIC DATA

IB-ELV = 8.000 OB-ELV = 5.000
BDFLAP = .000 SPDBRK = .000
RUDDER = .000 SILTS = 1.000
MACH = 1.250 RN/L = 3.500

RUN NO. 1224/ 0 RN/L = 3.50 GRADIENT INTERVAL = -5.00/ 5.00

ALPHAT	BETAT	CNFTS	CATS	CAFTS	CLMFTS	CYFTS	CYNTS	CYNFTS	CBLFTS	ALFATU	BETATU
-8.362	-5.936	-.46070	.33140	.16300	.06820	.10960	-.01120	-.00940	-.02580	-8.17720	-6.05060
-8.360	-3.882	-.44670	.33070	.16390	.06400	.06570	-.00460	-.00320	-.01730	-8.19950	-4.02980
-8.362	.285	-.41750	.33610	.16570	.04670	-.00640	.00050	.00050	.00170	-8.29310	.07750
-8.142	4.333	-.41600	.33190	.16640	.05130	-.07180	.00430	.00310	.01870	-8.18110	4.11810
-8.186	6.313	-.42600	.32950	.16500	.05250	-.10930	.01000	.00820	.02580	-8.26290	6.10850
	GRADIENT	.00375	.00015	.00030	-.00156	-.01674	.00108	.00077	.00438	.00212	.99183

RUN NO. 1225/ 0 RN/L = 3.50 GRADIENT INTERVAL = -5.00/ 5.00

ALPHAT	BETAT	CNFTS	CATS	CAFTS	CLMFTS	CYFTS	CYNTS	CYNFTS	CBLFTS	ALFATU	BETATU
-6.274	-6.038	-.37690	.33070	.16750	.06580	.10580	-.01040	-.00850	-.02270	-6.07300	-6.12330
-6.200	-4.090	-.36230	.33110	.16680	.06310	.06780	-.00620	-.00500	-.01550	-6.01820	-4.21010
-6.343	.132	-.33660	.33260	.16830	.04740	-.00620	.00060	.00060	.00090	-6.26950	-.07350
-6.116	4.305	-.33180	.33200	.17020	.05010	-.07250	.00580	.00470	.01580	-6.18060	4.09600
-5.869	6.409	-.32840	.32960	.16920	.04960	-.11040	.01110	.00920	.02210	-5.97930	6.22090
	GRADIENT	.00364	.00011	.00040	-.00155	-.01671	.00143	.00116	.00373	-.01942	.98943

RUN NO. 1226/ 0 RN/L = 3.50 GRADIENT INTERVAL = -5.00/ 5.00

ALPHAT	BETAT	CNFTS	CATS	CAFTS	CLMFTS	CYFTS	CYNTS	CYNFTS	CBLFTS	ALFATU	BETATU
-4.041	-6.132	-.30750	.33060	.17100	.07340	.10800	-.01300	-.01120	-.01910	-3.82690	-6.17200
-4.280	-4.002	-.29950	.32930	.17020	.06720	.06560	-.00850	-.00740	-.01280	-4.07920	-4.08810
-4.252	.389	-.26120	.33030	.16840	.04830	-.01100	.00120	.00110	.00150	-4.18980	.18000
-3.725	4.330	-.25370	.33440	.17630	.05660	-.07260	.00800	.00690	.01250	-3.83700	4.14310
-3.838	6.196	-.25960	.33030	.17300	.05650	-.10590	.01230	.01050	.01740	-3.97890	6.02910
	GRADIENT	.00556	.00060	.00071	-.00133	-.01630	.00198	.00172	.00304	.02804	.98755

RUN NO. 1227/ 0 RN/L = 3.50 GRADIENT INTERVAL = -5.00/ 5.00

ALPHAT	BETAT	CNFTS	CATS	CAFTS	CLMFTS	CYFTS	CYNTS	CYNFTS	CBLFTS	ALFATU	BETATU
-.190	-7.041	-.21510	.32920	.17260	.09480	.14260	-.02800	-.02610	-.01360	.01620	-6.97040
-.176	-4.841	-.19930	.32740	.17440	.08890	.09330	-.02060	-.01920	-.00930	.03060	-4.77050
-.204	-.483	-.16250	.32770	.17470	.06810	.00970	-.00610	-.00600	-.00110	.00240	-.41280
-.135	3.657	-.16180	.32900	.17730	.07570	-.07470	.01550	.01410	.00620	.07150	3.72700
-.148	5.875	-.16520	.32760	.17340	.07610	-.11900	.02240	.02050	.00990	.05860	5.94530
	GRADIENT	.00445	.00019	.00034	-.00158	-.01977	.00424	.00391	.00182	.00471	.99999

IA156A, AEDC PWT 16T-470, 0 T S W/SILTS (R8NSA0) (10 MAY 80)

REFERENCE DATA

SREF = 2690.0000 SQ.FT. XMRP = 976.0000 IN. XT
LREF = 1290.3000 INCHES YMRP = .0000 IN. YT
BREF = 1290.3000 INCHES ZMRP = 400.0000 IN. ZT
SCALE = .0200

PARAMETRIC DATA

IB-ELV = 8.000 OB-ELV = 5.000
BDFLAP = .000 SPDBRK = .000
RUDDER = .000 SILTS = 1.000
MACH = 1.250 RN/L = 3.500

RUN NO. 1228/ 0 RN/L = 3.50 GRADIENT INTERVAL = -5.00/ 5.00

ALPHAT	BETAT	CNFTS	CATS	CAFTS	CLMFTS	CYFTS	CYNTS	CYNFTS	CBLFTS	ALFATU	BETATU
4.336	-5.691	-.08310	.32290	.17220	.09300	.13710	-.03860	-.03750	-.00520	4.20060	-5.86190
4.357	-3.875	-.06970	.32350	.17330	.08710	.09540	-.03040	-.02980	-.00400	4.25480	-4.06790
4.224	.216	-.05280	.32210	.16950	.07780	-.00180	-.00480	-.00470	-.00060	4.29310	.00890
4.162	3.894	-.05650	.32230	.17060	.08050	-.08670	.02320	.02230	.00220	4.35510	3.79340
4.178	6.111	-.05930	.32180	.16580	.08280	-.13830	.03440	.03300	.00350	4.38900	6.05570
	GRADIENT	.00174	-.00016	-.00036	-.00088	-.02345	.00689	.00670	.00080	.01284	1.01160

IA156A, AEDC PWT 16T-470, 0 T S W/SILTS (R8NSA1) (10 MAY 80)

REFERENCE DATA

SREF = 2690.0000 SQ.FT. XMRP = 976.0000 IN. XT
LREF = 1290.3000 INCHES YMRP = .0000 IN. YT
BREF = 1290.3000 INCHES ZMRP = 400.0000 IN. ZT
SCALE = .0200

PARAMETRIC DATA

IB-ELV = 8.000 OB-ELV = 5.000
BDFLAP = .000 SPDBRK = .000
RUDDER = .000 SILTS = 1.000
MACH = 1.400 RN/L = 3.500

RUN NO. 1229/ 0 RN/L = 3.50 GRADIENT INTERVAL = -5.00/ 5.00

ALPHAT	BETAT	CNFTS	CATS	CAFTS	CLMFTS	CYFTS	CYNTS	CYNFTS	CBLFTS	ALFATU	BETATU
-8.312	-5.965	-.48010	.32120	.17010	.08260	.10740	-.00420	-.00260	-.02560	-8.08850	-6.09940
-8.364	-3.830	-.46670	.32270	.17130	.07690	.05950	.00300	.00410	-.01750	-8.17180	-4.00660
-8.316	.431	-.43640	.32550	.17270	.06080	-.00930	.00110	.00110	.00240	-8.23680	.18310
-8.093	4.458	-.43590	.32510	.17450	.06550	-.07290	-.00010	-.00140	.02010	-8.13990	4.20120
-8.101	6.388	-.44310	.32270	.17470	.06700	-.11080	.00460	.00290	.02590	-8.19240	6.14470
	GRADIENT	.00375	.00029	.00039	-.00140	-.01598	-.00037	-.00066	.00454	.00366	.99027

RUN NO. 1230/ 0 RN/L = 3.50 GRADIENT INTERVAL = -5.00/ 5.00

ALPHAT	BETAT	CNFTS	CATS	CAFTS	CLMFTS	CYFTS	CYNTS	CYNFTS	CBLFTS	ALFATU	BETATU
-6.280	-6.059	-.38890	.32040	.17350	.07320	.10080	-.00100	.00060	-.02210	-6.03940	-6.15850
-6.235	-4.099	-.37160	.32250	.17430	.06700	.06120	.00290	.00390	-.01510	-6.01660	-4.24050
-6.337	.155	-.34900	.32350	.17610	.05440	-.00750	.00210	.00220	.00090	-6.24670	-.09030
-6.086	4.378	-.33970	.32460	.17830	.05430	-.07000	-.00020	-.00100	.01580	-6.16230	4.12860
-6.018	6.363	-.34010	.32330	.17750	.05490	-.10690	.00350	.00200	.02150	-6.14260	6.13410
	GRADIENT	.00377	.00025	.00047	-.00150	-.01548	-.00037	-.00058	.00365	-.01723	.98728

IA156A, AEDC PWT 16T-470, 0 T S W/SILTS (R8NSA1) (10 MAY 80)

REFERENCE DATA

SREF = 2690.0000 SQ.FT. XMRP = 976.0000 IN. XT
LREF = 1290.3000 INCHES YMRP = .0000 IN. YT
BREF = 1290.3000 INCHES ZMRP = 400.0000 IN. ZT
SCALE = .0200

PARAMETRIC DATA

IB-ELV = 8.000 OB-ELV = 5.000
BDFLAP = .000 SPDBRK = .000
RUDDER = .000 SILTS = 1.000
MACH = 1.400 RN/L = 3.500

RUN NO. 1231/ 0 RN/L = 3.50 GRADIENT INTERVAL = -5.00/ 5.00

ALPHAT	BETAT	CNFTS	CATS	CAFTS	CLMFTS	CYFTS	CYNTS	CYNFTS	CBLFTS	ALFATU	BETATU
-4.044	-6.161	-.30710	.32100	.17780	.07500	.10410	-.00510	-.00360	-.01800	-3.78640	-6.20510
-4.320	-4.024	-.30070	.32110	.17990	.06690	.06070	-.00020	.00060	-.01210	-4.08050	-4.12410
-4.225	.423	-.26930	.32240	.18010	.05410	-.01330	.00250	.00250	.00160	-4.15000	.17390
-3.681	4.405	-.25270	.32400	.18060	.05970	-.07030	.00180	.00090	.01190	-3.81350	4.18130
-3.796	6.255	-.25910	.32470	.18020	.05910	-.10500	.00600	.00450	.01650	-3.96240	6.05580
	GRADIENT	.00572	.00034	.00008	-.00089	-.01556	.00024	.00004	.00285	.03076	.98497

RUN NO. 1232/ 0 RN/L = 3.50 GRADIENT INTERVAL = -5.00/ 5.00

ALPHAT	BETAT	CNFTS	CATS	CAFTS	CLMFTS	CYFTS	CYNTS	CYNFTS	CBLFTS	ALFATU	BETATU
-.238	-7.086	-.21300	.32050	.18120	.09590	.13930	-.02230	-.02070	-.01240	.00770	-7.00090
-.221	-4.895	-.19300	.31640	.18050	.08750	.08960	-.01450	-.01330	-.00850	.02460	-4.80990
-.232	-.499	-.16500	.31840	.18350	.07250	.00670	-.00330	-.00330	-.00100	.01320	-.41340
-.172	3.674	-.16370	.31730	.17870	.07900	-.07330	.01170	.01070	.00560	.07340	3.75900
-.198	5.900	-.16400	.32030	.17640	.07760	-.11890	.01880	.01710	.00910	.04710	5.98470
	GRADIENT	.00345	.00011	-.00020	-.00101	-.01901	.00305	.00280	.00165	.00562	1.00003

RUN NO. 1233/ 0 RN/L = 3.50 GRADIENT INTERVAL = . -5.00/ 5.00

ALPHAT	BETAT	CNFTS	CATS	CAFTS	CLMFTS	CYFTS	CYNTS	CYNFTS	CBLFTS	ALFATU	BETATU
4.465	-5.680	-.08390	.31490	.17950	.10550	.13380	-.03630	-.03510	-.00480	4.30580	-5.88390
4.395	-3.645	-.06710	.31370	.17860	.09370	.08630	-.02690	-.02620	-.00340	4.27910	-3.87770
4.118	.248	-.06100	.31350	.17690	.08710	-.00150	-.00380	-.00380	-.00060	4.20190	.00170
4.195	4.090	-.05560	.31330	.17710	.08680	-.08740	.02080	.02000	.00180	4.42840	3.97610
4.155	6.129	-.06070	.31410	.17910	.08910	-.13740	.03330	.03190	.00340	4.40800	6.06480
	GRADIENT	.00149	-.00005	-.00019	-.00089	-.02245	.00617	.00597	.00067	.01921	1.01521

IA156A, AEDC PWT 16T-470, 0 T S W/SILTS (R8NSA2) (10 MAY 80)

REFERENCE DATA

SREF = 2690.0000 SQ.FT. XMRP = 976.0000 IN. XT
LREF = 1290.3000 INCHES YMRP = .0000 IN. YT
BREF = 1290.3000 INCHES ZMRP = 400.0000 IN. ZT
SCALE = .0200

PARAMETRIC DATA

IB-ELV = 8.000 OB-ELV = 5.000
BDFLAP = .000 SPDBRK = .000
RUDDER = .000 SILTS = 1.000
MACH = 1.550 RN/L = 3.200

RUN NO. 1212/ 0 RN/L = 3.20 GRADIENT INTERVAL = -5.00/ 5.00

ALPHAT	BETAT	CNFTS	CATS	CAFTS	CLMFTS	CYFTS	CYNTS	CYNFTS	CBLFTS	ALFATU	BETATU
-8.298	-5.964	-.47380	.30020	.15780	.09310	.11440	-.01140	-.00960	-.02480	-7.97510	-6.11820
-8.401	-3.734	-.46770	.30020	.16620	.08890	.06640	-.00470	-.00340	-.01710	-8.11830	-3.95130
-8.297	.333	-.44190	.30320	.16920	.07760	-.00080	-.00410	-.00400	.00130	-8.14800	.00970
-8.039	4.545	-.44270	.30600	.17210	.08100	-.07180	-.00040	-.00150	.01920	-8.06780	4.18970
-8.021	6.480	-.44390	.30360	.17100	.08090	-.11240	.00540	.00390	.02480	-8.11170	6.13640
	GRADIENT	.00300	.00070	.00071	-.00094	-.01669	.00052	.00023	.00438	.00618	.98344

RUN NO. 1213/ 0 RN/L = 3.20 GRADIENT INTERVAL = -5.00/ 5.00

ALPHAT	BETAT	CNFTS	CATS	CAFTS	CLMFTS	CYFTS	CYNTS	CYNFTS	CBLFTS	ALFATU	BETATU
-6.337	-6.008	-.38050	.29960	.16800	.07820	.10690	-.00890	-.00730	-.02090	-5.99640	-6.11390
-6.276	-4.042	-.36550	.29990	.17020	.07350	.06690	-.00400	-.00300	-.01430	-5.96030	-4.20880
-6.311	.256	-.35160	.30070	.17120	.06630	-.00360	-.00240	-.00230	.00080	-6.15640	-.06580
-6.022	4.480	-.34530	.30600	.17490	.06680	-.06930	-.00140	-.00220	.01490	-6.09280	4.13150
-5.939	6.462	-.34860	.30570	.17400	.06890	-.10900	.00500	.00340	.02070	-6.07810	6.13350
	GRADIENT	.00237	.00071	.00055	-.00079	-.01598	.00031	.00009	.00343	-.01564	.97861

RUN NO. 1214/ 0 RN/L = 3.21 GRADIENT INTERVAL = -5.00/ 5.00

ALPHAT	BETAT	CNFTS	CATS	CAFTS	CLMFTS	CYFTS	CYNTS	CYNFTS	CBLFTS	ALFATU	BETATU
-4.156	-6.159	-.29920	.30020	.16880	.07410	.10970	-.01130	-.00980	-.01690	-3.80120	-6.18780
-4.417	-3.998	-.28930	.29720	.16850	.06620	.06600	-.00580	-.00500	-.01110	-4.07770	-4.10580
-4.295	.517	-.26680	.29970	.17100	.05760	-.00760	-.00300	-.00300	.00130	-4.15980	.18730
-3.665	4.504	-.25580	.30420	.17860	.06420	-.06990	.00100	.00020	.01090	-3.81550	4.18090
-3.737	6.347	-.26120	.30160	.17820	.06470	-.10540	.00690	.00560	.01520	-3.93810	6.05340
	GRADIENT	.00396	.00082	.00117	-.00027	-.01599	.00080	.00061	.00259	.02976	.97415

RUN NO. 1215/ 0 RN/L = 3.20 GRADIENT INTERVAL = -5.00/ 5.00

ALPHAT	BETAT	CNFTS	CATS	CAFTS	CLMFTS	CYFTS	CYNTS	CYNFTS	CBLFTS	ALFATU	BETATU
-.312	-7.117	-.19710	.29940	.17020	.09010	.13790	-.02440	-.02270	-.01110	.01010	-6.96990
-.299	-4.969	-.18170	.29690	.16950	.08410	.09030	-.01570	-.01460	-.00760	.02410	-4.82060
-.313	-.544	-.15320	.29510	.17770	.06840	.00770	-.00330	-.00310	-.00080	.00970	-.39610
-.296	3.586	-.15150	.30110	.15970	.06950	-.07060	.01160	.01070	.00520	.02740	3.73450
-.317	5.786	-.15020	.30140	.17780	.06640	-.11430	.01990	.01820	.00820	.00620	5.93460
	GRADIENT	.00356	.00048	-.00111	-.00173	-.01881	.00319	.00295	.00150	.00034	1.00005

IA156A, AEDC PWT 16T-470, O T S W/SILTS (R8NSA2) (10 MAY 80)

REFERENCE DATA

SREF = 2690.0000 SQ.FT. XMRP = 976.0000 IN. XT
LREF = 1290.3000 INCHES YMRP = .0000 IN. YT
BREF = 1290.3000 INCHES ZMRP = 400.0000 IN. ZT
SCALE = .0200

PARAMETRIC DATA

IB-ELV = 8.000 OB-ELV = 5.000
BDFLAP = .000 SPDBRK = .000
RUDDER = .000 SILTS = 1.000
MACH = 1.550 RN/L = 3.200

RUN NO. 1216/ 0 RN/L = 3.20 GRADIENT INTERVAL = -5.00/ 5.00

ALPHAT	BETAT	CNFTS	CATS	CAFTS	CLMFTS	CYFTS	CYNTS	CYNFTS	CBLFTS	ALFATU	BETATU
4.631	-5.614	-.07320	.29710	.17590	.10460	.13430	-.03930	-.03800	-.00350	4.44420	-5.91730
4.424	-3.524	-.06250	.29700	.17580	.09310	.08680	-.02890	-.02810	-.00290	4.30050	-3.85810
4.028	.283	-.05710	.29770	.17300	.08500	.00240	-.00800	-.00810	-.00070	4.17010	-.04360
4.040	4.057	-.04870	.29450	.17500	.08090	-.07030	.01530	.01440	.00140	4.37330	3.92920
4.027	6.135	-.04910	.29680	.17410	.08260	-.12880	.02780	.02650	.00260	4.37910	6.08060
	GRADIENT	.00182	-.00033	-.00011	-.00161	-.02191	.00583	.00561	.00057	.00954	1.02718

IA156A, AEDC PWT 16T-470, O T S W/SILTS (R8NSA3) (10 MAY 80)

REFERENCE DATA

SREF = 2690.0000 SQ.FT. XMRP = 976.0000 IN. XT
LREF = 1290.3000 INCHES YMRP = .0000 IN. YT
BREF = 1290.3000 INCHES ZMRP = 400.0000 IN. ZT
SCALE = .0200

PARAMETRIC DATA

IB-ELV = 12.000 OB-ELV = 5.000
BDFLAP = .000 SPDBRK = .000
RUDDER = .000 SILTS = 1.000
MACH = .600 RN/L = 3.500

RUN NO. 1240/ 0 RN/L = 3.50 GRADIENT INTERVAL = -5.00/ 5.00

ALPHAT	BETAT	CNFTS	CATS	CAFTS	CLMFTS	CYFTS	CYNTS	CYNFTS	CBLFTS	ALFATU	BETATU
-8.168	-7.833	-.38650	.20750	.05540	.06570	.09710	.00360	.00670	-.02820	-8.08040	-8.02480
-8.084	-5.784	-.37360	.20770	.05040	.06020	.06950	.00190	.00440	-.02080	-8.02210	-5.98510
-8.105	-3.778	-.36860	.20930	.06170	.05740	.04570	-.00010	.00130	-.01360	-8.08320	-3.98740
-8.004	.300	-.35600	.21140	.05910	.05430	-.00770	.00030	.00030	.00160	-8.08370	.10480
-7.885	4.224	-.34090	.21150	.06050	.04950	-.05330	.00060	-.00070	.01460	-8.04390	4.08610
-7.875	6.138	-.33890	.21040	.06050	.04940	-.07370	-.00090	-.00310	.02080	-8.05680	6.03110
-7.929	8.163	-.34400	.21160	.05670	.05110	-.09950	-.00140	-.00420	.02700	-8.12450	8.08440
	GRADIENT	.00346	.00028	-.00015	-.00099	-.01238	.00009	-.00025	.00353	.00488	1.00889

RUN NO. 1241/ 0 RN/L = 3.50 GRADIENT INTERVAL = -5.00/ 5.00

ALPHAT	BETAT	CNFTS	CATS	CAFTS	CLMFTS	CYFTS	CYNTS	CYNFTS	CBLFTS	ALFATU	BETATU
-6.091	-7.882	-.32640	.20800	.06030	.06550	.10390	.00010	.00300	-.02440	-5.97400	-8.05690
-6.067	-5.866	-.31700	.20720	.06120	.06050	.07440	-.00010	.00220	-.01850	-5.97600	-6.05590
-5.983	-3.960	-.30760	.20800	.06330	.05780	.04990	-.00140	.00000	-.01220	-5.92730	-4.16290
-6.034	.091	-.29140	.20900	.06380	.05050	-.00560	-.00050	-.00050	.00110	-6.10470	-.10700
-5.902	4.159	-.28110	.21120	.06670	.05050	-.05190	.00050	-.00080	.01230	-6.07610	4.04070
-5.828	6.119	-.27970	.21000	.06330	.05050	-.07560	.00040	-.00170	.01760	-6.02230	6.03830
-5.630	8.209	-.27240	.21260	.06360	.05150	-.10830	.00350	.00090	.02200	-5.83490	8.16040
	GRADIENT	.00326	.00039	.00042	-.00090	-.01254	.00023	-.00010	.00302	-.01831	1.01044

IA156A, AEDC PWT 16T-470, 0 T S W/SILTS (R8NSA3) (10 MAY 80)

REFERENCE DATA

SREF = 2690.0000 SQ.FT. XMRP = 976.0000 IN. XT
LREF = 1290.3000 INCHES YMRP = .0000 IN. YT
BREF = 1290.3000 INCHES ZMRP = 400.0000 IN. ZT
SCALE = .0200

PARAMETRIC DATA

IB-ELV = 12.000 OB-ELV = 5.000
BDFLAP = .000 SPDBRK = .000
RUDDER = .000 SILTS = 1.000
MACH = .600 RN/L = 3.500

RUN NO. 1242/ 0 RN/L = 3.49 GRADIENT INTERVAL = -5.00/ 5.00

ALPHAT	BETAT	CNFTS	CATS	CAFTS	CLMFTS	CYFTS	CYNTS	CYNFTS	CBLFTS	ALFATU	BETATU
-3.912	-7.932	-.26990	.20870	.06430	.06860	.11160	-.00490	-.00230	-.02020	-3.76370	-8.08160
-4.148	-5.901	-.26900	.20750	.06650	.06370	.07720	-.00250	-.00040	-.01540	-4.02280	-6.07090
-4.135	-3.837	-.25740	.20750	.06640	.05940	.04700	-.00270	-.00130	-.00970	-4.04490	-4.02740
-3.932	.182	-.23130	.20860	.06890	.05090	-.00740	-.00020	-.00030	.00120	-4.00630	-.01480
-3.606	4.192	-.22180	.21140	.07050	.05580	-.05740	.00360	.00220	.00990	-3.80330	4.11800
-3.721	5.998	-.22590	.21140	.06940	.05510	-.08140	.00480	.00280	.01390	-3.92800	5.95780
-3.755	7.985	-.22650	.21250	.06750	.05380	-.11060	.00770	.00530	.01800	-3.96560	7.97000
	GRADIENT	.00443	.00049	.00051	-.00045	-.01300	.00078	.00044	.00244	.03008	1.01447

RUN NO. 1243/ 0 RN/L = 3.50 GRADIENT INTERVAL = -5.00/ 5.00

ALPHAT	BETAT	CNFTS	CATS	CAFTS	CLMFTS	CYFTS	CYNTS	CYNFTS	CBLFTS	ALFATU	BETATU
-.211	-8.673	-.19870	.21220	.07050	.08010	.15050	-.02280	-.02050	-.01520	-.01430	-8.74930
-.206	-6.586	-.19300	.20880	.07050	.07750	.10970	-.01600	-.01380	-.01150	-.00990	-6.66280
-.201	-4.324	-.18300	.20690	.07170	.07280	.06960	-.01160	-.01000	-.00730	-.00500	-4.40040
-.197	-.255	-.16120	.20710	.07200	.06190	.00200	-.00130	-.00130	-.00050	-.00110	-.33130
-.151	3.815	-.15330	.20760	.07280	.06450	-.06060	.01070	.00930	.00490	.04570	3.73960
-.146	5.924	-.15230	.20930	.07250	.06460	-.09770	.01680	.01490	.00800	.05070	5.84820
-.141	8.023	-.14510	.21190	.07250	.06200	-.13330	.02220	.01990	.01050	.05560	7.94730
	GRADIENT	.00365	.00009	.00014	-.00102	-.01600	.00274	.00237	.00150	.00618	1.00014

RUN NO. 1244/ 0 RN/L = 3.50 GRADIENT INTERVAL = -5.00/ 5.00

ALPHAT	BETAT	CNFTS	CATS	CAFTS	CLMFTS	CYFTS	CYNTS	CYNFTS	CBLFTS	ALFATU	BETATU
4.521	-8.143	-.07340	.20460	.06990	.07910	.17180	-.04310	-.04160	-.00340	4.31160	-8.18410
4.344	-5.913	-.06750	.20150	.07080	.07670	.12240	-.03210	-.03060	-.00220	4.13790	-5.95650
4.330	-3.919	-.06020	.19900	.07010	.07410	.08150	-.02290	-.02190	-.00140	4.13620	-4.00110
4.128	.002	-.04850	.20080	.06920	.06410	.00320	-.00370	-.00370	-.00040	4.04050	-.19000
4.164	4.118	-.04470	.20220	.07010	.06690	-.07490	.01660	.01550	-.00010	4.24650	3.92340
4.101	6.270	-.04220	.20310	.07210	.06580	-.11850	.02630	.02450	.00060	4.22500	6.09970
4.079	8.280	-.03490	.20520	.06940	.06190	-.15630	.03440	.03240	.00130	4.22260	8.12580
	GRADIENT	.00192	.00040	.00000	-.00088	-.01946	.00492	.00465	.00016	.01402	.98615

IA156A, AEDC PWT 16T-470, 0 T S W/SILTS (R8NSA3) (10 MAY 80)

REFERENCE DATA

SREF = 2690.0000 SQ.FT. XMRP = 976.0000 IN. XT
LREF = 1290.3000 INCHES YMRP = .0000 IN. YT
BREF = 1290.3000 INCHES ZMRP = 400.0000 IN. ZT
SCALE = .0200

PARAMETRIC DATA

IB-ELV = 12.000 OB-ELV = 5.000
BDFLAP = .000 SPDBRK = .000
RUDDER = .000 SILTS = 1.000
MACH = .600 RN/L = 3.500

RUN NO. 1245/ 0 RN/L = 3.50 GRADIENT INTERVAL = -5.00/ 5.00

ALPHAT	BETAT	CNFTS	CATS	CAFTS	CLMFTS	CYFTS	CYNTS	CYNFTS	CBLFTS	ALFATU	BETATU
6.511	-8.034	-.01560	.20060	.06750	.07480	.17810	-.04780	-.04640	.00060	6.30780	-8.09010
6.490	-5.964	-.01090	.19830	.06920	.07460	.12760	-.03540	-.03410	.00100	6.29690	-6.04730
6.480	-3.884	-.00710	.19700	.06890	.07430	.08440	-.02410	-.02310	.00080	6.30700	-4.00450
6.192	.172	-.00430	.19960	.06800	.06880	-.00230	-.00130	-.00130	-.00050	6.11430	-.02330
6.114	4.131	-.00090	.19920	.06840	.06820	-.08200	.01930	.01830	-.00150	6.15870	3.92460
6.031	6.236	.00090	.19980	.06740	.06580	-.12080	.02920	.02770	-.00180	6.12090	6.04630
6.005	8.170	.01170	.20260	.06800	.06110	-.16130	.03830	.03650	-.00180	6.12040	7.99390
	GRADIENT	.00077	.00028	-.00006	-.00076	-.02076	.00542	.00517	-.00029	-.01862	.98924

RUN NO. 1246/ 0 RN/L = 3.50 GRADIENT INTERVAL = -5.00/ 5.00

ALPHAT	BETAT	CNFTS	CATS	CAFTS	CLMFTS	CYFTS	CYNTS	CYNFTS	CBLFTS	ALFATU	BETATU
8.423	-7.872	.04180	.19560	.06200	.06950	.17540	-.04680	-.04680	.00390	8.22960	-7.95460
8.347	-5.795	.04230	.19370	.06550	.07090	.12580	-.03560	-.03440	.00340	8.16660	-5.90430
8.342	-3.808	.04270	.19330	.06540	.07270	.07930	-.02230	-.02140	.00240	8.18490	-3.94830
8.255	.176	.04420	.19780	.06730	.07130	-.00210	-.00070	-.00080	-.00030	8.17680	-.01990
8.289	4.257	.05530	.19570	.06530	.06750	-.08180	.01980	.01860	-.00290	8.31110	4.04690
8.222	6.265	.06040	.19620	.06430	.06340	-.12140	.03020	.02870	-.00400	8.28250	6.06370
8.212	8.309	.06860	.19990	.06230	.05790	-.17250	.04390	.04240	-.00460	8.30070	8.11840
	GRADIENT	.00157	.00029	-.00001	-.00065	-.01997	.00522	.00496	-.00066	.01572	.99140

IA156A, AEDC PWT 16T-470, O T S W/SILTS (R8NSA4) (10 MAY 80)

REFERENCE DATA

SREF = 2690.0000 SQ.FT. XMRP = 976.0000 IN. XT
LREF = 1290.3000 INCHES YMRP = .0000 IN. YT
BREF = 1290.3000 INCHES ZMRP = 400.0000 IN. ZT
SCALE = .0200

PARAMETRIC DATA

IB-ELV = 12.000 OB-ELV = 5.000
BDFLAP = .000 SPDBRK = .000
RUDDER = .000 SILTS = 1.000
MACH = .800 RN/L = 3.500

RUN NO. 1247/ 0 RN/L = 3.50 GRADIENT INTERVAL = -5.00/ 5.00

ALPHAT	BETAT	CNFTS	CATS	CAFTS	CLMFTS	CYFTS	CYNTS	CYNFTS	CBLFTS	ALFATU	BETATU
-8.205	-5.817	-.40430	.22150	.06790	.06790	.08300	-.00580	-.00310	-.02230	-8.04890	-5.95410
-8.216	-3.773	-.39520	.22290	.07000	.06430	.05450	-.00550	-.00390	-.01460	-8.08870	-3.93640
-8.146	.391	-.37390	.22580	.07180	.05600	-.00760	.00020	.00030	.00190	-8.11220	.18600
-7.993	4.316	-.36320	.22340	.07140	.05050	-.05740	.00280	.00140	.01550	-8.05720	4.11890
-8.013	6.239	-.36600	.22020	.06990	.05020	-.08170	.00270	.00030	.02180	-8.11060	6.05520
	GRADIENT	.00397	.00007	.00018	-.00171	-.01384	.00103	.00066	.00372	.00380	.99576

RUN NO. 1248/ 0 RN/L = 3.50 GRADIENT INTERVAL = -5.00/ 5.00

ALPHAT	BETAT	CNFTS	CATS	CAFTS	CLMFTS	CYFTS	CYNTS	CYNFTS	CBLFTS	ALFATU	BETATU
-6.114	-5.928	-.33470	.22120	.07300	.06780	.08900	-.00830	-.00560	-.01950	-5.93860	-6.03860
-6.067	-4.019	-.32770	.22240	.07560	.06530	.06070	-.00740	-.00580	-.01330	-5.91460	-4.16010
-6.170	.079	-.30670	.22320	.07650	.05210	-.00180	-.00140	-.00120	.00050	-6.12710	-.12370
-5.987	4.220	-.29720	.22270	.07750	.05160	-.05830	.00440	.00310	.01260	-6.07270	4.03080
-5.895	6.225	-.29790	.22200	.07500	.05210	-.08470	.00530	.00300	.01820	-6.01810	6.05730
	GRADIENT	.00370	.00004	.00023	-.00166	-.01444	.00143	.00108	.00314	-.01913	.99420

RUN NO. 1249/ 0 RN/L = 3.50 GRADIENT INTERVAL = -5.00/ 5.00

ALPHAT	BETAT	CNFTS	CATS	CAFTS	CLMFTS	CYFTS	CYNTS	CYNFTS	CBLFTS	ALFATU	BETATU
-3.998	-6.026	-.28130	.22050	.07870	.07250	.09140	-.00970	-.00710	-.01610	-3.80330	-6.09760
-4.208	-3.909	-.27770	.22130	.08010	.06780	.05840	-.00850	-.00680	-.01070	-4.03360	-4.02200
-4.115	.409	-.23900	.22120	.07860	.04980	-.00980	.00090	.00080	.00130	-4.08750	.20360
-3.684	4.271	-.23300	.22260	.07860	.05540	-.06370	.00710	.00570	.01040	-3.81170	4.10690
-3.769	6.101	-.23830	.22070	.07910	.05640	-.09100	.00960	.00750	.01470	-3.92150	5.96060
	GRADIENT	.00553	.00016	-.00019	-.00157	-.01494	.00191	.00153	.00258	.02635	.99347

RUN NO. 1250/ 0 RN/L = 3.50 GRADIENT INTERVAL = -5.00/ 5.00

ALPHAT	BETAT	CNFTS	CATS	CAFTS	CLMFTS	CYFTS	CYNTS	CYNFTS	CBLFTS	ALFATU	BETATU
-.192	-6.825	-.20090	.22260	.08100	.08030	.12530	-.02290	-.02070	-.01250	.01240	-6.78680
-.202	-4.658	-.19300	.21860	.08120	.07510	.08410	-.01740	-.01560	-.00870	.00210	-4.62020
-.223	-.360	-.16460	.21480	.08080	.05850	.00700	-.00320	-.00300	-.00120	-.01850	-.32200
-.169	3.716	-.15710	.21790	.08290	.06090	-.06630	.01330	.01200	.00560	.03480	3.75450
-.157	5.851	-.16020	.22100	.08340	.06410	-.10580	.02090	.01900	.00900	.04730	5.88940
	GRADIENT	.00431	-.00009	.00020	-.00172	-.01796	.00366	.00329	.00171	.00383	1.00004

IA156A, AEDC PWT 16T-470, 0 T S W/SILTS (R8NSA4) (10 MAY 80)

REFERENCE DATA

SREF = 2690.0000 SQ.FT. XMRP = 976.0000 IN. XT
LREF = 1290.3000 INCHES YMRP = .0000 IN. YT
BREF = 1290.3000 INCHES ZMRP = 400.0000 IN. ZT
SCALE = .0200

PARAMETRIC DATA

IB-ELV = 12.000 OB-ELV = 5.000
BDFLAP = .000 SPDBRK = .000
RUDDER = .000 SILTS = 1.000
MACH = .800 RN/L = 3.500

RUN NO. 1251/ 0 RN/L = 3.50 GRADIENT INTERVAL = -5.00/ 5.00

ALPHAT	BETAT	CNFTS	CATS	CAFTS	CLMFTS	CYFTS	CYNTS	CYNFTS	CBLFTS	ALFATU	BETATU
4.431	-5.863	-.06350	.21350	.07820	.07560	.13230	-.03540	-.03380	-.00240	4.28110	-6.00650
4.298	-3.748	-.05910	.21150	.07800	.07310	.08300	-.02420	-.02310	-.00160	4.17890	-3.91810
4.025	.123	-.03810	.20950	.07880	.05710	.00340	-.00340	-.00340	-.00040	4.05930	-.08210
4.134	4.091	-.03800	.21250	.08050	.06320	-.07840	.01940	.01820	.00030	4.30540	3.97340
4.060	6.183	-.03930	.21480	.07910	.06240	-.12400	.03060	.02860	.00130	4.25240	6.10480
	GRADIENT	.00268	.00013	.00032	-.00125	-.02059	.00556	.00527	.00024	.01633	1.00680

RUN NO. 1252/ 0 RN/L = 3.50 GRADIENT INTERVAL = -5.00/ 5.00

ALPHAT	BETAT	CNFTS	CATS	CAFTS	CLMFTS	CYFTS	CYNTS	CYNFTS	CBLFTS	ALFATU	BETATU
6.459	-5.876	-.00100	.21030	.07510	.06820	.13510	-.03830	-.03680	.00070	6.33930	-6.04560
6.437	-3.828	.00020	.20790	.07700	.06850	.08860	-.02620	-.02510	.00050	6.35310	-4.01800
6.101	.161	.01270	.20740	.07720	.05780	.00150	-.00240	-.00240	-.00050	6.13790	-.04320
6.046	4.046	.01150	.20900	.07660	.06100	-.08100	.02080	.01970	-.00140	6.19210	3.89840
6.167	6.246	.02420	.21060	.07540	.05670	-.12730	.03300	.03130	-.00210	6.34030	6.13220
	GRADIENT	.00144	.00014	-.00005	-.00096	-.02154	.00597	.00569	-.00024	-.02060	1.00534

IA156A, AEDC PWT 16T-470, 0 T S W/SILTS (R8NSA5) (10 MAY 80)

REFERENCE DATA

SREF = 2690.0000 SQ.FT. XMRP = 976.0000 IN. XT
LREF = 1290.3000 INCHES YMRP = .0000 IN. YT
BREF = 1290.3000 INCHES ZMRP = 400.0000 IN. ZT
SCALE = .0200

PARAMETRIC DATA

IB-ELV = 12.000 OB-ELV = 5.000
BDFLAP = .000 SPDBRK = .000
RUDDER = .000 SILTS = 1.000
MACH = .900 RN/L = 3.500

RUN NO. 1253/ 0 RN/L = 3.50 GRADIENT INTERVAL = -5.00/ 5.00

ALPHAT	BETAT	CNFTS	CATS	CAFTS	CLMFTS	CYFTS	CYNTS	CYNFTS	CBLFTS	ALFATU	BETATU
-8.441	-5.948	-.42420	.24190	.07530	.06580	.09990	-.01380	-.01140	-.02330	-8.27580	-6.07340
-8.178	-3.731	-.40830	.24550	.08450	.06380	.06370	-.01140	-.01020	-.01460	-8.03960	-3.88400
-8.173	.179	-.38240	.24750	.08430	.05270	-.00280	-.00120	-.00100	.00070	-8.12050	-.02050
-8.028	4.418	-.37460	.24340	.08270	.04720	-.07020	.00830	.00700	.01700	-8.08100	4.21800
-8.069	6.252	-.37740	.24140	.08210	.04740	-.09530	.00940	.00720	.02300	-8.15360	6.06400
	GRADIENT	.00410	-.00027	-.00022	-.00203	-.01643	.00242	.00211	.00388	-.00488	.99440

IA156A, AEDC PWT 16T-470, 0 T S W/SILTS (R8NSA5) (10 MAY 80)

REFERENCE DATA

SREF = 2690.0000 SQ.FT. XMRP = 976.0000 IN. XT
LREF = 1290.3000 INCHES YMRP = .0000 IN. YT
BREF = 1290.3000 INCHES ZMRP = 400.0000 IN. ZT
SCALE = .0200

PARAMETRIC DATA

IB-ELV = 12.000 OB-ELV = 5.000
BDFLAP = .000 SPDBRK = .000
RUDDER = .000 SILTS = 1.000
MACH = .900 RN/L = 3.500

RUN NO. 1254/ 0 RN/L = 3.50 GRADIENT INTERVAL = -5.00/ 5.00

ALPHAT	BETAT	CNFTS	CATS	CAFTS	CLMFTS	CYFTS	CYNTS	CYNFTS	CBLFTS	ALFATU	BETATU
-6.150	-5.924	-.35030	.24470	.08720	.06620	.10300	-.01590	-.01340	-.02020	-5.96750	-6.02150
-6.105	-3.969	-.34010	.24420	.08710	.06210	.07100	-.01390	-.01250	-.01360	-5.94430	-4.09840
-6.136	.268	-.30430	.24360	.08770	.04540	-.00620	-.00100	-.00070	.00120	-6.08590	.06770
-6.026	4.223	-.30830	.24200	.08710	.04890	-.06700	.00860	.00720	.01370	-6.09950	4.02980
-5.973	6.206	-.30960	.24200	.08670	.04990	-.09740	.01090	.00860	.01960	-6.08310	6.03170
	GRADIENT	.00394	-.00027	.00000	-.00164	-.01686	.00275	.00241	.00333	-.01912	.99214

RUN NO. 1255/ 0 RN/L = 3.50 GRADIENT INTERVAL = -5.00/ 5.00

ALPHAT	BETAT	CNFTS	CATS	CAFTS	CLMFTS	CYFTS	CYNTS	CYNFTS	CBLFTS	ALFATU	BETATU
-3.972	-5.925	-.28910	.24540	.09110	.06980	.10430	-.01620	-.01380	-.01680	-3.77380	-5.98230
-4.216	-3.918	-.28050	.24340	.09160	.06340	.06750	-.01350	-.01210	-.01130	-4.03450	-4.01650
-4.172	.368	-.23700	.23950	.08950	.04240	-.00880	.00010	.00030	.00110	-4.12750	.16590
-3.713	4.237	-.23540	.24080	.09220	.05100	-.06960	.00940	.00810	.01100	-3.82820	4.06570
-3.799	6.096	-.24420	.24170	.09060	.05290	-.09980	.01330	.01120	.01550	-3.94210	5.94620
	GRADIENT	.00561	-.00033	.00006	-.00158	-.01683	.00281	.00248	.00274	.02446	.99081

RUN NO. 1256/ 0 RN/L = 3.50 GRADIENT INTERVAL = -5.00/ 5.00

ALPHAT	BETAT	CNFTS	CATS	CAFTS	CLMFTS	CYFTS	CYNTS	CYNFTS	CBLFTS	ALFATU	BETATU
-.229	-6.869	-.20580	.24530	.09370	.07800	.13540	-.02650	-.02440	-.01280	-.02870	-6.81710
-.221	-4.710	-.19310	.24260	.09450	.07290	.09440	-.02140	-.01960	-.00930	-.02120	-4.65840
-.277	-.359	-.15160	.23260	.09160	.04640	.00900	-.00470	-.00440	-.00130	-.07660	-.30760
-.218	3.721	-.15180	.23760	.09390	.05180	-.07080	.01530	.01410	.00600	-.01760	3.77280
-.202	5.873	-.15790	.24020	.09260	.05640	-.11200	.02380	.02190	.00940	-.00180	5.92430
	GRADIENT	.00495	-.00061	-.00008	-.00254	-.01960	.00435	.00399	.00182	.00028	1.00005

RUN NO. 1257/ 0 RN/L = 3.50 GRADIENT INTERVAL = -5.00/ 5.00

ALPHAT	BETAT	CNFTS	CATS	CAFTS	CLMFTS	CYFTS	CYNTS	CYNFTS	CBLFTS	ALFATU	BETATU
4.430	-5.855	-.06820	.23460	.09120	.07250	.13830	-.03690	-.03540	-.00340	4.29210	-6.00860
4.287	-3.763	-.06050	.23240	.09070	.06780	.08970	-.02620	-.02520	-.00250	4.18100	-3.94030
3.987	.082	-.03400	.22940	.09060	.04620	.00400	-.00320	-.00310	-.00060	4.03220	-.11940
4.118	4.037	-.04040	.23270	.09110	.05790	-.08140	.02070	.01960	.00130	4.29570	3.93050
4.047	6.158	-.04320	.23500	.09090	.05840	-.12910	.03240	.03050	.00250	4.24270	6.09270
	GRADIENT	.00256	.00004	.00005	-.00125	-.02193	.00601	.00574	.00049	.01495	1.00917

IA156A, AEDC PWT 16T-470, O T S W/SILTS (R8NSA6) (10 MAY 80)

REFERENCE DATA

SREF = 2690.0000 SQ.FT. XMRP = 976.0000 IN. XT
LREF = 1290.3000 INCHES YMRP = .0000 IN. YT
BREF = 1290.3000 INCHES ZMRP = 400.0000 IN. ZT
SCALE = .0200

PARAMETRIC DATA

IB-ELV = 12.000 OB-ELV = 5.000
BDFLAP = .000 SPDBRK = .000
RUDDER = .000 SILTS = 1.000
MACH = .950 RN/L = 3.500

RUN NO. 1258/ 0 RN/L = 3.50 GRADIENT INTERVAL = -5.00/ 5.00

ALPHAT	BETAT	CNFTS	CATS	CAFTS	CLMFTS	CYFTS	CYNTS	CYNFTS	CBLFTS	ALFATU	BETATU
-8.226	-5.894	-.42240	.26630	.09370	.05700	.10730	-.01660	-.01410	-.02340	-8.05800	-6.01220
-8.318	-3.788	-.41550	.26760	.09580	.05270	.06880	-.01250	-.01120	-.01530	-8.17690	-3.93700
-8.274	.350	-.38410	.27130	.09510	.03770	-.00750	.00080	.00090	.00180	-8.22290	.15120
-8.091	4.316	-.37980	.26730	.09510	.03890	-.07330	.01070	.00950	.01740	-8.13840	4.11590
-8.100	6.234	-.38760	.26480	.09350	.04220	-.10490	.01320	.01090	.02380	-8.18110	6.04490
	GRADIENT	.00443	-.00003	-.00009	-.00172	-.01754	.00287	.00256	.00404	.00464	.99370

RUN NO. 1259/ 0 RN/L = 3.50 GRADIENT INTERVAL = -5.00/ 5.00

ALPHAT	BETAT	CNFTS	CATS	CAFTS	CLMFTS	CYFTS	CYNTS	CYNFTS	CBLFTS	ALFATU	BETATU
-6.209	-5.931	-.35280	.26720	.09890	.05760	.10950	-.01810	-.01560	-.02070	-6.02550	-6.02400
-6.146	-4.014	-.34010	.26760	.10050	.05390	.07550	-.01510	-.01360	-.01420	-5.98250	-4.13810
-6.268	.099	-.30910	.27220	.09970	.03780	-.00200	-.00120	-.00110	.00070	-6.20920	-.09740
-6.076	4.217	-.30610	.26750	.10060	.04190	-.07100	.01070	.00930	.01450	-6.14530	4.02390
-5.784	6.299	-.30380	.26690	.09890	.04660	-.10600	.01480	.01230	.01980	-5.89510	6.12640
	GRADIENT	.00413	-.00001	.00001	-.00146	-.01780	.00313	.00278	.00349	-.01977	.99164

RUN NO. 1260/ 0 RN/L = 3.50 GRADIENT INTERVAL = -5.00/ 5.00

ALPHAT	BETAT	CNFTS	CATS	CAFTS	CLMFTS	CYFTS	CYNTS	CYNFTS	CBLFTS	ALFATU	BETATU
-4.007	-6.029	-.28950	.26920	.10320	.06480	.11170	-.01990	-.01730	-.01720	-3.80810	-6.07920
-4.252	-3.916	-.28060	.26920	.10530	.05810	.07200	-.01540	-.01390	-.01160	-4.06970	-4.00970
-4.186	.373	-.23700	.26800	.10320	.03950	-.00950	.00080	.00070	.00150	-4.13860	.17340
-3.715	4.255	-.23340	.26860	.10510	.04980	-.07280	.01240	.01070	.01110	-3.82800	4.08370
-3.804	6.080	-.24520	.26740	.10290	.05200	-.10560	.01640	.01390	.01580	-3.94370	5.92940
	GRADIENT	.00585	-.00008	-.00003	-.00107	-.01774	.00341	.00302	.00278	.02879	.99023

RUN NO. 1261/ 0 RN/L = 3.50 GRADIENT INTERVAL = -5.00/ 5.00

ALPHAT	BETAT	CNFTS	CATS	CAFTS	CLMFTS	CYFTS	CYNTS	CYNFTS	CBLFTS	ALFATU	BETATU
-.236	-6.886	-.20100	.26950	.10680	.07750	.14090	-.03030	-.02770	-.01260	-.03840	-6.83090
-.222	-4.728	-.18780	.26790	.10760	.07370	.09590	-.02390	-.02170	-.00860	-.02460	-4.67280
-.252	-.387	-.14650	.26460	.10710	.05220	.00910	-.00510	-.00470	-.00130	-.05410	-.33180
-.197	3.708	-.14760	.26850	.10790	.05700	-.07470	.01860	.01700	.00570	.00080	3.76350
-.196	5.879	-.15160	.26790	.10560	.05840	-.11630	.02690	.02460	.00910	.00150	5.93410
	GRADIENT	.00481	.00006	.00003	-.00201	-.02022	.00503	.00458	.00169	.00291	1.00001

IA156A, AEDC PWT 16T-470, O T S W/SILTS (R8NSA6) (10 MAY 80)

REFERENCE DATA

SREF = 2690.0000 SQ.FT. XMRP = 976.0000 IN. XT
LREF = 1290.3000 INCHES YMRP = .0000 IN. YT
BREF = 1290.3000 INCHES ZMRP = 400.0000 IN. ZT
SCALE = .0200

PARAMETRIC DATA

IB-ELV = 12.000 OB-ELV = 5.000
BDFLAP = .000 SPDBRK = .000
RUDDER = .000 SILTS = 1.000
MACH = .950 RN/L = 3.500

RUN NO. 1262/ 0 RN/L = 3.50 GRADIENT INTERVAL = -5.00/ 5.00

ALPHAT	BETAT	CNFTS	CATS	CAFTS	CLMFTS	CYFTS	CYNTS	CYNFTS	CBLFTS	ALFATU	BETATU
4.427	-5.834	-.07000	.26120	.10340	.07500	.14180	-.03880	-.03710	-.00380	4.29330	-5.98920
4.276	-3.726	-.05970	.25960	.10310	.06650	.09150	-.02740	-.02630	-.00280	4.17520	-3.90500
3.971	.126	-.03570	.25820	.10560	.04310	.00260	-.00230	-.00230	-.00050	4.02240	-.07280
4.130	4.072	-.03920	.25670	.10010	.05750	- 08510	.02180	.02050	.00160	4.30820	3.97040
4.072	6.161	-.04470	.25800	.09710	.06150	-.13250	.03330	.03100	.00270	4.26740	6.09910
	GRADIENT	.00261	-.00037	-.00039	-.00113	-.02264	.00631	.00600	.00056	.01728	1.00993

IA156A, AEDC PWT 16T-470, O T S W/SILTS (R8NSA7) (10 MAY 80)

REFERENCE DATA

SREF = 2690.0000 SQ.FT. XMRP = 976.0000 IN. XT
LREF = 1290.3000 INCHES YMRP = .0000 IN. YT
BREF = 1290.3000 INCHES ZMRP = 400.0000 IN. ZT
SCALE = .0200

PARAMETRIC DATA

IB-ELV = 12.000 OB-ELV = 5.000
BDFLAP = .000 SPDBRK = .000
RUDDER = .000 SILTS = 1.000
MACH = 1.050 RN/L = 3.500

RUN NO. 1263/ 0 RN/L = 3.50 GRADIENT INTERVAL = -5.00/ 5.00

ALPHAT	BETAT	CNFTS	CATS	CAFTS	CLMFTS	CYFTS	CYNTS	CYNFTS	CBLFTS	ALFATU	BETATU
-8.229	-5.948	-.43830	.34020	.13190	.05580	.11770	-.01660	-.01380	-.02630	-8.05760	-6.05830
-8.363	-3.735	-.43680	.34550	.13600	.05360	.07510	-.01230	-.01090	-.01780	-8.21930	-3.87880
-8.308	.179	-.40440	.35410	.14290	.03590	-.00190	-.00030	-.00030	.00090	-8.24680	-.01500
-8.134	4.369	-.40070	.34850	.13680	.03880	-.07850	.00970	.00840	.01930	-8.17700	4.16970
-8.137	6.238	-.40950	.34710	.13680	.04110	-.11320	.01290	.01040	.02610	-8.21330	6.04910
	GRADIENT	.00441	.00035	.00008	-.00180	-.01895	.00271	.00238	.00458	.00535	.99325

RUN NO. 1264/ 0 RN/L = 3.50 GRADIENT INTERVAL = -5.00/ 5.00

ALPHAT	BETAT	CNFTS	CATS	CAFTS	CLMFTS	CYFTS	CYNTS	CYNFTS	CBLFTS	ALFATU	BETATU
-6.132	-5.924	-.35940	.34740	.14020	.05560	.11840	-.01830	-.01570	-.02330	-5.94630	-6.00840
-6.149	-4.020	-.34930	.35060	.14420	.05210	.07830	-.01330	-.01180	-.01600	-5.98200	-4.13700
-6.310	.110	-.32220	.35230	.14130	.03510	-.00210	-.00060	-.00060	.00080	-6.24600	-.08350
-6.096	4.235	-.31920	.35100	.14300	.03980	-.07580	.01050	.00900	.01600	-6.16070	4.04170
-6.056	6.212	-.32760	.34760	.14150	.04230	-.11580	.01690	.01430	.02260	-6.15790	6.03540
	GRADIENT	.00365	.00005	-.00015	-.00149	-.01867	.00288	.00252	.00388	-.02166	.99078

IA156A, AEDC PWT 16T-470, 0 T S W/SILTS (R8NSA7) (10 MAY 80)

REFERENCE DATA

SREF = 2690.0000 SQ.FT. XMRP = 976.0000 IN. XT
LREF = 1290.3000 INCHES YMRP = .0000 IN. YT
BREF = 1290.3000 INCHES ZMRP = 400.0000 IN. ZT
SCALE = .0200

PARAMETRIC DATA

IB-ELV = 12.000 OB-ELV = 5.000
BDFLAP = .000 SPDBRK = .000
RUDDER = .000 SILTS = 1.000
MACH = 1.050 RN/L = 3.500

RUN NO. 1265/ 0 RN/L = 3.50 GRADIENT INTERVAL = -5.00/ 5.00

ALPHAT	BETAT	CNFTS	CATS	CAFTS	CLMFTS	CYFTS	CYNTS	CYNFTS	CBLFTS	ALFATU	BETATU
-4.137	-6.026	-.29600	.34730	.14710	.06130	.12090	-.01990	-.01750	-.01990	-3.93850	-6.07180
-4.282	-3.936	-.28630	.34780	.14640	.05550	.07710	-.01530	-.01390	-.01350	-4.09700	-4.02220
-4.237	.362	-.24220	.35110	.14340	.03520	-.00660	.00000	-.00010	.00140	-4.18460	.16540
-3.741	4.261	-.23920	.35040	.14690	.04600	-.07740	.01240	.01090	.01290	-3.84920	4.08860
-3.830	6.101	-.25110	.34660	.14500	.04870	-.11320	.01780	.01550	.01780	-3.96480	5.94890
	GRADIENT	.00582	.00032	.00005	-.00122	-.01886	.00338	.00303	.00322	.02937	.98919

RUN NO. 1266/ 0 RN/L = 3.50 GRADIENT INTERVAL = -5.00/ 5.00

ALPHAT	BETAT	CNFTS	CATS	CAFTS	CLMFTS	CYFTS	CYNTS	CYNFTS	CBLFTS	ALFATU	BETATU
-.242	-6.933	-.20150	.34360	.14730	.07990	.15390	-.03480	-.03240	-.01450	-.04750	-6.87450
-.241	-4.769	-.18360	.34270	.14870	.07250	.10540	-.02790	-.02610	-.00980	-.04650	-4.70770
-.322	-.361	-.13610	.34840	.14800	.04310	.01350	-.00830	-.00820	-.00140	-.12720	-.29930
-.244	3.724	-.14160	.35170	.15020	.05310	-.07680	.01950	.01780	.00670	-.04980	3.78430
-.216	5.892	-.14800	.34710	.14060	.05820	-.12230	.02910	.02680	.01020	-.02190	5.95340
	GRADIENT	.00502	.00106	.00017	-.00234	-.02145	.00557	.00515	.00194	-.00062	.99999

RUN NO. 1267/ 0 RN/L = 3.50 GRADIENT INTERVAL = -5.00/ 5.00

ALPHAT	BETAT	CNFTS	CATS	CAFTS	CLMFTS	CYFTS	CYNTS	CYNFTS	CBLFTS	ALFATU	BETATU
4.448	-5.824	-.06960	.33970	.14500	.07520	.14630	-.04230	-.04090	-.00480	4.32060	-5.98280
4.279	-3.711	-.05840	.33870	.14410	.06700	.09470	-.03050	-.02970	-.00370	4.18460	-3.89230
4.033	.129	-.02790	.34090	.14720	.04770	.00550	-.00520	-.00510	-.00080	4.09030	-.06680
4.134	4.065	-.03400	.34020	.14480	.05720	-.08800	.02390	.02300	.00220	4.31390	3.96880
4.100	6.149	-.04050	.33910	.14040	.06250	-.13770	.03490	.03350	.00320	4.29620	6.09330
	GRADIENT	.00312	.00019	.00009	-.00124	-.02350	.00700	.00678	.00076	.01679	1.01096

IA156A, AEDC PWT 16T-470, 0 T S W/SILTS (R8NSA8) (10 MAY 80)

REFERENCE DATA

SREF = 2690.0000 SQ.FT. XMRP = 976.0000 IN. XT
LREF = 1290.3000 INCHES YMRP = .0000 IN. YT
BREF = 1290.3000 INCHES ZMRP = 400.0000 IN. ZT
SCALE = .0200

PARAMETRIC DATA

IB-ELV = 12.000 OB-ELV = 5.000
BDFLAP = .000 SPDBRK = .000
RUDDER = .000 SILTS = 1.000
MACH = 1.100 RN/L = 3.500

RUN NO. 1268/ 0 RN/L = 3.50 GRADIENT INTERVAL = -5.00/ 5.00

ALPHAT	BETAT	CNFTS	CATS	CAFTS	CLMFTS	CYFTS	CYNTS	CYNFTS	CBLFTS	ALFATU	BETATU
-8.259	-5.940	-.43530	.33950	.14840	.05170	.11370	-.01630	-.01380	-.02610	-8.08550	-6.04860
-8.377	-3.749	-.43300	.34480	.14820	.04920	.07210	-.01070	-.00930	-.01750	-8.23030	-3.89120
-8.340	.185	-.39790	.34840	.14960	.03070	-.00310	-.00100	-.00110	.00170	-8.27600	-.00930
-8.157	4.375	-.39900	.34780	.14880	.03590	-.07760	.00850	.00700	.01960	-8.19840	4.17490
-8.141	6.239	-.40370	.34340	.14870	.03910	-.11230	.01290	.01050	.02620	-8.21560	6.04850
	GRADIENT	.00414	.00036	.00007	-.00161	-.01842	.00236	.00201	.00456	.00409	.99295

RUN NO. 1269/ 0 RN/L = 3.50 GRADIENT INTERVAL = -5.00/ 5.00

ALPHAT	BETAT	CNFTS	CATS	CAFTS	CLMFTS	CYFTS	CYNTS	CYNFTS	CBLFTS	ALFATU	BETATU
-6.251	-5.960	-.36180	.34020	.15240	.05160	.11170	-.01590	-.01350	-.02300	-6.06410	-6.04260
-6.206	-4.036	-.34900	.34070	.15280	.04730	.07370	-.01110	-.00980	-.01570	-6.03670	-4.15150
-6.360	.111	-.31870	.34340	.15150	.02920	-.00330	-.00180	-.00180	.00140	-6.29260	-.08190
-6.086	4.237	-.31450	.34290	.15430	.03730	-.07310	.00740	.00610	.01610	-6.14930	4.04230
-6.080	6.232	-.32330	.34050	.14970	.04070	-.11080	.01420	.01180	.02260	-6.18070	6.05340
	GRADIENT	.00417	.00027	.00018	-.00121	-.01775	.00224	.00192	.00384	-.01365	.99043

RUN NO. 1270/ 0 RN/L = 3.50 GRADIENT INTERVAL = -5.00/ 5.00

ALPHAT	BETAT	CNFTS	CATS	CAFTS	CLMFTS	CYFTS	CYNTS	CYNFTS	CBLFTS	ALFATU	BETATU
-4.004	-6.049	-.29330	.33810	.15460	.05940	.11280	-.01620	-.01410	-.01970	-3.80350	-6.08870
-4.297	-3.941	-.28650	.33740	.15530	.05190	.07150	-.01230	-.01100	-.01330	-4.11050	-4.02520
-4.233	.370	-.24180	.33700	.15430	.03350	-.00850	-.00010	-.00030	.00190	-4.17750	.17340
-3.713	4.269	-.23630	.33910	.15870	.04550	-.07400	.00880	.00750	.01290	-3.81960	4.09420
-3.834	6.109	-.25090	.33820	.15580	.04940	-.10980	.01420	.01230	.01800	-3.96780	5.95400
	GRADIENT	.00619	.00020	.00040	-.00084	-.01774	.00257	.00226	.00320	.03454	.98871

RUN NO. 1271/ 0 RN/L = 3.50 GRADIENT INTERVAL = -5.00/ 5.00

ALPHAT	BETAT	CNFTS	CATS	CAFTS	CLMFTS	CYFTS	CYNTS	CYNFTS	CBLFTS	ALFATU	BETATU
-.245	-6.951	-.20510	.33490	.15730	.08040	.14580	-.02880	-.02670	-.01460	-.05030	-6.88780
-.236	-4.780	-.18890	.33070	.15850	.07440	.09870	-.02300	-.02130	-.00980	-.04150	-4.71630
-.293	-.395	-.14430	.33380	.15940	.04840	.01170	-.00690	-.00680	-.00130	-.09870	-.33120
-.211	3.721	-.14930	.33680	.16140	.05900	-.07470	.01720	.01570	.00670	-.01640	3.78450
-.210	5.895	-.15220	.33290	.15780	.05950	-.11990	.02680	.02460	.01040	-.01560	5.95830
	GRADIENT	.00472	.00072	.00034	-.00186	-.02039	.00472	.00434	.00194	.00278	.99999

IA156A, AEDC PWT 16T-470, O T S W/SILTS (R8NSA8) (10 MAY 80)

REFERENCE DATA

SREF = 2690.0000 SQ.FT. XMRP = 976.0000 IN. XT
LREF = 1290.3000 INCHES YMRP = .0000 IN. YT
BREF = 1290.3000 INCHES ZMRP = 400.0000 IN. ZT
SCALE = .0200

PARAMETRIC DATA

IB-ELV = 12.000 OB-ELV = 5.000
BDFLAP = .000 SPDBRK = .000
RUDDER = .000 SILTS = 1.000
MACH = 1.100 RN/L = 3.500

RUN NO. 1272/ 0 RN/L = 3.50 GRADIENT INTERVAL = -5.00/ 5.00

ALPHAT	BETAT	CNFTS	CATS	CAFTS	CLMFTS	CYFTS	CYNTS	CYNFTS	CBLFTS	ALFATU	BETATU
4.498	-5.845	-.06870	.32490	.15380	.07980	.14340	-.04130	-.03990	-.00480	4.37120	-6.00580
4.323	-3.725	-.05730	.32350	.15700	.07180	.09330	-.03010	-.02950	-.00360	4.23040	-3.90690
4.057	.134	-.03430	.32600	.15570	.05450	.00120	-.00410	-.00410	-.00060	4.11680	-.06150
4.161	4.054	-.04110	.32640	.15880	.06520	-.08890	.02320	.02230	.00230	4.34280	3.95940
4.116	6.154	-.04640	.32490	.15350	.06710	-.13590	.03300	.03160	.00350	4.31320	6.09990
	GRADIENT	.00207	.00037	.00023	-.00084	-.02342	.00685	.00666	.00076	.01456	1.01130

IA156A, AEDC PWT 16T-470, O T S W/SILTS (R8NSA9) (10 MAY 80)

REFERENCE DATA

SREF = 2690.0000 SQ.FT. XMRP = 976.0000 IN. XT
LREF = 1290.3000 INCHES YMRP = .0000 IN. YT
BREF = 1290.3000 INCHES ZMRP = 400.0000 IN. ZT
SCALE = .0200

PARAMETRIC DATA

IB-ELV = 12.000 OB-ELV = 5.000
BDFLAP = .000 SPDBRK = .000
RUDDER = .000 SILTS = 1.000
MACH = 1.150 RN/L = 3.500

RUN NO. 1273/ 0 RN/L = 3.50 GRADIENT INTERVAL = -5.00/ 5.00

ALPHAT	BETAT	CNFTS	CATS	CAFTS	CLMFTS	CYFTS	CYNTS	CYNFTS	CBLFTS	ALFATU	BETATU
-8.251	-5.958	-.44480	.34140	.15870	.05600	.11700	-.01480	-.01250	-.02710	-8.07510	-6.06640
-8.359	-3.743	-.43600	.33870	.15800	.05380	.07270	-.01030	-.00890	-.01790	-8.21010	-3.88650
-8.326	.203	-.41440	.34910	.15730	.03690	-.00110	-.00230	-.00230	.00120	-8.26030	.00680
-8.110	4.353	-.40960	.34230	.15980	.04290	-.07160	.00560	.00430	.01950	-8.15000	4.14980
-8.152	6.260	-.41850	.33900	.15520	.04490	-.10810	.01060	.00860	.02670	-8.22620	6.06740
	GRADIENT	.00324	.00043	.00023	-.00132	-.01782	.00196	.00163	.00462	.00759	.99268

RUN NO. 1274/ 0 RN/L = 3.51 GRADIENT INTERVAL = -5.00/ 5.00

ALPHAT	BETAT	CNFTS	CATS	CAFTS	CLMFTS	CYFTS	CYNTS	CYNFTS	CBLFTS	ALFATU	BETATU
-6.229	-5.957	-.36650	.33890	.16000	.05580	.11500	-.01600	-.01360	-.02380	-6.03910	-6.03900
-6.175	-4.026	-.35370	.33830	.16180	.05190	.07660	-.01210	-.01070	-.01620	-6.00380	-4.14200
-6.318	.110	-.32880	.34170	.16030	.03680	.00070	-.00360	-.00360	.00090	-6.24900	-.08480
-6.081	4.258	-.32640	.34120	.16220	.04370	-.07150	.00500	.00380	.01630	-6.14340	4.06070
-6.052	6.236	-.33340	.33740	.16130	.04650	-.10720	.01050	.00830	.02280	-6.15260	6.05560
	GRADIENT	.00329	.00035	.00005	-.00099	-.01788	.00206	.00175	.00392	-.01683	.99014

IA156A, AEDC PWT 16T-470, O T S W/SILTS (R8NSA9) (10 MAY 80)

REFERENCE DATA

SREF = 2690.0000 SQ.FT. XMRP = 976.0000 IN. XT
LREF = 1290.3000 INCHES YMRP = .0000 IN. YT
BREF = 1290.3000 INCHES ZMRP = 400.0000 IN. ZT
SCALE = .0200

PARAMETRIC DATA

IB-ELV = 12.000 OB-ELV = 5.000
BDFLAP = .000 SPDBRK = .000
RUDDER = .000 SILTS = 1.000
MACH = 1.150 RN/L = 3.500

RUN NO. 1275/ 0 RN/L = 3.51 GRADIENT INTERVAL = -5.00/ 5.00

ALPHAT	BETAT	CNFTS	CATS	CAFTS	CLMFTS	CYFTS	CYNTS	CYNFTS	CBLFTS	ALFATU	BETATU
-3.993	-6.042	-.29520	.33560	.16350	.06350	.11600	-.01810	-.01600	-.01980	-3.79020	-6.08110
-4.283	-3.940	-.28980	.33590	.16540	.05630	.07550	-.01430	-.01310	-.01370	-4.09410	-4.02340
-4.219	.381	-.25030	.33640	.16340	.04060	-.00550	-.00230	-.00240	.00160	-4.16190	.18200
-3.705	4.273	-.24720	.33930	.16690	.05270	-.07200	.00730	.00610	.01290	-3.81160	4.09610
-3.822	6.138	-.26070	.33790	.16500	.05550	-.10810	.01230	.01030	.01820	-3.95580	5.98050
	GRADIENT	.00526	.00041	.00017	-.00050	-.01797	.00263	.00234	.00324	.03348	.98834

RUN NO. 1276/ 0 RN/L = 3.50 GRADIENT INTERVAL = -5.00/ 5.00

ALPHAT	BETAT	CNFTS	CATS	CAFTS	CLMFTS	CYFTS	CYNTS	CYNFTS	CBLFTS	ALFATU	BETATU
-.209	-6.974	-.26320	.33480	.16560	.08310	.15000	-.03170	-.02960	-.01440	-.01270	-6.90820
-.204	-4.759	-.18630	.33190	.16760	.07590	.09890	-.02360	-.02200	-.00970	-.00760	-4.69330
-.264	-.421	-.14610	.33650	.17010	.05080	.01200	-.00720	-.00720	-.00130	-.06760	-.35520
-.183	3.722	-.14760	.33860	.17130	.05970	-.07430	.01680	.01530	.00660	.01280	3.78750
-.170	5.924	-.15130	.33640	.16740	.06330	-.12040	.02510	.02310	.01030	.02660	5.98940
	GRADIENT	.00460	.00079	.00044	-.00194	-.02042	.00476	.00439	.00192	.00228	1.00000

RUN NO. 1277/ 0 RN/L = 3.50 GRADIENT INTERVAL = -5.00/ 5.00

ALPHAT	BETAT	CNFTS	CATS	CAFTS	CLMFTS	CYFTS	CYNTS	CYNFTS	CBLFTS	ALFATU	BETATU
4.521	-5.817	-.07510	.32560	.16540	.08630	.14460	-.04240	-.04110	-.00510	4.39460	-5.98030
4.367	-3.707	-.06410	.32820	.16630	.07980	.09750	-.03350	-.03280	-.00390	4.27520	-3.89170
4.101	.152	-.04420	.33020	.16560	.06480	.00790	-.00910	-.00890	-.00080	4.16350	-.04490
4.190	4.058	-.04010	.32800	.16790	.06640	-.08320	.02050	.01960	.00210	4.37370	3.96380
4.141	6.166	-.04760	.32930	.16790	.06990	-.13460	.03210	.03080	.00360	4.34060	6.11350
	GRADIENT	.00309	-.00003	.00021	-.00172	-.02327	.00696	.00675	.00077	.01277	1.01179

IA156A, AEDC PWT 16T-470, O T S W/SILTS (R8NSB0) (10 MAY 80)

REFERENCE DATA

SREF = 2690.0000 SQ.FT. XMRP = 976.0000 IN. XT
LREF = 1290.3000 INCHES YMRP = .0000 IN. YT
BREF = 1290.3000 INCHES ZMRP = 400.0000 IN. ZT
SCALE = .0200

PARAMETRIC DATA

IB-ELV = 12.000 OB-ELV = 5.000
BDFLAP = .000 SPDBRK = .000
RUDDER = .000 SILTS = 1.000
MACH = 1.250 RN/L = 3.500

RUN NO. 1278/ 0 RN/L = 3.50 GRADIENT INTERVAL = -5.00/ 5.00

ALPHAT	BETAT	CNFTS	CATS	CAFTS	CLMFTS	CYFTS	CYNTS	CYNFTS	CBLFTS	ALFATU	BETATU
-8.207	-5.964	-.45710	.33410	.16630	.06960	.11260	-.01170	-.00980	-.02620	-8.02050	-6.07720
-8.317	-3.751	-.45250	.33620	.16690	.06720	.06610	-.00470	-.00340	-.01720	-8.15820	-3.90100
-8.266	.196	-.42090	.33980	.16890	.05020	-.00240	-.00020	-.00020	.00140	-8.19540	-.01070
-8.076	4.397	-.42100	.33710	.16780	.05300	-.07280	.00390	.00280	.01910	-8.11720	4.18260
-8.119	6.290	-.42700	.33420	.16360	.05350	-.10940	.00900	.00710	.02620	-8.19620	6.08590
	GRADIENT	.00382	.00010	.00011	-.00172	-.01704	.00105	.00076	.00445	.00518	.99217

RUN NO. 1279/ 0 RN/L = 3.50 GRADIENT INTERVAL = -5.00/ 5.00

ALPHAT	BETAT	CNFTS	CATS	CAFTS	CLMFTS	CYFTS	CYNTS	CYNFTS	CBLFTS	ALFATU	BETATU
-6.218	-5.994	-.37690	.33270	.17040	.06750	.10810	-.01150	-.00950	-.02290	-6.01740	-6.07950
-6.144	-4.032	-.36620	.33460	.17050	.06580	.06840	-.00670	-.00550	-.01550	-5.96190	-4.15330
-6.260	.138	-.33780	.33540	.17100	.04980	-.00520	-.00010	.00000	.00090	-6.18600	-.06770
-6.052	4.267	-.33640	.33600	.17350	.05210	-.07070	.00490	.00390	.01590	-6.11660	4.05830
-5.856	6.356	-.33170	.33260	.17230	.05100	-.11000	.01030	.00830	.02230	-5.96500	6.16690
	GRADIENT	.00360	.00017	.00036	-.00165	-.01676	.00140	.00113	.00378	-.01870	.98945

RUN NO. 1280/ 0 RN/L = 3.50 GRADIENT INTERVAL = -5.00/ 5.00

ALPHAT	BETAT	CNFTS	CATS	CAFTS	CLMFTS	CYFTS	CYNTS	CYNFTS	CBLFTS	ALFATU	BETATU
-4.088	-6.052	-.30970	.33220	.17250	.07440	.10920	-.01390	-.01190	-.01930	-3.87420	-6.09460
-4.233	-3.958	-.30380	.33350	.17340	.06960	.06620	-.00900	-.00800	-.01290	-4.03290	-4.04390
-4.162	.376	-.26280	.33330	.17300	.05080	-.00980	.00050	.00050	.00150	-4.09940	.16690
-3.679	4.282	-.25280	.33430	.17610	.05780	-.07110	.00710	.00610	.01250	-3.78980	4.09450
-3.801	6.159	-.26220	.33500	.17520	.05840	-.10690	.01120	.00940	.01770	-3.94130	5.99250
	GRADIENT	.00625	.00009	.00032	-.00148	-.01668	.00196	.00172	.00309	.02869	.98741

RUN NO. 1281/ 0 RN/L = 3.51 GRADIENT INTERVAL = -5.00/ 5.00

ALPHAT	BETAT	CNFTS	CATS	CAFTS	CLMFTS	CYFTS	CYNTS	CYNFTS	CBLFTS	ALFATU	BETATU
-.170	-6.998	-.21350	.32850	.17500	.09540	.14390	-.02870	-.02670	-.01360	.03680	-6.92750
-.158	-4.772	-.20050	.32940	.17070	.09030	.09590	-.02170	-.02020	-.00940	.04820	-4.70190
-.189	-.426	-.16560	.33060	.17850	.07050	.01060	-.00640	-.00640	-.00120	.01790	-.35510
-.111	3.732	-.16200	.32990	.17960	.07720	-.07220	.01450	.01310	.00610	.09520	3.80290
-.122	5.946	-.16540	.32880	.17480	.07790	-.11690	.02160	.01960	.00970	.08520	6.01650
	GRADIENT	.00455	.00006	.00105	-.00156	-.01976	.00425	.00391	.00182	.00543	1.00002

IA156A, AEDC PWT 16T-470, 0 T S W/SILTS (R8NSB0) (10 MAY 80)

REFERENCE DATA

SREF = 2690.0000 SQ.FT. XMRP = 976.0000 IN. XT
LREF = 1290.3000 INCHES YMRP = .0000 IN. YT
BREF = 1290.3000 INCHES ZMRP = 400.0000 IN. ZT
SCALE = .0200

PARAMETRIC DATA

IB-ELV = 12.000 OB-ELV = 5.000
BDFLAP = .000 SPDBRK = .000
RUDDER = .000 SILTS = 1.000
MACH = 1.250 RN/L = 3.500

RUN NO. 1282/ 0 RN/L = 3.51 GRADIENT INTERVAL = -5.00/ 5.00

ALPHAT	BETAT	CNFTS	CATS	CAFTS	CLMFTS	CYFTS	CYNTS	CYNFTS	CBLFTS	ALFATU	BETATU
4.579	-5.814	-.08130	.32230	.17270	.09510	.13970	-.03940	-.03820	-.00500	4.44670	-5.98690
4.435	-3.706	-.06920	.32360	.17450	.08790	.09080	-.02930	-.02860	-.00390	4.33910	-3.90160
4.173	.156	-.05840	.32320	.17440	.08040	.00150	-.00580	-.00570	-.00080	4.23940	-.05130
4.242	4.062	-.05720	.32320	.17120	.08220	-.08800	.02330	.02240	.00220	4.43760	3.96410
4.196	6.148	-.06120	.32220	.17160	.08400	-.13670	.03350	.03210	.00360	4.40690	6.09270
	GRADIENT	.00154	-.00005	-.00043	-.00073	-.02302	.00677	.00657	.00079	.01275	1.01259

IA156A, AEDC PWT 16T-470, 0 T S W/SILTS (R8NSB1) (10 MAY 80)

REFERENCE DATA

SREF = 2690.0000 SQ.FT. XMRP = 976.0000 IN. XT
LREF = 1290.3000 INCHES YMRP = .0000 IN. YT
BREF = 1290.3000 INCHES ZMRP = 400.0000 IN. ZT
SCALE = .0200

PARAMETRIC DATA

IB-ELV = 12.000 OB-ELV = 5.000
BDFLAP = .000 SPDBRK = .000
RUDDER = .000 SILTS = 1.000
MACH = 1.400 RN/L = 3.500

RUN NO. 1283/ 0 RN/L = 3.49 GRADIENT INTERVAL = -5.00/ 5.00

ALPHAT	BETAT	CNFTS	CATS	CAFTS	CLMFTS	CYFTS	CYNTS	CYNFTS	CBLFTS	ALFATU	BETATU
-8.213	-5.977	-.48270	.32230	.17260	.08380	.11050	-.00560	-.00390	-.02610	-7.98890	-6.10960
-8.286	-3.750	-.47030	.32600	.17320	.07860	.06160	.00110	.00220	-.01730	-8.09480	-3.92740
-8.243	.241	-.43920	.32870	.17690	.06210	-.00510	-.00160	-.00160	.00180	-8.15700	-.00410
-8.017	4.477	-.43750	.32880	.17600	.06720	-.07170	-.00330	-.00450	.02030	-8.06450	4.22200
-8.071	6.395	-.44590	.32600	.17590	.07020	-.11030	.00160	-.00010	.02630	-8.16160	6.15200
	GRADIENT	.00395	.00034	.00033	-.00136	-.01620	-.00053	-.00081	.00457	.00387	.99064

RUN NO. 1284/ 0 RN/L = 3.50 GRADIENT INTERVAL = -5.00/ 5.00

ALPHAT	BETAT	CNFTS	CATS	CAFTS	CLMFTS	CYFTS	CYNTS	CYNFTS	CBLFTS	ALFATU	BETATU
-6.228	-6.011	-.39030	.32250	.17590	.07440	.10240	-.00210	-.00040	-.02240	-5.98760	-6.11000
-6.180	-4.052	-.37630	.32450	.17710	.06880	.06210	.00160	.00260	-.01530	-5.96190	-4.19410
-6.273	.166	-.35540	.32840	.17340	.05660	-.00660	-.00010	.00000	.00090	-6.18300	-.07890
-6.007	4.345	-.33930	.32650	.17980	.05650	-.06800	-.00320	-.00400	.01590	-6.08300	4.09640
-5.973	6.332	-.34750	.32560	.17560	.05910	-.10600	.00050	-.00110	.02210	-6.09730	6.10370
	GRADIENT	.00441	.00024	.00032	-.00147	-.01549	-.00057	-.00079	.00372	-.01448	.98722

IA156A, AEDC PWT 16T-470, 0 T S W/SILTS (R8NSB1) (10 MAY 80)

REFERENCE DATA

SREF = 2690.0000 SQ.FT. XMRP = 976.0000 IN. XT
LREF = 1290.3000 INCHES YMRP = .0000 IN. YT
BREF = 1290.3000 INCHES ZMRP = 400.0000 IN. ZT
SCALE = .0200

PARAMETRIC DATA

IB-ELV = 12.000 OB-ELV = 5.000
BDFLAP = .000 SPDBRK = .000
RUDDER = .000 SILTS = 1.000
MACH = 1.400 RN/L = 3.500

RUN NO. 1285/ 0 RN/L = 3.50 GRADIENT INTERVAL = -5.00/ 5.00

ALPHAT	BETAT	CNFTS	CATS	CAFTS	CLMFTS	CYFTS	CYNTS	CYNFTS	CBLFTS	ALFATU	BETATU
-4.217	-6.035	-.31700	.32300	.17980	.07540	.10500	-.00580	-.00420	-.01860	-3.96110	-6.08570
-4.229	-3.973	-.30090	.32440	.18020	.06840	.06440	-.00230	-.00140	-.01230	-3.98760	-4.07270
-4.165	.436	-.27220	.32340	.18090	.05600	-.01110	.00030	.00030	.00150	-4.08990	.18600
-3.628	4.347	-.25740	.32730	.18340	.06280	-.06870	-.00020	-.00100	.01190	-3.76000	4.12180
-3.750	6.212	-.26410	.32470	.18150	.06180	-.10470	.00420	.00270	.01670	-3.91700	6.01240
	GRADIENT	.00526	.00034	.00038	-.00072	-.01602	.00026	.00006	.00291	.02629	.98453

RUN NO. 1286/ 0 RN/L = 3.50 GRADIENT INTERVAL = -5.00/ 5.00

ALPHAT	BETAT	CNFTS	CATS	CAFTS	CLMFTS	CYFTS	CYNTS	CYNFTS	CBLFTS	ALFATU	BETATU
-.208	-7.057	-.21400	.32250	.16940	.09820	.14300	-.02430	-.02260	-.01250	.03760	-6.97110
-.205	-4.867	-.19540	.31840	.18210	.08930	.09340	-.01640	-.01510	-.00880	.04140	-4.78100
-.206	-.373	-.16530	.31930	.17920	.07430	.00820	-.00460	-.00450	-.00110	.04040	-.28720
-.143	3.743	-.16690	.32090	.18370	.08230	-.07280	.01150	.01040	.00560	.10390	3.82950
-.173	5.970	-.16570	.32230	.18370	.07920	-.11870	.01910	.01740	.00920	.07080	6.05400
	GRADIENT	.00336	.00029	.00017	-.00085	-.01930	.00323	.00295	.00167	.00715	1.00006

RUN NO. 1287/ 0 RN/L = 3.49 GRADIENT INTERVAL = -5.00/ 5.00

ALPHAT	BETAT	CNFTS	CATS	CAFTS	CLMFTS	CYFTS	CYNTS	CYNFTS	CBLFTS	ALFATU	BETATU
4.688	-5.772	-.08200	.31430	.17940	.10890	.13840	-.03930	-.03800	-.00450	4.53090	-5.97900
4.516	-3.662	-.06820	.31490	.17980	.09680	.08880	-.03000	-.02920	-.00350	4.40310	-3.89590
4.212	.189	-.06440	.31560	.18120	.09100	.00220	-.00630	-.00630	-.00070	4.29210	-.05970
4.261	4.092	-.05650	.31470	.18130	.08860	-.08510	.01950	.01870	.00180	4.49320	3.97650
4.189	6.136	-.06070	.31640	.18160	.09080	-.13540	.03200	.03060	.00320	4.43930	6.07220
	GRADIENT	.00150	-.00003	.00019	-.00106	-.02243	.00638	.00618	.00068	.01171	1.01527

IA156A FORCE DATA WITH FLOW ANGULARITY CORRECTION

IA156A, AEDC PWT 16T-470, O T S W/SILTS (R8NSB2) (10 MAY 80)

REFERENCE DATA

SREF = 2690.0000 SQ.FT. XMRP = 976.0000 IN. XT
LREF = 1290.3000 INCHES YMRP = .0000 IN. YT
BREF = 1290.3000 INCHES ZMRP = 400.0000 IN. ZT
SCALE = .0200

PARAMETRIC DATA

IB-ELV = 12.000 OB-ELV = 5.000
BDFLAP = .000 SPDBRK = .000
RUDDER = .000 SILTS = 1.000
MACH = 1.550 RN/L = 3.200

RUN NO. 1288/ 0 RN/L = 3.00 GRADIENT INTERVAL = -5.00/ 5.00

ALPHAT	BETAT	CNFTS	CATS	CAFTS	CLMFTS	CYFTS	CYNTS	CYNFTS	CBLFTS	ALFATU	BETATU
-8.250	-5.924	-.48580	.30200	.17010	.09790	.11370	-.01020	-.00850	-.02490	-7.92740	-6.07850
-8.318	-3.697	-.47420	.30420	.17130	.09180	.06480	-.00340	-.00230	-.01700	-8.03410	-3.91560
-8.219	.336	-.44660	.30840	.17360	.07920	-.00400	-.00330	-.00320	.00160	-8.06830	.01140
-7.988	4.548	-.44270	.30930	.17640	.08120	-.07510	-.00030	-.00150	.01950	-8.01600	4.19220
-7.945	6.426	-.44610	.30680	.17460	.08090	-.11350	.00460	.00300	.02520	-8.03510	6.08120
	GRADIENT	.00380	.00062	.00062	-.00127	-.01697	.00038	.00010	.00443	.00227	.98332

RUN NO. 1289/ 0 RN/L = 3.00 GRADIENT INTERVAL = -5.00/ 5.00

ALPHAT	BETAT	CNFTS	CATS	CAFTS	CLMFTS	CYFTS	CYNTS	CYNFTS	CBLFTS	ALFATU	BETATU
-6.279	-5.973	-.39010	.30280	.17310	.08240	.10810	-.00810	-.00640	-.02130	-5.93800	-6.07920
-6.229	-4.005	-.37920	.30300	.17290	.07800	.06680	-.00300	-.00200	-.01490	-5.91310	-4.17200
-6.247	.255	-.35640	.30560	.17430	.06920	-.00470	-.00260	-.00250	.00120	-6.09130	-.06800
-5.957	4.424	-.34480	.30780	.17780	.06790	-.07070	-.00060	-.00150	.01500	-6.02620	4.07250
-5.898	6.417	-.35240	.30880	.17670	.07060	-.11170	.00500	.00340	.02100	-6.03530	6.08750
	GRADIENT	.00409	.00057	.00058	-.00120	-.01632	.00028	.00006	.00355	-.01352	.97814

RUN NO. 1290/ 0 RN/L = 3.00 GRADIENT INTERVAL = -5.00/ 5.00

ALPHAT	BETAT	CNFTS	CATS	CAFTS	CLMFTS	CYFTS	CYNTS	CYNFTS	CBLFTS	ALFATU	BETATU
-4.099	-6.080	-.30580	.30280	.17560	.07780	.10760	-.01060	-.00900	-.01710	-3.74270	-6.10890
-4.363	-3.945	-.29840	.30180	.17540	.07070	.06510	-.00520	-.00430	-.01120	-4.02190	-4.05290
-4.207	.517	-.27240	.30370	.17720	.06190	-.00970	-.00190	-.00190	.00160	-4.06940	.18460
-3.614	4.445	-.25670	.30640	.17960	.06700	-.07110	.00280	.00200	.01080	-3.76240	4.11890
-3.701	6.284	-.26750	.30680	.18000	.06850	-.10970	.00880	.00740	.01570	-3.90120	5.98860
	GRADIENT	.00499	.00055	.00050	-.00048	-.01625	.00095	.00075	.00263	.03000	.97350

RUN NO. 1291/ 0 RN/L = 3.00 GRADIENT INTERVAL = -5.00/ 5.00

ALPHAT	BETAT	CNFTS	CATS	CAFTS	CLMFTS	CYFTS	CYNTS	CYNFTS	CBLFTS	ALFATU	BETATU
-.311	-7.047	-.20510	.30100	.17660	.09410	.13950	-.02470	-.02300	-.01160	.01350	-6.89830
-.291	-4.873	-.18720	.29850	.17730	.08760	.09180	-.01620	-.01500	-.00790	.03400	-4.72300
-.299	-.494	-.16500	.29940	.17920	.07590	.00780	-.00310	-.00300	-.00090	.02620	-.34250
-.285	3.653	-.15860	.30310	.18140	.07440	-.07240	.01240	.01160	.00510	.04100	3.80380
-.306	5.827	-.15710	.30350	.18180	.07110	-.11640	.02080	.01920	.00840	.01790	5.97530
	RADIENT	.00337	.00054	.00048	-.00156	-.01926	.00335	.00312	.00153	.00080	1.00020

IA156A, AEDC PWT 16T-470, 0 T S W/SILTS (R8NSB2) (10 MAY 80)

REFERENCE DATA

SREF = 2690.0000 SQ.FT. XMRP = 976.0000 IN. XT
LREF = 1290.3000 INCHES YMRP = .0000 IN. YT
BREF = 1290.3000 INCHES ZMRP = 400.0000 IN. ZT
SCALE = .0200

PARAMETRIC DATA

IB-ELV = 12.000 OB-ELV = 5.000
BDFLAP = .000 SPDBRK = .000
RUDDER = .000 SILTS = 1.000
MACH = 1.550 RN/L = 3.200

RUN NO. 1292/ 0 RN/L = 3.00 GRADIENT INTERVAL = -5.00/ 5.00

ALPHAT	BETAT	CNFTS	CATS	CAFTS	CLMFTS	CYFTS	CYNTS	CYNFTS	CBLFTS	ALFATU	BETATU
4.664	-5.691	-.07420	.30110	.17930	.10590	.13470	-.03930	-.03800	-.00380	4.47700	-5.99460
4.417	-3.544	-.06290	.30030	.18020	.09370	.08580	-.02800	-.02710	-.00290	4.29330	-3.87840
4.121	.271	-.06050	.29860	.17830	.08890	-.00020	-.00590	-.00600	-.00050	4.26080	-.05420
4.082	4.104	-.05590	.29780	.17780	.08610	-.08240	.01800	.01700	.00150	4.41260	3.97670
4.040	6.178	-.05360	.29770	.17810	.08510	-.13240	.03030	.02890	.00280	4.39490	6.12380
	GRADIENT	.00092	-.00033	-.00031	-.00099	-.02199	.00601	.00577	.00058	.01562	1.02704

IA15FA, AEDC PWT 16T-470, 0 T S W/SILTS (R8NS83) (10 MAY 80)

REFERENCE DATA

SREF = 2690.0000 SQ.FT. XMRP = 976.0000 IN. XT
LREF = 1290.3000 INCHES YMRP = .0000 IN. YT
BREF = 1290.3000 INCHES ZMRP = 400.0000 IN. ZT
SCALE = .0200

PARAMETRIC DATA

IB-ELV = 12.000 OB-ELV = 9.000
BDFLAP = .000 SPDBRK = .000
RUDDER = .000 SILTS = 1.000
MACH = .600 RN/L = 3.500

RUN NO. 1295/ 0 RN/L = 3.50 GRADIENT INTERVAL = -5.00/ 5.00

ALPHAT	BETAT	CNFTS	CATS	CAFTS	CLMFTS	CYFTS	CYNTS	CYNFTS	CBLFTS	ALFATU	BETATU
-8.132	-7.827	-.38480	.20760	.05800	.06630	.09310	.00480	.00780	-.02800	-8.04400	-8.01870
-8.104	-5.771	-.37660	.20860	.05620	.06120	.06770	.00250	.00490	-.02100	-8.04360	-5.97360
-8.095	-3.747	-.36780	.20890	.05960	.05820	.04490	.00020	.00170	-.01370	-8.07340	-3.95700
-8.003	.362	-.35760	.21230	.06210	.05550	-.00820	.00020	.00020	.00180	-8.08460	.16780
-7.868	4.248	-.34370	.21280	.06150	.05090	-.05550	.00140	.00010	.01480	-8.02960	4.11120
-7.894	6.158	-.34260	.21060	.05920	.05070	-.07690	.00010	-.00210	.02110	-8.07650	6.05160
-7.914	8.153	-.34380	.21090	.05730	.05200	-.09980	-.00100	-.00390	.02680	-8.10940	8.07390
	GRADIENT	.00301	.00049	.00024	-.00091	-.01256	.00015	-.00020	.00357	.00540	1.00912

RUN NO. 1296/ 0 RN/L = 3.49 GRADIENT INTERVAL = -5.00/ 5.00

ALPHAT	BETAT	CNFTS	CATS	CAFTS	CLMFTS	CYFTS	CYNTS	CYNFTS	CBLFTS	ALFATU	BETATU
-6.095	-7.891	-.32750	.20840	.05980	.06650	.10180	.00120	.00410	-.02450	-5.97930	-8.06820
-6.053	-5.857	-.31970	.20830	.06190	.06220	.07270	.00080	.00310	-.01860	-5.96390	-6.04880
-5.980	-3.954	-.31080	.20880	.06400	.05900	.04820	-.00080	.00070	-.01240	-5.92760	-4.15820
-6.026	.094	-.29240	.20930	.06560	.05160	-.00590	.00000	.00000	.00110	-6.09940	-.10340
-5.892	4.151	-.28380	.21240	.06470	.05190	-.05310	.00120	-.00010	.01230	-6.06750	4.03410
-5.802	6.122	-.28060	.21180	.06500	.05230	-.07780	.00140	-.00080	.01760	-5.99790	6.04340
-5.840	8.100	-.28540	.21280	.06140	.05270	-.10570	.00270	-.00010	.02260	-6.04490	8.04870
	GRADIENT	.00333	.00044	.00009	-.00088	-.01250	.00025	-.00010	.00305	-.01725	1.01079

IA156A, AEDC PWT 16T-470, 0 T S W/SILTS (R8NSB3) (10 MAY 80)

REFERENCE DATA

SREF = 2690.0000 SQ.FT. XMRP = 976.0000 IN. XT
LREF = 1290.3000 INCHES YMRP = .0000 IN. YT
BREF = 1290.3000 INCHES ZMRP = 400.0000 IN. ZT
SCALE = .0200

PARAMETRIC DATA

IB-ELV = 12.000 OB-ELV = 9.000
BDFLAP = .000 SPDBRK = .000
RUDDER = .000 SILTS = 1.000
MACH = .600 RN/L = 3.500

RUN NO. 1297/ 0 RN/L = 3.49 GRADIENT INTERVAL = -5.00/ 5.00

ALPHAT	BETAT	CNFTS	CATS	CAFTS	CLMFTS	CYFTS	CYNTS	CYNFTS	CBLFTS	ALFATU	BETATU
-4.123	-7.899	-.28040	.20890	.06560	.06960	.10810	-.00310	-.00040	-.02080	-3.97910	-8.05300
-4.118	-5.894	-.27020	.20760	.06620	.06520	.07520	-.00150	.00070	-.01540	-3.99360	-6.06470
-4.136	-3.836	-.26200	.20860	.06720	.06120	.04520	-.00200	-.00060	-.00980	-4.04860	-4.02810
-3.926	.179	-.23370	.20920	.06830	.05240	-.00780	.00000	-.00010	.00120	-4.00200	-.01790
-3.605	4.199	-.22090	.21160	.07130	.05650	-.05910	.00430	.00300	.00980	-3.80330	4.12530
-3.713	5.993	-.22430	.21060	.06840	.05560	-.08260	.00520	.00310	.01370	-3.92030	5.95260
-3.750	7.976	-.22690	.21300	.06740	.05470	-.11310	.00830	.00580	.01800	-3.96110	7.96180
	GRADIENT	.00512	.00037	.00051	-.00058	-.01298	.00078	.00045	.00244	.03053	1.01479

RUN NO. 1298/ 0 RN/L = 3.49 GRADIENT INTERVAL = -5.00/ 5.00

ALPHAT	BETAT	CNFTS	CATS	CAFTS	CLMFTS	CYFTS	CYNTS	CYNFTS	CBLFTS	ALFATU	BETATU
-.197	-8.670	-.19800	.21260	.07020	.08000	.15110	-.02260	-.02030	-.01510	-.00120	-8.74860
-.190	-6.581	-.19140	.20820	.07040	.07810	.10690	-.01520	-.01300	-.01130	.00650	-6.65740
-.181	-4.311	-.18150	.20730	.07250	.07400	.06780	-.01130	-.00970	-.00720	.01490	-4.38810
-.177	-.250	-.16170	.20730	.07220	.06390	.00050	-.00060	-.00070	-.00040	.01920	-.32740
-.135	3.827	-.15480	.20830	.07370	.06650	-.06360	.01160	.01010	.00500	.06180	3.74940
-.129	5.926	-.15350	.20940	.07260	.06620	-.09890	.01740	.01540	.00800	.06750	5.84920
-.123	8.026	-.14480	.21100	.07110	.06340	-.13380	.02250	.02030	.01020	.07310	7.95050
	GRADIENT	.00328	.00012	.00015	-.00092	-.01615	.00281	.00243	.00150	.00577	.99999

RUN NO. 1299/ 0 RN/L = 3.49 GRADIENT INTERVAL = -5.00/ 5.00

ALPHAT	BETAT	CNFTS	CATS	CAFTS	CLMFTS	CYFTS	CYNTS	CYNFTS	CBLFTS	ALFATU	BETATU
4.437	-7.989	-.07480	.20440	.07200	.07980	.16570	-.04140	-.03980	-.00330	4.22770	-8.00810
4.345	-5.862	-.06790	.20060	.07130	.07690	.11890	-.03080	-.02940	-.00210	4.13940	-5.90700
4.332	-3.876	-.06150	.19930	.07080	.07510	.07800	-.02160	-.02060	-.00140	4.13810	-3.95870
4.131	.081	-.05150	.19970	.06880	.06630	-.00020	-.00230	-.00230	-.00050	4.04770	-.11320
4.164	4.141	-.04590	.20180	.06980	.06800	-.07610	.01700	.01590	-.00010	4.24750	3.94690
4.104	6.277	-.04300	.20320	.07200	.06660	-.12070	.02730	.02550	.00050	4.22720	6.10580
4.079	8.275	-.03600	.20460	.07040	.06250	-.15640	.03490	.03290	.00130	4.22250	8.12070
	GRADIENT	.00194	.00031	-.00012	-.00088	-.01922	.00481	.00455	.00016	.01380	.98616

IA156A, AEDC PWT 16T-470, O T S W/SILTS (R8NS83) (10 MAY 80)

REFERENCE DATA

SREF = 2690.0000 SQ.FT. XMRP = 976.0000 IN. XT
LREF = 1290.3000 INCHES YMRP = .0000 IN. YT
BREF = 1290.3000 INCHES ZMRP = 400.0000 IN. ZT
SCALE = .0200

PARAMETRIC DATA

IB-ELV = 12.000 OB-ELV = 9.000
BDFLAP = .000 SPDBRK = .000
RUDDER = .000 SILTS = 1.000
MACH = .600 RN/L = 3.500

RUN NO. 1300/ 0 RN/L = 3.50 GRADIENT INTERVAL = -5.00/ 5.00

ALPHAT	BETAT	CNFTS	CATS	CAFTS	CLMFTS	CYFTS	CYNTS	CYNFTS	CBLFTS	ALFATU	BETATU
6.506	-8.031	-.01650	.20070	.06980	.07500	.17670	-.04710	-.04570	.00060	6.30300	-8.08650
6.494	-5.956	-.00940	.19680	.06840	.07430	.12700	-.03500	-.03360	.00120	6.30170	-6.04070
6.484	-3.879	-.00900	.19610	.06770	.07520	.08270	-.02330	-.02240	.00080	6.31130	-3.99900
6.199	.201	-.00530	.19930	.06910	.06970	-.00430	-.00030	-.00020	-.00050	6.12220	.00450
6.114	4.143	-.00180	.19870	.06930	.06890	-.08260	.01960	.01860	-.00150	6.16210	3.93850
6.078	6.091	.00300	.19940	.06960	.06690	-.11920	.02920	.02770	-.00190	6.16530	5.89960
6.076	8.146	.01010	.20190	.06870	.06200	-.16180	.03910	.03730	-.00160	6.19100	7.97020
	GRADIENT	.00090	.00033	.00020	-.00079	-.02061	.00535	.00511	-.00029	-.01876	.98943

RUN NO. 1301/ 0 RN/L = 3.50 GRADIENT INTERVAL = -5.00/ 5.00

ALPHAT	BETAT	CNFTS	CATS	CAFTS	CLMFTS	CYFTS	CYNTS	CYNFTS	CBLFTS	ALFATU	BETATU
8.425	-7.875	.04170	.19560	.06150	.07000	.17270	-.04690	-.04550	.00400	8.23110	-7.95760
8.336	-5.794	.04010	.19280	.06450	.07150	.12510	-.03500	-.03380	.00340	8.15660	-5.90330
8.353	-3.813	.04100	.19180	.06800	.07320	.07770	-.02130	-.02050	.00240	8.19650	-3.95440
8.257	.184	.04200	.19790	.06620	.07330	-.00570	.00080	.00070	-.00020	8.17880	-.01250
8.281	4.244	.05340	.19400	.06890	.06770	-.08190	.01980	.01870	-.00280	8.30310	4.03430
8.235	6.272	.06010	.19700	.06160	.06470	-.12320	.03070	.02920	-.00410	8.29470	6.07030
8.205	8.309	.06810	.19930	.06180	.05840	-.17380	.04440	.04290	-.00470	8.29350	8.11760
	GRADIENT	.00154	.00027	.00011	-.00068	-.01981	.00510	.00486	-.00065	.01328	.99151

IA156A, AEDC PWT 16T-470, 0 T S W/SILTS (R8NSB4) (10 MAY 80)

REFERENCE DATA

SREF = 2690.0000 SQ.FT. XMRP = 976.0000 IN. XT
LREF = 1290.3000 INCHES YMRP = .0000 IN. YT
BREF = 1290.3000 INCHES ZMRP = 400.0000 IN. ZT
SCALE = .0200

PARAMETRIC DATA

IB-ELV = 12.000 OB-ELV = 9.000
BDFLAP = .000 SPDBRK = .000
RUDDER = .000 SILTS = 1.000
MACH = .800 RN/L = 3.500

RUN NO. 1302/ 0 RN/L = 3.50 GRADIENT INTERVAL = -5.00/ 5.00

ALPHAT	BETAT	CNFTS	CATS	CAFTS	CLMFTS	CYFTS	CYNTS	CYNFTS	CBLFTS	ALFATU	BETATU
-8.221	-5.852	-.40640	.21980	.07330	.06850	.07940	-.00440	-.00160	-.02230	-8.06470	-5.98890
-8.054	-3.873	-.38980	.22350	.07180	.06540	.05560	-.00540	-.00380	-.01480	-7.92360	-4.03470
-8.143	.381	-.37480	.22690	.07150	.05650	-.00810	.00050	.00070	.00200	-8.10940	.17630
-7.998	4.319	-.36410	.22310	.07300	.05090	-.05880	.00330	.00190	.01550	-8.06150	4.12190
-7.999	6.234	-.36690	.22150	.06930	.05140	-.08240	.00250	.00010	.02190	-8.09570	6.05060
	GRADIENT	.00314	-.00004	.00014	-.00177	-.01398	.00107	.00070	.00370	-.01719	.99552

RUN NO. 1303/ 0 RN/L = 3.50 GRADIENT INTERVAL = -5.00/ 5.00

ALPHAT	BETAT	CNFTS	CATS	CAFTS	CLMFTS	CYFTS	CYNTS	CYNFTS	CBLFTS	ALFATU	BETATU
-6.118	-5.932	-.33830	.22090	.07300	.06860	.08770	-.00750	-.00480	-.01960	-5.94280	-6.04350
-6.067	-3.998	-.32870	.22210	.07650	.06600	.05810	-.00660	-.00490	-.01310	-5.91530	-4.13960
-6.167	.130	-.30350	.22200	.07780	.05190	-.00340	-.00090	-.00080	.00070	-6.12550	-.07320
-5.994	4.229	-.30070	.22480	.07660	.05320	-.05960	.00490	.00350	.01270	-6.08000	4.04010
-5.783	6.312	-.29270	.22210	.07790	.05300	-.08830	.00670	.00430	.01820	-5.90800	6.14600
	GRADIENT	.00341	.00033	.00001	-.00156	-.01431	.00140	.00102	.00314	-.02006	.99422

RUN NO. 1304/ 0 RN/L = 3.50 GRADIENT INTERVAL = -5.00/ 5.00

ALPHAT	BETAT	CNFTS	CATS	CAFTS	CLMFTS	CYFTS	CYNTS	CYNFTS	CBLFTS	ALFATU	BETATU
-4.051	-6.020	-.28410	.22090	.07850	.07280	.09090	-.00950	-.00690	-.01630	-3.85630	-6.09270
-4.196	-3.908	-.27850	.22210	.07910	.06870	.05730	-.00820	-.00660	-.01070	-4.02190	-4.02100
-4.124	.376	-.24010	.22040	.07920	.05090	-.01040	.00120	.00110	.00120	-4.09350	.17020
-3.682	4.253	-.23420	.22330	.08140	.05690	-.06520	.00820	.00680	.01030	-3.80890	4.08880
-3.761	6.090	-.23810	.22210	.07940	.05710	-.09220	.01080	.00860	.01460	-3.91310	5.94970
	GRADIENT	.00549	.00014	.00028	-.00149	-.01502	.00201	.00164	.00258	.02535	.99345

RUN NO. 1306/ 0 RN/L = 3.50 GRADIENT INTERVAL = -5.00/ 5.00

ALPHAT	BETAT	CNFTS	CATS	CAFTS	CLMFTS	CYFTS	CYNTS	CYNFTS	CBLFTS	ALFATU	BETATU
-.184	-6.779	-.20300	.22240	.08290	.08090	.12340	-.02210	-.01980	-.01260	.01990	-6.74060
-.185	-4.604	-.19390	.21920	.08270	.07630	.08120	-.01660	-.01480	-.00860	.01860	-4.56620
-.201	-.425	-.16540	.21390	.08110	.06080	.00570	-.00290	-.00270	-.00120	.00290	-.38670
-.152	3.746	-.15910	.21890	.08330	.06260	-.06800	.01410	.01270	.00570	.05180	3.78440
-.137	5.865	-.16220	.22080	.08270	.06600	-.10730	.02170	.01960	.00910	.06670	5.90340
	GRADIENT	.00417	-.00004	.00007	-.00164	-.01787	.00368	.00329	.00171	.00397	1.00005

IA156A, AEDC PWT 16T-470, 0 T S W/SILTS (R8NSB4) (10 MAY 80)

REFERENCE DATA

SREF =	2690.0000 SQ.FT.	XMRP =	976.0000 IN. XT		
LREF =	1290.3000 INCHES	YMRP =	.0000 IN. YT		
BREF =	1290.3000 INCHES	ZMRP =	400.0000 IN. ZT		
SCALE =	.0200				

PARAMETRIC DATA

IB-ELV =	12.000	OB-ELV =	9.000
BDFLAP =	.000	SPDBRK =	.000
RUDDER =	.000	SILTS =	1.000
MACH =	.800	RN/L =	3.500

RUN NO. 1314/ 0 RN/L = 3.49 GRADIENT INTERVAL = -5.00/ 5.00

ALPHAT	BETAT	CNFTS	CATS	CAFTS	CLMFTS	CYFTS	CYNTS	CYNFTS	CBLFTS	ALFATU	BETATU
6.450	-5.893	-.00700	.21040	.07580	.06940	.13600	-.03780	-.03630	.00050	6.33060	-6.06240
6.428	-3.822	-.00030	.20680	.08050	.06870	.08490	-.02460	-.02360	.00060	6.34440	-4.01220
6.116	.178	.01170	.21030	.07510	.05920	-.00140	-.00130	-.00130	-.00050	6.15260	-.02640
6.068	4.057	.00920	.20850	.07560	.06180	-.08010	.02080	.01960	-.00140	6.21390	3.90900
6.047	6.080	.01520	.21150	.07910	.05800	-.12440	.03250	.03090	-.00160	6.21980	5.96570
	GRADIENT	.00122	.00022	-.00063	-.00088	-.02095	.00576	.00548	-.00025	-.01673	1.00535

IA156A, AEDC PWT 16T-470, 0 T S W/SILTS (R8NSB5) (10 MAY 80)

REFERENCE DATA

SREF =	2690.0000 SQ.FT.	XMRP =	976.0000 IN. XT		
LREF =	1290.3000 INCHES	YMRP =	.0000 IN. YT		
BREF =	1290.3000 INCHES	ZMRP =	400.0000 IN. ZT		
SCALE =	.0200				

PARAMETRIC DATA

IB-ELV =	12.000	OB-ELV =	9.000
BDFLAP =	.000	SPDBRK =	.000
RUDDER =	.000	SILTS =	1.000
MACH =	.800	RN/L =	3.500

RUN NO. 1313/ 0 RN/L = 3.49 GRADIENT INTERVAL = -5.00/ 5.00

ALPHAT	BETAT	CNFTS	CATS	CAFTS	CLMFTS	CYFTS	CYNTS	CYNFTS	CBLFTS	ALFATU	BETATU
-.191	-6.747	-.20270	.22280	.08180	.08020	.12410	-.02260	-.02030	-.01260	.01360	-6.70850
-.189	-4.637	-.19430	.22040	.08320	.07590	.08350	-.01710	-.01530	-.00870	.01530	-4.59880
-.205	-.420	-.16590	.21600	.08160	.05980	.00560	-.00240	-.00230	-.00120	-.00100	-.38180
-.152	3.752	-.15920	.22140	.08430	.06250	-.06920	.01430	.01290	.00580	.05170	3.79030
-.142	5.876	-.16100	.22150	.08210	.06500	-.10840	.02210	.02000	.00920	.06240	5.91460
	GRADIENT	.00419	.00012	.00013	-.00160	-.01820	.00374	.00336	.00173	.00432	1.00006

IA156A, AEDC PWT 16T-470, 0 T S W/SILTS (R8NS86) (10 MAY 80)

REFERENCE DATA

SREF = 2690.0000 SQ.FT. XMRP = 976.0000 IN. XT
LREF = 1290.3000 INCHES YMRP = .0000 IN. YT
BREF = 1290.3000 INCHES ZMRP = 400.0000 IN. ZT
SCALE = .0200

PARAMETRIC DATA

IB-ELV =	12.000	OB-ELV =	9.000
BDFLAP =	.000	SPDBRK =	.000
RUDDER =	.000	SILTS =	1.000
MACH =	.900	RN/L =	3.500

RUN NO. 1308/ 0 RN/L = 3.50 GRADIENT INTERVAL = -5.00/ 5.00

ALPHAT	BETAT	CNFTS	CATS	CAFTS	CLMFTS	CYFTS	CYNTS	CYNFTS	CBLFTS	ALFATU	BETATU
-8.172	-5.916	-.41610	.24520	.08240	.06520	.10050	-.01420	-.01180	-.02310	-8.00590	-6.03840
-8.177	-3.832	-.40960	.24570	.08280	.06390	.06520	-.01150	-.01020	-.01500	-8.03720	-3.98410
-8.182	.295	-.38650	.24900	.08550	.05340	-.00720	-.00020	.00000	.00170	-8.13270	.09420
-8.035	4.268	-.37400	.24420	.08420	.04750	-.06910	.00850	.00720	.01650	-8.08460	4.06740
-8.055	6.223	-.37840	.24230	.07950	.04730	-.09680	.00960	.00740	.02320	-8.13940	6.03410
	GRADIENT	.00440	-.00018	.00018	-.00203	-.01659	.00247	.00215	.00389	-.00596	.99393

RUN NO. 1309/ 0 RN/L = 3.50 GRADIENT INTERVAL = -5.00/ 5.00

ALPHAT	BETAT	CNFTS	CATS	CAFTS	CLMFTS	CYFTS	CYNTS	CYNFTS	CBLFTS	ALFATU	BETATU
-6.164	-5.933	-.35510	.24620	.08450	.06640	.10200	-.01460	-.01240	-.02050	-5.98140	-6.03100
-6.094	-4.004	-.33900	.24330	.09060	.06260	.06940	-.01280	-.01150	-.01360	-5.93230	-4.13310
-6.210	.126	-.31410	.24660	.08830	.04860	-.00370	-.00110	-.00090	.00070	-6.15520	-.07290
-6.038	4.229	-.30890	.24330	.08710	.04950	-.06740	.00880	.00740	.01370	-6.11130	4.03540
-5.833	6.313	-.30350	.24320	.09210	.05000	-.10060	.01150	.00920	.01960	-5.94700	6.14010
	GRADIENT	.00366	.00000	-.00043	-.00159	-.01662	.00262	.00230	.00332	-.02178	.99220

RUN NO. 1310/ 0 RN/L = 3.49 GRADIENT INTERVAL = -5.00/ 5.00

ALPHAT	BETAT	CNFTS	CATS	CAFTS	CLMFTS	CYFTS	CYNTS	CYNFTS	CBLFTS	ALFATU	BETATU
-4.026	-6.027	-.29110	.24540	.09180	.06990	.10400	-.01550	-.01310	-.01710	-3.82700	-6.08420
-4.232	-3.924	-.28280	.24390	.09220	.06370	.06730	-.01300	-.01160	-.01140	-4.05050	-4.02310
-4.174	.378	-.24010	.24050	.09100	.04300	-.01000	.00080	.00080	.00120	-4.13120	.17590
-3.706	4.263	-.23590	.24140	.09290	.05160	-.07040	.00970	.00830	.01110	-3.82160	4.09170
-3.800	6.089	-.24460	.24190	.09160	.05290	-.10060	.01370	.01160	.01560	-3.94290	5.93940
	GRADIENT	.00580	-.00031	.00008	-.00154	-.01684	.00278	.00244	.00275	.02713	.99095

RUN NO. 1311/ 0 RN/L = 3.49 GRADIENT INTERVAL = -5.00/ 5.00

ALPHAT	BETAT	CNFTS	CATS	CAFTS	CLMFTS	CYFTS	CYNTS	CYNFTS	CBLFTS	ALFATU	BETATU
-.220	-6.872	-.20640	.24560	.09480	.07730	.13460	-.02570	-.02370	-.01290	-.01990	-6.82010
-.221	-4.704	-.19320	.24290	.09530	.07130	.09140	-.02020	-.01850	-.00920	-.02110	-4.65230
-.270	-.387	-.15300	.23350	.09370	.04590	.00720	-.00370	-.00350	-.00120	-.06970	-.33480
-.211	3.718	-.15360	.24040	.09410	.05180	-.07330	.01650	.01520	.00630	-.01060	3.76960
-.193	5.875	-.15960	.24180	.09310	.05710	-.11470	.02500	.02310	.00960	.00720	5.92720
	GRADIENT	.00474	-.00031	-.00014	-.00235	-.01956	.00435	.00400	.00184	.00114	1.00005

IA156A, AEDC PWT 16T-470, 0 T S W/SILTS (R8NSB6) (10 MAY 80)

REFERENCE DATA

SREF = 2690.0000 SQ.FT. XMRP = 976.0000 IN. XT
LREF = 1290.3000 INCHES YMRP = .0000 IN. YT
BREF = 1290.3000 INCHES ZMRP = 400.0000 IN. ZT
SCALE = .0200

PARAMETRIC DATA

IB-ELV = 12.000 OB-ELV = 9.000
BDFLAP = .000 SPDBRK = .000
RUDDER = .000 SILTS = 1.000
MACH = .900 RN/L = 3.500

RUN NO. 1312/ 0 RN/L = 3.50 GRADIENT INTERVAL = -5.00/ 5.00

ALPHAT	BETAT	CNFTS	CATS	CAFTS	CLMFTS	CYFTS	CYNTS	CYNFTS	CBLFTS	ALFATU	BETATU
4.428	-5.848	-.06800	.23630	.09140	.07360	.13690	-.03660	-.03500	-.00330	4.29000	-6.00190
4.299	-3.763	-.06180	.23480	.09180	.06920	.08760	-.02590	-.02490	-.00240	4.19270	-3.94000
3.986	.090	-.03800	.23210	.09280	.04830	.00260	-.00230	-.00230	-.00050	4.03160	-.11140
4.118	4.039	-.04180	.23440	.09220	.05980	-.08300	.02200	.02080	.00140	4.29600	3.93380
4.052	6.170	-.04410	.23640	.09210	.05940	-.13180	.03380	.03190	.00260	4.24770	6.10480
	GRADIENT	.00255	-.00005	.00005	-.00119	-.02186	.00614	.00586	.00049	.01346	1.00924

IA156A, AEDC PWT 16T-470, 0 T S (R8NSB7) (10 MAY 80)

REFERENCE DATA

SREF = 2690.0000 SQ.FT. XMRP = 976.0000 IN. XT
LREF = 1290.3000 INCHES YMRP = .0000 IN. YT
BREF = 1290.3000 INCHES ZMRP = 400.0000 IN. ZT
SCALE = .0200

PARAMETRIC DATA

IB-ELV = 12.000 OB-ELV = 9.000
BDFLAP = .000 SPDBRK = .000
RUDDER = .000 SILTS = .000
MACH = .800 RN/L = 3.500

RUN NO. 1324/ 0 RN/L = 3.50 GRADIENT INTERVAL = -5.00/ 5.00

ALPHAT	BETAT	CNFTS	CATS	CAFTS	CLMFTS	CYFTS	CYNTS	CYNFTS	CBLFTS	ALFATU	BETATU
4.489	-5.969	-.06400	.21420	.08050	.07770	.13170	-.03510	-.03350	-.00200	4.33910	-6.11270
4.288	-3.707	-.06180	.21190	.07860	.07520	.08130	-.02330	-.02220	-.00160	4.16900	-3.97700
4.049	.176	-.04160	.21020	.08240	.05930	.00060	-.00190	-.00190	-.00040	4.08640	-.02830
4.123	4.143	-.04100	.21250	.07890	.06430	-.07950	.02050	.01920	.00050	4.29520	4.02720
4.066	6.203	-.04200	.21430	.07960	.06280	-.12470	.03150	.02960	.00160	4.25840	6.12450
	GRADIENT	.00264	.00008	.00003	-.00138	-.02048	.00558	.00527	.00027	.01621	1.00702

IA156A, AEDC PWT 16T-470, O T S

(R8NS88) (10 MAY 80)

REFERENCE DATA

SREF = 2690.0000 SQ.FT. XMRP = 976.0000 IN, XT
LREF = 1290.3000 INCHES YMRP = .0000 IN, YT
BREF = 1290.3000 INCHES ZMRP = 400.0000 IN, ZT
SCALE = .0200

PARAMETRIC DATA

IB-ELV = 12.000 OB-ELV = 9.000
BDFLAP = .000 SPDBRK = .000
RUDDER = .000 SILTS = .000
MACH = .950 RN/L = 3.500

RUN NO. 1325/ 0 RN/L = 3.51 GRADIENT INTERVAL = -5.00/ 5.00

ALPHAT	BETAT	CNFTS	CATS	CAFTS	CLMFTS	CYFTS	CYNTS	CYNFTS	CBLFTS	ALFATU	BETATU
-8.198	-5.931	-.42010	.26510	.09170	.05720	.10660	-.01580	-.01320	-.02350	-8.02950	-6.04860
-8.338	-3.721	-.41770	.27180	.09640	.05180	.06730	-.01190	-.01050	-.01550	-8.19780	-3.87130
-8.264	.172	-.38370	.27480	.09510	.03630	-.00500	.00130	.00120	.00110	-8.20780	-.02570
-8.111	4.375	-.38520	.27250	.09860	.03810	-.07720	.01150	.01020	.01800	-8.15940	4.17540
-8.102	6.225	-.39170	.26900	.09600	.04150	-.10660	.01430	.01190	.02410	-8.18360	6.03620
	GRADIENT	.00396	.00008	.00028	-.00166	-.01784	.00288	.00255	.00414	.00483	.99396

RUN NO. 1326/ 0 RN/L = 3.50 GRADIENT INTERVAL = -5.00/ 5.00

ALPHAT	BETAT	CNFTS	CATS	CAFTS	CLMFTS	CYFTS	CYNTS	CYNFTS	CBLFTS	ALFATU	BETATU
-6.216	-5.935	-.35390	.26980	.10010	.05690	.10940	-.01750	-.01500	-.02090	-6.03330	-6.02790
-6.145	-4.006	-.33700	.26970	.10450	.05230	.07370	-.01400	-.01270	-.01410	-5.98170	-4.13090
-6.282	.104	-.31040	.27410	.10210	.03570	-.00350	.00010	.00020	.00080	-6.22340	-.09240
-6.072	4.214	-.30890	.27110	.10420	.04170	-.07250	.01140	.01000	.01460	-6.14150	4.02030
-5.785	6.298	-.30640	.27320	.10250	.04530	-.10880	.01590	.01320	.02020	-5.89670	6.12580
	GRADIENT	.00342	.00017	-.00004	-.00129	-.01779	.00309	.00276	.00349	-.01944	.99165

RUN NO. 1327/ 0 RN/L = 3.50 GRADIENT INTERVAL = -5.00/ 5.00

ALPHAT	BETAT	CNFTS	CATS	CAFTS	CLMFTS	CYFTS	CYNTS	CYNFTS	CBLFTS	ALFATU	BETATU
-4.043	-6.024	-.28900	.27140	.10450	.06360	.11130	-.01880	-.01620	-.01740	-3.84370	-6.07500
-4.256	-3.919	-.29020	.27070	.10580	.05680	.07090	-.01430	-.01300	-.01180	-4.07300	-4.01280
-4.200	.372	-.23890	.27070	.10530	.03910	-.01060	.00150	.00150	.00160	-4.15280	.17210
-3.708	4.247	-.23560	.27020	.10680	.04910	-.07520	.01250	.01090	.01160	-3.82000	4.07500
-3.813	6.095	-.24540	.26990	.10500	.05130	-.10740	.01680	.01430	.01610	-3.95250	5.94370
	GRADIENT	.00554	-.00006	.00012	-.00100	-.01791	.00329	.00293	.00287	.03010	.99019

RUN NO. 1328/ 0 RN/L = 3.50 GRADIENT INTERVAL = -5.00/ 5.00

ALPHAT	BETAT	CNFTS	CATS	CAFTS	CLMFTS	CYFTS	CYNTS	CYNFTS	CBLFTS	ALFATU	BETATU
-.230	-6.869	-.20100	.27140	.10970	.07690	.14140	-.02980	-.02710	-.01260	-.03230	-6.81380
-.209	-4.716	-.18560	.27110	.10840	.07220	.09750	-.02420	-.02210	-.00860	-.01160	-4.66090
-.247	-.395	-.14420	.26690	.10840	.05050	.00800	-.00410	-.00370	-.00130	-.04940	-.33940
-.190	3.696	-.14760	.27110	.10940	.05650	-.07600	.01990	.01830	.00570	.00760	3.75150
-.184	5.880	-.15300	.26960	.10790	.05880	-.11950	.02840	.02600	.00930	.01380	5.93540
	GRADIENT	.00456	-.00001	.00012	-.00190	-.02063	.00524	.00480	.00170	.00218	1.00002

IA156A, AEDC PWT 16T-470, 0 T S (R8NSB8) (10 MAY 80)

REFERENCE DATA

SREF = 2690.0000 SQ.FT. XMRP = 976.0000 IN. XT
LREF = 1290.3000 INCHES YMRP = .0000 IN. YT
BREF = 1290.3000 INCHES ZMRP = 400.0000 IN. ZT
SCALE = .0200

PARAMETRIC DATA

IB-ELV = 12.000 OB-ELV = 9.000
BDFLAP = .000 SPDBRK = .000
RUDDER = .000 SILTS = .000
MACH = .950 RN/L = 3.500

RUN NO. 1329/ 0 RN/L = 3.50 GRADIENT INTERVAL = -5.00/ 5.00

ALPHAT	BETAT	CNFTS	CATS	CAFTS	CLMFTS	CYFTS	CYNTS	CYNFTS	CBLFTS	ALFATU	BETATU
4.240	-5.717	-.07670	.26640	.10360	.07680	.13750	-.03790	-.03600	-.00390	4.10410	-5.87080
4.260	-3.947	-.06310	.26380	.10710	.06920	.09780	-.02930	-.02810	-.00290	4.15370	-4.12200
4.144	.183	-.03120	.26090	.10510	.04530	-.00020	-.00070	-.00080	-.00030	4.19860	-.01450
4.113	3.951	-.04220	.26450	.10890	.06040	-.08580	.02340	.02200	.00170	4.29050	3.84770
4.083	6.146	-.04740	.26290	.10330	.06390	-.13520	.03510	.03290	.00290	4.27900	6.08430
	GRADIENT	.00273	.00008	.00022	-.00119	-.02325	.00668	.00635	.00058	.01722	1.00887

IA156A, AEDC PWT 16T-470, 0 T S (R8NSB9) (10 MAY 80)

REFERENCE DATA

SREF = 2690.0000 SQ.FT. XMRP = 976.0000 IN. XT
LREF = 1290.3000 INCHES YMRP = .0000 IN. YT
BREF = 1290.3000 INCHES ZMRP = 400.0000 IN. ZT
SCALE = .0200

PARAMETRIC DATA

IB-ELV = 12.000 OB-ELV = 9.000
BDFLAP = .000 SPDBRK = .000
RUDDER = .000 SILTS = .000
MACH = 1.050 RN/L = 3.500

RUN NO. 1330/ 0 RN/L = 3.50 GRADIENT INTERVAL = -5.00/ 5.00

ALPHAT	BETAT	CNFTS	CATS	CAFTS	CLMFTS	CYFTS	CYNTS	CYNFTS	CBLFTS	ALFATU	BETATU
-8.358	-5.912	-.44640	.34850	.13820	.05490	.11620	-.01630	-.01360	-.02710	-8.18800	-6.02370
-8.344	-3.823	-.43670	.35220	.13880	.05310	.07690	-.01250	-.01110	-.01870	-8.19850	-3.96550
-8.324	.331	-.40700	.35890	.13800	.03460	-.00710	.00110	.00100	.00180	-8.26650	.13560
-8.134	4.312	-.40360	.35330	.13730	.03850	-.07850	.01050	.00910	.01930	-8.17600	4.11230
-8.142	6.234	-.41230	.35110	.13940	.04100	-.11450	.01360	.01100	.02650	-8.21820	6.04550
	GRADIENT	.00409	.00015	-.00018	-.00181	-.01911	.00283	.00249	.00467	.00263	.99299

RUN NO. 1331/ 0 RN/L = 3.51 GRADIENT INTERVAL = -5.00/ 5.00

ALPHAT	BETAT	CNFTS	CATS	CAFTS	CLMFTS	CYFTS	CYNTS	CYNFTS	CBLFTS	ALFATU	BETATU
-6.242	-5.964	-.36510	.34840	.14140	.05570	.11860	-.01790	-.01520	-.02370	-6.05690	-6.04930
-6.143	-4.031	-.34830	.35160	.14410	.05180	.07710	-.01230	-.01080	-.01610	-5.97660	-4.14750
-6.312	.117	-.32080	.35550	.14340	.03390	-.00410	.00050	.00050	.00080	-6.24850	-.07650
-6.121	4.224	-.32200	.35450	.14580	.03980	-.07600	.01060	.00910	.01620	-6.18530	4.03060
-5.814	6.327	-.31640	.34880	.14210	.04290	-.11780	01750	.01490	.02230	-5.92080	6.15380
	GRADIENT	.00319	.00035	.00021	-.00146	-.01855	.00277	.00241	.00391	-.02535	.99073

IA156A, AEDC PWT 16T-470, 0 T S (R8NSB9) (10 MAY 80)

REFERENCE DATA

SREF = 2690.0000 SQ.FT. XMRP = 976.0000 IN. XT
LREF = 1290.3000 INCHES YMRP = .0000 IN. YT
BREF = 1290.3000 INCHES ZMRP = 400.0000 IN. ZT
SCALE = .0200

PARAMETRIC DATA

IB-ELV = 12.000 OB-ELV = 9.000
BDFLAP = .000 SPDBRK = .000
RUDDER = .000 SILTS = .000
MACH = 1.050 RN/L = 3.500

RUN NO. 1332/ 0 RN/L = 3.50 GRADIENT INTERVAL = -5.00/ 5.00

ALPHAT	BETAT	CNFTS	CATS	CAFTS	CLMFTS	CYFTS	CYNTS	CYNFTS	CBLFTS	ALFATU	BETATU
-4.060	-6.059	-.29450	.34720	.14390	.06190	.12020	-.01930	-.01690	-.01980	-3.86120	-6.10260
-4.272	-3.933	-.28630	.34930	.14660	.05550	.07670	-.01500	-.01350	-.01350	-4.08770	-4.01900
-4.228	.370	-.24370	.35260	.14590	.03590	-.00780	.00080	.00060	.00140	-4.17580	.17330
-3.727	4.265	-.23920	.35150	.14800	.04650	-.07890	.01340	.01190	.01280	-3.83550	4.09290
-3.831	6.098	-.25190	.34880	.14520	.04920	-.11550	.01900	.01680	.01790	-3.96640	5.94510
	GRADIENT	.00582	.00028	.00016	-.00116	-.01899	.00347	.00310	.00321	.02987	.98921

RUN NO. 1333/ 0 RN/L = 3.50 GRADIENT INTERVAL = -5.00/ 5.00

ALPHAT	BETAT	CNFTS	CATS	CAFTS	CLMFTS	CYFTS	CYNTS	CYNFTS	CBLFTS	ALFATU	BETATU
-.231	-6.955	-.20180	.34350	.14850	.08060	.15310	-.03390	-.03140	-.01450	-.03700	-6.89410
-.226	-4.762	-.18350	.34550	.14870	.07330	.10420	-.02750	-.02560	-.00980	-.03150	-4.70070
-.310	-.364	-.13420	.34970	.15050	.04270	.01180	-.00710	-.00700	-.00130	-.11580	-.30290
-.226	3.709	-.13980	.35070	.14950	.05360	-.07750	.02020	.01860	.00660	-.03140	3.77020
-.209	5.903	-.14960	.35170	.14880	.05920	-.12440	.02990	.02770	.01040	-.01470	5.96380
	GRADIENT	.00524	.00062	.00010	-.00239	-.02144	.00562	.00520	.00194	-.00024	1.00000

RUN NO. 1334/ 0 RN/L = 3.50 GRADIENT INTERVAL = -5.00/ 5.00

ALPHAT	BETAT	CNFTS	CATS	CAFTS	CLMFTS	CYFTS	CYNTS	CYNFTS	CBLFTS	ALFATU	BETATU
4.236	-5.746	-.07580	.34030	.14190	.07680	.14300	-.03980	-.03850	-.00500	4.10530	-5.90290
4.222	-3.905	-.05870	.34060	.15060	.06660	.10020	-.03080	-.03000	-.00400	4.12280	-4.08250
4.169	.195	-.02460	.34070	.14900	.04850	.00280	-.00390	-.00380	-.00070	4.22990	.00040
4.121	3.944	-.03370	.34200	.14660	.05780	-.08650	.02380	.02280	.00200	4.29920	3.84620
4.097	6.126	-.04300	.33850	.13930	.06330	-.13670	.03500	.03360	.00320	4.29300	6.07030
	GRADIENT	.00326	.00018	-.00051	-.00117	-.02379	.00695	.00672	.00077	.02253	1.00991

IA156A, AEDC PWT 16T-470, O T S (R8NSCO) (10 MAY 80)

REFERENCE DATA

SREF = 2690.0000 SQ.FT. XMRP = 976.0000 IN. XT
LREF = 1290.3000 INCHES YMRP = .0000 IN. YT
BREF = 1290.3000 INCHES ZMRP = 400.0000 IN. ZT
SCALE = .0200

PARAMETRIC DATA

IB-ELV = 12.000 OB-ELV = 9.000
BDFLAP = .000 SPDBRK = .000
RUDDER = .000 SILTS = .000
MACH = 1.100 RN/L = 3.500

RUN NO. 1335/ 0 RN/L = 3.50 GRADIENT INTERVAL = -5.00/ 5.00

ALPHAT	BETAT	CNFTS	CATS	CAFTS	CLMFTS	CYFTS	CYNTS	CYNFTS	CBLFTS	ALFATU	BETATU
-8.238	-5.966	-.43640	.34260	.14780	.05240	.11500	-.01700	-.01440	-.02650	-8.06500	-6.07390
-8.378	-3.759	-.43220	.34600	.14900	.04910	.07000	-.01010	-.00870	-.01780	-8.23170	-3.90160
-8.342	.185	-.40030	.35080	.15060	.03040	-.00530	-.00010	-.00010	.00160	-8.27820	-.00900
-8.124	4.348	-.39670	.34730	.15090	.03670	-.07770	.00910	.00760	.01930	-8.16510	4.14810
-8.141	6.233	-.40450	.34550	.14740	.04000	-.11310	.01400	.01160	.02590	-8.21560	6.04260
	GRADIENT	.00435	.00015	.00023	-.00150	-.01821	.00237	.00201	.00457	.00839	.99291

RUN NO. 1336/ 0 RN/L = 3.50 GRADIENT INTERVAL = -5.00/ 5.00

ALPHAT	BETAT	CNFTS	CATS	CAFTS	CLMFTS	CYFTS	CYNTS	CYNFTS	CBLFTS	ALFATU	BETATU
-6.236	-5.945	-.35920	.34120	.15280	.05170	.11060	-.01590	-.01340	-.02270	-6.04920	-6.02770
-6.191	-4.021	-.34560	.34210	.15310	.04670	.07290	-.01120	-.00990	-.01560	-6.02260	-4.13690
-6.363	.104	-.31900	.34520	.15270	.02920	-.00390	-.00120	-.00120	.00120	-6.29640	-.08930
-6.096	4.247	-.31340	.34460	.15410	.03740	-.07500	.00850	.00720	.01610	-6.15950	4.05210
-6.065	6.217	-.32370	.34180	.15150	.04090	-.11210	.01520	.01280	.02270	-6.16560	6.03870
	GRADIENT	.00389	.00030	.00012	-.00112	-.01789	.00238	.00207	.00383	-.01652	.99048

RUN NO. 1337/ 0 RN/L = 3.50 GRADIENT INTERVAL = -5.00/ 5.00

ALPHAT	BETAT	CNFTS	CATS	CAFTS	CLMFTS	CYFTS	CYNTS	CYNFTS	CBLFTS	ALFATU	BETATU
-4.062	-6.066	-.29460	.33910	.15560	.05890	.11400	-.01690	-.01470	-.01990	-3.86160	-6.10630
-4.303	-3.946	-.28540	.33870	.15670	.05150	.07150	-.01240	-.01110	-.01340	-4.11620	-4.03010
-4.230	.372	-.24130	.33770	.15520	.03360	-.00960	.00030	.00010	.00190	-4.17490	.17530
-3.731	4.287	-.23770	.34090	.15940	.04580	-.07650	.00970	.00840	.01310	-3.83730	4.11230
-3.821	6.103	-.24910	.34090	.15590	.04990	-.11070	.01570	.01370	.01770	-3.95420	5.94790
	GRADIENT	.00587	.00026	.00032	-.00075	-.01799	.00269	.00237	.00322	.03306	.98878

RUN NO. 1338/ 0 RN/L = 3.50 GRADIENT INTERVAL = -5.00/ 5.00

ALPHAT	BETAT	CNFTS	CATS	CAFTS	CLMFTS	CYFTS	CYNTS	CYNFTS	CBLFTS	ALFATU	BETATU
-.233	-6.956	-.20530	.33560	.15920	.08110	.14560	-.02840	-.02640	-.01470	-.03850	-6.89250
-.215	-4.764	-.18720	.33230	.16020	.07480	.09870	-.02280	-.02110	-.00990	-.02010	-4.70090
-.287	-.395	-.14360	.33570	.16130	.04790	.00960	-.00550	-.00540	-.00130	-.09260	-.33130
-.196	3.725	-.14960	.33620	.16300	.05970	-.07620	.01810	.01660	.00670	-.00140	3.78870
-.195	5.906	-.15280	.33470	.15880	.06070	-.12140	.02780	.02560	.01040	-.00100	5.96960
	GRADIENT	.00448	.00046	.00033	-.00182	-.02060	.00481	.00443	.00196	.00201	.99999

IA156A, AEDC PWT 16T-470, O T S (R8NSC0) (10 MAY 80)

REFERENCE DATA

SREF = 2690.0000 SQ.FT. XMRP = 976.0000 IN. XT
LREF = 1290.3000 INCHES YMRP = .0000 IN. YT
BREF = 1290.3000 INCHES ZMRP = 400.0000 IN. ZT
SCALE = .0200

PARAMETRIC DATA

IB-ELV = 12.000 OB-ELV = 9.000
BDFLAP = .000 SPDBRK = .000
RUDDER = .000 SILTS = .000
MACH = 1.100 RN/L = 3.500

RUN NO. 1339/ 0 RN/L = 3.48 GRADIENT INTERVAL = -5.00/ 5.00

ALPHAT	BETAT	CNFTS	CATS	CAFTS	CLMFTS	CYFTS	CYNTS	CYNFTS	CBLFTS	ALFATU	BETATU
4.293	-5.746	-.07410	.32670	.15760	.08050	.14030	-.03860	-.03750	-.00490	4.16440	-5.90440
4.255	-3.900	-.06060	.32680	.15530	.07300	.09820	-.03050	-.02970	-.00390	4.15610	-4.07940
4.183	.192	-.03170	.32720	.15880	.05600	-.00160	-.00280	-.00270	-.00060	4.24510	-.00230
4.147	3.941	-.04190	.32720	.15820	.06570	-.08800	.02320	.02230	.00220	4.32760	3.84450
4.131	6.133	-.04540	.32550	.15440	.06770	-.13790	.03410	.03260	.00340	4.32820	6.07880
	GRADIENT	.00246	.00005	.00038	-.00098	-.02376	.00685	.00663	.00078	.02187	1.01033

IA156A, AEDC PWT 16T-470, O T S (R8NSC1) (10 MAY 80)

REFERENCE DATA

SREF = 2690.0000 SQ.FT. XMRP = 976.0000 IN. XT
LREF = 1290.3000 INCHES YMRP = .0000 IN. YT
BREF = 1290.3000 INCHES ZMRP = 400.0000 IN. ZT
SCALE = .0200

PARAMETRIC DATA

IB-ELV = 12.000 OB-ELV = 9.000
BDFLAP = .000 SPDBRK = .000
RUDDER = .000 SILTS = .000
MACH = 1.150 RN/L = 3.500

RUN NO. 1341/ 0 RN/L = 3.50 GRADIENT INTERVAL = -5.00/ 5.00

ALPHAT	BETAT	CNFTS	CATS	CAFTS	CLMFTS	CYFTS	CYNTS	CYNFTS	CBLFTS	ALFATU	BETATU
-8.291	-5.980	-.44410	.34020	.15710	.05600	.11610	-.01470	-.01240	-.02740	-8.11480	-6.08860
-8.379	-3.771	-.44080	.34300	.16010	.05410	.07130	-.00920	-.00780	-.01830	-8.22990	-3.91410
-8.333	.176	-.41110	.34800	.16190	.03600	-.00100	-.00140	-.00140	.00090	-8.26660	-.01980
-8.094	4.365	-.41200	.34620	.16430	.04380	-.07520	.00710	.00570	.01980	-8.13460	4.16240
-8.130	6.250	-.41670	.34180	.15600	.04520	-.11000	.01170	.00960	.02660	-8.20450	6.05730
	GRADIENT	.00350	.00038	.00052	-.00123	-.01800	.00200	.00166	.00468	.01191	.99267

RUN NO. 1342/ 0 RN/L = 3.50 GRADIENT INTERVAL = -5.00/ 5.00

ALPHAT	BETAT	CNFTS	CATS	CAFTS	CLMFTS	CYFTS	CYNTS	CYNFTS	CBLFTS	ALFATU	BETATU
-6.226	-5.962	-.36630	.33870	.16050	.05640	.11360	-.01520	-.01280	-.02390	-6.03650	-6.04440
-6.173	-4.037	-.35470	.34060	.16390	.05260	.07550	-.01150	-.01010	-.01640	-6.00130	-4.15260
-6.324	.116	-.32630	.34200	.16070	.03580	-.00050	-.00250	-.00250	.00080	-6.25530	-.07910
-6.105	4.251	-.32640	.34130	.16250	.04390	-.07100	.00590	.00470	.01610	-6.16700	4.05400
-5.910	6.348	-.32730	.33920	.16160	.04700	-.11260	.01310	.01070	.02290	-6.01420	6.16910
	GRADIENT	.00342	.00008	-.00017	-.00105	-.01768	.00210	.00179	.00392	-.02002	.99010

IA156A, AEDC PWT 16T-470, O T S (R8NSC1) (10 MAY 80)

REFERENCE DATA

SREF = 2690.0000 SQ.FT. XMRP = 976.0000 IN. XT
LREF = 1290.3000 INCHES YMRP = .0000 IN. YT
BREF = 1290.3000 INCHES ZMRP = 400.0000 IN. ZT
SCALE = .0200

PARAMETRIC DATA

IB-ELV = 12.000 OB-ELV = 9.000
BDFLAP = .000 SPDBRK = .000
RUDDER = .000 SILTS = .000
MACH = 1.150 RN/L = 3.500

RUN NO. 1343/ 0 RN/L = 3.50 GRADIENT INTERVAL = -5.00/ 5.00

ALPHAT	BETAT	CNFTS	CATS	CAFTS	CLMFTS	CYFTS	CYNTS	CYNFTS	CBLFTS	ALFATU	BETATU
-4.068	-6.061	-.29750	.33590	.16340	.06370	.11540	-.01740	-.01530	-.02010	-3.86540	-6.10150
-4.288	-3.951	-.29200	.33820	.16570	.05700	.07540	-.01390	-.01260	-.01390	-4.09860	-4.03520
-4.211	.384	-.25170	.33930	.16500	.04080	-.00700	-.00140	-.00150	.00160	-4.15460	.18530
-3.713	4.285	-.24640	.34000	.16760	.05270	-.07350	.00870	.00740	.01290	-3.81970	4.10800
-3.808	6.126	-.25810	.34060	.16720	.05550	-.10930	.01360	.01160	.01800	-3.94140	5.96840
	GRADIENT	.00561	.00022	.00022	-.00058	-.01810	.00275	.00243	.00326	.03300	.98839

RUN NO. 1344/ 0 RN/L = 3.50 GRADIENT INTERVAL = -5.00/ 5.00

ALPHAT	BETAT	CNFTS	CATS	CAFTS	CLMFTS	CYFTS	CYNTS	CYNFTS	CBLFTS	ALFATU	BETATU
-.200	-6.953	-.20400	.33560	.16780	.08400	.14930	-.03130	-.02920	-.01440	-.00370	-6.88710
-.195	-4.748	-.18770	.33370	.16960	.07670	.09740	-.02270	-.02120	-.00980	.00110	-4.68240
-.253	-.411	-.14240	.33790	.16990	.04980	.00970	-.00610	-.00600	-.00130	-.05640	-.34540
-.175	3.723	-.14630	.33780	.17100	.05970	-.07620	.01780	.01620	.00660	.02160	3.78910
-.155	5.911	-.15210	.33740	.16990	.06420	-.12160	.02610	.02410	.01030	.04130	5.97710
	GRADIENT	.00493	.00049	.00016	-.00204	-.02049	.00477	.00441	.00194	.00229	1.00002

RUN NO. 1345/ 0 RN/L = 3.50 GRADIENT INTERVAL = -5.00/ 5.00

ALPHAT	BETAT	CNFTS	CATS	CAFTS	CLMFTS	CYFTS	CYNTS	CYNFTS	CBLFTS	ALFATU	BETATU
4.397	-5.892	-.08110	.32840	.16650	.08850	.14710	-.04190	-.04060	-.00540	4.26690	-6.05270
4.395	-3.794	-.06650	.32980	.16810	.08150	.09960	-.03380	-.03300	-.00410	4.30090	-3.97830
4.237	.210	-.04010	.32980	.16770	.06540	.00500	-.00760	-.00750	-.00080	4.30230	.01350
4.171	4.008	-.04110	.33030	.16770	.06780	-.08530	.02150	.02060	.00210	4.35480	3.91390
4.145	6.149	-.04580	.32900	.16540	.06990	-.13460	.03270	.03120	.00340	4.34510	6.09670
	GRADIENT	.00329	.00006	-.00005	-.00178	-.02370	.00708	.00687	.00079	.00685	1.01141

IA156A, AEDC PWT 16T-470, 0 T S (R8NSC2) (10 MAY 80)

REFERENCE DATA

SREF = 2690.0000 SQ.FT. XMRP = 976.0000 IN. XI
LREF = 1290.3000 INCHES YMRP = .0000 IN. YT
BREF = 1290.3000 INCHES ZMRP = 400.0000 IN. ZT
SCALE = .0200

PARAMETRIC DATA

IB-ELV = 12.000 OB-ELV = 9.000
BDFLAP = .000 SPDBRK = .000
RUDDER = .000 SILTS = .000
MACH = 1.250 RN/L = 3.500

RUN NO. 1346/ 0 RN/L = 3.50 GRADIENT INTERVAL = -5.00/ 5.00

ALPHAT	BETAT	CNFTS	CATS	CAFTS	CLMFTS	CYFTS	CYNTS	CYNFTS	CBLFTS	ALFATU	BETATU
-8.334	-5.920	-.46560	.33490	.16630	.07110	.11040	-.01130	-.00930	-.02670	-8.14900	-6.03510
-8.298	-3.790	-.45050	.33680	.16700	.06730	.06510	-.00370	-.00240	-.01740	-8.13840	-3.93890
-8.269	.197	-.42210	.34250	.17000	.05010	-.00560	.00120	.00120	.00140	-8.19860	-.00910
-8.087	4.359	-.42030	.33710	.17040	.05310	-.07470	.00560	.00450	.01900	-8.12670	4.14440
-8.111	6.263	-.42630	.33510	.17030	.05370	-.10840	.00960	.00770	.02590	-8.18850	6.05930
	GRADIENT	.00368	.00003	.00041	-.00172	-.01715	.00114	.00085	.00447	.00155	.99204

RUN NO. 1347/ 0 RN/L = 3.50 GRADIENT INTERVAL = -5.00/ 5.00

ALPHAT	BETAT	CNFTS	CATS	CAFTS	CLMFTS	CYFTS	CYNTS	CYNFTS	CBLFTS	ALFATU	BETATU
-6.197	-5.966	-.37760	.33420	.17150	.06790	.10490	-.01030	-.00830	-.02280	-5.99590	-6.05170
-6.128	-4.046	-.36630	.33560	.17220	.06590	.06750	-.00590	-.00480	-.01560	-5.94620	-4.16630
-6.265	.134	-.33840	.33700	.17190	.04930	-.00690	.00100	.00100	.00080	-6.19120	-.07190
-6.044	4.269	-.33370	.33690	.17460	.05160	-.07350	.00680	.00570	.01590	-6.10900	4.06060
-6.014	6.245	-.34030	.33580	.17130	.05100	-.11070	.01120	.00920	.02270	-6.11970	6.05330
	GRADIENT	.00393	.00016	.00029	-.00172	-.01696	.00153	.00126	.00379	-.01965	.98940

RUN NO. 1348/ 0 RN/L = 3.49 GRADIENT INTERVAL = -5.00/ 5.00

ALPHAT	BETAT	CNFTS	CATS	CAFTS	CLMFTS	CYFTS	CYNTS	CYNFTS	CBLFTS	ALFATU	BETATU
-4.003	-6.086	-.30880	.33310	.17430	.07630	.10930	-.01300	-.01110	-.01930	-3.78870	-6.12630
-4.222	-3.956	-.30210	.33460	.17480	.07060	.06580	-.00800	-.00690	-.01290	-4.02210	-4.04220
-4.167	.377	-.26420	.33530	.17560	.05130	-.01120	.00190	.00190	.00140	-4.10530	.16760
-3.668	4.274	-.25480	.33740	.17700	.05890	-.07310	.00830	.00730	.01250	-3.77910	4.08630
-3.790	6.136	-.26270	.33450	.17590	.05940	-.10590	.01210	.01030	.01740	-3.93020	5.96890
	GRADIENT	.00580	.00034	.00027	-.00148	-.01689	.00199	.00173	.00309	.02862	.98739

RUN NO. 1349/ 0 RN/L = 3.49 GRADIENT INTERVAL = -5.00/ 5.00

ALPHAT	BETAT	CNFTS	CATS	CAFTS	CLMFTS	CYFTS	CYNTS	CYNFTS	CBLFTS	ALFATU	BETATU
-.152	-6.968	-.21620	.33200	.17750	.09770	.14470	-.02830	-.02630	-.01370	.05400	-6.89790
-.141	-4.800	-.20070	.33010	.17800	.09150	.09510	-.02070	-.01920	-.00940	.06510	-4.72960
-.172	-.383	-.16330	.33160	.17920	.07060	.00900	-.00540	-.00540	-.00100	.03440	-.31250
-.101	3.734	-.16360	.33210	.17870	.07840	-.07410	.01590	.01440	.00620	.10520	3.80420
-.107	5.928	-.16570	.33090	.17850	.07930	-.11950	.02320	.02120	.00970	.09970	5.99890
	GRADIENT	.00440	.00024	.00008	-.00157	-.01982	.00428	.00393	.00183	.00456	1.00001

IA156A, AEDC PWT 16T-470, 0 T S (R8NSC2) (10 MAY 80)

REFERENCE DATA

SREF = 2690.0000 SQ.FT. XMRP = 976.0000 IN. XT
LREF = 1290.3000 INCHES YMRP = .0000 IN. YT
BREF = 1290.3000 INCHES ZMRP = 400.0000 IN. ZT
SCALE = .0200

PARAMETRIC DATA

IB-ELV = 12.000 OB-ELV = 9.000
BDFLAP = .000 SPDBRK = .000
RUDDER = .000 SILTS = .000
MACH = 1.250 RN/L = 3.500

RUN NO. 1350/ 0 RN/L = 3.50 GRADIENT INTERVAL = -5.00/ 5.00

ALPHAT	BETAT	CNFTS	CATS	CAFTS	CLMFTS	CYFTS	CYNTS	CYNFTS	CBLFTS	ALFATU	BETATU
4.450	-5.884	-.08460	.32410	.17560	.09570	.14060	-.03850	-.03730	-.00510	4.31390	-6.05410
4.468	-3.793	-.06980	.32660	.17590	.08970	.09320	-.02960	-.02880	-.00380	4.36990	-3.98780
4.312	.216	-.05460	.32460	.17630	.08090	-.00110	-.00450	-.00450	-.00070	4.38160	.00970
4.224	3.990	-.05720	.32500	.17460	.08390	-.08820	.02350	.02270	.00200	4.41810	3.89110
4.215	6.165	-.06120	.32310	.17390	.08550	-.13800	.03490	.03340	.00350	4.42660	6.11020
	GRADIENT	.00164	-.00021	-.00016	-.00076	-.02331	.00682	.00661	.00075	.00616	1.01220

IA156A, AEDC PWT 16T-470, 0 T S (R8NSC3) (10 MAY 80)

REFERENCE DATA

SREF = 2690.0000 SQ.FT. XMRP = 976.0000 IN. XT
LREF = 1290.3000 INCHES YMRP = .0000 IN. YT
BREF = 1290.3000 INCHES ZMRP = 400.0000 IN. ZT
SCALE = .0200

PARAMETRIC DATA

IB-ELV = 12.000 OB-ELV = -2.000
BDFLAP = .000 SPDBRK = .000
RUDDER = .000 SILTS = .000
MACH = 1.150 RN/L = 3.500

RUN NO. 1355/ 0 RN/L = 3.50 GRADIENT INTERVAL = -5.00/ 5.00

ALPHAT	BETAT	CNFTS	CATS	CAFTS	CLMFTS	CYFTS	CYNTS	CYNFTS	CBLFTS	ALFATU	BETATU
-8.169	-6.009	-.44330	.33530	.15490	.05730	.11770	-.01520	-.01300	-.02700	-7.99160	-6.11610
-8.371	-3.831	-.43820	.33490	.15550	.05340	.07290	-.00970	-.00840	-.01830	-8.22010	-3.97310
-8.360	.291	-.41020	.34090	.15910	.03440	-.00350	-.00110	-.00110	.00180	-8.29690	.09430
-8.133	4.300	-.40850	.33720	.15800	.04200	-.07280	.00660	.00540	.01930	-8.17200	4.09680
-8.135	6.244	-.41490	.33550	.15510	.04480	-.10820	.01090	.00890	.02620	-8.20960	6.05110
	GRADIENT	.00367	.00029	.00031	-.00142	-.01792	.00200	.00170	.00463	.00580	.99240

RUN NO. 1356/ 0 RN/L = 3.50 GRADIENT INTERVAL = -5.00/ 5.00

ALPHAT	BETAT	CNFTS	CATS	CAFTS	CLMFTS	CYFTS	CYNTS	CYNFTS	CBLFTS	ALFATU	BETATU
-6.248	-5.968	-.36690	.33500	.16030	.05530	.11300	-.01550	-.01320	-.02340	-6.05790	-6.05050
-6.180	-4.030	-.35330	.33530	.16000	.05100	.07580	-.01160	-.01020	-.01600	-6.00820	-4.14470
-6.335	.122	-.32560	.33730	.15910	.03410	-.00080	-.00230	-.00230	.00090	-6.26610	-.07300
-6.118	4.251	-.32580	.33900	.16520	.04210	-.07200	.00570	.00450	.01620	-6.18070	4.05420
-5.830	6.341	-.31960	.33350	.16130	.04490	-.11110	.01240	.01020	.02220	-5.93520	6.16260
	GRADIENT	.00332	.00045	.00063	-.00108	-.01785	.00209	.00178	.00389	-.02087	.99011

IA156A, AEDC PWT 16T-470, 0 T S (RBNSC3) (10 MAY 80)

REFERENCE DATA

SREF = 2690.0000 SQ.FT. XMRP = 976.0000 IN. XT
LREF = 1290.3000 INCHES YMRP = .0000 IN. YT
BREF = 1290.3000 INCHES ZMRP = 400.0000 IN. ZT
SCALE = .0200

PARAMETRIC DATA

IB-ELV = 12.000 OB-ELV = -2.000
BDFLAP = .000 SPDBRK = .000
RUDDER = .000 SILTS = .000
MACH = 1.150 RN/L = 3.500

RUN NO. 1357/ 0 RN/L = 3.50 GRADIENT INTERVAL = -5.00/ 5.00

ALPHAT	BETAT	CNFTS	CATS	CAFTS	CLMFTS	CYFTS	CYNTS	CYNFTS	CBLFTS	ALFATU	BETATU
-4.062	-6.070	-.29960	.33440	.16430	.06290	.11710	-.01800	-.01600	-.02020	-3.85910	-6.10890
-4.287	-3.951	-.29180	.33380	.16480	.05590	.07560	-.01380	-.01260	-.01380	-4.09770	-4.03370
-4.220	.387	-.25190	.33510	.16370	.03940	-.00720	-.00150	-.00160	.00170	-4.16350	.18760
-3.709	4.281	-.24610	.33730	.16670	.05090	-.07290	.00740	.00610	.01300	-3.81670	4.10400
-3.820	6.119	-.25840	.33730	.16580	.05310	-.10830	.01240	.01050	.01800	-3.95420	5.96150
	GRADIENT	.00562	.00042	.00022	-.00067	-.01806	.00258	.00228	.00326	.03321	.98831

RUN NO. 1358/ 0 RN/L = 3.50 GRADIENT INTERVAL = -5.00/ 5.00

ALPHAT	BETAT	CNFTS	CATS	CAFTS	CLMFTS	CYFTS	CYNTS	CYNFTS	CBLFTS	ALFATU	BETATU
-.240	-6.981	-.20440	.33300	.16510	.08190	.14830	-.03130	-.02910	-.01440	-.04350	-6.91520
-.234	-4.772	-.18710	.32980	.16960	.07450	.10010	-.02370	-.02210	-.00990	-.03790	-4.70690
-.298	-.386	-.14410	.33590	.16910	.04720	.01160	-.00730	-.00720	-.00140	-.10180	-.32020
-.214	3.725	-.14890	.33620	.17240	.05850	-.07460	.01650	.01500	.00660	-.01800	3.79100
-.196	5.919	-.15230	.33320	.16780	.06210	-.11840	.02470	.02270	.01020	-.00040	5.98450
	GRADIENT	.00455	.00076	.00032	-.00193	-.02055	.00472	.00436	.00194	.00215	1.00002

RUN NO. 1359/ 0 RN/L = 3.50 GRADIENT INTERVAL = -5.00/ 5.00

ALPHAT	BETAT	CNFTS	CATS	CAFTS	CLMFTS	CYFTS	CYNTS	CYNFTS	CBLFTS	ALFATU	BETATU
4.399	-5.903	-.07930	.32740	.16680	.08630	.14740	-.04200	-.04080	-.00540	4.26940	-6.06410
4.357	-3.765	-.06340	.32860	.16720	.07870	.09920	-.03380	-.03310	-.00400	4.26350	-3.94950
4.214	.208	-.03660	.32760	.16460	.06080	.00510	-.00740	-.00740	-.00080	4.27900	.01170
4.175	4.024	-.04140	.32970	.16760	.06660	-.08510	.02140	.02050	.00210	4.35920	3.92900
4.128	6.152	-.04600	.32660	.16330	.06820	-.13450	.03190	.03060	.00340	4.32800	6.09880
	GRADIENT	.00285	.00014	.00005	-.00157	-.02366	.00708	.00688	.00078	.01223	1.01144

IA156A, AEDC PWT 16T-470, 0 T S (R8NSC4) (10 MAY 80)

REFERENCE DATA

SREF = 2690.0000 SQ.FT. XMRP = 976.0000 IN. XT
LREF = 1290.3000 INCHES YMRP = .0000 IN. YT
BREF = 1290.3000 INCHES ZMRP = 400.0000 IN. ZT
SCALE = .0200

PARAMETRIC DATA

IB-ELV = 12.000 OB-ELV = -2.000
BDFLAP = .000 SPDBRK = .000
RUDDER = .000 SILTS = .000
MACH = 1.250 RN/L = 3.500

RUN NO. 1360/ 0 RN/L = 3.50 GRADIENT INTERVAL = -5.00/ 5.00

ALPHAT	BETAT	CNFTS	CATS	CAFTS	CLMFTS	CYFTS	CYNTS	CYNFTS	CBLFTS	ALFATU	BETATU
-8.194	-3.980	-.46120	.33400	.16780	.06980	.11450	-.01270	-.01080	-.02660	-8.00790	-6.09240
-8.315	-3.761	-.44970	.33510	.16770	.06540	.06640	-.00520	-.00390	-.01720	-8.15630	-3.91030
-8.296	.194	-.42430	.33870	.16900	.04870	-.00270	-.00010	-.00010	.00120	-8.22550	-.01200
-8.089	4.397	-.41720	.33540	.16930	.05090	-.07490	.00530	.00420	.01920	-8.12990	4.18260
-8.128	6.270	-.42830	.33380	.16800	.05230	-.10930	.00920	.00730	.02610	-8.20540	6.06620
	GRADIENT	.00396	.00003	.00019	-.00175	-.01732	.00129	.00099	.00446	.00344	.99211

RUN NO. 1361/ 0 RN/L = 3.50 GRADIENT INTERVAL = -5.00/ 5.00

ALPHAT	BETAT	CNFTS	CATS	CAFTS	CLMFTS	CYFTS	CYNTS	CYNFTS	CBLFTS	ALFATU	BETATU
-6.229	-5.990	-.37690	.33220	.17070	.06620	.10790	-.01180	-.00980	-.02290	-6.02830	-6.07560
-6.132	-4.028	-.36440	.33280	.17060	.06310	.06930	-.00740	-.00620	-.01560	-5.95030	-4.14820
-6.280	.122	-.33980	.33750	.16900	.04740	-.00490	.00000	.00010	.00070	-6.20600	-.08330
-6.053	4.272	-.33210	.33550	.17390	.04930	-.07300	.00600	.00490	.01600	-6.11820	4.06460
-6.030	6.247	-.33680	.33230	.17210	.04890	-.10940	.01060	.00870	.02240	-6.13560	6.05600
	GRADIENT	.00389	.00033	.00040	-.00166	-.01714	.00161	.00134	.00381	-.02023	.98943

RUN NO. 1362/ 0 RN/L = 3.50 GRADIENT INTERVAL = -5.00/ 5.00

ALPHAT	BETAT	CNFTS	CATS	CAFTS	CLMFTS	CYFTS	CYNTS	CYNFTS	CBLFTS	ALFATU	BETATU
-3.976	-6.100	-.30680	.33130	.17260	.07320	.11030	-.01390	-.01200	-.01930	-3.76190	-6.13840
-4.234	-3.948	-.30220	.33270	.17420	.06830	.06670	-.00890	-.00780	-.01290	-4.03320	-4.03420
-4.177	.377	-.26240	.33240	.17230	.04870	-.01000	.00100	.00090	.00140	-4.11550	.16770
-3.704	4.311	-.25380	.33460	.17780	.05620	-.07160	.00710	.00610	.01260	-3.81620	4.12360
-3.784	6.115	-.26070	.33360	.17490	.05700	-.10480	.01100	.00930	.01730	-3.92510	5.94900
	GRADIENT	.00592	.00023	.00042	-.00152	-.01676	.00194	.00169	.00309	.02553	.98749

RUN NO. 1363/ 0 RN/L = 3.50 GRADIENT INTERVAL = -5.00/ 5.00

ALPHAT	BETAT	CNFTS	CATS	CAFTS	CLMFTS	CYFTS	CYNTS	CYNFTS	CBLFTS	ALFATU	BETATU
-.194	-7.011	-.21480	.33030	.17680	.09400	.14520	-.02880	-.02690	-.01380	.01180	-6.94100
-.184	-4.725	-.19980	.32760	.17680	.08770	.09450	-.02090	-.01940	-.00940	.02270	-4.65460
-.217	-.458	-.16420	.32940	.17880	.06740	.01220	-.00690	-.00690	-.00130	-.01100	-.38730
-.146	3.789	-.16330	.33040	.17840	.07450	-.07350	.01450	.01310	.00630	.06040	3.85970
-.154	5.967	-.16700	.33030	.17680	.07610	-.11840	.02150	.01960	.01000	.05280	6.03780
	GRADIENT	.00429	.00033	.00019	-.00155	-.01973	.00416	.00382	.00184	.00442	1.00000

IA156A, AEDC PWT 16T-470, 0 T S (R8NSC4) (10 MAY 80)

REFERENCE DATA

SREF = 2690.0000 SQ.FT. XMRP = 976.0000 IN. XT
LREF = 1290.3000 INCHES YMRP = .0000 IN. YT
BREF = 1290.3000 INCHES ZMRP = 400.0000 IN. ZT
SCALE = .0200

PARAMETRIC DATA

IB-ELV = 12.000 OB-ELV = -2.000
BDFLAP = .000 SPDBRK = .000
RUDDER = .000 SILTS = .000
MACH = 1.250 RN/L = 3.500

RUN NO. 1364/ 0 RN/L = 3.50 GRADIENT INTERVAL = -5.00/ 5.00

ALPHAT	BETAT	CNFTS	CATS	CAFTS	CLMFTS	CYFTS	CYNTS	CYNFTS	CBLFTS	ALFATU	BETATU
4.542	-5.780	-.07970	.32370	.17420	.09350	.14030	-.03950	-.03830	-.00490	4.40990	-5.95270
4.419	-3.661	-.06740	.32580	.17520	.08660	.09110	-.03000	-.02930	-.00380	4.32380	-3.85660
4.163	.215	-.05550	.32400	.17560	.07820	.00210	-.00580	-.00570	-.00080	4.23220	.00800
4.242	4.122	-.05490	.32270	.17330	.08180	-.08910	.02370	.02270	.00200	4.43740	4.02580
4.192	6.163	-.06010	.32360	.17370	.08320	-.13680	.03380	.03240	.00350	4.40280	6.10850
	GRADIENT	.00160	-.00040	-.00024	-.00061	-.02315	.00690	.00668	.00075	.01465	1.01277

IA156A, AEDC PWT 16T-470, 0 T S (R8NSC5) (10 MAY 80)

REFERENCE DATA

SREF = 2690.0000 SQ.FT. XMRP = 976.0000 IN. XT
LREF = 1290.3000 INCHES YMRP = .0000 IN. YT
BREF = 1290.3000 INCHES ZMRP = 400.0000 IN. ZT
SCALE = .0200

PARAMETRIC DATA

IB-ELV = 12.000 OB-ELV = -2.000
BDFLAP = .000 SPDBRK = .000
RUDDER = .000 SILTS = .000
MACH = 1.400 RN/L = 3.500

RUN NO. 1365/ 0 RN/L = 3.00 GRADIENT INTERVAL = -5.00/ 5.00

ALPHAT	BETAT	CNFTS	CATS	CAFTS	CLMFTS	CYFTS	CYNTS	CYNFTS	CBLFTS	ALFATU	BETATU
-8.108	-5.967	-.47750	.32150	.17200	.08330	11320	-.00880	-.00710	-.02650	-7.88530	-6.09910
-8.259	-3.760	-.46920	.32520	.17500	.07750	.06170	.00110	.00230	-.01770	-8.06940	-3.93650
-8.236	.227	-.43720	.32770	.17670	.06020	-.00490	-.00110	-.00110	.00140	-8.14970	-.01780
-8.033	4.521	-.43790	.32720	.17850	.06560	-.07230	-.00270	-.00390	.02030	-8.08090	4.26590
-8.015	6.347	-.44270	.32470	.17690	.06750	-.11160	.00310	.00150	.02610	-8.10460	6.10370
	GRADIENT	.00373	.00024	.00042	-.00140	-.01618	-.00046	-.00075	.00459	-.00117	.99067

RUN NO. 1366/ 0 RN/L = 3.00 GRADIENT INTERVAL = -5.00/ 5.00

ALPHAT	BETAT	CNFTS	CATS	CAFTS	CLMFTS	CYFTS	CYNTS	CYNFTS	CBLFTS	ALFATU	BETATU
-6.228	-5.983	-.39270	.32360	.17630	.07330	.10470	-.00310	-.00140	-.02280	-5.98970	-6.08430
-6.183	-4.053	-.37400	.32330	.17790	.06780	.06200	.00170	.00270	-.01540	-5.96650	-4.19610
-6.252	.156	-.34860	.32410	.17840	.05450	-.00690	.00050	.00060	.00080	-6.16170	-.08840
-5.999	4.322	-.33930	.32740	.18100	.05500	-.06800	-.00250	-.00330	.01560	-6.07450	4.07260
-5.977	6.325	-.34320	.32520	.17990	.05670	-.10480	.00090	-.00060	.02160	-6.10010	6.09580
	GRADIENT	.00415	.00049	.00037	-.00153	-.01552	-.00050	-.00072	.00370	-.01295	.98726

IA156A, AEDC PWT 16T-470, O T S

(R8NSC5) (10 MAY 80)

REFERENCE DATA

SREF = 2690.0000 SQ.FT. XMRP = 976.0000 IN. XT
LREF = 1290.3000 INCHES YMRP = .0000 IN. YT
BREF = 1290.3000 INCHES ZMRP = 400.0000 IN. ZT
SCALE = .0200

PARAMETRIC DATA

IB-ELV =	12.000	OB-ELV =	-2.000
BDFLAP =	.000	SPDBRK =	.000
RUDDER =	.000	SILTS =	.000
MACH =	1.400	RN/L =	3.500

RUN NO. 1367/ 0 RN/L = 2.99 GRADIENT INTERVAL = -5.00/ 5.00

ALPHAT	BETAT	CNFTS	CATS	CAFTS	CLMFTS	CYFTS	CYNTS	CYNFTS	CBLFTS	ALFATU	BETATU
-4.006	-6.104	-.30970	.32240	.18120	.07560	.10600	-.00620	-.00460	-.01830	-3.75150	-6.14920
-4.293	-3.959	-.30370	.32220	.17950	.06700	.06130	-.00110	-.00030	-.01230	-4.05340	-4.06200
-4.164	.417	-.27060	.32310	.18160	.05490	-.01090	.00070	.00070	.00130	-4.08880	.16810
-3.664	4.364	-.25630	.32570	.18400	.06100	-.06830	-.00010	-.00090	.01180	-3.79530	4.13940
-3.759	6.177	-.26250	.32430	.18150	.05990	-.10450	.00400	.00260	.01660	-3.92490	5.97600
	GRADIENT	.00573	.00042	.00054	-.00076	-.01559	.00013	-.00007	.00290	.03030	.98497

RUN NO. 1368/ 0 RN/L = 3.00 GRADIENT INTERVAL = -5.00/ 5.00

ALPHAT	BETAT	CNFTS	CATS	CAFTS	CLMFTS	CYFTS	CYNTS	CYNFTS	CBLFTS	ALFATU	BETATU
-.240	-6.978	-.21530	.32120	.18300	.09620	.14160	-.02380	-.02210	-.01270	.00570	-6.89230
-.236	-4.791	-.19630	.31760	.18280	.08770	.09180	-.01550	-.01430	-.00880	.01060	-4.70590
-.235	-.426	-.16620	.31850	.18480	.07220	.00790	-.00430	-.00420	-.00120	.01100	-.34030
-.181	3.710	-.16700	.32020	.18430	.07970	-.07180	.01080	.00980	.00550	.06490	3.79580
-.201	5.909	-.16550	.32040	.18450	.07720	-.11690	.01820	.01660	.00900	.04440	5.99460
	GRADIENT	.00348	.00030	.00018	-.00097	-.01924	.00309	.00283	.00168	.00633	1.00002

RUN NO. 1369/ 0 RN/L = 3.00 GRADIENT INTERVAL = -5.00/ 5.00

ALPHAT	BETAT	CNFTS	CATS	CAFTS	CLMFTS	CYFTS	CYNTS	CYNFTS	CBLFTS	ALFATU	BETATU
4.506	-5.883	-.09060	.31420	.17930	.10910	.14190	-.04040	-.03920	-.00490	4.34510	-6.08810
4.424	-3.652	-.07360	.31310	.18070	.09630	.08870	-.03000	-.02910	-.00340	4.31080	-3.88590
4.148	.192	-.06550	.31470	.18020	.08880	.00290	-.00720	-.00720	-.00060	4.22800	-.05550
4.186	4.093	-.06090	.31370	.18050	.08870	-.08560	.01990	.01910	.00180	4.41870	3.97720
4.147	6.172	-.06280	.31620	.18210	.09020	-.13650	.03240	.03100	.00340	4.39860	6.10740
	GRADIENT	.00164	.00008	-.00003	-.00098	-.02251	.00644	.00623	.00067	.01402	1.01537

IA156A, AEDC PWT 16T-470, O T S (R8NSC6) (10 MAY 80)

REFERENCE DATA

SREF = 2690.0000 SQ.FT. XMRP = 976.0000 IN. XT
LREF = 1290.3000 INCHES YMRP = .0000 IN. YT
BREF = 1290.3000 INCHES ZMRP = 400.0000 IN. ZT
SCALE = .0200

PARAMETRIC DATA

IB-ELV = 12.000 OB-ELV = -2.000
BDFLAP = .000 SPDBRK = .000
RUDDER = .000 SILTS = .000
MACH = 1.550 RN/L = 3.200

RUN NO. 1370/ 0 RN/L = 2.99 GRADIENT INTERVAL = -5.00/ 5.00

ALPHAT	BETAT	CNFTS	CATS	CAFTS	CLMFTS	CYFTS	CYNTS	CYNFTS	CBLFTS	ALFATU	BETATU
-8.131	-5.945	-.47940	.30180	.16940	.09630	.11370	-.01000	-.00830	-.02500	-7.80670	-6.09630
-8.296	-3.705	-.47260	.30270	.17130	.09030	.06520	-.00270	-.00160	-.01710	-8.01200	-3.92280
-8.214	.313	-.44550	.30570	.17420	.07870	-.00280	-.00310	-.00310	.00130	-8.06250	-.01140
-7.983	4.622	-.44560	.30810	.17550	.08130	-.07680	-.00050	-.00160	.01990	-8.01400	4.26550
-7.961	6.448	-.44880	.30510	.17490	.08140	-.11460	.00430	.00270	.02540	-8.05090	6.10210
	GRADIENT	.00320	.00065	.00050	-.00106	-.01705	.00027	.00000	.00444	-.00010	.98345

RUN NO. 1371/ 0 RN/L = 3.00 GRADIENT INTERVAL = -5.00/ 5.00

ALPHAT	BETAT	CNFTS	CATS	CAFTS	CLMFTS	CYFTS	CYNTS	CYNFTS	CBLFTS	ALFATU	BETATU
-6.304	-5.985	-.39070	.30190	.17340	.08120	.10780	-.00750	-.00580	-.02140	-5.96450	-6.09140
-6.201	-4.001	-.37370	.30130	.17280	.07610	.06460	-.00210	-.00110	-.01450	-5.88490	-4.16770
-6.259	.249	-.35720	.30550	.17520	.06840	-.00500	-.00210	-.00200	.00100	-6.10350	-.07290
-5.954	4.424	-.34250	.30510	.17800	.06690	-.06940	-.00140	-.00230	.01480	-6.02230	4.07080
-5.897	6.421	-.35230	.30860	.17900	.07000	-.10920	.00380	.00220	.02080	-6.03540	6.09000
	GRADIENT	.00370	.00045	.00062	-.00109	-.01591	.00008	-.00014	.00348	-.01642	.97783

RUN NO. 1372/ 0 RN/L = 3.00 GRADIENT INTERVAL = -5.00/ 5.00

ALPHAT	BETAT	CNFTS	CATS	CAFTS	CLMFTS	CYFTS	CYNTS	CYNFTS	CBLFTS	ALFATU	BETATU
-4.102	-6.112	-.30670	.30220	.17540	.07700	.10930	-.01050	-.00900	-.01720	-3.74520	-6.14010
-4.367	-3.945	-.29750	.30020	.17510	.06950	.06400	-.00460	-.00380	-.01110	-4.02550	-4.05340
-4.205	.513	-.27230	.30350	.17730	.06090	-.01050	-.00170	-.00170	.00140	-4.06780	.18230
-3.627	4.446	-.25480	.30540	.18020	.06480	-.07080	.00240	.00160	.01070	-3.77620	4.12170
-3.704	6.269	-.26750	.30680	.17990	.06700	-.10820	.00820	.00680	.01550	-3.90390	5.97410
	GRADIENT	.00510	.00062	.00061	-.00059	-.01608	.00083	.00064	.00260	.02884	.97368

RUN NO. 1373/ 0 RN/L = 3.00 GRADIENT INTERVAL = -5.00/ 5.00

ALPHAT	BETAT	CNFTS	CATS	CAFTS	CLMFTS	CYFTS	CYNTS	CYNFTS	CBLFTS	ALFATU	BETATU
-.330	-7.007	-.20380	.30000	.17760	.09180	.13840	-.02480	-.02310	-.01140	-.00600	-6.85830
-.318	-4.865	-.18810	.29830	.17580	.08550	.09160	-.01600	-.01490	-.00790	.00780	-4.71420
-.322	-.480	-.16370	.29740	.17950	.07310	.00820	-.00350	-.00340	-.00100	.00450	-.32820
-.304	3.649	-.15930	.30350	.18250	.07260	-.07090	.01150	.01070	.00510	.02010	3.79700
-.329	5.830	-.15780	.30470	.18250	.06950	-.11590	.02030	.01870	.00830	-.00340	5.98040
	GRADIENT	.00341	.00060	.00079	-.00153	-.01909	.00323	.00300	.00153	.00142	.99969

IA156A, AEDC PWT 16T-470, O T S (R8NSC6) (10 MAY 80)

REFERENCE DATA

SREF = 2690.0000 SQ.FT. XMRP = 976.0000 IN. XT
LREF = 1290.3000 INCHES YMRP = .0000 IN. YT
BREF = 1290.3000 INCHES ZMRP = 400.0000 IN. ZT
SCALE = .0200

PARAMETRIC DATA

IB-ELV = 12.000 OB-ELV = -2.000
BDFLAP = .000 SPDBRK = .000
RUDDER = .000 SILTS = .000
MACH = 1.550 RN/L = 3.200

RUN NO. 1374/ 0 RN/L = 3.01 GRADIENT INTERVAL = -5.00/ 5.00

ALPHAT	BETAT	CNFTS	CATS	CAFTS	CLMFTS	CYFTS	CYNTS	CYNFTS	CBLFTS	ALFATU	BETATU
4.652	-5.696	-.07420	.30170	.17970	.10460	.13630	-.03930	-.03800	-.00370	4.46560	-5.99700
4.434	-3.559	-.06230	.30040	.18060	.09220	.08690	-.02900	-.02800	-.00290	4.31100	-3.89120
4.089	.277	-.06020	.29890	.17930	.08690	-.00030	-.00580	-.00590	-.00060	4.23080	-.05020
4.080	4.099	-.05480	.29840	.17900	.08480	-.08300	.01790	.01700	.00120	4.41160	3.97050
4.023	6.177	-.05240	.29980	.17900	.08340	-.13240	.02990	.02850	.00260	4.37780	6.12290
	GRADIENT	.00098	-.00026	-.00021	-.00097	-.02219	.00613	.00588	.00054	.01312	1.02676

IA156A, AEDC PWT 16T-470, O T S W/SILTS (R8NSC7) (10 MAY 80)

REFERENCE DATA

SREF = 2690.0000 SQ.FT. XMRP = 976.0000 IN. XT
LREF = 1290.3000 INCHES YMRP = .0000 IN. YT
BREF = 1290.3000 INCHES ZMRP = 400.0000 IN. ZT
SCALE = .0200

PARAMETRIC DATA

IB-ELV = 9.000 OB-ELV = -2.000
BDFLAP = .000 SPDBRK = .000
RUDDER = .000 SILTS = 1.000
MACH = 1.150 RN/L = 3.500
IB-AIL = 1.000

RUN NO. 1377/ 0 RN/L = 3.50 GRADIENT INTERVAL = -5.00/ 5.00

ALPHAT	BETAT	CNFTS	CATS	CAFTS	CLMFTS	CYFTS	CYNTS	CYNFTS	CBLFTS	ALFATU	BETATU
-8.321	-5.895	-.44150	.33370	.15030	.05490	.11260	-.01480	-.01260	-.02650	-8.14570	-6.00450
-8.343	-3.842	-.42990	.33300	.15060	.05150	.07230	-.00940	-.00790	-.01820	-8.19120	-3.98290
-8.363	.286	-.39830	.33480	.15110	.02970	-.00340	-.00110	-.00110	.00140	-8.30020	.08910
-8.150	4.275	-.40490	.33530	.15230	.03950	-.07320	.00740	.00610	.01910	-8.18840	4.07120
-8.132	6.232	-.41100	.33440	.15200	.04160	-.10690	.01130	.00930	.02580	-8.20660	6.03910
	GRADIENT	.00311	.00028	.00021	-.00150	-.01793	.00207	.00172	.00460	.00019	.99232

RUN NO. 1378/ 0 RN/L = 3.50 GRADIENT INTERVAL = -5.00/ 5.00

ALPHAT	BETAT	CNFTS	CATS	CAFTS	CLMFTS	CYFTS	CYNTS	CYNFTS	CBLFTS	ALFATU	BETATU
-6.257	-5.977	-.36450	.33470	.15930	.05400	.11490	-.01570	-.01350	-.02360	-6.06740	-6.05900
-6.180	-4.023	-.34840	.33390	.15830	.04960	.07470	-.01100	-.00960	-.01600	-6.00800	-4.13820
-6.335	.121	-.31700	.33260	.15500	.03060	-.00050	-.00170	-.00170	.00050	-6.26660	-.07390
-6.118	4.246	-.32210	.33700	.15820	.03930	-.07000	.00570	.00450	.01590	-6.18070	4.04920
-5.876	6.361	-.31830	.33190	.15800	.04260	-.10910	.01230	.01020	.02220	-5.98180	6.18340
	GRADIENT	.00318	.00037	-.00001	-.00125	-.01750	.00202	.00171	.00386	-.02092	.99010

IA156A, AEDC PWT 16T-470, ϕ T S W/SILTS (R8NSC7) (10 MAY 80)

REFERENCE DATA

SREF = 2690.0000 SQ.FT. XMRP = 976.0000 IN. XT
LREF = 1290.3000 INCHES YMRP = .0000 IN. YT
BREF = 1290.3000 INCHES ZMRP = 400.0000 IN. ZT
SCALE = .0200

PARAMETRIC DATA

IB-ELV = 9.000 OB-ELV = -2.000
BDFLAP = .000 SPDBRK = .000
RUDDER = .000 SILTS = 1.000
MACH = 1.150 RN/L = 3.500
IB-AIL = 1.000

RUN NO. 1379/ 0 RN/L = 3.50 GRADIENT INTERVAL = -5.00/ 5.00

ALPHAT	BETAT	CNFTS	CATS	CAFTS	CLMFTS	CYFTS	CYNTS	CYNFTS	CBLFTS	ALFATU	BETATU
-4.067	-6.082	-.29530	.33400	.16160	.06120	.11700	-.01760	-.01560	-.02020	-3.86330	-6.12120
-4.288	-3.944	-.28870	.33270	.16320	.05410	.07520	-.01390	-.01260	-.01380	-4.09880	-4.02690
-4.236	.385	-.24590	.33170	.16100	.03610	-.00530	-.00190	-.00200	.00140	-4.17940	.18550
-3.719	4.274	-.24330	.33730	.16510	.04870	-.07160	.00740	.00610	.01270	-3.82610	4.09770
-3.829	8.117	-.25480	.33660	.16380	.05110	-.10660	.01250	.01060	.01770	-3.96390	5.96020
	GRADIENT	.00561	.00054	.00022	-.00072	-.01788	.00260	.00228	.00323	.03221	.98832

RUN NO. 1380/ 0 RN/L = 3.50 GRADIENT INTERVAL = -5.00/ 5.00

ALPHAT	BETAT	CNFTS	CATS	CAFTS	CLMFTS	CYFTS	CYNTS	CYNFTS	CBLFTS	ALFATU	BETATU
-.253	-6.980	-.20190	.33340	.16640	.07960	.14790	-.03080	-.02870	-.01450	-.05730	-6.91480
-.250	-4.780	-.18600	.33130	.16750	.07250	.09930	-.02340	-.02180	-.01000	-.05350	-4.71430
-.317	-.389	-.14200	.33400	.16860	.04500	.01210	-.00760	-.00750	-.00150	-.12040	-.32340
-.234	3.725	-.14670	.33660	.17120	.05600	-.07340	.01600	.01460	.00650	-.03780	3.79100
-.222	5.924	-.15140	.33550	.16640	.05950	-.11850	.02440	.02240	.01030	-.02630	5.98900
	GRADIENT	.00468	.00062	.00043	-.00199	-.02030	.00462	.00427	.00194	.00166	1.00001

RUN NO. 1381/ 0 RN/L = 3.50 GRADIENT INTERVAL = -5.00/ 5.00

ALPHAT	BETAT	CNFTS	CATS	CAFTS	CLMFTS	CYFTS	CYNTS	CYNFTS	CBLFTS	ALFATU	BETATU
4.510	-5.838	-.07430	.32860	.16540	.08360	.14700	-.04230	-.04110	-.00520	4.38440	-6.00220
4.329	-3.688	-.06290	.32860	.16460	.07580	.09760	-.03330	-.03260	-.00410	4.23720	-3.87310
4.104	.142	-.03950	.32930	.16640	.05980	.00800	-.00880	-.00870	-.00100	4.16570	-.05490
4.165	4.067	-.04090	.33020	.16630	.06410	-.08400	.02040	.01950	.00200	4.34880	3.97330
4.131	6.175	-.04380	.32910	.16230	.06620	-.13450	.03120	.02990	.00320	4.33120	6.12160
	GRADIENT	.00282	.00021	.00022	-.00150	-.02342	.00693	.00672	.00079	.01452	1.01186

IA156A, AEDC PWT 16T-470, 0 T S W/SILTS (R8NSC8) (10 MAY 80)

REFERENCE DATA

SREF = 2690.0000 SQ.FT. XMRP = 976.0000 IN. XT
LREF = 1290.3000 INCHES YMRP = .0000 IN. YT
BREF = 1290.3000 INCHES ZMRP = 400.0000 IN. ZT
SCALE = .0200

PARAMETRIC DATA

IB-ELV = 9.000 OB-ELV = -2.000
BDFLAP = .000 SPDBRK = .000
RUDDER = .000 SILTS = 1.000
MACH = 1.250 RN/L = 3.500
IB-AIL = 1.000

RUN NO. 1382/ 0 RN/L = 3.50 GRADIENT INTERVAL = -5.00/ 5.00

ALPHAT	BETAT	CNFTS	CATS	CAFTS	CLMFTS	CYFTS	CYNTS	CYNFTS	CBLFTS	ALFATU	BETATU
-8.276	-5.876	-.45960	.33290	.16440	.06810	.11160	-.01220	-.01040	-.02610	-8.09020	-5.99050
-8.324	-3.788	-.44930	.33280	.16640	.06430	.06670	-.00550	-.00410	-.01740	-8.16430	-3.93640
-8.297	.195	-.42010	.33900	.16660	.04680	-.00210	-.00040	-.00030	.00120	-8.22640	-.01140
-8.097	4.373	-.41700	.33490	.16680	.04910	-.07190	.00400	.00290	.01880	-8.13810	4.15850
-8.108	6.258	-.42120	.33110	.16750	.04990	-.10660	.00860	.00680	.02560	-8.18570	6.05420
	GRADIENT	.00393	.00025	.00005	-.00184	-.01698	.00116	.00086	.00443	.00336	.99204

RUN NO. 1383/ 0 RN/L = 3.50 GRADIENT INTERVAL = -5.00/ 5.00

ALPHAT	BETAT	CNFTS	CATS	CAFTS	CLMFTS	CYFTS	CYNTS	CYNFTS	CBLFTS	ALFATU	BETATU
-6.230	-5.975	-.37620	.33220	.16840	.06400	.10830	-.01190	-.01000	-.02300	-6.02930	-6.05960
-6.157	-4.043	-.36580	.33260	.16910	.06180	.07130	-.00780	-.00660	-.01600	-5.97530	-4.16330
-6.283	.126	-.33540	.33450	.17040	.04520	-.00480	.00000	.00010	.00070	-6.20890	-.07900
-6.054	4.267	-.33130	.33330	.17200	.04800	-.06980	.00470	.00360	.01560	-6.11960	4.05910
-6.036	6.254	-.33590	.33270	.17010	.04720	-.10750	.00970	.00780	.02210	-6.14150	6.06310
	GRADIENT	.00415	.00008	.00035	-.00166	-.01698	.00150	.00123	.00380	-.01741	.98936

RUN NO. 1384/ 0 RN L = 3.50 GRADIENT INTERVAL = -5.00/ 5.00

ALPHAT	BETAT	CNFTS	CATS	CAFTS	CLMFTS	CYFTS	CYNTS	CYNFTS	CBLFTS	ALFATU	BETATU
-3.988	-6.103	-.30610	.33220	.17150	.07200	.11060	-.01380	-.01200	-.01930	-3.77360	-6.14080
-4.246	-3.949	-.30110	.33120	.17250	.06570	.06800	-.00990	-.00870	-.01310	-4.04570	-4.03450
-4.175	.380	-.25910	.33130	.17180	.04670	-.00940	.00040	.00050	.00120	-4.11330	.17050
-3.702	4.297	-.25340	.33540	.17520	.05450	-.07160	.00660	.00560	.01250	-3.81380	4.11020
-3.803	6.137	-.25940	.33300	.17400	.05460	-.10590	.01080	.00910	.01750	-3.94390	5.97090
	GRADIENT	.00585	.00050	.00032	-.00141	-.01695	.00201	.00174	.00311	.02736	.98747

RUN NO. 1385/ 0 RN/L = 3.50 GRADIENT INTERVAL = -5.00/ 5.00

ALPHAT	BETAT	CNFTS	CATS	CAFTS	CLMFTS	CYFTS	CYNTS	CYNFTS	CBLFTS	ALFATU	BETATU
-.210	-6.937	-.21320	.32990	.17470	.09190	.14490	-.02840	-.02650	-.01390	-.00340	-6.86730
-.199	-4.762	-.19830	.32780	.17570	.08600	.09610	-.02120	-.01980	-.00960	.00710	-4.69210
-.236	-.458	-.16220	.32910	.17740	.06520	.01290	-.00720	-.00710	-.00140	-.02920	-.38740
-.158	3.794	-.16130	.32920	.17700	.07310	-.07230	.01390	.01260	.00610	.04830	3.86400
-.168	5.966	-.16560	.33090	.17710	.07470	-.11800	.02120	.01930	.00980	.03870	6.03590
	GRADIENT	.00433	.00016	.00015	-.00151	-.01968	.00410	.00379	.00184	.00479	1.00002

IA156A, AEDC PWT 16T-470, O T S W/SILTS (R8NSC8) (10 MAY 80)

REFERENCE DATA

SREF = 2690.0000 SQ.FT. XMRP = 976.0000 IN. XT
LREF = 1290.3000 INCHES YMRP = .0000 IN. YT
BREF = 1290.3000 INCHES ZMRP = 400.0000 IN. ZT
SCALE = .0200

PARAMETRIC DATA

IB-ELV = 9.000 OB-ELV = -2.000
BDFLAP = .000 SPDBRK = .000
RUDDER = .000 SILTS = 1.000
MACH = 1.250 RN/L = 3.500
IB-AIL = 1.000

RUN NO. 1386/ 0 RN/L = 3.50 GRADIENT INTERVAL = -5.00/ 5.00

ALPHAT	BETAT	CNFTS	CATS	CAFTS	CLMFTS	CYFTS	CYNTS	CYNFTS	CBLFTS	ALFATU	BETATU
4.615	-5.813	-.07690	.32480	.17410	.09270	.14270	-.04030	-.03930	-.00480	4.48430	-5.98720
4.396	-3.649	-.06830	.32660	.17580	.08560	.09190	-.03010	-.02940	-.00390	4.30120	-3.84480
4.161	.228	-.05460	.32400	.17410	.07640	.00000	-.00520	-.00520	-.00080	4.23100	.02220
4.242	4.112	-.05400	.32440	.17300	.08040	-.08770	.02240	.02140	.00190	4.43740	4.01520
4.195	6.174	-.05840	.32470	.17180	.08260	-.13790	.03360	.03220	.00330	4.40630	6.11940
	GRADIENT	.00184	-.00028	-.00036	-.00067	-.02314	.00676	.00655	.00075	.01756	1.01277

IA156A, AEDC PWT 16T-470, O T S W/SILTS (R8NSC9) (10 MAY 80)

REFERENCE DATA

SREF = 2690.0000 SQ.FT. XMRP = 976.0000 IN. XT
LREF = 1290.3000 INCHES YMRP = .0000 IN. YT
BREF = 1290.3000 INCHES ZMRP = 400.0000 IN. ZT
SCALE = .0200

PARAMETRIC DATA

IB-ELV = 9.000 OB-ELV = -2.000
BDFLAP = .000 SPDBRK = .000
RUDDER = .000 SILTS = 1.000
MACH = 1.400 RN/L = 3.500
IB-AIL = 1.000

RUN NO. 1387/ 0 RN/L = 2.99 GRADIENT INTERVAL = -5.00/ 5.00

ALPHAT	BETAT	CNFTS	CATS	CAFTS	CLMFTS	CYFTS	CYNTS	CYNFTS	CBLFTS	ALFATU	BETATU
-8.118	-5.972	-.47610	.32030	.17150	.08250	.11230	-.00760	-.00600	-.02640	-7.89500	-6.10490
-8.254	-3.761	-.47200	.32680	.17320	.07700	.06470	.00080	.00200	-.01820	-8.06350	-3.93850
-8.240	.230	-.43370	.32630	.17600	.05830	-.00390	-.00120	-.00120	.00120	-8.15440	-.01510
-8.048	4.519	-.43630	.32810	.17580	.06370	-.07290	-.00270	-.00400	.02030	-8.09620	4.26400
-8.018	6.342	-.43880	.32390	.17460	.06540	-.11030	.00250	.00100	.02580	-8.10780	6.09890
	GRADIENT	.00425	.00016	.00031	-.00157	-.01661	-.00042	-.00072	.00465	-.00373	.99068

RUN NO. 1388/ 0 RN/L = 3.00 GRADIENT INTERVAL = -5.00/ 5.00

ALPHAT	BETAT	CNFTS	CATS	CAFTS	CLMFTS	CYFTS	CYNTS	CYNFTS	CBLFTS	ALFATU	BETATU
-6.262	-6.015	-.39130	.32370	.17440	.07170	.10380	-.00260	-.00100	-.02280	-6.02200	-6.11590
-6.164	-4.024	-.37090	.32230	.17570	.06560	.06220	.00170	.00270	-.01530	-5.94710	-4.16750
-6.264	.151	-.35060	.32570	.17710	.05330	-.00570	.00030	.00050	.00060	-6.17360	-.09300
-6.012	4.328	-.33190	.32220	.17960	.05240	-.06640	-.00280	-.00360	.01520	-6.08660	4.07860
-5.984	6.333	-.34550	.32650	.17870	.05530	-.10570	.00040	-.00110	.02190	-6.10690	6.10420
	GRADIENT	.00467	-.00001	.00047	-.00158	-.01540	-.00054	-.00075	.00365	-.01670	.98731

IA156A, AEDC PWT 16T-470, O T S W/SILTS (R8NSC9) (10 MAY 80)

REFERENCE DATA

SREF = 2690.0000 SQ.FT. XMRP = 976.0000 IN. XT
LREF = 1290.3000 INCHES YMRP = .0000 IN. YT
BREF = 1290.3000 INCHES ZMRP = 400.0000 IN. ZT
SCALE = .0200

PARAMETRIC DATA

IB-ELV =	9.000	OB-ELV =	-2.000
BDFLAP =	.000	SPDBRK =	.000
RUDDER =	.000	SILTS =	1.000
MACH =	1.400	RN/L =	3.500
IB-AIL =	1.000		

RUN NO. 1389/ 0 RN/L = 3.01 GRADIENT INTERVAL = -5.00/ 5.00

ALPHAT	BETAT	CNFTS	CATS	CAFTS	CLMFTS	CYFTS	CYNTS	CYNFTS	CBLFTS	ALFATU	BETATU
-4.180	-6.111	-.31230	.32180	.17860	.07310	.10640	-.00590	-.00430	-.01860	-3.92420	-6.16070
-4.286	-3.966	-.30270	.32230	.17920	.06610	.06200	-.00110	-.00020	-.01240	-4.04610	-4.06780
-4.181	.416	-.27100	.32410	.17990	.05350	-.01090	.00050	.00060	.00120	-4.10470	.16590
-3.684	4.350	-.25810	.32680	.18160	.05910	-.06840	-.00060	-.00130	.01170	-3.81480	4.12440
-3.751	6.185	-.25800	.32110	.18050	.05750	-.10240	.00350	.00210	.01610	-3.91800	5.98460
	GRADIENT	.00540	.00054	.00029	-.00088	-.01570	.00007	-.00013	.00290	.02704	.98475

RUN NO. 1390/ 0 RN/L = 3.00 GRADIENT INTERVAL = -5.00/ 5.00

ALPHAT	BETAT	CNFTS	CATS	CAFTS	CLMFTS	CYFTS	CYNTS	CYNFTS	CBLFTS	ALFATU	BETATU
-.249	-6.942	-.21280	.32270	.18220	.09480	.14120	-.02340	-.02170	-.01260	-.00230	-6.85660
-.241	-4.798	-.19450	.31800	.18110	.08640	.09270	-.01570	-.01450	-.00880	.00530	-4.71180
-.251	-.385	-.16470	.31780	.18360	.07030	.00820	-.00440	-.00430	-.00130	-.00450	-.29860
-.196	3.727	-.16600	.32020	.18290	.07790	-.07230	.01040	.00940	.00550	.05000	3.81240
-.210	5.902	-.16470	.32220	.18440	.07640	-.11680	.01780	.01620	.00880	.03520	5.98780
	GRADIENT	.00338	.00025	.00022	-.00103	-.01935	.00306	.00280	.00168	.00515	.99997

RUN NO. 1391/ 0 RN/L = 3.01 GRADIENT INTERVAL = -5.00/ 5.00

ALPHAT	BETAT	CNFTS	CATS	CAFTS	CLMFTS	CYFTS	CYNTS	CYNFTS	CBLFTS	ALFATU	BETATU
4.608	-5.785	-.08420	.31430	.17890	.10710	.13950	-.04010	-.03890	-.00450	4.45220	-5.99140
4.435	-3.659	-.07150	.31620	.17850	.09590	.08990	-.03080	-.02990	-.00340	4.32210	-3.89360
4.136	.197	-.06360	.31450	.18040	.08690	.00310	-.00750	-.00760	-.00080	4.21540	-.04970
4.176	4.101	-.05930	.31360	.17950	.08690	-.08610	.01960	.01870	.00160	4.40830	3.98610
4.137	6.165	-.06280	.31980	.18110	.08950	-.13600	.03200	.03060	.00320	4.38830	6.10090
	GRADIENT	.00157	-.00033	.00013	-.00116	-.02268	.00650	.00626	.00064	.01119	1.01538

IA156A, AEDC PWT 16T-470, 0 T S W/SILTS (R8NSD0) (10 MAY 80)

REFERENCE DATA

SREF = 2690.0000 SQ.FT. XMRP = 976.0000 IN. XT
LREF = 1290.3000 INCHES YMRP = .0000 IN. YT
BREF = 1290.3000 INCHES ZMRP = 400.0000 IN. ZT
SCALE = .0200

PARAMETRIC DATA

IB-ELV = 9.000 OB-ELV = -2.000
BDFLAP = .000 SPDBRK = .000
RUDDER = .000 SILTS = 1.000
MACH = 1.550 RN/L = 3.200
IB-AIL = 1.000

RUN NO. 1392/ 0 RN/L = 3.00 GRADIENT INTERVAL = -5.00/ 5.00

ALPHAT	BETAT	CNFTS	CATS	CAFTS	CLMFTS	CYFTS	CYNTS	CYNFTS	CBLFTS	ALFATU	BETATU
-8.143	-5.947	-.47780	.30250	.16930	.09510	.11320	-.00960	-.00790	-.02510	-7.82090	-6.09910
-8.292	-3.704	-.47180	.30240	.17040	.08890	.06530	-.00280	-.00160	-.01720	-8.00920	-3.92060
-8.211	.328	-.44650	.30860	.17300	.07710	-.00400	-.00300	-.00290	.00130	-8.06040	.00330
-8.011	4.619	-.44390	.30850	.17510	.07930	-.07620	-.00080	-.00190	.01970	-8.04250	4.26390
-7.969	6.442	-.44480	.30480	.17390	.07830	-.11340	.00400	-.00250	.02510	-8.05930	6.09870
	GRADIENT	.00332	.00072	.00056	-.00114	-.01700	.00024	-.00003	.00443	-.00391	.98347

RUN NO. 1393/ 0 RN/L = 3.00 GRADIENT INTERVAL = -5.00/ 5.00

ALPHAT	BETAT	CNFTS	CATS	CAFTS	CLMFTS	CYFTS	CYNTS	CYNFTS	CBLFTS	ALFATU	BETATU
-6.287	-5.976	-.38710	.30240	.17190	.07960	.10840	-.00790	-.00630	-.02140	-5.94610	-6.08210
-6.217	-3.991	-.37570	.30210	.17210	.07510	.06480	-.00210	-.00110	-.01470	-5.90090	-4.15780
-6.255	.245	-.35550	.30430	.17330	.06650	-.00530	-.00210	-.00200	.00090	-6.09870	-.07750
-5.967	4.425	-.34460	.30650	.17670	.06570	-.06890	-.00190	-.00270	.01470	-6.03630	4.07460
-5.904	6.419	-.34890	.30870	.17800	.06760	-.10960	.00350	.00200	.02060	-6.04230	6.09020
	GRADIENT	.00370	.00052	.00055	-.00112	-.01589	.00002	-.00013	.00349	-.01616	.97816

RUN NO. 1394/ 0 RN/L = 3.00 GRADIENT INTERVAL = -5.00/ 5.00

ALPHAT	BETAT	CNFTS	CATS	CAFTS	CLMFTS	CYFTS	CYNTS	CYNFTS	CBLFTS	ALFATU	BETATU
-4.109	-6.111	-.30310	.30160	.17360	.07520	.10980	-.01070	-.00920	-.01720	-3.75300	-6.13900
-4.377	-3.941	-.29680	.30060	.17370	.06790	.06450	-.00460	-.00380	-.01120	-4.03500	-4.04890
-4.220	.514	-.27020	.30260	.17570	.05890	-.00920	-.00230	-.00220	.00130	-4.08270	.18280
-3.626	4.445	-.25360	.30550	.17890	.06320	-.07080	.00200	.00130	.01060	-3.77530	4.12020
-3.720	6.294	-.26510	.30630	.17810	.06500	-.10960	.00820	.00680	.01540	-3.92010	5.99760
	GRADIENT	.00517	.00058	.00062	-.00059	-.01614	.00078	.00060	.00260	.03005	.97360

RUN NO. 1395/ 0 RN/L = 3.00 GRADIENT INTERVAL = -5.00/ 5.00

ALPHAT	BETAT	CNFTS	CATS	CAFTS	CLMFTS	CYFTS	CYNTS	CYNFTS	CBLFTS	ALFATU	BETATU
-.335	-7.001	-.20330	.30150	.17630	.09160	.13900	-.02500	-.02330	-.01150	-.01000	-6.85160
-.327	-4.866	-.18660	.29820	.17600	.08440	.09210	-.01620	-.01510	-.00790	-.00120	-4.71510
-.332	-.492	-.16220	.29800	.17880	.07130	.00920	-.00390	-.00380	-.00120	-.00760	-.34210
-.317	3.654	-.15790	.30340	.18080	.07120	-.07020	.01100	.01020	.00490	.00760	3.80450
-.339	5.835	-.15650	.30400	.18150	.06790	-.11550	.01970	.01810	.00820	-.01530	5.98370
	GRADIENT	.00339	.00060	.00056	-.00156	-.01905	.00319	.00297	.00150	.00101	.99996

IA156A, AEDC PWT 16T-470, 0 T S W/SILTS (R8NSD0) (10 MAY 80)

REFERENCE DATA

SREF = 2690.0000 SQ.FT. XMRP = 976.0000 IN. XT
LREF = 1290.3000 INCHES YMRP = .0000 IN. YT
BREF = 1290.3000 INCHES ZMRP = 400.0000 IN. ZT
SCALE = .0200

PARAMETRIC DATA

IB-ELV = 9.000 OB-ELV = -2.000
BDFLAP = .000 SPDBRK = .000
RUDDER = .000 SILTS = 1.000
MACH = 1.550 RN/L = 3.200
IB-AIL = 1.000

RUN NO. 1396/ 0 RN/L = 3.00 GRADIENT INTERVAL = -5.00/ 5.00

ALPHAT	BETAT	CNFTS	CATS	CAFTS	CLMFTS	CYFTS	CYNTS	CYNFTS	CBLFTS	ALFATU	BETATU
4.652	-5.681	-.07450	.30260	.17910	.10350	.13670	-.03970	-.03840	-.00380	4.44630	-5.98540
4.409	-3.548	-.06260	.30060	.17810	.09040	.08650	-.02910	-.02820	-.00300	4.28640	-3.88280
4.086	.277	-.05780	.29840	.17800	.08510	.00130	-.00680	-.00690	-.00070	4.22980	-.05110
4.062	4.100	-.05440	.29730	.17740	.08300	-.08160	.01740	.01640	.00100	4.39530	3.97230
4.032	6.184	-.04940	.29820	.17810	.08120	-.13260	.03010	.02870	.00240	4.38670	6.12980
	GRADIENT	.00107	-.00043	-.00009	-.00097	-.02198	.00608	.00583	.00052	.01424	1.02710

IA156A, AEDC PWT 16T-470, 0 T S W/SILTS (R8NSD1) (10 MAY 80)

REFERENCE DATA

SREF = 2690.0000 SQ.FT. XMRP = 976.0000 IN. XT
LREF = 1290.3000 INCHES YMRP = .0000 IN. YT
BREF = 1290.3000 INCHES ZMRP = 400.0000 IN. ZT
SCALE = .0200

PARAMETRIC DATA

IB-ELV = 8.000 OB-ELV = -2.000
BDFLAP = .000 SPDBRK = .000
RUDDER = .000 SILTS = 1.000
MACH = 1.150 RN/L = 3.500

RUN NO. 1399/ 0 RN/L = 3.50 GRADIENT INTERVAL = -5.00/ 5.00

ALPHAT	BETAT	CNFTS	CATS	CAFTS	CLMFTS	CYFTS	CYNTS	CYNFTS	CBLFTS	ALFATU	BETATU
-8.345	-5.906	-.43640	.32980	.14970	.05270	.11240	-.01430	-.01220	-.02640	-8.17000	-6.01640
-8.338	-3.828	-.42820	.33320	.15500	.04990	.07050	-.00940	-.00800	-.01780	-8.18760	-3.96890
-8.360	.271	-.39590	.33330	.15410	.02840	-.00470	-.00010	-.00010	.00150	-8.29590	.07450
-8.166	4.278	-.39990	.33210	.15470	.03730	-.07250	.00770	.00650	.01890	-8.20460	4.07450
-8.146	6.235	-.40160	.33000	.15070	.03880	-.10710	.01180	.00990	.02550	-8.22010	6.04180
	GRADIENT	.00351	-.00014	-.00004	-.00157	-.01765	.00211	.00179	.00453	-.00219	.99234

RUN NO. 1400/ 0 RN/L = 3.51 GRADIENT INTERVAL = -5.00/ 5.00

ALPHAT	BETAT	CNFTS	CATS	CAFTS	CLMFTS	CYFTS	CYNTS	CYNFTS	CBLFTS	ALFATU	BETATU
-6.237	-5.964	-.35970	.33130	.15550	.05380	.11370	-.01550	-.01320	-.02340	-6.04650	-6.04620
-6.192	-4.033	-.34890	.33080	.15850	.04980	.07530	-.01110	-.00970	-.01620	-6.02040	-4.14800
-6.347	.118	-.31730	.33240	.15390	.02970	-.00200	-.00090	-.00090	.00070	-6.27860	-.07720
-6.127	4.243	-.31690	.33150	.15880	.03750	-.07010	.00660	.00540	.01570	-6.18920	4.04540
-5.890	6.367	-.31480	.32950	.15480	.04080	-.11060	.01330	.01120	.02220	-5.99470	6.18850
	GRADIENT	.00387	.00008	.00004	-.00149	-.01757	.00214	.00183	.00386	-.02044	.99009

IA156A, AEDC PWT 16T-470, 0 T S W/SILTS (R8NSD1) (10 MAY 80)

REFERENCE DATA

SREF = 2690.0000 SQ.FT. XMRP = 976.0000 IN. XT
LREF = 1290.3000 INCHES YMRP = .0000 IN. YT
BREF = 1290.3000 INCHES ZMRP = 400.0000 IN. ZT
SCALE = .0200

PARAMETRIC DATA

IB-ELV = 8.000 OB-ELV = -2.000
BDFLAP = .000 SPDBRK = .000
RUDDER = .000 SILTS = 1.000
MACH = 1.150 RN/L = 3.500

RUN NO. 1401/ 0 RN/L = 3.50 GRADIENT INTERVAL = -5.00/ 5.00

ALPHAT	BETAT	CNFTS	CATS	CAFTS	CLMFTS	CYFTS	CYNTS	CYNFTS	CBLFTS	ALFATU	BETATU
-4.063	-6.088	-.29670	.33250	.16180	.06220	.11540	-.01720	-.01520	-.01990	-3.86010	-6.12680
-4.282	-3.943	-.28810	.33120	.16280	.05460	.07340	-.01310	-.01180	-.01360	-4.09290	-4.02550
-4.234	.379	-.24500	.33070	.16090	.03550	-.00680	-.00100	-.00120	.00150	-4.17670	.18040
-3.720	4.270	-.24060	.33280	.16300	.04760	-.07210	.00820	.00690	.01270	-3.82720	4.09270
-3.848	6.139	-.25420	.33450	.16290	.05020	-.10810	.01320	.01120	.01790	-3.98230	5.98180
	GRADIENT	.00586	.00019	.00002	-.00092	-.01773	.00260	.00228	.00321	.03140	.98826

RUN NO. 1402/ 0 RN/L = 3.51 GRADIENT INTERVAL = -5.00/ 5.00

ALPHAT	BETAT	CNFTS	CATS	CAFTS	CLMFTS	CYFTS	CYNTS	CYNFTS	CBLFTS	ALFATU	BETATU
-.257	-6.947	-.20180	.33110	.16610	.07960	.14860	-.03060	-.02850	-.01450	-.06080	-6.88120
-.248	-4.779	-.18610	.33060	.16600	.07280	.09990	-.02320	-.02160	-.00990	-.05230	-4.71300
-.313	-.407	-.14660	.33210	.16800	.04540	.01160	-.00730	-.00720	-.00130	-.11700	-.34130
-.234	3.733	-.14670	.33510	.17010	.05620	-.07400	.01620	.01470	.00660	-.03740	3.79910
-.224	5.925	-.15100	.33400	.16650	.05920	-.11950	.02460	.02270	.01040	-.02750	5.99110
	GRADIENT	.00468	.00017	.00048	-.00199	-.02043	.00462	.00426	.00194	.00160	1.00002

RUN NO. 1403/ 0 RN/L = 3.50 GRADIENT INTERVAL = -5.00/ 5.00

ALPHAT	BETAT	CNFTS	CATS	CAFTS	CLMFTS	CYFTS	CYNTS	CYNFTS	CBLFTS	ALFATU	BETATU
4.493	-5.822	-.07270	.32710	.16470	.08270	.14490	-.04130	-.04010	-.00500	4.36670	-5.98640
4.332	-3.689	-.06210	.32950	.16590	.07600	.09730	-.03270	-.03210	-.00390	4.24080	-3.87480
4.106	.144	-.03980	.32910	.16720	.06020	.00650	-.00780	-.00770	-.00090	4.16790	-.05350
4.175	4.076	-.03910	.33000	.16770	.06400	-.08640	.02120	.02030	.00210	4.35930	3.98170
4.128	6.174	-.04430	.32800	.16480	.06610	-.13390	.03140	.03010	.00330	4.32820	6.12040
	GRADIENT	.00295	.00007	.00023	-.00153	-.02366	.00694	.00675	.00077	.01540	1.01187

IA156A, AEDC PWT 16T-470, O T S W/SILTS (R8NSD2) (10 MAY 80)

REFERENCE DATA

SREF = 2690.0000 SQ.FT. XMRP = 976.0000 IN. XT
LREF = 1290.3000 INCHES YMRP = .0000 IN. YT
BREF = 1290.3000 INCHES ZMRP = 400.0000 IN. ZT
SCALE = .0200

PARAMETRIC DATA

IB-ELV = 8.000 OB-ELV = -2.000
BDFLAP = .000 SPDBRK = .000
RUDDER = .000 SILTS = 1.000
MACH = 1.250 RN/L = 3.500

RUN NO. 1404/ 0 RN/L = 3.50 GRADIENT INTERVAL = -5.00/ 5.00

ALPHAT	BETAT	CNFTS	CATS	CAFTS	CLMFTS	CYFTS	CYNTS	CYNFTS	CBLFTS	ALFATU	BETATU
-8.157	-5.914	-.45420	.33340	.16510	.06740	.11260	-.01160	-.00980	-.02610	-7.97070	-6.02660
-8.322	-3.742	-.44800	.33290	.16590	.06370	.06550	-.00480	-.00350	-.01720	-8.16300	-3.89150
-8.302	.190	-.41820	.33660	.16810	.04610	-.00260	.00010	.00020	.00110	-8.23120	-.01700
-8.119	4.441	-.41680	.33330	.16750	.04810	-.07570	.00550	.00430	.01930	-8.16090	4.22680
-8.123	6.279	-.42600	.33290	.16670	.04980	-.10980	.00960	.00780	.02610	-8.20030	6.07480
	GRADIENT	.00377	.00004	.00019	-.00187	-.01726	.00126	.00095	.00446	.00048	.99225

RUN NO. 1405/ 0 RN/L = 3.49 GRADIENT INTERVAL = -5.00/ 5.00

ALPHAT	BETAT	CNFTS	CATS	CAFTS	CLMFTS	CYFTS	CYNTS	CYNFTS	CBLFTS	ALFATU	BETATU
-6.221	-5.975	-.37700	.33160	.16970	.06350	.10840	-.01160	-.00970	-.02310	-6.02080	-6.05930
-6.166	-4.050	-.36430	.33190	.17020	.06070	.06980	-.00720	-.00600	-.01590	-5.98390	-4.17000
-6.305	.141	-.33770	.33640	.16850	.04430	-.00720	.00050	.00050	.00090	-6.23180	-.06400
-6.075	4.273	-.33210	.33400	.17190	.04680	-.07190	.00560	.00450	.01590	-6.14030	4.06450
-5.911	6.376	-.33120	.33300	.17040	.04670	-.11160	.01070	.00880	.02260	-6.02050	6.18710
	GRADIENT	.00387	.00025	.00020	-.00168	-.01703	.00154	.00126	.00382	-.01889	.98933

RUN NO. 1406/ 0 RN/L = 3.50 GRADIENT INTERVAL = -5.00/ 5.00

ALPHAT	BETAT	CNFTS	CATS	CAFTS	CLMFTS	CYFTS	CYNTS	CYNFTS	CBLFTS	ALFATU	BETATU
-4.142	-6.085	-.30790	.32970	.17250	.07030	.10870	-.01310	-.01130	-.01940	-3.92840	-6.12720
-4.258	-3.967	-.30210	.33180	.17250	.06560	.06730	-.00910	-.00810	-.01310	-4.05740	-4.05190
-4.190	.374	-.26070	.33250	.17140	.04610	-.01060	.00110	.00110	.00140	-4.12760	.16510
-3.706	4.285	-.25040	.33370	.17570	.05340	-.07180	.00700	.00590	.01260	-3.81760	4.09750
-3.803	6.129	-.25910	.33120	.17440	.05400	-.10480	.01070	.00900	.01760	-3.94430	5.96310
	GRADIENT	.00633	.00023	.00038	-.00153	-.01688	.00196	.00170	.00312	.02824	.98737

RUN NO. 1407/ 0 RN/L = 3.51 GRADIENT INTERVAL = -5.00/ 5.00

ALPHAT	BETAT	CNFTS	CATS	CAFTS	CLMFTS	CYFTS	CYNTS	CYNFTS	CBLFTS	ALFATU	BETATU
-.215	-6.961	-.21020	.32630	.17820	.09050	.14200	-.02750	-.02570	-.01360	-.00890	-6.89100
-.205	-4.805	-.20090	.33240	.17490	.08680	.09770	-.02100	-.01960	-.00970	.00150	-4.73470
-.245	-.370	-.16080	.32810	.17760	.06370	.01020	-.00620	-.00620	-.00110	-.03840	-.29970
-.162	3.746	-.16180	.32940	.17790	.07290	-.07380	.01460	.01320	.00620	.04490	3.81620
-.177	5.953	-.16560	.32960	.17790	.07350	-.11840	.02150	.01960	.01000	.02950	6.02300
	GRADIENT	.00463	-.00036	.00035	-.00167	-.02005	.00415	.00383	.00186	.00489	1.00002

IA156A, AEDC PWT 16T-470, 0 T S W/SILTS (R8NSD2) (10 MAY 80)

REFERENCE DATA

SREF = 2690.0000 SQ.FT. XMRP = 976.0000 IN. XT
LREF = 1290.3000 INCHES YMRP = .0000 IN. YT
BREF = 1290.3000 INCHES ZMRP = 400.0000 IN. ZT
SCALE = .0200

PARAMETRIC DATA

IB-ELV = 8.000 OB-ELV = -2.000
BDFLAP = .000 SPDBRK = .000
RUDDER = .000 SILTS = 1.000
MACH = 1.250 RN/L = 3.500

RUN NO. 1408/ 0 RN/L = 3.50 GRADIENT INTERVAL = -5.00/ 5.00

ALPHAT	BETAT	CNFTS	CATS	CAFTS	CLMFTS	CYFTS	CYNTS	CYNFTS	CBLFTS	ALFATU	BETATU
4.605	-5.810	-.07770	.32500	.17410	.09240	.14190	-.03960	-.03860	-.00470	4.47360	-5.98480
4.401	-3.661	-.06740	.32530	.17540	.08500	.09110	-.02930	-.02870	-.00370	4.30650	-3.85700
4.162	.229	-.05370	.32370	.17240	.07550	-.00040	-.00480	-.00480	-.00070	4.23210	.02260
4.246	4.110	-.05330	.32570	.17710	.08080	-.08890	.02310	.02220	.00190	4.44060	4.01340
4.193	6.176	-.05640	.32340	.17390	.08130	-.13760	.03360	.03220	.00330	4.40390	6.12160
	GRADIENT	.00182	.00005	.00022	-.00054	-.02316	.00674	.00655	.00072	.01724	1.01279

IA156A, AEDC PWT 16T-470, 0 T S W/SILTS (R8NSD3) (10 MAY 80)

REFERENCE DATA

SREF = 2690.0000 SQ.FT. XMRP = 976.0000 IN. XT
LREF = 1290.3000 INCHES YMRP = .0000 IN. YT
BREF = 1290.3000 INCHES ZMRP = 400.0000 IN. ZT
SCALE = .0200

PARAMETRIC DATA

IB-ELV = 8.000 OB-ELV = -2.000
BDFLAP = .000 SPDBRK = .000
RUDDER = .000 SILTS = 1.000
MACH = 1.400 RN/L = 3.500

RUN NO. 1409/ 0 RN/L = 3.00 GRADIENT INTERVAL = -5.00/ 5.00

ALPHAT	BETAT	CNFTS	CATS	CAFTS	CLMFTS	CYFTS	CYNTS	CYNFTS	CBLFTS	ALFATU	BETATU
-8.121	-5.972	-.47630	.32210	.17100	.08180	.11270	-.00710	-.00550	-.02640	-7.89670	-6.10530
-8.273	-3.767	-.46460	.32160	.17350	.07540	.06280	.00130	.00260	-.01790	-8.08260	-3.94410
-8.247	.236	-.43410	.32560	.17400	.05810	-.00530	-.00030	-.00030	.00120	-8.16100	-.01030
-8.025	4.501	-.43770	.32750	.17730	.06400	-.07240	-.00240	-.00360	.02040	-8.07290	4.24510
-8.053	6.362	-.44080	.32070	.17570	.06510	-.10990	.00260	.00100	.02600	-8.14320	6.11830
	GRADIENT	.00321	.00071	.00046	-.00135	-.01635	-.00045	-.00075	.00463	.00139	.99058

RUN NO. 1410/ 0 RN/L = 2.99 GRADIENT INTERVAL = -5.00/ 5.00

ALPHAT	BETAT	CNFTS	CATS	CAFTS	CLMFTS	CYFTS	CYNTS	CYNFTS	CBLFTS	ALFATU	BETATU
-6.267	-6.009	-.39080	.32200	.17470	.07070	.10290	-.00220	-.00060	-.02270	-6.02820	-6.11020
-6.179	-4.036	-.37070	.32290	.17720	.06490	.06110	.00200	.00300	-.01530	-5.96220	-4.17850
-6.251	.156	-.34830	.32450	.17750	.05220	-.00720	.00090	.00100	.00080	-6.16050	-.08820
-6.021	4.327	-.33740	.32520	.18030	.05240	-.06710	-.00270	-.00340	.01550	-6.09620	4.07690
-5.987	6.317	-.34480	.32580	.17870	.05420	-.10620	.00110	-.00040	.02190	-6.11020	6.08680
	GRADIENT	.00398	.00028	.00037	-.00150	-.01533	-.00056	-.00077	.00368	-.01605	.98715

IA156A, AEDC PWT 16T-470, 0 T S W/SILTS (R8NSD3) (10 MAY 80)

REFERENCE DATA

SREF = 2690.0000 SQ.FT. XMRP = 976.0000 IN. XT
LREF = 1290.3000 INCHES YMRP = .0000 IN. YT
BREF = 1290.3000 INCHES ZMRP = 400.0000 IN. ZT
SCALE = .0200

PARAMETRIC DATA

IB-ELV = 8.000 OB-ELV = -2.000
BDFLAP = .000 SPDBRK = .000
RUDDER = .000 SILTS = 1.000
MACH = 1.400 RN/L = 3.500

RUN NO. 1411/ 0 RN/L = 2.99 GRADIENT INTERVAL = -5.00/ 5.00

ALPHAT	BETAT	CNFTS	CATS	CAFTS	CLMFTS	CYFTS	CYNTS	CYNFTS	CBLFTS	ALFATU	BETATU
-3.998	-6.099	-.30800	.32420	.17930	.07340	.10530	-.00560	-.00410	-.01820	-3.74270	-6.14380
-4.305	-3.966	-.30230	.32190	.17920	.06490	.06110	-.00070	.00010	-.01230	-4.06600	-4.06790
-4.171	.422	-.26790	.32180	.18070	.05250	-.01160	.00080	.00080	.00140	-4.09540	.17270
-3.682	4.356	-.25390	.32470	.18240	.05860	-.06830	-.00030	-.00100	.01170	-3.81230	4.13100
-3.767	6.183	-.26060	.32550	.18170	.05790	-.10390	.00390	.00250	.01650	-3.93290	5.98330
	GRADIENT	.00585	.00033	.00038	-.00080	-.01557	.00005	-.00013	.00289	.02977	.98484

RUN NO. 1412/ 0 RN/L = 2.99 GRADIENT INTERVAL = -5.00/ 5.00

ALPHAT	BETAT	CNFTS	CATS	CAFTS	CLMFTS	CYFTS	CYNTS	CYNFTS	CBLFTS	ALFATU	BETATU
-.258	-6.985	-.21360	.32270	.18270	.09390	.13970	-.02240	-.02080	-.01260	-.01300	-6.89970
-.254	-4.787	-.19540	.31730	.18210	.08530	.09080	-.01460	-.01340	-.00880	-.00870	-4.70160
-.257	-.434	-.16490	.31750	.18420	.06960	.00790	-.00430	-.00410	-.00120	-.01090	-.34850
-.201	3.715	-.16680	.32090	.18340	.07780	-.07240	.01070	.00970	.00560	.04630	3.80130
-.219	5.902	-.16640	.32250	.18500	.07600	-.11630	.01770	.01610	.00900	.02670	5.98680
	GRADIENT	.00339	.00042	.00016	-.00090	-.01919	.00297	.00271	.00169	.00641	1.00011

RUN NO. 1413/ 0 RN/L = 2.99 GRADIENT INTERVAL = -5.00/ 5.00

ALPHAT	BETAT	CNFTS	CATS	CAFTS	CLMFTS	CYFTS	CYNTS	CYNFTS	CBLFTS	ALFATU	BETATU
4.595	-5.780	-.08490	.31490	.18000	.10640	.13850	-.03900	-.03790	-.00450	4.43780	-5.98740
4.413	-3.653	-.07250	.31470	.18050	.09520	.08870	-.02940	-.02860	-.00330	4.30040	-3.88660
4.154	.201	-.06340	.31410	.18020	.08630	.00220	-.00700	-.00710	-.00070	4.23400	-.04520
4.185	4.082	-.05990	.31580	.17990	.08750	-.08610	.01980	.01900	.00160	4.41810	3.96580
4.128	6.160	-.06150	.31540	.18190	.08810	-.13440	.03180	.03040	.00310	4.38000	6.09570
	GRADIENT	.00163	.00014	-.00008	-.00099	-.02260	.00636	.00615	.00063	.01525	1.01520

IA156A, AEDC PWT 16T-470, 0 T S W/SILTS (R8NSD4) (10 MAY 80)

REFERENCE DATA

SREF = 2690.0000 SQ.FT. XMRP = 976.0000 IN. XT
LREF = 1290.3000 INCHES YMRP = .0000 IN. YT
BREF = 1290.3000 INCHES ZMRP = 400.0000 IN. ZT
SCALE = .0200

PARAMETRIC DATA

IB-ELV = 8.000 OB-ELV = -2.000
BDFLAP = .000 SPDBRK = .000
RUDDER = .000 SILTS = 1.000
MACH = 1.550 RN/L = 3.200

RUN NO. 1414/ 0 RN/L = 3.00 GRADIENT INTERVAL = -5.00/ 5.00

ALPHAT	BETAT	CNFTS	CATS	CAFTS	CLMFTS	CYFTS	CYNTS	CYNFTS	CBLFTS	ALFATU	BETATU
-8.145	-5.939	-.48370	.30300	.16990	.09610	.11420	-.00980	-.00810	-.02520	-7.82050	-6.09120
-8.305	-3.707	-.47490	.30360	.17110	.08910	.06360	-.00170	-.00060	-.01710	-8.02000	-3.92400
-8.236	.315	-.44380	.30660	.17290	.07560	-.00390	-.00220	-.00220	.00120	-8.08520	-.00920
-8.008	4.631	-.44480	.30840	.17560	.07880	-.07900	.00030	-.00090	.02000	-8.04060	4.27640
-7.981	6.443	-.44910	.30810	.17550	.07840	-.11710	.00520	.00370	.02550	-8.07120	6.09920
	GRADIENT	.00356	.00057	.00054	-.00121	-.01711	.00024	-.00003	.00445	-.00231	.98368

RUN NO. 1415/ 0 RN/L = 3.00 GRADIENT INTERVAL = -5.00/ 5.00

ALPHAT	BETAT	CNFTS	CATS	CAFTS	CLMFTS	CYFTS	CYNTS	CYNFTS	CBLFTS	ALFATU	BETATU
-6.320	-5.988	-.39250	.30320	.17270	.08020	.10740	-.00700	-.00540	-.02160	-5.97910	-6.09480
-6.224	-3.987	-.37450	.30130	.17190	.07430	.06600	-.00200	-.00110	-.01470	-5.90810	-4.15410
-6.266	.231	-.35530	.30500	.17410	.06590	-.00550	-.00160	-.00150	.00090	-6.11000	-.09020
-5.961	4.420	-.34350	.30700	.17730	.06540	-.07000	-.00080	-.00160	.01480	-6.03030	4.06880
-5.913	6.409	-.35120	.30870	.17820	.06720	-.11230	.00500	.00350	.02090	-6.05110	6.08040
	GRADIENT	.00369	.00068	.00064	-.00106	-.01618	.00014	-.00006	.00351	-.01458	.97813

RUN NO. 1416/ 0 RN/L = 3.00 GRADIENT INTERVAL = -5.00/ 5.00

ALPHAT	BETAT	CNFTS	CATS	CAFTS	CLMFTS	CYFTS	CYNTS	CYNFTS	CBLFTS	ALFATU	BETATU
-4.102	-6.104	-.30270	.30080	.17430	.07440	.10820	-.01000	-.00860	-.01690	-3.74490	-6.13150
-4.382	-3.950	-.29750	.30080	.17440	.06750	.06390	-.00400	-.00320	-.01110	-4.03930	-4.05710
-4.229	.511	-.27130	.30370	.17690	.05850	-.01090	-.00150	-.00150	.00150	-4.09120	.18050
-3.635	4.451	-.25460	.30430	.17890	.06270	-.07210	.00230	.00160	.01080	-3.78410	4.12390
-3.715	6.276	-.26730	.30840	.17990	.06500	-.10920	.00820	.00680	.01550	-3.91580	5.98010
	GRADIENT	.00512	.00042	.00054	-.00060	-.01620	.00075	.00057	.00261	.02946	.97339

RUN NO. 1417/ 0 RN/L = 3.00 GRADIENT INTERVAL = -5.00/ 5.00

ALPHAT	BETAT	CNFTS	CATS	CAFTS	CLMFTS	CYFTS	CYNTS	CYNFTS	CBLFTS	ALFATU	BETATU
-.343	-7.054	-.20310	.29970	.17660	.09050	.13770	-.02410	-.02240	-.01140	-.01830	-6.90390
-.339	-4.854	-.18840	.29930	.17630	.08380	.09140	-.01540	-.01440	-.00790	-.01500	-4.70460
-.339	-.508	-.16220	.29870	.17820	.07070	.00820	-.00340	-.00320	-.00100	-.01370	-.35710
-.322	3.648	-.15740	.30340	.18200	.07060	-.07090	.01110	.01030	.00510	.00380	3.79900
-.345	5.836	-.15660	.30500	.18070	.06720	-.11560	.01980	.01830	.00830	-.02120	5.98480
	GRADIENT	.00366	.00048	.00067	-.00156	-.01909	.00311	.00290	.00153	.00220	1.00023

IA156A, AEDC PWT 16T-470, O T S W/SILTS (R8NSD4) (10 MAY 80)

REFERENCE DATA

SREF = 2690.0000 SQ.FT. XMRP = 976.0000 IN. XT
LREF = 1290.3000 INCHES YMRP = .0000 IN. YT
BREF = 1290.3000 INCHES ZMRP = 400.0000 IN. ZT
SCALE = .0200

PARAMETRIC DATA

IB-ELV = 8.000 OB-ELV = -2.000
BDFLAP = .000 SPDBRK = .000
RUDDER = .000 SILTS = 1.000
MACH = 1.550 RN/L = 3.200

RUN NO. 1418/ 0 RN/L = 3.00 GRADIENT INTERVAL = -5.00/ 5.00

ALPHAT	BETAT	CNFTS	CATS	CAFTS	CLMFTS	CYFTS	CYNTS	CYNFTS	CBLFTS	ALFATU	BETATU
4.634	-5.682	-.07310	.30300	.18050	.10280	.13560	-.03900	-.03770	-.00370	4.44820	-5.98600
4.392	-3.538	-.06330	.30010	.17990	.09000	.08510	-.02840	-.02750	-.00280	4.26920	-3.87280
4.100	.276	-.05710	.29830	.17880	.08340	-.00150	-.00530	-.00540	-.00050	4.24270	-.05170
4.086	4.112	-.05230	.29960	.17760	.08270	-.08440	.01830	.01730	.00110	4.41850	3.98370
4.008	6.151	-.05120	.29950	.17950	.08160	-.13260	.03030	.02890	.00250	4.36090	6.09660
	GRADIENT	.00144	-.00006	-.00030	-.00095	-.02216	.00610	.00586	.00051	.01954	1.02703

IA156A, AEDC PWT 16T-470, O T S W/SILTS (R8NSD5) (10 MAY 80)

REFERENCE DATA

SREF = 2690.0000 SQ.FT. XMRP = 976.0000 IN. XT
LREF = 1290.3000 INCHES YMRP = .0000 IN. YT
BREF = 1290.3000 INCHES ZMRP = 400.0000 IN. ZT
SCALE = .0200

PARAMETRIC DATA

IB-ELV = 8.000 OB-ELV = -2.000
BDFLAP = .000 SPDBRK = .000
RUDDER = .000 SILTS = 1.000
MACH = 1.550 RN/L = 3.200

RUN NO. 1419/ 0 RN/L = 3.00 GRADIENT INTERVAL = -5.00/ 5.00

ALPHAT	BETAT	CNFTS	CATS	CAFTS	CLMFTS	CYFTS	CYNTS	CYNFTS	CBLFTS	ALFATU	BETATU
-8.311	-5.853	-.48730	.30200	.16920	.09620	.11180	-.00970	-.00790	-.02510	-7.99240	-6.01020
-8.334	-3.738	-.47210	.30290	.17090	.08820	.06500	-.00220	-.00100	-.01720	-8.04920	-3.95430
-8.216	.556	-.44570	.30840	.17360	.07610	-.00890	-.00210	-.00210	.00240	-8.07490	.22650
-8.008	4.520	-.44260	.30760	.17510	.07860	-.07440	-.00040	-.00160	.01930	-8.03610	4.16470
-7.984	6.431	-.44740	.30600	.17460	.07800	-.11580	.00520	.00380	.02530	-8.07410	6.08740
	GRADIENT	.00361	.00058	.00051	-.00119	-.01689	.00022	-.00008	.00442	.00148	.98305

IA156A, AEDC PWT 16T-470, 0 T S W/SILTS (R8NSD6) (10 MAY 80)

REFERENCE DATA

SREF = 2690.0000 SQ.FT. XMRP = 976.0000 IN. XT
LREF = 1290.3000 INCHES YMRP = .0000 IN. YT
BREF = 1290.3000 INCHES ZMRP = 400.0000 IN. ZT
SCALE = .0200

PARAMETRIC DATA

IB-ELV = 10.000 OB-ELV = -2.000
BOFLAP = .000 SPDBRK = .000
RUDDER = .000 SILTS = 1.000
MACH = 1.150 RN/L = 3.500

RUN NO. 1432/ 0 RN/L = 3.50 GRADIENT INTERVAL = -5.00/ 5.00

ALPHAT	BETAT	CNFTS	CATS	CAFTS	CLMFTS	CYFTS	CYNTS	CYNFTS	CBLFTS	ALFATU	BETATU
-8.186	-5.924	-.44170	.33750	.15600	.05520	.11530	-.01490	-.01270	-.02680	-8.00910	-6.03170
-8.382	-3.802	-.43750	.33730	.15370	.05240	.07090	-.00880	-.00740	-.01840	-8.23140	-3.94430
-8.381	.363	-.41090	.34200	.15840	.03300	-.00500	-.00120	-.00130	.00190	-8.31930	.16560
-8.145	4.329	-.41300	.33940	.15600	.04160	-.07390	.00730	.00600	.01960	-8.18410	4.12630
-8.158	6.266	-.41490	.33720	.15520	.04280	-.10840	.01150	.00950	.02630	-8.23240	6.07300
	GRADIENT	.00304	.00027	.00029	-.00136	-.01781	.00198	.00165	.00467	.00559	.99247

RUN NO. 1433/ 0 RN/L = 3.50 GRADIENT INTERVAL = -5.00/ 5.00

ALPHAT	BETAT	CNFTS	CATS	CAFTS	CLMFTS	CYFTS	CYNTS	CYNFTS	CBLFTS	ALFATU	BETATU
-6.265	-5.980	-.36510	.33650	.15980	.05340	.11450	-.01600	-.01370	-.02370	-6.07560	-6.06180
-6.179	-4.037	-.35270	.33740	.16230	.05020	.07540	-.01140	-.01000	-.01620	-6.00780	-4.15200
-6.344	.117	-.32640	.33840	.15920	.03330	-.00090	-.00230	-.00240	.00090	-6.27520	-.07800
-6.121	4.265	-.32640	.33850	.16260	.04080	-.07250	.00610	.00480	.01630	-6.18400	4.06810
-6.047	6.222	-.32970	.33640	.15860	.04300	-.10900	.01190	.00970	.02250	-6.14770	6.04180
	GRADIENT	.00317	.00013	.00004	-.00113	-.01781	.00211	.00178	.00391	-.02123	.99012

RUN NO. 1434/ 0 RN/L = 3.50 GRADIENT INTERVAL = -5.00/ 5.00

ALPHAT	BETAT	CNFTS	CATS	CAFTS	CLMFTS	CYFTS	CYNTS	CYNFTS	CBLFTS	ALFATU	BETATU
-4.072	-6.080	-.29680	.33560	.16290	.06170	.11560	-.01750	-.01540	-.02010	-3.86880	-6.11980
-4.298	-3.954	-.29020	.33470	.16420	.05460	.07450	-.01360	-.01230	-.01380	-4.10880	-4.03680
-4.231	.381	-.25150	.33550	.16420	.03820	-.00660	-.00150	-.00170	.00170	-4.17450	.18220
-3.725	4.295	-.24580	.33860	.16690	.04940	-.07400	.00800	.00670	.01300	-3.83290	4.11890
-3.824	6.123	-.25530	.33740	.16500	.05180	-.10770	.01270	.01080	.01790	-3.95880	5.96620
	GRADIENT	.00545	.00047	.00032	-.00069	-.01801	.00262	.00231	.00325	.03258	.98839

RUN NO. 1435/ 0 RN/L = 3.50 GRADIENT INTERVAL = -5.00/ 5.00

ALPHAT	BETAT	CNFTS	CATS	CAFTS	CLMFTS	CYFTS	CYNTS	CYNFTS	CBLFTS	ALFATU	BETATU
-.242	-7.018	-.20400	.33470	.16830	.08130	.15050	-.03140	-.02930	-.01470	-.04600	-6.95220
-.238	-4.785	-.18770	.33190	.16830	.07430	.09910	-.02340	-.02180	-.00990	-.04220	-4.71970
-.310	-.380	-.14360	.33460	.16890	.04630	.01140	-.00710	-.00710	-.00130	-.11420	-.31440
-.225	3.726	-.14740	.33620	.16960	.05700	-.07540	.01680	.01530	.00660	-.02880	3.79190
-.210	5.909	-.15280	.33530	.16770	.06090	-.12030	.02500	.02300	.01040	-.01420	5.97430
	GRADIENT	.00480	.00051	.00015	-.00208	-.02049	.00471	.00435	.00194	.00136	1.00001

IA156A, AEDC PWT 16T-470, O T S W/SILTS (R8NSD6) (10 MAY 80)

REFERENCE DATA

SREF = 2690.0000 SQ.FT. XMRP = 976.0000 IN. XT
LREF = 1290.3000 INCHES YMRP = .0000 IN. YT
BREF = 1290.3000 INCHES ZMRP = 400.0000 IN. ZT
SCALE = .0200

PARAMETRIC DATA

IB-ELV = 10.000 OB-ELV = -2.000
BDFLAP = .000 SPDBRK = .000
RUDDER = .000 SILTS = 1.000
MACH = 1.150 RN/L = 3.500

RUN NO. 1436/ 0 RN/L = 3.50 GRADIENT INTERVAL = -5.00/ 5.00

ALPHAT	BETAT	CNFTS	CATS	CAFTS	CLMFTS	CYFTS	CYNTS	CYNFTS	CBLFTS	ALFATU	BETATU
4.377	-5.885	-.07920	.32840	.16580	.08530	.14690	-.04170	-.04050	-.00530	4.24760	-6.04640
4.386	-3.792	-.06180	.32950	.16630	.07810	.09950	-.03340	-.03270	-.00390	4.29260	-3.97620
4.214	.210	-.03900	.32950	.16780	.06270	.00370	-.00680	-.00680	-.00080	4.27880	.01350
4.165	4.021	-.04320	.32980	.16770	.06640	-.08540	.02140	.02040	.00220	4.34870	3.92560
4.126	6.139	-.04640	.32860	.16470	.06840	-.13600	.03220	.03090	.00330	4.32590	6.08550
	GRADIENT	.00241	.00004	.00018	-.00152	-.02367	.00701	.00679	.00078	.00709	1.01135

IA156A, AEDC PWT 16T-470, O T S W/SILTS (R8NSD7) (10 MAY 80)

REFERENCE DATA

SREF = 2690.0000 SQ.FT. XMRP = 976.0000 IN. XT
LREF = 1290.3000 INCHES YMRP = .0000 IN. YT
BREF = 1290.3000 INCHES ZMRP = 400.0000 IN. ZT
SCALE = .0200

PARAMETRIC DATA

IB-ELV = 10.000 OB-ELV = -2.000
BDFLAP = .000 SPDBRK = .000
RUDDER = .000 SILTS = 1.000
MACH = 1.250 RN/L = 3.500

RUN NO. 1437/ 0 RN/L = 3.50 GRADIENT INTERVAL = -5.00/ 5.00

ALPHAT	BETAT	CNFTS	CATS	CAFTS	CLMFTS	CYFTS	CYNTS	CYNFTS	CBLFTS	ALFATU	BETATU
-8.306	-5.899	-.45790	.33080	.16560	.06780	.11000	-.01140	-.00950	-.02600	-8.12110	-6.01380
-8.322	-3.812	-.45070	.33480	.16650	.06560	.06640	-.00430	-.00290	-.01770	-8.16300	-3.96000
-8.289	.185	-.42050	.33880	.16880	.04760	-.00290	.00030	.00040	.00110	-8.21830	-.02130
-8.124	4.377	-.41820	.33450	.16810	.04970	-.07370	.00530	.00420	.01890	-8.16450	4.16260
-8.121	6.268	-.42690	.33290	.16850	.05110	-.10950	.00970	.00790	.02590	-8.19840	6.06410
	GRADIENT	.00394	-.00004	.00019	-.00192	-.01711	.00117	.00087	.00447	-.00008	.99203

RUN NO. 1438/ 0 RN/L = 3.50 GRADIENT INTERVAL = -5.00/ 5.00

ALPHAT	BETAT	CNFTS	CATS	CAFTS	CLMFTS	CYFTS	CYNTS	CYNFTS	CBLFTS	ALFATU	BETATU
-6.220	-5.978	-.37630	.33200	.16940	.06500	.10670	-.01110	-.00910	-.02290	-6.01880	-6.06290
-6.156	-4.049	-.36590	.33370	.17040	.06290	.06840	-.00660	-.00540	-.01570	-5.97460	-4.16910
-6.292	.128	-.33710	.33440	.16920	.04620	-.00620	.00050	.00050	.00080	-6.21870	-.07680
-6.063	4.272	-.33370	.33460	.17290	.04870	-.07280	.00580	.00470	.01600	-6.12860	4.06400
-6.049	6.271	-.33790	.33260	.17200	.04790	-.11030	.01100	.00910	.02260	-6.15420	6.08070
	GRADIENT	.00387	.00011	.00030	-.00171	-.01697	.00149	.00121	.00381	-.01856	.98942

IA156A, AEDC PWT 16T-470, O T S W/SILTS (R8NSD7) (10 MAY 80)

REFERENCE DATA

SREF = 2690.0000 SQ.FT. XMRP = 976.0000 IN. XT
LREF = 1290.3000 INCHES YMRP = .0000 IN. YT
BREF = 1290.3000 INCHES ZMRP = 400.0000 IN. ZT
SCALE = .0200

PARAMETRIC DATA

IB-ELV = 10.000 OB-ELV = -2.000
BDFLAP = .000 SPDBRK = .000
RUDDER = .000 SILTS = 1.000
MACH = 1.250 RN/L = 3.500

RUN NO. 1439/ 0 RN/L = 3.50 GRADIENT INTERVAL = -5.00/ 5.00

ALPHAT	BETAT	CNFTS	CATS	CAFTS	CLMFTS	CYFTS	CYNTS	CYNFTS	CBLFTS	ALFATU	BETATU
-4.013	-6.092	-.30620	.33180	.17270	.07290	.10930	-.01320	-.01130	-.01920	-3.79870	-6.13100
-4.236	-3.954	-.29950	.33140	.17260	.06710	.06660	-.00880	-.00770	-.01290	-4.03540	-4.04040
-4.195	.384	-.26290	.33210	.17320	.04810	-.01140	.00140	.00140	.00140	-4.13370	.17470
-3.702	4.302	-.25330	.33440	.17590	.05530	-.07160	.00720	.00610	.01260	-3.81440	4.11490
-3.830	6.173	-.26320	.33320	.17560	.05580	-.10590	.01110	.00940	.01770	-3.97130	6.00650
	GRADIENT	.00565	.00036	.00040	-.00148	-.01676	.00195	.00168	.00309	.02589	.98747

RUN NO. 1440/ 0 RN/L = 3.50 GRADIENT INTERVAL = -5.00/ 5.00

ALPHAT	BETAT	CNFTS	CATS	CAFTS	CLMFTS	CYFTS	CYNTS	CYNFTS	CBLFTS	ALFATU	BETATU
-.198	-7.063	-.21380	.33080	.17750	.09350	.14540	-.02840	-.02640	-.01380	.00780	-6.99290
-.191	-4.781	-.19870	.32800	.17720	.08700	.09490	-.02070	-.01930	-.00950	.01540	-4.71090
-.225	-.412	-.16250	.32890	.17760	.06630	.01050	-.00620	-.00620	-.00120	-.01860	-.34150
-.158	3.734	-.16280	.33030	.17750	.07350	-.07430	.01480	.01340	.00630	.04790	3.80400
-.167	5.927	-.16550	.32910	.17640	.07400	-.11820	.02160	.01980	.01000	.03970	5.99700
	GRADIENT	.00425	.00027	.00004	-.00161	-.01987	.00416	.00383	.00186	.00371	1.00001

RUN NO. 1441/ 0 RN/L = 3.50 GRADIENT INTERVAL = -5.00/ 5.00

ALPHAT	BETAT	CNFTS	CATS	CAFTS	CLMFTS	CYFTS	CYNTS	CYNFTS	CBLFTS	ALFATU	BETATU
4.439	-5.873	-.08240	.32450	.17380	.09320	.14200	-.03950	-.03830	-.00510	4.30360	-6.04320
4.441	-3.788	-.06710	.32540	.17500	.08680	.09400	-.03000	-.02940	-.00380	4.34290	-3.98310
4.289	.216	-.05190	.32310	.17460	.07740	.00000	-.00530	-.00520	-.00070	4.35790	.00960
4.227	4.016	-.05420	.32470	.17400	.08120	-.08900	.02330	.02240	.00200	4.42090	3.91660
4.193	6.149	-.05950	.32350	.17360	.08270	-.13740	.03380	.03240	.00350	4.40340	6.09410
	GRADIENT	.00167	-.00009	-.00013	-.00073	-.02345	.00682	.00663	.00074	.00994	1.01214

IA156A, AEDC PWT 16T-470, 0 T S W/SILTS (R8NSD8) (10 MAY 80)

REFERENCE DATA

SREF = 2690.0000 SQ.FT. XMRP = 976.0000 IN. XT
LREF = 1290.3000 INCHES YMRP = .0000 IN. YT
BREF = 1290.3000 INCHES ZMRP = 400.0000 IN. ZT
SCALE = .0200

PARAMETRIC DATA

IB-ELV = 10.000 OB-ELV = -2.000
BDFLAP = .000 SPDBRK = .000
RUDDER = .000 SILTS = 1.000
MACH = 1.400 RN/L = 3.500

RUN NO. 1442/ 0 RN/L = 3.00 GRADIENT INTERVAL = -5.00/ 5.00

ALPHAT	BETAT	CNFTS	CATS	CAFTS	CLMFTS	CYFTS	CYNTS	CYNFTS	CBLFTS	ALFATU	BETATU
-8.284	-5.907	-.48340	.32150	.17190	.08350	.10970	-.00710	-.00540	-.02640	-8.06310	-6.04280
-8.300	-3.808	-.46900	.32440	.17430	.07780	.06260	.00200	.00320	-.01820	-8.10920	-3.98430
-8.241	.448	-.43610	.32620	.17600	.06000	-.00910	-.00020	-.00020	.00220	-8.16120	.20000
-8.059	4.415	-.43620	.32410	.17710	.06460	-.07160	-.00110	-.00230	.01980	-8.10390	4.15790
-8.047	6.350	-.44170	.32170	.17430	.06700	-.11040	.00370	.00210	.02580	-8.13660	6.10550
	GRADIENT	.00403	-.00003	.00034	-.00164	-.01633	-.00038	-.00067	.00462	.00049	.99017

RUN NO. 1443/ 0 RN/L = 3.00 GRADIENT INTERVAL = -5.00/ 5.00

ALPHAT	BETAT	CNFTS	CATS	CAFTS	CLMFTS	CYFTS	CYNTS	CYNFTS	CBLFTS	ALFATU	BETATU
-6.238	-6.004	-.38620	.32060	.17500	.07240	.10140	-.00170	.00000	-.02230	-5.99910	-6.10490
-6.185	-4.058	-.37330	.32430	.17690	.06750	.06140	.00260	.00360	-.01540	-5.96740	-4.20090
-6.255	.163	-.34780	.32280	.17710	.05400	-.00800	.00190	.00200	.00050	-6.16530	-.08190
-6.054	4.334	-.34130	.32600	.18080	.05420	-.06870	-.00140	-.00220	.01550	-6.12910	4.08400
-5.745	6.425	-.33420	.32340	.18030	.05570	-.10800	.00270	.00120	.02130	-5.87430	6.19910
	GRADIENT	.00382	.00020	.00046	-.00159	-.01551	-.00048	-.00069	.00368	-.01932	.98724

RUN NO. 1444/ 0 RN/L = 3.00 GRADIENT INTERVAL = -5.00/ 5.00

ALPHAT	BETAT	CNFTS	CATS	CAFTS	CLMFTS	CYFTS	CYNTS	CYNFTS	CBLFTS	ALFATU	BETATU
-4.051	-6.101	-.30920	.32320	.18010	.07470	.10420	-.00500	-.00340	-.01830	-3.79540	-6.14820
-4.290	-3.974	-.30150	.32160	.17940	.06690	.06150	-.00070	.00020	-.01240	-4.05050	-4.07610
-4.174	.426	-.26890	.32200	.18110	.05430	-.01230	.00140	.00140	.00130	-4.09840	.17560
-3.694	4.366	-.25690	.32450	.18340	.05970	-.06900	.00010	-.00060	.01180	-3.82490	4.14030
-3.772	6.204	-.26260	.32370	.18130	.05870	-.10520	.00450	.00310	.01660	-3.93820	6.00330
	GRADIENT	.00539	.00034	.00048	-.00090	-.01567	.00010	-.00009	.00291	.02632	.98485

RUN NO. 1445/ 0 RN/L = 3.00 GRADIENT INTERVAL = -5.00/ 5.00

ALPHAT	BETAT	CNFTS	CATS	CAFTS	CLMFTS	CYFTS	CYNTS	CYNFTS	CBLFTS	ALFATU	BETATU
-.241	-6.955	-.21340	.32140	.18250	.09570	.14100	-.02310	-.02150	-.01260	.00520	-6.86990
-.232	-4.797	-.19420	.31740	.18160	.08710	.09040	-.01480	-.01360	-.00870	.01430	-4.71150
-.239	-.429	-.16410	.31800	.18440	.07110	.00710	-.00370	-.00360	-.00110	.00710	-.34360
-.186	3.705	-.16550	.32030	.18480	.07870	-.07370	.01140	.01040	.00560	.05900	3.79060
-.202	5.895	-.16490	.32140	.18420	.07700	-.11750	.01840	.01670	.00890	.04360	5.97960
	GRADIENT	.00341	.00034	.00038	-.00101	-.01930	.00308	.00282	.00168	.00519	.99998

IA156A, AEDC PWT 16T-470, 0 T S W/SILTS (R8NSD8) (10 MAY 80)

REFERENCE DATA

SREF = 2690.0000 SQ.FT. XMRP = 976.0000 IN. XT
LREF = 1290.3000 INCHES YMRP = .0000 IN. YT
BREF = 1290.3000 INCHES ZMRP = 400.0000 IN. ZT
SCALE = .0200

PARAMETRIC DATA

IB-ELV = 10.000 OB-ELV = -2.000
BDFLAP = .000 SPDBRK = .000
RUDDER = .000 SILTS = 1.000
MACH = 1.400 RN/L = 3.500

RUN NO. 1446/ 0 RN/L = 3.00 GRADIENT INTERVAL = -5.00/ 5.00

ALPHAT	BETAT	CNFTS	CATS	CAFTS	CLMFTS	CYFTS	CYNTS	CYNFTS	CBLFTS	ALFATU	BETATU
4.484	-5.854	-.08810	.31400	.17990	.10740	.13960	-.03920	-.03800	-.00480	4.32390	-6.05870
4.428	-3.724	-.07110	.31440	.17990	.09640	.08990	-.02950	-.02870	-.00330	4.31340	-3.95690
4.281	.250	-.06120	.31390	.18200	.08810	.00160	-.00610	-.00620	-.00070	4.36490	.00330
4.163	4.044	-.06090	.31570	.18030	.08910	-.08690	.02040	.01960	.00170	4.39490	3.92780
4.135	6.160	-.06260	.31590	.18170	.08970	-.13620	.03260	.03120	.00330	4.38750	6.09570
	GRADIENT	.00132	.00017	.00006	-.00095	-.02275	.00642	.00621	.00064	.01051	1.01477

IA156A, AEDC PWT 16T-470, 0 T S W/SILTS (R8NSD9) (10 MAY 80)

REFERENCE DATA

SREF = 2690.0000 SQ.FT. XMRP = 976.0000 IN. XT
LREF = 1290.3000 INCHES YMRP = .0000 IN. YT
BREF = 1290.3000 INCHES ZMRP = 400.0000 IN. ZT
SCALE = .0200

PARAMETRIC DATA

IB-ELV = 10.000 OB-ELV = -2.000
BDFLAP = .000 SPDBRK = .000
RUDDER = .000 SILTS = 1.000
MACH = 1.550 RN/L = 3.200

RUN NO. 1447/ 0 RN/L = 3.00 GRADIENT INTERVAL = -5.00/ 5.00

ALPHAT	BETAT	CNFTS	CATS	CAFTS	CLMFTS	CYFTS	CYNTS	CYNFTS	CBLFTS	ALFATU	BETATU
-8.314	-5.863	-.48360	.30100	.16800	.09590	.11090	-.00920	-.00750	-.02490	-7.99540	-6.02060
-8.332	-3.746	-.47280	.30340	.17040	.08940	.06290	-.00150	-.00030	-.01720	-8.05010	-3.96250
-8.221	.524	-.44620	.30800	.17390	.07790	-.00680	-.00280	-.00280	.00230	-8.08010	.19650
-8.005	4.532	-.44400	.30730	.17570	.08060	-.07480	-.00030	-.00150	.01940	-8.03370	4.17780
-7.980	6.440	-.45040	.30630	.17420	.08050	-.11380	.00450	.00300	.02540	-8.07030	6.09660
	GRADIENT	.00351	.00048	.00064	-.00108	-.01663	.00014	-.00015	.00442	.00188	.98318

RUN NO. 1448/ 0 RN/L = 3.00 GRADIENT INTERVAL = -5.00/ 5.00

ALPHAT	BETAT	CNFTS	CATS	CAFTS	CLMFTS	CYFTS	CYNTS	CYNFTS	CBLFTS	ALFATU	BETATU
-6.310	-6.000	-.39170	.30160	.17140	.08130	.10920	-.00790	-.00630	-.02160	-5.97080	-6.10680
-6.221	-3.995	-.37200	.30030	.17200	.07490	.06380	-.00130	-.00040	-.01460	-5.90630	-4.16200
-6.262	.248	-.35590	.30460	.17440	.06780	-.00620	-.00160	-.00160	.00100	-6.10630	-.07400
-5.993	4.429	-.34520	.30580	.17380	.06660	-.06910	-.00140	-.00230	.01490	-6.06200	4.07880
-5.673	6.522	-.34080	.30820	.17890	.06840	-.11140	.00450	.00290	.02040	-5.81960	6.19740
	GRADIENT	.00318	.00065	.00081	-.00099	-.01578	-.00001	-.00023	.00350	-.01855	.97824

IA156A, AEDC PWT 16T-470, 0 T S W/SILTS (R8NSD9) (10 MAY 80)

REFERENCE DATA

SREF = 2690.0000 SQ.FT. XMRP = 976.0000 IN. XT
LREF = 1290.3000 INCHES YMRP = .0000 IN. YT
BREF = 1290.3000 INCHES ZMRP = 400.0000 IN. ZT
SCALE = .0200

PARAMETRIC DATA

IB-ELV = 10.000 OB-ELV = -2.000
BDFLAP = .000 SPDBRK = .000
RUDDER = .000 SILTS = 1.000
MACH = 1.550 RN/L = 3.200

RUN NO. 1449/ 0 RN/L = 3.00 GRADIENT INTERVAL = -5.00/ 5.00

ALPHAT	BETAT	CNFTS	CATS	CAFTS	CLMFTS	CYFTS	CYNTS	CYNFTS	CBLFTS	ALFATU	BETATU
-4.335	-6.044	-.31560	.30220	.17490	.07640	.10650	-.00890	-.00740	-.01770	-3.98060	-6.08240
-4.340	-3.943	-.29490	.29980	.17390	.06850	.06330	-.00380	-.00300	-.01110	-3.99780	-4.04950
-4.222	.528	-.27100	.30250	.17630	.06020	-.00970	-.00220	-.00220	.00150	-4.08550	.19690
-3.648	4.470	-.25500	.30440	.17890	.06430	-.07120	.00220	.00140	.01070	-3.79750	4.14480
-3.703	6.283	-.26650	.30710	.17890	.06660	-.10890	.00830	.00690	.01540	-3.90390	5.98720
	GRADIENT	.00478	.00055	.00059	-.00053	-.01599	.00071	.00052	.00260	.02284	.97344

RUN NO. 1450/ 0 RN/L = 3.00 GRADIENT INTERVAL = -5.00/ 5.00

ALPHAT	BETAT	CNFTS	CATS	CAFTS	CLMFTS	CYFTS	CYNTS	CYNFTS	CBLFTS	ALFATU	BETATU
-.329	-7.016	-.20370	.30080	.17610	.09190	.13940	-.02440	-.02260	-.01160	-.00470	-6.86650
-.327	-4.846	-.18740	.29720	.17450	.08460	.08903	-.01480	-.01370	-.00780	-.00130	-4.69530
-.328	-.545	-.16230	.29800	.17930	.07190	.00800	-.00270	-.00260	-.00110	-.00360	-.39500
-.314	3.692	-.15840	.30320	.18250	.07170	-.07200	.01200	.01120	.00510	.01210	3.84320
-.334	5.826	-.15680	.30460	.18310	.06820	-.11690	.02070	.01910	.00830	-.00920	5.97570
	GRADIENT	.00340	.00070	.00094	-.00151	-.01886	.00314	.00292	.00151	.00156	1.00009

RUN NO. 1451/ 0 RN/L = 3.00 GRADIENT INTERVAL = -5.00/ 5.00

ALPHAT	BETAT	CNFTS	CATS	CAFTS	CLMFTS	CYFTS	CYNTS	CYNFTS	CBLFTS	ALFATU	BETATU
4.515	-5.753	-.07690	.30170	.17980	.10370	.13610	-.03870	-.03750	-.00390	4.32270	-6.05530
4.436	-3.535	-.06060	.30080	.17980	.09110	.08510	-.02810	-.02720	-.00290	4.31350	-3.87120
4.068	.323	-.05860	.29950	.18010	.08510	-.00250	-.00470	-.00490	-.00050	4.21530	-.00370
4.077	4.141	-.05420	.29800	.17860	.08360	-.08490	.01870	.01770	.00120	4.41200	4.01390
4.002	6.142	-.05190	.29910	.17910	.08270	-.13240	.03020	.02880	.00250	4.35570	6.08770
	GRADIENT	.00083	-.00036	-.00016	-.00098	-.02215	.00610	.00585	.00053	.01277	1.02725

IA156A, AEDC PWT 16T-470, 0 T S W/SILTS (R8NSE0) (10 MAY 80)

REFERENCE DATA

SREF = 2690.0000 SQ.FT. XMRP = 976.0000 IN. XT
LREF = 1290.3000 INCHES YMRP = .0000 IN. YT
BREF = 1290.3000 INCHES ZMRP = 400.0000 IN. ZT
SCALE = .0200

PARAMETRIC DATA

IB-ELV = 10.000 OB-ELV = -7.000
BDFLAP = .000 SPDBRK = .000
RUDDER = .000 SILTS = 1.000
MACH = 1.400 RN/L = 3.500

RUN NO. 1456/ 0 RN/L = 3.00 GRADIENT INTERVAL = -5.00/ 5.00

ALPHAT	BETAT	CNFTS	CATS	CAFTS	CLMFTS	CYFTS	CYNTS	CYNFTS	CBLFTS	ALFATU	BETATU
-8.283	-5.885	-.48320	.32030	.16980	.08210	.10940	-.00670	-.00510	-.02600	-8.06250	-6.02130
-8.309	-3.800	-.46630	.32230	.17260	.07570	.06250	.00140	.00260	-.01780	-8.11810	-3.97670
-8.242	.463	-.43290	.32470	.17390	.05820	-.00860	-.00080	-.00080	.00240	-8.16370	.21490
-8.069	4.438	-.43680	.32540	.17600	.06370	-.07080	-.00240	-.00360	.01990	-8.11520	4.18120
-8.021	6.327	-.43970	.32070	.17470	.06530	-.10840	.00260	.00110	.02570	-8.11060	6.08280
	GRADIENT	.00363	.00038	.00041	-.00149	-.01619	-.00046	-.00075	.00458	.00022	.99020

RUN NO. 1457/ 0 RN/L = 3.00 GRADIENT INTERVAL = -5.00/ 5.00

ALPHAT	BETAT	CNFTS	CATS	CAFTS	CLMFTS	CYFTS	CYNTS	CYNFTS	CBLFTS	ALFATU	BETATU
-6.251	-6.006	-.39050	.32210	.17460	.07170	.10290	-.00210	-.00050	-.02260	-6.01210	-6.10650
-6.172	-4.030	-.37350	.32230	.17610	.06600	.06220	.00170	.00270	-.01540	-5.95570	-4.17250
-6.283	.176	-.34710	.32270	.17730	.05220	-.00710	.00060	.00070	.00090	-6.19410	-.06800
-6.011	4.318	-.33610	.32530	.18030	.05300	-.06580	-.00310	-.00380	.01550	-6.08550	4.06960
-5.983	6.330	-.33830	.32330	.17710	.05450	-.10490	.00100	-.00050	.02150	-6.10570	6.10190
	GRADIENT	.00448	.00036	.00050	-.00156	-.01534	-.00057	-.00078	.00370	-.01565	.98732

RUN NO. 1458/ 0 RN/L = 3.00 GRADIENT INTERVAL = -5.00/ 5.00

ALPHAT	BETAT	CNFTS	CATS	CAFTS	CLMFTS	CYFTS	CYNTS	CYNFTS	CBLFTS	ALFATU	BETATU
-4.047	-6.110	-.30820	.32180	.17870	.07310	.10630	-.00620	-.00470	-.01830	-3.79180	-6.15590
-4.292	-3.965	-.30160	.32200	.17990	.06540	.06180	-.00110	-.00020	-.01230	-4.05320	-4.06670
-4.195	.416	-.26860	.32180	.18130	.05260	-.00960	.00030	.00030	.00130	-4.11940	.16710
-3.671	4.352	-.25480	.32460	.18300	.05860	-.06660	-.00040	-.00110	.01160	-3.80260	4.12780
-3.794	6.224	-.26160	.32410	.18190	.05740	-.10410	.00370	.00230	.01660	-3.96010	6.02390
	GRADIENT	.00566	.00031	.00037	-.00086	-.01545	.00009	-.00010	.00288	.02928	.98493

RUN NO. 1459/ 0 RN/L = 3.00 GRADIENT INTERVAL = -5.00/ 5.00

ALPHAT	BETAT	CNFTS	CATS	CAFTS	CLMFTS	CYFTS	CYNTS	CYNFTS	CBLFTS	ALFATU	BETATU
-.258	-6.955	-.21250	.32110	.18130	.09390	.14190	-.02330	-.02170	-.01260	-.01310	-6.87000
-.251	-4.809	-.19290	.31740	.18170	.08490	.09150	-.01510	-.01390	-.00870	-.00460	-4.72400
-.254	-.422	-.16360	.31740	.18380	.06940	.00810	-.00420	-.00410	-.00120	-.00850	-.33670
-.200	3.701	-.16480	.32040	.18460	.07710	-.07190	.01060	.00960	.00560	.04560	3.78630
-.224	5.892	-.16450	.32030	.18290	.07520	-.11610	.01750	.01590	.00900	.02140	5.97740
	GRADIENT	.00334	.00035	.00034	-.00094	-.01920	.00301	.00276	.00168	.00583	1.00002

IA156A, AEDC PWT 16T-470, O T S W/SILTS (R8NSE0) (10 MAY 80)

REFERENCE DATA

SREF = 2690.0000 SQ.FT. XMRP = 976.0000 IN. XT
LREF = 1290.3000 INCHES YMRP = .0000 IN. YT
BREF = 1290.3000 INCHES ZMRP = 400.0000 IN. ZT
SCALE = .0200

PARAMETRIC DATA

IB-ELV = 10.000 OB-ELV = -7.000
BDFLAP = .000 SPDBRK = .000
RUDDER = .000 SILTS = 1.000
MACH = 1.400 RN/L = 3.500

RUN NO. 1460/ 0 RN/L = 3.00 GRADIENT INTERVAL = -5.00/ 5.00

ALPHAT	BETAT	CNFTS	CATS	CAFTS	CLMFTS	CYFTS	CYNTS	CYNFTS	CBLFTS	ALFATU	BETATU
4.592	-5.782	-.08290	.31450	.18010	.10540	.13940	-.03920	-.03800	-.00450	4.43570	-5.98900
4.424	-3.659	-.06920	.31380	.17980	.09450	.08920	-.02950	-.02870	-.00320	4.31120	-3.89290
4.139	.195	-.06350	.31400	.18070	.08650	.00240	-.00680	-.00690	-.00060	4.21910	-.05220
4.169	4.088	-.05850	.31420	.17950	.08660	-.08630	.01960	.01870	.00170	4.40150	3.97240
4.126	6.151	-.06150	.31690	.18140	.08870	-.13520	.03190	.03050	.00320	4.37810	6.08620
	GRADIENT	.00138	.00005	-.00004	-.00102	-.02265	.00634	.00612	.00063	.01171	1.01524

IA156A, AEDC PWT 16T-470, O T S W/SILTS (R8NSE1) (10 MAY 80)

REFERENCE DATA

SREF = 2690.0000 SQ.FT. XMRP = 976.0000 IN. XT
LREF = 1290.3000 INCHES YMRP = .0000 IN. YT
BREF = 1290.3000 INCHES ZMRP = 400.0000 IN. ZT
SCALE = .0200

PARAMETRIC DATA

IB-ELV = 10.000 OB-ELV = -7.000
BDFLAP = .000 SPDBRK = .000
RUDDER = .000 SILTS = 1.000
MACH = 1.550 RN/L = 3.200

RUN NO. 1461/ 0 RN/L = 3.00 GRADIENT INTERVAL = -5.00/ 5.00

ALPHAT	BETAT	CNFTS	CATS	CAFTS	CLMFTS	CYFTS	CYNTS	CYNFTS	CBLFTS	ALFATU	BETATU
-8.243	-5.846	-.48280	.30250	.17090	.09550	.11070	-.00870	-.00710	-.02460	-7.92450	-6.00190
-8.308	-3.844	-.47790	.30550	.17190	.09010	.06690	-.00170	-.00050	-.01770	-8.02380	-4.05630
-8.233	.425	-.44610	.30940	.17530	.07710	-.00310	-.00330	-.00330	.00160	-8.08870	.09990
-8.031	4.410	-.44480	.30930	.17520	.07980	-.07170	-.00050	-.00170	.01900	-8.05470	4.05510
-7.992	6.440	-.45070	.30780	.17610	.07910	-.11300	.00420	.00270	.02540	-8.08250	6.09700
	GRADIENT	.00405	.00047	.00040	-.00127	-.01679	.00014	-.00015	.00445	-.00388	.98266

RUN NO. 1462/ 0 RN/L = 3.00 GRADIENT INTERVAL = -5.00/ 5.00

ALPHAT	BETAT	CNFTS	CATS	CAFTS	CLMFTS	CYFTS	CYNTS	CYNFTS	CBLFTS	ALFATU	BETATU
-6.314	-5.998	-.39240	.30380	.17400	.08120	.10810	-.00760	-.00600	-.02140	-5.97360	-6.10430
-6.220	-4.011	-.37380	.30350	.17350	.07490	.06580	-.00180	-.00080	-.01450	-5.90470	-4.17690
-6.267	.252	-.35600	.30620	.17550	.06700	-.00490	-.00200	-.00200	.00100	-6.11190	-.06960
-5.993	4.436	-.34460	.30650	.17840	.06540	-.06900	-.00170	-.00250	.01490	-6.06260	4.08600
-5.807	6.551	-.34500	.30830	.18050	.06750	-.11160	.00420	.00260	.02070	-5.95100	6.22560
	GRADIENT	.00346	.00036	.00058	-.00113	-.01596	.00001	-.00020	.00348	-.01879	.97820

IA156A, AEDC PWT 16T-470, 0 T S W/SILTS (R8NSE1) (10 MAY 80)

REFERENCE DATA

SREF = 2690.0000 SQ.FT. XMRP = 976.0000 IN. XT
LREF = 1290.3000 INCHES YMRP = .0000 IN. YT
BREF = 1290.3000 INCHES ZMRP = 400.0000 IN. ZT
SCALE = .0200

PARAMETRIC DATA

IB-ELV = 10.000 OB-ELV = -7.000
BDFLAP = .000 SPDBRK = .000
RUDDER = .000 SILTS = 1.000
MACH = 1.550 RN/L = 3.200

RUN NO. 1463/ 0 RN/L = 3.00 GRADIENT INTERVAL = -5.00/ 5.00

ALPHAT	BETAT	CNFTS	CATS	CAFTS	CLMFTS	CYFTS	CYNTS	CYNFTS	CBLFTS	ALFATU	BETATU
-4.229	-6.123	-.30920	.30080	.17410	.07570	.10770	-.00980	-.00830	-.01720	-3.87370	-6.15530
-4.377	-3.958	-.29970	.30280	.17580	.06890	.06380	-.00400	-.00310	-.01110	-4.03610	-4.06500
-4.215	.518	-.27100	.30300	.17770	.05980	-.00920	-.00220	-.00220	.00150	-4.07820	.18700
-3.646	4.463	-.25670	.30520	.17940	.06340	-.07190	.00230	.00160	.01090	-3.79580	4.13750
-3.715	6.283	-.26600	.30770	.18020	.06510	-.10880	.00850	.00710	.01540	-3.91530	5.98680
	GRADIENT	.00514	.00028	.00043	-.00068	-.01612	.00074	.00055	.00262	.02769	.97353

RUN NO. 1464/ 0 RN/L = 3.00 GRADIENT INTERVAL = -5.00/ 5.00

ALPHAT	BETAT	CNFTS	CATS	CAFTS	CLMFTS	CYFTS	CYNTS	CYNFTS	CBLFTS	ALFATU	BETATU
-.351	-7.071	-.20520	.30170	.17690	.09100	.13910	-.02420	-.02260	-.01150	-.02540	-6.92110
-.341	-4.876	-.18780	.29870	.17670	.08350	.09130	-.01550	-.01430	-.00780	-.01580	-4.72640
-.347	-.522	-.16420	.29870	.18050	.07100	.00850	-.00370	-.00360	-.00100	-.02240	-.37230
-.330	3.646	-.16090	.30450	.18230	.07110	-.07100	.01060	.00980	.00520	-.00590	3.79520
-.351	5.828	-.15890	.30540	.18150	.06770	-.11610	.01940	.01790	.00840	-.02760	5.97600
	GRADIENT	.00317	.00068	.00066	-.00147	-.01904	.00306	.00283	.00153	.00114	.99994

RUN NO. 1465/ 0 RN/L = 3.00 GRADIENT INTERVAL = -5.00/ 5.00

ALPHAT	BETAT	CNFTS	CATS	CAFTS	CLMFTS	CYFTS	CYNTS	CYNFTS	CBLFTS	ALFATU	BETATU
4.630	-5.677	-.07260	.30190	.18030	.10210	.13590	-.03890	-.03770	-.00360	4.44460	-5.98010
4.410	-3.554	-.06070	.30090	.18030	.08950	.08680	-.02850	-.02760	-.00280	4.28720	-3.88850
4.076	.278	-.05600	.29900	.17990	.08330	-.00110	-.00540	-.00550	-.00050	4.21930	-.05000
4.053	4.095	-.05340	.29990	.18000	.08280	-.08500	.01830	.01730	.00120	4.38530	3.96650
4.011	6.152	-.05090	.30060	.17930	.08160	-.13370	.03040	.02900	.00240	4.36290	6.09700
	GRADIENT	.00095	-.00013	-.00004	-.00088	-.02246	.00612	.00587	.00052	.01280	1.02691

IA156A, AEDC PWT 16T-470, O T S W/SILTS (R8NSE2) (10 MAY 80)

REFERENCE DATA

SREF = 2690.0000 SQ.FT. XMRP = 976.0000 IN. XT
LREF = 1290.3000 INCHES YMRP = .0000 IN. YT
BREF = 1290.3000 INCHES ZMRP = 400.0000 IN. ZT
SCALE = .0200

PARAMETRIC DATA

IB-ELV = 12.000 OB-ELV = -7.000
BDFLAP = .000 SPDBRK = .000
RUDDER = .000 SILTS = 1.000
MACH = 1.400 RN/L = 3.500

RUN NO. 1469/ 0 RN/L = 3.01 GRADIENT INTERVAL = -5.00/ 5.00

ALPHAT	BETAT	CNFTS	CATS	CAFTS	CLMFTS	CYFTS	CYNTS	CYNFTS	CBLFTS	ALFATU	BETATU
-8.256	-5.906	-.48500	.32180	.17250	.08340	.11100	-.00740	-.00580	-.02620	-8.03480	-6.04140
-8.288	-3.846	-.46840	.32250	.17300	.07780	.06430	.00130	.00250	-.01820	-8.09580	-4.02190
-8.244	.322	-.43640	.32570	.17560	.06050	-.00580	-.00070	-.00070	.00160	-8.16060	.07520
-8.046	4.379	-.43630	.32590	.17750	.06490	-.07030	-.00210	-.00320	.01980	-8.09030	4.12340
-8.034	6.333	-.44300	.32310	.17640	.06710	-.10860	.00250	.00100	.02570	-8.12370	6.08830
	GRADIENT	.00392	.00041	.00055	-.00158	-.01637	-.00041	-.00069	.00462	.00060	.99024

RUN NO. 1470/ 0 RN/L = 3.00 GRADIENT INTERVAL = -5.00/ 5.00

ALPHAT	BETAT	CNFTS	CATS	CAFTS	CLMFTS	CYFTS	CYNTS	CYNFTS	CBLFTS	ALFATU	BETATU
-6.240	-6.008	-.38950	.32210	.17550	.07310	.10330	-.00230	-.00060	-.02250	-6.00040	-6.10890
-6.160	-4.034	-.37440	.32260	.17660	.06760	.06283	.00190	.00290	-.01530	-5.94230	-4.17750
-6.266	.181	-.34980	.32410	.17810	.05430	-.00630	.00040	.00050	.00090	-6.17680	-.06430
-6.042	4.336	-.34050	.32500	.18070	.05410	-.06670	-.00250	-.00330	.01550	-6.11740	4.08530
-5.812	6.442	-.33670	.32430	.17980	.05570	-.10550	.00140	-.00010	.02140	-5.94130	6.21480
	GRADIENT	.00405	.00029	.00049	-.00162	-.01547	-.00053	-.00074	.00368	-.02100	.98715

RUN NO. 1471/ 0 RN/L = 3.00 GRADIENT INTERVAL = -5.00/ 5.00

ALPHAT	BETAT	CNFTS	CATS	CAFTS	CLMFTS	CYFTS	CYNTS	CYNFTS	CBLFTS	ALFATU	BETATU
-4.066	-6.117	-.31110	.32360	.17980	.07480	.10750	-.00620	-.00460	-.01850	-3.80990	-6.16340
-4.289	-3.969	-.30250	.32240	.18070	.06690	.06260	-.00150	-.00060	-.01230	-4.04970	-4.07120
-4.174	.417	-.27060	.32240	.18250	.05430	-.00930	.00020	.00020	.00120	-4.09870	.16770
-3.679	4.370	-.25590	.32500	.18350	.05950	-.06860	.00000	-.00070	.01180	-3.81020	4.14460
-3.789	6.216	-.26220	.32400	.18200	.05830	-.10440	.00400	.00250	.01650	-3.95530	6.01540
	GRADIENT	.00562	.00031	.00034	-.00092	-.01575	.00018	-.00001	.00289	.02799	.98488

RUN NO. 1472/ 0 RN/L = 2.99 GRADIENT INTERVAL = -5.00/ 5.00

ALPHAT	BETAT	CNFTS	CATS	CAFTS	CLMFTS	CYFTS	CYNTS	CYNFTS	CBLFTS	ALFATU	BETATU
-.248	-6.949	-.21340	.32180	.18330	.09500	.14120	-.02380	-.02210	-.01240	-.00170	-6.86370
-.244	-4.805	-.19620	.31940	.18260	.08690	.09220	-.01560	-.01440	-.00880	.00190	-4.71990
-.246	-.435	-.16540	.31790	.18480	.07110	.00900	-.00480	-.00470	-.00120	-.00050	-.35000
-.190	3.715	-.16570	.32090	.18460	.07860	-.07200	.01060	.00960	.00550	.05620	3.80050
-.208	5.888	-.16500	.32120	.18670	.07670	-.11650	.01770	.01610	.00890	.03710	5.97320
	GRADIENT	.00361	.00017	.00024	-.00100	-.01927	.00307	.00281	.00168	.00631	1.00004

IA156A, AEDC PWT 16T-470, O T S W/SILTS (R8NSE2) (10 MAY 80)

REFERENCE DATA

SREF = 2690.0000 SQ.FT. XMRP = 976.0000 IN. XT
LREF = 1290.3000 INCHES YMRP = .0000 IN. YT
BREF = 1290.3000 INCHES ZMRP = 400.0000 IN. ZT
SCALE = .0200

PARAMETRIC DATA

IB-ELV = 12.000 OB-ELV = -7.000
BDFLAP = .000 SPDBRK = .000
RUDDER = .000 SILTS = 1.000
MACH = 1.400 RN/L = 3.500

RUN NO. 1473/ 0 RN/L = 3.00 GRADIENT INTERVAL = -5.00/ 5.00

ALPHAT	BETAT	CNFTS	CATS	CAFTS	CLMFTS	CYFTS	CYNTS	CYNFTS	CBLFTS	ALFATU	BETATU
4.593	-5.770	-.08370	.31240	.17970	.10610	.13890	-.03940	-.03820	-.00450	4.43650	-5.97700
4.414	-3.653	-.07210	.31360	.18010	.09590	.08950	-.02990	-.02910	-.00340	4.30050	-3.88640
4.144	.190	-.06570	.31480	.18410	.08870	.00340	-.00680	-.00690	-.00070	4.22400	-.05720
4.167	4.085	-.05990	.31450	.18060	.08820	-.08630	.01980	.01900	.00160	4.39870	3.96920
4.135	6.169	-.06330	.31580	.18110	.08980	-.13550	.03220	.03070	.00320	4.38700	6.10430
	GRADIENT	.00158	.00012	.00006	-.00099	-.02272	.00642	.00622	.00065	.01277	1.01537

IA156A, AEDC PWT 16T-470, O T S W/SILTS (R8NSE3) (10 MAY 80)

REFERENCE DATA

SREF = 2690.0000 SQ.FT. XMRP = 976.0000 IN. XT
LREF = 1290.3000 INCHES YMRP = .0000 IN. YT
BREF = 1290.3000 INCHES ZMRP = 400.0000 IN. ZT
SCALE = .0200

PARAMETRIC DATA

IB-ELV = 12.000 OB-ELV = -7.000
BDFLAP = .000 SPDBRK = .000
RUDDER = .000 SILTS = 1.000
MACH = 1.550 RN/L = 3.200

RUN NO. 1474/ 0 RN/L = 3.01 GRADIENT INTERVAL = -5.00/ 5.00

ALPHAT	BETAT	CNFTS	CATS	CAFTS	CLMFTS	CYFTS	CYNTS	CYNFTS	CBLFTS	ALFATU	BETATU
-8.288	-5.868	-.48870	.30320	.17200	.09850	.11180	-.00930	-.00770	-.02490	-7.96860	-6.02430
-8.328	-3.741	-.47800	.30570	.17370	.09190	.06510	-.00190	-.00070	-.01710	-8.04460	-3.95750
-8.225	.334	-.44730	.30860	.17550	.07880	-.00330	-.00310	-.00300	.00130	-8.07500	.00960
-8.009	4.535	-.44860	.31110	.17850	.08200	-.07340	-.00090	-.00200	.01930	-8.03730	4.18040
-7.976	6.441	-.45280	.30770	.17710	.08140	-.11280	.00370	.00220	.02520	-8.06590	6.09690
	GRADIENT	.00353	.00065	.00058	-.00119	-.01673	.00012	-.00016	.00440	.00092	.98334

RUN NO. 1475/ 0 RN/L = 3.01 GRADIENT INTERVAL = -5.00/ 5.00

ALPHAT	BETAT	CNFTS	CATS	CAFTS	CLMFTS	CYFTS	CYNTS	CYNFTS	CBLFTS	ALFATU	BETATU
-6.311	-5.995	-.39620	.30460	.17440	.08330	.11100	-.00810	-.00650	-.02160	-5.97300	-6.10210
-6.220	-3.999	-.37490	.30390	.17440	.07600	.06520	-.00150	-.00050	-.01460	-5.90620	-4.16570
-6.253	.264	-.35640	.30680	.17650	.06810	-.00350	-.00250	-.00240	.00090	-6.10160	-.05680
-5.964	4.419	-.34740	.30870	.18060	.06740	-.06810	-.00160	-.00250	.01470	-6.03320	4.06820
-5.679	6.567	-.34460	.30950	.18090	.06830	-.11160	.00420	.00270	.02050	-5.82780	6.24170
	GRADIENT	.00327	.00057	.00074	-.00103	-.01584	-.00001	-.00024	.00348	-.0.522	.97813

IA156A, AEDC PWT 16T-470, O T S W/SILTS (R8NSE3) (10 MAY 80)

REFERENCE DATA

SREF = 2690.0000 SQ.FT. XMRP = 976.0000 IN. XT
LREF = 1290.3000 INCHES YMRP = .0000 IN. YT
BREF = 1290.3000 INCHES ZMRP = 400.0000 IN. ZT
SCALE = .0200

PARAMETRIC DATA

IB-ELV = 12.000 OB-ELV = -7.000
BDFLAP = .000 SPDBRK = .000
RUDDER = .000 SILTS = 1.000
MACH = 1.550 RN/L = 3.200

RUN NO. 1476/ 0 RN/L = 3.01 GRADIENT INTERVAL = -5.00/ 5.00

ALPHAT	BETAT	CNFTS	CATS	CAFTS	CLMFTS	CYFTS	CYNTS	CYNFTS	CBLFTS	ALFATU	BETATU
-4.092	-6.147	-.30680	.30270	.17620	.07780	.10980	-.01070	-.00920	-.01700	-3.73710	-6.17470
-4.372	-3.952	-.30220	.30370	.17750	.07100	.06360	-.00420	-.00330	-.01110	-4.03250	-4.05950
-4.195	.507	-.27150	.30460	.17920	.06140	-.00890	-.00210	-.00210	.00140	-4.05880	.17720
-3.651	4.455	-.25680	.30600	.18120	.06460	-.07090	.00250	.00170	.01060	-3.79940	4.13070
-3.710	6.277	-.26700	.30730	.18190	.06620	-.10850	.00840	.00700	.01530	-3.91030	5.98440
	GRADIENT	.00543	.00027	.00044	-.00079	-.01600	.00079	.00059	.00259	.02701	.97372

RUN NO. 1477/ 0 RN/L = 3.01 GRADIENT INTERVAL = -5.00/ 5.00

ALPHAT	BETAT	CNFTS	CATS	CAFTS	CLMFTS	CYFTS	CYNTS	CYNFTS	CBLFTS	ALFATU	BETATU
-.334	-7.020	-.20710	.30250	.17990	.09320	.14070	-.02490	-.02320	-.01150	-.00930	-6.87080
-.332	-4.875	-.18980	.29960	.17730	.08540	.09130	-.01590	-.01470	-.00790	-.00740	-4.72500
-.335	-.497	-.16540	.29930	.18010	.07280	.00750	-.00350	-.00340	-.00100	-.01070	-.34730
-.320	3.642	-.16100	.30540	.18290	.07270	-.07080	.01080	.01000	.00500	.00440	3.79210
-.333	5.822	-.15860	.30400	.18310	.06930	-.11540	.01960	.01810	.00830	-.01010	5.96990
	GRADIENT	.00340	.00067	.00066	-.00150	-.01903	.00313	.00290	.00152	.00136	1.00002

RUN NO. 1478/ 0 RN/L = 3.01 GRADIENT INTERVAL = -5.00/ 5.00

ALPHAT	BETAT	CNFTS	CATS	CAFTS	CLMFTS	CYFTS	CYNTS	CYNFTS	CBLFTS	ALFATU	BETATU
4.643	-5.685	-.07340	.30280	.18090	.10350	.13810	-.03960	-.03830	-.00360	4.45710	-5.98840
4.417	-3.553	-.06230	.30150	.18150	.09090	.08700	-.02870	-.02780	-.00280	4.29430	-3.88630
4.089	.271	-.05900	.29800	.17990	.08590	.00050	-.00600	-.00600	-.00060	4.23130	-.05670
4.063	4.098	-.05340	.29980	.17900	.08430	-.08480	.01820	.01730	.00110	4.39550	3.97000
4.025	6.166	-.05240	.30020	.17980	.08300	-.13260	.02990	.02850	.00240	4.37590	6.11100
	GRADIENT	.00116	-.00022	-.00033	-.00086	-.02246	.00613	.00589	.00051	.01323	1.02686

IA156A, AEDC PWT 16T-470, O T S W/SILTS (R8NSE4) (10 MAY 80)

REFERENCE DATA

SREF = 2690.0000 SQ.FT. XMRP = 976.0000 IN. XT
LREF = 1290.3000 INCHES YMRP = .0000 IN. YT
BREF = 1290.3000 INCHES ZMRP = 400.0000 IN. ZT
SCALE = .0200

PARAMETRIC DATA

IB-ELV = 8.000 OB-ELV = -7.000
BDFLAP = .000 SPDBRK = .000
RUDDER = .000 SILTS = 1.000
MACH = 1.400 RN/L = 3.500

RUN NO. 1482/ 0 RN/L = 3.00 GRADIENT INTERVAL = -5.00/ 5.00

ALPHAT	BETAT	CNFTS	CATS	CAFTS	CLMFTS	CYFTS	CYNTS	CYNFTS	CBLFTS	ALFATU	BETATU
-8.217	-5.784	-.47660	.32060	.16970	.07950	.10640	-.00590	-.00430	-.02560	-7.99630	-5.92150
-8.291	-3.783	-.46870	.32350	.17170	.07540	.06240	.00200	.00320	-.01810	-8.10020	-3.96030
-8.253	.235	-.43490	.32670	.17390	.05700	-.00520	-.00100	-.00090	.00130	-8.16700	-.01060
-8.076	4.528	-.43540	.32550	.17700	.06170	-.07440	-.00180	-.00300	.02050	-8.12330	4.27330
-8.023	6.345	-.43800	.32360	.17590	.06400	-.11180	.00280	.00120	.02620	-8.11280	6.10110
	GRADIENT	.00396	.00023	.00064	-.00162	-.01646	-.00045	-.00074	.00464	-.00263	.99079

RUN NO. 1483/ 0 RN/L = 3.00 GRADIENT INTERVAL = -5.00/ 5.00

ALPHAT	BETAT	CNFTS	CATS	CAFTS	CLMFTS	CYFTS	CYNTS	CYNFTS	CBLFTS	ALFATU	BETATU
-6.277	-6.019	-.38940	.32220	.17430	.07010	.10330	-.00180	-.00020	-.02270	-6.03740	-6.12020
-6.171	-4.046	-.36930	.32220	.17590	.06450	.06180	.00250	.00350	-.01550	-5.95340	-4.18940
-6.272	.152	-.34920	.32450	.17700	.05190	-.00630	.00070	.00090	.00070	-6.18200	-.09290
-6.054	4.328	-.33800	.32460	.17900	.05120	-.06760	-.00240	-.00320	.01560	-6.12900	4.07900
-5.773	6.466	-.33350	.32410	.17840	.05290	-.10750	.00150	.00000	.02160	-5.90370	6.24030
	GRADIENT	.00374	.00029	.00037	-.00159	-.01545	-.00058	-.00080	.00371	-.02100	.98730

RUN NO. 1484/ 0 RN/L = 3.00 GRADIENT INTERVAL = -5.00/ 5.00

ALPHAT	BETAT	CNFTS	CATS	CAFTS	CLMFTS	CYFTS	CYNTS	CYNFTS	CBLFTS	ALFATU	BETATU
-4.039	-6.144	-.30710	.32220	.17930	.07170	.10630	-.00530	-.00380	-.01830	-3.78220	-6.18840
-4.300	-3.961	-.30090	.32140	.17890	.06430	.06090	-.00070	.00020	-.01230	-4.05990	-4.06280
-4.193	.424	-.26920	.32260	.18070	.05200	-.01070	.00060	.00060	.00130	-4.11730	.17320
-3.708	4.375	-.25420	.32400	.18260	.05640	-.06850	.00010	-.00070	.01170	-3.83960	4.15000
-3.784	6.193	-.26080	.32370	.18030	.05580	-.10390	.00370	.00230	.01640	-3.95060	5.99290
	GRADIENT	.00563	.00031	.00044	-.00098	-.01554	.00010	-.00010	.00288	.02571	.98492

RUN NO. 1485/ 0 RN/L = 3.00 GRADIENT INTERVAL = -5.00/ 5.00

ALPHAT	BETAT	CNFTS	CATS	CAFTS	CLMFTS	CYFTS	CYNTS	CYNFTS	CBLFTS	ALFATU	BETATU
-.271	-6.994	-.21040	.32120	.18210	.09190	.14040	-.02260	-.02100	-.01250	-.02470	-6.90850
-.265	-4.810	-.19300	.31700	.18050	.08350	.09000	-.01440	-.01320	-.00860	-.01880	-4.72390
-.259	-.433	-.16250	.31960	.18590	.06840	.00770	-.00420	-.00400	-.00120	-.01500	-.34850
-.217	3.701	-.16540	.31890	.18280	.07560	-.07180	.01020	.00930	.00550	.02890	3.78600
-.241	5.895	-.16510	.32180	.18350	.07350	-.11650	.01730	.01560	.00900	.00370	5.98000
	GRADIENT	.00328	.00023	.00028	-.00095	-.01901	.00289	.00264	.00166	.00556	.99997

IA156A, AEDC PWT 16T-470, O T S W/SILTS (R8NSE4) (10 MAY 80)

REFERENCE DATA

SREF = 2690.0000 SQ.FT. XMRP = 976.0000 IN. XT
LREF = 1290.3000 INCHES YMRP = .0000 IN. YT
BREF = 1290.3000 INCHES ZMRP = 400.0000 IN. ZT
SCALE = .0200

PARAMETRIC DATA

IB-ELV = 8.000 OB-ELV = -7.000
BDFLAP = .000 SPDBRK = .000
RUDDER = .000 SILTS = 1.000
MACH = 1.400 RN/L = 3.500

RUN NO. 1486/ 0 RN/L = 3.00 GRADIENT INTERVAL = -5.00/ 5.00

ALPHAT	BETAT	CNFTS	CATS	CAFTS	CLMFTS	CYFTS	CYNTS	CYNFTS	CBLFTS	ALFATU	BETATU
4.599	-5.758	-.08050	.31750	.17870	.10410	.13770	-.03900	-.03790	-.00440	4.44380	-5.96500
4.391	-3.688	-.06680	.31290	.17900	.09250	.08890	-.02910	-.02840	-.00310	4.27650	-3.92090
4.153	.099	-.06210	.31440	.18040	.08570	.00390	-.00690	-.00700	-.00070	4.22710	-.15070
4.159	4.044	-.05730	.31590	.17960	.08570	-.08570	.01940	.01860	.00160	4.39210	3.92640
4.117	6.159	-.06070	.31670	.18090	.08730	-.13690	.03240	.03100	.00310	4.36930	6.09480
	GRADIENT	.00123	.00039	.00008	-.00087	-.02258	.00628	.00608	.00061	.01513	1.01499

IA156A, AEDC PWT 16T-470, O T S W/SILTS (R8NSE5) (10 MAY 80)

REFERENCE DATA

SREF = 2690.0000 SQ.FT. XMRP = 976.0000 IN. XT
LREF = 1290.3000 INCHES YMRP = .0000 IN. YT
BREF = 1290.3000 INCHES ZMRP = 400.0000 IN. ZT
SCALE = .0200

PARAMETRIC DATA

IB-ELV = 8.000 OB-ELV = -7.000
BDFLAP = .000 SPDBRK = .000
RUDDER = .000 SILTS = 1.000
MACH = 1.550 RN/L = 3.200

RUN NO. 1487/ 0 RN/L = 3.00 GRADIENT INTERVAL = -5.00/ 5.00

ALPHAT	BETAT	CNFTS	CATS	CAFTS	CLMFTS	CYFTS	CYNTS	CYNFTS	CBLFTS	ALFATU	BETATU
-8.271	-5.858	-.48560	.30350	.17130	.09610	.10960	-.00840	-.00670	-.02470	-7.95220	-6.01390
-8.322	-3.738	-.47300	.30420	.17200	.08850	.06430	-.00140	-.00020	-.01720	-8.03710	-3.95490
-8.242	.311	-.44790	.30940	.17430	.07630	-.00400	-.00220	-.00220	.00120	-8.09130	-.01260
-7.991	4.617	-.44470	.30850	.17680	.07870	-.07630	-.00010	-.00130	.01950	-8.02250	4.26030
-8.015	6.475	-.44860	.30630	.17560	.07800	-.11620	.00440	.00300	.02540	-8.10540	6.13110
	GRADIENT	.00336	.00051	.00057	-.00115	-.01683	.00016	-.00013	.00439	.00190	.98336

RUN NO. 1488/ 0 RN/L = 3.00 GRADIENT INTERVAL = -5.00/ 5.00

ALPHAT	BETAT	CNFTS	CATS	CAFTS	CLMFTS	CYFTS	CYNTS	CYNFTS	CBLFTS	ALFATU	BETATU
-6.311	-5.988	-.38980	.30310	.17180	.07970	.10620	-.00660	-.00510	-.02120	-5.97190	-6.09480
-6.235	-3.999	-.37400	.30240	.17210	.07410	.06330	-.00090	.00000	-.01450	-5.91970	-4.16540
-6.259	.243	-.35380	.30490	.17510	.06550	-.00480	-.00190	-.00180	.00090	-6.10330	-.07920
-5.996	4.437	-.34660	.30830	.17840	.06480	-.06940	-.00120	-.00210	.01480	-6.06530	4.08610
-5.910	6.415	-.35260	.30910	.17990	.06680	-.10910	.00350	.00200	.02060	-6.04820	6.08560
	GRADIENT	.00325	.00070	.00075	-.00110	-.01573	-.00004	-.00025	.00347	-.01731	.97810

IA156A, AEDC PWT 16T-470, 0 T S W/SILTS (R8NSE5) (10 MAY 80)

REFERENCE DATA

SREF = 2690.0000 SQ.FT. XMRP = 976.0000 IN. XT
LREF = 1290.3000 INCHES YMRP = .0000 IN. YT
BREF = 1290.3000 INCHES ZMRP = 400.0000 IN. ZT
SCALE = .0200

PARAMETRIC DATA

IB-ELV = 8.000 OB-ELV = -7.000
BDFLAP = .000 SPDBRK = .000
RUDDER = .000 SILTS = 1.000
MACH = 1.550 RN/L = 3.200

RUN NO. 1489/ 0 RN/L = 3.01 GRADIENT INTERVAL = -5.00/ 5.00

ALPHAT	BETAT	CNFTS	CATS	CAFTS	CLMFTS	CYFTS	CYNTS	CYNFTS	CBLFTS	ALFATU	BETATU
-4.127	-6.144	-.30700	.30310	.17510	.07520	.10850	-.00970	-.00830	-.01710	-3.77070	-6.17060
-4.385	-3.953	-.30040	.30200	.17610	.06790	.06190	-.00300	-.00220	-.01110	-4.04300	-4.06010
-4.222	.516	-.27050	.30430	.17850	.05890	-.01140	-.00120	-.00120	.00140	-4.08470	.18440
-3.651	4.457	-.25670	.30650	.18030	.06250	-.07320	.00280	.00210	.01080	-3.80040	4.13170
-3.726	6.279	-.26510	.30670	.17950	.06400	-.10810	.00840	.00710	.01510	-3.92640	5.98390
	GRADIENT	.00523	.00053	.00050	-.00067	-.01607	.00068	.00050	.00261	.02800	.97351

RUN NO. 1490/ 0 RN/L = 3.00 GRADIENT INTERVAL = -5.00/ 5.00

ALPHAT	BETAT	CNFTS	CATS	CAFTS	CLMFTS	CYFTS	CYNTS	CYNFTS	CBLFTS	ALFATU	BETATU
-.356	-7.018	-.20560	.30510	.17820	.09090	.13820	-.02370	-.02210	-.01140	-.03110	-6.86830
-.352	-4.877	-.18830	.29860	.17670	.08290	.09010	-.01500	-.01390	-.00780	-.02710	-4.72720
-.350	-.499	-.16320	.29900	.17980	.07070	.00740	-.00350	-.00330	-.00100	-.02460	-.34810
-.341	3.641	-.16040	.30630	.18200	.07030	-.07230	.01100	.01030	.00510	-.01570	3.79210
-.354	5.833	-.15770	.30550	.18190	.06680	-.11730	.01960	.01810	.00830	-.03220	5.97990
	GRADIENT	.00330	.00090	.00062	-.00149	-.01906	.00305	.00284	.00151	.00133	1.00005

RUN NO. 1491/ 0 RN/L = 3.00 GRADIENT INTERVAL = -5.00/ 5.00

ALPHAT	BETAT	CNFTS	CATS	CAFTS	CLMFTS	CYFTS	CYNTS	CYNFTS	CBLFTS	ALFATU	BETATU
4.628	-5.679	-.07200	.30090	.17940	.10090	.13550	-.03870	-.03750	-.00370	4.44250	-5.98410
4.397	-3.547	-.06060	.30080	.17940	.08860	.08590	-.02850	-.02760	-.00280	4.27430	-3.88100
4.080	.278	-.05590	.30060	.17990	.08340	-.00060	-.00560	-.00570	-.00060	4.22510	-.05110
4.061	4.101	-.05220	.30000	.17900	.08190	-.08620	.01870	.01780	.00110	4.39260	3.97200
4.006	6.154	-.04960	.30020	.17910	.08030	-.13480	.03080	.02940	.00230	4.35810	6.09840
	GRADIENT	.00110	-.00010	-.00005	-.00088	-.02250	.00617	.00594	.00051	.01546	1.02680

IA156A, AEDC PWT 16T-470, 0 T S W/SILTS (R8NSE6) (10 MAY 80)

REFERENCE DATA

SREF = 2690.0000 SQ.FT. XMRP = 976.0000 IN. XT
LREF = 1290.3000 INCHES YMRP = .0000 IN. YT
BREF = 1290.3000 INCHES ZMRP = 400.0000 IN. ZT
SCALE = .0200

PARAMETRIC DATA

IB-ELV = 10.000 OB-ELV = 2.000
BDFLAP = .000 SPDBRK = .000
RUDDER = .000 SILTS = 1.000
MACH = 1.050 RN/L = 3.500

RUN NO. 1494/ 0 RN/L = 3.50 GRADIENT INTERVAL = -5.00/ 5.00

ALPHAT	BETAT	CNFTS	CATS	CAFTS	CLMFTS	CYFTS	CYNTS	CYNFTS	CBLFTS	ALFATU	BETATU
-8.367	-5.684	-.44590	.34710	.13400	.05370	.12110	-.01900	-.01630	-.02750	-8.19710	-5.99630
-8.334	-3.764	-.43470	.34870	.13490	.05000	.07630	-.01260	-.01120	-.01850	-8.18950	-3.90740
-8.348	.177	-.40300	.35470	.13840	.03140	-.00160	-.00010	-.00010	.00080	-8.28670	-.01760
-8.168	4.339	-.40380	.35120	.13560	.03500	-.07760	.01010	.00880	.01940	-8.21060	4.13980
-8.158	6.243	-.41060	.34830	.13380	.03770	-.11290	.01320	.01070	.02630	-8.23490	6.05410
	GRADIENT	.00378	.00030	.00008	-.00183	-.01899	.00280	.00247	.00468	-.00241	.99314

RUN NO. 1495/ 0 RN/L = 3.50 GRADIENT INTERVAL = -5.00/ 5.00

ALPHAT	BETAT	CNFTS	CATS	CAFTS	CLMFTS	CYFTS	CYNTS	CYNFTS	CBLFTS	ALFATU	BETATU
-6.238	-5.952	-.35960	.34790	.14020	.05230	.11930	-.01910	-.01640	-.02340	-6.05310	-6.03680
-6.197	-4.043	-.34990	.35030	.14230	.04920	.07960	-.01340	-.01180	-.01640	-6.03020	-4.16020
-6.338	.116	-.31840	.35250	.14090	.03080	-.00200	-.00030	-.00030	.00070	-6.27450	-.07760
-6.119	4.239	-.31870	.35130	.14290	.03660	-.07480	.01050	.00910	.01590	-6.18490	4.04640
-6.069	6.206	-.32630	.34870	.14130	.03890	-.11480	.01680	.01430	.02260	-6.17180	6.02950
	GRADIENT	.00377	.00012	.00007	-.00153	-.01864	.00289	.00252	.00390	-.01874	.99081

RUN NO. 1496/ 0 RN/L = 3.50 GRADIENT INTERVAL = -5.00/ 5.00

ALPHAT	BETAT	CNFTS	CATS	CAFTS	CLMFTS	CYFTS	CYNTS	CYNFTS	CBLFTS	ALFATU	BETATU
-4.048	-6.103	-.29250	.34740	.14400	.05960	.12320	-.02070	-.01830	-.01980	-3.84870	-6.14530
-4.305	-3.942	-.28420	.34730	.14470	.05210	.07860	-.01610	-.01450	-.01360	-4.12000	-4.02770
-4.248	.370	-.24160	.34930	.14310	.03230	-.00630	-.00010	-.00030	.00140	-4.19560	.17270
-3.750	4.277	-.23770	.35110	.14820	.04340	-.07810	.01280	.01130	.01280	-3.85860	4.10530
-3.844	6.097	-.24860	.34730	.14410	.04640	-.11230	.01780	.01560	.01750	-3.97910	5.94480
	GRADIENT	.00573	.00046	.00041	-.00112	-.01908	.00352	.00314	.00322	.03096	.98924

RUN NO. 1497/ 0 RN/L = 3.50 GRADIENT INTERVAL = -5.00/ 5.00

ALPHAT	BETAT	CNFTS	CATS	CAFTS	CLMFTS	CYFTS	CYNTS	CYNFTS	CBLFTS	ALFATU	BETATU
-.262	-6.954	-.20070	.34460	.14780	.07810	.15500	-.03530	-.03280	-.01450	-.06710	-6.89320
-.270	-4.772	-.18390	.34400	.14820	.07050	.10580	-.02790	-.02610	-.01000	-.07590	-4.71170
-.353	-.398	-.13400	.34860	.14910	.03950	.01400	-.00820	-.00810	-.00130	-.15860	-.33680
-.270	3.698	-.13940	.35190	.14920	.05010	-.07620	.01940	.01780	.00670	-.07560	3.75850
-.248	5.877	-.14900	.35020	.14790	.05630	-.12240	.02920	.02710	.01030	-.05370	5.93780
	GRADIENT	.00532	.00093	.00012	-.00246	-.02148	.00557	.00517	.00197	-.00018	.99999

IA156A, AEDC PWT 16T-470, 0 T S W/SILTS (R8NSE6) (10 MAY 80)

REFERENCE DATA

SREF = 2690.0000 SQ.FT. XMRP = 976.0000 IN. XT
LREF = 1290.3000 INCHES YMRP = .0000 IN. YT
BREF = 1290.3000 INCHES ZMRP = 400.0000 IN. ZT
SCALE = .0200

PARAMETRIC DATA

IB-ELV = 10.000 OB-ELV = 2.000
BDFLAP = .000 SPDBRK = .000
RUDDER = .000 SILTS = 1.000
MACH = 1.050 RN/L = 3.500

RUN NO. 1498/ 0 RN/L = 3.50 GRADIENT INTERVAL = -5.00/ 5.00

ALPHAT	BETAT	CNFTS	CATS	CAFTS	CLMFTS	CYFTS	CYNTS	CYNFTS	CBLFTS	ALFATU	BETATU
4.436	-5.814	-.06870	.34000	.14430	.07420	.14740	-.04180	-.04050	-.00460	4.30860	-5.97330
4.275	-3.714	-.05560	.34010	.14510	.06510	.09790	-.03100	-.03030	-.00370	4.18080	-3.89500
4.011	.128	-.02560	.34090	.14680	.04500.	.00540	-.00490	-.00480	-.00070	4.06850	-.06690
4.126	4.067	-.03200	.34230	.14520	.05580	-.08970	.02410	.02310	.00220	4.30580	3.97140
4.086	6.135	-.04010	.34010	.14300	.06140	-.13840	.03550	.03400	.00320	4.28200	6.07840
	GRADIENT	.00301	.00028	.00001	-.00118	-.02411	.00708	.00686	.00076	.01625	1.01096

IA156A, AEDC PWT 16T-470, 0 T S W/SILTS (R8NSE7) (10 MAY 80)

REFERENCE DATA

SREF = 2690.0000 SQ.FT. XMRP = 976.0000 IN. XT
LREF = 1290.3000 INCHES YMRP = .0000 IN. YT
BREF = 1290.3000 INCHES ZMRP = 400.0000 IN. ZT
SCALE = .0200

PARAMETRIC DATA

IB-ELV = 10.000 OB-ELV = 2.000
BDFLAP = .000 SPDBRK = .000
RUDDER = .000 SILTS = 1.000
MACH = 1.100 RN/L = 3.500

RUN NO. 1499/ 0 RN/L = 3.50 GRADIENT INTERVAL = -5.00/ 5.00

ALPHAT	BETAT	CNFTS	CATS	CAFTS	CLMFTS	CYFTS	CYNTS	CYNFTS	CBLFTS	ALFATU	BETATU
-8.380	-5.886	-.43950	.33900	.14420	.05170	.11710	-.02020	-.01780	-.02640	-8.20740	-5.99630
-8.380	-3.784	-.42890	.34390	.14830	.04620	.07220	-.01100	-.00960	-.01790	-8.23230	-3.92550
-8.354	.172	-.39600	.34770	.15060	.02660	-.00200	-.00130	-.00140	.00150	-8.28950	-.02220
-8.151	4.437	-.39420	.34590	.14760	.03370	-.07860	.00980	.00830	.01960	-8.19310	4.23670
-8.161	6.248	-.40220	.34370	.14790	.03730	-.11310	.01440	.01200	.02590	-8.23590	6.05760
	GRADIENT	.00417	.00023	-.00009	-.00148	-.01834	.00253	.00218	.00456	.00500	.99299

RUN NO. 1500/ 0 RN/L = 3.50 GRADIENT INTERVAL = -5.00/ 5.00

ALPHAT	BETAT	CNFTS	CATS	CAFTS	CLMFTS	CYFTS	CYNTS	CYNFTS	CBLFTS	ALFATU	BETATU
-6.256	-5.948	-.35830	.34070	.15180	.04900	.11390	-.01790	-.01540	-.02290	-6.06910	-6.03130
-6.247	-4.045	-.34520	.34130	.15230	.04370	.07500	-.01240	-.01100	-.01570	-6.07790	-4.16080
-6.383	.099	-.31540	.34320	.15160	.02610	-.00220	-.00200	-.00200	.00110	-6.31630	-.09380
-6.117	4.246	-.31100	.34330	.15340	.03420	-.07300	.00830	.00690	.01600	-6.18040	4.05140
-6.074	6.210	-.32040	.34110	.15130	.03790	-.11060	.01520	.01290	.02230	-6.17460	6.03170
	GRADIENT	.00412	.00024	.00013	-.00115	-.01785	.00250	.00216	.00382	-.01236	.99050

IA156A, AEDC PWT 16T-470, O T S W/SILTS (R8NSE7) (10 MAY 80)

REFERENCE DATA

SREF = 2690.0000 SQ.FT. XMRP = 976.0000 IN. XT
LREF = 1290.3000 INCHES YMRP = .0000 IN. YT
BREF = 1290.3000 INCHES ZMRP = 400.0000 IN. ZT
SCALE = .0200

PARAMETRIC DATA

IB-ELV = 10.000 OB-ELV = 2.000
BDFLAP = .000 SPDBRK = .000
RUDDER = .000 SILTS = 1.000
MACH = 1.100 RN/L = 3.500

RUN NO. 1501/ 0 RN/L = 3.51 GRADIENT INTERVAL = -5.00/ 5.00

ALPHAT	BETAT	CNFTS	CATS	CAFTS	CLMFTS	CYFTS	CYNTS	CYNFTS	CBLFTS	ALFATU	BETATU
-4.051	-6.114	-.29230	.33830	.15580	.05710	.11620	-.01800	-.01590	-.01980	-3.85030	-6.15310
-4.321	-3.947	-.28420	.33730	.15560	.04880	.07240	-.01300	-.01170	-.01350	-4.13450	-4.03110
-4.252	.379	-.23810	.33660	.15500	.02970	-.00920	-.00030	-.00040	.00190	-4.19680	.18210
-3.734	4.268	-.23300	.33990	.15870	.04270	-.07350	.00870	.00740	.01280	-3.84070	4.09430
-3.850	6.126	-.24760	.34020	.15630	.04720	-.11000	.01490	.01290	.01780	-3.98320	5.97170
	GRADIENT	.00631	.00031	.00037	-.00081	-.01778	.00265	.00233	.00321	.03482	.98870

RUN NO. 1502/ 0 RN/L = 3.49 GRADIENT INTERVAL = -5.00/ 5.00

ALPHAT	BETAT	CNFTS	CATS	CAFTS	CLMFTS	CYFTS	CYNTS	CYNFTS	CBLFTS	ALFATU	BETATU
-.266	-6.960	-.20500	.33620	.15900	.07900	.14680	-.02930	-.02730	-.01470	-.07170	-6.89690
-.257	-4.787	-.18660	.33290	.15950	.07150	.10060	-.02350	-.02180	-.01000	-.06260	-4.72400
-.330	-.406	-.14090	.33430	.16010	.04340	.01160	-.00680	-.00670	-.00130	-.13580	-.34230
-.241	3.708	-.14680	.33570	.15780	.05530	-.07470	.01720	.01560	.00670	-.04630	3.77130
-.224	5.893	-.15260	.33530	.15970	.05900	-.11990	.02670	.02460	.01040	-.02930	5.95630
	GRADIENT	.00475	.00033	-.00020	-.00196	-.02063	.00478	.00439	.00197	.00172	.99999

RUN NO. 1503/ 0 RN/L = 3.50 GRADIENT INTERVAL = -5.00/ 5.00

ALPHAT	BETAT	CNFTS	CATS	CAFTS	CLMFTS	CYFTS	CYNTS	CYNFTS	CBLFTS	ALFATU	BETATU
4.456	-5.829	-.06590	.32370	.15500	.07640	.14340	-.04060	-.03930	-.00460	4.32910	-5.98940
4.294	-3.699	-.05580	.32620	.15670	.06990	.09470	-.03030	-.02970	-.00370	4.20160	-3.88180
4.061	.138	-.03000	.32690	.15670	.05130	.00100	-.00410	-.00410	-.00060	4.12100	-.05750
4.146	4.066	-.04070	.32810	.15580	.06300	-.08990	.02280	.02180	.00240	4.32770	3.97130
4.111	6.125	-.04640	.32810	.15940	.06720	-.13760	.03380	.03240	.00350	4.30770	6.07060
	GRADIENT	.00193	.00024	-.00012	-.00087	-.02377	.00684	.00663	.00079	.01638	1.01140

IA156A, AEDC PWT 16T-470, 0 T S W/SILTS (R8NSE8) (10 MAY 80)

REFERENCE DATA

SREF = 2690.0000 SQ.FT. XMRP = 976.0000 IN. XT
LREF = 1290.3000 INCHES YMRP = .0000 IN. YT
BREF = 1290.3000 INCHES ZMRP = 400.0000 IN. ZT
SCALE = .0200

PARAMETRIC DATA

IB-ELV = 10.000 OB-ELV = 2.000
BDFLAP = .000 SPDBRK = .000
RUDDER = .000 SILTS = 1.000
MACH = 1.150 RN/L = 3.500

RUN NO. 1504/ 0 RN/L = 3.50 GRADIENT INTERVAL = -5.00/ 5.00

ALPHAT	BETAT	CNFTS	CATS	CAFTS	CLMFTS	CYFTS	CYNTS	CYNFTS	CBLFTS	ALFATU	BETATU
-8.384	-5.902	-.44370	.33790	.15520	.05320	.11340	-.01420	-.01200	-.02690	-8.20870	-6.01300
-8.370	-3.767	-.43900	.34110	.15580	.05120	.07380	-.01080	-.00930	-.01860	-8.22060	-3.90930
-8.354	.166	-.41030	.34550	.16010	.03340	.00190	-.00270	-.00270	.00080	-8.28820	-.02980
-8.199	4.231	-.41180	.34330	.15870	.04080	-.07080	.00650	.00520	.01930	-8.23620	4.02730
-8.155	6.273	-.41650	.34010	.15640	.04230	-.11000	.01160	.00960	.02680	-8.22950	6.08060
	GRADIENT	.00338	.00027	.00036	-.00128	-.01808	.00216	.00181	.00474	-.00187	.99240

RUN NO. 1505/ 0 RN/L = 3.51 GRADIENT INTERVAL = -5.00/ 5.00

ALPHAT	BETAT	CNFTS	CATS	CAFTS	CLMFTS	CYFTS	CYNTS	CYNFTS	CBLFTS	ALFATU	BETATU
-6.238	-5.965	-.36050	.33900	.16190	.05310	.11580	-.01690	-.01450	-.02360	-6.04840	-6.04740
-6.191	-4.032	-.35230	.33950	.16230	.04960	.07680	-.01260	-.01120	-.01650	-6.01890	-4.14710
-6.331	.105	-.32360	.33980	.16030	.03340	.00040	-.00310	-.00310	.00090	-6.26130	-.08990
-6.136	4.275	-.32720	.34060	.16450	.04110	-.07200	.00570	.00440	.01660	-6.19900	4.07840
-6.053	6.229	-.33070	.33790	.16120	.04320	-.10950	.01180	.00960	.02290	-6.15340	6.04830
	GRADIENT	.00302	.00013	.00027	-.00102	-.01791	.00220	.00188	.00398	-.02163	.99017

RUN NO. 1506/ 0 RN/L = 3.50 GRADIENT INTERVAL = -5.00/ 5.00

ALPHAT	BETAT	CNFTS	CATS	CAFTS	CLMFTS	CYFTS	CYNTS	CYNFTS	CBLFTS	ALFATU	BETATU
-4.014	-6.078	-.29610	.33770	.16450	.06250	.11900	-.01890	-.01680	-.02010	-3.81090	-6.11690
-4.301	-3.947	-.28950	.33610	.16510	.05440	.07530	-.01440	-.01310	-.01390	-4.11140	-4.03090
-4.234	.373	-.24990	.33670	.16450	.03840	-.00360	-.00300	-.00310	.00150	-4.17660	.17450
-3.726	4.295	-.24530	.33900	.16630	.05000	-.07270	.00780	.00640	.01310	-3.83370	4.11800
-3.831	6.134	-.25610	.33840	.16580	.05290	-.10690	.01280	.01080	.01790	-3.96490	5.97700
	GRADIENT	.00543	.00035	.00014	-.00059	-.01796	.00269	.00237	.00327	.03287	.98842

RUN NO. 1507/ 0 RN/L = 3.51 GRADIENT INTERVAL = -5.00/ 5.00

ALPHAT	BETAT	CNFTS	CATS	CAFTS	CLMFTS	CYFTS	CYNTS	CYNFTS	CBLFTS	ALFATU	BETATU
-.230	-6.957	-.20270	.33510	.16740	.08140	.15050	-.03210	-.03000	-.01450	-.03350	-6.89110
-.226	-4.791	-.18680	.33280	.16830	.07450	.10110	-.02400	-.02240	-.01000	-.02990	-4.72590
-.294	-.412	-.14270	.33660	.16980	.04660	.01180	-.00710	-.00720	-.00130	-.09820	-.34620
-.209	3.701	-.14800	.33880	.17100	.05780	-.07400	.01670	.01510	.00670	-.01290	3.76620
-.193	5.916	-.15200	.33660	.17080	.06160	-.12040	.02530	.02330	.01040	.00270	5.98110
	GRADIENT	.00463	.00071	.00032	-.00201	-.02062	.00478	.00441	.00197	.00181	1.00001

IA156A, AEDC PWT 16T-470, O T S W/SILTS (R8NSE8) (10 MAY 80)

REFERENCE DATA

SREF =	2690.0000 SQ.FT.	XMRP =	976.0000 IN. XT		
LREF =	1290.3000 INCHES	YMRP =	.0000 IN. YT		
BREF =	1290.3000 INCHES	ZMRP =	400.0000 IN. ZT		
SCALE =	.0200				

PARAMETRIC DATA

IB-ELV =	10.000	OB-ELV =	2.000
BDFLAP =	.000	SPDBRK =	.000
RUDDER =	.000	SILTS =	1.000
MACH =	1.150	RN/L =	3.500

RUN NO. 1508/ 0 RN/L = 3.50 GRADIENT INTERVAL = -5.00/ 5.00

ALPHAT	BETAT	CNFTS	CATS	CAFTS	CLMFTS	CYFTS	CYNTS	CYNFTS	CBLFTS	ALFATU	BETATU
4.494	-5.800	-.07320	.32740	.16800	.08420	.14650	-.04220	-.04090	-.00500	4.36820	-5.96400
4.380	-3.709	-.06370	.33100	.17010	.08000	.09880	-.03400	-.03330	-.00400	4.28840	-3.89320
4.073	.142	-.04110	.32910	.16500	.06140	.00920	-.00920	-.00920	-.00090	4.13560	-.05580
4.173	4.069	-.04110	.33150	.16830	.06630	-.08600	.02120	.02030	.00220	4.35760	3.97590
4.126	6.140	-.04700	.33140	.16920	.06930	-.13430	.03190	.03060	.00340	4.32550	6.08680
	GRADIENT	.00290	.00007	-.00023	-.00175	-.02376	.00710	.00689	.00080	.00906	1.01184

IA156A, AEDC PWT 16T-470, O T S W/SILTS (R8NSE9) (10 MAY 80)

REFERENCE DATA

SREF =	2690.0000 SQ.FT.	XMRP =	976.0000 IN. XT		
LREF =	1290.3000 INCHES	YMRP =	.0000 IN. YT		
BREF =	1290.3000 INCHES	ZMRP =	400.0000 IN. ZT		
SCALE =	.0200				

PARAMETRIC DATA

IB-ELV =	10.000	OB-ELV =	2.000
BDFLAP =	.000	SPDBRK =	.000
RUDDER =	.000	SILTS =	1.000
MACH =	1.150	RN/L =	3.500

RUN NO. 1509/ 0 RN/L = 3.51 GRADIENT INTERVAL = -5.00/ 5.00

ALPHAT	BETAT	CNFTS	CATS	CAFTS	CLMFTS	CYFTS	CYNTS	CYNFTS	CBLFTS	ALFATU	BETATU
-.233	-6.909	-.20270	.33640	.16950	.08100	.14660	-.03140	-.02930	-.01440	-.03710	-6.84350
-.226	-4.726	-.18460	.33230	.16880	.07350	.09880	-.02380	-.02220	-.00970	-.02940	-4.65990
-.289	-.464	-.14210	.33600	.16960	.04700	.01290	-.00730	-.00730	-.00150	-.09280	-.39800
-.209	3.772	-.14410	.33590	.16590	.05650	-.07430	.01680	.01520	.00660	-.01320	3.83760
-.190	5.930	-.15110	.33730	.17090	.06110	-.12030	.02530	.02330	.01040	.00590	5.99580
	GRADIENT	.00477	.00042	-.00034	-.00200	-.02037	.00478	.00440	.00192	.00189	1.00000

IA156A, AEDC PWT 16T-470, 0 T S (R8NL01) (10 MAY 80)

REFERENCE DATA

SREF = 2690.0000 SQ.FT. XMRP = 976.0000 IN. XT
LREF = 1290.3000 INCHES YMRP = .0000 IN. YT
BREF = 1290.3000 INCHES ZMRP = 400.0000 IN. ZT
SCALE = .0200

PARAMETRIC DATA

IB-ELV = 10.000 OB-ELV = 5.000
BDFLAP = .000 SPDBRK = .000
RUDDER = .000 SILTS = .000
MACH = .600 RN/L = 3.500

RUN NO. 801/ 0 RN/L = 3.51 GRADIENT INTERVAL = -5.00/ 5.00

ALPHAL	BETAL	CNFLS	CAFLS	CLMFLS	CYFLS	CYNFLS	CBLLS	CABLS	CYNBLS	CP5	CP6
-.225	-6.492	-.04610	.01610	.02670	.05000	-.04680	-.00910	.03580	-.00690	-.43110	-.38370
-.218	-.205	-.01780	.01400	.00770	.03660	-.03820	-.00350	.03100	-.00600	-.37710	-.32910
-.225	6.025	.00610	.01450	-.00990	.02160	-.02970	.00110	.02560	-.00500	-.32220	-.26190
	GRADIENT	.00000	.00000	.00000	.00000	.00000	.00000	.00000	.00000	.00000	.00000

IA156A, AEDC PWT 16T-470, 0 T S (R8NL02) (10 MAY 80)

REFERENCE DATA

SREF = 2690.0000 SQ.FT. XMRP = 976.0000 IN. XT
LREF = 1290.3000 INCHES YMRP = .0000 IN. YT
BREF = 1290.3000 INCHES ZMRP = 400.0000 IN. ZT
SCALE = .0200

PARAMETRIC DATA

IB-ELV = 10.000 OB-ELV = 5.000
BDFLAP = .000 SPDBRK = .000
RUDDER = .000 SILTS = .000
MACH = .700 RN/L = 3.500

RUN NO. 803/ 0 RN/L = 3.50 GRADIENT INTERVAL = -5.00/ 5.00

ALPHAL	BETAL	CNFLS	CAFLS	CLMFLS	CYFLS	CYNFLS	CBLLS	CABLS	CYNBLS	CP5	CP6
-.199	-6.648	-.04780	.01740	.02770	.04930	-.04690	-.00940	.03620	-.00700	-.43000	-.39380
-.215	-.287	-.02050	.01620	.00990	.03470	-.03710	-.00410	.03030	-.00590	-.36790	-.32180
-.244	5.990	.00660	.01520	-.01070	.02120	-.02980	.00120	.02580	-.00500	-.32070	-.26680
	GRADIENT	.00000	.00000	.00000	.00000	.00000	.00000	.00000	.00000	.00000	.00000

IA156A, AEDC PWT 16T-470, 0 T S (R8NL03) (10 MAY 80)

REFERENCE DATA

SREF =	2690.0000 SQ.FT.	XMRP =	976.0000 IN. XT		
LREF =	1290.3000 INCHES	YMRP =	.0000 IN. YT		
BREF =	1290.3000 INCHES	ZMRP =	400.0000 IN. ZT		
SCALE =	.0200				

PARAMETRIC DATA

IB-ELV =	10.000	OB-ELV =	5.000
BDFLAP =	.000	SPDBRK =	.000
RUDDER =	.000	SILTS =	.000
MACH =	.800	RN/L =	3.500

RUN NO. 804/ 0 RN/L = 3.50 GRADIENT INTERVAL = -5.00/ 5.00

ALPHAL	BETAL	CNFLS	CAFLS	CLMFLS	CYFLS	CYNFLS	CBLLS	CABLS	CYNBLS	CP5	CP6
-.204	-6.715	-.04930	.01990	.02830	.04800	-.04660	-.00970	.03600	-.00700	-.43010	-.39010
-.249	-.339	-.02180	.01850	.00990	.03130	-.03540	-.00430	.03040	-.00590	-.36840	-.32360
-.271	5.997	.00820	.01780	-.01280	.01990	-.02960	.00150	.02500	-.00480	-.31210	-.25720
	GRADIENT	.00000	.00000	.00000	.00000	.00000	.00000	.00000	.00000	.00000	.00000

IA156A, AEDC PWT 16T-470, 0 T S (R8NL04) (10 MAY 80)

REFERENCE DATA

SREF =	2690.0000 SQ.FT.	XMRP =	976.0000 IN. XT		
LREF =	1290.3000 INCHES	YMRP =	.0000 IN. YT		
BREF =	1290.3000 INCHES	ZMRP =	400.0000 IN. ZT		
SCALE =	.0200				

PARAMETRIC DATA

IB-ELV =	10.000	OB-ELV =	5.000
BDFLAP =	.000	SPDBRK =	.000
RUDDER =	.000	SILTS =	.000
MACH =	.850	RN/L =	3.500

RUN NO. 805/ 0 RN/L = 3.50 GRADIENT INTERVAL = -5.00/ 5.00

ALPHAL	BETAL	CNFLS	CAFLS	CLMFLS	CYFLS	CYNFLS	CBLLS	CABLS	CYNBLS	CP5	CP6
-.217	-6.618	-.04990	.02150	.02840	.04970	-.04770	-.00980	.03660	-.00710	-.43520	-.39740
-.276	-.351	-.02090	.01960	.00880	.03060	-.03540	-.00420	.03120	-.00610	-.37480	-.33590
-.301	5.878	.00870	.01910	-.01400	.02120	-.03100	.00160	.02580	-.00500	-.31630	-.27080
	GRADIENT	.00000	.00000	.00000	.00000	.00000	.00000	.00000	.00000	.00000	.00000

IA156A, AEDC PWT 16T-470, 0 T S (R8NL05) (10 MAY 80)

REFERENCE DATA

SREF = 2690.0000 SQ.FT. XMRP = 976.0000 IN. XT
LREF = 1290.3000 INCHES YMRP = .0000 IN. YT
BREF = 1290.3000 INCHES ZMRP = 400.0000 IN. ZT
SCALE = .0200

PARAMETRIC DATA

IB-ELV = 10.000 OB-ELV = 5.000
BDFLAP = .000 SPDBRK = .000
RUDDER = .000 SILTS = .000
MACH = .900 RN/L = 3.500

RUN NO. 806/ 0 RN/L = 3.50 GRADIENT INTERVAL = -5.00/ 5.00

ALPHAL	BETAL	CNFLS	CAFLS	CLMFLS	CYFLS	CYNFLS	CBLLS	CABLS	CYNBLS	CP5	CP6
-.236	-6.619	-.04780	.02350	.02730	.04810	-.04790	-.00940	.03710	-.00720	-.44250	-.40190
-.313	-.340	-.02040	.02180	.00810	.02980	-.03520	-.00410	.03210	-.00620	-.38370	-.34760
-.336	5.919	.01020	.02070	-.01570	.02000	-.03190	.00190	.02700	-.00520	-.32780	-.28740
	GRADIENT	.00000	.00000	.00000	.00000	.00000	.00000	.00000	.00000	.00000	.00000

IA156A, AEDC PWT 16T-470, 0 T S (R8NL06) (10 MAY 80)

REFERENCE DATA

SREF = 2690.0000 SQ.FT. XMRP = 976.0000 IN. XT
LREF = 1290.3000 INCHES YMRP = .0000 IN. YT
BREF = 1290.3000 INCHES ZMRP = 400.0000 IN. ZT
SCALE = .0200

PARAMETRIC DATA

IB-ELV = 10.000 OB-ELV = 5.000
BDFLAP = .000 SPDBRK = .000
RUDDER = .000 SILTS = .000
MACH = .920 RN/L = 3.500

RUN NO. 807/ 0 RN/L = 3.50 GRADIENT INTERVAL = -5.00/ 5.00

ALPHAL	BETAL	CNFLS	CAFLS	CLMFLS	CYFLS	CYNFLS	CBLLS	CABLS	CYNBLS	CP5	CP6
-.246	-6.619	-.04820	.02440	.02750	.04880	-.04870	-.00960	.03810	-.00740	-.45320	-.41460
-.305	-.359	-.02090	.02290	.00920	.03060	-.03760	-.00420	.03330	-.00650	-.39480	-.36250
-.328	5.913	.00930	.02150	-.01430	.02000	-.03320	.00170	.02760	-.00540	-.33620	-.29190
	GRADIENT	.00000	.00000	.00000	.00000	.00000	.00000	.00000	.00000	.00000	.00000

IA156A, AEDC PWT 16T-470, O T S (R8NL07) (10 MAY 80)

REFERENCE DATA

SREF = 2690.0000 SQ.FT. XMRP = 976.0000 IN. XT
LREF = 1290.3000 INCHES YMRP = .0000 IN. YT
BREF = 1290.3000 INCHES ZMRP = 400.0000 IN. ZT
SCALE = .0200

PARAMETRIC DATA

IB-ELV = 10.000 OB-ELV = 5.000
BDFLAP = .000 SPDBRK = .000
RUDDER = .000 SILTS = .000
MACH = .940 RN/L = 3.500

RUN NO. 808/ 0 RN/L = 3.50 GRADIENT INTERVAL = -5.00/ 5.00

ALPHAL	BETAL	CNFLS	CAFLS	CLMFLS	CYFLS	CYNFLS	CBLLS	CABLS	CYNBLS	CP5	CP6
-.240	-6.596	-.04900	.02580	.02830	.05100	-.05070	-.00970	.03980	-.00770	-.47360	-.43220
-.276	-.380	-.02140	.02430	.01110	.03330	-.04010	-.00430	.03530	-.00680	-.41880	-.38400
-.317	6.024	.00800	.02220	-.01210	.01970	-.03420	.00140	.02820	-.00550	-.34330	-.29860
	GRADIENT	.00000	.00000	.00000	.00000	.00000	.00000	.00000	.00000	.00000	.00000

IA156A, AEDC PWT 16T-470, O T S (R8NL08) (10 MAY 80)

REFERENCE DATA

SREF = 2690.0000 SQ.FT. XMRP = 976.0000 IN. XT
LREF = 1290.3000 INCHES YMRP = .0000 IN. YT
BREF = 1290.3000 INCHES ZMRP = 400.0000 IN. ZT
SCALE = .0200

PARAMETRIC DATA

IB-ELV = 10.000 OB-ELV = 5.000
BDFLAP = .000 SPDBRK = .000
RUDDER = .000 SILTS = .000
MACH = .950 RN/L = 3.500

RUN NO. 816/ 0 RN/L = 3.50 GRADIENT INTERVAL = -5.00/ 5.00

BETAL	ALPHAL	CNFLS	CAFLS	CLMFLS	CYFLS	CYNFLS	CBLFLS	CABLS	CYNBLS	CP5	CP6
.717	-6.139	-.04070	.02010	.00810	-.01250	-.01320	-.00790	.03650	-.00710	-.43340	-.39860
.376	-1.018	-.01820	.02460	.00720	.03400	-.04030	-.00350	.03260	-.00630	-.38590	-.35700
.313	.126	-.01440	.02280	.00700	.03520	-.04150	-.00270	.03380	-.00660	-.40320	-.36660
-.031	6.101	.01220	.02250	.00220	.02020	-.03370	.00250	.03590	-.00700	-.43310	-.38550
	GRADIENT	.00332	-.00157	-.00017	.00105	-.00105	.00070	.00105	-.00026	-.01512	-.00839

IA156A, AEDC PWT 16T-470, 0 T S (R8NL09) (10 MAY 80)

REFERENCE DATA

SREF = 2690.0000 SQ.FT. XMRP = 976.0000 IN. XT
LREF = 1290.3000 INCHES YMRP = .0000 IN. YT
BREF = 1290.3000 INCHES ZMRP = 400.0000 IN. ZT
SCALE = .0200

PARAMETRIC DATA

IB-ELV = 10.000 OB-ELV = 5.000
BDFLAP = .000 SPDBRK = .000
RUDDER = .000 SILTS = .000
MACH = .950 RN/L = 3.500

RUN NO. 820/ 0 RN/L = 3.50 GRADIENT INTERVAL = -5.00/ 5.00

ALPHAL	BETAL	CNFLS	CAFLS	CLMFLS	CYFLS	CYNFLS	CBLLS	CABLS	CYNBLS	CP5	CP6
-.349	-6.738	-.05530	.02510	.03110	.04940	-.04920	-.01080	.04160	-.00810	-.49400	-.45250
-.312	.012	-.01870	.02360	.00930	.03570	-.04170	-.00360	.03460	-.00670	-.41240	-.37660
-.221	6.063	.00590	.02250	-.00910	.02060	-.03430	.00120	.02810	-.00550	-.34260	-.29860
	GRADIENT	.00000	.00000	.00000	.00000	.00000	.00000	.00000	.00000	.00000	.00000

IA156A, AEDC PWT 16T-470, 0 T S (R8NL10) (10 MAY 80)

REFERENCE DATA

SREF = 2690.0000 SQ.FT. XMRP = 976.0000 IN. XT
LREF = 1290.3000 INCHES YMRP = .0000 IN. YT
BREF = 1290.3000 INCHES ZMRP = 400.0000 IN. ZT
SCALE = .0200

PARAMETRIC DATA

IB-ELV = 10.000 OB-ELV = 5.000
BDFLAP = .000 SPDBRK = .000
RUDDER = .000 SILTS = .000
MACH = .960 RN/L = 3.500

RUN NO. 818/ 0 RN/L = 3.50 GRADIENT INTERVAL = -5.00/ 5.00

ALPHAL	BETAL	CNFLS	CAFLS	CLMFLS	CYFLS	CYNFLS	CBLLS	CABLS	CYNBLS	CP5	CP6
-.351	-6.724	-.05620	.02590	.03170	.05070	-.05040	-.01090	.04280	-.00830	-.50870	-.46560
-.319	-.333	-.02170	.02540	.01180	.03820	-.04290	-.00420	.03740	-.00730	-.44530	-.40690
-.233	6.057	.00490	.02280	-.00790	.02240	-.03530	.00100	.02910	-.00560	-.35500	-.30790
	GRADIENT	.00000	.00000	.00000	.00000	.00000	.00000	.00000	.00000	.00000	.00000

IA156A, AEDC PWT 16T-470, O T S (R8NL11) (10 MAY 80)

REFERENCE DATA

SREF = 2690.0000 SQ.FT. XMRP = 976.0000 IN. XT
LREF = 1290.3000 INCHES YMRP = .0000 IN. YT
BREF = 1290.3000 INCHES ZMRP = 400.0000 IN. ZT
SCALE = .0200

PARAMETRIC DATA

IB-ELV = 10.000 OB-ELV = 5.000
BDFLAP = .000 SPDBRK = .000
RUDDER = .000 SILTS = .000
MACH = .970 RN/L = 3.500

RUN NO. 821/ 0 RN/L = 3.50 GRADIENT INTERVAL = -5.00/ 5.00

ALPHAL	BETAL	CNFLS	CAFLS	CLMFLS	CYFLS	CYNFLS	CBLLS	CABLS	CYNBLS	CP5	CP6
-.376	-6.550	-.05580	.02720	.03130	.05140	-.05150	-.01080	.04430	-.00860	-.52630	-.48280
-.347	-.120	-.01940	.02680	.00990	.03960	-.04450	-.00370	.03790	-.00740	-.44970	-.41310
-.237	6.178	.00580	.02250	-.00860	.02300	-.03590	.00120	.02970	-.00580	-.36260	-.31460
	GRADIENT	.00000	.00000	.00000	.00000	.00000	.00000	.00000	.00000	.00000	.00000

IA156A, AEDC PWT 16T-470, O T S (R8NL12) (10 MAY 80)

REFERENCE DATA

SREF = 2690.0000 SQ.FT. XMRP = 976.0000 IN. XT
LREF = 1290.3000 INCHES YMRP = .0000 IN. YT
BREF = 1290.3000 INCHES ZMRP = 400.0000 IN. ZT
SCALE = .0200

PARAMETRIC DATA

IB-ELV = 10.000 OB-ELV = 5.000
BDFLAP = .000 SPDBRK = .000
RUDDER = .000 SILTS = .000
MACH = .980 RN/L = 3.500

RUN NO. 822/ 0 RN/L = 3.51 GRADIENT INTERVAL = -5.00/ 5.00

ALPHAL	BETAL	CNFLS	CAFLS	CLMFLS	CYFLS	CYNFLS	CBLLS	CABLS	CYNBLS	CP5	CP6
-.076	-6.000	-.04890	.02740	.02810	.05260	-.05260	-.00950	.04590	-.00890	-.54360	-.50220
-.362	.223	-.01660	.02720	.00700	.04150	-.04660	-.00320	.03890	-.00760	-.46010	-.42580
.100	6.162	.00740	.02440	-.00960	.02520	-.03810	.00150	.03210	-.00620	-.38890	-.34310
	GRADIENT	.00000	.00000	.00000	.00000	.00000	.00000	.00000	.00000	.00000	.00000

IA156A, AEDC PWT 16T-470, O T S (R8NL13) (10 MAY 80)

REFERENCE DATA

SREF = 2690.0000 SQ.FT. XMRP = 976.0000 IN. XT
LREF = 1290.3000 INCHES YMRP = .0000 IN. YT
BREF = 1290.3000 INCHES ZMRP = 400.0000 IN. ZT
SCALE = .0200

PARAMETRIC DATA

IB-ELV = 10.000 OB-ELV = 5.000
BDFLAP = .000 SPDBRK = .000
RUDDER = .000 SILTS = .000
MACH = .990 RN/L = 3.500

RUN NO. 823/ 0 RN/L = 3.50 GRADIENT INTERVAL = -5.00/ 5.00

ALPHAL	BETAL	CNFLS	CAFLS	CLMFLS	CYFLS	CYNFLS	CBLLS	CABLS	CYNBLS	CP5	CP6
.014	-6.011	-.04910	.02900	.02850	.05400	-.05390	-.00950	.04640	-.00900	-.55450	-.50200
-.326	.322	-.01430	.02610	.00500	.04190	-.04700	-.00270	.03870	-.00750	-.46010	-.42030
.043	5.906	.00660	.02520	-.00910	.02590	-.03840	.00130	.03290	-.00640	-.39890	-.35130
	GRADIENT	.00000	.00000	.00000	.00000	.00000	.00000	.00000	.00000	.00000	.00000

IA156A, AEDC PWT 16T-470, O T S (R8NL14) (10 MAY 80)

REFERENCE DATA

SREF = 2690.0000 SQ.FT. XMRP = 976.0000 IN. XT
LREF = 1290.3000 INCHES YMRP = .0000 IN. YT
BREF = 1290.3000 INCHES ZMRP = 400.0000 IN. ZT
SCALE = .0200

PARAMETRIC DATA

IB-ELV = 10.000 OB-ELV = 5.000
BDFLAP = .000 SPDBRK = .000
RUDDER = .000 SILTS = .000
MACH = 1.010 RN/L = 3.500

RUN NO. 824/ 0 RN/L = 3.51 GRADIENT INTERVAL = -5.00/ 5.00

ALPHAL	BETAL	CNFLS	CAFLS	CLMFLS	CYFLS	CYNFLS	CBLLS	CABLS	CYNBLS	CP5	CP6
.161	-5.947	-.04940	.03080	.03030	.05600	-.05560	-.00960	.04840	-.00940	-.57870	-.52420
-.205	.504	-.01430	.02470	.00550	.04280	-.04760	-.00270	.04340	-.00840	-.51570	-.47180
.005	6.256	.00760	.02620	-.00990	.02640	-.03940	.00150	.03580	-.00700	-.43400	-.38240
	GRADIENT	.00000	.00000	.00000	.00000	.00000	.00000	.00000	.00000	.00000	.00000

IA156A, AEDC PWT 16T-470, 0 T S (R8NL15) (10 MAY 80)

REFERENCE DATA

SREF = 2690.0000 SQ.FT. XMRP = 976.0000 IN. XT
LREF = 1290.3000 INCHES YMRP = .0000 IN. YT
BREF = 1290.3000 INCHES ZMRP = 400.0000 IN. ZT
SCALE = .0200

PARAMETRIC DATA

IB-ELV = 10.000 OB-ELV = 5.000
BDFLAP = .000 SPDBRK = .000
RUDDER = .000 SILTS = .000
MACH = 1.020 RN/L = 3.500

RUN NO. 825/ 0 RN/L = 3.51 GRADIENT INTERVAL = -5.00/ 5.00

ALPHAL	BETAL	CNFLS	CAFLS	CLMFLS	CYFLS	CYNFLS	CBLLS	CABLS	CYNBLS	CP5	CP6
.103	-6.010	-.05080	.03150	.03130	.05680	-.05660	-.00990	.04980	-.00970	-.59260	-.54030
-.317	.348	-.01600	.02750	.00660	.04520	-.05030	-.00310	.04480	-.00870	-.53420	-.48500
.071	6.303	.00810	.02680	-.01030	.02710	-.04020	.00160	.03780	-.00730	-.45540	-.40630
	GRADIENT	.00000	.00000	.00000	.00000	.00000	.00000	.00000	.00000	.00000	.00000

IA156A, AEDC PWT 16T-470, 0 T S (R8NL16) (10 MAY 80)

REFERENCE DATA

SREF = 2690.0000 SQ.FT. XMRP = 976.0000 IN. XT
LREF = 1290.3000 INCHES YMRP = .0000 IN. YT
BREF = 1290.3000 INCHES ZMRP = 400.0000 IN. ZT
SCALE = .0200

PARAMETRIC DATA

IB-ELV = 10.000 OB-ELV = 5.000
BDFLAP = .000 SPDBRK = .000
RUDDER = .000 SILTS = .000
MACH = 1.030 RN/L = 3.500

RUN NO. 826/ 0 RN/L = 3.51 GRADIENT INTERVAL = -5.00/ 5.00

ALPHAL	BETAL	CNFLS	CAFLS	CLMFLS	CYFLS	CYNFLS	CBLLS	CABLS	CYNBLS	CP5	CP6
.126	-6.301	-.05300	.03200	.03310	.05830	-.05760	-.01030	.05100	-.00990	-.60560	-.55520
-.277	.392	-.01650	.02860	.00720	.04570	-.0508(	-.00320	.04520	-.00880	-.54020	-.49000
.034	6.504	.00850	.02680	-.01060	.02690	-.04030	.00170	.03950	-.00770	-.47470	-.42460
	GRADIENT	.00000	.00000	.00000	.00000	.00000	.00000	.00000	.00000	.00000	.00000

IA156A, AEDC PWT 16T-470, 0 T S (R8NL17) (10 MAY 80)

REFERENCE DATA

SREF = 2690.0000 SQ.FT. XMRP = 976.0000 IN. XT
LREF = 1290.3000 INCHES YMRP = .0000 IN. YT
BREF = 1290.3000 INCHES ZMRP = 400.0000 IN. ZT
SCALE = .0200

PARAMETRIC DATA

IB-ELV = 10.000 OB-ELV = 5.000
BDFLAP = .000 SPDBRK = .000
RUDDER = .000 SILTS = .000
MACH = 1.040 RN/L = 3.500

RUN NO. 827/ 0 RN/L = 3.51 GRADIENT INTERVAL = -5.00/ 5.00

ALPHAL	BETAL	CNFLS	CAFLS	CLMFLS	CYFLS	CYNFLS	CBLLS	CABLS	CYNBLS	CP5	CP6
-.092	-6.184	-.05620	.03240	.03450	.05840	-.05840	-.01090	.05240	-.01020	-.62300	-.57070
-.306	.382	-.01670	.02850	.00740	.04690	-.05200	-.00320	.04770	-.00930	-.56970	-.51550
.101	6.380	.00800	.02790	-.01020	.02800	-.04120	.00160	.04140	-.00800	-.49790	-.44540
	GRADIENT	.00000	.00000	.00000	.00000	.00000	.00000	.00000	.00000	.00000	.00000

IA156A, AEDC PWT 16T-470, 0 T S (R8NL18) (10 MAY 80)

REFERENCE DATA

SREF = 2690.0000 SQ.FT. XMRP = 976.0000 IN. XT
LREF = 1290.3000 INCHES YMRP = .0000 IN. YT
BREF = 1290.3000 INCHES ZMRP = 400.0000 IN. ZT
SCALE = .0200

PARAMETRIC DATA

IB-ELV = 10.000 OB-ELV = 5.000
BDFLAP = .000 SPDBRK = .000
RUDDER = .000 SILTS = .000
MACH = 1.050 RN/L = 3.500

RUN NO. 828/ 0 RN/L = 3.51 GRADIENT INTERVAL = -5.00/ 5.00

ALPHAL	BETAL	CNFLS	CAFLS	CLMFLS	CYFLS	CYNFLS	CBLLS	CABLS	CYNBLS	CP5	CP6
.012	-6.160	-.05360	.03170	.03380	.05960	-.05920	-.01040	.05290	-.01030	-.62890	-.57660
-.247	.492	-.01570	.02970	.00700	.04780	-.05340	-.00300	.04720	-.00920	-.56460	-.51100
-.011	6.449	.00850	.02820	-.01070	.02870	-.04190	.00170	.04160	-.00810	-.49880	-.44830
	GRADIENT	.00000	.00000	.00000	.00000	.00000	.00000	.00000	.00000	.00000	.00000

IA156A, AEDC PWT 16T-470, O T S (R8NL19) (10 MAY 80)

REFERENCE DATA

SREF = 2690.0000 SQ.FT. XMRP = 976.0000 IN. XT
LREF = 1290.3000 INCHES YMRP = .0000 IN. YT
BREF = 1290.3000 INCHES ZMRP = 400.0000 IN. ZT
SCALE = .0200

PARAMETRIC DATA

IB-ELV = 10.000 OB-ELV = 5.000
BDFLAP = .000 SPDBRK = .000
RUDDER = .000 SILTS = .000
MACH = 1.060 RN/L = 3.500

RUN NO. 829/ 0 RN/L = 3.50 GRADIENT INTERVAL = -5.00/ 5.00

ALPHAL	BETAL	CNFLS	CAFLS	CLMFLS	CYFLS	CYNFLS	CBLLS	CABLS	CYNBLS	CP5	CP6
.111	-6.127	-.05200	.03400	.03280	.06050	-.06050	-.01010	.05110	-.00990	-.60740	-.55660
-.246	.513	-.01390	.03050	.00540	.04760	-.05340	-.00260	.04600	-.00890	-.55020	-.49720
-.046	6.439	.00930	.02890	-.01140	.02910	-.04230	.00190	.04060	-.00790	-.48600	-.43800
	GRADIENT	.00000	.00000	.00000	.00000	.00000	.00000	.00000	.00000	.00000	.00000

IA156A, AEDC PWT 16T-470, O T S (R8NL20) (10 MAY 80)

REFERENCE DATA

SREF = 2690.0000 SQ.FT. XMRP = 976.0000 IN. XT
LREF = 1290.3000 INCHES YMRP = .0000 IN. YT
BREF = 1290.3000 INCHES ZMRP = 400.0000 IN. ZT
SCALE = .0200

PARAMETRIC DATA

IB-ELV = 10.000 OB-ELV = 5.000
BDFLAP = .000 SPDBRK = .000
RUDDER = .000 SILTS = .000
MACH = 1.080 RN/L = 3.500

RUN NO. 830/ 0 RN/L = 3.48 GRADIENT INTERVAL = -5.00/ 5.00

ALPHAL	BETAL	CNFLS	CAFLS	CLMFLS	CYFLS	CYNFLS	CBLLS	CABLS	CYNBLS	CP5	CP6
-.040	-6.258	-.05400	.03610	.03330	.05870	-.05950	-.01050	.04730	-.00920	-.56410	-.51370
-.283	.407	-.01480	.03000	.00580	.04610	-.05180	-.00280	.04320	-.00840	-.51960	-.46340
-.089	6.433	.00890	.02950	-.01110	.02750	-.04090	.00180	.03550	-.00690	-.42760	-.38030
	GRADIENT	.00000	.00000	.00000	.00000	.00000	.00000	.00000	.00000	.00000	.00000

IA156A, AEDC PWT 16T-470, O T S (R8NL21) (10 MAY 80)

REFERENCE DATA

SREF = 2690.0000 SQ.FT. XMRP = 976.0000 IN. XT
LREF = 1290.3000 INCHES YMRP = .0000 IN. YT
BREF = 1290.3000 INCHES ZMRP = 400.0000 IN. ZT
SCALE = .0200

PARAMETRIC DATA

IB-ELV = 10.000 OB-ELV = 5.000
BDFLAP = .000 SPDBRK = .000
RUDDER = .000 SILTS = .000
MACH = 1.100 RN/L = 3.500

RUN NO. 831/ 0 RN/L = 3.50 GRADIENT INTERVAL = -5.00/ 5.00

ALPHAL	BETAL	CNFLS	CAFLS	CLMFLS	CYFLS	CYNFLS	CBLLS	CABLS	CYNBLS	CP5	CP6
-.092	-6.020	-.05500	.03530	.03390	.05580	-.05680	-.01070	.04690	-.00910	-.56000	-.50800
-.303	.355	-.01690	.03100	.00720	.04530	-.05100	-.00320	.04120	-.00800	-.49630	-.44130
.134	6.324	.00730	.02920	-.00980	.02720	-.04020	.00150	.03520	-.00680	-.42440	-.37640
	GRADIENT	.00000	.00000	.00000	.00000	.00000	.00000	.00000	.00000	.00000	.00000

IA156A, AEDC PWT 16T-470, O T S (R8NL22) (10 MAY 80)

REFERENCE DATA

SREF = 2690.0000 SQ.FT. XMRP = 976.0000 IN. XT
LREF = 1290.3000 INCHES YMRP = .0000 IN. YT
BREF = 1290.3000 INCHES ZMRP = 400.0000 IN. ZT
SCALE = .0200

PARAMETRIC DATA

IB-ELV = 10.000 OB-ELV = 5.000
BDFLAP = .000 SPDBRK = .000
RUDDER = .000 SILTS = .000
MACH = 1.150 RN/L = 3.500

RUN NO. 836/ 0 RN/L = 3.50 GRADIENT INTERVAL = -5.00/ 5.00

ALPHAL	BETAL	CNFLS	CAFLS	CLMFLS	CYFLS	CYNFLS	CBLLS	CABLS	CYNBLS	CP5	CP6
.380	-5.917	-.05100	.03740	.03430	.05660	-.05700	-.00990	.04380	-.00850	-.52320	-.47330
-.277	.324	-.01770	.03210	.00850	.04330	-.04970	-.00340	.03970	-.00770	-.47770	-.42560
-.029	6.211	.00620	.03010	-.00860	.02660	-.04030	.00120	.03400	-.00660	-.41340	-.36070
	GRADIENT	.00000	.00000	.00000	.00000	.00000	.00000	.00000	.00000	.00000	.00000

IA156A, AEDC PWT 16T-470, O T S (R8NL23) (10 MAY 80)

REFERENCE DATA

SREF = 2690.0000 SQ.FT. XMRP = 976.0000 IN. XT
LREF = 1290.3000 INCHES YMRP = .0000 IN. YT
BREF = 1290.3000 INCHES ZMRP = 400.0000 IN. ZT
SCALE = .0200

PARAMETRIC DATA

IB-ELV = 10.000 OB-ELV = 5.000
BDFLAP = .000 SPDBRK = .000
RUDDER = .000 SILTS = .000
MACH = 1.200 RN/L = 3.500

RUN NO. 837/ 0 RN/L = 3.51 GRADIENT INTERVAL = -5.00/ 5.00

ALPHAL	BETAL	CNFLS	CAFLS	CLMFLS	CYFLS	CYNFLS	CBLLS	CABLS	CYNBLS	CP5	CP6
.312	-5.903	-.05060	.03900	.03430	.05380	-.05430	-.00980	.04090	-.00790	-.49140	-.43990
-.091	.468	-.01800	.03320	.00920	.04170	-.04810	-.00350	.03750	-.00730	-.45510	-.39880
-.043	6.281	.00460	.02970	-.00750	.02540	-.03900	.00090	.03180	-.00620	-.38820	-.33580
	GRADIENT	.00000	.00000	.00000	.00000	.00000	.00000	.00000	.00000	.00000	.00000

IA156A, AEDC PWT 16T-470, O T S (R8NL24) (10 MAY 80)

REFERENCE DATA

SREF = 2690.0000 SQ.FT. XMRP = 976.0000 IN. XT
LREF = 1290.3000 INCHES YMRP = .0000 IN. YT
BREF = 1290.3000 INCHES ZMRP = 400.0000 IN. ZT
SCALE = .0200

PARAMETRIC DATA

IB-ELV = 10.000 OB-ELV = 5.000
BDFLAP = .000 SPDBRK = .000
RUDDER = .000 SILTS = .000
MACH = 1.250 RN/L = 3.500

RUN NO. 838/ 0 RN/L = 3.50 GRADIENT INTERVAL = -5.00/ 5.00

ALPHAL	BETAL	CNFLS	CAFLS	CLMFLS	CYFLS	CYNFLS	CBLLS	CABLS	CYNBLS	CP5	CP6
.077	-6.248	-.05580	.03780	.03720	.05260	-.05270	-.01090	.04080	-.00790	-.49320	-.43660
-.095	.480	-.02110	.03390	.01250	.04070	-.04650	-.00410	.03620	-.00700	-.43410	-.38950
.005	6.221	.00220	.02960	-.00540	.02540	-.03920	.00040	.03110	-.00600	-.38030	-.32860
	GRADIENT	.00000	.00000	.00000	.00000	.00000	.00000	.00000	.00000	.00000	.00000

IA156A, AEDC PWT 16T-470, O T S (R8NL25) (10 MAY 80)

REFERENCE DATA

SREF = 2690.0000 SQ.FT. XMRP = 976.0000 IN. XT
LREF = 1290.3000 INCHES YMRP = .0000 IN. YT
BREF = 1290.3000 INCHES ZMRP = 400.0000 IN. ZT
SCALE = .0200

PARAMETRIC DATA

IB-ELV = 10.000 OB-ELV = 5.000
BDFLAP = .000 SPDBRK = .000
RUDDER = .000 SILTS = .000
MACH = 1.300 RN/L = 3.500

RUN NO. 839/ 0 RN/L = 3.50 GRADIENT INTERVAL = -5.00/ 5.00

ALPHAL	BETAL	CNFLS	CAFLS	CLMFLS	CYFLS	CYNFLS	CBLLS	CABLS	CYNBLS	CP5	CP6
.066	-6.254	-.05410	.03820	.03640	.05080	-.05110	-.01060	.03860	-.00750	-.46840	-.41140
-.130	.377	-.02210	.03370	.01430	.03940	-.04530	-.00430	.03510	-.00680	-.42220	-.37710
.034	6.444	.00220	.02920	-.00450	.02410	-.03950	.00050	.02980	-.00580	-.36580	-.31390
	GRADIENT	.00000	.00000	.00000	.00000	.00000	.00000	.00000	.00000	.00000	.00000

IA156A, AEDC PWT 16T-470, O T S (R8NL26) (10 MAY 80)

REFERENCE DATA

SREF = 2690.0000 SQ.FT. XMRP = 976.0000 IN. XT
LREF = 1290.3000 INCHES YMRP = .0000 IN. YT
BREF = 1290.3000 INCHES ZMRP = 400.0000 IN. ZT
SCALE = .0200

PARAMETRIC DATA

IB-ELV = 10.000 OB-ELV = 5.000
BDFLAP = .000 SPDBRK = .000
RUDDER = .000 SILTS = .000
MACH = 1.400 RN/L = 3.500

RUN NO. 840/ 0 RN/L = 3.50 GRADIENT INTERVAL = -5.00/ 5.00

ALPHAL	BETAL	CNFLS	CAFLS	CLMFLS	CYFLS	CYNFLS	CBLLS	CABLS	CYNBLS	CP5	CP6
.078	-6.316	-.05240	.03860	.03510	.04850	-.04940	-.01020	.03570	-.00690	-.43800	-.37650
-.129	.455	-.02230	.03410	.01410	.03510	-.04180	-.00440	.03280	-.00640	-.39720	-.34920
.045	6.456	.00050	.02980	-.00310	.02260	-.03750	.00010	.02840	-.00550	-.34690	-.29900
	GRADIENT	.00000	.00000	.00000	.00000	.00000	.00000	.00000	.00000	.00000	.00000

IA156A, AEDC PWT 16T-470, 0 T S (R8NL27) (10 MAY 80)

REFERENCE DATA

SREF = 2690.0000 SQ.FT. XMRP = 976.0000 IN. XT
LREF = 1290.3000 INCHES YMRP = .0000 IN. YT
BREF = 1290.3000 INCHES ZMRP = 400.0000 IN. ZT
SCALE = .0200

PARAMETRIC DATA

IB-ELV = 10.000 OB-ELV = 5.000
BDFLAP = .000 SPDBRK = .000
RUDDER = .000 SILTS = .000
MACH = 1.550 RN/L = 3.200

RUN NO. 841/ 0 RN/L = 3.19 GRADIENT INTERVAL = -5.00/ 5.00

ALPHAL	BETAL	CNFLS	CAFLS	CLMFLS	CYFLS	CYNFLS	CBLLS	CABLS	CYNBLS	CP5	CP6
.084	-6.325	-.04680	.03750	.03150	.04740	-.04920	-.00920	.03320	-.00650	-.41710	-.34050
-.228	.444	-.02080	.03380	.01310	.03300	-.04040	-.00410	.02920	-.00570	-.35550	-.30900
-.108	6.364	.00070	.02950	-.00380	.01880	-.03400	.00020	.02500	-.00480	-.30460	-.26420
	GRADIENT	.00000	.00000	.00000	.00000	.00000	.00000	.00000	.00000	.00000	.00000

IA156A, AEDC PWT 16T-470, 0 T S (R8NL28) (10 MAY 80)

REFERENCE DATA

SREF = 2690.0000 SQ.FT. XMRP = 976.0000 IN. XT
LREF = 1290.3000 INCHES YMRP = .0000 IN. YT
BREF = 1290.3000 INCHES ZMRP = 400.0000 IN. ZT
SCALE = .0200

PARAMETRIC DATA

IB-ELV = 10.000 OB-ELV = 5.000
BDFLAP = .000 SPDBRK = .000
RUDDER = .000 SILTS = .000
MACH = .600 RN/L = 3.500

RUN NO. 846/ 0 RN/L = 3.50 GRADIENT INTERVAL = -5.00/ 5.00

ALPHAL	BETAL	CNFLS	CAFLS	CLMFLS	CYFLS	CYNFLS	CBLLS	CABLS	CYNBLS	CP5	CP6
-.272	-6.458	-.04790	.01290	.02640	.04610	-.04330	-.00940	.03740	-.00730	-.44790	-.40370
.216	-5.909	-.03760	.01500	.02190	.04690	-.04490	-.00730	.03580	-.00690	-.42870	-.38590
.200	.083	-.01120	.01340	.00520	.03650	-.03880	-.00210	.03020	-.00590	-.37010	-.31820
-.167	6.053	.00630	.01310	-.00860	.02240	-.03030	.00130	.02650	-.00520	-.33460	-.27030
.230	6.571	.00850	.01390	-.00920	.02080	-.03000	.00180	.02550	-.00490	-.32020	-.26020
	GRADIENT	.00000	.00000	.00000	.00000	.00000	.00000	.00000	.00000	.00000	.00000

IA156A, AEDC PWT 16T-470, 0 T S (R8NL29) (10 MAY 80)

REFERENCE DATA

SREF = 2690.0000 SQ.FT. XMRP = 976.0000 IN. XT
LREF = 1290.3000 INCHES YMRP = .0000 IN. YT
BREF = 1290.3000 INCHES ZMRP = 400.0000 IN. ZT
SCALE = .0200

PARAMETRIC DATA

IB-ELV = 10.000 OB-ELV = 5.000
BDFLAP = .000 SPDBRK = .000
RUDDER = .000 SILTS = .000
MACH = .900 RN/L = 3.500

RUN NO. 845/ 0 RN/L = 3.51 GRADIENT INTERVAL = -5.00/ 5.00

ALPHAL	BETAL	CNFLS	CAFLS	CLMFLS	CYFLS	CYNFLS	CBLLS	CABLS	CYNBLS	CP5	CP6
-.322	-6.682	-.05060	.02230	.02780	.04410	-.04500	-.00990	.03770	-.00730	-.44940	-.40900
.164	-5.822	-.04230	.02120	.02380	.04370	-.04460	-.00820	.03870	-.00750	-.46150	-.41870
-.357	-.065	-.01550	.02030	.00400	.02950	-.03710	-.00300	.03160	-.00610	-.37470	-.34590
.081	.304	-.01230	.02080	.00250	.02980	-.03730	-.00240	.03090	-.00600	-.36690	-.33780
-.223	6.024	.01030	.01960	-.01470	.02090	-.03250	.00200	.02810	-.00550	-.34190	-.29790
.147	6.865	.01330	.01990	-.01590	.02100	-.03300	.00260	.02790	-.00540	-.33980	-.29680
	GRADIENT	.00867	.00136	-.00407	.00081	-.00054	.00163	-.00190	.00027	.02114	.02195

IA156A, AEDC PWT 16T-470, 0 T S (R8NL30) (10 MAY 80)

REFERENCE DATA

SREF = 2690.0000 SQ.FT. XMRP = 976.0000 IN. XT
LREF = 1290.3000 INCHES YMRP = .0000 IN. YT
BREF = 1290.3000 INCHES ZMRP = 400.0000 IN. ZT
SCALE = .0200

PARAMETRIC DATA

IB-ELV = 10.000 OB-ELV = 5.000
BDFLAP = .000 SPDBRK = .000
RUDDER = .000 SILTS = .000
MACH = 1.100 RN/L = 3.500

RUN NO. 844/ 0 RN/L = 3.50 GRADIENT INTERVAL = -5.00/ 5.00

ALPHAL	BETAL	CNFLS	CAFLS	CLMFLS	CYFLS	CYNFLS	CBLLS	CABLS	CYNBLS	CP5	CP6
-.411	-6.659	-.06190	.03550	.03710	.05500	-.05640	-.01200	.04710	-.00910	-.56180	-.51010
.199	-5.811	-.04860	.03560	.03160	.05610	-.05750	- 00940	.04650	-.00900	-.55390	-.50430
-.371	.039	-.01950	.03150	.00940	.04540	-.05140	-.00380	.04210	-.00820	-.50670	-.45280
.098	.262	-.01520	.03170	.00810	.04460	-.05160	-.00290	.04110	-.00800	-.49260	-.44350
-.199	6.090	.00640	.02900	-.00930	.02730	-.04040	.00130	.03560	-.00690	-.42980	-.38080
.151	6.913	.01110	.02940	-.01230	.02510	-.04050	.00220	.03740	-.00730	-.45110	-.40180
	GRADIENT	.01925	.00090	-.00582	-.00358	-.00090	.00403	-.00448	.00090	.06312	.04163

IA156A, AEDC PWT 16T-470, 0 T S (R8NL31) (10 MAY 80)

REFERENCE DATA

SREF = 2690.0000 SQ.FT. XMRP = 976.0000 IN. XT
LREF = 1290.3000 INCHES YMRP = .0000 IN. YT
BREF = 1290.3000 INCHES ZMRP = 400.0000 IN. ZT
SCALE = .0200

PARAMETRIC DATA

IB-ELV = 10.000 OB-ELV = 5.000
BDFLAP = .000 SPDBRK = .000
RUDDER = .000 SILTS = .000
MACH = 1.550 RN/L = 3.200

RUN NO. 842/ 0 RN/L = 3.20 GRADIENT INTERVAL = -5.00/ 5.00

ALPHAL	BETAL	CNFLS	CAFLS	CLMFLS	CYFLS	CYNFLS	CBLLS	CABLS	CYNBLS	CP5	CP6
-.406	-6.672	-.05360	.03750	.03390	.04500	-.04720	-.01050	.03330	-.00650	-.41870	-.34050
.466	-6.050	-.04190	.03690	.03000	.04760	-.04950	-.00820	.03290	-.00640	-.41310	-.33660
-.347	-.127	-.02380	.03330	.01480	.03290	-.03970	-.00470	.02950	-.00570	-.35910	-.31250
.429	.380	-.01990	.03290	.01560	.03370	-.04130	-.00380	.02990	-.00580	-.36710	-.31370
-.290	6.082	-.00060	.02950	-.00300	.01900	-.03360	-.00010	.02480	-.00480	-.30170	-.26270
-.308	6.316	.00050	.02870	-.00410	.01860	-.03360	.00010	.02570	-.00500	-.31320	-.27270
.358	6.895	.00060	.02820	-.00210	.01620	-.03300	00020	.02540	-.00490	-.31050	-.26740
	GRADIENT	.00769	-.00079	.00158	.00158	-.00316	.00178	.00079	-.00020	-.01578	-.00237

IA156A, AEDC PWT 16T-470, 0 T S (R8NL34) (10 MAY 80)

REFERENCE DATA

SREF = 2690.0000 SQ.FT. XMRP = 976.0000 IN. XT
LREF = 1290.3000 INCHES YMRP = .0000 IN. YT
BREF = 1290.3000 INCHES ZMRP = 400.0000 IN. ZT
SCALE = .0200

PARAMETRIC DATA

IB-ELV = 10.000 OB-ELV = 5.000
BDFLAP = .000 SPDBRK = .000
RUDDER = .000 SILTS = .000
MACH = 1.100 RN/L = 3.500
Z = 4.500

RUN NO. 835/ 0 RN/L = 3.51 GRADIENT INTERVAL = -5.00/ 5.00

ALPHAL	BETAL	CNFLS	CAFLS	CLMFLS	CYFLS	CYNFLS	CBLLS	CABLS	CYNBLS	CP5	CP6
.328	-5.895	-.04490	.03610	.03100	.06020	-.06000	-.00870	.04640	-.00900	-.55340	-.50420
-.284	.404	-.01770	.03150	.00820	.04660	-.05270	-.00340	.04350	-.00850	-.52260	-.46890
-.026	6.350	.00820	.02890	-.01110	.02730	-.04070	.00160	.03580	-.00690	-.43120	-.38370
	GRADIENT	.00000	.00000	.00000	.00000	.00000	.00000	.00000	.00000	.00000	.00000

IA156A, AEDC PWT 16T-470, O T S (R8NL35) (10 MAY 80)

REFERENCE DATA

SREF = 2690.0000 SQ.FT. XMRP = 976.0000 IN. XT
LREF = 1290.3000 INCHES YMRP = .0000 IN. YT
BREF = 1290.3000 INCHES ZMRP = 400.0000 IN. ZT
SCALE = .0200

PARAMETRIC DATA

IB-ELV = 10.000 OB-ELV = 5.000
BDFLAP = .000 SPDBRK = .000
RUDDER = .000 SILTS = .000
MACH = 1.100 RN/L = 3.500
Z = 5.500

RUN NO. 834/ 0 RN/L = 3.51 GRADIENT INTERVAL = -5.00/ 5.00

ALPHAL	BETAL	CNFLS	CAFLS	CLMFLS	CYFLS	CYNFLS	CBLLS	CABLS	CYNBLS	CP5	CP6
.375	-5.930	-.04680	.03550	.03130	.05870	-.05870	-.00910	.04620	-.00900	-.55170	-.50060
-.183	.531	-.01460	.03120	.00520	.04470	-.05100	-.00280	.04120	-.00800	-.49700	-.44250
-.110	6.233	.00700	.02880	-.01000	.02780	-.04060	.00140	.03520	-.00680	-.42510	-.37610
	GRADIENT	.00000	.00000	.00000	.00000	.00000	.00000	.00000	.00000	.00000	.00000

IA156A, AEDC PWT 16T-470, O T S (R8NL36) (10 MAY 80)

REFERENCE DATA

SREF = 2690.0000 SQ.FT. XMRP = 976.0000 IN. XT
LREF = 1290.3000 INCHES YMRP = .0000 IN. YT
BREF = 1290.3000 INCHES ZMRP = 400.0000 IN. ZT
SCALE = .0200

PARAMETRIC DATA

IB-ELV = 10.000 OB-ELV = 5.000
BDFLAP = .000 SPDBRK = .000
RUDDER = .000 SILTS = .000
MACH = 1.100 RN/L = 3.500
Z = 6.500

RUN NO. 832/ 0 RN/L = 3.50 GRADIENT INTERVAL = -5.00/ 5.00

ALPHAL	BETAL	CNFLS	CAFLS	CLMFLS	CYFLS	CYNFLS	CBLLS	CABLS	CYNBLS	CP5	CP6
-.017	-6.222	-.05580	.03530	.03460	.05660	-.05730	-.01090	.04700	-.00910	-.56070	-.50990
-.260	.457	-.01580	.03110	.00640	.04530	-.05100	-.00300	.04110	-.00800	-.49480	-.44040
.055	6.443	.00780	.02920	-.01020	.02700	-.04030	.00150	.03540	-.00690	-.42800	-.37810
	GRADIENT	.00000	.00000	.00000	.00000	.00000	.00000	.00000	.00000	.00000	.00000

IA156A, AEDC PWT 16T-470, O T S (R8NL37) (10 MAY 80)

REFERENCE DATA

SREF = 2690.0000 SQ.FT. XMRP = 976.0000 IN. XT
LREF = 1290.3000 INCHES YMRP = .0000 IN. YT
BREF = 1290.3000 INCHES ZMRP = 400.0000 IN. ZT
SCALE = .0200

PARAMETRIC DATA

IB-ELV = 10.000 OB-ELV = 5.000
BDFLAP = .000 SPDBRK = .000
RUDDER = .000 SILTS = .000
MACH = 1.550 RN/L = 3.200

RUN NO. 843/ 0 RN/L = 3.19 GRADIENT INTERVAL = -5.00/ 5.00

ALPHAL	BETAL	CNFLS	CAFLS	CLMFLS	CYFLS	CYNFLS	CBLLS	CABLS	CYNBLS	CP5	CP6
.435	.337	-.01980	.03300	.01570	.03430	-.04170	-.00380	.02970	-.00580	-.36360	-.31400
-.352	-.072	-.02370	.03410	.01470	.03270	-.03990	-.00460	.02940	-.00570	-.35870	-.31090
-.359	-.094	-.02450	.03390	.01500	.03330	-.04020	-.00480	.02970	-.00580	-.36190	-.31520
.463	.310	-.01950	.03370	.01550	.03510	-.04210	-.00380	.02940	-.00570	-.35990	-.30920
.416	.310	-.02000	.03340	.01520	.03420	-.04130	-.00390	.02980	-.00580	-.36700	-.31160
-.323	-.083	-.02420	.03410	.01550	.03380	-.04080	-.00470	.02980	-.00580	-.36380	-.31480
	GRADIENT	.01087	-.00169	.00100	.00309	-.00346	.00216	-.00001	.00000	-.00493	.00497

IA156A, AEDC PWT 16T-470, O T S W/SILTS (R8NL40) (10 MAY 80)

REFERENCE DATA

SREF = 2690.0000 SQ.FT. XMRP = 976.0000 IN. XT
LREF = 1290.3000 INCHES YMRP = .0000 IN. YT
BREF = 1290.3000 INCHES ZMRP = 400.0000 IN. ZT
SCALE = .0200

PARAMETRIC DATA

IB-ELV = 10.000 OB-ELV = 5.000
BDFLAP = .000 SPDBRK = .000
RUDDER = .000 SILTS = 1.000
MACH = .300 RN/L = 3.500

RUN NO. 862/ 0 RN/L = 2.70 GRADIENT INTERVAL = -5.00/ 5.00

ALPHAL	BETAL	CNFLS	CAFLS	CLMFLS	CYFLS	CYNFLS	CBLLS	CABLS	CYNBLS	CP5	CP6
-5.979	-9.880	-.12280	.01070	.05740	.03710	-.03700	-.02390	.04000	-.00780	-.47900	-.43280
-6.207	-5.836	-.09400	.01040	.04100	.01350	-.02210	-.01830	.03800	-.00740	-.45850	-.40650
-6.297	.435	-.04130	.00980	.01160	-.00320	-.01170	-.00790	.03200	-.00620	-.40520	-.32440
-5.814	6.201	-.00020	.01260	-.01320	-.00020	-.01780	.00020	.02610	-.00510	-.33710	-.25850
-5.915	10.184	.02000	.00970	-.02570	.00320	-.02410	.00410	.02570	-.00500	-.32820	-.25710
	GRADIENT	.00000	.00000	.00000	.00000	.00000	.00000	.00000	.00000	.00000	.00000

RUN NO. 863/ 0 RN/L = 2.68 GRADIENT INTERVAL = -5.00/ 5.00

ALPHAL	BETAL	CNFLS	CAFLS	CLMFLS	CYFLS	CYNFLS	CBLLS	CABLS	CYNBLS	CP5	CP6
-.303	-10.477	-.06540	.01550	.03720	.05760	-.05140	-.01260	.03800	-.00740	-.45780	-.40810
-.279	-6.399	-.04690	.01450	.02550	.04670	-.04380	-.00900	.03590	-.00700	-.43260	-.38480
-.228	-.291	-.01790	.01310	.00860	.03650	-.03720	-.00330	.03130	-.00610	-.38760	-.32500
-.176	5.794	.00310	.01520	-.00560	.02250	-.02960	.00080	.02500	-.00480	-.32190	-.24750
-.163	9.862	.01710	.01470	-.01660	.01970	-.03080	.00360	.02600	-.00500	-.33660	-.25610
	GRADIENT	.00000	.00000	.00000	.00000	.00000	.00000	.00000	.00000	.00000	.00000

IA156A, AEDC PWT 16T-470, O T S W/SILTS (R8NL40) (10 MAY 80)

REFERENCE DATA

SREF = 2690.0000 SQ.FT. XMRP = 976.0000 IN. XT
LREF = 1290.3000 INCHES YMRP = .0000 IN. YT
BREF = 1290.3000 INCHES ZMRP = 400.0000 IN. ZT
SCALE = .0200

PARAMETRIC DATA

IB-ELV = 10.000 OB-ELV = 5.000
BDFLAP = .000 SPDBRK = .000
RUDDER = .000 SILTS = 1.000
MACH = .300 RN/L = 3.500

RUN NO. 865/ 0 RN/L = 2.67 GRADIENT INTERVAL = -5.00/ 5.00

ALPHAL	BETAL	CNFLS	CAFLS	CLMFLS	CYFLS	CYNFLS	CBLLS	CABLS	CYNBLS	CP5	CP6
6.453	-10.007	.02360	.01580	-.00030	.04400	-.04600	.00500	.03540	-.00690	-.42530	-.38180
6.126	-5.675	.01920	.01420	.00040	.03490	-.03860	.00410	.03380	-.00660	-.41480	-.35630
6.266	.095	.01500	.01440	.00120	.01640	-.02680	.00320	.03010	-.00590	-.37710	-.31000
5.793	6.142	.00970	.01290	-.00090	.00110	-.01640	.00210	.02780	-.00540	-.35830	-.27630
5.886	10.238	.01490	.01530	-.00880	-.00500	-.01560	.00320	.02720	-.00530	-.35210	-.26890
	GRADIENT	.00000	.00000	.00000	.00000	.00000	.00000	.00000	.00000	.00000	.00000

IA156A, AEDC PWT 16T-470, O T S W/SILTS (R8NL41) (10 MAY 80)

REFERENCE DATA

SREF = 2690.0000 SQ.FT. XMRP = 976.0000 IN. XT
LREF = 1290.3000 INCHES YMRP = .0000 IN. YT
BREF = 1290.3000 INCHES ZMRP = 400.0000 IN. ZT
SCALE = .0200

PARAMETRIC DATA

IB-ELV = 10.000 OB-ELV = 5.000
BDFLAP = .000 SPDBRK = .000
RUDDER = .000 SILTS = 1.000
MACH = .300 RN/L = 3.500

RUN NO. 861/ 0 RN/L = 2.74 GRADIENT INTERVAL = -5.00/ 5.00

ALPHAL	BETAL	CNFLS	CAFLS	CLMFLS	CYFLS	CYNFLS	CBLLS	CABLS	CYNBLS	CP5	CP6
-10.203	-5.968	-.13360	.00690	.05380	-.01340	-.00970	-.02610	.03960	-.00770	-.47990	-.42200
-10.137	.405	-.07500	.00390	.02400	-.05030	.01330	-.01460	.03890	-.00750	-.49840	-.38760
-9.965	6.306	-.01350	.00240	-.01190	-.04480	.00430	-.00250	.03460	-.00670	-.44980	-.33830
	GRADIENT	.00000	.00000	.00000	.00000	.00000	.00000	.00000	.00000	.00000	.00000

RUN NO. 866/ 0 RN/L = 2.66 GRADIENT INTERVAL = -5.00/ 5.00

ALPHAL	BETAL	CNFLS	CAFLS	CLMFLS	CYFLS	CYNFLS	CBLLS	CABLS	CYNBLS	CP5	CP6
10.244	-5.835	.05410	.01620	-.01180	-.00490	-.01800	.01080	.03280	-.00640	-.40860	-.33960
10.065	.271	.03520	.01350	-.00490	-.02220	-.00620	.00710	.03150	-.00610	-.40090	-.31830
10.179	6.365	.02340	.01190	-.00490	-.04070	.00650	.00480	.02820	-.00550	-.35670	-.28490
	GRADIENT	.00000	.00000	.00000	.00000	.00000	.00000	.00000	.00000	.00000	.00000

IA156A, AEDC PWT-16T-470, O T S W/SILTS (R8NL42) (10 MAY 80)

REFERENCE DATA

SREF = 2690.0000 SQ.FT. XMRP = 976.0000 IN. XT
LREF = 1290.3000 INCHES YMRP = .0000 IN. YT
BREF = 1290.3000 INCHES ZMRP = 400.0000 IN. ZT
SCALE = .0200

PARAMETRIC DATA

IB-ELV = 10.000 OB-ELV = 5.000
BDFLAP = .000 SPDBRK = .000
RUDDER = .000 SILTS = 1.000
MACH = .600 RN/L = 3.500

RUN NO. 867/ 0 RN/L = 3.50 GRADIENT INTERVAL = -5.00/ 5.00

ALPHAL	BETAL	CNFLS	CAFLS	CLMFLS	CYFLS	CYNFLS	CBLLS	CABLS	CYNBLS	CP5	CP6
-8.311	-7.631	-.13560	.00600	.05670	-.00200	-.01590	-.02660	.04430	-.00860	-.52560	-.48430
-8.456	-5.724	-.11750	.00920	.04760	-.01460	-.00890	-.02310	.03790	-.00740	-.45170	-.41130
-8.292	-3.671	-.09510	.00860	.03660	-.02090	-.00400	-.01870	.03720	-.00720	-.44640	-.40180
-8.371	.431	-.05810	.00830	.01600	-.03440	.00370	-.01150	.03430	-.00670	-.42670	-.35560
-8.000	4.270	-.01980	.01070	-.00700	-.03130	-.00100	-.00400	.03020	-.00590	-.38790	-.30070
-7.930	6.174	-.00340	.00940	-.01660	-.02590	-.00650	-.00080	.02710	-.00530	-.34230	-.27630
-8.153	8.410	.00970	.00770	-.02400	-.02300	-.01100	.00170	.02550	-.00500	-.32160	-.26030
	GRADIENT	.00918	.00026	-.00548	-.00133	.00039	.00185	-.00088	.00016	.00734	.01271

RUN NO. 868/ 0 RN/L = 3.50 GRADIENT INTERVAL = -5.00/ 5.00

ALPHAL	BETAL	CNFLS	CAFLS	CLMFLS	CYFLS	CYNFLS	CBLLS	CABLS	CYNBLS	CP5	CP6
-6.358	-7.860	-.11380	.01130	.04990	.01470	-.02500	-.02240	.03910	-.00760	-.46160	-.42770
-6.275	-5.696	-.09420	.01050	.04010	.00570	-.01670	-.01860	.03760	-.00730	-.44690	-.40950
-6.107	-3.749	-.07610	.01040	.03080	.00000	-.01450	-.01500	.03580	-.00690	-.42860	-.38660
-6.206	.149	-.04310	.01030	.01180	-.00770	-.01060	-.00860	.03210	-.00620	-.39930	-.33130
-6.150	4.354	-.01150	.01170	-.00790	-.00950	-.01210	-.00240	.02870	-.00560	-.36780	-.28720
-5.914	6.207	.00090	.01110	-.01540	-.00560	-.01630	.00000	.02630	-.00510	-.32830	-.27020
-5.883	8.420	.01190	.01010	-.02190	-.00300	-.02010	.00220	.02490	-.00480	-.31140	-.25550
	GRADIENT	.00797	.00016	-.00477	-.00116	.00029	.00155	-.00088	.00016	.00750	.01224

RUN NO. 869/ 0 RN/L = 3.50 GRADIENT INTERVAL = -5.00/ 5.00

ALPHAL	BETAL	CNFLS	CAFLS	CLMFLS	CYFLS	CYNFLS	CBLLS	CABLS	CYNBLS	CP5	CP6
-4.270	-8.058	-.09420	.01270	.04400	.03070	-.03350	-.01850	.03810	-.00740	-.45430	-.41300
-4.342	-6.040	-.08030	.01240	.03650	.02230	-.02780	-.01580	.03650	-.00710	-.43710	-.39510
-4.287	-3.817	-.06250	.01190	.02690	.01690	-.02400	-.01240	.03500	-.00680	-.42200	-.37580
-4.002	.286	-.02940	.01150	.00800	.01520	-.02400	-.00590	.03080	-.00600	-.38060	-.32220
-3.784	4.174	-.00620	.01280	-.00630	.01210	-.02370	-.00140	.02800	-.00540	-.35320	-.28600
-3.901	6.157	.00390	.01260	-.01330	.01080	-.02480	.00060	.02580	-.00500	-.32110	-.26700
-3.775	8.095	.01300	.01250	-.01960	.01100	-.02650	.00240	.02440	-.00470	-.30600	-.25030
	GRADIENT	.00706	.00011	-.00416	-.00060	.00004	.00138	-.00088	.00018	.00862	.01126

IA156A, AEDC PWT 16T-470, 0 T S W/SILTS (R8NL42) (10 MAY 80)

REFERENCE DATA

SREF = 2690.0000 SQ.FT. XMRP = 976.0000 IN. XT
LREF = 1290.3000 INCHES YMRP = .0000 IN. YT
BREF = 1290.3000 INCHES ZMRP = 400.0000 IN. ZT
SCALE = .0200

PARAMETRIC DATA

IB-ELV = 10.000 OB-ELV = 5.000
BDFLAP = .000 SPDBRK = .000
RUDDER = .000 SILTS = 1.000
MACH = .600 RN/L = 3.500

RUN NO. 870/ 0 RN/L = 3.50 GRADIENT INTERVAL = -5.00/ 5.00

ALPHAL	BETAL	CNFLS	CAFLS	CLMFLS	CYFLS	CYNFLS	CBLLS	CABLS	CYNBLS	CP5	CP6
-.310	-8.667	-.05960	.01520	.03350	.05320	-.04860	-.01180	.03720	-.00720	-.44410	-.40400
-.286	-6.538	-.04980	.01460	.02790	.04660	-.04390	-.00990	.03660	-.00710	-.44140	-.39320
-.266	-4.473	-.03980	.01460	.02190	.04140	-.04030	-.00790	.03500	-.00680	-.42190	-.37480
-.237	-.236	-.01750	.01320	.00750	.03630	-.03810	-.00360	.03090	-.00600	-.37650	-.32670
-.169	3.888	-.00280	.01360	-.00210	.02690	-.03250	-.00070	.02720	-.00530	-.34030	-.27950
-.160	5.969	.00420	.01360	-.00760	.02230	-.03020	.00070	.02580	-.00500	-.32500	-.26370
-.165	8.076	.01200	.01400	-.01400	.02050	-.03080	.00220	.02510	-.00490	-.31720	-.25560
	GRADIENT	.00443	-.00012	-.00287	-.00173	.00093	.00086	-.00093	.00018	.00976	.01140

RUN NO. 871/ 0 RN/L = 3.50 GRADIENT INTERVAL = -5.00/ 5.00

ALPHAL	BETAL	CNFLS	CAFLS	CLMFLS	CYFLS	CYNFLS	CBLLS	CABLS	CYNBLS	CP5	CP6
4.391	-7.776	-.00460	.01560	.01060	.05050	-.04910	-.00100	.03530	-.00690	-.42320	-.38100
4.497	-5.960	.00020	.01540	.00770	.04500	-.04490	.00000	.03400	-.00660	-.40850	-.36550
4.212	-3.808	-.00030	.01430	.00700	.04120	-.04170	-.00020	.03370	-.00650	-.40760	-.35910
4.349	.079	.00480	.01370	.00300	.03050	-.03540	.00090	.02980	-.00580	-.36410	-.31530
4.180	4.261	.00620	.01360	-.00030	.01780	-.02740	.00110	.02760	-.00540	-.34790	-.28200
4.036	6.316	.00730	.01340	-.00230	.01210	-.02410	.00130	.02650	-.00510	-.33720	-.26590
3.886	8.082	.00980	.01420	-.00600	.00980	-.02370	.00180	.02550	-.00490	-.32520	-.25600
	GRADIENT	.00080	-.00009	-.00090	-.00290	.00177	.00016	-.00075	.00014	.00735	.00953

RUN NO. 872/ 0 RN/L = 3.50 GRADIENT INTERVAL = -5.00/ 5.00

ALPHAL	BETAL	CNFLS	CAFLS	CLMFLS	CYFLS	CYNFLS	CBLLS	CABLS	CYNBLS	CP5	CP6
6.618	-7.962	.02000	.01540	.00110	.03980	-.04410	.00380	.03470	-.00670	-.41770	-.37350
6.497	-5.921	.01810	.01480	.00130	.03510	-.04000	.00350	.03410	-.00660	-.41260	-.36440
6.616	-3.817	.01880	.01410	.00080	.02630	-.03390	.00360	.03350	-.00650	-.41070	-.35210
6.147	.296	.01380	.01300	.00120	.01750	-.02860	.00260	.03060	-.00590	-.37490	-.32250
6.140	4.248	.01060	.01260	.00030	.00440	-.02000	.00200	.02820	-.00550	-.35620	-.28700
6.209	6.414	.01130	.01320	-.00250	-.00330	-.01550	.00210	.02680	-.00520	-.34030	-.26970
5.866	8.140	.01300	.01370	-.00620	-.00380	-.01570	.00240	.02650	-.00510	-.33790	-.26570
	GRADIENT	-.00102	-.00019	-.00006	-.00271	.00172	-.00020	-.00066	.00012	.00677	.00807

IA156A, AEDC PWT 16T-470, 0 T S W/SILTS (R8NL42) (10 MAY 80)

REFERENCE DATA

SREF = 2690.0000 SQ.FT. XMRP = 976.0000 IN. XT
LREF = 1290.3000 INCHES YMRP = .0000 IN. YT
BREF = 1290.3000 INCHES ZMRP = 400.0000 IN. ZT
SCALE = .0200

PARAMETRIC DATA

IB-ELV = 10.000 OB-ELV = 5.000
BDFLAP = .000 SPDBRK = .000
RUDDER = .000 SILTS = 1.000
MACH = .600 RN/L = 3.500

RUN NO. 873/ 0 RN/L = 3.50 GRADIENT INTERVAL = -5.00/ 5.00

ALPHAL	BETAL	CNFLS	CAFLS	CLMFLS	CYFLS	CYNFLS	CBLLS	CABLS	CYNBLS	CP5	CP6
8.535	-7.904	.04080	.01410	-.00700	.02360	-.03540	.00790	.03510	-.00680	-.42150	-.37770
8.412	-5.622	.03660	.01420	-.00570	.01440	-.02860	.00710	.03380	-.00660	-.40980	-.35940
8.397	-3.655	.03270	.01410	-.00410	.00680	-.02330	.00630	.03330	-.00650	-.41010	-.34970
8.439	.274	.02500	.01290	-.00160	-.00340	-.01760	.00480	.03160	-.00610	-.38840	-.33250
8.195	4.300	.01900	.01180	-.00240	-.01600	-.00900	.00360	.02830	-.00550	-.35730	-.28730
8.294	6.375	.01870	.01220	-.00520	-.02070	-.00560	.00350	.02730	-.00530	-.34530	-.27630
8.139	8.372	.01960	.01210	-.00910	-.02210	-.00520	.00370	.02740	-.00530	-.34100	-.28260
	GRADIENT	-.00172	-.00029	.00021	-.00287	.00180	-.00034	-.00063	.00013	.00664	.00786

IA156A, AEDC PWT 16T-470, 0 T S W/SILTS (R8NL43) (10 MAY 80)

REFERENCE DATA

SREF = 2690.0000 SQ.FT. XMRP = 976.0000 IN. XT
LREF = 1290.3000 INCHES YMRP = .0000 IN. YT
BREF = 1290.3000 INCHES ZMRP = 400.0000 IN. ZT
SCALE = .0200

PARAMETRIC DATA

IB-ELV = 10.000 OB-ELV = 5.000
BDFLAP = .000 SPDBRK = .000
RUDDER = .000 SILTS = 1.000
MACH = .800 RN/L = 3.500

RUN NO. 874/ 0 RN/L = 3.50 GRADIENT INTERVAL = -5.00/ 5.00

ALPHAL	BETAL	CNFLS	CAFLS	CLMFLS	CYFLS	CYNFLS	CBLLS	CABLS	CYNBLS	CP5	CP6
-8.660	-5.955	-.12550	.01300	.05040	-.02500	-.00790	-.02470	.03840	-.00750	-.44890	-.42550
-8.712	-3.692	-.10300	.01230	.03950	-.03830	.00050	-.02030	.03700	-.00720	-.43490	-.40830
-8.354	.425	-.05990	.01220	.01600	-.04600	.00560	-.01190	.03390	-.00660	-.41360	-.35810
-8.231	4.485	-.01870	.01240	-.00970	-.04130	.00080	-.00380	.02950	-.00570	-.36770	-.30500
-8.145	6.412	-.00380	.01110	-.01840	-.03410	-.00530	-.00090	.02550	-.00500	-.31880	-.26260
	GRADIENT	.01031	.00001	-.00602	-.00037	.00004	.00202	-.00092	.00018	.00821	.01263

RUN NO. 875/ 0 RN/L = 3.50 GRADIENT INTERVAL = -5.00/ 5.00

ALPHAL	BETAL	CNFLS	CAFLS	CLMFLS	CYFLS	CYNFLS	CBLLS	CABLS	CYNBLS	CP5	CP6
-6.401	-5.744	-.10040	.01460	.04280	-.00480	-.01680	-.01980	.03770	-.00730	-.44170	-.41730
-6.269	-3.711	-.07980	.01490	.03280	-.01010	-.01250	-.01580	.03540	-.00690	-.41590	-.39060
-6.367	.273	-.04460	.01340	.01180	-.01750	-.00310	-.00890	.03260	-.00630	-.39760	-.34430
-6.011	4.255	-.01270	.01440	-.00770	-.01270	-.01220	-.00270	.02800	-.00540	-.34760	-.29010
-6.026	6.509	.00190	.01270	-.01740	-.00990	-.01620	.00020	.02490	-.00480	-.30920	-.25920
	GRADIENT	.00842	-.00006	-.00508	-.00033	.00004	.00164	-.00093	.00019	.00857	.01262

IA156A, AEDC PWT 16T-470, 0 T S W/SILTS (R8NL43) (10 MAY 80)

REFERENCE DATA

SREF = 2690.0000 SQ.FT. XMRP = 976.0000 IN. XT
LREF = 1290.3000 INCHES YMRP = .0000 IN. YT
BREF = 1290.3000 INCHES ZMRP = 400.0000 IN. ZT
SCALE = .0200

PARAMETRIC DATA

IB-ELV = 10.000 OB-ELV = 5.000
BDFLAP = .000 SPDBRK = .000
RUDDER = .000 SILTS = 1.000
MACH = .800 RN/L = 3.500

RUN NO. 876/ 0 RN/L = 3.50 GRADIENT INTERVAL = -5.00/ 5.00

ALPHAL	BETAL	CNFLS	CAFLS	CLMFLS	CYFLS	CYNFLS	CBLLS	CABLS	CYNBLS	CP5	CP6
-4.207	-5.732	-.07910	.01660	.03620	.01750	-.02720	-.01560	.03660	-.00710	-.43250	-.40050
-4.237	-3.696	-.06320	.01610	.02790	.01220	-.02350	-.01250	.03500	-.00680	-.41250	-.38390
-4.361	.486	-.03060	.01520	.00760	.00650	-.02100	-.00610	.03040	-.00590	-.36910	-.32390
-3.799	4.186	-.00650	.01580	-.00680	.00690	-.02250	-.00140	.02710	-.00530	-.33460	-.28350
-3.859	6.224	.00410	.01500	-.01410	.00630	-.02390	.00060	.02470	-.00480	-.30460	-.25750
	GRADIENT	.00721	-.00004	-.00441	-.00069	.00014	.00141	-.00100	.00019	.00989	.01277

RUN NO. 877/ 0 RN/L = 3.50 GRADIENT INTERVAL = -5.00/ 5.00

ALPHAL	BETAL	CNFLS	CAFLS	CLMFLS	CYFLS	CYNFLS	CBLLS	CABLS	CYNBLS	CP5	CP6
-.317	-6.739	-.05220	.01850	.02900	.04500	-.04430	-.01030	.03670	-.00710	-.43710	-.39900
-.293	-4.617	-.04210	.01850	.02310	.03870	-.03980	-.00840	.03440	-.00670	-.41280	-.37100
-.270	-.376	-.02130	.01710	.00990	.03230	-.03640	-.00430	.03030	-.00590	-.36630	-.32420
-.189	3.866	-.00170	.01700	-.00430	.02450	-.03200	-.00050	.02630	-.00510	-.32500	-.27330
-.166	5.969	.00650	.01720	-.01050	.02070	-.03040	.00110	.02490	-.00480	-.31070	-.25770
	GRADIENT	.00476	-.00018	-.00323	-.00167	.00092	.00093	-.00095	.00019	.01035	.01152

RUN NO. 878/ 0 RN/L = 3.50 GRADIENT INTERVAL = -5.00/ 5.00

ALPHAL	BETAL	CNFLS	CAFLS	CLMFLS	CYFLS	CYNFLS	CBLLS	CABLS	CYNBLS	CP5	CP6
4.384	-5.746	-.00440	.01850	.00910	.04260	-.04560	-.00100	.03490	-.00680	-.41300	-.38130
4.341	-3.850	-.00130	.01820	.00740	.03780	-.04150	-.00040	.03360	-.00650	-.40160	-.36360
4.047	.273	.00450	.01630	.00250	.03150	-.03680	.00070	.02940	-.00570	-.35550	-.31420
3.918	4.122	.00630	.01670	-.00040	.01920	-.02910	.00110	.02740	-.00530	-.34110	-.28340
4.104	6.139	.00860	.01680	-.00320	.01210	-.02550	.00150	.02600	-.00500	-.32690	-.26490
	GRADIENT	.00096	-.00019	-.00098	-.00232	.00155	.00019	-.00078	.00015	.00763	.01008

RUN NO. 879/ 0 RN/L = 3.50 GRADIENT INTERVAL = -5.00/ 5.00

ALPHAL	BETAL	CNFLS	CAFLS	CLMFLS	CYFLS	CYNFLS	CBLLS	CABLS	CYNBLS	CP5	CP6
6.534	-5.726	.01760	.01720	.00140	.03230	-.04080	.00330	.03530	-.00690	-.42090	-.38310
6.211	-3.583	.01500	.01700	.00220	.02610	-.03570	.00280	.03420	-.00660	-.41120	-.36700
6.060	.364	.01420	.01630	.00100	.01750	-.03040	.00260	.03030	-.00590	-.36570	-.32380
6.179	4.290	.01210	.01630	-.00040	.00340	-.02120	.00220	.02760	-.00540	-.34530	-.28470
6.040	6.130	.01280	.01660	-.00330	-.00070	-.01880	.00240	.02670	-.00520	-.33470	-.27400
	GRADIENT	-.00037	-.00009	-.00033	-.00288	.00184	-.00008	-.00084	.00015	.00837	.01045

IA156A, AEDC PWT 16T-470, 0 T S W/SILTS (R8NL44) (10 MAY 80)

REFERENCE DATA

SREF = 2690.0000 SQ.FT. XMRP = 976.0000 IN. XT
LREF = 1290.3000 INCHES YMRP = .0000 IN. YT
BREF = 1290.3000 INCHES ZMRP = 400.0000 IN. ZT
SCALE = .0200

PARAMETRIC DATA

IB-ELV = 10.000 OB-ELV = 5.000
BDFLAP = .000 SPDBRK = .000
RUDDER = .000 SILTS = 1.000
MACH = .900 RN/L = 3.500

RUN NO. 880/ 0 RN/L = 3.50 GRADIENT INTERVAL = -5.00/ 5.00

ALPHAL	BETAL	CNFLS	CAFLS	CLMFLS	CYFLS	CYNFLS	CBLLS	CABLS	CYNBLS	CP5	CP6
-8.706	-5.879	-.12680	.01680	.05010	-.03030	-.00650	-.02500	.03890	-.00760	-.44860	-.43770
-8.660	-3.594	-.10400	.01540	.03890	-.04090	.00010	-.02050	.03770	-.00730	-.43380	-.42540
-8.387	.515	-.06090	.01540	.01550	-.04840	.00380	-.01210	.03590	-.00700	-.42910	-.38890
-8.251	4.515	-.01870	.01490	-.01130	-.04640	.00080	-.00390	.03020	-.00590	-.36860	-.31970
-8.182	6.442	-.00360	.01320	-.01980	-.04070	-.00440	-.00090	.02740	-.00530	-.33960	-.28410
	GRADIENT	.01052	-.00006	-.00619	-.00068	.00009	.00205	-.00092	.00017	.00801	.01302

RUN NO. 881/ 0 RN/L = 3.50 GRADIENT INTERVAL = -5.00/ 5.00

ALPHAL	BETAL	CNFLS	CAFLS	CLMFLS	CYFLS	CYNFLS	CBLLS	CABLS	CYNBLS	CP5	CP6
-6.368	-5.631	-.10150	.01850	.04230	-.00960	-.01550	-.02000	.03850	-.00750	-.44040	-.43520
-6.518	-3.797	-.08490	.01870	.03320	-.01850	-.01003	-.01680	.03580	-.00690	-.41280	-.40180
-6.295	.212	-.04680	.01750	.01220	-.02070	-.00890	-.00930	.03460	-.00670	-.41310	-.37430
-6.192	4.499	-.00950	.01720	-.01190	-.02060	-.01150	-.00210	.02910	-.00570	-.35400	-.30980
-6.264	6.537	.00250	.01600	-.01940	-.01810	-.01550	.00030	.02620	-.00510	-.32050	-.27570
	GRADIENT	.00908	-.00018	-.00544	-.00025	-.00019	.00177	-.00081	.00015	.00716	.01114

RUN NO. 882/ 0 RN/L = 3.50 GRADIENT INTERVAL = -5.00/ 5.00

ALPHAL	BETAL	CNFLS	CAFLS	CLMFLS	CYFLS	CYNFLS	CBLLS	CABLS	CYNBLS	CP5	CP6
-4.402	-6.036	-.08600	.02000	.03860	.01290	-.02630	-.01700	.03860	-.00750	-.44340	-.43530
-4.266	-3.714	-.06540	.02000	.02800	.00720	-.02240	-.01300	.03560	-.00690	-.40930	-.40050
-4.309	.385	-.03090	.01860	.00650	.00300	-.02140	-.00620	.03170	-.00610	-.37620	-.34520
-3.958	4.418	-.00330	.01910	-.01090	.00160	-.02290	-.00090	.02840	-.00550	-.33850	-.30800
-3.823	6.235	.00580	.01840	-.01660	.00310	-.02580	.00090	.02650	-.00510	-.31900	-.28410
	GRADIENT	.00764	-.00011	-.00478	-.00069	-.00006	.00149	-.00089	.00017	.00870	.01138

RUN NO. 883/ 0 RN/L = 3.50 GRADIENT INTERVAL = -5.00/ 5.00

ALPHAL	BETAL	CNFLS	CAFLS	CLMFLS	CYFLS	CYNFLS	CBLLS	CABLS	CYNBLS	CP5	CP6
-.360	-6.775	-.05210	.02300	.02850	.04590	-.04590	-.01040	.03710	-.00720	-.44190	-.40370
-.329	-4.656	-.04160	.02280	.02270	.03910	-.04160	-.00830	.03570	-.00690	-.42150	-.39230
-.341	-.315	-.01810	.02080	.00630	.02990	-.03730	-.00370	.03160	-.00610	-.37430	-.34470
-.246	3.866	.00150	.02050	-.00840	.02340	-.03330	.00010	.02800	-.00540	-.33900	-.29910
-.227	5.980	.00970	.02000	-.01440	.02100	-.03250	.00160	.02690	-.00520	-.32730	-.28530
	GRADIENT	.00506	-.00027	-.00365	-.00184	.00097	.00099	-.00090	.00018	.00969	.01094

IA156A, AEDC PWT 16T-470, O T S W/SILTS (R8NL44) (10 MAY 80)

REFERENCE DATA

SREF = 2690.0000 SQ.FT. XMRP = 976.0000 IN. XT
LREF = 1290.3000 INCHES YMRP = .0000 IN. YT
BREF = 1290.3000 INCHES ZMRP = 400.0000 IN. ZT
SCALE = .0200

PARAMETRIC DATA

IB-ELV = 10.000 OB-ELV = 5.000
BDFLAP = .000 SPDBRK = .000
RUDDER = .000 SILTS = 1.000
MACH = .900 RN/L = 3.500

RUN NO. 884/ 0 RN/L = 3.50 GRADIENT INTERVAL = -5.00/ 5.00

ALPHAL	BETAL	CNFLS	CAFLS	CLMFLS	CYFLS	CYNFLS	CBLLS	CABLS	CYNBLS	CP5	CP6
4.321	-5.657	-.00660	.02260	.00960	.04460	-.04700	-.00150	.03610	-.00700	-.42830	-.39390
4.187	-3.806	-.00400	.02210	.00780	.03870	-.04220	-.00090	.03530	-.00680	-.42360	-.37940
4.034	.277	.00480	.02060	-.00020	.03070	-.03770	.00080	.03190	-.00620	-.38540	-.34050
3.981	4.122	.00880	.02080	-.00410	.01990	-.03080	.00150	.02930	-.00570	-.35710	-.30940
3.885	6.075	.01100	.02050	-.00680	.01560	-.02880	.00190	.02780	-.00540	-.34320	-.28980
	GRADIENT	.00162	-.00017	-.00151	-.00237	.00143	.00030	-.00076	.00014	.00840	.00884

IA156A, AEDC PWT 16T-470, O T S W/SILTS (R8NL45) (10 MAY 80)

REFERENCE DATA

SREF = 2690.0000 SQ.FT. XMRP = 976.0000 IN. XT
LREF = 1290.3000 INCHES YMRP = .0000 IN. YT
BREF = 1290.3000 INCHES ZMRP = 400.0000 IN. ZT
SCALE = .0200

PARAMETRIC DATA

IB-ELV = 10.000 OB-ELV = 5.000
BDFLAP = .000 SPDBRK = .000
RUDDER = .000 SILTS = 1.000
MACH = .950 RN/L = 3.500

RUN NO. 885/ 0 RN/L = 3.50 GRADIENT INTERVAL = -5.00/ 5.00

ALPHAL	BETAL	CNFLS	CAFLS	CLMFLS	CYFLS	CYNFLS	CBLLS	CABLS	CYNBLS	CP5	CP6
-8.876	-5.899	-.13400	.01950	.05140	-.03350	-.00660	-.02650	.04110	-.00800	-.47420	-.46240
-8.828	-3.609	-.10890	.01830	.03860	-.04440	.00100	-.02160	.04010	-.00780	-.45880	-.45430
-8.458	.421	-.06220	.01750	.01350	-.04640	.00270	-.01250	.03850	-.00750	-.45410	-.42230
-8.315	4.493	-.01840	.01670	-.01350	-.04270	-.00170	-.00390	.03330	-.00650	-.39970	-.35980
-8.259	6.406	-.00370	.01480	-.02210	-.03910	-.00610	-.00110	.02900	-.00560	-.35860	-.30240
	GRADIENT	.01117	-.00020	-.00643	.00021	-.00033	.00218	-.00084	.00016	.00731	.01167

RUN NO. 886/ 0 RN/L = 3.50 GRADIENT INTERVAL = -5.00/ 5.00

ALPHAL	BETAL	CNFLS	CAFLS	CLMFLS	CYFLS	CYNFLS	CBLLS	CABLS	CYNBLS	CP5	CP6
-6.505	-5.685	-.10470	.01920	.04240	-.01070	-.01570	-.02070	.04120	-.00800	-.47300	-.46410
-6.401	-3.666	-.08440	.02160	.03160	-.01650	-.01150	-.01680	.03860	-.00750	-.44560	-.43320
-6.519	.262	-.04670	.02000	.00950	-.02220	-.00860	-.00940	.03800	-.00740	-.44980	-.41490
-6.094	4.334	-.00890	.01970	-.01330	-.01520	-.01520	-.00200	.03290	-.00640	-.39450	-.35510
-6.142	6.560	.00400	.01760	-.02110	-.01330	-.01920	.00050	.02880	-.00560	-.35100	-.30540
	GRADIENT	.00944	-.00024	-.00561	.00017	-.00047	.00185	-.00072	.00014	.00643	.00979

IA156A, AEDC PWT 16T-470, O T S W/SILTS (R8NL45) (10 MAY 80)

REFERENCE DATA

SREF = 2690.0000 SQ.FT. XMRP = 976.0000 IN. XT
LREF = 1290.3000 INCHES YMRP = .0000 IN. YT
BREF = 1290.3000 INCHES ZMRP = 400.0000 IN. ZT
SCALE = .0200

PARAMETRIC DATA

IB-ELV = 10.000 OB-ELV = 5.000
BDFLAP = .000 SPDBRK = .000
RUDDER = .000 SILTS = 1.000
MACH = .950 RN/L = 3.500

RUN NO. 887/ 0 RN/L = 3.50 GRADIENT INTERVAL = -5.00/ 5.00

ALPHAL	BETAL	CNFLS	CAFLS	CLMFLS	CYFLS	CYNFLS	CBLLS	CABLS	CYNBLS	CP5	CP6
-4.493	-6.113	-.08930	.02350	.04030	.01990	-.03080	-.01770	.04070	-.00790	-.47030	-.45520
-4.441	-3.840	-.06890	.02340	.02970	.01410	-.02670	-.01370	.03910	-.00760	-.45270	-.43700
-4.290	.530	-.02920	.02150	.00570	.01070	-.02650	-.00590	.03530	-.00680	-.41700	-.38630
-3.954	4.395	-.00320	.02170	-.01060	.00790	-.02680	-.00090	.03170	-.00620	-.37770	-.34520
-4.117	6.398	.00650	.02040	-.01720	.00620	-.02830	.00100	.02870	-.00560	-.34670	-.30780
	GRADIENT	.00800	-.00021	-.00491	-.00075	-.00001	.00156	-.00090	.00017	.00909	.01116

RUN NO. 888/ 0 RN/L = 3.50 GRADIENT INTERVAL = -5.00/ 5.00

ALPHAL	BETAL	CNFLS	CAFLS	CLMFLS	CYFLS	CYNFLS	CBLLS	CABLS	CYNBLS	CP5	CP6
-.368	-6.807	-.05410	.02570	.03010	.05050	-.04990	-.01080	.04140	-.00800	-.49350	-.45030
-.327	-4.639	-.04180	.02530	.02360	.04370	-.04540	-.00840	.04040	-.00780	-.47790	-.44200
-.308	-.356	-.01930	.02470	.01000	.03590	-.04210	-.00400	.03590	-.00700	-.42550	-.39090
-.212	3.887	-.00080	.02250	-.00360	.02330	-.03490	-.00040	.03110	-.00600	-.37510	-.33220
-.202	6.017	.00650	.02210	-.00930	.02010	-.03470	.00100	.02840	-.00550	-.34640	-.30120
	GRADIENT	.00481	-.00033	-.00319	-.00239	.00123	.00094	-.00109	.00021	.01206	.01288

RUN NO. 889/ 0 RN/L = 3.50 GRADIENT INTERVAL = -5.00/ 5.00

ALPHAL	BETAL	CNFLS	CAFLS	CLMFLS	CYFLS	CYNFLS	CBLLS	CABLS	CYNBLS	CP5	CP6
4.381	-5.551	-.00870	.02530	.01310	.04500	-.04980	-.00190	.04030	-.00780	-.48300	-.43410
4.193	-3.709	-.00600	.02490	.01000	.03740	-.04370	-.00140	.03890	-.00760	-.46790	-.41840
3.909	.349	.00400	.02300	-.00030	.03070	-.03960	.00060	.03460	-.00670	-.41620	-.37110
4.110	4.227	.00820	.02230	-.00290	.01780	-.03110	.00140	.03190	-.00620	-.39140	-.33470
4.071	6.265	.01000	.02210	-.00480	.01280	-.02890	.00170	.02930	-.00570	-.36120	-.30640
	GRADIENT	.00179	-.00033	-.00163	-.00246	.00158	.00035	-.00088	.00018	.00966	.01056

IA156A, AEDC PWT 16T-470, 0 T S W/SILTS (R8NL46) (10 MAY 80)

REFERENCE DATA

SREF = 2690.0000 SQ.FT. XMRP = 976.0000 IN. XT
LREF = 1290.3000 INCHES YMRP = .0000 IN. YT
BREF = 1290.3000 INCHES ZMRP = 400.0000 IN. ZT
SCALE = .0200

PARAMETRIC DATA

IB-ELV = 10.000 OB-ELV = 5.000
BDFLAP = .000 SPDBRK = .000
RUDDER = .000 SILTS = 1.000
MACH = 1.050 RN/L = 3.500

RUN NO. 892/ 0 RN/L = 3.50 GRADIENT INTERVAL = -5.00/ 5.00

ALPHAL	BETAL	CNFLS	CAFLS	CLMFLS	CYFLS	CYNFLS	CBLLS	CABLS	CYNBLS	CP5	CP6
-8.957	-5.793	-.14940	.02610	.06040	-.02720	-.01320	-.02920	.05350	-.01040	-.63110	-.58760
-8.913	-3.656	-.12720	.02470	.04980	-.03420	-.00840	-.02480	.05260	-.01020	-.61630	-.58110
-8.688	.601	-.06890	.02450	.01410	-.04180	-.00330	-.01350	.05070	-.00980	-.59880	-.55570
-8.500	4.597	-.02460	.02360	-.01280	-.03580	-.00940	-.00480	.04440	-.00860	-.52820	-.48390
-8.398	6.515	-.00930	.02180	-.02130	-.03160	-.01300	-.00180	.04090	-.00790	-.49010	-.44140
	GRADIENT	.01245	-.00013	-.00759	-.00021	-.00011	.00243	-.00099	.00019	.01060	.01171

RUN NO. 893/ 0 RN/L = 3.50 GRADIENT INTERVAL = -5.00/ 5.00

ALPHAL	BETAL	CNFLS	CAFLS	CLMFLS	CYFLS	CYNFLS	CBLLS	CABLS	CYNBLS	CP5	CP6
-6.690	-5.900	-.12070	.02900	.05260	-.00070	-.02480	-.02360	.05390	-.01050	-.63530	-.59250
-6.591	-3.779	-.09750	.02810	.04010	-.00680	-.01970	-.01900	.05230	-.01020	-.61650	-.57450
-6.390	.362	-.05170	.02640	.01300	-.00760	-.02020	-.01000	.04910	-.00950	-.58300	-.53580
-6.377	4.514	-.01280	.02620	-.01240	-.00840	-.02180	-.00250	.04470	-.00870	-.52880	-.48830
-6.017	6.405	.00100	.02430	-.01970	-.00330	-.02620	.00020	.04030	-.00780	-.47690	-.44110
	GRADIENT	.01021	-.00023	-.00633	-.00019	-.00025	.00199	-.00092	.00018	.01058	.01040

RUN NO. 894/ 0 RN/L = 3.50 GRADIENT INTERVAL = -5.00/ 5.00

ALPHAL	BETAL	CNFLS	CAFLS	CLMFLS	CYFLS	CYNFLS	CBLLS	CABLS	CYNBLS	CP5	CP6
-4.381	-5.698	-.09490	.03060	.04580	.02910	-.03990	-.01850	.05260	-.01020	-.62140	-.57560
-4.625	-3.934	-.08070	.03020	.03710	.02000	-.03440	-.01570	.05140	-.01000	-.60670	-.56370
-4.537	.329	-.03910	.02740	.01090	.01450	-.03220	-.00750	.04870	-.00950	-.57740	-.53150
-4.136	4.486	-.00530	.02790	-.01080	.01630	-.03430	-.00100	.04390	-.00850	-.52110	-.47950
-3.896	6.359	.00500	.02700	-.01670	.01770	-.03670	.00100	.04060	-.00790	-.48030	-.44450
	GRADIENT	.00896	-.00027	-.00569	-.00044	.00001	.00175	-.00089	.00018	.01015	.00999

RUN NO. 895/ 0 RN/L = 3.50 GRADIENT INTERVAL = -5.00/ 5.00

ALPHAL	BETAL	CNFLS	CAFLS	CLMFLS	CYFLS	CYNFLS	CBLLS	CABLS	CYNBLS	CP5	CP6
-.390	-6.787	-.06310	.03290	.03830	.05940	-.05940	-.01230	.05230	-.01020	-.62260	-.56840
-.354	-4.640	-.04840	.03280	.02930	.05530	-.05690	-.00940	.05150	-.01000	-.61180	-.56000
-.366	-.347	-.02260	.03060	.01250	.04940	-.05430	-.00430	.04880	-.00950	-.58160	-.53080
-.250	3.877	-.00180	.02890	-.00280	.03550	-.04560	-.00030	.04360	-.00850	-.52040	-.47190
-.225	6.030	.00640	.02860	-.00940	.02910	-.04240	.00130	.04120	-.00800	-.49410	-.44470
	GRADIENT	.00547	-.00046	-.00377	-.00232	.00132	.00107	-.00093	.00018	.01072	.01033

IA156A, AEDC PWT 16T-470, 0 T S W/SILTS (R8NL46) (10 MAY 80)

REFERENCE DATA

SREF = 2690.0000 SQ.FT. XMRP = 976.0000 IN. XT
LREF = 1290.3000 INCHES YMRP = .0000 IN. YT
BREF = 1290.3000 INCHES ZMRP = 400.0000 IN. ZT
SCALE = .0200

PARAMETRIC DATA

IB-ELV = 10.000 OB-ELV = 5.000
BDFLAP = .000 SPDBRK = .000
RUDDER = .000 SILTS = 1.000
MACH = 1.050 RN/L = 3.500

RUN NO. 896/ 0 RN/L = 3.50 GRADIENT INTERVAL = -5.00/ 5.00

ALPHAL	BETAL	CNFLS	CAFLS	CLMFLS	CYFLS	CYNFLS	CBLLS	CABLS	CYNBLS	CP5	CP6
4.348	-5.747	-.01270	.03240	.01780	.06040	-.06400	-.00240	.05050	-.00980	-.59820	-.55180
4.400	-3.700	-.00750	.03160	.01330	.04930	-.05560	-.00130	.04980	-.00970	-.59020	-.54400
3.948	.318	.00090	.03090	.00400	.03920	-.04860	.00030	.04790	-.00930	-.56880	-.52190
3.920	4.134	.00810	.02990	-.00410	.02440	-.03880	.00170	.04490	-.00870	-.53310	-.48910
4.165	6.331	.01150	.02810	-.00730	.01720	-.03520	.00240	.04310	-.00840	-.51490	-.46750
	GRADIENT	.00199	-.00022	-.00222	-.00317	.00214	.00038	-.00062	.00013	.00727	.00699

IA156A, AEDC PWT 16T-470, 0 T S W/SILTS (R8NL47) (10 MAY 80)

REFERENCE DATA

SREF = 2690.0000 SQ.FT. XMRP = 976.0000 IN. XT
LREF = 1290.3000 INCHES YMRP = .0000 IN. YT
BREF = 1290.3000 INCHES ZMRP = 400.0000 IN. ZT
SCALE = .0200

PARAMETRIC DATA

IB-ELV = 10.000 OB-ELV = 5.000
BDFLAP = .000 SPDBRK = .000
RUDDER = .000 SILTS = 1.000
MACH = 1.100 RN/L = 3.500

RUN NO. 897/ 0 RN/L = 3.49 GRADIENT INTERVAL = -5.00/ 5.00

ALPHAL	BETAL	CNFLS	CAFLS	CLMFLS	CYFLS	CYNFLS	CBLLS	CABLS	CYNBLS	CP5	CP6
-8.960	-5.862	-.15070	.03040	.06010	-.02810	-.01490	-.02950	.05130	-.01000	-.60570	-.56250
-8.982	-3.649	-.12590	.02950	.04760	-.03910	-.00700	-.02460	.05020	-.00970	-.58740	-.55470
-8.768	.487	-.06870	.02710	.01340	-.04380	-.00430	-.01350	.04780	-.00930	-.56600	-.52340
-8.575	4.617	-.02370	.02540	-.01360	-.03580	-.01060	-.00460	.04200	-.00810	-.49880	-.45710
-8.506	6.569	-.00840	.02260	-.02200	-.03340	-.01300	-.00170	.03860	-.00750	-.46270	-.41750
	GRADIENT	.01236	-.00050	-.00740	.00040	-.00044	.00242	-.00099	.00019	.01072	.01181

RUN NO. 898/ 0 RN/L = 3.50 GRADIENT INTERVAL = -5.00/ 5.00

ALPHAL	BETAL	CNFLS	CAFLS	CLMFLS	CYFLS	CYNFLS	CBLLS	CABLS	CYNBLS	CP5	CP6
-6.647	-5.769	-.11790	.03250	.05000	-.00160	-.02460	-.02310	.05000	-.00970	-.59180	-.54730
-6.862	-3.809	-.09940	.03140	.03880	-.01250	-.01840	-.01940	.04860	-.00940	-.57290	-.53410
-6.579	.336	-.05080	.02820	.01040	-.01240	-.01930	-.00990	.04600	-.00890	-.54650	-.50020
-6.420	4.539	-.01120	.02770	-.01420	-.00870	-.02240	-.00220	.04170	-.00810	-.49500	-.45380
-6.090	6.454	.00240	.02480	-.02140	-.00350	-.02640	.00040	.03830	-.00740	-.45590	-.41560
	GRADIENT	.01056	-.00044	-.00635	.00046	-.00048	.00206	-.00083	.00016	.00934	.00962

IA156A, AEDC PWT 16T-470, O T S W/SILTS (R8NL47) (10 MAY 80)

REFERENCE DATA

SREF = 2690.0000 SQ.FT. XMRP = 976.0000 IN. XT
LREF = 1290.3000 INCHES YMRP = .0000 IN. YT
BREF = 1290.3000 INCHES ZMRP = 400.0000 IN. ZT
SCALE = .0200

PARAMETRIC DATA

IB-ELV = 10.000 OB-ELV = 5.000
BDFLAP = .000 SPDBRK = .000
RUDDER = .000 SILTS = 1.000
MACH = 1.100 RN/L = 3.500

RUN NO. 899/ 0 RN/L = 3.50 GRADIENT INTERVAL = -5.00/ 5.00

ALPHAL	BETAL	CNFLS	CAFLS	CLMFLS	CYFLS	CYNFLS	CBLLS	CABLS	CYNBLS	CP5	CP6
-4.347	-5.874	-.09490	.03370	.04490	.02640	-.03840	-.01850	.04830	-.00940	-.57110	-.52920
-4.474	-3.793	-.07670	.03260	.03410	.02040	-.03460	-.01500	.04700	-.00910	-.55530	-.51470
-4.321	.553	-.03330	.02920	.00690	.01780	-.03450	-.00650	.04320	-.00840	-.51880	-.46520
-3.953	4.382	-.00430	.02930	-.01160	.01780	-.03560	-.00080	.04020	-.00780	-.47840	-.43600
-4.098	6.363	.00550	.02790	-.01830	.01620	-.03600	.00110	.03840	-.00750	-.45380	-.42040
	GRADIENT	.00888	-.00039	-.00561	-.00032	-.00012	.00174	-.00083	.00016	.00938	.00967

RUN NO. 900/ 0 RN/L = 3.50 GRADIENT INTERVAL = -5.00/ 5.00

ALPHAL	BETAL	CNFLS	CAFLS	CLMFLS	CYFLS	CYNFLS	CBLLS	CABLS	CYNBLS	CP5	CP6
-.273	-6.883	-.06310	.03530	.03790	.05620	-.05710	-.01230	.04730	-.00920	-.56560	-.51240
-.309	-4.778	-.04930	.03510	.02920	.05230	-.05440	-.00960	.04580	-.00890	-.54690	-.49700
-.356	-.412	-.02370	.03220	.01260	.04690	-.05190	-.00460	.04250	-.00830	-.51010	-.45870
-.282	3.692	-.00330	.02950	-.00230	.03460	-.04430	-.00060	.03780	-.00730	-.45390	-.40680
-.224	6.220	.00660	.02860	-.00990	.02750	-.04080	.00130	.03530	-.00690	-.42680	-.37830
	GRADIENT	.00544	-.00066	-.00372	-.00208	.00119	.00106	-.00094	.00019	.01095	.01063

RUN NO. 901/ 0 RN/L = 3.50 GRADIENT INTERVAL = -5.00/ 5.00

ALPHAL	BETAL	CNFLS	CAFLS	CLMFLS	CYFLS	CYNFLS	CBLLS	CABLS	CYNBLS	CP5	CP6
4.626	-5.790	-.01010	.03480	.01710	.05370	-.05970	-.00190	.04400	-.00860	-.52440	-.47870
4.257	-3.597	-.00790	.03390	.01440	.04710	-.05450	-.00140	.04340	-.00840	-.51630	-.47160
3.956	.369	.00090	.03220	.00460	.03800	-.04840	.00030	.04200	-.00820	-.50090	-.45580
4.150	4.241	.00860	.03020	-.00380	.02150	-.03720	.00180	.03940	-.00760	-.47000	-.42660
4.105	6.289	.01060	.02900	-.00680	.01690	-.03510	.00210	.03690	-.00720	-.44300	-.39720
	GRADIENT	.00211	-.00047	-.00232	-.00326	.00220	.00041	-.00051	.00010	.00590	.00573

IA156A, AEDC PWT 16T-470, 0 T S W/SILTS (R8NL48) (10 MAY 80)

REFERENCE DATA

SREF = 2690.0000 SQ.FT. XMRP = 976.0000 IN. XT
LREF = 1290.3000 INCHES YMRP = .0000 IN. YT
BREF = 1290.3000 INCHES ZMRP = 400.0000 IN. ZT
SCALE = .0200

PARAMETRIC DATA

IB-ELV = 10.000 OB-ELV = 5.000
BDFLAP = .000 SPDBRK = .000
RUDDER = .000 SILTS = 1.000
MACH = 1.150 RN/L = 3.500

RUN NO. 902/ 0 RN/L = 3.50 GRADIENT INTERVAL = -5.00/ 5.00

ALPHAL	BETAL	CNFLS	CAFLS	CLMFLS	CYFLS	CYNFLS	CBLLS	CABLS	CYNBLS	CP5	CP6
-9.026	-5.762	-.15190	.03210	.06130	-.02980	-.01200	-.02970	.04780	-.00930	-.56270	-.52520
-8.993	-3.632	-.12880	.03110	.04930	-.03970	-.00550	-.02520	.04690	-.00910	-.54910	-.51800
-8.758	.639	-.07110	.02920	.01380	-.04670	-.00160	-.01400	.04440	-.00860	-.52490	-.48640
-8.614	4.615	-.02670	.02610	-.01390	-.03980	-.00780	-.00530	.03990	-.00780	-.47630	-.43310
-8.512	6.545	-.01120	.02380	-.02190	-.03350	-.01280	-.00220	.03670	-.00710	-.44080	-.39520
	GRADIENT	.01239	-.00060	-.00767	-.00003	-.00026	.00242	-.00085	.00016	.00879	.01026

RUN NO. 903/ 0 RN/L = 3.49 GRADIENT INTERVAL = -5.00/ 5.00

ALPHAL	BETAL	CNFLS	CAFLS	CLMFLS	CYFLS	CYNFLS	CBLLS	CABLS	CYNBLS	CP5	CP6
-6.850	-5.923	-.12440	.03370	.05430	-.00340	-.02210	-.02440	.04750	-.00920	-.56310	-.51810
-6.431	-3.641	-.09550	.03290	.03930	-.00600	-.01970	-.01870	.04520	-.00880	-.53130	-.49700
-6.546	.334	-.05420	.02900	.01290	-.01270	-.01760	-.01060	.04350	-.00840	-.51670	-.47370
-6.415	4.549	-.01420	.02900	-.01360	-.01130	-.02060	-.00280	.03870	-.00750	-.46160	-.41860
-6.156	6.543	.00100	.02660	-.02210	-.00510	-.02530	.00010	.03500	-.00680	-.41700	-.37910
	GRADIENT	.00992	-.00047	-.00646	-.00064	-.00012	.00194	-.00080	.00016	.00856	.00961

RUN NO. 904/ 0 RN/L = 3.50 GRADIENT INTERVAL = -5.00/ 5.00

ALPHAL	BETAL	CNFLS	CAFLS	CLMFLS	CYFLS	CYNFLS	CBLLS	CABLS	CYNBLS	CP5	CP6
-4.497	-6.064	-.10060	.03500	.04860	.02160	-.03460	-.01970	.04590	-.00890	-.54330	-.50140
-4.501	-3.748	-.07890	.03410	.03640	.01770	-.03220	-.01540	.04380	-.00850	-.51810	-.47980
-4.181	.401	-.03760	.03020	.01080	.01810	-.03360	-.00730	.04150	-.00810	-.49600	-.44900
-3.846	4.294	-.00700	.03020	-.00930	.01780	-.03460	-.00140	.03800	-.00740	-.45470	-.41100
-4.014	6.278	.00310	.02860	-.01650	.01610	-.03540	.00060	.03570	-.00690	-.42260	-.39000
	GRADIENT	.00895	-.00049	-.00569	.00001	-.00030	.00174	-.00072	.00014	.00786	.00854

RUN NO. 905/ 0 RN/L = 3.50 GRADIENT INTERVAL = -5.00/ 5.00

ALPHAL	BETAL	CNFLS	CAFLS	CLMFLS	CYFLS	CYNFLS	CBLLS	CABLS	CYNBLS	CP5	CP6
-.236	-6.888	-.06220	.03690	.03850	.05450	-.05540	-.01210	.04460	-.00870	-.53440	-.48140
-.277	-4.513	-.04810	.03630	.02940	.05000	-.05240	-.00940	.04350	-.00840	-.51850	-.47230
-.322	-.443	-.02470	.03350	.01400	.04560	-.05080	-.00480	.04130	-.00800	-.49520	-.44520
-.236	3.709	-.00400	.03070	-.00110	.03390	-.04380	-.00080	.03630	-.00700	-.43800	-.38830
-.225	5.968	.00470	.02940	-.00780	.02730	-.04050	.00090	.03430	-.00670	-.41710	-.36520
	GRADIENT	.00536	-.00068	-.00371	-.00196	.00105	.00105	-.00088	.00017	.00980	.01023

IA156A, AEDC PWT 16T-470, O T S W/SILTS (R8NL48) (10 MAY 80)

REFERENCE DATA

SREF = 2690.0000 SQ.FT. XMRP = 976.0000 IN. XT
LREF = 1290.3000 INCHES YMRP = .0000 IN. YT
BREF = 1290.3000 INCHES ZMRP = 400.0000 IN. ZT
SCALE = .0200

PARAMETRIC DATA

IB-ELV = 10.000 OB-ELV = 5.000
BDFLAP = .000 SPDBRK = .000
RUDDER = .000 SILTS = 1.000
MACH = 1.150 RN/L = 3.500

RUN NO. 906/ 0 RN/L = 3.50 GRADIENT INTERVAL = -5.00/ 5.00

ALPHAL	BETAL	CNFLS	CAFLS	CLMFLS	CYFLS	CYNFLS	CBLLS	CABLS	CYNBLS	CP5	CP6
4.563	-5.605	-.01330	.03650	.02030	.05420	-.06010	-.00250	.04240	-.00820	-.50570	-.45990
4.299	-3.432	-.00970	.03540	.01650	.04730	-.05490	-.00180	.04190	-.00810	-.49650	-.45840
4.120	.365	-.00090	.03360	.00710	.03610	-.04700	-.00010	.04090	-.00790	-.48710	-.44330
4.273	4.404	.00860	.03150	-.00330	.01870	-.03560	.00180	.03770	-.00730	-.45030	-.40770
4.047	6.130	.01010	.03040	-.00590	.01660	-.03510	.00200	.03600	-.00700	-.43320	-.38600
	GRADIENT	.00234	-.00050	-.00253	-.00366	.00247	.00046	-.00054	.00010	.00593	.00650

IA156A, AEDC PWT 16T-470, O T S W/SILTS (R8NL49) (10 MAY 80)

REFERENCE DATA

SREF = 2690.0000 SQ.FT. XMRP = 976.0000 IN. XT
LREF = 1290.3000 INCHES YMRP = .0000 IN. YT
BREF = 1290.3000 INCHES ZMRP = 400.0000 IN. ZT
SCALE = .0200

PARAMETRIC DATA

IB-ELV = 10.000 OB-ELV = 5.000
BDFLAP = .000 SPDBRK = .000
RUDDER = .000 SILTS = 1.000
MACH = 1.250 RN/L = 3.500

RUN NO. 907/ 0 RN/L = 3.50 GRADIENT INTERVAL = -5.00/ 5.00

ALPHAL	BETAL	CNFLS	CAFLS	CLMFLS	CYFLS	CYNFLS	CBLLS	CABLS	CYNBLS	CP5	CP6
-8.718	-5.657	-.15080	.03430	.06230	-.02870	-.00820	-.02950	.04340	-.00840	-.51350	-.47490
-8.993	-3.731	-.13230	.03340	.05130	-.04060	-.00110	-.02590	.04300	-.00830	-.50520	-.47360
-8.765	.603	-.07490	.03040	.01580	-.04670	.00080	-.01470	.04140	-.00800	-.48850	-.45380
-8.581	4.669	-.02920	.02710	-.01380	-.04440	-.00350	-.00580	.03640	-.00710	-.43680	-.39320
-8.482	6.608	-.01350	.02480	-.02280	-.03890	-.00820	-.00270	.03340	-.00650	-.40200	-.35930
	GRADIENT	.01228	-.00075	-.00775	-.00046	-.00028	.00239	-.00078	.00014	.00810	.00952

RUN NO. 908/ 0 RN/L = 3.50 GRADIENT INTERVAL = -5.00/ 5.00

ALPHAL	BETAL	CNFLS	CAFLS	CLMFLS	CYFLS	CYNFLS	CBLLS	CABLS	CYNBLS	CP5	CP6
-6.586	-5.779	-.12180	.03550	.05410	-.00510	-.01810	-.02390	.04240	-.00820	-.50460	-.46100
-6.806	-3.861	-.10580	.03420	.04450	-.01410	-.01340	-.02070	.04150	-.00800	-.48810	-.45600
-6.516	.295	-.05840	.03080	.01560	-.01770	-.01320	-.01150	.04040	-.00780	-.47800	-.44130
-6.396	4.573	-.01700	.02900	-.01250	-.01660	-.01600	-.00330	.03550	-.00690	-.42500	-.38410
-6.079	6.493	-.00190	.02660	-.02140	-.00960	-.02120	-.00040	.03290	-.00640	-.39350	-.35560
	GRADIENT	.01052	-.00062	-.00676	-.00029	-.00031	.00206	-.00071	.00013	.00751	.00855

IA156A, AEDC PWT 16T-470, 0 T S W/SILTS (R8NL49) (10 MAY 80)

REFERENCE DATA

SREF = 2690.0000 SQ.FT. XMRP = 976.0000 IN. XT
LREF = 1290.3000 INCHES YMRP = .0000 IN. YT
BREF = 1290.3000 INCHES ZMRP = 400.0000 IN. ZT
SCALE = .0200

PARAMETRIC DATA

IB-ELV =	10.000	OB-ELV =	5.000
BDFLAP =	.000	SPDBRK =	.000
RUDDER =	.000	SILTS =	1.000
MACH =	1.250	RN/L =	3.500

RUN NO. 909/ 0 RN/L = 3.50 GRADIENT INTERVAL = -5.00/ 5.00

ALPHAL	BETAL	CNFLS	CAFLS	CLMFLS	CYFLS	CYNFLS	CBLLS	CABLS	CYNBLS	CP5	CP6
-4.575	-6.086	-.10300	.03630	.04940	.01240	-.02810	-.02020	.04190	-.00810	-.50170	-.45340
-4.440	-3.855	-.08120	.03500	.03750	.00970	-.02650	-.01590	.04030	-.00780	-.48000	-.43860
-4.300	.535	-.04020	.03160	.01210	.01020	-.02790	-.00790	.03890	-.00750	-.46570	-.41960
-3.971	4.396	-.01060	.03080	-.00750	.01090	-.02980	-.00210	.03500	-.00680	-.42060	-.37710
-4.075	6.446	.00090	.02850	-.01560	.01040	-.03110	.00020	.03230	-.00630	-.38640	-.34970
	GRADIENT	.00857	-.00052	-.00546	.00014	-.00040	.00168	-.00064	.00012	.00711	.00738

RUN NO. 910/ 0 RN/L = 3.50 GRADIENT INTERVAL = -5.00/ 5.00

ALPHAL	BETAL	CNFLS	CAFLS	CLMFLS	CYFLS	CYNFLS	CBLLS	CABLS	CYNBLS	CP5	CP6
-.206	-6.962	-.06370	.03870	.04070	.05210	-.05250	-.01250	.04050	-.00790	-.49020	-.43270
-.237	-4.632	-.05080	.03780	.03250	.04790	-.04980	-.01000	.03970	-.00770	-.47880	-.42600
-.239	-.422	-.02750	.03440	.01680	.04240	-.04750	-.00540	.03770	-.00730	-.45170	-.40690
-.155	4.058	-.00720	.03080	.00190	.03010	-.04070	-.00140	.03280	-.00640	-.39610	-.35090
-.129	5.998	.00070	.02950	-.00450	.02570	-.03930	.00010	.03120	-.00610	-.37970	-.33180
	GRADIENT	.00501	-.00081	-.00352	-.00206	.00105	.00099	-.00080	.00015	.00955	.00868

RUN NO. 911/ 0 RN/L = 3.50 GRADIENT INTERVAL = -5.00/ 5.00

ALPHAL	BETAL	CNFLS	CAFLS	CLMFLS	CYFLS	CYNFLS	CBLLS	CABLS	CYNBLS	CP5	CP6
4.620	-5.641	-.01320	.03810	.02150	.05000	-.05690	-.00250	.03880	-.00750	-.46430	-.41850
4.493	-3.720	-.00930	.03700	.01770	.04300	-.05170	-.00170	.03850	-.00750	-.46050	-.41600
4.160	.313	-.00300	.03390	.00960	.03210	-.04450	-.00050	.03720	-.00720	-.44640	-.39990
4.016	4.039	.00500	.03150	-.00070	.01820	-.03510	.00100	.03440	-.00670	-.41520	-.36770
4.231	6.369	.00930	.03030	-.00520	.01200	-.03260	.00190	.03240	-.00630	-.39300	-.34560
	GRADIENT	.00184	-.00071	-.00237	-.00319	.00213	.00035	-.00053	.00010	.00581	.00619

IA156A, AEDC PWT 16T-470, 0 T S W/SILTS (R8NL50) (10 MAY 80)

REFERENCE DATA

SREF = 2690.0000 SQ.FT. XMRP = 976.0000 IN. XT
LREF = 1290.3000 INCHES YMRP = .0000 IN. YT
BREF = 1290.3000 INCHES ZMRP = 400.0000 IN. ZT
SCALE = .0200

PARAMETRIC DATA

IB-ELV = 10.000 OB-ELV = 5.000
BDFLAP = .000 SPDBRK = .000
RUDDER = .000 SILTS = 1.000
MACH = 1.400 RN/L = 3.500

RUN NO. 912/ 0 RN/L = 3.50 GRADIENT INTERVAL = -5.00/ 5.00

ALPHAL	BETAL	CNFLS	CAFLS	CLMFLS	CYFLS	CYNFLS	CBLLS	CABLS	CYNBLS	CP5	CP6
-8.975	-5.930	-.16330	.03580	.06850	-.03240	-.00150	-.03190	.03860	-.00750	-.46910	-.41120
-8.953	-3.788	-.13940	.03480	.05570	-.04620	.00750	-.02730	.03870	-.00750	-.46280	-.41960
-8.588	.500	-.07870	.03080	.01950	-.04800	.00560	-.01550	.03670	-.00710	-.43500	-.39960
-8.382	4.647	-.03400	.02750	-.00930	-.04160	-.00250	-.00670	.03280	-.00640	-.39510	-.35280
-8.316	6.567	-.02190	.02550	-.01590	-.03810	-.00660	-.00430	.03020	-.00590	-.36490	-.32270
	GRADIENT	.01251	-.00087	-.00771	.00054	-.00118	.00244	-.00070	.00013	.00802	.00790

RUN NO. 913/ 0 RN/L = 3.51 GRADIENT INTERVAL = -5.00/ 5.00

ALPHAL	BETAL	CNFLS	CAFLS	CLMFLS	CYFLS	CYNFLS	CBLLS	CABLS	CYNBLS	CP5	CP6
-6.712	-5.805	-.12630	.03640	.05470	-.01840	-.00680	-.02470	.03740	-.00730	-.45740	-.39550
-6.530	-3.807	-.10350	.03460	.04250	-.02320	-.00430	-.02030	.03720	-.00720	-.45080	-.39610
-6.609	.412	-.06140	.03110	.01650	-.02670	-.00510	-.01210	.03560	-.00690	-.42600	-.38400
-6.269	4.565	-.02060	.02980	-.00950	-.01890	-.01400	-.00400	.03210	-.00620	-.38490	-.34600
-6.110	6.768	-.00690	.02730	-.01750	-.01400	-.01850	-.00140	.02900	-.00560	-.34980	-.30990
	GRADIENT	.00990	-.00057	-.00621	.00051	-.00116	.00195	-.00061	.00012	.00787	.00598

RUN NO. 914/ 0 RN/L = 3.50 GRADIENT INTERVAL = -5.00/ 5.00

ALPHAL	BETAL	CNFLS	CAFLS	CLMFLS	CYFLS	CYNFLS	CBLLS	CABLS	CYNBLS	CP5	CP6
-4.368	-5.800	-.09550	.03700	.04520	.00740	-.02210	-.01870	.03650	-.00710	-.44450	-.38600
-4.327	-3.743	-.07760	.03560	.03510	.00350	-.01990	-.01520	.03520	-.00680	-.43020	-.37120
-4.338	.447	-.04310	.03190	.01320	.00010	-.01960	-.00850	.03400	-.00660	-.41100	-.36260
-3.905	4.502	-.01310	.03060	-.00490	.00750	-.02770	-.00260	.03230	-.00630	-.38880	-.34700
-4.044	6.596	-.00260	.02930	-.01250	.00680	-.02910	-.00050	.02890	-.00560	-.34890	-.30990
	GRADIENT	.00782	-.00061	-.00485	.00048	-.00094	.00153	-.00035	.00006	.00502	.00293

RUN NO. 915/ 0 RN/L = 3.50 GRADIENT INTERVAL = -5.00/ 5.00

ALPHAL	BETAL	CNFLS	CAFLS	CLMFLS	CYFLS	CYNFLS	CBLLS	CABLS	CYNBLS	CP5	CP6
-.370	-6.994	-.06110	.03870	.03860	.04820	-.04870	-.01200	.03640	-.00710	-.44840	-.38080
-.273	-4.544	-.04700	.03760	.03050	.04290	-.04510	-.00930	.03560	-.00690	-.43480	-.37590
-.256	-.534	-.02790	.03500	.01760	.03700	-.04290	-.00550	.03370	-.00650	-.40830	-.35840
-.186	4.084	-.01000	.03080	.00470	.02710	-.03850	-.00200	.03000	-.00580	-.36190	-.32200
-.228	6.024	-.00180	.02970	-.00230	.02330	-.03750	-.00040	.02880	-.00560	-.35070	-.30480
	GRADIENT	.00428	-.00079	-.00299	-.00184	.00077	.00084	-.00065	.00013	.00849	.00629

IA156A, AEDC PWT 16T-470, 0 T S W/SILTS (R8NL50) (10 MAY 80)

REFERENCE DATA

SREF = 2690.0000 SQ.FT. XMRP = 976.0000 IN. XT
LREF = 1290.3000 INCHES YMRP = .0000 IN. YT
BREF = 1290.3000 INCHES ZMRP = 400.0000 IN. ZT
SCALE = .0200

PARAMETRIC DATA

IB-ELV = 10.000 OB-ELV = 5.000
BDFLAP = .000 SPDBRK = .000
RUDDER = .000 SILTS = 1.000
MACH = 1.400 RN/L = 3.500

RUN NO. 916/ 0 RN/L = 3.50 GRADIENT INTERVAL = -5.00/ 5.00

ALPHAL	BETAL	CNFLS	CAFLS	CLMFLS	CYFLS	CYNFLS	CBLLS	CABLS	CYNBLS	CP5	CP6
4.727	-5.622	-.01290	.03790	.02460	.04660	-.05590	-.00240	.03540	-.00690	-.43520	-.37190
4.618	-3.643	-.00890	.03690	.01960	.03880	-.05030	-.00170	.03450	-.00670	-.42290	-.36340
4.223	.349	-.00450	.03400	.01220	.02740	-.04170	-.00080	.03200	-.00640	-.40070	-.34780
4.118	4.177	.00410	.03140	.00160	.01360	-.03280	.00080	.03080	-.00600	-.37370	-.32840
4.049	6.136	.00770	.03090	-.00290	.00980	-.03130	.00150	.02940	-.00570	-.35750	-.31150
	GRADIENT	.00166	-.00070	-.00230	-.00322	.00224	.00032	-.00047	.00009	.00629	.00447

IA156A, AEDC PWT 16T-470, 0 T S W/SILTS (R8NL51) (10 MAY 80)

REFERENCE DATA

SREF = 2690.0000 SQ.FT. XMRP = 976.0000 IN. XT
LREF = 1290.3000 INCHES YMRP = .0000 IN. YT
BREF = 1290.3000 INCHES ZMRP = 400.0000 IN. ZT
SCALE = .0200

PARAMETRIC DATA

IB-ELV = 10.000 OB-ELV = 5.000
BDFLAP = .000 SPDBRK = .000
RUDDER = .000 SILTS = 1.000
MACH = 1.550 RN/L = 3.200

RUN NO. 917/ 0 RN/L = 3.19 GRADIENT INTERVAL = -5.00/ 5.00

ALPHAL	BETAL	CNFLS	CAFLS	CLMFLS	CYFLS	CYNFLS	CBLLS	CABLS	CYNBLS	CP5	CP6
-8.951	-5.916	-.15820	.03380	.06920	-.02430	-.00370	-.03090	.03450	-.00670	-.42290	-.36310
-8.952	-3.763	-.13800	.03360	.05690	-.04200	.00790	-.02700	.03410	-.00660	-.41470	-.36220
-8.549	.601	-.08250	.02900	.02330	-.04910	.00910	-.01620	.03240	-.00630	-.38990	-.34800
-8.309	4.744	-.03800	.02640	-.00670	-.04580	.00250	-.00750	.02800	-.00540	-.33950	-.29920
-8.297	6.599	-.02510	.02500	-.01500	-.04380	-.00110	-.00500	.02610	-.00510	-.31570	-.27900
	GRADIENT	.01176	-.00085	-.00748	-.00046	-.00063	.00229	-.00071	.00014	.00881	.00737

RUN NO. 918/ 0 RN/L = 3.19 GRADIENT INTERVAL = -5.00/ 5.00

ALPHAL	BETAL	CNFLS	CAFLS	CLMFLS	CYFLS	CYNFLS	CBLLS	CABLS	CYNBLS	CP5	CP6
-6.534	-5.736	-.11940	.03520	.05300	-.01430	-.00730	-.02340	.03430	-.00670	-.42350	-.35730
-6.686	-3.869	-.10430	.03400	.04380	-.02290	-.00270	-.02040	.03290	-.00640	-.40440	-.34600
-6.408	.376	-.06040	.03020	.01740	-.02430	-.00470	-.01190	.03090	-.00600	-.37440	-.33010
-6.227	4.678	-.02470	.02740	-.00650	-.02200	-.00950	-.00490	.02870	-.00560	-.34400	-.30950
-6.125	6.837	-.01140	.02620	-.01510	-.01920	-.01330	-.00230	.02630	-.00510	-.32030	-.27850
	GRADIENT	.00931	-.00077	-.00588	.00011	-.00080	.00181	-.00049	.00009	.00707	.00427

IA156A, AEDC PWT 16T-470, O T S W/SILTS (R8NL51) (10 MAY 80)

REFERENCE DATA

SREF = 2690.0000 SQ.FT. XMRP = 976.0000 IN. XT
LREF = 1290.3000 INCHES YMRP = .0000 IN. YT
BREF = 1290.3000 INCHES ZMRP = 400.0000 IN. ZT
SCALE = .0200

PARAMETRIC DATA

IB-ELV = 10.000 OB-ELV = 5.000
BDFLAP = .000 SPDBRK = .000
RUDDER = .000 SILTS = 1.000
MACH = 1.550 RN/L = 3.200

RUN NO. 919/ 0 RN/L = 3.20 GRADIENT INTERVAL = -5.00/ 5.00

ALPHAL	BETAL	CNFLS	CAFLS	CLMFLS	CYFLS	CYNFLS	CBLLS	CABLS	CYNBLS	CP5	CP6
-4.448	-5.817	-.09090	.03630	.04260	.00740	-.02140	-.01780	.03280	-.00640	-.40480	-.34220
-4.692	-4.017	-.07870	.03480	.03440	.00030	-.01730	-.01550	.03190	-.00620	-.39310	-.33470
-4.163	.457	-.04150	.03070	.01300	.00090	-.01930	-.00820	.03030	-.00590	-.37040	-.32060
-3.819	4.748	-.01480	.02840	-.00400	.00210	-.02250	-.00290	.02830	-.00550	-.34160	-.30280
-3.787	6.419	-.00670	.02770	-.00970	.00340	-.02480	-.00140	.02610	-.00510	-.31670	-.27790
	GRADIENT	.00730	-.00073	-.00438	.00020	-.00059	.00144	-.00041	.00008	.00587	.00364

RUN NO. 920/ 0 RN/L = 3.19 GRADIENT INTERVAL = -5.00/ 5.00

ALPHAL	BETAL	CNFLS	CAFLS	CLMFLS	CYFLS	CYNFLS	CBLLS	CABLS	CYNBLS	CP5	CP6
-.448	-6.986	-.05590	.03790	.03500	.04720	-.04830	-.01100	.03330	-.00650	-.41810	-.34070
-.393	-4.587	-.04420	.03620	.02840	.04210	-.04420	-.00870	.03210	-.00620	-.39790	-.33420
-.337	-.499	-.02570	.03390	.01610	.03510	-.04120	-.00510	.03010	-.00580	-.36710	-.31820
-.324	3.665	-.01010	.03070	.00450	.02390	-.03510	-.00200	.02780	-.00540	-.33710	-.29670
-.356	5.828	-.00160	.02950	-.00270	.01970	-.03400	-.00040	.02550	-.00490	-.31060	-.26990
	GRADIENT	.00413	-.00067	-.00290	-.00221	.00110	.00081	-.00052	.00010	.00737	.00455

RUN NO. 921/ 0 RN/L = 3.19 GRADIENT INTERVAL = -5.00/ 5.00

ALPHAL	BETAL	CNFLS	CAFLS	CLMFLS	CYFLS	CYNFLS	CBLLS	CABLS	CYNBLS	CP5	CP6
4.612	-5.368	-.00850	.03640	.02160	.04300	-.05340	-.00160	.03340	-.00650	-.41230	-.34860
4.453	-3.408	-.00600	.03560	.01760	.03450	-.04740	-.00110	.03200	-.00620	-.39830	-.33200
4.059	.508	-.00390	.03280	.01190	.02450	-.04010	-.00070	.02920	-.00570	-.36030	-.30510
4.119	4.294	.00490	.03090	.00150	.01010	-.03080	.00100	.02760	-.00540	-.34150	-.28810
3.996	6.352	.00870	.03000	-.00310	.00670	-.02960	.00170	.02620	-.00510	-.32410	-.27370
	GRADIENT	.00141	-.00061	-.00209	-.00316	.00215	.00027	-.00057	.00010	.00739	.00571

IA156A, AEDC PWT 16T-470, 0 T S W/SILTS (R8NL52) (10 MAY 80)

REFERENCE DATA

SREF = 2690.0000 SQ.FT. XMRP = 976.0000 IN. XT
LREF = 1290.3000 INCHES YMRP = .0000 IN. YT
BREF = 1290.3000 INCHES ZMRP = 400.0000 IN. ZT
SCALE = .0200

PARAMETRIC DATA

IB-ELV = 10.000 OB-ELV = 9.000
BDFLAP = .000 SPDBRK = .000
RUDDER = .000 SILTS = 1.000
MACH = .300 RN/L = 3.500

RUN NO. 928/ 0 RN/L = 2.68 GRADIENT INTERVAL = -5.00/ 5.00

ALPHAL	BETAL	CNFLS	CAFLS	CLMFLS	CYFLS	CYNFLS	CBLLS	CABLS	CYNBLS	CP5	CP6
-6.060	-10.004	-.12480	.01210	.05850	.03400	-.03520	-.02400	.03940	-.00760	-.47400	-.42300
-6.387	-5.989	-.09760	.00920	.04330	.01160	-.01980	-.01870	.03910	-.00760	-.47090	-.42030
-6.220	.378	-.04180	.01130	.01280	.00130	-.01340	-.00770	.03100	-.00600	-.39800	-.30820
-5.748	6.147	-.00270	.01270	-.00990	.00480	-.01980	.00000	.02580	-.00500	-.33110	-.25650
-5.856	10.091	.01460	.01020	-.02030	.00460	-.02360	.00340	.02450	-.00480	-.31670	-.24120
	GRADIENT	.00000	.00000	.00000	.00000	.00000	.00000	.00000	.00000	.00000	.00000

RUN NO. 929/ 0 RN/L = 2.68 GRADIENT INTERVAL = -5.00/ 5.00

ALPHAL	BETAL	CNFLS	CAFLS	CLMFLS	CYFLS	CYNFLS	CBLLS	CABLS	CYNBLS	CP5	CP6
-.316	-10.464	-.06410	.01580	.03730	.06020	-.05200	-.01200	.03780	-.00730	-.45410	-.40740
-.282	-6.381	-.04870	.01550	.02810	.04970	-.04510	-.00900	.03470	-.00670	-.42330	-.36720
-.221	-.413	-.02050	.01420	.01130	.03890	-.03930	-.00350	.03110	-.00600	-.38620	-.32160
-.190	5.674	-.00030	.01380	-.00260	.02260	-.02990	.00050	.02600	-.00510	-.33650	-.25660
-.141	10.048	.01290	.01500	-.01350	.01830	-.03050	.00310	.02520	-.00490	-.32470	-.24930
	GRADIENT	.00000	.00000	.00000	.00000	.00000	.00000	.00000	.00000	.00000	.00000

RUN NO. 930/ 0 RN/L = 2.68 GRADIENT INTERVAL = -5.00/ 5.00

ALPHAL	BETAL	CNFLS	CAFLS	CLMFLS	CYFLS	CYNFLS	CBLLS	CABLS	CYNBLS	CP5	CP6
6.259	-9.993	.01420	.01640	.00400	.04600	-.04750	.00350	.03470	-.00670	-.42000	-.36990
6.088	-5.879	.01290	.01520	.00310	.03690	-.04020	.00330	.03260	-.00630	-.40160	-.34230
5.938	.274	.01060	.01360	.00200	.01920	-.02800	.00280	.03030	-.00590	-.37820	-.31150
6.141	6.310	.00920	.01430	-.00120	-.00210	-.01410	.00250	.02640	-.00510	-.34270	-.25900
5.902	10.185	.01320	.01460	-.00810	-.00370	-.01510	.00330	.02640	-.00510	-.34140	-.26100
	GRADIENT	.00000	.00000	.00000	.00000	.00000	.00000	.00000	.00000	.00000	.00000

IA156A, AEDC PWT 16T-470, O T S W/SILTS (R8NL53) (10 MAY 80)

REFERENCE DATA

SREF = 2690.0000 SQ.FT. XMRP = 976.0000 IN. XT
LREF = 1290.3000 INCHES YMRP = .0000 IN. YT
BREF = 1290.3000 INCHES ZMRP = 400.0000 IN. ZT
SCALE = .0200

PARAMETRIC DATA

IB-ELV = 10.000 OB-ELV = 9.000
BDFLAP = .000 SPDBRK = .000
RUDDER = .000 SILTS = 1.000
MACH = .300 RN/L = 3.500

RUN NO. 927/ 0 RN/L = 2.67 GRADIENT INTERVAL = -5.00/ 5.00

ALPHAL	BETAL	CNFLS	CAFLS	CLMFLS	CYFLS	CYNFLS	CBLLS	CABLS	CYNBLS	CP5	CP6
-10.226	-7.831	-.15590	.00750	.06570	-.00670	-.01420	-.03020	.04140	-.00800	-.49160	-.45020
-10.213	-5.678	-.13240	.00450	.05370	-.02110	-.00440	-.02560	.04230	-.00820	-.51040	-.45330
-9.923	.282	-.07400	.00700	.02430	-.04650	.01210	-.01420	.03560	-.00690	-.45590	-.35670
-10.030	6.345	-.01450	.00870	-.01060	-.03970	.00120	-.00240	.02840	-.00550	-.37370	-.27410
-10.031	8.147	-.00090	.00650	-.01760	-.03420	-.00410	.00020	.02620	-.00510	-.34070	-.25630
	GRADIENT	.00000	.00000	.00000	.00000	.00000	.00000	.00000	.00000	.00000	.00000

RUN NO. 931/ 0 RN/L = 2.68 GRADIENT INTERVAL = -5.00/ 5.00

ALPHAL	BETAL	CNFLS	CAFLS	CLMFLS	CYFLS	CYNFLS	CBLLS	CABLS	CYNBLS	CP5	CP6
10.126	-7.952	.05350	.01460	-.01090	.00950	-.02610	.01130	.03350	-.00650	-.40760	-.35630
10.192	-5.620	.04870	.01440	-.00920	-.00030	-.01940	.01030	.03350	-.00650	-.41600	-.34820
10.060	.326	.03090	.01360	-.00230	-.01770	-.00810	.00690	.03130	-.00610	-.39510	-.31820
10.118	6.370	.02060	.01250	-.00310	-.03510	.00360	.00490	.02680	-.00520	-.34440	-.26760
9.880	8.214	.01800	.01170	-.00450	-.03470	.00360	.00440	.02710	-.00530	-.34280	-.27420
	GRADIENT	.00000	.00000	.00000	.00000	.00000	.00000	.00000	.00000	.00000	.00000

IA156A, AEDC PWT 16T-470, O T S W/SILTS (R8NL54) (10 MAY 80)

REFERENCE DATA

SREF = 2690.0000 SQ.FT. XMRP = 976.0000 IN. XT
LREF = 1290.3000 INCHES YMRP = .0000 IN. YT
BREF = 1290.3000 INCHES ZMRP = 400.0000 IN. ZT
SCALE = .0200

PARAMETRIC DATA

IB-ELV = 10.000 OB-ELV = 9.000
BDFLAP = .000 SPDBRK = .000
RUDDER = .000 SILTS = 1.000
MACH = .600 RN/L = 3.500

RUN NO. 932/ 0 RN/L = 3.50 GRADIENT INTERVAL = -5.00/ 5.00

ALPHAL	BETAL	CNFLS	CAFLS	CLMFLS	CYFLS	CYNFLS	CBLLS	CABLS	CYNBLS	CP5	CP6
-8.401	-7.767	-.13660	.00940	.05800	-.00280	-.01610	-.02650	.04000	-.00780	-.47310	-.43680
-8.329	-5.661	-.11750	.00910	.04860	-.01390	-.00920	-.02270	.03910	-.00760	-.46470	-.42510
-8.176	-3.596	-.09550	.00950	.03760	-.02100	-.00420	-.01840	.03660	-.00710	-.44020	-.39370
-8.130	.380	-.05950	.00920	.01740	-.03220	.00180	-.01130	.03390	-.00660	-.42180	-.35050
-8.064	4.315	-.02210	.01100	-.00520	-.03120	-.00140	-.00400	.03020	-.00590	-.38720	-.30040
-7.989	6.234	-.00590	.00980	-.01490	-.02590	-.00710	-.00090	.02720	-.00530	-.34320	-.27730
-7.882	8.326	.00700	.00880	-.02170	-.02030	-.01240	.00160	.02480	-.00480	-.31370	-.25150
	GRADIENT	.00928	.00019	-.00541	-.00129	.00036	.00182	-.00081	.00015	.00670	.01179

IA156A, AEDC PWT 16T-470, O T S W/SILTS (R8NL54) (10 MAY 80)

REFERENCE DATA

SREF = 2690.0000 SQ.FT. XMRP = 976.0000 IN. XT
LREF = 1290.3000 INCHES YMRP = .0000 IN. YT
BREF = 1290.3000 INCHES ZMRP = 400.0000 IN. ZT
SCALE = .0200

PARAMETRIC DATA

IB-ELV = 10.000 OB-ELV = 9.000
BDFLAP = .000 SPDBRK = .000
RUDDER = .000 SILTS = 1.000
MACH = .600 RN/L = 3.500

RUN NO. 933/ 0 RN/L = 3.51 GRADIENT INTERVAL = -5.00/ 5.00

ALPHAL	BETAL	CNFLS	CAFLS	CLMFLS	CYFLS	CYNFLS	CBLLS	CABLS	CYNBLS	CP5	CP6
-6.181	-7.672	-.11270	.01150	.05040	.01480	-.02480	-.02180	.03890	-.00750	-.46180	-.42350
-6.317	-5.771	-.09790	.01120	.04260	.00580	-.01900	-.01890	.03750	-.00730	-.44630	-.40660
-6.219	-3.745	-.08040	.01090	.03340	-.00130	-.01410	-.01550	.03580	-.00690	-.43000	-.38490
-6.290	.204	-.04510	.01030	.01310	-.00850	-.01030	-.00850	.03220	-.00630	-.40000	-.33460
-6.032	4.296	-.01390	.01200	-.00560	-.00650	-.01380	-.00240	.02880	-.00560	-.36740	-.29020
-5.814	6.131	-.00130	.01130	-.01330	-.00330	-.01770	.00010	.02640	-.00510	-.33050	-.27090
-5.809	8.454	.01000	.01090	-.02030	-.00130	-.02140	.00220	.02430	-.00470	-.30420	-.24910
	GRADIENT	.00827	.00014	-.00485	-.00064	.00003	.00163	-.00087	.00016	.00779	.01177

RUN NO. 934/ 0 RN/L = 3.51 GRADIENT INTERVAL = -5.00/ 5.00

ALPHAL	BETAL	CNFLS	CAFLS	CLMFLS	CYFLS	CYNFLS	CBLLS	CABLS	CYNBLS	CP5	CP6
-4.213	-7.822	-.[illegible]	.01330	.04520	.02960	-.03290	-.01840	.03780	-.00730	-.44950	-.41060
-4.162	-5.714	-.[illegible]	.01230	.03660	.02240	-.02770	-.01520	.03670	-.00710	-.43720	-.39890
-4.201	-3.711	-.06350	.01270	.02800	.01760	-.02460	-.01220	.03450	-.00670	-.41580	-.36930
-3.910	.283	-.03160	.01[illegible]	.00960	.01560	-.02440	-.00590	.03060	-.00590	-.37800	-.31860
-3.948	4.349	-.00790	.01[illegible]	-.00550	.01080	-.02310	-.00120	.02770	-.00540	-.34870	-.28300
-3.840	6.078	.00120	.01270	-.01140	.01150	-.02510	.00050	.02580	-.00500	-.32250	-.26480
-3.733	8.016	.01030	.01200	-.01780	.01150	-.02680	.00230	.02470	-.00480	-.31030	-.25170
	GRADIENT	.00690	.00001	-.00416	-.00084	.00019	.00136	-.00084	.00016	.00832	.01070

RUN NO. 935/ 0 RN/L = 3.51 GRADIENT INTERVAL = -5.00/ 5.00

ALPHAL	BETAL	CNFLS	CAFLS	CLMFLS	CYFLS	CYNFLS	CBLLS	CABLS	CYNBLS	CP5	CP6
-.205	-8.679	-.05950	.01530	.03410	.05430	-.04920	-.01130	.03700	-.00720	-.44110	-.40260
-.250	-6.669	-.05090	.01510	.02920	.04830	-.04500	-.00970	.03630	-.00700	-.43500	-.39140
-.232	-4.338	-.03950	.01430	.02250	.04260	-.04100	-.00750	.03510	-.00680	-.42210	-.37700
-.207	-.062	-.01870	.01340	.00930	.03720	-.03920	-.00340	.03090	-.00600	-.37490	-.32920
-.157	3.977	-.00480	.01380	.00000	.02650	-.03290	-.00060	.02690	-.00520	-.33790	-.27410
-.105	5.833	.00130	.01400	-.00480	.02200	-.03070	.00060	.02520	-.00490	-.31970	-.25480
-.179	7.985	.00930	.01360	-.01180	.01990	-.03090	.00210	.02490	-.00480	-.31300	-.25560
	GRADIENT	.00418	-.00006	-.00271	-.00193	.00097	.00083	-.00099	.00019	.01013	.01236

IA156A, AEDC PWT 16T-470, 0 T S W/SILTS (R8NL54) (10 MAY 80)

REFERENCE DATA

SREF = 2690.0000 SQ.FT. XMRP = 976.0000 IN. XT
LREF = 1290.3000 INCHES YMRP = .0000 IN. YT
BREF = 1290.3000 INCHES ZMRP = 400.0000 IN. ZT
SCALE = .0200

PARAMETRIC DATA

IB-ELV = 10.000 OB-ELV = 9.000
BDFLAP = .000 SPDBRK = .000
RUDDER = .000 SILTS = 1.000
MACH = .600 RN/L = 3.500

RUN NO. 936/ 0 RN/L = 3.51 GRADIENT INTERVAL = -5.00/ 5.00

ALPHAL	BETAL	CNFLS	CAFLS	CLMFLS	CYFLS	CYNFLS	CBLLS	CABLS	CYNBLS	CP5	CP6
4.302	-7.747	-.00690	.01590	.01190	.05080	-.04980	-.00100	.03480	-.00680	-.41690	-.37660
4.344	-5.661	-.00180	.01520	.00860	.04460	-.04500	.00000	.03410	-.00660	-.41060	-.36620
4.308	-3.702	-.00010	.01500	.00720	.03990	-.04170	.00040	.03260	-.00630	-.39870	-.34510
4.100	.287	.00200	.01350	.00370	.03130	-.03640	.00080	.02990	-.00580	-.36530	-.31640
4.125	4.289	.00470	.01340	-.00010	.01810	-.02760	.00130	.02740	-.00530	-.34480	-.28020
4.056	6.234	.00660	.01360	-.00270	.01180	-.02380	.00160	.02620	-.00510	-.33270	-.26350
3.943	8.087	.00970	.01390	-.00680	.00910	-.02300	.00230	.02580	-.00500	-.32850	-.26020
	GRADIENT	.00060	-.00020	-.00091	-.00273	.00176	.00011	-.00065	.00013	.00674	.00812

RUN NO. 937/ 0 RN/L = 3.51 GRADIENT INTERVAL = -5.00/ 5.00

ALPHAL	BETAL	CNFLS	CAFLS	CLMFLS	CYFLS	CYNFLS	CBLLS	CABLS	CYNBLS	CP5	CP6
6.513	-7.906	.01610	.01530	.00220	.03800	-.04300	.00350	.03470	-.00670	-.41500	-.37450
6.342	-5.738	.01370	.01510	.00250	.03330	-.03880	.00310	.03360	-.00650	-.40590	-.35830
6.465	-3.793	.01410	.01450	.00220	.02610	-.03340	.00310	.03310	-.00640	-.40220	-.35110
6.240	.299	.01080	.01410	.00170	.01730	-.02810	.00250	.03060	-.00590	-.37180	-.32490
6.009	4.172	.00990	.01290	-.00120	.00590	-.02020	.00230	.02770	-.00540	-.34890	-.28130
6.157	6.244	.01050	.01330	-.00340	-.00060	-.01630	.00240	.02650	-.00510	-.33530	-.26810
5.988	8.333	.01280	.01380	-.00730	-.00320	-.01550	.00290	.02620	-.00510	-.33170	-.26600
	GRADIENT	-.00053	-.00020	-.00042	-.00253	.00165	-.00010	-.00068	.00013	.00670	.00874

RUN NO. 938/ 0 RN/L = 3.51 GRADIENT INTERVAL = -5.00/ 5.00

ALPHAL	BETAL	CNFLS	CAFLS	CLMFLS	CYFLS	CYNFLS	CBLLS	CABLS	CYNBLS	CP5	CP6
8.441	-7.967	.03430	.01500	-.00460	.02460	-.03560	.00710	.03430	-.00670	-.41270	-.36910
8.354	-5.695	.03160	.01470	-.00370	.01620	-.02940	.00660	.03350	-.00650	-.40680	-.35520
8.567	-3.866	.03000	.01460	-.00290	.00780	-.02360	.00620	.03330	-.00650	-.40730	-.35110
8.225	.278	.02120	.01350	-.00060	.00080	-.01950	.00450	.03130	-.00610	-.37950	-.33360
8.373	4.290	.01840	.01200	-.00280	-.01380	-.00990	.00400	.02790	-.00540	-.35190	-.28470
8.029	6.210	.01560	.01220	-.00390	-.01580	-.00780	.00340	.02700	-.00520	-.34110	-.27510
8.286	8.355	.01780	.01260	-.00780	-.02170	-.00520	.00390	.02670	-.00520	-.33440	-.27430
	GRADIENT	-.00143	-.00032	.00002	-.00264	.00168	-.00027	-.00066	.00013	.00679	.00812

IA156A, AEDC PWT 16T-470, O T S W/SILTS (R8NL55) (10 MAY 80)

REFERENCE DATA

SREF = 2690.0000 SQ.FT. XMRP = 976.0000 IN. XT
LREF = 1290.3000 INCHES YMRP = .0000 IN. YT
BREF = 1290.3000 INCHES ZMRP = 400.0000 IN. ZT
SCALE = .0200

PARAMETRIC DATA

IB-ELV = 10.000 OB-ELV = 9.000
BDFLAP = .000 SPDBRK = .000
RUDDER = .000 SILTS = 1.000
MACH = .800 RN/L = 3.500

RUN NO. 939/ 0 RN/L = 3.51 GRADIENT INTERVAL = -5.00/ 5.00

ALPHAL	BETAL	CNFLS	CAFLS	CLMFLS	CYFLS	CYNFLS	CBLLS	CABLS	CYNBLS	CP5	CP6
-8.749	-5.841	-.12580	.01350	.05140	-.02560	-.00690	-.02440	.03770	-.00730	-.43850	-.41950
-8.613	-3.701	-.10600	.01220	.04150	-.03740	-.00020	-.02050	.03860	-.00750	-.45200	-.42600
-8.371	.546	-.06000	.01280	.01610	-.04410	.00430	-.01150	.03390	-.00660	-.41360	-.35770
-8.286	4.465	-.02310	.01240	-.00700	-.03930	-.00040	-.00430	.02960	-.00580	-.36810	-.30700
-8.176	6.399	-.00710	.01110	-.01580	-.03110	-.00690	-.00120	.02550	-.00490	-.31850	-.26240
	GRADIENT	.01016	.00003	-.00594	-.00025	-.00001	.00199	-.00110	.00021	.01026	.01460

RUN NO. 940/ 0 RN/L = 3.50 GRADIENT INTERVAL = -5.00/ 5.00

ALPHAL	BETAL	CNFLS	CAFLS	CLMFLS	CYFLS	CYNFLS	CBLLS	CABLS	CYNBLS	CP5	CP6
-6.538	-5.890	-.10440	.01510	.04530	-.00470	-.01690	-.02020	.03780	-.00730	-.44320	-.41700
-6.405	-3.802	-.08480	.01490	.03550	-.01130	-.01230	-.01640	.03590	-.00700	-.42210	-.39580
-6.183	.285	-.04490	.01380	.01260	-.01390	-.01050	-.00850	.03260	-.00630	-.39710	-.34670
-6.217	4.438	-.01390	.01420	-.00730	-.01480	-.01170	-.00250	.02810	-.00550	-.34870	-.29160
-5.899	6.358	-.00080	.01350	-.01520	-.00910	-.01670	.00010	.02470	-.00480	-.30670	-.25640
	GRADIENT	.00860	-.00008	-.00519	-.00042	.00007	.00169	-.00095	.00018	.00891	.01265

RUN NO. 941/ 0 RN/L = 3.50 GRADIENT INTERVAL = -5.00/ 5.00

ALPHAL	BETAL	CNFLS	CAFLS	CLMFLS	CYFLS	CYNFLS	CBLLS	CABLS	CYNBLS	CP5	CP6
-4.413	-6.039	-.08500	.01700	.03940	.01580	-.02680	-.01640	.03680	-.00710	-.43670	-.40160
-4.348	-3.802	-.05690	.01660	.03020	.01170	-.02370	-.01290	.03500	-.00680	-.41330	-.38450
-4.058	.358	-.03170	.01560	.00930	.01070	-.02390	-.00600	.03070	-.00600	-.36950	-.32880
-3.780	4.254	-.00800	.01600	-.00540	.00810	-.02360	-.00130	.02730	-.00530	-.33670	-.28600
-3.967	6.230	.00220	.01520	-.01270	.00660	-.02430	.00070	.02440	-.00470	-.30200	-.25420
	GRADIENT	.00732	-.00008	-.00443	-.00044	.00001	.00144	-.00096	.00019	.00952	.01224

RUN NO. 942/ 0 RN/L = 3.51 GRADIENT INTERVAL = -5.00/ 5.00

ALPHAL	BETAL	CNFLS	CAFLS	CLMFLS	CYFLS	CYNFLS	CBLLS	CABLS	CYNBLS	CP5	CP6
-.245	-6.590	-.05320	.01910	.03010	.04460	-.04450	-.01020	.03640	-.00710	-.43450	-.39340
-.277	-4.645	-.04490	.01860	.02510	.03920	-.04040	-.00860	.03480	-.00680	-.41620	-.37670
-.251	-.201	-.02190	.01710	.01050	.03270	-.03700	-.00400	.03020	-.00590	-.36470	-.32330
-.198	3.890	-.00310	.01700	-.00330	.02480	-.03260	-.00040	.02630	-.00510	-.32640	-.27340
-.201	5.753	.00410	.01690	-.00910	.02110	-.03060	.00100	.02540	-.00490	-.31650	-.26130
	GRADIENT	.00490	-.00019	-.00333	-.00168	.00091	.00096	-.00100	.00020	.01054	.01210

IA156A, AEDC PWT 16T-470, O T S W/SILTS (R8NL55) (10 MAY 80)

REFERENCE DATA

SREF = 2690.0000 SQ.FT. XMRP = 976.0000 IN. XT
LREF = 1290.3000 INCHES YMRP = .0000 IN. YT
BREF = 1290.3000 INCHES ZMRP = 400.0000 IN. ZT
SCALE = .0200

PARAMETRIC DATA

IB-ELV = 10.000 OB-ELV = 9.000
BDFLAP = .000 SPDBRK = .000
RUDDER = .000 SILTS = 1.000
MACH = .800 RN/L = 3.500

RUN NO. 943/ 0 RN/L = 3.50 GRADIENT INTERVAL = -5.00/ 5.00

ALPHAL	BETAL	CNFLS	CAFLS	CLMFLS	CYFLS	CYNFLS	CBLLS	CABLS	CYNBLS	CP5	CP6
4.243	-5.604	-.00700	.01860	.01090	.04540	-.04720	-.00110	.03470	-.00670	-.41180	-.37880
4.239	-3.607	-.00290	.01820	.00870	.03980	-.04280	-.00030	.03360	-.00650	-.40200	-.36270
4.232	.219	.00350	.01640	.00380	.03140	-.03760	.00100	.02990	-.00580	-.36170	-.31880
4.080	4.226	.00520	.01660	.00040	.01860	-.02920	.00130	.02760	-.00540	-.34270	-.28690
3.984	6.234	.00740	.01730	-.00290	.01350	-.02650	.00170	.02580	-.00500	-.32340	-.26430
	GRADIENT	.00103	-.00020	-.00106	-.00271	.00174	.00020	-.00076	.00014	.00755	.00966

RUN NO. 944/ 0 RN/L = 3.51 GRADIENT INTERVAL = -5.00/ 5.00

ALPHAL	BETAL	CNFLS	CAFLS	CLMFLS	CYFLS	CYNFLS	CBLLS	CABLS	CYNBLS	CP5	CP6
6.478	-5.757	.01540	.01790	.00200	.03310	-.04160	.00330	.03470	-.00670	-.41540	-.37590
6.534	-3.750	.01590	.01770	.00130	.02300	-.03430	.00340	.03400	-.00660	-.40720	-.36700
6.270	.311	.01250	.01700	.00050	.01650	-.03050	.00270	.03080	-.00600	-.36810	-.33350
6.090	4.141	.01150	.01660	-.00190	.00520	-.02170	.00250	.02770	-.00540	-.34380	-.28790
6.204	6.281	.01320	.01690	-.00490	-.00190	-.01760	.00290	.02650	-.00510	-.33210	-.27200
	GRADIENT	-.00056	-.00014	-.00040	-.00225	.00159	-.00011	-.00080	.00015	.00805	.01001

IA156A, AEDC PWT 16T-470, O T S W/SILTS (R8NL56) (10 MAY 80)

REFERENCE DATA

SREF = 2690.0000 SQ.FT. XMRP = 976.0000 IN. XT
LREF = 1290.3000 INCHES YMRP = .0000 IN. YT
BREF = 1290.3000 INCHES ZMRP = 400.0000 IN. ZT
SCALE = .0200

PARAMETRIC DATA

IB-ELV = 10.000 OB-ELV = 9.000
BDFLAP = .000 SPDBRK = .000
RUDDER = .000 SILTS = 1.000
MACH = .900 RN/L = 3.500

RUN NO. 952/ 0 RN/L = 3.51 GRADIENT INTERVAL = -5.00/ 5.00

ALPHAL	BETAL	CNFLS	CAFLS	CLMFLS	CYFLS	CYNFLS	CBLLS	CABLS	CYNBLS	CP5	CP6
-8.658	-5.706	-.12680	.01740	.05000	-.03380	-.00530	-.02490	.03890	-.00760	-.44480	-.44090
-8.384	-3.527	-.10130	.01640	.03830	-.03940	-.00090	-.01990	.03760	-.00730	-.43160	-.42420
-8.476	.482	-.06210	.01640	.01590	-.04810	.00320	-.01220	.03630	-.00710	-.43530	-.39230
-8.370	4.582	-.02070	.01510	-.01040	-.04580	-.00030	-.00410	.03060	-.00590	-.37200	-.32610
-8.349	6.445	-.00480	.01390	-.01920	-.04130	-.00530	-.00100	.02660	-.00520	-.32960	-.27720
	GRADIENT	.00994	-.00016	-.00601	-.00078	.00007	.00195	-.00087	.00017	.00738	.01211

IA156A, AEDC PWT 16T-470, 0 T S W/SILTS (R8NL56) (10 MAY 80)

REFERENCE DATA

SREF = 2690.0000 SQ.FT. XMRP = 976.0000 IN. XT
LREF = 1290.3000 INCHES YMRP = .0000 IN. YT
BREF = 1290.3000 INCHES ZMRP = 400.0000 IN. ZT
SCALE = .0200

PARAMETRIC DATA

IB-ELV = 10.000 OB-ELV = 9.000
BDFLAP = .000 SPDBRK = .000
RUDDER = .000 SILTS = 1.000
MACH = .900 RN/L = 3.500

RUN NO. 953/ 0 RN/L = 3.50 GRADIENT INTERVAL = -5.00/ 5.00

ALPHAL	BETAL	CNFLS	CAFLS	CLMFLS	CYFLS	CYNFLS	CBLLS	CABLS	CYNBLS	CP5	CP6
-6.486	-5.851	-.10490	.01920	.04390	-.00990	-.01580	-.02060	.03830	-.00740	-.44020	-.43150
-6.326	-3.815	-.08280	.01920	.03310	-.01430	-.01220	-.01630	.03630	-.00700	-.41740	-.40820
-6.216	.318	-.04530	.01790	.01140	-.01900	-.01040	-.00890	.03430	-.00670	-.41110	-.36950
-6.185	4.374	-.01110	.01750	-.01090	-.02020	-.01200	-.00220	.02990	-.00580	-.36330	-.31850
-5.982	6.374	.00240	.01580	-.01900	-.01590	-.01710	.00040	.02740	-.00530	-.33250	-.29120
	GRADIENT	.00876	-.00021	-.00537	-.00072	.00003	.00172	-.00078	.00015	.00659	.01095

RUN NO. 954/ 0 RN/L = 3.50 GRADIENT INTERVAL = -5.00/ 5.00

ALPHAL	BETAL	CNFLS	CAFLS	CLMFLS	CYFLS	CYNFLS	CBLLS	CABLS	CYNBLS	CP5	CP6
-4.368	-6.068	-.08510	.02110	.03850	.01390	-.02700	-.01670	.03820	-.00740	-.44290	-.42740
-4.330	-3.810	-.06680	.02070	.02890	.00790	-.02310	-.01320	.03610	-.00700	-.41650	-.40570
-4.080	.371	-.03040	.01940	.00700	.00600	-.02340	-.00600	.03210	-.00620	-.38250	-.34950
-4.110	4.525	-.00340	.01940	-.01100	.00120	-.02310	-.00080	.02860	-.00560	-.34170	-.31010
-3.903	6.432	.00660	.01780	-.01710	.00370	-.02650	.00110	.02710	-.00530	-.32640	-.29100
	GRADIENT	.00761	-.00016	-.00479	-.00080	-.00000	.00149	-.00090	.00017	.00897	.01147

RUN NO. 955/ 0 RN/L = 3.50 GRADIENT INTERVAL = -5.00/ 5.00

ALPHAL	BETAL	CNFLS	CAFLS	CLMFLS	CYFLS	CYNFLS	CBLLS	CABLS	CYNBLS	CP5	CP6
-.339	-6.824	-.05370	.02340	.02960	.04490	-.04590	-.01070	.03740	-.00730	-.44460	-.40770
-.306	-4.750	-.04230	.02260	.02330	.03920	-.04210	-.00840	.03690	-.00720	-.43620	-.40340
-.319	-.407	-.01900	.02150	.00720	.03120	-.03850	-.00390	.03230	-.00630	-.38260	-.35290
-.241	3.679	.00080	.02100	-.00760	.02440	-.03430	.00000	.02850	-.00550	-.34210	-.30650
-.221	5.915	.00900	.02050	-.01360	.02180	-.03360	.00160	.02730	-.00530	-.33290	-.28900
	GRADIENT	.00512	-.00019	-.00367	-.00176	.00092	.00100	-.00100	.00020	.01118	.01150

RUN NO. 956/ 0 RN/L = 3.50 GRADIENT INTERVAL = -5.00/ 5.00

ALPHAL	BETAL	CNFLS	CAFLS	CLMFLS	CYFLS	CYNFLS	CBLLS	CABLS	CYNBLS	CP5	CP6
4.435	-5.873	-.00590	.02250	.01010	.04750	-.04920	-.00130	.03710	-.00720	-.44190	-.40230
4.515	-3.864	-.00210	.02250	.00850	.04080	-.04390	-.00050	.03570	-.00690	-.43120	-.38280
3.977	.296	.00440	.02050	.00100	.03270	-.03910	.00070	.03200	-.00620	-.38640	-.34340
4.176	4.168	.00910	.02080	-.00300	.01920	-.03100	.00160	.02930	-.00570	-.35820	-.30840
3.967	6.287	.01160	.02070	-.00690	.01540	-.02930	.00210	.02730	-.00530	-.33900	-.28410
	GRADIENT	.00140	-.00021	-.00144	-.00268	.00160	.00026	-.00080	.00015	.00911	.00927

IA156A, AEDC PWT 16T-470, 0 T S W/SILTS (R8NL57) (10 MAY 80)

REFERENCE DATA

SREF = 2690.0000 SQ.FT. XMRP = 976.0000 IN. XT
LREF = 1290.3000 INCHES YMRP = .0000 IN. YT
BREF = 1290.3000 INCHES ZMRP = 400.0000 IN. ZT
SCALE = .0200

PARAMETRIC DATA

IB-ELV = 10.000 OB-ELV = 9.000
BDFLAP = .000 SPDBRK = .000
RUDDER = .000 SILTS = 1.000
MACH = .950 RN/L = 3.500

RUN NO. 957/ 0 RN/L = 3.50 GRADIENT INTERVAL = -5.00/ 5.00

ALPHAL	BETAL	CNFLS	CAFLS	CLMFLS	CYFLS	CYNFLS	CBLLS	CABLS	CYNBLS	CP5	CP6
-8.654	-5.781	-.13030	.01960	.04950	-.03290	-.00790	-.02570	.04090	-.00790	-.47160	-.45980
-8.679	-3.579	-.10650	.01920	.03760	-.04460	.00040	-.02110	.03970	-.00770	-.45250	-.45080
-8.426	.488	-.06100	.01820	.01250	-.04780	.00270	-.01220	.03930	-.00760	-.46210	-.43160
-8.257	4.455	-.01910	.01760	-.01370	-.04290	-.00240	-.00400	.03380	-.00660	-.40480	-.36430
-8.172	6.370	-.00460	.01600	-.02160	-.03750	-.00760	-.00120	.02950	-.00570	-.36630	-.30570
	GRADIENT	.01088	-.00020	-.00639	.00021	-.00034	.00213	-.00073	.00014	.00590	.01074

RUN NO. 959/ 0 RN/L = 3.49 GRADIENT INTERVAL = -5.00/ 5.00

ALPHAL	BETAL	CNFLS	CAFLS	CLMFLS	CYFLS	CYNFLS	CBLLS	CABLS	CYNBLS	CP5	CP6
-6.537	-5.786	-.10630	.02150	.04310	-.01020	-.01740	-.02110	.04050	-.00790	-.46830	-.45450
-6.477	-3.851	-.08730	.02280	.03310	-.01640	-.01260	-.01740	.03890	-.00750	-.44640	-.43810
-6.535	.312	-.04620	.02070	.00950	-.02130	-.00970	-.00930	.03780	-.00730	-.44630	-.41550
-6.256	4.445	-.00960	.02000	-.01280	-.01540	-.01570	-.00220	.03320	-.00640	-.39500	-.36030
-5.978	6.579	.00400	.01890	-.02020	-.01010	-.02120	.00040	.02860	-.00560	-.34810	-.30430
	GRADIENT	.00937	-.00034	-.00553	.00012	-.00037	.00183	-.00069	.00013	.00619	.00937

RUN NO. 958/ 0 RN/L = 3.49 GRADIENT INTERVAL = -5.00/ 5.00

ALPHAL	BETAL	CNFLS	CAFLS	CLMFLS	CYFLS	CYNFLS	CBLLS	CABLS	CYNBLS	CP5	CP6
-4.445	-6.014	-.08800	.02360	.03940	.01390	-.02860	-.01750	.04110	-.00800	-.47660	-.45820
-4.482	-3.833	-.06930	.02320	.02940	.00840	-.02410	-.01380	.03950	-.00770	-.45640	-.44320
-4.388	.510	-.03090	.02170	.00660	.00850	-.02530	-.00630	.03640	-.00710	-.42750	-.40120
-3.859	4.460	-.00300	.02210	-.01000	.00970	-.02810	-.00090	.03190	-.00620	-.37830	-.34730
-3.905	6.300	.00580	.02030	-.01610	.00840	-.02960	.00080	.02970	-.00580	-.35880	-.31830
	GRADIENT	.00801	-.00014	-.00476	.00015	-.00048	.00156	-.00091	.00018	.00937	.01153

RUN NO. 960/ 0 RN/L = 3.50 GRADIENT INTERVAL = -5.00/ 5.00

ALPHAL	BETAL	CNFLS	CAFLS	CLMFLS	CYFLS	CYNFLS	CBLLS	CABLS	CYNBLS	CP5	CP6
-.331	-6.699	-.05350	.02590	.03000	.04920	-.04970	-.01070	.04140	-.00800	-.49220	-.45090
-.296	-4.666	-.04210	.02590	.02400	.04440	-.04650	-.00850	.04070	-.00790	-.48430	-.44340
-.296	-.467	-.02050	.02500	.01070	.03650	-.04290	-.00430	.03660	-.00710	-.43290	-.39950
-.213	3.724	-.00130	.02360	-.00340	.02440	-.03600	-.00060	.03100	-.00600	-.37240	-.33270
-.207	5.950	.00670	.02240	-.00960	.02110	-.03570	.00100	.02870	-.00560	-.35040	-.30360
	GRADIENT	.00486	-.00027	-.00327	-.00238	.00125	.00094	-.00116	.00023	.01334	.01319

IA156A, AEDC PWT 16T-470, O T S W/SILTS (R8NL57) (10 MAY 80)

REFERENCE DATA

SREF = 2690.0000 SQ.FT. XMRP = 976.0000 IN. XT
LREF = 1290.3000 INCHES YMRP = .0000 IN. YT
BREF = 1290.3000 INCHES ZMRP = 400.0000 IN. ZT
SCALE = .0200

PARAMETRIC DATA

IB-ELV = 10.000 OB-ELV = 9.000
BDFLAP = .000 SPDBRK = .000
RUDDER = .000 SILTS = 1.000
MACH = .950 RN/L = 3.500

RUN NO. 961/ 0 RN/L = 3.49 GRADIENT INTERVAL = -5.00/ 5.00

ALPHAL	BETAL	CNFLS	CAFLS	CLMFLS	CYFLS	CYNFLS	CBLLS	CABLS	CYNBLS	CP5	CP6
4.262	-5.700	-.01020	.02490	.01380	.04700	-.05100	-.00220	.04100	-.00800	-.49370	-.44080
4.282	-3.657	-.00550	.02530	.00980	.03820	-.04430	-.00130	.03900	-.00760	-.46900	-.41850
3.917	.144	.00270	.02360	.00120	.03220	-.04090	.00030	.03570	-.00690	-.43210	-.38100
4.111	4.102	.00870	.02350	-.00320	.01940	-.03270	.00140	.03220	-.00620	-.39570	-.33740
4.072	6.260	.01000	.02200	-.00480	.01390	-.02990	.00170	.02950	-.00570	-.36580	-.30690
	GRADIENT	.00183	-.00023	-.00167	-.00243	.00150	.00035	-.00088	.00018	.00945	.01046

IA156A, AEDC PWT 16T-470, O T S W/SILTS (R8NL58) (10 MAY 80)

REFERENCE DATA

SREF = 2690.0000 SQ.FT. XMRP = 976.0000 IN. XT
LREF = 1290.3000 INCHES YMRP = .0000 IN. YT
BREF = 1290.3000 INCHES ZMRP = 400.0000 IN. ZT
SCALE = .0200

PARAMETRIC DATA

IB-ELV = 10.000 OB-ELV = 9.000
BDFLAP = .000 SPDBRK = .000
RUDDER = .000 SILTS = 1.000
MACH = 1.050 RN/L = 3.500

RUN NO. 962/ 0 RN/L = 3.50 GRADIENT INTERVAL = -5.00/ 5.00

ALPHAL	BETAL	CNFLS	CAFLS	CLMFLS	CYFLS	CYNFLS	CBLLS	CABLS	CYNBLS	CP5	CP6
-8.685	-5.747	-.14510	.02800	.05880	-.02550	-.01580	-.02870	.05450	-.01060	-.64170	-.59890
-8.808	-3.517	-.12370	.02660	.04810	-.03460	-.01030	-.02450	.05340	-.01040	-.62410	-.59170
-8.671	.444	-.07020	.02570	.01490	-.04400	-.00430	-.01410	.05210	-.01010	-.61360	-.57210
-8.400	4.638	-.02110	.02410	-.01550	-.03620	-.01110	-.00450	.04620	-.00900	-.54550	-.50540
-8.376	6.547	-.00560	.02250	-.02420	-.03240	-.01460	-.00150	.04220	-.00820	-.50470	-.45570
	GRADIENT	.01257	-.00031	-.00779	-.00018	-.00011	.00245	-.00089	.00017	.00970	.01063

RUN NO. 963/ 0 RN/L = 3.50 GRADIENT INTERVAL = -5.00/ 5.00

ALPHAL	BETAL	CNFLS	CAFLS	CLMFLS	CYFLS	CYNFLS	CBLLS	CABLS	CYNBLS	CP5	CP6
-6.602	-5.787	-.11770	.02960	.05080	-.00240	-.02550	-.02330	.05470	-.01060	-.64440	-.60110
-6.487	-3.860	-.09590	.02920	.03910	-.00740	-.02150	-.01900	.05290	-.01030	-.62300	-.58140
-6.589	.317	-.05200	.02670	.01200	-.01300	-.01940	-.01040	.05040	-.00980	-.59610	-.55170
-6.324	4.470	-.01090	.02700	-.01440	-.00910	-.02320	-.00240	.04610	-.00900	-.54670	-.50320
-5.974	6.595	.00510	.02530	-.02300	-.00230	-.02890	.00070	.04080	-.00790	-.48480	-.44350
	GRADIENT	.01021	-.00026	-.00642	-.00021	-.00020	.00199	-.00082	.00016	.00916	.00939

IA156A, AEDC PWT 16T-470, 0 T S W/SILTS (R8NL58) (10 MAY 80)

REFERENCE DATA

SREF = 2690.0000 SQ.FT. XMRP = 976.0000 IN. XT
LREF = 1290.3000 INCHES YMRP = .0000 IN. YT
BREF = 1290.3000 INCHES ZMRP = 400.0000 IN. ZT
SCALE = .0200

PARAMETRIC DATA

IB-ELV = 10.000 OB-ELV = 9.000
BDFLAP = .000 SPDBRK = .000
RUDDER = .000 SILTS = 1.000
MACH = 1.050 RN/L = 3.500

RUN NO. 964/ 0 RN/L = 3.50 GRADIENT INTERVAL = -5.00/ 5.00

ALPHAL	BETAL	CNFLS	CAFLS	CLMFLS	CYFLS	CYNFLS	CBLLS	CABLS	CYNBLS	CP5	CP6
-4.322	-5.959	-.09390	.03120	.04510	.02890	-.04080	-.01860	.05340	-.01040	-.63190	-.58480
-4.528	-3.816	-.07680	.03050	.03480	.01990	-.03530	-.01530	.05220	-.01010	-.61450	-.57500
-4.446	.543	-.03450	.02770	.00830	.01740	-.03500	-.00700	.04910	-.00950	-.58350	-.53440
-3.866	4.463	-.00260	.02880	-.01200	.01920	-.03720	-.00080	.04420	-.00860	-.52250	-.48300
-3.955	6.329	.00670	.02700	-.01840	.01730	-.03780	.00100	.04170	-.00810	-.49180	-.45670
	GRADIENT	.00898	-.00021	-.00566	-.00009	-.00022	.00175	-.00096	.00018	.01104	.01108

RUN NO. 965/ 0 RN/L = 3.50 GRADIENT INTERVAL = -5.00/ 5.00

ALPHAL	BETAL	CNFLS	CAFLS	CLMFLS	CYFLS	CYNFLS	CBLLS	CABLS	CYNBLS	CP5	CP6
-.349	-6.758	-.06040	.03310	.03670	.05980	-.06030	-.01210	.05280	-.01020	-.62700	-.57490
-.328	-4.618	-.04640	.03320	.02810	.05560	-.05780	-.00930	.05190	-.01010	-.61500	-.56650
-.352	-.378	-.02100	.03130	.01150	.05040	-.05590	-.00430	.04900	-.00950	-.58330	-.53370
-.253	3.885	.00000	.02880	-.00400	.03590	-.04650	-.00030	.04400	-.00850	-.52520	-.47720
-.237	6.040	.00830	.02830	-.01060	.02970	-.04340	.00130	.04170	-.00810	-.49910	-.45120
	GRADIENT	.00546	-.00052	-.00377	-.00232	.00133	.00106	-.00093	.00019	.01056	.01050

RUN NO. 966/ 0 RN/L = 3.50 GRADIENT INTERVAL = -5.00/ 5.00

ALPHAL	BETAL	CNFLS	CAFLS	CLMFLS	CYFLS	CYNFLS	CBLLS	CABLS	CYNBLS	CP5	CP6
4.336	-5.689	-.01030	.03250	.01640	.06050	-.06470	-.00230	.05050	-.00980	-.59840	-.55110
4.294	-3.527	-.00570	.03210	.01220	.04980	-.05680	-.00130	.04930	-.00960	-.58390	-.53920
3.980	.325	.00270	.03150	.00330	.03960	-.04960	.00030	.04800	-.00930	-.56790	-.52620
4.099	4.231	.01080	.02980	-.00520	.02380	-.03920	.00190	.04520	-.00880	-.53710	-.49220
4.078	6.301	.01250	.02810	-.00740	.01900	-.03680	.00220	.04320	-.00840	-.51600	-.46880
	GRADIENT	.00213	-.00030	-.00224	-.00335	.00227	.00041	-.00053	.00010	.00604	.00606

IA156A, AEDC PWT 16T-470, 0 T S W/SILTS (R8NL59) (10 MAY 80)

REFERENCE DATA

SREF = 2690.0000 SQ.FT. XMRP = 976.0000 IN. XT
LREF = 1290.3000 INCHES YMRP = .0000 IN. YT
BREF = 1290.3000 INCHES ZMRP = 400.0000 IN. ZT
SCALE = .0200

PARAMETRIC DATA

IB-ELV = 10.000 OB-ELV = 9.000
BDFLAP = .000 SPDBRK = .000
RUDDER = .000 SILTS = 1.000
MACH = 1.100 RN/L = 3.500

RUN NO. 967/ 0 RN/L = 3.49 GRADIENT INTERVAL = -5.00/ 5.00

ALPHAL	BETAL	CNFLS	CAFLS	CLMFLS	CYFLS	CYNFLS	CBLLS	CABLS	CYNBLS	CP5	CP6
-8.738	-5.718	-.14420	.03080	.05740	-.02680	-.01580	-.02860	.05130	-.01000	-.60630	-.56170
-8.800	-3.497	-.12040	.02970	.04500	-.03870	-.00790	-.02380	.05060	-.00980	-.59320	-.55960
-8.697	.462	-.06790	.02840	.01290	-.04500	-.00520	-.01360	.04780	-.00930	-.56400	-.52530
-8.403	4.674	-.02090	.02500	-.01520	-.03650	-.01140	-.00440	.04290	-.00830	-.51000	-.46680
-8.370	6.572	-.00610	.02390	-.02320	-.03280	-.01440	-.00160	.03830	-.00740	-.45980	-.41350
	GRADIENT	.01217	-.00058	-.00736	.00029	-.00044	.00237	-.00094	.00018	.01021	.01138

RUN NO. 968/ 0 RN/L = 3.49 GRADIENT INTERVAL = -5.00/ 5.00

ALPHAL	BETAL	CNFLS	CAFLS	CLMFLS	CYFLS	CYNFLS	CBLLS	CABLS	CYNBLS	CP5	CP6
-6.622	-5.786	-.11620	.03310	.04890	-.00390	-.02440	-.02310	.05020	-.00970	-.59330	-.55010
-6.547	-3.853	-.09500	.03190	.03720	-.00980	-.02040	-.01890	.04880	-.00950	-.57580	-.53480
-6.635	.321	-.05030	.02890	.00990	-.01490	-.01920	-.01010	.04610	-.00890	-.54700	-.50270
-6.328	4.492	-.00980	.02820	-.01530	-.00930	-.02290	-.00220	.04200	-.00810	-.49930	-.45660
-6.218	6.484	.00380	.02610	-.02270	-.00490	-.02680	.00040	.03770	-.00730	-.44990	-.40970
	GRADIENT	.01021	-.00044	-.00629	.00006	-.00030	.00200	-.00081	.00017	.00917	.00937

RUN NO. 969/ 0 RN/L = 3.49 GRADIENT INTERVAL = -5.00/ 5.00

ALPHAL	BETAL	CNFLS	CAFLS	CLMFLS	CYFLS	CYNFLS	CBLLS	CABLS	CYNBLS	CP5	CP6
-4.341	-5.971	-.09400	.03410	.04440	.02610	-.03870	-.01870	.04840	-.00940	-.57380	-.52830
-4.555	-3.827	-.07620	.03270	.03350	.01860	-.03420	-.01520	.04760	-.00920	-.56240	-.52150
-4.442	.542	-.03240	.02960	.00630	.01690	-.03460	-.00660	.04380	-.00850	-.52390	-.47350
-3.866	4.479	-.00250	.02990	-.01200	.01940	-.03710	-.00080	.04030	-.00780	-.47950	-.43930
-3.942	6.325	.00630	.02820	-.01800	.01780	-.03750	.00090	.03860	-.00750	-.45610	-.42360
	GRADIENT	.00889	-.00034	-.00549	.00009	-.00034	.00174	-.00088	.00017	.00996	.00992

RUN NO. 970/ 0 RN/L = 3.49 GRADIENT INTERVAL = -5.00/ 5.00

ALPHAL	BETAL	CNFLS	CAFLS	CLMFLS	CYFLS	CYNFLS	CBLLS	CABLS	CYNBLS	CP5	CP6
-.358	-6.893	-.06230	.03600	.03740	.05650	-.05780	-.01250	.04710	-.00910	-.56330	-.50990
-.325	-4.662	-.04720	.03510	.02810	.05220	-.05480	-.00950	.04600	-.00890	-.54730	-.50040
-.344	-.295	-.02140	.03280	.01120	.04740	-.05310	-.00440	.04220	-.00820	-.50500	-.45670
-.239	3.827	-.00160	.02960	-.00310	.03470	-.04490	-.00060	.03800	-.00740	-.45540	-.41070
-.220	6.027	.00690	.02910	-.00970	.02830	-.04160	.00110	.03520	-.00680	-.42550	-.37720
	GRADIENT	.00538	-.00065	-.00368	-.00205	.00116	.00105	-.00094	.00018	.01081	.01056

IA156A, AEDC PWT 16T-470, 0 T S W/SILTS (R8NL59) (10 MAY 80)

REFERENCE DATA

SREF = 2690.0000 SQ.FT. XMRP = 976.0000 IN. XT
LREF = 1290.3000 INCHES YMRP = .0000 IN. YT
BREF = 1290.3000 INCHES ZMRP = 400.0000 IN. ZT
SCALE = .0200

PARAMETRIC DATA

IB-ELV = 10.000 OB-ELV = 9.000
BDFLAP = .000 SPDBRK = .000
RUDDER = .000 SILTS = 1.000
MACH = 1.100 RN/L = 3.500

RUN NO. 971/ 0 RN/L = 3.49 GRADIENT INTERVAL = -5.00/ 5.00

ALPHAL	BETAL	CNFLS	CAFLS	CLMFLS	CYFLS	CYNFLS	CBLLS	CABLS	CYNBLS	CP5	CP6
4.493	-5.632	-.00940	.03510	.01670	.05480	-.06070	-.00210	.04400	-.00850	-.52350	-.47790
4.342	-3.548	-.00540	.03440	.01310	.04730	-.05510	-.00130	.04340	-.00840	-.51530	-.47350
4.005	.283	.00170	.03230	.00470	.03860	-.04910	.00010	.04260	-.00830	-.50710	-.46220
4.130	4.178	.00990	.03100	-.00430	.02210	-.03820	.00170	.03900	-.00760	-.46500	-.42330
4.095	6.288	.01220	.02970	-.00750	.01760	-.03620	.00210	.03670	-.00710	-.44180	-.39480
	GRADIENT	.00198	-.00044	-.00225	-.00326	.00219	.00039	-.00057	.00010	.00652	.00651

IA156A, AEDC PWT 16T-470, 0 T S W/SILTS (R8NL60) (10 MAY 80)

REFERENCE DATA

SREF = 2690.0000 SQ.FT. XMRP = 976.0000 IN. XT
LREF = 1290.3000 INCHES YMRP = .0000 IN. YT
BREF = 1290.3000 INCHES ZMRP = 400.0000 IN. ZT
SCALE = .0200

PARAMETRIC DATA

IB-ELV = 10.000 OB-ELV = 9.000
BDFLAP = .000 SPDBRK = .000
RUDDER = .000 SILTS = 1.000
MACH = 1.150 RN/L = 3.500

RUN NO. 972/ 0 RN/L = 3.49 GRADIENT INTERVAL = -5.00/ 5.00

ALPHAL	BETAL	CNFLS	CAFLS	CLMFLS	CYFLS	CYNFLS	CBLLS	CABLS	CYNBLS	CP5	CP6
-8.729	-5.758	-.14740	.03260	.05950	-.02830	-.01270	-.02920	.04750	-.00920	-.55980	-.52110
-8.822	-3.527	-.12410	.03110	.04740	-.03860	-.00580	-.02460	.04720	-.00920	-.55360	-.52140
-8.704	.464	-.07170	.02940	.01460	-.04700	-.00170	-.01440	.04470	-.00870	-.52600	-.49190
-8.413	4.682	-.02300	.02630	-.01530	-.03850	-.00890	-.00480	.03990	-.00770	-.47560	-.43240
-8.376	6.569	-.00850	.02370	-.02320	-.03290	-.01370	-.00200	.03720	-.00720	-.44730	-.40020
	GRADIENT	.01231	-.00059	-.00763	.00003	-.00039	.00241	-.00089	.00018	.00953	.01087

RUN NO. 973/ 0 RN/L = 3.49 GRADIENT INTERVAL = -5.00/ 5.00

ALPHAL	BETAL	CNFLS	CAFLS	CLMFLS	CYFLS	CYNFLS	CBLLS	CABLS	CYNBLS	CP5	CP6
-6.613	-5.833	-.11930	.03440	.05220	-.00300	-.02260	-.02370	.04680	-.00910	-.55290	-.51180
-6.499	-3.878	-.09800	.03340	.04040	-.00770	-.01950	-.01950	.04520	-.00880	-.53280	-.49690
-6.617	.333	-.05390	.02940	.01220	-.01720	-.01590	-.01080	.04330	-.00840	-.51300	-.47330
-6.317	4.498	-.01300	.02880	-.01430	-.01240	-.02030	-.00290	.03900	-.00760	-.46630	-.42220
-6.224	6.499	.00200	.02730	-.02330	-.00750	-.02480	.00010	.03470	-.00670	-.41460	-.37610
	GRADIENT	.01015	-.00055	-.00653	-.00056	-.00009	.00198	-.00074	.00014	.00793	.00891

IA156A, AEDC PWT 16T-470, 0 T S W/SILTS (R8NL60) (10 MAY 80)

REFERENCE DATA

SREF = 2690.0000 SQ.FT. XMRP = 976.0000 IN. XT
LREF = 1290.3000 INCHES YMRP = .0000 IN. YT
BREF = 1290.3000 INCHES ZMRP = 400.0000 IN. ZT
SCALE = .0200

PARAMETRIC DATA

IB-ELV = 10.000 OB-ELV = 9.000
BDFLAP = .000 SPDBRK = .000
RUDDER = .000 SILTS = 1.000
MACH = 1.150 RN/L = 3.500

RUN NO. 974/ 0 RN/L = 3.49 GRADIENT INTERVAL = -5.00/ 5.00

ALPHAL	BETAL	CNFLS	CAFLS	CLMFLS	CYFLS	CYNFLS	CBLLS	CABLS	CYNBLS	CP5	CP6
-4.328	-5.972	-.09630	.03530	.04660	.02180	-.03510	-.01910	.04560	-.00880	-.54040	-.49710
-4.527	-3.844	-.07830	.03420	.03600	.01750	-.03240	-.01560	.04440	-.00860	-.52420	-.48580
-4.434	.539	-.03650	.03010	.00940	.01520	-.03240	-.00740	.04220	-.00820	-.50410	-.45590
-3.842	4.474	-.00530	.03080	-.01010	.01800	-.03530	-.00130	.03720	-.00720	-.44230	-.40490
-3.949	6.351	.00410	.02890	-.01680	.01630	-.03610	.00050	.03570	-.00690	-.42200	-.39010
	GRADIENT	.00879	-.00042	-.00555	.00005	-.00034	.00172	-.00086	.00017	.00975	.00967

RUN NO. 975/ 0 RN/L = 3.49 GRADIENT INTERVAL = -5.00/ 5.00

ALPHAL	BETAL	CNFLS	CAFLS	CLMFLS	CYFLS	CYNFLS	CBLLS	CABLS	CYNBLS	CP5	CP6
-.319	-6.779	-.06110	.03710	.03770	.05430	-.05560	-.01220	.04480	-.00870	-.53620	-.48320
-.286	-4.668	-.04760	.03680	.02930	.05050	-.05320	-.00960	.04330	-.00840	-.51710	-.46980
-.293	-.386	-.02260	.03370	.01300	.04620	-.05190	-.00470	.04150	-.00810	-.49760	-.44760
-.200	3.817	-.00250	.03080	-.00180	.03370	-.04420	-.00080	.03640	-.00710	-.43620	-.39230
-.180	6.034	.00590	.02990	-.00850	.02730	-.04120	.00090	.03420	-.00660	-.41560	-.36440
	GRADIENT	.00532	-.00071	-.00367	-.00198	.00106	.00104	-.00081	.00015	.00952	.00912

RUN NO. 976/ 0 RN/L = 3.49 GRADIENT INTERVAL = -5.00/ 5.00

ALPHAL	BETAL	CNFLS	CAFLS	CLMFLS	CYFLS	CYNFLS	CBLLS	CABLS	CYNBLS	CP5	CP6
4.396	-5.682	-.01340	.03680	.02030	.05570	-.06120	-.00290	.04240	-.00820	-.50530	-.45920
4.397	-3.611	-.00750	.03580	.01540	.04760	-.05550	-.00170	.04160	-.00810	-.49370	-.45390
4.204	.364	.00050	.03420	.00680	.03600	-.04740	-.00010	.04060	-.00790	-.48400	-.44030
4.148	4.151	.00940	.03180	-.00350	.02040	-.03690	.00160	.03810	-.00740	-.45540	-.41320
4.108	6.299	.01230	.03080	-.00710	.01620	-.03540	.00210	.03540	-.00690	-.42490	-.38200
	GRADIENT	.00218	-.00051	-.00243	-.00350	.00239	.00042	-.00045	.00009	.00491	.00523

IA156A, AEDC PWT 16T-470, 0 T S W/SILTS (R8NL61) (10 MAY 80)

REFERENCE DATA

SREF = 2690.0000 SQ.FT. XMRP = 976.0000 IN. XT
LREF = 1290.3000 INCHES YMRP = .0000 IN. YT
BREF = 1290.3000 INCHES ZMRP = 400.0000 IN. ZT
SCALE = .0200

PARAMETRIC DATA

IB-ELV = 10.000 OB-ELV = 9.000
BDFLAP = .000 SPDBRK = .000
RUDDER = .000 SILTS = 1.000
MACH = 1.250 RN/L = 3.500

RUN NO. 977/ 0 RN/L = 3.51 GRADIENT INTERVAL = -5.00/ 5.00

ALPHAL	BETAL	CNFLS	CAFLS	CLMFLS	CYFLS	CYNFLS	CBLLS	CABLS	CYNBLS	CP5	CP6
-8.675	-5.808	-.14930	.03460	.06210	-.02580	-.00970	-.02950	.04290	-.00830	-.50830	-.46840
-8.791	-3.583	-.12550	.03320	.04890	-.03830	-.00190	-.02490	.04240	-.00820	-.49900	-.46680
-8.657	.449	-.07370	.03090	.01610	-.04550	.00010	-.01480	.04080	-.00790	-.47990	-.45000
-8.398	4.658	-.02720	.02790	-.01380	-.04230	-.00470	-.00570	.03590	-.00700	-.42980	-.38800
-8.391	6.605	-.01180	.02500	-.02330	-.03840	-.00880	-.00270	.03310	-.00640	-.39690	-.35590
	GRADIENT	.01192	-.00064	-.00760	-.00048	-.00035	.00233	-.00079	.00015	.00842	.00960

RUN NO. 978/ 0 RN/L = 3.51 GRADIENT INTERVAL = -5.00/ 5.00

ALPHAL	BETAL	CNFLS	CAFLS	CLMFLS	CYFLS	CYNFLS	CBLLS	CABLS	CYNBLS	CP5	CP6
-6.573	-5.860	-.11990	.03580	.05350	-.00390	-.01890	-.02380	.04200	-.00820	-.50060	-.45550
-6.471	-3.921	-.09990	.03450	.04260	-.00910	-.01590	-.01990	.04130	-.00800	-.48740	-.45270
-6.559	.313	-.05680	.03130	.01510	-.01580	-.01430	-.01140	.03990	-.00780	-.47260	-.43700
-6.284	4.517	-.01590	.02950	-.01240	-.01590	-.01690	-.00340	.03520	-.00680	-.42050	-.38180
-6.216	6.504	-.00140	.02760	-.02240	-.01220	-.02040	-.00060	.03200	-.00620	-.38320	-.34530
	GRADIENT	.00996	-.00059	-.00652	-.00081	-.00012	.00196	-.00072	.00014	.00792	.00840

RUN NO. 979/ 0 RN/L = 3.52 GRADIENT INTERVAL = -5.00/ 5.00

ALPHAL	BETAL	CNFLS	CAFLS	CLMFLS	CYFLS	CYNFLS	CBLLS	CABLS	CYNBLS	CP5	CP6
-4.299	-6.006	-.09670	.03680	.04720	.01610	-.03050	-.01920	.04100	-.00800	-.49190	-.44250
-4.485	-3.849	-.08040	.03520	.03710	.00970	-.02680	-.01600	.04020	-.00780	-.47790	-.43680
-4.377	.534	-.03930	.03230	.01170	.00960	-.02770	-.00800	.03800	-.00740	-.45390	-.41170
-3.829	4.492	-.00890	.03100	-.00740	.01320	-.03150	-.00200	.03440	-.00670	-.41170	-.37250
-3.914	6.351	.00120	.02860	-.01490	.01210	-.03240	-.00010	.03310	-.00640	-.39440	-.35990
	GRADIENT	.00859	-.00051	-.00534	.00041	-.00056	.00168	-.00069	.00013	.00789	.00767

RUN NO. 980/ 0 RN/L = 3.50 GRADIENT INTERVAL = -5.00/ 5.00

ALPHAL	BETAL	CNFLS	CAFLS	CLMFLS	CYFLS	CYNFLS	CBLLS	CABLS	CYNBLS	CP5	CP6
-.263	-6.816	-.06150	.03860	.03940	.05190	-.05250	-.01230	.04050	-.00790	-.48940	-.43280
-.232	-4.704	-.04960	.03780	.03200	.04840	-.05030	-.01000	.03970	-.00770	-.47760	-.42590
-.230	-.396	-.02580	.03460	.01590	.04260	-.04800	-.00530	.03750	-.00730	-.44970	-.40540
-.141	3.819	-.00700	.03070	.00220	.03070	-.04140	-.00170	.03340	-.00650	-.40160	-.35850
-.160	6.066	.00220	.02960	-.00560	.02560	-.03970	.00010	.03120	-.00610	-.37860	-.33150
	GRADIENT	.00500	-.00083	-.00350	-.00207	.00104	.00097	-.00074	.00014	.00891	.00790

IA156A, AEDC PWT 16T-470, O T S W/SILTS (R8NL61) (10 MAY 80)

REFERENCE DATA

SREF = 2690.0000 SQ.FT. XMRP = 976.0000 IN. XT
LREF = 1290.3000 INCHES YMRP = .0000 IN. YT
BREF = 1290.3000 INCHES ZMRP = 400.0000 IN. ZT
SCALE = .0200

PARAMETRIC DATA

IB-ELV = 10.000 OB-ELV = 9.000
BDFLAP = .000 SPDBRK = .000
RUDDER = .000 SILTS = 1.000
MACH = 1.250 RN/L = 3.500

RUN NO. 981/ 0 RN/L = 3.50 GRADIENT INTERVAL = -5.00/ 5.00

ALPHAL	BETAL	CNFLS	CAFLS	CLMFLS	CYFLS	CYNFLS	CBLLS	CABLS	CYNBLS	CP5	CP6
4.476	-5.686	-.01370	.03830	.02180	.05160	-.05810	-.00290	.03870	-.00750	-.46510	-.41550
4.445	-3.604	-.00810	.03730	.01700	.04290	-.05210	-.00180	.03770	-.00730	-.45070	-.40750
4.271	.374	-.00110	.03400	.00880	.03170	-.04480	-.00050	.03730	-.00720	-.44810	-.40190
4.197	4.149	.00750	.03160	-.00200	.01670	-.03490	.00120	.03440	-.00670	-.41480	-.36960
4.172	6.308	.01120	.03080	-.00670	.01210	-.03300	.00190	.03210	-.00620	-.38820	-.34190
	GRADIENT	.00201	-.00074	-.00245	-.00337	.00222	.00039	-.00042	.00008	.00459	.00486

IA156A, AEDC PWT 16T-470, O T S W/SILTS (R8NL62) (10 MAY 80)

REFERENCE DATA

SREF = 2690.0000 SQ.FT. XMRP = 976.0000 IN. XT
LREF = 1290.3000 INCHES YMRP = .0000 IN. YT
BREF = 1290.3000 INCHES ZMRP = 400.0000 IN. ZT
SCALE = .0200

PARAMETRIC DATA

IB-ELV = 10.000 OB-ELV = 11.000
BDFLAP = .000 SPDBRK = .000
RUDDER = .000 SILTS = 1.000
MACH = .300 RN/L = 3.500

RUN NO. 985/ 0 RN/L = 2.62 GRADIENT INTERVAL = 5.00/ 5.00

ALPHAL	BETAL	CNFLS	CAFLS	CLMFLS	CYFLS	CYNFLS	CBLLS	CABLS	CYNBLS	CP5	CP6
-6.251	-9.857	-.12920	.01220	.06020	.03040	-.03330	-.02500	.03970	-.00770	-.47750	-.42600
-6.186	-5.735	-.09390	.01160	.04150	.01080	-.01960	-.01810	.03710	-.00720	-.44610	-.39920
-6.061	.213	-.04340	.01090	.01390	.00290	-.01420	-.00810	.03220	-.00630	-.41180	-.32300
-5.769	6.284	-.00180	.01260	-.01050	.00530	-.02020	.00010	.02590	-.00500	-.33020	-.25980
-5.908	10.178	.01400	.01090	-.02020	.00570	-.02470	.00320	.02390	-.00460	-.31090	-.23360
	GRADIENT	.00000	.00000	.00000	.00000	.00000	.00000	.00000	.00000	.00000	.00000

RUN NO. 986/ 0 RN/L = 2.62 GRADIENT INTERVAL = -5.00/ 5.00

ALPHAL	BETAL	CNFLS	CAFLS	CLMFLS	CYFLS	CYNFLS	CBLLS	CABLS	CYNBLS	CP5	CP6
-.255	-10.491	-.06570	.01540	.03800	.06040	-.05190	-.01240	.03900	-.00760	-.46620	-.42260
-.246	-6.438	-.04850	.01550	.02790	.04990	-.04520	-.00900	.03530	-.00680	-.42710	-.37650
-.213	-.253	-.02120	.01390	.01180	.03810	-.03860	-.00370	.03150	-.00610	-.39100	-.32780
-.175	5.735	-.00140	.01610	-.00220	.02220	-.03000	.00020	.02420	-.00470	-.31280	-.23960
-.168	9.910	.01250	.01550	-.01350	.02010	-.03220	.00290	.02550	-.00490	-.32640	-.25390
	GRADIENT	.00000	.00000	.00000	.00000	.00000	.00000	.00000	.00000	.00000	.00000

IA156A, AEDC PWT 16T-470, O T S W/SILTS (R8NL62) (10 MAY 80)

REFERENCE DATA

SREF = 2690.0000 SQ.FT. XMRP = 976.0000 IN. XT
LREF = 1290.3000 INCHES YMRP = .0000 IN. YT
BREF = 1290.3000 INCHES ZMRP = 400.0000 IN. ZT
SCALE = .0200

PARAMETRIC DATA

IB-ELV = 10.000 OB-ELV = 11.000
BDFLAP = .000 SPDBRK = .000
RUDDER = .000 SILTS = 1.000
MACH = .300 RN/L = 3.500

RUN NO. 987/ 0 RN/L = 2.62 GRADIENT INTERVAL = -5.00/ 5.00

ALPHAL	BETAL	CNFLS	CAFLS	CLMFLS	CYFLS	CYNFLS	CBLLS	CABLS	CYNBLS	CP5	CP6
6.297	-9.908	.01530	.01720	.00350	.04530	-.04720	.00370	.03470	-.00670	-.42060	-.37030
6.062	-5.694	.01450	.01550	.00250	.03440	-.03860	.00350	.03270	-.00640	-.40060	-.34540
5.937	.162	.00930	.01510	.00300	.01940	-.02840	.00250	.02960	-.00570	-.37330	-.30050
6.006	6.235	.00740	.01540	-.00060	-.00130	-.01470	.00210	.02560	-.00500	-.33300	-.25020
5.866	10.125	.01140	.01550	-.00720	-.00310	-.01580	.00290	.02680	-.00520	-.34680	-.26450
	GRADIENT	.00000	.00000	.00000	.00000	.00000	.00000	.00000	.00000	.00000	.00000

IA156A, AEDC PWT 16T-470, O T S W/SILTS (R8NL63) (10 MAY 80)

REFERENCE DATA

SREF = 2690.0000 SQ.FT. XMRP = 976.0000 IN. XT
LREF = 1290.3000 INCHES YMRP = .0000 IN. YT
BREF = 1290.3000 INCHES ZMRP = 400.0000 IN. ZT
SCALE = .0200

PARAMETRIC DATA

IB-ELV = 10.000 OB-ELV = 11.000
BDFLAP = .000 SPDBRK = .000
RUDDER = .000 SILTS = 1.000
MACH = .300 RN/L = 3.500

RUN NO. 984/ 0 RN/L = 2.64 GRADIENT INTERVAL = -5.00/ 5.00

ALPHAL	BETAL	CNFLS	CAFLS	CLMFLS	CYFLS	CYNFLS	CBLLS	CABLS	CYNBLS	CP5	CP6
-10.456	-7.837	-.15800	.00640	.06640	-.01020	-.01290	-.03070	.04250	-.00820	-.50920	-.45810
-10.114	-5.678	-.13170	.00760	.05350	-.02200	-.00460	-.02560	.03930	-.00760	-.47490	-.42030
-10.029	.363	-.07530	.00780	.02460	-.05010	.01350	-.01450	.03510	-.00680	-.44850	-.35270
-10.028	6.333	-.01510	.00920	-.01070	-.04180	.00220	-.00270	.02790	-.00540	-.36750	-.26850
-10.066	8.291	-.00070	.00830	-.01810	-.03390	-.00490	.00010	.02510	-.00490	-.32700	-.24510
	GRADIENT	.00000	.00000	.00000	.00000	.00000	.00000	.00000	.00000	.00000	.00000

RUN NO. 988/ 0 RN/L = 2.63 GRADIENT INTERVAL = -5.00/ 5.00

ALPHAL	BETAL	CNFLS	CAFLS	CLMFLS	CYFLS	CYNFLS	CBLLS	CABLS	CYNBLS	CP5	CP6
10.260	-7.800	.05320	.01510	-.01080	.00660	-.02440	.01110	.03340	-.00650	-.40270	-.35870
10.135	-5.723	.04810	.01500	-.00890	-.00230	-.01840	.01010	.03330	-.00650	-.41340	-.34490
9.967	.276	.02970	.01410	-.00180	-.01800	-.00820	.00650	.03090	-.00600	-.38920	-.31560
10.137	6.372	.01980	.01290	-.00290	-.03790	.00500	.00450	.02660	-.00520	-.34010	-.26730
10.081	8.353	.01850	.01260	-.00540	-.03770	.00470	.00430	.02690	-.00520	-.33900	-.27460
	GRADIENT	.00000	.00000	.00000	.00000	.00000	.00000	.00000	.00000	.00000	.00000

IA156A, AEDC PWT 16T-470, O T S W/SILTS (R8NL64) (10 MAY 80)

REFERENCE DATA

SREF = 2690.0000 SQ.FT. XMRP = 976.0000 IN. XT
LREF = 1290.3000 INCHES YMRP = .0000 IN. YT
BREF = 1290.3000 INCHES ZMRP = 400.0000 IN. ZT
SCALE = .0200

PARAMETRIC DATA

IB-ELV = 10.000 OB-ELV = 11.000
BDFLAP = .000 SPDBRK = .000
RUDDER = .000 SILTS = 1.000
MACH = .600 RN/L = 3.500

RUN NO. 989/ 0 RN/L = 3.51 GRADIENT INTERVAL = -5.00/ 5.00

ALPHAL	BETAL	CNFLS	CAFLS	CLMFLS	CYFLS	CYNFLS	CBLLS	CABLS	CYNBLS	CP5	CP6
-8.375	-7.713	-.13770	.00820	.05870	-.00390	-.01550	-.02670	.04190	-.00810	-.49860	-.45490
-8.373	-5.646	-.11940	.01030	.04940	-.01540	-.00870	-.02310	.03820	-.00740	-.45520	-.41410
-8.372	-3.635	-.09800	.00930	.03860	-.02320	-.00310	-.01900	.03730	-.00720	-.44770	-.40250
-8.203	.291	-.06140	.00830	.01860	-.03180	.00180	-.01180	.03530	-.00690	-.43870	-.36540
-8.039	4.434	-.02120	.01080	-.00580	-.03050	-.00210	-.00390	.03050	-.00590	-.39230	-.30390
-8.021	6.319	-.00590	.00940	-.01490	-.02560	-.00730	-.00090	.02750	-.00530	-.34730	-.27940
-8.032	8.345	.00620	.00900	-.02150	-.02140	-.01230	.00140	.02460	-.00480	-.31060	-.25030
	GRADIENT	.00952	.00019	-.00551	-.00089	.00011	.00187	-.00085	.00016	.00691	.01224

RUN NO. 990/ 0 RN/L = 3.50 GRADIENT INTERVAL = -5.00/ 5.00

ALPHAL	BETAL	CNFLS	CAFLS	CLMFLS	CYFLS	CYNFLS	CBLLS	CABLS	CYNBLS	CP5	CP6
-6.325	-7.839	-.11630	.01130	.05200	.01400	-.02450	-.02250	.03930	-.00760	-.46640	-.42750
-6.289	-5.817	-.09960	.01130	.04340	.00500	-.01850	-.01930	.03750	-.00730	-.44620	-.40780
-6.181	-3.908	-.08040	.01110	.03370	.00040	-.01490	-.01550	.03610	-.00700	-.43160	-.39020
-6.213	.152	-.04590	.01100	.01380	-.00700	-.01120	-.00870	.03200	-.00620	-.39550	-.33340
-6.007	4.264	-.01460	.01210	-.00500	-.00550	-.01420	-.00260	.02890	-.00560	-.36910	-.29070
-5.923	6.269	-.00190	.01170	-.01290	-.00310	-.01800	-.00010	.02600	-.00510	-.32610	-.26690
-5.930	8.262	.00820	.01080	-.01930	-.00210	-.02090	.00180	.02430	-.00470	-.30540	-.24860
	GRADIENT	.00805	.00012	-.00473	-.00072	.00008	.00158	-.00088	.00017	.00764	.01217

RUN NO. 991/ 0 RN/L = 3.50 GRADIENT INTERVAL = -5.00/ 5.00

ALPHAL	BETAL	CNFLS	CAFLS	CLMFLS	CYFLS	CYNFLS	CBLLS	CABLS	CYNBLS	CP5	CP6
-4.079	-7.973	-.09410	.01350	.04520	.03170	-.03400	-.01820	.03820	-.00740	-.45230	-.41640
-4.317	-5.865	-.08180	.01240	.03800	.02180	-.02730	-.01580	.03690	-.00720	-.44150	-.39840
-4.211	-3.860	-.06470	.01240	.02890	.01820	-.02480	-.01240	.03500	-.00680	-.42200	-.37620
-4.149	.404	-.03170	.01230	.00970	.01510	-.02410	-.00600	.03040	-.00590	-.37800	-.31570
-3.720	4.256	-.00810	.01320	-.00470	.01300	-.02430	-.00130	.02770	-.00540	-.34850	-.28270
-3.787	6.115	.00060	.01300	-.01090	.01200	-.02550	.00040	.02550	-.00490	-.31850	-.26220
-3.813	8.115	.01010	.01190	-.01760	.01170	-.02700	.00230	.02460	-.00480	-.30980	-.25140
	GRADIENT	.00699	.00010	-.00415	-.00064	.00006	.00137	-.00090	.00017	.00908	.01157

IA156A, AEDC PWT 16T-470, 0 T S W/SILTS (R8NL64) (10 MAY 80)

REFERENCE DATA

SREF = 2690.0000 SQ.FT. XMRP = 976.0000 IN. XT
LREF = 1290.3000 INCHES YMRP = .0000 IN. YT
BREF = 1290.3000 INCHES ZMRP = 400.0000 IN. ZT
SCALE = .0200

PARAMETRIC DATA

IB-ELV = 10.000 OB-ELV = 11.000
BDFLAP = .000 SPDBRK = .000
RUDDER = .000 SILTS = 1.000
MACH = .600 RN/L = 3.500

RUN NO. 992/ 0 RN/L = 3.50 GRADIENT INTERVAL = -5.00/ 5.00

ALPHAL	BETAL	CNFLS	CAFLS	CLMFLS	CYFLS	CYNFLS	CBLLS	CABLS	CYNBLS	CP5	CP6
-.266	-8.652	-.06050	.01550	.03470	.05390	-.04900	-.01160	.03710	-.00720	-.44290	-.40310
-.244	-6.567	-.05140	.01540	.02960	.04810	-.04480	-.00980	.03620	-.00700	-.43610	-.38800
-.223	-4.317	-.04020	.01480	.02310	.04270	-.04130	-.00760	.03520	-.00680	-.42150	-.37910
-.199	-.226	-.01970	.01390	.01010	.03740	-.03950	-.00360	.03080	-.00600	-.37250	-.32810
-.139	3.861	-.00600	.01390	.00090	.02690	-.03320	-.00090	.02710	-.00530	-.33910	-.27860
-.140	5.969	.00120	.01400	-.00500	.02180	-.03080	.00050	.02530	-.00490	-.31970	-.25620
-.135	8.070	.00880	.01450	-.01130	.02030	-.03150	.00200	.02460	-.00480	-.31140	-.24960
	GRADIENT	.00418	-.00011	-.00271	-.00193	.00099	.00082	-.00099	.00018	.01008	.01229

RUN NO. 993/ 0 RN/L = 3.50 GRADIENT INTERVAL = -5.00/ 5.00

ALPHAL	BETAL	CNFLS	CAFLS	CLMFLS	CYFLS	CYNFLS	CBLLS	CABLS	CYNBLS	CP5	CP6
4.430	-7.877	-.00600	.01580	.01190	.05070	-.04990	-.00080	.03540	-.00690	-.42330	-.38400
4.356	-5.772	-.00260	.01530	.00920	.04480	-.04510	-.00020	.03400	-.00660	-.40840	-.36630
4.303	-3.782	-.00150	.01510	.00800	.04030	-.04190	.00000	.03260	-.00630	-.39790	-.34490
4.083	.158	.00060	.01390	.00500	.03170	-.03660	.00040	.03000	-.00580	-.36740	-.31560
4.132	4.198	.00430	.01360	.00030	.01790	-.02760	.00120	.02750	-.00530	-.34260	-.28300
4.057	6.317	.00590	.01430	-.00250	.01170	-.02400	.00150	.02560	-.00500	-.32630	-.25770
4.044	8.323	.01020	.01450	-.00740	.00850	-.02290	.00230	.02570	-.00500	-.32730	-.25840
	GRADIENT	.00073	-.00019	-.00097	-.00281	.00179	.00015	-.00064	.00013	.00693	.00776

RUN NO. 994/ 0 RN/L = 3.50 GRADIENT INTERVAL = -5.00/ 5.00

ALPHAL	BETAL	CNFLS	CAFLS	CLMFLS	CYFLS	CYNFLS	CBLLS	CABLS	CYNBLS	CP5	CP6
6.526	-7.920	.01510	.01540	.00290	.03910	-.04380	.00330	.03480	-.00680	-.41630	-.37710
6.505	-5.841	.01600	.01500	.00190	.03120	-.03770	.00350	.03370	-.00650	-.40620	-.36180
6.498	-3.782	.01410	.01520	.00250	.02580	-.03350	.00310	.03280	-.00640	-.40110	-.34610
6.179	.269	.00990	.01470	.00230	.01820	-.02870	.00230	.03030	-.00590	-.37100	-.31820
6.084	4.201	.00960	.01350	-.00110	.00570	-.02030	.00220	.02730	-.00530	-.34540	-.27700
6.051	6.123	.00980	.01370	-.00280	.00020	-.01670	.00230	.02620	-.00510	-.33410	-.26280
6.056	8.375	.01260	.01370	-.00720	-.00270	-.01570	.00280	.02650	-.00510	-.33510	-.26780
	GRADIENT	-.00057	-.00021	-.00045	-.00251	.00165	-.00011	-.00069	.00014	.00698	.00865

IA156A, AEDC PWT 16T-470, O T S W/SILTS (R8NL64) (10 MAY 80)

REFERENCE DATA

SREF = 2690.0000 SQ.FT. XMRP = 976.0000 IN. XT
LREF = 1290.3000 INCHES YMRP = .0000 IN. YT
BREF = 1290.3000 INCHES ZMRP = 400.0000 IN. ZT
SCALE = .0200

PARAMETRIC DATA

IB-ELV = 10.000 OB-ELV = 11.000
BDFLAP = .000 SPDBRK = .000
RUDDER = .000 SILTS = 1.000
MACH = .600 RN/L = 3.500

RUN NO. 995/ 0 RN/L = 3.50 GRADIENT INTERVAL = -5.00/ 5.00

ALPHAL	BETAL	CNFLS	CAFLS	CLMFLS	CYFLS	CYNFLS	CBLLS	CABLS	CYNBLS	CP5	CP6
8.504	-7.759	.03490	.01500	-.00460	.02190	-.03390	.00720	.03370	-.00650	-.40620	-.36110
8.398	-5.671	.03170	.01470	-.00350	.01450	-.02840	.00650	.03360	-.00650	-.41000	-.35650
8.376	-3.708	.02780	.01440	-.00200	.00890	-.02400	.00580	.03340	-.00650	-.40890	-.35190
8.268	.282	.02060	.01410	-.00030	.00070	-.01980	.00440	.03090	-.00600	-.37450	-.32950
8.171	4.241	.01670	.01240	-.00220	-.01110	-.01130	.00360	.02760	-.00540	-.34870	-.28130
8.232	6.371	.01600	.01260	-.00400	-.01810	-.00680	.00350	.02670	-.00520	-.33640	-.27160
8.185	8.378	.01740	.01260	-.00790	-.02020	-.00600	.00380	.02680	-.00520	-.33620	-.27380
	GRADIENT	-.00140	-.00025	-.00002	-.00252	.00160	-.00028	-.00073	.00014	.00758	.00888

IA156A, AEDC PWT 16T-470, O T S W/SILTS (R8NL65) (10 MAY 80)

REFERENCE DATA

SREF = 2690.0000 SQ.FT. XMRP = 976.0000 IN. XT
LREF = 1290.3000 INCHES YMRP = .0000 IN. YT
BREF = 1290.3000 INCHES ZMRP = 400.0000 IN. ZT
SCALE = .0200

PARAMETRIC DATA

IB-ELV = 10.000 OB-ELV = 11.000
BDFLAP = .000 SPDBRK = .000
RUDDER = .000 SILTS = 1.000
MACH = .800 RN/L = 3.500

RUN NO. 996/ 0 RN/L = 3.50 GRADIENT INTERVAL = -5.00/ 5.00

ALPHAL	BETAL	CNFLS	CAFLS	CLMFLS	CYFLS	CYNFLS	CBLLS	CABLS	CYNBLS	CP5	CP6
-8.508	-5.813	-.12550	.01290	.05150	-.02710	-.00670	-.02440	.03920	-.00760	-.45620	-.43630
-8.521	-3.572	-.10240	.01340	.04030	-.03670	-.00040	-.01990	.03690	-.00720	-.43080	-.40920
-8.397	.365	-.06400	.01260	.01880	-.04490	.00440	-.01230	.03470	-.00670	-.42230	-.36870
-8.207	4.615	-.02010	.01300	-.00860	-.04150	.00020	-.00370	.02940	-.00570	-.36520	-.30430
-8.150	6.451	-.00560	.01130	-.01700	-.03520	-.00550	-.00090	.02600	-.00510	-.32520	-.26840
	GRADIENT	.01006	-.00005	-.00598	-.00057	.00006	.00198	-.00092	.00018	.00808	.01284

RUN NO. 997/ 0 RN/L = 3.50 GRADIENT INTERVAL = -5.00/ 5.00

ALPHAL	BETAL	CNFLS	CAFLS	CLMFLS	CYFLS	CYNFLS	CBLLS	CABLS	CYNBLS	CP5	CP6
-6.404	-5.831	-.10250	.01550	.04480	-.00410	-.01710	-.01990	.03760	-.00730	-.43930	-.41610
-6.322	-3.911	-.08560	.01520	.03640	-.00980	-.01320	-.01660	.03600	-.00700	-.42210	-.39740
-6.372	.258	-.04750	.01410	.01400	-.01670	-.00920	-.00910	.03300	-.00640	-.40030	-.35100
-6.163	4.388	-.01470	.01480	-.00660	-.01460	-.01210	-.00260	.02840	-.00550	-.35160	-.29560
-5.831	6.536	.00010	.01370	-.01550	-.00800	-.01760	.00020	.02470	-.00480	-.30740	-.25490
	GRADIENT	.00854	-.00005	-.00518	-.00058	.00013	.00169	-.00092	.00018	.00849	.01227

IA156A, AEDC PWT 16T-470, 0 T S W/SILTS (R8NL65) (10 MAY 80)

REFERENCE DATA

SREF = 2690.0000 SQ.FT. XMRP = 976.0000 IN. XT
LREF = 1290.3000 INCHES YMRP = .0000 IN. YT
BREF = 1290.3000 INCHES ZMRP = 400.0000 IN. ZT
SCALE = .0200

PARAMETRIC DATA

IB-ELV = 10.000 OB-ELV = 11.000
BDFLAP = .000 SPDBRK = .000
RUDDER = .000 SILTS = 1.000
MACH = .800 RN/L = 3.500

RUN NO. 998/ 0 RN/L = 3.50 GRADIENT INTERVAL = -5.00/ 5.00

ALPHAL	BETAL	CNFLS	CAFLS	CLMFLS	CYFLS	CYNFLS	CBLLS	CABLS	CYNBLS	CP5	CP6
-4.157	-6.001	-.08230	.01740	.03880	.01850	-.02830	-.01590	.03690	-.00720	-.43610	-.40330
-4.392	-3.836	-.06790	.01690	.03090	.01090	-.02330	-.01310	.03520	-.00680	-.41520	-.38700
-4.287	.484	-.03240	.01560	.00950	.00850	-.02280	-.00610	.03100	-.00600	-.37250	-.33250
-3.797	4.414	-.00740	.01610	-.00580	.00820	-.02370	-.00120	.02700	-.00520	-.33060	-.28380
-3.852	6.255	.00180	.01560	-.01220	.00690	-.02460	.00060	.02440	-.00470	-.30250	-.25420
	GRADIENT	.00735	-.00010	-.00446	-.00033	-.00005	.00145	-.00099	.00019	.01025	.01251

RUN NO. 999/ 0 RN/L = 3.50 GRADIENT INTERVAL = -5.00/ 5.00

ALPHAL	BETAL	CNFLS	CAFLS	CLMFLS	CYFLS	CYNFLS	CBLLS	CABLS	CYNBLS	CP5	CP6
-.247	-6.763	-.05440	.01910	.03110	.04560	-.04520	-.01040	.03680	-.00710	-.43790	-.39900
-.242	-4.620	-.04540	.01920	.02570	.03940	-.04060	-.00870	.03470	-.00670	-.41440	-.37580
-.238	-.341	-.02330	.01780	.01150	.03260	-.03690	-.00430	.03020	-.00590	-.36600	-.32270
-.166	3.773	-.00400	.01730	-.00240	.02520	-.03290	-.00060	.02640	-.00510	-.32640	-.27550
-.157	5.926	.00460	.01750	-.00910	.02100	-.03080	.00110	.02500	-.00490	-.31310	-.25670
	GRADIENT	.00493	-.00023	-.00335	-.00169	.00092	.00097	-.00099	.00019	.01049	.01195

RUN NO. 1000/ 0 RN/L = 3.51 GRADIENT INTERVAL = -5.00/ 5.00

ALPHAL	BETAL	CNFLS	CAFLS	CLMFLS	CYFLS	CYNFLS	CBLLS	CABLS	CYNBLS	CP5	CP6
4.418	-5.731	-.00550	.01890	.01050	.04510	-.04740	-.00080	.03480	-.00680	-.41230	-.38130
4.277	-3.609	-.00280	.01840	.00870	.03940	-.04270	-.00030	.03360	-.00650	-.40070	-.36400
3.996	.230	.00170	.01720	.00440	.03270	-.03850	.00060	.02940	-.00570	-.35610	-.31460
4.109	4.166	.00520	.01720	.00050	.01870	-.02940	.00120	.02730	-.00530	-.33880	-.28220
4.037	6.254	.00780	.01760	-.00320	.01350	-.02650	.00180	.02570	-.00500	-.32370	-.26260
	GRADIENT	.00103	-.00015	-.00105	-.00267	.00171	.00019	-.00081	.00015	.00795	.01051

RUN NO. 1001/ 0 RN/L = 3.51 GRADIENT INTERVAL = -5.00/ 5.00

ALPHAL	BETAL	CNFLS	CAFLS	CLMFLS	CYFLS	CYNFLS	CBLLS	CABLS	CYNBLS	CP5	CP6
6.476	-5.739	.01570	.01800	.00200	.03270	-.04150	.00330	.03480	-.00680	-.41400	-.37840
6.459	-3.691	.01480	.01800	.00190	.02350	-.03460	.00310	.03380	-.00660	-.40490	-.36410
6.087	.288	.01130	.01670	.00100	.01830	-.03140	.00240	.03080	-.00600	-.36930	-.33210
6.008	4.127	.01090	.01670	-.00160	.00630	-.02240	.00240	.02760	-.00540	-.34360	-.28590
6.116	6.306	.01260	.01710	-.00450	-.00020	-.01860	.00270	.02630	-.00510	-.33020	-.26930
	GRADIENT	-.00050	-.00017	-.00045	-.00219	.00156	-.00009	-.00079	.00015	.00785	.00999

IA156A, AEDC PWT 16T-470, 0 T S W/SILTS (R8NL66) (10 MAY 80)

REFERENCE DATA

SREF = 2690.0000 SQ.FT. XMRP = 976.0000 IN. XT
LREF = 1290.3000 INCHES YMRP = .0000 IN. YT
BREF = 1290.3000 INCHES ZMRP = 400.0000 IN. ZT
SCALE = .0200

PARAMETRIC DATA

IB-ELV = 10.000 OB-ELV = 11.000
BDFLAP = .000 SPDBRK = .000
RUDDER = .000 SILTS = 1.000
MACH = .900 RN/L = 3.500

RUN NO. 1002/ 0 RN/L = 3.50 GRADIENT INTERVAL = -5.00/ 5.00

ALPHAL	BETAL	CNFLS	CAFLS	CLMFLS	CYFLS	CYNFLS	CBLLS	CABLS	CYNBLS	CP5	CP6
-8.519	-5.790	-.12580	.01800	.05010	-.03210	-.00640	-.02450	.03830	-.00740	-.43980	-.43190
-8.605	-3.533	-.10480	.01690	.03980	-.04220	-.00010	-.02040	.03730	-.00720	-.43000	-.41950
-8.459	.402	-.06550	.01680	.01810	-.04960	.00370	-.01270	.03650	-.00710	-.43610	-.39580
-8.253	4.621	-.01950	.01640	-.01110	-.04750	.00020	-.00370	.02980	-.00580	-.36220	-.31610
-8.275	6.531	-.00490	.01390	-.01940	-.04310	-.00450	-.00080	.02730	-.00530	-.33850	-.28330
	GRADIENT	.01047	-.00006	-.00625	-.00064	.00003	.00205	-.00093	.00017	.00842	.01275

RUN NO. 1003/ 0 RN/L = 3.50 GRADIENT INTERVAL = -5.00/ 5.00

ALPHAL	BETAL	CNFLS	CAFLS	CLMFLS	CYFLS	CYNFLS	CBLLS	CABLS	CYNBLS	CP5	CP6
-6.468	-5.800	-.10630	.01910	.04500	-.01050	-.01540	-.02070	.03870	-.00750	-.44680	-.43520
-6.379	-3.880	-.08740	.01910	.03540	-.01600	-.01150	-.01700	.03670	-.00710	-.42390	-.41190
-6.445	.279	-.04920	.01810	.01360	-.02270	-.00860	-.00950	.03480	-.00680	-.41530	-.37720
-6.197	4.436	-.01260	.01790	-.00990	-.02040	-.01210	-.00230	.02980	-.00580	-.36060	-.31810
-6.113	6.441	.00040	.01660	-.01780	-.01670	-.01690	.00020	.02660	-.00520	-.32480	-.28040
	GRADIENT	.00899	-.00014	-.00545	-.00053	-.00007	.00177	-.00083	.00016	.00761	.01128

RUN NO. 1004/ 0 RN/L = 3.49 GRADIENT INTERVAL = -5.00/ 5.00

ALPHAL	BETAL	CNFLS	CAFLS	CLMFLS	CYFLS	CYNFLS	CBLLS	CABLS	CYNBLS	CP5	CP6
-4.177	-5.991	-.08440	.02140	.03890	.01530	-.02760	-.01640	.03800	-.00740	-.44040	-.42400
-4.452	-3.840	-.06960	.02050	.03040	.00620	-.02210	-.01350	.03660	-.00710	-.42310	-.40960
-4.345	.514	-.03230	.01860	.00760	.00300	-.02190	-.00620	.03290	-.00640	-.39270	-.35700
-3.835	4.444	-.00520	.01960	-.00900	.00360	-.02420	-.00090	.02890	-.00560	-.34470	-.31450
-3.901	6.299	.00400	.01870	-.01530	.00290	-.02600	.00090	.02630	-.00510	-.31800	-.28120
	GRADIENT	.00779	-.00011	-.00476	-.00032	-.00025	.00152	-.00093	.00018	.00942	.01149

RUN NO. 1005/ 0 RN/L = 3.49 GRADIENT INTERVAL = -5.00/ 5.00

ALPHAL	BETAL	CNFLS	CAFLS	CLMFLS	CYFLS	CYNFLS	CBLLS	CABLS	CYNBLS	CP5	CP6
-.299	-6.820	-.05510	.02330	.03090	.04540	-.04630	-.01060	.03770	-.00730	-.44880	-.41000
-.285	-4.659	-.04420	.02310	.02470	.03920	-.04210	-.00850	.03670	-.00710	-.43760	-.39730
-.304	-.326	-.02080	.02160	.00860	.03130	-.03870	-.00390	.03190	-.00620	-.38050	-.34550
-.229	3.794	-.00120	.02090	-.00600	.02370	-.03400	-.00010	.02840	-.00550	-.34570	-.30200
-.207	5.954	.00680	.02050	-.01200	.02130	-.03360	.00150	.02720	-.00530	-.33220	-.28760
	GRADIENT	.00509	-.00026	-.00363	-.00183	.00096	.00099	-.00098	.00019	.01089	.01128

IA156A, AEDC PWT 16T-470, O T S W/SILTS (R8NL66) (10 MAY 80)

REFERENCE DATA

SREF = 2690.0000 SQ.FT. XMRP = 976.0000 IN. XT
LREF = 1290.3000 INCHES YMRP = .0000 IN. YT
BREF = 1290.3000 INCHES ZMRP = 400.0000 IN. ZT
SCALE = .0200

PARAMETRIC DATA

IB-ELV = 10.000 OB-ELV = 11.000
BDFLAP = .000 SPDBRK = .000
RUDDER = .000 SILTS = 1.000
MACH = .900 RN/L = 3.500

RUN NO. 1006/ 0 RN/L = 3.50 GRADIENT INTERVAL = -5.00/ 5.00

ALPHAL	BETAL	CNFLS	CAFLS	CLMFLS	CYFLS	CYNFLS	CBLLS	CABLS	CYNBLS	CP5	CP6
4.423	-5.717	-.00810	.02270	.01160	.04680	-.04860	-.00140	.03690	-.00720	-.44100	-.40030
4.264	-3.608	-.00580	.02270	.00990	.04050	-.04360	-.00100	.03540	-.00690	-.42460	-.38080
3.954	.239	.00140	.02070	.00260	.03320	-.03940	.00050	.03230	-.00630	-.38850	-.34790
4.094	4.158	.00710	.02110	-.00200	.01970	-.03140	.00150	.02910	-.00570	-.35580	-.30730
4.015	6.255	.00990	.02060	-.00590	.01560	-.02940	.00210	.02760	-.00540	-.34120	-.28690
	GRADIENT	.00166	-.00021	-.00153	-.00268	.00157	.00032	-.00081	.00015	.00886	.00947

IA156A, AEDC PWT 16T-470, O T S W/SILTS (R8NL67) (10 MAY 80)

REFERENCE DATA

SREF = 2690.0000 SQ.FT. XMRP = 976.0000 IN. XT
LREF = 1290.3000 INCHES YMRP = .0000 IN. YT
BREF = 1290.3000 INCHES ZMRP = 400.0000 IN. ZT
SCALE = .0200

PARAMETRIC DATA

IB-ELV = 10.000 OB-ELV = 11.000
BDFLAP = .000 SPDBRK = .000
RUDDER = .000 SILTS = 1.000
MACH = .950 RN/L = 3.500

RUN NO. 1007/ 0 RN/L = 3.49 GRADIENT INTERVAL = -5.00/ 5.00

ALPHAL	BETAL	CNFLS	CAFLS	CLMFLS	CYFLS	CYNFLS	CBLLS	CABLS	CYNBLS	CP5	CP6
-8.662	-5.750	-.13310	.01940	.05100	-.03420	-.00720	-.02600	.04120	-.00800	-.47420	-.46320
-8.716	-3.524	-.10860	.01940	.03890	-.04500	.00060	-.02120	.03950	-.00770	-.45170	-.44840
-8.572	.404	-.06590	.01870	.01550	-.04950	.00330	-.01280	.03890	-.00760	-.45770	-.42830
-8.335	4.624	-.02050	.01740	-.01300	-.04330	-.00250	-.00390	.03390	-.00660	-.40750	-.36540
-8.324	6.522	-.00660	.01610	-.02070	-.03900	-.00730	-.00130	.02900	-.00560	-.36000	-.30100
	GRADIENT	.01081	-.00025	-.00637	.00022	-.00039	.00212	-.00069	.00014	.00550	.01024

RUN NO. 1008/ 0 RN/L = 3.50 GRADIENT INTERVAL = -5.00/ 5.00

ALPHAL	BETAL	CNFLS	CAFLS	CLMFLS	CYFLS	CYNFLS	CBLLS	CABLS	CYNBLS	CP5	CP6
-6.563	-5.794	-.11070	.02140	.04540	-.01070	-.01710	-.02160	.04090	-.00790	-.47140	-.45950
-6.466	-3.872	-.08980	.02180	.03470	-.01650	-.01210	-.01750	.03910	-.00760	-.44820	-.44090
-6.529	.278	-.04880	.02100	.01120	-.02120	-.00980	-.00950	.03810	-.00740	-.44730	-.41900
-6.283	4.433	-.01230	.02050	-.01150	-.01630	-.01550	-.00230	.03310	-.00640	-.39530	-.35830
-5.924	6.593	.00170	.01960	-.01880	-.01000	-.02140	.00040	.02810	-.00540	-.34040	-.29880
	GRADIENT	.00933	-.00016	-.00556	.00002	-.00041	.00183	-.00072	.00014	.00637	.00995

IA156A, AEDC PWT 16T-470, 0 T S W/SILTS (R8NL67) (10 MAY 80)

REFERENCE DATA

SREF = 2690.0000 SQ.FT. XMRP = 976.0000 IN. XT
LREF = 1290.3000 INCHES YMRP = .0000 IN. YT
BREF = 1290.3000 INCHES ZMRP = 400.0000 IN. ZT
SCALE = .0200

PARAMETRIC DATA

IB-ELV =	10.000	OB-ELV =	11.000
BDFLAP =	.000	SPDBRK =	.000
RUDDER =	.000	SILTS =	1.000
MACH =	.950	RN/L =	3.500

RUN NO. 1009/ 0 RN/L = 3.50 GRADIENT INTERVAL = -5.00/ 5.00

ALPHAL	BETAL	CNFLS	CAFLS	CLMFLS	CYFLS	CYNFLS	CBLLS	CABLS	CYNBLS	CP5	CP6
-4.247	-5.984	-.08810	.02400	.04030	.01720	-.03030	-.01710	.04130	-.00800	-.48020	-.46070
-4.493	-3.826	-.07160	.02390	.03070	.00800	-.02400	-.01390	.03900	-.00760	-.45310	-.43570
-4.392	.507	-.03320	.02260	.00790	.00790	-.02510	-.00640	.03580	-.00700	-.42430	-.39150
-3.853	4.447	-.00530	.02260	-.00860	.00990	-.02830	-.00090	.03190	-.00620	-.37740	-.35000
-3.928	6.296	.00360	.02080	-.01490	.00840	-.02990	.00080	.02930	-.00570	-.35280	-.31500
	GRADIENT	.00803	-.00016	-.00476	.00023	-.00052	.00157	-.00086	.00017	.00911	.01036

RUN NO. 1010/ 0 RN/L = 3.50 GRADIENT INTERVAL = -5.00/ 5.00

ALPHAL	BETAL	CNFLS	CAFLS	CLMFLS	CYFLS	CYNFLS	CBLLS	CABLS	CYNBLS	CP5	CP6
-.314	-6.814	-.05690	.02610	.03220	.05000	-.05040	-.01100	.04170	-.00810	-.49640	-.45340
-.284	-4.625	-.04480	.02630	.02570	.04450	-.04670	-.00870	.04030	-.00780	-.47900	-.43980
-.289	-.366	-.02230	.02520	.01190	.03630	-.04290	-.00420	.03650	-.00710	-.43370	-.39840
-.205	3.846	-.00330	.02330	-.00210	.02420	-.03600	-.00050	.03120	-.00610	-.37650	-.33520
-.192	6.004	.00460	.02270	-.00820	.02110	-.03580	.00100	.02860	-.00560	-.34970	-.30200
	GRADIENT	.00490	-.00035	-.00328	-.00240	.00126	.00097	-.00107	.00020	.01210	.01234

RUN NO. 1011/ 0 RN/L = 3.49 GRADIENT INTERVAL = -5.00/ 5.00

ALPHAL	BETAL	CNFLS	CAFLS	CLMFLS	CYFLS	CYNFLS	CBLLS	CABLS	CYNBLS	CP5	CP6
4.449	-5.858	-.01120	.02520	.01450	.04610	-.05050	-.00200	.04080	-.00790	-.48950	-.44040
4.244	-3.529	-.00770	.02540	.01100	.03800	-.04420	-.00140	.03900	-.00760	-.46860	-.42040
3.931	.323	.00060	.02350	.00220	.03280	-.04140	.00030	.03580	-.00700	-.43300	-.38350
4.106	4.234	.00620	.02320	-.00180	.01950	-.03290	.00140	.03220	-.00620	-.39360	-.33920
4.061	6.283	.00820	.02260	-.00370	.01430	-.03030	.00170	.02920	-.00570	-.36160	-.30420
	GRADIENT	.00179	-.00028	-.00165	-.00239	.00146	.00036	-.00088	.00018	.00966	.01046

IA156A, AEDC PWT 16T-470, 0 T S W/SILTS (R8NL68) (10 MAY 80)

REFERENCE DATA

SREF = 2690.0000 SQ.FT. XMRP = 976.0000 IN. XT
LREF = 1290.3000 INCHES YMRP = .0000 IN. YT
BREF = 1290.3000 INCHES ZMRP = 400.0000 IN. ZT
SCALE = .0200

PARAMETRIC DATA

IB-ELV = 10.000 OB-ELV = 11.000
BDFLAP = .000 SPDBRK = .000
RUDDER = .000 SILTS = 1.000
MACH = 1.050 RN/L = 3.500

RUN NO. 1012/ 0 RN/L = 3.52 GRADIENT INTERVAL = -5.00/ 5.00

ALPHAL	BETAL	CNFLS	CAFLS	CLMFLS	CYFLS	CYNFLS	CBLLS	CABLS	CYNBLS	CP5	CP6
-8.707	-5.739	-.14740	.02810	.06000	-.02570	-.01590	-.02880	.05440	-.01060	-.64110	-.59730
-8.812	-3.500	-.12410	.02800	.04850	-.03470	-.01020	-.02420	.05110	-.00990	-.59850	-.56400
-8.679	.441	-.07340	.02420	.01660	-.04350	-.00450	-.01430	.05480	-.01060	-.64660	-.60030
-8.370	4.670	-.02270	.02470	-.01430	-.03450	-.01240	-.00440	.04600	-.00890	-.54440	-.50290
-8.379	6.557	-.00790	.02260	-.02280	-.03150	-.01530	-.00150	.04210	-.00820	-.50210	-.45630
	GRADIENT	.01241	-.00040	-.00768	.00005	-.00029	.00242	-.00064	.00013	.00683	.00767

RUN NO. 1013/ 0 RN/L = 3.50 GRADIENT INTERVAL = -5.00/ 5.00

ALPHAL	BETAL	CNFLS	CAFLS	CLMFLS	CYFLS	CYNFLS	CBLLS	CABLS	CYNBLS	CP5	CP6
-6.601	-5.788	-.12000	.02980	.05230	-.00160	-.02580	-.02340	.05480	-.01060	-.64610	-.60210
-6.494	-3.864	-.09830	.02930	.04050	-.00760	-.02140	-.01910	.05310	-.01030	-.62560	-.58360
-6.591	.327	-.05440	.02700	.01350	-.01390	-.01930	-.01050	.05030	-.00980	-.59410	-.55140
-6.313	4.481	-.01290	.02730	-.01350	-.00990	-.02320	-.00240	.04590	-.00890	-.54550	-.49940
-6.224	6.481	.00200	.02500	-.02270	-.00760	-.02650	.00050	.04150	-.00810	-.49360	-.45090
	GRADIENT	.01023	-.00024	-.00647	-.00028	-.00021	.00200	-.00086	.00017	.00960	.01009

RUN NO. 1014/ 0 RN/L = 3.50 GRADIENT INTERVAL = -5.00/ 5.00

ALPHAL	BETAL	CNFLS	CAFLS	CLMFLS	CYFLS	CYNFLS	CBLLS	CABLS	CYNBLS	CP5	CP6
-4.288	-5.979	-.09610	.03140	.04660	.02900	-.04100	-.01870	.05330	-.01040	-.63030	-.58380
-4.530	-3.828	-.07850	.03110	.03610	.02090	-.03590	-.01530	.05170	-.01000	-.60860	-.56860
-4.310	.361	-.03730	.02850	.01070	.01990	-.03670	-.00720	.04890	-.00950	-.57960	-.53350
-4.109	4.396	-.00550	.02890	-.01100	.01680	-.03620	-.00100	.04410	-.00860	-.52310	-.48200
-3.935	6.320	.00460	.02770	-.01700	.01780	-.03850	.00100	.04120	-.00800	-.48710	-.45210
	GRADIENT	.00888	-.00027	-.00573	-.00050	-.00004	.00174	-.00092	.00017	.01037	.01052

RUN NO. 1015/ 0 RN/L = 3.50 GRADIENT INTERVAL = -5.00/ 5.00

ALPHAL	BETAL	CNFLS	CAFLS	CLMFLS	CYFLS	CYNFLS	CBLLS	CABLS	CYNBLS	CP5	CP6
-.321	-6.791	-.06240	.03330	.03800	.06030	-.06060	-.01210	.05250	-.01020	-.62480	-.57140
-.304	-4.613	-.04840	.03350	.02950	.05620	-.05820	-.00930	.05150	-.01000	-.61090	-.56130
-.342	-.376	-.02320	.03160	.01300	.05070	-.05620	-.00440	.04870	-.00950	-.57790	-.53060
-.253	3.801	-.00240	.02920	-.00240	.03620	-.04690	-.00030	.04380	-.00850	-.52300	-.47400
-.236	6.006	.00610	.02860	-.00930	.02980	-.04360	.00130	.04160	-.00810	-.49800	-.44870
	GRADIENT	.00547	-.00051	-.00379	-.00237	.00134	.00107	-.00091	.00018	.01044	.01037

IA156A, AEDC PWT 16T-470, O T S W/SILTS (R8NL68) (10 MAY 80)

REFERENCE DATA

SREF = 2690.0000 SQ.FT. XMRP = 976.0000 IN. XT
LREF = 1290.3000 INCHES YMRP = .0000 IN. YT
BREF = 1290.3000 INCHES ZMRP = 400.0000 IN. ZT
SCALE = .0200

PARAMETRIC DATA

IB-ELV = 10.000 OB-ELV = 11.000
BDFLAP = .000 SPDBRK = .000
RUDDER = .000 SILTS = 1.000
MACH = 1.050 RN/L = 3.500

RUN NO. 1016/ 0 RN/L = 3.50 GRADIENT INTERVAL = -5.00/ 5.00

ALPHAL	BETAL	CNFLS	CAFLS	CLMFLS	CYFLS	CYNFLS	CBLLS	CABLS	CYNBLS	CP5	CP6
4.457	-5.625	-.01100	.03260	.01660	.05850	-.06360	-.00200	.05010	-.00970	-.59400	-.54570
4.299	-3.562	-.00790	.03260	.01350	.05000	-.05710	-.00140	.04880	-.00950	-.57760	-.53470
3.955	.306	.00050	.03180	.00460	.03940	-.04960	.00030	.04790	-.00930	-.56700	-.52380
4.103	4.288	.00890	.02960	-.00420	.02360	-.03920	.00190	.04510	-.00880	-.53510	-.49220
4.047	6.294	.01060	.02830	-.00640	.01890	-.03690	.00220	.04310	-.00840	-.51450	-.46610
	GRADIENT	.00214	-.00038	-.00225	-.00337	.00228	.00042	-.00047	.00009	.00543	.00543

IA156A, AEDC PWT 16T-470, O T S W/SILTS (R8NL69) (10 MAY 80)

REFERENCE DATA

SREF = 2690.0000 SQ.FT. XMRP = 976.0000 IN. XT
LREF = 1290.3000 INCHES YMRP = .0000 IN. YT
BREF = 1290.3000 INCHES ZMRP = 400.0000 IN. ZT
SCALE = .0200

PARAMETRIC DATA

IB-ELV = 10.000 OB-ELV = 11.000
BDFLAP = .000 SPDBRK = .000
RUDDER = .000 SILTS = 1.000
MACH = 1.100 RN/L = 3.500

RUN NO. 1017/ 0 RN/L = 3.50 GRADIENT INTERVAL = -5.00/ 5.00

ALPHAL	BETAL	CNFLS	CAFLS	CLMFLS	CYFLS	CYNFLS	CBLLS	CABLS	CYNBLS	CP5	CP6
-8.670	-5.654	-.14340	.03160	.05730	-.02740	-.01550	-.02800	.05060	-.00980	-.59680	-.55530
-8.823	-3.479	-.12190	.03050	.04570	-.03900	-.00840	-.02380	.05010	-.00970	-.58680	-.55310
-8.709	.453	-.07040	.02880	.01440	-.04570	-.00510	-.01370	.04750	-.00920	-.55870	-.52180
-8.418	4.715	-.02230	.02550	-.01470	-.03780	-.01110	-.00430	.04260	-.00830	-.50620	-.46370
-8.361	6.568	-.00800	.02380	-.02240	-.03380	-.01430	-.00150	.03910	-.00760	-.46770	-.42260
	GRADIENT	.01214	-.00061	-.00736	.00017	-.00034	.00238	-.00092	.00017	.00987	.01095

RUN NO. 1018/ 0 RN/L = 3.50 GRADIENT INTERVAL = -5.00/ 5.00

ALPHAL	BETAL	CNFLS	CAFLS	CLMFLS	CYFLS	CYNFLS	CBLLS	CABLS	CYNBLS	CP5	CP6
-6.602	-5.789	-.11810	.03360	.05040	-.00260	-.02500	-.02300	.04980	-.00970	-.58830	-.54640
-6.551	-3.875	-.09770	.03200	.03890	-.00900	-.02070	-.01900	.04890	-.00950	-.57810	-.53560
-6.641	.357	-.05180	.02900	.01070	-.01540	-.01920	-.01000	.04620	-.00900	-.54680	-.50420
-6.326	4.492	-.01170	.02860	-.01420	-.00960	-.02300	-.00220	.04150	-.00810	-.49520	-.45080
-6.104	6.623	.00290	.02580	-.02250	-.00550	-.02670	.00060	.03830	-.00740	-.45590	-.41550
	GRADIENT	.01028	-.00041	-.00635	-.00008	-.00027	.00201	-.00088	.00017	.00990	.01012

IA156A, AEDC PWT 16T-470, O T S W/SILTS (R8NL69) (10 MAY 80)

REFERENCE DATA

SREF = 2690.0000 SQ.FT. XMRP = 976.0000 IN. XT
LREF = 1290.3000 INCHES YMRP = .0000 IN. YT
BREF = 1290.3000 INCHES ZMRP = 400.0000 IN. ZT
SCALE = .0200

PARAMETRIC DATA

IB-ELV = 10.000 OB-ELV = 11.000
BDFLAP = .000 SPDBRK = .000
RUDDER = .000 SILTS = 1.000
MACH = 1.100 RN/L = 3.500

RUN NO. 1019/ 0 RN/L = 3.50 GRADIENT INTERVAL = -5.00/ 5.00

ALPHAL	BETAL	CNFLS	CAFLS	CLMFLS	CYFLS	CYNFLS	CBLLS	CABLS	CYNBLS	CP5	CP6
-4.460	-5.976	-.09780	.03450	.04610	.02410	-.03780	-.01900	.04840	-.00940	-.57470	-.52810
-4.544	-3.835	-.07780	.03310	.03460	.01910	-.03450	-.01510	.04720	-.00920	-.55830	-.51680
-4.449	.431	-.03560	.03010	.00830	.01660	-.03470	-.00680	.04370	-.00850	-.52230	-.47360
-3.878	4.424	-.00460	.03050	-.01090	.01930	-.03740	-.00080	.03980	-.00770	-.47270	-.43360
-3.934	6.308	.00430	.02840	-.01680	.01790	-.03770	.00090	.03860	-.00750	-.45590	-.42220
	GRADIENT	.00887	-.00032	-.00552	.00002	-.00035	.00173	-.00090	.00018	.01034	.01007

RUN NO. 1020/ 0 RN/L = 3.50 GRADIENT INTERVAL = -5.00/ 5.00

ALPHAL	BETAL	CNFLS	CAFLS	CLMFLS	CYFLS	CYNFLS	CBLLS	CABLS	CYNBLS	CP5	CP6
-.326	-6.822	-.06330	.03610	.03820	.05650	-.05780	-.01230	.04680	-.00910	-.55740	-.50730
-.312	-4.645	-.04950	.03550	.02950	.05220	-.05490	-.00960	.04570	-.00890	-.54390	-.49700
-.335	-.267	-.02310	.03250	.01230	.04760	-.05340	-.00440	.04240	-.00820	-.50920	-.45690
-.235	3.906	-.00310	.02990	-.00210	.03410	-.04490	-.00050	.03760	-.00730	-.45160	-.40480
-.230	6.042	.00520	.02930	-.00880	.02810	-.04180	.00110	.03520	-.00680	-.42560	-.37570
	GRADIENT	.00543	-.00066	-.00370	-.00211	.00116	.00107	-.00095	.00019	.01077	.01077

RUN NO. 1021/ 0 RN/L = 3.50 GRADIENT INTERVAL = -5.00/ 5.00

ALPHAL	BETAL	CNFLS	CAFLS	CLMFLS	CYFLS	CYNFLS	CBLLS	CABLS	CYNBLS	CP5	CP6
4.480	-5.813	-.01160	.03490	.01830	.05630	-.06210	-.00210	.04510	-.00880	-.53680	-.49030
4.296	-3.478	-.00740	.03490	.01420	.04700	-.05520	-.00130	.04270	-.00830	-.50550	-.46570
3.999	.361	.00000	.03260	.00570	.03850	-.04930	.00020	.04240	-.00820	-.50690	-.45890
4.124	4.252	.00790	.03040	-.00320	.02220	-.03830	.00170	.03940	-.00770	-.46970	-.42830
4.083	6.293	.01030	.02970	-.00640	.01720	-.03610	.00220	.03650	-.00710	-.43800	-.39330
	GRADIENT	.00198	-.00058	-.00225	-.00321	.00219	.00039	-.00043	.00008	.00464	.00485

IA156A, AEDC PWT 16T-470, 0 T S W/SILTS (R8NL70) (10 MAY 80)

REFERENCE DATA

SREF = 2690.0000 SQ.FT. XMRP = 976.0000 IN. XT
LREF = 1290.3000 INCHES YMRP = .0000 IN. YT
BREF = 1290.3000 INCHES ZMRP = 400.0000 IN. ZT
SCALE = .0200

PARAMETRIC DATA

IB-ELV = 10.000 OB-ELV = 11.000
BDFLAP = .000 SPDBRK = .000
RUDDER = .000 SILTS = 1.000
MACH = 1.150 RN/L = 3.500

RUN NO. 1022/ 0 RN/L = 3.50 GRADIENT INTERVAL = -5.00/ 5.00

ALPHAL	BETAL	CNFLS	CAFLS	CLMFLS	CYFLS	CYNFLS	CBLLS	CABLS	CYNBLS	CP5	CP6
-8.715	-5.693	-.14710	.03320	.05970	-.02780	-.01290	-.02880	.04740	-.00920	-.55990	-.52040
-8.832	-3.498	-.12590	.03140	.04800	-.04070	-.00570	-.02460	.04710	-.00920	-.55200	-.52120
-8.706	.466	-.07400	.02970	.01580	-.04790	-.00180	-.01450	.04480	-.00870	-.52790	-.49330
-8.419	4.709	-.02490	.02670	-.01430	-.03820	-.00950	-.00480	.03980	-.00770	-.47610	-.43080
-8.398	6.595	-.01010	.02450	-.02260	-.03410	-.01340	-.00190	.03650	-.00710	-.43870	-.39330
	GRADIENT	.01230	-.00057	-.00759	.00033	-.00048	.00241	-.00089	.00018	.00928	.01106

RUN NO. 1023/ 0 RN/L = 3.50 GRADIENT INTERVAL = -5.00/ 5.00

ALPHAL	BETAL	CNFLS	CAFLS	CLMFLS	CYFLS	CYNFLS	CBLLS	CABLS	CYNBLS	CP5	CP6
-6.601	-5.811	-.12090	.03450	.05310	-.00300	-.02280	-.02360	.04690	-.00910	-.55620	-.51290
-6.500	-3.881	-.09950	.03350	.04140	-.00730	-.01980	-.01940	.04550	-.00880	-.53700	-.49970
-6.627	.338	-.05600	.02960	.01330	-.01750	-.01600	-.01090	.04320	-.00840	-.51110	-.47190
-6.322	4.502	-.01450	.02920	-.01350	-.01210	-.02100	-.00280	.03910	-.00760	-.46760	-.42200
-6.092	6.639	.00160	.02760	-.02280	-.00580	-.02590	.00040	.03480	-.00680	-.41600	-.37600
	GRADIENT	.01014	-.00051	-.00655	-.00058	-.00014	.00198	-.00076	.00014	.00827	.00926

RUN NO. 1024/ 0 RN/L = 3.50 GRADIENT INTERVAL = -5.00/ 5.00

ALPHAL	BETAL	CNFLS	CAFLS	CLMFLS	CYFLS	CYNFLS	CBLLS	CABLS	CYNBLS	CP5	CP6
-4.453	-5.986	-.09990	.03530	.04820	.02010	-.03440	-.01950	.04590	-.00890	-.54400	-.50130
-4.533	-3.841	-.08080	.03430	.03740	.01760	-.03270	-.01570	.04480	-.00870	-.52990	-.48930
-4.434	.542	-.03830	.03090	.01070	.01570	-.03310	-.00740	.04160	-.00810	-.49640	-.45120
-3.861	4.470	-.00720	.03110	-.00910	.01790	-.03560	-.00130	.03730	-.00720	-.44470	-.40440
-3.940	6.343	.00230	.02930	-.01580	.01670	-.03660	.00050	.03570	-.00690	-.42350	-.38930
	GRADIENT	.00887	-.00039	-.00560	.00003	-.00034	.00174	-.00090	.00018	.01020	.01019

RUN NO. 1025/ 0 RN/L = 3.50 GRADIENT INTERVAL = -5.00/ 5.00

ALPHAL	BETAL	CNFLS	CAFLS	CLMFLS	CYFLS	CYNFLS	CBLLS	CABLS	CYNBLS	CP5	CP6
-.291	-6.864	-.06330	.03740	.03920	.05470	-.05600	-.01230	.04440	-.00860	-.53150	-.48030
-.267	-4.688	-.04980	.03660	.03080	.05090	-.05360	-.00960	.04380	-.00850	-.52230	-.47480
-.294	-.313	-.02440	.03410	.01400	.04650	-.05240	-.00460	.04130	-.00800	-.49420	-.44680
-.200	3.835	-.00430	.03100	-.00050	.03380	-.04460	-.00070	.03640	-.00710	-.43780	-.39070
-.191	6.048	.00450	.03010	-.00770	.02730	-.04130	.00100	.03410	-.00660	-.41450	-.36340
	GRADIENT	.00534	-.00066	-.00367	-.00200	.00105	.00105	-.00087	.00016	.00988	.00984

IA156A, AEDC PWT 16T-470, O T S W/SILTS (R8NL70) (10 MAY 80)

REFERENCE DATA

SREF = 2690.0000 SQ.FT. XMRP = 976.0000 IN. XT
LREF = 1290.3000 INCHES YMRP = .0000 IN. YT
BREF = 1290.3000 INCHES ZMRP = 400.0000 IN. ZT
SCALE = .0200

PARAMETRIC DATA

IB-ELV = 10.000 OB-ELV = 11.000
BDFLAP = .000 SPDBRK = .000
RUDDER = .000 SILTS = 1.000
MACH = 1.150 RN/L = 3.500

RUN NO. 1026/ 0 RN/L = 3.50 GRADIENT INTERVAL = -5.00/ 5.00

ALPHAL	BETAL	CNFLS	CAFLS	CLMFLS	CYFLS	CYNFLS	CBLLS	CABLS	CYNBLS	CP5	CP6
4.546	-5.629	-.01380	.03660	.02080	.05510	-.06120	-.00250	.04250	-.00820	-.50610	-.46090
4.364	-3.518	-.00980	.03600	.01690	.04780	-.05590	-.00170	.04180	-.00810	-.49480	-.45610
4.072	.297	-.00240	.03440	.00850	.03710	-.04830	-.00030	.04090	-.00790	-.48710	-.44440
4.160	4.201	.00730	.03200	-.00220	.02060	-.03720	.00160	.03800	-.00740	-.45390	-.41260
4.101	6.293	.01020	.03060	-.00590	.01630	-.03560	.00210	.03590	-.00700	-.43180	-.38560
	GRADIENT	.00222	-.00052	-.00248	-.00353	.00242	.00043	-.00049	.00009	.00531	.00564

IA156A, AEDC PWT 16T-470, O T S W/SILTS (R8NL71) (10 MAY 80)

REFERENCE DATA

SREF = 2690.0000 SQ.FT. XMRP = 976.0000 IN. XT
LREF = 1290.3000 INCHES YMRP = .0000 IN. YT
BREF = 1290.3000 INCHES ZMRP = 400.0000 IN. ZT
SCALE = .0200

PARAMETRIC DATA

IB-ELV = 12.000 OB-ELV = 11.000
BDFLAP = .000 SPDBRK = .000
RUDDER = .000 SILTS = 1.000
MACH = .600 RN/L = 3.500

RUN NO. 1030/ 0 RN/L = 3.50 GRADIENT INTERVAL = -5.00/ 5.00

ALPHAL	BETAL	CNFLS	CAFLS	CLMFLS	CYFLS	CYNFLS	CBLLS	CABLS	CYNBLS	CP5	CP6
-8.497	-7.741	-.13990	.00980	.05960	-.00540	-.01510	-.02730	.04030	-.00780	-.47750	-.43980
-8.348	-5.715	-.11780	.00950	.04900	-.01480	-.00860	-.02290	.03910	-.00760	-.46660	-.42410
-8.348	-3.692	-.09870	.00990	.03920	-.02300	-.00330	-.01920	.03700	-.00720	-.44440	-.39900
-8.204	.413	-.05890	.00990	.01760	-.03300	.00230	-.01140	.03370	-.00650	-.41930	-.34900
-8.045	4.364	-.02190	.01080	-.00510	-.03180	-.00140	-.00420	.03050	-.00590	-.39250	-.30250
-7.882	6.425	-.00490	.01030	-.01480	-.02370	-.00830	-.00080	.02670	-.00520	-.33950	-.26950
-7.882	8.475	.00650	.00930	-.02100	-.01990	-.01310	.00140	.02440	-.00470	-.30860	-.24650
	GRADIENT	.00953	.00011	-.00550	-.00110	.00024	.00186	-.00081	.00016	.00644	.01198

RUN NO. 1031/ 0 RN/L = 3.49 GRADIENT INTERVAL = -5.00/ 5.00

ALPHAL	BETAL	CNFLS	CAFLS	CLMFLS	CYFLS	CYNFLS	CBLLS	CABLS	CYNBLS	CP5	CP6
-6.338	-7.853	-.11720	.01220	.05250	.01360	-.02440	-.02280	.03880	-.00750	-.46100	-.42170
-6.275	-5.816	-.09940	.01140	.04360	.00430	-.01810	-.01930	.03780	-.00730	-.45130	-.40910
-6.182	-3.902	-.08220	.01110	.03470	-.00140	-.01390	-.01590	.03620	-.00700	-.43650	-.38870
-6.205	.163	-.04610	.01090	.01440	-.00700	-.01110	-.00890	.03230	-.00630	-.39960	-.33550
-6.001	4.269	-.01470	.01240	-.00460	-.00600	-.01410	-.00270	.02890	-.00560	-.36700	-.29170
-5.930	6.264	-.00180	.01160	-.01280	-.00410	-.01740	-.00020	.02610	-.00510	-.33020	-.26500
-5.719	8.431	.00920	.01090	-.01910	-.00020	-.02200	.00200	.02440	-.00470	-.30540	-.25000
	GRADIENT	.00826	.00016	-.00481	-.00056	-.00003	.00162	-.00089	.00017	.00851	.01187

IA156A, AEDC PWT 16T-470, 0 T S W/SILTS (F8NL71) (10 MAY 80)

REFERENCE DATA

SREF = 2690.0000 SQ.FT. XMRP = 976.0000 IN. XT
LREF = 1290.3000 INCHES YMRP = .0000 IN. YT
BREF = 1290.3000 INCHES ZMRP = 400.0000 IN. ZT
SCALE = .0200

PARAMETRIC DATA

IB-ELV = 12.000 OB-ELV = 11.000
BDFLAP = .000 SPDBRK = .000
RUDDER = .000 SILTS = 1.000
MACH = .600 RN/L = 3.500

RUN NO. 1042/ 0 RN/L = 3.50 GRADIENT INTERVAL = -5.00/ 5.00

ALPHAL	BETAL	CNFLS	CAFLS	CLMFLS	CYFLS	CYNFLS	CBLLS	CABLS	CYNBLS	CP5	CP6
-4.213	-7.773	-.09340	.01310	.04510	.03090	-.03290	-.01830	.03840	-.00750	-.45510	-.42000
-4.268	-5.857	-.07980	.01300	.03750	.02310	-.02750	-.01570	.03670	-.00710	-.43810	-.39710
-4.281	-3.823	-.06300	.01230	.02850	.01880	-.02440	-.01240	.03500	-.00680	-.42570	-.37140
-4.141	.440	-.03030	.01250	.00950	.01600	-.02400	-.00600	.03060	-.00590	-.38050	-.31760
-3.711	4.271	-.00670	.01340	-.00480	.01390	-.02450	-.00130	.02770	-.00540	-.34820	-.28350
-3.778	6.124	.00200	.01310	-.01090	.01310	-.02580	.00040	.02530	-.00490	-.31450	-.26230
-3.810	8.119	.01090	.01250	-.01720	.01260	-.02730	.00210	.02420	-.00470	-.30460	-.24640
	GRADIENT	.00697	.00013	-.00412	-.00061	-.00001	.00137	-.00090	.00017	.00959	.01089

RUN NO. 1043/ 0 RN/L = 3.50 GRADIENT INTERVAL = -5.00/ 5.00

ALPHAL	BETAL	CNFLS	CAFLS	CLMFLS	CYFLS	CYNFLS	CBLLS	CABLS	CYNBLS	CP5	CP6
-.255	-8.656	-.05820	.01600	.03400	.05450	-.04910	-.01140	.03710	-.00720	-.44410	-.40000
-.232	-6.453	-.04850	.01560	.02840	.04850	-.04500	-.00950	.03610	-.00700	-.43520	-.38640
-.211	-4.411	-.03830	.01540	.02250	.04360	-.04170	-.00760	.03490	-.00680	-.42150	-.37240
-.188	-.229	-.01870	.01430	.01010	.03800	-.03980	-.00370	.03090	-.00600	-.37490	-.32890
-.125	3.860	-.00470	.01480	.00060	.02710	-.03350	-.00100	.02670	-.00520	-.33430	-.27350
-.128	5.967	.00220	.01450	-.00510	.02180	-.03080	.00040	.02510	-.00490	-.31810	-.25330
-.129	8.081	.00990	.01420	-.01160	.02010	-.03140	.00190	.02480	-.00480	-.31430	-.25180
	GRADIENT	.00406	-.00007	-.00265	-.00199	.00099	.00080	-.00099	.00019	.01055	.01195

RUN NO. 1044/ 0 RN/L = 3.50 GRADIENT INTERVAL = -5.00/ 5.00

ALPHAL	BETAL	CNFLS	CAFLS	CLMFLS	CYFLS	CYNFLS	CBLLS	CABLS	CYNBLS	CP5	CP6
4.281	-7.993	-.00660	.01590	.01220	.05110	-.05010	-.00130	.03540	-.00690	-.42540	-.38140
4.354	-5.814	-.00210	.01590	.00910	.04510	-.04550	-.00040	.03380	-.00660	-.40880	-.36140
4.322	-3.817	.00060	.01540	.00730	.03950	-.04140	.00010	.03270	-.00630	-.39640	-.34770
4.220	.265	.00280	.01440	.00420	.03030	-.03590	.00050	.02960	-.00570	-.36430	-.31030
4.135	4.267	.00520	.01340	.00010	.01760	-.02750	.00100	.02770	-.00540	-.34780	-.28360
4.074	6.329	.00720	.01450	-.00300	.01120	-.02390	.00140	.02570	-.00500	-.32750	-.25810
4.053	8.322	.01120	.01460	-.00770	.00780	-.02270	.00210	.02590	-.00500	-.32990	-.26100
	GRADIENT	.00057	-.00025	-.00089	-.00271	.00172	.00011	-.00062	.00011	.00602	.00793

IA156A, AEDC PWT 16T-470, O T S W/SILTS (R8NL71) (10 MAY 80)

REFERENCE DATA

SREF = 2690.0000 SQ.FT. XMRP = 976.0000 IN. XT
LREF = 1290.3000 INCHES YMRP = .0000 IN. YT
BREF = 1290.3000 INCHES ZMRP = 400.0000 IN. ZT
SCALE = .0200

PARAMETRIC DATA

IB-ELV = 12.000 OB-ELV = 11.000
BDFLAP = .000 SPDBRK = .000
RUDDER = .000 SILTS = 1.000
MACH = .600 RN/L = 3.500

RUN NO. 1045/ 0 RN/L = 3.51 GRADIENT INTERVAL = -5.00/ 5.00

ALPHAL	BETAL	CNFLS	CAFLS	CLMFLS	CYFLS	CYNFLS	CBLLS	CABLS	CYNBLS	CP5	CP6
6.533	-7.903	.01810	.01580	.00160	.03810	-.04340	.00350	.03430	-.00670	-.41160	-.36990
6.525	-5.846	.01800	.01600	.00130	.03060	-.03770	.00340	.03280	-.00640	-.40470	-.34270
6.495	-3.783	.01600	.01470	.00170	.02530	-.03330	.00310	.03310	-.00640	-.40660	-.34850
6.183	.277	.01110	.01480	.00210	.01730	-.02850	.00210	.03020	-.00590	-.36980	-.31760
6.091	4.203	.01060	.01300	-.00100	.00450	-.01980	.00200	.02790	-.00540	-.35180	-.28390
6.013	6.288	.01090	.01420	-.00320	-.00070	-.01660	.00210	.02590	-.00500	-.33100	-.25970
6.051	8.318	.01340	.01430	-.00730	-.00350	-.01550	.00260	.02620	-.00510	-.33310	-.26430
	GRADIENT	-.00068	-.00021	-.00034	-.00260	.00169	-.00014	-.00065	.00013	.00687	.00809

RUN NO. 1046/ 0 RN/L = 3.51 GRADIENT INTERVAL = -5.00/ 5.00

ALPHAL	BETAL	CNFLS	CAFLS	CLMFLS	CYFLS	CYNFLS	CBLLS	CABLS	CYNBLS	CP5	CP6
8.479	-7.736	.03790	.01480	-.00580	.02180	-.03410	.00730	.03400	-.00660	-.40970	-.36540
8.393	-5.669	.03380	.01480	-.00430	.01470	-.02870	.00650	.03310	-.00640	-.40790	-.34680
8.389	-3.695	.03010	.01510	-.00280	.00760	-.02370	.00580	.03250	-.00630	-.40340	-.33720
8.271	.282	.02220	.01390	-.00080	.00050	-.01990	.00420	.03070	-.00600	-.37720	-.32180
8.286	4.337	.01900	.01210	-.00290	-.01380	-.00990	.00360	.02780	-.00540	-.35020	-.28380
8.224	6.345	.01760	.01260	-.00440	-.01880	-.00670	.00330	.02690	-.00520	-.34110	-.27180
8.204	8.399	.01880	.01300	-.00840	-.02180	-.00560	.00360	.02650	-.00520	-.33380	-.27110
	GRADIENT	-.00138	-.00037	-.00001	-.00267	.00172	-.00027	-.00059	.00011	.00662	.00666

IA156A, AEDC PWT 16T-470, 0 T S W/SILTS (R8NL72) (10 MAY 80)

REFERENCE DATA

SREF = 2690.0000 SQ.FT. XMRP = 976.0000 IN. XT
LREF = 1290.3000 INCHES YMRP = .0000 IN. YT
BREF = 1290.3000 INCHES ZMRP = 400.0000 IN. ZT
SCALE = .0200

PARAMETRIC DATA

IB-ELV = 12.000 OB-ELV = 11.000
BDFLAP = .000 SPDBRK = .000
RUDDER = .000 SILTS = 1.000
MACH = .800 RN/L = 3.500

RUN NO. 1047/ 0 RN/L = 3.50 GRADIENT INTERVAL = -5.00/ 5.00

ALPHAL	BETAL	CNFLS	CAFLS	CLMFLS	CYFLS	CYNFLS	CBLLS	CABLS	CYNBLS	CP5	CP6
-8.610	-5.706	-.12220	.01330	.05050	-.02520	-.00670	-.02420	.03910	-.00760	-.45780	-.43250
-8.525	-3.650	-.10230	.01310	.04050	-.03480	-.00100	-.02030	.03750	-.00730	-.43940	-.41340
-8.385	.519	-.05990	.01300	.01680	-.04410	.00420	-.01190	.03420	-.00660	-.41640	-.36250
-8.192	4.514	-.01930	.01270	-.00840	-.03850	-.00090	-.00400	.02980	-.00580	-.37170	-.30690
-8.162	6.454	-.00480	.01110	-.01680	-.03130	-.00690	-.00120	.02570	-.00500	-.32230	-.26360
	GRADIENT	.01017	-.00005	-.00599	-.00047	.00002	.00200	-.00094	.00018	.00827	.01304

RUN NO. 1048/ 0 RN/L = 3.50 GRADIENT INTERVAL = -5.00/ 5.00

ALPHAL	BETAL	CNFLS	CAFLS	CLMFLS	CYFLS	CYNFLS	CBLLS	CABLS	CYNBLS	CP5	CP6
-6.388	-5.831	-.10030	.01530	.04400	-.00320	-.01740	-.01990	.03820	-.00740	-.44740	-.42210
-6.294	-3.904	-.08270	.01520	.03540	-.00870	-.01360	-.01640	.03650	-.00710	-.43060	-.40010
-6.372	.255	-.04610	.01430	.01360	-.01680	-.00910	-.00920	.03300	-.00640	-.40140	-.35060
-6.143	4.388	-.01180	.01500	-.00760	-.01380	-.01260	-.00250	.02850	-.00550	-.35340	-.29500
-5.855	6.491	.00230	.01360	-.01610	-.00670	-.01810	.00020	.02470	-.00480	-.30770	-.25590
	GRADIENT	.00855	-.00002	-.00519	-.00062	.00012	.00168	-.00096	.00019	.00931	.01267

RUN NO. 1049/ 0 RN/L = 3.50 GRADIENT INTERVAL = -5.00/ 5.00

ALPHAL	BETAL	CNFLS	CAFLS	CLMFLS	CYFLS	CYNFLS	CBLLS	CABLS	CYNBLS	CP5	CP6
-4.202	-5.948	-.08090	.01720	.03830	.01790	-.02770	-.01610	.03730	-.00720	-.44100	-.40820
-4.388	-3.848	-.06650	.01690	.03050	.01150	-.02350	-.01330	.03550	-.00690	-.42080	-.38830
-4.281	.480	-.03150	.01610	.00930	.00910	-.02300	-.00640	.03100	-.00600	-.37620	-.32950
-3.775	4.397	-.00550	.01640	-.00600	.00830	-.02370	-.00130	.02690	-.00520	-.33140	-.28130
-3.849	6.258	.00420	.01590	-.01370	.00720	-.02460	.00060	.02420	-.00470	-.30170	-.25080
-3.802	6.465	.00500	.01540	-.01390	.00750	-.02480	.00070	.02430	-.00470	-.30020	-.25350
	GRADIENT	.00741	-.00006	-.00453	-.00039	-.00002	.00146	-.00104	.00021	.01083	.01299

RUN NO. 1050/ 0 RN/L = 3.50 GRADIENT INTERVAL = -5.00/ 5.00

ALPHAL	BETAL	CNFLS	CAFLS	CLMFLS	CYFLS	CYNFLS	CBLLS	CABLS	CYNBLS	CP5	CP6
-.243	-6.719	-.05200	.01950	.03000	.04550	-.04500	-.01040	.03660	-.00710	-.43640	-.39720
-.228	-4.600	-.04270	.01890	.02440	.03930	-.04060	-.00870	.03500	-.00680	-.41970	-.37840
-.226	-.367	-.02190	.01790	.01110	.03310	-.03750	-.00460	.03040	-.00590	-.36990	-.32290
-.156	3.811	-.00230	.01750	-.00300	.02560	-.03340	-.00080	.02640	-.00510	-.32520	-.27680
-.139	5.927	.00560	.01770	-.00920	.02140	- 03120	.00080	.02480	-.00480	-.31340	-.25270
	GRADIENT	.00480	-.00017	-.00326	-.00163	.00086	.00094	-.00102	.00020	.01124	.01208

IA156A, AEDC PWT 16T-470, O T S W/SILTS (R8NL72) (10 MAY 80)

REFERENCE DATA

SREF = 2690.0000 SQ.FT. XMRP = 976.0000 IN. XT
LREF = 1290.3000 INCHES YMRP = .0000 IN. YT
BREF = 1290.3000 INCHES ZMRP = 400.0000 IN. ZT
SCALE = .0200

PARAMETRIC DATA

IB-ELV = 12.000 OB-ELV = 11.000
BDFLAP = .000 SPDBRK = .000
RUDDER = .000 SILTS = 1.000
MACH = .800 RN/L = 3.500

RUN NO. 1051/ 0 RN/L = 3.49 GRADIENT INTERVAL = -5.00/ 5.00

ALPHAL	BETAL	CNFLS	CAFLS	CLMFLS	CYFLS	CYNFLS	CBLLS	CABLS	CYNBLS	CP5	CP6
4.419	-5.703	-.00340	.01900	.00990	.04550	-.04730	-.00090	.03480	-.00680	-.41330	-.37900
4.297	-3.683	-.00120	.01850	.00820	.03930	-.04260	-.00050	.03350	-.00650	-.40210	-.36050
4.156	.296	.00390	.01720	.00360	.03180	-.03810	.00050	.02940	-.00570	-.35650	-.31320
4.087	4.128	.00640	.01770	-.00020	.01910	-.03000	.00100	.02710	-.00530	-.33700	-.28090
4.044	6.256	.00910	.01780	-.00400	.01360	-.02690	.00150	.02570	-.00500	-.32170	-.26470
	GRADIENT	.00097	-.00010	-.00108	-.00258	.00161	.00019	-.00082	.00015	.00835	.01020

RUN NO. 1052/ 0 RN/L = 3.50 GRADIENT INTERVAL = -5.00/ 5.00

ALPHAL	BETAL	CNFLS	CAFLS	CLMFLS	CYFLS	CYNFLS	CBLLS	CABLS	CYNBLS	CP5	CP6
6.502	-5.731	.01710	.01810	.00160	.03270	-.04120	.00300	.03470	-.00670	-.41380	-.37570
6.462	-3.689	.01600	.01830	.00190	.02520	-.03570	.00280	.03330	-.00650	-.40200	-.35630
6.105	.291	.01240	.01750	.00100	.01810	-.03170	.00210	.03060	-.00590	-.36760	-.32950
6.015	4.224	.01210	.01720	-.00210	.00600	-.02270	.00210	.02730	-.00530	-.33930	-.28270
6.081	6.181	.01380	.01730	-.00480	-.00050	-.01890	.00240	.02640	-.00510	-.33100	-.27020
	GRADIENT	-.00049	-.00014	-.00050	-.00243	.00164	-.00009	-.00076	.00015	.00793	.00930

IA156A, AEDC PWT 16T-470, O T S W/SILTS (R8NL73) (10 MAY 80)

REFERENCE DATA

SREF = 2690.0000 SQ.FT. XMRP = 976.0000 IN. XT
LREF = 1290.3000 INCHES YMRP = .0000 IN. YT
BREF = 1290.3000 INCHES ZMRP = 400.0000 IN. ZT
SCALE = .0200

PARAMETRIC DATA

IB-ELV = 12.000 OB-ELV = 11.000
BDFLAP = .000 SPDBRK = .000
RUDDER = .000 SILTS = 1.000
MACH = .900 RN/L = 3.500

RUN NO. 1053/ 0 RN/L = 3.50 GRADIENT INTERVAL = -5.00/ 5.00

ALPHAL	BETAL	CNFLS	CAFLS	CLMFLS	CYFLS	CYNFLS	CBLLS	CABLS	CYNBLS	CP5	CP6
-8.643	-5.681	-.12510	.01730	.04990	-.03400	-.00560	-.02490	.03970	-.00770	-.45720	-.44620
-8.565	-3.579	-.10380	.01710	.03980	-.04110	-.00080	-.02070	.03770	-.00730	-.43520	-.42360
-8.473	.564	-.06060	.01680	.01510	-.04910	.00290	-.01230	.03610	-.00700	-.43200	-.38930
-8.239	4.526	-.01790	.01620	-.01160	-.04560	-.00090	-.00390	.03040	-.00590	-.37080	-.32080
	GRADIENT	.01060	-.00011	-.00634	-.00057	-.00001	.00207	-.00090	.00017	.00789	.01265

IA156A, AEDC PWT 16T-470, O T S W/SILTS (R8NL73) (10 MAY 80)

REFERENCE DATA

SREF = 2690.0000 SQ.FT. XMRP = 376.0000 IN. XT
LREF = 1290.3000 INCHES YMRP = .0000 IN. YT
BREF = 1290.3000 INCHES ZMRP = 400.0000 IN. ZT
SCALE = .0200

PARAMETRIC DATA

IB-ELV = 12.000 OB-ELV = 11.000
BDFLAP = .000 SPDBRK = .000
RUDDER = .000 SILTS = 1.000
MACH = .900 RN/L = 3.500

RUN NO. 1054/ 0 RN/L = 3.50 GRADIENT INTERVAL = -5.00/ 5.00

ALPHAL	BETAL	CNFLS	CAFLS	CLMFLS	CYFLS	CYNFLS	CBLLS	CABLS	CYNBLS	CP5	CP6
-6.451	-5.790	-.10440	.01910	.04440	-.00990	-.01600	-.02090	.03910	-.00760	-.45080	-.43840
-6.382	-3.879	-.08500	.01900	.03470	-.01490	-.01220	-.01710	.03730	-.00720	-.43010	-.41860
-6.440	.295	-.04710	.01780	.01260	-.02040	-.00990	-.00960	.03470	-.00670	-.41750	-.37330
-6.197	4.437	-.01060	.01820	-.01080	-.01860	-.01310	-.00250	.02920	-.00570	-.35540	-.30960
-5.957	6.549	.00420	.01670	-.01960	-.01350	-.01860	.00040	.02650	-.00510	-.32520	-.27800
	GRADIENT	.00895	-.00010	-.00547	-.00045	-.00011	.00176	-.00097	.00018	.00898	.01310

RUN NO. 1055/ 0 RN/L = 3.50 GRADIENT INTERVAL = -5.00/ 5.00

ALPHAL	BETAL	CNFLS	CAFLS	CLMFLS	CYFLS	CYNFLS	CBLLS	CABLS	CYNBLS	CP5	CP6
-4.268	-5.945	-.08330	.02120	.03840	.01510	-.02760	-.01670	.03880	-.00750	-.45150	-.43090
-4.433	-3.840	-.06770	.02140	.02980	.00740	-.02300	-.01370	.03620	-.00700	-.42060	-.40300
-4.344	.514	-.03100	.01900	.00730	.00390	-.02270	-.00640	.03280	-.00640	-.39150	-.35640
-3.826	4.441	-.00290	.01990	-.01040	.00400	-.02480	-.00100	.02890	-.00560	-.34720	-.31130
-3.899	6.310	.00630	.01880	-.01650	.00430	-.02700	.00080	.02650	-.00510	-.32140	-.28220
	GRADIENT	.00784	-.00019	-.00486	-.00042	-.00021	.00154	-.00088	.00017	.00882	.01107

RUN NO. 1056/ 0 RN/L = 3.50 GRADIENT INTERVAL = -5.00/ 5.00

ALPHAL	BETAL	CNFLS	CAFLS	CLMFLS	CYFLS	CYNFLS	CBLLS	CABLS	CYNBLS	CP5	CP6
-.291	-6.847	-.05400	.02350	.03050	.04690	-.04710	-.01090	.03800	-.00740	-.45080	-.41350
-.271	-4.643	-.04320	.02340	.02440	.04020	-.04260	-.00890	.03680	-.00710	-.43930	-.39870
-.290	-.302	-.01940	.02160	.00810	.03180	-.03930	-.00420	.03220	-.00620	-.38390	-.34840
-.212	3.789	-.00010	.02120	-.00630	.02380	-.03440	-.00040	.02840	-.00550	-.34470	-.30170
-.194	5.968	.00800	.02080	-.01230	.02100	-.03390	.00110	.02700	-.00520	-.33090	-.28480
	GRADIENT	.00511	-.00026	-.00364	-.00194	.00097	.00101	-.00100	.00019	.01123	.01150

RUN NO. 1058/ 0 RN/L = 3.51 GRADIENT INTERVAL = -5.00/ 5.00

ALPHAL	BETAL	CNFLS	CAFLS	CLMFLS	CYFLS	CYNFLS	CBLLS	CABLS	CYNBLS	CP5	CP6
4.439	-5.719	-.00620	.02260	.01090	.04720	-.04910	-.00160	.03690	-.00720	-.44150	-.39970
4.287	-3.622	-.00370	.02240	.00910	.04050	-.04380	-.00110	.03590	.00700	-.43280	-.38550
3.951	.217	.00290	.02110	.00230	.03330	-.04000	.00020	.03250	-.00630	-.39440	-.34700
4.096	4.154	.00850	.02120	-.00270	.02040	-.03210	.00130	.02900	-.00560	-.35580	-.30590
4.027	6.247	.01160	.02150	-.00650	.01570	-.03000	.00190	.02700	-.00520	-.33550	-.27890
	GRADIENT	.00157	-.00015	-.00152	-.00259	.00151	.00031	-.00089	.00018	.00990	.01024

IA156A, AEDC PWT 16T-470, O T S W/SILTS (R8NL74) (10 MAY 80)

REFERENCE DATA

SREF = 2690.0000 SQ.FT. XMRP = 976.0000 IN. XT
LREF = 1290.3000 INCHES YMRP = .0000 IN. YT
BREF = 1290.3000 INCHES ZMRP = 400.0000 IN. ZT
SCALE = .0200

PARAMETRIC DATA

IB-ELV = 12.000 OB-ELV = 11.000
BDFLAP = .000 SPDBRK = .000
RUDDER = .000 SILTS = 1.000
MACH = .950 RN/L = 3.500

RUN NO. 1059/ 0 RN/L = 3.50 GRADIENT INTERVAL = -5.00/ 5.00

ALPHAL	BETAL	CNFLS	CAFLS	CLMFLS	CYFLS	CYNFLS	CBLLS	CABLS	CYNBLS	CP5	CP6
-8.720	-5.638	-.13070	.01950	.05040	-.03480	-.00670	-.02610	.04190	-.00810	-.48400	-.47010
-8.707	-3.571	-.10780	.01970	.03900	-.04460	.00030	-.02160	.04030	-.00780	-.46220	-.45410
-8.556	.625	-.06070	.01840	.01290	-.04690	.00190	-.01240	.03930	-.00760	-.46180	-.43190
-8.322	4.580	-.01890	.01780	-.01250	-.04030	-.00410	-.00420	.03350	-.00650	-.40310	-.36060
-8.326	6.524	-.00460	.01600	-.02090	-.03760	-.00830	-.00140	.02880	-.00560	-.35560	-.30050
	GRADIENT	.01091	-.00023	-.00632	.00052	-.00053	.00214	-.00083	.00016	.00718	.01141

RUN NO. 1060/ 0 RN/L = 3.50 GRADIENT INTERVAL = -5.00/ 5.00

ALPHAL	BETAL	CNFLS	CAFLS	CLMFLS	CYFLS	CYNFLS	CBLLS	CABLS	CYNBLS	CP5	CP6
-6.549	-5.789	-.10900	.02100	.04500	-.01050	-.01760	-.02180	.04160	-.00810	-.48130	-.46620
-6.456	-3.870	-.08840	.02190	.03460	-.01610	-.01250	-.01780	.04000	-.00730	-.46110	-.45000
-6.511	.280	-.04770	.02120	.01110	-.02010	-.01070	-.00980	.03850	-.00750	-.45360	-.42400
-6.264	4.435	-.00960	.02040	-.01260	-.01520	-.01620	-.00240	.03320	-.00640	-.39700	-.35880
-5.926	6.557	.00410	.01910	-.02000	-.00880	-.02220	.00030	.02910	-.00570	-.35540	-.30780
	GRADIENT	.00949	-.00018	-.00568	.00011	-.00045	.00185	-.00082	.00017	.00772	.01098

RUN NO. 1061/ 0 RN/L = 3.50 GRADIENT INTERVAL = -5.00/ 5.00

ALPHAL	BETAL	CNFLS	CAFLS	CLMFLS	CYFLS	CYNFLS	CBLLS	CABLS	CYNBLS	CP5	CP6
-4.271	-5.930	-.08670	.02400	.03980	.01630	-.02990	-.01740	.04180	-.00810	-.48520	-.46570
-4.482	-3.832	-.07080	.02410	.03080	.00900	-.02470	-.01430	.03990	-.00770	-.46390	-.44490
-4.376	.511	-.03170	.02230	.00760	.00940	-.02620	-.00660	.03660	-.00710	-.43180	-.40110
-3.845	4.452	-.00320	.02220	-.00950	.01120	-.02920	-.00110	.03240	-.00630	-.38530	-.35270
-3.907	6.296	.00560	.02120	-.01550	.01020	-.03090	.00060	.02870	-.00560	-.34500	-.30820
	GRADIENT	.00817	-.00023	-.00487	.00026	-.00054	.00160	-.00090	.00017	.00945	.01111

RUN NO. 1062/ 0 RN/L = 3.50 GRADIENT INTERVAL = -5.00/ 5.00

ALPHAL	BETAL	CNFLS	CAFLS	CLMFLS	CYFLS	CYNFLS	CBLLS	CABLS	CYNBLS	CP5	CP6
-.299	-6.820	-.05480	.02630	.03140	.05150	-.05110	-.01110	.04220	-.00820	-.50510	-.45550
-.267	-4.653	-.04330	.02640	.02530	.04610	-.04760	-.00890	.04130	-.00800	-.49300	-.44700
-.265	-.320	-.02110	.02540	.01190	.03800	-.04420	-.00450	.03640	-.00710	-.43340	-.39610
-.179	3.793	-.00320	.02370	-.00140	.02500	-.03670	-.00110	.03120	-.00610	-.37720	-.33280
-.172	5.979	.00490	.02220	-.00790	.02150	-.03610	.00050	.02890	-.00560	-.35230	-.30610
	GRADIENT	.00475	-.00032	-.00316	-.00249	.00129	.00092	-.00120	.00022	.01371	.01350

IA156A, AEDC PWT 16T-470, O T S W/SILTS (R8NL74) (10 MAY 80)

REFERENCE DATA

SREF = 2690.0000 SQ.FT. XMRP = 976.0000 IN. XT
LREF = 1290.3000 INCHES YMRP = .0000 IN. YT
BREF = 1290.3000 INCHES ZMRP = 400.0000 IN. ZT
SCALE = .0200

PARAMETRIC DATA

IB-ELV = 12.000 OB-ELV = 11.000
BDFLAP = .000 SPDBRK = .000
RUDDER = .000 SILTS = 1.000
MACH = .950 RN/L = 3.500

RUN NO. 1063/ 0 RN/L = 3.50 GRADIENT INTERVAL = -5.00/ 5.00

ALPHAL	BETAL	CNFLS	CAFLS	CLMFLS	CYFLS	CYNFLS	CBLLS	CABLS	CYNBLS	CP5	CP6
4.331	-5.769	-.01100	.02510	.01480	.04680	-.05100	-.00250	.04050	-.00790	-.48530	-.43780
4.300	-3.672	-.00620	.02540	.01090	.03860	-.04500	-.00160	.03900	-.00760	-.47180	-.41690
4.114	.317	.00250	.02390	.00170	.03260	-.04190	.00010	.03550	-.00690	-.42830	-.38100
4.077	4.110	.00780	.02350	-.00260	.02030	-.03370	.00110	.03220	-.00630	-.39460	-.33890
4.061	6.263	.00970	.02250	-.00420	.01440	-.03080	.00150	.02930	-.00570	-.36290	-.30440
	GRADIENT	.00180	-.00025	-.00174	-.00234	.00145	.00035	-.00087	.00017	.00993	.01001

IA156A, AEDC PWT 16T-470, O T S W/SILTS (R8NL75) (10 MAY 80)

REFERENCE DATA

SREF = 2690.0000 SQ.FT. XMRP = 976.0000 IN. XT
LREF = 1290.3000 INCHES YMRP = .0000 IN. YT
BREF = 1290.3000 INCHES ZMRP = 400.0000 IN. ZT
SCALE = .0200

PARAMETRIC DATA

IB-ELV = 12.000 OB-ELV = 11.000
BDFLAP = .000 SPDBRK = .000
RUDDER = .000 SILTS = 1.000
MACH = 1.050 RN/L = 3.500

RUN NO. 1064/ 0 RN/L = 3.50 GRADIENT INTERVAL = -5.00/ 5.00

ALPHAL	BETAL	CNFLS	CAFLS	CLMFLS	CYFLS	CYNFLS	CBLLS	CABLS	CYNBLS	CP5	CP6
-8.783	-5.627	-.14470	.02810	.05890	-.02660	-.01570	-.02880	.05500	-.01070	-.64760	-.60400
-8.771	-3.540	-.12420	.02500	.04850	-.03510	-.01020	-.02470	.05480	-.01060	-.64090	-.60770
-8.653	.658	-.06770	.02650	.01410	-.04320	-.00510	-.01370	.05110	-.00990	-.60020	-.56380
-8.401	4.612	-.02250	.02790	-.01420	-.03660	-.01160	-.00490	.04350	-.00840	-.51600	-.47380
-8.386	6.569	-.00540	.02260	-.02440	-.03300	-.01500	-.00150	.04250	-.00820	-.50900	-.45850
	GRADIENT	.01249	.00036	-.00770	-.00020	-.00016	.00243	- 00138	.00027	.01526	.01636

RUN NO. 1065/ 0 RN/L = 3.51 GRADIENT INTERVAL = -5.00/ 5.00

ALPHAL	BETAL	CNFLS	CAFLS	CLMFLS	CYFLS	CYNFLS	CBLLS	CABLS	CYNBLS	CP5	CP6
-6.597	-5.798	-.11970	.03010	.05230	-.00200	-.02570	-.02390	.05480	-.01060	-.64530	-.60260
-6.488	-3.850	-.09800	.02920	.04050	-.00860	-.02090	-.01960	.05360	-.01040	-.63030	-.59010
-6.583	.316	-.05280	.02730	.01340	-.01250	-.01980	-.01070	.05060	-.00980	-.59600	-.55610
-6.278	4.470	-.01100	.02750	-.01370	-.00880	-.02370	-.00260	.04590	-.00890	-.54390	-.50040
-6.232	6.489	.00370	.02510	-.02290	-.00620	-.02710	.00020	.04160	-.00810	-.49430	-.45200
	GRADIENT	.01046	-.00020	-.00651	-.00002	-.00034	.00204	-.00093	.00018	.01038	.01078

IA156A, AEDC PWT 16T-470, O T S W/SILTS (R8NL75) (10 MAY 80)

REFERENCE DATA

SREF = 2690.0000 SQ.FT. XMRP = 976.0000 IN. XT
LREF = 1290.3000 INCHES YMRP = .0000 IN. YT
BREF = 1290.3000 INCHES ZMRP = 400.0000 IN. ZT
SCALE = .0200

PARAMETRIC DATA

IB-ELV = 12.000 OB-ELV = 11.000
BDFLAP = .000 SPDBRK = .000
RUDDER = .000 SILTS = 1.000
MACH = 1.050 RN/L = 3.500

RUN NO. 1066/ 0 RN/L = 3.50 GRADIENT INTERVAL = -5.00/ 5.00

ALPHAL	BETAL	CNFLS	CAFLS	CLMFLS	CYFLS	CYNFLS	CBLLS	CABLS	CYNBLS	CP5	CP6
-4.315	-5.939	-.09480	.03140	.04610	.02880	-.04060	-.01900	.05360	-.01040	-.63440	-.58710
-4.509	-3.831	-.07680	.03100	.03570	.02260	-.03660	-.01550	.05220	-.01010	-.61490	-.57430
-4.430	.523	-.03570	.02850	.01000	.02100	-.03710	-.00740	.04920	-.00960	-.58410	-.53630
-3.864	4.472	-.00310	.02890	-.01110	.02040	-.03770	-.00100	.04450	-.00860	-.52690	-.48690
-3.940	6.330	.00640	.02770	-.01760	.01850	-.03860	.00080	.04130	-.00800	-.48740	-.45210
	GRADIENT	.00889	-.00026	-.00564	-.00027	-.00013	.00175	-.00092	.00018	.01054	.01050

RUN NO. 1067/ 0 RN/L = 3.50 GRADIENT INTERVAL = -5.00/ 5.00

ALPHAL	BETAL	CNFLS	CAFLS	CLMFLS	CYFLS	CYNFLS	CBLLS	CABLS	CYNBLS	CP5	CP6
-.310	-6.839	-.06220	.03330	.03820	.06140	-.06090	-.01260	.05270	-.01020	-.62680	-.57310
-.288	-4.662	-.04800	.03370	.02960	.05750	-.05870	-.00980	.05150	-.01000	-.61050	-.56150
-.329	-.292	-.02160	.03170	.01240	.05150	-.05650	-.00460	.04900	-.00950	-.58200	-.53330
-.236	3.825	-.00140	.02910	-.00260	.03710	-.04740	-.00070	.04400	-.00860	-.52580	-.47720
-.217	6.006	.00660	.02830	-.00900	.03060	-.04390	.00090	.04210	-.00820	-.50490	-.45420
	GRADIENT	.00550	-.00054	-.00380	-.00239	.00132	.00107	-.00088	.00016	.00994	.00990

RUN NO. 1068/ 0 RN/L = 3.50 GRADIENT INTERVAL = -5.00/ 5.00

ALPHAL	BETAL	CNFLS	CAFLS	CLMFLS	CYFLS	CYNFLS	CBLLS	CABLS	CYNBLS	CP5	CP6
4.363	-5.717	-.01080	.03250	.01710	.06130	-.06530	-.00250	.05050	-.00980	-.59840	-.55170
4.307	-3.620	-.00680	.03240	.01320	.04990	-.05710	-.00170	.04920	-.00950	-.58120	-.53890
4.112	.349	.00240	.03170	.00390	.03880	-.04950	.00010	.04810	-.00930	-.57030	-.52550
4.096	4.142	.00990	.02940	-.00460	.02430	-.03980	.00160	.04600	-.00890	-.54470	-.50170
4.075	6.288	.01180	.02880	-.00710	.01960	-.03740	.00200	.04300	-.00840	-.51400	-.46630
	GRADIENT	.00215	-.00038	-.00229	-.00329	.00223	.00043	-.00041	.00008	.00469	.00478

IA156A, AEDC PWT 16T-470, 0 T S W/SILTS (R8NL76) (10 MAY 80)

REFERENCE DATA

SREF = 2690.0000 SQ.FT. XMRP = 976.0000 IN. XT
LREF = 1290.3000 INCHES YMRP = .0000 IN. YT
BREF = 1290.3000 INCHES ZMRP = 400.0000 IN. ZT
SCALE = .0200

PARAMETRIC DATA

IB-ELV = 12.000 OB-ELV = 11.000
BDFLAP = .000 SPDBRK = .000
RUDDER = .000 SILTS = 1.000
MACH = 1.100 RN/L = 3.500

RUN NO. 1069/ 0 RN/L = 3.50 GRADIENT INTERVAL = -5.00/ 5.00

ALPHAL	BETAL	CNFLS	CAFLS	CLMFLS	CYFLS	CYNFLS	CBLLS	CABLS	CYNBLS	CP5	CP6
-8.804	-5.732	-.14540	.03140	.05800	-.02890	-.01470	-.02900	.05130	-.01000	-.60500	-.56200
-8.806	-3.590	-.12100	.03050	.04560	-.03880	-.00820	-.02410	.05010	-.00970	-.58710	-.55370
-9.698	.568	-.06700	.02860	.01290	-.04470	-.00530	-.01360	.04800	-.00930	-.56310	-.52870
-8.418	4.591	-.02150	.02590	-.01440	-.03640	-.01180	-.00470	.04300	-.00830	-.51150	-.46730
-8.363	6.549	-.00600	.02440	-.02330	-.03330	-.01490	-.00160	.03840	-.00750	-.46190	-.41330
	GRADIENT	.01217	-.00056	-.00734	.00028	-.00043	.00237	-.00087	.00017	.00922	.01054

RUN NO. 1070/ 0 RN/L = 3.50 GRADIENT INTERVAL = -5.00/ 5.00

ALPHAL	BETAL	CNFLS	CAFLS	CLMFLS	CYFLS	CYNFLS	CBLLS	CABLS	CYNBLS	CP5	CP6
-6.611	-5.809	-.11710	.03300	.05020	-.00220	-.02480	-.02340	.05070	-.00980	-.59900	-.55580
-6.519	-3.875	-.09600	.03250	.03850	-.00850	-.02090	-.01920	.04870	-.00940	-.57340	-.53470
-6.643	.348	-.05100	.02980	.01030	-.01670	-.01830	-.01040	.04540	-.00880	-.53700	-.49710
-6.318	4.486	-.00990	.02880	-.01480	-.00950	-.02320	-.00240	.04200	-.00810	-.49990	-.45600
-6.060	6.591	.00540	.02650	-.02330	-.00400	-.02740	.00060	.03780	-.00730	-.45060	-.40960
	GRADIENT	.01030	-.00044	-.00638	-.00013	-.00027	.00201	-.00080	.00016	.00879	.00941

RUN NO. 1071/ 0 RN/L = 3.50 GRADIENT INTERVAL = -5.00/ 5.00

ALPHAL	BETAL	CNFLS	CAFLS	CLMFLS	CYFLS	CYNFLS	CBLLS	CABLS	CYNBLS	CP5	CP6
-4.353	-5.945	-.09530	.03440	.04510	.02260	-.03690	-.01910	.04870	-.00950	-.57660	-.53190
-4.545	-3.838	-.07700	.03310	.03430	.01740	-.03350	-.01550	.04740	-.00920	-.55940	-.52020
-4.446	.547	-.03340	.03030	.00740	.01700	-.03510	-.00690	.04410	-.00860	-.52600	-.47760
-3.872	4.482	-.00300	.03040	-.01160	.01970	-.03750	-.00100	.04060	-.00790	-.48180	-.44190
-3.930	6.324	.00600	.02900	-.01760	.01850	-.03800	.00070	.03820	-.00740	-.45080	-.41800
	GRADIENT	.00891	-.00033	-.00553	.00027	-.00043	.00175	-.00082	.00016	.00929	.00942

RUN NO. 1072/ 0 RN/L = 3.50 GRADIENT INTERVAL = -5.00/ 5.00

ALPHAL	BETAL	CNFLS	CAFLS	CLMFLS	CYFLS	CYNFLS	CBLLS	CABLS	CYNBLS	CP5	CP6
-.310	-6.865	-.06240	.03640	.03790	.05660	-.05770	-.01260	.04660	-.00900	-.55610	-.50510
-.299	-4.688	-.04940	.03550	.02970	.05330	-.05530	-.01010	.04590	-.00890	-.54630	-.49830
-.315	-.299	-.02250	.03280	.01250	.04880	-.05400	-.00480	.04290	-.00830	-.51310	-.46470
-.225	3.827	-.00250	.03010	-.00200	.03580	-.04580	-.00090	.03800	-.00740	-.45500	-.41060
-.206	6.034	.00550	.02940	-.00830	.02940	-.04260	.00070	.03540	-.00690	-.43000	-.37720
	GRADIENT	.00551	-.00063	-.00372	-.00204	.00111	.00108	-.00093	.00018	.01069	.01027

IA156A, AEDC PWT 16T-470, O T S W/SILTS (R8NL76) (10 MAY 80)

REFERENCE DATA

SREF = 2690.0000 SQ.FT. XMRP = 976.0000 IN. XT
LREF = 1290.3000 INCHES YMRP = .0000 IN. YT
BREF = 1290.3000 INCHES ZMRP = 400.0000 IN. ZT
SCALE = .0200

PARAMETRIC DATA

IB-ELV = 12.000 OB-ELV = 11.000
BDFLAP = .000 SPDBRK = .000
RUDDER = .000 SILTS = 1.000
MACH = 1.100 RN/L = 3.500

RUN NO. 1073/ 0 RN/L = 3.51 GRADIENT INTERVAL = -5.00/ 5.00

ALPHAL	BETAL	CNFLS	CAFLS	CLMFLS	CYFLS	CYNFLS	CBLLS	CABLS	CYNBLS	CP5	CP6
4.523	-5.612	-.00920	.03520	.01710	.05470	-.06100	-.00210	.04390	-.00850	-.52100	-.47780
4.329	-3.607	-.00630	.03440	.01410	.04710	-.05540	-.00160	.04340	-.00840	-.51410	-.47390
4.152	.354	.00150	.03310	.00530	.03750	-.04920	.00000	.04200	-.00810	-.50060	-.45540
4.132	4.121	.00910	.03110	-.00390	.02220	-.03870	.00140	.03940	-.00760	-.47050	-.42670
4.088	6.275	.01160	.02970	-.00720	.01760	-.03640	.00190	.03700	-.00720	-.44560	-.39720
	GRADIENT	.00199	-.00043	-.00233	-.00321	.00216	.00039	-.00052	.00010	.00562	.00609

IA156A, AEDC PWT 16T-470, O T S W/SILTS (R8NL77) (10 MAY 80)

REFERENCE DATA

SREF = 2690.0000 SQ.FT. XMRP = 976.0000 IN. XT
LREF = 1290.3000 INCHES YMRP = .0000 IN. YT
BREF = 1290.3000 INCHES ZMRP = 400.0000 IN. ZT
SCALE = .0200

PARAMETRIC DATA

IB-ELV = 8.000 OB-ELV = 11.000
BDFLAP = .000 SPDBRK = .000
RUDDER = .000 SILTS = 1.000
MACH = .600 RN/L = 3.500

RUN NO. 1077/ 0 RN/L = 3.50 GRADIENT INTERVAL = -5.00/ 5.00

ALPHAL	BETAL	CNFLS	CAFLS	CLMFLS	CYFLS	CYNFLS	CBLLS	CABLS	CYNBLS	CP5	CP6
-8.510	-7.764	-.13830	.00950	.05800	-.00160	-.01740	-.02700	.04060	-.00790	-.48070	-.44270
-8.352	-5.706	-.11620	.00910	.04740	-.01250	-.01020	-.02270	.03860	-.00750	-.45940	-.42040
-8.357	-3.692	-.09790	.00650	.03780	-.02120	-.00400	-.01910	.04020	-.00780	-.48090	-.43460
-8.209	.401	-.05590	.01020	.01530	-.02930	.00050	-.01090	.03200	-.00620	-.39730	-.33250
-8.059	4.368	-.01940	.00740	-.00730	-.02900	-.00230	-.00370	.03360	-.00650	-.42970	-.33580
-8.024	6.312	-.00380	.01030	-.01640	-.02370	-.00850	-.00070	.02640	-.00510	-.33410	-.26680
-8.023	8.337	.00840	.00820	-.02270	-.01850	-.01340	.00170	.02450	-.00480	-.30980	-.24810
	GRADIENT	.00974	.00012	-.00559	-.00097	.00022	.00191	-.00083	.00016	.00643	.01235

RUN NO. 1078/ 0 RN/L = 3.50 GRADIENT INTERVAL = -5.00/ 5.00

ALPHAL	BETAL	CNFLS	CAFLS	CLMFLS	CYFLS	CYNFLS	CBLLS	CABLS	CYNBLS	CP5	CP6
-6.339	-7.850	-.11420	.01130	.05050	.01730	-.02610	-.02230	.03910	-.00760	-.46290	-.42710
-6.288	-5.816	-.09750	.01080	.04200	.00790	-.02000	-.01900	.03770	-.00730	-.44610	-.41340
-6.187	-3.904	-.07960	.01120	.03270	.00210	-.01610	-.01550	.03560	-.00690	-.42950	-.38070
-6.218	.166	-.04340	.01000	.01180	-.00580	-.01180	-.00840	.03250	-.00630	-.40290	-.33750
-6.022	4.265	-.01240	.01180	-.00650	-.00400	-.01510	-.00230	.02900	-.00560	-.36750	-.29260
-5.932	6.263	.00060	.01130	-.01450	-.00120	-.01910	.00020	.02580	-.00500	-.32410	-.26480
-5.725	8.413	.01160	.01080	-.02110	.00160	-.02300	.00230	.02400	-.00470	-.30160	-.24580
	GRADIENT	.00822	.00007	-.00480	-.00075	.00012	.00162	-.00081	.00016	.00759	.01078

IA156A, AEDC PWT 16T-470, O T S W/SILTS (R8NL77) (10 MAY 80)

REFERENCE DATA

SREF = 2690.0000 SQ.FT. XMRP = 976.0000 IN. XT
LREF = 1290.3000 INCHES YMRP = .0000 IN. YT
BREF = 1290.3000 INCHES ZMRP = 400.0000 IN. ZT
SCALE = .0200

PARAMETRIC DATA

IB-ELV = 8.000 OB-ELV = 11.000
BDFLAP = .000 SPDBRK = .000
RUDDER = .000 SILTS = 1.000
MACH = .600 RN/L = 3.500

RUN NO. 1079/ 0 RN/L = 3.50 GRADIENT INTERVAL = -5.00/ 5.00

ALPHAL	BETAL	CNFLS	CAFLS	CLMFLS	CYFLS	CYNFLS	CBLLS	CABLS	CYNBLS	CP5	CP6
-4.093	-7.954	-.09200	.01300	.04370	.03310	-.03500	-.01790	.03860	-.00750	-.45520	-.42310
-4.309	-5.855	-.07960	.01270	.03640	.02350	-.02860	-.01550	.03670	-.00710	-.43990	-.39520
-4.300	-3.804	-.06270	.01280	.02730	.01860	-.02520	-.01220	.03440	-.00670	-.41500	-.36810
-4.075	.258	-.03030	.01190	.00860	.01720	-.02530	-.00580	.03090	-.00600	-.38010	-.32430
-3.704	4.312	-.00560	.01290	-.00620	.01500	-.02590	-.00100	.02810	-.00550	-.35070	-.28950
-3.789	6.121	.00260	.01300	-.01200	.01340	-.02660	.00060	.02520	-.00490	-.31590	-.25880
-3.829	8.124	.01200	.01210	-.01880	.01250	-.02780	.00250	.02440	-.00470	-.30690	-.24990
	GRADIENT	.00704	.00001	-.00413	-.00044	-.00009	.00138	-.00078	.00015	.00792	.00969

RUN NO. 1080/ 0 RN/L = 3.50 GRADIENT INTERVAL = -5.00/ 5.00

ALPHAL	BETAL	CNFLS	CAFLS	CLMFLS	CYFLS	CYNFLS	CBLLS	CABLS	CYNBLS	CP5	CP6
-.278	-8.612	-.05930	.01550	.03370	.05440	-.04950	-.01140	.03700	-.00720	-.44360	-.39890
-.263	-6.387	-.04900	.01520	.02780	.04820	-.04510	-.00940	.03630	-.00710	-.43710	-.39060
-.242	-4.402	-.03890	.01440	.02200	.04370	-.04200	-.00750	.03560	-.00690	-.42810	-.38310
-.218	-.253	-.01800	.01370	.00870	.03810	-.04010	-.00340	.03100	-.00600	-.37530	-.33190
-.162	3.863	-.00400	.01410	-.00080	.02760	-.03400	-.00060	.02690	-.00520	-.33750	-.27650
-.155	5.967	.00270	.01360	-.00620	.02230	-.03110	.00070	.02550	-.00490	-.32170	-.25870
-.155	8.081	.01050	.01400	-.01280	.02090	-.03210	.00230	.02510	-.00490	-.31690	-.25410
	GRADIENT	.00422	-.00004	-.00276	-.00195	.00097	.00084	-.00105	.00021	.01096	.01290

RUN NO. 1081/ 0 RN/L = 3.50 GRADIENT INTERVAL = -5.00/ 5.00

ALPHAL	BETAL	CNFLS	CAFLS	CLMFLS	CYFLS	CYNFLS	CBLLS	CABLS	CYNBLS	CP5	CP6
4.427	-7.872	-.00480	.01580	.01080	.05140	-.05080	-.00070	.03520	-.00680	-.41830	-.38240
4.355	-5.774	-.00120	.01530	.00800	.04530	-.04590	.00000	.03400	-.00660	-.40830	-.36630
4.292	-3.770	-.00020	.01480	.00680	.04110	-.04270	.00020	.03320	-.00640	-.40260	-.35390
4.089	.163	.00160	.01380	.00390	.03220	-.03720	.00060	.03020	-.00590	-.37090	-.31730
4.125	4.200	.00570	.01370	-.00100	.01840	-.02830	.00140	.02730	-.00530	-.34090	-.28030
4.064	6.320	.00710	.01390	-.00360	.01210	-.02470	.00160	.02600	-.00500	-.33080	-.26190
4.044	8.320	.01070	.01390	-.00780	.00890	-.02360	.00240	.02610	-.00510	-.33210	-.26270
	GRADIENT	.00074	-.00014	-.00098	-.00285	.00181	.00015	-.00074	.00014	.00774	.00923

IA156A, AEDC PWT 16T-470, O T S W/SILTS (R8NL77) (10 MAY 80)

REFERENCE DATA

SREF = 2690.0000 SQ.FT. XMRP = 976.0000 IN. XT
LREF = 1290.3000 INCHES YMRP = .0000 IN. YT
BREF = 1290.3000 INCHES ZMRP = 400.0000 IN. ZT
SCALE = .0200

PARAMETRIC DATA

IB-ELV = 8.000 OB-ELV = 11.000
BDFLAP = .000 SPDBRK = .000
RUDDER = .000 SILTS = 1.000
MACH = .600 RN/L = 3.500

RUN NO. 1082/ 0 RN/L = 3.50 GRADIENT INTERVAL = -5.00/ 5.00

ALPHAL	BETAL	CNFLS	CAFLS	CLMFLS	CYFLS	CYNFLS	CBLLS	CABLS	CYNBLS	CP5	CP6
6.512	-7.906	.01690	.01540	.00170	.03940	-.04440	.00360	.03490	-.00680	-.41630	-.37910
6.507	-5.845	.01690	.01530	.00100	.03250	-.03890	.00360	.03360	-.00650	-.41170	-.35280
6.477	-3.771	.01510	.01490	.00150	.02660	-.03430	.00320	.03290	-.00640	-.40210	-.34850
6.174	.278	.01110	.01410	.00190	.01850	-.02950	.00240	.03050	-.00590	-.37140	-.32350
6.089	4.210	.01000	.01270	-.00080	.00580	-.02090	.00220	.02810	-.00540	-.35310	-.28630
6.035	6.134	.01010	.01340	-.00220	-.00050	-.01740	.00220	.02660	-.00520	-.33960	-.26570
6.090	8.411	.01230	.01330	-.00610	-.00530	-.01540	.00270	.02680	-.00520	-.34050	-.26990
	GRADIENT	-.00064	-.00028	-.00029	-.00260	.00168	-.00013	-.00060	.00013	.00615	.00778

RUN NO. 1083/ 0 RN/L = 3.50 GRADIENT INTERVAL = -5.00/ 5.00

ALPHAL	BETAL	CNFLS	CAFLS	CLMFLS	CYFLS	CYNFLS	CBLLS	CABLS	CYNBLS	CP5	CP6
8.481	-7.733	.03700	.01420	-.00590	.02290	-.03490	.00750	.03490	-.00680	-.41800	-.37800
8.387	-5.672	.03250	.01410	-.00430	.01610	-.02960	.00660	.03400	-.00660	-.41240	-.36290
8.379	-3.694	.02890	.01430	-.00300	.00920	-.02450	.00590	.03340	-.00650	-.40750	-.35280
8.255	.298	.02230	.01330	-.00170	.00210	-.02110	.00470	.03130	-.00610	-.38220	-.32970
8.279	4.340	.01850	.01200	-.00350	-.01160	-.01150	.00390	.02800	-.00540	-.35080	-.28650
8.202	6.344	.01660	.01250	-.00410	-.01830	-.00740	.00350	.02690	-.00520	-.34050	-.27170
8.197	8.392	.01810	.01280	-.00820	-.02130	-.00630	.00380	.02680	-.00520	-.33720	-.27360
	GRADIENT	-.00129	-.00029	-.00006	-.00259	.00162	-.00025	-.00067	.00014	.00706	.00826

IA156A, AEDC PWT 16T-470, O T S W/SILTS (R8NL78) (10 MAY 80)

REFERENCE DATA

SREF = 2690.0000 SQ.FT. XMRP = 976.0000 IN. XT
LREF = 1290.3000 INCHES YMRP = .0000 IN. YT
BREF = 1290.3000 INCHES ZMRP = 400.0000 IN. ZT
SCALE = .0200

PARAMETRIC DATA

IB-ELV = 8.000 OB-ELV = 11.000
BDFLAP = .000 SPDBRK = .000
RUDDER = .000 SILTS = 1.000
MACH = .800 RN/L = 3.500

RUN NO. 1084/ 0 RN/L = 3.50 GRADIENT INTERVAL = -5.00/ 5.00

ALPHAL	BETAL	CNFLS	CAFLS	CLMFLS	CYFLS	CYNFLS	CBLLS	CABLS	CYNBLS	CP5	CP6
-8.532	-5.654	-.12270	.01250	.04960	-.02680	-.00650	-.02390	.03880	-.00750	-.45340	-.43040
-8.547	-3.610	-.10170	.01290	.03930	-.03640	-.00050	-.01980	.03660	-.00710	-.43010	-.40380
-8.396	.372	-.06210	.01210	.01730	-.04560	.00490	-.01200	.03450	-.00670	-.42080	-.36580
-8.192	4.550	-.01900	.01210	-.00950	-.03980	-.00050	-.00360	.02970	-.00580	-.36700	-.30890
-8.180	6.459	-.00540	.01070	-.01710	-.03150	-.00700	-.00090	.02540	-.00490	-.31570	-.26220
	GRADIENT	.01014	-.00010	-.00598	-.00040	-.00001	.00199	-.00085	.00016	.00778	.01165

RUN NO. 1085/ 0 RN/L = 3.50 GRADIENT INTERVAL = -5.00/ 5.00

ALPHAL	BETAL	CNFLS	CAFLS	CLMFLS	CYFLS	CYNFLS	CBLLS	CABLS	CYNBLS	CP5	CP6
-6.432	-5.847	-.10150	.01470	.04360	-.00410	-.01700	-.01970	.03790	-.00740	-.44070	-.42150
-6.327	-3.896	-.08370	.01520	.03490	-.00930	-.01350	-.01620	.03540	-.00690	-.41470	-.39010
-6.376	.247	-.04580	.01390	.01290	-.01570	-.00960	-.00880	.03250	-.00630	-.39420	-.34500
-6.140	4.400	-.01290	.01370	-.00760	-.01330	-.01260	-.00230	.02870	-.00560	-.35440	-.29930
-6.077	6.401	.00080	.01280	-.01640	-.00980	-.01680	.00030	.02470	-.00480	-.30570	-.25630
	GRADIENT	.00853	-.00018	-.00512	-.00048	.00011	.00168	-.00081	.00016	.00727	.01095

RUN NO. 1086/ 0 RN/L = 3.50 GRADIENT INTERVAL = -5.00/ 5.00

ALPHAL	BETAL	CNFLS	CAFLS	CLMFLS	CYFLS	CYNFLS	CBLLS	CABLS	CYNBLS	CP5	CP6
-4.289	-5.971	-.08190	.01700	.03780	.01720	-.02760	-.01590	.03660	-.00710	-.43360	-.39990
-4.396	-3.854	-.06680	.01660	.02980	.01200	-.02390	-.01290	.03490	-.00680	-.41320	-.38180
-4.293	.468	-.03140	.01490	.00850	.00890	-.02270	-.00590	.03100	-.00600	-.37560	-.33100
-3.798	4.398	-.00600	.01600	-.00670	.00830	-.02400	-.00100	.02680	-.00520	-.32890	-.28050
-3.844	6.269	.00290	.01480	-.01280	.00790	-.02530	.00080	.02460	-.00480	-.30330	-.25690
	GRADIENT	.00738	-.00008	-.00443	-.00045	-.00001	.00145	-.00098	.00019	.01019	.01227

RUN NO. 1087/ 0 RN/L = 3.50 GRADIENT INTERVAL = -5.00/ 5.00

ALPHAL	BETAL	CNFLS	CAFLS	CLMFLS	CYFLS	CYNFLS	CBLLS	CABLS	CYNBLS	CP5	CP6
-.275	-6.739	-.05410	.01910	.03050	.04600	-.04550	-.01040	.03670	-.00710	-.43540	-.40000
-.261	-4.611	-.04450	.01870	.02480	.03970	-.04090	-.00850	.03480	-.00680	-.41620	-.37580
-.250	-.304	-.02290	.01740	.01120	.03300	-.03730	-.00430	.03010	-.00580	-.36230	-.32300
-.186	3.792	-.00390	.01660	-.00260	.02550	-.03320	-.00060	.02670	-.00520	-.32970	-.27950
-.176	5.903	.00450	.01710	-.00910	.02150	-.03110	.00110	.02490	-.00480	-.31310	-.25520
	GRADIENT	.00483	-.00025	-.00326	-.00169	.00092	.00094	-.00096	.00019	.01031	.01147

IA156A, AEDC PWT 16T-470, 0 T S W/SILTS (R8NL78) (10 MAY 80)

REFERENCE DATA

SREF = 2690.0000 SQ.FT. XMRP = 976.0000 IN. XT
LREF = 1290.3000 INCHES YMRP = .0000 IN. YT
BREF = 1290.3000 INCHES ZMRP = 400.0000 IN. ZT
SCALE = .0200

PARAMETRIC DATA

IB-ELV = 8.000 OB-ELV = 11.000
BDFLAP = .000 SPDBRK = .000
RUDDER = .000 SILTS = 1.000
MACH = .800 RN/L = 3.500

RUN NO. 1088/ 0 RN/L = 3.50 GRADIENT INTERVAL = -5.00/ 5.00

ALPHAL	BETAL	CNFLS	CAFLS	CLMFLS	CYFLS	CYNFLS	CBLLS	CABLS	CYNBLS	CP5	CP6
4.419	-5.725	-.00520	.01860	.01020	.04590	-.04800	-.00080	.03490	-.00680	-.41230	-.38150
4.276	-3.615	-.00310	.01810	.00890	.04060	-.04320	-.00040	.03330	-.00650	-.39920	-.35990
4.007	.236	.00170	.01650	.00450	.03350	-.03870	.00060	.02980	-.00580	-.36120	-.31690
4.104	4.165	.00520	.01660	.00070	.01970	-.03030	.00120	.02770	-.00540	-.34320	-.28820
4.019	6.258	.00780	.01710	-.00360	.01470	-.02730	.00180	.02610	-.00510	-.32730	-.26820
	GRADIENT	.00107	-.00019	-.00105	-.00269	.00166	.00021	-.00072	.00014	.00719	.00921

RUN NO. 1089/ 0 RN/L = 3.50 GRADIENT INTERVAL = -5.00/ 5.00

ALPHAL	BETAL	CNFLS	CAFLS	CLMFLS	CYFLS	CYNFLS	CBLLS	CABLS	CYNBLS	CP5	CP6
6.411	-5.637	.01500	.01750	.00210	.03440	-.04230	.00320	.03490	-.00680	-.41510	-.37980
6.456	-3.672	.01530	.01790	.00160	.02450	-.03560	.00320	.03380	-.00660	-.40860	-.36140
6.083	.291	.01250	.01730	.00050	.01940	-.03160	.00270	.03070	-.00600	-.36850	-.32960
6.016	4.136	.01160	.01640	-.00180	.00670	-.02280	.00250	.02770	-.00540	-.34350	-.28790
6.032	6.332	.01340	.01670	-.00520	.00060	-.01940	.00290	.02650	-.00510	-.33290	-.27130
	GRADIENT	-.00048	-.00019	-.00043	-.00227	.00164	-.00009	-.00078	.00015	.00835	.00941

IA156A, AEDC PWT 16T-470, 0 T S W/SILTS (R8NL79) (10 MAY 80)

REFERENCE DATA

SREF = 2690.0000 SQ.FT. XMRP = 976.0000 IN. XT
LREF = 1290.3000 INCHES YMRP = .0000 IN. YT
BREF = 1290.3000 INCHES ZMRP = 400.0000 IN. ZT
SCALE = .0200

PARAMETRIC DATA

IB-ELV = 8.000 OB-ELV = 11.000
BDFLAP = .000 SPDBRK = .000
RUDDER = .000 SILTS = 1.000
MACH = .900 RN/L = 3.500

RUN NO. 1090/ 0 RN/L = 3.50 GRADIENT INTERVAL = -5.00/ 5.00

ALPHAL	BETAL	CNFLS	CAFLS	CLMFLS	CYFLS	CYNFLS	CBLLS	CABLS	CYNBLS	CP5	CP6
-8.544	-5.766	-.12550	.01690	.04990	-.03000	-.00680	-.02450	.03940	-.00760	-.45310	-.44380
-8.599	-3.538	-.10490	.01630	.03980	-.04020	-.00060	-.02040	.03760	-.00730	-.43350	-.42220
-8.459	.400	-.06380	.01640	.01750	-.04650	.00270	-.01240	.03620	-.00700	-.43280	-.39220
-8.252	4.608	-.01950	.01510	-.01050	-.04490	-.00040	-.00370	.03050	-.00590	-.37000	-.32550
-8.249	6.516	-.00440	.01340	-.01900	-.04050	-.00530	-.00070	.02700	-.00520	-.33510	-.28020
	GRADIENT	.01048	-.00015	-.00618	-.00057	.00002	.00205	-.00088	.00017	.00788	.01192

IA156A, AEDC PWT 16T-470, 0 T S W/SILTS (R8NL79) (10 MAY 80)

REFERENCE DATA

SREF = 2690.0000 SQ.FT. XMRP = 976.0000 IN. XT
LREF = 1290.3000 INCHES YMRP = .0000 IN. YT
BREF = 1290.3000 INCHES ZMRP = 400.0000 IN. ZT
SCALE = .0200

PARAMETRIC DATA

IB-ELV = 8.000 OB-ELV = 11.000
BDFLAP = .000 SPDBRK = .000
RUDDER = .000 SILTS = 1.000
MACH = .900 RN/L = 3.500

RUN NO. 1091/ 0 RN/L = 3.50 GRADIENT INTERVAL = -5.00/ 5.00

ALPHAL	BETAL	CNFLS	CAFLS	CLMFLS	CYFLS	CYNFLS	CBLLS	CABLS	CYNBLS	CP5	CP6
-6.467	-5.796	-.10570	.01890	.04460	-.00930	-.01620	-.02060	.03870	-.00750	-.44540	-.43580
-6.382	-3.874	-.08620	.01860	.03470	-.01460	-.01220	-.01670	.03690	-.00720	-.42680	-.41250
-6.442	.274	-.04870	.01780	.01340	-.02060	-.00940	-.00940	.03490	-.00680	-.41790	-.37690
-6.199	4.431	-.01170	.01740	-.01010	-.01940	-.01230	-.00210	.02980	-.00580	-.36030	-.31740
-6.119	6.433	.00120	.01610	-.01810	-.01610	-.01680	.00040	.02650	-.00520	-.32320	-.28150
	GRADIENT	.00897	-.00014	-.00539	-.00058	-.00001	.00176	-.00086	.00017	.00801	.01145

RUN NO. 1092/ 0 RN/L = 3.50 GRADIENT INTERVAL = -5.00/ 5.00

ALPHAL	BETAL	CNFLS	CAFLS	CLMFLS	CYFLS	CYNFLS	CBLLS	CABLS	CYNBLS	CP5	CP6
-4.183	-5.960	-.08370	.02120	.03850	.01540	-.02800	-.01620	.03850	-.00750	-.44570	-.43060
-4.438	-3.828	-.06850	.02090	.02980	.00650	-.02263	-.01330	.03590	-.00700	-.41600	-.40150
-4.363	.515	-.03200	.01820	.00750	.00290	-.02170	-.00610	.03300	-.00640	-.39210	-.35900
-3.819	4.439	-.00470	.01930	-.00910	.00400	-.02430	-.00080	.02890	-.00560	-.34620	-.31120
-3.905	6.309	.00420	.01810	-.01530	.00390	-.02640	.00100	.02690	-.00520	-.32470	-.28800
	GRADIENT	.00773	-.00020	-.00471	-.00031	-.00020	.00151	-.00084	.00017	.00839	.01090

RUN NO. 1093/ 0 RN/L = 3.50 GRADIENT INTERVAL = -5.00/ 5.00

ALPHAL	BETAL	CNFLS	CAFLS	CLMFLS	CYFLS	CYNFLS	CBLLS	CABLS	CYNBLS	CP5	CP6
-.301	-6.824	-.05490	.02260	.03080	.04770	-.04740	-.01060	.03820	-.00740	-.45250	-.41830
-.281	-4.660	-.04410	.02290	.02480	.04070	-.04300	-.00850	.03700	-.00720	-.43990	-.40240
-.308	-.325	-.02030	.02090	.00840	.03150	-.03880	-.00380	.03190	-.00620	-.38000	-.34680
-.230	3.780	-.00110	.02080	-.00580	.02300	-.03380	-.00010	.02820	-.00550	-.34190	-.30050
-.213	5.970	.00680	.02060	-.01190	.02040	-.03340	.00150	.02680	-.00520	-.32470	-.28530
	GRADIENT	.00510	-.00025	-.00363	-.00210	.00109	.00100	-.00104	.00020	.01163	.01208

RUN NO. 1094/ 0 RN/L = 3.50 GRADIENT INTERVAL = -5.00/ 5.00

ALPHAL	BETAL	CNFLS	CAFLS	CLMFLS	CYFLS	CYNFLS	CBLLS	CABLS	CYNBLS	CP5	CP6
4.407	-5.704	-.00750	.02200	.01080	.04680	-.04870	-.00130	.03710	-.00720	-.43890	-.40490
4.252	-3.601	-.00550	.02190	.00900	.03960	-.04290	-.00090	.03530	-.00690	-.42240	-.38130
3.938	.239	.00220	.02080	.00140	.03310	-.03950	.00060	.03200	-.00620	-.38470	-.34500
4.084	4.157	.00770	.02060	-.00280	.02000	-.03160	.00170	.02940	-.00570	-.36050	-.31000
4.014	6.271	.01020	.02060	-.00620	.01580	-.02960	.00220	.02740	-.00530	-.33730	-.28740
	GRADIENT	.00170	-.00017	-.00152	-.00253	.00146	.00033	-.00076	.00015	.00797	.00919

IA156A, AEDC PWT 16T-470, 0 T S W/SILTS (R8NL80) (10 MAY 80)

REFERENCE DATA

SREF = 2690.0000 SQ.FT. XMRP = 976.0000 IN. XT
LREF = 1290.3000 INCHES YMRP = .0000 IN. YT
BREF = 1290.3000 INCHES ZMRP = 400.0000 IN. ZT
SCALE = .0200

PARAMETRIC DATA

IB-ELV = 8.000 OB-ELV = 11.000
BDFLAP = .000 SPDBRK = .000
RUDDER = .000 SILTS = 1.000
MACH = .950 RN/L = 3.500

RUN NO. 1095/ 0 RN/L = 3.50 GRADIENT INTERVAL = -5.00/ 5.00

ALPHAL	BETAL	CNFLS	CAFLS	CLMFLS	CYFLS	CYNFLS	CBLLS	CABLS	CYNBLS	CP5	CP6
-8.793	-5.801	-.13500	.01930	.05200	-.03360	-.00750	-.02640	.04190	-.00810	-.48390	-.47060
-8.641	-3.531	-.10710	.01970	.03850	-.04220	-.00050	-.02090	.03940	-.00760	-.45140	-.44420
-8.585	.400	-.06480	.01840	.01490	-.04680	.00220	-.01260	.03920	-.00760	-.46110	-.43180
-8.332	4.679	-.01920	.01710	-.01300	-.04070	-.00350	-.00370	.03350	-.00650	-.40070	-.36160
-8.313	6.519	-.00550	.01510	-.02080	-.03780	-.00750	-.00110	.02920	-.00570	-.35870	-.30730
	GRADIENT	.01071	-.00032	-.00628	.00020	-.00038	.00209	-.00073	.00014	.00629	.01015

RUN NO. 1096/ 0 RN/L = 3.50 GRADIENT INTERVAL = -5.00/ 5.00

ALPHAL	BETAL	CNFLS	CAFLS	CLMFLS	CYFLS	CYNFLS	CBLLS	CABLS	CYNBLS	CP5	CP6
-6.556	-5.792	-.10980	.02150	.04520	-.00980	-.01790	-.02140	.04100	-.00800	-.47120	-.46100
-6.465	-3.858	-.08970	.02130	.03470	-.01640	-.01240	-.01750	.03960	-.00770	-.45620	-.44500
-6.534	.292	-.04840	.02100	.01090	-.02040	-.01030	-.00940	.03810	-.00740	-.44850	-.41840
-6.241	4.433	-.01070	.01980	-.01200	-.01420	-.01640	-.00200	.03320	-.00640	-.39600	-.36030
-6.184	6.467	.00110	.01840	-.01890	-.01230	-.02000	.00030	.02860	-.00560	-.34830	-.30390
	GRADIENT	.00953	-.00018	-.00563	.00026	-.00048	.00187	-.00077	.00016	.00726	.01021

RUN NO. 1097/ 0 RN/L = 3.50 GRADIENT INTERVAL = -5.00/ 5.00

ALPHAL	BETAL	CNFLS	CAFLS	CLMFLS	CYFLS	CYNFLS	CBLLS	CABLS	CYNBLS	CP5	CP6
-4.227	-5.998	-.08810	.02400	.04010	.01690	-.03050	-.01710	.04120	-.00800	-.47810	-.46000
-4.485	-3.819	-.07150	.02340	.03070	.00880	-.02460	-.01390	.03950	-.00770	-.45680	-.44150
-4.401	.516	-.03280	.02230	.00770	.00850	-.02560	-.00630	.03640	-.00710	-.42990	-.39960
-3.848	4.451	-.00420	.02210	-.00950	.01040	-.02870	-.00070	.03180	-.00620	-.37730	-.34730
-3.932	6.310	.00460	.02070	-.01530	.00940	-.03040	.00100	.02880	-.00560	-.34580	-.31060
	GRADIENT	.00815	-.00016	-.00487	.00019	-.00049	.00160	-.00093	.00018	.00956	.01136

RUN NO. 1098/ 0 RN/L = 3.51 GRADIENT INTERVAL = -5.00/ 5.00

ALPHAL	BETAL	CNFLS	CAFLS	CLMFLS	CYFLS	CYNFLS	CBLLS	CABLS	CYNBLS	CP5	CP6
-.325	-6.853	-.05620	.02590	.03170	.05180	-.05140	-.01090	.04170	-.00810	-.49570	-.45470
-.290	-4.640	-.04430	.02610	.02540	.04740	-.04850	-.00860	.04060	-.00790	-.48270	-.44140
-.294	-.347	-.02160	.02520	.01160	.03810	-.04410	-.00410	.03610	-.00700	-.42750	-.39440
-.212	3.794	-.00350	.02330	-.00170	.02480	-.03640	-.00060	.03110	-.00600	-.37350	-.33400
-.209	5.990	.00420	.02260	-.00780	.02160	-.03610	.00090	.02860	-.00550	-.34940	-.30140
	GRADIENT	.00484	-.00033	-.00321	-.00268	.00143	.00095	-.00113	.00023	.01295	.01272

IA156A, AEDC PWT 16T-470, 0 T S W/SILTS (R8NL80) (10 MAY 80)

REFERENCE DATA

SREF = 2690.0000 SQ.FT. XMRP = 976.0000 IN. XT
LREF = 1290.3000 INCHES YMRP = .0000 IN. YT
BREF = 1290.3000 INCHES ZMRP = 400.0000 IN. ZT
SCALE = .0200

PARAMETRIC DATA

IB-ELV = 8.000 OB-ELV = 11.000
BDFLAP = .000 SPDBRK = .000
RUDDER = .000 SILTS = 1.000
MACH = .950 RN/L = 3.500

RUN NO. 1099/ 0 RN/L = 3.50 GRADIENT INTERVAL = -5.00/ 5.00

ALPHAL	BETAL	CNFLS	CAFLS	CLMFLS	CYFLS	CYNFLS	CBLLS	CABLS	CYNBLS	CP5	CP6
4.428	-5.648	-.00960	.02480	.01360	.04560	-.05010	-.00170	.04080	-.00790	-.48850	-.44000
4.268	-3.665	-.00680	.02490	.01060	.03800	-.04430	-.00120	.03900	-.00760	-.47070	-.41740
4.072	.319	.00240	.02360	.00110	.03230	-.04140	.00060	.03550	-.00690	-.42730	-.38120
4.074	4.115	.00630	.02320	-.00220	.02090	-.03390	.00140	.03220	-.00630	-.39510	-.33860
4.055	6.256	.00830	.02180	-.00380	.01510	-.03110	.00180	.02990	-.00580	-.37030	-.30990
	GRADIENT	.00169	-.00022	-.00165	-.00219	.00133	.00034	-.00087	.00017	.00973	.01012

IA156A, AEDC PWT 16T-470, 0 T S W/SILTS (R8NL81) (10 MAY 80)

REFERENCE DATA

SREF = 2690.0000 SQ.FT. XMRP = 976.0000 IN. XT
LREF = 1290.3000 INCHES YMRP = .0000 IN. YT
BREF = 1290.3000 INCHES ZMRP = 400.0000 IN. ZT
SCALE = .0200

PARAMETRIC DATA

IB-ELV = 8.000 OB-ELV = 11.000
BDFLAP = .000 SPDBRK = .000
RUDDER = .000 SILTS = 1.000
MACH = 1.050 RN/L = 3.500

RUN NO. 1102/ 0 RN/L = 3.50 GRADIENT INTERVAL = -5.00/ 5.00

ALPHAL	BETAL	CNFLS	CAFLS	CLMFLS	CYFLS	CYNFLS	CBLLS	CABLS	CYNBLS	CP5	CP6
-8.766	-5.728	-.14440	.02660	.05850	-.02450	-.01570	-.02830	.05400	-.01050	-.63620	-.59390
-8.776	-3.600	-.12350	.02550	.04810	-.03250	-.01090	-.02410	.05330	-.01030	-.62380	-.58910
-8.683	.542	-.06930	.02510	.01400	-.04350	-.00400	-.01350	.05110	-.00990	-.60140	-.56220
-8.431	4.570	-.02270	.02390	-.01480	-.03710	-.01040	-.00440	.04560	-.00880	-.53960	-.49840
-8.372	6.555	-.00660	.02200	-.02420	-.03320	-.01400	-.00130	.04150	-.00810	-.49610	-.44930
	GRADIENT	.01234	-.00020	-.00770	-.00057	.00007	.00241	-.00094	.00018	.01028	.01108

RUN NO. 1103/ 0 RN/L = 3.50 GRADIENT INTERVAL = -5.00/ 5.00

ALPHAL	BETAL	CNFLS	CAFLS	CLMFLS	CYFLS	CYNFLS	CBLLS	CABLS	CYNBLS	CP5	CP6
-6.594	-5.775	-.12040	.02930	.05210	-.00190	-.02600	-.02350	.05440	-.01060	-.64060	-.59760
-6.518	-3.860	-.09910	.02850	.04040	-.00840	-.02120	-.01930	.05300	-.01030	-.62460	-.58250
-6.609	.319	-.05340	.02600	.01260	-.01320	-.01910	-.01040	.05060	-.00980	-.59750	-.55430
-6.320	4.474	-.01190	.02670	-.01370	-.00860	-.02320	-.00230	.04500	-.00870	-.53480	-.48920
-6.068	6.590	.00420	.02430	-.02300	-.00320	-.02810	.00090	.04120	-.00800	-.48840	-.44930
	GRADIENT	.01046	-.00022	-.00649	-.00003	-.00024	.00204	-.00096	.00019	.01077	.01119

IA156A, AEDC PWT 16T-470, O T S W/SILTS (R8NL81) (10 MAY 80)

REFERENCE DATA

SREF = 2690.0000 SQ.FT. XMRP = 976.0000 IN. XT
LREF = 1290.3000 INCHES YMRP = .0000 IN. YT
BREF = 1290.3000 INCHES ZMRP = 400.0000 IN. ZT
SCALE = .0200

PARAMETRIC DATA

IB-ELV = 8.000 OB-ELV = 11.000
BDFLAP = .000 SPDBRK = .000
RUDDER = .000 SILTS = 1.000
MACH = 1.050 RN/L = 3.500

RUN NO. 1104/ 0 RN/L = 3.50 GRADIENT INTERVAL = -5.00/ 5.00

ALPHAL	BETAL	CNFLS	CAFLS	CLMFLS	CYFLS	CYNFLS	CBLLS	CABLS	CYNBLS	CP5	CP6
-4.314	-5.945	-.09510	.03080	.04560	.02800	-.04060	-.01850	.05300	-.01030	-.62560	-.58160
-4.534	-3.818	-.07800	.03050	.03540	.02090	-.03590	-.01520	.05160	-.01000	-.60630	-.56740
-4.455	.539	-.03610	.02720	.00890	.01750	-.03510	-.00700	.04960	-.00960	-.59010	-.53880
-3.882	4.471	-.00340	.02790	-.01220	.01930	-.03730	-.00060	.04430	-.00860	-.52620	-.48320
-3.948	6.311	.00670	.02760	-.01900	.01760	-.03820	.00140	.04030	-.00780	-.47530	-.44240
	GRADIENT	.00901	-.00032	-.00575	-.00020	-.00016	.00176	-.00087	.00017	.00956	.01009

RUN NO. 1105/ 0 RN/L = 3.49 GRADIENT INTERVAL = -5.00/ 5.00

ALPHAL	BETAL	CNFLS	CAFLS	CLMFLS	CYFLS	CYNFLS	CBLLS	CABLS	CYNBLS	CP5	CP6
-.342	-6.848	-.06350	.03330	.03840	.06190	-.06140	-.01230	.05230	-.01020	-.61840	-.57240
-.318	-4.670	-.04900	.03310	.02970	.05800	-.05910	-.00950	.05170	-.01000	-.61240	-.56510
-.357	-.306	-.02220	.03150	.01210	.05170	-.05690	-.00420	.04850	-.00940	-.57630	-.52850
-.273	3.819	-.00160	.02830	-.00330	.03740	-.04750	-.00020	.04440	-.00860	-.52990	-.48080
-.254	6.013	.00650	.02810	-.00970	.03090	-.04420	.00140	.04180	-.00810	-.50160	-.44980
	GRADIENT	.00559	-.00056	-.00389	-.00242	.00136	.00110	-.00086	.00016	.00970	.00992

RUN NO. 1106/ 0 RN/L = 3.49 GRADIENT INTERVAL = -5.00/ 5.00

ALPHAL	BETAL	CNFLS	CAFLS	CLMFLS	CYFLS	CYNFLS	CBLLS	CABLS	CYNBLS	CP5	CP6
4.469	-5.621	-.01060	.03300	.01620	.05990	-.06450	-.00190	.04930	-.00960	-.58580	-.53610
4.254	-3.518	-.00790	.03190	.01330	.05080	-.05760	-.00140	.04930	-.00960	-.58330	-.53880
4.004	.280	.00090	.03090	.00430	.04030	-.05040	.00040	.04830	-.00940	-.57330	-.52680
4.089	4.192	.00900	.02930	-.00450	.02440	-.03980	.00190	.04570	-.00890	-.54220	-.49840
4.058	6.282	.01120	.02850	-.00730	.01950	-.03730	.00230	.04300	-.00830	-.51400	-.46540
	GRADIENT	.00219	-.00034	-.00231	-.00343	.00231	.00043	-.00047	.00009	.00534	.00525

IA156A, AEDC PWT 16T-470, O T S W/SILTS (R8NL82) (10 MAY 80)

REFERENCE DATA

SREF = 2690.0000 SQ.FT. XMRP = 976.0000 IN. XT
LREF = 1290.3000 INCHES YMRP = .0000 IN. YT
BREF = 1290.3000 INCHES ZMRP = 400.0000 IN. ZT
SCALE = .0200

PARAMETRIC DATA

IB-ELV = 8.000 OB-ELV = 11.000
BDFLAP = .000 SPDBRK = .000
RUDDER = .000 SILTS = 1.000
MACH = 1.100 RN/L = 3.500

RUN NO. 1107/ 0 RN/L = 3.51 GRADIENT INTERVAL = -5.00/ 5.00

ALPHAL	BETAL	CNFLS	CAFLS	CLMFLS	CYFLS	CYNFLS	CBLLS	CABLS	CYNBLS	CP5	CP6
-8.829	-5.626	-.14400	.03120	.05680	-.02810	-.01540	-.02820	.05090	-.00990	-.60090	-.55720
-8.803	-3.546	-.12060	.03040	.04490	-.03680	-.00940	-.02360	.04960	-.00960	-.58090	-.54860
-8.716	.477	-.06770	.02790	.01240	-.04390	-.00570	-.01320	.04770	-.00930	-.56330	-.52390
-8.428	4.638	-.02080	.02550	-.01560	-.03540	-.01200	-.00410	.04220	-.00820	-.50150	-.46020
-8.397	6.570	-.00630	.02420	-.02390	-.03330	-.01440	-.00120	.03770	-.00730	-.45160	-.40800
	GRADIENT	.01219	-.00060	-.00739	.00018	-.00032	.00238	-.00091	.00017	.00973	.01083

RUN NO. 1108/ 0 RN/L = 3.50 GRADIENT INTERVAL = -5.00/ 5.00

ALPHAL	BETAL	CNFLS	CAFLS	CLMFLS	CYFLS	CYNFLS	CBLLS	CABLS	CYNBLS	CP5	CP6
-6.633	-5.787	-.11800	.03320	.04970	-.00350	-.02480	-.02310	.04980	-.00970	-.58810	-.54550
-6.556	-3.859	-.09720	.03210	.03800	-.01010	-.02060	-.01900	.04840	-.00940	-.57130	-.53040
-6.656	.356	-.05070	.02840	.00980	-.01460	-.01950	-.00990	.04610	-.00900	-.54810	-.50250
-6.309	4.473	-.00990	.02790	-.01540	-.00840	-.02350	-.00190	.04170	-.00810	-.49800	-.45180
-6.248	6.481	.00380	.02600	-.02350	-.00490	-.02680	.00080	.03750	-.00730	-.44640	-.40750
	GRADIENT	.01048	-.00051	-.00641	.00020	-.00035	.00205	-.00080	.00016	.00878	.00942

RUN NO. 1109/ 0 RN/L = 3.51 GRADIENT INTERVAL = -5.00/ 5.00

ALPHAL	BETAL	CNFLS	CAFLS	CLMFLS	CYFLS	CYNFLS	CBLLS	CABLS	CYNBLS	CP5	CP6
-4.539	-5.866	-.09810	.03410	.04540	.02030	-.03600	-.01910	.04830	-.00940	-.57090	-.52840
-4.536	-3.831	-.07700	.03340	.03370	.01910	-.03480	-.01500	.04640	-.00900	-.54890	-.50670
-4.463	.523	-.03380	.02960	.00670	.01690	-.03490	-.00650	.04400	-.00860	-.52660	-.47650
-3.869	4.463	-.00310	.02970	-.01230	.01990	-.03770	-.00050	.04010	-.00780	-.47710	-.43700
-3.971	6.334	.00620	.02830	-.01880	.01820	-.03800	.00130	.03810	-.00740	-.45020	-.41660
	GRADIENT	.00893	-.00045	-.00556	.00009	-.00034	.00175	-.00076	.00014	.00860	.00838

RUN NO. 1110/ 0 RN/L = 3.50 GRADIENT INTERVAL = -5.00/ 5.00

ALPHAL	BETAL	CNFLS	CAFLS	CLMFLS	CYFLS	CYNFLS	CBLLS	CABLS	CYNBLS	CP5	CP6
-.350	-6.874	-.06470	.03630	.03870	.05780	-.05860	-.01260	.04670	-.00910	-.55750	-.50550
-.330	-4.691	-.05010	.03490	.02960	.05390	-.05560	-.00970	.04600	-.00890	-.54690	-.50000
-.357	-.248	-.02280	.03230	.01170	.04920	-.05430	-.00430	.04280	-.00830	-.51260	-.46270
-.254	3.839	-.00270	.03000	-.00270	.03580	-.04590	-.00040	.03740	-.00730	-.44820	-.40320
-.240	6.024	.00540	.02890	-.00910	.02930	-.04250	.00110	.03530	-.00690	-.42740	-.37670
	GRADIENT	.00557	-.00057	-.00379	-.00211	.00112	.00109	-.00100	.00019	.01151	.01130

IA156A, AEDC PWT 16T-470, 0 T S W/SILTS (R8NL82) (10 MAY 80)

REFERENCE DATA

SREF = 2690.0000 SQ.FT. XMRP = 976.0000 IN. XT
LREF = 1290.3000 INCHES YMRP = .0000 IN. YT
BREF = 1290.3000 INCHES ZMRP = 400.0000 IN. ZT
SCALE = .0200

PARAMETRIC DATA

IB-ELV = 8.000 OB-ELV = 11.000
BDFLAP = .000 SPDBRK = .000
RUDDER = .000 SILTS = 1.000
MACH = 1.100 RN/L = 3.500

RUN NO. 1111/ 0 RN/L = 3.50 GRADIENT INTERVAL = -5.00/ 5.00

ALPHAL	BETAL	CNFLS	CAFLS	CLMFLS	CYFLS	CYNFLS	CBLLS	CABLS	CYNBLS	CP5	CP6
4.493	-5.629	-.01020	.03390	.01670	.05470	-.06050	-.00180	.04460	-.00870	-.53070	-.48410
4.332	-3.548	-.00680	.03410	.01350	.04730	-.05530	-.00120	.04320	-.00840	-.51330	-.46990
3.980	.297	.00010	.03230	.00530	.03880	-.04980	.00020	.04220	-.00820	-.50430	-.45720
4.110	4.190	.00840	.03080	-.00400	.02240	-.03890	.00180	.03940	-.00770	-.47090	-.42730
4.085	6.302	.01120	.02950	-.00750	.01760	-.03640	.00230	.03660	-.00710	-.44070	-.39380
	GRADIENT	.00196	-.00043	-.00226	-.00322	.00212	.00039	-.00049	.00009	.00549	.00551

IA156A, AEDC PWT 16T-470, 0 T S W/SILTS (R8NL83) (10 MAY 80)

REFERENCE DATA

SREF = 2690.0000 SQ.FT. XMRP = 976.0000 IN. XT
LREF = 1290.3000 INCHES YMRP = .0000 IN. YT
BREF = 1290.3000 INCHES ZMRP = 400.0000 IN. ZT
SCALE = .0200

PARAMETRIC DATA

IB-ELV = 8.000 OB-ELV = 9.000
BDFLAP = .000 SPDBRK = .000
RUDDER = .000 SILTS = 1.000
MACH = .600 RN/L = 3.500

RUN NO. 1114/ 0 RN/L = 3.51 GRADIENT INTERVAL = -5.00/ 5.00

ALPHAL	BETAL	CNFLS	CAFLS	CLMFLS	CYFLS	CYNFLS	CBLLS	CABLS	CYNBLS	CP5	CP6
-8.496	-7.745	-.13850	.00890	.05780	-.00250	-.01680	-.02710	.04110	-.00800	-.48520	-.45060
-8.351	-5.791	-.11750	.00900	.04780	-.01080	-.01090	-.02300	.03910	-.00760	-.46400	-.42650
-8.364	-3.683	-.09600	.00900	.03690	-.02010	-.00450	-.01880	.03690	-.00720	-.44170	-.39960
-8.223	.410	-.05660	.00890	.01530	-.03020	.00140	-.01100	.03380	-.00660	-.41850	-.35080
-8.052	4.360	-.01940	.01050	-.00730	-.02810	-.00300	-.00370	.03030	-.00590	-.38820	-.30200
-8.022	6.321	-.00350	.00920	-.01650	-.02310	-.00830	-.00060	.02710	-.00530	-.34190	-.27640
-8.039	8.336	.00840	.00820	-.02290	-.01880	-.01310	.00170	.02470	-.00480	-.31210	-.25030
	GRADIENT	.00952	.00019	-.00549	-.00100	.00019	.00188	-.00082	.00016	.00665	.01213

RUN NO. 1115/ 0 RN/L = 3.51 GRADIENT INTERVAL = -5.00/ 5.00

ALPHAL	BETAL	CNFLS	CAFLS	CLMFLS	CYFLS	CYNFLS	CBLLS	CABLS	CYNBLS	CP5	CP6
-6.339	-7.847	-.11480	.01150	.05060	.01680	-.02590	-.02240	.03890	-.00760	-.46120	-.42570
-6.294	-5.820	-.09750	.01110	.04180	.00750	-.01970	-.01900	.03750	-.00730	-.44690	-.40760
-6.194	-3.911	-.07950	.01140	.03250	.00160	-.01560	-.01550	.03520	-.00680	-.42850	-.37320
-6.220	.164	-.04360	.01120	.01180	-.00520	-.01220	-.00840	.03130	-.00610	-.39040	-.32390
-6.010	4.271	-.01210	.01160	-.00680	-.00350	-.01520	-.00230	.02930	-.00570	-.37250	-.29590
-5.944	6.264	.00060	.00960	-.01480	-.00200	-.01810	.00020	.02790	-.00540	-.34880	-.28760
-5.732	8.419	.01150	.01060	-.02110	.00130	-.02240	.00230	.02420	-.00470	-.30310	-.24900
	GRADIENT	.00824	.00002	-.00480	-.00062	.00005	.00161	-.00072	.00013	.00684	.00944

IA156A, AEDC PWT 16T-470, O T S W/SILTS (R8NL83) (10 MAY 80)

REFERENCE DATA

SREF = 2690.0000 SQ.FT. XMRP = 976.0000 IN. XT
LREF = 1290.3000 INCHES YMRP = .0000 IN. YT
BREF = 1290.3000 INCHES ZMRP = 400.0000 IN. ZT
SCALE = .0200

PARAMETRIC DATA

IB-ELV = 8.000 OB-ELV = 9.000
BDFLAP = .000 SPDBRK = .000
RUDDER = .000 SILTS = 1.000
MACH = .600 RN/L = 3.500

RUN NO. 1117/ 0 RN/L = 3.49 GRADIENT INTERVAL = -5.00/ 5.00

ALPHAL	BETAL	CNFLS	CAFLS	CLMFLS	CYFLS	CYNFLS	CBLLS	CABLS	CYNBLS	CP5	CP6
-4.089	-7.872	-.09180	.01330	.04350	.03340	-.03490	-.01790	.03820	-.00740	-.45230	-.41660
-4.310	-5.852	-.07870	.01240	.03580	.02340	-.02810	-.01530	.03670	-.00710	-.43820	-.39870
-4.299	-3.792	-.06270	.01260	.02710	.01870	-.02500	-.01220	.03450	-.00670	-.41670	-.36800
-4.079	.251	-.03040	.01190	.00850	.01730	-.02520	-.00580	.03070	-.00600	-.37790	-.32060
-3.703	4.311	-.00570	.01330	-.00610	.01510	-.02570	-.00100	.02760	-.00540	-.34430	-.28390
-3.778	6.116	.00260	.01290	-.01190	.01390	-.02660	.00070	.02530	-.00490	-.31540	-.26120
-3.821	8.126	.01170	.01220	-.01850	.01300	-.02780	.00240	.02430	-.00470	-.30590	-.24880
	GRADIENT	.00703	.00009	-.00410	-.00044	-.00009	.00138	-.00085	.00016	.00893	.01038

RUN NO. 1118/ 0 RN/L = 3.50 GRADIENT INTERVAL = -5.00/ 5.00

ALPHAL	BETAL	CNFLS	CAFLS	CLMFLS	CYFLS	CYNFLS	CBLLS	CABLS	CYNBLS	CP5	CP6
-.283	-8.657	-.05920	.01560	.03360	.05520	-.04990	-.01140	.03680	-.00720	-.43970	-.39940
-.268	-6.578	-.04940	.01510	.02810	.04930	-.04560	-.00950	.03640	-.00710	-.43530	-.39320
-.251	-4.289	-.03810	.01500	.02130	.04370	-.04190	-.00730	.03480	-.00670	-.41740	-.37420
-.223	-.222	-.01760	.01370	.00840	.03830	-.04000	-.00330	.03110	-.00600	-.37670	-.33100
-.168	3.860	-.00420	.01360	-.00060	.02780	-.03380	-.00060	.02740	-.00530	-.34190	-.28230
-.161	5.955	.00250	.01390	-.00600	.02250	-.03110	.00070	.02540	-.00490	-.31990	-.25970
-.161	8.066	.01020	.01400	-.01250	.02080	-.03190	.00220	.02500	-.00490	-.31570	-.25440
	GRADIENT	.00416	-.00017	-.00269	-.00195	.00099	.00082	-.00091	.00017	.00926	.01128

RUN NO. 1119/ 0 RN/L = 3.49 GRADIENT INTERVAL = -5.00/ 5.00

ALPHAL	BETAL	CNFLS	CAFLS	CLMFLS	CYFLS	CYNFLS	CBLLS	CABLS	CYNBLS	CP5	CP6
4.313	-8.050	-.00640	.01650	.01150	.05240	-.05150	-.00100	.03500	-.00680	-.41820	-.37780
4.324	-5.737	-.00250	.01520	.00840	.04620	-.04630	-.00020	.03440	-.00670	-.41330	-.36980
4.304	-3.739	.00050	.01470	.00640	.04060	-.04220	.00040	.03300	-.00640	-.39910	-.35220
4.055	.230	.00340	.01330	.00220	.03210	-.03720	.00100	.03000	-.00580	-.36740	-.31650
4.124	4.248	.00570	.01350	-.00090	.01830	-.02800	.00140	.02750	-.00530	-.34430	-.28160
4.067	6.335	.00640	.01410	-.00240	.01220	-.02490	.00150	.02580	-.00500	-.33030	-.25800
4.038	8.328	.01000	.01390	-.00690	.00840	-.02350	.00230	.02600	-.00500	-.32990	-.26260
	GRADIENT	.00065	-.00015	-.00091	-.00279	.00178	.00013	-.00069	.00014	.00686	.00884

IA156A, AEDC PWT 16T-470, 0 T S W/SILTS (R8NL83) (10 MAY 80)

REFERENCE DATA

SREF = 2690.0000 SQ.FT. XMRP = 976.0000 IN. XT
LREF = 1290.3000 INCHES YMRP = .0000 IN. YT
BREF = 1290.3000 INCHES ZMRP = 400.0000 IN. ZT
SCALE = .0200

PARAMETRIC DATA

IB-ELV = 8.000 OB-ELV = 9.000
BDFLAP = .000 SPDBRK = .000
RUDDER = .000 SILTS = 1.000
MACH = .600 RN/L = 3.500

RUN NO. 1120/ 0 RN/L = 3.49 GRADIENT INTERVAL = -5.00/ 5.00

ALPHAL	BETAL	CNFLS	CAFLS	CLMFLS	CYFLS	CYNFLS	CBLLS	CABLS	CYNBLS	CP5	CP6
6.523	-7.915	.01640	.01540	.00170	.03900	-.04380	.00350	.03490	-.00680	-.41740	-.37710
6.496	-5.859	.01690	.01490	.00100	.03250	-.03860	.00360	.03410	-.00660	-.40950	-.36630
6.479	-3.829	.01550	.01530	.00130	.02720	-.03460	.00330	.03270	-.00640	-.40000	-.34600
6.206	.224	.01160	.01370	.00150	.01860	-.02920	.00260	.03100	-.00600	-.37780	-.32750
6.088	4.208	.01000	.01300	-.00060	.00550	-.02060	.00220	.02790	-.00540	-.35100	-.28500
6.030	6.132	.00980	.01330	-.00200	-.00020	-.01720	.00220	.02680	-.00520	-.34080	-.27020
6.073	8.419	.01240	.01370	-.00650	-.00490	-.01540	.00270	.02660	-.00520	-.33720	-.26900
	GRADIENT	-.00069	-.00029	-.00024	-.00270	.00174	-.00014	-.00060	.00012	.00610	.00758

RUN NO. 1121/ 0 RN/L = 3.50 GRADIENT INTERVAL = -5.00/ 5.00

ALPHAL	BETAL	CNFLS	CAFLS	CLMFLS	CYFLS	CYNFLS	CBLLS	CABLS	CYNBLS	CP5	CP6
8.476	-7.741	.03550	.01470	-.00550	.02320	-.03470	.00730	.03450	-.00670	-.41260	-.37290
8.386	-5.677	.03200	.01460	-.00430	.01610	-.02940	.00660	.03370	-.00650	-.40810	-.35860
8.373	-3.694	.02860	.01440	-.00300	.01000	-.02470	.00590	.03330	-.00650	-.40860	-.35010
8.251	.276	.02200	.01280	-.00190	.00280	-.02100	.00460	.03170	-.00620	-.38370	-.33850
8.267	4.339	.01860	.01190	-.00360	-.01190	-.01110	.00400	.02820	-.00550	-.35450	-.28800
8.214	6.352	.01740	.01250	-.00500	-.01740	-.00760	.00370	.02680	-.00520	-.33920	-.27220
8.177	8.385	.01860	.01240	-.00910	-.02010	-.00640	.00400	.02720	-.00530	-.33990	-.27890
	GRADIENT	-.00124	-.00031	-.00008	-.00273	.00170	-.00024	-.00064	.00012	.00674	.00775

IA156A, AEDC PWT 16T-470, 0 T S W/SILTS (R8NL85) (10 MAY 80)

REFERENCE DATA

SREF = 2690.0000 SQ.FT. XMRP = 976.0000 IN. XT
LREF = 1290.3000 INCHES YMRP = .0000 IN. YT
BREF = 1290.3000 INCHES ZMRP = 400.0000 IN. ZT
SCALE = .0200

PARAMETRIC DATA

IB-ELV = 8.000 OB-ELV = 9.000
BDFLAP = .000 SPDBRK = .000
RUDDER = .000 SILTS = 1.000
MACH = .800 RN/L = 3.500

RUN NO. 1132/ 0 RN/L = 3.51 GRADIENT INTERVAL = -5.00/ 5.00

ALPHAL	BETAL	CNFLS	CAFLS	CLMFLS	CYFLS	CYNFLS	CBLLS	CABLS	CYNBLS	CP5	CP6
-8.559	-5.688	-.12420	.01200	.05020	-.02570	-.00610	-.02440	.03930	-.00760	-.45870	-.43680
-8.523	-3.679	-.10190	.01230	.03930	-.03240	-.00140	-.02000	.03710	-.00720	-.43390	-.41050
-8.410	.449	-.06070	.01210	.01600	-.04090	.00330	-.01190	.03430	-.00670	-.41870	-.36230
-8.209	4.474	-.02090	.01200	-.00860	-.03730	-.00140	-.00410	.02930	-.00570	-.36350	-.30460
-8.206	6.464	-.00540	.01050	-.01810	-.03180	-.00680	-.00110	.02590	-.00500	-.32370	-.26580
	GRADIENT	.00993	-.00004	-.00587	-.00061	.00000	.00195	-.00096	.00018	.00861	.01298

RUN NO. 1133/ 0 RN/L = 3.50 GRADIENT INTERVAL = -5.00/ 5.00

ALPHAL	BETAL	CNFLS	CAFLS	CLMFLS	CYFLS	CYNFLS	CBLLS	CABLS	CYNBLS	CP5	CP6
-6.422	-5.854	-.10030	.01460	.04280	-.00070	-.01830	-.01970	.03800	-.00740	-.44540	-.41990
-6.327	-3.896	-.08360	.01490	.03450	-.00700	-.01410	-.01640	.03550	-.00690	-.41600	-.39230
-6.387	.265	-.04610	.01320	.01260	-.01280	-.01050	-.00900	.03270	-.00640	-.39960	-.34550
-6.135	4.396	-.01280	.01380	-.00830	-.01310	-.01250	-.00250	.02810	-.00550	-.34880	-.29150
-6.086	6.386	.00020	.01300	-.01720	-.00980	-.01650	.00000	.02480	-.00480	-.30820	-.25770
	GRADIENT	.00854	-.00013	-.00516	-.00074	.00019	.00168	-.00089	.00017	.00810	.01215

RUN NO. 1134/ 0 RN/L = 3.50 GRADIENT INTERVAL = -5.00/ 5.00

ALPHAL	BETAL	CNFLS	CAFLS	CLMFLS	CYFLS	CYNFLS	CBLLS	CABLS	CYNBLS	CP5	CP6
-4.204	-5.959	-.08040	.01660	.03700	.02060	-.02910	-.01580	.03710	-.00720	-.43810	-.40740
-4.404	-3.851	-.05600	.01630	.02920	.01340	-.02450	-.01300	.03510	-.00680	-.41340	-.38690
-4.298	.477	-.03130	.01510	.00800	.00830	-.02220	-.00620	.03090	-.00600	-.37380	-.32910
-3.823	4.404	-.00410	.01550	-.00980	.00770	-.02310	-.00090	.02710	-.00530	-.33680	-.28090
-3.878	6.239	.00650	.01500	-.01740	.00760	-.02460	.00120	.02500	-.00490	-.31120	-.25870
	GRADIENT	.00751	-.00010	-.00473	-.00070	.00018	.00147	-.00097	.00018	.00928	.01285

RUN NO. 1135/ 0 RN/L = 3.50 GRADIENT INTERVAL = -5.00/ 5.00

ALPHAL	BETAL	CNFLS	CAFLS	CLMFLS	CYFLS	CYNFLS	CBLLS	CABLS	CYNBLS	CP5	CP6
-.288	-6.718	-.05310	.01910	.02920	.04520	-.04470	-.01050	.03680	-.00710	-.43770	-.40060
-.279	-4.406	-.04280	.01840	.02270	.03810	-.03940	-.00850	.03480	-.00670	-.41630	-.37540
-.275	-.294	-.02050	.01770	.00840	.03280	-.03660	-.00410	.03000	-.00580	-.35830	-.32410
-.207	3.771	-.00120	.01720	-.00520	.02660	-.03300	-.00030	.02660	-.00520	-.32870	-.27650
-.184	5.914	.00700	.01720	-.01120	.02360	-.03140	.00130	.02540	-.00490	-.31730	-.26160
	GRADIENT	.00509	-.00015	-.00341	-.00141	.00078	.00100	-.00100	.00018	.01072	.01209

IA156A, AEDC PWT 16T-470, O T S W/SILTS (R8NL85) (10 MAY 80)

REFERENCE DATA

SREF = 2690.0000 SQ.FT. XMRP = 976.0000 IN. XT
LREF = 1290.3000 INCHES YMRP = .0000 IN. YT
BREF = 1290.3000 INCHES ZMRP = 400.0000 IN. ZT
SCALE = .0200

PARAMETRIC DATA

IB-ELV = 8.000 OB-ELV = 9.000
BDFLAP = .000 SPDBRK = .000
RUDDER = .000 SILTS = 1.000
MACH = .800 RN/L = 3.500

RUN NO. 1136/ 0 RN/L = 3.50 GRADIENT INTERVAL = -5.00/ 5.00

ALPHAL	BETAL	CNFLS	CAFLS	CLMFLS	CYFLS	CYNFLS	CBLLS	CABLS	CYNBLS	CP5	CP6
4.305	-5.817	-.00460	.01850	.00990	.04890	-.04870	-.00090	.03500	-.00680	-.41550	-.38140
4.302	-3.695	-.00080	.01780	.00810	.04250	-.04390	-.00020	.03370	-.00650	-.40280	-.36440
4.153	.302	.00520	.01640	.00260	.03210	-.03810	.00090	.02970	-.00580	-.35660	-.31950
4.082	4.119	.00620	.01700	.00030	.01910	-.02990	.00110	.02750	-.00530	-.33880	-.28850
4.048	6.260	.00850	.01710	-.00300	.01360	-.02700	.00160	.02620	-.00510	-.32650	-.27000
	GRADIENT	.00090	-.00010	-.00100	-.00299	.00179	.00017	-.00080	.00015	.00822	.00973

RUN NO. 1137/ 0 RN/L = 3.50 GRADIENT INTERVAL = -5.00/ 5.00

ALPHAL	BETAL	CNFLS	CAFLS	CLMFLS	CYFLS	CYNFLS	CBLLS	CABLS	CYNBLS	CP5	CP6
6.482	-5.740	.01770	.01750	.00120	.03520	-.04250	.00340	.03510	-.00680	-.41780	-.38100
6.460	-3.694	.01710	.01710	.00140	.02680	-.03600	.00330	.03420	-.00660	-.41030	-.36930
6.108	.286	.01330	.01610	.00140	.01850	-.03150	.00250	.03080	-.00600	-.36960	-.33190
6.032	4.234	.01080	.01630	.00020	.00570	-.02330	.00200	.02810	-.00550	-.34840	-.29210
6.085	6.206	.01190	.01650	-.00230	-.00020	-.01980	.00220	.02690	-.00520	-.33710	-.27550
	GRADIENT	-.00079	-.00010	-.00015	-.00266	.00160	-.00016	-.00077	.00014	.00781	.00974

IA156A, AEDC PWT 16T-470, O T S W/SILTS (R8NL86) (10 MAY 80)

REFERENCE DATA

SREF = 2690.0000 SQ.FT. XMRP = 976.0000 IN. XT
LREF = 1290.3000 INCHES YMRP = .0000 IN. YT
BREF = 1290.3000 INCHES ZMRP = 400.0000 IN. ZT
SCALE = .0200

PARAMETRIC DATA

IB-ELV = 8.000 OB-ELV = 9.000
BDFLAP = .000 SPDBRK = .000
RUDDER = .000 SILTS = 1.000
MACH = .900 RN/L = 3.500

RUN NO. 1139/ 0 RN/L = 3.50 GRADIENT INTERVAL = -5.00/ 5.00

ALPHAL	BETAL	CNFLS	CAFLS	CLMFLS	CYFLS	CYNFLS	CBLLS	CABLS	CYNBLS	CP5	CP6
-8.482	-5.787	-.12420	.01710	.04930	-.02550	-.00820	-.02440	.03890	-.00750	-.44830	-.43650
-8.611	-3.554	-.10290	.01590	.03860	-.03660	-.00170	-.02020	.03750	-.00730	-.43100	-.42190
-8.472	.393	-.06270	.01550	.01650	-.04400	.00190	-.01230	.03630	-.00700	-.43310	-.39310
-8.256	4.605	-.01900	.01460	-.01130	-.04340	-.00100	-.00380	.03050	-.00590	-.37060	-.32360
-8.255	6.511	-.00410	.01300	-.01980	-.03930	-.00570	-.00090	.02720	-.00530	-.33760	-.28120
	GRADIENT	.01028	-.00016	-.00612	-.00082	.00008	.00201	-.00086	.00017	.00749	.01210

IA156A, AEDC PWT 16T-470, O T S W/SILTS (R8NL86) (10 MAY 80)

REFERENCE DATA

SREF = 2690.0000 SQ.FT. XMRP = 976.0000 IN. XT
LREF = 1290.3000 INCHES YMRP = .0000 IN. YT
BREF = 1290.3000 INCHES ZMRP = 400.0000 IN. ZT
SCALE = .0200

PARAMETRIC DATA

IB-ELV = 8.000 OB-ELV = 9.000
BDFLAP = .000 SPDBRK = .000
RUDDER = .000 SILTS = 1.000
MACH = .900 RN/L = 3.500

RUN NO. 1140/ 0 RN/L = 3.50 GRADIENT INTERVAL = -5.00/ 5.00

ALPHAL	BETAL	CNFLS	CAFLS	CLMFLS	CYFLS	CYNFLS	CBLLS	CABLS	CYNBLS	CP5	CP6
-6.473	-5.814	-.10430	.01880	.04380	-.00590	-.01720	-.02050	.03840	-.00750	-.44240	-.43230
-6.386	-3.887	-.08490	.01850	.03390	-.01180	-.01310	-.01670	.03640	-.00710	-.42020	-.40790
-6.457	.270	-.04670	.01720	.01180	-.01830	-.01030	-.00920	.03410	-.00660	-.40880	-.36810
-6.217	4.420	-.01110	.01680	-.01080	-.01900	-.01230	-.00220	.02950	-.00570	-.35660	-.31450
-5.900	6.545	.00350	.01590	-.01920	-.01320	-.01840	.00060	.02630	-.00510	-.32130	-.27890
	GRADIENT	.00888	-.00020	-.00538	-.00087	.00010	.00175	-.00083	.00017	.00765	.01124

RUN NO. 1141/ 0 RN/L = 3.50 GRADIENT INTERVAL = -5.00/ 5.00

ALPHAL	BETAL	CNFLS	CAFLS	CLMFLS	CYFLS	CYNFLS	CBLLS	CABLS	CYNBLS	CP5	CP6
-4.241	-5.942	-.08320	.02060	.03790	.01590	-.02770	-.01630	.03850	-.00750	-.44560	-.43100
-4.450	-3.837	-.06830	.02040	.02960	.00800	-.02300	-.01340	.03610	-.00700	-.41740	-.40340
-4.364	.516	-.03040	.01820	.00640	.00380	-.02220	-.00600	.03210	-.00620	-.38240	-.34850
-3.844	4.448	-.00280	.01860	-.01120	.00290	-.02390	-.00060	.02870	-.00560	-.34520	-.30940
-3.908	6.293	.00680	.01820	-.01800	.00350	-.02640	.00120	.02670	-.00520	-.32300	-.28410
	GRADIENT	.00792	-.00022	-.00493	-.00062	-.00010	.00155	-.00089	.00017	.00870	.01137

RUN NO. 1142/ 0 RN/L = 3.50 GRADIENT INTERVAL = -5.00/ 5.00

ALPHAL	BETAL	CNFLS	CAFLS	CLMFLS	CYFLS	CYNFLS	CBLLS	CABLS	CYNBLS	CP5	CP6
-.328	-6.806	-.05370	.02260	.02950	.04660	-.04660	-.01060	.03790	-.00740	-.44950	-.41400
-.308	-4.654	-.04370	.02260	.02390	.03950	-.04170	-.00860	.03670	-.00710	-.43630	-.39980
-.348	-.339	-.01860	.02080	.00560	.03060	-.03700	-.00370	.03220	-.00630	-.38200	-.35160
-.270	3.780	.00140	.02040	-.00890	.02550	-.03410	.00020	.02840	-.00550	-.34420	-.30230
-.245	5.947	.00980	.02020	-.01500	.02410	-.03390	.00180	.02720	-.00530	-.33240	-.28780
	GRADIENT	.00535	-.00026	-.00389	-.00166	.00090	.00104	-.00098	.00019	.01093	.01156

RUN NO. 1143/ 0 RN/L = 3.50 GRADIENT INTERVAL = -5.00/ 5.00

ALPHAL	BETAL	CNFLS	CAFLS	CLMFLS	CYFLS	CYNFLS	CBLLS	CABLS	CYNBLS	CP5	CP6
4.405	-5.667	-.00540	.02240	.00970	.04710	-.04860	-.00110	.03640	-.00710	-.43600	-.39330
4.274	-3.714	-.00360	.02170	.00830	.04070	-.04330	-.00070	.03540	-.00690	-.42380	-.38190
4.107	.298	.00470	.02010	.00090	.03280	-.03910	.00090	.03180	-.00620	-.38160	-.34340
4.051	4.058	.00790	.02060	-.00230	.02090	-.03170	.00150	.02950	-.00570	-.36160	-.30960
4.023	6.245	.01050	.02030	-.00550	.01580	-.02950	.00200	.02770	-.00540	-.34310	-.28910
	GRADIENT	.00149	-.00014	-.00137	-.00254	.00149	.00028	-.00076	.00015	.00803	.00931

IA156A, AEDC PWT 16T-470, 0 T S W/SILTS (R8NL87) (10 MAY 80)

REFERENCE DATA

SREF = 2690.0000 SQ.FT. XMRP = 976.0000 IN. XT
LREF = 1290.3000 INCHES YMRP = .0000 IN. YT
BREF = 1290.3000 INCHES ZMRP = 400.0000 IN. ZT
SCALE = .0200

PARAMETRIC DATA

IB-ELV = 8.000 OB-ELV = 9.000
BDFLAP = .000 SPDBRK = .000
RUDDER = .000 SILTS = 1.000
MACH = .950 RN/L = 3.500

RUN NO. 1144/ 0 RN/L = 3.50 GRADIENT INTERVAL = -5.00/ 5.00

ALPHAL	BETAL	CNFLS	CAFLS	CLMFLS	CYFLS	CYNFLS	CBLLS	CABLS	CYNBLS	CP5	CP6
-8.748	-5.663	-.13180	.01830	.05040	-.03130	-.00780	-.02590	.04230	-.00820	-.48570	-.47680
-8.694	-3.586	-.10680	.01910	.03820	-.03900	-.00170	-.02110	.03910	-.00760	-.44520	-.44470
-8.576	.608	-.06090	.01740	.01200	-.04420	.00120	-.01200	.03850	-.00750	-.45410	-.42210
-8.350	4.573	-.01880	.01630	-.01340	-.04080	-.00300	-.00380	.03380	-.00660	-.40610	-.36450
-8.307	6.493	-.00440	.01460	-.02170	-.03780	-.00730	-.00100	.02940	-.00570	-.36200	-.30680
	GRADIENT	.01079	-.00034	-.00632	-.00023	-.00015	.00212	-.00064	.00012	.00473	.00979

RUN NO. 1145/ 0 RN/L = 3.50 GRADIENT INTERVAL = -5.00/ 5.00

ALPHAL	BETAL	CNFLS	CAFLS	CLMFLS	CYFLS	CYNFLS	CBLLS	CABLS	CYNBLS	CP5	CP6
-6.544	-5.800	-.10840	.02150	.04460	-.00570	-.01880	-.02130	.04130	-.00800	-.47570	-.46330
-6.455	-3.880	-.08740	.02120	.03380	-.01080	-.01430	-.01720	.03950	-.00770	-.45550	-.44340
-6.524	.282	-.04650	.02040	.01020	-.01470	-.01320	-.00920	.03750	-.00730	-.44230	-.41210
-6.283	4.428	-.01020	.01900	-.01230	-.01390	-.01600	-.00210	.03330	-.00650	-.39770	-.36130
-5.933	6.543	.00300	.01800	-.01950	-.00870	-.02140	.00050	.02860	-.00560	-.34910	-.30350
	GRADIENT	.00929	-.00026	-.00555	-.00037	-.00020	.00182	-.00075	.00014	.00695	.00988

RUN NO. 1146/ 0 RN/L = 3.49 GRADIENT INTERVAL = -5.00/ 5.00

ALPHAL	BETAL	CNFLS	CAFLS	CLMFLS	CYFLS	CYNFLS	CBLLS	CABLS	CYNBLS	CP5	CP6
-4.278	-5.933	-.08610	.02330	.03890	.01950	-.03090	-.01690	.04120	-.00800	-.47880	-.45830
-4.486	-3.835	-.06970	.02320	.03000	.01270	-.02620	-.01380	.03940	-.00770	-.45620	-.44100
-4.393	.515	-.03110	.02070	.00690	.01050	-.02690	-.00620	.03700	-.00720	-.43740	-.40510
-3.861	4.451	-.00370	.02170	-.00970	.00940	-.02800	-.00090	.03150	-.00610	-.37400	-.34220
-3.927	6.292	.00510	.02010	-.01590	.00770	-.02920	.00080	.02880	-.00560	-.34820	-.30820
	GRADIENT	.00798	-.00019	-.00480	-.00040	-.00022	.00156	-.00095	.00019	.00982	.01186

RUN NO. 1147/ 0 RN/L = 3.49 GRADIENT INTERVAL = -5.00/ 5.00

ALPHAL	BETAL	CNFLS	CAFLS	CLMFLS	CYFLS	CYNFLS	CBLLS	CABLS	CYNBLS	CP5	CP6
-.338	-6.806	-.05460	.02570	.03020	.04960	-.05020	-.01080	.04130	-.00800	-.49200	-.44900
-.305	-4.645	-.04280	.02570	.02400	.04450	-.04650	-.00850	.04020	-.00780	-.47830	-.43780
-.316	-.329	-.01980	.02440	.00970	.03590	-.04230	-.00400	.03650	-.00710	-.43000	-.40060
-.244	3.784	-.00080	.02300	-.00450	.02490	-.03590	-.00030	.03140	-.00610	-.37850	-.33600
-.230	5.983	.00710	.02220	-.01040	.02200	-.03560	.00120	.02890	-.00560	-.35260	-.30470
	GRADIENT	.00499	-.00032	-.00338	-.00232	.00126	.00097	-.00104	.00020	.01183	.01205

IA156A, AEDC PWT 16T-470, O T S W/SILTS (R8NL87) (10 MAY 80)

REFERENCE DATA

SREF = 2690.0000 SQ.FT. XMRP = 976.0000 IN. XT
LREF = 1290.3000 INCHES YMRP = .0000 IN. YT
BREF = 1290.3000 INCHES ZMRP = 400.0000 IN. ZT
SCALE = .0200

PARAMETRIC DATA

IB-ELV = 8.000 OB-ELV = 9.000
BDFLAP = .000 SPDBRK = .000
RUDDER = .000 SILTS = 1.000
MACH = .950 RN/L = 3.500

RUN NO. 1148/ 0 RN/L = 3.49 GRADIENT INTERVAL = -5.00/ 5.00

ALPHAL	BETAL	CNFLS	CAFLS	CLMFLS	CYFLS	CYNFLS	CBLLS	CABLS	CYNBLS	CP5	CP6
4.320	-5.774	-.00990	.02440	.01360	.04800	-.05130	-.00200	.04100	-.00800	-.49120	-.44350
4.277	-3.669	-.00590	.02430	.00980	.03840	-.04400	-.00120	.03910	-.00760	-.47030	-.42120
4.073	.313	.00380	.02350	-.00020	.03190	-.04030	.00070	.03520	-.00680	-.42500	-.37780
4.072	4.120	.00760	.02250	-.00270	.02020	-.03250	.00140	.03220	-.00630	-.39590	-.33760
4.055	6.266	.00960	.02200	-.00460	.01480	-.03020	.00180	.02960	-.00570	-.36920	-.30530
	GRADIENT	.00174	-.00023	-.00161	-.00233	.00147	.00033	-.00089	.00017	.00957	.01071

IA156A, AEDC PWT 16T-470, O T S W/SILTS (R8NL88) (10 MAY 80)

REFERENCE DATA

SREF = 2690.0000 SQ.FT. XMRP = 976.0000 IN. XT
LREF = 1290.3000 INCHES YMRP = .0000 IN. YT
BREF = 1290.3000 INCHES ZMRP = 400.0000 IN. ZT
SCALE = .0200

PARAMETRIC DATA

IB-ELV = 8.000 OB-ELV = 9.000
BDFLAP = .000 SPDBRK = .000
RUDDER = .000 SILTS = 1.000
MACH = 1.050 RN/L = 3.500

RUN NO. 1149/ 0 RN/L = 3.50 GRADIENT INTERVAL = -5.00/ 5.00

ALPHAL	BETAL	CNFLS	CAFLS	CLMFLS	CYFLS	CYNFLS	CBLLS	CABLS	CYNBLS	CP5	CP6
-8.836	-5.658	-.14630	.02670	.05860	-.02430	-.01640	-.02880	.05490	-.01070	-.64690	-.60340
-8.805	-3.562	-.12380	.02540	.04760	-.03230	-.01070	-.02430	.05360	-.01040	-.62540	-.59420
-8.685	.654	-.06720	.02460	.01210	-.04130	-.00510	-.01330	.05170	-.01000	-.60970	-.56730
-8.429	4.619	-.02170	.02350	-.01640	-.03710	-.01060	-.00440	.04640	-.00900	-.55000	-.50700
-8.397	6.559	-.00510	.02150	-.02570	-.03240	-.01470	-.00120	.04220	-.00820	-.50340	-.45870
	GRADIENT	.01249	-.00023	-.00783	-.00060	.00003	.00243	-.00088	.00017	.00916	.01061

RUN NO. 1150/ 0 RN/L = 3.50 GRADIENT INTERVAL = -5.00/ 5.00

ALPHAL	BETAL	CNFLS	CAFLS	CLMFLS	CYFLS	CYNFLS	CBLLS	CABLS	CYNBLS	CP5	CP6
-6.601	-5.790	-.11790	.02890	.05100	.00160	-.02690	-.02320	.05480	-.01060	-.64410	-.60300
-6.484	-3.861	-.09590	.02870	.03920	-.00330	-.02290	-.01890	.05280	-.01030	-.62140	-.58080
-6.601	.308	-.05230	.02580	.01200	-.00920	-.02070	-.01030	.05060	-.00980	-.59840	-.55470
-6.306	4.473	-.01100	.02580	-.01470	-.00710	-.02390	-.00230	.04590	-.00890	-.54520	-.49990
-6.239	6.479	.00390	.02380	-.02390	-.00470	-.02750	.00060	.04130	-.00800	-.49000	-.45110
	GRADIENT	.01019	-.00035	-.00647	-.00046	-.00012	.00199	-.00083	.00017	.00914	.00971

IA156A, AEDC PWT 16T-470, 0 T S W/SILTS (R8NL88) (10 MAY 80)

REFERENCE DATA

SREF = 2690.0000 SQ.FT. XMRP = 976.0000 IN. XT
LREF = 1290.3000 INCHES YMRP = .0000 IN. YT
BREF = 1290.3000 INCHES ZMRP = 400.0000 IN. ZT
SCALE = .0200

PARAMETRIC DATA

IB-ELV = 8.000 OB-ELV = 9.000
BDFLAP = .000 SPDBRK = .000
RUDDER = .000 SILTS = 1.000
MACH = 1.050 RN/L = 3.500

RUN NO. 1151/ 0 RN/L = 3.50 GRADIENT INTERVAL = -5.00/ 5.00

ALPHAL	BETAL	CNFLS	CAFLS	CLMFLS	CYFLS	CYNFLS	CBLLS	CABLS	CYNBLS	CP5	CP6
-4.321	-5.919	-.09480	.03080	.04520	.02790	-.04040	-.01870	.05350	-.01040	-.63110	-.58670
-4.538	-3.827	-.07700	.03000	.03490	.02230	-.03640	-.01520	.05210	-.01010	-.61240	-.57290
-4.447	.534	-.03440	.02700	.00820	.02120	-.03690	-.00680	.04890	-.00950	-.58320	-.53120
-3.882	4.462	-.00260	.02800	-.01200	.02050	-.03770	-.00060	.04360	-.00850	-.51690	-.47580
-3.961	6.321	.00710	.02580	-.01880	.01910	-.03840	.00120	.04170	-.00810	-.49180	-.45740
	GRADIENT	.00899	-.00025	-.00567	-.00022	-.00016	.00176	-.00102	.00019	.01143	.01168

RUN NO. 1152/ 0 RN/L = 3.50 GRADIENT INTERVAL = -5.00/ 5.00

ALPHAL	BETAL	CNFLS	CAFLS	CLMFLS	CYFLS	CYNFLS	CBLLS	CABLS	CYNBLS	CP5	CP6
-.345	-6.849	-.06190	.03340	.03730	.06000	-.06040	-.01220	.05240	-.01020	-.62300	-.56980
-.329	-4.662	-.04800	.03300	.02890	.05580	-.05790	-.00950	.05180	-.01010	-.61430	-.56580
-.374	-.287	-.02100	.03050	.01090	.04980	-.05530	-.00420	.04900	-.00950	-.58290	-.53260
-.282	3.818	-.00020	.02860	-.00440	.03630	-.04650	-.00020	.04400	-.00850	-.52720	-.47480
-.256	6.010	.00810	.02800	-.01080	.03040	-.04350	.00140	.04190	-.00810	-.50240	-.45090
	GRADIENT	.00564	-.00052	-.00393	-.00229	.00134	.00110	-.00092	.00019	.01024	.01070

RUN NO. 1153/ 0 RN/L = 3.50 GRADIENT INTERVAL = -5.00/ 5.00

ALPHAL	BETAL	CNFLS	CAFLS	CLMFLS	CYFLS	CYNFLS	CBLLS	CABLS	CYNBLS	CP5	CP6
4.425	-5.613	-.01010	.03160	.01510	.05700	-.06130	-.00210	.05050	-.00980	-.59980	-.54950
4.277	-3.600	-.00710	.03190	.01240	.04930	-.05540	-.00150	.04910	-.00950	-.58200	-.53640
3.989	.179	.00150	.03110	.00440	.04240	-.05060	.00020	.04800	-.00930	-.56950	-.52390
4.089	4.143	.00960	.02910	-.00420	.02680	-.04050	.00180	.04580	-.00890	-.54320	-.50040
4.072	6.283	.01140	.02790	-.00650	.02080	-.03750	.00210	.04360	-.00850	-.52070	-.47120
	GRADIENT	.00216	-.00036	-.00214	-.00291	.00197	.00043	-.00043	.00008	.00502	.00466

IA156A, AEDC PWT 16T-470, O T S W/SILTS (R8NL89) (10 MAY 80)

REFERENCE DATA

SREF = 2690.0000 SQ.FT. XMRP = 976.0000 IN. XT
LREF = 1290.3000 INCHES YMRP = .0000 IN. YT
BREF = 1290.3000 INCHES ZMRP = 400.0000 IN. ZT
SCALE = .0200

PARAMETRIC DATA

IB-ELV = 8.000 OB-ELV = 9.000
BDFLAP = .000 SPDBRK = .000
RUDDER = .000 SILTS = 1.000
MACH = 1.100 RN/L = 3.500

RUN NO. 1154/ 0 RN/L = 3.50 GRADIENT INTERVAL = -5.00/ 5.00

ALPHAL	BETAL	CNFLS	CAFLS	CLMFLS	CYFLS	CYNFLS	CBLLS	CABLS	CYNBLS	CP5	CP6
-8.821	-5.637	-.14250	.03090	.05650	-.02470	-.01680	-.02810	.05000	-.00970	-.59180	-.54650
-8.801	-3.550	-.12020	.03000	.04470	-.03510	-.00920	-.02370	.04940	-.00960	-.57930	-.54590
-8.714	.456	-.06740	.02750	.01190	-.04240	-.00550	-.01340	.04770	-.00930	-.56160	-.52480
-8.434	4.646	-.02080	.02480	-.01630	-.03760	-.01050	-.00430	.04260	-.00830	-.50600	-.46370
-8.392	6.555	-.00600	.02290	-.02440	-.03350	-.01380	-.00140	.03890	-.00750	-.46480	-.42010
	GRADIENT	.01212	-.00063	-.00744	-.00029	-.00017	.00237	-.00083	.00016	.00898	.01006

RUN NO. 1155/ 0 RN/L = 3.50 GRADIENT INTERVAL = -5.00/ 5.00

ALPHAL	BETAL	CNFLS	CAFLS	CLMFLS	CYFLS	CYNFLS	CBLLS	CABLS	CYNBLS	CP5	CP6
-6.624	-5.782	-.11820	.03270	.04960	-.00220	-.02500	-.02330	.05010	-.00970	-.59190	-.54910
-6.564	-3.865	-.09590	.03110	.03750	-.00770	-.02090	-.01890	.04870	-.00940	-.57360	-.53430
-6.643	.323	-.04980	.02790	.00930	-.01210	-.01970	-.00990	.04580	-.00890	-.54390	-.49980
-6.331	4.489	-.01020	.02700	-.01530	-.00730	-.02360	-.00220	.04200	-.00820	-.50130	-.45530
-6.235	6.475	.00390	.02430	-.02330	-.00460	-.02660	.00060	.03780	-.00730	-.45000	-.41160
	GRADIENT	.01026	-.00049	-.00632	.00005	-.00032	.00200	-.00080	.00014	.00865	.00946

RUN NO. 1156/ 0 RN/L = 3.50 GRADIENT INTERVAL = -5.00/ 5.00

ALPHAL	BETAL	CNFLS	CAFLS	CLMFLS	CYFLS	CYNFLS	CBLLS	CABLS	CYNBLS	CP5	CP6
-4.345	-5.927	-.09480	.03380	.04440	.02400	-.03790	-.01870	.04840	-.00940	-.57170	-.52980
-4.567	-3.827	-.07630	.03240	.03330	.01800	-.03380	-.01510	.04690	-.00910	-.55180	-.51520
-4.455	.532	-.03270	.02910	.00640	.01860	-.03530	-.00650	.04360	-.00850	-.52230	-.47070
-3.871	4.476	-.00260	.02910	-.01200	.02010	-.03730	-.00070	.04000	-.00780	-.47440	-.43580
-3.956	6.326	.00660	.02740	-.01850	.01860	-.03750	.00110	.03800	-.00740	-.44940	-.41530
	GRADIENT	.00890	-.00040	-.00547	.00025	-.00042	.00174	-.00083	.00016	.00928	.00957

RUN NO. 1157/ 0 RN/L = 3.50 GRADIENT INTERVAL = -5.00/ 5.00

ALPHAL	BETAL	CNFLS	CAFLS	CLMFLS	CYFLS	CYNFLS	CBLLS	CABLS	CYNBLS	CP5	CP6
-.356	-6.850	-.06320	.03570	.03770	.05640	-.05770	-.01250	.04720	-.00920	-.56330	-.51080
-.333	-4.698	-.04880	.03480	.02880	.05180	-.05450	-.00970	.04590	-.00890	-.54620	-.49880
-.360	-.278	-.02160	.03180	.01080	.04670	-.05240	-.00440	.04270	-.00830	-.51220	-.46070
-.268	3.824	-.00140	.03000	-.00370	.03490	-.04490	-.00040	.03740	-.00730	-.44980	-.40230
-.247	6.018	.00710	.02860	-.01020	.02890	-.04180	.00120	.03560	-.00690	-.43050	-.37980
	GRADIENT	.00557	-.00056	-.00382	-.00197	.00112	.00109	-.00099	.00019	.01126	.01129

IA156A, AEDC PWT 16T-470, 0 T S W/SILTS (R8NL89) (10 MAY 80)

REFERENCE DATA

SREF = 2690.0000 SQ.FT. XMRP = 976.0000 IN. XT
LREF = 1290.3000 INCHES YMRP = .0000 IN. YT
BREF = 1290.3000 INCHES ZMRP = 400.0000 IN. ZT
SCALE = .0200

PARAMETRIC DATA

IB-ELV = 8.000 OB-ELV = 9.000
BDFLAP = .000 SPDBRK = .000
RUDDER = .000 SILTS = 1.000
MACH = 1.100 RN/L = 3.500

RUN NO. 1158/ 0 RN/L = 3.50 GRADIENT INTERVAL = -5.00/ 5.00

ALPHAL	BETAL	CNFLS	CAFLS	CLMFLS	CYFLS	CYNFLS	CBLLS	CABLS	CYNBLS	CP5	CP6
4.356	-5.729	-.01200	.03460	.01700	.05440	-.05960	-.00240	.04430	-.00860	-.52840	-.47970
4.320	-3.621	-.00730	.03440	.01360	.04710	-.05410	-.00150	.04310	-.00840	-.51310	-.46770
4.131	.356	.00220	.03210	.00470	.04040	-.04980	.00030	.04220	-.00820	-.50280	-.45780
4.113	4.141	.00890	.03060	-.00350	.02450	-.03930	.00160	.03930	-.00760	-.46830	-.42640
4.100	6.300	.01100	.02950	-.00650	.01920	-.03690	.00200	.03710	-.00720	-.44580	-.39810
	GRADIENT	.00209	-.00049	-.00220	-.00290	.00190	.00040	-.00049	.00010	.00575	.00530

IA156A, AEDC PWT 16T-470, 0 T S W/SILTS (R8NL90) (10 MAY 80)

REFERENCE DATA

SREF = 2690.0000 SQ.FT. XMRP = 976.0000 IN. XT
LREF = 1290.3000 INCHES YMRP = .0000 IN. YT
BREF = 1290.3000 INCHES ZMRP = 400.0000 IN. ZT
SCALE = .0200

PARAMETRIC DATA

IB-ELV = 8.000 OB-ELV = 9.000
BDFLAP = .000 SPDBRK = .000
RUDDER = .000 SILTS = 1.000
MACH = 1.150 RN/L = 3.500

RUN NO. 1159/ 0 RN/L = 3.49 GRADIENT INTERVAL = -5.00/ 5.00

ALPHAL	BETAL	CNFLS	CAFLS	CLMFLS	CYFLS	CYNFLS	CBLLS	CABLS	CYNBLS	CP5	CP6
-8.834	-5.684	-.14680	.03230	.05910	-.02610	-.01360	-.02900	.04730	-.00920	-.55770	-.51840
-8.817	-3.571	-.12410	.03060	.04710	-.03660	-.00650	-.02450	.04680	-.00910	-.54810	-.51760
-8.727	.664	-.06880	.02840	.01190	-.04520	-.00230	-.01370	.04400	-.00860	-.51930	-.48350
-8.427	4.632	-.02400	.02550	-.01540	-.03920	-.00830	-.00490	.04010	-.00780	-.47920	-.43470
-8.389	6.570	-.00810	.02350	-.02420	-.03310	-.01330	-.00180	.03650	-.00710	-.43780	-.39360
	GRADIENT	.01221	-.00062	-.00763	-.00034	-.00021	.00239	-.00082	.00016	.00838	.01008

RUN NO. 1160/ 0 RN/L = 3.50 GRADIENT INTERVAL = -5.00/ 5.00

ALPHAL	BETAL	CNFLS	CAFLS	CLMFLS	CYFLS	CYNFLS	CBLLS	CABLS	CYNBLS	CP5	CP6
-6.617	-5.809	-.12020	.03390	.05200	-.00380	-.02230	-.02370	.04660	-.00900	-.55130	-.50940
-6.527	-3.876	-.09910	.03290	.04020	-.00960	-.01850	-.01960	.04500	-.00870	-.53050	-.49370
-6.631	.315	-.05370	.02870	.01180	-.01460	-.01640	-.01070	.04290	-.00830	-.50860	-.46830
-6.312	4.496	-.01280	.02770	-.01420	-.00940	-.02140	-.00270	.03910	-.00760	-.46770	-.42230
-6.230	6.481	.00200	.02600	-.02340	-.00540	-.02550	.00020	.03500	-.00680	-.41640	-.38080
	GRADIENT	.01031	-.00062	-.00650	.00002	-.00035	.00202	-.00070	.00013	.00750	.00853

IA156A, AEDC PWT 16T-470, O T S W/SILTS (R8NL90) (10 MAY 80)

REFERENCE DATA

SREF = 2690.0000 SQ.FT. XMRP = 976.0000 IN. XT
LREF = 1290.3000 INCHES YMRP = .0000 IN. YT
BREF = 1290.3000 INCHES ZMRP = 400.0000 IN. ZT
SCALE = .0200

PARAMETRIC DATA

IB-ELV = 8.000 OB-ELV = 9.000
BDFLAP = .000 SPDBRK = .000
RUDDER = .000 SILTS = 1.000
MACH = 1.150 RN/L = 3.500

RUN NO. 1161/ 0 RN/L = 3.50 GRADIENT INTERVAL = -5.00/ 5.00

ALPHAL	BETAL	CNFLS	CAFLS	CLMFLS	CYFLS	CYNFLS	CBLLS	CABLS	CYNBLS	CP5	CP6
-4.315	-5.948	-.09660	.03520	.04670	.02250	-.03560	-.01910	.04510	-.00870	-.53470	-.49120
-4.533	-3.839	-.07860	.03370	.03600	.01760	-.03240	-.01560	.04370	-.00850	-.51680	-.47940
-4.454	.541	-.03610	.02950	.00890	.01500	-.03190	-.00720	.04160	-.00810	-.49650	-.44980
-3.860	4.473	-.00530	.02980	-.01050	.01760	-.03500	-.00120	.03740	-.00730	-.44750	-.40460
-3.949	6.344	.00440	.02810	-.01730	.01670	-.03600	.00070	.03520	-.00680	-.41710	-.38460
	GRADIENT	.00884	-.00048	-.00561	-.00001	-.00030	.00174	-.00075	.00014	.00827	.00896

RUN NO. 1162/ 0 RN/L = 3.49 GRADIENT INTERVAL = -5.00/ 5.00

ALPHAL	BETAL	CNFLS	CAFLS	CLMFLS	CYFLS	CYNFLS	CBLLS	CABLS	CYNBLS	CP5	CP6
-.321	-6.884	-.06280	.03730	.03850	.05430	-.05560	-.01240	.04420	-.00860	-.52900	-.47680
-.282	-4.725	-.04840	.03620	.02970	.05040	-.05300	-.00960	.04360	-.00850	-.52040	-.47250
-.312	-.264	-.02220	.03350	.01210	.04530	-.05120	-.00450	.04080	-.00790	-.49080	-.43940
-.221	3.828	-.00220	.03080	-.00230	.03440	-.04440	-.00060	.03610	-.00700	-.43550	-.38670
-.212	6.033	.00640	.02940	-.00910	.02830	-.04140	.00110	.03440	-.00670	-.41870	-.36610
	GRADIENT	.00541	-.00063	-.00374	-.00186	.00100	.00105	-.00087	.00017	.00988	.00999

RUN NO. 1163/ 0 RN/L = 3.50 GRADIENT INTERVAL = -5.00/ 5.00

ALPHAL	BETAL	CNFLS	CAFLS	CLMFLS	CYFLS	CYNFLS	CBLLS	CABLS	CYNBLS	CP5	CP6
4.408	-5.724	-.01490	.03620	.02010	.05470	-.05990	-.00300	.04250	-.00820	-.50720	-.46040
4.359	-3.596	-.00970	.03520	.01630	.04810	-.05470	-.00200	.04210	-.00820	-.50240	-.45660
4.187	.370	-.00020	.03360	.00740	.03890	-.04860	-.00010	.04090	-.00790	-.48790	-.44290
4.181	4.181	.00820	.03170	-.00250	.02250	-.03800	.00150	.03820	-.00740	-.45600	-.41350
4.079	6.245	.01060	.03060	-.00560	.01810	-.03630	.00190	.03610	-.00700	-.43430	-.38740
	GRADIENT	.00230	-.00045	-.00242	-.00329	.00214	.00045	-.00050	.00010	.00595	.00553

IA156A, AEDC PWT 16T-470, O T S W/SILTS (R8NL91) (10 MAY 80)

REFERENCE DATA

SREF = 2690.0000 SQ.FT. XMRP = 976.0000 IN. XT
LREF = 1290.3000 INCHES YMRP = .0000 IN. YT
BREF = 1290.3000 INCHES ZMRP = 400.0000 IN. ZT
SCALE = .0200

PARAMETRIC DATA

IB-ELV = 8.000 OB-ELV = 9.000
BDFLAP = .000 SPDBRK = .000
RUDDER = .000 SILTS = 1.000
MACH = 1.250 RN/L = 3.500

RUN NO. 1164/ 0 RN/L = 3.50 GRADIENT INTERVAL = -5.00/ 5.00

ALPHAL	BETAL	CNFLS	CAFLS	CLMFLS	CYFLS	CYNFLS	CBLLS	CABLS	CYNBLS	CP5	CP6
-8.789	-5.722	-.14800	.03380	.06140	-.02580	-.00950	-.02920	.04260	-.00830	-.50490	-.46530
-8.759	-3.613	-.12420	.03280	.04850	-.03570	-.00280	-.02450	.04240	-.00820	-.49910	-.46620
-8.685	.652	-.07190	.02960	.01420	-.04480	-.00020	-.01430	.04080	-.00790	-.48010	-.44800
-8.399	4.647	-.02760	.02720	-.01350	-.03910	-.00600	-.00560	.03570	-.00690	-.42620	-.38720
-8.395	6.586	-.01210	.02460	-.02340	-.03700	-.00930	-.00260	.03290	-.00640	-.39420	-.35530
	GRADIENT	.01170	-.00068	-.00751	-.00043	-.00038	.00229	-.00081	.00016	.00878	.00950

RUN NO. 1165/ 0 RN/L = 3.50 GRADIENT INTERVAL = -5.00/ 5.00

ALPHAL	BETAL	CNFLS	CAFLS	CLMFLS	CYFLS	CYNFLS	CBLLS	CABLS	CYNBLS	CP5	CP6
-6.605	-5.865	-.12060	.03530	.05340	-.00480	-.01860	-.02380	.04190	-.00810	-.49950	-.45440
-6.500	-3.909	-.10030	.03370	.04220	-.01100	-.01510	-.01980	.04090	-.00790	-.48430	-.44810
-6.587	.314	-.05740	.03030	.01460	-.01780	-.01300	-.01140	.03970	-.00770	-.47000	-.43330
-6.286	4.506	-.01630	.02860	-.01210	-.01290	-.01800	-.00340	.03530	-.00680	-.42050	-.38230
-6.226	6.505	-.00180	.02630	-.02170	-.00950	-.02160	-.00060	.03240	-.00630	-.38670	-.35200
	GRADIENT	.00998	-.00061	-.00645	-.00023	-.00034	.00195	-.00067	.00013	.00758	.00781

RUN NO. 1166/ 0 RN/L = 3.49 GRADIENT INTERVAL = -5.00/ 5.00

ALPHAL	BETAL	CNFLS	CAFLS	CLMFLS	CYFLS	CYNFLS	CBLLS	CABLS	CYNBLS	CP5	CP6
-4.292	-5.983	-.09720	.03640	.04730	.01610	-.03050	-.01920	.04110	-.00800	-.49310	-.44240
-4.489	-3.833	-.07950	.03490	.03610	.00910	-.02660	-.01580	.03930	-.00760	-.46860	-.42660
-4.405	.537	-.03900	.03090	.01080	.00800	-.02680	-.00780	.03810	-.00740	-.45770	-.40990
-3.838	4.484	-.00870	.03040	-.00790	.01330	-.03160	-.00190	.03470	-.00670	-.41560	-.37360
-3.934	6.364	.00160	.02830	-.01550	.01240	-.03240	.00010	.03230	-.00630	-.38520	-.34990
	GRADIENT	.00853	-.00055	-.00530	.00049	-.00059	.00167	-.00055	.00011	.00630	.00633

RUN NO. 1167/ 0 RN/L = 3.50 GRADIENT INTERVAL = -5.00/ 5.00

ALPHAL	BETAL	CNFLS	CAFLS	CLMFLS	CYFLS	CYNFLS	CBLLS	CABLS	CYNBLS	CP5	CP6
-.284	-6.918	-.06360	.03850	.04030	.05190	-.05260	-.01260	.04030	-.00780	-.48860	-.43050
-.242	-4.713	-.04990	.03760	.03200	.04840	-.05030	-.01000	.03940	-.00770	-.47600	-.42220
-.245	-.326	-.02550	.03440	.01530	.04220	-.04750	-.00510	.03700	-.00720	-.44470	-.39910
-.174	3.831	-.00640	.03020	.00130	.03200	-.04170	-.00140	.03370	-.00650	-.40690	-.36070
-.172	6.070	.00210	.03000	-.00550	.02710	-.04040	.00020	.03080	-.00600	-.37490	-.32580
	GRADIENT	.00510	-.00086	-.00360	-.00191	.00100	.00101	-.00067	.00014	.00808	.00718

IA156A, AEDC PWT 16T-470, O T S W/SILTS (R8NL91) (10 MAY 80)

REFERENCE DATA

SREF = 2690.0000 SQ.FT. XMRP = 976.0000 IN. XT
LREF = 1290.3000 INCHES YMRP = .0000 IN. YT
BREF = 1290.3000 INCHES ZMRP = 400.0000 IN. ZT
SCALE = .0200

PARAMETRIC DATA

IB-ELV = 8.000 OB-ELV = 9.000
BDFLAP = .000 SPDBRK = .000
RUDDER = .000 SILTS = 1.000
MACH = 1.250 RN/L = 3.500

RUN NO. 1168/ 0 RN/L = 3.49 GRADIENT INTERVAL = -5.00/ 5.00

ALPHAL	BETAL	CNFLS	CAFLS	CLMFLS	CYFLS	CYNFLS	CBLLS	CABLS	CYNBLS	CP5	CP6
4.585	-5.584	-.01200	.03780	.02000	.05000	-.05640	-.00250	.03830	-.00740	-.46120	-.41190
4.441	-3.640	-.00860	.03720	.01710	.04370	-.05160	-.00180	.03770	-.00730	-.45340	-.40560
4.259	.365	-.00200	.03410	.00980	.03380	-.04580	-.00050	.03730	-.00720	-.44780	-.40190
4.175	4.093	.00650	.03170	-.00150	.01790	-.03570	.00110	.03460	-.00670	-.41470	-.37240
4.195	6.336	.01010	.03050	-.00570	.01320	-.03380	.00180	.03240	-.00630	-.39200	-.34570
	GRADIENT	.00195	-.00071	-.00240	-.00333	.00205	.00037	-.00040	.00008	.00496	.00425

IA156A, AEDC PWT 16T-470, O T S W/SILTS (R8NL92) (10 MAY 80)

REFERENCE DATA

SREF = 2690.0000 SQ.FT. XMRP = 976.0000 IN. XT
LREF = 1290.3000 INCHES YMRP = .0000 IN. YT
BREF = 1290.3000 INCHES ZMRP = 400.0000 IN. ZT
SCALE = .0200

PARAMETRIC DATA

IB-ELV = 8.000 OB-ELV = 5.000
BDFLAP = .000 SPDBRK = .000
RUDDER = .000 SILTS = 1.000
MACH = .600 RN/L = 3.500

RUN NO. 1173/ 0 RN/L = 3.50 GRADIENT INTERVAL = -5.00/ 5.00

ALPHAL	BETAL	CNFLS	CAFLS	CLMFLS	CYFLS	CYNFLS	CBLLS	CABLS	CYNBLS	CP5	CP6
-8.295	-7.824	-.13540	.00900	.05650	.00040	-.01770	-.02640	.04050	-.00790	-.47890	-.44370
-8.373	-5.684	-.11690	.00870	.04700	-.01240	-.00970	-.02290	.03880	-.00750	-.46500	-.41780
-8.348	-3.696	-.09570	.00890	.03640	-.01980	-.00450	-.01870	.03640	-.00710	-.44190	-.38650
-8.225	.384	-.05640	.00890	.01470	-.03020	.00140	-.01100	.03310	-.00640	-.41220	-.34150
-8.048	4.343	-.01900	.00990	-.00810	-.02960	-.00200	-.00370	.02990	-.00580	-.38070	-.30100
-8.029	6.302	-.00290	.00890	-.01770	-.02550	-.00720	-.00050	.02700	-.00520	-.34050	-.27540
-7.833	8.386	.00940	.00840	-.02420	-.01890	-.01320	.00190	.02500	-.00490	-.31460	-.25550
	GRADIENT	.00954	.00012	-.00553	-.00123	.00032	.00187	-.00081	.00016	.00761	.01064

RUN NO. 1174/ 0 RN/L = 3.49 GRADIENT INTERVAL = -5.00/ 5.00

ALPHAL	BETAL	CNFLS	CAFLS	CLMFLS	CYFLS	CYNFLS	CBLLS	CABLS	CYNBLS	CP5	CP6
-6.336	-7.836	-.11470	.01090	.04990	.01620	-.02570	-.02240	.03920	-.00760	-.46330	-.42920
-6.284	-5.840	-.09790	.00970	.04110	.00660	-.01930	-.01910	.03870	-.00750	-.46050	-.42030
-6.215	-3.888	-.07940	.01100	.03160	.00100	-.01540	-.01550	.03520	-.00680	-.42780	-.37510
-6.225	.197	-.04300	.01000	.01090	-.00620	-.01140	-.00830	.03190	-.00620	-.39680	-.32940
-6.037	4.278	-.01130	.01140	-.00840	-.00640	-.01370	-.00210	.02890	-.00560	-.36790	-.29170
-5.796	6.334	.00260	.01110	-.01670	-.00240	-.01840	.00060	.02610	-.00510	-.32620	-.26760
-5.936	8.265	.01130	.01000	-.02250	-.00260	-.02060	.00230	.02480	-.00480	-.31010	-.25520
	GRADIENT	.00834	.00005	-.00490	-.00091	.00021	.00164	-.00077	.00015	.00734	.01021

IA156A, AEDC PWT 16T-470, 0 T S W/SILTS (R8NL92) (10 MAY 80)

REFERENCE DATA

SREF = 2690.0000 SQ.FT. XMRP = 976.0000 IN. XT
LREF = 1290.3000 INCHES YMRP = .0000 IN. YT
BREF = 1290.3000 INCHES ZMRP = 400.0000 IN. ZT
SCALE = .0200

PARAMETRIC DATA

IB-ELV = 8.000 OB-ELV = 5.000
BDFLAP = .000 SPDBRK = .000
RUDDER = .000 SILTS = 1.000
MACH = .600 RN/L = 3.500

RUN NO. 1175/ 0 RN/L = 3.49 GRADIENT INTERVAL = -5.00/ 5.00

ALPHAL	BETAL	CNFLS	CAFLS	CLMFLS	CYFLS	CYNFLS	CBLLS	CABLS	CYNBLS	CP5	CP6
-4.122	-7.957	-.09270	.01260	.04310	.03250	-.03450	-.01810	.03850	-.00750	-.45850	-.41900
-4.318	-5.844	-.07880	.01240	.03520	.02300	-.02820	-.01530	.03620	-.00700	-.43340	-.39010
-4.316	-3.799	-.06240	.01150	.02620	.01780	-.02460	-.01210	.03540	-.00690	-.42730	-.37810
-4.082	.254	-.02980	.01180	.00740	.01540	-.02440	-.00570	.03050	-.00590	-.37730	-.31830
-3.701	4.324	-.00440	.01290	-.00770	.01350	-.02480	-.00070	.02760	-.00540	-.34670	-.28180
-3.652	6.120	.00420	.01280	-.01380	.01330	-.02630	.00100	.02560	-.00500	-.31850	-.26570
-3.825	8.111	.01340	.01200	-.02070	.01240	-.02770	.00280	.02490	-.00480	-.31050	-.25650
	GRADIENT	.00714	.00017	-.00417	-.00053	-.00002	.00140	-.00096	.00018	.00992	.01185

RUN NO. 1176/ 0 RN/L = 3.49 GRADIENT INTERVAL = -5.00/ 5.00

ALPHAL	BETAL	CNFLS	CAFLS	CLMFLS	CYFLS	CYNFLS	CBLLS	CABLS	CYNBLS	CP5	CP6
-.319	-8.646	-.06260	.01530	.03450	.05210	-.04810	-.01210	.03700	-.00720	-.44350	-.40010
-.293	-6.465	-.05060	.01470	.02760	.04590	-.04340	-.00980	.03650	-.00710	-.43940	-.39240
-.280	-4.405	-.04000	.01430	.02110	.04150	-.04030	-.00770	.03480	-.00680	-.41920	-.37450
-.258	-.243	-.01800	.01310	.00700	.03770	-.03870	-.00340	.03100	-.00600	-.37620	-.32890
-.198	3.845	-.00260	.01350	-.00300	.02810	-.03280	-.00040	.02710	-.00530	-.33990	-.27690
-.193	5.965	.00460	.01380	-.00860	.02360	-.03060	.00100	.02560	-.00500	-.32210	-.26100
-.182	8.061	.01200	.01390	-.01430	.02210	-.03140	.00250	.02530	-.00490	-.31870	-.25870
	GRADIENT	.00454	-.00010	-.00292	-.00162	.00091	.00089	-.00093	.00018	.00961	.01183

RUN NO. 1177/ 0 RN/L = 3.50 GRADIENT INTERVAL = -5.00/ 5.00

ALPHAL	BETAL	CNFLS	CAFLS	CLMFLS	CYFLS	CYNFLS	CBLLS	CABLS	CYNBLS	CP5	CP6
4.342	-7.997	-.00570	.01570	.01120	.05390	-.05070	-.00090	.03510	-.00680	-.41950	-.38020
4.341	-5.769	-.00130	.01500	.00840	.04810	-.04620	.00000	.03430	-.00670	-.41040	-.36970
4.312	-3.778	.00150	.01470	.00650	.04270	-.04230	.00050	.03300	-.00640	-.39770	-.35360
4.073	.162	.00280	.01330	.00360	.03390	-.03700	.00080	.03000	-.00580	-.36370	-.31850
4.138	4.195	.00570	.01300	.00030	.02020	-.02870	.00130	.02780	-.00540	-.34760	-.28610
4.069	6.319	.00660	.01330	-.00180	.01370	-.02520	.00150	.02650	-.00510	-.33550	-.26790
4.043	8.332	.00950	.01370	-.00550	.00980	-.02410	.00210	.02590	-.00500	-.32890	-.26180
	GRADIENT	.00053	-.00021	-.00078	-.00282	.00171	.00010	-.00065	.00013	.00627	.00846

IA156A, AEDC PWT 16T-470, 0 T S W/SILTS (R8NL92) (10 MAY 80)

REFERENCE DATA

SREF = 2690.0000 SQ.FT. XMRP = 976.0000 IN. XT
LREF = 1290.3000 INCHES YMRP = .0000 IN. YT
BREF = 1290.3000 INCHES ZMRP = 400.0000 IN. ZT
SCALE = .0200

PARAMETRIC DATA

IB-ELV = 8.000 OB-ELV = 5.000
BDFLAP = .000 SPDBRK = .000
RUDDER = .000 SILTS = 1.000
MACH = .600 RN/L = 3.500

RUN NO. 1178/ 0 RN/L = 3.51 GRADIENT INTERVAL = -5.00/ 5.00

ALPHAL	BETAL	CNFLS	CAFLS	CLMFLS	CYFLS	CYNFLS	CBLLS	CABLS	CYNBLS	CP5	CP6
6.530	-7.911	.01820	.01520	.00180	.04330	-.04600	.00380	.03510	-.00680	-.41990	-.37980
6.503	-5.836	.01920	.01480	.00070	.03570	-.04040	.00400	.03410	-.00660	-.41160	-.36460
6.482	-3.775	.01740	.01410	.00120	.02980	-.03590	.00360	.03340	-.00650	-.40410	-.35620
6.175	.280	.01320	.01310	.00160	.01970	-.02980	.00280	.03080	-.00600	-.37580	-.32560
6.090	4.205	.01010	.01270	.00040	.00660	-.02140	.00220	.02810	-.00550	-.35260	-.28860
6.029	6.132	.01020	.01290	-.00150	-.00070	-.01780	.00220	.02720	-.00530	-.34610	-.27310
6.075	8.432	.01340	.01340	-.00680	-.00410	-.01570	.00290	.02680	-.00520	-.33950	-.27160
	GRADIENT	-.00092	-.00018	-.00010	-.00291	.00182	-.00018	-.00066	.00013	.00646	.00847

RUN NO. 1179/ 0 RN/L = 3.50 GRADIENT INTERVAL = -5.00/ 5.00

ALPHAL	BETAL	CNFLS	CAFLS	CLMFLS	CYFLS	CYNFLS	CBLLS	CABLS	CYNBLS	CP5	CP6
8.478	-7.736	.03920	.01450	-.00710	.02420	-.03550	.00790	.03460	-.00670	-.41670	-.37200
8.394	-5.683	.03510	.01430	-.00560	.01740	-.03040	.00710	.03380	-.00660	-.41440	-.35660
8.362	-3.682	.03170	.01410	-.00430	.00930	-.02450	.00640	.03340	-.00650	-.40980	-.35150
8.258	.281	.02400	.01330	-.00160	-.00050	-.01910	.00490	.03130	-.00610	-.38500	-.32920
8.273	4.339	.01940	.01220	-.00290	-.01430	-.01000	.00400	.02830	-.00550	-.35850	-.28740
8.213	6.355	.01840	.01230	-.00520	-.01860	-.00720	.00380	.02730	-.00530	-.34280	-.27900
8.175	8.381	.01970	.01250	-.00960	-.02010	-.00650	.00410	.02740	-.00530	-.34210	-.28120
	GRADIENT	-.00153	-.00024	.00017	-.00294	.00181	-.00030	-.00064	.00012	.00640	.00800

IA156A, AEDC PWT 16T-470, O T S W/SILTS (RBNL93) (10 MAY 80)

REFERENCE DATA

SREF = 2690.0000 SQ.FT. XMRP = 976.0000 IN. XT
LREF = 1290.3000 INCHES YMRP = .0000 IN. YT
BREF = 1290.3000 INCHES ZMRP = 400.0000 IN. ZT
SCALE = .0200

PARAMETRIC DATA

IB-ELV = 8.000 OB-ELV = 5.000
BDFLAP = .000 SPDBRK = .000
RUDDER = .000 SILTS = 1.000
MACH = .800 RN/L = 3.500

RUN NO. 1180/ 0 RN/L = 3.49 GRADIENT INTERVAL = -5.00/ 5.00

ALPHAL	BETAL	CNFLS	CAFLS	CLMFLS	CYFLS	CYNFLS	CBLLS	CABLS	CYNBLS	CP5	CP6
-8.563	-5.711	-.12200	.01210	.04860	-.02760	-.00530	-.02380	.03860	-.00750	-.44960	-.42950
-8.555	-3.642	-.10140	.01230	.03850	-.03570	.00010	-.01970	.03650	-.00710	-.42750	-.40310
-8.412	.551	-.05850	.01180	.01420	-.04350	.00510	-.01130	.03380	-.00660	-.41420	-.35570
-8.201	4.541	-.01910	.01150	-.01010	-.03780	-.00070	-.00360	.02910	-.00560	-.36080	-.30190
-8.202	6.469	-.00470	.01040	-.01870	-.03230	-.00610	-.00080	.02560	-.00500	-.31850	-.26400
	GRADIENT	.01006	-.00010	-.00594	-.00027	-.00009	.00197	-.00090	.00018	.00811	.01236

RUN NO. 1181/ 0 RN/L = 3.50 GRADIENT INTERVAL = -5.00/ 5.00

ALPHAL	BETAL	CNFLS	CAFLS	CLMFLS	CYFLS	CYNFLS	CBLLS	CABLS	CYNBLS	CP5	CP6
-6.420	-5.841	-.10060	.01450	.04250	-.00210	-.01760	-.01960	.03730	-.00730	-.43770	-.41270
-6.330	-3.909	-.08280	.01380	.03370	-.00780	-.01350	-.01610	.03590	-.00700	-.42070	-.39600
-6.400	.241	-.04550	.01290	.01170	-.01450	-.00920	-.00880	.03220	-.00630	-.39330	-.34110
-6.173	4.390	-.01150	.01340	-.00940	-.01460	-.01150	-.00210	.02810	-.00550	-.34770	-.29230
-5.857	6.485	.00240	.01300	-.01780	-.00840	-.01700	.00060	.02470	-.00480	-.30650	-.25650
	GRADIENT	.00859	-.00005	-.00519	-.00082	.00024	.00169	-.00094	.00018	.00880	.01249

RUN NO. 1182/ 0 RN/L = 3.50 GRADIENT INTERVAL = -5.00/ 5.00

ALPHAL	BETAL	CNFLS	CAFLS	CLMFLS	CYFLS	CYNFLS	CBLLS	CABLS	CYNBLS	CP5	CP6
-4.386	-5.893	-.08200	.01670	.03700	.01710	-.02710	-.01590	.03620	-.00700	-.42770	-.39610
-4.395	-3.845	-.06550	.01580	.02840	.01220	-.02360	-.01270	.03490	-.00680	-.41020	-.38410
-4.303	.486	-.03040	.01470	.00710	.00750	-.02140	-.00580	.03050	-.00590	-.36760	-.32760
-3.818	4.414	-.00430	.01510	-.00940	.00730	-.02270	-.00070	.02710	-.00530	-.33420	-.28300
-3.876	6.248	.00590	.01470	-.01670	.00660	-.02390	.00130	.02480	-.00480	-.30770	-.25790
	GRADIENT	.00742	-.00009	-.00458	-.00060	.00012	.00146	-.00095	.00018	.00921	.01225

RUN NO. 1183/ 0 RN/L = 3.50 GRADIENT INTERVAL = -5.00/ 5.00

ALPHAL	BETAL	CNFLS	CAFLS	CLMFLS	CYFLS	CYNFLS	CBLLS	CABLS	CYNBLS	CP5	CP6
-.308	-6.783	-.05260	.01900	.02860	.04530	-.04470	-.01020	.03630	-.00710	-.43180	-.39580
-.303	-4.632	-.04400	.01850	.02320	.03860	-.03970	-.00850	.03450	-.00670	-.40900	-.37590
-.296	-.344	-.02050	.01730	.00800	.03230	-.03600	-.00390	.02990	-.00580	-.36010	-.32100
-.232	3.764	-.00150	.01690	-.00550	.02600	-.03220	-.00020	.02640	-.00510	-.32380	-.27700
-.211	5.907	.00690	.01700	-.01160	.02320	-.03090	.00150	.02540	-.00490	-.31420	-.26450
	GRADIENT	.00507	-.00019	-.00342	-.00150	.00089	.00099	-.00097	.00019	.01016	.01179

IA156A, AEDC PWT 16T-470, O T S W/SILTS (R8NL93) (10 MAY 80)

REFERENCE DATA

SREF = 2690.0000 SQ.FT. XMRP = 976.0000 IN. XT
LREF = 1290.3000 INCHES YMRP = .0000 IN. YT
BREF = 1290.3000 INCHES ZMRP = 400.0000 IN. ZT
SCALE = .0200

PARAMETRIC DATA

IB-ELV = 8.000 OB-ELV = 5.000
BDFLAP = .000 SPDBRK = .000
RUDDER = .000 SILTS = 1.000
MACH = .800 RN/L = 3.500

RUN NO. 1184/ 0 RN/L = 3.50 GRADIENT INTERVAL = -5.00/ 5.00

ALPHAL	BETAL	CNFLS	CAFLS	CLMFLS	CYFLS	CYNFLS	CBLLS	CABLS	CYNBLS	CP5	CP6
4.405	-5.722	-.00340	.01870	.00880	.04620	-.04740	-.00050	.03460	-.00670	-.40760	-.38130
4.277	-3.626	-.00100	.01830	.00730	.04040	-.04260	.00000	.03300	-.00640	-.39380	-.35660
3.992	.226	.00410	.01630	.00240	.03290	-.03800	.00100	.02930	-.00570	-.35320	-.31470
4.093	4.160	.00660	.01680	-.00040	.01830	-.02890	.00140	.02720	-.00530	-.33620	-.28460
4.034	6.253	.00850	.01710	-.00340	.01280	-.02620	.00180	.02590	-.00500	-.32250	-.26750
	GRADIENT	.00097	-.00019	-.00099	-.00284	.00176	.00018	-.00074	.00014	.00739	.00924

RUN NO. 1185/ 0 RN/L = 3.50 GRADIENT INTERVAL = -5.00/ 5.00

ALPHAL	BETAL	CNFLS	CAFLS	CLMFLS	CYFLS	CYNFLS	CBLLS	CABLS	CYNBLS	CP5	CP6
6.485	-5.730	.01800	.01730	.00060	.03360	-.04150	.00370	.03500	-.00680	-.41670	-.37930
6.437	-3.694	.01650	.01740	.00100	.02630	-.03590	.00340	.03370	-.00650	-.40480	-.36190
6.089	.284	.01330	.01540	.00090	.01820	-.03070	.00280	.03080	-.00600	-.37020	-.33030
6.027	4.143	.01110	.01620	-.00050	.00540	-.02240	.00230	.02790	-.00540	-.34660	-.28880
6.149	6.327	.01300	.01630	-.00410	-.00170	-.01820	.00270	.02700	-.00520	-.33730	-.27860
	GRADIENT	-.00069	-.00015	-.00019	-.00266	.00172	-.00014	-.00074	.00014	.00743	.00932

IA156A, AEDC PWT 16T-470, O T S W/SILTS (R8NL94) (10 MAY 80)

REFERENCE DATA

SREF = 2690.0000 SQ.FT. XMRP = 976.0000 IN. XT
LREF = 1290.3000 INCHES YMRP = .0000 IN. YT
BREF = 1290.3000 INCHES ZMRP = 400.0000 IN. ZT
SCALE = .0200

PARAMETRIC DATA

IB-ELV = 8.000 OB-ELV = 5.000
BDFLAP = .000 SPDBRK = .000
RUDDER = .000 SILTS = 1.000
MACH = .900 RN/L = 3.500

RUN NO. 1186/ 0 RN/L = 3.50 GRADIENT INTERVAL = -5.00/ 5.00

ALPHAL	BETAL	CNFLS	CAFLS	CLMFLS	CYFLS	CYNFLS	CBLLS	CABLS	CYNBLS	CP5	CP6
-8.580	-5.704	-.12390	.01640	.04850	-.02900	-.00670	-.02420	.03880	-.00750	-.44420	-.43880
-8.614	-3.533	-.10370	.01560	.03830	-.04010	-.00010	-.02020	.03720	-.00720	-.42810	-.41800
-8.466	.391	-.06300	.01540	.01630	-.04610	.00290	-.01230	.03580	-.00690	-.42680	-.38840
-8.266	4.637	-.01770	.01430	-.01260	-.04570	.00010	-.00340	.03020	-.00590	-.36710	-.32140
-8.249	6.505	-.00310	.01300	-.02080	-.04040	-.00500	-.00050	.02710	-.00530	-.33320	-.28360
	GRADIENT	.01053	-.00016	-.00624	-.00067	.00002	.00206	-.00086	.00016	.00756	.01188

IA156A, AEDC PWT 16T-470, O T S W/SILTS (R8NL94) (10 MAY 80)

REFERENCE DATA

SREF = 2690.0000 SQ.FT. XMRP = 976.0000 IN. XT
LREF = 1290.3000 INCHES YMRP = .0000 IN. YT
BREF = 1290.3000 INCHES ZMRP = 400.0000 IN. ZT
SCALE = .0200

PARAMETRIC DATA

IB-ELV = 8.000 OB-ELV = 5.000
BDFLAP = .000 SPDBRK = .000
RUDDER = .000 SILTS = 1.000
MACH = .900 RN/L = 3.500

RUN NO. 1187/ 0 RN/L = 3.50 GRADIENT INTERVAL = -5.00/ 5.00

ALPHAL	BETAL	CNFLS	CAFLS	CLMFLS	CYFLS	CYNFLS	CBLLS	CABLS	CYNBLS	CP5	CP6
-6.479	-5.799	-.10430	.01830	.04330	-.00880	-.01580	-.02030	.03830	-.00740	-.44020	-.43140
-6.406	-3.881	-.08560	.01850	.03370	-.01520	-.01160	-.01670	.03590	-.00700	-.41220	-.40530
-6.459	.264	-.04690	.01730	.01160	-.02120	-.00870	-.00910	.03400	-.00660	-.40680	-.36810
-6.195	4.424	-.01040	.01650	-.01160	-.01980	-.01160	-.00200	.02930	-.00570	-.35410	-.31360
-6.134	6.437	.00270	.01520	-.01980	-.01730	-.01590	.00060	.02650	-.00520	-.32310	-.28160
	GRADIENT	.00905	-.00024	-.00545	-.00055	-.00000	.00177	-.00079	.00016	.00700	.01104

RUN NO. 1188/ 0 RN/L = 3.50 GRADIENT INTERVAL = -5.00/ 5.00

ALPHAL	BETAL	CNFLS	CAFLS	CLMFLS	CYFLS	CYNFLS	CBLLS	CABLS	CYNBLS	CP5	CP6
-4.191	-5.959	-.08270	.02070	.03730	.01450	-.02700	-.01610	.03800	-.00740	-.43960	-.42530
-4.451	-3.833	-.06750	.02030	.02880	.00670	-.02220	-.01310	.03560	-.00690	-.41160	-.39830
-4.361	.516	-.03010	.01820	.00590	.00320	-.02180	-.00580	.03190	-.00620	-.38080	-.34520
-3.837	4.433	-.00270	.01860	-.01130	.00200	-.02330	-.00050	.02850	-.00550	-.34080	-.30860
-3.926	6.385	.00760	.01780	-.01870	.00230	-.02580	.00150	.02650	-.00520	-.32030	-.28410
	GRADIENT	.00745	-.00021	-.00486	-.00057	-.00013	.00153	-.00086	.00017	.00854	.01088

RUN NO. 1189/ 0 RN/L = 3.50 GRADIENT INTERVAL = -5.00/ 5.00

ALPHAL	BETAL	CNFLS	CAFLS	CLMFLS	CYFLS	CYNFLS	CBLLS	CABLS	CYNBLS	CP5	CP6
-.351	-6.841	-.05330	.02230	.02880	.04550	-.04570	-.01040	.03790	-.00740	-.44950	-.41400
-.331	-4.678	-.04360	.02190	.02320	.03810	-.04060	-.00850	.03670	-.00710	-.43630	-.39980
-.370	-.278	-.01840	.02040	.00480	.02920	-.03580	-.00360	.03220	-.00630	-.38200	-.35160
-.299	3.787	.00170	.02020	-.00960	.02460	-.03330	.00030	.02840	-.00550	-.34420	-.30230
-.274	5.944	.00960	.02010	-.01530	.02310	-.03310	.00190	.02720	-.00530	-.33240	-.28780
	GRADIENT	.00536	-.00020	-.00388	-.00160	.00087	.00104	-.00098	.00019	.01090	.01151

RUN NO. 1190/ 0 RN/L = 3.50 GRADIENT INTERVAL = -5.00/ 5.00

ALPHAL	BETAL	CNFLS	CAFLS	CLMFLS	CYFLS	CYNFLS	CBLLS	CABLS	CYNBLS	CP5	CP6
4.363	-5.657	-.00530	.02220	.00930	.04640	-.04780	-.00090	.03640	-.00710	-.43600	-.39330
4.253	-3.647	-.00360	.02140	.00780	.03970	-.04230	-.00060	.03540	-.00690	-.42380	-.38190
3.931	.191	.00400	.02000	.00010	.03240	-.03810	.00090	.03180	-.00620	-.38160	-.34340
4.074	4.112	.00830	.02030	-.00290	.01900	-.03010	.00170	.02950	-.00570	-.36160	-.30960
4.018	6.250	.01070	.02010	-.00590	.01380	-.02790	.00210	.02770	-.00540	-.34310	-.28910
	GRADIENT	.00153	-.00014	-.00138	-.00267	.00157	.00030	-.00076	.00015	.00801	.00932

IA156A, AEDC PWT 16T-470, 0 T S W/SILTS (R8NL95) (10 MAY 80)

REFERENCE DATA

SREF = 2690.0000 SQ.FT. XMRP = 976.0000 IN. XT
LREF = 1290.3000 INCHES YMRP = .0000 IN. YT
BREF = 1290.3000 INCHES ZMRP = 400.0000 IN. ZT
SCALE = .0200

PARAMETRIC DATA

IB-ELV = 8.000 OB-ELV = 5.000
BDFLAP = .000 SPDBRK = .000
RUDDER = .000 SILTS = 1.000
MACH = .950 RN/L = 3.500

RUN NO. 1191/ 0 RN/L = 3.50 GRADIENT INTERVAL = -5.00/ 5.00

ALPHAL	BETAL	CNFLS	CAFLS	CLMFLS	CYFLS	CYNFLS	CBLLS	CABLS	CYNBLS	CP5	CP6
-8.615	-5.689	-.12980	.01820	.04940	-.03040	-.00760	-.02540	.04230	-.00820	-.48570	-.47680
-8.722	-3.529	-.10670	.01890	.03770	-.04120	-.00020	-.02090	.03910	-.00760	-.44520	-.44470
-8.581	.390	-.06370	.01760	.01360	-.04690	.00300	-.01250	.03850	-.00750	-.45410	-.42210
-8.357	4.657	-.01780	.01570	-.01530	-.04400	-.00120	-.00350	.03380	-.00660	-.40610	-.36450
-8.314	6.506	-.00410	.01410	-.02280	-.03930	-.00630	-.00080	.02940	-.00570	-.36200	-.30680
	GRADIENT	.01086	-.00039	-.00648	-.00033	-.00013	.00213	-.00065	.00012	.00487	.00985

RUN NO. 1192/ 0 RN/L = 3.49 GRADIENT INTERVAL = -5.00/ 5.00

ALPHAL	BETAL	CNFLS	CAFLS	CLMFLS	CYFLS	CYNFLS	CBLLS	CABLS	CYNBLS	CP5	CP6
-6.581	-5.807	-.10860	.02090	.04410	-.00930	-.01710	-.02120	.04130	-.00800	-.47570	-.46330
-6.450	-3.862	-.08670	.02060	.03300	-.01420	-.01250	-.01700	.03950	-.00770	-.45550	-.44340
-6.536	.269	-.04650	.02050	.00950	-.01970	-.00990	-.00910	.03750	-.00730	-.44230	-.41210
-6.261	4.434	-.00930	.01840	-.01360	-.01550	-.01480	-.00180	.03330	-.00650	-.39770	-.36130
-6.191	6.443	.00240	.01740	-.02060	-.01330	-.01870	.00050	.02860	-.00560	-.34910	-.30350
	GRADIENT	.00933	-.00027	-.00562	-.00016	-.00028	.00183	-.00075	.00014	.00697	.00990

RUN NO. 1193/ 0 RN/L = 3.49 GRADIENT INTERVAL = -5.00/ 5.00

ALPHAL	BETAL	CNFLS	CAFLS	CLMFLS	CYFLS	CYNFLS	CBLLS	CABLS	CYNBLS	CP5	CP6
-4.238	-5.944	-.08610	.02350	.03870	.01810	-.03010	-.01680	.04120	-.00800	-.47880	-.45830
-4.497	-3.835	-.06950	.02270	.02950	.01120	-.02520	-.01360	.03940	-.00770	-.45620	-.44100
-4.405	.513	-.03080	.02050	.00630	.00920	-.02580	-.00600	.03700	-.00720	-.43740	-.40510
-3.859	4.446	-.00340	.02150	-.01020	.00860	-.02740	-.00070	.03150	-.00610	-.37400	-.34220
-3.936	6.289	.00520	.01980	-.01610	.00680	-.02840	.00100	.02880	-.00560	-.34820	-.30820
	GRADIENT	.00800	-.00015	-.00480	-.00032	-.00026	.00156	-.00095	.00019	.00983	.01187

RUN NO. 1194/ 0 RN/L = 3.48 GRADIENT INTERVAL = -5.00/ 5.00

ALPHAL	BETAL	CNFLS	CAFLS	CLMFLS	CYFLS	CYNFLS	CBLLS	CABLS	CYNBLS	CP5	CP6
-.363	-6.836	-.05500	.02570	.03000	.04800	-.04900	-.01070	.04130	-.00800	-.49200	-.44900
-.330	-4.659	-.04320	.02500	.02370	.04220	-.04470	-.00840	.04020	-.00780	-.47830	-.43780
-.336	-.330	-.02010	.02440	.00950	.03470	-.04150	-.00390	.03650	-.00710	-.43000	-.40060
-.266	3.779	-.00120	.02270	-.00460	.02370	-.03490	-.00020	.03140	-.00610	-.37850	-.33600
-.252	5.983	.00680	.02190	-.01060	.02070	-.03440	.00130	.02890	-.00560	-.35260	-.30470
	GRADIENT	.00498	-.00027	-.00335	-.00219	.00116	.00097	-.00104	.00020	.01182	.01203

IA156A, AEDC PWT 16T-470, O T S W/SILTS (R8NL95) (10 MAY 80)

REFERENCE DATA

SREF = 2690.0000 SQ.FT. XMRP = 976.0000 IN. XT
LREF = 1290.3000 INCHES YMRP = .0000 IN. YT
BREF = 1290.3000 INCHES ZMRP = 400.0000 IN. ZT
SCALE = .0200

PARAMETRIC DATA

IB-ELV = 8.000 OB-ELV = 5.000
BDFLAP = .000 SPDBRK = .000
RUDDER = .000 SILTS = 1.000
MACH = .950 RN/L = 3.500

RUN NO. 1195/ 0 RN/L = 3.49 GRADIENT INTERVAL = -5.00/ 5.00

ALPHAL	BETAL	CNFLS	CAFLS	CLMFLS	CYFLS	CYNFLS	CBLLS	CABLS	CYNBLS	CP5	CP6
4.415	-5.680	-.00820	.02380	.01210	.04590	-.04960	-.00150	.04100	-.00800	-.49120	-.44350
4.234	-3.577	-.00590	.02370	.00920	.03720	-.04280	-.00110	.03910	-.00760	-.47030	-.42120
3.905	.249	.00300	.02280	-.00030	.03110	-.03940	.00070	.03520	-.00680	-.42500	-.37780
4.090	4.165	.00760	.02230	-.00280	.01840	-.03120	.00150	.03220	-.00630	-.39590	-.33780
4.047	6.263	.00940	.02180	-.00470	.01370	-.02930	.00190	.02960	-.00570	-.36920	-.30530
	GRADIENT	.00174	-.00018	-.00155	-.00243	.00150	.00034	-.00089	.00017	.00960	.01077

IA156A, AEDC PWT 16T-470, O T S W/SILTS (R8NL96) (10 MAY 80)

REFERENCE DATA

SREF = 2690.0000 SQ.FT. XMRP = 976.0000 IN. XT
LREF = 1290.3000 INCHES YMRP = .0000 IN. YT
BREF = 1290.3000 INCHES ZMRP = 400.0000 IN. ZT
SCALE = .0200

PARAMETRIC DATA

IB-ELV = 8.000 OB-ELV = 5.000
BDFLAP = .000 SPDBRK = .000
RUDDER = .000 SILTS = 1.000
MACH = 1.050 RN/L = 3.500

RUN NO. 1196/ 0 RN/L = 3.50 GRADIENT INTERVAL = -5.00/ 5.00

ALPHAL	BETAL	CNFLS	CAFLS	CLMFLS	CYFLS	CYNFLS	CBLLS	CABLS	CYNBLS	CP5	CP6
-8.723	-5.723	-.14510	.02680	.05810	-.02320	-.01670	-.02840	.05490	-.01070	-.64690	-.60340
-8.813	-3.525	-.12290	.02490	.04680	-.03360	-.00970	-.02400	.05360	-.01040	-.62540	-.59420
-8.718	.448	-.07100	.02500	.01390	-.04400	-.00380	-.01390	.05170	-.01000	-.60970	-.56730
-8.424	4.609	-.02140	.02320	-.01690	-.03770	-.01000	-.00420	.04640	-.00900	-.55000	-.50700
-8.402	6.545	-.00540	.02100	-.02610	-.03400	-.01370	-.00110	.04220	-.00820	-.50340	-.45870
	GRADIENT	.01247	-.00021	-.00783	-.00049	-.00005	.00243	-.00089	.00017	.00931	.01075

RUN NO. 1197/ 0 RN/L = 3.50 GRADIENT INTERVAL = -5.00/ 5.00

ALPHAL	BETAL	CNFLS	CAFLS	CLMFLS	CYFLS	CYNFLS	CBLLS	CABLS	CYNBLS	CP5	CP6
-6.612	-5.783	-.11900	.02900	.05100	.00020	-.02630	-.02330	.05480	-.01060	-.64410	-.60300
-6.513	-3.843	-.09690	.02860	.03910	-.00590	-.02180	-.01890	.05280	-.01030	-.62150	-.58080
-6.612	.373	-.05130	.02540	.01070	-.01230	-.01910	-.01000	.05060	-.00980	-.59840	-.55470
-6.333	4.490	-.01050	.02560	-.01570	-.00910	-.02280	-.00200	.04590	-.00890	-.54520	-.49990
-6.039	6.555	.00540	.02360	-.02480	-.00390	-.02760	.00100	.04130	-.00800	-.49000	-.45110
	GRADIENT	.01037	-.00036	-.00658	-.00039	-.00012	.00203	-.00083	.00017	.00914	.00969

IA156A, AEDC PWT 16T-470, 0 T S W/SILTS (R8NL96) (10 MAY 80)

REFERENCE DATA

SREF = 2690.0000 SQ.FT. XMRP = 976.0000 IN. XT
LREF = 1290.3000 INCHES YMRP = .0000 IN. YT
BREF = 1290.3000 INCHES ZMRP = 400.0000 IN. ZT
SCALE = .0200

PARAMETRIC DATA

IB-ELV = 8.000 OB-ELV = 5.000
BDFLAP = .000 SPDBRK = .000
RUDDER = .000 SILTS = 1.000
MACH = 1.050 RN/L = 3.500

RUN NO. 1198/ 0 RN/L = 3.50 GRADIENT INTERVAL = -5.00/ 5.00

ALPHAL	BETAL	CNFLS	CAFLS	CLMFLS	CYFLS	CYNFLS	CBLLS	CABLS	CYNBLS	CP5	CP6
-4.330	-5.922	-.09480	.03080	.04490	.02660	-.03960	-.01850	.05350	-.01040	-.63110	-.58670
-4.546	-3.827	-.07710	.03020	.03450	.02080	-.03550	-.01510	.05210	-.01010	-.61240	-.57290
-4.455	.521	-.03460	.02690	.00800	.01990	-.03590	-.00670	.04890	-.00950	-.58230	-.53120
-3.882	4.453	-.00280	.02800	-.01230	.01950	-.03690	-.00050	.04360	-.00850	-.51690	-.47580
-3.956	6.305	.00670	.02540	-.01870	.01810	-.03740	.00130	.04170	-.00810	-.49180	-.45740
	GRADIENT	.00899	-.00027	-.00566	-.00016	-.00017	.00177	-.00102	.00019	.01145	.01169

RUN NO. 1199/ 0 RN/L = 3.50 GRADIENT INTERVAL = -5.00/ 5.00

ALPHAL	BETAL	CNFLS	CAFLS	CLMFLS	CYFLS	CYNFLS	CBLLS	CABLS	CYNBLS	CP5	CP6
-.373	-6.868	-.06220	.03310	.03700	.05840	-.05940	-.01210	.05240	-.01020	-.62300	-.56980
-.352	-4.666	-.04780	.03240	.02830	.05420	-.05660	-.00930	.05180	-.01010	-.61430	-.56580
-.399	-.289	-.02090	.02980	.01040	.04820	-.05390	-.00400	.04900	-.00950	-.58290	-.53260
-.299	3.809	-.00030	.02840	-.00450	.03520	-.04540	.00000	.04400	-.00850	-.52720	-.47480
-.278	6.000	.00780	.02820	-.01090	.02940	-.04260	.00160	.04190	-.00810	-.50240	-.45090
	GRADIENT	.00561	-.00047	-.00387	-.00223	.00131	.00110	-.00092	.00019	.01024	.01070

RUN NO. 1200/ 0 RN/L = 3.50 GRADIENT INTERVAL = -5.00/ 5.00

ALPHAL	BETAL	CNFLS	CAFLS	CLMFLS	CYFLS	CYNFLS	CBLLS	CABLS	CYNBLS	CP5	CP6
4.430	-5.629	-.01130	.03210	.01580	.05740	-.06160	-.00210	.05050	-.00980	-.59980	-.54950
4.269	-3.550	-.00810	.03180	.01280	.04950	-.05520	-.00150	.04910	-.00950	-.58200	-.53640
3.968	.273	.00150	.03040	.00400	.04190	-.05000	.00040	.04800	-.00930	-.56950	-.52390
4.099	4.186	.00970	.02890	-.00430	.02530	-.03950	.00200	.04580	-.00890	-.54320	-.50040
4.073	6.282	.01120	.02740	-.00650	.01940	-.03620	.00230	.04360	-.00850	-.52070	-.47120
	GRADIENT	.00230	-.00037	-.00221	-.00313	.00203	.00045	-.00043	.00008	.00502	.00466

REFERENCE DATA

SREF = 2690.0000 SQ.FT. XMRP = 976.0000 IN. XT
LREF = 1290.3000 INCHES YMRP = .0000 IN. YT
BREF = 1290.3000 INCHES ZMRP = 400.0000 IN. ZT
SCALE = .0200

PARAMETRIC DATA

IB-ELV = 8.000 OB-ELV = 5.000
BDFLAP = .000 SPDBRK = .000
RUDDER = .000 SILTS = 1.000
MACH = 1.100 RN/L = 3.500

RUN NO. 1201/ 0 RN/L = 3.50 GRADIENT INTERVAL = -5.00/ 5.00

ALPHAL	BETAL	CNFLS	CAFLS	CLMFLS	CYFLS	CYNFLS	CBLLS	CABLS	CYNBLS	CP5	CP6
-8.775	-5.709	-.14540	.03050	.05720	-.02580	-.01630	-.02850	.05120	-.00990	-.60570	-.56070
-8.830	-3.524	-.12100	.03050	.04440	-.03760	-.00810	-.02370	.04920	-.00950	-.57660	-.54310
-8.718	.469	-.06720	.02730	.01180	-.04340	-.00520	-.01320	.04740	-.00920	-.56140	-.51890
-8.453	4.620	-.02090	.02500	-.01700	-.03920	-.00970	-.00410	.04250	-.00830	-.50590	-.46280
-8.392	6.550	-.00570	.02280	-.02480	-.03420	-.01330	-.00120	.03840	-.00740	-.45850	-.41540
	GRADIENT	.01228	-.00067	-.00753	-.00019	-.00020	.00241	-.00083	.00015	.00871	.00988

RUN NO. 1202/ 0 RN/L = 3.50 GRADIENT INTERVAL = -5.00/ 5.00

ALPHAL	BETAL	CNFLS	CAFLS	CLMFLS	CYFLS	CYNFLS	CBLLS	CABLS	CYNBLS	CP5	CP6
-6.631	-5.784	-.11570	.03240	.04840	-.00220	-.02470	-.02270	.04990	-.00970	-.58870	-.54750
-6.558	-3.829	-.09560	.03170	.03710	-.00820	-.02080	-.01870	.04830	-.00940	-.56970	-.53110
-6.675	.382	-.04970	.02760	.00860	-.01480	-.01850	-.00970	.04620	-.00900	-.54930	-.50350
-6.340	4.497	-.00970	.02720	-.01590	-.00850	-.02270	-.00190	.04120	-.00800	-.49100	-.44780
-6.020	6.544	.00500	.02500	-.02410	-.00340	-.02700	.00090	.03750	-.00730	-.44580	-.40740
	GRADIENT	.01032	-.00054	-.00637	-.00004	-.00023	.00202	-.00085	.00017	.00943	.00999

RUN NO. 1203/ 0 RN/L = 3.50 GRADIENT INTERVAL = -5.00/ 5.00

ALPHAL	BETAL	CNFLS	CAFLS	CLMFLS	CYFLS	CYNFLS	CBLLS	CABLS	CYNBLS	CP5	CP6
-4.340	-5.940	-.09490	.03400	.04420	.02320	-.03730	-.01860	.04820	-.00940	-.56940	-.52760
-4.575	-3.831	-.07640	.03190	.03310	.01720	-.03310	-.01490	.04730	-.00920	-.55710	-.51970
-4.464	.534	-.03260	.02900	.00590	.01750	-.03450	-.00630	.04340	-.00840	-.51930	-.46900
-3.884	4.466	-.00250	.02920	-.01260	.01900	-.03660	-.00050	.03990	-.00770	-.47280	-.43510
-3.958	6.323	.00630	.02710	-.01850	.01780	-.03680	.00120	.03820	-.00740	-.45050	-.41980
	GRADIENT	.00893	-.00033	-.00552	.00021	-.00042	.00174	-.00089	.00018	.01013	.01022

RUN NO. 1204/ 0 RN/L = 3.50 GRADIENT INTERVAL = -5.00/ 5.00

ALPHAL	BETAL	CNFLS	CAFLS	CLMFLS	CYFLS	CYNFLS	CBLLS	CABLS	CYNBLS	CP5	CP6
-.381	-6.875	-.06340	.03540	.03740	.05480	-.05650	-.01240	.04710	-.00910	-.56200	-.51040
-.343	-4.696	-.04800	.03480	.02810	.05130	-.05400	-.00940	.04600	-.00890	-.54830	-.49880
-.385	-.296	-.02150	.03140	.01040	.04520	-.05100	-.00420	.04230	-.00820	-.50750	-.45530
-.278	3.820	-.00180	.02970	-.00360	.03370	-.04370	-.00030	.03760	-.00730	-.45240	-.40310
-.264	6.034	.00690	.02870	-.01030	.02790	-.04080	.00130	.03550	-.00690	-.43000	-.37830
	GRADIENT	.00543	-.00060	-.00373	-.00206	.00120	.00107	-.00098	.00019	.01124	.01122

IA156A, AEDC PWT 16T-470, O T S W/SILTS (R8NL97) (10 MAY 80)

REFERENCE DATA

SREF = 2690.0000 SQ.FT. XMRP = 976.0000 IN. XT
LREF = 1290.3000 INCHES YMRP = .0000 IN. YT
BREF = 1290.3000 INCHES ZMRP = 400.0000 IN. ZT
SCALE = .0200

PARAMETRIC DATA

IB-ELV = 8.000 OB-ELV = 5.000
BDFLAP = .000 SPDBRK = .000
RUDDER = .000 SILTS = 1.000
MACH = 1.100 RN/L = 3.500

RUN NO. 1205/ 0 RN/L = 3.50 GRADIENT INTERVAL = -5.00/ 5.00

ALPHAL	BETAL	CNFLS	CAFLS	CLMFLS	CYFLS	CYNFLS	CBLLS	CABLS	CYNBLS	CP5	CP6
4.479	-5.647	-.01150	.03480	.01680	.05280	-.05840	-.00220	.04380	-.00850	-.52210	-.47460
4.301	-3.542	-.00770	.03400	.01360	.04620	-.05300	-.00140	.04290	-.00830	-.51100	-.46660
3.999	.286	.00100	.03170	.00490	.04020	-.04910	.00030	.04240	-.00820	-.50530	-.45950
4.120	4.191	.00870	.03010	.00370	.02350	-.03830	.00180	.03960	-.00770	-.47280	-.42880
4.099	6.294	.01090	.02930	-.00650	.01820	-.03590	.00220	.03700	-.00720	-.44450	-.39710
	GRADIENT	.00212	-.00050	-.00224	-.00294	.00190	.00041	-.00043	.00008	.00495	.00490

IA156A, AEDC PWT 16T-470, O T S W/SILTS (R8NL98) (28 MAY 80)

REFERENCE DATA

SREF = 2690.0000 SQ.FT. XMRP = 976.0000 IN. XT
LREF = 1290.3000 INCHES YMRP = .0000 IN. YT
BREF = 1290.3000 INCHES ZMRP = 400.0000 IN. ZT
SCALE = .0200

PARAMETRIC DATA

IB-ELV = 8.000 OB-ELV = 5.000
BDFLAP = .000 SPDBRK = .000
RUDDER = .000 SILTS = 1.000
MACH = 1.150 RN/L = 3.500

RUN NO. 1206/ 0 RN/L = 3.50 GRADIENT INTERVAL = -5.00/ 5.00

ALPHAL	BETAL	CNFLS	CAFLS	CLMFLS	CYFLS	CYNFLS	CBLLS	CABLS	CYNBLS	CP5	CP6
-8.705	-5.700	-.14560	.03240	.05850	-.02590	-.01350	-.02850	.04750	-.00920	-.56060	-.52060
-8.841	-3.501	-.12410	.03080	.04640	-.03920	-.00530	-.02430	.04660	-.00900	-.54610	-.51520
-8.729	.449	-.07140	.02860	.01340	-.04680	-.00140	-.01400	.04430	-.00860	-.52180	-.48750
-8.424	4.693	-.02340	.02560	-.01640	-.04030	-.00730	-.00460	.03970	-.00770	-.47430	-.42980
-8.415	6.589	-.00780	.02350	-.02530	-.03490	-.01230	-.00160	.03630	-.00710	-.43470	-.39270
	GRADIENT	.01228	-.00064	-.00766	-.00011	-.00026	.00240	-.00085	.00016	.00879	.01046

RUN NO. 1207/ 0 RN/L = 3.50 GRADIENT INTERVAL = -5.00/ 5.00

ALPHAL	BETAL	CNFLS	CAFLS	CLMFLS	CYFLS	CYNFLS	CBLLS	CABLS	CYNBLS	CP5	CP6
-6.629	-5.812	-.12080	.03390	.05220	-.00380	-.02230	-.02370	.04710	-.00920	-.55710	-.51650
-6.507	-3.863	-.09780	.03310	.03980	-.00890	-.01870	-.01910	.04450	-.00860	-.52410	-.48950
-6.647	.307	-.05490	.02870	.01190	-.01760	-.01500	-.01070	.04300	-.00840	-.50960	-.47010
-6.304	4.488	-.01250	.02800	-.01500	-.01100	-.02060	-.00250	.03850	-.00750	-.46040	-.41570
-6.253	6.494	.00160	.02570	-.02370	-.00710	-.02420	.00030	.03500	-.00680	-.41850	-.37820
	GRADIENT	.01021	-.00061	-.00656	-.00025	-.00023	.00199	-.00072	.00013	.00763	.00884

IA156A, AEDC PWT 16T-470, 0 T S W/SILTS (R8NL98) (28 MAY 80)

REFERENCE DATA

SREF = 2690.0000 SQ.FT. XMRP = 976.0000 IN. XT
LREF = 1290.3000 INCHES YMRP = .0000 IN. YT
BREF = 1290.3000 INCHES ZMRP = 400.0000 IN. ZT
SCALE = .0200

PARAMETRIC DATA

IB-ELV = 8.000 OB-ELV = 5.000
BDFLAP = .000 SPDBRK = .000
RUDDER = .000 SILTS = 1.000
MACH = 1.150 RN/L = 3.500

RUN NO. 1208/ 0 RN/L = 3.50 GRADIENT INTERVAL = -5.00/ 5.00

ALPHAL	BETAL	CNFLS	CAFLS	CLMFLS	CYFLS	CYNFLS	CBLLS	CABLS	CYNBLS	CP5	CP6
-4.302	-5.961	-.09710	.03540	.04670	.02140	-.03500	-.01900	.04500	-.00870	-.52990	-.49480
-4.543	-3.830	-.07870	.03300	.03570	.01610	-.03120	-.01540	.04410	-.00860	-.52090	-.48370
-4.464	.531	-.03690	.02930	.00910	.01450	-.03140	-.00720	.04180	-.00810	-.49920	-.45220
-3.860	4.483	-.00540	.03020	-.01080	.01720	-.03480	-.00100	.03750	-.00730	-.44710	-.40610
-3.946	6.329	.00410	.02770	-.01730	.01590	-.03510	.00080	.03540	-.00690	-.41940	-.38560
	GRADIENT	.00883	-.00035	-.00560	.00012	-.00043	.00173	-.00079	.00016	.00881	.00930

RUN NO. 1210/ 0 RN/L = 3.51 GRADIENT INTERVAL = -5.00/ 5.00

ALPHAL	BETAL	CNFLS	CAFLS	CLMFLS	CYFLS	CYNFLS	CBLLS	CABLS	CYNBLS	CP5	CP6
-.340	-6.847	-.06250	.03690	.03790	.05310	-.05460	-.01220	.04420	-.00860	-.52930	-.47790
-.316	-4.600	-.04860	.03620	.02930	.04910	-.05200	-.00950	.04370	-.00850	-.52220	-.47360
-.337	-.277	-.02270	.03400	.01200	.04400	-.05000	-.00440	.04020	-.00780	-.48260	-.43290
-.239	3.896	-.00220	.03050	-.00250	.03310	-.04310	-.00040	.03620	-.00700	-.43780	-.38750
-.222	6.037	.00600	.02960	-.00910	.02730	-.04050	.00120	.03410	-.00660	-.41480	-.36220
	GRADIENT	.00546	-.00067	-.00374	-.00188	.00104	.00107	-.00088	.00018	.00993	.01013

RUN NO. 1211/ 0 RN/L = 3.50 GRADIENT INTERVAL = -5.00/ 5.00

ALPHAL	BETAL	CNFLS	CAFLS	CLMFLS	CYFLS	CYNFLS	CBLLS	CABLS	CYNBLS	CP5	CP6
4.500	-5.630	-.01400	.03610	.01960	.05290	-.05840	-.00260	.04240	-.00820	-.50590	-.45880
4.369	-3.511	-.00930	.03510	.01590	.04630	-.05310	-.00170	.04160	-.00810	-.49230	-.45570
4.054	.344	-.00130	.03350	.00760	.03890	-.04810	-.00010	.04090	-.00790	-.48950	-.44210
4.142	4.214	.00770	.03130	-.00260	.02180	-.03710	.00160	.03820	-.00740	-.45670	-.41360
4.118	6.300	.01040	.03050	-.00570	.01680	-.03570	.00210	.03590	-.00700	-.43250	-.38470
	GRADIENT	.00220	-.00049	-.00240	-.00317	.00207	.00043	-.00044	.00009	.00461	.00545

IA156A, AEDC PWT 16T-470, 0 T S W/SILTS (R8NLA0) (10 MAY 80)

REFERENCE DATA

SREF = 2690.0000 SQ.FT. XMRP = 976.0000 IN. XT
LREF = 1290.3000 INCHES YMRP = .0000 IN. YT
BREF = 1290.3000 INCHES ZMRP = 400.0000 IN. ZT
SCALE = .0200

PARAMETRIC DATA

IB-ELV = 8.000 OB-ELV = 5.000
BDFLAP = .000 SPDBRK = .000
RUDDER = .000 SILTS = 1.000
MACH = 1.250 RN/L = 3.500

RUN NO. 1224/ 0 RN/L = 3.50 GRADIENT INTERVAL = -5.00/ 5.00

ALPHAL	BETAL	CNFLS	CAFLS	CLMFLS	CYFLS	CYNFLS	CBLLS	CABLS	CYNBLS	CP5	CP6
-8.807	-5.718	-.14840	.03350	.06110	-.02700	-.00870	-.02910	.04280	-.00830	-.50760	-.46680
-8.753	-3.670	-.12410	.03240	.04810	-.03610	-.00220	-.02430	.04220	-.00820	-.49700	-.46340
-8.683	.520	-.07340	.02940	.01520	-.04590	.00120	-.01450	.04070	-.00790	-.48010	-.44760
-8.394	4.581	-.02850	.02660	-.01310	-.04030	-.00470	-.00570	.03600	-.00700	-.43020	-.39050
-8.416	6.579	-.01290	.02440	-.02340	-.03900	-.00740	-.00270	.03300	-.00640	-.39590	-.35640
	GRADIENT	.01159	-.00070	-.00742	-.00052	-.00030	.00225	-.00075	.00015	.00807	.00881

RUN NO. 1225/ 0 RN/L = 3.50 GRADIENT INTERVAL = -5.00/ 5.00

ALPHAL	BETAL	CNFLS	CAFLS	CLMFLS	CYFLS	CYNFLS	CBLLS	CABLS	CYNBLS	CP5	CP6
-6.612	-5.874	-.12040	.03490	.05310	-.00500	-.01790	-.02360	.04200	-.00820	-.50200	-.45540
-6.495	-3.922	-.10000	.03320	.04210	-.01030	-.01470	-.01960	.04130	-.00800	-.48800	-.45150
-6.577	.316	-.05720	.03000	.01440	-.01850	-.01200	-.01130	.03940	-.00770	-.46710	-.43060
-6.293	4.492	-.01710	.02820	-.01160	-.01430	-.01650	-.00350	.03540	-.00690	-.42250	-.38420
-6.020	6.605	-.00120	.02610	-.02150	-.00870	-.02120	-.00040	.03210	-.00620	-.38400	-.34750
	GRADIENT	.00985	-.00059	-.00638	-.00048	-.00021	.00191	-.00070	.00013	.00778	.00799

RUN NO. 1226/ 0 RN/L = 3.50 GRADIENT INTERVAL = -5.00/ 5.00

ALPHAL	BETAL	CNFLS	CAFLS	CLMFLS	CYFLS	CYNFLS	CBLLS	CABLS	CYNBLS	CP5	CP6
-4.285	-5.984	-.09680	.03630	.04690	.01540	-.02980	-.01900	.04100	-.00800	-.49170	-.44190
-4.498	-3.848	-.07970	.03430	.03610	.00860	-.02580	-.01570	.03970	-.00770	-.47350	-.43090
-4.406	.535	-.03940	.03010	.01090	.00730	-.02560	-.00780	.03890	-.00750	-.46650	-.41900
-3.830	4.470	-.00920	.03050	-.00780	.01220	-.03050	-.00190	.03470	-.00670	-.41610	-.37470
-3.934	6.351	.00120	.02820	-.01540	.01090	-.03090	.00010	.03200	-.00620	-.38220	-.34650
	GRADIENT	.00849	-.00047	-.00529	.00042	-.00055	.00166	-.00059	.00012	.00680	.00668

RUN NO. 1227/ 0 RN/L = 3.50 GRADIENT INTERVAL = -5.00/ 5.00

ALPHAL	BETAL	CNFLS	CAFLS	CLMFLS	CYFLS	CYNFLS	CBLLS	CABLS	CYNBLS	CP5	CP6
-.286	-6.910	-.06260	.03800	.03970	.05110	-.05180	-.01240	.04050	-.00790	-.49010	-.43180
-.250	-4.708	-.04960	.03710	.03170	.04740	-.04940	-.00980	.03980	-.00770	-.48010	-.42540
-.248	-.333	-.02510	.03380	.01500	.04170	-.04670	-.00500	.03740	-.00730	-.44880	-.40290
-.162	3.825	-.00680	.03070	.00180	.03080	-.04070	-.00150	.03270	-.00630	-.39310	-.35090
-.173	6.064	.00190	.02950	-.00540	.02560	-.03900	.00020	.03110	-.00600	-.38000	-.32900
	GRADIENT	.00502	-.00075	-.00351	-.00194	.00102	.00097	-.00083	.00016	.01017	.00870

IA156A, AEDC PWT 16T-470, O T S W/SILTS (R8NLA0) (10 MAY 80)

REFERENCE DATA

SREF =	2690.0000 SQ.FT.	XMRP =	976.0000 IN. XT		
LREF =	1290.3000 INCHES	YMRP =	.0000 IN. YT		
BREF =	1290.3000 INCHES	ZMRP =	400.0000 IN. ZT		
SCALE =	.0200				

PARAMETRIC DATA

IB-ELV =	8.000	OB-ELV =	5.000
BDFLAP =	.000	SPDBRK =	.000
RUDDER =	.000	SILTS =	1.000
MACH =	1.250	RN/L =	3.500

RUN NO. 1228/ 0 RN/L = 3.50 GRADIENT INTERVAL = -5.00/ 5.00

ALPHAL	BETAL	CNFLS	CAFLS	CLMFLS	CYFLS	CYNFLS	CBLLS	CABLS	CYNBLS	CP5	CP6
4.394	-5.561	-.01470	.03750	.02130	.05000	-.05620	-.00300	.03880	-.00750	-.46540	-.41740
4.420	-3.747	-.00990	.03700	.01800	.04370	-.05140	-.00200	.03810	-.00740	-.45760	-.41090
4.277	.376	-.00220	.03390	.00990	.03320	-.04510	-.00050	.03750	-.00730	-.44990	-.40450
4.189	4.084	.00610	.03130	-.00120	.01720	-.03480	.00110	.03470	-.00670	-.41850	-.37260
4.197	6.321	.00970	.02930	-.00540	.01220	-.03270	.00180	.03330	-.00650	-.40430	-.35340
	GRADIENT	.00204	-.00073	-.00244	-.00337	.00211	.00040	-.00043	.00009	.00493	.00483

IA156A, AEDC PWT 16T-470, O T S W/SILTS (R8NLA1) (10 MAY 80)

REFERENCE DATA

SREF =	2690.0000 SQ.FT.	XMRP =	976.0000 IN. XT		
LREF =	1290.3000 INCHES	YMRP =	.0000 IN. YT		
BREF =	1290.3000 INCHES	ZMRP =	400.0000 IN. ZT		
SCALE =	.0200				

PARAMETRIC DATA

IB-ELV =	8.000	OB-ELV =	5.000
BDFLAP =	.000	SPDBRK =	.000
RUDDER =	.000	SILTS =	1.000
MACH =	1.400	RN/L =	3.500

RUN NO. 1229/ 0 RN/L = 3.50 GRADIENT INTERVAL = -5.00/ 5.00

ALPHAL	BETAL	CNFLS	CAFLS	CLMFLS	CYFLS	CYNFLS	CBLLS	CABLS	CYNBLS	CP5	CP6
-8.789	-5.784	-.15340	.03520	.06320	-.03200	-.00140	-.03030	.03790	-.00740	-.46050	-.40370
-8.792	-3.641	-.13070	.03390	.05100	-.04460	.00610	-.02580	.03750	-.00730	-.44870	-.40510
-8.654	.640	-.07680	.03040	.01750	-.04850	.00610	-.01530	.03620	-.00700	-.42970	-.39480
-8.364	4.703	-.03160	.02730	-.01180	-.04460	-.00070	-.00640	.03200	-.00620	-.38480	-.34430
-8.346	6.652	-.01920	.02560	-.01890	-.04060	-.00540	-.00400	.02960	-.00570	-.35750	-.31710
	GRADIENT	.01188	-.00079	-.00753	-.00001	-.00081	.00233	-.00066	.00013	.00763	.00724

RUN NO. 1230/ 0 RN/L = 3.50 GRADIENT INTERVAL = -5.00/ 5.00

ALPHAL	BETAL	CNFLS	CAFLS	CLMFLS	CYFLS	CYNFLS	CBLLS	CABLS	CYNBLS	CP5	CP6
-6.648	-5.916	-.12260	.03570	.05260	-.01710	-.00730	-.02430	.03710	-.00720	-.45380	-.39180
-6.558	-3.948	-.10150	.03440	.04090	-.02260	-.00460	-.02010	.03650	-.00710	-.44230	-.38840
-6.588	.326	-.06010	.03060	.01560	-.02700	-.00460	-.01200	.03530	-.00680	-.42240	-.38080
-6.276	4.574	-.01920	.02920	-.01090	-.01970	-.01330	-.00400	.03210	-.00620	-.38530	-.34670
-6.186	6.573	-.00650	.02740	-.01860	-.01540	-.01750	-.00150	.02960	-.00570	-.35600	-.31730
	GRADIENT	.00966	-.00061	-.00608	.00034	-.00102	.00189	-.00052	.00011	.00669	.00489

IA156A, AEDC PWT 16T-470, 0 T S W/SILTS (R8NLA1) (10 MAY 80)

REFERENCE DATA

SREF = 2690.0000 SQ.FT. XMRP = 976.0000 IN. XT
LREF = 1290.3000 INCHES YMRP = .0000 IN. YT
BREF = 1290.3000 INCHES ZMRP = 400.0000 IN. ZT
SCALE = .0200

PARAMETRIC DATA

IB-ELV = 8.000 OB-ELV = 5.000
BDFLAP = .000 SPDBRK = .000
RUDDER = .000 SILTS = 1.000
MACH = 1.400 RN/L = 3.500

RUN NO. 1231/ 0 RN/L = 3.50 GRADIENT INTERVAL = -5.00/ 5.00

ALPHAL	BETAL	CNFLS	CAFLS	CLMFLS	CYFLS	CYNFLS	CBLLS	CABLS	CYNBLS	CP5	CP6
-4.297	-6.035	-.09350	.03650	.04410	.00860	-.02270	-.01860	.03610	-.00700	-.44120	-.38130
-4.550	-3.891	-.07790	.03490	.03400	.00040	-.01800	-.01550	.03500	-.00680	-.42550	-.37180
-4.390	.563	-.04070	.03120	.01130	-.00160	-.01880	-.00820	.03390	-.00660	-.41150	-.36170
-3.789	4.555	-.01050	.03050	-.00640	.00810	-.02910	-.00230	.03160	-.00610	-.38090	-.33880
-3.894	6.422	-.00100	.02940	-.01320	.00750	-.02940	-.00050	.02920	-.00570	-.35250	-.31200
	GRADIENT	.00799	-.00053	-.00479	.00089	-.00118	.00156	-.00040	.00008	.00524	.00388

RUN NO. 1232/ 0 RN/L = 3.50 GRADIENT INTERVAL = -5.00/ 5.00

ALPHAL	BETAL	CNFLS	CAFLS	CLMFLS	CYFLS	CYNFLS	CBLLS	CABLS	CYNBLS	CP5	CP6
-.331	-6.961	-.05840	.03820	.03680	.04660	-.04790	-.01170	.03590	-.00700	-.44150	-.37560
-.291	-4.771	-.04610	.03730	.02970	.04180	-.04450	-.00930	.03500	-.00680	-.42810	-.36990
-.275	-.354	-.02530	.03470	.01560	.03550	-.04170	-.00520	.03300	-.00640	-.39930	-.35180
-.197	3.846	-.00890	.03040	.00420	.02720	-.03810	-.00200	.03020	-.00590	-.36420	-.32310
-.220	6.093	-.00040	.02980	-.00290	.02260	-.03690	-.00040	.02810	-.00550	-.34220	-.29870
	GRADIENT	.00432	-.00080	-.00296	-.00169	.00074	.00085	-.00056	.00010	.00741	.00542

RUN NO. 1233/ 0 RN/L = 3.50 GRADIENT INTERVAL = -5.00/ 5.00

ALPHAL	BETAL	CNFLS	CAFLS	CLMFLS	CYFLS	CYNFLS	CBLLS	CABLS	CYNBLS	CP5	CP6
4.556	-5.530	-.01220	.03820	.02360	.04700	-.05580	-.00260	.03510	-.00680	-.43060	-.36930
4.477	-3.496	-.00740	.03670	.01830	.03840	-.04940	-.00170	.03460	-.00670	-.42320	-.36510
4.177	.420	-.00330	.03400	.01150	.02730	-.04160	-.00090	.03270	-.00640	-.39760	-.34760
4.232	4.296	.00560	.03140	.00060	.01230	-.03230	.00080	.03090	-.00600	-.37570	-.32780
4.183	6.348	.00870	.03070	-.00340	.00910	-.03100	.00140	.02900	-.00560	-.35150	-.30870
	GRADIENT	.00167	-.00068	-.00227	-.00335	.00219	.00032	-.00047	.00009	.00610	.00479

IA156A, AEDC PWT 16T-470, 0 T S W/SILTS (R8NLA2) (10 MAY 80)

REFERENCE DATA

SREF = 2690.0000 SQ.FT. XMRP = 976.0000 IN. XT
LREF = 1290.3000 INCHES YMRP = .0000 IN. YT
BREF = 1290.3000 INCHES ZMRP = 400.0000 IN. ZT
SCALE = .0200

PARAMETRIC DATA

IB-ELV = 8.000 OB-ELV = 5.000
BDFLAP = .000 SPDBRK = .000
RUDDER = .000 SILTS = 1.000
MACH = 1.550 RN/L = 3.200

RUN NO. 1212/ 0 RN/L = 3.20 GRADIENT INTERVAL = -5.00/ 5.00

ALPHAL	BETAL	CNFLS	CAFLS	CLMFLS	CYFLS	CYNFLS	CBLLS	CABLS	CYNBLS	CP5	CP6
-8.712	-5.820	-.15110	.03370	.06590	-.02230	-.00490	-.02950	.03420	-.00660	-.42030	-.35890
-8.786	-3.589	-.13170	.03260	.05400	-.04050	.00700	-.02580	.03410	-.00660	-.41370	-.36210
-8.605	.504	-.08230	.02900	.02340	-.04830	.00880	-.01620	.03170	-.00620	-.38070	-.34090
-8.291	4.745	-.03740	.02580	-.00690	-.04420	.00210	-.00740	.02830	-.00550	-.34210	-.30290
-8.253	6.701	-.02350	.02480	-.01550	-.04160	-.00180	-.00460	.02640	-.00510	-.31980	-.28240
	GRADIENT	.01131	-.00082	-.00731	-.00044	-.00059	.00221	-.00070	.00013	.00859	.00711

RUN NO. 1213/ 0 RN/L = 3.20 GRADIENT INTERVAL = -5.00/ 5.00

ALPHAL	BETAL	CNFLS	CAFLS	CLMFLS	CYFLS	CYNFLS	CBLLS	CABLS	CYNBLS	CP5	CP6
-6.659	-5.889	-.11870	.03530	.05240	-.01340	-.00810	-.02320	.03350	-.00650	-.41500	-.34820
-6.562	-3.915	-.09980	.03350	.04160	-.01960	-.00490	-.01950	.03240	-.00630	-.39780	-.33970
-6.539	.404	-.06110	.02920	.01730	-.02580	-.00380	-.01200	.03090	-.00600	-.37370	-.32970
-6.200	4.643	-.02460	.02750	-.00640	-.02170	-.00980	-.00480	.02840	-.00550	-.34040	-.30690
-6.100	6.638	-.01170	.02610	-.01470	-.01870	-.01330	-.00230	.02630	-.00510	-.32040	-.27950
	GRADIENT	.00879	-.00070	-.00561	-.00025	-.00057	.00172	-.00047	.00009	.00670	.00383

RUN NO. 1214/ 0 RN/L = 3.21 GRADIENT INTERVAL = -5.00/ 5.00

ALPHAL	BETAL	CNFLS	CAFLS	CLMFLS	CYFLS	CYNFLS	CBLLS	CABLS	CYNBLS	CP5	CP6
-4.382	-6.042	-.08940	.03560	.04190	.01010	-.02330	-.01750	.03300	-.00640	-.40770	-.34340
-4.626	-3.877	-.07470	.03420	.03210	.00180	-.01830	-.01470	.03120	-.00610	-.38730	-.32300
-4.449	.645	-.04110	.03000	.01180	-.00150	-.01830	-.00810	.03010	-.00580	-.36830	-.31710
-3.773	4.631	-.01480	.02810	-.00390	.00210	-.02240	-.00290	.02760	-.00540	-.33420	-.29480
-3.838	6.488	-.00580	.02750	-.01050	.00220	-.02410	-.00110	.02520	-.00490	-.30600	-.26730
	GRADIENT	.00705	-.00072	-.00424	.00002	-.00047	.00139	-.00042	.00008	.00620	.00327

RUN NO. 1215/ 0 RN/L = 3.20 GRADIENT INTERVAL = -5.00/ 5.00

ALPHAL	BETAL	CNFLS	CAFLS	CLMFLS	CYFLS	CYNFLS	CBLLS	CABLS	CYNBLS	CP5	CP6
-.394	-6.994	-.05320	.03720	.03320	.04580	-.04760	-.01040	.03290	-.00640	-.41610	-.33490
-.362	-4.850	-.04290	.03660	.02720	.04020	-.04350	-.00840	.03150	-.00610	-.39560	-.32280
-.353	-.408	-.02310	.03360	.01380	.03390	-.04050	-.00450	.02920	-.00570	-.35580	-.30880
-.322	3.738	-.00830	.03040	.00310	.02350	-.03460	-.00160	.02760	-.00540	-.33490	-.29310
-.343	5.957	-.00020	.02880	-.00370	.01900	-.03310	.00000	.02530	-.00490	-.30800	-.26800
	GRADIENT	.00403	-.00072	-.00281	-.00194	.00103	.00079	-.00045	.00008	.00709	.00345

IA156A, AEDC PWT 16T-470, O T S W/SILTS (R8NLA2) (10 MAY 80)

REFERENCE DATA

SREF = 2690.0000 SQ.FT. XMRP = 976.0000 IN. XT
LREF = 1290.3000 INCHES YMRP = .0000 IN. YT
BREF = 1290.3000 INCHES ZMRP = 400.0000 IN. ZT
SCALE = .0200

PARAMETRIC DATA

IB-ELV = 8.000 OB-ELV = 5.000
BDFLAP = .000 SPDBRK = .000
RUDDER = .000 SILTS = 1.000
MACH = 1.550 RN/L = 3.200

RUN NO. 1216/ 0 RN/L = 3.20 GRADIENT INTERVAL = -5.00/ 5.00

ALPHAL	BETAL	CNFLS	CAFLS	CLMFLS	CYFLS	CYNFLS	CBLLS	CABLS	CYNBLS	CP5	CP6
4.722	-5.470	-.00820	.03550	.02130	.04190	-.05240	-.00150	.03290	-.00640	-.40800	-.34200
4.503	-3.385	-.00680	.03480	.01800	.03450	-.04640	-.00130	.03150	-.00610	-.39100	-.32630
4.085	.445	-.00450	.03350	.01280	.02600	-.04100	-.00080	.02940	-.00570	-.36230	-.30730
4.076	4.248	.00440	.03100	.00180	.01080	-.03110	.00090	.02740	-.00530	-.33840	-.28630
4.058	6.341	.00770	.02980	-.00180	.00690	-.02940	.00150	.02640	-.00510	-.32550	-.27670
	GRADIENT	.00147	-.00050	-.00212	-.00310	.00200	.00029	-.00054	.00010	.00689	.00524

IA156A, AEDC PWT 16T-470, O T S W/SILTS (R8NLA3) (10 MAY 80)

REFERENCE DATA

SREF = 2690.0000 SQ.FT. XMRP = 976.0000 IN. XT
LREF = 1290.3000 INCHES YMRP = .0000 IN. YT
BREF = 1290.3000 INCHES ZMRP = 400.0000 IN. ZT
SCALE = .0200

PARAMETRIC DATA

IB-ELV = 12.000 OB-ELV = 5.000
BDFLAP = .000 SPDBRK = .000
RUDDER = .000 SILTS = 1.000
MACH = .600 RN/L = 3.500

RUN NO. 1240/ 0 RN/L = 3.50 GRADIENT INTERVAL = -5.00/ 5.00

ALPHAL	BETAL	CNFLS	CAFLS	CLMFLS	CYFLS	CYNFLS	CBLLS	CABLS	CYNBLS	CP5	CP6
-8.421	-7.717	-.13810	.00910	.05830	-.00240	-.01560	-.02700	.03990	-.00770	-.47420	-.43380
-8.302	-5.672	-.11600	.00700	.04760	-.01240	-.00850	-.02270	.04050	-.00790	-.48170	-.44000
-8.296	-3.668	-.09750	.00930	.03810	-.02100	-.00350	-.01900	.03660	-.00710	-.44120	-.39140
-8.143	.403	-.05840	.00870	.01700	-.03060	.00190	-.01140	.03390	-.00660	-.42090	-.35140
-7.985	4.333	-.02050	.01020	-.00600	-.02970	-.00190	-.00390	.03000	-.00580	-.38740	-.29740
-7.956	6.256	-.00460	.00960	-.01560	-.02510	-.00710	-.00080	.02680	-.00520	-.33990	-.27060
-7.994	8.294	.00770	.00820	-.02240	-.02170	-.01170	.00160	.02500	-.00490	-.31630	-.25410
	GRADIENT	.00962	.00011	-.00551	-.00109	.00021	.00189	-.00082	.00016	.00671	.01174

RUN NO. 1241/ 0 RN/L = 3.50 GRADIENT INTERVAL = -5.00/ 5.00

ALPHAL	BETAL	CNFLS	CAFLS	CLMFLS	CYFLS	CYNFLS	CBLLS	CABLS	CYNBLS	CP5	CP6
-6.293	-7.783	-.11540	.01090	.05100	.01430	-.02390	-.02250	.03900	-.00760	-.46480	-.42410
-6.244	-5.770	-.09820	.01040	.04220	.00510	-.01770	-.01910	.03770	-.00730	-.45210	-.40580
-6.133	-3.869	-.07990	.01060	.03310	-.00010	-.01390	-.01560	.03590	-.00700	-.43200	-.38540
-6.140	.174	-.04430	.01020	.01280	-.00680	-.01080	-.00860	.03210	-.00620	-.40130	-.33120
-5.975	4.239	-.01270	.01160	-.00640	-.00700	-.01320	-.00240	.02880	-.00560	-.36790	-.28900
-5.888	6.209	.00040	.01070	-.01470	-.00460	-.01690	.00020	.02630	-.00510	-.32840	-.27080
-5.677	8.306	.01100	.01060	-.02080	.00000	-.02180	.00220	.02470	-.00480	-.30910	-.25310
	GRADIENT	.00829	.00012	-.00487	-.00085	.00009	.00163	-.00088	.00017	.00791	.01189

IA156A, AEDC PWT 16T-470, O T S W/SILTS (R8NLA3) (10 MAY 80)

REFERENCE DATA

SREF = 2690.0000 SQ.FT. XMRP = 976.0000 IN. XT
LREF = 1290.3000 INCHES YMRP = .0000 IN. YT
BREF = 1290.3000 INCHES ZMRP = 400.0000 IN. ZT
SCALE = .0200

PARAMETRIC DATA

IB-ELV = 12.000 OB-ELV = 5.000
BDFLAP = .000 SPDBRK = .000
RUDDER = .000 SILTS = 1.000
MACH = .600 RN/L = 3.500

RUN NO. 1242/ 0 RN/L = 3.49 GRADIENT INTERVAL = -5.00/ 5.00

ALPHAL	BETAL	CNFLS	CAFLS	CLMFLS	CYFLS	CYNFLS	CBLLS	CABLS	CYNBLS	CP5	CP6
-4.062	-7.846	-.09270	.01270	.04400	.03140	-.03320	-.01810	.03800	-.00740	-.45530	-.41080
-4.283	-5.817	-.07970	.01230	.03640	.02170	-.02670	-.01550	.03650	-.00710	-.43880	-.39190
-4.247	-3.755	-.06330	.01180	.02770	.01670	-.02340	-.01230	.03510	-.00680	-.42300	-.37700
-4.005	.253	-.03110	.01180	.00930	.01410	-.02320	-.00600	.03070	-.00600	-.38000	-.31920
-3.654	4.251	-.00590	.01290	-.00630	.01230	-.02370	-.00100	.02780	-.00540	-.35140	-.28250
-3.764	6.065	.00270	.01270	-.01250	.01120	-.02480	.00060	.02580	-.00500	-.32190	-.26500
-3.792	8.062	.01220	.01210	-.01910	.01150	-.02680	.00250	.02470	-.00480	-.31000	-.25390
	GRADIENT	.00717	.00014	-.00425	-.00055	-.00004	.00141	-.00091	.00017	.00894	.01181

RUN NO. 1243/ 0 RN/L = 3.50 GRADIENT INTERVAL = -5.00/ 5.00

ALPHAL	BETAL	CNFLS	CAFLS	CLMFLS	CYFLS	CYNFLS	CBLLS	CABLS	CYNBLS	CP5	CP6
-.289	-8.584	-.06330	.01540	.03580	.05050	-.04650	-.01230	.03690	-.00720	-.44220	-.39810
-.274	-6.499	-.05350	.01470	.02990	.04480	-.04220	-.01040	.03640	-.00710	-.43980	-.38860
-.255	-4.238	-.04090	.01430	.02230	.04000	-.03880	-.00790	.03460	-.00670	-.41920	-.36970
-.230	-.161	-.01920	.01340	.00870	.03610	-.03740	-.00360	.03060	-.00590	-.37480	-.32240
-.171	3.913	-.00440	.01370	-.00090	.02710	-.03190	-.00070	.02690	-.00520	-.34050	-.27330
-.163	6.027	.00310	.01380	-.00670	.02270	-.02980	.00070	.02570	-.00500	-.32450	-.26130
-.156	8.136	.01030	.01420	-.01250	.02090	-.03040	.00220	.02500	-.00490	-.31630	-.25340
	GRADIENT	.00448	-.00007	-.00285	-.00158	.00085	.00088	-.00094	.00018	.00966	.01183

RUN NO. 1244/ 0 RN/L = 3.50 GRADIENT INTERVAL = -5.00/ 5.00

ALPHAL	BETAL	CNFLS	CAFLS	CLMFLS	CYFLS	CYNFLS	CBLLS	CABLS	CYNBLS	CP5	CP6
4.552	-8.098	-.00520	.01580	.01200	.05240	-.04940	-.00080	.03510	-.00680	-.42040	-.37790
4.376	-5.872	-.00290	.01520	.01010	.04690	-.04490	-.00040	.03410	-.00660	-.41050	-.36650
4.363	-3.875	-.00060	.01470	.00840	.04160	-.04110	.00010	.03270	-.00630	-.39820	-.34640
4.155	.072	.00280	.01310	.00440	.03250	-.03590	.00070	.03000	-.00580	-.36910	-.31470
4.187	4.214	.00410	.01300	.00190	.01920	-.02780	.00100	.02770	-.00540	-.34630	-.28450
4.119	6.377	.00520	.01400	-.00020	.01270	-.02460	.00120	.02570	-.00500	-.32730	-.25810
4.092	8.396	.00790	.01360	-.00370	.00890	-.02320	.00170	.02570	-.00500	-.32710	-.25830
	GRADIENT	.00058	-.00021	-.00080	-.00277	.00165	.00011	-.00062	.00011	.00641	.00765

IA156A, AEDC PWT 16T-470, 0 T S W/SILTS (R8NLA3) (10 MAY 80)

REFERENCE DATA

SREF = 2690.0000 SQ.FT. XMRP = 976.0000 IN. XT
LREF = 1290.3000 INCHES YMRP = .0000 IN. YT
BREF = 1290.3000 INCHES ZMRP = 400.0000 IN. ZT
SCALE = .0200

PARAMETRIC DATA

IB-ELV = 12.000 OB-ELV = 5.000
BDFLAP = .000 SPDBRK = .000
RUDDER = .000 SILTS = 1.000
MACH = .600 RN/L = 3.500

RUN NO. 1245/ 0 RN/L = 3.50 GRADIENT INTERVAL = -5.00/ 5.00

ALPHAL	BETAL	CNFLS	CAFLS	CLMFLS	CYFLS	CYNFLS	CBLLS	CABLS	CYNBLS	CP5	CP6
6.585	-7.971	.01730	.01550	.00280	.04130	-.04460	.00360	.03440	-.00670	-.41520	-.36860
6.562	-5.902	.01740	.01500	.00220	.03440	-.03930	.00360	.03360	-.00650	-.40870	-.35700
6.548	-3.820	.01620	.01450	.00240	.02760	-.03420	.00340	.03290	-.00640	-.40340	-.34600
6.246	.258	.01130	.01300	.00340	.01850	-.02880	.00240	.03080	-.00600	-.37690	-.32550
6.153	4.235	.00910	.01280	.00150	.00500	-.02020	.00200	.02780	-.00540	-.35260	-.28220
6.060	6.346	.00890	.01310	-.00060	-.00030	-.01680	.00190	.02680	-.00520	-.34270	-.26720
6.028	8.290	.01110	.01350	-.00410	-.00400	-.01560	.00240	.02630	-.00510	-.33400	-.26510
	GRADIENT	-.00088	-.00021	-.00011	-.00280	.00174	-.00017	-.00063	.00012	.00631	.00791

RUN NO. 1246/ 0 RN/L = 3.50 GRADIENT INTERVAL = -5.00/ 5.00

ALPHAL	BETAL	CNFLS	CAFLS	CLMFLS	CYFLS	CYNFLS	CBLLS	CABLS	CYNBLS	CP5	CP6
8.535	-7.794	.03760	.01430	-.00550	.02360	-.03460	.00760	.03450	-.00670	-.41610	-.36990
8.452	-5.716	.03420	.01440	-.00440	.01590	-.02900	.00690	.03340	-.00650	-.40910	-.35270
8.440	-3.727	.03070	.01420	-.00300	.00830	-.02350	.00620	.03300	-.00640	-.40660	-.34420
8.334	.278	.02220	.01330	-.00010	-.00050	-.01870	.00450	.03080	-.00600	-.37860	-.32350
8.347	4.373	.01830	.01220	-.00200	-.01450	-.00930	.00380	.02790	-.00540	-.35330	-.28210
8.267	6.383	.01730	.01230	-.00430	-.01800	-.00650	.00360	.02700	-.00520	-.34030	-.27500
8.245	8.435	.01870	.01220	-.00850	-.02170	-.00480	.00390	.02740	-.00530	-.34330	-.28220
	GRADIENT	-.00153	-.00025	.00012	-.00282	.00176	-.00030	-.00063	.00012	.00658	.00768

IA156A, AEDC PWT 16T-470, 0 T S W/SILTS (R8NLA4) (10 MAY 80)

REFERENCE DATA

SREF = 2690.0000 SQ.FT. XMRP = 976.0000 IN. XT
LREF = 1290.3000 INCHES YMRP = .0000 IN. YT
BREF = 1290.3000 INCHES ZMRP = 400.0000 IN. ZT
SCALE = .0200

PARAMETRIC DATA

IB-ELV = 12.000 OB-ELV = 5.000
BDFLAP = .000 SPDBRK = .000
RUDDER = .000 SILTS = 1.000
MACH = .800 RN/L = 3.500

RUN NO. 1247/ 0 RN/L = 3.50 GRADIENT INTERVAL = -5.00/ 5.00

ALPHAL	BETAL	CNFLS	CAFLS	CLMFLS	CYFLS	CYNFLS	CBLLS	CABLS	CYNBLS	CP5	CP6
-8.498	-5.639	-.12430	.01260	.05100	-.02770	-.00470	-.02420	.03900	-.00760	-.45620	-.43220
-8.469	-3.598	-.10320	.01210	.04060	-.03510	.00020	-.02010	.03740	-.00730	-.43980	-.41220
-8.331	.556	-.06060	.01190	.01670	-.04170	.00420	-.01170	.03430	-.00670	-.41880	-.36220
-8.129	4.485	-.02100	.01170	-.00790	-.03720	-.00100	-.00400	.02920	-.00570	-.36510	-.30070
-8.129	6.419	-.00590	.01070	-.01700	-.03250	-.00590	-.00100	.02520	-.00490	-.31700	-.25770
	GRADIENT	.01017	-.00005	-.00600	-.00027	-.00014	.00199	-.00101	.00020	.00920	.01378

RUN NO. 1248/ 0 RN/L = 3.50 GRADIENT INTERVAL = -5.00/ 5.00

ALPHAL	BETAL	CNFLS	CAFLS	CLMFLS	CYFLS	CYNFLS	CBLLS	CABLS	CYNBLS	CP5	CP6
-6.339	-5.787	-.10130	.01430	.04420	-.00200	-.01690	-.01970	.03810	-.00740	-.44570	-.42150
-6.260	-3.884	-.08470	.01420	.03600	-.00750	-.01310	-.01650	.03630	-.00700	-.42690	-.39920
-6.312	.204	-.04840	.01330	.01460	-.01300	-.01090	-.00940	.03270	-.00630	-.39820	-.34560
-6.085	4.345	-.01350	.01370	-.00720	-.01410	-.01160	-.00250	.02800	-.00540	-.34680	-.29080
-5.978	6.360	.00020	.01270	-.01600	-.01000	-.01610	.00020	.02490	-.00480	-.30980	-.25740
	GRADIENT	.00865	-.00006	-.00525	-.00080	.00018	.00170	-.00101	.00019	.00974	.01317

RUN NO. 1249/ 0 RN/L = 3.50 GRADIENT INTERVAL = -5.00/ 5.00

ALPHAL	BETAL	CNFLS	CAFLS	CLMFLS	CYFLS	CYNFLS	CBLLS	CABLS	CYNBLS	CP5	CP6
-4.165	-5.912	-.08170	.01670	.03840	.01810	-.02700	-.01590	.03680	-.00710	-.43550	-.40220
-4.352	-3.795	-.06770	.01630	.03070	.01100	-.02260	-.01320	.03530	-.00690	-.41680	-.38760
-4.211	.513	-.03190	.01500	.00920	.00740	-.02140	-.00610	.03090	-.00600	-.37530	-.32910
-3.749	4.365	-.00570	.01520	-.00750	.00710	-.02270	-.00100	.02730	-.00530	-.33700	-.28550
-3.826	6.206	.00400	.01510	-.01430	.00670	-.02410	.00090	.02460	-.00480	-.30420	-.25530
	GRADIENT	.00761	-.00014	-.00469	-.00048	-.00001	.00150	-.00098	.00020	.00978	.01253

RUN NO. 1250/ 0 RN/L = 3.50 GRADIENT INTERVAL = -5.00/ 5.00

ALPHAL	BETAL	CNFLS	CAFLS	CLMFLS	CYFLS	CYNFLS	CBLLS	CABLS	CYNBLS	CP5	CP6
-.277	-6.717	-.05450	.01890	.03060	.04380	-.04320	-.01060	.03670	-.00710	-.44010	-.39530
-.276	-4.554	-.04500	.01810	.02460	.03700	-.03810	-.00870	.03500	-.00680	-.41970	-.37650
-.270	-.250	-.02250	.01740	.01020	.03170	-.03520	-.00430	.03030	-.00590	-.36900	-.32110
-.201	3.831	-.00270	.01720	-.00370	.02590	-.03190	-.00050	.02630	-.00510	-.32630	-.27270
-.183	5.971	.00530	.01740	-.00970	.02330	-.03080	.00110	.02510	-.00490	-.31440	-.25820
	GRADIENT	.00505	-.00011	-.00337	-.00132	.00074	.00098	-.00104	.00020	.01114	.01238

IA156A, AEDC PWT 16T-470, O T S W/SILTS (R8NLA4) (10 MAY 80)

REFERENCE DATA

SREF = 2690.0000 SQ.FT. XMRP = 976.0000 IN. XT
LREF = 1290.3000 INCHES YMRP = .0000 IN. YT
BREF = 1290.3000 INCHES ZMRP = 400.0000 IN. ZT
SCALE = .0200

PARAMETRIC DATA

IB-ELV = 12.000 OB-ELV = 5.000
BDFLAP = .000 SPDBRK = .000
RUDDER = .000 SILTS = 1.000
MACH = .800 RN/L = 3.500

RUN NO. 1251/ 0 RN/L = 3.50 GRADIENT INTERVAL = -5.00/ 5.00

ALPHAL	BETAL	CNFLS	CAFLS	CLMFLS	CYFLS	CYNFLS	CBLLS	CABLS	CYNBLS	CP5	CP6
4.464	-5.790	-.00480	.01840	.01060	.04550	-.04660	-.00080	.03500	-.00680	-.41710	-.38090
4.333	-3.676	-.00240	.01780	.00890	.03940	-.04180	-.00040	.03340	-.00650	-.40100	-.36020
4.058	.221	.00260	.01630	.00420	.03210	-.03740	.00060	.02940	-.00570	-.35870	-.31130
4.163	4.215	.00520	.01710	.00120	.01750	-.02840	.00110	.02690	-.00520	-.33730	-.27670
4.082	6.317	.00700	.01720	-.00180	.01220	-.02570	.00150	.02570	-.00500	-.32460	-.26200
	GRADIENT	.00096	-.00009	-.00097	-.00278	.00170	.00019	-.00082	.00016	.00806	.01057

RUN NO. 1252/ 0 RN/L = 3.50 GRADIENT INTERVAL = -5.00/ 5.00

ALPHAL	BETAL	CNFLS	CAFLS	CLMFLS	CYFLS	CYNFLS	CBLLS	CABLS	CYNBLS	CP5	CP6
6.546	-5.777	.01710	.01710	.00210	.03270	-.04070	.00350	.03520	-.00680	-.42080	-.38150
6.517	-3.731	.01500	.01740	.00260	.02550	-.03510	.00310	.03360	-.00650	-.40720	-.35920
6.168	.279	.01170	.01600	.00290	.01790	-.03040	.00240	.03060	-.00590	-.37010	-.32770
6.095	4.182	.01000	.01620	.00080	.00500	-.02210	.00210	.02790	-.00540	-.34820	-.28660
6.206	6.391	.01140	.01640	-.00230	-.00230	-.01780	.00240	.02690	-.00520	-.33680	-.27540
	GRADIENT	-.00063	-.00015	-.00023	-.00259	.00164	-.00013	-.00072	.00014	.00746	.00917

IA156A, AEDC PWT 16T-470, O T S W/SILTS (R8NLA5) (10 MAY 80)

REFERENCE DATA

SREF = 2690.0000 SQ.FT. XMRP = 976.0000 IN. XT
LREF = 1290.3000 INCHES YMRP = .0000 IN. YT
BREF = 1290.3000 INCHES ZMRP = 400.0000 IN. ZT
SCALE = .0200

PARAMETRIC DATA

IB-ELV = 12.000 OB-ELV = 5.000
BDFLAP = .000 SPDBRK = .000
RUDDER = .000 SILTS = 1.000
MACH = .900 RN/L = 3.500

RUN NO. 1253/ 0 RN/L = 3.50 GRADIENT INTERVAL = -5.00/ 5.00

ALPHAL	BETAL	CNFLS	CAFLS	CLMFLS	CYFLS	CYNFLS	CBLLS	CABLS	CYNBLS	CP5	CP6
-8.781	-5.729	-.13020	.01510	.05160	-.03420	-.00430	-.02550	.04040	-.00780	-.46340	-.45600
-8.461	-3.518	-.10500	.01610	.04030	-.04070	.00020	-.02050	.03770	-.00730	-.43370	-.42360
-8.385	.390	-.06480	.01550	.01830	-.04700	.00330	-.01260	.03620	-.00700	-.43280	-.39180
-8.182	4.635	-.01890	.01420	-.01100	-.04530	-.00010	-.00370	.03040	-.00590	-.37070	-.32140
-8.199	6.481	-.00480	.01330	-.01900	-.04030	-.00510	-.00090	.02680	-.00520	-.33240	-.27770
	GRADIENT	.01056	-.00023	-.00630	-.00055	-.00005	.00206	-.00090	.00017	.00783	.01259

IA156A, AEDC PWT 16T-470, O T S W/SILTS (R8NLA5) (10 MAY 80)

REFERENCE DATA

SREF = 2690.0000 SQ.FT. XMRP = 976.0000 IN. XT
LREF = 1290.3000 INCHES YMRP = .0000 IN. YT
BREF = 1290.3000 INCHES ZMRP = 400.0000 IN. ZT
SCALE = .0200

PARAMETRIC DATA

IB-ELV = 12.000 OB-ELV = 5.000
BDFLAP = .000 SPDBRK = .000
RUDDER = .000 SILTS = 1.000
MACH = .900 RN/L = 3.500

RUN NO. 1254/ 0 RN/L = 3.50 GRADIENT INTERVAL = -5.00/ 5.00

ALPHAL	BETAL	CNFLS	CAFLS	CLMFLS	CYFLS	CYNFLS	CBLLS	CABLS	CYNBLS	CP5	CP6
-6.408	-5.755	-.10540	.01870	.04500	-.00900	-.01540	-.02060	.03900	-.00760	-.44990	-.43810
-6.327	-3.803	-.08660	.01780	.03540	-.01520	-.01110	-.01690	.03730	-.00720	-.43170	-.41820
-6.292	.429	-.04580	.01690	.01190	-.01870	-.01010	-.00890	.03410	-.00660	-.41010	-.36670
-6.141	4.387	-.01270	.01630	-.00950	-.01980	-.01160	-.00240	.02960	-.00580	-.36030	-.31490
-6.068	6.389	.00130	.01560	-.01800	-.01680	-.01610	.00030	.02640	-.00510	-.32410	-.27820
	GRADIENT	.00903	-.00018	-.00548	-.00056	-.00006	.00177	-.00094	.00017	.00868	.01261

RUN NO. 1255/ 0 RN/L = 3.50 GRADIENT INTERVAL = -5.00/ 5.00

ALPHAL	BETAL	CNFLS	CAFLS	CLMFLS	CYFLS	CYNFLS	CBLLS	CABLS	CYNBLS	CP5	CP6
-4.162	-5.791	-.08410	.02080	.03900	.01380	-.02640	-.01640	.03880	-.00750	-.45140	-.43240
-4.378	-3.783	-.06870	.02010	.03050	.00640	-.02180	-.01340	.03670	-.00710	-.42510	-.40940
-4.281	.501	-.03210	.01810	.00830	.00340	-.02190	-.00620	.03270	-.00630	-.38990	-.35410
-3.787	4.368	-.00440	.01870	-.00940	.00220	-.02330	-.00080	.02880	-.00560	-.34530	-.30980
-3.866	6.242	.00500	.01800	-.01600	.00250	-.02560	.00100	.02660	-.00520	-.32360	-.28290
	GRADIENT	.00790	-.00018	-.00490	-.00052	-.00018	.00155	-.00097	.00018	.00976	.01223

RUN NO. 1256/ 0 RN/L = 3.50 GRADIENT INTERVAL = -5.00/ 5.00

ALPHAL	BETAL	CNFLS	CAFLS	CLMFLS	CYFLS	CYNFLS	CBLLS	CABLS	CYNBLS	CP5	CP6
-.321	-6.748	-.05520	.02230	.03110	.04390	-.04480	-.01070	.03850	-.00750	-.45810	-.41850
-.296	-4.590	-.04540	.02220	.02590	.03800	-.04070	-.00880	.03740	-.00730	-.44570	-.40640
-.333	-.228	-.02120	.02090	.00830	.02960	-.03620	-.00410	.03240	-.00630	-.38600	-.35100
-.259	3.857	-.00040	.02050	-.00700	.02500	-.03350	.00000	.02830	-.00550	-.34470	-.30050
-.237	6.015	.00810	.01990	-.01320	.02350	-.03310	.00160	.02740	-.00530	-.33380	-.28990
	GRADIENT	.00533	-.00020	-.00390	-.00154	.00085	.00104	-.00108	.00021	.01198	.01254

RUN NO. 1257/ 0 RN/L = 3.50 GRADIENT INTERVAL = -5.00/ 5.00

ALPHAL	BETAL	CNFLS	CAFLS	CLMFLS	CYFLS	CYNFLS	CBLLS	CABLS	CYNBLS	CP5	CP6
4.454	-5.775	-.00840	.02200	.01140	.04510	-.04690	-.00150	.03650	-.00710	-.43790	-.39340
4.313	-3.688	-.00550	.02140	.00940	.03860	-.04140	-.00100	.03510	-.00680	-.42210	-.37790
4.009	.186	.00180	.02030	.00240	.03180	-.03780	.00050	.03190	-.00620	-.38700	-.33970
4.143	4.171	.00660	.02060	-.00130	.01890	-.03020	.00140	.02950	-.00570	-.36290	-.30910
4.065	6.307	.00880	.02030	-.00420	.01410	-.02830	.00180	.02760	-.00540	-.34230	-.28610
	GRADIENT	.00154	-.00010	-.00136	-.00251	.00143	.00031	-.00071	.00014	.00753	.00875

IA156A, AEDC PWT 16T-470, 0 T S W/SILTS (R8NLA6) (10 MAY 80)

REFERENCE DATA

SREF = 2690.0000 SQ.FT. XMRP = 976.0000 IN. XT
LREF = 1290.3000 INCHES YMRP = .0000 IN. YT
BREF = 1290.3000 INCHES ZMRP = 400.0000 IN. ZT
SCALE = .0200

PARAMETRIC DATA

IB-ELV = 12.000 OB-ELV = 5.000
BDFLAP = .000 SPDBRK = .000
RUDDER = .000 SILTS = 1.000
MACH = .950 RN/L = 3.500

RUN NO. 1258/ 0 RN/L = 3.50 GRADIENT INTERVAL = -5.00/ 5.00

ALPHAL	BETAL	CNFLS	CAFLS	CLMFLS	CYFLS	CYNFLS	CBLLS	CABLS	CYNBLS	CP5	CP6
-8.589	-5.671	-.13230	.01900	.05160	-.03190	-.00620	-.02590	.04170	-.00810	-.48180	-.46640
-8.634	-3.570	-.10960	.01850	.04010	-.04290	.00140	-.02140	.04030	-.00780	-.46140	-.45570
-8.511	.567	-.06350	.01700	.01420	-.04940	.00460	-.01240	.03890	-.00760	-.45990	-.42570
-8.266	4.534	-.02110	.01640	-.01180	-.04290	-.00140	-.00410	.03290	-.00640	-.39680	-.35370
-8.249	6.469	-.00730	.01440	-.01930	-.03820	-.00660	-.00140	.02870	-.00560	-.35650	-.29860
	GRADIENT	.01092	-.00026	-.00640	-.00001	-.00034	.00214	-.00091	.00017	.00792	.01255

RUN NO. 1259/ 0 RN/L = 3.50 GRADIENT INTERVAL = -5.00/ 5.00

ALPHAL	BETAL	CNFLS	CAFLS	CLMFLS	CYFLS	CYNFLS	CBLLS	CABLS	CYNBLS	CP5	CP6
-6.493	-5.749	-.10990	.02080	.04590	-.00970	-.01620	-.02150	.04130	-.00800	-.47720	-.46380
-6.389	-3.845	-.08990	.02070	.03580	-.01510	-.01150	-.01760	.03990	-.00770	-.46180	-.44550
-6.441	.261	-.04930	.02000	.01290	-.01850	-.01020	-.00960	.03860	-.00750	-.45600	-.42330
-6.197	4.382	-.01250	.01910	-.00990	-.01500	-.01470	-.00240	.03230	-.00630	-.38780	-.34870
-5.881	6.477	.00050	.01770	-.01700	-.00960	-.02010	.00010	.02830	-.00550	-.34640	-.29900
	GRADIENT	.00941	-.00019	-.00556	.00001	-.00039	.00185	-.00092	.00017	.00900	.01177

RUN NO. 1260/ 0 RN/L = 3.50 GRADIENT INTERVAL = -5.00/ 5.00

ALPHAL	BETAL	CNFLS	CAFLS	CLMFLS	CYFLS	CYNFLS	CBLLS	CABLS	CYNBLS	CP5	CP6
-4.212	-5.888	-.08800	.02320	.04070	.01600	-.02860	-.01720	.04200	-.00810	-.48760	-.46760
-4.426	-3.781	-.07130	.02300	.03170	.01000	-.02430	-.01390	.04010	-.00780	-.46480	-.44860
-4.299	.503	-.03300	.02140	.00920	.00920	-.02550	-.00640	.03610	-.00700	-.42900	-.39330
-3.789	4.380	-.00660	.02110	-.00690	.00810	-.02650	-.00120	.03140	-.00610	-.37490	-.34040
-3.870	6.225	.00280	.01970	-.01350	.00600	-.02740	.00060	.02840	-.00550	-.34330	-.30390
	GRADIENT	.00795	-.00024	-.00474	-.00023	-.00027	.00156	-.00106	.00021	.01097	.01325

RUN NO. 1261/ 0 RN/L = 3.50 GRADIENT INTERVAL = -5.00/ 5.00

ALPHAL	BETAL	CNFLS	CAFLS	CLMFLS	CYFLS	CYNFLS	CBLLS	CABLS	CYNBLS	CP5	CP6
-.332	-6.755	-.05680	.02550	.03240	.04710	-.04830	-.01100	.04190	-.00810	-.50060	-.45330
-.296	-4.598	-.04520	.02540	.02640	.04150	-.04450	-.00880	.04100	-.00800	-.49060	-.44420
-.292	-.243	-.02290	.02450	.01290	.03410	-.04100	-.00440	.03620	-.00700	-.43230	-.39320
-.224	3.863	-.00340	.02290	-.00170	.02340	-.03470	-.00060	.03140	-.00610	-.37970	-.33630
-.220	6.048	.00530	.02210	-.00870	.02010	-.03410	.00110	.02880	-.00560	-.35120	-.30400
	GRADIENT	.00494	-.00029	-.00332	-.00213	.00115	.00097	-.00113	.00022	.01311	.01274

IA156A, AEDC PWT 16T-470, O T S W/SILTS (R8NLA6) (10 MAY 80)

REFERENCE DATA

SREF = 2690.0000 SQ.FT. XMRP = 976.0000 IN. XT
LREF = 1290.3000 INCHES YMRP = .0000 IN. YT
BREF = 1290.3000 INCHES ZMRP = 400.0000 IN. ZT
SCALE = .0200

PARAMETRIC DATA

IB-ELV = 12.000 OB-ELV = 5.000
BDFLAP = .000 SPDBRK = .000
RUDDER = .000 SILTS = 1.000
MACH = .950 RN/L = 3.500

RUN NO. 1262/ 0 RN/L = 3.50 GRADIENT INTERVAL = -5.00/ 5.00

ALPHAL	BETAL	CNFLS	CAFLS	CLMFLS	CYFLS	CYNFLS	CBLLS	CABLS	CYNBLS	CP5	CP6
4.456	-5.734	-.01080	.02490	.01430	.04530	-.04940	-.00200	.03980	-.00770	-.47820	-.42750
4.303	-3.631	-.00780	.02420	.01130	.03780	-.04330	-.00140	.03850	-.00750	-.46370	-.41430
3.986	.246	.00030	.02400	.00240	.03130	-.03960	.00020	.03480	-.00680	-.42480	-.36790
4.154	4.217	.00590	.02190	-.00100	.01840	-.03100	.00120	.03240	-.00630	-.39820	-.33960
4.093	6.319	.00810	.02080	-.00340	.01370	-.02880	.00170	.03010	-.00580	-.37410	-.31160
	GRADIENT	.00174	-.00029	-.00156	-.00247	.00157	.00033	-.00078	.00015	.00834	.00951

IA156A, AEDC PWT 16T-470, O T S W/SILTS (R8NLA7) (10 MAY 80)

REFERENCE DATA

SREF = 2690.0000 SQ.FT. XMRP = 976.0000 IN. XT
LREF = 1290.3000 INCHES YMRP = .0000 IN. YT
BREF = 1290.3000 INCHES ZMRP = 400.0000 IN. ZT
SCALE = .0200

PARAMETRIC DATA

IB-ELV = 12.000 OB-ELV = 5.000
BDFLAP = .000 SPDBRK = .000
RUDDER = .000 SILTS = 1.000
MACH = 1.050 RN/L = 3.500

RUN NO. 1263/ 0 RN/L = 3.50 GRADIENT INTERVAL = -5.00/ 5.00

ALPHAL	BETAL	CNFLS	CAFLS	CLMFLS	CYFLS	CYNFLS	CBLLS	CABLS	CYNBLS	CP5	CP6
-8.636	-5.695	-.14450	.02630	.05890	-.02580	-.01350	-.02830	.05400	-.01050	-.63610	-.59380
-8.725	-3.481	-.12410	.02550	.04850	-.03560	-.00750	-.02420	.05270	-.01020	-.61640	-.58300
-8.591	.426	-.07300	.02640	.01710	-.04470	-.00220	-.01430	.05050	-.00980	-.59410	-.55600
-8.345	4.627	-.02390	.02360	-.01340	-.03830	-.00860	-.00460	.04580	-.00890	-.54420	-.49960
-8.323	6.508	-.00840	.02210	-.02280	-.03470	-.01250	-.00160	.04180	-.00810	-.50070	-.45090
	GRADIENT	.01235	-.00024	-.00763	-.00031	-.00015	.00242	-.00085	.00016	.00894	.01033

RUN NO. 1264/ 0 RN/L = 3.50 GRADIENT INTERVAL = -5.00/ 5.00

ALPHAL	BETAL	CNFLS	CAFLS	CLMFLS	CYFLS	CYNFLS	CBLLS	CABLS	CYNBLS	CP5	CP6
-6.442	-5.725	-.11920	.02930	.05250	-.00010	-.02510	-.02330	.05460	-.01060	-.64190	-.60150
-6.418	-3.827	-.09820	.02900	.04120	-.00600	-.02080	-.01920	.05290	-.01030	-.62250	-.58300
-6.515	.307	-.05510	.02620	.01450	-.01420	-.01710	-.01070	.05010	-.00970	-.59150	-.54900
-6.245	4.430	-.01370	.02640	-.01230	-.01020	-.02140	-.00260	.04560	-.00880	-.53940	-.49830
-6.184	6.425	.00130	.02470	-.02190	-.00840	-.02480	.00030	.04080	-.00790	-.48580	-.44370
	GRADIENT	.01023	-.00032	-.00648	-.00051	-.00007	.00201	-.00088	.00018	.01006	.01026

IA156A, AEDC PWT 16T-470, 0 T S W/SILTS (R8NLA7) (10 MAY 80)

REFERENCE DATA

SREF = 2690.0000 SQ.FT. XMRP = 976.0000 IN. XT
LREF = 1290.3000 INCHES YMRP = .0000 IN. YT
BREF = 1290.3000 INCHES ZMRP = 401.0000 IN. ZT
SCALE = .0200

PARAMETRIC DATA

IB-ELV = 12.000 OB-ELV = 5.000
BDFLAP = .000 SPDBRK = .000
RUDDER = .000 SILTS = 1.000
MACH = 1.050 RN/L = 3.500

RUN NO. 1265/ 0 RN/L = 3.50 GRADIENT INTERVAL = -5.00/ 5.00

ALPHAL	BETAL	CNFLS	CAFLS	CLMFLS	CYFLS	CYNFLS	CBLLS	CABLS	CYNBLS	CP5	CP6
-4.365	-5.859	-.09730	.03180	.04690	.02370	-.03760	-.01900	.05280	-.01030	-.62370	-.57920
-4.476	-3.776	-.07870	.03060	.03650	.01930	-.03400	-.01540	.05190	-.01010	-.61050	-.57030
-4.369	.514	-.03680	.02770	.01060	.01960	-.03520	-.00710	.04900	-.00950	-.58150	-.53450
-3.828	4.404	-.00530	.02810	-.00940	.01890	-.03610	-.00100	.04440	-.00860	-.52470	-.48740
-3.908	6.261	.00400	.02650	-.01600	.01710	-.03670	.00080	.04140	-.00800	-.48940	-.45320
	GRADIENT	.00899	-.00031	-.00562	-.00005	-.00026	.00176	-.00091	.00018	.01043	.01010

RUN NO. 1266/ 0 RN/L = 3.50 GRADIENT INTERVAL = -5.00/ 5.00

ALPHAL	BETAL	CNFLS	CAFLS	CLMFLS	CYFLS	CYNFLS	CBLLS	CABLS	CYNBLS	CP5	CP6
-.341	-6.782	-.06280	.03320	.03800	.05720	-.05830	-.01220	.05220	-.01010	-.62040	-.56840
-.317	-4.613	-.04830	.03330	.02930	.05270	-.05560	-.00940	.05110	-.00990	-.60570	-.55760
-.366	-.189	-.02230	.03070	.01200	.04680	-.05280	-.00430	.04880	-.00950	-.58170	-.52870
-.271	3.900	-.00200	.02960	-.00260	.03430	-.04490	-.00030	.04360	-.00850	-.52210	-.47140
-.239	6.078	.00570	.02700	-.00850	.02770	-.04080	.00120	.04240	-.00820	-.50980	-.45620
	GRADIENT	.00544	-.00044	-.00375	-.00215	.00125	.00107	-.00088	.00016	.00976	.01008

RUN NO. 1267/ 0 RN/L = 3.50 GRADIENT INTERVAL = -5.00/ 5.00

ALPHAL	BETAL	CNFLS	CAFLS	CLMFLS	CYFLS	CYNFLS	CBLLS	CABLS	CYNBLS	CP5	CP6
4.486	-5.695	-.01240	.03230	.01690	.05550	-.06010	-.00230	.05020	-.00980	-.59750	-.54630
4.316	-3.587	-.00960	.03180	.01430	.04860	-.05450	-.00170	.04940	-.00960	-.58520	-.53880
4.068	.273	-.00020	.03120	.00590	.04090	-.04920	.00010	.04830	-.00940	-.57360	-.52730
4.159	4.236	.00810	.02920	-.00290	.02440	-.03850	.00170	.04540	-.00880	-.53800	-.49510
4.120	6.336	.00960	.02760	-.00500	.01880	-.03570	.00200	.04370	-.00850	-.52130	-.47310
	GRADIENT	.00226	-.00033	-.00220	-.00310	.00205	.00043	-.00051	.00010	.00605	.00560

IA156A, AEDC PWT 16T-470, 0 T S W/SILTS (R8NLA8) (10 MAY 80)

REFERENCE DATA

SREF = 2690.0000 SQ.FT. XMRP = 976.0000 IN. XT
LREF = 1290.3000 INCHES YMRP = .0000 IN. YT
BREF = 1290.3000 INCHES ZMRP = 400.0000 IN. ZT
SCALE = .0200

PARAMETRIC DATA

IB-ELV = 12.000 OB-ELV = 5.000
BDFLAP = .000 SPDBRK = .000
RUDDER = .000 SILTS = 1.000
MACH = 1.100 RN/L = 3.500

RUN NO. 1268/ 0 RN/L = 3.50 GRADIENT INTERVAL = -5.00/ 5.00

ALPHAL	BETAL	CNFLS	CAFLS	CLMFLS	CYFLS	CYNFLS	CBLLS	CABLS	CYNBLS	CP5	CP6
-8.680	-5.672	-.14380	.03120	.05740	-.02740	-.01440	-.02820	.05000	-.00970	-.58890	-.55020
-8.750	-3.484	-.12210	.02970	.04600	-.03820	-.00710	-.02390	.05020	-.00970	-.58730	-.55480
-8.630	.453	-.07020	.02760	.01480	-.04500	-.00380	-.01370	.04780	-.00930	-.56280	-.52630
-8.374	4.646	-.02270	.02490	-.01470	-.03930	-.00910	-.00440	.04320	-.00840	-.51290	-.47130
-8.330	6.517	-.00770	.02370	-.02330	-.03630	-.01190	-.00150	.03880	-.00750	-.46540	-.41740
	GRADIENT	.01222	-.00059	-.00746	-.00012	-.00026	.00240	-.00086	.00016	.00918	.01030

RUN NO. 1269/ 0 RN/L = 3.50 GRADIENT INTERVAL = -5.00/ 5.00

ALPHAL	BETAL	CNFLS	CAFLS	CLMFLS	CYFLS	CYNFLS	CBLLS	CABLS	CYNBLS	CP5	CP6
-6.581	-5.754	-.11920	.03280	.05080	-.00470	-.02280	-.02330	.05000	-.00970	-.59010	-.54840
-6.493	-3.836	-.09750	.03150	.03880	-.01040	-.01870	-.01910	.04840	-.00940	-.56900	-.53230
-6.576	.322	-.05280	.02810	.01140	-.01640	-.01700	-.01030	.04600	-.00890	-.54480	-.50240
-6.239	4.434	-.01200	.02760	-.01380	-.00930	-.02200	-.00230	.04190	-.00810	-.49670	-.45650
-6.210	6.443	.00170	.02480	-.02190	-.00750	-.02460	.00030	.03820	-.00740	-.45620	-.41460
	GRADIENT	.01034	-.00047	-.00636	.00013	-.00040	.00203	-.00079	.00016	.00874	.00916

RUN NO. 1270/ 0 RN/L = 3.50 GRADIENT INTERVAL = -5.00/ 5.00

ALPHAL	BETAL	CNFLS	CAFLS	CLMFLS	CYFLS	CYNFLS	CBLLS	CABLS	CYNBLS	CP5	CP6
-4.241	-5.885	-.09650	.03380	.04580	.02020	-.03490	-.01880	.04860	-.00940	-.57550	-.53190
-4.504	-3.781	-.07840	.03260	.03500	.01560	-.03160	-.01530	.04710	-.00910	-.55520	-.51620
-4.372	.522	-.03550	.02920	.00880	.01640	-.03300	-.00690	.04350	-.00840	-.52050	-.47050
-3.803	4.412	-.00500	.02960	-.00990	.01830	-.03560	-.00090	.04010	-.00780	-.47460	-.43830
-3.915	6.268	.00410	.02760	-.01620	.01680	-.03610	.00080	.03810	-.00740	-.45110	-.41730
	GRADIENT	.00898	-.00037	-.00549	.00033	-.00049	.00176	-.00085	.00016	.00981	.00953

RUN NO. 1271/ 0 RN/L = 3.50 GRADIENT INTERVAL = -5.00/ 5.00

ALPHAL	BETAL	CNFLS	CAFLS	CLMFLS	CYFLS	CYNFLS	CBLLS	CABLS	CYNBLS	CP5	CP6
-.351	-6.804	-.06430	.03550	.03850	.05360	-.05530	-.01250	.04720	-.00920	-.56320	-.51080
-.319	-4.632	-.04950	.03500	.02960	.04930	-.05250	-.00960	.04550	-.00880	-.54280	-.49440
-.340	-.231	-.02340	.03230	.01280	.04420	-.05020	-.00450	.04240	-.00820	-.50980	-.45580
-.239	3.894	-.00360	.03040	-.00140	.03290	-.04330	-.00070	.03760	-.00730	-.45230	-.40450
-.235	6.078	.00500	.02930	-.00820	.02700	-.04020	.00100	.03530	-.00680	-.42780	-.37550
	GRADIENT	.00539	-.00054	-.00364	-.00192	.00107	.00105	-.00092	.00018	.01058	.01052

IA156A, AEDC PWT 16T-470, O T S W/SILTS (R8NLA8) (10 MAY 80)

REFERENCE DATA

SREF = 2690.0000 SQ.FT. XMRP = 976.0000 IN. XT
LREF = 1290.3000 INCHES YMRP = .0000 IN. YT
BREF = 1290.3000 INCHES ZMRP = 400.0000 IN. ZT
SCALE = .0200

PARAMETRIC DATA

IB-ELV = 12.000 OB-ELV = 5.000
BDFLAP = .000 SPDBRK = .000
RUDDER = .000 SILTS = 1.000
MACH = 1.100 RN/L = 3.500

RUN NO. 1272/ 0 RN/L = 3.50 GRADIENT INTERVAL = -5.00/ 5.00

ALPHAL	BETAL	CNFLS	CAFLS	CLMFLS	CYFLS	CYNFLS	CBLLS	CABLS	CYNBLS	CP5	CP6
4.544	-5.717	-.01220	.03430	.01800	.05170	-.05750	-.00230	.04460	-.00870	-.53190	-.48410
4.370	-3.600	-.00890	.03430	.01500	.04560	-.05260	-.00160	.04280	-.00830	-.50960	-.46430
4.096	.283	-.00080	.03210	.00690	.03910	-.04830	.00000	.04250	-.00820	-.50680	-.46080
4.189	4.229	.00720	.03110	-.00190	.02220	-.03750	.00150	.03860	-.00750	-.46280	-.41990
4.135	6.344	.00920	.02920	-.00490	.01750	-.03510	.00190	.03720	-.00720	-.44780	-.39860
	GRADIENT	.00206	-.00041	-.00216	-.00299	.00193	.00040	-.00051	.00010	.00599	.00568

IA156A, AEDC PWT 16T-470, O T S W/SILTS (R8NLA9) (10 MAY 80)

REFERENCE DATA

SREF = 2690.0000 SQ.FT. XMRP = 976.0000 IN. XT
LREF = 1290.3000 INCHES YMRP = .0000 IN. YT
BREF = 1290.3000 INCHES ZMRP = 400.0000 IN. ZT
SCALE = .0200

PARAMETRIC DATA

IB-ELV = 12.000 OB-ELV = 5.000
BDFLAP = .000 SPDBRK = .000
RUDDER = .000 SILTS = 1.000
MACH = 1.150 RN/L = 3.500

RUN NO. 1273/ 0 RN/L = 3.50 GRADIENT INTERVAL = -5.00/ 5.00

ALPHAL	BETAL	CNFLS	CAFLS	CLMFLS	CYFLS	CYNFLS	CBLLS	CABLS	CYNBLS	CP5	CP6
-8.682	-5.711	-.14810	.03330	.06060	-.02700	-.01250	-.02900	.04740	-.00920	-.55860	-.52100
-8.743	-3.493	-.12390	.03130	.04780	-.03780	-.00550	-.02420	.04610	-.00890	-.53890	-.50960
-8.638	.466	-.07500	.02850	.01630	-.04910	-.00020	-.01470	.04610	-.00890	-.54240	-.50720
-8.342	4.617	-.02550	.02680	-.01400	-.04030	-.00740	-.00500	.03950	-.00770	-.47170	-.42350
-8.359	6.539	-.00950	.02410	-.02380	-.03670	-.01110	-.00190	.03690	-.00720	-.44480	-.39610
	GRADIENT	.01213	-.00055	-.00762	-.00029	-.00025	.00237	-.00082	.00015	.00836	.01007

RUN NO. 1274/ 0 RN/L = 3.51 GRADIENT INTERVAL = -5.00/ 5.00

ALPHAL	BETAL	CNFLS	CAFLS	CLMFLS	CYFLS	CYNFLS	CBLLS	CABLS	CYNBLS	CP5	CP6
-6.564	-5.763	-.12260	.03400	.05380	-.00570	-.02090	-.02400	.04720	-.00920	-.55790	-.51670
-6.466	-3.836	-.10010	.03290	.04140	-.01090	-.01720	-.01960	.04540	-.00880	-.53390	-.49980
-6.543	.311	-.05640	.02880	.01380	-.01800	-.01440	-.01100	.04350	-.00840	-.51460	-.47480
-6.247	4.457	-.01490	.02830	-.01280	-.01250	-.01960	-.00290	.03930	-.00760	-.46950	-.42640
-6.196	6.447	-.00070	.02650	-.02150	-.00780	-.02400	-.00010	.03520	-.00680	-.42040	-.38150
	GRADIENT	.01027	-.00055	-.00654	-.00019	-.00029	.00201	-.00074	.00014	.00777	.00885

IA156A, AEDC PWT 16T-470, 0 T S W/SILTS (R8NLA9) (10 MAY 80)

REFERENCE DATA

SREF = 2690.0000 SQ.FT. XMRP = 976.0000 IN. XT
LREF = 1290.3000 INCHES YMRP = .0000 IN. YT
BREF = 1290.3000 INCHES ZMRP = 400.0000 IN. ZT
SCALE = .0200

PARAMETRIC DATA

IB-ELV = 12.000 OB-ELV = 5.000
BDFLAP = .000 SPDBRK = .000
RUDDER = .000 SILTS = 1.000
MACH = 1.150 RN/L = 3.500

RUN NO. 1275/ 0 RN/L = 3.51 GRADIENT INTERVAL = -5.00/ 5.00

ALPHAL	BETAL	CNFLS	CAFLS	CLMFLS	CYFLS	CYNFLS	CBLLS	CABLS	CYNBLS	CP5	CP6
-4.231	-5.882	-.09760	.03500	.04730	.01740	-.03260	-.01910	.04560	-.00880	-.54010	-.49770
-4.493	-3.783	-.08060	.03390	.03720	.01320	-.02960	-.01570	.04400	-.00850	-.51940	-.48180
-4.363	.529	-.03830	.03000	.01100	.01410	-.03070	-.00740	.04190	-.00810	-.50040	-.45440
-3.801	4.415	-.00760	.03020	-.00820	.01680	-.03410	-.00150	.03810	-.00740	-.45390	-.41420
-3.910	6.299	.00210	.02850	-.01540	.01490	-.03470	.00040	.03570	-.00690	-.42380	-.38920
	GRADIENT	.00892	-.00046	-.00555	.00043	-.00054	.00174	-.00072	.00013	.00793	.00821

RUN NO. 1276/ 0 RN/L = 3.50 GRADIENT INTERVAL = -5.00/ 5.00

ALPHAL	BETAL	CNFLS	CAFLS	CLMFLS	CYFLS	CYNFLS	CBLLS	CABLS	CYNBLS	CP5	CP6
-.309	-6.833	-.06360	.03720	.03930	.05230	-.05390	-.01240	.04440	-.00860	-.53210	-.47930
-.283	-4.616	-.04940	.03660	.03040	.04800	-.05110	-.00960	.04300	-.00830	-.51410	-.46510
-.311	-.260	-.02400	.03390	.01350	.04290	-.04900	-.00460	.04080	-.00790	-.49020	-.43860
-.210	3.894	-.00410	.03130	-.00060	.03230	-.04270	-.00080	.03620	-.00700	-.43760	-.38790
-.192	6.109	.00420	.02990	-.00700	.02630	-.03980	.00080	.03430	-.00670	-.41700	-.36500
	GRADIENT	.00533	-.00062	-.00364	-.00184	.00098	.00104	-.00080	.00015	.00896	.00905

RUN NO. 1277/ 0 RN/L = 3.50 GRADIENT INTERVAL = -5.00/ 5.00

ALPHAL	BETAL	CNFLS	CAFLS	CLMFLS	CYFLS	CYNFLS	CBLLS	CABLS	CYNBLS	CP5	CP6
4.573	-5.688	-.01450	.03650	.02060	.05170	-.05760	-.00270	.04190	-.00810	-.50020	-.45340
4.421	-3.577	-.01080	.03580	.01760	.04620	-.05340	-.00200	.04180	-.00810	-.49850	-.45430
4.145	.300	-.00280	.03360	.00930	.03900	-.04750	-.00050	.04150	-.00810	-.49440	-.45010
4.219	4.233	.00660	.03220	-.00110	.02060	-.03640	.00140	.03730	-.00720	-.44620	-.40420
4.163	6.362	.00910	.03120	-.00450	.01550	-.03430	.00190	.03540	-.00690	-.42650	-.37870
	GRADIENT	.00223	-.00046	-.00239	-.00328	.00218	.00044	-.00058	.00012	.00671	.00643

IA156A, AEDC PWT 16T-470, 0 T S W/SILTS (R8NL80) (10 MAY 80)

REFERENCE DATA

SREF = 2690.0000 SQ.FT. XMRP = 976.0000 IN. XT
LREF = 1290.3000 INCHES YMRP = .0000 IN. YT
BREF = 1290.3000 INCHES ZMRP = 400.0000 IN. ZT
SCALE = .0200

PARAMETRIC DATA

IB-ELV = 12.000 OB-ELV = 5.000
BDFLAP = .000 SPDBRK = .000
RUDDER = .000 SILTS = 1.000
MACH = 1.250 RN/L = 3.500

RUN NO. 1278/ 0 RN/L = 3.50 GRADIENT INTERVAL = -5.00/ 5.00

ALPHAL	BETAL	CNFLS	CAFLS	CLMFLS	CYFLS	CYNFLS	CBLLS	CABLS	CYNBLS	CP5	CP6
-8.651	-5.749	-.15020	.03450	.06300	-.02730	-.00840	-.02940	.04320	-.00840	-.51130	-.47180
-8.713	-3.536	-.12700	.03310	.05020	-.03820	-.00130	-.02490	.04300	-.00830	-.50530	-.47370
-8.587	.429	-.07660	.03050	.01800	-.04580	.00110	-.01500	.04150	-.00810	-.48930	-.45510
-8.329	4.655	-.02970	.02710	-.01240	-.04280	-.00420	-.00580	.03680	-.00710	-.44160	-.39720
-8.349	6.564	-.01370	.02510	-.02250	-.03950	-.00790	-.00270	.03330	-.00650	-.40120	-.35790
	GRADIENT	.01187	-.00073	-.00764	-.00055	-.00036	.00233	-.00076	.00015	.00782	.00939

RUN NO. 1279/ 0 RN/L = 3.50 GRADIENT INTERVAL = -5.00/ 5.00

ALPHAL	BETAL	CNFLS	CAFLS	CLMFLS	CYFLS	CYNFLS	CBLLS	CABLS	CYNBLS	CP5	CP6
-6.561	-5.821	-.12300	.03590	.05490	-.00760	-.01720	-.02410	.04220	-.00820	-.50220	-.45780
-6.442	-3.857	-.10260	.03420	.04380	-.01310	-.01390	-.02010	.04150	-.00810	-.48950	-.45560
-6.493	.323	-.05880	.03060	.01600	-.01920	-.01170	-.01150	.04000	-.00780	-.47420	-.43680
-6.230	4.459	-.01900	.02900	-.01020	-.01580	-.01620	-.00370	.03590	-.00700	-.42900	-.38900
-6.009	6.558	-.00260	.02720	-.02060	-.01000	-.02120	-.00050	.03210	-.00620	-.38630	-.34540
	GRADIENT	.01005	-.00063	-.00649	-.00033	-.00028	.00197	-.00067	.00013	.00727	.00800

RUN NO. 1280/ 0 RN/L = 3.50 GRADIENT INTERVAL = -5.00/ 5.00

ALPHAL	BETAL	CNFLS	CAFLS	CLMFLS	CYFLS	CYNFLS	CBLLS	CABLS	CYNBLS	CP5	CP6
-4.337	-5.901	-.09950	.03680	.04860	.01270	-.02830	-.01950	.04160	-.00810	-.49850	-.44840
-4.454	-3.801	-.08250	.03530	.03810	.00700	-.02530	-.01610	.04040	-.00780	-.48160	-.43830
-4.316	.524	-.04130	.03120	.01250	.00570	-.02500	-.00810	.03910	-.00760	-.46800	-.42170
-3.782	4.423	-.01060	.03060	-.00630	.01190	-.03020	-.00200	.03510	-.00680	-.41900	-.38040
-3.895	6.317	-.00030	.02860	-.01380	.01120	-.03150	.00000	.03270	-.00640	-.39210	-.35370
	GRADIENT	.00876	-.00058	-.00541	.00058	-.00058	.00172	-.00064	.00012	.00753	.00698

RUN NO. 1281/ 0 RN/L = 3.51 GRADIENT INTERVAL = -5.00/ 5.00

ALPHAL	BETAL	CNFLS	CAFLS	CLMFLS	CYFLS	CYNFLS	CBLLS	CABLS	CYNBLS	CP5	CP6
-.266	-6.869	-.06420	.03840	.04100	.04970	-.05070	-.01250	.04040	-.00780	-.48890	-.43080
-.233	-4.640	-.05170	.03760	.03340	.04650	-.04880	-.01010	.04030	-.00780	-.48630	-.43200
-.233	-.276	-.02730	.03460	.01680	.04070	-.04620	-.00530	.03740	-.00730	-.44930	-.40300
-.137	3.900	-.00860	.03140	.00360	.03000	-.04010	-.00170	.03270	-.00630	-.39440	-.35000
-.145	6.134	-.00020	.02980	-.00330	.02500	-.03850	.00000	.03110	-.00600	-.37920	-.32910
	GRADIENT	.00505	-.00073	-.00349	-.00193	.00102	.00098	-.00089	.00018	.01074	.00958

IA156A, AEDC PWT 16T-470, 0 T S W/SILTS (R8NLB0) (10 MAY 80)

REFERENCE DATA

SREF = 2690.0000 SQ.FT. XMRP = 976.0000 IN. XT
LREF = 1290.3000 INCHES YMRP = .0000 IN. YT
BREF = 1290.3000 INCHES ZMRP = 400.0000 IN. ZT
SCALE = .0200

PARAMETRIC DATA

IB-ELV = 12.000 OB-ELV = 5.000
BDFLAP = .000 SPDBRK = .000
RUDDER = .000 SILTS = 1.000
MACH = 1.250 RN/L = 3.500

RUN NO. 1282/ 0 RN/L = 3.51 GRADIENT INTERVAL = -5.00/ 5.00

ALPHAL	BETAL	CNFLS	CAFLS	CLMFLS	CYFLS	CYNFLS	CBLLS	CABLS	CYNBLS	CP5	CP6
4.643	-5.685	-.01470	.03770	.02220	.04870	-.05530	-.00280	.03890	-.00750	-.46770	-.41780
4.500	-3.578	-.01100	.03730	.01910	.04260	-.05060	-.00210	.03810	-.00740	-.45820	-.41020
4.225	.314	-.00510	.03470	.01220	.03370	-.04510	-.00090	.03730	-.00720	-.44770	-.40080
4.270	4.253	.00480	.03140	.00010	.01630	-.03420	.00100	.03480	-.00680	-.42050	-.37260
4.216	6.356	.00780	.03040	-.00370	.01180	-.03240	.00160	.03240	-.00630	-.39240	-.34560
	GRADIENT	.00202	-.00075	-.00243	-.00336	.00210	.00040	-.00042	.00008	.00482	.00481

IA156A, AEDC PWT 16T-470, 0 T S W/SILTS (R8NLB1) (10 MAY 80)

REFERENCE DATA

SREF = 2690.0000 SQ.FT. XMRP = 976.0000 IN. XT
LREF = 1290.3000 INCHES YMRP = .0000 IN. YT
BREF = 1290.3000 INCHES ZMRP = 400.0000 IN. ZT
SCALE = .0200

PARAMETRIC DATA

IB-ELV = 12.000 OB-ELV = 5.000
BDFLAP = .000 SPDBRK = .000
RUDDER = .000 SILTS = 1.000
MACH = 1.400 RN/L = 3.500

RUN NO. 1283/ 0 RN/L = 3.49 GRADIENT INTERVAL = -5.00/ 5.00

ALPHAL	BETAL	CNFLS	CAFLS	CLMFLS	CYFLS	CYNFLS	CBLLS	CABLS	CYNBLS	CP5	CP6
-8.698	-5.795	-.15740	.03610	.06560	-.03320	-.00070	-.03080	.03820	-.00740	-.46410	-.40720
-8.712	-3.563	-.13330	.03450	.05330	-.04490	.00630	-.02610	.03840	-.00750	-.45870	-.41550
-8.584	.454	-.08080	.03130	.02050	-.05000	.00660	-.01590	.03680	-.00710	-.43590	-.40160
-8.284	4.730	-.03340	.02780	-.00980	-.04480	-.00150	-.00660	.03260	-.00630	-.39210	-.35100
-8.313	6.665	-.02140	.02600	-.01660	-.04110	-.00580	-.00420	.03000	-.00580	-.36420	-.31970
	GRADIENT	.01204	-.00081	-.00760	.00002	-.00095	.00235	-.00070	.00015	.00805	.00782

RUN NO. 1284/ 0 RN/L = 3.50 GRADIENT INTERVAL = -5.00/ 5.00

ALPHAL	BETAL	CNFLS	CAFLS	CLMFLS	CYFLS	CYNFLS	CBLLS	CABLS	CYNBLS	CP5	CP6
-6.600	-5.868	-.12600	.03640	.05500	-.01780	-.00700	-.02460	.03780	-.00730	-.46080	-.39950
-6.506	-3.900	-.10490	.03510	.04330	-.02380	-.00410	-.02050	.03700	-.00720	-.44760	-.39450
-6.527	.342	-.06320	.03110	.01770	-.02880	-.00400	-.01240	.03640	-.00710	-.43520	-.39330
-6.195	4.545	-.02100	.02950	-.00890	-.01960	-.01370	-.00410	.03260	-.00630	-.38970	-.35270
-6.139	6.544	-.00870	.02750	-.01630	-.01580	-.01750	-.00170	.02970	-.00580	-.36000	-.31750
	GRADIENT	.00994	-.00066	-.00618	.00049	-.00114	.00194	-.00052	.00011	.00685	.00494

IA156A, AEDC PWT 16T-470, 0 T S W/SILTS (R8NLB1) (10 MAY 80)

REFERENCE DATA

SREF = 2690.0000 SQ.FT. XMRP = 976.0000 IN. XT
LREF = 1290.3000 INCHES YMRP = .0000 IN. YT
BREF = 1290.3000 INCHES ZMRP = 400.0000 IN. ZT
SCALE = .0200

PARAMETRIC DATA

IB-ELV = 12.000 OB-ELV = 5.000
BDFLAP = .000 SPDBRK = .000
RUDDER = .000 SILTS = 1.000
MACH = 1.400 RN/L = 3.500

RUN NO. 1285/ 0 RN/L = 3.50 GRADIENT INTERVAL = -5.00/ 5.00

ALPHAL	BETAL	CNFLS	CAFLS	CLMFLS	CYFLS	CYNFLS	CBLLS	CABLS	CYNBLS	CP5	CP6
-4.484	-5.908	-.09920	.03710	.04710	.00500	-.02050	-.01940	.03690	-.00720	-.44880	-.39150
-4.458	-3.839	-.08050	.03540	.03630	.00110	-.01860	-.01580	.03630	-.00700	-.44030	-.38570
-4.332	.576	-.04340	.03170	.01350	-.00260	-.01810	-.00850	.03430	-.00670	-.41470	-.36670
-3.736	4.499	-.01310	.03100	-.00430	.00720	-.02780	-.00250	.03230	-.00630	-.38810	-.34850
-3.849	6.381	-.00350	.02940	-.01130	.00700	-.02920	-.00070	.02940	-.00570	-.35430	-.31640
	GRADIENT	.00809	-.00053	-.00488	.00070	-.00108	.00160	-.00048	.00008	.00625	.00446

RUN NO. 1286/ 0 RN/L = 3.50 GRADIENT INTERVAL = -5.00/ 5.00

ALPHAL	BETAL	CNFLS	CAFLS	CLMFLS	CYFLS	CYNFLS	CBLLS	CABLS	CYNBLS	CP5	CP6
-.301	-6.933	-.06070	.03840	.03900	.04700	-.04810	-.01190	.03670	-.00710	-.45090	-.38440
-.276	-4.743	-.04900	.03770	.03200	.04200	-.04460	-.00960	.03580	-.00700	-.43740	-.37840
-.247	-.229	-.02750	.03500	.01770	.03590	-.04210	-.00540	.03350	-.00650	-.40540	-.35780
-.166	3.917	-.01110	.03110	.00620	.02700	-.03820	-.00220	.03080	-.00600	-.37120	-.33090
-.195	6.162	-.00220	.03020	-.00130	.02250	-.03690	-.00040	.02850	-.00550	-.34640	-.30330
	GRADIENT	.00438	-.00076	-.00298	-.00173	.00074	.00086	-.00058	.00012	.00764	.00547

RUN NO. 1287/ 0 RN/L = 3.49 GRADIENT INTERVAL = -5.00/ 5.00

ALPHAL	BETAL	CNFLS	CAFLS	CLMFLS	CYFLS	CYNFLS	CBLLS	CABLS	CYNBLS	CP5	CP6
4.782	-5.618	-.01290	.03780	.02470	.04560	-.05520	-.00240	.03560	-.00690	-.43700	-.37300
4.600	-3.508	-.00980	.03700	.02050	.03890	-.05020	-.00180	.03500	-.00680	-.42820	-.36900
4.272	.361	-.00600	.03450	.01390	.02800	-.04230	-.00110	.03310	-.00640	-.40360	-.35040
4.299	4.297	.00330	.03200	.00270	.01220	-.03240	.00070	.03070	-.00600	-.37380	-.32520
4.218	6.354	.00680	.03130	-.00160	.00890	-.03100	.00140	.02900	-.00560	-.35490	-.30650
	GRADIENT	.00168	-.00064	-.00228	-.00342	.00228	.00032	-.00055	.00010	.00697	.00561

IA156A, AEDC PWT 16T-470, 0 T S W/SILTS (R8NLB2) (10 MAY 80)

REFERENCE DATA

SREF = 2690.0000 SQ.FT. XMRP = 976.0000 IN. XT
LREF = 1290.3000 INCHES YMRP = .0000 IN. YT
BREF = 1290.3000 INCHES ZMRP = 400.0000 IN. ZT
SCALE = .0200

PARAMETRIC DATA

IB-ELV = 12.000 OB-ELV = 5.000
BDFLAP = .000 SPDBRK = .000
RUDDER = .000 SILTS = 1.000
MACH = 1.550 RN/L = 3.200

RUN NO. 1288/ 0 RN/L = 3.00 GRADIENT INTERVAL = -5.00/ 5.00

ALPHAL	BETAL	CNFLS	CAFLS	CLMFLS	CYFLS	CYNFLS	CBLLS	CABLS	CYNBLS	CP5	CP6
-8.646	-5.785	-.15500	.03420	.06820	-.02380	-.00420	-.03030	.03420	-.00660	-.41910	-.35930
-8.679	-3.555	-.13320	.03330	.05510	-.04120	.00670	-.02600	.03390	-.00660	-.41260	-.35990
-8.510	.502	-.08350	.02970	.02400	-.05040	.00950	-.01640	.03240	-.00630	-.38830	-.34890
-8.225	4.745	-.03750	.02640	-.00680	-.04740	.00310	-.00740	.02850	-.00550	-.34360	-.30540
-8.164	6.642	-.02400	.02520	-.01540	-.04480	-.00090	-.00470	.02640	-.00510	-.32010	-.28040
	GRADIENT	.01152	-.00083	-.00746	-.00074	-.00044	.00224	-.00065	.00013	.00833	.00659

RUN NO. 1289/ 0 RN/L = 3.00 GRADIENT INTERVAL = -5.00/ 5.00

ALPHAL	BETAL	CNFLS	CAFLS	CLMFLS	CYFLS	CYNFLS	CBLLS	CABLS	CYNBLS	CP5	CP6
-6.586	-5.861	-.12270	.03580	.05500	-.01440	-.00740	-.02400	.03400	-.00660	-.42100	-.35410
-6.506	-3.886	-.10490	.03410	.04460	-.02280	-.00270	-.02050	.03300	-.00640	-.40400	-.34790
-6.460	.394	-.06190	.03000	.01820	-.02700	-.00330	-.01210	.03150	-.00610	-.38040	-.33700
-6.124	4.579	-.02520	.02760	-.00570	-.02220	-.00970	-.00490	.02860	-.00550	-.34240	-.30820
-6.048	6.588	-.01250	.02690	-.01400	-.01990	-.01340	-.00250	.02590	-.00500	-.31660	-.27430
	GRADIENT	.00942	-.00077	-.00594	.00007	-.00082	.00184	-.00052	.00011	.00727	.00468

RUN NO. 1290/ 0 RN/L = 3.00 GRADIENT INTERVAL = -5.00/ 5.00

ALPHAL	BETAL	CNFLS	CAFLS	CLMFLS	CYFLS	CYNFLS	CBLLS	CABLS	CYNBLS	CP5	CP6
-4.313	-5.971	-.09210	.03660	.04410	.00790	-.02170	-.01800	.03340	-.00650	-.41280	-.34300
-4.559	-3.831	-.07730	.03490	.03420	.00000	-.01710	-.01520	.03220	-.00630	-.39460	-.33900
-4.349	.636	-.04210	.03060	.01290	-.00310	-.01730	-.00830	.03050	-.00590	-.37180	-.32360
-3.712	4.562	-.01590	.02870	-.00240	.00170	-.02210	-.00310	.02820	-.00550	-.33950	-.30190
-3.794	6.418	-.00650	.02760	-.00970	.00180	-.02420	-.00130	.02590	-.00500	-.31420	-.27630
	GRADIENT	.00733	-.00074	-.00437	.00018	-.00058	.00144	-.00047	.00010	.00653	.00440

RUN NO. 1291/ 0 RN/L = 3.00 GRADIENT INTERVAL = -5.00/ 5.00

ALPHAL	BETAL	CNFLS	CAFLS	CLMFLS	CYFLS	CYNFLS	CBLLS	CABLS	CYNBLS	CP5	CP6
-.388	-6.930	-.05610	.03790	.03550	.04520	-.04740	-.01100	.03330	-.00650	-.41870	-.34120
-.349	-4.759	-.04530	.03680	.02940	.03960	-.04310	-.00890	.03210	-.00620	-.39700	-.33450
-.334	-.364	-.02620	.03410	.01680	.03420	-.04070	-.00510	.03010	-.00580	-.36660	-.31880
-.307	3.799	-.01050	.03110	.00550	.02280	-.03450	-.00210	.02800	-.00540	-.33880	-.29880
-.328	5.990	-.00200	.02960	-.00200	.01810	-.03270	-.00040	.02530	-.00490	-.30770	-.26870
	GRADIENT	.00407	-.00067	-.00279	-.00196	.00100	.00080	-.00048	.00009	.00680	.00417

IA156A, AEDC PWT 16T-470, O T S W/SILTS (R8NLB2) (10 MAY 80)

REFERENCE DATA

SREF = 2690.0000 SQ.FT. XMRP = 976.0000 IN. XT
LREF = 1290.3000 INCHES YMRP = .0000 IN. YT
BREF = 1290.3000 INCHES ZMRP = 400.0000 IN. ZT
SCALE = .0200

PARAMETRIC DATA

IB-ELV = 12.000 OB-ELV = 5.000
BDFLAP = .000 SPDBRK = .000
RUDDER = .000 SILTS = 1.000
MACH = 1.550 RN/L = 3.200

RUN NO. 1292/ 0 RN/L = 3.00 GRADIENT INTERVAL = -5.00/ 5.00

ALPHAL	BETAL	CNFLS	CAFLS	CLMFLS	CYFLS	CYNFLS	CBLLS	CABLS	CYNBLS	CP5	CP6
4.752	-5.557	-.00930	.03700	.02250	.04160	-.05260	-.00170	.03320	-.00640	-.41260	-.34360
4.493	-3.412	-.00750	.03600	.01890	.03440	-.04700	-.00140	.03210	-.00620	-.39890	-.33180
4.176	.427	-.00580	.03360	.01420	.02490	-.04060	-.00110	.02980	-.00580	-.36720	-.31130
4.117	4.284	.00200	.03140	.00420	.01070	-.03110	.00040	.02750	-.00530	-.34030	-.28640
4.070	6.374	.00660	.03020	-.00080	.00700	-.02970	.00130	.02590	-.00500	-.32110	-.27010
	GRADIENT	.00124	-.00060	-.00191	-.00308	.00207	.00023	-.00060	.00012	.00761	.00590

IA156A, AEDC PWT 16T-470, O T S W/SILTS (R8NLB3) (10 MAY 80)

REFERENCE DATA

SREF = 2690.0000 SQ.FT. XMRP = 976.0000 IN. XT
LREF = 1290.3000 INCHES YMRP = .0000 IN. YT
BREF = 1290.3000 INCHES ZMRP = 400.0000 IN. ZT
SCALE = .0200

PARAMETRIC DATA

IB-ELV = 12.000 OB-ELV = 9.000
BDFLAP = .000 SPDBRK = .000
RUDDER = .000 SILTS = 1.000
MACH = .600 RN/L = 3.500

RUN NO. 1295/ 0 RN/L = 3.50 GRADIENT INTERVAL = -5.00/ 5.00

ALPHAL	BETAL	CNFLS	CAFLS	CLMFLS	CYFLS	CYNFLS	CBLLS	CABLS	CYNBLS	CP5	CP6
-8.382	-7.710	-.13780	.00940	.05850	-.00300	-.01560	-.02690	.03970	-.00770	-.47130	-.43290
-8.324	-5.655	-.11810	.00830	.04880	-.01400	-.00830	-.02310	.03950	-.00770	-.47160	-.42880
-8.286	-3.635	-.09830	.00870	.03880	-.02150	-.00350	-.01920	.03720	-.00720	-.44420	-.40350
-8.142	.468	-.05890	.00940	.01740	-.03140	.00190	-.01150	.03370	-.00650	-.41600	-.35130
-7.967	4.357	-.02130	.01060	-.00550	-.03020	-.00190	-.00410	.03020	-.00590	-.39030	-.29870
-7.976	6.277	-.00540	.00920	-.01510	-.02590	-.00690	-.00100	.02720	-.00530	-.34630	-.27310
-7.979	8.283	.00670	.00860	-.02160	-.02140	-.01190	.00140	.02470	-.00480	-.31370	-.24930
	GRADIENT	.00963	.00024	-.00554	-.00110	.00021	.00189	-.00088	.00016	.00675	.01311

RUN NO. 1296/ 0 RN/L = 3.49 GRADIENT INTERVAL = -5.00/ 5.00

ALPHAL	BETAL	CNFLS	CAFLS	CLMFLS	CYFLS	CYNFLS	CBLLS	CABLS	CYNBLS	CP5	CP6
-6.296	-7.793	-.11660	.01080	.05200	.01450	-.02400	-.02270	.03930	-.00760	-.46720	-.42790
-6.228	-5.761	-.09930	.01060	.04320	.00530	-.01790	-.01930	.03790	-.00740	-.45330	-.41050
-6.131	-3.862	-.08200	.01040	.03440	-.00030	-.01400	-.01590	.03630	-.00700	-.43530	-.39090
-6.132	.177	-.04540	.01050	.01380	-.00690	-.01080	-.00880	.03210	-.00620	-.39920	-.33290
-5.965	4.231	-.01430	.01140	-.00530	-.00690	-.01320	-.00270	.02950	-.00570	-.37620	-.29680
-5.861	6.210	-.00050	.01110	-.01380	-.00360	-.01750	.00000	.02630	-.00510	-.33130	-.26890
-5.891	8.200	.00910	.01020	-.02000	-.00210	-.02080	.00190	.02490	-.00480	-.31330	-.25370
	GRADIENT	.00837	.00012	-.00491	-.00082	.00010	.00163	-.00084	.00016	.00730	.01163

IA156A, AEDC PWT 16T-470, 0 T S W/SILTS (R8NLB3) (10 MAY 80)

REFERENCE DATA

SREF = 2690.0000 SQ.FT. XMRP = 976.0000 IN. XT
LREF = 1290.3000 INCHES YMRP = .0000 IN. YT
BREF = 1290.3000 INCHES ZMRP = 400.0000 IN. ZT
SCALE = .0200

PARAMETRIC DATA

IB-ELV = 12.000 OB-ELV = 9.000
BDFLAP = .000 SPDBRK = .000
RUDDER = .000 SILTS = 1.000
MACH = .600 RN/L = 3.500

RUN NO. 1297/ 0 RN/L = 3.49 GRADIENT INTERVAL = -5.00/ 5.00

ALPHAL	BETAL	CNFLS	CAFLS	CLMFLS	CYFLS	CYNFLS	CBLLS	CABLS	CYNBLS	CP5	CP6
-4.279	-7.811	-.09700	.01280	.04600	.02920	-.03210	-.01890	.03810	-.00740	-.45230	-.41470
-4.252	-5.809	-.08100	.01230	.03760	.02180	-.02690	-.01570	.03680	-.00710	-.44330	-.39470
-4.249	-3.753	-.06520	.01170	.02900	.01650	-.02340	-.01260	.03550	-.00690	-.42750	-.38100
-4.000	.250	-.03260	.01170	.01050	.01470	-.02360	-.00620	.03110	-.00600	-.38550	-.32400
-3.652	4.257	-.00710	.01310	-.00510	.01280	-.02410	-.00120	.02780	-.00540	-.35030	-.28390
-3.755	6.061	.00150	.01260	-.01120	.01160	-.02520	.00050	.02560	-.00500	-.31950	-.26290
-3.787	8.054	.01100	.01210	-.01820	.01180	-.02710	.00230	.02460	-.00480	-.30940	-.25100
	GRADIENT	.00725	.00017	-.00426	-.00046	-.00009	.00142	-.00096	.00019	.00964	.01212

RUN NO. 1298/ 0 RN/L = 3.49 GRADIENT INTERVAL = -5.00/ 5.00

ALPHAL	BETAL	CNFLS	CAFLS	CLMFLS	CYFLS	CYNFLS	CBLLS	CABLS	CYNBLS	CP5	CP6
-.274	-8.581	-.06350	.01530	.03630	.05190	-.04740	-.01220	.03710	-.00720	-.44470	-.40070
-.255	-6.494	-.05350	.01450	.03060	.04540	-.04260	-.01030	.03650	-.00710	-.43780	-.39420
-.233	-4.224	-.04140	.01450	.02330	.04070	-.03950	-.00790	.03480	-.00670	-.42080	-.37100
-.208	-.154	-.02040	.01350	.01000	.03650	-.03790	-.00380	.03070	-.00600	-.37650	-.32310
-.154	3.926	-.00560	.01390	.00010	.02710	-.03220	-.00090	.02680	-.00520	-.33730	-.27280
-.146	6.030	.00170	.01390	-.00570	.02270	-.03010	.00050	.02550	-.00490	-.32310	-.25770
-.139	8.140	.00880	.01380	-.01130	.02090	-.03040	.00190	.02510	-.00490	-.31620	-.25680
	GRADIENT	.00439	-.00007	-.00285	-.00167	.00090	.00086	-.00098	.00018	.01025	.01205

RUN NO. 1299/ 0 RN/L = 3.49 GRADIENT INTERVAL = -5.00/ 5.00

ALPHAL	BETAL	CNFLS	CAFLS	CLMFLS	CYFLS	CYNFLS	CBLLS	CABLS	CYNBLS	CP5	CP6
4.467	-7.945	-.00660	.01590	.01290	.05240	-.04930	-.00100	.03460	-.00670	-.41670	-.37190
4.376	-5.821	-.00400	.01510	.01080	.04680	-.04480	-.00050	.03380	-.00660	-.40890	-.36170
4.364	-3.833	-.00180	.01470	.00940	.04170	-.04110	-.00010	.03280	-.00640	-.39640	-.35040
4.158	.151	.00050	.01330	.00610	.03270	-.03600	.00040	.02980	-.00580	-.36580	-.31370
4.186	4.238	.00290	.01300	.00280	.01940	-.02800	.00080	.02760	-.00540	-.34660	-.28290
4.121	6.383	.00400	.01370	.00060	.01280	-.02460	.00110	.02590	-.00500	-.32950	-.26180
4.091	8.391	.00670	.01390	-.00290	.00920	-.02350	.00160	.02540	-.00490	-.32370	-.25450
	GRADIENT	.00058	-.00021	-.00082	-.00277	.00162	.00011	-.00064	.00012	.00616	.00836

IA156A, AEDC PWT 16T-470, 0 T S W/SILTS (R8NLB3) (10 MAY 80)

REFERENCE DATA

SREF = 2690.0000 SQ.FT. XMRP = 976.0000 IN. XT
LREF = 1290.3000 INCHES YMRP = .0000 IN. YT
BREF = 1290.3000 INCHES ZMRP = 400.0000 IN. ZT
SCALE = .0200

PARAMETRIC DATA

IB-ELV = 12.000 OB-ELV = 9.000
BDFLAP = .000 SPDBRK = .000
RUDDER = .000 SILTS = 1.000
MACH = .600 RN/L = 3.500

RUN NO. 1300/ 0 RN/L = 3.50 GRADIENT INTERVAL = -5.00/ 5.00

ALPHAL	BETAL	CNFLS	CAFLS	CLMFLS	CYFLS	CYNFLS	CBLLS	CABLS	CYNBLS	CP5	CP6
6.579	-7.967	.01620	.01570	.00350	.04130	-.04470	.00350	.03410	-.00660	-.41320	-.36470
6.566	-5.893	.01710	.01460	.00250	.03370	-.03870	.00370	.03370	-.00650	-.40760	-.35990
6.552	-3.815	.01480	.01410	.00350	.02800	-.03440	.00320	.03290	-.00640	-.40490	-.34540
6.252	.286	.00980	.01300	.00450	.01870	-.02890	.00220	.03090	-.00600	-.37700	-.32740
6.153	4.249	.00800	.01290	.00250	.00530	-.02050	.00190	.02770	-.00540	-.34960	-.28190
6.109	6.201	.00780	.01340	.00070	-.00050	-.01680	.00180	.02640	-.00510	-.33860	-.26410
6.097	8.264	.01110	.01390	-.00460	-.00430	-.01510	.00250	.02600	-.00500	-.33180	-.26030
	GRADIENT	-.00085	-.00015	-.00012	-.00281	.00172	-.00016	-.00064	.00012	.00686	.00785

RUN NO. 1301/ 0 RN/L = 3.50 GRADIENT INTERVAL = -5.00/ 5.00

ALPHAL	BETAL	CNFLS	CAFLS	CLMFLS	CYFLS	CYNFLS	CBLLS	CABLS	CYNBLS	CP5	CP6
8.537	-7.795	.03690	.01390	-.00490	.02340	-.03460	.00750	.03490	-.00680	-.42050	-.37380
8.440	-5.715	.03270	.01380	-.00340	.01650	-.02930	.00670	.03380	-.00660	-.41140	-.35870
8.449	-3.733	.02910	.01460	-.00200	.00830	-.02350	.00600	.03230	-.00630	-.39800	-.33690
8.335	.285	.02120	.01300	.00080	-.00070	-.01860	.00450	.03140	-.00610	-.38750	-.32800
8.336	4.358	.01760	.01280	-.00190	-.01330	-.00980	.00380	.02680	-.00520	-.33900	-.27220
8.278	6.390	.01600	.01170	-.00330	-.01810	-.00640	.00350	.02770	-.00540	-.35220	-.27990
8.236	8.434	.01760	.01220	-.00770	-.02120	-.00510	.00380	.02730	-.00530	-.34390	-.27930
	GRADIENT	-.00142	-.00022	.00001	-.00267	.00169	-.00027	-.00068	.00014	.00730	.00801

IA156A, AEDC PWT 16T-470, 0 T S W/SILTS (R8NLB4) (10 MAY 80)

REFERENCE DATA

SREF = 2690.0000 SQ.FT. XMRP = 976.0000 IN. XT
LREF = 1290.3000 INCHES YMRP = .0000 IN. YT
BREF = 1290.3000 INCHES ZMRP = 400.0000 IN. ZT
SCALE = .0200

PARAMETRIC DATA

IB-ELV = 12.000 OB-ELV = 9.000
BDFLAP = .000 SPDBRK = .000
RUDDER = .000 SILTS = 1.000
MACH = .800 RN/L = 3.500

RUN NO. 1302/ 0 RN/L = 3.50 GRADIENT INTERVAL = -5.00/ 5.00

ALPHAL	BETAL	CNFLS	CAFLS	CLMFLS	CYFLS	CYNFLS	CBLLS	CABLS	CYNBLS	CP5	CP6
-8.515	-5.674	-.12590	.01370	.05220	-.02710	-.00530	-.02440	.03770	-.00730	-.43950	-.41880
-8.303	-3.701	-.10350	.01290	.04160	-.03270	-.00120	-.02000	.03720	-.00720	-.43860	-.40830
-8.328	.548	-.06160	.01180	.01760	-.04170	.00390	-.01180	.03470	-.00670	-.42330	-.36760
-8.136	4.491	-.02250	.01220	-.00700	-.03760	-.00110	-.00420	.02900	-.00560	-.36280	-.29860
-8.116	6.415	-.00730	.01050	-.01620	-.03100	-.00700	-.00120	.02550	-.00500	-.32080	-.26090
	GRADIENT	.00989	-.00009	-.00593	-.00062	.00003	.00193	-.00100	.00019	.00918	.01334

RUN NO. 1303/ 0 RN/L = 3.50 GRADIENT INTERVAL = -5.00/ 5.00

ALPHAL	BETAL	CNFLS	CAFLS	CLMFLS	CYFLS	CYNFLS	CBLLS	CABLS	CYNBLS	CP5	CP6
-6.346	-5.790	-.10350	.01420	.04560	-.00210	-.01710	-.02000	.03820	-.00740	-.44790	-.42090
-6.260	-3.862	-.08540	.01420	.03670	-.00770	-.01310	-.01650	.03630	-.00700	-.42540	-.40130
-6.307	.258	-.04830	.01350	.01480	-.01330	-.01010	-.00920	.03220	-.00630	-.39020	-.34320
-6.095	4.355	-.01500	.01340	-.00640	-.01350	-.00270	-.01220	.02850	-.00550	-.35420	-.29530
-5.865	6.446	-.00040	.01340	-.01540	-.00770	-.01760	.00020	.02410	-.00470	-.30060	-.24950
	GRADIENT	.00857	-.00010	-.00525	-.00071	.00011	.00168	-.00095	.00018	.00866	.01290

RUN NO. 1304/ 0 RN/L = 3.50 GRADIENT INTERVAL = -5.00/ 5.00

ALPHAL	BETAL	CNFLS	CAFLS	CLMFLS	CYFLS	CYNFLS	CBLLS	CABLS	CYNBLS	CP5	CP6
-4.221	-5.903	-.08380	.01670	.03960	.01820	-.02730	-.01620	.03700	-.00720	-.43760	-.40430
-4.340	-3.792	-.06900	.01590	.03170	.01120	-.02290	-.01330	.03590	-.00700	-.42370	-.39410
-4.221	.482	-.03370	.01490	.01050	.00750	-.02180	-.00630	.03080	-.00600	-.37400	-.32820
-3.748	4.349	-.00730	.01560	-.00630	.00720	-.02310	-.00120	.02700	-.00520	-.33400	-.28150
-3.819	6.195	.00260	.01470	-.01330	.00710	-.02440	.00070	.02480	-.00480	-.31060	-.25510
	GRADIENT	.00759	-.00004	-.00467	-.00050	-.00002	.00149	-.00109	.00022	.01103	.01386

RUN NO. 1306/ 0 RN/L = 3.50 GRADIENT INTERVAL = -5.00/ 5.00

ALPHAL	BETAL	CNFLS	CAFLS	CLMFLS	CYFLS	CYNFLS	CBLLS	CABLS	CYNBLS	CP5	CP6
-.272	-6.669	-.05660	.01900	.03180	.04340	-.04320	-.01080	.03650	-.00710	-.43620	-.39390
-.259	-4.499	-.04620	.01850	.02570	.03740	-.03850	-.00880	.03500	-.00680	-.42020	-.37680
-.248	-.314	-.02410	.01720	.01180	.03270	-.03590	-.00450	.03040	-.00590	-.36850	-.32350
-.184	3.861	-.00400	.01710	-.00270	.02680	-.03250	-.00060	.02630	-.00510	-.32680	-.27240
-.164	5.985	.00410	.01720	-.00860	.02360	-.03100	.00100	.02500	-.00490	-.31510	-.25560
	GRADIENT	.00505	-.00017	-.00340	-.00127	.00072	.00098	-.00104	.00020	.01117	.01249

IA156A, AEDC PWT 16T-470, O T S W/SILTS (R8NLB4) (10 MAY 80)

REFERENCE DATA

SREF = 2690.0000 SQ.FT. XMRP = 976.0000 IN. XT
LREF = 1290.3000 INCHES YMRP = .0000 IN. YT
BREF = 1290.3000 INCHES ZMRP = 400.0000 IN. ZT
SCALE = .0200

PARAMETRIC DATA

IB-ELV = 12.000 OB-ELV = 9.000
BDFLAP = .000 SPDBRK = .000
RUDDER = .000 SILTS = 1.000
MACH = .800 RN/L = 3.500

RUN NO. 1314/ 0 RN/L = 3.49 GRADIENT INTERVAL = -5.00/ 5.00

ALPHAL	BETAL	CNFLS	CAFLS	CLMFLS	CYFLS	CYNFLS	CBLLS	CABLS	CYNBLS	CP5	CP6
6.533	-5.795	.01500	.01750	.00300	.03430	-.04160	.00320	.03510	-.00680	-.42020	-.37900
6.508	-3.725	.01450	.01840	.00290	.02500	-.03500	.00310	.03250	-.00630	-.39340	-.34730
6.182	.298	.01100	.01570	.00350	.01870	-.03130	.00240	.03160	-.00610	-.38190	-.33830
6.115	4.192	.00910	.01590	.00130	.00570	-.02250	.00200	.02810	-.00540	-.34850	-.29090
6.083	6.223	.01050	.01710	-.00210	.00060	-.01950	.00230	.02640	-.00510	-.33230	-.27050
	GRADIENT	-.00068	-.00032	-.00020	-.00243	.00156	-.00014	-.00055	.00011	.00566	.00710

IA156A, AEDC PWT 16T-470, O T S W/SILTS (R8NLB5) (10 MAY 80)

REFERENCE DATA

SREF = 2690.0000 SQ.FT. XMRP = 976.0000 IN. XT
LREF = 1290.3000 INCHES YMRP = .0000 IN. YT
BREF = 1290.3000 INCHES ZMRP = 400.0000 IN. ZT
SCALE = .0200

PARAMETRIC DATA

IB-ELV = 12.000 OB-ELV = 9.000
BDFLAP = .000 SPDBRK = .000
RUDDER = .000 SILTS = 1.000
MACH = .800 RN/L = 3.500

RUN NO. 1313/ 0 RN/L = 3.49 GRADIENT INTERVAL = -5.00/ 5.00

ALPHAL	BETAL	CNFLS	CAFLS	CLMFLS	CYFLS	CYNFLS	CBLLS	CABLS	CYNBLS	CP5	CP6
-.277	-6.637	-.05560	.01890	.03130	.04420	-.04370	-.01070	.03670	-.00710	-.43990	-.39680
-.262	-4.530	-.04590	.01890	.02540	.03740	-.03880	-.00880	.03480	-.00680	-.41950	-.37410
-.252	-.307	-.02330	.01770	.01090	.03230	-.03600	-.00440	.03050	-.00590	-.37320	-.32160
-.184	3.870	-.00310	.01770	-.00330	.02680	-.03300	-.00040	.02660	-.00520	-.33090	-.27530
-.168	5.998	.00500	.01720	-.00950	.02330	-.03090	.00120	.02540	-.00490	-.31840	-.26140
	GRADIENT	.00510	-.00014	-.00342	-.00126	.00069	.00100	-.00098	.00019	.01055	.01176

IA156A, AEDC PWT 16T-470, 0 T S W/SILTS (R8NLB6) (10 MAY 80)

REFERENCE DATA

SREF = 2690.0000 SQ.FT. XMRP = 976.0000 IN. XT
LREF = 1290.3000 INCHES YMRP = .0000 IN. YT
BREF = 1290.3000 INCHES ZMRP = 400.0000 IN. ZT
SCALE = .0200

PARAMETRIC DATA

IB-ELV = 12.000 OB-ELV = 9.000
GDFLAP = .000 SPDBRK = .000
RUDDER = .000 SILTS = 1.000
MACH = .900 RN/L = 3.500

RUN NO. 1308/ 0 RN/L = 3.50 GRADIENT INTERVAL = -5.00/ 5.00

ALPHAL	BETAL	CNFLS	CAFLS	CLMFLS	CYFLS	CYNFLS	CBLLS	CABLS	CYNBLS	CP5	CP6
-8.507	-5.698	-.12830	.01670	.05130	-.03170	-.00600	-.02490	.03950	-.00770	-.45290	-.44650
-8.465	-3.617	-.10670	.01590	.04120	-.04040	-.00020	-.02070	.03820	-.00740	-.43880	-.43020
-8.397	.510	-.06430	.01570	.01730	-.04780	.00310	-.01240	.03620	-.00700	-.42240	-.39230
-8.194	4.488	-.02100	.01480	-.01000	-.04560	-.00040	-.00390	.03070	-.00600	-.37440	-.32390
-8.189	6.457	-.00550	.01280	-.01900	-.04070	-.00540	-.00090	.02760	-.00540	-.34290	-.28530
	GRADIENT	.01057	-.00014	-.00631	-.00065	-.00002	.00207	-.00092	.00017	.00791	.01309

RUN NO. 1309/ 0 RN/L = 3.50 GRADIENT INTERVAL = -5.00/ 5.00

ALPHAL	BETAL	CNFLS	CAFLS	CLMFLS	CYFLS	CYNFLS	CBLLS	CABLS	CYNBLS	CP5	CP6
-6.428	-5.760	-.10770	.01810	.04600	-.01010	-.01510	-.02090	.03970	-.00770	-.45770	-.44560
-6.316	-3.838	-.08710	.01890	.03580	-.01500	-.01150	-.01690	.03630	-.00700	-.41990	-.40540
-6.373	.293	-.05000	.01730	.01420	-.02030	-.00970	-.00960	.03480	-.00680	-.41780	-.37540
-6.156	4.396	-.01360	.01660	-.00910	-.01930	-.01220	-.00240	.02980	-.00580	-.36430	-.31530
-5.928	6.497	.00140	.01680	-.01800	-.01420	-.01840	.00050	.02560	-.00500	-.31300	-.27090
	GRADIENT	.00893	-.00028	-.00545	-.00052	-.00008	.00176	-.00079	.00015	.00675	.01094

RUN NO. 1310/ 0 RN/L = 3.49 GRADIENT INTERVAL = -5.00/ 5.00

ALPHAL	BETAL	CNFLS	CAFLS	CLMFLS	CYFLS	CYNFLS	CBLLS	CABLS	CYNBLS	CP5	CP6
-4.219	-5.892	-.08610	.02070	.03990	.01450	-.02700	-.01670	.03880	-.00750	-.44890	-.43330
-4.397	-3.788	-.07010	.02020	.03120	.00680	-.02230	-.01350	.03660	-.00710	-.42350	-.40890
-4.288	.514	-.03300	.01850	.00850	.00320	-.02220	-.00620	.03240	-.00630	-.38820	-.34950
-3.783	4.395	-.00520	.01910	-.00910	.00310	-.02420	-.00080	.02880	-.00560	-.34640	-.31040
-3.869	6.237	.00450	.01830	-.01600	.00300	-.02620	.00110	.02640	-.00510	-.32090	-.27960
	GRADIENT	.00794	-.00014	-.00493	-.00046	-.00023	.00155	-.00095	.00018	.00940	.01207

RUN NO. 1311/ 0 RN/L = 3.49 GRADIENT INTERVAL = -5.00/ 5.00

ALPHAL	BETAL	CNFLS	CAFLS	CLMFLS	CYFLS	CYNFLS	CBLLS	CABLS	CYNBLS	CP5	CP6
-.315	-6.751	-.05620	.02290	.03150	.04510	-.04560	-.01080	.03800	-.00740	-.45300	-.41310
-.299	-4.584	-.04570	.02270	.02560	.03770	-.04050	-.00880	.03700	-.00720	-.44170	-.40190
-.329	-.255	-.02150	.02150	.00800	.02990	-.03660	-.00400	.03220	-.00620	-.38510	-.34740
-.254	3.856	-.00050	.02070	-.00730	.02600	-.03450	.00010	.02890	-.00560	-.34980	-.30890
-.230	6.018	.00750	.02030	-.01310	.02430	-.03390	.00160	.02760	-.00540	-.33680	-.29140
	GRADIENT	.00536	-.00024	-.00390	-.00139	.00071	.00106	-.00096	.00019	.01091	.01103

IA156A, AEDC PWT 16T-470, O T S W/SILTS (R8NLB6) (10 MAY 80)

REFERENCE DATA

SREF = 2690.0000 SQ.FT. XMRP = 976.0000 IN. XT
LREF = 1290.3000 INCHES YMRP = .0000 IN. YT
BREF = 1290.3000 INCHES ZMRP = 400.0000 IN. ZT
SCALE = .0200

PARAMETRIC DATA

IB-ELV = 12.000 OB-ELV = 9.000
BDFLAP = .000 SPDBRK = .000
RUDDER = .000 SILTS = 1.000
MACH = .900 RN/L = 3.500

RUN NO. 1312/ 0 RN/L = 3.50 GRADIENT INTERVAL = -5.00/ 5.00

ALPHAL	BETAL	CNFLS	CAFLS	CLMFLS	CYFLS	CYNFLS	CBLLS	CABLS	CYNBLS	CP5	CP6
4.455	-5.768	-.00880	.02220	.01220	.04730	-.04840	-.00150	.03690	-.00720	-.44090	-.39940
4.327	-3.686	-.00620	.02200	.01030	.04020	-.04280	-.00100	.03550	-.00690	-.42530	-.38380
4.008	.198	.00070	.02080	.00340	.03340	-.03930	.00040	.03200	-.00620	-.38660	-.34220
4.143	4.176	.00560	.02080	-.00040	.01990	-.03120	.00130	.02950	-.00570	-.36350	-.30930
4.071	6.320	.00840	.02060	-.00380	.01460	-.02880	.00190	.02750	-.00530	-.34070	-.28650
	GRADIENT	.00150	-.00015	-.00136	-.00259	.00148	.00029	-.00076	.00015	.00785	.00947

IA156A, AEDC PWT 16T-470, O T S (R8NLB7) (10 MAY 80)

REFERENCE DATA

SREF = 2690.0000 SQ.FT. XMRP = 976.0000 IN. XT
LREF = 1290.3000 INCHES YMRP = .0000 IN. YT
BREF = 1290.3000 INCHES ZMRP = 400.0000 IN. ZT
SCALE = .0200

PARAMETRIC DATA

IB-ELV = 12.000 OB-ELV = 9.000
BDFLAP = .000 SPDBRK = .000
RUDDER = .000 SILTS = .000
MACH = .800 RN/L = 3.500

RUN NO. 1324/ 0 RN/L = 3.50 GRADIENT INTERVAL = -5.00/ 5.00

ALPHAL	BETAL	CNFLS	CAFLS	CLMFLS	CYFLS	CYNFLS	CBLLS	CABLS	CYNBLS	CP5	CP6
4.529	-5.894	-.00340	.01910	.01050	.04700	-.04800	-.00060	.03470	-.00670	-.41270	-.37850
4.324	-3.633	-.00300	.01840	.00960	.04120	-.04320	-.00060	.03320	-.00640	-.39930	-.35710
4.082	.278	.00230	.01740	.00440	.03250	-.03820	.00050	.02900	-.00560	-.34990	-.31040
4.151	4.268	.00520	.01700	.00110	.01870	-.02940	.00100	.02740	-.00530	-.34110	-.28300
4.088	6.337	.00720	.01750	-.00200	.01360	-.02680	.00140	.02560	-.00500	-.32190	-.26140
	GRADIENT	.00104	-.00018	-.00107	-.00285	.00175	.00020	-.00073	.00014	.00735	.00937

IA156A, AEDC PWT 16T-470, 0 T S (R8NLB8) (10 MAY 80)

REFERENCE DATA

SREF = 2690.0000 SQ.FT. XMRP = 976.0000 IN. XT
LREF = 1290.3000 INCHES YMRP = .0000 IN. YT
BREF = 1290.3000 INCHES ZMRP = 400.0000 IN. ZT
SCALE = .0200

PARAMETRIC DATA

IB-ELV = 12.000 OB-ELV = 9.000
BDFLAP = .000 SPDBRK = .000
RUDDER = .000 SILTS = .000
MACH = .950 RN/L = 3.500

RUN NO. 1325/ 0 RN/L = 3.51 GRADIENT INTERVAL = -5.00/ 5.00

ALPHAL	BETAL	CNFLS	CAFLS	CLMFLS	CYFLS	CYNFLS	CBLLS	CABLS	CYNBLS	CP5	CP6
-8.562	-5.704	-.13200	.01870	.05150	-.03250	-.00610	-.02590	.04210	-.00820	-.48490	-.47360
-8.659	-3.496	-.11080	.01900	.04050	-.04450	.00150	-.02170	.04120	-.00800	-.47290	-.46440
-8.507	.390	-.06580	.01760	.01530	-.04840	.00380	-.01290	.03960	-.00770	-.46580	-.43590
-8.291	4.600	-.02100	.01740	-.01260	-.04260	-.00260	-.00420	.03320	-.00640	-.39900	-.35660
-8.257	6.464	-.00750	.01560	-.01990	-.03780	-.00730	-.00150	.02880	-.00560	-.35790	-.29780
	GRADIENT	.01108	-.00020	-.00656	.00025	-.00052	.00216	-.00100	.00020	.00922	.01339

RUN NO. 1326/ 0 RN/L = 3.50 GRADIENT INTERVAL = -5.00/ 5.00

ALPHAL	BETAL	CNFLS	CAFLS	CLMFLS	CYFLS	CYNFLS	CBLLS	CABLS	CYNBLS	CP5	CP6
-6.505	-5.750	-.11020	.02150	.04570	-.01020	-.01640	-.02160	.04150	-.00810	-.47790	-.46680
-6.387	-3.836	-.08900	.02210	.03520	-.01440	-.01240	-.01750	.03920	-.00760	-.45340	-.43960
-6.460	.271	-.04920	.02070	.01210	-.01950	-.01030	-.00970	.03850	-.00750	-.45330	-.42270
-6.197	4.383	-.01260	.02040	-.01050	-.01480	-.01570	-.00250	.03240	-.00630	-.38790	-.35090
-5.887	6.480	.00110	.01870	-.01820	-.00830	-.02150	.00020	.02860	-.00560	-.34900	-.30280
	GRADIENT	.00930	-.00021	-.00556	-.00005	-.00040	.00182	-.00083	.00016	.00797	.01079

RUN NO. 1327/ 0 RN/L = 3.50 GRADIENT INTERVAL = -5.00/ 5.00

ALPHAL	BETAL	CNFLS	CAFLS	CLMFLS	CYFLS	CYNFLS	CBLLS	CABLS	CYNBLS	CP5	CP6
-4.249	-5.883	-.08820	.02380	.04060	.01670	-.02920	-.01730	.04190	-.00810	-.48640	-.48650
-4.432	-3.783	-.07140	.02360	.03140	.01010	-.02470	-.01400	.03990	-.00770	-.46270	-.44580
-4.316	.508	-.03290	.02200	.00860	.00980	-.02660	-.00650	.03630	-.00700	-.42930	-.39630
-3.782	4.378	-.00550	.02180	-.00800	.00890	-.02780	-.00110	.03160	-.00610	-.37690	-.34230
-3.880	6.244	.00360	.02080	-.01440	.00730	-.02910	.00060	.02820	-.00550	-.34200	-.30120
	GRADIENT	.00809	-.00022	-.00484	-.00015	-.00038	.00158	-.00101	.00020	.01046	.01266

RUN NO. 1328/ 0 RN/L = 3.50 GRADIENT INTERVAL = -5.00/ 5.00

ALPHAL	BETAL	CNFLS	CAFLS	CLMFLS	CYFLS	CYNFLS	CBLLS	CABLS	CYNBLS	CP5	CP6
-.327	-6.737	-.05630	.02650	.03190	.04760	-.04890	-.01110	.04170	-.00810	-.49650	-.45200
-.282	-4.587	-.04390	.02610	.02530	.04280	-.04540	-.00870	.04130	-.00800	-.49210	-.44860
-.288	-.248	-.02160	.02530	.01160	.03460	-.04180	-.00430	.03640	-.00710	-.43360	-.39540
-.218	3.854	-.00270	.02370	-.00250	.02480	-.03610	-.00060	.03150	-.00610	-.38040	-.33720
-.209	6.052	.00620	.02310	-.00960	.02130	-.03540	.00110	.02840	-.00550	-.34770	-.29860
	GRADIENT	.00488	-.00028	-.00329	-.00213	.00110	.00096	-.00116	.00022	.01324	.01319

IA156A, AEDC PWT 16T-470, 0 T S (R8NLB8) (10 MAY 80)

REFERENCE DATA

SREF = 2690.0000 SQ.FT. XMRP = 976.0000 IN. XT
LREF = 1290.3000 INCHES YMRP = .0000 IN. YT
BREF = 1290.3000 INCHES ZMRP = 400.0000 IN. ZT
SCALE = .0200

PARAMETRIC DATA

IB-ELV = 12.000 OB-ELV = 9.000
BDFLAP = .000 SPDBRK = .000
RUDDER = .000 SILTS = .000
MACH = .950 RN/L = 3.500

RUN NO. 1329/ 0 RN/L = 3.50 GRADIENT INTERVAL = -5.00/ 5.00

ALPHAL	BETAL	CNFLS	CAFLS	CLMFLS	CYFLS	CYNFLS	CBLLS	CABLS	CYNBLS	CP5	CP6
4.268	-5.618	-.01210	.02470	.01520	.04700	-.05050	-.00240	.04100	-.00800	-.49100	-.44220
4.289	-3.849	-.00800	.02550	.01180	.03920	-.04480	-.00160	.03860	-.00750	-.46590	-.41230
4.165	.312	.00150	.02390	.00240	.03150	-.04050	.00030	.03540	-.00690	-.42890	-.37730
4.138	4.101	.00600	.02400	-.00090	.01970	-.03280	.00110	.03190	-.00620	-.39150	-.33480
4.105	6.308	.00860	.02210	-.00360	.01470	-.03010	.00160	.02970	-.00580	-.36810	-.30810
	GRADIENT	.00177	-.00019	-.00161	-.00244	.00150	.00034	-.00084	.00016	.00935	.00973

IA156A, AEDC PWT 16T-470, 0 T S (R8NLB9) (10 MAY 80)

REFERENCE DATA

SREF = 2690.0000 SQ.FT. XMRP = 976.0000 IN. XT
LREF = 1290.3000 INCHES YMRP = .0000 IN. YT
BREF = 1290.3000 INCHES ZMRP = 400.0000 IN. ZT
SCALE = .0200

PARAMETRIC DATA

IB-ELV = 12.000 OB-ELV = 9.000
BDFLAP = .000 SPDBRK = .000
RUDDER = .000 SILTS = .000
MACH = 1.050 RN/L = 3.500

RUN NO. 1330/ 0 RN/L = 3.50 GRADIENT INTERVAL = -5.00/ 5.00

ALPHAL	BETAL	CNFLS	CAFLS	CLMFLS	CYFLS	CYNFLS	CBLLS	CABLS	CYNBLS	CP5	CP6
-8.774	-5.635	-.14750	.02790	.05980	-.02850	-.01460	-.02900	.05450	-.01060	-.64020	-.60060
-8.709	-3.551	-.12530	.02680	.04900	-.03460	-.01040	-.02460	.05320	-.01030	-.62240	-.58900
-8.609	.597	-.07120	.02490	.01520	-.04580	-.00330	-.01410	.05250	-.01020	-.61750	-.57790
-8.349	4.580	-.02370	.02430	-.01430	-.03840	-.00980	-.00480	.04670	-.00910	-.55190	-.51080
-8.330	6.513	-.00760	.02300	-.02390	-.03470	-.01380	-.00160	.04190	-.00810	-.50210	-.45120
	GRADIENT	.01250	-.00031	-.00779	-.00048	.00009	.00244	-.00080	.00015	.00862	.00957

RUN NO. 1331/ 0 RN/L = 3.51 GRADIENT INTERVAL = -5.00/ 5.00

ALPHAL	BETAL	CNFLS	CAFLS	CLMFLS	CYFLS	CYNFLS	CBLLS	CABLS	CYNBLS	CP5	CP6
-6.558	-5.756	-.12060	.02990	.05280	-.00210	-.02490	-.02370	.05450	-.01060	-.64160	-.59990
-6.413	-3.832	-.09790	.02950	.04080	-.00640	-.02130	-.01930	.05300	-.01030	-.62380	-.58340
-6.518	.323	-.05450	.02720	.01390	-.01340	-.01890	-.01080	.05010	-.00970	-.59130	-.54980
-6.272	4.427	-.01320	.02750	-.01300	-.00960	-.02300	-.00270	.04580	-.00890	-.54190	-.50140
-5.935	6.542	.00340	.02510	-.02250	-.00440	-.02770	.00050	.04090	-.00790	-.48650	-.44440
	GRADIENT	.01026	-.00024	-.00651	-.00039	-.00020	.00201	-.00087	.00017	.00991	.00992

IA156A, AEDC PWT 16T-470, 0 T S (R8NLB9) (10 MAY 80)

REFERENCE DATA

SREF = 2690.0000 SQ.FT. XMRP = 976.0000 IN. XT
LREF = 1290.3000 INCHES YMRP = .0000 IN. YT
BREF = 1290.3000 INCHES ZMRP = 400.0000 IN. ZT
SCALE = .0200

PARAMETRIC DATA

IB-ELV = 12.000 OB-ELV = 9.000
BDFLAP = .000 SPDBRK = .000
RUDDER = .000 SILTS = .000
MACH = 1.050 RN/L = 3.500

RUN NO. 1332/ 0 RN/L = 3.50 GRADIENT INTERVAL = -5.00/ 5.00

ALPHAL	BETAL	CNFLS	CAFLS	CLMFLS	CYFLS	CYNFLS	CBLLS	CABLS	CYNBLS	CP5	CP6
-4.286	-5.891	-.09640	.03140	.04650	.02480	-.03830	-.01900	.05350	-.01040	-.63090	-.58720
-4.466	-3.769	-.07830	.03100	.03620	.02000	-.03510	-.01540	.05190	-.01010	-.61160	-.57000
-4.359	.530	-.03650	.02860	.01030	.01940	-.03610	-.00720	.04870	-.00950	-.57930	-.53050
-3.814	4.413	-.00490	.02870	-.00980	.01920	-.03690	-.00110	.04450	-.00860	-.52610	-.48720
-3.909	6.263	.00450	.02680	-.01650	.01730	-.03750	.00070	.04170	-.00810	-.49210	-.45640
	GRADIENT	.00898	-.00029	-.00563	-.00010	-.00022	.00175	-.00090	.00018	.01040	.01010

RUN NO. 1333/ 0 RN/L = 3.50 GRADIENT INTERVAL = -5.00/ 5.00

ALPHAL	BETAL	CNFLS	CAFLS	CLMFLS	CYFLS	CYNFLS	CBLLS	CABLS	CYNBLS	CP5	CP6
-.330	-6.799	-.06260	.03370	.03800	.05780	-.05900	-.01240	.05190	-.01010	-.61680	-.56620
-.300	-4.601	-.04770	.03350	.02910	.05410	-.05700	-.00940	.05170	-.01000	-.61350	-.56420
-.352	-.186	-.02140	.03170	.01160	.04830	-.05470	-.00430	.04850	-.00940	-.57830	-.52710
-.251	3.891	-.00140	.02960	-.00290	.03480	-.04570	-.00040	.04370	-.00850	-.52220	-.47310
-.231	6.094	.00660	.02890	-.00920	.02850	-.04250	.00120	.04170	-.00810	-.50130	-.44910
	GRADIENT	.00546	-.00046	-.00377	-.00226	.00132	.00106	-.00094	.00018	.01071	.01070

RUN NO. 1334/ 0 RN/L = 3.50 GRADIENT INTERVAL = -5.00/ 5.00

ALPHAL	BETAL	CNFLS	CAFLS	CLMFLS	CYFLS	CYNFLS	CBLLS	CABLS	CYNBLS	CP5	CP6
4.271	-5.616	-.01370	.03170	.01740	.05660	-.06080	-.00270	.05100	-.00990	-.60510	-.55630
4.259	-3.777	-.00930	.03340	.01410	.04970	-.05590	-.00190	.04840	-.00940	-.56720	-.53490
4.209	.345	.00130	.03180	.00540	.04060	-.04980	.00020	.04790	-.00930	-.56750	-.52340
4.149	4.120	.00840	.03000	-.00270	.02540	-.03990	.00160	.04540	-.00880	-.53900	-.49590
4.118	6.316	.00990	.02770	-.00520	.01970	-.03660	.00180	.04380	-.00850	-.52310	-.47410
	GRADIENT	.00225	-.00043	-.00213	-.00306	.00202	.00044	-.00038	.00008	.00351	.00491

IA156A, AEDC PWT 16T-470, 0 T S (R8NLC0) (10 MAY 80)

REFERENCE DATA

SREF = 2690.0000 SQ.FT. XMRP = 976.0000 IN. XT
LREF = 1290.3000 INCHES YMRP = .0000 IN. YT
BREF = 1290.3000 INCHES ZMRP = 400.0000 IN. ZT
SCALE = .0200

PARAMETRIC DATA

IB-ELV = 12.000 OB-ELV = 9.000
BDFLAP = .000 SPDBRK = .000
RUDDER = .000 SILTS = .000
MACH = 1.100 RN/L = 3.500

RUN NO. 1335/ 0 RN/L = 3.50 GRADIENT INTERVAL = -5.00/ 5.00

ALPHAL	BETAL	CNFLS	CAFLS	CLMFLS	CYFLS	CYNFLS	CBLLS	CABLS	CYNBLS	CP5	CP6
-8.661	-6.689	-.14490	.03130	.05800	-.02760	-.01530	-.02850	.05100	-.00990	-.60130	-.56070
-8.754	-3.483	-.12280	.03010	.04630	-.03930	-.00770	-.02420	.05000	-.00970	-.58600	-.55300
-8.635	.464	-.07050	.02810	.01440	-.04650	-.00410	-.01400	.04820	-.00940	-.56690	-.53110
-8.339	4.623	-.02240	.02600	-.01460	-.03850	-.01010	-.00460	.04230	-.00820	-.50170	-.46110
-8.330	6.515	-.00780	.02390	-.02320	-.03630	-.01250	-.00170	.03920	-.00760	-.47030	-.42190
	GRADIENT	.01238	-.00051	-.00751	.00012	-.00031	.00242	-.00095	.00019	.01045	.01139

RUN NO. 1336/ 0 RN/L = 3.50 GRADIENT INTERVAL = -5.00/ 5.00

ALPHAL	BETAL	CNFLS	CAFLS	CLMFLS	CYFLS	CYNFLS	CBLLS	CABLS	CYNBLS	CP5	CP6
-6.559	-5.735	-.11740	.03320	.05000	-.00470	-.02350	-.02310	.05020	-.00970	-.59300	-.55020
-6.474	-3.813	-.09640	.03190	.03840	-.01000	-.01990	-.01900	.04860	-.00940	-.57300	-.53460
-6.579	.322	-.05260	.02860	.01130	-.01630	-.01890	-.01050	.04620	-.00900	-.54680	-.50510
-6.248	4.449	-.01150	.02790	-.01400	-.00910	-.02270	-.00240	.04220	-.00820	-.50100	-.45910
-6.195	6.434	.00220	.02550	-.02240	-.00810	-.02500	.00020	.03800	-.00740	-.45730	-.41110
	GRADIENT	.01028	-.00048	-.00634	.00011	-.00034	00201	-.00077	.00015	.00971	.00914

RUN NO. 1337/ 0 RN/L = 3.50 GRADIENT INTERVAL = -5.00/ 5.00

ALPHAL	BETAL	CNFLS	CAFLS	CLMFLS	CYFLS	CYNFLS	CBLLS	CABLS	CYNBLS	CP5	CP6
-4.300	-5.896	-.09670	.03440	.04570	.02050	-.03590	-.01910	.04870	-.00950	-.57590	-.53310
-4.508	-3.780	-.07780	.03330	.03460	.01600	-.03270	-.01540	.04700	-.00910	-.55420	-.51500
-4.368	.531	-.03440	.02980	.00800	.01650	-.03390	-.00690	.04370	-.00850	-.52100	-.47370
-3.821	4.437	-.00440	.03000	-.01040	.01840	-.03650	-.00100	.04040	-.00790	-.47940	-.44160
-3.900	6.263	.00420	.02800	-.01610	.01740	-.03680	.00060	.03860	-.00750	-.45640	-.42200
	GRADIENT	.00895	-.00041	-.00549	.00029	-.00046	.00176	-.00080	.00015	.00908	.00894

RUN NO. 1338/ 0 RN/L = 3.50 GRADIENT INTERVAL = -5.00/ 5.00

ALPHAL	BETAL	CNFLS	CAFLS	CLMFLS	CYFLS	CYNFLS	CBLLS	CABLS	CYNBLS	CP5	CP6
-.338	-6.805	-.06410	.03610	.03860	.05450	-.05640	-.01270	.04690	-.00910	-.56030	-.50870
-.295	-4.613	-.04890	.03580	.02940	.05070	-.05390	-.00970	.04550	-.00880	-.54280	-.49230
-.333	-.225	-.02290	.03290	.01230	.04520	-.05170	-.00460	.04250	-.00820	-.50960	-.45750
-.223	3.903	-.00290	.03090	-.00180	.03320	-.04400	-.00080	.03720	-.00720	-.44830	-.39980
-.219	6.093	.00570	.02960	-.00860	.02740	-.04100	.00090	.03540	-.00690	-.42890	-.37830
	GRADIENT	.00541	-.00058	-.00367	-.00205	.00116	.00105	-.00097	.00019	.01106	.01083

IA156A, AEDC PWT 16T-470, 0 T S (R8NLC0) (10 MAY 80)

REFERENCE DATA

SREF = 2690.0000 SQ.FT. XMRP = 976.0000 IN. XT
LREF = 1290.3000 INCHES YMRP = .0000 IN. YT
BREF = 1290.3000 INCHES ZMRP = 400.0000 IN. ZT
SCALE = .0200

PARAMETRIC DATA

IB-ELV = 12.000 OB-ELV = 9.000
BDFLAP = .000 SPDBRK = .000
RUDDER = .000 SILTS = .000
MACH = 1.100 RN/L = 3.500

RUN NO. 1339/ 0 RN/L = 3.48 GRADIENT INTERVAL = -5.00/ 5.00

ALPHAL	BETAL	CNFLS	CAFLS	CLMFLS	CYFLS	CYNFLS	CBLLS	CABLS	CYNBLS	CP5	CP6
4.336	-5.616	-.01360	.03540	.01840	.05260	-.05850	-.00280	.04400	-.00850	-.52400	-.47740
4.300	-3.774	-.00920	.03420	.01520	.04670	-.05370	-.00190	.04380	-.00850	-.52210	-.47640
4.226	.346	.00020	.03290	.00670	.03920	-.04910	-.00010	.04220	-.00820	-.50270	-.45820
4.176	4.119	.00740	.03120	-.00180	.02350	-.03370	.00130	.03930	-.00760	-.46870	-.42660
4.152	6.327	.00980	.02950	-.00500	.01750	-.03570	.00180	.03710	-.00720	-.44550	-.39950
	GRADIENT	.00211	-.00038	-.00215	-.00292	.00189	.00041	-.00057	.00011	.00673	.00628

IA156A, AEDC PWT 16T-470, 0 T S (R8NLC1) (10 MAY 80)

REFERENCE DATA

SREF = 2690.0000 SQ.FT. XMRP = 976.0000 IN. XT
LREF = 1290.3000 INCHES YMRP = .0000 IN. YT
BREF = 1290.3000 INCHES ZMRP = 400.0000 IN. ZT
SCALE = .0200

PARAMETRIC DATA

IB-ELV = 12.000 OB-ELV = 9.000
BDFLAP = .000 SPDBRK = .000
RUDDER = .000 SILTS = .000
MACH = 1.150 RN/L = 3.500

RUN NO. 1341/ 0 RN/L = 3.50 GRADIENT INTERVAL = -5.00/ 5.00

ALPHAL	BETAL	CNFLS	CAFLS	CLMFLS	CYFLS	CYNFLS	CBLLS	CABLS	CYNBLS	CP5	CP6
-8.727	-5.723	-.14880	.03270	.06070	-.02810	-.01260	-.02930	.04760	-.00930	-.56020	-.52470
-8.768	-3.512	-.12600	.03220	.04860	-.03950	-.00550	-.02480	.04620	-.00900	-.54050	-.51100
-8.644	.444	-.07440	.02970	.01610	-.04910	-.00090	-.01480	.04470	-.00870	-.52500	-.49160
-8.329	4.639	-.02460	.02830	-.01510	-.04060	-.00850	-.00510	.03920	-.00760	-.46780	-.42500
-8.336	6.534	-.00870	.02450	-.02430	-.03660	-.01180	-.00200	.03710	-.00720	-.44710	-.39770
	GRADIENT	.01243	-.00048	-.00781	-.00011	-.00038	.00242	-.00086	.00017	.00897	.01060

RUN NO. 1342/ 0 RN/L = 3.50 GRADIENT INTERVAL = -5.00/ 5.00

ALPHAL	BETAL	CNFLS	CAFLS	CLMFLS	CYFLS	CYNFLS	CBLLS	CABLS	CYNBLS	CP5	CP6
-6.560	-5.765	-.12200	.03440	.05340	-.00600	-.02110	-.02410	.04700	-.00910	-.55620	-.51470
-6.463	-3.842	-.10040	.03350	.04160	-.01070	-.01810	-.01980	.04530	-.00880	-.53280	-.49810
-6.549	.324	-.05580	.02910	.01340	-.01870	-.01480	-.01110	.04320	-.00840	-.51050	-.47260
-6.270	4.454	-.01460	.02840	-.01290	-.01290	-.01980	-.00310	.03930	-.00760	-.46770	-.42800
-6.047	6.557	.00140	.02680	-.02250	-.00630	-.02520	.00000	.03500	-.00680	-.41940	-.37860
	GRADIENT	.01034	-.00062	-.00657	-.00027	-.00020	.00201	-.00072	.00014	.00784	.00845

IA156A, AEDC PWT 16T-470, 0 T S (R8NLC1) (10 MAY 80)

REFERENCE DATA

SREF = 2690.0000 SQ.FT. XMRP = 976.0000 IN. XT
LREF = 1290.3000 INCHES YMRP = .0000 IN. YT
BREF = 1290.3000 INCHES ZMRP = 400.0000 IN. ZT
SCALE = .0200

PARAMETRIC DATA

IB-ELV = 12.000 OB-ELV = 9.000
BDFLAP = .000 SPDBRK = .000
RUDDER = .000 SILTS = .000
MACH = 1.150 RN/L = 3.500

RUN NO. 1343/ 0 RN/L = 3.50 GRADIENT INTERVAL = -5.00/ 5.00

ALPHAL	BETAL	CNFLS	CAFLS	CLMFLS	CYFLS	CYNFLS	CBLLS	CABLS	CYNBLS	CP5	CP6
-4.308	-5.899	-.09840	.03560	.04770	.01760	-.03300	-.01940	.04550	-.00880	-.53920	-.49770
-4.497	-3.791	-.08090	.03420	.03740	.01440	-.03080	-.01600	.04440	-.00860	-.52470	-.48640
-4.354	.538	-.03780	.03050	.01040	.01430	-.03170	-.00760	.04200	-.00810	-.50030	-.45520
-3.808	4.430	-.00710	.03060	-.00860	.01690	-.03460	-.00160	.03790	-.00740	-.45170	-.41180
-3.894	6.289	.00260	.02930	-.01560	.01580	-.03590	.00030	.03570	-.00690	-.42380	-.38840
	GRADIENT	.00900	-.00045	-.00561	.00030	-.00046	.00176	-.00079	.00015	.00992	.00904

RUN NO. 1344/ 0 RN/L = 3.50 GRADIENT INTERVAL = -5.00/ 5.00

ALPHAL	BETAL	CNFLS	CAFLS	CLMFLS	CYFLS	CYNFLS	CBLLS	CABLS	CYNBLS	CP5	CP6
-.299	-6.808	-.06340	.03740	.03930	.05300	-.05480	-.01260	.04450	-.00860	-.53350	-.48050
-.273	-4.600	-.04920	.03710	.03030	.04870	-.05220	-.00980	.04310	-.00840	-.51500	-.46670
-.296	-.243	-.02310	.03400	.01310	.04390	-.05060	-.00470	.04120	-.00800	-.49490	-.44340
-.200	3.900	-.00350	.03140	-.00090	.03260	-.04340	-.00090	.03620	-.00700	-.43510	-.38840
-.176	6.101	.00470	.03060	-.00730	.02660	-.04050	.00070	.03400	-.00660	-.41340	-.36100
	GRADIENT	.00538	-.00067	-.00367	-.00189	.00103	.00105	-.00081	.00016	.00936	.00918

RUN NO. 1345/ 0 RN/L = 3.50 GRADIENT INTERVAL = -5.00/ 5.00

ALPHAL	BETAL	CNFLS	CAFLS	CLMFLS	CYFLS	CYNFLS	CBLLS	CABLS	CYNBLS	CP5	CP6
4.446	-5.760	-.01570	.03690	.02120	.05320	-.05910	-.00320	.04240	-.00820	-.50550	-.45900
4.449	-3.662	-.01090	.03630	.01790	.04750	-.05470	-.00230	.04190	-.00810	-.49950	-.45450
4.286	.365	-.00130	.03420	.00880	.03790	-.04820	-.00040	.04100	-.00800	-.48830	-.44470
4.202	4.189	.00700	.03220	-.00120	.02150	-.03750	.00120	.03810	-.00740	-.45460	-.41200
4.169	6.349	.00980	.03090	-.00460	.01600	-.03510	.00170	.03570	-.00690	-.43040	-.38380
	GRADIENT	.00228	-.00052	-.00243	-.00330	.00219	.00045	-.00048	.00009	.00569	.00539

IA156A, AEDC PWT 16T-470, O T S (R8NLC2) (10 MAY 80)

REFERENCE DATA

SREF = 2690.0000 SQ.FT. XMRP = 976.0000 IN. XT
LREF = 1290.3000 INCHES YMRP = .0000 IN. YT
BREF = 1290.3000 INCHES ZMRP = 400.0000 IN. ZT
SCALE = .0200

PARAMETRIC DATA

IB-ELV = 12.000 OB-ELV = 9.000
BDFLAP = .000 SPDBRK = .000
RUDDER = .000 SILTS = .000
MACH = 1.250 RN/L = 3.500

RUN NO. 1346/ 0 RN/L = 3.50 GRADIENT INTERVAL = -5.00/ 5.00

ALPHAL	BETAL	CNFLS	CAFLS	CLMFLS	CYFLS	CYNFLS	CBLLS	CABLS	CYNBLS	CP5	CP6
-8.786	-5.696	-.15320	.03460	.06430	-.02890	-.00830	-.03020	.04340	-.00840	-.51350	-.47470
-8.692	-3.575	-.12650	.03340	.05010	-.03450	-.00380	-.02500	.04290	-.00830	-.50420	-.47220
-8.592	.442	-.07650	.03080	.01760	-.04750	.00110	-.01520	.04170	-.00810	-.49190	-.45680
-8.342	4.625	-.02890	.02780	-.01320	-.04430	-.00410	-.00590	.03630	-.00700	-.43460	-.39200
-8.341	6.540	-.01340	.02610	-.02270	-.03920	-.00850	-.00290	.03290	-.00640	-.39590	-.35320
	GRADIENT	.01190	-.00068	-.00772	-.00118	-.00004	.00233	-.00081	.00016	.00852	.00982

RUN NO. 1347/ 0 RN/L = 3.50 GRADIENT INTERVAL = -5.00/ 5.00

ALPHAL	BETAL	CNFLS	CAFLS	CLMFLS	CYFLS	CYNFLS	CBLLS	CABLS	CYNBLS	CP5	CP6
-6.537	-5.788	-.12220	.03620	.05440	-.00830	-.01730	-.02410	.04220	-.00820	-.50350	-.45820
-6.427	-3.864	-.10210	.03480	.04340	-.01340	-.01440	-.02020	.04130	-.00800	-.48710	-.45230
-6.501	.333	-.05880	.03080	.01550	-.02170	-.01150	-.01170	.03990	-.00780	-.47310	-.43610
-6.222	4.470	-.01780	.02970	-.01130	-.01690	-.01640	-.00370	.03560	-.00690	-.42580	-.38440
-6.174	6.458	-.00290	.02730	-.02150	-.01290	-.02040	-.00080	.03270	-.00630	-.39420	-.35060
	GRADIENT	.01012	-.00061	-.00656	-.00042	-.00024	.00198	-.00068	.00013	.00735	.00814

RUN NO. 1348/ 0 RN/L = 3.49 GRADIENT INTERVAL = -5.00/ 5.00

ALPHAL	BETAL	CNFLS	CAFLS	CLMFLS	CYFLS	CYNFLS	CBLLS	CABLS	CYNBLS	CP5	CP6
-4.246	-5.939	-.09890	.03730	.04890	.01570	-.03010	-.01960	.04150	-.00800	-.49810	-.44600
-4.440	-3.796	-.08190	.03580	.03800	.00800	-.02630	-.01620	.04030	-.00780	-.48050	-.43660
-4.322	.530	-.04120	.03190	.01240	.00570	-.02560	-.00830	.03880	-.00750	-.46380	-.41900
-3.771	4.420	-.01040	.03090	-.00640	.01240	-.03120	-.00220	.03560	-.00690	-.42540	-.38590
-3.884	6.297	-.00030	.02940	-.01380	.01130	-.03200	-.00030	.03230	-.00630	-.38780	-.34850
	GRADIENT	.00872	-.00060	-.00541	.00052	-.00058	.00171	-.00057	.00011	.00665	.00613

RUN NO. 1349/ 0 RN/L = 3.49 GRADIENT INTERVAL = -5.00/ 5.00

ALPHAL	BETAL	CNFLS	CAFLS	CLMFLS	CYFLS	CYNFLS	CBLLS	CABLS	CYNBLS	CP5	CP6
-.246	-6.836	-.06380	.03890	.04100	.05130	-.05230	-.01270	.04100	-.00800	-.49600	-.43730
-.214	-4.665	-.05110	.03810	.03320	.04750	-.04990	-.01020	.04000	-.00780	-.48270	-.42890
-.213	-.228	-.02620	.03500	.01640	.04180	-.04750	-.00530	.03750	-.00730	-.44970	-.40430
-.126	3.907	-.00820	.03140	.00340	.03080	-.04130	-.00180	.03330	-.00650	-.40140	-.35710
-.129	6.121	.00050	.03060	-.00360	.02540	-.03950	-.00020	.03080	-.00600	-.37540	-.32680
	GRADIENT	.00501	-.00078	-.00348	-.00194	.00100	.00098	-.00078	.00015	.00946	.00834

IA156A, AEDC PWT 16T-470, O T S (R8NLC2) (10 MAY 80)

REFERENCE DATA

SREF = 2690.0000 SQ.FT. XMRP = 976.0000 IN. XT
LREF = 1290.3000 INCHES YMRP = .0000 IN. YT
BREF = 1290.3000 INCHES ZMRP = 400.0000 IN. ZT
SCALE = .0200

PARAMETRIC DATA

IB-ELV = 12.000 OB-ELV = 9.000
BDFLAP = .000 SPDBRK = .000
RUDDER = .000 SILTS = .000
MACH = 1.250 RN/L = 3.500

RUN NO. 1350/ 0 RN/L = 3.50 GRADIENT INTERVAL = -5.00/ 5.00

ALPHAL	BETAL	CNFLS	CAFLS	CLMFLS	CYFLS	CYNFLS	CBLLS	CABLS	CYNBLS	CP5	CP6
4.511	-5.753	-.01490	.03830	.02200	.05000	-.05650	-.00310	.03860	-.00750	-.46460	-.41540
4.536	-3.662	-.01020	.03770	.01900	.04380	-.05200	-.00220	.03870	-.00750	-.46500	-.41600
4.369	.379	-.00360	.03500	.01160	.03350	-.04570	-.00090	.03730	-.00720	-.44880	-.40170
4.256	4.182	.00480	.03220	.00070	.01800	-.03570	.00070	.03470	-.00670	-.41760	-.37270
4.238	6.377	.00850	.03110	-.00390	.01210	-.03310	.00150	.03210	-.00620	-.38860	-.34230
	GRADIENT	.00191	-.00070	-.00233	-.00328	.00207	.00037	-.00051	.00010	.00602	.00550

IA156A, AEDC PWT 16T-470, O T S (R8NLC3) (10 MAY 80)

REFERENCE DATA

SREF = 2690.0000 SQ.FT. XMRP = 976.0000 IN. XT
LREF = 1290.3000 INCHES YMRP = .0000 IN. YT
BREF = 1290.3000 INCHES ZMRP = 400.0000 IN. ZT
SCALE = .0200

PARAMETRIC DATA

IB-ELV = 12.000 OB-ELV = -2.000
BDFLAP = .000 SPDBRK = .000
RUDDER = .000 SILTS = .000
MACH = 1.150 RN/L = 3.500

RUN NO. 1355/ 0 RN/L = 3.50 GRADIENT INTERVAL = -5.00/ 5.00

ALPHAL	BETAL	CNFLS	CAFLS	CLMFLS	CYFLS	CYNFLS	CBLLS	CABLS	CYNBLS	CP5	CP6
-8.606	-5.768	-.14860	.03220	.06030	-.02960	-.00980	-.02910	.04630	-.00900	-.54670	-.50810
-8.765	-3.586	-.12650	.03070	.04820	-.04240	-.00180	-.02470	.04520	-.00880	-.53030	-.49780
-8.673	.544	-.07260	.02830	.01430	-.05200	.00280	-.01420	.04330	-.00840	-.51130	-.47540
-8.369	4.558	-.02610	.02580	-.01380	-.04350	-.00430	-.00510	.03870	-.00750	-.46190	-.41910
-8.342	6.514	-.01020	.02360	-.02300	-.03790	-.00930	-.00200	.03610	-.00700	-.43360	-.38840
	GRADIENT	.01233	-.00060	-.00762	-.00015	-.00030	.00241	-.00080	.00016	.00833	.00964

RUN NO. 1356/ 0 RN/L = 3.50 GRADIENT INTERVAL = -5.00/ 5.00

ALPHAL	BETAL	CNFLS	CAFLS	CLMFLS	CYFLS	CYNFLS	CBLLS	CABLS	CYNBLS	CP5	CP6
-6.586	-5.782	-.12220	.03380	.05300	-.00900	-.01780	-.02390	.04580	-.00890	-.54160	-.50100
-6.474	-3.847	-.10030	.03220	.04100	-.01420	-.01390	-.01960	.04450	-.00860	-.52470	-.48940
-6.563	.314	-.05620	.02830	.01310	-.02170	-.01100	-.01100	.04200	-.00820	-.50020	-.45620
-6.287	4.442	-.01550	.02870	-.01280	-.01530	-.01700	-.00300	.03780	-.00730	-.45400	-.40780
-5.966	6.536	.00040	.02650	-.02140	-.00760	-.02270	.00010	.03400	-.00660	-.40740	-.36730
	GRADIENT	.01023	-.00042	-.00649	-.00014	-.00037	.00200	-.00081	.00016	.00853	.00984

IA156A, AEDC PWT 16T-470, O T S (R8NLC3) (10 MAY 80)

REFERENCE DATA

SREF = 2690.0000 SQ.FT. XMRP = 976.0000 IN. XT
LREF = 1290.3000 INCHES YMRP = .0000 IN. YT
BREF = 1290.3000 INCHES ZMRP = 400.0000 IN. ZT
SCALE = .0200

PARAMETRIC DATA

IB-ELV = 12.000 OB-ELV = -2.000
BDFLAP = .000 SPDBRK = .000
RUDDER = .000 SILTS = .000
MACH = 1.150 RN/L = 3.500

RUN NO. 1357/ 0 RN/L = 3.50 GRADIENT INTERVAL = -5.00/ 5.00

ALPHAL	BETAL	CNFLS	CAFLS	CLMFLS	CYFLS	CYNFLS	CBLLS	CABLS	CYNBLS	CP5	CP6
-4.309	-5.919	-.10020	.03510	.04810	.01460	-.02980	-.01950	.04470	-.00870	-.53120	-.48700
-4.502	-3.802	-.08160	.03350	.03710	.01030	-.02670	-.01590	.04310	-.00840	-.51090	-.47110
-4.369	.527	-.03870	.02970	.01040	.01100	-.02780	-.00750	.04090	-.00790	-.49120	-.44110
-3.808	4.415	-.00810	.02980	-.00820	.01450	-.03170	-.00150	.03720	-.00720	-.44340	-.40480
-3.910	6.272	.00170	.02840	-.01540	.01290	-.03280	.00040	.03520	-.00680	-.41820	-.38320
	GRADIENT	.00896	-.00046	-.00553	.00050	-.00060	.00176	-.00071	.00015	.00815	.00805

RUN NO. 1358/ 0 RN/L = 3.50 GRADIENT INTERVAL = -5.00/ 5.00

ALPHAL	BETAL	CNFLS	CAFLS	CLMFLS	CYFLS	CYNFLS	CBLLS	CABLS	CYNBLS	CP5	CP6
-.346	-6.847	-.06440	.03640	.03910	.05000	-.05140	-.01250	.04410	-.00860	-.52900	-.47620
-.319	-4.638	-.05040	.03670	.03030	.04580	-.04880	-.00980	.04180	-.00810	-.50200	-.44990
-.349	-.232	-.02380	.03350	.01260	.04060	-.04670	-.00460	.04020	-.00780	-.48660	-.42930
-.244	3.891	-.00420	.03140	-.00100	.03000	-.04040	-.00080	.03520	-.00680	-.42660	-.37450
-.221	6.097	.00410	.03000	-.00730	.02450	-.03780	.00080	.03340	-.00650	-.40630	-.35370
	GRADIENT	.00542	-.00062	-.00367	-.00184	.00098	.00106	-.00077	.00015	.00878	.00879

RUN NO. 1359/ 0 RN/L = 3.50 GRADIENT INTERVAL = -5.00/ 5.00

ALPHAL	BETAL	CNFLS	CAFLS	CLMFLS	CYFLS	CYNFLS	CBLLS	CABLS	CYNBLS	CP5	CP6
4.445	-5.782	-.01620	.03660	.02110	.05120	-.05650	-.00310	.04150	-.00810	-.49650	-.44940
4.408	-3.646	-.01090	.03580	.01740	.04510	-.05170	-.00200	.04130	-.00800	-.49300	-.44720
4.258	.350	-.00140	.03290	.00820	.03590	-.04520	-.00020	.04050	-.00790	-.48410	-.43750
4.203	4.193	.00650	.03170	-.00140	.01960	-.03480	.00140	.03740	-.00730	-.44830	-.40430
4.148	6.342	.00910	.03030	-.00470	.01490	-.03320	.00190	.03540	-.00690	-.42760	-.37930
	GRADIENT	.00222	-.00052	-.00240	-.00325	.00215	.00043	-.00050	.00009	.00568	.00545

IA156A, AEDC PWT 16T-470, 0 T S (R8NLC4) (10 MAY 80)

REFERENCE DATA

SREF = 2690.0000 SQ.FT. XMRP = 976.0000 IN. XT
LREF = 1290.3000 INCHES YMRP = .0000 IN. YT
BREF = 1290.3000 INCHES ZMRP = 400.0000 IN. ZT
SCALE = .0200

PARAMETRIC DATA

IB-ELV = 12.000 OB-ELV = -2.000
BDFLAP = .000 SPDBRK = .000
RUDDER = .000 SILTS = .000
MACH = 1.250 RN/L = 3.500

RUN NO. 1360/ 0 RN/L = 3.50 GRADIENT INTERVAL = -5.00/ 5.00

ALPHAL	BETAL	CNFLS	CAFLS	CLMFLS	CYFLS	CYNFLS	CBLLS	CABLS	CYNBLS	CP5	CP6
-8.646	-5.769	-.15260	.03460	.06390	-.02900	-.00690	-.02980	.04260	-.00830	-.50440	-.46590
-8.713	-3.553	-.12710	.03310	.05000	-.03860	-.00040	-.02480	.04230	-.00820	-.49820	-.46590
-8.627	.430	-.07870	.03020	.01830	-.05090	.00440	-.01540	.04090	-.00790	-.48270	-.44760
-8.345	4.650	-.02940	.02720	-.01300	-.04580	-.00170	-.00570	.03590	-.00700	-.43110	-.38700
-8.362	6.540	-.01460	.02510	-.02240	-.04220	-.00580	-.00290	.03320	-.00640	-.39980	-.35640
	GRADIENT	.01191	-.00072	-.00768	-.00086	-.00017	.00233	-.00078	.00015	.00822	.00967

RUN NO. 1361/ 0 RN/L = 3.50 GRADIENT INTERVAL = -5.00/ 5.00

ALPHAL	BETAL	CNFLS	CAFLS	CLMFLS	CYFLS	CYNFLS	CBLLS	CABLS	CYNBLS	CP5	CP6
-6.575	-5.822	-.12350	.03580	.05470	-.00990	-.01520	-.02420	.04170	-.00810	-.49800	-.45260
-6.433	-3.856	-.10280	.03400	.04350	-.01540	-.01200	-.02010	.04080	-.00790	-.48240	-.44760
-6.521	.310	-.06040	.02980	.01590	-.02460	-.00840	-.01180	.04030	-.00780	-.47940	-.43910
-6.235	4.463	-.01860	.02900	-.01120	-.01930	-.01370	-.00360	.03520	-.00680	-.42150	-.38000
-6.193	6.449	-.00370	.02720	-.02110	-.01470	-.01800	-.00070	.03190	-.00620	-.38290	-.34260
	GRADIENT	.01012	-.00060	-.00657	-.00047	-.00020	.00198	-.00067	.00013	.00732	.00812

RUN NO. 1362/ 0 RN/L = 3.50 GRADIENT INTERVAL = -5.00/ 5.00

ALPHAL	BETAL	CNFLS	CAFLS	CLMFLS	CYFLS	CYNFLS	CBLLS	CABLS	CYNBLS	CP5	CP6
-4.225	-5.960	-.09940	.03660	.04850	.01270	-.02720	-.01940	.04110	-.00800	-.49460	-.44050
-4.455	-3.799	-.09240	.03520	.03780	.00550	-.02350	-.01610	.03980	-.00770	-.47580	-.43100
-4.337	.519	-.04170	.03090	.01210	.00300	-.02250	-.00810	.03840	-.00750	-.46200	-.41290
-3.812	4.446	-.01080	.03070	-.00670	.00960	-.02820	-.00210	.03450	-.00670	-.41300	-.37190
-3.882	6.266	-.00120	.02880	-.01360	.00920	-.02940	-.00020	.03220	-.00630	-.38590	-.34800
	GRADIENT	.00870	-.00055	-.00541	.00048	-.00056	.00170	-.00064	.00012	.00754	.00712

RUN NO. 1363/ 0 RN/L = 3.50 GRADIENT INTERVAL = -5.00/ 5.00

ALPHAL	BETAL	CNFLS	CAFLS	CLMFLS	CYFLS	CYNFLS	CBLLS	CABLS	CYNBLS	CP5	CP6
-.295	-6.890	-.06480	.03840	.04070	.04850	-.04920	-.01260	.04010	-.00780	-.48810	-.42630
-.263	-4.602	-.05170	.03760	.03270	.04460	-.04670	-.01010	.03920	-.00760	-.47470	-.41770
-.265	-.316	-.02720	.03450	.01630	.03920	-.04430	-.00530	.03670	-.00710	-.44210	-.39370
-.175	3.952	-.00800	.03140	.00260	.02880	-.03880	-.00160	.03270	-.00630	-.39610	-.34880
-.180	6.150	.00050	.03000	-.00420	.02380	-.03730	.00010	.03090	-.00600	-.37660	-.32620
	GRADIENT	.00511	-.00072	-.00352	-.00185	.00092	.00099	-.00076	.00015	.00919	.00805

IA156A, AEDC PWT 16T-470, O T S (R8NLC4) (10 MAY 80)

REFERENCE DATA

SREF = 2690.0000 SQ.FT. XMRP = 976.0000 IN. XT
LREF = 1290.3000 INCHES YMRP = .0000 IN. YT
BREF = 1290.3000 INCHES ZMRP = 400.0000 IN. ZT
SCALE = .0200

PARAMETRIC DATA

IB-ELV = 12.000 OB-ELV = -2.000
BDFLAP = .000 SPDBRK = .000
RUDDER = .000 SILTS = .000
MACH = 1.250 RN/L = 3.500

RUN NO. 1364/ 0 RN/L = 3.50 GRADIENT INTERVAL = -5.00/ 5.00

ALPHAL	BETAL	CNFLS	CAFLS	CLMFLS	CYFLS	CYNFLS	CBLLS	CABLS	CYNBLS	CP5	CP6
4.604	-5.657	-.01450	.03800	.02180	.04810	-.05440	-.00280	.03820	-.00740	-.45990	-.41100
4.482	-3.539	-.01080	.03750	.01890	.04180	-.04970	-.00200	.03800	-.00740	-.45690	-.40880
4.212	.365	-.00460	.03480	.01160	.03230	-.04360	-.00080	.03680	-.00710	-.44270	-.39460
4.271	4.305	.00450	.03150	.00050	.01590	-.03320	.00100	.03390	-.00660	-.41010	-.36120
4.212	6.365	.00760	.03070	-.00350	.01130	-.03140	.00160	.03200	-.00620	-.38890	-.34080
	GRADIENT	.00195	-.00077	-.00235	-.00330	.00210	.00038	-.00052	.00010	.00597	.00607

IA156A, AEDC PWT 16T-470, O T S (R8NLC5) (10 MAY 80)

REFERENCE DATA

SREF = 2690.0000 SQ.FT. XMRP = 976.0000 IN. XT
LREF = 1290.3000 INCHES YMRP = .0000 IN. YT
BREF = 1290.3000 INCHES ZMRP = 400.0000 IN. ZT
SCALE = .0200

PARAMETRIC DATA

IB-ELV = 12.000 OB-ELV = -2.000
BDFLAP = .000 SPDBRK = .000
RUDDER = .000 SILTS = .000
MACH = 1.400 RN/L = 3.500

RUN NO. 1365/ 0 RN/L = 3.00 GRADIENT INTERVAL = -5.00/ 5.00

ALPHAL	BETAL	CNFLS	CAFLS	CLMFLS	CYFLS	CYNFLS	CBLLS	CABLS	CYNBLS	CP5	CP6
-8.519	-5.812	-.15790	.03550	.06690	-.02950	-.00270	-.03090	.03800	-.00740	-.46160	-.40370
-8.628	-3.607	-.13520	.03500	.05430	-.04660	.00840	-.02650	.03800	-.00740	-.45420	-.41190
-8.531	.411	-.08180	.03100	.02080	-.05270	.00840	-.01610	.03640	-.00710	-.43230	-.39750
-8.266	4.733	-.03400	.02780	-.01000	-.04700	.00020	-.00670	.03190	-.00620	-.38380	-.34230
-8.224	6.571	-.02110	.02610	-.01700	-.04210	-.00450	-.00410	.02960	-.00570	-.35860	-.31600
	GRADIENT	.01212	-.00086	-.00770	-.00003	-.00099	.00237	-.00074	.00014	.00848	.00840

RUN NO. 1366/ 0 RN/L = 3.00 GRADIENT INTERVAL = -5.00/ 5.00

ALPHAL	BETAL	CNFLS	CAFLS	CLMFLS	CYFLS	CYNFLS	CBLLS	CABLS	CYNBLS	CP5	CP6
-6.549	-5.864	-.12690	.03630	.05510	-.01830	-.00610	-.02480	.03760	-.00730	-.45900	-.39740
-6.464	-3.926	-.10450	.03490	.04310	-.02390	-.00330	-.02050	.03650	-.00710	-.44130	-.38970
-6.468	.302	-.06250	.03110	.01750	-.02890	-.00330	-.01220	.03520	-.00680	-.42010	-.38220
-6.163	4.486	-.02210	.02970	-.00850	-.02120	-.01220	-.00430	.03240	-.00630	-.38840	-.34970
-6.121	6.500	-.00910	.02780	-.01630	-.01720	-.01620	-.00180	.02950	-.00570	-.35600	-.31500
	GRADIENT	.00980	-.00062	-.00613	.00032	-.00106	.00193	-.00049	.00010	.00629	.00475

IA156A, AEDC PWT 16T-470, 0 T S (R8NLC5) (10 MAY 80)

REFERENCE DATA

SREF = 2690.0000 SQ.FT. XMRP = 976.0000 IN. XT
LREF = 1290.3000 INCHES YMRP = .0000 IN. YT
BREF = 1290.3000 INCHES ZMRP = 400.0000 IN. ZT
SCALE = .0200

PARAMETRIC DATA

IB-ELV = 12.000 OB-ELV = -2.000
BDFLAP = .000 SPDBRK = .000
RUDDER = .000 SILTS = .000
MACH = 1.400 RN/L = 3.500

RUN NO. 1367/ 0 RN/L = 2.99 GRADIENT INTERVAL = -5.00/ 5.00

ALPHAL	BETAL	CNFLS	CAFLS	CLMFLS	CYFLS	CYNFLS	CBLLS	CABLS	CYNBLS	CP5	CP6
-4.225	-5.999	-.09650	.03740	.04610	.00750	-.02140	-.01890	.03590	-.00700	-.43890	-.37920
-4.495	-3.847	-.08100	.03500	.03580	-.00130	-.01630	-.01590	.03550	-.00690	-.43140	-.37720
-4.308	.531	-.04360	.03130	.01350	-.00340	-.01690	-.00860	.03420	-.00660	-.41220	-.36650
-3.759	4.486	-.01340	.03100	-.00450	.00550	-.02610	-.00260	.03160	-.00610	-.37980	-.33980
-3.846	6.314	-.00370	.02930	-.01140	.00550	-.02780	-.00070	.02930	-.00570	-.35310	-.31400
	GRADIENT	.00812	-.00049	-.00484	.00079	-.00116	.00160	-.00046	.00010	.00616	.00445

RUN NO. 1368/ 0 RN/L = 3.00 GRADIENT INTERVAL = -5.00/ 5.00

ALPHAL	BETAL	CNFLS	CAFLS	CLMFLS	CYFLS	CYNFLS	CBLLS	CABLS	CYNBLS	CP5	CP6
-.324	-6.874	-.06090	.03840	.03840	.04530	-.04620	-.01190	.03590	-.00700	-.44150	-.37680
-.300	-4.688	-.04920	.03750	.03150	.04040	-.04280	-.00970	.03520	-.00680	-.43040	-.37200
-.275	-.305	-.02750	.03490	.01710	.03400	-.04000	-.00540	.03300	-.00640	-.39950	-.35160
-.204	3.857	-.01120	.03120	.00580	.02610	-.03690	-.00220	.03030	-.00590	-.36460	-.32540
-.222	6.073	-.00250	.03020	-.00130	.02150	-.03560	-.00050	.02780	-.00540	-.33890	-.29530
	GRADIENT	.00445	-.00074	-.00301	-.00167	.00069	.00088	-.00057	.00011	.00770	.00545

RUN NO. 1369/ 0 RN/L = 3.00 GRADIENT INTERVAL = -5.00/ 5.00

ALPHAL	BETAL	CNFLS	CAFLS	CLMFLS	CYFLS	CYNFLS	CBLLS	CABLS	CYNBLS	CP5	CP6
4.579	-5.764	-.01540	.03780	.02550	.04690	-.05500	-.00290	.03500	-.00680	-.42940	-.36730
4.488	-3.534	-.01100	.03690	.02040	.03840	-.04850	-.00210	.03410	-.00660	-.41770	-.35910
4.195	.330	-.00610	.03400	.01330	.02770	-.04090	-.00110	.03290	-.00640	-.40130	-.34830
4.216	4.263	.00230	.03180	.00310	.01270	-.03170	.00050	.03030	-.00590	-.37040	-.31980
4.169	6.358	.00690	.03110	-.00210	.00790	-.02980	.00140	.02870	-.00560	-.35050	-.30250
	GRADIENT	.00171	-.00065	-.00222	-.00330	.00216	.00033	-.00049	.00009	.00607	.00505

IA156A, AEDC PWT 16T-470, O T S (R8NLC6) (10 MAY 80)

REFERENCE DATA

SREF = 2690.0000 SQ.FT. XMRP = 976.0000 IN. XT
LREF = 1290.3000 INCHES YMRP = .0000 IN. YT
BREF = 1290.3000 INCHES ZMRP = 400.0000 IN. ZT
SCALE = .0200

PARAMETRIC DATA

IB-ELV = 12.000 OB-ELV = -2.000
BDFLAP = .000 SPDBRK = .000
RUDDER = .000 SILTS = .000
MACH = 1.550 RN/L = 3.200

RUN NO. 1370/ 0 RN/L = 2.99 GRADIENT INTERVAL = -5.00/ 5.00

ALPHAL	BETAL	CNFLS	CAFLS	CLMFLS	CYFLS	CYNFLS	CBLLS	CABLS	CYNBLS	CP5	CP6
-8.523	-5.814	-.15430	.03400	.06790	-.02340	-.00350	-.03010	.03420	-.00660	-.42020	-.35890
-8.662	-3.576	-.13410	.03380	.05500	-.04300	.00920	-.02620	.03350	-.00650	-.40850	-.35510
-8.506	.473	-.08440	.02990	.02460	-.05130	.01060	-.01660	.03150	-.00610	-.37820	-.33960
-8.221	4.817	-.03740	.02620	-.00720	-.04870	.00410	-.00740	.02810	-.00550	-.33910	-.30100
-8.181	6.662	-.02430	.02510	-.01530	-.04610	.00010	-.00480	.02590	-.00500	-.31370	-.27610
	GRADIENT	.01151	-.00090	-.00741	-.00066	-.00062	.00224	-.00065	.00012	.00828	.00648

RUN NO. 1371/ 0 RN/L = 3.00 GRADIENT INTERVAL = -5.00/ 5.00

ALPHAL	BETAL	CNFLS	CAFLS	CLMFLS	CYFLS	CYNFLS	CBLLS	CABLS	CYNBLS	CP5	CP6
-6.616	-5.879	-.12310	.03550	.05460	-.01600	-.00560	-.02410	.03340	-.00650	-.41440	-.34730
-6.476	-3.888	-.10280	.03380	.04330	-.02300	-.00180	-.02010	.03230	-.00630	-.39620	-.33980
-6.475	.384	-.06280	.03010	.01850	-.02840	-.00190	-.01230	.03100	-.00600	-.37600	-.33110
-6.120	4.574	-.02540	.02760	-.00550	-.02280	-.00870	-.00500	.02780	-.00540	-.33350	-.29870
-6.049	6.587	-.01310	.02670	-.01370	-.02040	-.01250	-.00260	.02600	-.00500	-.31680	-.27440
	GRADIENT	.00915	-.00073	-.00577	.00002	-.00081	.00178	-.00053	.00011	.00740	.00485

RUN NO. 1372/ 0 RN/L = 3.00 GRADIENT INTERVAL = -5.00/ 5.00

ALPHAL	BETAL	CNFLS	CAFLS	CLMFLS	CYFLS	CYNFLS	CBLLS	CABLS	CYNBLS	CP5	CP6
-4.319	-6.009	-.09230	.03620	.04360	.00730	-.02060	-.01810	.03280	-.00640	-.40600	-.34060
-4.566	-3.837	-.07660	.03430	.03330	-.00120	-.01570	-.01500	.03150	-.00610	-.38770	-.33020
-4.349	.628	-.04220	.03050	.01270	-.00410	-.01610	-.00830	.03010	-.00580	-.36660	-.31960
-3.728	4.558	-.01620	.02870	-.00260	.00050	-.02080	-.00320	.02760	-.00540	-.33390	-.29500
-3.800	6.398	-.00700	.02760	-.00970	.00040	-.02280	-.00140	.02570	-.00500	-.31170	-.27310
	GRADIENT	.00721	-.00067	-.00428	.00018	-.00060	.00141	-.00046	.00008	.00637	.00415

RUN NO. 1373/ 0 RN/L = 3.00 GRADIENT INTERVAL = -5.00/ 5.00

ALPHAL	BETAL	CNFLS	CAFLS	CLMFLS	CYFLS	CYNFLS	CBLLS	CABLS	CYNBLS	CP5	CP6
-.411	-6.896	-.05560	.03760	.03460	.04320	-.04540	-.01090	.03270	-.00630	-.41050	-.33470
-.381	-4.757	-.04510	.03600	.02840	.03800	-.04130	-.00890	.03200	-.00620	-.39500	-.33510
-.360	-.357	-.02620	.03390	.01610	.03230	-.03860	-.00510	.02930	-.00570	-.35620	-.31070
-.329	3.790	-.01080	.03100	.00510	.02160	-.03300	-.00210	.02780	-.00540	-.33620	-.29600
-.354	5.988	-.00210	.02950	-.00230	.01710	-.03160	-.00040	.02510	-.00490	-.30610	-.26600
	GRADIENT	.00402	-.00058	-.00273	-.00191	.00097	.00080	-.00049	.00009	.00690	.00458

IA156A, AEDC PWT 16T-470, O T S (R8NLC6) (10 MAY 80)

REFERENCE DATA

SREF = 2690.0000 SQ.FT. XMRP = 976.0000 IN. XT
LREF = 1290.3000 INCHES YMRP = .0000 IN. YT
BREF = 1290.3000 INCHES ZMRP = 400.0000 IN. ZT
SCALE = .0200

PARAMETRIC DATA

IB-ELV = 12.000 OB-ELV = -2.000
BDFLAP = .000 SPDBRK = .000
RUDDER = .000 SILTS = .000
MACH = 1.550 RN/L = 3.200

RUN NO. 1374/ 0 RN/L = 3.01 GRADIENT INTERVAL = -5.00/ 5.00

ALPHAL	BETAL	CNFLS	CAFLS	CLMFLS	CYFLS	CYNFLS	CBLLS	CABLS	CYNBLS	CP5	CP6
4.737	-5.565	-.00880	.03680	.02150	.04100	-.05170	-.00170	.03250	-.00630	-.40460	-.33530
4.508	-3.431	-.00690	.03570	.01810	.03360	-.04580	-.00130	.03150	-.00610	-.39180	-.32510
4.141	.425	-.00520	.03350	.01320	.02440	-.03930	-.00100	.02920	-.00570	-.36060	-.30500
4.114	4.272	.00180	.03140	.00420	.00990	-.02990	.00040	.02710	-.00530	-.33620	-.28030
4.051	6.366	.00600	.03010	-.00050	.00600	-.02830	.00120	.02600	-.00500	-.32300	-.26910
	GRADIENT	.00113	-.00056	-.00180	-.00308	.00206	.00022	-.00057	.00010	.00722	.00582

IA156A, AEDC PWT 16T-470, O T S W/SILTS (R8NLC7) (10 MAY 80)

REFERENCE DATA

SREF = 2690.0000 SQ.FT. XMRP = 976.0000 IN. XT
LREF = 1290.3000 INCHES YMRP = .0000 IN. YT
BREF = 1290.3000 INCHES ZMRP = 400.0000 IN. ZT
SCALE = .0200

PARAMETRIC DATA

IB-ELV = 9.000 OB-ELV = -2.000
BDFLAP = .000 SPDBRK = .000
RUDDER = .000 SILTS = 1.000
MACH = 1.150 RN/L = 3.500
IB-AIL = 1.000

RUN NO. 1377/ 0 RN/L = 3.50 GRADIENT INTERVAL = -5.00/ 5.00

ALPHAL	BETAL	CNFLS	CAFLS	CLMFLS	CYFLS	CYNFLS	CBLLS	CABLS	CYNBLS	CP5	CP6
-8.751	-5.650	-.14500	.03080	.05810	-.02880	-.01060	-.02830	.04700	-.00910	-.55440	-.51620
-8.726	-3.603	-.12270	.02950	.04650	-.03870	-.00330	-.02400	.04600	-.00890	-.54050	-.50720
-8.671	.540	-.07000	.02680	.01280	-.04970	.00150	-.01370	.04370	-.00850	-.51660	-.47900
-8.386	4.534	-.02530	.02420	-.01460	-.04360	-.00410	-.00490	.03930	-.00760	-.46980	-.42500
-8.340	6.501	-.00960	.02270	-.02400	-.03850	-.00880	-.00190	.03640	-.00710	-.43670	-.39190
	GRADIENT	.01197	-.00065	-.00751	-.00061	-.00009	.00235	-.00082	.00016	.00867	.01008

RUN NO. 1378/ 0 RN/L = 3.50 GRADIENT INTERVAL = -5.00/ 5.00

ALPHAL	BETAL	CNFLS	CAFLS	CLMFLS	CYFLS	CYNFLS	CBLLS	CABLS	CYNBLS	CP5	CP6
-6.594	-5.792	-.12130	.03360	.05250	-.00800	-.01840	-.02370	.04560	-.00880	-.53910	-.49850
-6.470	-3.843	-.09870	.03170	.04020	-.01270	-.01460	-.01920	.04440	-.00860	-.52350	-.48720
-6.560	.310	-.05440	.02730	.01210	-.01990	-.01170	-.01060	.04190	-.00810	-.49850	-.45570
-6.287	4.437	-.01500	.02670	-.01320	-.01500	-.01690	-.00290	.03860	-.00750	-.46140	-.41830
-6.015	6.558	.00110	.02540	-.02230	-.00790	-.02240	.00020	.03410	-.00660	-.40700	-.37000
	GRADIENT	.01011	-.00060	-.00645	-.00028	-.00028	.00197	-.00070	.00013	.00750	.00832

IA156A, AEDC PWT 16T-470, O T S W/SILTS (R8NLC7) (10 MAY 80)

REFERENCE DATA

SREF = 2690.0000 SQ.FT. XMRP = 976.0000 IN. XT
LREF = 1290.3000 INCHES YMRP = .0000 IN. YT
BREF = 1290.3000 INCHES ZMRP = 400.0000 IN. ZT
SCALE = .0200

PARAMETRIC DATA

IB-ELV =	9.000	OB-ELV =	-2.000
BDFLAP =	.000	SPDBRK =	.000
RUDDER =	.000	SILTS =	1.000
MACH =	1.150	RN/L =	3.500
IB-AIL =	1.000		

RUN NO. 1379/ 0 RN/L = 3.50 GRADIENT INTERVAL = -5.00/ 5.00

ALPHAL	BETAL	CNFLS	CAFLS	CLMFLS	CYFLS	CYNFLS	CBLLS	CABLS	CYNBLS	CP5	CP6
-4.310	-5.932	-.09860	.03440	.04730	.01550	-.03020	-.01920	.04480	-.00870	-.53110	-.48800
-4.501	-3.797	-.08050	.03300	.03650	.01130	-.02710	-.01570	.04300	-.00840	-.50950	-.47080
-4.393	.522	-.03760	.02920	.00980	.01150	-.02790	-.00730	.04020	-.00780	-.48180	-.43430
-3.818	4.408	-.00770	.02940	-.00870	.01500	-.03190	-.00140	.03720	-.00720	-.44500	-.40339
-3.920	6.270	.00210	.02800	-.01590	.01340	-.03290	.00050	.03510	-.00680	-.41680	-.38280
	GRADIENT	.00889	-.00045	-.00552	.00044	-.00058	.00175	-.00071	.00015	.00783	.00823

RUN NO. 1380/ 0 RN/L = 3.50 GRADIENT INTERVAL = -5.00/ 5.00

ALPHAL	BETAL	CNFLS	CAFLS	CLMFLS	CYFLS	CYNFLS	CBLLS	CABLS	CYNBLS	CP5	CP6
-.360	-6.847	-.06370	.03650	.03840	.05050	-.05190	-.01240	.04360	-.00850	-.52330	-.46940
-.334	-4.645	-.04970	.03610	.02970	.04610	-.04900	-.00970	.04250	-.00820	-.50960	-.45730
-.368	-.235	-.02320	.03320	.01200	.04060	-.04670	-.00450	.03980	-.00770	-.48110	-.42550
-.266	3.891	-.00370	.03100	-.00170	.03040	-.04070	-.00070	.03550	-.00690	-.43000	-.37860
-.249	6.103	.00500	.02940	-.00830	.02500	-.03820	.00100	.03410	-.00660	-.41400	-.36190
	GRADIENT	.00540	-.00060	-.00368	-.00183	.00097	.00106	-.00082	.00015	.00929	.00920

RUN NO. 1381/ 0 RN/L = 3.50 GRADIENT INTERVAL = -5.00/ 5.00

ALPHAL	BETAL	CNFLS	CAFLS	CLMFLS	CYFLS	CYNFLS	CBLLS	CABLS	CYNBLS	CP5	CP6
4.557	-5.716	-.01440	.03620	.01970	.05130	-.05670	-.00270	.04180	-.00810	-.50070	-.45050
4.376	-3.568	-.01070	.03500	.01660	.04520	-.05160	-.00200	.04150	-.00810	-.49570	-.44950
4.145	.283	-.00180	.03340	.00800	.03680	-.04580	-.00020	.04050	-.00790	-.48440	-.43700
4.190	4.235	.00670	.03160	-.00180	.02020	-.03520	.00140	.03770	-.00730	-.45180	-.40690
4.151	6.366	.00960	.03000	-.00510	.01510	-.03340	.00200	.03600	-.00700	-.43420	-.38500
	GRADIENT	.00223	-.00044	-.00236	-.00321	.00210	.00044	-.00049	.00010	.00564	.00547

IA156A, AEDC PWT 16T-470, 0 T S W/SILTS (R8NLC8) (10 MAY 80)

REFERENCE DATA

SREF = 2690.0000 SQ.FT. XMRP = 976.0000 IN. XT
LREF = 1290.3000 INCHES YMRP = .0000 IN. YT
BREF = 1290.3000 INCHES ZMRP = 400.0000 IN. ZT
SCALE = .0200

PARAMETRIC DATA

IB-ELV = 9.000 OB-ELV = -2.000
BDFLAP = .000 SPDBRK = .000
RUDDER = .000 SILTS = 1.000
MACH = 1.250 RN/L = 3.500
IB-AIL = 1.000

RUN NO. 1382/ 0 RN/L = 3.50 GRADIENT INTERVAL = -5.00/ 5.00

ALPHAL	BETAL	CNFLS	CAFLS	CLMFLS	CYFLS	CYNFLS	CBLLS	CABLS	CYNBLS	CP5	CP6
-8.722	-5.665	-.15000	.03370	.06240	-.02930	-.00650	-.02930	.04270	-.00830	-.50620	-.46650
-8.724	-3.578	-.12680	.03280	.04960	-.03960	.00030	-.02480	.04200	-.00820	-.49540	-.46200
-8.624	.425	-.07670	.02970	.01740	-.04800	.00310	-.01500	.04130	-.00800	-.48850	-.45290
-8.356	4.627	-.02960	.02650	-.01330	-.04570	-.00180	-.00580	.03630	-.00710	-.43540	-.39200
-8.341	6.526	-.01370	.02490	-.02290	-.04130	-.00610	-.00270	.03270	-.00630	-.39280	-.35160
	GRADIENT	.01184	-.00077	-.00766	-.00073	-.00026	.00231	-.00070	.00013	.00736	.00858

RUN NO. 1383/ 0 RN/L = 3.50 GRADIENT INTERVAL = -5.00/ 5.00

ALPHAL	BETAL	CNFLS	CAFLS	CLMFLS	CYFLS	CYNFLS	CBLLS	CABLS	CYNBLS	CP5	CP6
-6.578	-5.805	-.12300	.03520	.05400	-.01000	-.01510	-.02400	.04190	-.00810	-.50090	-.45430
-6.463	-3.871	-.10350	.03360	.04350	-.01540	-.01190	-.02020	.04100	-.00800	-.48490	-.44900
-6.523	.311	-.05870	.03000	.01480	-.02300	-.00910	-.01150	.03930	-.00760	-.46610	-.42860
-6.237	4.458	-.01860	.02850	-.01120	-.01850	-.01400	-.00360	.03510	-.00680	-.41930	-.37980
-6.200	6.455	-.00360	.02660	-.02150	-.01460	-.01800	-.00070	.03240	-.00630	-.38900	-.34910
	GRADIENT	.01019	-.00061	-.00657	-.00037	-.00025	.00199	-.00071	.00014	.00787	.00830

RUN NO. 1384/ 0 RN/L = 3.50 GRADIENT INTERVAL = -5.00/ 5.00

ALPHAL	BETAL	CNFLS	CAFLS	CLMFLS	CYFLS	CYNFLS	CBLLS	CABLS	CYNBLS	CP5	CP6
-4.236	-5.962	-.09850	.03620	.04790	.01320	-.02750	-.01920	.04110	-.00800	-.49420	-.44080
-4.470	-3.798	-.08210	.03480	.03730	.00580	-.02370	-.01600	.03960	-.00770	-.47320	-.42820
-4.334	.522	-.04090	.03090	.01160	.00430	-.02330	-.00800	.03810	-.00740	-.45840	-.40870
-3.810	4.434	-.01030	.03020	-.00730	.00990	-.02850	-.00200	.03480	-.00680	-.41810	-.37510
-3.902	6.289	-.00010	.02840	-.01470	.00920	-.02950	.00000	.03220	-.00620	-.38440	-.34860
	GRADIENT	.00874	-.00056	-.00543	.00048	-.00057	.00170	-.00058	.00011	.00664	.00642

RUN NO. 1385/ 0 RN/L = 3.50 GRADIENT INTERVAL = -5.00/ 5.00

ALPHAL	BETAL	CNFLS	CAFLS	CLMFLS	CYFLS	CYNFLS	CBLLS	CABLS	CYNBLS	CP5	CP6
-.312	-6.816	-.06420	.03790	.04000	.04860	-.04930	-.01250	.04010	-.00780	-.48740	-.42700
-.279	-4.639	-.05140	.03720	.03230	.04490	-.04680	-.01000	.03920	-.00760	-.47530	-.41820
-.285	-.315	-.02700	.03430	.01580	.03920	-.04430	-.00520	.03670	-.00710	-.44220	-.39340
-.188	3.957	-.00770	.03070	.00210	.02860	-.03860	-.00150	.03270	-.00630	-.39570	-.34840
-.195	6.149	.00080	.03000	-.00470	.02390	-.03740	.00020	.03080	-.00600	-.37690	-.32520
	GRADIENT	.00509	-.00076	-.00351	-.00190	.00095	.00099	-.00076	.00015	.00926	.00812

IA156A, AEDC PWT 16T-470, O T S W/SILTS (R8NLC8) (10 MAY 80)

REFERENCE DATA

SREF = 2690.0000 SQ.FT. XMRP = 976.0000 IN. XT
LREF = 1290.3000 INCHES YMRP = .0000 IN. YT
BREF = 1290.3000 INCHES ZMRP = 400.0000 IN. ZT
SCALE = .0200

PARAMETRIC DATA

IB-ELV = 9.000 OB-ELV = -2.000
BDFLAP = .000 SPDBRK = .000
RUDDER = .000 SILTS = 1.000
MACH = 1.250 RN/L = 3.500
IB-AIL = 1.000

RUN NO. 1386/ 0 RN/L = 3.50 GRADIENT INTERVAL = -5.00/ 5.00

ALPHAL	BETAL	CNFLS	CAFLS	CLMFLS	CYFLS	CYNFLS	CBLLS	CABLS	CYNBLS	CP5	CP6
4.678	-5.689	-.01330	.03780	.02090	.04820	-.05450	-.00250	.03830	-.00740	-.46110	-.41160
4.457	-3.526	-.01050	.03740	.01820	.04210	-.04980	-.00190	.03770	-.00730	-.45330	-.40590
4.209	.378	-.00400	.03410	.01070	.03240	-.04340	-.00070	.03690	-.00720	-.44410	-.39620
4.271	4.296	.00480	.03140	.00020	.01680	-.03380	.00100	.03430	-.00670	-.41570	-.36540
4.215	6.377	.00800	.03020	-.00380	.01130	-.03160	.00170	.03250	-.00630	-.39490	-.34600
	GRADIENT	.00196	-.00077	-.00230	-.00323	.00205	.00037	-.00043	.00008	.00481	.00518

IA156A, AEDC PWT 16T-470, O T S W/SILTS (R8NLC9) (10 MAY 80)

REFERENCE DATA

SREF = 2690.0000 SQ.FT. XMRP = 976.0000 IN. XT
LREF = 1290.3000 INCHES YMRP = .0000 IN. YT
BREF = 1290.3000 INCHES ZMRP = 400.0000 IN. ZT
SCALE = .0200

PARAMETRIC DATA

IB-ELV = 9.000 OB-ELV = -2.000
BDFLAP = .000 SPDBRK = .000
RUDDER = .000 SILTS = 1.000
MACH = 1.400 RN/L = 3.500
IB-AIL = 1.000

RUN NO. 1387/ 0 RN/L = 2.99 GRADIENT INTERVAL = -5.00/ 5.00

ALPHAL	BETAL	CNFLS	CAFLS	CLMFLS	CYFLS	CYNFLS	CBLLS	CABLS	CYNBLS	CP5	CP6
-8.528	-5.821	-.15670	.03520	.06600	-.02930	-.00240	-.03060	.03760	-.00730	-.45710	-.40000
-8.625	-3.609	-.13640	.03460	.05460	-.04640	.00840	-.02670	.03870	-.00750	-.46360	-.41820
-8.535	.412	-.08110	.03080	.02020	-.05230	.00820	-.01590	.03610	-.00700	-.42890	-.39390
-8.282	4.732	-.03310	.02720	-.01090	-.04700	.00020	-.00650	.03260	-.00630	-.39190	-.34950
-8.227	6.565	-.02030	.02540	-.01780	-.04170	-.00460	-.00400	.03000	-.00580	-.36200	-.32210
	GRADIENT	.01237	-.00089	-.00784	-.00006	-.00099	.00242	-.00073	.00014	.00860	.00826

RUN NO. 1388/ 0 RN/L = 3.00 GRADIENT INTERVAL = -5.00/ 5.00

ALPHAL	BETAL	CNFLS	CAFLS	CLMFLS	CYFLS	CYNFLS	CBLLS	CABLS	CYNBLS	CP5	CP6
-6.587	-5.894	-.12640	.03570	.05440	-.01870	-.00580	-.02470	.03780	-.00730	-.46170	-.39940
-6.445	-3.896	-.10340	.03430	.04220	-.02420	-.00300	-.02020	.03650	-.00710	-.44230	-.38920
-6.483	.299	-.06270	.03080	.01720	-.02920	-.00320	-.01230	.03580	-.00690	-.42770	-.38680
-6.175	4.492	-.02120	.02950	-.00890	-.02060	-.01230	-.00410	.03150	-.00610	-.37760	-.33980
-6.129	6.510	-.00860	.02730	-.01720	-.01780	-.01610	-.00170	.02990	-.00580	-.36120	-.32060
	GRADIENT	.00980	-.00057	-.00609	.00043	-.00111	.00192	-.00060	.00012	.00771	.00589

IA156A, AEDC PWT 16T-470, O T S W/SILTS (R8NLC9) (10 MAY 80)

REFERENCE DATA

SREF = 2690.0000 SQ.FT. XMRP = 976.0000 IN. XT
LREF = 1290.3000 INCHES YMRP = .0000 IN. YT
BREF = 1290.3000 INCHES ZMRP = 400.0000 IN. ZT
SCALE = .0200

PARAMETRIC DATA

IB-ELV = 9.000 OB-ELV = -2.000
BDFLAP = .000 SPDBRK = .000
RUDDER = .000 SILTS = 1.000
MACH = 1.400 RN/L = 3.500
IB-AIL = 1.000

RUN NO. 1389/ 0 RN/L = 3.01 GRADIENT INTERVAL = -5.00/ 5.00

ALPHAL	BETAL	CNFLS	CAFLS	CLMFLS	CYFLS	CYNFLS	CBLLS	CABLS	CYNBLS	CP5	CP6
-4.408	-6.004	-.09720	.03650	.04570	.00570	-.02020	-.01900	.03610	-.00700	-.44170	-.38110
-4.489	-3.852	-.08020	.03480	.03520	-.00080	-.01660	-.01570	.03540	-.00690	-.43090	-.37480
-4.327	.531	-.04320	.03090	.01290	-.00340	-.01690	-.00850	.03450	-.00670	-.41660	-.37020
-3.782	4.474	-.01330	.03060	-.00500	.00520	-.02610	-.00260	.03220	-.00620	-.38780	-.34490
-3.839	6.322	-.00320	.02920	-.01180	.00580	-.02790	-.00060	.02870	-.00560	-.34690	-.30790
	GRADIENT	.00804	-.00051	-.00483	.00070	-.00112	.00157	-.00038	.00008	.00514	.00354

RUN NO. 1390/ 0 RN/L = 3.00 GRADIENT INTERVAL = -5.00/ 5.00

ALPHAL	BETAL	CNFLS	CAFLS	CLMFLS	CYFLS	CYNFLS	CBLLS	CABLS	CYNBLS	CP5	CP6
-.332	-6.838	-.05980	.03790	.03750	.04540	-.04630	-.01170	.03600	-.00700	-.44370	-.37760
-.306	-4.694	-.04820	.03700	.03060	.04050	-.04250	-.00950	.03530	-.00690	-.43060	-.37320
-.291	-.263	-.02680	.03460	.01630	.03420	-.04010	-.00520	.03290	-.00640	-.39760	-.35100
-.220	3.875	-.01070	.03080	.00520	.02650	-.03730	-.00210	.03040	-.00590	-.36760	-.32590
-.231	6.067	-.00220	.03020	-.00160	.02180	-.03590	-.00040	.02810	-.00550	-.34280	-.29780
	GRADIENT	.00438	-.00072	-.00297	-.00163	.00064	.00086	-.00057	.00012	.00735	.00551

RUN NO. 1391/ 0 RN/L = 3.01 GRADIENT INTERVAL = -5.00/ 5.00

ALPHAL	BETAL	CNFLS	CAFLS	CLMFLS	CYFLS	CYNFLS	CBLLS	CABLS	CYNBLS	CP5	CP6
4.682	-5.664	-.01310	.03740	.02360	.04540	-.05390	-.00250	.03460	-.00670	-.42430	-.36420
4.500	-3.540	-.01000	.03630	.01950	.03840	-.04860	-.00190	.03500	-.00680	-.42740	-.36920
4.181	.334	-.00580	.03400	.01280	.02800	-.04100	-.00110	.03260	-.00630	-.39710	-.34440
4.205	4.273	.00250	.03160	.00280	.01300	-.03190	.00060	.03040	-.00590	-.37160	-.32170
4.160	6.351	.00660	.03080	-.00180	.00890	-.03050	.00140	.02950	-.00570	-.36100	-.31170
	GRADIENT	.00160	-.00060	-.00214	-.00325	.00214	.00032	-.00059	.00012	.00714	.00608

IA156A, AEDC PWT 16T-470, O T S W/SILTS (R8NLD0) (10 MAY 80)

REFERENCE DATA

SREF = 2690.0000 SQ.FT. XMRP = 976.0000 IN. XT
LREF = 1290.3000 INCHES YMRP = .0000 IN. YT
BREF = 1290.3000 INCHES ZMRP = 400.0000 IN. ZT
SCALE = .0200

PARAMETRIC DATA

IB-ELV = 9.000 OB-ELV = -2.000
BDFLAP = .000 SPDBRK = .000
RUDDER = .000 SILTS = 1.000
MACH = 1.550 RN/L = 3.200
IB-AIL = 1.000

RUN NO. 1392/ 0 RN/L = 3.00 GRADIENT INTERVAL = -5.00/ 5.00

ALPHAL	BETAL	CNFLS	CAFLS	CLMFLS	CYFLS	CYNFLS	CBLLS	CABLS	CYNBLS	CP5	CP6
-8.535	-5.817	-.15330	.03380	.06710	-.02400	-.00310	-.03000	.03420	-.00660	-.41980	-.35920
-8.660	-3.574	-.13340	.03330	.05430	-.04330	.00950	-.02610	.03350	-.00650	-.40850	-.35520
-8.505	.489	-.08400	.02930	.02390	-.05170	.01090	-.01650	.03230	-.00630	-.38760	-.34750
-8.251	4.814	-.03710	.02600	-.00770	-.04880	.00420	-.00730	.02820	-.00550	-.34080	-.30240
-8.191	6.656	-.02360	.02480	-.01610	-.04610	.00020	-.00460	.02620	-.00510	-.31620	-.27980
	GRADIENT	.01147	-.00087	-.00739	-.00064	-.00064	.00224	-.00064	.00012	.00810	.00634

RUN NO. 1393/ 0 RN/L = 3.00 GRADIENT INTERVAL = -5.00/ 5.00

ALPHAL	BETAL	CNFLS	CAFLS	CLMFLS	CYFLS	CYNFLS	CBLLS	CABLS	CYNBLS	CP5	CP6
-6.596	-5.870	-.12170	.03490	.05370	-.01540	-.00590	-.02380	.03360	-.00650	-.41550	-.34910
-6.496	-3.877	-.10340	.03330	.04300	-.02370	-.00140	-.02020	.03240	-.00630	-.39810	-.34110
-6.472	.380	-.06210	.02950	.01780	-.02840	-.00170	-.01220	.03110	-.00600	-.37570	-.33300
-6.136	4.577	-.02560	.02720	-.00600	-.02320	-.00860	-.00500	.02820	-.00550	-.33920	-.30370
-6.056	6.586	-.01260	.02630	-.01420	-.02010	-.01270	-.00240	.02620	-.00510	-.31970	-.27730
	GRADIENT	.00920	-.00072	-.00580	.00006	-.00085	.00180	-.00050	.00009	.00696	.00442

RUN NO. 1394/ 0 RN/L = 3.00 GRADIENT INTERVAL = -5.00/ 5.00

ALPHAL	BETAL	CNFLS	CAFLS	CLMFLS	CYFLS	CYNFLS	CBLLS	CABLS	CYNBLS	CP5	CP6
-4.326	-6.007	-.09120	.03560	.04270	.00730	-.02060	-.01790	.03260	-.00630	-.40430	-.33910
-4.577	-3.832	-.07610	.03390	.03260	-.00150	-.01540	-.01490	.03160	-.00610	-.38840	-.33050
-4.365	.629	-.04170	.03010	.01210	-.00400	-.01610	-.00820	.03010	-.00580	-.36620	-.31930
-3.727	4.558	-.01540	.02840	-.00330	.00070	-.02100	-.00300	.02780	-.00540	-.33620	-.29590
-3.816	6.424	-.00640	.02720	-.01030	.00050	-.02290	-.00120	.02590	-.00500	-.31480	-.27470
	GRADIENT	.00725	-.00066	-.00429	.00024	-.00066	.00142	-.00045	.00008	.00619	.00409

RUN NO. 1395/ 0 RN/L = 3.00 GRADIENT INTERVAL = -5.00/ 5.00

ALPHAL	BETAL	CNFLS	CAFLS	CLMFLS	CYFLS	CYNFLS	CBLLS	CABLS	CYNBLS	CP5	CP6
-.415	-6.889	-.05500	.03710	.03400	.04380	-.04580	-.01080	.03300	-.00640	-.41540	-.33760
-.390	-4.757	-.04430	.03580	.02770	.03820	-.04140	-.00870	.03170	-.00620	-.39110	-.33140
-.372	-.370	-.02540	.03360	.01540	.03250	-.03870	-.00500	.02930	-.00570	-.35650	-.31150
-.343	3.796	-.01020	.03050	.00450	.02170	-.03300	-.00200	.02790	-.00540	-.33790	-.29810
-.365	5.993	-.00140	.02900	-.00300	.01720	-.03170	-.00030	.02520	-.00490	-.30700	-.26780
	GRADIENT	.00399	-.00062	-.00271	-.00192	.00098	.00078	-.00045	.00009	.00624	.00390

IA156A, AEDC PWT 16T-470, 0 T S W/SILTS (R8NLD0) (10 MAY 80)

REFERENCE DATA

SREF = 2690.0000 SQ.FT. XMRP = 976.0000 IN. XT
LREF = 1290.3000 INCHES YMRP = .0000 IN. YT
BREF = 1290.3000 INCHES ZMRP = 400.0000 IN. ZT
SCALE = .0200

PARAMETRIC DATA

IB-ELV = 9.000 OB-ELV = -2.300
BDFLAP = .000 SPDBRK = .000
RUDDER = .000 SILTS = 1.000
MACH = 1.550 RN/L = 3.200
IB-AIL = 1.000

RUN NO. 1396/ 0 RN/L = 3.00 GRADIENT INTERVAL = -5.00/ 5.00

ALPHAL	BETAL	CNFLS	CAFLS	CLMFLS	CYFLS	CYNFLS	CBLLS	CABLS	CYNBLS	CP5	CP6
4.714	-5.552	-.00880	.03610	.02120	.04150	-.05200	-.00170	.03270	-.00630	-.40520	-.33950
4.479	-3.422	-.00690	.03500	.01760	.03410	-.04590	-.00130	.03170	-.00620	-.39420	-.32850
4.137	.424	-.00460	.03330	.01260	.02460	-.03940	-.00080	.02900	-.00560	-.35790	-.30360
4.095	4.272	.00190	.03110	.00400	.01060	-.03010	.00040	.02710	-.00530	-.33570	-.28070
4.060	6.376	.00660	.03000	-.00110	.00580	-.02820	.00130	.02570	-.00500	-.31800	-.26680
	GRADIENT	.00114	-.00051	-.00177	-.00305	.00205	.00022	-.00060	.00012	.00760	.00621

IA156A, AEDC PWT 16T-470, 0 T S W/SILTS (R8NLD1) (10 MAY 80)

REFERENCE DATA

SREF = 2690.0000 SQ.FT. XMRP = 976.0000 IN. XT
LREF = 1290.3000 INCHES YMRP = .0000 IN. YT
BREF = 1290.3000 INCHES ZMRP = 400.0000 IN. ZT
SCALE = .0200

PARAMETRIC DATA

IB-ELV = 8.000 OB-ELV = -2.000
BDFLAP = .000 SPDBRK = .000
RUDDER = .000 SILTS = 1.000
MACH = 1.150 RN/L = 3.500

RUN NO. 1399/ 0 RN/L = 3.50 GRADIENT INTERVAL = -5.00/ 5.00

ALPHAL	BETAL	CNFLS	CAFLS	CLMFLS	CYFLS	CYNFLS	CBLLS	CABLS	CYNBLS	CP5	CP6
-8.776	-5.661	-.14320	.03070	.05670	-.02960	-.00990	-.02800	.04610	-.00890	-.54420	-.50500
-8.717	-3.588	-.12040	.03040	.04490	-.03860	-.00390	-.02350	.04490	-.00870	-.52740	-.49390
-8.665	.521	-.06820	.02710	.01140	-.04910	.00140	-.01330	.04240	-.00820	-.50220	-.46380
-8.399	4.535	-.02380	.02460	-.01550	-.04330	-.00420	-.00460	.03830	-.00740	-.45650	-.41610
-8.351	6.503	-.00790	.02250	-.02480	-.03770	-.00900	-.00150	.03590	-.00700	-.42940	-.38850
	GRADIENT	.01190	-.00071	-.00744	-.00059	-.00003	.00233	-.00081	.00016	.00872	.00957

RUN NO. 1400/ 0 RN/L = 3.51 GRADIENT INTERVAL = -5.00/ 5.00

ALPHAL	BETAL	CNFLS	CAFLS	CLMFLS	CYFLS	CYNFLS	CBLLS	CABLS	CYNBLS	CP5	CP6
-6.570	-5.778	-.11870	.03300	.05090	-.00640	-.01940	-.02320	.04580	-.00890	-.54270	-.49960
-6.485	-3.850	-.09960	.03180	.03980	-.01270	-.01490	-.01920	.04360	-.00850	-.51430	-.47880
-6.575	.310	-.05340	.02690	.01090	-.02040	-.01170	-.01040	.04200	-.00820	-.50010	-.45660
-6.296	4.432	-.01430	.02670	-.01390	-.01540	-.01650	-.00270	.03720	-.00720	-.44490	-.40300
-6.028	6.564	.00210	.02440	-.02320	-.00820	-.02220	.00040	.03440	-.00670	-.40990	-.37290
	GRADIENT	.01018	-.00062	-.00648	-.00033	-.00019	.00199	-.00077	.00016	.00837	.00915

IA156A, AEDC PWT 16T-470, O T S W/SILTS (R8NLD1) (10 MAY 80)

REFERENCE DATA

SREF = 2690.0000 SQ.FT. XMRP = 976.0000 IN. XT
LREF = 1290.3000 INCHES YMRP = .0000 IN. YT
BREF = 1290.3000 INCHES ZMRP = 400.0000 IN. ZT
SCALE = .0200

PARAMETRIC DATA

IB-ELV = 8.000 OB-ELV = -2.000
BDFLAP = .000 SPDBRK = .000
RUDDER = .000 SILTS = 1.000
MACH = 1.150 RN/L = 3.500

RUN NO. 1401/ 0 RN/L = 3.50 GRADIENT INTERVAL = -5.00/ 5.00

ALPHAL	BETAL	CNFLS	CAFLS	CLMFLS	CYFLS	CYNFLS	CBLLS	CABLS	CYNBLS	CP5	CP6
-4.305	-5.936	-.09710	.03420	.04620	.01590	-.03050	-.01890	.04440	-.00860	-.52730	-.48370
-4.492	-3.797	-.07900	.03290	.03550	.01160	-.02720	-.01540	.04260	-.00830	-.50440	-.46460
-4.380	.517	-.03610	.02890	.00850	.01110	-.02750	-.00700	.03980	-.00770	-.47790	-.42850
-3.817	4.401	-.00590	.02870	-.00990	.01400	-.03090	-.00110	.03640	-.00710	-.43400	-.39490
-3.938	6.291	.00370	.02750	-.01710	.01270	-.03220	.00080	.03470	-.00670	-.41160	-.37860
	GRADIENT	.00894	-.00052	-.00555	.00029	-.00044	.00175	-.00075	.00015	.00854	.00850

RUN NO. 1402/ 0 RN/L = 3.51 GRADIENT INTERVAL = -5.00/ 5.00

ALPHAL	BETAL	CNFLS	CAFLS	CLMFLS	CYFLS	CYNFLS	CBLLS	CABLS	CYNBLS	CP5	CP6
-.364	-6.813	-.06330	.03640	.03800	.05010	-.05150	-.01230	.04310	-.00840	-.51850	-.46420
-.333	-4.644	-.04950	.03560	.02950	.04610	-.04880	-.00960	.04260	-.00830	-.51090	-.45890
-.365	-.253	-.02260	.03300	.01150	.04030	-.04650	-.00430	.03920	-.00760	-.47420	-.41900
-.265	3.900	-.00320	.03080	-.00220	.02990	-.04040	-.00060	.03510	-.00680	-.42420	-.37420
-.251	6.106	.00530	.02940	-.00890	.02440	-.03790	.00110	.03370	-.00650	-.40930	-.35780
	GRADIENT	.00543	-.00056	-.00371	-.00189	.00098	.00105	-.00088	.00018	.01013	.00991

RUN NO. 1403/ 0 RN/L = 3.50 GRADIENT INTERVAL = -5.00/ 5.00

ALPHAL	BETAL	CNFLS	CAFLS	CLMFLS	CYFLS	CYNFLS	CBLLS	CABLS	CYNBLS	CP5	CP6
4.540	-5.702	-.01320	.03600	.01880	.05090	-.05610	-.00250	.04140	-.00800	-.49710	-.44650
4.381	-3.570	-.01000	.03520	.01620	.04530	-.05170	-.00180	.04140	-.00800	-.49470	-.44840
4.146	.286	-.00150	.03350	.00760	.03640	-.04570	-.00020	.04030	-.00780	-.48220	-.43540
4.201	4.246	.00740	.03160	-.00240	.01950	-.03490	.00160	.03740	-.00730	-.44750	-.40370
4.148	6.364	.00970	.03030	-.00530	.01500	-.03330	.00200	.03530	-.00690	-.42550	-.37890
	GRADIENT	.00223	-.00046	-.00238	-.00331	.00215	.00044	-.00051	.00009	.00605	.00573

IA156A, AEDC PWT 16T-470, O T S W/SILTS (R8NLD2) (10 MAY 80)

REFERENCE DATA

SREF = 2690.0000 SQ.FT. XMRP = 976.0000 IN. XT
LREF = 1290.3000 INCHES YMRP = .0000 IN. YT
BREF = 1290.3000 INCHES ZMRP = 400.0000 IN. ZT
SCALE = .0200

PARAMETRIC DATA

IB-ELV = 8.000 OB-ELV = -2.000
BDFLAP = .000 SPDBRK = .000
RUDDER = .000 SILTS = 1.000
MACH = 1.250 RN/L = 3.500

RUN NO. 1404/ 0 RN/L = 3.50 GRADIENT INTERVAL = -5.00/ 5.00

ALPHAL	BETAL	CNFLS	CAFLS	CLMFLS	CYFLS	CYNFLS	CBLLS	CABLS	CYNBLS	CP5	CP6
-8.602	-5.704	-.14880	.03390	.06160	-.02850	-.00690	-.02910	.04270	-.00830	-.50660	-.46550
-8.721	-3.532	-.12580	.03270	.04880	-.03950	.00020	-.02460	.04200	-.00820	-.49500	-.46140
-8.631	.422	-.07640	.02980	.01680	-.04890	.00350	-.01500	.04030	-.00780	-.47560	-.44090
-8.380	4.697	-.02830	.02640	-.01460	-.04680	-.00110	-.00550	.03570	-.00690	-.42710	-.38670
-8.358	6.545	-.01310	.02450	-.02400	-.04240	-.00540	-.00260	.03320	-.00640	-.39870	-.35800
	GRADIENT	.01184	-.00077	-.00770	-.00087	-.00017	.00232	-.00077	.00016	.00829	.00913

RUN NO. 1405/ 0 RN/L = 3.49 GRADIENT INTERVAL = -5.00/ 5.00

ALPHAL	BETAL	CNFLS	CAFLS	CLMFLS	CYFLS	CYNFLS	CBLLS	CABLS	CYNBLS	CP5	CP6
-6.573	-5.803	-.12320	.03540	.05370	-.01050	-.01510	-.02410	.04140	-.00800	-.49530	-.44700
-6.472	-3.876	-.10290	.03370	.04280	-.01590	-.01180	-.02010	.04050	-.00790	-.47930	-.44370
-6.549	.333	-.05840	.02950	.01390	-.02450	-.00870	-.01140	.03980	-.00770	-.47370	-.43350
-6.260	4.463	-.01790	.02840	-.01240	-.01990	-.01330	-.00350	.03510	-.00680	-.41970	-.37920
-6.071	6.576	-.00170	.02630	-.02250	-.01310	-.01880	-.00030	.03230	-.00630	-.38710	-.34780
	GRADIENT	.01019	-.00064	-.00662	-.00048	-.00018	.00199	-.00065	.00013	.00713	.00772

RUN NO. 1406/ 0 RN/L = 3.50 GRADIENT INTERVAL = -5.00/ 5.00

ALPHAL	BETAL	CNFLS	CAFLS	CLMFLS	CYFLS	CYNFLS	CBLLS	CABLS	CYNBLS	CP5	CP6
-4.398	-5.943	-.09940	.03610	.04760	.01150	-.02650	-.01940	.04010	-.00780	-.48310	-.43140
-4.485	-3.815	-.09210	.03450	.03700	.00520	-.02330	-.01600	.03960	-.00770	-.47360	-.42880
-4.351	.518	-.04070	.03060	.01100	.00370	-.02320	-.00790	.03820	-.00740	-.46070	-.40950
-3.814	4.421	-.00960	.03020	-.00790	.00980	-.02840	-.00180	.03420	-.00660	-.41060	-.36830
-3.904	6.281	.00020	.02830	-.01520	.00880	-.02920	.00010	.03180	-.00620	-.37980	-.34450
	GRADIENT	.00882	-.00053	-.00546	.00054	-.00061	.00173	-.00065	.00013	.00756	.00729

RUN NO. 1407/ 0 RN/L = 3.51 GRADIENT INTERVAL = -5.00/ 5.00

ALPHAL	BETAL	CNFLS	CAFLS	CLMFLS	CYFLS	CYNFLS	CBLLS	CABLS	CYNBLS	CP5	CP6
-.317	-6.839	-.06300	.03850	.03910	.04770	-.04880	-.01230	.03850	-.00750	-.46710	-.40980
-.288	-4.679	-.05210	.03690	.03250	.04520	-.04710	-.01020	.04040	-.00790	-.49030	-.43080
-.296	-.227	-.02630	.03420	.01500	.03860	-.04410	-.00510	.03620	-.00700	-.43670	-.38830
-.193	3.909	-.00730	.03080	.00160	.02840	-.03860	-.00140	.03230	-.00630	-.39180	-.34490
-.205	6.137	.00140	.02990	-.00540	.02360	-.03730	.00030	.03050	-.00590	-.37240	-.32180
	GRADIENT	.00522	-.00071	-.00360	-.00195	.00099	.00103	-.00094	.00019	.01148	.01000

IA156A, AEDC PWT 16T-470, O T S W/SILTS (R8NLD2) (10 MAY 80)

REFERENCE DATA

SREF = 2690.0000 SQ.FT. XMRP = 976.0000 IN. XT
LREF = 1290.3000 INCHES YMRP = .0000 IN. YT
BREF = 1290.3000 INCHES ZMRP = 400.0000 IN. ZT
SCALE = .0200

PARAMETRIC DATA

IB-ELV = 8.000 OB-ELV = -2.000
BDFLAP = .000 SPDBRK = .000
RUDDER = .000 SILTS = 1.000
MACH = 1.250 RN/L = 3.500

RUN NO. 1408/ 0 RN/L = 3.50 GRADIENT INTERVAL = -5.00/ 5.00

ALPHAL	BETAL	CNFLS	CAFLS	CLMFLS	CYFLS	CYNFLS	CBLLS	CABLS	CYNBLS	CP5	CP6
4.666	-5.686	-.01300	.03760	.02030	.04810	-.05440	-.00240	.03840	-.00750	-.46230	-.41180
4.461	-3.541	-.00990	.03720	.01760	.04180	-.04940	-.00180	.03760	-.00730	-.45160	-.40450
4.209	.378	-.00360	.03360	.01020	.03240	-.04330	-.00060	.03720	-.00720	-.44650	-.40000
4.275	4.294	.00500	.03190	.00010	.01670	-.03390	.00110	.03380	-.00660	-.40800	-.36170
4.213	6.380	.00830	.03070	-.00410	.01130	-.03160	.00170	.03180	-.00620	-.38590	-.33880
	GRADIENT	.00190	-.00068	-.00223	-.00320	.00198	.00037	-.00048	.00009	.00556	.00546

IA156A, AEDC PWT 16T-470, O T S W/SILTS (R8NLD3) (10 MAY 80)

REFERENCE DATA

SREF = 2690.0000 SQ.FT. XMRP = 976.0000 IN. XT
LREF = 1290.3000 INCHES YMRP = .0000 IN. YT
BREF = 1290.3000 INCHES ZMRP = 400.0000 IN. ZT
SCALE = .0200

PARAMETRIC DATA

IB-ELV = 8.000 OB-ELV = -2.000
BDFLAP = .000 SPDBRK = .000
RUDDER = .000 SILTS = 1.000
MACH = 1.400 RN/L = 3.500

RUN NO. 1409/ 0 RN/L = 3.00 GRADIENT INTERVAL = -5.00/ 5.00

ALPHAL	BETAL	CNFLS	CAFLS	CLMFLS	CYFLS	CYNFLS	CBLLS	CABLS	CYNBLS	CP5	CP6
-8.531	-5.820	-.15650	.03490	.06550	-.02960	-.00230	-.03060	.03800	-.00740	-.46240	-.40350
-8.642	-3.616	-.13390	.03440	.05310	-.04600	.00830	-.02620	.03740	-.00730	-.44870	-.40350
-8.545	.416	-.08110	.03040	.02000	-.05170	.00820	-.01590	.03630	-.00710	-.43170	-.39600
-8.259	4.710	-.03320	.02730	-.01110	-.04670	.00020	-.00650	.03210	-.00620	-.38640	-.34520
-8.267	6.591	-.02050	.02550	-.01810	-.04350	-.00380	-.00400	.02900	-.00560	-.34950	-.31160
	GRADIENT	.01209	-.00085	-.00771	-.00007	-.00098	.00236	-.00064	.00013	.00752	.00705

RUN NO. 1410/ 0 RN/L = 2.99 GRADIENT INTERVAL = -5.00/ 5.00

ALPHAL	BETAL	CNFLS	CAFLS	CLMFLS	CYFLS	CYNFLS	CBLLS	CABLS	CYNBLS	CP5	CP6
-6.592	-5.888	-.12570	.03560	.05370	-.01890	-.00570	-.02460	.03710	-.00720	-.45390	-.39210
-6.459	-3.907	-.10310	.03450	.04160	-.02410	-.00320	-.02020	.03620	-.00700	-.43870	-.38550
-6.469	.303	-.06180	.03060	.01640	-.02920	-.00320	-.01210	.03530	-.00690	-.42300	-.38160
-6.188	4.492	-.02110	.02950	-.00990	-.02160	-.01200	-.00410	.03190	-.00620	-.38230	-.34370
-6.134	6.494	-.00820	.02720	-.01790	-.01830	-.01580	-.00130	.02990	-.00580	-.36000	-.32020
	GRADIENT	.00976	-.00060	-.00613	.00030	-.00105	.00192	-.00051	.00010	.00671	.00497

IA156A, AEDC PWT 16T-470, O T S W/SILTS (R8NLD3) (10 MAY 80)

REFERENCE DATA

SREF = 2690.0000 SQ.FT. XMRP = 976.0000 IN. XT
LREF = 1290.3000 INCHES YMRP = .0000 IN. YT
BREF = 1290.3000 INCHES ZMRP = 400.0000 IN. ZT
SCALE = .0200

PARAMETRIC DATA

IB-ELV = 8.000 OB-ELV = -2.000
BDFLAP = .000 SPDBRK = .000
RUDDER = .000 SILTS = 1.000
MACH = 1.400 RN/L = 3.500

RUN NO. 1411/ 0 RN/L = 2.99 GRADIENT INTERVAL = -5.00/ 5.00

ALPHAL	BETAL	CNFLS	CAFLS	CLMFLS	CYFLS	CYNFLS	CBLLS	CABLS	CYNBLS	CP5	CP6
-4.218	-5.993	-.09520	.03650	.04480	.00760	-.02150	-.01860	.03630	-.00700	-.44430	-.38240
-4.508	-3.852	-.08000	.03470	.03470	-.00120	-.01640	-.01570	.03500	-.00680	-.42740	-.37060
-4.315	.537	-.04220	.03100	.01210	-.00320	-.01710	-.00830	.03370	-.00650	-.40730	-.36010
-3.778	4.481	-.01220	.03060	-.00570	.00580	-.02640	-.00240	.03140	-.00610	-.37890	-.33630
-3.855	6.321	-.00280	.02930	-.01240	.00590	-.02820	-.00050	.02930	-.00570	-.35400	-.31390
	GRADIENT	.00815	-.00050	-.00485	.00082	-.00118	.00160	-.00043	.00008	.00580	.00408

RUN NO. 1412/ 0 RN/L = 2.99 GRADIENT INTERVAL = -5.00/ 5.00

ALPHAL	BETAL	CNFLS	CAFLS	CLMFLS	CYFLS	CYNFLS	CBLLS	CABLS	CYNBLS	CP5	CP6
-.344	-6.881	-.05980	.03790	.03700	.04470	-.04580	-.01170	.03570	-.00690	-.43890	-.37410
-.322	-4.683	-.04810	.03690	.03000	.03960	-.04220	-.00940	.03470	-.00670	-.42440	-.36720
-.299	-.312	-.02660	.03450	.01590	.03400	-.04000	-.00520	.03260	-.00630	-.39480	-.34790
-.226	3.864	-.01030	.03070	.00460	.02610	-.03710	-.00200	.03030	-.00590	-.36630	-.32460
-.241	6.066	-.00180	.03010	-.00230	.02180	-.03600	-.00030	.02820	-.00550	-.34330	-.29840
	GRADIENT	.00443	-.00072	-.00297	-.00158	.00060	.00087	-.00051	.00009	.00680	.00498

RUN NO. 1413/ 0 RN/L = 2.99 GRADIENT INTERVAL = -5.00/ 5.00

ALPHAL	BETAL	CNFLS	CAFLS	CLMFLS	CYFLS	CYNFLS	CBLLS	CABLS	CYNBLS	CP5	CP6
4.666	-5.661	-.01300	.03740	.02330	.04510	-.05370	-.00240	.03460	-.00670	-.42430	-.36420
4.475	-3.537	-.00990	.03650	.01910	.03800	-.04800	-.00190	.03410	-.00660	-.41730	-.35920
4.199	.337	-.00520	.03390	.01210	.02780	-.04070	-.00090	.03240	-.00630	-.39610	-.34270
4.214	4.253	.00250	.03150	.00290	.01330	-.03210	.00060	.03080	-.00600	-.37670	-.32580
4.150	6.345	.00650	.03090	-.00180	.00890	-.03030	.00130	.02860	-.00550	-.34850	-.30200
	GRADIENT	.00159	-.00064	-.00208	-.00317	.00204	.00032	-.00042	.00008	.00521	.00429

IA156A, AEDC PWT 16T-470, O T S W/SILTS (R8NLD4) (10 MAY 80)

REFERENCE DATA

SREF = 2690.0000 SQ.FT. XMRP = 976.0000 IN. XT
LREF = 1290.3000 INCHES YMRP = .0000 IN. YT
BREF = 1290.3000 INCHES ZMRP = 400.0000 IN. ZT
SCALE = .0200

PARAMETRIC DATA

IB-ELV = 8.000 OB-ELV = -2.000
BDFLAP = .000 SPDBRK = .000
RUDDER = .000 SILTS = 1.000
MACH = 1.550 RN/L = 3.200

RUN NO. 1414/ 0 RN/L = 3.00 GRADIENT INTERVAL = -5.00/ 5.00

ALPHAL	BETAL	CNFLS	CAFLS	CLMFLS	CYFLS	CYNFLS	CBLLS	CABLS	CYNBLS	CP5	CP6
-8.541	-5.807	-.15440	.03380	.06720	-.02380	-.00340	-.03020	.03400	-.00660	-.41780	-.35710
-8.675	-3.577	-.13370	.03310	.05390	-.04390	.00990	-.02610	.03350	-.00650	-.40820	-.35510
-8.532	.476	-.08350	.02920	.02320	-.05220	.01130	-.01640	.03170	-.00610	-.38080	-.34030
-8.252	4.828	-.03630	.02580	-.00870	-.04950	.00460	-.00710	.02800	-.00540	-.33780	-.29980
-8.205	6.657	-.02320	.02490	-.01710	-.04740	.00080	-.00450	.02650	-.00520	-.32120	-.28320
	GRADIENT	.01158	-.00087	-.00745	-.00065	-.00064	.00226	-.00066	.00013	.00839	.00661

RUN NO. 1415/ 0 RN/L = 3.00 GRADIENT INTERVAL = -5.00/ 5.00

ALPHAL	BETAL	CNFLS	CAFLS	CLMFLS	CYFLS	CYNFLS	CBLLS	CABLS	CYNBLS	CP5	CP6
-6.636	-5.881	-.12330	.03490	.05400	-.01620	-.00560	-.02410	.03330	-.00650	-.41280	-.34630
-6.503	-3.873	-.10250	.03310	.04220	-.02370	-.00130	-.02010	.03210	-.00620	-.39350	-.33680
-6.484	.366	-.06180	.02940	.01730	-.02870	-.00160	-.01210	.03100	-.00600	-.37390	-.33120
-6.131	4.570	-.02530	.02740	-.00630	-.02350	-.00820	-.00490	.02810	-.00550	-.33760	-.30190
-6.069	6.576	-.01250	.02620	-.01490	-.02160	-.01170	-.00240	.02620	-.00510	-.31780	-.27830
	GRADIENT	.00914	-.00068	-.00574	.00002	-.00082	.00180	-.00047	.00008	.00662	.00413

RUN NO. 1416/ 0 RN/L = 3.00 GRADIENT INTERVAL = -5.00/ 5.00

ALPHAL	BETAL	CNFLS	CAFLS	CLMFLS	CYFLS	CYNFLS	CBLLS	CABLS	CYNBLS	CP5	CP6
-4.320	-6.000	-.09020	.03570	.04180	.00700	-.02040	-.01770	.03200	-.00620	-.39760	-.33210
-4.583	-3.840	-.07560	.03380	.03190	-.00160	-.01530	-.01480	.03120	-.00610	-.38490	-.32550
-4.375	.626	-.04130	.03010	.01150	-.00430	-.01590	-.00810	.02980	-.00580	-.36430	-.31550
-3.737	4.565	-.01490	.02820	-.00400	.00030	-.02090	-.00290	.02740	-.00530	-.33230	-.29170
-3.813	6.406	-.00640	.02750	-.01060	.00020	-.02290	-.00120	.02600	-.00500	-.31560	-.27650
	GRADIENT	.00723	-.00067	-.00428	.00021	-.00065	.00142	-.00045	.00009	.00622	.00398

RUN NO. 1417/ 0 RN/L = 3.00 GRADIENT INTERVAL = -5.00/ 5.00

ALPHAL	BETAL	CNFLS	CAFLS	CLMFLS	CYFLS	CYNFLS	CBLLS	CABLS	CYNBLS	CP5	CP6
-.426	-6.939	-.05460	.03700	.03340	.04350	-.04580	-.01070	.03240	-.00630	-.40760	-.33160
-.406	-4.745	-.04470	.03570	.02750	.03770	-.04110	-.00880	.03170	-.00610	-.39030	-.33140
-.380	-.386	-.02530	.03310	.01500	.03220	-.03840	-.00500	.02970	-.00580	-.36250	-.31390
-.349	3.790	-.00970	.03050	.00400	.02160	-.03310	-.00190	.02750	-.00530	-.33320	-.29390
-.371	5.995	-.00110	.02900	-.00340	.01720	-.03170	-.00020	.02530	-.00490	-.30860	-.26800
	GRADIENT	.00410	-.00061	-.00275	-.00188	.00093	.00081	-.00049	.00009	.00669	.00439

IA156A, AEDC PWT 16T-470, 0 T S W/SILTS (R8NLD4) (10 MAY 80)

REFERENCE DATA

SREF = 2690.0000 SQ.FT. XMRP = 976.0000 IN. XT
LREF = 1290.3000 INCHES YMRP = .0000 IN. YT
BREF = 1290.3000 INCHES ZMRP = 400.0000 IN. ZT
SCALE = .0200

PARAMETRIC DATA

IB-ELV = 8.000 OB-ELV = -2.000
BDFLAP = .000 SPDBRK = .000
RUDDER = .000 SILTS = 1.000
MACH = 1.550 RN/L = 3.200

RUN NO. 1418/ 0 RN/L = 3.00 GRADIENT INTERVAL = -5.00/ 5.00

ALPHAL	BETAL	CNFLS	CAFLS	CLMFLS	CYFLS	CYNFLS	CBLLS	CABLS	CYNBLS	CP5	CP6
4.716	-5.550	-.00810	.03610	.02050	.04100	-.05180	-.00150	.03250	-.00630	-.40210	-.33850
4.461	-3.413	-.00660	.03500	.01700	.03370	-.04550	-.00120	.03120	-.00610	-.38770	-.32370
4.150	.423	-.00380	.03320	.01170	.02400	-.03890	-.00070	.02880	-.00560	-.35480	-.30140
4.119	4.286	.00270	.03100	.00320	.01010	-.02990	.00060	.02740	-.00530	-.33940	-.28430
4.034	6.342	.00630	.03020	-.00100	.00650	-.02880	.00130	.02560	-.00500	-.31620	-.26710
	GRADIENT	.00121	-.00052	-.00179	-.00307	.00203	.00023	-.00049	.00010	.00627	.00512

IA156A, AEDC PWT 16T-470, 0 T S W/SILTS (R8NLD5) (10 MAY 80)

REFERENCE DATA

SREF = 2690.0000 SQ.FT. XMRP = 976.0000 IN. XT
LREF = 1290.3000 INCHES YMRP = .0000 IN. YT
BREF = 1290.3000 INCHES ZMRP = 400.0000 IN. ZT
SCALE = .0200

PARAMETRIC DATA

IB-ELV = 8.000 OB-ELV = -2.000
BDFLAP = .000 SPDBRK = .000
RUDDER = .000 SILTS = 1.000
MACH = 1.550 RN/L = 3.200

RUN NO. 1419/ 0 RN/L = 3.00 GRADIENT INTERVAL = -5.00/ 5.00

ALPHAL	BETAL	CNFLS	CAFLS	CLMFLS	CYFLS	CYNFLS	CBLLS	CABLS	CYNBLS	CP5	CP6
-8.712	-5.719	-.15520	.03350	.06740	-.02580	-.00220	-.03030	.03430	-.00670	-.41970	-.36120
-8.704	-3.607	-.13310	.03310	.05370	-.04340	.00960	-.02600	.03340	-.00650	-.40660	-.35430
-8.507	.718	-.08060	.02900	.02130	-.05220	.01100	-.01580	.03190	-.00620	-.38350	-.34310
-8.250	4.714	-.03710	.02590	-.00800	-.04920	.00470	-.00730	.02800	-.00540	-.33820	-.30030
-8.209	6.645	-.02340	.02480	-.01690	-.04750	.00100	-.00460	.02630	-.00510	-.31830	-.28090
	GRADIENT	.01155	-.00087	-.00742	-.00072	-.00058	.00225	-.00064	.00013	.00818	.00644

IA156A, AEDC PWT 16T-470, 0 T S W/SILTS (R8NLD6) (10 MAY 80)

REFERENCE DATA

SREF = 2690.0000 SQ.FT. XMRP = 976.0000 IN. XT
LREF = 1290.3000 INCHES YMRP = .0000 IN. YT
BREF = 1290.3000 INCHES ZMRP = 400.0000 IN. ZT
SCALE = .0200

PARAMETRIC DATA

IB-ELV = 10.000 OB-ELV = -2.000
BDFLAP = .000 SPDBRK = .000
RUDDER = .000 SILTS = 1.000
MACH = 1.150 RN/L = 3.500

RUN NO. 1432/ 0 RN/L = 3.50 GRADIENT INTERVAL = -5.00/ 5.00

ALPHAL	BETAL	CNFLS	CAFLS	CLMFLS	CYFLS	CYNFLS	CBLLS	CABLS	CYNBLS	CP5	CP6
-8.619	-5.680	-.14600	.03240	.05870	-.02950	-.01020	-.02870	.04630	-.00900	-.54560	-.50840
-8.771	-3.559	-.12490	.03030	.04730	-.04160	-.00210	-.02450	.04610	-.00900	-.54160	-.50860
-8.693	.620	-.07100	.02820	.01280	-.05120	.00180	-.01400	.04330	-.00840	-.51100	-.47440
-8.382	4.590	-.02480	.02540	-.01540	-.04370	-.00450	-.00500	.03920	-.00760	-.46790	-.42480
-8.366	6.538	-.00850	.02380	-.02480	-.03790	-.00970	-.00180	.03620	-.00700	-.43540	-.38980
	GRADIENT	.01229	-.00060	-.00770	-.00028	-.00028	.00239	-.00085	.00017	.00903	.01026

RUN NO. 1433/ 0 RN/L = 3.50 GRADIENT INTERVAL = -5.00/ 5.00

ALPHAL	BETAL	CNFLS	CAFLS	CLMFLS	CYFLS	CYNFLS	CBLLS	CABLS	CYNBLS	CP5	CP6
-6.603	-5.788	-.12070	.03410	.05170	-.00780	-.01920	-.02370	.04600	-.00890	-.54420	-.50310
-6.472	-3.851	-.09810	.03290	.04010	-.01260	-.01560	-.01950	.04440	-.00860	-.52280	-.48720
-6.573	.313	-.05460	.02840	.01170	-.02070	-.01210	-.01080	.04210	-.00820	-.50100	-.45710
-6.291	4.459	-.01360	.02820	-.01450	-.01490	-.01750	-.00280	.03790	-.00740	-.46350	-.41060
-6.192	6.428	.00080	.02590	-.02320	-.00970	-.02230	.00010	.03510	-.00680	-.41760	-.38090
	GRADIENT	.01029	-.00057	-.00657	-.00028	-.00023	.00201	-.00078	.00014	.00834	.00922

RUN NO. 1434/ 0 RN/L = 3.50 GRADIENT INTERVAL = -5.00/ 5.00

ALPHAL	BETAL	CNFLS	CAFLS	CLMFLS	CYFLS	CYNFLS	CBLLS	CABLS	CYNBLS	CP5	CP6
-4.315	-5.927	-.09790	.03500	.04670	.01610	-.03110	-.01920	.04500	-.00870	-.53360	-.49110
-4.510	-3.803	-.07980	.03350	.03590	.01200	-.02810	-.01570	.04340	-.00840	-.51330	-.47400
-4.380	.523	-.03670	.03010	.00870	.01160	-.02860	-.00730	.04030	-.00780	-.48320	-.43460
-3.825	4.432	-.00640	.03000	-.01000	.01470	-.03220	-.00140	.03740	-.00730	-.44430	-.40650
-3.914	6.278	.00340	.02860	-.01680	.01390	-.03360	.00050	.03510	-.00680	-.41770	-.38250
	GRADIENT	.00893	-.00043	-.00559	.00032	-.00049	.00174	-.00073	.00013	.00835	.00821

RUN NO. 1435/ 0 RN/L = 3.50 GRADIENT INTERVAL = -5.00/ 5.00

ALPHAL	BETAL	CNFLS	CAFLS	CLMFLS	CYFLS	CYNFLS	CBLLS	CABLS	CYNBLS	CP5	CP6
-.347	-6.882	-.06340	.03750	.03830	.05110	-.05260	-.01250	.04350	-.00840	-.52320	-.46720
-.321	-4.648	-.04890	.03660	.02920	.04650	-.04960	-.00970	.04240	-.00820	-.50870	-.45780
-.361	-.225	-.02200	.03340	.01120	.04090	-.04700	-.00440	.03980	-.00770	-.48120	-.42460
-.254	3.893	-.00240	.03080	-.00250	.03040	-.04070	-.00060	.03560	-.00690	-.43270	-.37890
-.235	6.089	.00590	.02990	-.00890	.02470	-.03820	.00100	.03360	-.00650	-.41010	-.35630
	GRADIENT	.00545	-.00068	-.00372	-.00188	.00104	.00107	-.00079	.00015	.00887	.00922

IA156A, AEDC PWT 16T-470, 0 T S W/SILTS (R8NLD6) (10 MAY 80)

REFERENCE DATA

SREF = 2690.0000 SQ.FT. XMRP = 976.0000 IN. XT
LREF = 1290.3000 INCHES YMRP = .0000 IN. YT
BREF = 1290.3000 INCHES ZMRP = 400.0000 IN. ZT
SCALE = .0200

PARAMETRIC DATA

IB-ELV = 10.000 OB-ELV = -2.000
BDFLAP = .000 SPDBRK = .000
RUDDER = .000 SILTS = 1.000
MACH = 1.150 RN/L = 3.500

RUN NO. 1436/ 0 RN/L = 3.50 GRADIENT INTERVAL = -5.00/ 5.00

ALPHAL	BETAL	CNFLS	CAFLS	CLMFLS	CYFLS	CYNFLS	CBLLS	CABLS	CYNBLS	CP5	CP6
4.423	-5.761	-.01430	.03650	.01950	.05130	-.05690	-.00290	.04170	-.00810	-.50020	-.45010
4.439	-3.670	-.00870	.03570	.01580	.04480	-.05180	-.00180	.04140	-.00800	-.49520	-.44730
4.259	.354	.00000	.03380	.00710	.03560	-.04550	-.00010	.04020	-.00780	-.48100	-.43450
4.192	4.191	.00790	.03200	-.00260	.02020	-.03540	.00140	.03720	-.00720	-.44690	-.40130
4.148	6.330	.01050	.03040	-.00570	.01480	-.03330	.00190	.03540	-.00690	-.42770	-.37890
	GRADIENT	.00211	-.00047	-.00234	-.00312	.00208	.00041	-.00053	.00010	.00612	.00583

IA156A, AEDC PWT 16T-470, 0 T S W/SILTS (R8NLD7) (10 MAY 80)

REFERENCE DATA

SREF = 2690.0000 SQ.FT. XMRP = 976.0000 IN. XT
LREF = 1290.3000 INCHES YMRP = .0000 IN. YT
BREF = 1290.3000 INCHES ZMRP = 400.0000 IN. ZT
SCALE = .0200

PARAMETRIC DATA

IB-ELV = 10.000 OB-ELV = -2.000
BDFLAP = .000 SPDBRK = .000
RUDDER = .000 SILTS = 1.000
MACH = 1.250 RN/L = 3.500

RUN NO. 1437/ 0 RN/L = 3.50 GRADIENT INTERVAL = -5.00/ 5.00

ALPHAL	BETAL	CNFLS	CAFLS	CLMFLS	CYFLS	CYNFLS	CBLLS	CABLS	CYNBLS	CP5	CP6
-8.754	-5.685	-.14870	.03410	.06140	-.03030	-.00610	-.02930	.04210	-.00820	-.49700	-.46050
-8.723	-3.604	-.12680	.03300	.04950	-.04040	.00100	-.02500	.04280	-.00830	-.50340	-.47070
-8.615	.419	-.07570	.03020	.01650	-.04980	.00380	-.01500	.04080	-.00790	-.48130	-.44720
-8.384	4.634	-.02850	.02680	-.01430	-.04700	-.00110	-.00580	.03590	-.00700	-.43050	-.38800
-8.356	6.538	-.01280	.02520	-.02400	-.04240	-.00560	-.00280	.03290	-.00640	-.39590	-.35410
	GRADIENT	.01193	-.00075	-.00774	-.00079	-.00026	.00233	-.00084	.00016	.00887	.01007

RUN NO. 1438/ 0 RN/L = 3.50 GRADIENT INTERVAL = -5.00/ 5.00

ALPHAL	BETAL	CNFLS	CAFLS	CLMFLS	CYFLS	CYNFLS	CBLLS	CABLS	CYNBLS	CP5	CP6
-6.566	-5.806	-.12150	.03530	.05300	-.01020	-.01520	-.02400	.04180	-.00810	-.49880	-.45300
-6.460	-3.876	-.10180	.03390	.04240	-.01590	-.01170	-.02010	.04100	-.00800	-.48490	-.44970
-6.532	.317	-.05740	.02990	.01380	-.02390	-.00880	-.01140	.03950	-.00770	-.46920	-.43130
-6.246	4.464	-.01710	.02890	-.01250	-.01930	-.01380	-.00360	.03510	-.00680	-.41950	-.37920
-6.212	6.476	-.00190	.02690	-.02280	-.01500	-.01800	-.00060	.03200	-.00620	-.38450	-.34450
	GRADIENT	.01016	-.00060	-.00658	-.00041	-.00025	.00198	-.00071	.00014	.00783	.00845

IA156A, AEDC PWT 16T-470, O T S W/SILTS (R8NLD7) (10 MAY 80)

REFERENCE DATA

SREF = 2690.0000 SQ.FT. XMRP = 976.0000 IN. XT
LREF = 1290.3000 INCHES YMRP = .0000 IN. YT
BREF = 1290.3000 INCHES ZMRP = 400.0000 IN. ZT
SCALE = .0200

PARAMETRIC DATA

IB-ELV =	10.000	OB-ELV =	-2.000
BDFLAP =	.000	SPDBRK =	.000
RUDDER =	.000	SILTS =	1.000
MACH =	1.250	RN/L =	3.500

RUN NO. 1439/ 0 RN/L = 3.50 GRADIENT INTERVAL = -5.00/ 5.00

ALPHAL	BETAL	CNFLS	CAFLS	CLMFLS	CYFLS	CYNFLS	CBLLS	CABLS	CYNBLS	CP5	CP6
-4.259	-5.952	-.09720	.03640	.04710	.01360	-.02770	-.01920	.04080	-.00790	-.49150	-.43690
-4.456	-3.804	-.08030	.03480	.03630	.00610	-.02390	-.01590	.03960	-.00770	-.47370	-.42860
-4.354	.527	-.04000	.03110	.01080	.00340	-.02290	-.00800	.03800	-.00740	-.45850	-.40810
-3.810	4.438	-.00930	.03040	-.00790	.00980	-.02840	-.00200	.03460	-.00670	-.41540	-.37370
-3.930	6.326	.00090	.02870	-.01560	.00870	-.02940	-.00010	.03210	-.00620	-.38320	-.34720
	GRADIENT	.00863	-.00054	-.00537	.00043	-.00053	.00169	-.00060	.00012	.00701	.00663

RUN NO. 1440/ 0 RN/L = 3.50 GRADIENT INTERVAL = -5.00/ 5.00

ALPHAL	BETAL	CNFLS	CAFLS	CLMFLS	CYFLS	CYNFLS	CBLLS	CABLS	CYNBLS	CP5	CP6
-.298	-6.940	-.06300	.03860	.03940	.04880	-.04970	-.01250	.03990	-.00770	-.48490	-.42370
-.269	-4.656	-.05000	.03740	.03140	.04470	-.04690	-.01000	.03930	-.00760	-.47580	-.41890
-.272	-.268	-.02530	.03440	.01470	.03890	-.04430	-.00520	.03670	-.00710	-.44180	-.39320
-.187	3.898	-.00610	.03100	.00100	.02860	-.03890	-.00140	.03290	-.00640	-.39980	-.35010
-.192	6.111	.00240	.03000	-.00590	.02370	-.03730	.00020	.03070	-.00600	-.37460	-.32420
	GRADIENT	.00514	-.00075	-.00356	-.00188	.00093	.00101	-.00075	.00014	.00887	.00802

RUN NO. 1441/ 0 RN/L = 3.50 GRADIENT INTERVAL = -5.00/ 5.00

ALPHAL	BETAL	CNFLS	CAFLS	CLMFLS	CYFLS	CYNFLS	CBLLS	CABLS	CYNBLS	CP5	CP6
4.499	-5.748	-.01320	.03780	.02040	.04840	-.05480	-.00280	.03850	-.00750	-.46370	-.41420
4.506	-3.665	-.00870	.03740	.01730	.04190	-.04970	-.00190	.03800	-.00740	-.45700	-.40860
4.343	.370	-.00180	.03430	.00980	.03160	-.04330	-.00050	.03690	-.00720	-.44400	-.39710
4.258	4.199	.00610	.03170	-.00060	.01680	-.03390	.00100	.03430	-.00670	-.41600	-.36640
4.215	6.352	.00920	.03100	-.00460	.01160	-.03180	.00160	.03190	-.00620	-.38580	-.34090
	GRADIENT	.00188	-.00073	-.00227	-.00319	.00201	.00037	-.00047	.00009	.00520	.00534

IA156A, AEDC PWT 16T-470, 0 T S W/SILTS (R8NLD8) (10 MAY 80)

REFERENCE DATA

SREF = 2690.0000 SQ.FT. XMRP = 976.0000 IN. XT
LREF = 1290.3000 INCHES YMRP = .0000 IN. YT
BREF = 1290.3000 INCHES ZMRP = 400.0000 IN. ZT
SCALE = .0200

PARAMETRIC DATA

IB-ELV = 10.000 OB-ELV = -2.000
BDFLAP = .000 SPDBRK = .000
RUDDER = .000 SILTS = 1.000
MACH = 1.400 RN/L = 3.500

RUN NO. 1442/ 0 RN/L = 3.00 GRADIENT INTERVAL = -5.00/ 5.00

ALPHAL	BETAL	CNFLS	CAFLS	CLMFLS	CYFLS	CYNFLS	CBLLS	CABLS	CYNBLS	CP5	CP6
-8.699	-5.750	-.15660	.03530	.06510	-.03210	-.00110	-.03090	.03790	-.00740	-.46090	-.40240
-8.670	-3.656	-.13420	.03500	.05330	-.04630	.00840	-.02660	.03790	-.00740	-.45370	-.40970
-8.531	.632	-.07730	.03080	.01760	-.05260	.00820	-.01550	.03600	-.00700	-.42760	-.39310
-8.293	4.628	-.03260	.02750	-.01130	-.04780	.00080	-.00670	.03170	-.00620	-.38060	-.34110
-8.257	6.578	-.01940	.02560	-.01850	-.04280	-.00430	-.00410	.02960	-.00570	-.35660	-.31670
	GRADIENT	.01228	-.00091	-.00780	-.00020	-.00091	.00240	-.00074	.00014	.00879	.00823

RUN NO. 1443/ 0 RN/L = 3.00 GRADIENT INTERVAL = -5.00/ 5.00

ALPHAL	BETAL	CNFLS	CAFLS	CLMFLS	CYFLS	CYNFLS	CBLLS	CABLS	CYNBLS	CP5	CP6
-6.554	-5.884	-.12230	.03590	.05240	-.01830	-.00590	-.02430	.03710	-.00720	-.45270	-.39160
-6.462	-3.930	-.10240	.03450	.04150	-.02420	-.00310	-.02040	.03680	-.00710	-.44630	-.39220
-6.470	.310	-.06020	.03080	.01590	-.02890	-.00330	-.01220	.03510	-.00680	-.41900	-.38020
-6.219	4.501	-.[illegible]6	.02970	-.01040	-.02230	-.01180	-.00430	.03220	-.00620	-.38580	-.34730
-5.880	6.599	-.00550	.02800	-.01800	-.01470	-.01780	-.00140	.02900	-.00560	-.34940	-.31050
	GRADIENT	.00976	-.00057	-.00616	.00022	-.00103	.00191	-.00055	.00011	.00717	.00532

RUN NO. 1444/ 0 RN/L = 3.00 GRADIENT INTERVAL = -5.00/ 5.00

ALPHAL	BETAL	CNFLS	CAFLS	CLMFLS	CYFLS	CYNFLS	CBLLS	CABLS	CYNBLS	CP5	CP6
-4.270	-5.995	-.09420	.03690	.04430	.00710	-.02120	-.01880	.03620	-.00700	-.44340	-.38150
-4.488	-3.861	-.07820	.03490	.03410	-.00060	-.01680	-.01570	.03520	-.00680	-.42870	-.37250
-4.315	.541	-.04090	.03140	.01160	-.00320	-.01710	-.00840	.03380	-.00660	-.40880	-.36140
-3.789	4.491	-.01140	.03100	-.00620	.00510	-.02610	-.00260	.03140	-.00610	-.37830	-.33680
-3.859	6.344	-.00150	.02930	-.01320	.00500	-.02780	-.00060	.02920	-.00570	-.35290	-.31330
	GRADIENT	.00801	-.00047	-.00483	.00066	-.00109	.00157	-.00045	.00008	.00601	.00424

RUN NO. 1445/ 0 RN/L = 3.00 GRADIENT INTERVAL = -5.00/ 5.00

ALPHAL	BETAL	CNFLS	CAFLS	CLMFLS	CYFLS	CYNFLS	CBLLS	CABLS	CYNBLS	CP5	CP6
-.322	-6.850	-.05810	.03820	.03650	.04530	-.04640	-.01180	.03580	-.00690	-.44030	-.37450
-.294	-4.693	-.04620	.03730	.02940	.04020	-.04270	-.00940	.03510	-.00680	-.42820	-.37030
-.277	-.307	-.02490	.03460	.01520	.03400	-.04010	-.00520	.03290	-.00640	-.40010	-.35050
-.208	3.854	-.00870	.03130	.00390	.02590	-.03700	-.00210	.03000	-.00580	-.36260	-.32110
-.220	6.061	-.00030	.03010	-.00290	.02170	-.03600	-.00040	.02820	-.00550	-.34360	-.29810
	GRADIENT	.00439	-.00070	-.00299	-.00167	.00067	.00086	-.00060	.00012	.00766	.00575

IA156A, AEDC PWT 16T-470, O T S W/SILTS (R8NLD8) (10 MAY 80)

REFERENCE DATA

SREF = 2690.0000 SQ.FT. XMRP = 976.0000 IN. XT
LREF = 1290.3000 INCHES YMRP = .0000 IN. YT
BREF = 1290.3000 INCHES ZMRP = 400.0000 IN. ZT
SCALE = .0200

PARAMETRIC DATA

IB-ELV = 10.000 OB-ELV = -2.000
BDFLAP = .000 SPDBRK = .000
RUDDER = .000 SILTS = 1.000
MACH = 1.400 RN/L = 3.500

RUN NO. 1446/ 0 RN/L = 3.00 GRADIENT INTERVAL = -5.00/ 5.00

ALPHAL	BETAL	CNFLS	CAFLS	CLMFLS	CYFLS	CYNFLS	CBLLS	CABLS	CYNBLS	CP5	CP6
4.557	-5.736	-.01310	.03780	.02350	.04650	-.05470	-.00280	.03470	-.00670	-.42540	-.36500
4.495	-3.605	-.00800	.03660	.01820	.03820	-.04860	-.00190	.03440	-.00670	-.42140	-.36250
4.332	.390	-.00290	.03430	.01130	.02690	-.04050	-.00090	.03220	-.00620	-.39200	-.34050
4.195	4.216	.00390	.03170	.00220	.01320	-.03220	.00050	.03080	-.00600	-.37660	-.32570
4.160	6.347	.00810	.03080	-.00280	.00910	-.03060	.00130	.02880	-.00560	-.35200	-.30480
	GRADIENT	.00152	-.00063	-.00204	-.00319	.00210	.00031	-.00046	.00009	.00574	.00471

IA156A, AEDC PWT 16T-470, O T S W/SILTS (R8NLD9) (10 MAY 80)

REFERENCE DATA

SREF = 2690.0000 SQ.FT. XMRP = 976.0000 IN. XT
LREF = 1290.3000 INCHES YMRP = .0000 IN. YT
BREF = 1290.3000 INCHES ZMRP = 400.0000 IN. ZT
SCALE = .0200

PARAMETRIC DATA

IB-ELV = 10.000 OB-ELV = -2.000
BDFLAP = .000 SPDBRK = .000
RUDDER = .000 SILTS = 1.000
MACH = 1.550 RN/L = 3.200

RUN NO. 1447/ 0 RN/L = 3.00 GRADIENT INTERVAL = -5.00/ 5.00

ALPHAL	BETAL	CNFLS	CAFLS	CLMFLS	CYFLS	CYNFLS	CBLLS	CABLS	CYNBLS	CP5	CP6
-8.710	-5.730	-.15240	.03350	.06600	-.02600	-.00200	-.03020	.03440	-.00670	-.42180	-.36140
-8.699	-3.616	-.13150	.03350	.05280	-.04390	.00980	-.02610	.03380	-.00660	-.41190	-.35840
-8.509	.688	-.07980	.02940	.02120	-.05160	.01030	-.01610	.03200	-.00620	-.38380	-.34500
-8.244	4.727	-.03590	.02640	-.00830	-.04860	.00420	-.00740	.02800	-.00540	-.33760	-.29950
-8.201	6.656	-.02250	.02490	-.01720	-.04700	.00040	-.00480	.02640	-.00510	-.31910	-.28260
	GRADIENT	.01146	-.00085	-.00732	-.00058	-.00066	.00224	-.00069	.00014	.00887	.00702

RUN NO. 1448/ 0 RN/L = 3.00 GRADIENT INTERVAL = -5.00/ 5.00

ALPHAL	BETAL	CNFLS	CAFLS	CLMFLS	CYFLS	CYNFLS	CBLLS	CABLS	CYNBLS	CP5	CP6
-6.622	-5.892	-.12140	.03480	.05330	-.01490	-.00650	-.02420	.03340	-.00650	-.41480	-.34700
-6.496	-3.881	-.10060	.03350	.04150	-.02360	-.00150	-.02010	.03210	-.00620	-.39390	-.33700
-6.476	.385	-.06020	.02980	.01670	-.02820	-.00210	-.01220	.03100	-.00600	-.37450	-.33140
-6.161	4.583	-.02370	.02760	-.00720	-.02330	-.00880	-.00500	.02780	-.00540	-.33480	-.29950
-5.815	6.686	-.00970	.02670	-.01520	-.01750	-.01420	-.00230	.02590	-.00500	-.31580	-.27520
	GRADIENT	.00909	-.00070	-.00575	.00003	-.00060	.00178	-.00051	.00009	.00698	.00442

IA156A, AEDC PWT 16T-470, 0 T S W/SILTS (R8NLD9) (10 MAY 80)

REFERENCE DATA

SREF = 2690.0000 SQ.FT. XMRP = 976.0000 IN. XT
LREF = 1290.3000 INCHES YMRP = .0000 IN. YT
BREF = 1290.3000 INCHES ZMRP = 400.0000 IN. ZT
SCALE = .0200

PARAMETRIC DATA

IB-ELV = 10.000 OB-ELV = -2.000
BDFLAP = .000 SPDBRK = .000
RUDDER = .000 SILTS = 1.000
MACH = 1.550 RN/L = 3.200

RUN NO. 1449/ 0 RN/L = 3.00 GRADIENT INTERVAL = -5.00/ 5.00

ALPHAL	BETAL	CNFLS	CAFLS	CLMFLS	CYFLS	CYNFLS	CBLLS	CABLS	CYNBLS	CP5	CP6
-4.562	-5.940	-.09340	.03590	.04300	.00380	-.01840	-.01870	.03280	-.00640	-.40550	-.34080
-4.535	-3.833	-.07370	.03390	.03130	-.00110	-.01570	-.01490	.03140	-.00610	-.38690	-.32900
-4.363	.643	-.03990	.03010	.01100	-.00400	-.01610	-.00820	.03020	-.00590	-.36950	-.31800
-3.747	4.584	-.01380	.02830	-.00440	.00020	-.02070	-.00310	.02760	-.00540	-.33440	-.29510
-3.797	6.414	-.00490	.02760	-.01120	.00060	-.02310	-.00140	.02580	-.00500	-.31440	-.27420
	GRADIENT	.00713	-.00067	-.00425	.00014	-.00058	.00140	-.00045	.00008	.00618	.00399

RUN NO. 1450/ 0 RN/L = 3.00 GRADIENT INTERVAL = -5.00/ 5.00

ALPHAL	BETAL	CNFLS	CAFLS	CLMFLS	CYFLS	CYNFLS	CBLLS	CABLS	CYNBLS	CP5	CP6
-.408	-6.903	-.05380	.03740	.03330	.04360	-.04580	-.01100	.03310	-.00640	-.41580	-.33790
-.388	-4.737	-.04250	.03570	.02650	.03780	-.04120	-.00880	.03180	-.00620	-.39260	-.33160
-.365	-.421	-.02370	.03380	.01430	.03260	-.03900	-.00510	.02930	-.00570	-.35660	-.31120
-.337	3.835	-.00810	.03090	.00310	.02160	-.03320	-.00200	.02760	-.00540	-.33400	-.29430
-.357	5.987	.00030	.02940	-.00410	.01720	-.03190	-.00040	.02520	-.00490	-.30720	-.26600
	GRADIENT	.00401	-.00056	-.00273	-.00189	.00093	.00079	-.00049	.00009	.00684	.00435

RUN NO. 1451/ 0 RN/L = 3.00 GRADIENT INTERVAL = -5.00/ 5.00

ALPHAL	BETAL	CNFLS	CAFLS	CLMFLS	CYFLS	CYNFLS	CBLLS	CABLS	CYNBLS	CP5	CP6
4.598	-5.623	-.00760	.03640	.02020	.04190	-.05220	-.00190	.03240	-.00630	-.40230	-.33680
4.510	-3.407	-.00420	.03530	.01600	.03310	-.04560	-.00120	.03170	-.00610	-.39490	-.32660
4.121	.472	-.00240	.03340	.01100	.02410	-.03930	-.00080	.02890	-.00560	-.35670	-.30250
4.113	4.315	.00420	.03130	.00230	.01030	-.03020	.00050	.02700	-.00520	-.33530	-.28020
4.032	6.333	.00800	.03000	-.00190	.00680	-.02910	.00120	.02590	-.00500	-.31980	-.26940
	GRADIENT	.00109	-.00052	-.00177	-.00295	.00199	.00022	-.00061	.00012	.00772	.00601

IA156A, AEDC PWT 16T-470, 0 T S W/SILTS (R8NLE0) (10 MAY 80)

REFERENCE DATA

SREF = 2690.0000 SQ.FT. XMRP = 976.0000 IN. XT
LREF = 1290.3000 INCHES YMRP = .0000 IN. YT
BREF = 1290.3000 INCHES ZMRP = 400.0000 IN. ZT
SCALE = .0200

PARAMETRIC DATA

IB-ELV = 10.000 OB-ELV = -7.000
BDFLAP = .000 SPDBRK = .000
RUDDER = .000 SILTS = 1.000
MACH = 1.400 RN/L = 3.500

RUN NO. 1456/ 0 RN/L = 3.00 GRADIENT INTERVAL = -5.00/ 5.00

ALPHAL	BETAL	CNFLS	CAFLS	CLMFLS	CYFLS	CYNFLS	CBLLS	CABLS	CYNBLS	CP5	CP6
-8.699	-5.735	-.15680	.03470	.06500	-.03330	.00040	-.03060	.03780	-.00730	-.45890	-.40240
-8.679	-3.652	-.13390	.03420	.05310	-.04730	.00970	-.02620	.03780	-.00730	-.45180	-.40800
-8.534	.640	-.07750	.03020	.01790	-.05250	.00910	-.01520	.03600	-.00700	-.42790	-.39290
-8.306	4.647	-.03360	.02700	-.01080	-.04820	.00160	-.00660	.03210	-.00620	-.38540	-.34530
-8.233	6.548	-.02070	.02540	-.01780	-.04330	-.00320	-.00410	.02930	-.00570	-.35280	-.31460
	GRADIENT	.01210	-.00087	-.00771	-.00012	-.00097	.00236	-.00068	.00013	.00797	.00751

RUN NO. 1457/ 0 RN/L = 3.00 GRADIENT INTERVAL = -5.00/ 5.00

ALPHAL	BETAL	CNFLS	CAFLS	CLMFLS	CYFLS	CYNFLS	CBLLS	CABLS	CYNBLS	CP5	CP6
-6.574	-5.890	-.12550	.03560	.05360	-.01980	-.00450	-.02460	.03740	-.00730	-.45560	-.39570
-6.455	-3.905	-.10400	.03420	.04210	-.02530	-.00200	-.02030	.03650	-.00710	-.44180	-.38980
-6.502	.320	-.06130	.03060	.01600	-.02990	-.00230	-.01200	.03490	-.00680	-.41730	-.37800
-6.174	4.478	-.02080	.02940	-.00950	-.02120	-.01160	-.00410	.03200	-.00620	-.38360	-.34480
-6.124	6.500	-.00750	.02690	-.01730	-.01670	-.01580	-.00150	.02960	-.00580	-.35660	-.31860
	GRADIENT	.00993	-.00057	-.00616	.00048	-.00114	.00193	-.00054	.00011	.00694	.00536

RUN NO. 1458/ 0 RN/L = 3.00 GRADIENT INTERVAL = -5.00/ 5.00

ALPHAL	BETAL	CNFLS	CAFLS	CLMFLS	CYFLS	CYNFLS	CBLLS	CABLS	CYNBLS	CP5	CP6
-4.270	-6.008	-.09540	.03650	.04480	.00630	-.02010	-.01870	.03610	-.00700	-.44170	-.38060
-4.494	-3.856	-.07970	.03490	.03470	-.00140	-.01580	-.01560	.03510	-.00680	-.42790	-.37220
-4.340	.528	-.04220	.03130	.01200	-.00390	-.01630	-.00830	.03350	-.00650	-.40590	-.35810
-3.769	4.471	-.01280	.03080	-.00540	.00480	-.02520	-.00250	.03140	-.00610	-.37830	-.33690
-3.883	6.359	-.00280	.02930	-.01260	.00490	-.02710	-.00050	.02920	-.00570	-.35180	-.31280
	GRADIENT	.00804	-.00050	-.00482	.00072	-.00111	.00157	-.00044	.00008	.00594	.00422

RUN NO. 1459/ 0 RN/L = 3.00 GRADIENT INTERVAL = -5.00/ 5.00

ALPHAL	BETAL	CNFLS	CAFLS	CLMFLS	CYFLS	CYNFLS	CBLLS	CABLS	CYNBLS	CP5	CP6
-.345	-6.855	-.05980	.03770	.03690	.04430	-.04510	-.01170	.03580	-.00700	-.44100	-.37560
-.317	-4.709	-.04730	.03710	.02960	.03940	-.04170	-.00930	.03490	-.00680	-.42540	-.36950
-.296	-.304	-.02620	.03440	.01560	.03320	-.03910	-.00520	.03270	-.00640	-.39570	-.34960
-.225	3.846	-.01000	.03100	.00450	.02550	-.03630	-.00200	.03020	-.00590	-.36430	-.32330
-.246	6.054	-.00180	.02970	-.00230	.02140	-.03520	-.00040	.02820	-.00550	-.34430	-.29870
	GRADIENT	.00436	-.00071	-.00294	-.00162	.00063	.00085	-.00055	.00011	.00714	.00539

IA156A, AEDC PWT 16T-470, 0 T S W/SILTS (R8NLE0) (10 MAY 80)

REFERENCE DATA

SREF = 2690.0000 SQ.FT. XMRP = 976.0000 IN. XT
LREF = 1290.3000 INCHES YMRP = .0000 IN. YT
BREF = 1290.3000 INCHES ZMRP = 400.0000 IN. ZT
SCALE = .0200

PARAMETRIC DATA

IB-ELV = 10.000 OB-ELV = -7.000
BDFLAP = .000 SPDBRK = .000
RUDDER = .000 SILTS = 1.000
MACH = 1.400 RN/L = 3.500

RUN NO. 1460/ 0 RN/L = 3.00 GRADIENT INTERVAL = -5.00/ 5.00

ALPHAL	BETAL	CNFLS	CAFLS	CLMFLS	CYFLS	CYNFLS	CBLLS	CABLS	CYNBLS	CP5	CP6
4.664	-5.666	-.01230	.03730	.02270	.04460	-.05300	-.00240	.03460	-.00670	-.42400	-.36470
4.488	-3.543	-.00880	.03620	.01840	.03730	-.04740	-.00170	.03420	-.00660	-.41760	-.36100
4.184	.329	-.00500	.03390	.01190	.02740	-.04020	-.00090	.03230	-.00630	-.39290	-.34200
4.198	4.256	.00280	.03140	.00250	.01290	-.03150	.00060	.03050	-.00590	-.37300	-.32210
4.149	6.334	.00660	.03060	-.00180	.00900	-.03010	.00130	.02900	-.00560	-.35450	-.30720
	GRADIENT	.00149	-.00062	-.00204	-.00313	.00204	.00030	-.00047	.00009	.00572	.00499

IA156A, AEDC PWT 16T-470, 0 T S W/SILTS (R8NLE1) (10 MAY 80)

REFERENCE DATA

SREF = 2690.0000 SQ.FT. XMRP = 976.0000 IN. XT
LREF = 1290.3000 INCHES YMRP = .0000 IN. YT
BREF = 1290.3000 INCHES ZMRP = 400.0000 IN. ZT
SCALE = .0200

PARAMETRIC DATA

IB-ELV = 10.000 OB-ELV = -7.000
BDFLAP = .000 SPDBRK = .000
RUDDER = .000 SILTS = 1.000
MACH = 1.550 RN/L = 3.200

RUN NO. 1461/ 0 RN/L = 3.00 GRADIENT INTERVAL = -5.00/ 5.00

ALPHAL	BETAL	CNFLS	CAFLS	CLMFLS	CYFLS	CYNFLS	CBLLS	CABLS	CYNBLS	CP5	CP6
-8.642	-5.716	-.15330	.03390	.06640	-.02600	-.00160	-.03000	.03380	-.00660	-.41540	-.35440
-8.681	-3.718	-.13500	.03350	.05470	-.04420	.01050	-.02640	.03390	-.00660	-.41270	-.35880
-8.527	.584	-.08280	.02940	.02280	-.05240	.01150	-.01630	.03200	-.00620	-.38420	-.34550
-8.276	4.600	-.03890	.02600	-.00670	-.04990	.00570	-.00770	.02860	-.00560	-.34500	-.30740
-8.218	6.654	-.02420	.02500	-.01660	-.04810	.00140	-.00480	.02630	-.00510	-.31690	-.28240
	GRADIENT	.01156	-.00090	-.00738	-.00070	-.00057	.00225	-.00063	.00012	.00812	.00614

RUN NO. 1462/ 0 RN/L = 3.00 GRADIENT INTERVAL = -5.00/ 5.00

ALPHAL	BETAL	CNFLS	CAFLS	CLMFLS	CYFLS	CYNFLS	CBLLS	CABLS	CYNBLS	CP5	CP6
-6.627	-5.893	-.12280	.03500	.05380	-.01610	-.00540	-.02400	.03310	-.00640	-.40900	-.34540
-6.498	-3.900	-.10230	.03340	.04220	-.02440	-.00060	-.02000	.03250	-.00630	-.39890	-.34040
-6.485	.385	-.06170	.02960	.01730	-.02880	-.00120	-.01220	.03110	-.00600	-.37660	-.33290
-6.165	4.587	-.02510	.02730	-.00650	-.02400	-.00790	-.00500	.02800	-.00540	-.33700	-.30080
-5.956	6.714	-.01140	.02650	-.01480	-.01930	-.01280	-.00230	.02580	-.00500	-.31320	-.27460
	GRADIENT	.00910	-.00072	-.00574	.00004	-.00086	.00177	-.00053	.00011	.00729	.00466

IA156A, AEDC PWT 16T-470, 0 T S W/SILTS (R8NLE1) (10 MAY 80)

REFERENCE DATA

SREF = 2690.0000 SQ.FT. XMRP = 976.0000 IN. XT
LREF = 1290.3000 INCHES YMRP = .0000 IN. YT
BREF = 1290.3000 INCHES ZMRP = 400.0000 IN. ZT
SCALE = .0200

PARAMETRIC DATA

IB-ELV = 10.000 OB-ELV = -7.000
BDFLAP = .000 SPDBRK = .000
RUDDER = .000 SILTS = 1.000
MACH = 1.550 RN/L = 3.200

RUN NO. 1463/ 0 RN/L = 3.00 GRADIENT INTERVAL = -5.00/ 5.00

ALPHAL	BETAL	CNFLS	CAFLS	CLMFLS	CYFLS	CYNFLS	CBLLS	CABLS	CYNBLS	CP5	CP6
-4.454	-6.024	-.09250	.03550	.04290	.00460	-.01830	-.01820	.03250	-.00630	-.40090	-.33910
-4.579	-3.852	-.07610	.03410	.03230	-.00240	-.01450	-.01490	.03160	-.00610	-.38800	-.33160
-4.359	.630	-.04120	.03030	.01170	-.00440	-.01560	-.00810	.02970	-.00580	-.36110	-.31540
-3.749	4.576	-.01510	.02830	-.00390	-.00030	-.02020	-.00300	.02760	-.00540	-.33450	-.29440
-3.811	6.411	-.00630	.02760	-.01060	.00010	-.02240	-.00130	.02590	-.00500	-.31440	-.27620
	GRADIENT	.00725	-.00069	-.00430	.00023	-.00067	.00141	-.00047	.00008	.00634	.00440

RUN NO. 1464/ 0 RN/L = 3.00 GRADIENT INTERVAL = -5.00/ 5.00

ALPHAL	BETAL	CNFLS	CAFLS	CLMFLS	CYFLS	CYNFLS	CBLLS	CABLS	CYNBLS	CP5	CP6
-.435	-6.963	-.05510	.03710	.03350	.04230	-.04430	-.01090	.03270	-.00630	-.40880	-.33600
-.407	-4.771	-.04430	.03570	.02710	.03680	-.04020	-.00880	.03160	-.00610	-.38840	-.33250
-.389	-.402	-.02550	.03370	.01500	.03160	-.03790	-.00510	.02920	-.00570	-.35410	-.31200
-.358	3.786	-.00970	.03060	.00380	.02100	-.03250	-.00200	.02780	-.00540	-.33620	-.29680
-.377	5.986	-.00100	.02900	-.00350	.01670	-.03110	-.00030	.02540	-.00490	-.30900	-.26860
	GRADIENT	.00405	-.00060	-.00272	-.00184	.00090	.00080	-.00044	.00008	.00611	.00418

RUN NO. 1465/ 0 RN/L = 3.00 GRADIENT INTERVAL = -5.00/ 5.00

ALPHAL	BETAL	CNFLS	CAFLS	CLMFLS	CYFLS	CYNFLS	CBLLS	CABLS	CYNBLS	CP5	CP6
4.712	-5.548	-.00720	.03590	.01960	.04050	-.05100	-.00140	.03230	-.00630	-.39840	-.33700
4.481	-3.430	-.00520	.03510	.01610	.03320	-.04520	-.00100	.03140	-.00610	-.38920	-.32690
4.127	.425	-.00330	.03320	.01140	.02370	-.03870	-.00060	.02900	-.00560	-.35590	-.30390
4.085	4.267	.00290	.03130	.00290	.00980	-.02960	.00060	.02700	-.00520	-.33490	-.28040
4.038	6.342	.00650	.02990	-.00110	.00630	-.02850	.00130	.02600	-.00500	-.32090	-.27070
	GRADIENT	.00105	-.00049	-.00171	-.00304	.00203	.00021	-.00057	.00012	.00706	.00604

IA156A, AEDC PWT 16T-470, 0 T S W/SILTS (R8NLE2) (10 MAY 80)

REFERENCE DATA

SREF = 2690.0000 SQ.FT. XMRP = 976.0000 IN. XT
LREF = 1290.3000 INCHES YMRP = .0000 IN. YT
BREF = 1290.3000 INCHES ZMRP = 400.0000 IN. ZT
SCALE = .0200

PARAMETRIC DATA

IB-ELV = 12.000 OB-ELV = -7.000
BDFLAP = .000 SPDBRK = .000
RUDDER = .000 SILTS = 1.000
MACH = 1.400 RN/L = 3.500

RUN NO. 1469/ 0 RN/L = 3.01 GRADIENT INTERVAL = -5.00/ 5.00

ALPHAL	BETAL	CNFLS	CAFLS	CLMFLS	CYFLS	CYNFLS	CBLLS	CABLS	CYNBLS	CP5	CP6
-8.671	-5.754	-.15790	.03550	.06600	-.03330	.00010	-.03090	.03780	-.00730	-.45760	-.40320
-8.660	-3.699	-.13570	.03460	.05440	-.04690	.00950	-.02650	.03780	-.00730	-.45090	-.40940
-8.538	.498	-.08070	.03080	.02000	-.05330	.00960	-.01580	.03620	-.00700	-.42840	-.39510
-8.281	4.587	-.03480	.02750	-.00950	-.04810	.00170	-.00680	.03220	-.00620	-.38640	-.34610
-8.246	6.556	-.02180	.02590	-.01680	-.04380	-.00320	-.00430	.02970	-.00580	-.35770	-.31790
	GRADIENT	.01218	-.00086	-.00771	-.00015	-.00094	.00238	-.00067	.00013	.00777	.00762

RUN NO. 1470/ 0 RN/L = 3.00 GRADIENT INTERVAL = -5.00/ 5.00

ALPHAL	BETAL	CNFLS	CAFLS	CLMFLS	CYFLS	CYNFLS	CBLLS	CABLS	CYNBLS	CP5	CP6
-6.560	-5.892	-.12520	.03590	.05410	-.01950	-.00470	-.02450	.03750	-.00730	-.45640	-.39790
-6.440	-3.911	-.10410	.03450	.04260	-.02520	-.00190	-.02040	.03660	-.00710	-.44180	-.39080
-6.483	.324	-.06230	.03090	.01710	-.03020	-.00210	-.01220	.03520	-.00680	-.41930	-.38160
-6.208	4.497	-.02200	.02950	-.00880	-.02290	-.01060	-.00430	.03210	-.00620	-.38380	-.34630
-5.952	6.611	-.00810	.02780	-.01640	-.01630	-.01620	-.00160	.02940	-.00570	-.35320	-.31550
	GRADIENT	.00976	-.00060	-.00611	.00027	-.00103	.00191	-.00053	.00011	.00689	.00528

RUN NO. 1471/ 0 RN/L = 3.00 GRADIENT INTERVAL = -5.00/ 5.00

ALPHAL	BETAL	CNFLS	CAFLS	CLMFLS	CYFLS	CYNFLS	CBLLS	CABLS	CYNBLS	CP5	CP6
-4.290	-6.014	-.09720	.03670	.04610	.00600	-.01990	-.01900	.03680	-.00720	-.45150	-.38800
-4.490	-3.860	-.08040	.03530	.03550	-.00170	-.01580	-.01570	.03530	-.00690	-.42880	-.37540
-4.319	.528	-.04340	.03170	.01310	-.00440	-.01600	-.00850	.03370	-.00650	-.40660	-.36060
-3.776	4.489	-.01310	.03100	-.00490	.00420	-.02490	-.00260	.03160	-.00610	-.37960	-.33960
-3.878	6.351	-.00350	.02960	-.01180	.00430	-.02670	-.00070	.02920	-.00570	-.35260	-.31310
	GRADIENT	.00807	-.00052	-.00484	.00068	-.00107	.00157	-.00044	.00010	.00588	.00427

RUN NO. 1472/ 0 RN/L = 2.99 GRADIENT INTERVAL = -5.00/ 5.00

ALPHAL	BETAL	CNFLS	CAFLS	CLMFLS	CYFLS	CYNFLS	CBLLS	CABLS	CYNBLS	CP5	CP6
-.332	-6.847	-.05980	.03790	.03740	.04420	-.04520	-.01170	.03610	-.00700	-.44500	-.37780
-.309	-4.704	-.04880	.03740	.03090	.03940	-.04190	-.00960	.03560	-.00690	-.43330	-.37690
-.286	-.317	-.02720	.03480	.01670	.03330	-.03930	-.00530	.03280	-.00640	-.39670	-.35070
-.213	3.859	-.01090	.03120	.00540	.02520	-.03610	-.00210	.03040	-.00590	-.36660	-.32560
-.229	6.049	-.00270	.03040	-.00120	.02080	-.03490	-.00050	.02780	-.00540	-.33900	-.29470
	GRADIENT	.00443	-.00072	-.00298	-.00166	.00068	.00068	-.00061	.00012	.00779	.00599

IA156A, AEDC PWT 16T-470, O T S W/SILTS (R8NLE2) (10 MAY 80)

REFERENCE DATA

SREF = 2690.0000 SQ.FT. XMRP = 976.0000 IN. XT
LREF = 1290.3000 INCHES YMRP = .0000 IN. YT
BREF = 1290.3000 INCHES ZMRP = 400.0000 IN. ZT
SCALE = .0200

PARAMETRIC DATA

IB-ELV = 12.000 OB-ELV = -7.000
BDFLAP = .000 SPDBRK = .000
RUDDER = .000 SILTS = 1.000
MACH = 1.400 RN/L = 3.500

RUN NO. 1473/ 0 RN/L = 3.00 GRADIENT INTERVAL = -5.00/ 5.00

ALPHAL	BETAL	CNFLS	CAFLS	CLMFLS	CYFLS	CYNFLS	CBLLS	CABLS	CYNBLS	CP5	CP6
4.665	-5.654	-.01310	.03760	.02350	.04430	-.05290	-.00250	.03420	-.00660	-.41930	-.36070
4.477	-3.536	-.01020	.03650	.01960	.03760	-.04780	-.00190	.03410	-.00660	-.41700	-.35990
4.190	.323	-.00580	.03450	.01290	.02730	-.04030	-.00110	.03190	-.00620	-.38900	-.33840
4.197	4.251	.00210	.03160	.00320	.01300	-.03150	.00050	.03060	-.00590	-.37370	-.32320
4.159	6.350	.00580	.03070	-.00100	.00890	-.02990	.00120	.02880	-.00560	-.35110	-.30390
	GRADIENT	.00158	-.00063	-.00211	-.00316	.00209	.00031	-.00045	.00009	.00556	.00471

IA156A, AEDC PWT 16T-470, O T S W/SILTS (R8NLE3) (10 MAY 80)

REFERENCE DATA

SREF = 2690.0000 SQ.FT. XMRP = 976.0000 IN. XT
LREF = 1290.3000 INCHES YMRP = .0000 IN. YT
BREF = 1290.3000 INCHES ZMRP = 400.0000 IN. ZT
SCALE = .0200

PARAMETRIC DATA

IB-ELV = 12.000 OB-ELV = -7.000
BDFLAP = .000 SPDBRK = .000
RUDDER = .000 SILTS = 1.000
MACH = 1.550 RN/L = 3.200

RUN NO. 1474/ 0 RN/L = 3.01 GRADIENT INTERVAL = -5.00/ 5.00

ALPHAL	BETAL	CNFLS	CAFLS	CLMFLS	CYFLS	CYNFLS	CBLLS	CABLS	CYNBLS	CP5	CP6
-8.687	-5.737	-.15520	.03430	.06810	-.02680	-.00120	-.03030	.03400	-.00660	-.41750	-.35740
-8.696	-3.615	-.13440	.03410	.05480	-.04470	.01070	-.02630	.03360	-.00650	-.40910	-.35560
-8.519	.493	-.08410	.02980	.02420	-.05250	.01160	-.01650	.03200	-.00620	-.38320	-.34460
-8.250	4.726	-.03910	.02650	-.00620	-.05010	.00550	-.00770	.02850	-.00550	-.34270	-.30540
-8.199	6.655	-.02500	.02510	-.01530	-.04790	.00130	-.00490	.02620	-.00510	-.31530	-.28080
	GRADIENT	.01142	-.00091	-.00731	-.00064	-.00063	.00223	-.00061	.00012	.00797	.00603

RUN NO. 1475/ 0 RN/L = 3.01 GRADIENT INTERVAL = -5.00/ 5.00

ALPHAL	BETAL	CNFLS	CAFLS	CLMFLS	CYFLS	CYNFLS	CBLLS	CABLS	CYNBLS	CP5	CP6
-6.626	-5.890	-.12450	.03530	.05520	-.01590	-.00560	-.02430	.03360	-.00650	-.41660	-.34970
-6.499	-3.889	-.10320	.03370	.04320	-.02450	-.00050	-.02020	.03260	-.00630	-.40020	-.34330
-6.468	.396	-.06230	.03010	.01830	-.02880	-.00130	-.01220	.03120	-.00610	-.37670	-.33430
-6.134	4.567	-.02630	.02790	-.00540	-.02430	-.00770	-.00520	.02810	-.00550	-.33800	-.30290
-5.826	6.730	-.01170	.02670	-.01410	-.01910	-.01290	-.00230	.02610	-.00510	-.31720	-.27740
	GRADIENT	.00910	-.00069	-.00575	.00002	-.00085	.00177	-.00053	.00009	.00735	.00477

IA156A, AEDC PWT 16T-470, 0 T S W/SILTS (R8NLE3) (10 MAY 80)

REFERENCE DATA

SREF = 2690.0000 SQ.FT. XMRP = 976.0000 IN. XT
LREF = 1290.3000 INCHES YMRP = .0000 IN. YT
BREF = 1290.3000 INCHES ZMRP = 400.0000 IN. ZT
SCALE = .0200

PARAMETRIC DATA

IB-ELV = 12.000 OB-ELV = -7.000
BDFLAP = .000 SPDBRK = .000
RUDDER = .000 SILTS = 1.000
MACH = 1.550 RN/L = 3.200

RUN NO. 1476/ 0 RN/L = 3.01 GRADIENT INTERVAL = -5.00/ 5.00

ALPHAL	BETAL	CNFLS	CAFLS	CLMFLS	CYFLS	CYNFLS	CBLLS	CABLS	CYNBLS	CP5	CP6
-4.308	-6.018	-.09170	.03630	.04350	.00650	-.01970	-.01800	.03280	-.00640	-.40480	-.34180
-4.571	-3.846	-.07710	.03470	.03350	-.00240	-.01460	-.01510	.03170	-.00610	-.38850	-.33300
-4.337	.618	-.04200	.03080	.01270	-.00430	-.01570	-.00820	.02990	-.00580	-.36350	-.31860
-3.752	4.566	-.01640	.02880	-.00260	-.00060	-.01990	-.00320	.02770	-.00540	-.33460	-.29580
-3.807	6.405	-.00740	.02800	-.00960	-.00040	-.02210	-.00150	.02570	-.00500	-.31170	-.27300
	GRADIENT	.00723	-.00071	-.00430	.00020	-.00062	.00142	-.00047	.00008	.00639	.00440

RUN NO. 1477/ 0 RN/L = 3.01 GRADIENT INTERVAL = -5.00/ 5.00

ALPHAL	BETAL	CNFLS	CAFLS	CLMFLS	CYFLS	CYNFLS	CBLLS	CABLS	CYNBLS	CP5	CP6
-.417	-6.911	-.05600	.03750	.03460	.04230	-.04440	-.01100	.03280	-.00640	-.40930	-.33770
-.398	-4.768	-.04520	.03620	.02820	.03680	-.04030	-.00890	.03190	-.00620	-.39200	-.33530
-.375	-.376	-.02610	.03380	.01580	.03140	-.03790	-.00510	.02950	-.00570	-.35800	-.31510
-.347	3.782	-.01110	.03100	.00520	.02080	-.03230	-.00220	.02800	-.00540	-.33820	-.30020
-.358	5.978	-.00220	.02920	-.00220	.01610	-.03060	-.00040	.02500	-.00490	-.30430	-.26620
	GRADIENT	.00399	-.00061	-.00269	-.00187	.00093	.00078	-.00046	.00009	.00631	.00411

RUN NO. 1478/ 0 RN/L = 3.01 GRADIENT INTERVAL = -5.00/ 5.00

ALPHAL	BETAL	CNFLS	CAFLS	CLMFLS	CYFLS	CYNFLS	CBLLS	CABLS	CYNBLS	CP5	CP6
4.725	-5.557	-.00800	.03630	.02050	.04050	-.05120	-.00150	.03270	-.00630	-.40470	-.34040
4.488	-3.428	-.00610	.03550	.01700	.03340	-.04550	-.00110	.03160	-.00610	-.39170	-.32820
4.141	.418	-.00480	.03350	.01280	.02390	-.03880	-.00090	.02900	-.00560	-.35590	-.30390
4.096	4.270	.00200	.03100	.00390	.00940	-.02940	.00040	.02740	-.00530	-.33930	-.28550
4.052	6.355	.00550	.02990	-.00010	.00640	-.02840	.00110	.02590	-.00500	-.32140	-.26950
	GRADIENT	.00105	-.00058	-.00170	-.00312	.00209	.00019	-.00055	.00010	.00681	.00555

IA156A, AEDC PWT 16T-470, 0 T S W/SILTS (R8NLE4) (10 MAY 80)

REFERENCE DATA

SREF = 2690.0000 SQ.FT. XMRP = 976.0000 IN. XT
LREF = 1290.3000 INCHES YMRP = .0000 IN. YT
BREF = 1290.3000 INCHES ZMRP = 400.0000 IN. ZT
SCALE = .0200

PARAMETRIC DATA

IB-ELV = 8.000 OB-ELV = -7.000
BDFLAP = .000 SPDBRK = .000
RUDDER = .000 SILTS = 1.000
MACH = 1.400 RN/L = 3.500

RUN NO. 1482/ 0 RN/L = 3.00 GRADIENT INTERVAL = -5.00/ 5.00

ALPHAL	BETAL	CNFLS	CAFLS	CLMFLS	CYFLS	CYNFLS	CBLLS	CABLS	CYNBLS	CP5	CP6
-8.628	-5.635	-.15460	.03430	.06370	-.03370	.00080	-.03020	.03790	-.00740	-.46040	-.40240
-8.565	-3.636	-.13540	.03380	.05350	-.04740	.00980	-.02650	.03820	-.00740	-.45850	-.41160
-8.552	.416	-.08070	.02980	.01910	-.05410	.00970	-.01580	.03660	-.00710	-.43580	-.39730
-8.312	4.739	-.03230	.02690	-.01210	-.04850	.00150	-.00630	.03180	-.00620	-.38140	-.34240
-8.233	6.567	-.01910	.02540	-.01900	-.04300	-.00350	-.00370	.02950	-.00570	-.35670	-.31590
	GRADIENT	.01230	-.00082	-.00783	-.00012	-.00100	.00241	-.00077	.00014	.00924	.00831

RUN NO. 1483/ 0 RN/L = 3.00 GRADIENT INTERVAL = -5.00/ 5.00

ALPHAL	BETAL	CNFLS	CAFLS	CLMFLS	CYFLS	CYNFLS	CBLLS	CABLS	CYNBLS	CP5	CP6
-6.603	-5.903	-.12560	.03520	.05330	-.01990	-.00440	-.02450	.03730	-.00720	-.45510	-.39490
-6.453	-3.924	-.10340	.03390	.04170	-.02490	-.00190	-.02020	.03630	-.00710	-.44030	-.38750
-6.493	.297	-.06190	.03030	.01610	-.03020	-.00220	-.01210	.03520	-.00680	-.42090	-.38080
-6.223	4.493	-.02080	.02900	-.01050	-.02290	-.01090	-.00400	.03200	-.00620	-.38360	-.34510
-5.914	6.637	-.00650	.02710	-.01810	-.01590	-.01660	-.00120	.02950	-.00570	-.35420	-.31750
	GRADIENT	.00981	-.00058	-.00620	.00024	-.00107	.00192	-.00051	.00011	.00674	.00503

RUN NO. 1484/ 0 RN/L = 3.00 GRADIENT INTERVAL = -5.00/ 5.00

ALPHAL	BETAL	CNFLS	CAFLS	CLMFLS	CYFLS	CYNFLS	CBLLS	CABLS	CYNBLS	CP5	CP6
-4.263	-6.041	-.09540	.03590	.04440	.00630	-.02000	-.01870	.03600	-.00700	-.44180	-.37800
-4.503	-3.851	-.07940	.03420	.03420	-.00160	-.01560	-.01560	.03500	-.00680	-.42840	-.36990
-4.340	.536	-.04250	.03090	.01190	-.00400	-.01630	-.00830	.03360	-.00650	-.40660	-.35860
-3.809	4.496	-.01260	.03050	-.00600	.00400	-.02480	-.00240	.03120	-.00610	-.37650	-.33400
-3.876	6.330	-.00270	.02900	-.01300	.00440	-.02690	-.00050	.02930	-.00570	-.35160	-.31670
	GRADIENT	.00801	-.00045	-.00482	.00065	-.00109	.00158	-.00045	.00008	.00620	.00427

RUN NO. 1485/ 0 RN/L = 3.00 GRADIENT INTERVAL = -5.00/ 5.00

ALPHAL	BETAL	CNFLS	CAFLS	CLMFLS	CYFLS	CYNFLS	CBLLS	CABLS	CYNBLS	CP5	CP6
-.358	-6.893	-.05890	.03730	.03600	.04390	-.04480	-.01150	.03540	-.00690	-.43490	-.37160
-.334	-4.709	-.04710	.03640	.02900	.03870	-.04110	-.00920	.03480	-.00680	-.42410	-.36830
-.301	-.315	-.02590	.03440	.01530	.03360	-.03940	-.00510	.03260	-.00630	-.39330	-.34870
-.244	3.845	-.01010	.03050	.00420	.02540	-.03610	-.00200	.03010	-.00580	-.36330	-.32250
-.266	6.057	-.00140	.02970	-.00290	.02120	-.03510	-.00030	.02830	-.00550	-.34590	-.29970
	GRADIENT	.00433	-.00069	-.00290	-.00155	.00058	.00084	-.00055	.00012	.00711	.00535

IA156A, AEDC PWT 16T-470, 0 T S W/SILTS (R8NLE4) (10 MAY 80)

REFERENCE DATA

SREF = 2690.0000 SQ.FT. XMRP = 976.0000 IN. XT
LREF = 1290.3000 INCHES YMRP = .0000 IN. YT
BREF = 1290.3000 INCHES ZMRP = 400.0000 IN. ZT
SCALE = .0200

PARAMETRIC DATA

IB-ELV = 8.000 OB-ELV = -7.000
BDFLAP = .000 SPDBRK = .000
RUDDER = .000 SILTS = 1.000
MACH = 1.400 RN/L = 3.500

RUN NO. 1486/ 0 RN/L = 3.00 GRADIENT INTERVAL = -5.00/ 5.00

ALPHAL	BETAL	CNFLS	CAFLS	CLMFLS	CYFLS	CYNFLS	CBLLS	CABLS	CYNBLS	CP5	CP6
4.670	-5.641	-.01170	.03670	.02210	.04420	-.05280	-.00220	.03520	-.00680	-.43230	-.37060
4.453	-3.572	.00810	.03570	.01750	.03660	-.04700	-.00150	.03380	-.00660	-.41210	-.35740
4.198	.234	-.00450	.03360	.01150	.02710	-.04000	-.00080	.03230	-.00630	-.39400	-.34260
4.188	4.211	.00280	.03120	.00240	.01300	-.03150	.00060	.03070	-.00600	-.37610	-.32420
4.138	6.342	.00670	.03040	-.00210	.00870	-.02980	.00140	.02880	-.00560	-.35200	-.30500
	GRADIENT	.00140	-.00058	-.00194	-.00304	.00199	.00027	-.00040	.00008	.00462	.00427

IA156A, AEDC PWT 16T-470, 0 T S W/SILTS (R8NLE5) (10 MAY 80)

REFERENCE DATA

SREF = 2690.0000 SQ.FT. XMRP = 976.0000 IN. XT
LREF = 1290.3000 INCHES YMRP = .0000 IN. YT
BREF = 1290.3000 INCHES ZMRP = 400.0000 IN. ZT
SCALE = .0200

PARAMETRIC DATA

IB-ELV = 8.000 OB-ELV = -7.000
BDFLAP = .000 SPDBRK = .000
RUDDER = .000 SILTS = 1.000
MACH = 1.550 RN/L = 3.200

RUN NO. 1487/ 0 RN/L = 3.00 GRADIENT INTERVAL = -5.00/ 5.00

ALPHAL	BETAL	CNFLS	CAFLS	CLMFLS	CYFLS	CYNFLS	CBLLS	CABLS	CYNBLS	CP5	CP6
-8.670	-5.728	-.15380	.03330	.06660	-.02660	-.00110	-.03000	.03420	-.00660	-.42010	-.35860
-8.693	-3.613	-.13350	.03310	.05370	-.04450	.01080	-.02610	.03340	-.00650	-.40700	-.35340
-8.540	.468	-.08420	.02890	.02330	-.05330	.01250	-.01650	.03210	-.00620	-.38630	-.34470
-8.235	4.809	-.03710	.02570	-.00820	-.05030	.00560	-.00730	.02790	-.00540	-.33610	-.29920
-8.241	6.689	-.02360	.02440	-.01690	-.04850	.00180	-.00460	.02620	-.00510	-.31630	-.28100
	GRADIENT	.01144	-.00088	-.00735	-.00067	-.00063	.00223	-.00066	.00013	.00845	.00648

RUN NO. 1488/ 0 RN/L = 3.00 GRADIENT INTERVAL = -5.00/ 5.00

ALPHAL	BETAL	CNFLS	CAFLS	CLMFLS	CYFLS	CYNFLS	CBLLS	CABLS	CYNBLS	CP5	CP6
-6.626	-5.885	-.12160	.03410	.05300	-.01640	-.00490	-.02380	.03320	-.00650	-.41060	-.34670
-6.516	-3.889	-.10230	.03270	.04190	-.02500	.00000	-.02000	.03220	-.00630	-.39520	-.33860
-6.477	.374	-.06160	.02930	.01700	-.02900	-.00090	-.01210	.03070	-.00600	-.37020	-.32850
-6.169	4.588	-.02550	.02710	-.00670	-.02450	-.00760	-.00500	.02800	-.00540	-.33770	-.30060
-6.067	6.582	-.01310	.02620	-.01480	-.02180	-.01140	-.00250	.02600	-.00510	-.31590	-.27670
	GRADIENT	.00906	-.00066	-.00573	.00006	-.00090	.00177	-.00050	.00011	.00678	.00448

IA156A, AEDC PWT 16T-470, O T S W/SILTS (R8NLE5) (10 MAY 80)

REFERENCE DATA

SREF = 2690.0000 SQ.FT. XMRP = 976.0000 IN. XT
LREF = 1290.3000 INCHES YMRP = .0000 IN. YT
BREF = 1290.3000 INCHES ZMRP = 400.0000 IN. ZT
SCALE = .0200

PARAMETRIC DATA

IB-ELV = 8.000 OB-ELV = -7.000
BDFLAP = .000 SPDBRK = .000
RUDDER = .000 SILTS = 1.000
MACH = 1.550 RN/L = 3.200

RUN NO. 1489/ 0 RN/L = 3.01 GRADIENT INTERVAL = -5.00/ 5.00

ALPHAL	BETAL	CNFLS	CAFLS	CLMFLS	CYFLS	CYNFLS	CBLLS	CABLS	CYNBLS	CP5	CP6
-4.350	-6.043	-.09140	.03520	.04210	.00600	-.01920	-.01790	.03250	-.00630	-.40390	-.33660
-4.590	-3.847	-.07620	.03370	.03190	-.00320	-.01380	-.01490	.03110	-.00600	-.38280	-.32470
-4.369	.628	-.04130	.03000	.01140	-.00470	-.01530	-.00810	.02950	-.00570	-.35980	-.31300
-3.755	4.570	-.01520	.02810	-.00410	-.00040	-.02030	-.00300	.02760	-.00530	-.33410	-.29350
-3.825	6.407	-.00680	.02710	-.01040	-.00020	-.02210	-.00130	.02590	-.00500	-.31430	-.27540
	GRADIENT	.00726	-.00067	-.00428	.00032	-.00076	.00142	-.00041	.00008	.00577	.00368

RUN NO. 1490/ 0 RN/L = 3.00 GRADIENT INTERVAL = -5.00/ 5.00

ALPHAL	BETAL	CNFLS	CAFLS	CLMFLS	CYFLS	CYNFLS	CBLLS	CABLS	CYNBLS	CP5	CP6
-.442	-6.908	-.05500	.03680	.03320	.04240	-.04460	-.01080	.03310	-.00640	-.41440	-.33910
-.421	-4.771	-.04410	.03530	.02670	.03660	-.04003	-.00870	.03130	-.00610	-.38530	-.32860
-.393	-.378	-.02520	.03320	.01470	.03130	-.03760	-.00490	.02930	-.00570	-.35450	-.31220
-.370	3.783	-.00960	.03030	.00350	.02080	-.03240	-.00190	.02800	-.00540	-.33820	-.29890
-.382	5.992	-.00120	.02840	-.00350	.01650	-.03100	-.00020	.02560	-.00500	-.31130	-.27130
	GRADIENT	.00404	-.00058	-.00271	-.00184	.00089	.00080	-.00039	.00008	.00552	.00347

RUN NO. 1491/ 0 RN/L = 3.00 GRADIENT INTERVAL = -5.00/ 5.00

ALPHAL	BETAL	CNFLS	CAFLS	CLMFLS	CYFLS	CYNFLS	CBLLS	CABLS	CYNBLS	CP5	CP6
4.706	-5.550	-.00780	.03550	.01970	.04070	-.05110	-.00140	.03190	-.00620	-.39310	-.33370
4.466	-3.422	-.00550	.03470	.01600	.03330	-.04520	-.00100	.03130	-.00610	-.38760	-.32610
4.131	.425	-.00330	.03300	.01130	.02350	-.03860	-.00060	.02920	-.00570	-.35860	-.30660
4.093	4.273	.00280	.03080	.00280	.00950	-.02930	.00060	.02720	-.00530	-.33710	-.28260
4.032	6.344	.00630	.02960	-.00110	.00620	-.02830	.00130	.02580	-.00500	-.31850	-.27010
	GRADIENT	.00108	-.00051	-.00172	-.00309	.00207	.00021	-.00053	.00010	.00656	.00565

IA156A, AEDC PWT 16T-470, 0 T S W/SILTS (R8NLE6) (10 MAY 80)

REFERENCE DATA

SREF = 2690.0000 SQ.FT. XMRP = 976.0000 IN. XT
LREF = 1290.3000 INCHES YMRP = .0000 IN. YT
BREF = 1290.3000 INCHES ZMRP = 400.0000 IN. ZT
SCALE = .0200

PARAMETRIC DATA

IB-ELV = 10.000 OB-ELV = 2.000
BDFLAP = .000 SPDBRK = .000
RUDDER = .000 SILTS = 1.000
MACH = 1.050 RN/L = 3.500

RUN NO. 1494/ 0 RN/L = 3.50 GRADIENT INTERVAL = -5.00/ 5.00

ALPHAL	BETAL	CNFLS	CAFLS	CLMFLS	CYFLS	CYNFLS	CBLLS	CABLS	CYNBLS	CP5	CP6
-8.787	-5.614	-.14940	.02610	.06070	-.02640	-.01500	-.02920	.05460	-.01060	-.64180	-.60130
-8.703	-3.499	-.12540	.02530	.04840	-.03650	-.00810	-.02450	.05280	-.01020	-.61710	-.58470
-8.639	.431	-.07300	.02500	.01590	-.04600	-.00190	-.01430	.05110	-.00990	-.60260	-.56040
-8.388	4.603	-.02380	.02290	-.01510	-.04040	-.00790	-.00460	.04620	-.00900	-.54860	-.50460
-8.350	6.517	-.00780	.02070	-.02430	-.03670	-.01160	-.00150	.04250	-.00820	-.50620	-.46080
	GRADIENT	.01253	-.00030	-.00783	-.00046	.00001	.00245	-.00082	.00015	.00850	.00992

RUN NO. 1495/ 0 RN/L = 3.50 GRADIENT INTERVAL = -5.00/ 5.00

ALPHAL	BETAL	CNFLS	CAFLS	CLMFLS	CYFLS	CYNFLS	CBLLS	CABLS	CYNBLS	CP5	CP6
-6.555	-5.749	-.11960	.02930	.05180	-.00180	-.02440	-.02340	.05430	-.01050	-.63890	-.59680
-6.476	-3.845	-.09980	.02860	.04100	-.00810	-.01990	-.01950	.05250	-.01020	-.61790	-.57850
-6.548	.317	-.05430	.02590	.01300	-.01460	-.01720	-.01060	.04970	-.00960	-.58880	-.54230
-6.274	4.437	-.01310	.02610	-.01350	-.01110	-.02100	-.00250	.04530	-.00880	-.53740	-.49490
-6.204	6.423	.00180	.02430	-.02320	-.00940	-.02450	.00040	.04110	-.00800	-.48860	-.44790
	GRADIENT	.01047	-.00030	-.00658	-.00036	-.00013	.00205	-.00087	.00017	.00972	.01009

RUN NO. 1496/ 0 RN/L = 3.50 GRADIENT INTERVAL = -5.00/ 5.00

ALPHAL	BETAL	CNFLS	CAFLS	CLMFLS	CYFLS	CYNFLS	CBLLS	CABLS	CYNBLS	CP5	CP6
-4.276	-5.940	-.09670	.03120	.04630	.02530	-.03820	-.01890	.05300	-.01030	-.62430	-.58170
-4.504	-3.782	-.07920	.03030	.03610	.01910	-.03390	-.01540	.05150	-.01000	-.60700	-.56570
-4.385	.522	-.03650	.02740	.00950	.01830	-.03430	-.00710	.04800	-.00930	-.57130	-.52090
-3.840	4.420	-.00510	.02830	-.01030	.01810	-.03560	-.00090	.04380	-.00850	-.51740	-.47980
-3.924	6.256	.00390	.02640	-.01630	.01660	-.03630	.00080	.04130	-.00800	-.48750	-.45280
	GRADIENT	.00905	-.00025	-.00567	-.00012	-.00021	.00177	-.00094	.00018	.01088	.01047

RUN NO. 1497/ 0 RN/L = 3.50 GRADIENT INTERVAL = -5.00/ 5.00

ALPHAL	BETAL	CNFLS	CAFLS	CLMFLS	CYFLS	CYNFLS	CBLLS	CABLS	CYNBLS	CP5	CP6
-.365	-6.803	-.06340	.03330	.03790	.05710	-.05810	-.01230	.05190	-.01010	-.61750	-.56470
-.351	-4.618	-.04890	.03320	.02910	.05240	-.05520	-.00950	.05090	-.00990	-.60450	-.55460
-.401	-.227	-.02150	.03060	.01090	.04620	-.05230	-.00410	.04790	-.00930	-.57210	-.51910
-.299	3.874	-.00150	.02940	-.00330	.03370	-.04440	-.00020	.04360	-.00850	-.52250	-.47010
-.273	6.061	.00620	.02820	-.00940	.02720	-.04080	.00130	.04140	-.00800	-.49770	-.44620
	GRADIENT	.00559	-.00045	-.00382	-.00219	.00126	.00110	-.00086	.00016	.00963	.00993

IA156A, AEDC PWT 16T-470, O T S W/SILTS (R8NLE6) (10 MAY 80)

REFERENCE DATA

SREF = 2690.0000 SQ.FT. XMRP = 976.0000 IN. XT
LREF = 1290.3000 INCHES YMRP = .0000 IN. YT
BREF = 1290.3000 INCHES ZMRP = 400.0000 IN. ZT
SCALE = .0200

PARAMETRIC DATA

IB-ELV = 10.000 OB-ELV = 2.000
BDFLAP = .000 SPDBRK = .000
RUDDER = .000 SILTS = 1.000
MACH = 1.050 RN/L = 3.500

RUN NO. 1498/ 0 RN/L = 3.50 GRADIENT INTERVAL = -5.00/ 5.00

ALPHAL	BETAL	CNFLS	CAFLS	CLMFLS	CYFLS	CYNFLS	CBLLS	CABLS	CYNBLS	CP5	CP6
4.473	-5.686	-.01220	.03200	.01650	.05520	-.05980	-.00220	.05010	-.00970	-.59740	-.54460
4.312	-3.591	-.00860	.03190	.01350	.04800	-.05390	-.00150	.04900	-.00950	-.58180	-.53420
4.044	.271	.00060	.03070	.00490	.04020	-.04850	.00030	.04790	-.00930	-.56880	-.52260
4.150	4.238	.00840	.02890	-.00330	.02370	-.03790	.00180	.04530	-.00880	-.53760	-.49330
4.104	6.318	.00940	.02780	-.00510	.01820	-.03500	.00200	.04300	-.00840	-.51500	-.46530
	GRADIENT	.00217	-.00038	-.00215	-.00311	.00205	.00042	-.00047	.00009	.00566	.00523

IA156A, AEDC PWT 16T-470, O T S W/SILTS (R8NLE7) (10 MAY 80)

REFERENCE DATA

SREF = 2690.0000 SQ.FT. XMRP = 976.0000 IN. XT
LREF = 1290.3000 INCHES YMRP = .0000 IN. YT
BREF = 1290.3000 INCHES ZMRP = 400.0000 IN. ZT
SCALE = .0200

PARAMETRIC DATA

IB-ELV = 10.000 OB-ELV = 2.000
BDFLAP = .000 SPDBRK = .000
RUDDER = .000 SILTS = 1.000
MACH = 1.100 RN/L = 3.500

RUN NO. 1499/ 0 RN/L = 3.50 GRADIENT INTERVAL = -5.00/ 5.00

ALPHAL	BETAL	CNFLS	CAFLS	CLMFLS	CYFLS	CYNFLS	CBLLS	CABLS	CYNBLS	CP5	CP6
-8.807	-5.605	-.14630	.02980	.05870	-.02890	-.01450	-.02860	.05020	-.00980	-.59140	-.55220
-8.762	-3.515	-.12310	.02960	.04580	-.04020	-.00610	-.02400	.04960	-.00960	-.58190	-.54800
-8.651	.445	-.07010	.02750	.01340	-.04720	-.00290	-.01370	.04720	-.00920	-.55700	-.51720
-8.367	4.704	-.02160	.02440	-.01560	-.03990	-.00820	-.00420	.04240	-.00820	-.50360	-.46250
-8.354	6.524	-.00790	.02310	-.02370	-.03760	-.01090	-.00150	.03860	-.00750	-.46220	-.41620
	GRADIENT	.01234	-.00063	-.00746	.00006	-.00027	.00241	-.00088	.00017	.00956	.01043

RUN NO. 1500/ 0 RN/L = 3.50 GRADIENT INTERVAL = -5.00/ 5.00

ALPHAL	BETAL	CNFLS	CAFLS	CLMFLS	CYFLS	CYNFLS	CBLLS	CABLS	CYNBLS	CP5	CP6
-6.587	-5.738	-.11880	.03280	.05000	-.00540	-.02300	-.02320	.04990	-.00970	-.59090	-.54580
-6.536	-3.838	-.09770	.03150	.03840	-.01170	-.01860	-.01910	.04820	-.00940	-.56760	-.52940
-6.603	.312	-.05270	.02780	.01080	-.01700	-.01670	-.01020	.04570	-.00890	-.54320	-.49720
-6.272	4.442	-.01190	.02740	-.01420	-.01030	-.02120	-.00230	.04150	-.00810	-.49360	-.45110
-6.208	6.422	.00140	.02480	-.02240	-.00930	-.02360	.00030	.03780	-.00730	-.45060	-.41130
	GRADIENT	.01036	-.00050	-.00635	.00017	-.00031	.00203	-.00081	.00016	.00893	.00945

IA156A, AEDC PWT 16T-470, O T S W/SILTS (R8NLE7) (10 MAY 80)

REFERENCE DATA

SREF = 2690.0000 SQ.FT. XMRP = 976.0000 IN. XT
LREF = 1290.3000 INCHES YMRP = .0000 IN. YT
BREF = 1290.3000 INCHES ZMRP = 400.0000 IN. ZT
SCALE = .0200

PARAMETRIC DATA

IB-ELV = 10.000 OB-ELV = 2.000
BDFLAP = .000 SPDBRK = .000
RUDDER = .000 SILTS = 1.000
MACH = 1.100 RN/L = 3.500

RUN NO. 1501/ 0 RN/L = 3.51 GRADIENT INTERVAL = -5.00/ 5.00

ALPHAL	BETAL	CNFLS	CAFLS	CLMFLS	CYFLS	CYNFLS	CBLLS	CABLS	CYNBLS	CP5	CP6
-4.292	-5.952	-.09720	.03410	.04570	.02150	-.03570	-.01900	.04790	-.00930	-.56720	-.52430
-4.532	-3.787	-.07910	.03250	.03480	.01480	-.03110	-.01540	.04650	-.00900	-.54830	-.51160
-4.394	.532	-.03450	.02910	.00730	.01540	-.03240	-.00670	.04310	-.00840	-.51700	-.46490
-3.827	4.412	-.00500	.02940	-.01040	.01800	-.03540	-.00090	.04000	-.00780	-.47330	-.43740
-3.933	6.284	.00380	.02760	-.01640	.01630	-.03570	.00080	.03820	-.00740	-.45100	-.41820
	GRADIENT	.00906	-.00039	-.00553	.00039	-.00052	.00177	-.00079	.00015	.00911	.00908

RUN NO. 1502/ 0 RN/L = 3.49 GRADIENT INTERVAL = -5.00/ 5.00

ALPHAL	BETAL	CNFLS	CAFLS	CLMFLS	CYFLS	CYNFLS	CBLLS	CABLS	CYNBLS	CP5	CP6
-.377	-6.815	-.06520	.03560	.03870	.05370	-.05520	-.01270	.04680	-.00910	-.56040	-.50600
-.344	-4.643	-.05020	.03520	.02950	.04980	-.05250	-.00970	.04540	-.00880	-.54230	-.49180
-.382	-.245	-.02300	.03210	.01170	.04420	-.05000	-.00440	.04180	-.00810	-.50220	-.44910
-.272	3.878	-.00340	.02950	-.00210	.03200	-.04230	-.00060	.03780	-.00730	-.45440	-.40600
-.250	6.074	.00500	.02920	-.00850	.02600	-.03940	.00100	.03520	-.00680	-.42620	-.37620
	GRADIENT	.00550	-.00067	-.00371	-.00208	.00119	.00107	-.00089	.00018	.01030	.01007

RUN NO. 1503/ 0 RN/L = 3.50 GRADIENT INTERVAL = -5.00/ 5.00

ALPHAL	BETAL	CNFLS	CAFLS	CLMFLS	CYFLS	CYNFLS	CBLLS	CABLS	CYNBLS	CP5	CP6
4.498	-5.703	-.01210	.03460	.01720	.05110	-.05680	-.00220	.04360	-.00850	-.52010	-.47180
4.338	-3.578	-.00900	.03420	.01470	.04510	-.05180	-.00160	.04290	-.00830	-.51040	-.46570
4.098	.284	.00000	.03200	.00590	.03840	-.04740	.00010	.04200	-.00820	-.50210	-.45540
4.170	4.238	.00710	.03010	-.00240	.02240	-.03710	.00150	.03940	-.00770	-.46970	-.42770
4.128	6.312	.00890	.02990	-.00490	.01690	-.03470	.00190	.03660	-.00710	-.44070	-.39240
	GRADIENT	.00206	-.00052	-.00219	-.00291	.00188	.00040	-.00045	.00008	.00522	.00487

IA156A, AEDC PWT 16T-470, O T S W/SILTS (R8NLE8) (10 MAY 80)

REFERENCE DATA

SREF = 2690.0000 SQ.FT. XMRP = 976.0000 IN. XT
LREF = 1290.3000 INCHES YMRP = .0000 IN. YT
BREF = 1290.3000 INCHES ZMRP = 400.0000 IN. ZT
SCALE = .0200

PARAMETRIC DATA

IB-ELV = 10.000 OB-ELV = 2.000
BDFLAP = .000 SPDBRK = .000
RUDDER = .000 SILTS = 1.000
MACH = 1.150 RN/L = 3.500

RUN NO. 1504/ 0 RN/L = 3.50 GRADIENT INTERVAL = -5.00/ 5.00

ALPHAL	BETAL	CNFLS	CAFLS	CLMFLS	CYFLS	CYNFLS	CBLLS	CABLS	CYNBLS	CP5	CP6
-8.825	-5.646	-.14810	.03240	.05920	-.03300	-.00920	-.02900	.04700	-.00910	-.55410	-.51700
-8.767	-3.508	-.12740	.03080	.04860	-.04220	-.00340	-.02490	.04670	-.00910	-.54720	-.51640
-8.674	.434	-.07540	.02870	.01580	-.05110	.00070	-.01470	.04430	-.00860	-.52320	-.48530
-8.442	4.499	-.02700	.02590	-.01430	-.04360	-.00540	-.00520	.03980	-.00770	-.47550	-.43170
-8.365	6.555	-.00900	.02370	-.02490	-.03860	-.01010	-.00170	.03680	-.00710	-.44180	-.39660
	GRADIENT	.01254	-.00061	-.00785	-.00016	-.00026	.00246	-.00086	.00018	.00897	.01059

RUN NO. 1505/ 0 RN/L = 3.51 GRADIENT INTERVAL = -5.00/ 5.00

ALPHAL	BETAL	CNFLS	CAFLS	CLMFLS	CYFLS	CYNFLS	CBLLS	CABLS	CYNBLS	CP5	CP6
-6.574	-5.771	-.12160	.03430	.05290	-.00630	-.02050	-.02380	.04640	-.00900	-.54910	-.50790
-6.489	-3.837	-.10130	.03280	.04140	-.01270	-.01640	-.01980	.04530	-.00880	-.53320	-.49780
-6.560	.307	-.05560	.02820	.01260	-.01940	-.01350	-.01080	.04270	-.00830	-.50780	-.46570
-6.309	4.477	-.01490	.02830	-.01380	-.01490	-.01830	-.00290	.03840	-.00740	-.45950	-.41430
-6.201	6.441	-.00010	.02600	-.02280	-.00960	-.02300	.00000	.03500	-.00680	-.41850	-.37910
	GRADIENT	.01039	-.00054	-.00664	-.00026	-.00023	.00203	-.00083	.00017	.00887	.01005

RUN NO. 1506/ 0 RN/L = 3.50 GRADIENT INTERVAL = -5.00/ 5.00

ALPHAL	BETAL	CNFLS	CAFLS	CLMFLS	CYFLS	CYNFLS	CBLLS	CABLS	CYNBLS	CP5	CP6
-4.255	-5.926	-.09920	.03510	.04820	.02000	-.03360	-.01930	.04530	-.00880	-.53840	-.49410
-4.512	-3.794	-.09120	.03370	.03720	.01400	-.02980	-.01580	.04370	-.00850	-.51710	-.47830
-4.382	.520	-.03870	.02990	.01050	.01340	-.03020	-.00750	.04130	-.00800	-.49370	-.44610
-3.826	4.434	-.00740	.02980	-.00900	.01570	-.03310	-.00140	.03760	-.00730	-.44650	-.40880
-3.922	6.292	.00190	.02840	-.01570	.01460	-.03430	.00040	.03540	-.00690	-.41910	-.38620
	GRADIENT	.00898	-.00048	-.00562	.00020	-.00040	.00175	-.00074	.00015	.00853	.00843

RUN NO. 1507/ 0 RN/L = 3.51 GRADIENT INTERVAL = -5.00/ 5.00

ALPHAL	BETAL	CNFLS	CAFLS	CLMFLS	CYFLS	CYNFLS	CBLLS	CABLS	CYNBLS	CP5	CP6
-.335	-6.817	-.06470	.03670	.03950	.05190	-.05340	-.01260	.04430	-.00860	-.53230	-.47740
-.310	-4.651	-.05080	.03630	.03080	.04770	-.05060	-.00990	.04300	-.00840	-.51540	-.46450
-.345	-.253	-.02360	.03350	.01260	.04250	-.04850	-.00450	.04030	-.00780	-.48640	-.43200
-.239	3.871	-.00400	.03110	-.00120	.03130	-.04180	-.00070	.03590	-.00700	-.43370	-.38350
-.218	6.099	.00460	.03010	-.00780	.02520	-.03890	.00100	.03360	-.00650	-.40840	-.35640
	GRADIENT	.00550	-.00061	-.00376	-.00192	.00103	.00108	-.00083	.00016	.00955	.00948

IA156A, AEDC PWT 16T-470, 0 T S W/SILTS (R8NLE8) (10 MAY 80)

REFERENCE DATA

SREF = 2690.0000 SQ.FT. XMRP = 976.0000 IN. XT
LREF = 1290.3000 INCHES YMRP = .0000 IN. YT
BREF = 1290.3000 INCHES ZMRP = 400.0000 IN. ZT
SCALE = .0200

PARAMETRIC DATA

IB-ELV = 10.000 OB-ELV = 2.000
BDFLAP = .000 SPDBRK = .000
RUDDER = .000 SILTS = 1.000
MACH = 1.150 RN/L = 3.500

RUN NO. 1508/ 0 RN/L = 3.50 GRADIENT INTERVAL = -5.00/ 5.00

ALPHAL	BETAL	CNFLS	CAFLS	CLMFLS	CYFLS	CYNFLS	CBLLS	CABLS	CYNBLS	CP5	CP6
4.543	-5.674	-.01410	.03670	.01970	.05110	-.05700	-.00260	.04130	-.00800	-.49460	-.44550
4.433	-3.584	-.01100	.03640	.01770	.04590	-.05280	-.00200	.04110	-.00800	-.49140	-.44540
4.114	.285	-.00240	.03290	.00850	.03700	-.04620	-.00030	.04100	-.00800	-.48950	-.44490
4.200	4.242	.00660	.03170	-.00150	.02030	-.03570	.00140	.03780	-.00730	-.45150	-.40950
4.146	6.330	.00870	.03110	-.00430	.01580	-.03410	.00180	.03540	-.00690	-.42570	-.38100
	GRADIENT	.00225	-.00060	-.00245	-.00327	.00219	.00043	-.00042	.00009	.00512	.00460

IA156A, AEDC PWT 16T-470, 0 T S W/SILTS (R8NLE9) (10 MAY 80)

REFERENCE DATA

SREF = 2690.0000 SQ.FT. XMRP = 976.0000 IN. XT
LREF = 1290.3000 INCHES YMRP = .0000 IN. YT
BREF = 1290.3000 INCHES ZMRP = 400.0000 IN. ZT
SCALE = .0200

PARAMETRIC DATA

IB-ELV = 10.000 OB-ELV = 2.000
BDFLAP = .000 SPDBRK = .000
RUDDER = .000 SILTS = 1.000
MACH = 1.150 RN/L = 3.500

RUN NO. 1509/ 0 RN/L = 3.51 GRADIENT INTERVAL = -5.00/ 5.00

ALPHAL	BETAL	CNFLS	CAFLS	CLMFLS	CYFLS	CYNFLS	CBLLS	CABLS	CYNBLS	CP5	CP6
-.337	-6.770	-.06420	.03730	.03920	.05210	-.05360	-.01250	.04400	-.00850	-.52770	-.47440
-.307	-4.586	-.04990	.03640	.03030	.04770	-.05060	-.00970	.04280	-.00830	-.51220	-.46220
-.339	-.305	-.02400	.03370	.01310	.04250	-.04860	-.00460	.04030	-.00780	-.48480	-.43240
-.239	3.942	-.00380	.03000	-.00120	.03100	-.04130	-.00070	.03650	-.00710	-.44030	-.39020
-.215	6.114	.00450	.03010	-.00770	.02500	-.03870	.00100	.03360	-.00650	-.40810	-.35760
	GRADIENT	.00541	-.00075	-.00369	-.00196	.00109	.00106	-.00074	.00014	.00843	.00844

IA156A, AEDC PWT 16T-470, 0 T S (R8NR01) (10 MAY 80)

REFERENCE DATA

SREF =	2690.0000 SQ.FT.	XMRP =	976.0000 IN. XT		
LREF =	1290.3000 INCHES	YMRP =	.0000 IN. YT		
BREF =	1290.3000 INCHES	ZMRP =	400.0000 IN. ZT		
SCALE =	.0200				

PARAMETRIC DATA

IB-ELV =	10.000	OB-ELV =	5.000
BDFLAP =	.000	SPDBRK =	.000
RUDDER =	.000	SILTS =	.000
MACH =	.600	RN/L =	3.500

RUN NO. 801/ 0 RN/L = 3.51 GRADIENT INTERVAL = -5.00/ 5.00

ALPHAR	BETAR	CNFRS	CAFRS	CLMFRS	CYFRS	CYNFRS	CBLRS	CABRS	CYNBRS	CP9	CP10
-.198	-6.904	.00990	.01400	-.01190	-.02070	.03100	-.00200	.02480	.00480	-.31520	-.25060
-.211	-.607	-.01280	.01330	.00500	-.03250	.03600	.00250	.03030	.00590	-.36920	-.32070
-.251	5.621	-.04080	.01520	.02160	-.04460	.04330	.00800	.03500	.00680	-.42010	-.37760
	GRADIENT	.00000	.00000	.00000	.00000	.00000	.00000	.00000	.00000	.00000	.00000

IA156A, AEDC PWT 16T-470, 0 T S (R8NR02) (10 MAY 80)

REFERENCE DATA

SREF =	2690.0000 SQ.FT.	XMRP =	976.0000 IN. XT		
LREF =	1290.3000 INCHES	YMRP =	.0000 IN. YT		
BREF =	1290.3000 INCHES	ZMRP =	400.0000 IN. ZT		
SCALE =	.0200				

PARAMETRIC DATA

IB-ELV =	10.000	OB-ELV =	5.000
BDFLAP =	.000	SPDBRK =	.000
RUDDER =	.000	SILTS =	.000
MACH =	.700	RN/L =	3.500

RUN NO. 803/ 0 RN/L = 3.50 GRADIENT INTERVAL = -5.00/ 5.00

ALPHAR	BETAR	CNFRS	CAFRS	CLMFRS	CYFRS	CYNFRS	CBLRS	CABRS	CYNBRS	CP9	CP10
-.170	-7.080	.01080	.01540	-.01300	-.02060	.03110	-.00210	.02500	.00490	-.31640	-.25430
-.209	-.706	-.01250	.01500	.00440	-.03230	.03630	.00250	.02920	.00570	-.35460	-.30990
-.275	5.562	-.04250	.01610	.02240	-.04380	.04350	.00840	.03550	.00690	-.42480	-.38390
	GRADIENT	.00000	.00000	.00000	.00000	.00000	.00000	.00000	.00000	.00000	.00000

IA156A, AEDC PWT 16T-470, O T S (R8NR03) (10 MAY 80)

REFERENCE DATA

SREF = 2690.0000 SQ.FT. XMRP = 976.0000 IN. XT
LREF = 1290.3000 INCHES YMRP = .0000 IN. YT
BREF = 1290.3000 INCHES ZMRP = 400.0000 IN. ZT
SCALE = .0200

PARAMETRIC DATA

IB-ELV = 10.000 OB-ELV = 5.000
BDFLAP = .000 SPDBRK = .000
RUDDER = .000 SILTS = .000
MACH = .800 RN/L = 3.500

RUN NO. 804/ 0 RN/L = 3.50 GRADIENT INTERVAL = -5.00/ 5.00

ALPHAR	BETAR	CNFRS	CAFRS	CLMFRS	CYFRS	CYNFRS	CBLRS	CABRS	CYNBRS	CP9	CP10
-.172	-7.160	.01260	.01810	-.01480	-.02190	.03170	-.00250	.02520	.00490	-.31680	-.25660
-.248	-.772	-.01260	.01720	.00290	-.03020	.03500	.00250	.02880	.00560	-.34980	-.30700
-.307	5.546	-.04400	.01860	.02270	-.04200	.04340	.00870	.03480	.00680	-.41490	-.37730
	GRADIENT	.00000	.00000	.00000	.00000	.00000	.00000	.00000	.00000	.00000	.00000

IA156A, AEDC PWT 16T-470, O T S (R8NR04) (10 MAY 80)

REFERENCE DATA

SREF = 2690.0000 SQ.FT. XMRP = 976.0000 IN. XT
LREF = 1290.3000 INCHES YMRP = .0000 IN. YT
BREF = 1290.3000 INCHES ZMRP = 400.0000 IN. ZT
SCALE = .0200

PARAMETRIC DATA

IB-ELV = 10.000 OB-ELV = 5.000
BDFLAP = .000 SPDBRK = .000
RUDDER = .000 SILTS = .000
MACH = .850 RN/L = 3.500

RUN NO. 805/ 0 RN/L = 3.50 GRADIENT INTERVAL = -5.00/ 5.00

ALPHAR	BETAR	CNFRS	CAFRS	CLMFRS	CYFRS	CYNFRS	CBLRS	CABRS	CYNBRS	CP9	CP10
-.191	-7.070	.01310	.02000	-.01620	-.02300	.03300	-.00250	.02650	.00510	-.32750	-.27540
-.280	-.796	-.01130	.01850	.00110	-.02830	.03440	.00220	.02960	.00580	-.35730	-.31760
-.337	5.415	-.04360	.01950	.02200	-.04190	.04370	.00860	.03530	.00680	-.42010	-.38300
	GRADIENT	.00000	.00000	.00000	.00000	.00000	.00000	.00000	.00000	.00000	.00000

IA156A, AEDC PWT 16T-470, 0 T S (R8NR05) (10 MAY 80)

REFERENCE DATA

SREF =	2690.0000 SQ.FT.	XMRP =	976.0000 IN. XT		
LREF =	1290.3000 INCHES	YMRP =	.0000 IN. YT		
BREF =	1290.3000 INCHES	ZMRP =	400.0000 IN. ZT		
SCALE =	.0200				

PARAMETRIC DATA

IB-ELV =	10.000	OB-ELV =	5.000
BDFLAP =	.000	SPDBRK =	.000
RUDDER =	.000	SILTS =	.000
MACH =	.900	RN/L =	3.500

RUN NO. 806/ 0 RN/L = 3.50 GRADIENT INTERVAL = -5.00/ 5.00

ALPHAR	BETAR	CNFRS	CAFRS	CLMFRS	CYFRS	CYNFRS	CBLRS	CABRS	CYNBRS	CP9	CP10
-.216	-7.091	.01340	.02150	-.01700	-.02170	.03310	-.00260	.02750	.00530	-.33790	-.28890
-.319	-.807	-.01070	.02060	.00020	-.02680	.03480	.00210	.03070	.00600	-.36700	-.33160
-.372	5.432	-.04200	.02180	.02080	-.04290	.04530	.00830	.03580	.00700	-.42870	-.38720
	GRADIENT	.00000	.00000	.00000	.00000	.00000	.00000	.00000	.00000	.00000	.00000

IA156A, AEDC PWT 16T-470, 0 T S (R8NR06) (10 MAY 80)

REFERENCE DATA

SREF =	2690.0000 SQ.FT.	XMRP =	976.0000 IN. XT		
LREF =	1290.3000 INCHES	YMRP =	.0000 IN. YT		
BREF =	1290.3000 INCHES	ZMRP =	400.0000 IN. ZT		
SCALE =	.0200				

PARAMETRIC DATA

IB-ELV =	10.000	OB-ELV =	5.000
BDFLAP =	.000	SPDBRK =	.000
RUDDER =	.000	SILTS =	.000
MACH =	.920	RN/L =	3.500

RUN NO. 807/ 0 RN/L = 3.50 GRADIENT INTERVAL = -5.00/ 5.00

ALPHAR	BETAR	CNFRS	CAFRS	CLMFRS	CYFRS	CYNFRS	CBLRS	CABRS	CYNBRS	CP9	CP10
-.221	-7.106	.01250	.02230	-.01590	-.02070	.03390	-.00240	.02810	.00550	-.34490	-.29550
-.310	-.840	-.01090	.02160	.00100	-.02750	.03610	.00220	.03170	.00620	-.38100	-.34200
-.365	5.414	-.04240	.02330	.02140	-.04380	.04620	.00830	.03670	.00710	-.43810	-.39850
	GRADIENT	.00000	.00000	.00000	.00000	.00000	.00000	.00000	.00000	.00000	.00000

IA156A, AEDC PWT 16T-470, 0 T S (R8NR07) (10 MAY 80)

REFERENCE DATA

SREF = 2690.0000 SQ.FT. XMRP = 976.0000 IN. XT
LREF = 1290.3000 INCHES YMRP = .0000 IN. YT
BREF = 1290.3000 INCHES ZMRP = 400.0000 IN. ZT
SCALE = .0200

PARAMETRIC DATA

IB-ELV =	10.000	OB-ELV =	5.000
BDFLAP =	.000	SPDBRK =	.000
RUDDER =	.000	SILTS =	.000
MACH =	.940	RN/L =	3.500

RUN NO. 808/ 0 RN/L = 3.50 GRADIENT INTERVAL = -5.00/ 5.00

ALPHAR	BETAR	CNFRS	CAFRS	CLMFRS	CYFRS	CYNFRS	CBLRS	CABRS	CYNBRS	CP9	CP10
-.208	-7.100	.01120	.02300	-.01400	-.01940	.03480	-.00220	.02840	.00550	-.34720	-.29920
-.277	-.872	-.01160	.02280	.00300	-.02960	.03830	.00230	.03330	.00650	-.40050	-.35680
-.359	5.513	-.04400	.02460	.02290	-.04620	.04810	.00860	.03870	.00750	-.46290	-.41880
	GRADIENT	.00000	.00000	.00000	.00000	.00000	.00000	.00000	.00000	.00000	.00000

IA156A, AEDC PWT 16T-470, 0 T S (R8NR08) (10 MAY 80)

REFERENCE DATA

SREF = 2690.0000 SQ.FT. XMRP = 976.0000 IN. XT
LREF = 1290.3000 INCHES YMRP = .0000 IN. YT
BREF = 1290.3000 INCHES ZMRP = 400.0000 IN. ZT
SCALE = .0200

PARAMETRIC DATA

IB-ELV =	10.000	OB-ELV =	5.000
BDFLAP =	.000	SPDBRK =	.000
RUDDER =	.000	SILTS =	.000
MACH =	.950	RN/L =	3.500

RUN NO. 816/ 0 RN/L = 3.50 GRADIENT INTERVAL = -5.00/ 5.00

BETAR	ALPHAR	CNFRS	CAFRS	CLMFRS	CYFRS	CYNFRS	CBLFRS	CABRS	CYNBRS	CP9	CP10
.439	-6.180	-.05490	.01930	.01560	.01460	.01180	.01080	.03750	.00730	-.44200	-.41170
.173	-1.025	-.02060	.02440	.00820	-.03560	.04150	.00400	.03280	.00640	-.39210	-.35500
.096	.124	-.01480	.02210	.00670	-.03580	.04210	.00290	.03390	.00660	-.40680	-.36510
-.281	6.100	.01500	.02290	-.00170	-.01730	.03180	-.00300	.03570	.00690	-.43050	-.38330
	GRADIENT	.00505	-.00200	-.00131	-.00017	.00052	-.00096	.00096	.00017	-.01279	-.00879

IA156A, AEDC PWT 16T-470, 0 T S (R8NR09) (10 MAY 80)

REFERENCE DATA

SREF = 2690.0000 SQ.FT. XMRP = 976.0000 IN. XT
LREF = 1290.3000 INCHES YMRP = .0000 IN. YT
BREF = 1290.3000 INCHES ZMRP = 400.0000 IN. ZT
SCALE = .0200

PARAMETRIC DATA

IB-ELV = 10.000 OB-ELV = 5.000
BDFLAP = .000 SPDBRK = .000
RUDDER = .000 SILTS = .000
MACH = .950 RN/L = 3.500

RUN NO. 820/ 0 RN/L = 3.50 GRADIENT INTERVAL = -5.00/ 5.00

ALPHAR	BETAR	CNFRS	CAFRS	CLMFRS	CYFRS	CYNFRS	CBLRS	CABRS	CYNBRS	CP9	CP10
-.300	-7.245	.01030	.02200	-.01320	-.01940	.03500	-.00200	.02900	.00560	-.35540	-.30520
-.319	-.482	-.01530	.02230	.00540	-.03300	.04020	.00300	.03370	.00650	-.40220	-.36440
-.258	5.553	-.04220	.02500	.02320	-.04970	.05070	.00830	.04020	.00780	-.48240	-.43340
	GRADIENT	.00000	.00000	.00000	.00000	.00000	.00000	.00000	.00000	.00000	.00000

IA156A, AEDC PWT 16T-470, 0 T S (R8NR10) (10 MAY 80)

REFERENCE DATA

SREF = 2690.0000 SQ.FT. XMRP = 976.0000 IN. XT
LREF = 1290.3000 INCHES YMRP = .0000 IN. YT
BREF = 1290.3000 INCHES ZMRP = 400.0000 IN. ZT
SCALE = .0200

PARAMETRIC DATA

IB-ELV = 10.000 OB-ELV = 5.000
BDFLAP = .000 SPDBRK = .000
RUDDER = .000 SILTS = .000
MACH = .960 RN/L = 3.500

RUN NO. 818/ 0 RN/L = 3.50 GRADIENT INTERVAL = -5.00/ 5.00

ALPHAR	BETAR	CNFRS	CAFRS	CLMFRS	CYFRS	CYNFRS	CBLRS	CABRS	CYNBRS	CP9	CP10
-.299	-7.232	.00990	.02240	-.01260	-.02100	.03590	-.00200	.02950	.00570	-.36170	-.31100
-.323	-.817	-.01390	.02360	.00470	-.03400	.04080	.00270	.03580	.00690	-.42910	-.38540
-.270	5.546	-.04330	.02540	.02400	-.05170	.05230	.00850	.04190	.00810	-.49880	-.45550
	GRADIENT	.00000	.00000	.00000	.00000	.00000	.00000	.00000	.00000	.00000	.00000

IA156A, AEDC PWT 16T-470, 0 T S (R8NR11) (10 MAY 80)

REFERENCE DATA

SREF =	2690.0000 SQ.FT.	XMRP =	976.0000 IN. XT		
LREF =	1290.3000 INCHES	YMRP =	.0000 IN. YT		
BREF =	1290.3000 INCHES	ZMRP =	400.0000 IN. ZT		
SCALE =	.0200				

PARAMETRIC DATA

IB-ELV =	10.000	OB-ELV =	5.000
BDFLAP =	.000	SPDBRK =	.000
RUDDER =	.000	SILTS =	.000
MACH =	.970	RN/L =	3.500

RUN NO. 821/ 0 RN/L = 3.50 GRADIENT INTERVAL = -5.00/ 5.00

ALPHAR	BETAR	CNFRS	CAFRS	CLMFRS	CYFRS	CYNFRS	CBLRS	CABRS	CYNBRS	CP9	CP10
-.324	-7.066	.01040	.02370	-.01310	-.02360	.03820	-.00210	.03110	.00600	-.37970	-.32880
-.355	-.612	-.01380	.02520	.00420	-.03710	.04340	.00270	.03720	.00720	-.44430	-.40240
-.276	5.663	-.04400	.02540	.02440	-.05270	.05310	.00660	.04290	.00830	-.51080	-.46680
	GRADIENT	.00000	.00000	.00000	.00000	.00000	.00000	.00000	.00000	.00000	.00000

IA156A, AEDC PWT 16T-470, 0 T S (R8NR12) (10 MAY 80)

REFERENCE DATA

SREF =	2690.0000 SQ.FT.	XMRP =	976.0000 IN. XT		
LREF =	1290.3000 INCHES	YMRP =	.0000 IN. YT		
BREF =	1290.3000 INCHES	ZMRP =	400.0000 IN. ZT		
SCALE =	.0200				

PARAMETRIC DATA

IB-ELV =	10.000	OB-ELV =	5.000
BDFLAP =	.000	SPDBRK =	.000
RUDDER =	.000	SILTS =	.000
MACH =	.980	RN/L =	3.500

RUN NO. 822/ 0 RN/L = 3.51 GRADIENT INTERVAL = -5.00/ 5.00

ALPHAR	BETAR	CNFRS	CAFRS	CLMFRS	CYFRS	CYNFRS	CBLRS	CABRS	CYNBRS	CP9	CP10
-.037	-6.518	.00900	.02400	-.01180	-.02490	.03890	-.00180	.03360	.00650	-.40780	-.35670
-.371	-.263	-.01480	.02580	.00450	-.04090	.04670	.00290	.03950	.00770	-.47140	-.42760
.071	5.634	-.04010	.02740	.02320	-.05620	.05670	.00780	.04500	.00870	-.53390	-.49090
	GRADIENT	.00000	.00000	.00000	.00000	.00000	.00000	.00000	.00000	.00000	.00000

IA156A, AEDC PWT 16T-470, 0 T S (R8NR13) (10 MAY 80)

REFERENCE DATA

SREF = 2690.0000 SQ.FT. XMRP = 976.0000 IN. XT
LREF = 1290.3000 INCHES YMRP = .0000 IN. YT
BREF = 1290.3000 INCHES ZMRP = 400.0000 IN. ZT
SCALE = .0200

PARAMETRIC DATA

IB-ELV =	10.000	OB-ELV =	5.000
BDFLAP =	.000	SPDBRK =	.000
RUDDER =	.000	SILTS =	.000
MACH =	.990	RN/L =	3.500

RUN NO. 823/ 0 RN/L = 3.50 GRADIENT INTERVAL = -5.00/ 5.00

ALPHAR	BETAR	CNFRS	CAFRS	CLMFRS	CYFRS	CYNFRS	CBLRS	CABRS	CYNBRS	CP9	CP10
.051	-6.534	.00990	.02500	-.01260	-.02550	.03990	-.00200	.03450	.00670	-.41670	-.36830
-.334	-.169	-.01520	.02610	.00490	-.04230	.04800	.00290	.03950	.00770	-.47310	-.42690
.013	5.378	-.04030	.02800	.02310	-.05570	.05640	.00790	.04550	.00880	-.54170	-.49480
	GRADIENT	.00000	.00000	.00000	.00000	.00000	.00000	.00000	.00000	.00000	.00000

IA156A, AEDC PWT 16T-470, 0 T S (R8NR14) (10 MAY 80)

REFERENCE DATA

SREF = 2690.0000 SQ.FT. XMRP = 976.0000 IN. XT
LREF = 1290.3000 INCHES YMRP = .0000 IN. YT
BREF = 1290.3000 INCHES ZMRP = 400.0000 IN. ZT
SCALE = .0200

PARAMETRIC DATA

IB-ELV =	10.000	OB-ELV =	5.000
BDFLAP =	.000	SPDBRK =	.000
RUDDER =	.000	SILTS =	.000
MACH =	1.010	RN/L =	3.500

RUN NO. 824/ 0 RN/L = 3.51 GRADIENT INTERVAL = -5.00/ 5.00

ALPHAR	BETAR	CNFRS	CAFRS	CLMFRS	CYFRS	CYNFRS	CBLRS	CABRS	CYNBRS	CP9	CP10
.191	-6.472	.00930	.02670	-.01200	-.02560	.04010	-.00190	.03590	.00700	-.43390	-.38280
-.210	.015	-.01700	.02480	.00690	-.04400	.04910	.00330	.04490	00870	-.53570	-.48590
-.022	5.720	-.04480	.02950	.02670	-.05840	.05880	.00870	.04880	.00950	-.57740	-.53490
	GRADIENT	.00000	.00000	.00000	.00000	.00000	.00000	.00000	.00000	.00000	.00000

IA156A, AEDC PWT 16T-470, 0 T S (R8NR15) (10 MAY 80)

REFERENCE DATA

SREF =	2690.0000 SQ.FT.	XMRP =	976.0000 IN. XT		
LREF =	1290.3000 INCHES	YMRP =	.0000 IN. YT		
BREF =	1290.3000 INCHES	ZMRP =	400.0000 IN. ZT		
SCALE =	.0200				

PARAMETRIC DATA

IB-ELV =	10.000	OB-ELV =	5.000
BDFLAP =	.000	SPDBRK =	.000
RUDDER =	.000	SILTS =	.000
MACH =	1.020	RN/L =	3.500

RUN NO. 825/ 0 RN/L = 3.51 GRADIENT INTERVAL = -5.00/ 5.00

ALPHAR	BETAR	CNFRS	CAFRS	CLMFRS	CYFRS	CYNFRS	CBLRS	CABRS	CYNBRS	CP9	CP10
.133	-6.541	.00970	.02710	-.01230	-.02620	.04070	-.00200	.03750	.00730	-.45080	-.40280
-.321	-.160	-.01730	.02760	.00700	-.04540	.05130	.00330	.04540	.00880	-.54170	-.49290
.048	5.762	-.04510	.03070	.02740	-.05960	.06000	.00880	.05030	.00980	-.59500	-.55000
	GRADIENT	.00000	.00000	.00000	.00000	.00000	.00000	.00000	.00000	.00000	.00000

IA156A, AEDC PWT 16T-470, 0 T S (R8NR16) (10 MAY 80)

REFERENCE DATA

SREF =	2690.0000 SQ.FT.	XMRP =	976.0000 IN. XT		
LREF =	1290.3000 INCHES	YMRP =	.0000 IN. YT		
BREF =	1290.3000 INCHES	ZMRP =	400.0000 IN. ZT		
SCALE =	.0200				

PARAMETRIC DATA

IB-ELV =	10.000	OB-ELV =	5.000
BDFLAP =	.000	SPDBRK =	.000
RUDDER =	.000	SILTS =	.000
MACH =	1.030	RN/L =	3.500

RUN NO. 826/ 0 RN/L = 3.51 GRADIENT INTERVAL = -5.00/ 5.00

ALPHAR	BETAR	CNFRS	CAFRS	CLMFRS	CYFRS	CYNFRS	CBLRS	CABRS	CYNBRS	CP9	CP10
.156	-6.838	.01090	.02770	-.01330	-.02690	.04180	-.00220	.03890	.00750	-.46820	-.41700
-.280	-.116	-.01800	.02870	.00770	-.04620	.05220	.00350	.04650	.00900	-.55400	-.50480
.011	5.960	-.04740	.03110	.02920	-.06040	.06050	.00920	.05200	.01010	-.61470	-.56900
	GRADIENT	.00000	.00000	.00000	.00000	.00000	.00000	.00000	.00000	.00000	.00000

IA156A, AEDC PWT 16T-470, 0 T S (R8NR17) (10 MAY 80)

REFERENCE DATA

SREF = 2690.0000 SQ.FT. XMRP = 976.0000 IN. XT
LREF = 1290.3000 INCHES YMRP = .0000 IN. YT
BREF = 1290.3000 INCHES ZMRP = 400.0000 IN. ZT
SCALE = .0200

PARAMETRIC DATA

IB-ELV = 10.000 OB-ELV = 5.000
BDFLAP = .000 SPDBRK = .000
RUDDER = .000 SILTS = .000
MACH = 1.040 RN/L = 3.500

RUN NO. 827/ 0 RN/L = 3.51 GRADIENT INTERVAL = -5.00/ 5.00

ALPHAR	BETAR	CNFRS	CAFRS	CLMFRS	CYFRS	CYNFRS	CBLRS	CABRS	CYNBRS	CP9	CP10
-.057	-6.725	.01060	.02760	-.01340	-.02720	.04180	-.00210	.04000	.00780	-.48070	-.43020
-.308	-.146	-.01850	.02890	.00830	-.04740	.05340	.00360	.04900	.00950	-.58260	-.53220
.083	5.830	-.04620	.03230	.02880	-.06160	.06210	.00900	.05340	.01040	-.63190	-.58300
	GRADIENT	.00000	.00000	.00000	.00000	.00000	.00000	.00000	.00000	.00000	.00000

IA156A, AEDC PWT 16T-470, 0 T S (P8NR18) (10 MAY 80)

REFERENCE DATA

SREF = 2690.0000 SQ.FT. XMRP = 976.0000 IN. XT
LREF = 1290.3000 INCHES YMRP = .0000 IN. YT
BREF = 1290.3000 INCHES ZMRP = 400.0000 IN. ZT
SCALE = .0200

PARAMETRIC DATA

IB-ELV = 10.000 OB-ELV = 5.000
BDFLAP = .000 SPDBRK = .000
RUDDER = .000 SILTS = .000
MACH = 1.050 RN/L = 3.500

RUN NO. 828/ 0 RN/L = 3.51 GRADIENT INTERVAL = -5.00/ 5.00

ALPHAR	BETAR	CNFRS	CAFRS	CLMFRS	CYFRS	CYNFRS	CBLRS	CABRS	CYNBRS	CP9	CP10
.042	-6.704	.00980	.02740	-.01250	-.02730	.04170	-.00200	.04130	.00800	-.49550	-.44460
-.249	-.036	-.01870	.03010	.00880	-.04780	.05400	.00360	.04840	.00940	-.57730	-.52470
-.032	5.896	-.04770	.03320	.02960	-.06180	.06240	.00930	.05330	.01030	-.63080	-.58260
	GRADIENT	.00000	.00000	.00000	.00000	.00000	.00000	.00000	.00000	.00000	.00000

IA156A, AEDC PWT 16T-470, 0 T S (R8NR19) (10 MAY 80)

REFERENCE DATA

SREF =	2690.0000 SQ.FT.	XMRP =	976.0000 IN. XT		
LREF =	1290.3000 INCHES	YMRP =	.0000 IN. YT		
BREF =	1290.3000 INCHES	ZMRP =	400.0000 IN. ZT		
SCALE =	.0200				

PARAMETRIC DATA

IB-ELV =	10.000	OB-ELV =	5.000
BDFLAP =	.000	SPDBRK =	.000
RUDDER =	.000	SILTS =	.000
MACH =	1.060	RN/L =	3.500

RUN NO. 829/ 0 RN/L = 3.50 GRADIENT INTERVAL = -5.00/ 5.00

ALPHAR	BETAR	CNFRS	CAFRS	CLMFRS	CYFRS	CYNFRS	CBLRS	CABRS	CYNBRS	CP9	CP10
.139	-6.672	.01010	.02890	-.01270	-.02690	.04150	-.00210	.03970	.00770	-.47790	-.42730
-.248	-.016	-.01830	.03100	.00840	-.04770	.05400	.00350	.04750	.00920	-.56630	-.51460
-.069	5.883	-.04740	.03410	.02910	-.06170	.06260	.00920	.05220	.01010	-.61880	-.57010
	GRADIENT	.00000	.00000	.00000	.00000	.00000	.00000	.00000	.00000	.00000	.00000

IA156A, AEDC PWT 16T-470, 0 T S (R8NR20) (10 MAY 80)

REFERENCE DATA

SREF =	2690.0000 SQ.FT.	XMRP =	976.0000 IN. XT		
LREF =	1290.3000 INCHES	YMRP =	.0000 IN. YT		
BREF =	1290.3000 INCHES	ZMRP =	400.0000 IN. ZT		
SCALE =	.0200				

PARAMETRIC DATA

IB-ELV =	10.000	OB-ELV =	5.000
BDFLAP =	.000	SPDBRK =	.000
RUDDER =	.000	SILTS =	.000
MACH =	1.080	RN/L =	3.500

RUN NO. 830/ 0 RN/L = 3.48 GRADIENT INTERVAL = -5.00/ 5.00

ALPHAR	BETAR	CNFRS	CAFRS	CLMFRS	CYFRS	CYNFRS	CBLRS	CABRS	CYNBRS	CP9	CP10
-.008	-6.798	.01060	.03040	-.01330	-.02710	.04170	-.00210	.03680	.00710	-.44430	-.39380
-.286	-.115	-.01810	.03090	.00790	-.04650	.05290	.00350	.04500	.00870	-.53960	-.48460
-.112	5.886	-.04790	.03540	.02930	-.05900	.06030	.00930	.04730	.00920	-.56090	-.51600
	GRADIENT	.00000	.00000	.00000	.00000	.00000	.00000	.00000	.00000	.00000	.00000

IA156A, AEDC PWT 16T-470, 0 T S (R8NR21) (10 MAY 80)

REFERENCE DATA

SREF = 2690.0000 SQ.FT. XMRP = 976.0000 IN. XT
LREF = 1290.3000 INCHES YMRP = .0000 IN. YT
BREF = 1290.3000 INCHES ZMRP = 400.0000 IN. ZT
SCALE = .0200

PARAMETRIC DATA

IB-ELV = 10.000 OB-ELV = 5.000
BDFLAP = .000 SPDBRK = .000
RUDDER = .000 SILTS = .000
MACH = 1.100 RN/L = 3.500

RUN NO. 831/ 0 RN/L = 3.50 GRADIENT INTERVAL = -5.00/ 5.00

ALPHAR	BETAR	CNFRS	CAFRS	CLMFRS	CYFRS	CYNFRS	CBLRS	CABRS	CYNBRS	CP9	CP10
-.059	-6.563	.00850	.02950	-.01200	-.02880	.04290	-.00170	.03720	.00720	-.45070	-.39770
-.304	-.160	-.02010	.03170	.00920	-.04530	.05160	.00390	.04230	.00820	-.50770	-.45470
.117	5.783	-.04770	.03580	.03000	-.05860	.05960	.00930	.04660	.00900	-.55310	-.50710
	GRADIENT	.00000	.00000	.00000	.00000	.00000	.00000	.00000	.00000	.00000	.00000

IA156A, AEDC PWT 16T-470, 0 T S (R8NR22) (10 MAY 80)

REFERENCE DATA

SREF = 2690.0000 SQ.FT. XMRP = 976.0000 IN. XT
LREF = 1290.3000 INCHES YMRP = .0000 IN. YT
BREF = 1290.3000 INCHES ZMRP = 400.0000 IN. ZT
SCALE = .0200

PARAMETRIC DATA

IB-ELV = 10.000 OB-ELV = 5.000
BDFLAP = .000 SPDBRK = .000
RUDDER = .000 SILTS = .000
MACH = 1.150 RN/L = 3.500

RUN NO. 836/ 0 RN/L = 3.50 GRADIENT INTERVAL = -5.00/ 5.00

ALPHAR	BETAR	CNFRS	CAFRS	CLMFRS	CYFRS	CYNFRS	CBLRS	CABRS	CYNBRS	CP9	CP10
.399	-5.923	.00610	.03060	-.00900	-.02550	.03990	-.00130	.03450	.00670	-.41790	-.36890
-.277	-.168	-.02050	.03330	.01010	-.04370	.05030	.00390	.04120	.00800	-.49710	-.44150
-.046	5.672	-.04960	.03770	.03150	-.05510	.05650	.00960	.04460	.00870	-.53280	-.48230
	GRADIENT	.00000	.00000	.00000	.00000	.00000	.00000	.00000	.00000	.00000	.00000

IA156A, AEDC PWT 16T-470, 0 T S (R8NR23) (10 MAY 80)

REFERENCE DATA

SREF = 2690.0000 SQ.FT. XMRP = 976.0000 IN. XT
LREF = 1290.3000 INCHES YMRP = .0000 IN. YT
BREF = 1290.3000 INCHES ZMRP = 400.0000 IN. ZT
SCALE = .0200

PARAMETRIC DATA

IB-ELV = 10.000 OB-ELV = 5.000
BDFLAP = .000 SPDBRK = .000
RUDDER = .000 SILTS = .000
MACH = 1.200 RN/L = 3.500

RUN NO. 837/ 0 RN/L = 3.51 GRADIENT INTERVAL = -5.00/ 5.00

ALPHAR	BETAR	CNFRS	CAFRS	CLMFRS	CYFRS	CYNFRS	CBLRS	CABRS	CYNBRS	CP9	CP10
.330	-5.899	.00520	.03150	-.00830	-.02370	.03850	-.00110	.03200	.00620	-.38800	-.34140
-.083	.005	-.02310	.03440	.01310	-.04310	.04930	.00440	.03950	.00770	-.47760	-.42280
-.057	5.749	-.05160	.03830	.03310	-.05310	.05420	.01000	.04280	.00830	-.51460	-.45970
	GRADIENT	.00000	.00000	.00000	.00000	.00000	.00000	.00000	.00000	.00000	.00000

IA156A, AEDC PWT 16T-470, 0 T S (R8NR24) (10 MAY 80)

REFERENCE DATA

SREF = 2690.0000 SQ.FT. XMRP = 976.0000 IN. XT
LREF = 1290.3000 INCHES YMRP = .0000 IN. YT
BREF = 1290.3000 INCHES ZMRP = 400.0000 IN. ZT
SCALE = .0200

PARAMETRIC DATA

IB-ELV = 10.000 OB-ELV = 5.000
BDFLAP = .000 SPDBRK = .000
RUDDER = .000 SILTS = .000
MACH = 1.250 RN/L = 3.500

RUN NO. 838/ 0 RN/L = 3.50 GRADIENT INTERVAL = -5.00/ 5.00

ALPHAR	BETAR	CNFRS	CAFRS	CLMFRS	CYFRS	CYNFRS	CBLRS	CABRS	CYNBRS	CP9	CP10
.103	-6.775	.00460	.02930	-.00820	-.02380	.03880	-.00100	.03200	.00620	-.39670	-.33320
-.084	-.006	-.02480	.03530	.01520	-.04200	.04770	.00470	.03810	.00740	-.46220	-.40510
.000	5.687	-.05110	.03850	.03380	-.05340	.05410	.00990	.04160	.00810	-.50160	-.44510
	GRADIENT	.00000	.00000	.00000	.00000	.00000	.00000	.00000	.00000	.00000	.00000

IA156A, AEDC PWT 16T-470, 0 T S (R8NR25) (10 MAY 80)

REFERENCE DATA

SREF = 2690.0000 SQ.FT. XMRP = 976.0000 IN. XT
LREF = 1290.3000 INCHES YMRP = .0000 IN. YT
BREF = 1290.3000 INCHES ZMRP = 400.0000 IN. ZT
SCALE = .0200

PARAMETRIC DATA

IB-ELV = 10.000 OB-ELV = 5.000
BDFLAP = .000 SPDBRK = .000
RUDDER = .000 SILTS = .000
MACH = 1.300 RN/L = 3.500

RUN NO. 839/ 0 RN/L = 3.50 GRADIENT INTERVAL = -5.00/ 5.00

ALPHAR	BETAR	CNFRS	CAFRS	CLMFRS	CYFRS	CYNFRS	CBLRS	CABRS	CYNBRS	CP9	CP10
.095	-6.778	.00260	.03000	-.00610	-.02220	.03780	-.00060	.02990	.00580	-.36750	-.31450
-.118	-.118	-.02390	.03460	.01510	-.03990	.04590	.00460	.03630	.00700	-.44140	-.38490
.033	5.909	-.05000	.03840	.03400	-.05300	.05330	.00970	.03980	.00770	-.48310	-.42410
	GRADIENT	.00000	.00000	.00000	.00000	.00000	.00000	.00000	.00000	.00000	.00000

IA156A, AEDC PWT 16T-470, 0 T S (R8NR26) (10 MAY 80)

REFERENCE DATA

SREF = 2690.0000 SQ.FT. XMRP = 976.0000 IN. XT
LREF = 1290.3000 INCHES YMRP = .0000 IN. YT
BREF = 1290.3000 INCHES ZMRP = 400.0000 IN. ZT
SCALE = .0200

PARAMETRIC DATA

IB-ELV = 10.000 OB-ELV = 5.000
BDFLAP = .000 SPDBRK = .000
RUDDER = .000 SILTS = .000
MACH = 1.400 RN/L = 3.500

RUN NO. 840/ 0 RN/L = 3.50 GRADIENT INTERVAL = -5.00/ 5.00

ALPHAR	BETAR	CNFRS	CAFRS	CLMFRS	CYFRS	CYNFRS	CBLRS	CABRS	CYNBRS	CP9	CP10
.112	-6.847	.00120	.03080	-.00450	-.01970	.03660	-.00030	.02810	.00540	-.34560	-.29360
-.114	-.026	-.02600	.03540	.01670	-.03640	.04320	.00500	.03370	.00660	-.41270	-.35600
.042	5.919	-.04950	.03900	.03340	-.05030	.05130	.00960	.03770	.00730	-.46280	-.39620
	GRADIENT	.00000	.00000	.00000	.00000	.00000	.00000	.00000	.00000	.00000	.00000

IA156A, AEDC PWT 16T-470, 0 T S (R8NR27) (10 MAY 80)

REFERENCE DATA

SREF = 2690.0000 SQ.FT. XMRP = 976.0000 IN. XT
LREF = 1290.3000 INCHES YMRP = .0000 IN. YT
BREF = 1290.3000 INCHES ZMRP = 400.0000 IN. ZT
SCALE = .0200

PARAMETRIC DATA

IB-ELV = 10.000 OB-ELV = 5.000
BDFLAP = .000 SPDBRK = .000
RUDDER = .000 SILTS = .000
MACH = 1.550 RN/L = 3.200

RUN NO. 841/ 0 RN/L = 3.19 GRADIENT INTERVAL = -5.00/ 5.00

ALPHAR	BETAR	CNFRS	CAFRS	CLMFRS	CYFRS	CYNFRS	CBLRS	CABRS	CYNBRS	CP9	CP10
.111	-6.840	-.00020	.02930	-.00310	-.01750	.03460	-.00010	.02550	.00500	-.31370	-.26730
-.216	-.013	-.02610	.03420	.01680	-.03280	.03980	.00500	.02980	.00580	-.37020	-.30810
-.117	5.849	-.04580	.03770	.02970	-.04680	.04950	.00890	.03410	.00660	-.42820	-.34930
	GRADIENT	.00000	.00000	.00000	.00000	.00000	.00000	.00000	.00000	.00000	.00000

IA156A, AEDC PWT 16T-470, 0 T S (R8NR28) (10 MAY 80)

REFERENCE DATA

SREF = 2690.0000 SQ.FT. XMRP = 976.0000 IN. XT
LREF = 1290.3000 INCHES YMRP = .0000 IN. YT
BREF = 1290.3000 INCHES ZMRP = 400.0000 IN. ZT
SCALE = .0200

PARAMETRIC DATA

IB-ELV = 10.000 OB-ELV = 5.000
BDFLAP = .000 SPDBRK = .000
RUDDER = .000 SILTS = .000
MACH = .600 RN/L = 3.500

RUN NO. 846/ 0 RN/L = 3.50 GRADIENT INTERVAL = -5.00/ 5.00

ALPHAR	BETAR	CNFRS	CAFRS	CLMFRS	CYFRS	CYNFRS	CBLRS	CABRS	CYNBRS	CP9	CP10
-.238	-6.869	.00690	.01170	-.00980	-.02120	.03110	-.00160	.02630	.00510	-.33140	-.26900
.236	-5.792	.00490	.01330	-.00760	-.02130	.03030	-.00120	.02550	.00500	-.32360	-.25870
-.235	-.329	-.01790	.01380	.00810	-.03380	.03690	.00340	.03090	.00600	-.37740	-.32680
.200	.199	-.01410	.01320	.00700	-.03470	.03770	.00260	.03070	.00600	-.37270	-.32650
-.190	5.644	-.03930	.01450	.02220	-.04670	.04500	.00750	.03640	.00710	-.43260	-.39610
.216	6.680	-.03390	.01500	.02070	-.04910	.04720	.00650	.03560	.00690	-.42470	-.38570
	GRADIENT	.00719	-.00114	-.00208	-.00170	.00151	-.00151	-.00038	.00000	.00890	.00057

IA156A, AEDC PWT 16T-470, 0 T S (R8NR29) (10 MAY 80)

REFERENCE DATA

SREF = 2690.0000 SQ.FT. XMRP = 976.0000 IN. XT
LREF = 1290.3000 INCHES YMRP = .0000 IN. YT
BREF = 1290.3000 INCHES ZMRP = 400.0000 IN. ZT
SCALE = .0200

PARAMETRIC DATA

IB-ELV = 10.000 OB-ELV = 5.000
BDFLAP = .000 SPDBRK = .000
RUDDER = .000 SILTS = .000
MACH = .900 RN/L = 3.500

RUN NO. 845/ 0 RN/L = 3.51 GRADIENT INTERVAL = -5.00/ 5.00

ALPHAR	BETAR	CNFRS	CAFRS	CLMFRS	CYFRS	CYNFRS	CBLRS	CABRS	CYNBRS	CP9	CP10
-.293	-7.160	.01220	.02050	-.01640	-.02060	.03290	-.00250	.02790	.00540	-.33990	-.29620
.176	-5.765	.00960	.01940	-.01440	-.02160	.03190	-.00200	.02960	.00570	-.36040	-.31280
-.369	-.549	-.01430	.01930	.00220	-.02780	.03580	.00270	.03100	.00600	-.36900	-.33630
.067	.349	-.01380	.02010	.00250	-.02920	.03640	.00260	.03080	.00600	-.36730	-.33340
-.256	5.535	-.04250	.02100	.02230	-.04450	.04630	.00820	.03770	.00730	-.44920	-.40830
.122	6.896	-.04120	.02160	.02330	-.04900	.04960	.00790	.03820	.00740	-.45500	-.41460
	GRADIENT	.00056	.00089	.00033	-.00156	.00067	-.00011	-.00022	.00000	.00189	.00323

IA156A, AEDC PWT 16T-470, 0 T S (R8NR30) (10 MAY 80)

REFERENCE DATA

SREF = 2690.0000 SQ.FT. XMRP = 976.0000 IN. XT
LREF = 1290.3000 INCHES YMRP = .0000 IN. YT
BREF = 1290.3000 INCHES ZMRP = 400.0000 IN. ZT
SCALE = .0200

PARAMETRIC DATA

IB-ELV = 10.000 OB-ELV = 5.000
BDFLAP = .000 SPDBRK = .000
RUDDER = .000 SILTS = .000
MACH = 1.100 RN/L = 3.500

RUN NO. 844/ 0 RN/L = 3.50 GRADIENT INTERVAL = -5.00/ 5.00

ALPHAR	BETAR	CNFRS	CAFRS	CLMFRS	CYFRS	CYNFRS	CBLRS	CABRS	CYNBRS	CP9	CP10
-.369	-7.209	.01130	.02970	-.01490	-.02850	.04350	-.00230	.03680	.00720	-.44520	-.39400
.220	-5.823	.00780	.02950	-.01060	-.02560	.03980	-.00170	.03670	.00710	-.44220	-.39310
-.374	-.503	-.01870	.03200	.00800	-.04420	.05100	.00350	.04240	.00820	-.50880	-.45590
.099	.238	-.01650	.03250	.00840	-.04390	.05110	.00300	.04220	.00820	-.50480	-.45580
-.225	5.547	-.05090	.03560	.03110	-.05650	.05820	.00980	.04690	.00910	-.55740	-.50960
.142	6.883	-.04940	.03570	.03270	-.06000	.06040	.00950	.04770	.00930	-.56790	-.51850
	GRADIENT	.00297	.00067	.00054	.00040	.00013	-.00067	-.00027	.00000	.00540	.00013

IA156A, AEDC PWT 16T-470, O T S (R8NR31) (10 MAY 80)

REFERENCE DATA

SREF = 2690.0000 SQ.FT. XMRP = 976.0000 IN. XT
LREF = 1290.3000 INCHES YMRP = .0000 IN. YT
BREF = 1290.3000 INCHES ZMRP = 400.0000 IN. ZT
SCALE = .0200

PARAMETRIC DATA

IB-ELV = 10.000 OB-ELV = 5.000
BDFLAP = .000 SPDBRK = .000
RUDDER = .000 SILTS = .000
MACH = 1.550 RN/L = 3.200

RUN NO. 842/ 0 RN/L = 3.20 GRADIENT INTERVAL = -5.00/ 5.00

ALPHAR	BETAR	CNFRS	CAFRS	CLMFRS	CYFRS	CYNFRS	CBLRS	CABRS	CYNBRS	CP9	CP10
-.372	-7.186	.00110	.02890	-.00570	-.01760	.03460	-.00030	.02500	.00490	-.30840	-.26110
.489	-6.040	-.00190	.02930	-.00040	-.01500	.03230	.00020	.02560	.00500	-.31210	-.27120
-.333	-.605	-.02390	.03350	.01480	-.03170	.03920	.00460	.02940	.00570	-.36370	-.30550
.448	.415	-.02260	.03470	.01730	-.03380	.04120	.00430	.02990	.00580	-.36780	-.31360
-.301	5.572	-.04630	.03760	.02960	-.04500	.04810	.00900	.03350	.00650	-.41980	-.34420
-.321	5.803	-.04800	.03710	.03050	-.04560	.04850	.00930	.03490	.00680	-.43710	-.35790
.364	6.890	-.04390	.03720	.03120	-.04990	.05190	.00850	.03440	.00670	-.42940	-.35400
	GRADIENT	.00127	.00118	.00245	-.00206	.00196	-.00029	.00049	.00010	-.00402	-.00794

IA156A, AEDC PWT 16T-470, O T S (R8NR34) (10 MAY 80)

REFERENCE DATA

SREF = 2690.0000 SQ.FT. XMRP = 976.0000 IN. XT
LREF = 1290.3000 INCHES YMRP = .0000 IN. YT
BREF = 1290.3000 INCHES ZMRP = 400.0000 IN. ZT
SCALE = .0200

PARAMETRIC DATA

IB-ELV = 10.000 OB-ELV = 5.000
BDFLAP = .000 SPDBRK = .000
RUDDER = .000 SILTS = .000
MACH = 1.100 RN/L = 3.500
Z = 4.500

RUN NO. 835/ 0 RN/L = 3.51 GRADIENT INTERVAL = -5.00/ 5.00

ALPHAR	BETAR	CNFRS	CAFRS	CLMFRS	CYFRS	CYNFRS	CBLRS	CABRS	CYNBRS	CP9	CP10
.338	-5.907	.00780	.03010	-.00990	-.02540	.04010	-.00170	.03670	.00710	-.44200	-.39290
-.281	-.115	-.01720	.03080	.00770	-.04290	.04930	.00320	.04270	.00830	-.51210	-.46060
-.055	5.803	-.05110	.03540	.03070	-.05640	.05810	.00990	.04750	.00920	-.56520	-.51750
	GRADIENT	.00000	.00000	.00000	.00000	.00000	.00000	.00000	.00000	.00000	.00000

IA156A, AEDC PWT 16T-470, 0 T S (R8NR35) (10 MAY 80)

REFERENCE DATA

SREF = 2690.0000 SQ.FT. XMRP = 976.0000 IN. XT
LREF = 1290.3000 INCHES YMRP = .0000 IN. YT
BREF = 1290.3000 INCHES ZMRP = 400.0000 IN. ZT
SCALE = .0200

PARAMETRIC DATA

IB-ELV = 10.000 OB-ELV = 5.000
BDFLAP = .000 SPDBRK = .000
RUDDER = .000 SILTS = .000
MACH = 1.100 RN/L = 3.500
Z = 5.500

RUN NO. 834/ 0 RN/L = 3.51 GRADIENT INTERVAL = -5.00/ 5.00

ALPHAR	BETAR	CNFRS	CAFRS	CLMFRS	CYFRS	CYNFRS	CBLRS	CABRS	CYNBRS	CP9	CP10
.391	-5.939	.00790	.02920	-.01030	-.02570	.03990	-.00170	.03650	.00710	-.44090	-.39100
-.182	.033	-.01980	.03250	.00920	-.04630	.05270	.00380	.04370	.00850	-.52530	-.46910
-.138	5.693	-.05140	.03560	.03100	-.05610	.05780	.01000	.04660	.00910	-.55460	-.50700
	GRADIENT	.00000	.00000	.00000	.00000	.00000	.00000	.00000	.00000	.00000	.00000

IA156A, AEDC PWT 16T-470, 0 T S (R8NR36) (10 MAY 80)

REFERENCE DATA

SREF = 2690.0000 SQ.FT. XMRP = 976.0000 IN. XT
LREF = 1290.3000 INCHES YMRP = .0000 IN. YT
BREF = 1290.3000 INCHES ZMRP = 400.0000 IN. ZT
SCALE = .0200

PARAMETRIC DATA

IB-ELV = 10.000 OB-ELV = 5.000
BDFLAP = .000 SPDBRK = .000
RUDDER = .000 SILTS = .000
MACH = 1.100 RN/L = 3.500
Z = 6.500

RUN NO. 832/ 0 RN/L = 3.50 GRADIENT INTERVAL = -5.00/ 5.00

ALPHAR	BETAR	CNFRS	CAFRS	CLMFRS	CYFRS	CYNFRS	CBLRS	CABRS	CYNBRS	CP9	CP10
.016	-6.765	.00970	.02940	-.01280	-.02840	.04270	-.00200	.03760	.00730	-.45270	-.40290
-.261	-.059	-.02040	.03200	.00960	-.04580	.05200	.00390	.04240	.00820	-.51020	-.45500
.039	5.899	-.04820	.03580	.03050	-.05900	.05990	.00940	.04680	.00910	-.55620	-.50880
	GRADIENT	.00000	.00000	.00000	.00000	.00000	.00000	.00000	.00000	.00000	.00000

IA156A, AEDC PWT 16T-470, O T S (R8NR37) (10 MAY 80)

REFERENCE DATA

SREF = 2690.0000 SQ.FT. XMRP = 976.0000 IN. XT
LREF = 1290.3000 INCHES YMRP = .0000 IN. YT
BREF = 1290.3000 INCHES ZMRP = 400.0000 IN. ZT
SCALE = .0200

PARAMETRIC DATA

IB-ELV = 10.000 OB-ELV = 5.000
BDFLAP = .000 SPDBRK = .000
RUDDER = .000 SILTS = .000
MACH = 1.550 RN/L = 3.200

RUN NO. 843/ 0 RN/L = 3.19 GRADIENT INTERVAL = -5.00/ 5.00

ALPHAR	BETAR	CNFRS	CAFRS	CLMFRS	CYFRS	CYNFRS	CBLRS	CABRS	CYNBRS	CP9	CP10
.455	.368	-.02270	.03450	.01750	-.03370	.04120	.00430	.03010	.00580	-.37110	-.31360
-.338	-.551	-.02450	.03420	.01510	-.03190	.03960	.00470	.02930	.00570	-.36360	-.30470
-.344	-.574	-.02350	.03410	.01420	-.03130	.03920	.00450	.02940	.00570	-.36280	-.30650
.486	.345	-.02270	.03410	.01800	-.03480	.04180	.00430	.02980	.00580	-.36920	-.30940
.435	.347	-.02340	.03440	.01740	-.03500	.04210	.00440	.03010	.00580	-.37320	-.31210
-.306	-.566	-.02270	.03450	.01450	-.03240	.04020	.00430	.02960	.00570	-.36530	-.30830
	GRADIENT	.00068	.00008	.00331	-.00286	.00221	-.00018	.00062	.00011	-.00793	-.00568

IA156A, AEDC PWT 16T-470, O T S W/SILTS (R8NR40) (10 MAY 80)

REFERENCE DATA

SREF = 2690.0000 SQ.FT. XMRP = 976.0000 IN. XT
LREF = 1290.3000 INCHES YMRP = .0000 IN. YT
BREF = 1290.3000 INCHES ZMRP = 400.0000 IN. ZT
SCALE = .0200

PARAMETRIC DATA

IB-ELV = 10.000 OB-ELV = 5.000
BDFLAP = .000 SPDBRK = .000
RUDDER = .000 SILTS = 1.000
MACH = .300 RN/L = 3.500

RUN NO. 862/ 0 RN/L = 2.70 GRADIENT INTERVAL = -5.00/ 5.00

ALPHAR	BETAR	CNFRS	CAFRS	CLMFRS	CYFRS	CYNFRS	CBLRS	CABRS	CYNBRS	CP9	CP10
-5.928	-10.181	.02250	.01040	-.02850	-.01090	.02890	-.00420	.02500	.00490	-.32050	-.25040
-6.178	-6.087	-.00390	.01160	-.01250	.00080	.01730	.00090	.02720	.00530	-.35190	-.26730
-6.306	.388	-.05060	.01050	.01640	-.00370	.01550	.01000	.03260	.00630	-.40630	-.33630
-5.853	6.325	-.08540	.01230	.03650	-.02240	.02820	.01680	.03660	.00710	-.44090	-.39230
-5.978	10.332	-.11580	.01140	.05130	-.03690	.03810	.02270	.03990	.00780	-.48050	-.42910
	GRADIENT	.00000	.00000	.00000	.00000	.00000	.00000	.00000	.00000	.00000	.00000

RUN NO. 863/ 0 RN/L = 2.68 GRADIENT INTERVAL = -5.00/ 5.00

ALPHAR	BETAR	CNFRS	CAFRS	CLMFRS	CYFRS	CYNFRS	CBLRS	CABRS	CYNBRS	CP9	CP10
-.286	-10.799	.02490	.01550	-.02410	-.02070	.03160	-.00470	.02670	.00520	-.34180	-.26580
-.266	-6.718	.00680	.01370	-.01010	-.02240	.03060	-.00120	.02540	.00490	-.32440	-.25490
-.231	-.605	-.01580	.01280	.00550	-.03360	.03510	.00330	.03160	.00610	-.39250	-.32660
-.189	5.478	-.03900	.01540	.02060	-.04610	.04350	.00780	.03500	.00680	-.42870	-.36810
-.182	9.537	-.05460	.01630	.03000	-.05650	.05110	.01090	.03710	.00720	-.45050	-.39360
	GRADIENT	.00000	.00000	.00000	.00000	.00000	.00000	.00000	.00000	.00000	.00000

IA156A, AEDC PWT 16T-470, O T S W/SILTS (R8NR40) (10 MAY 80)

REFERENCE DATA

SREF = 2690.0000 SQ.FT. XMRP = 976.0000 IN. XT
LREF = 1290.3000 INCHES YMRP = .0000 IN. YT
BREF = 1290.3000 INCHES ZMRP = 400.0000 IN. ZT
SCALE = .0200

PARAMETRIC DATA

IB-ELV = 10.000 OB-ELV = 5.000
BDFLAP = .000 SPDBRK = .000
RUDDER = .000 SILTS = 1.000
MACH = .300 RN/L = 3.500

RUN NO. 865/ 0 RN/L = 2.67 GRADIENT INTERVAL = -5.00/ 5.00

ALPHAR	BETAR	CNFRS	CAFRS	CLMFRS	CYFRS	CYNFRS	CBLRS	CABRS	CYNBRS	CP9	CP10
6.423	-9.851	.01550	.01420	-.00900	.01060	.01010	-.00290	.02850	.00550	-.37180	-.27860
6.110	-5.552	.01120	.01270	-.00200	.00200	.01400	-.00200	.02850	.00550	-.36760	-.28120
6.264	.039	.01740	.01410	-.00250	-.01690	.02620	-.00320	.03050	.00590	-.38120	-.31290
5.806	5.891	.01820	.01310	-.00170	-.03820	.04020	-.00330	.03540	.00690	-.42640	-.38020
5.909	9.939	.01830	.01660	-.00020	-.04670	.04730	-.00330	.03530	.00690	-.42600	-.37900
	GRADIENT	.00000	.00000	.00000	.00000	.00000	.00000	.00000	.00000	.00000	.00000

IA156A, AEDC PWT 16T-470, O T S W/SILTS (R8NR41) (10 MAY 80)

REFERENCE DATA

SREF = 2690.0000 SQ.FT. XMRP = 976.0000 IN. XT
LREF = 1290.3000 INCHES YMRP = .0000 IN. YT
BREF = 1290.3000 INCHES ZMRP = 400.0000 IN. ZT
SCALE = .0200

PARAMETRIC DATA

IB-ELV = 10.000 OB-ELV = 5.000
BDFLAP = .000 SPDBRK = .000
RUDDER = .000 SILTS = 1.000
MACH = .300 RN/L = 3.500

RUN NO. 861/ 0 RN/L = 2.74 GRADIENT INTERVAL = -5.00/ 5.00

ALPHAR	BETAR	CNFRS	CAFRS	CLMFRS	CYFRS	CYNFRS	CBLRS	CABRS	CYNBRS	CP9	CP10
-10.157	-6.209	-.01540	.00880	-.01220	.04160	-.00140	.00320	.02750	.00530	-.36280	-.26370
-10.147	.317	-.08420	.00470	.02830	.04550	-.01050	.01650	.03910	.00760	-.50010	-.39120
-10.028	6.338	-.12910	-.00010	.05040	.01140	.01060	.02530	.04750	.00920	-.56710	-.51390
	GRADIENT	.00000	.00000	.00000	.00000	.00000	.00000	.00000	.00000	.00000	.00000

RUN NO. 866/ 0 RN/L = 2.66 GRADIENT INTERVAL = -5.00/ 5.00

ALPHAR	BETAR	CNFRS	CAFRS	CLMFRS	CYFRS	CYNFRS	CBLRS	CABRS	CYNBRS	CP9	CP10
10.211	-5.781	.02450	.01400	-.00620	.03490	-.00380	-.00460	.02680	.00520	-.34380	-.26700
10.067	.187	.03630	.01420	-.00660	.01830	.00680	-.00680	.03160	.00610	-.40100	-.31940
10.213	6.144	.05670	.01370	-.01470	.00240	.01760	-.01080	.03390	.00660	-.41700	-.35590
	GRADIENT	.00000	.00000	.00000	.00000	.00000	.00000	.00000	.00000	.00000	.00000

IA156A, AEDC PWT 16T-470, 0 T S W/SILTS (R8NR42) (10 MAY 80)

REFERENCE DATA

SREF = 2690.0000 SQ.FT. XMRP = 976.0000 IN. XT
LREF = 1290.3000 INCHES YMRP = .0000 IN. YT
BREF = 1290.3000 INCHES ZMRP = 400.0000 IN. ZT
SCALE = .0200

PARAMETRIC DATA

IB-ELV = 10.000 OB-ELV = 5.000
BDFLAP = .000 SPDBRK = .000
RUDDER = .000 SILTS = 1.000
MACH = .600 RN/L = 3.500

RUN NO. 867/ 0 RN/L = 3.50 GRADIENT INTERVAL = -5.00/ 5.00

ALPHAR	BETAR	CNFRS	CAFRS	CLMFRS	CYFRS	CYNFRS	CBLRS	CABRS	CYNBRS	CP9	CP10
-8.175	-8.057	.00720	.00550	-.02430	.01730	.01360	-.00120	.02760	.00540	-.34910	-.28000
-8.359	-6.113	-.00840	.00880	-.01510	.02740	.00540	.00180	.02590	.00500	-.33290	-.25810
-8.240	-4.003	-.02670	.00950	-.00390	.03290	-.00090	.00540	.03030	.00590	-.38880	-.30280
-8.392	.234	-.06790	.00860	.02150	.02910	-.00160	.01340	.03440	.00670	-.42700	-.35700
-8.093	4.176	-.09500	.00960	.03580	.01260	.00920	.01870	.03660	.00710	-.43820	-.39460
-8.059	6.107	-.11080	.00960	.04430	.00350	.01500	.02180	.03810	.00740	-.45420	-.41390
-8.332	8.351	-.13420	.00890	.05550	-.00520	.02110	.02640	.04050	.00790	-.47750	-.44490
	GRADIENT	-.00837	.00001	.00487	-.00246	.00122	.00163	.00077	.00015	-.00608	-.01124

RUN NO. 868/ 0 RN/L = 3.50 GRADIENT INTERVAL = -5.00/ 5.00

ALPHAR	BETAR	CNFRS	CAFRS	CLMFRS	CYFRS	CYNFRS	CBLRS	CABRS	CYNBRS	CP9	CP10
-6.246	-8.270	.01170	.00960	-.02340	-.00130	.02280	-.00210	.02430	.00470	-.30630	-.24730
-6.201	-6.066	-.00250	.01040	-.01440	.00460	.01650	.00070	.02600	.00500	-.33070	-.26210
-6.066	-4.064	-.01830	.01100	-.00440	.00850	.01130	.00370	.02910	.00560	-.36990	-.29240
-6.223	-.015	-.04960	.01030	.01520	.00420	.01170	.00980	.03230	.00630	-.39800	-.33860
-6.226	4.329	-.07890	.01060	.03160	-.00690	.01910	.01560	.03600	.00700	-.42890	-.39010
-6.015	6.212	-.09090	.01120	.03830	-.01460	.02420	.01790	.03730	.00720	-.44210	-.40770
-6.014	8.436	-.10690	.01180	.04660	-.02310	.03000	.02110	.03830	.00740	-.45330	-.41780
	GRADIENT	-.00721	-.00005	.00428	-.00184	.00094	.00142	.00082	.00017	-.00703	-.01164

RUN NO. 869/ 0 RN/L = 3.50 GRADIENT INTERVAL = -5.00/ 5.00

ALPHAR	BETAR	CNFRS	CAFRS	CLMFRS	CYFRS	CYNFRS	CBLRS	CABRS	CYNBRS	CP9	CP10
-4.183	-8.465	.01390	.01090	-.02140	-.01360	.02880	-.00250	.02470	.00480	-.30690	-.25600
-4.278	-6.419	.00200	.01150	-.01350	-.01030	.02480	-.00020	.02510	.00490	-.31570	-.25750
-4.253	-4.146	-.01220	.01210	-.00420	-.00770	.02030	.00260	.02800	.00540	-.35560	-.28340
-4.013	.150	-.03620	.01130	.01210	-.01880	.02560	.00730	.03220	.00630	-.39390	-.33980
-3.832	4.222	-.05700	.01270	.02490	-.02730	.03090	.01130	.03490	.00680	-.41930	-.37550
-3.970	6.221	-.07050	.01280	.03220	-.03090	.03340	.01390	.03620	.00700	-.43120	-.39220
-3.861	8.165	-.08120	.01400	.03800	-.03700	.03790	.01600	.03660	.00710	-.43550	-.39710
	GRADIENT	-.00536	.00007	.00348	-.00234	.00127	.00104	.00083	.00017	-.00762	-.01103

IA156A, AEDC PWT 16T-470, O T S W/SILTS (R8NR42) (10 MAY 80)

REFERENCE DATA

SREF = 2690.0000 SQ.FT. XMRP = 976.0000 IN. XT
LREF = 1290.3000 INCHES YMRP = .0000 IN. YT
BREF = 1290.3000 INCHES ZMRP = 400.0000 IN. ZT
SCALE = .0200

PARAMETRIC DATA

IB-ELV = 10.000 OB-ELV = 5.000
BDFLAP = .000 SPDBRK = .000
RUDDER = .000 SILTS = 1.000
MACH = .600 RN/L = 3.500

RUN NO. 870/ 0 RN/L = 3.50 GRADIENT INTERVAL = -5.00/ 5.00

ALPHAR	BETAR	CNFRS	CAFRS	CLMFRS	CYFRS	CYNFRS	CBLRS	CABRS	CYNBRS	CP9	CP10
-.272	-9.086	.01720	.01380	-.01860	-.02100	.03240	-.00330	.02600	.00500	-.32850	-.26380
-.255	-6.948	.00720	.01300	-.01050	-.02130	.03130	-.00130	.02530	.00490	-.32010	-.25630
-.243	-4.874	-.00140	.01300	-.00400	-.02320	.03120	.00040	.02640	.00510	-.32970	-.27240
-.236	-.638	-.01630	.01300	.00670	-.03370	.03660	.00330	.03100	.00600	-.37960	-.32730
-.182	3.485	-.03000	.01430	.01610	-.04300	.04240	.00600	.03460	.00670	-.41520	-.37240
-.181	5.562	-.03830	.01470	.02120	-.04670	.04480	.00770	.03550	.00690	-.42340	-.38610
-.193	7.658	-.04640	.01520	.02610	-.05140	.04810	.00920	.03640	.00710	-.43150	-.39670
	GRADIENT	-.00342	.00015	.00240	-.00237	.00134	.00067	.00098	.00019	-.01023	-.01197

RUN NO. 871/ 0 RN/L = 3.50 GRADIENT INTERVAL = -5.00/ 5.00

ALPHAR	BETAR	CNFRS	CAFRS	CLMFRS	CYFRS	CYNFRS	CBLRS	CABRS	CYNBRS	CP9	CP10
4.365	-7.698	.01300	.01450	-.00880	-.00890	.02230	-.00250	.02710	.00530	-.34670	-.27050
4.477	-5.891	.00950	.01400	-.00450	-.01060	.02260	-.00180	.02660	.00520	-.33630	-.26980
4.201	-3.762	.00690	.01260	-.00180	-.01690	.02600	-.00130	.02850	.00550	-.35760	-.29250
4.345	-.061	.00700	.01340	-.00030	-.02890	.03470	-.00130	.02990	.00580	-.36470	-.31760
4.194	3.920	.00430	.01410	.00310	-.04010	.04250	-.00070	.03340	.00650	-.40020	-.36050
4.058	5.933	.00150	.01430	.00550	-.04500	.04600	-.00020	.03510	.00680	-.42020	-.37840
3.910	7.675	-.00440	.01530	.00900	-.04970	.04960	.00100	.03580	.00700	-.42720	-.38820
	GRADIENT	-.00034	.00020	.00064	-.00302	.00215	.00008	.00064	.00013	-.00559	-.00888

RUN NO. 872/ 0 RN/L = 3.50 GRADIENT INTERVAL = -5.00/ 5.00

ALPHAR	BETAR	CNFRS	CAFRS	CLMFRS	CYFRS	CYNFRS	CBLRS	CABRS	CYNBRS	CP9	CP10
6.557	-7.921	.01510	.01420	-.00810	.00290	.01460	-.00290	.02760	.00540	-.34970	-.27890
6.452	-5.895	.01310	.01370	-.00490	.00010	.01580	-.00250	.02740	.00530	-.34550	-.27840
6.584	-3.832	.01320	.01310	-.00270	-.00200	.01700	-.00250	.02880	.00560	-.36060	-.29570
6.143	.127	.01560	.01340	-.00230	-.01820	.02830	-.00300	.03070	00600	-.37320	-.32710
6.166	3.928	.01780	.01340	-.00130	-.02780	.03500	-.00340	.03330	.00650	-.40020	-.35740
6.255	6.046	.02000	.01410	-.00120	-.03320	.03930	-.00380	.03440	.00670	-.41100	-.37290
5.921	7.743	.01750	.01480	.00060	-.03980	.04410	-.00330	.03530	.00680	-.42040	-.38260
	GRADIENT	.00059	.00004	.00018	-.00333	.00232	-.00012	.00058	.00012	-.00509	-.00795

IA156A, AEDC PWT 16T-470, 0 T S W/SILTS (R8NR42) (10 MAY 80)

REFERENCE DATA

SREF = 2690.0000 SQ.FT. XMRP = 976.0000 IN. XT
LREF = 1290.3000 INCHES YMRP = .0000 IN. YT
BREF = 1290.3000 INCHES ZMRP = 400.0000 IN. ZT
SCALE = .0200

PARAMETRIC DATA

IB-ELV = 10.000 OB-ELV = 5.000
BDFLAP = .000 SPDBRK = .000
RUDDER = .000 SILTS = 1.000
MACH = .600 RN/L = 3.500

RUN NO. 873/ 0 RN/L = 3.50 GRADIENT INTERVAL = -5.00/ 5.00

ALPHAR	BETAR	CNFRS	CAFRS	CLMFRS	CYFRS	CYNFRS	CBLRS	CABRS	CYNBRS	CP9	CP10
8.446	-7.909	.01920	.01210	-.00870	.01870	.00560	-.00370	.02850	.00550	-.35790	-.29100
8.350	-5.649	.01840	.01320	-.00520	.01580	.00660	-.00360	.02730	.00530	-.34380	-.27770
8.356	-3.720	.01960	.01260	-.00380	.01160	.00940	-.00380	.02900	.00560	-.35970	-.30050
8.440	.077	.02530	.01310	-.00360	.00030	.01790	-.00490	.03200	.00620	-.38640	-.34330
8.239	3.983	.03260	.01330	-.00580	-.01000	.02450	-.00630	.03360	.00650	-.40960	-.35660
8.363	6.016	.03750	.01320	-.00720	-.01430	.02800	-.00730	.03450	.00670	-.41560	-.37050
8.226	7.977	.03850	.01410	-.00720	-.02290	.03420	-.00750	.03480	.00680	-.41710	-.37540
	GRADIENT	.00169	.00009	-.00026	-.00280	.00196	-.00032	.00060	.00012	-.00648	-.00726

IA156A, AEDC PWT 16T-470, 0 T S W/SILTS (R8NR43) (10 MAY 80)

REFERENCE DATA

SREF = 2690.0000 SQ.FT. XMRP = 976.0000 IN. XT
LREF = 1290.3000 INCHES YMRP = .0000 IN. YT
BREF = 1290.3000 INCHES ZMRP = 400.0000 IN. ZT
SCALE = .0200

PARAMETRIC DATA

IB-ELV = 10.000 OB-ELV = 5.000
BDFLAP = .000 SPDBRK = .000
RUDDER = .000 SILTS = 1.000
MACH = .800 RN/L = 3.500

RUN NO. 874/ 0 RN/L = 3.50 GRADIENT INTERVAL = -5.00/ 5.00

ALPHAR	BETAR	CNFRS	CAFRS	CLMFRS	CYFRS	CYNFRS	CBLRS	CABRS	CYNBRS	CP9	CP10
-8.531	-6.471	-.00660	.00990	-.01850	.03480	.00410	.00140	.02420	.00470	-.30920	-.24180
-8.646	-4.159	-.02820	.01190	-.00550	.04550	-.00380	.00570	.02900	.00560	-.36350	-.29690
-8.378	.100	-.06780	.01220	.02050	.04270	-.00500	.01340	.03330	.00650	-.41050	-.34920
-8.357	4.267	-.09940	.01200	.03630	.02790	.00470	.01960	.03630	.00710	-.42870	-.39870
-8.327	6.219	-.11770	.01260	.04500	.02050	.01020	.02320	.03730	.00720	-.43730	-.41100
	GRADIENT	-.00845	.00001	.00497	-.00208	.00100	.00165	.00087	.00018	-.00775	-.01208

RUN NO. 875/ 0 RN/L = 3.50 GRADIENT INTERVAL = -5.00/ 5.00

ALPHAR	BETAR	CNFRS	CAFRS	CLMFRS	CYFRS	CYNFRS	CBLRS	CABRS	CYNBRS	CP9	CP10
-6.303	-6.216	-.00070	.01200	-.01690	.01370	.01390	.00030	.02460	.00480	-.30880	-.25100
-6.220	-4.123	-.01760	.01410	-.00600	.01820	.00930	.00360	.02800	.00540	-.34910	-.28950
-6.388	.022	-.05060	.01350	.01490	.01390	.00920	.01000	.03200	.00620	-.39060	-.33930
-6.104	4.156	-.07610	.01450	.02930	-.00070	.01830	.01500	.03450	.00670	-.40750	-.37700
-6.165	6.430	-.09580	.01420	.03890	-.00670	.02270	.01890	.03690	.00720	-.43240	-.40760
	GRADIENT	-.00707	.00005	.00426	-.00228	.00109	.00138	.00079	.00016	-.00706	-.01057

IA156A, AEDC PWT 16T-470, 0 T S W/SILTS (R8NR43) (10 MAY 80)

REFERENCE DATA

SREF = 2690.0000 SQ.FT. XMRP = 976.0000 IN. XT
LREF = 1290.3000 INCHES YMRP = .0000 IN. YT
BREF = 1290.3000 INCHES ZMRP = 400.0000 IN. ZT
SCALE = .0200

PARAMETRIC DATA

IB-ELV = 10.000 OB-ELV = 5.000
BDFLAP = .000 SPDBRK = .000
RUDDER = .000 SILTS = 1.000
MACH = .800 RN/L = 3.500

RUN NO. 876/ 0 RN/L = 3.50 GRADIENT INTERVAL = -5.00/ 5.00

ALPHAR	BETAR	CNFRS	CAFRS	CLMFRS	CYFRS	CYNFRS	CBLRS	CABRS	CYNBRS	CP9	CP10
-4.135	-6.175	.00130	.01400	-.01370	-.00410	.02270	-.00010	.02450	.00480	-.30490	-.25400
-4.199	-4.091	-.01220	.01520	-.00470	-.00200	.01940	.00250	.02730	.00530	-.33760	-.28430
-4.380	.293	-.03860	.01500	.01220	-.00960	.02270	.00770	.03110	.00600	-.37540	-.33290
-3.863	4.171	-.05710	.01560	.02380	-.02120	.02940	.01130	.03410	.00660	-.40650	-.36920
-3.952	6.223	-.07150	.01620	.03150	-.02550	.03260	.01410	.03530	.00690	-.41850	-.38530
	GRADIENT	-.00545	.00005	.00346	-.00231	.00120	.00107	.00082	.00016	-.00835	-.01029

RUN NO. 877/ 0 RN/L = 3.50 GRADIENT INTERVAL = -5.00/ 5.00

ALPHAR	BETAR	CNFRS	CAFRS	CLMFRS	CYFRS	CYNFRS	CBLRS	CABRS	CYNBRS	CP9	CP10
-.279	-7.185	.01190	.01650	-.01480	-.02200	.03150	-.00230	.02560	.00500	-.32140	-.26130
-.273	-5.050	.00150	.01630	-.00770	-.02340	.03100	-.00020	.02570	.00500	-.32060	-.26610
-.276	-.814	-.01610	.01580	.00480	-.03040	.03490	.00320	.02930	.00570	-.35400	-.31360
-.211	3.422	-.03210	.01710	.01600	-.04020	.04150	.00640	.03360	.00650	-.39940	-.36540
-.197	5.517	-.04200	.01820	.02250	-.04490	.04500	.00830	.03520	.00680	-.42000	-.38130
	GRADIENT	-.00378	.00031	.00264	-.00231	.00156	.00076	.00102	.00019	-.01072	-.01223

RUN NO. 878/ 0 RN/L = 3.50 GRADIENT INTERVAL = -5.00/ 5.00

ALPHAR	BETAR	CNFRS	CAFRS	CLMFRS	CYFRS	CYNFRS	CBLRS	CABRS	CYNBRS	CP9	CP10
4.382	-5.731	.00920	.01690	-.00300	-.01080	.02420	-.00180	.02690	.00520	-.33750	-.27630
4.342	-3.851	.00750	.01630	-.00060	-.01520	.02610	-.00140	.02790	.00540	-.34780	-.28880
4.053	.084	.00600	.01610	.00130	-.03100	.03640	-.00110	.02960	.00570	-.35630	-.31790
3.934	3.734	.00090	.01720	.00520	-.03960	.04290	-.00010	.03360	.00650	-.39890	-.36670
4.127	5.902	-.00070	.01770	.00680	-.04480	.04740	.00020	.03600	.00700	-.42410	-.39530
	GRADIENT	-.00086	.00012	.00076	-.00323	.00222	.00017	.00075	.00014	-.00668	-.01023

RUN NO. 879/ 0 RN/L = 3.50 GRADIENT INTERVAL = -5.00/ 5.00

ALPHAR	BETAR	CNFRS	CAFRS	CLMFRS	CYFRS	CYNFRS	CBLRS	CABRS	CYNBRS	CP9	CP10
6.488	-5.768	.01540	.01660	-.00550	.00240	.01630	-.00300	.02800	.00540	-.35060	-.28650
6.186	-3.653	.01350	.01590	-.00210	-.00370	.01970	-.00260	.02890	.00560	-.35640	-.30140
6.062	.133	.01660	.01640	-.00200	-.01810	.03020	-.00320	.03040	.00590	-.36420	-.32710
6.216	3.909	.01960	.01660	-.00180	-.02590	.03550	-.00380	.03370	.00650	-.40120	-.36530
6.095	5.699	.01960	.01760	-.00110	-.03250	.04120	-.00380	.03470	.00670	-.41350	-.37660
	GRADIENT	.00081	.00009	.00004	-.00294	.00209	-.00016	.00063	.00012	-.00592	-.00845

IA156A, AEDC PWT 16T-470, 0 T S W/SILTS (R8NR44) (10 MAY 80)

REFERENCE DATA

SREF = 2690.0000 SQ.FT. XMRP = 976.0000 IN. XT
LREF = 1290.3000 INCHES YMRP = .0000 IN. YT
BREF = 1290.3000 INCHES ZMRP = 400.0000 IN. ZT
SCALE = .0200

PARAMETRIC DATA

IB-ELV = 10.000 OB-ELV = 5.000
BDFLAP = .000 SPDBRK = .000
RUDDER = .000 SILTS = 1.000
MACH = .900 RN/L = 3.500

RUN NO. 880/ 0 RN/L = 3.50 GRADIENT INTERVAL = -5.00/ 5.00

ALPHAR	BETAR	CNFRS	CAFRS	CLMFRS	CYFRS	CYNFRS	CBLRS	CABRS	CYNBRS	CP9	CP10
-8.567	-6.452	-.00840	.01230	-.01820	.04430	.00050	.00180	.02670	.00520	-.33520	-.27330
-8.593	-4.118	-.02980	.01410	-.00580	.05270	-.00620	.00600	.03140	.00610	-.38460	-.33120
-8.419	.118	-.07090	.01430	.02110	.04550	-.00350	.01400	.03480	.00680	-.41960	-.37320
-8.386	4.230	-.10330	.01560	.03810	.03180	.00500	.02040	.03630	.00700	-.41780	-.40870
-8.380	6.180	-.12140	.01560	.04650	.02430	.01000	.02390	.03810	.00740	-.43550	-.43180
	GRADIENT	-.00881	.00018	.00526	-.00250	.00134	.00173	.00059	.00011	-.00400	-.00929

RUN NO. 881/ 0 RN/L = 3.50 GRADIENT INTERVAL = -5.00/ 5.00

ALPHAR	BETAR	CNFRS	CAFRS	CLMFRS	CYFRS	CYNFRS	CBLRS	CABRS	CYNBRS	CP9	CP10
-6.267	-6.150	-.00130	.01520	-.01820	.01960	.01240	.00040	.02710	.00530	-.33540	-.28260
-6.461	-4.267	-.01790	.01690	-.00810	.02660	.00640	.00360	.02970	.00580	-.36590	-.31100
-6.321	-.097	-.05030	.01580	.01330	.01880	.00860	.00990	.03320	.00640	-.39950	-.35640
-6.302	4.334	-.08260	.01760	.03160	.00730	.01560	.01630	.03600	.00700	-.41220	-.40720
-6.423	6.383	-.10190	.01840	.04130	.00310	.01910	.02010	.03740	.00730	-.43120	-.42120
	GRADIENT	-.00752	.00008	.00461	-.00225	.00107	.00148	.00073	.00014	-.00536	-.01119

RUN NO. 882/ 0 RN/L = 3.50 GRADIENT INTERVAL = -5.00/ 5.00

ALPHAR	BETAR	CNFRS	CAFRS	CLMFRS	CYFRS	CYNFRS	CBLRS	CABRS	CYNBRS	CP9	CP10
-4.318	-6.531	.00420	.01720	-.01760	.00070	.02270	-.00070	.02680	.00520	-.32780	-.28250
-4.228	-4.154	-.01050	.01830	-.00770	.00340	.01830	.00210	.02970	.00580	-.36040	-.31580
-4.333	.136	-.03660	.01740	.00930	-.00450	.02140	.00720	.03140	.00610	-.37130	-.34290
-4.033	4.356	-.06210	.01960	.02570	-.01540	.02710	.01220	.03490	.00680	-.40700	-.38850
-3.924	6.185	-.07430	.02010	.03270	-.02160	.03120	.01460	.03670	.00710	-.42740	-.40920
	GRADIENT	-.00606	.00015	.00392	-.00221	.00103	.00119	.00061	.00012	-.00547	-.00854

RUN NO. 883/ 0 RN/L = 3.50 GRADIENT INTERVAL = -5.00/ 5.00

ALPHAR	BETAR	CNFRS	CAFRS	CLMFRS	CYFRS	CYNFRS	CBLRS	CABRS	CYNBRS	CP9	CP10
-.330	-7.250	.01240	.02050	-.01680	-.02060	.03290	-.00240	.02760	.00530	-.33620	-.29150
-.319	-5.123	.00400	.02050	-.01090	-.02020	.03150	-.00070	.02780	.00540	-.33840	-.29510
-.353	-.796	-.01340	.01970	.00160	-.02720	.03520	.00270	.03050	.00590	-.36560	-.32970
-.267	3.387	-.03130	.02070	.01490	-.03860	.04230	.00620	.03420	.00660	-.40600	-.37290
-.258	5.495	-.04090	.02260	.02130	-.04460	.04620	.00810	.03590	.00700	-.42980	-.38760
	GRADIENT	-.00428	.00024	.00318	-.00273	.00170	.00084	.00088	.00017	-.00966	-.01033

IA156A, AEDC PWT 16T-470, O T S W/SILTS (R8NR44) (10 MAY 80)

REFERENCE DATA

SREF = 2690.0000 SQ.FT. XMRP = 976.0000 IN. XT
LREF = 1290.3000 INCHES YMRP = .0000 IN. YT
BREF = 1290.3000 INCHES ZMRP = 400.0000 IN. ZT
SCALE = .0200

PARAMETRIC DATA

IB-ELV = 10.000 OB-ELV = 5.000
BDFLAP = .000 SPDBRK = .000
RUDDER = .000 SILTS = 1.000
MACH = .900 RN/L = 3.500

RUN NO. 884/ 0 RN/L = 3.50 GRADIENT INTERVAL = -5.00/ 5.00

ALPHAR	BETAR	CNFRS	CAFRS	CLMFRS	CYFRS	CYNFRS	CBLRS	CABRS	CYNBRS	CP9	CP10
4.322	-5.655	.01110	.02090	-.00500	-.01180	.02590	-.00220	.02870	.00560	-.35540	-.29870
4.188	-3.814	.00880	.02040	-.00300	-.01680	.02780	-.00170	.03050	.00590	-.37210	-.32210
4.040	.068	.00540	.02060	-.00010	-.03060	.03700	-.00100	.03160	.00610	-.38000	-.34030
3.999	3.721	-.00110	.02120	.00580	-.03970	.04330	.00030	.03530	.00690	-.42080	-.38370
3.902	5.623	-.00620	.02180	.00860	-.04590	.04840	.00130	.03700	.00720	-.44210	-.40110
	GRADIENT	-.00131	.00011	.00116	-.00304	.00206	.00026	.00063	.00013	-.00642	-.00814

IA156A, AEDC PWT 16T-470, O T S W/SILTS (R8NR45) (10 MAY 80)

REFERENCE DATA

SREF = 2690.0000 SQ.FT. XMRP = 976.0000 IN. XT
LREF = 1290.3000 INCHES YMRP = .0000 IN. YT
BREF = 1290.3000 INCHES ZMRP = 400.0000 IN. ZT
SCALE = .0200

PARAMETRIC DATA

IB-ELV = 10.000 OB-ELV = 5.000
BDFLAP = .000 SPDBRK = .000
RUDDER = .000 SILTS = 1.000
MACH = .950 RN/L = 3.500

RUN NO. 885/ 0 RN/L = 3.50 GRADIENT INTERVAL = -5.00/ 5.00

ALPHAR	BETAR	CNFRS	CAFRS	CLMFRS	CYFRS	CYNFRS	CBLRS	CABRS	CYNBRS	CP9	CP10
-8.725	-6.511	-.00900	.01440	-.02030	.04120	.00410	.00190	.02850	.00550	-.35880	-.29110
-8.755	-4.159	-.02970	.01660	-.00870	.04970	-.00320	.00600	.03410	.00660	-.41530	-.36260
-8.497	.003	-.07000	.01700	.01750	.04800	-.00350	.01390	.03870	.00750	-.45730	-.42330
-8.466	4.184	-.10910	.01820	.03960	.03550	.00440	.02150	.03880	.00750	-.44290	-.43930
-8.454	6.111	-.12970	.01860	.04950	.02800	.01000	.02550	.04020	.00780	-.46050	-.45340
	GRADIENT	-.00952	.00019	.00579	-.00170	.00091	.00186	.00056	.00011	-.00330	-.00919

RUN NO. 886/ 0 RN/L = 3.50 GRADIENT INTERVAL = -5.00/ 5.00

ALPHAR	BETAR	CNFRS	CAFRS	CLMFRS	CYFRS	CYNFRS	CBLRS	CABRS	CYNBRS	CP9	CP10
-6.388	-6.229	-.00120	.01640	-.01870	.01540	.01600	.00040	.02960	.00580	-.36600	-.30930
-6.341	-4.142	-.01740	.01980	-.00910	.01980	.01110	.00350	.03310	.00640	-.40190	-.35260
-6.549	-.066	-.05220	.01910	.01240	.02050	.00910	.01030	.03810	.00740	-.45100	-.41680
-6.206	4.161	-.08510	.02070	.03310	.00490	.01770	.01680	.03930	.00760	-.45290	-.44210
-6.310	6.400	-.10650	.02110	.04400	-.00100	.02180	.02090	.04070	.00790	-.46780	-.45800
	GRADIENT	-.00815	.00011	.00508	-.00181	.00080	.00160	.00074	.00014	-.00611	-.01075

IA156A, AEDC PWT 16T-470, 0 T S W/SILTS (R8NR45) (10 MAY 80)

REFERENCE DATA

SREF = 2690.0000 SQ.FT. XMRP = 976.0000 IN. XT
LREF = 1290.3000 INCHES YMRP = .0000 IN. YT
BREF = 1290.3000 INCHES ZMRP = 400.0000 IN. ZT
SCALE = .0200

PARAMETRIC DATA

IB-ELV = 10.000 OB-ELV = 5.000
BDFLAP = .000 SPDBRK = .000
RUDDER = .000 SILTS = 1.000
MACH = .950 RN/L = 3.500

RUN NO. 887/ 0 RN/L = 3.50 GRADIENT INTERVAL = -5.00/ 5.00

ALPHAR	BETAR	CNFRS	CAFRS	CLMFRS	CYFRS	CYNFRS	CBLRS	CABRS	CYNBRS	CP9	CP10
-4.400	-6.613	.00430	.02020	-.01770	-.00360	.02620	-.00070	.02830	.00550	-.34390	-.30140
-4.399	-4.279	-.00960	.02140	-.00890	-.00150	.02190	.00200	.03260	.00630	-.39210	-.35110
-4.312	.297	-.03950	.02050	.01230	-.01320	.02660	.00780	.03600	.00700	-.42480	-.39410
-4.031	4.339	-.06630	.02240	.02900	-.02250	.03150	.01300	.03960	.00770	-.45970	-.44150
-4.233	6.340	-.08320	.02280	.03770	-.02540	.03370	.01630	.04110	.00800	-.47700	-.45880
	GRADIENT	-.00658	.00011	.00440	-.00244	.00111	.00128	.00081	.00016	-.00783	-.01047

RUN NO. 888/ 0 RN/L = 3.50 GRADIENT INTERVAL = -5.00/ 5.00

ALPHAR	BETAR	CNFRS	CAFRS	CLMFRS	CYFRS	CYNFRS	CBLRS	CABRS	CYNBRS	CP9	CP10
-.318	-7.312	.01000	.02210	-.01290	-.01940	.03490	-.00190	.02890	.00560	-.35510	-.30330
-.299	-5.129	.00060	.02240	-.00590	-.02000	.03330	-.00010	.03040	.00590	-.36930	-.32320
-.313	-.849	-.01460	.02290	.00510	-.03160	.03920	.00290	.03420	.00660	-.41020	-.36860
-.234	3.388	-.03210	.02450	.01740	-.04380	.04650	.00630	.03900	.00760	-.46520	-.42200
-.239	5.500	-.04240	.02460	.02340	-.04960	.05050	.00830	.04010	.00780	-.47800	-.43470
	GRADIENT	-.00413	.00038	.00290	-.00288	.00172	.00080	.00113	.00024	-.01298	-.01260

RUN NO. 889/ 0 RN/L = 3.50 GRADIENT INTERVAL = -5.00/ 5.00

ALPHAR	BETAR	CNFRS	CAFRS	CLMFRS	CYFRS	CYNFRS	CBLRS	CABRS	CYNBRS	CP9	CP10
4.372	-5.584	.00990	.02250	-.00400	-.01190	.02720	-.00200	.03150	.00610	-.38890	-.32800
4.189	-3.751	.00760	.02310	-.00240	-.01730	.02950	-.00150	.03270	.00630	-.40040	-.34430
3.909	.104	.00340	.02320	-.00010	-.03070	.03900	-.00070	.03520	.00680	-.42520	-.37750
4.130	3.792	-.00280	.02420	.00760	-.03770	.04430	.00050	.03900	.00760	-.46810	-.42080
4.100	5.777	-.00670	.02450	.01110	-.04590	.05070	.00130	.04080	.00790	-.49030	-.43830
	GRADIENT	-.00138	.00014	.00132	-.00271	.00197	.00026	.00083	.00017	-.00896	-.01013

IA156A, AEDC PWT 16T-470, O T S W/SILTS (R8NR46) (10 MAY 80)

REFERENCE DATA

SREF = 2690.0000 SQ.FT. XMRP = 976.0000 IN. XT
LREF = 1290.3000 INCHES YMRP = .0000 IN. YT
BREF = 1290.3000 INCHES ZMRP = 400.0000 IN. ZT
SCALE = .0200

PARAMETRIC DATA

IB-ELV = 10.000 OB-ELV = 5.000
BDFLAP = .000 SPDBRK = .000
RUDDER = .000 SILTS = 1.000
MACH = 1.050 RN/L = 3.500

RUN NO. 892/ 0 RN/L = 3.50 GRADIENT INTERVAL = -5.00/ 5.00

ALPHAR	BETAR	CNFRS	CAFRS	CLMFRS	CYFRS	CYNFRS	CBLRS	CABRS	CYNBRS	CP9	CP10
-8.811	-6.454	-.00950	.02010	-.02480	.03920	.00790	.00200	.03920	.00760	-.47720	-.41610
-8.842	-4.269	-.03060	.02270	-.01190	.04790	.00200	.00610	.04450	.00860	-.53390	-.47940
-8.733	.134	-.08030	.02490	.02070	.04360	.00320	.01580	.05080	.00990	-.60270	-.55480
-8.651	4.225	-.12390	.02530	.04800	.02660	.01460	.02430	.05160	.01000	-.60760	-.56640
-8.615	6.177	-.14260	.02650	.05730	.01980	.01860	.02810	.05370	.01040	-.63820	-.58520
	GRADIENT	-.01099	.00031	.00706	-.00249	.00147	.00214	.00084	.00017	-.00876	-.01033

RUN NO. 893/ 0 RN/L = 3.50 GRADIENT INTERVAL = -5.00/ 5.00

ALPHAR	BETAR	CNFRS	CAFRS	CLMFRS	CYFRS	CYNFRS	CBLRS	CABRS	CYNBRS	CP9	CP10
-6.580	-6.484	.00240	.02380	-.02530	.00950	.02280	-.00040	.04030	.00780	-.48580	-.43270
-6.535	-4.299	-.01660	.02560	-.01270	.01600	.01710	.00330	.04470	.00870	-.53790	-.48110
-6.420	-.008	-.05720	.02610	.01550	.00960	.02090	.01120	.04930	.00960	-.58380	-.53800
-6.496	4.294	-.09740	.02790	.04000	-.00030	.02510	.01910	.05220	.01010	-.61750	-.57050
-6.175	6.224	-.11170	.02910	.04900	-.01290	.03240	.02190	.05260	.01020	-.61870	-.57850
	GRADIENT	-.00940	.00027	.00613	-.00190	.00093	.00184	.00087	.00016	-.00926	-.01040

RUN NO. 894/ 0 RN/L = 3.50 GRADIENT INTERVAL = -5.00/ 5.00

ALPHAR	BETAR	CNFRS	CAFRS	CLMFRS	CYFRS	CYNFRS	CBLRS	CABRS	CYNBRS	CP9	CP10
-4.308	-6.235	.00560	.02620	-.02100	-.01130	.03350	-.00100	.04080	.00790	-.48790	-.44030
-4.585	-4.432	-.00760	.02750	-.01280	-.00580	.02820	.00150	.04310	.00840	-.51990	-.46240
-4.555	.022	-.04310	.02770	.01300	-.01840	.03470	.00840	.04910	.00950	-.58200	-.53570
-4.211	4.381	-.07490	.03010	.03460	-.03030	.04130	.01470	.05210	.01010	-.61700	-.57000
-4.002	6.269	-.08880	.03100	.04310	-.03520	.04470	.01740	.05250	.01020	-.62290	-.57210
	GRADIENT	-.00764	.00029	.00538	-.00278	.00149	.00150	.00102	.00019	-.01103	-.01223

RUN NO. 895/ 0 RN/L = 3.50 GRADIENT INTERVAL = -5.00/ 5.00

ALPHAR	BETAR	CNFRS	CAFRS	CLMFRS	CYFRS	CYNFRS	CBLRS	CABRS	CYNBRS	CP9	CP10
-.347	-7.339	.01290	.02780	-.01580	-.02790	.04320	-.00260	.04020	.00780	-.48300	-.43180
-.327	-5.175	.00280	.02800	-.00770	-.03000	.04250	-.00060	.04200	.00820	-.50180	-.45460
-.368	-.891	-.01530	.02980	.00580	-.04420	.05110	.00290	.04820	.00940	-.57310	-.52490
-.263	3.328	-.03650	.03260	.02170	-.05580	.05890	.00710	.05210	.01010	-.61650	-.57000
-.250	5.476	-.04820	.03310	.02910	-.06010	.06130	.00940	.05270	.01020	-.62380	-.57710
	GRADIENT	-.00502	.00066	.00377	-.00275	.00185	.00100	.00092	.00017	-.01029	-.01069

IA156A, AEDC PWT 16T-470, O T S W/SILTS (R8NR46) (10 MAY 80)

REFERENCE DATA

SREF = 2690.0000 SQ.FT. XMRP = 976.0000 IN. XT
LREF = 1290.3000 INCHES YMRP = .0000 IN. YT
BREF = 1290.3000 INCHES ZMRP = 400.0000 IN. ZT
SCALE = .0200

PARAMETRIC DATA

IB-ELV =	10.000	OB-ELV =	5.000
BDFLAP =	.000	SPDBRK =	.000
RUDDER =	.000	SILTS =	1.000
MACH =	1.050	RN/L =	3.500

RUN NO. 896/ 0 RN/L = 3.50 GRADIENT INTERVAL = -5.00/ 5.00

ALPHAR	BETAR	CNFRS	CAFRS	CLMFRS	CYFRS	CYNFRS	CBLRS	CABRS	CYNBRS	CP9	CP10
4.315	-5.836	.01230	.02940	-.00760	-.01600	.03380	-.00250	.04360	.00850	-.52250	-.47130
4.373	-3.809	.01080	.02980	-.00590	-.02120	.03640	-.00220	.04590	.00890	-.54530	-.50090
3.952	.027	.00320	.03130	.00180	-.03690	.04680	-.00070	.04770	.00930	-.56660	-.51960
3.958	3.646	-.00500	.03240	.01020	-.04570	.05340	.00090	.04990	.00970	-.59590	-.54090
4.215	5.787	-.00720	.03150	.01290	-.05340	.05950	.00130	.05090	.00990	-.60810	-.55150
	GRADIENT	-.00212	.00035	.00216	-.00329	.00228	.00042	.00054	.00011	-.00677	-.00536

IA156A, AEDC PWT 16T-470, O T S W/SILTS (R8NR47) (10 MAY 80)

REFERENCE DATA

SREF = 2690.0000 SQ.FT. XMRP = 976.0000 IN. XT
LREF = 1290.3000 INCHES YMRP = .0000 IN. YT
BREF = 1290.3000 INCHES ZMRP = 400.0000 IN. ZT
SCALE = .0200

PARAMETRIC DATA

IB-ELV =	10.000	OB-ELV =	5.000
BDFLAP =	.000	SPDBRK =	.000
RUDDER =	.000	SILTS =	1.000
MACH =	1.100	RN/L =	3.500

RUN NO. 897/ 0 RN/L = 3.49 GRADIENT INTERVAL = -5.00/ 5.00

ALPHAR	BETAR	CNFRS	CAFRS	CLMFRS	CYFRS	CYNFRS	CBLRS	CABRS	CYNBRS	CP9	CP10
-8.811	-6.557	-.00840	.02270	-.02650	.04080	.00820	.00180	.03760	.00730	-.45620	-.40060
-8.911	-4.290	-.03130	.02490	-.01240	.05020	.00200	.00620	.04210	.00820	-.50270	-.45650
-8.819	-.027	-.07890	.02770	.01890	.04610	.00350	.01550	.04800	.00930	-.57190	-.52200
-8.738	4.223	-.12490	.02950	.04760	.02800	.01500	.02450	.04990	.00970	-.58790	-.54750
-8.740	6.201	-.14480	.03060	.05750	.01970	.02040	.02850	.05120	.00990	-.60820	-.55880
	GRADIENT	-.01100	.00054	.00705	-.00261	.00153	.00215	.00092	.00018	-.01001	-.01069

RUN NO. 898/ 0 RN/L = 3.50 GRADIENT INTERVAL = -5.00/ 5.00

ALPHAR	BETAR	CNFRS	CAFRS	CLMFRS	CYFRS	CYNFRS	CBLRS	CABRS	CYNBRS	CP9	CP10
-6.541	-6.357	.00040	.02600	-.02480	.01220	.02140	.00000	.03750	.00730	-.45310	-.40190
-6.803	-4.364	-.01730	.02750	-.01400	.02080	.01540	.00350	.04140	.00800	-.49860	-.44350
-6.613	-.070	-.05790	.02860	.01450	.01270	.01930	.01140	.04600	.00890	-.54510	-.50130
-6.539	4.312	-.09690	.03190	.03960	-.00470	.02790	.01300	.04890	.00950	-.57990	-.53280
-6.258	6.260	-.11440	.03260	.04990	-.01070	.03180	.02240	.05050	.00980	-.59540	-.55410
	GRADIENT	-.00917	.00051	.00618	-.00294	.00144	.00179	.00086	.00017	-.00937	-.01028

IA156A, AEDC PWT 16T-470, 0 T S W/SILTS (R8NR47) (10 MAY 80)

REFERENCE DATA

SREF = 2690.0000 SQ.FT. XMRP = 976.0000 IN. XT
LREF = 1290.3000 INCHES YMRP = .0000 IN. YT
BREF = 1290.3000 INCHES ZMRP = 400.0000 IN. ZT
SCALE = .0200

PARAMETRIC DATA

IB-ELV = 10.000 OB-ELV = 5.000
BDFLAP = .000 SPDBRK = .000
RUDDER = .000 SILTS = 1.000
MACH = 1.100 RN/L = 3.500

RUN NO. 899/ 0 RN/L = 3.50 GRADIENT INTERVAL = -5.00/ 5.00

ALPHAR	BETAR	CNFRS	CAFRS	CLMFRS	CYFRS	CYNFRS	CBLRS	CABRS	CYNBRS	CP9	CP10
-4.270	-6.416	.00620	.02780	-.02190	-.01200	.03400	-.00120	.03790	.00730	-.45270	-.40950
-4.441	-4.288	-.00810	.02900	-.01300	-.00680	.02870	.00160	.04010	.00780	-.48430	-.42870
-4.342	.265	-.04390	.03040	.01400	-.02100	.03580	.00860	.04450	.00860	-.52930	-.48400
-4.025	4.275	-.07220	.03330	.03320	-.02870	.04040	.01410	.04700	.00910	-.55810	-.51280
-4.210	6.263	-.09100	.03370	.04350	-.03010	.04170	.01780	.04910	.00950	-.58380	-.53370
	GRADIENT	-.00749	.00050	.00541	-.00257	.00137	.00146	.00081	.00015	-.00865	-.00987

RUN NO. 900/ 0 RN/L = 3.50 GRADIENT INTERVAL = -5.00/ 5.00

ALPHAR	BETAR	CNFRS	CAFRS	CLMFRS	CYFRS	CYNFRS	CBLRS	CABRS	CYNBRS	CP9	CP10
-.229	-7.433	.01210	.02910	-.01550	-.02850	.04350	-.00240	.03690	.00720	-.44580	-.39530
-.278	-5.308	.00220	.02930	-.00740	-.03000	.04230	-.00050	.03700	.00720	-.44680	-.39650
-.357	-.946	-.01610	.03150	.00590	-.04230	.04930	.00310	.04200	.00820	-.50260	-.45500
-.295	3.153	-.03750	.03410	.02190	-.05210	.05560	.00730	.04590	.00890	-.54700	-.49820
-.252	5.674	-.05150	.03510	.03090	-.05670	.05820	.01000	.04710	.00910	-.55990	-.51180
	GRADIENT	-.00522	.00063	.00390	-.00239	.00154	.00102	.00095	.00017	-.01083	-.01054

RUN NO. 901/ 0 RN/L = 3.50 GRADIENT INTERVAL = -5.00/ 5.00

ALPHAR	BETAR	CNFRS	CAFRS	CLMFRS	CYFRS	CYNFRS	CBLRS	CABRS	CYNBRS	CP9	CP10
4.589	-5.889	.01260	.03050	-.00710	-.01180	.03150	-.00260	.03750	.00730	-.45300	-.40110
4.227	-3.707	.01020	.03160	-.00500	-.01980	.03550	-.00210	.03990	.00770	-.47470	-.43340
3.963	.067	.00230	.03240	.00330	-.03610	.04630	-.00060	.04220	.00820	-.50340	-.45680
4.198	3.751	-.00500	.03380	.01170	-.04340	.05160	.00090	.04450	.00860	-.53430	-.48000
4.162	5.744	-.00990	.03440	.01530	-.05240	.05870	.00180	.04470	.00870	-.53630	-.48260
	GRADIENT	-.00204	.00029	.00224	-.00317	.00216	.00040	.00062	.00012	-.00799	-.00625

IA156A, AEDC PWT 16T-470, 0 T S W/SILTS (R8NR48) (10 MAY 80)

REFERENCE DATA

SREF = 2690.0000 SQ.FT. XMRP = 976.0000 IN. XT
LREF = 1290.3000 INCHES YMRP = .0000 IN. YT
BREF = 1290.3000 INCHES ZMRP = 400.0000 IN. ZT
SCALE = .0200

PARAMETRIC DATA

IB-ELV = 10.000 OB-ELV = 5.000
BDFLAP = .000 SPDBRK = .000
RUDDER = .000 SILTS = 1.000
MACH = 1.150 RN/L = 3.500

RUN NO. 902/ 0 RN/L = 3.50 GRADIENT INTERVAL = -5.00/ 5.00

ALPHAR	BETAR	CNFRS	CAFRS	CLMFRS	CYFRS	CYNFRS	CBLRS	CABRS	CYNBRS	CP9	CP10
-8.894	-6.449	-.00950	.02430	-.02780	.04150	.00840	.00200	.03630	.00700	-.43970	-.38670
-8.933	-4.272	-.03130	.02640	-.01440	.05170	.00110	.00620	.03930	.00760	-.47090	-.42350
-8.814	.138	-.08250	.02970	.01980	.04830	.00140	.01620	.04500	.00870	-.53270	-.49200
-8.771	4.228	-.13050	.03120	.05070	.03100	.01150	.02560	.04720	.00920	-.55660	-.51760
-8.743	6.184	-.14940	.03240	.06000	.02240	.01720	.02930	.04730	.00920	-.56170	-.51640
	GRADIENT	-.01167	.00057	.00766	-.00241	.00121	.00228	.00093	.00019	-.01013	-.01113

RUN NO. 903/ 0 RN/L = 3.49 GRADIENT INTERVAL = -5.00/ 5.00

ALPHAR	BETAR	CNFRS	CAFRS	CLMFRS	CYFRS	CYNFRS	CBLRS	CABRS	CYNBRS	CP9	CP10
-6.748	-6.509	.00150	.02640	-.02720	.01440	.02080	-.00020	.03480	.00680	-.42090	-.37280
-6.394	-4.162	-.01750	.02900	-.01360	.01780	.01630	.00350	.03830	.00740	-.46340	-.40850
-6.578	-.044	-.05930	.03000	.01540	.01180	.01800	.01160	.04350	.00850	-.51790	-.47360
-6.532	4.322	-.10040	.03370	.04130	.00320	.02270	.01970	.04560	.00890	-.54100	-.49780
-6.323	6.350	-.11850	.03520	.05210	-.00510	.02800	.02320	.04670	.00910	-.55290	-.51050
	GRADIENT	-.00977	.00056	.00647	-.00172	.00076	.00191	.00086	.00018	-.00911	-.01048

RUN NO. 904/ 0 RN/L = 3.50 GRADIENT INTERVAL = -5.00/ 5.00

ALPHAR	BETAR	CNFRS	CAFRS	CLMFRS	CYFRS	CYNFRS	CBLRS	CABRS	CYNBRS	CP9	CP10
-4.418	-6.604	.00640	.02800	-.02280	-.01030	.03290	-.00120	.03490	.00680	-.41820	-.37580
-4.474	-4.232	-.00960	.03010	-.01240	-.00580	.02750	.00190	.03700	.00720	-.44750	-.39470
-4.200	.117	-.04320	.03160	.01400	-.02070	.03480	.00840	.04210	.00820	-.50150	-.45710
-3.912	4.199	-.07370	.03470	.03500	-.02660	.03850	.01440	.04480	.00870	-.53270	-.48700
-4.118	6.188	-.09230	.03570	.04530	-.02780	.03940	.01800	.04600	.00890	-.54810	-.50000
	GRADIENT	-.00760	.00054	.00563	-.00248	.00131	.00148	.00093	.00018	-.01013	-.01098

RUN NO. 905/ 0 RN/L = 3.50 GRADIENT INTERVAL = -5.00/ 5.00

ALPHAR	BETAR	CNFRS	CAFRS	CLMFRS	CYFRS	CYNFRS	CBLRS	CABRS	CYNBRS	CP9	CP10
-.194	-7.429	.01130	.03000	-.01420	-.02590	.04130	-.00230	.03380	.00660	-.41070	-.36030
-.248	-5.036	.00020	.02990	-.00550	-.02930	.04130	-.00010	.03570	.00690	-.43200	-.38080
-.322	-.972	-.01680	.03260	.00690	-.04030	.04770	.00320	.04090	.00790	-.49210	-.44040
-.246	3.174	-.03770	.03610	.02290	-.05040	.05410	.00730	.04420	.00860	-.52870	-.47850
-.245	5.428	-.05020	.03690	.03120	-.05380	.05560	.00980	.04500	.00870	-.53770	-.48720
	GRADIENT	-.00504	.00084	.00386	-.00244	.00154	.00099	.00080	.00017	-.00883	-.00919

IA156A, AEDC PWT 16T-470, 0 T S W/SILTS (R8NR48) (10 MAY 80)

REFERENCE DATA

SREF = 2690.0000 SQ.FT. XMRP = 976.0000 IN. XT
LREF = 1290.3000 INCHES YMRP = .0000 IN. YT
BREF = 1290.3000 INCHES ZMRP = 400.0000 IN. ZT
SCALE = .0200

PARAMETRIC DATA

IB-ELV = 10.000 OB-ELV = 5.000
BDFLAP = .000 SPDBRK = .000
RUDDER = .000 SILTS = 1.000
MACH = 1.150 RN/L = 3.500

RUN NO. 906/ 0 RN/L = 3.50 GRADIENT INTERVAL = -5.00/ 5.00

ALPHAR	BETAR	CNFRS	CAFRS	CLMFRS	CYFRS	CYNFRS	CBLRS	CABRS	CYNBRS	CP9	CP10
4.520	-5.710	.01240	.03150	-.00730	-.01120	.03140	-.00250	.03600	.00700	-.43450	-.38560
4.270	-3.552	.00920	.03300	-.00390	-.01840	.03470	-.00190	.03820	.00740	-.45690	-.41320
4.132	.067	.00130	.03460	.00520	-.03330	.04430	-.00040	.04050	.00790	-.48470	-.43740
4.327	3.905	-.00440	.03610	.01220	-.04290	.05170	.00070	.04270	.00830	-.50990	-.46210
4.105	5.584	-.00980	.03630	.01570	-.05020	.05700	.00180	.04290	.00830	-.51570	-.46170
	GRADIENT	-.00182	.00042	.00216	-.00328	.00228	.00035	.00060	.00012	-.00710	-.00656

IA156A, AEDC PWT 16T-470, 0 T S W/SILTS (R8NR49) (10 MAY 80)

REFERENCE DATA

SREF = 2690.0000 SQ.FT. XMRP = 976.0000 IN. XT
LREF = 1290.3000 INCHES YMRP = .0000 IN. YT
BREF = 1290.3000 INCHES ZMRP = 400.0000 IN. ZT
SCALE = .0200

PARAMETRIC DATA

IB-ELV = 10.000 OB-ELV = 5.000
BDFLAP = .000 SPDBRK = .000
RUDDER = .000 SILTS = 1.000
MACH = 1.250 RN/L = 3.500

RUN NO. 907/ 0 RN/L = 3.50 GRADIENT INTERVAL = -5.00/ 5.00

ALPHAR	BETAR	CNFRS	CAFRS	CLMFRS	CYFRS	CYNFRS	CBLRS	CABRS	CYNBRS	CP9	CP10
-8.598	-6.287	-.01540	.02560	-.02390	.04260	.00500	.00310	.03360	.00650	-.40590	-.36030
-8.930	-4.328	-.03690	.02720	-.01100	.05250	-.00150	.00730	.03570	.00690	-.42720	-.38630
-8.808	.137	-.08710	.03080	.02370	.04740	-.00080	.01710	.04160	.00810	-.49090	-.45530
-8.727	4.317	-.13150	.03370	.05190	.03180	.00720	.02580	.04250	.00830	-.50590	-.46300
-8.698	6.284	-.15190	.03570	.06220	.02520	.01130	.02980	.04320	.00840	-.51470	-.46800
	GRADIENT	-.01095	.00075	.00728	-.00238	.00100	.00214	.00079	.00016	-.00916	-.00895

RUN NO. 908/ 0 RN/L = 3.50 GRADIENT INTERVAL = -5.00/ 5.00

ALPHAR	BETAR	CNFRS	CAFRS	CLMFRS	CYFRS	CYNFRS	CBLRS	CABRS	CYNBRS	CP9	CP10
-6.493	-6.323	-.00490	.02680	-.02260	.01520	.01740	.00100	.03220	.00630	-.38860	-.34570
-6.758	-4.374	-.02380	.02870	-.01070	.02440	.01100	.00470	.03510	.00680	-.42210	-.37790
-6.535	-.062	-.06340	.03140	.01920	.01250	.01530	.01240	.04020	.00780	-.47760	-.43680
-6.507	4.366	-.10320	.03540	.04350	.00690	.01810	.02020	.04170	.00810	-.49710	-.45200
-6.236	6.322	-.11850	.03650	.05250	-.00080	.02280	.02320	.04280	.00830	-.51220	-.46210
	GRADIENT	-.00908	.00077	.00620	-.00200	.00081	.00177	.00075	.00015	-.00856	-.00846

IA156A, AEDC PWT 16T-470, 0 T S W/SILTS (R8NR49) (10 MAY 80)

REFERENCE DATA

SREF = 2690.0000 SQ.FT. XMRP = 976.0000 IN. XT
LREF = 1290.3000 INCHES YMRP = .0000 IN. YT
BREF = 1290.3000 INCHES ZMRP = 400.0000 IN. ZT
SCALE = .0200

PARAMETRIC DATA

IB-ELV = 10.000 OB-ELV = 5.000
BDFLAP = .000 SPDBRK = .000
RUDDER = .000 SILTS = 1.000
MACH = 1.250 RN/L = 3.500

RUN NO. 909/ 0 RN/L = 3.50 GRADIENT INTERVAL = -5.00/ 5.00

ALPHAR	BETAR	CNFRS	CAFRS	CLMFRS	CYFRS	CYNFRS	CBLRS	CABRS	CYNBRS	CP9	CP10
-4.490	-6.614	.00100	.02770	-.01950	-.00680	.02870	-.00020	.03200	.00620	-.38490	-.34430
-4.396	-4.335	-.01580	.02990	-.00680	-.00540	.02580	.00310	.03470	.00670	-.41840	-.37100
-4.316	.264	-.04840	.03240	.01740	-.01210	.02850	.00940	.03900	.00760	-.46790	-.41960
-4.039	4.302	-.07660	.03610	.03630	-.01810	.03210	.01500	.04050	.00790	-.48510	-.43840
-4.184	6.364	-.09500	.03750	.04650	-.02030	.03340	.01860	.04180	.00810	-.50180	-.45030
	GRADIENT	-.00704	.00071	.00500	-.00147	.00073	.00138	.00068	.00014	-.00779	-.00787

RUN NO. 910/ 0 RN/L = 3.50 GRADIENT INTERVAL = -5.00/ 5.00

ALPHAR	BETAR	CNFRS	CAFRS	CLMFRS	CYFRS	CYNFRS	CBLRS	CABRS	CYNBRS	CP9	CP10
-.169	-7.494	.00710	.03000	-.01120	-.02380	.03950	-.00150	.03060	.00590	-.37560	-.32200
-.211	-5.146	-.00350	.03050	-.00270	-.02750	.03970	.00060	.03230	.00630	-.39220	-.34300
-.228	-.934	-.02160	.03420	.01180	-.03830	.04530	.00410	.03740	.00730	-.45550	-.39710
-.151	3.538	-.04190	.03760	.02760	-.04930	.05160	.00810	.04070	.00790	-.49150	-.43630
-.135	5.465	-.05170	.03830	.03380	-.05220	.05320	.01010	.04140	.00800	-.49970	-.44290
	GRADIENT	-.00454	.00076	.00353	-.00246	.00141	.00089	.00074	.00013	-.00805	-.00877

RUN NO. 911/ 0 RN/L = 3.50 GRADIENT INTERVAL = -5.00/ 5.00

ALPHAR	BETAR	CNFRS	CAFRS	CLMFRS	CYFRS	CYNFRS	CBLRS	CABRS	CYNBRS	CP9	CP10
4.571	-5.750	.01140	.03170	-.00610	-.00850	.02960	-.00240	.03310	.00640	-.40210	-.35120
4.456	-3.844	.00890	.03310	-.00330	-.01370	.03210	-.00190	.03500	.00680	-.42150	-.37540
4.179	.006	-.00160	.03500	.00830	-.02940	.04180	.00020	.03730	.00720	-.45160	-.39900
4.083	3.535	-.00850	.03710	.01600	-.04190	.05110	.00150	.03900	.00760	-.47000	-.41860
4.313	5.805	-.01070	.03750	.01850	-.04900	.05640	.00200	.04000	.00780	-.48310	-.42830
	GRADIENT	-.00236	.00054	.00262	-.00383	.00257	.00046	.00054	.00011	-.00659	-.00586

IA156A, AEDC PWT 16T-470, 0 T S W/SILTS (R8NR50) (10 MAY 80)

REFERENCE DATA

SREF = 2690.0000 SQ.FT. XMRP = 976.0000 IN. XT
LREF = 1290.3000 INCHES YMRP = .0000 IN. YT
BREF = 1290.3000 INCHES ZMRP = 400.0000 IN. ZT
SCALE = .0200

PARAMETRIC DATA

IB-ELV = 10.000 OB-ELV = 5.000
BDFLAP = .000 SPDBRK = .000
RUDDER = .000 SILTS = 1.000
MACH = 1.400 RN/L = 3.500

RUN NO. 912/ 0 RN/L = 3.50 GRADIENT INTERVAL = -5.00/ 5.00

ALPHAR	BETAR	CNFRS	CAFRS	CLMFRS	CYFRS	CYNFRS	CBLRS	CABRS	CYNBRS	CP9	CP10
-8.832	-6.523	-.02440	.02480	-.01880	.04700	.00120	.00480	.02980	.00580	-.35690	-.32230
-8.881	-4.324	-.04370	.02690	-.00660	.05270	-.00430	.00860	.03210	.00620	-.38270	-.34850
-8.629	.104	-.08940	.03180	.02610	.04730	-.00580	.01750	.03670	.00710	-.43670	-.39840
-8.533	4.360	-.13780	.03580	.05670	.03700	-.00140	.02690	.03880	.00750	-.47020	-.41280
-8.531	6.300	-.15620	.03660	.06590	.02540	.00640	.03060	.03850	.00750	-.47110	-.40610
	GRADIENT	-.01083	.00103	.00729	-.00180	.00033	.00211	.00077	.00015	-.01009	-.00743

RUN NO. 913/ 0 RN/L = 3.51 GRADIENT INTERVAL = -5.00/ 5.00

ALPHAR	BETAR	CNFRS	CAFRS	CLMFRS	CYFRS	CYNFRS	CBLRS	CABRS	CYNBRS	CP9	CP10
-6.600	-6.332	-.01110	.02690	-.01870	.02020	.01400	.00220	.02890	.00560	-.34810	-.31030
-6.473	-4.291	-.02760	.02890	-.00720	.02400	.00980	.00540	.03220	.00630	-.38600	-.34810
-6.637	.084	-.06850	.03210	.02080	.02410	.00620	.01340	.03500	.00680	-.42060	-.37750
-6.389	4.377	-.10340	.03640	.04320	.01430	.01050	.02020	.03630	.00700	-.44300	-.38350
-6.287	6.617	-.12390	.03810	.05470	.00710	.01460	.02420	.03740	.00730	-.46000	-.39310
	GRADIENT	-.00875	.00086	.00582	-.00112	.00008	.00171	.00047	.00008	-.00658	-.00409

RUN NO. 914/ 0 RN/L = 3.50 GRADIENT INTERVAL = -5.00/ 5.00

ALPHAR	BETAR	CNFRS	CAFRS	CLMFRS	CYFRS	CYNFRS	CBLRS	CABRS	CYNBRS	CP9	CP10
-4.287	-6.309	-.00430	.02880	-.01470	-.00290	.02640	.00080	.02860	.00560	-.34710	-.30450
-4.286	-4.209	-.01850	.03050	-.00490	.00090	.02210	.00360	.03090	.00600	-.37420	-.33040
-4.356	.186	-.05070	.03340	.01790	-.00140	.02040	.00990	.03410	.00660	-.41550	-.36030
-3.974	4.417	-.07580	.03600	.03610	-.01350	.02720	.01480	.03640	.00710	-.44390	-.38470
-4.152	6.522	-.09280	.03800	.04540	-.01660	.02900	.01810	.03700	.00720	-.45280	-.38960
	GRADIENT	-.00665	.00064	.00476	-.00166	.00058	.00130	.00064	.00013	-.00809	-.00630

RUN NO. 915/ 0 RN/L = 3.50 GRADIENT INTERVAL = -5.00/ 5.00

ALPHAR	BETAR	CNFRS	CAFRS	CLMFRS	CYFRS	CYNFRS	CBLRS	CABRS	CYNBRS	CP9	CP10
-.325	-7.526	.00460	.03030	-.00860	-.02010	.03740	-.00100	.02760	.00540	-.34200	-.28770
-.243	-5.052	-.00530	.03040	-.00010	-.02280	.03670	.00090	.02940	.00570	-.35740	-.31120
-.238	-1.035	-.02170	.03430	.01300	-.03340	.04130	.00420	.03280	.00640	-.40280	-.34400
-.181	3.568	-.04170	.03730	.02780	-.04350	.04670	.00810	.03610	.00700	-.44270	-.37980
-.235	5.493	-.05090	.03860	.03330	-.04760	.04940	.00990	.03770	.00730	-.46380	-.39500
	GRADIENT	-.00435	.00065	.00322	-.00219	.00117	.00085	.00072	.00013	-.00867	-.00778

IA156A, AEDC PWT 16T-470, O T S W/SILTS (R8NR50) (10 MAY 80)

REFERENCE DATA

SREF = 2690.0000 SQ.FT. XMRP = 976.0000 IN. XT
LREF = 1290.3000 INCHES YMRP = .0000 IN. YT
BREF = 1290.3000 INCHES ZMRP = 400.0000 IN. ZT
SCALE = .0200

PARAMETRIC DATA

IB-ELV = 10.000 OB-ELV = 5.000
BDFLAP = .000 SPDBRK = .000
RUDDER = .000 SILTS = 1.000
MACH = 1.400 RN/L = 3.500

RUN NO. 916/ 0 RN/L = 3.50 GRADIENT INTERVAL = -5.00/ 5.00

ALPHAR	BETAR	CNFRS	CAFRS	CLMFRS	CYFRS	CYNFRS	CBLRS	CABRS	CYNBRS	CP9	CP10
4.665	-5.760	.00970	.03050	-.00360	-.00300	.02650	-.00200	.02880	.00560	-.35340	-.30300
4.579	-3.802	.00710	.03220	-.00040	-.00820	.02920	-.00150	.03010	.00580	-.36750	-.31890
4.248	.025	-.00280	.03530	.01060	-.02440	.03920	.00040	.03310	.00640	-.40810	-.34650
4.194	3.646	-.00750	.03690	.01690	-.03810	.04920	.00130	.03540	.00690	-.43900	-.36770
4.144	5.561	-.01170	.03830	.02090	-.04530	.05410	.00220	.03650	.00710	-.45190	-.38040
	GRADIENT	-.00197	.00063	.00233	-.00402	.00268	.00038	.00071	.00015	-.00961	-.00656

IA156A, AEDC PWT 16T-470, O T S W/SILTS (R8NR51) (10 MAY 80)

REFERENCE DATA

SREF = 2690.0000 SQ.FT. XMRP = 976.0000 IN. XT
LREF = 1290.3000 INCHES YMRP = .0000 IN. YT
BREF = 1290.3000 INCHES ZMRP = 400.0000 IN. ZT
SCALE = .0200

PARAMETRIC DATA

IB-ELV = 10.000 OB-ELV = 5.000
BDFLAP = .000 SPDBRK = .000
RUDDER = .000 SILTS = 1.000
MACH = 1.550 RN/L = 3.200

RUN NO. 917/ 0 RN/L = 3.19 GRADIENT INTERVAL = -5.00/ 5.00

ALPHAR	BETAR	CNFRS	CAFRS	CLMFRS	CYFRS	CYNFRS	CBLRS	CABRS	CYNBRS	CP9	CP10
-8.843	-6.431	-.02890	.02420	-.01470	.04690	-.00120	.00570	.02550	.00500	-.30590	-.27490
-8.894	-4.216	-.04670	.02610	-.00380	.05200	-.00670	.00910	.02750	.00530	-.32870	-.29760
-8.587	.286	-.09350	.03090	.02940	.04990	-.01060	.01830	.03220	.00630	-.38910	-.34510
-8.425	4.535	-.13930	.03430	.05970	.03430	-.00300	.02720	.03430	.00670	-.41860	-.36210
-8.458	6.400	-.15480	.03430	.06790	.02090	.00580	.03020	.03400	.00660	-.41770	-.35800
	GRADIENT	-.01058	.00094	.00726	-.00201	.00041	.00207	.00078	.00016	-.01030	-.00740

RUN NO. 918/ 0 RN/L = 3.19 GRADIENT INTERVAL = -5.00/ 5.00

ALPHAR	BETAR	CNFRS	CAFRS	CLMFRS	CYFRS	CYNFRS	CBLRS	CABRS	CYNBRS	CP9	CP10
-6.454	-6.209	-.01430	.02570	-.01600	.02230	.01110	.00280	.02580	.00500	-.30890	-.27790
-6.638	-4.301	-.03050	.02740	-.00530	.02810	.00560	.00590	.02790	.00540	-.33350	-.30270
-6.432	.103	-.06700	.03120	.02130	.02520	.00320	.01310	.03090	.00600	-.37410	-.32860
-6.325	4.555	-.10480	.03450	.04520	.01670	.00630	.02050	.03350	.00650	-.41130	-.35110
-6.264	6.739	-.12440	.03630	.05680	.00730	.01230	.02430	.03490	.00680	-.43080	-.36430
	GRADIENT	-.00839	.00080	.00570	-.00129	.00008	.00165	.00063	.00012	-.00878	-.00546

IA156A, AEDC PWT 16T-470, 0 T S W/SILTS (R8NR51) (10 MAY 80)

REFERENCE DATA

SREF = 2690.0000 SQ.FT. XMRP = 976.0000 IN. XT
LREF = 1290.3000 INCHES YMRP = .0000 IN. YT
BREF = 1290.3000 INCHES ZMRP = 400.0000 IN. ZT
SCALE = .0200

PARAMETRIC DATA

IB-ELV = 10.000 OB-ELV = 5.000
BDFLAP = .000 SPDBRK = .000
RUDDER = .000 SILTS = 1.000
MACH = 1.550 RN/L = 3.200

RUN NO. 919/ 0 RN/L = 3.20 GRADIENT INTERVAL = -5.00/ 5.00

ALPHAR	BETAR	CNFRS	CAFRS	CLMFRS	CYFRS	CYNFRS	CBLRS	CABRS	CYNBRS	CP9	CP10
-4.388	-6.297	-.00630	.02770	-.01410	.00340	.02140	.00120	.02500	.00480	-.30200	-.26660
-4.652	-4.459	-.02000	.02860	-.00480	.00890	.01610	.00390	.02730	.00530	-.32960	-.29160
-4.177	.223	-.04840	.03210	.01740	.00030	.01820	.00940	.03050	.00590	-.37680	-.31710
-3.880	4.707	-.07470	.03480	.03530	-.01080	.02400	.01460	.03270	.00630	-.40410	-.34120
-3.869	6.391	-.08710	.03630	.04290	-.01480	.02640	.01700	.03370	.00650	-.41680	-.35140
	GRADIENT	-.00597	.00068	.00438	-.00215	.00086	.00117	.00059	.00011	-.00814	-.00541

RUN NO. 920/ 0 RN/L = 3.19 GRADIENT INTERVAL = -5.00/ 5.00

ALPHAR	BETAR	CNFRS	CAFRS	CLMFRS	CYFRS	CYNFRS	CBLRS	CABRS	CYNBRS	CP9	CP10
-.411	-7.494	.00310	.02850	-.00750	-.01650	.03370	-.00070	.02470	.00480	-.30710	-.25660
-.367	-5.072	-.00730	.02960	.00130	-.02060	.03440	.00130	.02660	.00520	-.32690	-.27930
-.319	-.977	-.02270	.03310	.01400	-.03140	.03920	.00430	.02940	.00570	-.36440	-.30660
-.321	3.177	-.03790	.03600	.02460	-.03960	.04400	.00730	.03250	.00630	-.40620	-.33530
-.365	5.322	-.04630	.03710	.02940	-.04390	.04710	.00900	.03400	.00660	-.42730	-.34820
	GRADIENT	-.00366	.00070	.00255	-.00197	.00116	.00072	.00075	.00014	-.01006	-.00691

RUN NO. 921/ 0 RN/L = 3.19 GRADIENT INTERVAL = -5.00/ 5.00

ALPHAR	BETAR	CNFRS	CAFRS	CLMFRS	CYFRS	CYNFRS	CBLRS	CABRS	CYNBRS	CP9	CP10
4.560	-5.486	.00810	.03010	-.00140	.00010	.02470	-.00180	.02670	.00520	-.33020	-.27780
4.423	-3.545	.00520	.03110	.00200	-.00580	.02750	-.00120	.02730	.00530	-.33860	-.28400
4.087	.189	-.00360	.03400	.01190	-.02140	.03750	.00050	.03020	.00590	-.37830	-.31090
4.186	3.782	-.00480	.03540	.01500	-.03410	.04660	.00080	.03290	.00640	-.41080	-.33820
4.081	5.789	-.00840	.03700	.01870	-.04440	.05410	.00150	.03360	.00650	-.41890	-.34690
	GRADIENT	-.00137	.00059	.00178	-.00386	.00261	.00027	.00076	.00015	-.00986	-.00740

IA156A, AEDC PWT 16T-470, 0 T S W/SILTS (R8NR52) (10 MAY 80)

REFERENCE DATA

SREF = 2690.0000 SQ.FT. XMRP = 976.0000 IN. XT
LREF = 1290.3000 INCHES YMRP = .0000 IN. YT
BREF = 1290.3000 INCHES ZMRP = 400.0000 IN. ZT
SCALE = .0200

PARAMETRIC DATA

IB-ELV = 10.000 OB-ELV = 9.000
BDFLAP = .000 SPDBRK = .000
RUDDER = .000 SILTS = 1.000
MACH = .300 RN/L = 3.500

RUN NO. 928/ 0 RN/L = 2.68 GRADIENT INTERVAL = -5.00/ 5.00

ALPHAR	BETAR	CNFRS	CAFRS	CLMFRS	CYFRS	CYNFRS	CBLRS	CABRS	CYNBRS	CP9	CP10
-6.008	-10.307	.02180	.01230	-.02810	-.01110	.02990	-.00310	.02360	.00460	-.30530	-.23180
-6.357	-6.240	-.00420	.01070	-.01260	.00130	.01730	.00200	.02800	.00540	-.36220	-.27730
-6.231	.332	-.05170	.01190	.01710	-.00490	.01680	.01140	.03210	.00620	-.40290	-.32950
-5.789	6.274	-.08670	.01380	.03720	-.02220	.02850	.01820	.03610	.00700	-.43260	-.38940
-5.920	10.242	-.11420	.01260	.05070	-.03720	.03870	.02370	.03980	.00770	-.48120	-.42490
	GRADIENT	.00000	.00000	.00000	.00000	.00000	.00000	.00000	.00000	.00000	.00000

RUN NO. 929/ 0 RN/L = 2.68 GRADIENT INTERVAL = -5.00/ 5.00

ALPHAR	BETAR	CNFRS	CAFRS	CLMFRS	CYFRS	CYNFRS	CBLRS	CABRS	CYNBRS	CP9	CP10
-.301	-10.786	.02410	.01670	-.02390	-.02080	.03280	-.00370	.02570	.00500	-.33470	-.25130
-.271	-6.700	.00540	.01510	-.00930	-.02210	.03160	-.00010	.02440	.00470	-.31650	-.24020
-.224	-.729	-.01660	.01450	.00620	-.03460	.03700	.00430	.03080	.00600	-.38370	-.31740
-.201	5.354	-.03590	.01470	.01930	-.04720	.04500	.00810	.03590	.00700	-.43640	-.38190
-.156	9.719	-.05030	.01690	.02820	-.05770	.05290	.01090	.03650	.00710	-.44490	-.38710
	GRADIENT	.00000	.00000	.00000	.00000	.00000	.00000	.00000	.00000	.00000	.00000

RUN NO. 930/ 0 RN/L = 2.68 GRADIENT INTERVAL = -5.00/ 5.00

ALPHAR	BETAR	CNFRS	CAFRS	CLMFRS	CYFRS	CYNFRS	CBLRS	CABRS	CYNBRS	CP9	CP10
6.235	-9.836	.01550	.01540	-.00950	.00690	.01300	-.00210	.02700	.00520	-.35710	-.25940
6.074	-5.754	.01080	.01470	-.00270	.00050	.01600	-.00110	.02600	.00500	-.33960	-.25240
5.939	.210	.01510	.01390	-.00180	-.01920	.02810	-.00180	.03030	.00590	-.37850	-.31250
6.159	6.060	.02300	.01460	-.00330	-.03330	.03850	-.00330	.03420	.00660	-.41340	-.36500
5.927	9.888	.02060	.01630	-.00160	-.04440	.04670	-.00270	.03480	.00680	-.42110	-.37260
	GRADIENT	.00000	.00000	.00000	.00000	.00000	.00000	.00000	.00000	.00000	.00000

IA156A, AEDC PWT 16T-470, O T S W/SILTS (R8NR53) (10 MAY 80)

REFERENCE DATA

SREF = 2690.0000 SQ.FT. XMRP = 976.0000 IN. XT
LREF = 1290.3000 INCHES YMRP = .0000 IN. YT
BREF = 1290.3000 INCHES ZMRP = 400.0000 IN. ZT
SCALE = .0200

PARAMETRIC DATA

IB-ELV = 10.000 OB-ELV = 9.000
BDFLAP = .000 SPDBRK = .000
RUDDER = .000 SILTS = 1.000
MACH = .300 RN/L = 3.500

RUN NO. 927/ 0 RN/L = 2.67 GRADIENT INTERVAL = -5.00/ 5.00

ALPHAR	BETAR	CNFRS	CAFRS	CLMFRS	CYFRS	CYNFRS	CBLRS	CABRS	CYNBRS	CP9	CP10
-10.162	-8.104	-.00180	.00810	-.01980	.03310	.00650	.00180	.02460	.00480	-.32730	-.23340
-10.170	-5.914	-.01930	.00740	-.01010	.04320	-.00270	.00520	.03020	.00590	-.39530	-.29250
-9.933	.195	-.08170	.00800	.02720	.04330	-.00870	.01720	.03600	.00700	-.45470	-.36610
-10.096	6.380	-.13200	.00870	.05150	.01130	.01290	.02710	.03970	.00770	-.47740	-.42670
-10.115	8.205	-.15110	.00710	.06070	.00050	.01930	.03080	.04260	.00830	-.50760	-.46330
	GRADIENT	.00000	.00000	.00000	.00000	.00000	.00000	.00000	.00000	.00000	.00000

RUN NO. 931/ 0 RN/L = 2.68 GRADIENT INTERVAL = -5.00/ 5.00

ALPHAR	BETAR	CNFRS	CAFRS	CLMFRS	CYFRS	CYNFRS	CBLRS	CABRS	CYNBRS	CP9	CP10
10.082	-7.867	.02200	.01240	-.00820	.03560	-.00350	-.00310	.02710	.00530	-.34730	-.27000
10.161	-5.568	.02340	.01220	-.00590	.03310	-.00250	-.00340	.02730	.00530	-.34970	-.27190
10.063	.240	.03550	.01430	-.00640	.01940	.00700	-.00570	.03080	.00600	-.38550	-.31650
10.151	6.147	.05470	.01430	-.01420	.00240	.01830	-.00950	.03310	.00640	-.40750	-.34570
9.921	7.962	.05680	.01390	-.01530	-.00780	.02500	-.00990	.03370	.00650	-.40930	-.35880
	GRADIENT	.00000	.00000	.00000	.00000	.00000	.00000	.00000	.00000	.00000	.00000

IA156A, AEDC PWT 16T-470, O T S W/SILTS (R8NR54) (10 MAY 80)

REFERENCE DATA

SREF = 2690.0000 SQ.FT. XMRP = 976.0000 IN. XT
LREF = 1290.3000 INCHES YMRP = .0000 IN. YT
BREF = 1290.3000 INCHES ZMRP = 400.0000 IN. ZT
SCALE = .0200

PARAMETRIC DATA

IB-ELV = 10.000 OB-ELV = 9.000
BDFLAP = .000 SPDBRK = .000
RUDDER = .000 SILTS = 1.000
MACH = .600 RN/L = 3.500

RUN NO. 932/ 0 RN/L = 3.50 GRADIENT INTERVAL = -5.00/ 5.00

ALPHAR	BETAR	CNFRS	CAFRS	CLMFRS	CYFRS	CYNFRS	CBLRS	CABRS	CYNBRS	CP9	CP10
-8.262	-8.196	.00750	.00810	-.02390	.01610	.01510	-.00090	.02410	.00470	-.30650	-.24260
-8.234	-6.051	-.00860	.00920	-.01470	.02440	.00760	.00220	.02670	.00520	-.34270	-.26690
-8.124	-3.927	-.02650	.01070	-.00340	.03000	.00120	.00580	.02980	.00580	-.38230	-.29740
-8.148	.179	-.06580	.00970	.02070	.02680	.00040	.01350	.03400	.00660	-.42230	-.35280
-8.155	4.218	-.09470	.00990	.03590	.01150	.01030	.01920	.03680	.00710	-.44000	-.39740
-8.117	6.161	-.11170	.01020	.04470	.00320	.01590	.02250	.03830	.00740	-.45290	-.42020
-8.050	8.274	-.13000	.01040	.05410	-.00780	.02280	.02610	.03980	.00770	-.46680	-.43850
	GRADIENT	-.00838	-.00010	.00483	-.00227	.00111	.00165	.00086	.00016	-.00709	-.01228

IA156A, AEDC PWT 16T-470, 0 T S W/SILTS (R8NR54) (10 MAY 80)

REFERENCE DATA

SREF = 2690.0000 SQ.FT. XMRP = 976.0000 IN. XT
LREF = 1290.3000 INCHES YMRP = .0000 IN. YT
BREF = 1290.3000 INCHES ZMRP = 400.0000 IN. ZT
SCALE = .0200

PARAMETRIC DATA

IB-ELV = 10.000 OB-ELV = 9.000
BDFLAP = .000 SPDBRK = .000
RUDDER = .000 SILTS = 1.000
MACH = .600 RN/L = 3.500

RUN NO. 933/ 0 RN/L = 3.51 GRADIENT INTERVAL = -5.00/ 5.00

ALPHAR	BETAR	CNFRS	CAFRS	CLMFRS	CYFRS	CYNFRS	CBLRS	CABRS	CYNBRS	CP9	CP10
-6.073	-8.080	.01030	.01020	-.02210	-.00310	.02400	-.00140	.02410	.00470	-.30360	-.24550
-6.240	-6.144	-.00210	.01090	-.01480	.00380	.01760	.00100	.02580	.00500	-.32860	-.26030
-6.175	-4.065	-.01840	.01180	-.00450	.00870	.01200	.00420	.02890	.00560	-.36890	-.28910
-6.306	.037	-.05020	.01090	.01560	.00340	.01280	.01050	.03240	.00630	-.39980	-.33840
-6.103	4.272	-.07650	.01170	.03080	-.00950	.02120	.01560	.03570	.00690	-.42580	-.38760
-5.911	6.136	-.08940	.01230	.03790	-.01630	.02580	.01810	.03680	.00710	-.43710	-.40150
-5.938	8.469	-.10640	.01280	.04670	-.02490	.03170	.02150	.03820	.00740	-.45160	-.41800
	GRADIENT	-.00696	-.00001	.00423	-.00219	.00111	.00137	.00082	.00016	-.00682	-.01181

RUN NO. 934/ 0 RN/L = 3.51 GRADIENT INTERVAL = -5.00/ 5.00

ALPHAR	BETAR	CNFRS	CAFRS	CLMFRS	CYFRS	CYNFRS	CBLRS	CABRS	CYNBRS	CP9	CP10
-4.127	-8.230	.01230	.01180	-.02040	-.01370	.02930	-.00180	.02410	.00470	-.30240	-.24650
-4.101	-6.091	-.00010	.01200	-.01170	-.01200	.02590	.00060	.02590	.00500	-.32430	-.26590
-4.167	-4.041	-.01220	.01270	-.00410	-.00910	.02170	.00290	.02790	.00540	-.35420	-.28270
-3.920	.143	-.03620	.01220	.01220	-.02000	.02690	.00770	.03190	.00620	-.38970	-.33720
-3.997	4.392	-.05990	.01300	.02620	-.02720	.03140	.01230	.03510	.00680	-.41980	-.37930
-3.904	6.141	-.06890	.01330	.03160	-.03240	.03480	.01410	.03630	.00700	-.43400	-.39170
-3.816	8.084	-.08070	.01350	.03790	-.03790	.03860	.01630	.03750	.00730	-.44520	-.40820
	GRADIENT	-.00566	.00004	.00359	-.00215	.00115	.00111	.00085	.00017	-.00778	-.01145

RUN NO. 935/ 0 RN/L = 3.51 GRADIENT INTERVAL = -5.00/ 5.00

ALPHAR	BETAR	CNFRS	CAFRS	CLMFRS	CYFRS	CYNFRS	CBLRS	CABRS	CYNBRS	CP9	CP10
-.169	-9.101	.01760	.01410	-.01880	-.02190	.03370	-.00290	.02600	.00510	-.33060	-.26240
-.220	-7.081	.00820	.01370	-.01120	-.02200	.03250	-.00110	.02500	.00480	-.31680	-.25250
-.213	-4.743	-.00110	.01320	-.00410	-.02420	.03230	.00080	.02670	.00520	-.33340	-.27470
-.207	-.471	-.01650	.01390	.00720	-.03520	.03830	.00380	.03100	.00600	-.37700	-.32920
-.170	3.567	-.02950	.01490	.01610	-.04400	.04380	.00630	.03440	.00670	-.41210	-.37240
-.120	5.417	-.03470	.01560	.01970	-.04800	.04660	.00730	.03520	.00680	-.41940	-.38210
-.206	7.559	-.04590	.01540	.02580	-.05240	.04930	.00960	.03670	.00710	-.43540	-.39930
	GRADIENT	-.00342	.00020	.00243	-.00238	.00138	.00066	.00093	.00018	-.00948	-.01177

IA156A, AEDC PWT 16T-470, O T S W/SILTS (R8NR54) (10 MAY 80)

REFERENCE DATA

SREF = 2690.0000 SQ.FT. XMRP = 976.0000 IN. XT
LREF = 1290.3000 INCHES YMRP = .0000 IN. YT
BREF = 1290.3000 INCHES ZMRP = 400.0000 IN. ZT
SCALE = .0200

PARAMETRIC DATA

IB-ELV = 10.000 OB-ELV = 9.000
BDFLAP = .000 SPDBRK = .000
RUDDER = .000 SILTS = 1.000
MACH = .600 RN/L = 3.500

RUN NO. 936/ 0 RN/L = 3.51 GRADIENT INTERVAL = -5.00/ 5.00

ALPHAR	BETAR	CNFRS	CAFRS	CLMFRS	CYFRS	CYNFRS	CBLRS	CABRS	CYNBRS	CP9	CP10
4.276	-7.672	.01380	.01520	-.00980	-.01070	.02400	-.00230	.02650	.00510	-.33910	-.26390
4.325	-5.597	.01000	.01430	-.00510	-.01230	.02420	-.00160	.02670	.00520	-.33850	-.27000
4.295	-3.667	.00820	.01390	-.00280	-.01700	.02690	-.00120	.02760	.00540	-.34590	-.28320
4.101	.128	.00630	.01350	-.00030	-.03100	.03660	-.00080	.03030	.00590	-.36990	-.32060
4.142	3.942	.00450	.01420	.00270	-.03990	.04280	-.00040	.03340	.00650	-.40120	-.35930
4.080	5.851	.00130	.01470	.00540	-.04520	.04660	.00020	.03500	.00680	-.41980	-.37830
3.973	7.678	-.00190	.01510	.00770	-.04920	.04970	.00080	.03620	.00700	-.43020	-.39370
	GRADIENT	-.00049	.00004	.00072	-.00301	.00209	.00011	.00076	.00014	-.00727	-.01000

RUN NO. 937/ 0 RN/L = 3.51 GRADIENT INTERVAL = -5.00/ 5.00

ALPHAR	BETAR	CNFRS	CAFRS	CLMFRS	CYFRS	CYNFRS	CBLRS	CABRS	CYNBRS	CP9	CP10
6.460	-7.867	.01590	.01470	-.00880	.00070	.01640	-.00270	.02700	.00520	-.34280	-.27210
6.307	-5.712	.01350	.01450	-.00540	-.00280	.01800	-.00230	.02670	.00520	-.33880	-.26940
6.441	-3.806	.01330	.01350	-.00310	-.00470	.01890	-.00220	.02850	.00550	-.35570	-.29310
6.245	.131	.01560	.01370	-.00230	-.01860	.02900	-.00260	.03090	.00600	-.37370	-.33040
6.042	3.856	.01700	.01420	-.00120	-.02860	.03590	-.00290	.03340	.00650	-.40230	-.35830
6.205	5.882	.01840	.01430	-.00100	-.03350	.03960	-.00320	.03470	.00670	-.41600	-.37480
6.050	7.936	.01890	.01510	-.00020	-.03880	.04400	-.00320	.03540	.00690	-.42230	-.38310
	GRADIENT	.00048	.00009	.00025	-.00312	.00222	-.00009	.00064	.00013	-.00607	-.00852

RUN NO. 938/ 0 RN/L = 3.51 GRADIENT INTERVAL = -5.00/ 5.00

ALPHAR	BETAR	CNFRS	CAFRS	CLMFRS	CYFRS	CYNFRS	CBLRS	CABRS	CYNBRS	CP9	CP10
8.364	-7.970	.01990	.01320	-.00950	.01600	.00790	-.00360	.02750	.00530	-.34610	-.28050
8.299	-5.720	.01860	.01330	-.00560	.01400	.00820	-.00330	.02690	.00520	-.34060	-.27350
8.530	-3.930	.02040	.01310	-.00430	.01200	.00980	-.00360	.02820	.00550	-.35360	-.28970
8.233	.085	.02490	.01380	-.00370	-.00200	.01980	-.00440	.03140	.00610	-.38130	-.33390
8.424	3.975	.03450	.01360	-.00650	-.00850	.02420	-.00630	.03370	.00650	-.40970	-.35870
8.097	5.855	.03480	.01330	-.00660	-.01800	.03050	-.00650	.03460	.00670	-.41710	-.37110
8.377	7.961	.04100	.01430	-.00850	-.02190	.03420	-.00760	.03450	.00670	-.41400	-.37270
	GRADIENT	.00178	.00006	-.00028	-.00260	.00183	-.00034	.00070	.00013	-.00710	-.00874

IA156A, AEDC PWT 16T-470, 0 T S W/SILTS (R8NR55) (10 MAY 80)

REFERENCE DATA

SREF = 2690.0000 SQ.FT. XMRP = 976.0000 IN. XT
LREF = 1290.3000 INCHES YMRP = .0000 IN. YT
BREF = 1290.3000 INCHES ZMRP = 400.0000 IN. ZT
SCALE = .0200

PARAMETRIC DATA

IB-ELV = 10.000 OB-ELV = 9.000
BDFLAP = .000 SPDBRK = .000
RUDDER = .000 SILTS = 1.000
MACH = .800 RN/L = 3.500

RUN NO. 939/ 0 RN/L = 3.51 GRADIENT INTERVAL = -5.00/ 5.00

ALPHAR	BETAR	CNFRS	CAFRS	CLMFRS	CYFRS	CYNFRS	CBLRS	CABRS	CYNBRS	CP9	CP10
-8.625	-6.353	-.00820	.01070	-.01750	.03510	.00410	.00200	.02350	.00460	-.30040	-.23610
-8.544	-4.171	-.02650	.01180	-.00650	.04290	-.00180	.00560	.03000	.00580	-.37460	-.30840
-8.396	.222	-.06950	.01290	.02160	.03970	-.00270	.01400	.03330	.00650	-.40950	-.34960
-8.410	4.243	-.10000	.01260	.03630	.02850	.00510	.02000	.03640	.00710	-.43130	-.39810
-8.352	6.209	-.11620	.01270	.04450	.01870	.01120	.02320	.03770	.00730	-.43930	-.41830
	GRADIENT	-.00875	.00010	.00511	-.00170	.00080	.00171	.00076	.00015	-.00676	-.01064

RUN NO. 940/ 0 RN/L = 3.50 GRADIENT INTERVAL = -5.00/ 5.00

ALPHAR	BETAR	CNFRS	CAFRS	CLMFRS	CYFRS	CYNFRS	CBLRS	CABRS	CYNBRS	CP9	CP10
-6.435	-6.366	.00070	.01270	-.01800	.01330	.01490	.00030	.02410	.00470	-.30310	-.24530
-6.352	-4.223	-.01690	.01410	-.00690	.01760	.01020	.00370	.02800	.00540	-.34850	-.28970
-6.203	.035	-.04930	.01420	.01460	.00970	.01210	.01000	.03200	.00620	-.39090	-.33880
-6.312	4.327	-.07850	.01440	.03020	-.00060	.01900	.01580	.03530	.00690	-.41530	-.38810
-6.028	6.280	-.09170	.01520	.03740	-.00880	.02430	.01840	.03640	.00710	-.42750	-.40150
	GRADIENT	-.00720	.00004	.00434	-.00213	.00103	.00142	.00085	.00018	-.00781	-.01151

RUN NO. 941/ 0 RN/L = 3.50 GRADIENT INTERVAL = -5.00/ 5.00

ALPHAR	BETAR	CNFRS	CAFRS	CLMFRS	CYFRS	CYNFRS	CBLRS	CABRS	CYNBRS	CP9	CP10
-4.335	-6.493	.00350	.01430	-.01570	-.00410	.02360	-.00030	.02410	.00470	-.29980	-.24850
-4.308	-4.204	-.01130	.01570	-.00560	-.00200	.02030	.00260	.02700	.00530	-.33600	-.28030
-4.073	.155	-.03540	.01510	.01090	-.01340	.02540	.00740	.03130	.00610	-.37710	-.33510
-3.842	4.236	-.05700	.01610	.02410	-.02240	.03080	.01160	.03430	.00670	-.40690	-.37440
-4.058	6.221	-.07190	.01670	.03190	-.02530	.03310	.01450	.03560	.00690	-.42110	-.38880
	GRADIENT	-.00542	.00005	.00352	-.00242	.00124	.00107	.00087	.00017	-.00841	-.01117

RUN NO. 942/ 0 RN/L = 3.51 GRADIENT INTERVAL = -5.00/ 5.00

ALPHAR	BETAR	CNFRS	CAFRS	CLMFRS	CYFRS	CYNFRS	CBLRS	CABRS	CYNBRS	CP9	CP10
-.208	-7.043	.01140	.01690	-.01440	-.02280	.03280	-.00180	.02530	.00490	-.31970	-.25800
-.253	-5.088	.00220	.01670	-.00800	-.02440	.03280	.00010	.02570	.00500	-.32100	-.26440
-.256	-.646	-.01610	.01610	.00490	-.03230	.03690	.00350	.02970	.00580	-.35760	-.31850
-.217	3.439	-.03200	.01750	.01620	-.04100	.04270	.00670	.03360	.00650	-.39990	-.36610
-.228	5.298	-.04130	.01810	.02210	-.04470	.04520	.00840	.03560	.00690	-.42350	-.38650
	GRADIENT	-.00389	.00034	.00277	-.00213	.00142	.00078	.00095	.00017	-.01035	-.01165

IA156A, AEDC PWT 16T-470, O T S W/SILTS (R8NR55) (10 MAY 80)

REFERENCE DATA

SREF = 2690.0000 SQ.FT. XMRP = 976.0000 IN. XT
LREF = 1290.3000 INCHES YMRP = .0000 IN. YT
BREF = 1290.3000 INCHES ZMRP = 400.0000 IN. ZT
SCALE = .0200

PARAMETRIC DATA

IB-ELV = 10.000 OB-ELV = 9.000
BDFLAP = .000 SPDBRK = .000
RUDDER = .000 SILTS = 1.000
MACH = .800 RN/L = 3.500

RUN NO. 943/ 0 RN/L = 3.50 GRADIENT INTERVAL = -5.00/ 5.00

ALPHAR	BETAR	CNFRS	CAFRS	CLMFRS	CYFRS	CYNFRS	CBLRS	CABRS	CYNBRS	CP9	CP10
4.240	-5.589	.01010	.01740	-.00410	-.01250	.02580	-.00160	.02670	.00520	-.33570	-.27330
4.238	-3.614	.00770	.01680	-.00100	-.01750	.02810	-.00120	.02790	.00540	-.34590	-.29080
4.238	.021	.00720	.01640	.00090	-.03110	.03740	-.00100	.02980	.00580	-.36080	-.31860
4.103	3.830	.00360	.01720	.00420	-.04010	.04400	-.00030	.03410	.00660	-.40370	-.37390
4.008	5.795	-.00110	.01860	.00680	-.04580	.04860	.00060	.03560	.00690	-.42060	-.38980
	GRADIENT	-.00055	.00005	.00070	-.00303	.00213	.00012	.00084	.00016	-.00779	-.01119

RUN NO. 944/ 0 RN/L = 3.51 GRADIENT INTERVAL = -5.00/ 5.00

ALPHAR	BETAR	CNFRS	CAFRS	CLMFRS	CYFRS	CYNFRS	CBLRS	CABRS	CYNBRS	CP9	CP10
6.434	-5.802	.01580	.01760	-.00630	.00030	.01820	-.00270	.02720	.00530	-.34120	-.27860
6.507	-3.830	.01510	.01680	-.00370	-.00120	.01900	-.00260	.02840	.00550	-.35190	-.29470
6.282	.072	.01700	.01640	-.00230	-.01700	.03010	-.00300	.03080	.00600	-.36840	-.33290
6.133	3.764	.01870	.01670	-.00170	-.02630	.03640	-.00330	.03410	.00660	-.40580	-.36970
6.268	5.848	.02240	.01730	-.00260	-.03030	.04030	-.00400	.03540	.00690	-.42100	-.38600
	GRADIENT	.00047	-.00001	.00026	-.00331	.00230	-.00009	.00075	.00014	-.00707	-.00988

IA156A, AEDC PWT 16T-470, O T S W/SILTS (R8NR56) (10 MAY 80)

REFERENCE DATA

SREF = 2690.0000 SQ.FT. XMRP = 976.0000 IN. XT
LREF = 1290.3000 INCHES YMRP = .0000 IN. YT
BREF = 1290.3000 INCHES ZMRP = 400.0000 IN. ZT
SCALE = .0200

PARAMETRIC DATA

IB-ELV = 10.000 OB-ELV = 9.000
BDFLAP = .000 SPDBRK = .000
RUDDER = .000 SILTS = 1.000
MACH = .900 RN/L = 3.500

RUN NO. 952/ 0 RN/L = 3.51 GRADIENT INTERVAL = -5.00/ 5.00

ALPHAR	BETAR	CNFRS	CAFRS	CLMFRS	CYFRS	CYNFRS	CBLRS	CABRS	CYNBRS	CP9	CP10
-8.520	-6.291	-.00840	.01320	-.01840	.04470	.00090	.00170	.02700	.00520	-.33980	-.27510
-8.319	-4.050	-.02870	.01530	-.00560	.04930	-.00390	.00570	.03160	.00610	-.38890	-.33120
-8.505	.077	-.07120	.01460	.02120	.04660	-.00350	.01400	.03520	.00680	-.42570	-.37540
-8.508	4.282	-.10550	.01530	.03890	.03410	.00450	.02070	.03650	.00710	-.41890	-.41190
-8.552	6.160	-.12310	.01610	.04690	.02710	.00950	.02420	.03720	.00720	-.42460	-.42240
	GRADIENT	-.00921	.00000	.00534	-.00183	.00101	.00180	.00059	.00012	-.00358	-.00968

IA156A, AEDC PWT 16T-470, 0 T S W/SILTS (R8NR56) (10 MAY 80)

REFERENCE DATA

SREF = 2690.0000 SQ.FT. XMRP = 976.0000 IN. XT
LREF = 1290.3000 INCHES YMRP = .0000 IN. YT
BREF = 1290.3000 INCHES ZMRP = 400.0000 IN. ZT
SCALE = .0200

PARAMETRIC DATA

IB-ELV = 10.000 OB-ELV = 9.000
BDFLAP = .000 SPDBRK = .000
RUDDER = .000 SILTS = 1.000
MACH = .900 RN/L = 3.500

RUN NO. 953/ 0 RN/L = 3.50 GRADIENT INTERVAL = -5.00/ 5.00

ALPHAR	BETAR	CNFRS	CAFRS	CLMFRS	CYFRS	CYNFRS	CBLRS	CABRS	CYNBRS	CP9	CP10
-6.380	-6.382	.00020	.01560	-.01960	.01950	.01350	.00000	.02670	.00520	-.32950	-.27870
-6.271	-4.281	-.01630	.01740	-.00840	.02290	.00880	.00320	.03010	.00580	-.36970	-.31610
-6.242	.008	-.05030	.01600	.01360	.01770	.00980	.00990	.03330	.00650	-.39860	-.36050
-6.289	4.201	-.08150	.01760	.03130	.00870	.01500	.01600	.03630	.00700	-.41790	-.40840
-6.130	6.222	-.09810	.01770	.04000	.00150	.01980	.01930	.03830	.00740	-.43910	-.43310
	GRADIENT	-.00769	.00002	.00468	-.00167	.00073	.00151	.00073	.00014	-.00569	-.01088

RUN NO. 954/ 0 RN/L = 3.50 GRADIENT INTERVAL = -5.00/ 5.00

ALPHAR	BETAR	CNFRS	CAFRS	CLMFRS	CYFRS	CYNFRS	CBLRS	CABRS	CYNBRS	CP9	CP10
-4.287	-6.564	.00460	.01800	-.01760	-.00040	.02390	-.00080	.02650	.00510	-.32270	-.28140
-4.291	-4.254	-.00990	.01900	-.00810	.00270	.01930	.00200	.02980	.00580	-.36250	-.31640
-4.101	.122	-.03460	.01750	.00890	-.00750	.02360	.00680	.03180	.00620	-.37490	-.34830
-4.188	4.454	-.06470	.01960	.02700	-.01310	.02620	.01270	.03570	.00690	-.41440	-.39760
-4.009	6.375	-.07670	.01930	.03390	-.02050	.03100	.01510	.03800	.00740	-.44170	-.42340
	GRADIENT	-.00629	.00007	.00403	-.00182	.00079	.00123	.00068	.00013	-.00595	-.00932

RUN NO. 955/ 0 RN/L = 3.50 GRADIENT INTERVAL = -5.00/ 5.00

ALPHAR	BETAR	CNFRS	CAFRS	CLMFRS	CYFRS	CYNFRS	CBLRS	CABRS	CYNBRS	CP9	CP10
-.307	-7.306	.01320	.02080	-.01730	-.02150	.03400	-.00260	.02750	.00530	-.33670	-.28980
-.295	-5.224	.00410	.02030	-.01090	-.02110	.03240	-.00080	.02930	.00550	-.34420	-.30120
-.329	-.891	-.01340	.01980	.00180	-.02760	.03580	.00260	.03120	.00610	-.37380	-.33690
-.258	3.195	-.03110	.02030	.01530	-.03890	.04280	.00610	.03500	.00680	-.41490	-.38310
-.248	5.423	-.04150	.02200	.02230	-.04560	.04730	.00820	.03680	.00710	-.43880	-.39980
	GRADIENT	-.00433	.00012	.00330	-.00277	.00171	.00086	.00093	.00017	-.01006	-.01131

RUN NO. 956/ 0 RN/L = 3.50 GRADIENT INTERVAL = -5.00/ 5.00

ALPHAR	BETAR	CNFRS	CAFRS	CLMFRS	CYFRS	CYNFRS	CBLRS	CABRS	CYNBRS	CP9	CP10
4.431	-5.879	.01120	.02090	-.00480	-.01120	.02630	-.00220	.02890	.00560	-.35860	-.30020
4.511	-3.887	.00920	.02070	-.00220	-.01570	.02810	-.00180	.03020	.00590	-.37110	-.31650
3.981	.080	.00470	.02040	.00070	-.03160	.03810	-.00090	.03210	.00620	-.38500	-.34550
4.197	3.761	.00040	.02100	.00600	-.03980	.04360	-.00010	.03580	.00700	-.42750	-.38870
3.988	5.826	-.00570	.02180	.00900	-.04690	.04960	.00110	.03750	.00730	-.44510	-.40830
	GRADIENT	-.00115	.00004	.00107	-.00316	.00203	.00022	.00073	.00014	-.00732	-.00941

IA156A, AEDC PWT 16T-470, 0 T S W/SILTS (R8NR57) (10 MAY 80)

REFERENCE DATA

SREF = 2690.0000 SQ.FT. XMRP = 976.0000 IN. XT
LREF = 1290.3000 INCHES YMRP = .0000 IN. YT
BREF = 1290.3000 INCHES ZMRP = 400.0000 IN. ZT
SCALE = .0200

PARAMETRIC DATA

IB-ELV = 10.000 OB-ELV = 9.000
BDFLAP = .000 SPDBRK = .000
RUDDER = .000 SILTS = 1.000
MACH = .950 RN/L = 3.500

RUN NO. 957/ 0 RN/L = 3.50 GRADIENT INTERVAL = -5.00/ 5.00

ALPHAR	BETAR	CNFRS	CAFRS	CLMFRS	CYFRS	CYNFRS	CBLRS	CABRS	CYNBRS	CP9	CP10
-8.503	-6.400	-.00810	.01500	-.02010	.03660	.00690	.00170	.02890	.00560	-.36090	-.29680
-8.602	-4.133	-.02860	.01690	-.00830	.04560	-.00060	.00570	.03410	.00660	-.41320	-.36450
-8.459	.071	-.06990	.01730	.01820	.04450	-.00150	.01380	.03920	.00760	-.46140	-.43220
-8.400	4.140	-.10820	.01830	.03930	.03410	.00550	.02130	.03880	.00750	-.44600	-.43640
-8.375	6.075	-.12610	.01830	.04820	.02690	.01060	.02480	.04070	.00790	-.46730	-.45830
	GRADIENT	-.00962	.00017	.00576	-.00138	.00073	.00189	.00057	.00011	-.00401	-.00873

RUN NO. 959/ 0 RN/L = 3.49 GRADIENT INTERVAL = -5.00/ 5.00

ALPHAR	BETAR	CNFRS	CAFRS	CLMFRS	CYFRS	CYNFRS	CBLRS	CABRS	CYNBRS	CP9	CP10
-6.420	-6.341	-.00140	.01800	-.01890	.01330	.01820	.00030	.02880	.00560	-.35470	-.30110
-6.411	-4.342	-.01640	.02030	-.00980	.01870	.01270	.00330	.03280	.00640	-.39920	-.34830
-6.564	-.019	-.05320	.01940	.01350	.01950	.01090	.01040	.03780	.00730	-.44740	-.41440
-6.366	4.268	-.08650	.02080	.03420	.00450	.01800	.01700	.03960	.00770	-.45780	-.44340
-6.131	6.437	-.10350	.02140	.04410	-.00780	.02500	.02030	.04130	.00800	-.47480	-.46470
	GRADIENT	-.00814	.00006	.00511	-.00165	.00061	.00159	.00079	.00015	-.00681	-.01105

RUN NO. 958/ 0 RN/L = 3.49 GRADIENT INTERVAL = -5.00/ 5.00

ALPHAR	BETAR	CNFRS	CAFRS	CLMFRS	CYFRS	CYNFRS	CBLRS	CABRS	CYNBRS	CP9	CP10
-4.352	-6.530	.00260	.02010	-.01630	-.00470	.02720	-.00050	.02870	.00560	-.35020	-.30360
-4.436	-4.285	-.01080	.02120	-.00800	-.00140	.02220	.00210	.03320	.00640	-.39900	-.35760
-4.408	.270	-.04040	.02040	.01280	-.01270	.02660	.00790	.03660	.00710	-.43040	-.40310
-3.933	4.406	-.06540	.02290	.02940	-.02480	.03310	.01280	.03970	.00770	-.46170	-.44110
-4.012	6.248	-.08110	.02250	.03750	-.02800	.03530	.01590	.04220	.00820	-.49230	-.46760
	GRADIENT	-.00629	.00019	.00431	-.00269	.00125	.00123	.00075	.00015	-.00721	-.00961

RUN NO. 960/ 0 RN/L = 3.50 GRADIENT INTERVAL = -5.00/ 5.00

ALPHAR	BETAR	CNFRS	CAFRS	CLMFRS	CYFRS	CYNFRS	CBLRS	CABRS	CYNBRS	CP9	CP10
-.285	-7.212	.00900	.02210	-.01230	-.01980	.03550	-.00180	.02880	.00560	-.35490	-.30160
-.270	-5.164	-.00020	.02270	-.00550	-.02080	.03450	.00000	.03030	.00590	-.36950	-.32160
-.301	-.966	-.01570	.02300	.00580	-.03160	.03970	.00300	.03470	.00670	-.41840	-.37270
-.233	3.220	-.03300	.02470	.01820	-.04330	.04670	.00640	.03890	.00750	-.46320	-.42240
-.240	5.427	-.04290	.02450	.02420	-.04940	.05080	.00840	.04060	.00790	-.48430	-.44040
	GRADIENT	-.00413	.00041	.00296	-.00279	.00167	.00081	.00100	.00019	-.01070	-.01187

IA156A, AEDC PWT 16T-470, O T S W/SILTS (R8NR57) (10 MAY 80)

REFERENCE DATA

SREF =	2690.0000 SQ.FT.	XMRP =	976.0000 IN. XT		
LREF =	1290.3000 INCHES	YMRP =	.0000 IN. YT		
BREF =	1290.3000 INCHES	ZMRP =	400.0000 IN. ZT		
SCALE =	.0200				

PARAMETRIC DATA

IB-ELV =	10.000	OB-ELV =	9.000
BDFLAP =	.000	SPDBRK =	.000
RUDDER =	.000	SILTS =	1.000
MACH =	.950	RN/L =	3.500

RUN NO. 961/ 0 RN/L = 3.49 GRADIENT INTERVAL = -5.00/ 5.00

ALPHAR	BETAR	CNFRS	CAFRS	CLMFRS	CYFRS	CYNFRS	CBLRS	CABRS	CYNBRS	CP9	CP10
4.250	-5.729	.00950	.02250	-.00460	-.01410	.02890	-.00200	.03210	.00620	-.39590	-.33450
4.272	-3.705	.00700	.02320	-.00250	-.01890	.03120	-.00150	.03320	.00650	-.40620	-.35110
3.915	-.093	.00210	.02360	.00090	-.03120	.04000	-.00050	.03620	.00700	-.43640	-.38810
4.138	3.664	-.00420	.02430	.00950	-.03780	.04470	.00070	.03910	.00760	-.47180	-.41960
4.107	5.769	-.00780	.02440	.01280	-.04650	.05130	.00150	.04120	.00800	-.49560	-.44330
	GRADIENT	-.00152	.00015	.00163	-.00256	.00183	.00030	.00080	.00015	-.00891	-.00929

IA156A, AEDC PWT 16T-470, O T S W/SILTS (R8NR58) (10 MAY 80)

REFERENCE DATA

SREF =	2690.0000 SQ.FT.	XMRP =	976.0000 IN. XT		
LREF =	1290.3000 INCHES	YMRP =	.0000 IN. YT		
BREF =	1290.3000 INCHES	ZMRP =	400.0000 IN. ZT		
SCALE =	.0200				

PARAMETRIC DATA

IB-ELV =	10.000	OB-ELV =	9.000
BDFLAP =	.000	SPDBRK =	.000
RUDDER =	.000	SILTS =	1.000
MACH =	1.050	RN/L =	3.500

RUN NO. 962/ 0 RN/L = 3.50 GRADIENT INTERVAL = -5.00/ 5.00

ALPHAR	BETAR	CNFRS	CAFRS	CLMFRS	CYFRS	CYNFRS	CBLRS	CABRS	CYNBRS	CP9	CP10
-8.549	-6.423	-.00610	.02200	-.02670	.03410	.01190	.00130	.04030	.00780	-.49070	-.42770
-8.744	-4.151	-.03060	.02410	-.01190	.04500	.00480	.00610	.04640	.00900	-.55300	-.50270
-8.714	-.064	-.07890	.02530	.01990	.04320	.00480	.01550	.05230	.01020	-.61930	-.57160
-8.552	4.238	-.12390	.02570	.04810	.02570	.01660	.02430	.05330	.01040	-.62600	-.58780
-8.596	6.177	-.14470	.02710	.05860	.02050	.01970	.02840	.05540	.01070	-.65500	-.60550
	GRADIENT	-.01112	.00019	.00715	-.00232	.00142	.00217	.00082	.00017	-.00864	-.01009

RUN NO. 963/ 0 RN/L = 3.50 GRADIENT INTERVAL = -5.00/ 5.00

ALPHAR	BETAR	CNFRS	CAFRS	CLMFRS	CYFRS	CYNFRS	CBLRS	CABRS	CYNBRS	CP9	CP10
-6.496	-6.388	.00200	.02450	-.02490	.00800	.02430	-.00030	.04110	.00800	-.49510	-.44060
-6.429	-4.405	-.01530	.02660	-.01300	.01280	.01970	.00300	.04530	.00880	-.54330	-.48790
-6.617	-.090	-.05890	.02660	.01610	.01060	.02060	.01150	.05040	.00980	-.59600	-.55050
-6.433	4.231	-.09670	.02860	.04040	-.00300	.02730	.01890	.05370	.01040	-.63420	-.58880
-6.131	6.397	-.11360	.02970	.05090	-.01750	.03580	.02230	.05430	.01050	-.63900	-.59680
	GRADIENT	-.00943	.00023	.00618	-.00183	.00088	.00184	.00097	.00019	-.01053	-.01168

IA156A, AEDC PWT 16T-470, O T S W/SILTS (R8NR58) (10 MAY 80)

REFERENCE DATA

SREF = 2690.0000 SQ.FT. XMRP = 976.0000 IN. XT
LREF = 1290.3000 INCHES YMRP = .0000 IN. YT
BREF = 1290.3000 INCHES ZMRP = 400.0000 IN. ZT
SCALE = .0200

PARAMETRIC DATA

IB-ELV = 10.000 OB-ELV = 9.000
BDFLAP = .000 SPDBRK = .000
RUDDER = .000 SILTS = 1.000
MACH = 1.050 RN/L = 3.500

RUN NO. 964/ 0 RN/L = 3.50 GRADIENT INTERVAL = -5.00/ 5.00

ALPHAR	BETAR	CNFRS	CAFRS	CLMFRS	CYFRS	CYNFRS	CBLRS	CABRS	CYNBRS	CP9	CP10
-4.244	-6.513	.00650	.02650	-.02100	-.01440	.03620	-.00120	.04110	.00800	-.49070	-.44570
-4.489	-4.321	-.00900	.02790	-.01120	-.00910	.03060	.00180	.04460	.00870	-.53600	-.47990
-4.467	.238	-.04480	.02780	.01490	-.02090	.03670	.00870	.05000	.00970	-.59110	-.54720
-3.932	4.357	-.07230	.03070	.03460	-.03530	.04450	.01410	.05240	.01020	-.62210	-.57160
-4.055	6.225	-.08910	.03070	.04370	-.03610	.04530	.01740	.05330	.01040	-.63140	-.58280
	GRADIENT	-.00730	.00032	.00529	-.00301	.00160	.00142	.00090	.00017	-.00996	-.01064

RUN NO. 965/ 0 RN/L = 3.50 GRADIENT INTERVAL = -5.00/ 5.00

ALPHAR	BETAR	CNFRS	CAFRS	CLMFRS	CYFRS	CYNFRS	CBLRS	CABRS	CYNBRS	CP9	CP10
-.307	-7.318	.01140	.02750	-.01430	-.02820	.04360	-.00230	.04040	.00790	-.48600	-.43510
-.302	-5.163	.00190	.02800	-.00670	-.03060	.04320	-.00040	.04240	.00820	-.50720	-.45800
-.353	-.933	-.01610	.03010	.00680	-.04470	.05210	.00310	.04850	.00940	-.57540	-.52830
-.265	3.328	-.03780	.03230	.02290	-.05610	.05940	.00730	.05260	.01020	-.62210	-.57520
-.261	5.476	-.04940	.03260	.03030	-.06050	.06190	.00960	.05340	.01040	-.63300	-.58340
	GRADIENT	-.00509	.00052	.00378	-.00268	.00171	.00099	.00096	.00019	-.01096	-.01101

RUN NO. 966/ 0 RN/L = 3.50 GRADIENT INTERVAL = -5.00/ 5.00

ALPHAR	BETAR	CNFRS	CAFRS	CLMFRS	CYFRS	CYNFRS	CBLRS	CABRS	CYNBRS	CP9	CP10
4.300	-5.789	.01220	.02910	-.00750	-.01540	.03390	-.00250	.04360	.00850	-.52260	-.47090
4.266	-3.648	.01010	.03010	-.00510	-.02230	.03760	-.00210	.04570	.00890	-.54200	-.49910
3.985	.026	.00250	.03130	.00310	-.03710	.04720	-.00060	.04810	.00930	-.57030	-.52420
4.138	3.736	-.00390	.03210	.01040	-.04570	.05360	.00060	.05040	.00980	-.60150	-.54670
4.126	5.751	-.00850	.03140	.01420	-.05460	.06050	.00150	.05100	.00990	-.60830	-.55280
	GRADIENT	-.00190	.00027	.00210	-.00317	.00217	.00037	.00064	.00012	-.00806	-.00645

IA156A, AEDC PWT 16T-470, 0 T S W/SILTS (R8NR59) (10 MAY 80)

REFERENCE DATA

SREF = 2690.0000 SQ.FT. XMRP = 976.0000 IN. XT
LREF = 1290.3000 INCHES YMRP = .0000 IN. YT
BREF = 1290.3000 INCHES ZMRP = 400.0000 IN. ZT
SCALE = .0200

PARAMETRIC DATA

IB-ELV = 10.000 OB-ELV = 9.000
BDFLAP = .000 SPDBRK = .000
RUDDER = .000 SILTS = 1.000
MACH = 1.100 RN/L = 3.500

RUN NO. 967/ 0 RN/L = 3.49 GRADIENT INTERVAL = -5.00/ 5.00

ALPHAR	BETAR	CNFRS	CAFRS	CLMFRS	CYFRS	CYNFRS	CBLRS	CABRS	CYNBRS	CP9	CP10
-8.596	-6.409	-.00930	.02310	-.02470	.03740	.00980	.00190	.03820	.00740	-.46250	-.40670
-8.733	-4.141	-.03250	.02520	-.01060	.04710	.00370	.00640	.04330	.00840	-.51490	-.47080
-8.743	-.071	-.07890	.02820	.01960	.04510	.00450	.01550	.04820	.00930	-.56980	-.52660
-8.565	4.267	-.12420	.02930	.04780	.02650	.01600	.02430	.05080	.00990	-.59960	-.55730
-8.597	6.203	-.14300	.03110	.05760	.01810	.02100	.02810	.05140	.01000	-.61160	-.55920
	GRADIENT	-.01090	.00049	.00694	-.00247	.00148	.00213	.00089	.00018	-.01004	-.01025

RUN NO. 968/ 0 RN/L = 3.49 GRADIENT INTERVAL = -5.00/ 5.00

ALPHAR	BETAR	CNFRS	CAFRS	CLMFRS	CYFRS	CYNFRS	CBLRS	CABRS	CYNBRS	CP9	CP10
-6.513	-6.386	.00010	.02610	-.02390	.01080	.02220	.00000	.03770	.00730	-.45540	-.40390
-6.488	-4.408	-.01640	.02770	-.01310	.01590	.01790	.00330	.04170	.00810	-.50260	-.44750
-6.667	-.103	-.05930	.02890	.01560	.01340	.01920	.01160	.04620	.00900	-.54740	-.50430
-6.440	4.258	-.09610	.03200	.04000	-.00590	.02860	.01880	.04910	.00950	-.58160	-.53660
-6.385	6.276	-.11530	.03310	.05070	-.01100	.03220	.02260	.05020	.00970	-.59160	-.55060
	GRADIENT	-.00920	.00050	.00613	-.00252	.00124	.00179	.00085	.00016	-.00911	-.01028

RUN NO. 969/ 0 RN/L = 3.49 GRADIENT INTERVAL = -5.00/ 5.00

ALPHAR	BETAR	CNFRS	CAFRS	CLMFRS	CYFRS	CYNFRS	CBLRS	CABRS	CYNBRS	CP9	CP10
-4.263	-6.521	.00580	.02770	-.02130	-.01230	.03450	-.00110	.03790	.00740	-.45310	-.40970
-4.520	-4.331	-.00980	.02880	-.01160	-.00670	.02890	.00190	.04090	.00790	-.49470	-.43720
-4.464	.243	-.04570	.03050	.01530	-.01970	.03520	.00890	.04480	.00870	-.53210	-.48870
-3.937	4.373	-.07280	.03320	.03460	-.03190	.04220	.01420	.04750	.00920	-.56430	-.51800
-4.046	6.227	-.08960	.03380	.04400	-.03310	.04330	.01750	.04900	.00950	-.58270	-.53370
	GRADIENT	-.00725	.00050	.00532	-.00289	.00153	.00142	.00076	.00015	-.00800	-.00932

RUN NO. 970/ 0 RN/L = 3.49 GRADIENT INTERVAL = -5.00/ 5.00

ALPHAR	BETAR	CNFRS	CAFRS	CLMFRS	CYFRS	CYNFRS	CBLRS	CABRS	CYNBRS	CP9	CP10
-.313	-7.451	.01100	.02920	-.01440	-.02860	.04410	-.00230	.03660	.00710	-.44170	-.39200
-.295	-5.197	.00060	.02900	-.00600	-.03050	.04270	-.00020	.03750	.00730	-.45100	-.40260
-.345	-.839	-.01790	.03190	.00760	-.04320	.05050	.00340	.04200	.00820	-.50310	-.45400
-.251	3.282	-.03930	.03410	.02370	-.05300	.05650	.00760	.04630	.00900	-.55170	-.50370
-.246	5.476	-.05150	.03540	.03150	-.05670	.05850	.01000	.04660	.00900	-.55390	-.50730
	GRADIENT	-.00519	.00053	.00391	-.00238	.00146	.00102	.00104	.00019	-.01179	-.01206

IA156A, AEDC PWT 16T-470, 0 T S W/SILTS (R8NR59) (10 MAY 80)

REFERENCE DATA

SREF = 2690.0000 SQ.FT. XMRP = 976.0000 IN. XT
LREF = 1290.3000 INCHES YMRP = .0000 IN. YT
BREF = 1290.3000 INCHES ZMRP = 400.0000 IN. ZT
SCALE = .0200

PARAMETRIC DATA

IB-ELV = 10.000 OB-ELV = 9.000
BDFLAP = .000 SPDBRK = .000
RUDDER = .000 SILTS = 1.000
MACH = 1.100 RN/L = 3.500

RUN NO. 971/ 0 RN/L = 3.49 GRADIENT INTERVAL = -5.00/ 5.00

ALPHAR	BETAR	CNFRS	CAFRS	CLMFRS	CYFRS	CYNFRS	CBLRS	CABRS	CYNBRS	CP9	CP10
4.453	-5.734	.01200	.03050	-.00690	-.01260	.03210	-.00250	.03750	.00730	-.45140	-.40290
4.312	-3.669	.00940	.03160	-.00400	-.01980	.03590	-.00200	.04010	.00780	-.47770	-.43560
4.012	-.017	.00120	.03220	.00450	-.03590	.04630	-.00040	.04250	.00830	-.50750	-.46040
4.176	3.686	-.00600	.03410	.01260	-.04370	.05180	.00100	.04410	.00860	-.52930	-.47510
4.150	5.738	-.01050	.03450	.01600	-.05280	.05900	.00190	.04460	.00870	-.53550	-.48080
	GRADIENT	-.00209	.00034	.00226	-.00325	.00216	.00041	.00054	.00011	-.00701	-.00537

IA156A, AEDC PWT 16T-470, 0 T S W/SILTS (R8NR60) (10 MAY 80)

REFERENCE DATA

SREF = 2690.0000 SQ.FT. XMRP = 976.0000 IN. XT
LREF = 1290.3000 INCHES YMRP = .0000 IN. YT
BREF = 1290.3000 INCHES ZMRP = 400.0000 IN. ZT
SCALE = .0200

PARAMETRIC DATA

IB-ELV = 10.000 OB-ELV = 9.000
BDFLAP = .000 SPDBRK = .000
RUDDER = .000 SILTS = 1.000
MACH = 1.150 RN/L = 3.500

RUN NO. 972/ 0 RN/L = 3.49 GRADIENT INTERVAL = -5.00/ 5.00

ALPHAR	BETAR	CNFRS	CAFRS	CLMFRS	CYFRS	CYNFRS	CBLRS	CABRS	CYNBRS	CP9	CP10
-8.595	-6.437	-.00830	.02470	-.02700	.03690	.01050	.00170	.03590	.00700	-.43570	-.38300
-8.765	-4.156	-.03260	.02680	-.01230	.04890	.00250	.00640	.03980	.00770	-.47720	-.43000
-8.754	-.043	-.08030	.02950	.01910	.04760	.00170	.01580	.04480	.00870	-.53100	-.49000
-8.569	4.302	-.12810	.03150	.05040	.02750	.01290	.02510	.04690	.00910	-.55420	-.51350
-8.600	6.215	-.14830	.03240	.06060	.01930	.01820	.02910	.04820	.00930	-.57230	-.52440
	GRADIENT	-.01129	.00055	.00741	-.00255	.00124	.00221	.00084	.00016	-.00907	-.00983

RUN NO. 973/ 0 RN/L = 3.49 GRADIENT INTERVAL = -5.00/ 5.00

ALPHAR	BETAR	CNFRS	CAFRS	CLMFRS	CYFRS	CYNFRS	CBLRS	CABRS	CYNBRS	CP9	CP10
-6.514	-6.416	.00020	.02690	-.02490	.01110	.02220	.00000	.03480	.00670	-.41970	-.37220
-6.451	-4.414	-.01690	.02890	-.01360	.01710	.01700	.00330	.03810	.00740	-.46200	-.40670
-6.648	-.062	-.06120	.03030	.01660	.01440	.01660	.01200	.04350	.00840	-.51510	-.47470
-6.423	4.275	-.09960	.03330	.04210	-.00090	.02430	.01950	.04580	.00890	-.54260	-.49990
-6.387	6.298	-.12040	.03520	.05350	-.00530	.02780	.02350	.04630	.00900	-.54800	-.50680
	GRADIENT	-.00952	.00051	.00641	-.00207	.00084	.00186	.00089	.00017	-.00928	-.01073

IA156A, AEDC PWT 16T-470, O T S W/SILTS (R8NR60) (10 MAY 80)

REFERENCE DATA

SREF = 2690.0000 SQ.FT. XMRP = 976.0000 IN. XT
LREF = 1290.3000 INCHES YMRP = .0000 IN. YT
BREF = 1290.3000 INCHES ZMRP = 400.0000 IN. ZT
SCALE = .0200

PARAMETRIC DATA

IB-ELV = 10.000 OB-ELV = 9.000
BDFLAP = .000 SPDBRK = .000
RUDDER = .000 SILTS = 1.000
MACH = 1.150 RN/L = 3.500

RUN NO. 974/ 0 RN/L = 3.49 GRADIENT INTERVAL = -5.00/ 5.00

ALPHAR	BETAR	CNFRS	CAFRS	CLMFRS	CYFRS	CYNFRS	CBLRS	CABRS	CYNBRS	CP9	CP10
-4.249	-6.514	.00460	.02810	-.02040	-.01250	.03410	-.00090	.03480	.00680	-.41770	-.37500
-4.497	-4.335	-.01030	.02960	-.01150	-.00620	.02800	.00200	.03770	.00730	-.45660	-.40320
-4.453	.257	-.04790	.03160	.01690	-.01840	.03340	.00930	.04270	.00830	-.50910	-.46420
-3.908	4.381	-.07550	.03520	.03680	-.02830	.03940	.01470	.04420	.00860	-.52650	-.48010
-4.051	6.261	-.09290	.03570	.04640	-.02910	.04000	.01810	.04590	.00890	-.54540	-.49870
	GRADIENT	-.00749	.00064	.00555	-.00254	.00131	.00146	.00075	.00015	-.00808	-.00891

RUN NO. 975/ 0 RN/L = 3.49 GRADIENT INTERVAL = -5.00/ 5.00

ALPHAR	BETAR	CNFRS	CAFRS	CLMFRS	CYFRS	CYNFRS	CBLRS	CABRS	CYNBRS	CP9	CP10
-.277	-7.326	.00940	.02960	-.01280	-.02640	.04180	-.00200	.03420	.00660	-.41530	-.36370
-.256	-5.198	-.00050	.03010	-.00460	-.02930	.04170	.00000	.03530	.00690	-.42770	-.37730
-.293	-.924	-.01850	.03270	.00880	-.04100	.04850	.00350	.04120	.00800	-.49480	-.44450
-.210	3.276	-.03950	.03630	.02460	-.05140	.05500	.00760	.04450	.00860	-.53000	-.48310
-.198	5.488	-.05130	.03730	.03250	-.05460	.05640	.00990	.04480	.00870	-.53470	-.48620
	GRADIENT	-.00500	.00086	.00376	-.00248	.00165	.00098	.00079	.00014	-.00838	-.00919

RUN NO. 976/ 0 RN/L = 3.49 GRADIENT INTERVAL = -5.00/ 5.00

ALPHAR	BETAR	CNFRS	CAFRS	CLMFRS	CYFRS	CYNFRS	CBLRS	CABRS	CYNBRS	CP9	CP10
4.352	-5.785	.01120	.03150	-.00650	-.01190	.03200	-.00240	.03590	.00700	-.43390	-.38430
4.364	-3.736	.00880	.03300	-.00340	-.01760	.03470	-.00190	.03770	.00730	-.45130	-.40760
4.215	.060	.00070	.03470	.00610	-.03280	.04420	-.00030	.04030	.00780	-.48280	-.43530
4.198	3.655	-.00620	.03580	.01340	-.04350	.05210	.00100	.04300	.00840	-.51340	-.46610
4.167	5.746	-.01050	.03630	.01660	-.05110	.05770	.00190	.04270	.00830	-.51340	-.46000
	GRADIENT	-.00203	.00038	.00228	-.00351	.00236	.00039	.00072	.00015	-.00840	-.00791

IA156A, AEDC PWT 16T-470, 0 T S W/SILTS (R8NR61) (10 MAY 80)

REFERENCE DATA

SREF = 2690.0000 SQ.FT. XMRP = 976.0000 IN. XT
LREF = 1290.3000 INCHES YMRP = .0000 IN. YT
BREF = 1290.3000 INCHES ZMRP = 400.0000 IN. ZT
SCALE = .0200

PARAMETRIC DATA

IB-ELV = 10.000 OB-ELV = 9.000
BDFLAP = .000 SPDBRK = .000
RUDDER = .000 SILTS = 1.000
MACH = 1.250 RN/L = 3.500

RUN NO. 977/ 0 RN/L = 3.51 GRADIENT INTERVAL = -5.00/ 5.00

ALPHAR	BETAR	CNFRS	CAFRS	CLMFRS	CYFRS	CYNFRS	CBLRS	CABRS	CYNBRS	CP9	CP10
-8.553	-6.434	-.01530	.02550	-.02300	.04050	.00610	.00300	.03290	.00640	-.39720	-.35280
-8.734	-4.162	-.03860	.02750	-.00800	.04910	-.00020	.00760	.03570	.00690	-.42430	-.38830
-8.693	-.012	-.08430	.03080	.02340	.04450	.00020	.01650	.04090	.00790	-.48290	-.44770
-8.532	4.323	-.12740	.03390	.05130	.02800	.00830	.02490	.04200	.00820	-.49970	-.45630
-8.600	6.287	-.14910	.03540	.06180	.02280	.01200	.02920	.04290	.00830	-.51270	-.46320
	GRADIENT	-.01046	.00075	.00698	-.00250	.00101	.00204	.00074	.00015	-.00885	-.00797

RUN NO. 978/ 0 RN/L = 3.51 GRADIENT INTERVAL = -5.00/ 5.00

ALPHAR	BETAR	CNFRS	CAFRS	CLMFRS	CYFRS	CYNFRS	CBLRS	CABRS	CYNBRS	CP9	CP10
-6.481	-6.401	-.00600	.02700	-.02100	.01380	.01810	.00120	.03200	.00620	-.38520	-.34290
-6.424	-4.421	-.02340	.02890	-.00880	.01880	.01370	.00460	.03520	.00680	-.42370	-.37900
-6.581	-.040	-.06420	.03140	.02020	.01270	.01500	.01250	.03970	.00770	-.47370	-.43140
-6.389	4.311	-.10130	.03540	.04350	.00510	.01870	.01980	.04110	.00800	-.48960	-.44560
-6.368	6.325	-.11950	.03700	.05330	.00010	.02220	.02340	.04180	.00810	-.50010	-.45190
	GRADIENT	-.00892	.00074	.00599	-.00157	.00057	.00174	.00068	.00014	-.00755	-.00763

RUN NO. 979/ 0 RN/L = 3.52 GRADIENT INTERVAL = -5.00/ 5.00

ALPHAR	BETAR	CNFRS	CAFRS	CLMFRS	CYFRS	CYNFRS	CBLRS	CABRS	CYNBRS	CP9	CP10
-4.220	-6.530	-.00060	.02810	-.01660	-.00950	.03010	.00010	.03140	.00610	-.37720	-.33760
-4.439	-4.330	-.01730	.02990	-.00530	-.00550	.02600	.00330	.03490	.00680	-.42030	-.37350
-4.392	.262	-.04940	.03270	.01840	-.01200	.02830	.00960	.03810	.00740	-.45690	-.41160
-3.896	4.402	-.07590	.03630	.03710	-.02050	.03340	.01480	.04000	.00780	-.47850	-.43270
-4.015	6.269	-.09290	.03720	.04650	-.02210	.03440	.01810	.04240	.00820	-.50950	-.45600
	GRADIENT	-.00672	.00073	.00486	-.00171	.00084	.00132	.00059	.00011	-.00669	-.00681

RUN NO. 980/ 0 RN/L = 3.50 GRADIENT INTERVAL = -5.00/ 5.00

ALPHAR	BETAR	CNFRS	CAFRS	CLMFRS	CYFRS	CYNFRS	CBLRS	CABRS	CYNBRS	CP9	CP10
-.226	-7.351	.00480	.02970	-.00910	-.02410	.03980	-.00110	.03060	.00590	-.37320	-.32310
-.207	-5.223	-.00440	.03030	-.00170	-.02750	.04010	.00070	.03230	.00630	-.39210	-.34460
-.219	-.914	-.02320	.03410	.01330	-.03860	.04570	.00440	.03750	.00730	-.45540	-.39980
-.136	3.293	-.04220	.03710	.02810	-.04900	.05170	.00810	.04090	.00790	-.49340	-.43790
-.166	5.527	-.05340	.03830	.03520	-.05250	.05360	.01030	.04140	.00800	-.49990	-.44260
	GRADIENT	-.00452	.00071	.00352	-.00247	.00143	.00088	.00081	.00014	-.00903	-.00905

IA156A, AEDC PWT 16T-470, O T S W/SILTS (R8NR61) (10 MAY 80)

REFERENCE DATA

SREF = 2690.0000 SQ.FT. XMRP = 976.0000 IN. XT
LREF = 1290.3000 INCHES YMRP = .0000 IN. YT
BREF = 1290.3000 INCHES ZMRP = 400.0000 IN. ZT
SCALE = .0200

PARAMETRIC DATA

IB-ELV = 10.000 OB-ELV = 9.000
BDFLAP = .000 SPDBRK = .000
RUDDER = .000 SILTS = 1.000
MACH = 1.250 RN/L = 3.500

RUN NO. 981/ 0 RN/L = 3.50 GRADIENT INTERVAL = -5.00/ 5.00

ALPHAR	BETAR	CNFRS	CAFRS	CLMFRS	CYFRS	CYNFRS	CBLRS	CABRS	CYNBRS	CP9	CP10
4.427	-5.795	.01030	.03160	-.00540	-.00940	.03040	-.00220	.03280	.00640	-.39900	-.34900
4.405	-3.734	.00770	.03310	-.00250	-.01380	.03240	-.00170	.03450	.00670	-.41670	-.36970
4.287	.055	-.00180	.03490	.00880	-.02890	.04200	.00020	.03730	.00720	-.45040	-.40010
4.265	3.637	-.00780	.03710	.01620	-.04150	.05110	.00130	.03900	.00760	-.47060	-.41780
4.254	5.743	-.01220	.03780	.01980	-.04970	.05700	.00220	.03960	.00770	-.47820	-.42480
	GRADIENT	-.00211	.00054	.00254	-.00376	.00254	.00041	.00061	.00012	-.00733	-.00654

IA156A, AEDC PWT 16T-470, O T S W/SILTS (R8NR62) (10 MAY 80)

REFERENCE DATA

SREF = 2690.0000 SQ.FT. XMRP = 976.0000 IN. XT
LREF = 1290.3000 INCHES YMRP = .0000 IN. YT
BREF = 1290.3000 INCHES ZMRP = 400.0000 IN. ZT
SCALE = .0200

PARAMETRIC DATA

IB-ELV = 10.000 OB-ELV = 11.000
BDFLAP = .000 SPDBRK = .000
RUDDER = .000 SILTS = 1.000
MACH = .300 RN/L = 3.500

RUN NO. 985/ 0 RN/L = 2.62 GRADIENT INTERVAL = -5.00/ 5.00

ALPHAR	BETAR	CNFRS	CAFRS	CLMFRS	CYFRS	CYNFRS	CBLRS	CABRS	CYNBRS	CP9	CP10
-6.197	-10.157	.01910	.01170	-.02640	-.01040	.02970	-.00360	.02390	.00460	-.30990	-.23520
-6.159	-5.981	-.00740	.01280	-.01000	.00060	.01750	.00160	.02680	.00520	-.35110	-.25930
-6.069	.162	-.04960	.01150	.01660	-.00590	.01730	.00980	.03280	.00640	-.40970	-.33860
-5.809	6.414	-.08840	.01260	.03840	-.02300	.02860	.01740	.03710	.00720	-.44460	-.40080
-5.970	10.331	-.11700	.01320	.05220	-.03710	.03880	.02300	.03940	.00770	-.47680	-.42180
	GRADIENT	.00000	.00000	.00000	.00000	.00000	.00000	.00000	.00000	.00000	.00000

RUN NO. 986/ 0 RN/L = 2.62 GRADIENT INTERVAL = -5.00/ 5.00

ALPHAR	BETAR	CNFRS	CAFRS	CLMFRS	CYFRS	CYNFRS	CBLRS	CABRS	CYNBRS	CP9	CP10
-.239	-10.811	.02380	.01600	-.02360	-.02170	.03340	-.00460	.02650	.00510	-.34530	-.25930
-.235	-6.755	.00440	.01460	-.00820	-.02280	.03180	-.00080	.02480	.00480	-.31900	-.24680
-.215	-.567	-.01860	.01410	.00790	-.03530	.03730	.00370	.03120	.00610	-.38990	-.32030
-.185	5.418	-.03950	.01680	.02180	-.04750	.04540	.00780	.03390	.00660	-.41500	-.35750
-.183	9.582	-.05490	.01690	.03110	-.05820	.05300	.01080	.03700	.00720	-.45170	-.39030
	GRADIENT	.00000	.00000	.00000	.00000	.00000	.00000	.00000	.00000	.00000	.00000

IA156A, AEDC PWT 16T-470, 0 T S W/SILTS (R8NR62) (10 MAY 80)

REFERENCE DATA

SREF = 2690.0000 SQ.FT. XMRP = 976.0000 IN. XT
LREF = 1290.3000 INCHES YMRP = .0000 IN. YT
BREF = 1290.3000 INCHES ZMRP = 400.0000 IN. ZT
SCALE = .0200

PARAMETRIC DATA

IB-ELV = 10.000 OB-ELV = 11.000
BDFLAP = .000 SPDBRK = .000
RUDDER = .000 SILTS = 1.000
MACH = .300 RN/L = 3.500

RUN NO. 987/ 0 RN/L = 2.62 GRADIENT INTERVAL = -5.00/ 5.00

ALPHAR	BETAR	CNFRS	CAFRS	CLMFRS	CYFRS	CYNFRS	CBLRS	CABRS	CYNBRS	CP9	CP10
6.272	-9.749	.01470	.01560	-.00890	.00590	.01370	-.00290	.02730	.00530	-.36040	-.26140
6.050	-5.570	.01000	.01430	-.00130	.00000	.01630	-.00200	.02660	.00520	-.34570	-.26180
5.938	.105	.01400	.01480	-.00090	-.02070	.02940	-.00270	.02950	.00570	-.37100	-.30030
6.024	5.986	.01910	.01540	-.00120	-.03620	.04030	-.00360	.03320	.00640	-.40450	-.35200
5.891	9.829	.01630	.01670	.00120	-.04710	.04840	-.00310	.03510	.00680	-.42600	-.37430
	GRADIENT	.00000	.00000	.00000	.00000	.00000	.00000	.00000	.00000	.00000	.00000

IA156A, AEDC PWT 16T-470, 0 T S W/SILTS (R8NR63) (10 MAY 80)

REFERENCE DATA

SREF = 2690.0000 SQ.FT. XMRP = 976.0000 IN. XT
LREF = 1290.3000 INCHES YMRP = .0000 IN. YT
BREF = 1290.3000 INCHES ZMRP = 400.0000 IN. ZT
SCALE = .0200

PARAMETRIC DATA

IB-ELV = 10.000 OB-ELV = 11.000
BDFLAP = .000 SPDBRK = .000
RUDDER = .000 SILTS = 1.000
MACH = .300 RN/L = 3.500

RUN NO. 984/ 0 RN/L = 2.64 GRADIENT INTERVAL = -5.00/ 5.00

ALPHAR	BETAR	CNFRS	CAFRS	CLMFRS	CYFRS	CYNFRS	CBLRS	CABRS	CYNBRS	CP9	CP10
-10.391	-8.110	-.00260	.00720	-.01910	.03400	.00630	.00060	.02530	.00490	-.33580	-.24110
-10.072	-5.913	-.01940	.00910	-.00950	.04070	-.00120	.00390	.02830	.00550	-.37670	-.26970
-10.037	.280	-.08240	.00890	.02800	.04200	-.00790	.01620	.03510	.00680	-.44310	-.35650
-10.091	6.369	-.13280	.00830	.05240	.01170	.01240	.02610	.03950	.00770	-.47110	-.42930
-10.148	8.352	-.15120	.00880	.06150	-.00030	.01980	.02970	.04110	.00800	-.49100	-.44610
	GRADIENT	.00000	.00000	.00000	.00000	.00000	.00000	.00000	.00000	.00000	.00000

RUN NO. 988/ 0 RN/L = 2.63 GRADIENT INTERVAL = -5.00/ 5.00

ALPHAR	BETAR	CNFRS	CAFRS	CLMFRS	CYFRS	CYNFRS	CBLRS	CABRS	CYNBRS	CP9	CP10
10.219	-7.717	.02100	.01240	-.00700	.03390	-.00240	-.00410	.02670	.00520	-.34130	-.26790
10.106	-5.667	.02260	.01240	-.00500	.03180	-.00190	-.00440	.02710	.00530	-.34780	-.27060
9.969	.194	.03350	.01450	-.00520	.01590	.00890	-.00650	.03080	.00600	-.38750	-.31450
10.174	6.150	.05540	.01430	-.01360	.00200	.01890	-.01070	.03290	.00640	-.40080	-.34920
10.126	8.101	.05930	.01480	-.01520	-.00920	.02670	-.01150	.03330	.00650	-.40290	-.35500
	GRADIENT	.00000	.00000	.00000	.00000	.00000	.00000	.00000	.00000	.00000	.00000

IA156A, AEDC PWT 16T-470, 0 T S W/SILTS (R8NR64) (10 MAY 80)

REFERENCE DATA

SREF = 2690.0000 SQ.FT. XMRP = 976.0000 IN. XT
LREF = 1290.3000 INCHES YMRP = .0000 IN. YT
BREF = 1290.3000 INCHES ZMRP = 400.0000 IN. ZT
SCALE = .0200

PARAMETRIC DATA

IB-ELV = 10.000 OB-ELV = 11.000
BDFLAP = .000 SPDBRK = .000
RUDDER = .000 SILTS = 1.000
MACH = .600 RN/L = 3.500

RUN NO. 989/ 0 RN/L = 3.51 GRADIENT INTERVAL = -5.00/ 5.00

ALPHAR	BETAR	CNFRS	CAFRS	CLMFRS	CYFRS	CYNFRS	CBLRS	CABRS	CYNBRS	CP9	CP10
-8.236	-8.143	.00670	.00730	-.02340	.01570	.01530	-.00120	.02560	.00500	-.32380	-.25890
-8.276	-6.039	-.00940	.00990	-.01430	.02540	.00730	.00190	.02610	.00510	-.33640	-.25870
-8.316	-3.970	-.02770	.01030	-.00290	.03170	.00050	.00550	.03030	.00590	-.38880	-.30130
-8.218	.088	-.06570	.00860	.02090	.02640	.00050	.01290	.03530	.00690	-.43700	-.36710
-8.132	4.339	-.09750	.01010	.03760	.01050	.01120	.01920	.03710	.00720	-.44230	-.40250
-8.150	6.246	-.11370	.00970	.04600	.00290	.01600	.02240	.03890	.00760	-.46280	-.42400
-8.203	8.287	-.13320	.01050	.05570	-.00640	.02220	.02620	.03960	.00770	-.46620	-.43610
	GRADIENT	-.00838	-.00002	.00487	-.00256	.00130	.00165	.00082	.00016	-.00640	-.01215

RUN NO. 990/ 0 RN/L = 3.50 GRADIENT INTERVAL = -5.00/ 5.00

ALPHAR	BETAR	CNFRS	CAFRS	CLMFRS	CYFRS	CYNFRS	CBLRS	CABRS	CYNBRS	CP9	CP10
-6.212	-8.251	.01110	.00990	-.02270	-.00270	.02420	-.00200	.02420	.00470	-.30450	-.24620
-6.209	-6.191	-.00240	.01110	-.01440	.00360	.01780	.00060	.02560	.00500	-.32750	-.25680
-6.136	-4.229	-.01780	.01180	-.00450	.00750	.01280	.00360	.02880	.00560	-.37000	-.28560
-6.227	-.015	-.05000	.01120	.01580	.00270	.01340	.00990	.03210	.00620	-.39740	-.33420
-6.076	4.243	-.07640	.01160	.03120	-.00990	.02130	.01510	.03590	.00700	-.42860	-.38990
-6.020	6.274	-.09100	.01190	.03900	-.01610	.02560	.01790	.03730	.00720	-.44050	-.40870
-6.058	8.273	-.10790	.01230	.04740	-.02270	.03020	.02120	.03830	.00740	-.45350	-.41950
	GRADIENT	-.00692	-.00002	.00421	-.00206	.00100	.00136	.00084	.00017	-.00692	-.01231

RUN NO. 991/ 0 RN/L = 3.50 GRADIENT INTERVAL = -5.00/ 5.00

ALPHAR	BETAR	CNFRS	CAFRS	CLMFRS	CYFRS	CYNFRS	CBLRS	CABRS	CYNBRS	CP9	CP10
-3.994	-8.379	.01250	.01180	-.01990	-.01590	.03060	-.00230	.02430	.00470	-.30390	-.25050
-4.252	-6.242	.00030	.01170	-.01220	-.01130	.02560	.00000	.02570	.00500	-.32050	-.26440
-4.174	-4.192	-.01210	.01280	-.00390	-.00990	.02230	.00250	.02780	.00540	-.35390	-.27930
-4.160	.273	-.03820	.01240	.01350	-.01960	.02680	.00760	.03190	.00620	-.38990	-.33690
-3.764	4.304	-.05770	.01330	.02600	-.02950	.03280	.01140	.03500	.00680	-.41740	-.37860
-3.850	6.180	-.07030	.01350	.03270	-.03280	.03500	.01390	.03610	.00700	-.42950	-.39360
-3.897	8.181	-.08310	.01350	.03930	-.03770	.03860	.01640	.03760	.00730	-.44810	-.40760
	GRADIENT	-.00538	.00006	.00353	-.00230	.00123	.00105	.00085	.00017	-.00748	-.01171

IA156A, AEDC PWT 16T-470, O T S W/SILTS (R8NR64) (10 MAY 80)

REFERENCE DATA

SREF = 2690.0000 SQ.FT. XMRP = 976.0000 IN. XT
LREF = 1290.3000 INCHES YMRP = .0000 IN. YT
BREF = 1290.3000 INCHES ZMRP = 400.0000 IN. ZT
SCALE = .0200

PARAMETRIC DATA

IB-ELV = 10.000 OB-ELV = 11.000
BDFLAP = .000 SPDBRK = .000
RUDDER = .000 SILTS = 1.000
MACH = .600 RN/L = 3.500

RUN NO. 992/ 0 RN/L = 3.50 GRADIENT INTERVAL = -5.00/ 5.00

ALPHAR	BETAR	CNFRS	CAFRS	CLMFRS	CYFRS	CYNFRS	CBLRS	CABRS	CYNBRS	CP9	CP10
-.228	-9.074	.01710	.01440	-.01830	-.02240	.03430	-.00330	.02580	.00500	-.32800	-.25950
-.213	-6.979	.00700	.01360	-.01020	-.02240	.03280	-.00130	.02510	.00490	-.31830	-.25410
-.203	-4.721	-.00220	.01330	-.00310	-.02460	.03260	.00050	.02680	.00520	-.33530	-.27550
-.197	-.634	-.01680	.01400	.00760	-.03520	.03850	.00340	.03070	.00600	-.37470	-.32560
-.149	3.451	-.02960	.01450	.01660	-.04400	.04380	.00590	.03470	.00670	-.41570	-.37530
-.157	5.553	-.03780	.01500	.02140	-.04840	.04660	.00750	.03580	.00700	-.42720	-.38890
-.156	7.642	-.04450	.01600	.02580	-.05340	.05040	.00880	.03650	.00710	-.43500	-.39640
	GRADIENT	-.00335	.00015	.00241	-.00237	.00137	.00066	.00097	.00018	-.00984	-.01221

RUN NO. 993/ 0 RN/L = 3.50 GRADIENT INTERVAL = -5.00/ 5.00

ALPHAR	BETAR	CNFRS	CAFRS	CLMFRS	CYFRS	CYNFRS	CBLRS	CABRS	CYNBRS	CP9	CP10
4.404	-7.803	.01340	.01530	-.00920	-.01010	.02370	-.00260	.02680	.00520	-.34320	-.26840
4.339	-5.706	.00930	.01440	-.00450	-.01270	.02460	-.00180	.02650	.00510	-.33600	-.26790
4.293	-3.745	.00720	.01410	-.00190	-.01730	.02720	-.00140	.02730	.00530	-.34420	-.27760
4.084	.009	.00520	.01360	.00060	-.03080	.03640	-.00100	.03010	.00580	-.36540	-.31940
4.151	3.853	.00390	.01440	.00350	-.04030	.04310	-.00070	.03320	.00640	-.39880	-.35750
4.094	5.932	.00040	.01520	.00640	-.04580	.04710	.00000	.03470	.00670	-.41430	-.37700
4.080	7.913	-.00170	.01550	.00830	-.04940	.05010	.00040	.03600	.00700	-.42830	-.39180
	GRADIENT	-.00043	.00004	.00071	-.00302	.00209	.00009	.00078	.00014	-.00719	-.01051

RUN NO. 994/ 0 RN/L = 3.50 GRADIENT INTERVAL = -5.00/ 5.00

ALPHAR	BETAR	CNFRS	CAFRS	CLMFRS	CYFRS	CYNFRS	CBLRS	CABRS	CYNBRS	CP9	CP10
6.475	-7.882	.01530	.01500	-.00820	.00020	.01700	-.00300	.02700	.00520	-.34440	-.27090
6.467	-5.820	.01330	.01420	-.00460	-.00110	.01710	-.00260	.02700	.00520	-.34150	-.27300
6.475	-3.797	.01260	.01410	-.00230	-.00430	.01910	-.00240	.02800	.00540	-.35120	-.28670
6.184	.103	.01410	.01400	-.00120	-.01890	.02920	-.00270	.03060	.00590	-.37070	-.32570
6.119	3.885	.01610	.01420	-.00040	-.02930	.03640	-.00310	.03330	.00650	-.40220	-.35580
6.099	5.763	.01750	.01440	-.00020	-.03320	.03950	-.00340	.03440	.00670	-.41210	-.37070
6.121	7.979	.01830	.01490	.00050	-.03900	.04420	-.00350	.03550	.00690	-.42270	-.38510
	GRADIENT	.00046	.00001	.00025	-.00326	.00225	-.00009	.00069	.00014	-.00663	-.00900

IA156A, AEDC PWT 16T-470, O T S W/SILTS (R8NR64) (10 MAY 80)

REFERENCE DATA

SREF = 2690.0000 SQ.FT. XMRP = 976.0000 IN. XT
LREF = 1290.3000 INCHES YMRP = .0000 IN. YT
BREF = 1290.3000 INCHES ZMRP = 400.0000 IN. ZT
SCALE = .0200

PARAMETRIC DATA

IB-ELV = 10.000 OB-ELV = 11.000
BDFLAP = .000 SPDBRK = .000
RUDDER = .000 SILTS = 1.000
MACH = .600 RN/L = 3.500

RUN NO. 995/ 0 RN/L = 3.50 GRADIENT INTERVAL = -5.00/ 5.00

ALPHAR	BETAR	CNFRS	CAFRS	CLMFRS	CYFRS	CYNFRS	CBLRS	CABRS	CYNBRS	CP9	CP10
8.429	-7.765	.01900	.01350	-.00810	.01610	.00790	-.00370	.02670	.00520	-.33650	-.27220
8.345	-5.697	.01800	.01310	-.00470	.01380	.00850	-.00350	.02720	.00530	-.34310	-.27780
8.344	-3.769	.01860	.01270	-.00300	.00970	.01110	-.00360	.02870	.00560	-.35750	-.29610
8.278	.089	.02400	.01390	-.00300	-.00330	.02070	-.00470	.03160	.00610	-.38580	-.33390
8.222	3.930	.03120	.01390	-.00490	-.01170	.02610	-.00610	.03340	.00650	-.40630	-.35560
8.305	6.013	.03680	.01380	-.00670	-.01610	.02970	-.00720	.03420	.00660	-.41490	-.36320
8.277	7.985	.03880	.01450	-.00710	-.02360	.03520	-.00760	.03450	.00670	-.41410	-.37230
	GRADIENT	.00164	.00016	-.00025	-.00278	.00195	-.00032	.00061	.00012	-.00634	-.00773

IA156A, AEDC PWT 16T-470, O T S W/SILTS (R8NR65) (10 MAY 80)

REFERENCE DATA

SREF = 2690.0000 SQ.FT. XMRP = 976.0000 IN. XT
LREF = 1290.3000 INCHES YMRP = .0000 IN. YT
BREF = 1290.3000 INCHES ZMRP = 400.0000 IN. ZT
SCALE = .0200

PARAMETRIC DATA

IB-ELV = 10.000 OB-ELV = 11.000
BDFLAP = .000 SPDBRK = .000
RUDDER = .000 SILTS = 1.000
MACH = .800 RN/L = 3.500

RUN NO. 996/ 0 RN/L = 3.50 GRADIENT INTERVAL = -5.00/ 5.00

ALPHAR	BETAR	CNFRS	CAFRS	CLMFRS	CYFRS	CYNFRS	CBLRS	CABRS	CYNBRS	CP9	CP10
-8.381	-6.327	-.00700	.01060	-.01750	.03210	.00570	.00150	.02460	.00480	-.31270	-.24690
-8.456	-4.032	-.02740	.01280	-.00510	.04090	-.00100	.00550	.02910	.00560	-.36320	-.29890
-8.415	.034	-.06720	.01230	.02040	.03860	-.00220	.01330	.03400	.00660	-.41810	-.35710
-8.329	4.395	-.09940	.01270	.03680	.02480	.00690	.01960	.03630	.00710	-.42830	-.39880
-8.325	6.252	-.11780	.01290	.04560	.01860	.01150	.02320	.03790	.00740	-.44290	-.42080
	GRADIENT	-.00853	-.00001	.00496	-.00193	.00095	.00167	.00085	.00018	-.00766	-.01183

RUN NO. 997/ 0 RN/L = 3.50 GRADIENT INTERVAL = -5.00/ 5.00

ALPHAR	BETAR	CNFRS	CAFRS	CLMFRS	CYFRS	CYNFRS	CBLRS	CABRS	CYNBRS	CP9	CP10
-6.303	-6.303	-.00010	.01280	-.01690	.01220	.01530	.00010	.02430	.00470	-.30470	-.24870
-6.264	-4.335	-.01540	.01440	-.00720	.01680	.01100	.00310	.02780	.00540	-.34820	-.28590
-6.389	.001	-.05040	.01400	.01510	.01170	.01110	.01000	.03230	.00630	-.39210	-.34350
-6.255	4.275	-.07840	.01460	.03060	-.00090	.01930	.01550	.03530	.00690	-.41500	-.38860
-5.958	6.461	-.09240	.01510	.03840	-.01080	.02560	.01820	.03690	.00720	-.43200	-.40910
	GRADIENT	-.00732	.00002	.00439	-.00205	.00096	.00144	.00087	.00017	-.00776	-.01193

IA156A, AEDC PWT 16T-470, O T S W/SILTS (R8NR65) (10 MAY 80)

REFERENCE DATA

SREF = 2690.0000 SQ.FT. XMRP = 976.0000 IN. XT
LREF = 1290.3000 INCHES YMRP = .0000 IN. YT
BREF = 1290.3000 INCHES ZMRP = 400.0000 IN. ZT
SCALE = .0200

PARAMETRIC DATA

IB-ELV = 10.000 OB-ELV = 11.000
BDFLAP = .000 SPDBRK = .000
RUDDER = .000 SILTS = 1.000
MACH = .800 RN/L = 3.500

RUN NO. 998/ 0 RN/L = 3.50 GRADIENT INTERVAL = -5.00/ 5.00

ALPHAR	BETAR	CNFRS	CAFRS	CLMFRS	CYFRS	CYNFRS	CBLRS	CABRS	CYNBRS	CP9	CP10
-4.081	-6.452	.00320	.01490	-.01450	-.00660	.02490	-.00050	.02400	.00470	-.29890	-.24770
-4.349	-4.237	-.01180	.01590	-.00500	-.00260	.02060	.00240	.02720	.00530	-.33710	-.28190
-4.302	.286	-.03770	.01520	.01220	-.01230	.02490	.00750	.03160	.00610	-.38020	-.33840
-3.860	4.397	-.05920	.01620	.02560	-.02330	.03140	.01170	.03450	.00670	-.40830	-.37730
-3.941	6.250	-.07240	.01670	.03270	-.02670	.03380	.01430	.03580	.00690	-.42270	-.39190
	GRADIENT	-.00549	.00003	.00355	-.00239	.00125	.00108	.00085	.00016	-.00827	-.01107

RUN NO. 999/ 0 RN/L = 3.50 GRADIENT INTERVAL = -5.00/ 5.00

ALPHAR	BETAR	CNFRS	CAFRS	CLMFRS	CYFRS	CYNFRS	CBLRS	CABRS	CYNBRS	CP9	CP10
-.208	-7.219	.01180	.01710	-.01440	-.02310	.03330	-.00220	.02530	.00490	-.31780	-.25850
-.217	-5.063	.00170	.01680	-.00720	-.02470	.03320	-.00020	.02570	.00500	-.31860	-.26600
-.241	-.785	-.01600	.01670	.00500	-.03210	.03690	.00320	.02940	.00570	-.35500	-.31430
-.182	3.321	-.03200	.01790	.01670	-.04150	.04320	.00630	.03330	.00650	-.39700	-.36220
-.181	5.470	-.04210	.01860	.02330	-.04620	.04630	.00830	.03560	.00690	-.42320	-.38830
	GRADIENT	-.00390	.00029	.00285	-.00229	.00153	.00075	.00095	.00019	-.01023	-.01167

RUN NO. 1000/ 0 RN/L = 3.51 GRADIENT INTERVAL = -5.00/ 5.00

ALPHAR	BETAR	CNFRS	CAFRS	CLMFRS	CYFRS	CYNFRS	CBLRS	CABRS	CYNBRS	CP9	CP10
4.415	-5.722	.00990	.01710	-.00340	-.01220	.02590	-.00190	.02700	.00520	-.33800	-.27710
4.278	-3.620	.00730	.01680	-.00050	-.01800	.02870	-.00140	.02800	.00540	-.34540	-.29210
4.005	.033	.00510	.01670	.00190	-.03280	.03850	-.00100	.02940	.00570	-.35390	-.31670
4.134	3.769	.00320	.01770	.00480	-.04030	.04430	-.00060	.03360	.00650	-.39860	-.36710
4.068	5.815	-.00070	.01860	.00740	-.04600	.04890	.00020	.03560	.00690	-.41990	-.38980
	GRADIENT	-.00055	.00012	.00072	-.00301	.00211	.00011	.00076	.00015	-.00722	-.01016

RUN NO. 1001/ 0 RN/L = 3.51 GRADIENT INTERVAL = -5.00/ 5.00

ALPHAR	BETAR	CNFRS	CAFRS	CLMFRS	CYFRS	CYNFRS	CBLRS	CABRS	CYNBRS	CP9	CP10
6.431	-5.787	.01510	.01770	-.00570	.00020	.01870	-.00300	.02720	.00530	-.34140	-.27870
6.435	-3.773	.01400	.01700	-.00280	-.00270	.02020	-.00270	.02820	.00550	-.34850	-.29480
6.100	.051	.01530	.01650	-.00140	-.01890	.03150	-.00300	.03070	.00600	-.36730	-.33230
6.053	3.746	.01720	.01720	-.00050	-.02660	.03700	-.00330	.03380	.00660	-.40300	-.36660
6.180	5.873	.02050	.01760	-.00130	-.03170	.04130	-.00400	.03530	.00690	-.41810	-.38580
	GRADIENT	.00043	.00003	.00031	-.00318	.00224	-.00008	.00074	.00015	-.00723	-.00955

IA156A, AEDC PWT 16T-470, 0 T S W/SILTS (R8NR66) (10 MAY 80)

REFERENCE DATA

SREF = 2690.0000 SQ.FT. XMRP = 976.0000 IN. XT
LREF = 1290.3000 INCHES YMRP = .0000 IN. YT
BREF = 1290.3000 INCHES ZMRP = 400.0000 IN. ZT
SCALE = .0200

PARAMETRIC DATA

IB-ELV = 10.000 OB-ELV = 11.000
BDFLAP = .000 SPDBRK = .000
RUDDER = .000 SILTS = 1.000
MACH = .900 RN/L = 3.500

RUN NO. 1002/ 0 RN/L = 3.50 GRADIENT INTERVAL = -5.00/ 5.00

ALPHAR	BETAR	CNFRS	CAFRS	CLMFRS	CYFRS	CYNFRS	CBLRS	CABRS	CYNBRS	CP9	CP10
-8.382	-6.374	-.00700	.01420	-.01890	.04100	.00340	.00150	.02640	.00510	-.33430	-.26820
-8.536	-4.069	-.02970	.01570	-.00550	.05080	-.00390	.00590	.03140	.00610	-.38560	-.33070
-8.484	-.010	-.06980	.01530	.02020	.04640	-.00290	.01380	.03530	.00690	-.42650	-.37820
-8.385	4.325	-.10350	.01630	.03840	.03060	.00650	.02040	.03620	.00700	-.41360	-.41050
-8.474	6.244	-.12330	.01620	.04720	.02500	.01080	.02430	.03800	.00740	-.43320	-.43220
	GRADIENT	-.00878	.00007	.00522	-.00242	.00125	.00173	.00057	.00011	-.00326	-.00948

RUN NO. 1003/ 0 RN/L = 3.50 GRADIENT INTERVAL = -5.00/ 5.00

ALPHAR	BETAR	CNFRS	CAFRS	CLMFRS	CYFRS	CYNFRS	CBLRS	CABRS	CYNBRS	CP9	CP10
-6.361	-6.330	-.00010	.01590	-.01930	.01870	.01420	.00010	.02690	.00520	-.33160	-.28030
-6.319	-4.357	-.01590	.01750	-.00910	.02370	.00910	.00320	.03000	.00580	-.37010	-.31260
-6.468	-.044	-.05200	.01650	.01440	.01920	.00950	.01030	.03350	.00650	-.40340	-.36000
-6.300	4.261	-.08210	.01810	.03170	.00710	.01630	.01620	.03650	.00710	-.42030	-.41030
-6.261	6.284	-.09900	.01860	.04050	.00110	.02040	.01950	.03800	.00740	-.43550	-.42910
	GRADIENT	-.00768	.00007	.00473	-.00193	.00084	.00151	.00075	.00015	-.00583	-.01134

RUN NO. 1004/ 0 RN/L = 3.49 GRADIENT INTERVAL = -5.00/ 5.00

ALPHAR	BETAR	CNFRS	CAFRS	CLMFRS	CYFRS	CYNFRS	CBLRS	CABRS	CYNBRS	CP9	CP10
-4.098	-6.486	.00420	.01850	-.01680	-.00280	.02540	-.00070	.02630	.00510	-.32040	-.27810
-4.410	-4.287	-.01010	.01910	-.00830	.00300	.01970	.00210	.02990	.00580	-.36440	-.31690
-4.367	.267	-.03780	.01700	.01050	-.00690	.02350	.00750	.03290	.00640	-.38720	-.36110
-3.903	4.384	-.06090	.01990	.02590	-.01790	.02920	.01200	.03580	.00700	-.41670	-.39920
-4.001	6.242	-.07540	.02050	.03350	-.02160	.03180	.01490	.03700	.00720	-.42980	-.41160
	GRADIENT	-.00586	.00008	.00395	-.00241	.00109	.00114	.00068	.00014	-.00601	-.00949

RUN NO. 1005/ 0 RN/L = 3.49 GRADIENT INTERVAL = -5.00/ 5.00

ALPHAR	BETAR	CNFRS	CAFRS	CLMFRS	CYFRS	CYNFRS	CBLRS	CABRS	CYNBRS	CP9	CP10
-.266	-7.306	.01310	.02060	-.01700	-.02220	.03480	-.00250	.02760	.00540	-.33850	-.29090
-.272	-5.135	.00410	.02060	-.01080	-.02190	.03340	-.00070	.02820	.00550	-.34350	-.29960
-.313	-.815	-.01380	.02050	.00230	-.02900	.03730	.00280	.03080	.00600	-.36930	-.33270
-.245	3.308	-.03200	.02110	.01600	-.04000	.04390	.00630	.03520	.00680	-.41890	-.38210
-.232	5.457	-.04180	.02210	.02270	-.04690	.04860	.00820	.03720	.00720	-.44280	-.40540
	GRADIENT	-.00441	.00015	.00332	-.00267	.00160	.00085	.00107	.00019	-.01203	-.01198

IA156A, AEDC PWT 16T-470, O T S W/SILTS (R8NR66) (10 MAY 80)

REFERENCE DATA

SREF = 2690.0000 SQ.FT. XMRP = 976.0000 IN. XT
LREF = 1290.3000 INCHES YMRP = .0000 IN. YT
BREF = 1290.3000 INCHES ZMRP = 400.0000 IN. ZT
SCALE = .0200

PARAMETRIC DATA

IB-ELV = 10.000 OB-ELV = 11.000
BDFLAP = .000 SPDBRK = .000
RUDDER = .000 SILTS = 1.000
MACH = .900 RN/L = 3.500

RUN NO. 1006/ 0 RN/L = 3.50 GRADIENT INTERVAL = -5.00/ 5.00

ALPHAR	BETAR	CNFRS	CAFRS	CLMFRS	CYFRS	CYNFRS	CBLRS	CABRS	CYNBRS	CP9	CP10
4.423	-5.725	.01090	.02100	-.00450	-.01310	.02780	-.00210	.02890	.00560	-.35860	-.30090
4.265	-3.630	.00850	.02100	-.00240	-.01930	.03040	-.00170	.03040	.00590	-.37110	-.32120
3.961	.025	.00400	.02080	.00100	-.03290	.03930	-.00080	.03200	.00620	-.38290	-.34500
4.122	3.746	-.00020	.02180	.00670	-.04160	.04530	.00010	.03580	.00700	-.42830	-.38800
4.043	5.793	-.00510	.02200	.00920	-.04840	.05090	.00100	.03780	.00730	-.45090	-.41030
	GRADIENT	-.00118	.00011	.00123	-.00302	.00202	.00024	.00073	.00015	-.00777	-.00906

IA156A, AEDC PWT 16T-470, O T S W/SILTS (R8NR67) (10 MAY 80)

REFERENCE DATA

SREF = 2690.0000 SQ.FT. XMRP = 976.0000 IN. XT
LREF = 1290.3000 INCHES YMRP = .0000 IN. YT
BREF = 1290.3000 INCHES ZMRP = 400.0000 IN. ZT
SCALE = .0200

PARAMETRIC DATA

IB-ELV = 10.000 OB-ELV = 11.000
BDFLAP = .000 SPDBRK = .000
RUDDER = .000 SILTS = 1.000
MACH = .950 RN/L = 3.500

RUN NO. 1007/ 0 RN/L = 3.49 GRADIENT INTERVAL = -5.00/ 5.00

ALPHAR	BETAR	CNFRS	CAFRS	CLMFRS	CYFRS	CYNFRS	CBLRS	CABRS	CYNBRS	CP9	CP10
-8.508	-6.373	-.00800	.01510	-.02040	.03670	.00730	.00170	.02880	.00560	-.36140	-.29440
-8.640	-4.081	-.02960	.01750	-.00800	.04580	-.00020	.00600	.03420	.00660	-.41310	-.36500
-8.601	-.027	-.06960	.01800	.01760	.04610	-.00180	.01380	.03860	.00750	-.45800	-.42200
-8.480	4.307	-.10970	.01830	.03990	.03390	.00600	.02160	.03930	.00760	-.45120	-.44390
-8.534	6.217	-.13030	.01890	.04970	.02730	.01110	.02570	.04050	.00790	-.46450	-.45730
	GRADIENT	-.00955	.00010	.00570	-.00143	.00075	.00186	.00060	.00012	-.00447	-.00936

RUN NO. 1008/ 0 RN/L = 3.50 GRADIENT INTERVAL = -5.00/ 5.00

ALPHAR	BETAR	CNFRS	CAFRS	CLMFRS	CYFRS	CYNFRS	CBLRS	CABRS	CYNBRS	CP9	CP10
-6.438	-6.356	-.00010	.01810	-.02020	.01310	.01900	.00010	.02880	.00560	-.35520	-.30070
-6.394	-4.366	-.01510	.02010	-.01050	.01850	.01310	.00310	.03260	.00630	-.39860	-.34430
-6.555	-.057	-.05230	.01980	.01280	.01840	.01120	.01030	.03790	.00740	-.44780	-.41530
-6.394	4.245	-.08700	.02110	.03370	.00610	.01780	.01710	.03950	.00770	-.45430	-.44560
-6.075	6.447	-.10220	.02250	.04310	-.00780	.02550	.02010	.04040	.00780	-.46360	-.45510
	GRADIENT	-.00835	.00012	.00513	-.00144	.00055	.00163	.00080	.00016	-.00647	-.01177

IA156A, AEDC PWT 16T-470, 0 T S W/SILTS (R8NR67) (10 MAY 80)

REFERENCE DATA

SREF = 2690.0000 SQ.FT. XMRP = 976.0000 IN. XT
LREF = 1290.3000 INCHES YMRP = .0000 IN. YT
BREF = 1290.3000 INCHES ZMRP = 400.0000 IN. ZT
SCALE = .0200

PARAMETRIC DATA

IB-ELV = 10.000 OB-ELV = 11.000
BDFLAP = .000 SPDBRK = .000
RUDDER = .000 SILTS = 1.000
MACH = .950 RN/L = 3.500

RUN NO. 1009/ 0 RN/L = 3.50 GRADIENT INTERVAL = -5.00/ 5.00

ALPHAR	BETAR	CNFRS	CAFRS	CLMFRS	CYFRS	CYNFRS	CBLRS	CABRS	CYNBRS	CP9	CP10
-4.155	-6.494	.00370	.02060	-.01660	-.00790	.02920	-.00060	.02900	.00560	-.35190	-.30870
-4.445	-4.279	-.00990	.02220	-.00880	-.00250	.02330	.00200	.03270	.00640	-.39360	-.35210
-4.410	.265	-.04000	.02130	.01220	-.01250	.02690	.00790	.03590	.00700	-.42540	-.39220
-3.922	4.390	-.06420	.02350	.02870	-.02600	.03420	.01260	.03940	.00770	-.46000	-.43800
-4.035	6.237	-.08080	.02310	.03700	-.02830	.03590	.01590	.04160	.00810	-.48550	-.46180
	GRADIENT	-.00627	.00014	.00433	-.00270	.00125	.00122	.00077	.00015	-.00765	-.00989

RUN NO. 1010/ 0 RN/L = 3.50 GRADIENT INTERVAL = -5.00/ 5.00

ALPHAR	BETAR	CNFRS	CAFRS	CLMFRS	CYFRS	CYNFRS	CBLRS	CABRS	CYNBRS	CP9	CP10
-.263	-7.333	.01050	.02240	-.01330	-.02060	.03670	-.00200	.02850	.00550	-.35090	-.29800
-.254	-5.128	.00100	.02310	-.00620	-.02170	.03540	-.00020	.03000	.00580	-.36570	-.31770
-.289	-.869	-.01500	.02340	.00560	-.03310	.04120	.00300	.03500	.00680	-.42080	-.37550
-.220	3.337	-.03260	.02500	.01830	-.04570	.04880	.00640	.03950	.00770	-.47140	-.42860
-.219	5.477	-.04260	.02510	.02430	-.05180	.05290	.00840	.04090	.00790	-.48700	-.44470
	GRADIENT	-.00418	.00038	.00302	-.00300	.00181	.00081	.00107	.00021	-.01203	-.01263

RUN NO. 1011/ 0 RN/L = 3.49 GRADIENT INTERVAL = -5.00/ 5.00

ALPHAR	BETAR	CNFRS	CAFRS	CLMFRS	CYFRS	CYNFRS	CBLRS	CABRS	CYNBRS	CP9	CP10
4.448	-5.899	.00980	.02250	-.00370	-.01330	.02950	-.00200	.03140	.00610	-.38940	-.32680
4.247	-3.586	.00730	.02340	-.00170	-.01980	.03260	-.00150	.03360	.00650	-.40920	-.35520
3.940	.069	.00190	.02340	.00180	-.03310	.04170	-.00040	.03630	.00700	-.43620	-.38990
4.135	3.789	-.00320	.02480	.00850	-.03950	.04630	.00060	.03930	.00760	-.47250	-.42280
4.096	5.789	-.00670	.02520	.01150	-.04750	.05240	.00130	.04090	.00790	-.49120	-.43940
	GRADIENT	-.00142	.00019	.00138	-.00267	.00186	.00028	.00077	.00015	-.00859	-.00917

IA156A, AEDC PWT 16T-470, 0 T S W/SILTS (R8NR68) (10 MAY 80)

REFERENCE DATA

SREF = 2690.0000 SQ.FT. XMRP = 976.0000 IN. XT
LREF = 1290.3000 INCHES YMRP = .0000 IN. YT
BREF = 1290.3000 INCHES ZMRP = 400.0000 IN. ZT
SCALE = .0200

PARAMETRIC DATA

IB-ELV = 10.000 OB-ELV = 11.000
BDFLAP = .000 SPDBRK = .000
RUDDER = .000 SILTS = 1.000
MACH = 1.050 RN/L = 3.500

RUN NO. 1012/ 0 RN/L = 3.52 GRADIENT INTERVAL = -5.00/ 5.00

ALPHAR	BETAR	CNFRS	CAFRS	CLMFRS	CYFRS	CYNFRS	CBLRS	CABRS	CYNBRS	CP9	CP10
-8.563	-6.419	-.00510	.02220	-.02710	.03250	.01320	.00120	.04020	.00780	-.48950	-.42620
-8.742	-4.137	-.02990	.02590	-.01190	.04330	.00610	.00600	.04360	.00850	-.52090	-.47240
-8.718	-.078	-.07900	.02410	.01960	.04270	.00550	.01560	.05470	.01060	-.64860	-.59700
-8.519	4.271	-.12330	.02640	.04770	.02400	.01810	.02420	.05330	.01040	-.62750	-.58660
-8.594	6.185	-.14340	.02730	.05780	.01870	.02120	.02820	.05540	.01080	-.65530	-.60670
	GRADIENT	-.01110	.00007	.00708	-.00232	.00144	.00216	.00114	.00022	-.01247	-.01339

RUN NO. 1013/ 0 RN/L = 3.50 GRADIENT INTERVAL = -5.00/ 5.00

ALPHAR	BETAR	CNFRS	CAFRS	CLMFRS	CYFRS	CYNFRS	CBLRS	CABRS	CYNBRS	CP9	CP10
-6.492	-6.390	.00260	.02490	-.02540	.00680	.02540	-.00040	.04100	.00800	-.49450	-.43930
-6.433	-4.413	-.01440	.02670	-.01370	.01180	.02060	.00290	.04540	.00880	-.54440	-.49040
-6.614	-.087	-.05790	.02690	.01560	.00930	.02180	.01140	.05030	.00980	-.59430	-.55110
-6.417	4.237	-.09590	.02890	.03980	-.00420	.02840	.01880	.05370	.01040	-.63300	-.58870
-6.381	6.255	-.11600	.02940	.05070	-.01260	.03390	.02280	.05470	.01060	-.64540	-.60090
	GRADIENT	-.00942	.00025	.00619	-.00185	.00090	.00184	.00096	.00018	-.01024	-.01136

RUN NO. 1014/ 0 RN/L = 3.50 GRADIENT INTERVAL = -5.00/ 5.00

ALPHAR	BETAR	CNFRS	CAFRS	CLMFRS	CYFRS	CYNFRS	CBLRS	CABRS	CYNBRS	CP9	CP10
-4.208	-6.537	.00760	.02700	-.02170	-.01580	.03750	-.00140	.04080	.00790	-.48690	-.44250
-4.489	-4.335	-.00770	.02830	-.01200	-.01010	.03160	.00160	.04420	.00860	-.53200	-.47510
-4.325	.043	-.04070	.02850	.01260	-.02420	.03920	.00800	.04950	.00960	-.58620	-.54050
-4.172	4.273	-.07270	.03100	.03400	-.03400	.04430	.01420	.05230	.01010	-.61970	-.57080
-4.033	6.209	-.08800	.03160	.04310	-.03760	.04690	.01720	.05300	.01030	-.62810	-.57950
	GRADIENT	-.00755	.00031	.00535	-.00278	.00148	.00146	.00094	.00017	-.01020	-.01114

RUN NO. 1015/ 0 RN/L = 3.50 GRADIENT INTERVAL = -5.00/ 5.00

ALPHAR	BETAR	CNFRS	CAFRS	CLMFRS	CYFRS	CYNFRS	CBLRS	CABRS	CYNBRS	CP9	CP10
-.277	-7.355	.01230	.02820	-.01490	-.02890	.04470	-.00240	.04000	.00780	-.48140	-.42900
-.275	-5.161	.00270	.02850	-.00730	-.03150	.04430	-.00050	.04210	.00820	-.50470	-.45460
-.340	-.936	-.01520	.03070	.00620	-.04600	.05340	.00290	.04820	.00940	-.57210	-.52550
-.260	3.237	-.03620	.03300	.02200	-.05710	.06070	.00710	.05210	.01010	-.61680	-.56960
-.255	5.437	-.04800	.03310	.02960	-.06170	.06310	.00940	.05330	.01030	-.63050	-.58220
	GRADIENT	-.00503	.00055	.00379	-.00266	.00175	.00101	.00093	.00017	-.01071	-.01057

IA156A, AEDC PWT 16T-470, O T S W/SILTS (R8NR68) (10 MAY 80)

REFERENCE DATA

SREF = 2690.0000 SQ.FT. XMRP = 976.0000 IN. XT
LREF = 1290.3000 INCHES YMRP = .0000 IN. YT
BREF = 1290.3000 INCHES ZMRP = 400.0000 IN. ZT
SCALE = .0200

PARAMETRIC DATA

IB-ELV = 10.000 OB-ELV = 11.000
BDFLAP = .000 SPDBRK = .000
RUDDER = .000 SILTS = 1.000
MACH = 1.050 RN/L = 3.500

RUN NO. 1016/ 0 RN/L = 3.50 GRADIENT INTERVAL = -5.00/ 5.00

ALPHAR	BETAR	CNFRS	CAFRS	CLMFRS	CYFRS	CYNFRS	CBLRS	CABRS	CYNBRS	CP9	CP10
4.427	-5.734	.01280	.02960	-.00750	-.01680	.03550	-.00260	.04310	.00840	-.51590	-.46500
4.273	-3.687	.01090	.03100	-.00590	-.02330	.03890	-.00220	.04510	.00880	-.53530	-.49160
3.964	.004	.00310	.03210	.00250	-.03840	.04860	-.00070	.04780	.00930	-.56680	-.52060
4.145	3.787	-.00310	.03220	.00970	-.04720	.05490	.00050	.05060	.00980	-.60260	-.54930
4.099	5.740	-.00720	.03170	.01320	-.05570	.06150	.00130	.05090	.00990	-.60640	-.55230
	GRADIENT	-.00187	.00016	.00209	-.00319	.00214	.00036	.00074	.00013	-.00901	-.00772

IA156A, AEDC PWT 16T-470, O T S W/SILTS (R8NR69) (10 MAY 80)

REFERENCE DATA

SREF = 2690.0000 SQ.FT. XMRP = 976.0000 IN. XT
LREF = 1290.3000 INCHES YMRP = .0000 IN. YT
BREF = 1290.3000 INCHES ZMRP = 400.0000 IN. ZT
SCALE = .0200

PARAMETRIC DATA

IB-ELV = 10.000 OB-ELV = 11.000
BDFLAP = .000 SPDBRK = .000
RUDDER = .000 SILTS = 1.000
MACH = 1.100 RN/L = 3.500

RUN NO. 1017/ 0 RN/L = 3.50 GRADIENT INTERVAL = -5.00/ 5.00

ALPHAR	BETAR	CNFRS	CAFRS	CLMFRS	CYFRS	CYNFRS	CBLRS	CABRS	CYNBRS	CP9	CP10
-8.528	-6.340	-.00770	.02420	-.02530	.03470	.01150	.00160	.03770	.00730	-.45880	-.40100
-8.754	-4.130	-.03120	.02630	-.01160	.04590	.00490	.00620	.04280	.00830	-.50920	-.46660
-8.751	-.087	-.07760	.02850	.01860	.04430	.00530	.01530	.04780	.00930	-.56650	-.52250
-8.577	4.303	-.12350	.03000	.04710	.02570	.01690	.02420	.05050	.00980	-.59610	-.55340
-8.580	6.195	-.14170	.03100	.05670	.01720	.02160	.02790	.05240	.01020	-.62280	-.57030
	GRADIENT	-.01094	.00044	.00695	-.00242	.00144	.00213	.00091	.00018	-.01025	-.01025

RUN NO. 1018/ 0 RN/L = 3.50 GRADIENT INTERVAL = -5.00/ 5.00

ALPHAR	BETAR	CNFRS	CAFRS	CLMFRS	CYFRS	CYNFRS	CBLRS	CABRS	CYNBRS	CP9	CP10
-6.491	-6.386	.00110	.02650	-.02450	.00910	.02360	-.00010	.03760	.00730	-.45210	-.40330
-6.490	-4.432	-.01560	.02790	-.01390	.01530	.01880	.00310	.04190	.00810	-.50380	-.45070
-6.669	-.071	-.05880	.02930	.01520	.01190	.02050	.01150	.04620	.00900	-.54790	-.50420
-6.434	4.257	-.09500	.03260	.03920	-.00740	.02980	.01860	.04870	.00940	-.57570	-.53240
-6.266	6.415	-.11480	.03280	.05050	-.01370	.03400	.02250	.05130	.00990	-.60630	-.56080
	GRADIENT	-.00914	.00054	.00611	-.00261	.00126	.00178	.00078	.00015	-.00828	-.00941

IA156A, AEDC PWT 16T-470, O T S W/SILTS (R8NR69) (10 MAY 80)

REFERENCE DATA

SREF = 2690.0000 SQ.FT. XMRP = 976.0000 IN. XT
LREF = 1290.3000 INCHES YMRP = .0000 IN. YT
BREF = 1290.3000 INCHES ZMRP = 400.0000 IN. ZT
SCALE = .0200

PARAMETRIC DATA

IB-ELV = 10.000 OB-ELV = 11.000
BDFLAP = .000 SPDBRK = .000
RUDDER = .000 SILTS = 1.000
MACH = 1.100 RN/L = 3.500

RUN NO. 1019/ 0 RN/L = 3.50 GRADIENT INTERVAL = -5.00/ 5.00

ALPHAR	BETAR	CNFRS	CAFRS	CLMFRS	CYFRS	CYNFRS	CBLRS	CABRS	CYNBRS	CP9	CP10
-4.378	-6.531	.00650	.02830	-.02240	-.01250	.03510	-.00120	.03760	.00730	-.45040	-.40680
-4.507	-4.341	-.00840	.02940	-.01260	-.00820	.03030	.00170	.04060	.00790	-.49130	-.43290
-4.468	.119	-.04350	.03070	.01350	-.02070	.03640	.00850	.04450	.00860	-.52800	-.48460
-3.944	4.311	-.07140	.03400	.03360	-.03300	.04340	.01400	.04680	.00910	-.55520	-.51060
-4.035	6.206	-.08850	.03400	.04320	-.03450	.04460	.01730	.04910	.00950	-.58410	-.53480
	GRADIENT	-.00729	.00053	.00535	-.00287	.00151	.00142	.00072	.00014	-.00739	-.00901

RUN NO. 1020/ 0 RN/L = 3.50 GRADIENT INTERVAL = -5.00/ 5.00

ALPHAR	BETAR	CNFRS	CAFRS	CLMFRS	CYFRS	CYNFRS	CBLRS	CABRS	CYNBRS	CP9	CP10
-.281	-7.382	.01160	.02960	-.01480	-.02980	.04510	-.00230	.03630	.00700	-.43730	-.38870
-.281	-5.184	.00140	.02970	-.00670	-.03170	.04400	-.00030	.03730	.00720	-.44760	-.40120
-.333	-.818	-.01720	.03210	.00720	-.04470	.05200	.00330	.04220	.00820	-.50570	-.45570
-.244	3.355	-.03830	.03460	.02320	-.05440	.05780	.00750	.04590	.00890	-.54660	-.49970
-.252	5.487	-.05060	.03560	.03090	-.05780	.05960	.00990	.04670	.00910	-.55500	-.50820
	GRADIENT	-.00506	.00060	.00383	-.00232	.00139	.00101	.00089	.00017	-.00980	-.01054

RUN NO. 1021/ 0 RN/L = 3.50 GRADIENT INTERVAL = -5.00/ 5.00

ALPHAR	BETAR	CNFRS	CAFRS	CLMFRS	CYFRS	CYNFRS	CBLRS	CABRS	CYNBRS	CP9	CP10
4.443	-5.924	.01290	.03040	-.00730	-.01420	.03410	-.00260	.03810	.00740	-.45860	-.40840
4.269	-3.604	.01040	.03240	-.00490	-.02100	.03720	-.00210	.03930	.00760	-.46910	-.42670
4.010	.049	.00230	.03280	.00380	-.03750	.04800	-.00050	.04230	.00820	-.50500	-.45840
4.173	3.754	-.00500	.03390	.01170	-.04530	.05310	.00090	.04460	.00870	-.53510	-.48120
4.141	5.739	-.00870	.03480	.01460	-.05360	.05980	.00160	.04440	.00860	-.53270	-.47870
	GRADIENT	-.00209	.00020	.00226	-.00330	.00216	.00041	.00072	.00015	-.00897	-.00740

IA156A, AEDC PWT 16T-470, 0 T S W/SILTS (R8NR70) (10 MAY 80)

REFERENCE DATA

SREF = 2690.0000 SQ.FT. XMRP = 976.0000 IN. XT
LREF = 1290.3000 INCHES YMRP = .0000 IN. YT
BREF = 1290.3000 INCHES ZMRP = 400.0000 IN. ZT
SCALE = .0200

PARAMETRIC DATA

IB-ELV = 10.000 OB-ELV = 11.000
BDFLAP = .000 SPDBRK = .000
RUDDER = .000 SILTS = 1.000
MACH = 1.150 RN/L = 3.500

RUN NO. 1022/ 0 RN/L = 3.50 GRADIENT INTERVAL = -5.00/ 5.00

ALPHAR	BETAR	CNFRS	CAFRS	CLMFRS	CYFRS	CYNFRS	CBLRS	CABRS	CYNBRS	CP9	CP10
-8.583	-6.368	-.00710	.02540	-.02780	.03510	.01190	.00150	.03580	.00700	-.43570	-.38070
-8.770	-4.141	-.03130	.02730	-.01330	.04720	.00390	.00620	.04010	.00780	-.47990	-.43230
-8.751	-.053	-.07910	.03000	.01820	.04660	.00300	.01560	.04500	.00870	-.53200	-.49220
-8.571	4.325	-.12650	.03200	.04930	.02640	.01400	.02480	.04700	.00910	-.55510	-.51480
-8.617	6.232	-.14630	.03310	.05930	.01890	.01900	.02880	.04770	.00930	-.56650	-.51930
	GRADIENT	-.01124	.00055	.00739	-.00248	.00121	.00220	.00081	.00015	-.00884	-.00969

RUN NO. 1023/ 0 RN/L = 3.50 GRADIENT INTERVAL = -5.00/ 5.00

ALPHAR	BETAR	CNFRS	CAFRS	CLMFRS	CYFRS	CYNFRS	CBLRS	CABRS	CYNBRS	CP9	CP10
-6.499	-6.399	.00130	.02690	-.02580	.01010	.02320	-.00020	.03500	.00680	-.42120	-.37550
-6.451	-4.422	-.01540	.02890	-.01470	.01590	.01820	.00310	.03840	.00750	-.46470	-.41010
-6.655	-.062	-.06040	.03080	.01580	.01310	.01800	.01180	.04340	.00840	-.51450	-.47280
-6.427	4.271	-.09900	.03390	.04160	-.00260	.02590	.01940	.04600	.00890	-.54560	-.50230
-6.250	6.442	-.11840	.03540	.05280	-.00900	.03040	.02320	.04680	.00910	-.55360	-.51250
	GRADIENT	-.00962	.00058	.00648	-.00213	.00088	.00188	.00087	.00016	-.00931	-.01061

RUN NO. 1024/ 0 RN/L = 3.50 GRADIENT INTERVAL = -5.00/ 5.00

ALPHAR	BETAR	CNFRS	CAFRS	CLMFRS	CYFRS	CYNFRS	CBLRS	CABRS	CYNBRS	CP9	CP10
-4.372	-6.536	.00600	.02830	-.02210	-.01250	.03470	-.00110	.03500	.00680	-.42030	-.37740
-4.501	-4.337	-.00910	.02990	-.01260	-.00730	.02910	.00180	.03810	.00740	-.45990	-.40760
-4.453	.253	-.04580	.03230	.01530	-.02020	.03530	.00900	.04220	.00820	-.50290	-.45810
-3.925	4.367	-.07450	.03550	.03600	-.02950	.04070	.01460	.04430	.00860	-.52580	-.48330
-4.039	6.247	-.09220	.03610	.04580	-.03050	.04150	.01800	.04620	.00900	-.54980	-.50230
	GRADIENT	-.00752	.00064	.00559	-.00256	.00133	.00147	.00072	.00014	-.00761	-.00874

RUN NO. 1025/ 0 RN/L = 3.50 GRADIENT INTERVAL = -5.00/ 5.00

ALPHAR	BETAR	CNFRS	CAFRS	CLMFRS	CYFRS	CYNFRS	CBLRS	CABRS	CYNBRS	CP9	CP10
-.247	-7.417	.01090	.03020	-.01380	-.02740	.04310	-.00220	.03370	.00650	-.40940	-.35850
-.235	-5.225	.00070	.03020	-.00560	-.03040	.04290	-.00020	.03570	.00690	-.43170	-.38260
-.291	-.858	-.01770	.03320	.00800	-.04230	.04990	.00340	.04110	.00800	-.49350	-.44240
-.206	3.287	-.03810	.03650	.02370	-.05250	.05620	.00740	.04450	.00860	-.53090	-.48180
-.207	5.498	-.05030	.03730	.03180	-.05570	.05740	.00980	.04500	.00870	-.53790	-.48740
	GRADIENT	-.00492	.00080	.00379	-.00246	.00152	.00096	.00082	.00014	-.00902	-.00951

IA156A, AEDC PWT 16T-470, O T S W/SILTS (R8NR70) (10 MAY 80)

REFERENCE DATA

SREF = 2690.0000 SQ.FT. XMRP = 976.0000 IN. XT
LREF = 1290.3000 INCHES YMRP = .0000 IN. YT
BREF = 1290.3000 INCHES ZMRP = 400.0000 IN. ZT
SCALE = .0200

PARAMETRIC DATA

IB-ELV = 10.000 OB-ELV = 11.000
BDFLAP = .000 SPDBRK = .000
RUDDER = .000 SILTS = 1.000
MACH = 1.150 RN/L = 3.500

RUN NO. 1026/ 0 RN/L = 3.50 GRADIENT INTERVAL = -5.00/ 5.00

ALPHAR	BETAR	CNFRS	CAFRS	CLMFRS	CYFRS	CYNFRS	CBLRS	CABRS	CYNBRS	CP9	CP10
4.504	-5.745	.01240	.03140	-.00710	-.01290	.03330	-.00250	.03600	.00700	-.43430	-.38480
4.333	-3.650	.00980	.03310	-.00420	-.01890	.03600	-.00200	.03810	.00740	-.45570	-.41100
4.085	-.007	.00110	.03490	.00550	-.03450	.04580	-.00030	.04060	.00790	-.48680	-.43770
4.212	3.700	-.00480	.03590	.01220	-.04460	.05310	.00080	.04300	.00830	-.51450	-.46480
4.163	5.735	-.00930	.03630	.01570	-.05230	.05890	.00170	.04320	.00840	-.51860	-.46530
	GRADIENT	-.00199	.00038	.00223	-.00349	.00233	.00038	.00067	.00012	-.00800	-.00732

IA156A, AEDC PWT 16T-470, O T S W/SILTS (R8NR71) (10 MAY 80)

REFERENCE DATA

SREF = 2690.0000 SQ.FT. XMRP = 976.0000 IN. XT
LREF = 1290.3000 INCHES YMRP = .0000 IN. YT
BREF = 1290.3000 INCHES ZMRP = 400.0000 IN. ZT
SCALE = .0200

PARAMETRIC DATA

IB-ELV = 12.000 OB-ELV = 11.000
BDFLAP = .000 SPDBRK = .000
RUDDER = .000 SILTS = 1.000
MACH = .600 RN/L = 3.500

RUN NO. 1030/ 0 RN/L = 3.50 GRADIENT INTERVAL = -5.00/ 5.00

ALPHAR	BETAR	CNFRS	CAFRS	CLMFRS	CYFRS	CYNFRS	CBLRS	CABRS	CYNBRS	CP9	CP10
-8.353	-8.174	.00600	.00810	-.02270	.01740	.01450	-.00110	.02390	.00460	-.30550	-.23960
-8.250	-6.102	-.00980	.00910	-.01330	.02480	.00700	.00200	.02670	.00520	-.34310	-.26490
-8.291	-4.026	-.02840	.01070	-.00210	.03220	.00010	.00560	.02990	.00580	-.38510	-.29760
-8.220	.215	-.06730	.00980	.02250	.02590	.00050	.01320	.03380	.00660	-.41980	-.34970
-8.135	4.267	-.09720	.00930	.03790	.01140	.01000	.01910	.03730	.00720	-.44680	-.40290
-8.009	6.363	-.11310	.01010	.04650	.00110	.01660	.02220	.03850	.00750	-.45580	-.42110
-8.049	8.426	-.13210	.01060	.05590	-.00760	.02230	.02590	.03930	.00760	-.46340	-.43200
	GRADIENT	-.00830	-.00017	.00483	-.00250	.00119	.00163	.00089	.00017	-.00745	-.01269

RUN NO. 1031/ 0 RN/L = 3.49 GRADIENT INTERVAL = -5.00/ 5.00

ALPHAR	BETAR	CNFRS	CAFRS	CLMFRS	CYFRS	CYNFRS	CBLRS	CABRS	CYNBRS	CP9	CP10
-6.222	-8.263	.01020	.01030	-.02180	-.00240	.02390	-.00190	.02370	.00460	-.29900	-.24100
-6.193	-6.188	-.00320	.01090	-.01340	.00370	.01750	.00070	.02560	.00500	-.32630	-.25780
-6.134	-4.223	-.01830	.01170	-.00390	.00870	.01190	.00370	.02880	.00560	-.36910	-.28860
-6.216	.000	-.05020	.01080	.01650	.00300	.01260	.00990	.03240	.00630	-.40070	-.33780
-6.069	4.249	-.07690	.01150	.03190	-.00970	.02080	.01510	.03570	.00690	-.42670	-.38590
-6.027	6.271	-.09190	.01160	.03980	-.01520	.02460	.01810	.03740	.00730	-.44330	-.40920
-5.844	8.452	-.10660	.01220	.04780	-.02490	.03110	.02100	.03860	.00750	-.45640	-.42270
	GRADIENT	-.00692	-.00002	.00423	-.00217	.00105	.00135	.00081	.00015	-.00680	-.01149

IA156A, AEDC PWT 16T-470, 0 T S W/SILTS (R8NR71) (10 MAY 80)

REFERENCE DATA

SREF = 2690.0000 SQ.FT. XMRP = 976.0000 IN. XT
LREF = 1290.3000 INCHES YMRP = .0000 IN. YT
BREF = 1290.3000 INCHES ZMRP = 400.0000 IN. ZT
SCALE = .0200

PARAMETRIC DATA

IB-ELV = 12.000 OB-ELV = 11.000
BDFLAP = .000 SPDBRK = .000
RUDDER = .000 SILTS = 1.000
MACH = .600 RN/L = 3.500

RUN NO. 1042/ 0 RN/L = 3.50 GRADIENT INTERVAL = -5.00/ 5.00

ALPHAR	BETAR	CNFRS	CAFRS	CLMFRS	CYFRS	CYNFRS	CBLRS	CABRS	CYNBRS	CP9	CP10
-4.131	-8.172	.01070	.01120	-.01870	-.01350	.02870	-.00200	.02460	.00480	-.30920	-.25060
-4.207	-6.226	-.00090	.01200	-.01090	-.01050	.02480	.00030	.02540	.00490	-.31880	-.25900
-4.247	-4.145	-.01370	.01210	-.00250	-.00820	.02070	.00280	.02810	.00540	-.35560	-.28400
-4.155	.318	-.03960	.01190	.01470	-.01850	.02560	.00790	.03220	.00630	-.39530	-.33890
-3.758	4.325	-.05940	.01300	.02740	-.02840	.03160	.01170	.03520	.00680	-.42250	-.37860
-3.844	6.194	-.07110	.01330	.03370	-.03150	.03380	.01400	.03610	.00700	-.43220	-.39090
-3.896	8.191	-.08390	.01340	.04020	-.03630	.03720	.01650	.03760	.00730	-.44610	-.41100
	GRADIENT	-.00540	.00010	.00354	-.00238	.00128	.00105	.00084	.00017	-.00792	-.01119

RUN NO. 1043/ 0 RN/L = 3.50 GRADIENT INTERVAL = -5.00/ 5.00

ALPHAR	BETAR	CNFRS	CAFRS	CLMFRS	CYFRS	CYNFRS	CBLRS	CABRS	CYNBRS	CP9	CP10
-.220	-9.073	.01600	.01450	-.01710	-.02120	.03300	-.00310	.02570	.00500	-.32630	-.25970
-.204	-6.861	.00530	.01380	-.00850	-.02180	.03190	-.00100	.02490	.00480	-.31530	-.25180
-.193	-4.812	-.00270	.01330	-.00250	-.02330	.03140	.00060	.02650	.00520	-.33190	-.27270
-.188	-.635	-.01810	.01380	.00870	-.03390	.03720	.00360	.03070	.00600	-.37480	-.32350
-.138	3.452	-.03070	.01510	.01760	-.04280	.04270	.00610	.03410	.00660	-.41020	-.36630
-.148	5.554	-.03950	.01530	.02280	-.04700	.04530	.00780	.03550	.00690	-.42440	-.38500
-.153	7.655	-.04670	.01530	.02740	-.05210	.04890	.00920	.03700	.00720	-.43920	-.40260
	GRADIENT	-.00339	.00022	.00243	-.00236	.00137	.00067	.00092	.00017	-.00948	-.01133

RUN NO. 1044/ 0 RN/L = 3.50 GRADIENT INTERVAL = -5.00/ 5.00

ALPHAR	BETAR	CNFRS	CAFRS	CLMFRS	CYFRS	CYNFRS	CBLRS	CABRS	CYNBRS	CP9	CP10
4.255	-7.916	.01200	.01510	-.00830	-.00990	.02330	-.00240	.02670	.00520	-.34290	-.26490
4.335	-5.748	.00790	.01480	-.00350	-.01210	.02400	-.00150	.02620	.00510	-.33200	-.26440
4.309	-3.779	.00580	.01390	-.00060	-.01630	.02610	-.00110	.02750	.00530	-.34540	-.28220
4.220	.108	.00430	.01360	.00180	-.02940	.03520	-.00080	.03010	.00590	-.36810	-.31860
4.152	3.921	.00250	.01370	.00470	-.03900	.04180	-.00040	.03380	.00660	-.40550	-.36350
4.099	5.943	-.00100	.01510	.00750	-.04450	.04590	.00030	.03460	.00670	-.41650	-.37200
4.087	7.912	-.00310	.01520	.00950	-.04840	.04900	.00070	.03620	.00700	-.43170	-.39340
	GRADIENT	-.00043	-.00003	.00069	-.00295	.00204	.00009	.00082	.00017	-.00780	-.01056

IA156A, AEDC PWT 16T-470, O T S W/SILTS (R8NR71) (10 MAY 80)

REFERENCE DATA

SREF = 2690.0000 SQ.FT. XMRP = 976.0000 IN. XT
LREF = 1290.3000 INCHES YMRP = .0000 IN. YT
BREF = 1290.3000 INCHES ZMRP = 400.0000 IN. ZT
SCALE = .0200

PARAMETRIC DATA

IB-ELV = 12.000 OB-ELV = 11.000
BDFLAP = .000 SPDBRK = .000
RUDDER = .000 SILTS = 1.000
MACH = .600 RN/L = 3.500

RUN NO. 1045/ 0 RN/L = 3.51 GRADIENT INTERVAL = -5.00/ 5.00

ALPHAR	BETAR	CNFRS	CAFRS	CLMFRS	CYFRS	CYNFRS	CBLRS	CABRS	CYNBRS	CP9	CP10
6.477	-7.864	.01430	.01500	-.00730	.00130	.01590	-.00280	.02670	.00520	-.34040	-.26780
6.483	-5.824	.01210	.01470	-.00360	-.00050	.01640	-.00240	.02650	.00520	-.33620	-.26890
6.469	-3.798	.01140	.01370	-.00140	-.00370	.01820	-.00220	.02830	.00550	-.35420	-.29160
6.185	.110	.01240	.01400	.00000	-.01850	.02860	-.00240	.03050	.00590	-.37060	-.32510
6.123	3.885	.01420	.01400	.00120	-.02840	.03540	-.00270	.03330	.00650	-.40600	-.35340
6.060	5.925	.01540	.01460	.00130	-.03310	.03910	-.00300	.03430	.00660	-.41120	-.36880
6.113	7.921	.01610	.01490	.00210	-.03800	.04310	-.00310	.03530	.00690	-.42120	-.38380
	GRADIENT	.00036	.00004	.00034	-.00322	.00224	-.00006	.00065	.00013	-.00673	-.00805

RUN NO. 1046/ 0 RN/L = 3.51 GRADIENT INTERVAL = -5.00/ 5.00

ALPHAR	BETAR	CNFRS	CAFRS	CLMFRS	CYFRS	CYNFRS	CBLRS	CABRS	CYNBRS	CP9	CP10
8.399	-7.743	.01770	.01360	-.00690	.01660	.00720	-.00340	.02700	.00520	-.34180	-.27300
8.336	-5.695	.01660	.01310	-.00370	.01390	.00800	-.00320	.02730	.00530	-.34380	-.27910
8.353	-3.759	.01760	.01350	-.00210	.00990	.01080	-.00340	.02820	.00550	-.35140	-.29050
8.278	.087	.02220	.01400	-.00150	-.00250	.01990	-.00430	.03130	.00610	-.37950	-.33320
8.337	4.022	.03120	.01340	-.00410	-.00910	.02410	-.00600	.03370	.00650	-.41140	-.35700
8.296	5.986	.03530	.01320	-.00540	-.01480	.02840	-.00680	.03440	.00670	-.41740	-.36730
8.296	8.003	.03760	.01450	-.00580	-.02250	.03420	-.00730	.03440	.00670	-.41150	-.37110
	GRADIENT	.00175	-.00001	-.00026	-.00244	.00171	-.00033	.00071	.00013	-.00771	-.00854

IA156A, AEDC PWT 16T-470, 0 T S W/SILTS (R8NR72) (10 MAY 80)

REFERENCE DATA

SREF = 2690.0000 SQ.FT. XMRP = 976.0000 IN. XT
LREF = 1290.3000 INCHES YMRP = .0000 IN. YT
BREF = 1290.3000 INCHES ZMRP = 400.0000 IN. ZT
SCALE = .0200

PARAMETRIC DATA

IB-ELV = 12.000 OB-ELV = 11.000
BDFLAP = .000 SPDBRK = .000
RUDDER = .000 SILTS = 1.000
MACH = .800 RN/L = 3.500

RUN NO. 1047/ 0 RN/L = 3.50 GRADIENT INTERVAL = -5.00/ 5.00

ALPHAR	BETAR	CNFRS	CAFRS	CLMFRS	CYFRS	CYNFRS	CBLRS	CABRS	CYNBRS	CP9	CP10
-8.495	-6.205	-.01020	.01030	-.01560	.03410	.00410	.00210	.02460	.00480	-.31450	-.24620
-8.461	-4.106	-.02880	.01260	-.00420	.04210	-.00190	.00580	.02890	.00560	-.36280	-.29630
-8.411	.198	-.07070	.01290	.02310	.03910	-.00260	.01400	.03350	.00650	-.41160	-.35250
-8.316	4.300	-.10050	.01260	.03800	.02580	.00610	.01980	.03670	.00710	-.43360	-.40120
-8.340	6.264	-.11930	.01260	.04700	.01930	.01070	.02350	.03790	.00740	-.44080	-.42220
	GRADIENT	-.00854	.00000	.00503	-.00193	.00094	.00167	.00093	.00018	-.00845	-.01248

RUN NO. 1048/ 0 RN/L = 3.50 GRADIENT INTERVAL = -5.00/ 5.00

ALPHAR	BETAR	CNFRS	CAFRS	CLMFRS	CYFRS	CYNFRS	CBLRS	CABRS	CYNBRS	CP9	CP10
-6.292	-6.299	-.00120	.01270	-.01580	.01330	.01440	.00040	.02430	.00470	-.30590	-.24870
-6.242	-4.325	-.01650	.01440	-.00610	.01790	.01010	.00340	.02790	.00540	-.34850	-.28810
-6.393	-.004	-.05230	.01410	.01660	.01430	.00970	.01040	.03230	.00630	-.39400	-.34120
-6.240	4.275	-.08010	.01440	.03200	.00060	.01830	.01580	.03530	.00690	-.41680	-.38670
-5.989	6.416	-.09490	.01490	.04020	-.00870	.02410	.01870	.03690	.00720	-.43330	-.40790
	GRADIENT	-.00740	-.00000	.00443	-.00201	.00095	.00144	.00086	.00017	-.00795	-.01147

RUN NO. 1049/ 0 RN/L = 3.50 GRADIENT INTERVAL = -5.00/ 5.00

ALPHAR	BETAR	CNFRS	CAFRS	CLMFRS	CYFRS	CYNFRS	CBLRS	CABRS	CYNBRS	CP9	CP10
-4.128	-6.395	.00170	.01440	-.01330	-.00510	.02360	-.00020	.02420	.00470	-.30100	-.24950
-4.348	-4.248	-.01310	.01560	-.00390	-.00090	.01930	.00270	.02720	.00530	-.33690	-.28320
-4.300	.283	-.04010	.01520	.01400	-.01080	.02390	.00800	.03150	.00610	-.37950	-.33900
-3.839	4.381	-.05990	.01640	.02650	-.02250	.03090	.01180	.03410	.00660	-.40150	-.37590
-3.938	6.255	-.07380	.01660	.03420	-.02560	.03300	.01460	.03600	.00700	-.42610	-.39290
-3.891	6.465	-.07550	.01640	.03550	-.02630	.03330	.01490	.03660	.00710	-.43390	-.40060
	GRADIENT	-.00543	.00009	.00353	-.00250	.00134	.00106	.00080	.00015	-.00752	-.01077

RUN NO. 1050/ 0 RN/L = 3.50 GRADIENT INTERVAL = -5.00/ 5.00

ALPHAR	BETAR	CNFRS	CAFRS	CLMFRS	CYFRS	CYNFRS	CBLRS	CABRS	CYNBRS	CP9	CP10
-.208	-7.170	.00980	.01710	-.01290	-.02210	.03210	-.00180	.02490	.00480	-.31380	-.25350
-.207	-5.042	-.00010	.01660	-.00580	-.02340	.03180	.00010	.02590	.00500	-.32190	-.26760
-.231	-.812	-.01760	.01660	.00640	-.03140	.03620	.00350	.02940	.00570	-.35500	-.31430
-.175	3.361	-.03380	.01720	.01820	-.04020	.04180	.00670	.03380	.00660	-.40080	-.36810
-.166	5.472	-.04310	.01820	.02440	-.04480	.04500	.00860	.03560	.00690	-.42410	-.38730
	GRADIENT	-.00388	.00014	.00283	-.00211	.00134	.00077	.00105	.00022	-.01097	-.01289

IA156A, AEDC PWT 16T-470, 0 T S W/SILTS (R8NR72) (10 MAY 80)

REFERENCE DATA

SREF = 2690.0000 SQ.FT. XMRP = 976.0000 IN. XT
LREF = 1290.3000 INCHES YMRP = .0000 IN. YT
BREF = 1290.3000 INCHES ZMRP = 400.0000 IN. ZT
SCALE = .0200

PARAMETRIC DATA

IB-ELV = 12.000 OB-ELV = 11.000
BDFLAP = .000 SPDBRK = .000
RUDDER = .000 SILTS = 1.000
MACH = .800 RN/L = 3.500

RUN NO. 1051/ 0 RN/L = 3.49 GRADIENT INTERVAL = -5.00/ 5.00

ALPHAR	BETAR	CNFRS	CAFRS	CLMFRS	CYFRS	CYNFRS	CBLRS	CABRS	CYNBRS	CP9	CP10
4.411	-5.689	.00790	.01720	-.00170	-.01090	.02480	-.00150	.02680	.00520	-.33610	-.27400
4.295	-3.690	.00550	.01670	.00090	-.01710	.02780	-.00100	.02780	.00540	-.34280	-.29070
4.165	.094	.00410	.01670	.00340	-.03100	.03720	-.00070	.02940	.00570	-.35550	-.31500
4.110	3.733	.00110	.01770	.00640	-.03900	.04330	-.00010	.03340	.00650	-.39770	-.36330
4.074	5.817	-.00300	.01840	.00910	-.04490	.04780	.00070	.03560	.00690	-.42150	-.38940
	GRADIENT	-.00059	.00013	.00074	-.00296	.00209	.00012	.00075	.00015	-.00737	-.00976

RUN NO. 1052/ 0 RN/L = 3.50 GRADIENT INTERVAL = -5.00/ 5.00

ALPHAR	BETAR	CNFRS	CAFRS	CLMFRS	CYFRS	CYNFRS	CBLRS	CABRS	CYNBRS	CP9	CP10
6.455	-5.776	.01280	.01740	-.00370	.00110	.01770	-.00250	.02720	.00530	-.34160	-.27870
6.433	-3.769	.01180	.01710	-.00110	-.00180	.01950	-.00230	.02800	.00540	-.34460	-.29290
6.114	.054	.01300	.01660	.00050	-.01750	.03020	-.00250	.03030	.00590	-.36460	-.32500
6.059	3.840	.01520	.01730	.00110	-.02580	.03630	-.00290	.03340	.00650	-.39990	-.36180
6.143	5.750	.01840	.01730	.00040	-.03000	.03980	-.00350	.03520	.00680	-.41830	-.38300
	GRADIENT	.00045	.00003	.00029	-.00316	.00221	-.00008	.00071	.00014	-.00726	-.00905

IA156A, AEDC PWT 16T-470, 0 T S W/SILTS (R8NR73) (10 MAY 80)

REFERENCE DATA

SREF = 2690.0000 SQ.FT. XMRP = 976.0000 IN. XT
LREF = 1290.3000 INCHES YMRP = .0000 IN. YT
BREF = 1290.3000 INCHES ZMRP = 400.0000 IN. ZT
SCALE = .0200

PARAMETRIC DATA

IB-ELV = 12.000 OB-ELV = 11.000
BDFLAP = .000 SPDBRK = .000
RUDDER = .000 SILTS = 1.000
MACH = .900 RN/L = 3.500

RUN NO. 1053/ 0 RN/L = 3.50 GRADIENT INTERVAL = -5.00/ 5.00

ALPHAR	BETAR	CNFRS	CAFRS	CLMFRS	CYFRS	CYNFRS	CBLRS	CABRS	CYNBRS	CP9	CP10
-8.513	-6.270	-.01050	.01350	-.01690	.04420	.00150	.00220	.02740	.00530	-.34480	-.27920
-8.499	-4.111	-.03070	.01580	-.00460	.05060	-.00420	.00620	.03120	.00610	-.38520	-.32510
-8.506	.151	-.07520	.01520	.02390	.04680	-.00300	.01490	.03510	.00680	-.42410	-.37520
-8.373	4.228	-.10550	.01600	.04020	.03220	.00550	.02080	.03670	.00710	-.42250	-.41380
	GRADIENT	-.00898	.00002	.00538	-.00220	.00116	.00175	.00066	.00012	-.00451	-.01065

IA156A, AEDC PWT 16T-470, 0 T S W/SILTS (R8NR73) (10 MAY 80)

REFERENCE DATA

SREF = 2690.0000 SQ.FT. XMRP = 976.0000 IN. XT
LREF = 1290.3000 INCHES YMRP = .0000 IN. YT
BREF = 1290.3000 INCHES ZMRP = 400.0000 IN. ZT
SCALE = .0200

PARAMETRIC DATA

IB-ELV = 12.000 OB-ELV = 11.000
BDFLAP = .000 SPDBRK = .000
RUDDER = .000 SILTS = 1.000
MACH = .900 RN/L = 3.500

RUN NO. 1054/ 0 RN/L = 3.50 GRADIENT INTERVAL = -5.00/ 5.00

ALPHAR	BETAR	CNFRS	CAFRS	CLMFRS	CYFRS	CYNFRS	CBLRS	CABRS	CYNBRS	CP9	CP10
-6.348	-6.322	-.00190	.01570	-.01780	.01930	.01360	.00050	.02670	.00520	-.33120	-.27680
-6.327	-4.352	-.01740	.01710	-.00770	.02380	.00860	.00350	.03010	.00580	-.37190	-.31340
-6.466	-.027	-.05470	.01590	.01650	.01980	.00900	.01080	.03360	.00650	-.40460	-.35960
-6.304	4.268	-.08470	.01820	.03380	.00830	.01530	.01670	.03620	.00700	-.41830	-.40650
-6.108	6.406	-.10100	.01860	.04250	-.00080	.02100	.01990	.03820	.00740	-.43910	-.42940
	GRADIENT	-.00781	.00013	.00482	-.00180	-.00078	.00153	.00071	.00014	-.00539	-.01080

RUN NO. 1055/ 0 RN/L = 3.50 GRADIENT INTERVAL = -5.00/ 5.00

ALPHAR	BETAR	CNFRS	CAFRS	CLMFRS	CYFRS	CYNFRS	CBLRS	CABRS	CYNBRS	CP9	CP10
-4.192	-6.438	.00210	.01810	-.01550	-.00090	.02400	-.00030	.02650	.00520	-.32430	-.28020
-4.396	-4.286	-.01170	.01950	-.00700	.00410	.01880	.00240	.02920	.00570	-.35560	-.30880
-4.367	.267	-.04050	.01750	.01270	-.00620	.02280	.00800	.03250	.00630	-.38520	-.35450
-3.898	4.377	-.06430	.02000	.02820	-.01660	.02830	.01270	.03600	.00700	-.42040	-.39880
-4.002	6.252	-.07820	.02040	.03560	-.02040	.03110	.01540	.03740	.00730	-.43620	-.41430
	GRADIENT	-.00608	.00005	.00407	-.00239	.00109	.00119	.00078	.00015	-.00746	-.01038

RUN NO. 1056/ 0 RN/L = 3.50 GRADIENT INTERVAL = -5.00/ 5.00

ALPHAR	BETAR	CNFRS	CAFRS	CLMFRS	CYFRS	CYNFRS	CBLRS	CABRS	CYNBRS	CP9	CP10
-.260	-7.331	.01120	.02080	-.01550	-.02130	.03420	-.00210	.02720	.00530	-.33320	-.28710
-.258	-5.116	.00220	.02110	-.00920	-.02100	.03270	-.00040	.02760	.00540	-.33650	-.29310
-.300	-.792	-.01620	.02010	.00430	-.02830	.03660	.00320	.03110	.00600	-.37260	-.33660
-.230	3.301	-.03390	.02090	.01770	-.03890	.04290	.00670	.03520	.00680	-.41810	-.38330
-.219	5.468	-.04380	.02180	.02450	-.04560	.04740	.00860	.03720	.00720	-.44360	-.40440
	GRADIENT	-.00432	.00020	.00327	-.00259	.00154	.00086	.00100	.00020	-.01112	-.01141

RUN NO. 1058/ 0 RN/L = 3.51 GRADIENT INTERVAL = -5.00/ 5.00

ALPHAR	BETAR	CNFRS	CAFRS	CLMFRS	CYFRS	CYNFRS	CBLRS	CABRS	CYNBRS	CP9	CP10
4.435	-5.728	.00880	.02080	-.00270	-.01180	.02660	-.00170	.02880	.00560	-.35630	-.30040
4.283	-3.646	.00640	.02070	-.00070	-.01840	.02950	-.00130	.03080	.00600	-.37540	-.32510
3.956	.003	.00180	.02060	.00290	-.03190	.03840	-.00040	.03220	.00630	-.38630	-.34770
4.119	3.741	-.00300	.02160	.00860	-.04040	.04430	.00060	.03560	.00690	-.42430	-.38680
4.052	5.783	-.00750	.02230	.01120	-.04720	.05000	.00150	.03760	.00730	-.44650	-.40870
	GRADIENT	-.00127	.00012	.00126	-.00298	.00200	.00026	.00065	.00012	-.00663	-.00836

IA156A, AEDC PWT 16T-470, O T S W/SILTS (R8NR74) (10 MAY 80)

REFERENCE DATA

SREF = 2690.0000 SQ.FT. XMRP = 976.0000 IN. XT
LREF = 1290.3000 INCHES YMRP = .0000 IN. YT
BREF = 1290.3000 INCHES ZMRP = 400.0000 IN. ZT
SCALE = .0200

PARAMETRIC DATA

IB-ELV = 12.000 OB-ELV = 11.000
BDFLAP = .000 SPDBRK = .000
RUDDER = .000 SILTS = 1.000
MACH = .950 RN/L = 3.500

RUN NO. 1059/ 0 RN/L = 3.50 GRADIENT INTERVAL = -5.00/ 5.00

ALPHAR	BETAR	CNFRS	CAFRS	CLMFRS	CYFRS	CYNFRS	CBLRS	CABRS	CYNBRS	CP9	CP10
-8.577	-6.257	-.01220	.01500	-.01770	.03930	.00560	.00250	.02920	.00570	-.36780	-.29770
-8.635	-4.127	-.03190	.01740	-.00620	.04730	-.00120	.00640	.03380	.00660	-.41060	-.36010
-8.600	.204	-.07580	.01740	.02160	.04690	-.00230	.01500	.03880	.00750	-.45880	-.42500
-8.474	4.266	-.11240	.01840	.04220	.03490	.00520	.02210	.03920	.00760	-.45000	-.44180
-8.543	6.219	-.13360	.01890	.05230	.02890	.00990	.02630	.04060	.00790	-.46520	-.45970
	GRADIENT	-.00960	.00012	.00577	-.00146	.00075	.00187	.00065	.00012	-.00477	-.00979

RUN NO. 1060/ 0 RN/L = 3.50 GRADIENT INTERVAL = -5.00/ 5.00

ALPHAR	BETAR	CNFRS	CAFRS	CLMFRS	CYFRS	CYNFRS	CBLRS	CABRS	CYNBRS	CP9	CP10
-6.430	-6.353	-.00280	.01760	-.01800	.01380	.01840	.00070	.02900	.00560	-.36040	-.30140
-6.390	-4.363	-.01780	.01970	-.00840	.01940	.01220	.00360	.03290	.00640	-.39870	-.35110
-6.540	-.055	-.05500	.01960	.01510	.01930	.01050	.01080	.03810	.00740	-.45320	-.41550
-6.378	4.248	-.08950	.02100	.03600	.00730	.01680	.01760	.03980	.00770	-.45750	-.44850
-6.081	6.411	-.10590	.02160	.04590	-.00610	.02410	.02080	.04190	.00810	-.48390	-.47000
	GRADIENT	-.00833	.00015	.00516	-.00140	.00053	.00163	.00080	.00015	-.00683	-.01131

RUN NO. 1061/ 0 RN/L = 3.50 GRADIENT INTERVAL = -5.00/ 5.00

ALPHAR	BETAR	CNFRS	CAFRS	CLMFRS	CYFRS	CYNFRS	CBLRS	CABRS	CYNBRS	CP9	CP10
-4.181	-6.441	.00110	.02060	-.01450	-.00660	.02820	-.00010	.02880	.00560	-.35080	-.30460
-4.436	-4.285	-.01210	.02220	-.00690	-.00150	.02270	.00240	.03240	.00630	-.39220	-.34630
-4.396	.267	-.04340	.02080	.01500	-.01110	.02610	.00850	.03660	.00710	-.43230	-.40120
-3.920	4.396	-.06840	.02280	.03160	-.02380	.03260	.01340	.04030	.00780	-.46930	-.44730
-4.017	6.241	-.08370	.02340	.03950	-.02660	.03480	.01640	.04120	.00800	-.48020	-.45810
	GRADIENT	-.00649	.00006	.00444	-.00256	.00113	.00127	.00091	.00017	-.00888	-.01164

RUN NO. 1062/ 0 RN/L = 3.50 GRADIENT INTERVAL = -5.00/ 5.00

ALPHAR	BETAR	CNFRS	CAFRS	CLMFRS	CYFRS	CYNFRS	CBLRS	CABRS	CYNBRS	CP9	CP10
-.253	-7.335	.00830	.02210	-.01150	-.01970	.03590	-.00160	.02840	.00550	-.35090	-.29730
-.239	-5.153	-.00120	.02290	-.00440	-.02070	.03470	.00030	.03000	.00580	-.36470	-.31960
-.267	-.823	-.01820	.02340	.00830	-.03260	.04080	.00350	.03480	.00670	-.41890	-.37260
-.193	3.285	-.03490	.02430	.02050	-.04460	.04790	.00680	.03960	.00770	-.47430	-.42840
-.197	5.453	-.04460	.02380	.02630	-.05030	.05140	.00870	.04130	.00800	-.49410	-.44750
	GRADIENT	-.00407	.00022	.00297	-.00292	.00173	.00080	.00117	.00024	-.01349	-.01358

IA156A, AEDC PWT 16T-470, O T S W/SILTS (R8NR74) (10 MAY 80)

REFERENCE DATA

SREF = 2690.0000 SQ.FT. XMRP = 976.0000 IN. XT
LREF = 1290.3000 INCHES YMRP = .0000 IN. YT
BREF = 1290.3000 INCHES ZMRP = 400.0000 IN. ZT
SCALE = .0200

PARAMETRIC DATA

IB-ELV = 12.000 OB-ELV = 11.000
BDFLAP = .000 SPDBRK = .000
RUDDER = .000 SILTS = 1.000
MACH = .950 RN/L = 3.500

RUN NO. 1063/ 0 RN/L = 3.50 GRADIENT INTERVAL = -5.00/ 5.00

ALPHAR	BETAR	CNFRS	CAFRS	CLMFRS	CYFRS	CYNFRS	CBLRS	CABRS	CYNBRS	CP9	CP10
4.326	-5.804	.00750	.02270	-.00210	-.01290	.02870	-.00150	.03090	.00600	-.38170	-.32140
4.298	-3.729	.00540	.02350	-.00010	-.01820	.03140	-.00110	.03290	.00640	-.40260	-.34740
4.122	.060	.00020	.02350	.00380	-.03170	.04060	-.00010	.03600	.00700	-.43290	-.38660
4.104	3.667	-.00560	.02450	.01030	-.03850	.04530	.00110	.03910	.00760	-.46930	-.42190
4.090	5.768	-.00910	.02480	.01320	-.04600	.05100	.00180	.04040	.00780	-.48800	-.43250
	GRADIENT	-.00149	.00013	.00140	-.00275	.00188	.00030	.00084	.00016	-.00901	-.01008

IA156A, AEDC PWT 16T-470, O T S W/SILTS (R8NR75) (10 MAY 80)

REFERENCE DATA

SREF = 2690.0000 SQ.FT. XMRP = 976.0000 IN. XT
LREF = 1290.3000 INCHES YMRP = .0000 IN. YT
BREF = 1290.3000 INCHES ZMRP = 400.0000 IN. ZT
SCALE = .0200

PARAMETRIC DATA

IB-ELV = 12.000 OB-ELV = 11.000
BDFLAP = .000 SPDBRK = .000
RUDDER = .000 SILTS = 1.000
MACH = 1.050 RN/L = 3.500

RUN NO. 1064/ 0 RN/L = 3.50 GRADIENT INTERVAL = -5.00/ 5.00

ALPHAR	BETAR	CNFRS	CAFRS	CLMFRS	CYFRS	CYNFRS	CBLRS	CABRS	CYNBRS	CP9	CP10
-8.653	-6.306	-.00980	.02210	-.02430	.03620	.01090	.00210	.04090	.00790	-.49860	-.43200
-8.705	-4.180	-.03210	.02240	-.01060	.04510	.00450	.00640	.04740	.00920	-.56470	-.51500
-8.702	.158	-.08290	.02640	.02300	.04230	.00540	.01630	.05170	.01000	-.61030	-.56670
-8.548	4.209	-.12620	.03030	.05040	.02500	.01820	.02480	.05010	.00970	-.58910	-.55140
-8.606	6.192	-.14730	.02680	.06040	.02010	.02010	.02900	.05590	.01090	-.66100	-.61210
	GRADIENT	-.01122	.00094	.00728	-.00238	.00162	.00219	.00033	.00006	-.00300	-.00443

RUN NO. 1065/ 0 RN/L = 3.51 GRADIENT INTERVAL = -5.00/ 5.00

ALPHAR	BETAR	CNFRS	CAFRS	CLMFRS	CYFRS	CYNFRS	CBLRS	CABRS	CYNBRS	CP9	CP10
-6.489	-6.400	.00070	.02480	-.02400	.00820	.02440	.00000	.04100	.00800	-.49380	-.43900
-6.428	-4.400	-.01700	.02650	-.01190	.01390	.01920	.00340	.04580	.00890	-.54610	-.49610
-6.614	-.093	-.06080	.02680	.01770	.01090	.02070	.01190	.05040	.00980	-.59600	-.55210
-6.388	4.230	-.09820	.02900	.04180	-.00320	.02740	.01930	.05330	.01040	-.63010	-.58410
-6.394	6.268	-.11840	.02900	.05270	-.01090	.03250	.02320	.05480	.01060	-.64510	-.60190
	GRADIENT	-.00941	.00029	.00622	-.00198	.00095	.00184	.00087	.00017	-.00973	-.01019

IA156A, AEDC PWT 16T-470, O T S W/SILTS (R8NR75) (10 MAY 80)

REFERENCE DATA

SREF = 2690.0000 SQ.FT. XMRP = 976.0000 IN. XT
LREF = 1290.3000 INCHES YMRP = .0000 IN. YT
BREF = 1290.3000 INCHES ZMRP = 400.0000 IN. ZT
SCALE = .0200

PARAMETRIC DATA

IB-ELV = 12.000 OB-ELV = 11.000
BDFLAP = .000 SPDBRK = .000
RUDDER = .000 SILTS = 1.000
MACH = 1.050 RN/L = 3.500

RUN NO. 1066/ 0 RN/L = 3.50 GRADIENT INTERVAL = -5.00/ 5.00

ALPHAR	BETAR	CNFRS	CAFRS	CLMFRS	CYFRS	CYNFRS	CBLRS	CABRS	CYNBRS	CP9	CP10
-4.236	-6.492	.00500	.02670	-.01970	-.01420	.03630	-.00090	.04110	.00800	-.49050	-.44490
-4.472	-4.330	-.01040	.02830	-.00970	-.00910	.03070	.00210	.04470	.00870	-.53400	-.48290
-4.451	.221	-.04620	.02800	.01630	-.02100	.03690	.00900	.04970	.00960	-.58840	-.54250
-3.933	4.367	-.07500	.03090	.03650	-.03470	.04430	.01470	.05220	.01010	-.61700	-.57190
-4.045	6.227	-.09180	.03130	.04560	-.03570	.04530	.01800	.05280	.01030	-.62520	-.57770
	GRADIENT	-.00744	.00029	.00532	-.00294	.00156	.00145	.00087	.00016	-.00958	-.01028

RUN NO. 1067/ 0 RN/L = 3.50 GRADIENT INTERVAL = -5.00/ 5.00

ALPHAR	BETAR	CNFRS	CAFRS	CLMFRS	CYFRS	CYNFRS	CBLRS	CABRS	CYNBRS	CP9	CP10
-.266	-7.399	.01050	.02790	-.01350	-.02790	.04390	-.00210	.04000	.00780	-.48190	-.42870
-.260	-5.205	.00040	.02850	-.00540	-.03010	.04330	-.00010	.04180	.00810	-.50040	-.45230
-.331	-.847	-.01840	.03020	.00860	-.04480	.05230	.00350	.04820	.00940	-.57200	-.52490
-.245	3.265	-.03850	.03210	.02400	-.05590	.05950	.00750	.05220	.01010	-.61930	-.57020
-.236	5.442	-.05010	.03240	.03150	-.06040	.06180	.00980	.05360	.01040	-.63430	-.58650
	GRADIENT	-.00489	.00046	.00374	-.00270	.00175	.00097	.00097	.00017	-.01150	-.01102

RUN NO. 1068/ 0 RN/L = 3.50 GRADIENT INTERVAL = -5.00/ 5.00

ALPHAR	BETAR	CNFRS	CAFRS	CLMFRS	CYFRS	CYNFRS	CBLRS	CABRS	CYNBRS	CP9	CP10
4.329	-5.819	.01010	.02900	-.00550	-.01650	.03480	-.00210	.04330	.00840	-.51880	-.46800
4.279	-3.741	.00870	.03060	-.00400	-.02200	.03770	-.00180	.04520	.00880	-.53560	-.49360
4.119	.043	.00120	.03160	.00440	-.03700	.04740	-.00040	.04790	.00930	-.56820	-.52220
4.135	3.648	-.00560	.03170	.01150	-.04580	.05350	.00100	.05080	.00990	-.60580	-.55220
4.125	5.739	-.01000	.03180	.01520	-.05400	.05990	.00190	.05060	.00980	-.60380	-.54930
	GRADIENT	-.00194	.00015	.00210	-.00323	.00214	.00038	.00076	.00015	-.00949	-.00793

IA156A, AEDC PWT 16T-470, O T S W/SILTS (R8NR76) (10 MAY 80)

REFERENCE DATA

SREF = 2690.0000 SQ.FT. XMRP = 976.0000 IN. XT
LREF = 1290.3000 INCHES YMRP = .0000 IN. YT
BREF = 1290.3000 INCHES ZMRP = 400.0000 IN. ZT
SCALE = .0200

PARAMETRIC DATA

IB-ELV = 12.000 OB-ELV = 11.000
BDFLAP = .000 SPDBRK = .000
RUDDER = .000 SILTS = 1.000
MACH = 1.100 RN/L = 3.500

RUN NO. 1069/ 0 RN/L = 3.50 GRADIENT INTERVAL = -5.00/ 5.00

ALPHAR	BETAR	CNFRS	CAFRS	CLMFRS	CYFRS	CYNFRS	CBLRS	CABRS	CYNBRS	CP9	CP10
-8.661	-6.424	-.01060	.02340	-.02370	.03790	.00970	.00220	.03790	.00740	-.46220	-.40230
-8.738	-4.239	-.03340	.02590	-.00970	.04660	.00420	.00660	.04270	.00830	-.50830	-.46360
-8.750	.040	-.08290	.02850	.02230	.04520	.00440	.01630	.04830	.00940	-.57130	-.52860
-8.579	4.180	-.12560	.02980	.04910	.02730	.01560	.02460	.05050	.00980	-.59600	-.55380
-8.589	6.172	-.14530	.03070	.05920	.01840	.02090	.02850	.05170	.01000	-.61490	-.56190
	GRADIENT	-.01095	.00046	.00699	-.00228	.00135	.00214	.00093	.00018	-.01044	-.01074

RUN NO. 1070/ 0 RN/L = 3.50 GRADIENT INTERVAL = -5.00/ 5.00

ALPHAR	BETAR	CNFRS	CAFRS	CLMFRS	CYFRS	CYNFRS	CBLRS	CABRS	CYNBRS	CP9	CP10
-6.503	-6.404	-.00130	.02590	-.02280	.01070	.02240	.00030	.03800	.00740	-.45950	-.40680
-6.462	-4.428	-.01810	.02810	-.01170	.01620	.01800	.00360	.04170	.00810	-.49980	-.44990
-6.676	-.076	-.06240	.02970	.01760	.01430	.01870	.01220	.04530	.00880	-.53710	-.49500
-6.432	4.250	-.09780	.03220	.04130	-.00530	.02810	.01920	.04890	.00950	-.57880	-.53480
-6.225	6.391	-.11680	.03280	.05250	-.01320	.03320	.02290	.05060	.00980	-.59780	-.55400
	GRADIENT	-.00919	.00047	.00611	-.00248	.00116	.00180	.00083	.00016	-.00910	-.00978

RUN NO. 1071/ 0 RN/L = 3.50 GRADIENT INTERVAL = -5.00/ 5.00

ALPHAR	BETAR	CNFRS	CAFRS	CLMFRS	CYFRS	CYNFRS	CBLRS	CABRS	CYNBRS	CP9	CP10
-4.272	-6.500	.00440	.02790	-.02020	-.01200	.03450	-.00080	.03790	.00740	-.45410	-.40950
-4.507	-4.343	-.01090	.02920	-.01040	-.00680	.02910	.00220	.04100	.00800	-.49370	-.44020
-4.469	.243	-.04700	.03030	.01620	-.01960	.03540	.00920	.04470	.00870	-.53270	-.48580
-3.943	4.375	-.07520	.03340	.03630	-.03120	.04190	.01470	.04720	.00920	-.56040	-.51410
-4.035	6.227	-.09170	.03400	.04560	-.03280	.04310	.01790	.04860	.00940	-.57670	-.52910
	GRADIENT	-.00738	.00048	.00537	-.00280	.00147	.00144	.00071	.00014	-.00767	-.00850

RUN NO. 1072/ 0 RN/L = 3.50 GRADIENT INTERVAL = -5.00/ 5.00

ALPHAR	BETAR	CNFRS	CAFRS	CLMFRS	CYFRS	CYNFRS	CBLRS	CABRS	CYNBRS	CP9	CP10
-.266	-7.421	.00940	.02970	-.01310	-.02860	.04410	-.00190	.03600	.00700	-.43560	-.38470
-.266	-5.225	-.00060	.02960	-.00500	-.03040	.04310	.00010	.03710	.00720	-.44690	-.39860
-.315	-.845	-.01950	.03140	.00910	-.04330	.05060	.00380	.04230	.00820	-.50640	-.45660
-.235	3.280	-.04040	.03410	.02500	-.05310	.05660	.00790	.04610	.00890	-.54820	-.50100
-.228	5.484	-.05240	.03520	.03270	-.05670	.05840	.01020	.04690	.00910	-.55900	-.50870
	GRADIENT	-.00507	.00065	.00385	-.00238	.00145	.00099	.00092	.00017	-.01013	-.01076

IA156A, AEDC PWT 16T-470, O T S W/SILTS (R8NR76) (10 MAY 80)

REFERENCE DATA

SREF = 2690.0000 SQ.FT. XMRP = 976.0000 IN. XT
LREF = 1290.3000 INCHES YMRP = .0000 IN. YT
BREF = 1290.3000 INCHES ZMRP = 400.0000 IN. ZT
SCALE = .0200

PARAMETRIC DATA

IB-ELV = 12.000 OB-ELV = 11.000
BDFLAP = .000 SPDBRK = .000
RUDDER = .000 SILTS = 1.000
MACH = 1.100 RN/L = 3.500

RUN NO. 1073/ 0 RN/L = 3.51 GRADIENT INTERVAL = -5.00/ 5.00

ALPHAR	BETAR	CNFRS	CAFRS	CLMFRS	CYFRS	CYNFRS	CBLRS	CABRS	CYNBRS	CP9	CP10
4.484	-5.719	.01000	.03060	-.00490	-.01390	.03320	-.00200	.03730	.00720	-.44880	-.40100
4.299	-3.731	.00770	.03180	-.00260	-.01990	.03620	-.00160	.03980	.00770	-.47490	-.43190
4.161	.041	.00040	.03310	.00570	-.03600	.04680	-.00020	.04180	.00810	-.49880	-.45210
4.181	3.626	-.00710	.03410	.01350	-.04400	.05200	.00130	.04430	.00860	-.53040	-.47840
4.145	5.723	-.01240	.03430	.01740	-.05280	.05900	.00230	.04480	.00870	-.53680	-.48330
	GRADIENT	-.00201	.00031	.00219	-.00328	.00215	.00039	.00061	.00012	-.00753	-.00631

IA156A, AEDC PWT 16T-470, O T S W/SILTS (R8NR77) (10 MAY 80)

REFERENCE DATA

SREF = 2690.0000 SQ.FT. XMRP = 976.0000 IN. XT
LREF = 1290.3000 INCHES YMRP = .0000 IN. YT
BREF = 1290.3000 INCHES ZMRP = 400.0000 IN. ZT
SCALE = .0200

PARAMETRIC DATA

IB-ELV = 8.000 OB-ELV = 11.000
BDFLAP = .000 SPDBRK = .000
RUDDER = .000 SILTS = 1.000
MACH = .600 RN/L = 3.500

RUN NO. 1077/ 0 RN/L = 3.50 GRADIENT INTERVAL = -5.00/ 5.00

ALPHAR	BETAR	CNFRS	CAFRS	CLMFRS	CYFRS	CYNFRS	CBLRS	CABRS	CYNBRS	CP9	CP10
-8.370	-8.200	.00770	.00770	-.02470	.01740	.01520	-.00140	.02480	.00480	-.31440	-.25160
-8.258	-6.099	-.00830	.00900	-.01510	.02490	.00750	.00170	.02660	.00520	-.34320	-.26360
-8.304	-4.029	-.02720	.00810	-.00400	.03290	.00000	.00540	.03250	.00630	-.41460	-.32670
-8.230	.205	-.06550	.01050	.02070	.02630	.00090	.01280	.03240	.00630	-.40130	-.33600
-8.154	4.269	-.09700	.00630	.03700	.01180	.00980	.01900	.04070	.00790	-.48660	-.44000
-8.156	6.241	-.11440	.01090	.04590	.00350	.01620	.02240	.03760	.00730	-.44510	-.41200
-8.196	8.283	-.13230	.01030	.05490	-.00610	.02210	.02600	.03940	.00760	-.46350	-.43360
	GRADIENT	-.00842	-.00021	.00495	-.00254	.00117	.00164	.00098	.00019	-.00859	-.01357

RUN NO. 1078/ 0 RN/L = 3.50 GRADIENT INTERVAL = -5.00/ 5.00

ALPHAR	BETAR	CNFRS	CAFRS	CLMFRS	CYFRS	CYNFRS	CBLRS	CABRS	CYNBRS	CP9	CP10
-6.228	-8.261	.01190	.00990	-.02350	-.00300	.02460	-.00230	.02430	.00470	-.30600	-.24880
-6.210	-6.191	-.00150	.01080	-.01530	.00390	.01790	.00030	.02560	.00500	-.32510	-.25740
-6.143	-4.228	-.01650	.01140	-.00570	.00830	.01270	.00330	.02880	.00560	-.36900	-.28730
-6.234	-.000	-.04980	.01060	.01540	.00310	.01310	.00980	.03280	.00640	-.40370	-.34390
-6.094	4.243	-.07670	.01150	.03100	-.00930	.02120	.01500	.03570	.00690	-.42440	-.38810
-6.033	6.268	-.09100	.01180	.03870	-.01530	.02530	.01780	.03700	.00720	-.43690	-.40460
-5.853	8.432	-.10560	.01230	.04650	-.02520	.03190	.02070	.03830	.00740	-.44940	-.42210
	GRADIENT	-.00711	.00001	.00433	-.00208	.00100	.00138	.00081	.00015	-.00654	-.01190

IA156A, AEDC PWT 16T-470, O T S W/SILTS (R8NR77) (10 MAY 80)

REFERENCE DATA

SREF = 2690.0000 SQ.FT. XMRP = 976.0000 IN. XT
LREF = 1290.3000 INCHES YMRP = .0000 IN. YT
BREF = 1290.3000 INCHES ZMRP = 400.0000 IN. ZT
SCALE = .0200

PARAMETRIC DATA

IB-ELV = 8.000 OB-ELV = 11.000
BDFLAP = .000 SPDBRK = .000
RUDDER = .000 SILTS = 1.000
MACH = .600 RN/L = 3.500

RUN NO. 1079/ 0 RN/L = 3.50 GRADIENT INTERVAL = -5.00/ 5.00

ALPHAR	BETAR	CNFRS	CAFRS	CLMFRS	CYFRS	CYNFRS	CBLRS	CABRS	CYNBRS	CP9	CP10
-4.012	-8.362	.01320	.01140	-.02070	-.01550	.03060	-.00250	.02480	.00480	-.31100	-.25490
-4.247	-6.234	.00090	.01190	-.01270	-.01160	.02610	-.00010	.02550	.00490	-.31890	-.26200
-4.266	-4.135	-.01230	.01240	-.00420	-.00900	.02180	.00240	.02790	.00540	-.35240	-.28310
-4.086	.117	-.03660	.01210	.01240	-.01930	.02670	.00720	.03210	.00620	-.39220	-.33970
-3.752	4.360	-.05820	.01300	.02610	-.02960	.03290	.01140	.03550	.00690	-.42420	-.38330
-3.856	6.184	-.07000	.01360	.03230	-.03260	.03510	.01370	.03610	.00700	-.42890	-.39310
-3.916	8.188	-.08310	.01370	.03000	-.03770	.03880	.01630	.03750	.00730	-.44410	-.40980
	GRADIENT	-.00540	.00007	.00357	-.00242	.00131	.00106	.00089	.00018	-.00845	-.01180

RUN NO. 1080/ 0 RN/L = 3.50 GRADIENT INTERVAL = -5.00/ 5.00

ALPHAR	BETAR	CNFRS	CAFRS	CLMFRS	CYFRS	CYNFRS	CBLRS	CABRS	CYNBRS	CP9	CP10
-.241	-9.035	.01730	.01440	-.01850	-.02250	.03440	-.00340	.02570	.00500	-.32900	-.25740
-.233	-6.801	.00660	.01340	-.01000	-.02250	.03290	-.00130	.02530	.00490	-.31990	-.25740
-.223	-4.809	-.00130	.01280	-.00390	-.02460	.03280	.00030	.02730	.00530	-.33880	-.28210
-.217	-.663	-.01660	.01380	.00720	-.03500	.03840	.00330	.03100	.00600	-.37840	-.32760
-.174	3.450	-.02950	.01470	.01620	-.04390	.04380	.00580	.03440	.00670	-.41090	-.37310
-.174	5.550	-.03790	.01490	.02140	-.04800	.04640	.00740	.03570	.00690	-.42370	-.38920
-.177	7.651	-.04460	.01560	.02560	-.05350	.05050	.00880	.03670	.00710	-.43780	-.39860
	GRADIENT	-.00341	.00023	.00243	-.00234	.00133	.00067	.00086	.00017	-.00873	-.01102

RUN NO. 1081/ 0 RN/L = 3.50 GRADIENT INTERVAL = -5.00/ 5.00

ALPHAR	BETAR	CNFRS	CAFRS	CLMFRS	CYFRS	CYNFRS	CBLRS	CABRS	CYNBRS	CP9	CP10
4.400	-7.803	.01390	.01520	-.00980	-.01090	.02430	-.00280	.02670	.00520	-.34280	-.26640
4.336	-5.713	.00980	.01440	-.00500	-.01310	.02490	-.00200	.02660	.00520	-.33770	-.26870
4.281	-3.737	.00770	.01370	-.00240	-.01790	.02770	-.00150	.02780	.00540	-.34900	-.28500
4.090	.011	.00560	.01350	.00020	-.03110	.03670	-.00110	.03050	.00590	-.37080	-.32320
4.143	3.851	.00410	.01450	.00310	-.04000	.04310	-.00080	.03320	.00640	-.39600	-.35900
4.090	5.930	.00030	.01500	.00610	-.04590	.04740	-.00010	.03520	.00680	-.41890	-.38180
4.078	7.905	-.00120	.01550	.00790	-.04930	.05020	.00020	.03600	.00700	-.43040	-.39020
	GRADIENT	-.00047	.00011	.00072	-.00291	.00203	.00009	.00071	.00013	-.00620	-.00975

IA156A, AEDC PWT 16T-470, O T S W/SILTS (R8NR77) (10 MAY 80)

REFERENCE DATA

SREF = 2690.0000 SQ.FT. XMRP = 976.0000 IN. XT
LREF = 1290.3000 INCHES YMRP = .0000 IN. YT
BREF = 1290.3000 INCHES ZMRP = 400.0000 IN. ZT
SCALE = .0200

PARAMETRIC DATA

IB-ELV = 8.000 OB-ELV = 11.000
BDFLAP = .000 SPDBRK = .000
RUDDER = .000 SILTS = 1.000
MACH = .600 RN/L = 3.500

RUN NO. 1082/ 0 RN/L = 3.50 GRADIENT INTERVAL = -5.00/ 5.00

ALPHAR	BETAR	CNFRS	CAFRS	CLMFRS	CYFRS	CYNFRS	CBLRS	CABRS	CYNBRS	CP9	CP10
6.459	-7.872	.01580	.01470	-.00870	-.00010	.01730	-.00320	.02740	.00530	-.34810	-.27720
6.468	-5.827	.01400	.01420	-.00540	-.00210	.01780	-.00280	.02740	.00530	-.34610	-.27840
6.452	-3.789	.01320	.01400	-.00300	-.00560	.01990	-.00260	.02820	.00550	-.35150	-.29190
6.175	.106	.01450	.01440	-.00190	-.01980	.03000	-.00290	.03040	.00590	-.36760	-.32540
6.119	3.888	.01620	.01440	-.00070	-.02980	.03690	-.00320	.03320	.00640	-.40010	-.35540
6.078	5.766	.01720	.01470	-.00020	-.03400	.04030	-.00340	.03410	.00660	-.41100	-.36640
6.151	8.003	.01860	.01480	.00030	-.03900	.04430	-.00370	.03550	.00690	-.42250	-.38690
	GRADIENT	.00039	.00005	.00030	-.00315	.00222	-.00008	.00065	.00012	-.00632	-.00827

RUN NO. 1083/ 0 RN/L = 3.50 GRADIENT INTERVAL = -5.00/ 5.00

ALPHAR	BETAR	CNFRS	CAFRS	CLMFRS	CYFRS	CYNFRS	CBLRS	CABRS	CYNBRS	CP9	CP10
8.404	-7.744	.01960	.01320	-.00850	.01520	.00860	-.00390	.02770	.00540	-.35120	-.28100
8.333	-5.700	.01840	.01330	-.00530	.01230	.00960	-.00370	.02760	.00540	-.34730	-.28090
8.347	-3.760	.01930	.01310	-.00350	.00840	.01210	-.00380	.02870	.00560	-.35780	-.29700
8.263	.089	.02430	.01380	-.00340	-.00350	.02090	-.00480	.03170	.00620	-.38370	-.33880
8.332	4.022	.03300	.01360	-.00570	-.01050	.02560	-.00650	.03360	.00650	-.40710	-.35740
8.274	5.979	.03680	.01350	-.00700	-.01610	.02970	-.00720	.03420	.00660	-.41120	-.36860
8.290	7.990	.04000	.01460	-.00760	-.02310	.03530	-.00790	.03450	.00670	-.41240	-.37360
	GRADIENT	.00176	.00006	-.00028	-.00243	.00173	-.00035	.00063	.00012	-.00633	-.00775

IA156A, AEDC PWT 16T-470, O T S W/SILTS (R8NR78) (10 MAY 80)

REFERENCE DATA

SREF = 2690.0000 SQ.FT. XMRP = 976.0000 IN. XT
LREF = 1290.3000 INCHES YMRP = .0000 IN. YT
BREF = 1290.3000 INCHES ZMRP = 400.0000 IN. ZT
SCALE = .0200

PARAMETRIC DATA

IB-ELV = 8.000 OB-ELV = 11.000
BDFLAP = .000 SPDBRK = .000
RUDDER = .000 SILTS = 1.000
MACH = .800 RN/L = 3.500

RUN NO. 1084/ 0 RN/L = 3.50 GRADIENT INTERVAL = -5.00/ 5.00

ALPHAR	BETAR	CNFRS	CAFRS	CLMFRS	CYFRS	CYNFRS	CBLRS	CABRS	CYNBRS	CP9	CP10
-8.414	-6.165	-.00900	.01030	-.01690	.03390	.00480	.00180	.02490	.00480	-.31640	-.25180
-8.483	-4.073	-.02730	.01240	-.00570	.04200	-.00140	.00540	.02890	.00560	-.36110	-.29760
-8.419	.037	-.06700	.01220	.01970	.04180	-.00370	.01320	.03360	.00650	-.41350	-.35220
-8.319	4.330	-.10010	.01240	.03660	.02670	.00590	.01970	.03630	.00700	-.42640	-.39920
-8.360	6.266	-.11730	.01240	.04480	.01950	.01080	.02300	.03740	.00730	-.43490	-.41560
	GRADIENT	-.00866	.00000	.00503	-.00183	.00088	.00170	.00088	.00017	-.00774	-.01208

RUN NO. 1085/ 0 RN/L = 3.50 GRADIENT INTERVAL = -5.00/ 5.00

ALPHAR	BETAR	CNFRS	CAFRS	CLMFRS	CYFRS	CYNFRS	CBLRS	CABRS	CYNBRS	CP9	CP10
-6.335	-6.319	-.00080	.01240	-.01710	.01130	.01570	.00020	.02410	.00470	-.30390	-.24650
-6.272	-4.320	-.01580	.01440	-.00730	.01610	.01140	.00310	.02720	.00530	-.33950	-.28040
-6.397	-.012	-.04970	.01390	.01430	.01380	.01010	.00980	.03190	.00620	-.38790	-.33800
-6.236	4.287	-.07790	.01400	.02990	.00020	.01860	.01530	.03520	.00680	-.41400	-.38700
-6.215	6.312	-.09540	.01480	.03900	-.00580	.02280	.01870	.03630	.00700	-.42140	-.40460
	GRADIENT	-.00722	-.00005	.00432	-.00185	.00084	.00142	.00093	.00017	-.00866	-.01239

RUN NO. 1086/ 0 RN/L = 3.50 GRADIENT INTERVAL = -5.00/ 5.00

ALPHAR	BETAR	CNFRS	CAFRS	CLMFRS	CYFRS	CYNFRS	CBLRS	CABRS	CYNBRS	CP9	CP10
-4.212	-6.425	.00340	.01440	-.01500	-.00550	.02450	-.00060	.02400	.00470	-.29880	-.24780
-4.353	-4.259	-.01090	.01500	-.00570	-.00200	.02040	.00220	.02750	.00530	-.34240	-.28510
-4.311	.268	-.03760	.01480	.01170	-.01130	.02430	.00740	.03160	.00610	-.37770	-.34090
-3.865	4.378	-.05860	.01620	.02480	-.02220	.03090	.01150	.03390	.00660	-.39990	-.37130
-3.935	6.262	-.07240	.01640	.03270	-.02620	.03350	.01420	.03580	.00700	-.42300	-.39220
	GRADIENT	-.00553	.00014	.00354	-.00233	.00121	.00108	.00074	.00015	-.00668	-.01002

RUN NO. 1087/ 0 RN/L = 3.50 GRADIENT INTERVAL = -5.00/ 5.00

ALPHAR	BETAR	CNFRS	CAFRS	CLMFRS	CYFRS	CYNFRS	CBLRS	CABRS	CYNBRS	CP9	CP10
-.237	-7.194	.01250	.01700	-.01530	-.02290	.03300	-.00240	.02520	.00490	-.31660	-.25720
-.237	-5.055	.00240	.01660	-.00810	-.02470	.03280	-.00040	.02540	.00490	-.31660	-.26170
-.253	-.750	-.01570	.01650	.00480	-.03210	.03680	.00310	.02920	.00570	-.35280	-.31120
-.205	3.339	-.03140	.01700	.01570	-.04120	.04280	.00620	.03370	.00650	-.39830	-.36810
-.203	5.445	-.04100	.01800	.02220	-.04520	.04580	.00810	.03550	.00690	-.42110	-.38780
	GRADIENT	-.00384	.00012	.00267	-.00223	.00147	.00076	.00110	.00020	-.01113	-.01391

IA156A, AEDC PWT 16T-470, O T S W/SILTS (R8NR78) (10 MAY 80)

REFERENCE DATA

SREF = 2690.0000 SQ.FT. XMRP = 976.0000 IN. XT
LREF = 1290.3000 INCHES YMRP = .0000 IN. YT
BREF = 1290.3000 INCHES ZMRP = 400.0000 IN. ZT
SCALE = .0200

PARAMETRIC DATA

IB-ELV = 8.000 OB-ELV = 11.000
BDFLAP = .000 SPDBRK = .000
RUDDER = .000 SILTS = 1.000
MACH = .800 RN/L = 3.500

RUN NO. 1088/ 0 RN/L = 3.50 GRADIENT INTERVAL = -5.00/ 5.00

ALPHAR	BETAR	CNFRS	CAFRS	CLMFRS	CYFRS	CYNFRS	CBLRS	CABRS	CYNBRS	CP9	CP10
4.415	-5.717	.00990	.01750	-.00340	-.01230	.02600	-.00200	.02660	.00520	-.33430	-.27300
4.276	-3.623	.00760	.01670	-.00080	-.01880	.02910	-.00150	.02810	.00550	-.34710	-.29410
4.014	.042	.00570	.01610	.00140	-.03260	.03790	-.00110	.02970	.00580	-.35860	-.31840
4.127	3.769	.00380	.01700	.00430	-.04070	.04430	-.00070	.03380	.00660	-.40000	-.36960
4.047	5.821	-.00110	.01800	.00700	-.04700	.04900	.00020	.03570	.00690	-.42220	-.39130
	GRADIENT	-.00051	.00004	.00069	-.00296	.00206	.00011	.00077	.00015	-.00717	-.01022

RUN NO. 1089/ 0 RN/L = 3.50 GRADIENT INTERVAL = -5.00/ 5.00

ALPHAR	BETAR	CNFRS	CAFRS	CLMFRS	CYFRS	CYNFRS	CBLRS	CABRS	CYNBRS	CP9	CP10
6.369	-5.683	.01500	.01720	-.00570	-.00150	.01940	-.00300	.02760	.00540	-.34660	-.28280
6.430	-3.755	.01460	.01670	-.00320	-.00390	.02070	-.00290	.02860	.00560	-.35330	-.29860
6.093	.061	.01590	.01690	-.00180	-.01950	.03160	-.00320	.03070	.00600	-.36700	-.33160
6.055	3.758	.01770	.01700	-.00140	-.02840	.03760	-.00350	.03370	.00650	-.40240	-.36480
6.093	5.895	.02020	.01740	-.00160	-.03240	.04190	-.00400	.03540	.00690	-.42140	-.38490
	GRADIENT	.00041	.00004	.00024	-.00327	.00225	-.00008	.00068	.00012	-.00652	-.00881

IA156A, AEDC PWT 16T-470, O T S W/SILTS (R8NR79) (10 MAY 80)

REFERENCE DATA

SREF = 2690.0000 SQ.FT. XMRP = 976.0000 IN. XT
LREF = 1290.3000 INCHES YMRP = .0000 IN. YT
BREF = 1290.3000 INCHES ZMRP = 400.0000 IN. ZT
SCALE = .0200

PARAMETRIC DATA

IB-ELV = 8.000 OB-ELV = 11.000
BDFLAP = .000 SPDBRK = .000
RUDDER = .000 SILTS = 1.000
MACH = .900 RN/L = 3.500

RUN NO. 1090/ 0 RN/L = 3.50 GRADIENT INTERVAL = -5.00/ 5.00

ALPHAR	BETAR	CNFRS	CAFRS	CLMFRS	CYFRS	CYNFRS	CBLRS	CABRS	CYNBRS	CP9	CP10
-8.410	-6.340	-.00770	.01310	-.01860	.04050	.00300	.00160	.02680	.00520	-.33740	-.27450
-8.531	-4.064	-.02970	.01520	-.00570	.05050	-.00410	.00590	.03130	.00610	-.38280	-.32910
-8.487	.001	-.06940	.01510	.02010	.04450	-.00240	.01370	.03510	.00680	-.42100	-.37770
-8.388	4.323	-.10380	.01610	.03850	.02990	.00640	.02040	.03680	.00710	-.42360	-.41380
-8.450	6.246	-.12270	.01620	.04710	.02330	.01110	.02410	.03830	.00740	-.43680	-.43430
	GRADIENT	-.00883	.00011	.00526	-.00247	.00126	.00173	.00065	.00012	-.00482	-.01008

IA156A, AEDC PWT 16T-470, O T S W/SILTS (R8NR79) (10 MAY 80)

REFERENCE DATA

SREF = 2690.0000 SQ.FT. XMRP = 976.0000 IN. XT
LREF = 1290.3000 INCHES YMRP = .0000 IN. YT
BREF = 1290.3000 INCHES ZMRP = 400.0000 IN. ZT
SCALE = .0200

PARAMETRIC DATA

IB-ELV = 8.000 OB-ELV = 11.000
BDFLAP = .000 SPDBRK = .000
RUDDER = .000 SILTS = 1.000
MACH = .900 RN/L = 3.500

RUN NO. 1091/ 0 RN/L = 3.50 GRADIENT INTERVAL = -5.00/ 5.00

ALPHAR	BETAR	CNFRS	CAFRS	CLMFRS	CYFRS	CYNFRS	CBLRS	CABRS	CYNBRS	CP9	CP10
-6.359	-6.328	.00000	.01530	-.01930	.01870	.01400	.00010	.02670	.00520	-.33120	-.27750
-6.323	-4.348	-.01600	.01670	-.00880	.02330	.00890	.00320	.03030	.00590	-.37140	-.31860
-6.467	-.043	-.05170	.01630	.01420	.01910	.00930	.01020	.03350	.00650	-.40140	-.36060
-6.305	4.262	-.08210	.01800	.03160	.00740	.01590	.01610	.03660	.00710	-.42000	-.41390
-6.272	6.281	-.09940	.01870	.04040	.00110	.02040	.01950	.03770	.00730	-.43190	-.42680
	GRADIENT	-.00768	.00015	.00469	-.00185	.00081	.00150	.00073	.00014	-.00565	-.01107

RUN NO. 1092/ 0 RN/L = 3.50 GRADIENT INTERVAL = -5.00/ 5.00

ALPHAR	BETAR	CNFRS	CAFRS	CLMFRS	CYFRS	CYNFRS	CBLRS	CABRS	CYNBRS	CP9	CP10
-4.105	-6.456	.00390	.01820	-.01670	-.00270	.02510	-.00070	.02640	.00510	-.32310	-.27800
-4.396	-4.275	-.01020	.01910	-.00790	.00280	.01950	.00200	.02950	.00570	-.35970	-.31120
-4.385	.269	-.03720	.01690	.00990	-.00670	.02300	.00730	.03260	.00630	-.38390	-.35890
-3.891	4.379	-.06060	.01990	.02540	-.01760	.02890	.01190	.03550	.00690	-.41300	-.39500
-4.009	6.252	-.07530	.02010	.03300	-.02190	.03210	.01480	.03720	.00720	-.43180	-.41520
	GRADIENT	-.00583	.00008	.00385	-.00235	.00108	.00114	.00069	.00014	-.00614	-.00970

RUN NO. 1093/ 0 RN/L = 3.50 GRADIENT INTERVAL = -5.00/ 5.00

ALPHAR	BETAR	CNFRS	CAFRS	CLMFRS	CYFRS	CYNFRS	CBLRS	CABRS	CYNBRS	CP9	CP10
-.268	-7.310	.01320	.02040	-.01700	-.02140	.03460	-.00260	.02770	.00540	-.33900	-.29170
-.267	-5.137	.00410	.02060	-.01050	-.02150	.03330	-.00080	.02800	.00540	-.34190	-.29510
-.316	-.815	-.01350	.01980	.00220	-.02860	.03700	.00270	.03090	.00600	-.37010	-.33350
-.248	3.289	-.03110	.02110	.01530	-.03980	.04390	.00610	.03460	.00670	-.41000	-.37760
-.240	5.467	-.04070	.02170	.02170	-.04650	.04840	.00800	.03680	.00720	-.43620	-.40290
	GRADIENT	-.00429	.00032	.00319	-.00273	.00168	.00083	.00090	.00017	-.00972	-.01074

RUN NO. 1094/ 0 RN/L = 3.50 GRADIENT INTERVAL = -5.00/ 5.00

ALPHAR	BETAR	CNFRS	CAFRS	CLMFRS	CYFRS	CYNFRS	CBLRS	CABRS	CYNBRS	CP9	CP10
4.406	-5.713	.01120	.02050	-.00500	-.01300	.02750	-.00220	.02930	.00570	-.36290	-.30500
4.253	-3.623	.00880	.02050	-.00300	-.01940	.03020	-.00170	.03050	.00590	-.37280	-.32230
3.944	.026	.00470	.02080	-.00020	-.03260	.03890	-.00090	.03190	.00620	-.38260	-.34380
4.106	3.744	.00010	.02120	.00550	-.04090	.04480	.00000	.03580	.00690	-.42460	-.39050
4.036	5.807	-.00500	.02210	.00830	-.04780	.05060	.00100	.03720	.00720	-.44310	-.40440
	GRADIENT	-.00118	.00010	.00115	-.00292	.00198	.00023	.00072	.00014	-.00704	-.00927

IA156A, AEDC PWT 16T-470, O T S W/SILTS (R8NR80) (10 MAY 80)

REFERENCE DATA

SREF = 2690.0000 SQ.FT. XMRP = 976.0000 IN. XT
LREF = 1290.3000 INCHES YMRP = .0000 IN. YT
BREF = 1290.3000 INCHES ZMRP = 400.0000 IN. ZT
SCALE = .0200

PARAMETRIC DATA

IB-ELV = 8.000 OB-ELV = 11.000
BDFLAP = .000 SPDBRK = .000
RUDDER = .000 SILTS = 1.000
MACH = .950 RN/L = 3.500

RUN NO. 1095/ 0 RN/L = 3.50 GRADIENT INTERVAL = -5.00/ 5.00

ALPHAR	BETAR	CNFRS	CAFRS	CLMFRS	CYFRS	CYNFRS	CBLRS	CABRS	CYNBRS	CP9	CP10
-8.643	-6.425	-.00830	.01440	-.02110	.03890	.00600	.00180	.02890	.00560	-.36170	-.29790
-8.571	-4.078	-.02830	.01760	-.00890	.04450	.00010	.00570	.03350	.00650	-.40590	-.35800
-8.623	-.024	-.06980	.01720	.01690	.04660	-.00240	.01380	.03860	.00750	-.45500	-.42320
-8.487	4.368	-.11050	.01830	.03990	.03330	.00630	.02170	.03900	.00760	-.44720	-.44040
-8.531	6.218	-.13050	.01900	.04960	.02720	.01120	.02560	.04050	.00790	-.46580	-.45580
	GRADIENT	-.00973	.00009	.00577	-.00135	.00075	.00189	.00064	.00013	-.00480	-.00967

RUN NO. 1096/ 0 RN/L = 3.50 GRADIENT INTERVAL = -5.00/ 5.00

ALPHAR	BETAR	CNFRS	CAFRS	CLMFRS	CYFRS	CYNFRS	CBLRS	CABRS	CYNBRS	CP9	CP10
-6.436	-6.353	.00030	.01780	-.02050	.01310	.01870	.00000	.02860	.00560	-.35320	-.29930
-6.396	-4.353	-.01480	.01900	-.01100	.01900	.01240	.00300	.03310	.00640	-.40100	-.35390
-6.564	-.042	-.05160	.01950	.01180	.01900	.01060	.01020	.03750	.00730	-.44250	-.41220
-6.358	4.250	-.08560	.02040	.03260	.00500	.01820	.01680	.03920	.00760	-.44950	-.44200
-6.351	6.299	-.10510	.02110	.04300	-.00080	.02220	.02060	.04040	.00780	-.46170	-.45700
	GRADIENT	-.00823	.00016	.00507	-.00163	.00067	.00160	.00071	.00014	-.00564	-.01024

RUN NO. 1097/ 0 RN/L = 3.50 GRADIENT INTERVAL = -5.00/ 5.00

ALPHAR	BETAR	CNFRS	CAFRS	CLMFRS	CYFRS	CYNFRS	CBLRS	CABRS	CYNBRS	CP9	CP10
-4.135	-6.513	.00430	.02060	-.01720	-.00770	.02900	-.00080	.02850	.00550	-.34650	-.30270
-4.437	-4.274	-.00920	.02150	-.00930	-.00240	.02310	.00190	.03290	.00640	-.39420	-.35410
-4.424	.273	-.03930	.02090	.01120	-.01140	.02620	.00770	.03600	.00700	-.42320	-.39560
-3.924	4.393	-.06430	.02330	.02800	-.02470	.03340	.01260	.03890	.00760	-.45210	-.43380
-4.044	6.252	-.07960	.02290	.03580	-.02810	.03590	.01560	.04050	.00790	-.47020	-.45070
	GRADIENT	-.00636	.00020	.00431	-.00256	.00118	.00124	.00069	.00014	-.00668	-.00919

RUN NO. 1098/ 0 RN/L = 3.51 GRADIENT INTERVAL = -5.00/ 5.00

ALPHAR	BETAR	CNFRS	CAFRS	CLMFRS	CYFRS	CYNFRS	CBLRS	CABRS	CYNBRS	CP9	CP10
-.276	-7.371	.01100	.02190	-.01380	-.02020	.03620	-.00210	.02860	.00550	-.35160	-.29930
-.262	-5.142	.00150	.02280	-.00670	-.02120	.03520	-.00030	.02980	.00580	-.36280	-.31680
-.299	-.850	-.01390	.02340	.00440	-.03260	.04070	.00270	.03430	.00670	-.41070	-.37080
-.232	3.285	-.03160	.02480	.01700	-.04520	.04840	.00620	.03860	.00750	-.45980	-.41860
-.240	5.463	-.04170	.02470	.02320	-.05150	.05270	.00820	.04020	.00780	-.47980	-.43680
	GRADIENT	-.00428	.00034	.00305	-.00305	.00186	.00085	.00104	.00019	-.01188	-.01156

IA156A, AEDC PWT 16T-470, O T S W/SILTS (R8NR80) (10 MAY 80)

REFERENCE DATA

SREF = 2690.0000 SQ.FT. XMRP = 976.0000 IN. XT
LREF = 1290.3000 INCHES YMRP = .0000 IN. YT
BREF = 1290.3000 INCHES ZMRP = 400.0000 IN. ZT
SCALE = .0200

PARAMETRIC DATA

IB-ELV = 8.000 OB-ELV = 11.000
BDFLAP = .000 SPDBRK = .000
RUDDER = .000 SILTS = 1.000
MACH = .950 RN/L = 3.500

RUN NO. 1099/ 0 RN/L = 3.50 GRADIENT INTERVAL = -5.00/ 5.00

ALPHAR	BETAR	CNFRS	CAFRS	CLMFRS	CYFRS	CYNFRS	CBLRS	CABRS	CYNBRS	CP9	CP10
4.423	-5.688	.00990	.02240	-.00380	-.01360	.02930	-.00200	.03140	.00610	-.38730	-.32840
4.266	-3.720	.00790	.02290	-.00250	-.01930	.03200	-.00160	.03350	.00650	-.40810	-.35470
4.077	.062	.00410	.02350	.00030	-.03170	.04060	-.00080	.03570	.00690	-.42760	-.38540
4.099	3.671	-.00280	.02470	.00760	-.03930	.04600	.00050	.03880	.00750	-.46550	-.41780
4.086	5.759	-.00600	.02450	.01060	-.04730	.05210	.00120	.04120	.00800	-.49370	-.44400
	GRADIENT	-.00144	.00024	.00136	-.00271	.00190	.00028	.00072	.00014	-.00774	-.00853

IA156A, AEDC PWT 16T-470, O T S W/SILTS (R8NR81) (10 MAY 80)

REFERENCE DATA

SREF = 2690.0000 SQ.FT. XMRP = 976.0000 IN. XT
LREF = 1290.3000 INCHES YMRP = .0000 IN. YT
BREF = 1290.3000 INCHES ZMRP = 400.0000 IN. ZT
SCALE = .0200

PARAMETRIC DATA

IB-ELV = 8.000 OB-ELV = 11.000
BDFLAP = .000 SPDBRK = .000
RUDDER = .000 SILTS = 1.000
MACH = 1.050 RN/L = 3.500

RUN NO. 1102/ 0 RN/L = 3.50 GRADIENT INTERVAL = -5.00/ 5.00

ALPHAR	BETAR	CNFRS	CAFRS	CLMFRS	CYFRS	CYNFRS	CBLRS	CABRS	CYNBRS	CP9	CP10
-8.630	-6.396	-.00710	.02040	-.02590	.03390	.01130	.00150	.04060	.00790	-.49220	-.43220
-8.710	-4.227	-.02880	.02330	-.01280	.04250	.00570	.00570	.04580	.00890	-.54800	-.49410
-8.726	.048	-.07830	.02520	.01920	.04190	.00510	.01540	.05120	.00990	-.60630	-.55930
-8.579	4.174	-.12240	.02570	.04690	.02460	.01670	.02400	.05280	.01030	-.62120	-.58130
-8.586	6.191	-.14290	.02700	.05720	.01830	.02060	.02810	.05490	.01070	-.65010	-.59960
	GRADIENT	-.01114	.00029	.00711	-.00212	.00130	.00218	.00084	.00017	-.00874	-.01041

RUN NO. 1103/ 0 RN/L = 3.50 GRADIENT INTERVAL = -5.00/ 5.00

ALPHAR	BETAR	CNFRS	CAFRS	CLMFRS	CYFRS	CYNFRS	CBLRS	CABRS	CYNBRS	CP9	CP10
-6.484	-6.382	.00370	.02410	-.02650	.00690	.02540	-.00070	.04100	.00800	-.49390	-.44080
-6.456	-4.414	-.01370	.02580	-.01470	.01280	.02000	.00270	.04540	.00880	-.54650	-.48790
-6.636	-.090	-.05790	.02590	.01510	.01000	.02100	.01140	.05070	.00980	-.59860	-.55480
-6.431	4.235	-.09530	.02880	.03910	-.00270	.02750	.01870	.05250	.01020	-.61750	-.57720
-6.227	6.386	-.11410	.02900	.05020	-.01570	.03540	.02240	.05470	.01060	-.64400	-.60200
	GRADIENT	-.00943	.00035	.00622	-.00179	.00087	.00185	.00082	.00016	-.00821	-.01032

IA156A, AEDC PWT 16T-470, O T S W/SILTS (R8NR81) (10 MAY 80)

REFERENCE DATA

SREF = 2690.0000 SQ.FT. XMRP = 976.0000 IN. XT
LREF = 1290.3000 INCHES YMRP = .0000 IN. YT
BREF = 1290.3000 INCHES ZMRP = 400.0000 IN. ZT
SCALE = .0200

PARAMETRIC DATA

IB-ELV = 8.000 OB-ELV = 11.000
BDFLAP = .000 SPDBRK = .000
RUDDER = .000 SILTS = 1.000
MACH = 1.050 RN/L = 3.500

RUN NO. 1104/ 0 RN/L = 3.50 GRADIENT INTERVAL = -5.00/ 5.00

ALPHAR	BETAR	CNFRS	CAFRS	CLMFRS	CYFRS	CYNFRS	CBLRS	CABRS	CYNBRS	CP9	CP10
-4.235	-6.507	.00790	.02640	-.02230	-.01560	.03730	-.00150	.04080	.00790	-.48720	-.44280
-4.495	-4.327	-.00760	.02790	-.01250	-.00960	.03130	.00150	.04400	.00850	-.53040	-.47120
-4.474	.231	-.04350	.02750	.01360	-.02290	.03830	.00850	.05060	.00980	-.59910	-.55250
-3.947	4.359	-.07270	.03040	.03430	-.03670	.04600	.01420	.05290	.01030	-.62430	-.57930
-4.049	6.203	-.08930	.03140	.04330	-.03710	.04660	.01750	.05220	.01010	-.61850	-.57110
	GRADIENT	-.00750	.00028	.00539	-.00312	.00169	.00146	.00103	.00021	-.01088	-.01254

RUN NO. 1105/ 0 RN/L = 3.49 GRADIENT INTERVAL = -5.00/ 5.00

ALPHAR	BETAR	CNFRS	CAFRS	CLMFRS	CYFRS	CYNFRS	CBLRS	CABRS	CYNBRS	CP9	CP10
-.297	-7.412	.01370	.02760	-.01630	-.02890	.04480	-.00270	.04000	.00780	-.48230	-.42950
-.289	-5.218	.00340	.02790	-.00800	-.03140	.04440	-.00070	.04220	.00820	-.50490	-.45630
-.359	-.865	-.01530	.03040	.00580	-.04590	.05340	.00290	.04800	.00930	-.56940	-.52260
-.284	3.256	-.03640	.03170	.02160	-.05700	.06030	.00710	.05270	.01020	-.62400	-.57570
-.276	5.445	-.04770	.03260	.02890	-.06140	.06290	.00930	.05330	.01030	-.63130	-.58140
	GRADIENT	-.00512	.00032	.00383	-.00269	.00167	.00102	.00114	.00022	-.01325	-.01288

RUN NO. 1106/ 0 RN/L = 3.49 GRADIENT INTERVAL = -5.00/ 5.00

ALPHAR	BETAR	CNFRS	CAFRS	CLMFRS	CYFRS	CYNFRS	CBLRS	CABRS	CYNBRS	CP9	CP10
4.436	-5.728	.01320	.03010	-.00810	-.01660	.03520	-.00270	.04270	.00830	-.51180	-.46150
4.228	-3.644	.01040	.03020	-.00570	-.02430	.03940	-.00220	.04580	.00890	-.54340	-.50020
4.009	-.023	.00420	.03100	.00130	-.03840	.04850	-.00090	.04810	.00930	-.57050	-.52510
4.129	3.695	-.00270	.03160	.00910	-.04730	.05470	.00040	.05080	.00990	-.60480	-.55110
4.110	5.730	-.00710	.03170	.01290	-.05610	.06170	.00130	.05070	.00980	-.60500	-.55000
	GRADIENT	-.00179	.00019	.00202	-.00313	.00208	.00035	.00068	.00014	-.00837	-.00694

IA156A, AEDC PWT 16T-470, O T S W/SILTS (R8NR82) (10 MAY 80)

REFERENCE DATA

SREF = 2690.0000 SQ.FT. XMRP = 976.0000 IN. XT
LREF = 1290.3000 INCHES YMRP = .0000 IN. YT
BREF = 1290.3000 INCHES ZMRP = 400.0000 IN. ZT
SCALE = .0200

PARAMETRIC DATA

IB-ELV = 8.000 OB-ELV = 11.000
BDFLAP = .000 SPDBRK = .000
RUDDER = .000 SILTS = 1.000
MACH = 1.100 RN/L = 3.500

RUN NO. 1107/ 0 RN/L = 3.51 GRADIENT INTERVAL = -5.00/ 5.00

ALPHAR	BETAR	CNFRS	CAFRS	CLMFRS	CYFRS	CYNFRS	CBLRS	CABRS	CYNBRS	CP9	CP10
-8.691	-6.322	-.00840	.02340	-.02610	.03710	.01050	.00180	.03820	.00740	-.46460	-.40450
-8.736	-4.193	-.02960	.02610	-.01280	.04460	.00560	.00590	.04230	.00820	-.50480	-.45900
-8.766	-.058	-.07830	.02810	.01840	.04410	.00550	.01540	.04810	.00930	-.56980	-.52500
-8.590	4.231	-.12150	.03010	.04580	.02550	.01670	.02380	.04990	.00970	-.58780	-.54940
-8.622	6.192	-.14120	.03160	.05600	.01780	.02150	.02770	.05070	.00980	-.60290	-.55150
	GRADIENT	-.01090	.00047	.00695	-.00228	.00133	.00212	.00090	.00018	-.00982	-.01070

RUN NO. 1108/ 0 RN/L = 3.50 GRADIENT INTERVAL = -5.00/ 5.00

ALPHAR	BETAR	CNFRS	CAFRS	CLMFRS	CYFRS	CYNFRS	CBLRS	CABRS	CYNBRS	CP9	CP10
-6.523	-6.393	.00190	.02600	-.02580	.00960	.02350	-.00030	.03760	.00730	-.45350	-.40250
-6.496	-4.424	-.01480	.02790	-.01490	.01520	.01903	.00300	.04150	.00810	-.50040	-.44480
-6.689	-.074	-.05800	.02880	.01410	.01230	.02030	.01140	.04620	.00900	-.54780	-.50500
-6.420	4.237	-.09420	.03200	.03860	-.00820	.03020	.01840	.04900	.00950	-.57870	-.53780
-6.416	6.264	-.11420	.03320	.04920	-.00990	.03250	.02240	.04980	.00970	-.58740	-.54730
	GRADIENT	-.00917	.00047	.00618	-.00270	.00129	.00178	.00087	.00016	-.00904	-.01074

RUN NO. 1109/ 0 RN/L = 3.51 GRADIENT INTERVAL = -5.00/ 5.00

ALPHAR	BETAR	CNFRS	CAFRS	CLMFRS	CYFRS	CYNFRS	CBLRS	CABRS	CYNBRS	CP9	CP10
-4.455	-6.433	.00720	.02760	-.02350	-.01160	.03470	-.00140	.03790	.00740	-.45340	-.40940
-4.500	-4.344	-.00780	.02970	-.01330	-.00820	.03050	.00160	.03980	.00770	-.48290	-.42390
-4.486	.212	-.04360	.03000	.01310	-.02140	.03690	.00850	.04520	.00880	-.53810	-.49190
-3.940	4.349	-.07260	.03330	.03390	-.03280	.04350	.01420	.04760	.00920	-.56390	-.51900
-4.076	6.227	-.08950	.03390	.04340	-.03390	.04440	.01750	.04860	.00940	-.57820	-.52950
	GRADIENT	-.00746	.00041	.00544	-.00283	.00149	.00145	.00090	.00017	-.00936	-.01101

RUN NO. 1110/ 0 RN/L = 3.50 GRADIENT INTERVAL = -5.00/ 5.00

ALPHAR	BETAR	CNFRS	CAFRS	CLMFRS	CYFRS	CYNFRS	CBLRS	CABRS	CYNBRS	CP9	CP10
-.304	-7.436	.01290	.02960	-.01630	-.02990	.04550	-.00260	.03620	.00700	-.43770	-.38670
-.297	-5.232	.00230	.02900	-.00770	-.03170	.04420	-.00050	.03760	.00730	-.45050	-.40480
-.358	-.798	-.01720	.03140	.00670	-.04470	.05190	.00330	.04260	.00830	-.51060	-.45980
-.265	3.288	-.03790	.03460	.02250	-.05400	.05760	.00740	.04550	.00880	-.54180	-.49440
-.262	5.468	-.04960	.03530	.03010	-.05810	.05970	.00970	.04670	.00910	-.55570	-.50810
	GRADIENT	-.00507	.00078	.00387	-.00228	.00139	.00100	.00071	.00012	-.00764	-.00847

IA156A, AEDC PWT 16T-470, 0 T S W/SILTS (R8NR82) (10 MAY 80)

REFERENCE DATA

SREF = 2690.0000 SQ.FT. XMRP = 976.0000 IN. XT
LREF = 1290.3000 INCHES YMRP = .0000 IN. YT
BREF = 1290.3000 INCHES ZMRP = 400.0000 IN. ZT
SCALE = .0200

PARAMETRIC DATA

IB-ELV = 8.000 OB-ELV = 11.000
BDFLAP = .000 SPDBRK = .000
RUDDER = .000 SILTS = 1.000
MACH = 1.100 RN/L = 3.500

RUN NO. 1111/ 0 RN/L = 3.50 GRADIENT INTERVAL = -5.00/ 5.00

ALPHAR	BETAR	CNFRS	CAFRS	CLMFRS	CYFRS	CYNFRS	CBLRS	CABRS	CYNBRS	CP9	CP10
4.457	-5.736	.01280	.03000	-.00750	-.01450	.03370	-.00260	.03810	.00740	-.45870	-.40900
4.305	-3.674	.01020	.03180	-.00480	-.02150	.03750	-.00210	.04010	.00780	-.47840	-.43560
3.987	-.011	.00280	.03240	.00290	-.03750	.04770	-.00070	.04220	.00820	-.50400	-.45620
4.158	3.691	-.00480	.03410	.01130	-.04570	.05330	.00080	.04430	.00860	-.53200	-.47800
4.143	5.746	-.00900	.03450	.01460	-.05420	.06020	.00170	.04440	.00860	-.53330	-.47770
	GRADIENT	-.00204	.00031	.00219	-.00328	.00214	.00039	.00057	.00011	-.00728	-.00576

IA156A, AEDC PWT 16T-470, 0 T S W/SILTS (R8NR83) (10 MAY 80)

REFERENCE DATA

SREF = 2690.0000 SQ.FT. XMRP = 976.0000 IN. XT
LREF = 1290.3000 INCHES YMRP = .0000 IN. YT
BREF = 1290.3000 INCHES ZMRP = 400.0000 IN. ZT
SCALE = .0200

PARAMETRIC DATA

IB-ELV = 8.000 OB-ELV = 9.000
BDFLAP = .000 SPDBRK = .000
RUDDER = .000 SILTS = 1.000
MACH = .600 RN/L = 3.500

RUN NO. 1114/ 0 RN/L = 3.51 GRADIENT INTERVAL = -5.00/ 5.00

ALPHAR	BETAR	CNFRS	CAFRS	CLMFRS	CYFRS	CYNFRS	CBLRS	CABRS	CYNBRS	CP9	CP10
-8.354	-8.180	.00780	.00730	-.02470	.01730	.01500	-.00150	.02510	.00490	-.31820	-.25490
-8.253	-6.183	-.00660	.00870	-.01620	.02440	.00800	.00130	.02650	.00510	-.34060	-.26330
-8.311	-4.016	-.02700	.01050	-.00390	.03250	.00040	.00530	.02970	.00580	-.38210	-.29590
-8.243	.214	-.06610	.00940	.02080	.02660	.00050	.01290	.03400	.00660	-.41990	-.35390
-8.147	4.265	-.09630	.00970	.03660	.01200	.01040	.01880	.03700	.00720	-.44080	-.40270
-8.155	6.251	-.11320	.00970	.04530	.00320	.01600	.02220	.03850	.00750	-.45380	-.42190
-8.214	8.280	-.13260	.01020	.05490	-.00550	.02190	.02600	.03980	.00770	-.46700	-.43960
	GRADIENT	-.00837	-.00010	.00490	-.00247	.00120	.00163	.00088	.00017	-.00710	-.01290

RUN NO. 1115/ 0 RN/L = 3.51 GRADIENT INTERVAL = -5.00/ 5.00

ALPHAR	BETAR	CNFRS	CAFRS	CLMFRS	CYFRS	CYNFRS	CBLRS	CABRS	CYNBRS	CP9	CP10
-6.226	-8.259	.01170	.01000	-.02340	-.00250	.02430	-.00230	.02430	.00470	-.30530	-.24760
-6.215	-6.195	-.00160	.01060	-.01530	.00400	.01780	.00030	.02590	.00500	-.32770	-.26160
-6.150	-4.234	-.01700	.01190	-.00550	.00890	.01230	.00330	.02830	.00550	-.36080	-.28370
-6.235	-.001	-.04930	.01170	.01500	.00340	.01310	.00960	.03170	.00610	-.39070	-.33060
-6.082	4.250	-.07610	.01140	.03060	-.00920	.02110	.01490	.03600	.00700	-.42850	-.39030
-6.047	6.267	-.09170	.00930	.03870	-.01500	.02480	.01800	.03960	.00770	-.46780	-.43430
-5.862	8.438	-.10520	.01260	.04610	-.02500	.03170	.02060	.03790	.00740	-.44840	-.41470
	GRADIENT	-.00697	-.00006	.00425	-.00213	.00104	.00137	.00091	.00018	-.00798	-.01257

IA156A, AEDC PWT 16T-470, 0 T S W/SILTS (R8NR83) (10 MAY 80)

REFERENCE DATA

SREF = 2690.0000 SQ.FT. XMRP = 976.0000 IN. XT
LREF = 1296.3000 INCHES YMRP = .0000 IN. YT
BREF = 1290.3000 INCHES ZMRP = 400.0000 IN. ZT
SCALE = .0200

PARAMETRIC DATA

IB-ELV = 8.000 OB-ELV = 9.000
BDFLAP = .000 SPDBRK = .000
RUDDER = .000 SILTS = 1.000
MACH = .600 RN/L = 3.500

RUN NO. 1117/ 0 RN/L = 3.49 GRADIENT INTERVAL = -5.00/ 5.00

ALPHAR	BETAR	CNFRS	CAFRS	CLMFRS	CYFRS	CYNFRS	CBLRS	CABRS	CYNBRS	CP9	CP10
-4.008	-8.277	.01320	.01170	-.02070	-.01510	.03040	-.00260	.02450	.00480	-.30780	-.25110
-4.250	-6.227	.00030	.01170	-.01230	-.01130	.02560	-.00010	.02580	.00500	-.32410	-.26360
-4.266	-4.120	-.01240	.01250	-.00430	-.00860	.02140	.00240	.02790	.00540	-.35380	-.28160
-4.090	.112	-.03640	.01210	.01200	-.01880	.02630	.00710	.03190	.00620	-.38970	-.33700
-3.752	4.362	-.05760	.01360	.02550	-.02930	.03280	.01130	.03470	.00670	-.41540	-.37500
-3.845	6.181	-.06920	.01330	.03180	-.03230	.03480	.01350	.03590	.00700	-.42780	-.39060
-3.909	8.193	-.08260	.01390	.03870	-.03740	.03860	.01620	.03710	.00720	-.44080	-.40340
	GRADIENT	-.00533	.00013	00351	-.00244	.00134	.00105	.00080	.00015	-.00726	-.01101

RUN NO. 1118/ 0 RN/L = 3.50 GRADIENT INTERVAL = -5.00/ 5.00

ALPHAR	BETAR	CNFRS	CAFRS	CLMFRS	CYFRS	CYNFRS	CBLRS	CABRS	CYNBRS	CP9	CP10
-.247	-9.079	.01770	.01420	-.01890	-.02210	.03410	-.00350	.02600	.00500	-.32910	-.26320
-.239	-6.991	.00790	.01330	-.01110	-.02200	.03260	-.00160	.02530	.00490	-.31930	-.25670
-.233	-4.694	-.00150	.01370	-.00390	-.02450	.03270	.00030	.02640	.00510	-.33110	-.27150
-.223	-.631	-.01590	.01380	.00670	-.03490	.03820	.00310	.03100	.00600	-.37810	-.32870
-.181	3.449	-.02910	.01440	.01580	-.04360	.04360	.00570	.03460	.00670	-.41460	-.37380
-.180	5.539	-.03680	.01520	.02050	-.04770	.04630	.00720	.03550	.00690	-.42170	-.38640
-.184	7.638	-.04380	.01580	.02490	-.05290	.05000	.00850	.03650	.00710	-.43470	-.39570
	GRADIENT	-.00339	.00009	.00242	-.00235	.00134	.00066	.00101	.00020	-.01025	-.01256

RUN NO. 1119/ 0 RN/L = 3.49 GRADIENT INTERVAL = -5.00/ 5.00

ALPHAR	BETAR	CNFRS	CAFRS	CLMFRS	CYFRS	CYNFRS	CBLRS	CABRS	CYNBRS	CP9	CP10
4.286	-7.978	.01440	.01560	-.01050	-.01070	.02420	-.00290	.02660	.00520	-.34280	-.26440
4.306	-5.674	.00970	.01410	-.00540	-.01320	.02490	-.00200	.02690	.00520	-.34150	-.27200
4.292	-3.706	.00780	.01380	-.00270	-.01750	.02730	-.00160	.02780	.00540	-.34650	-.28670
4.054	.073	.00570	.01370	-.00030	-.03100	.03670	-.00120	.03030	.00590	-.36880	-.32210
4.141	3.901	.00450	.01450	.00270	-.03970	.04290	-.00090	.03320	.00640	-.39800	-.35850
4.090	5.945	.00110	.01530	.00550	-.04540	.04720	-.00030	.03490	.00680	-.41690	-.37770
4.070	7.912	-.00100	.01580	.00750	-.04920	.05020	.00010	.03590	.00700	-.42600	-.39180
	GRADIENT	-.00043	.00009	.00071	-.00292	.00205	.00009	.00071	.00013	-.00677	-.00944

IA156A, AEDC PWT 16T-470, O T S W/SILTS (R8NR83) (10 MAY 80)

REFERENCE DATA

SREF = 2690.0000 SQ.FT. XMRP = 976.0000 IN. XT
LREF = 1290.3000 INCHES YMRP = .0000 IN. YT
BREF = 1290.3000 INCHES ZMRP = 400.0000 IN. ZT
SCALE = .0200

PARAMETRIC DATA

IB-ELV = 8.000 OB-ELV = 9.000
BDFLAP = .000 SPDBRK = .000
RUDDER = .000 SILTS = 1.000
MACH = .600 RN/L = 3.500

RUN NO. 1120/ 0 RN/L = 3.49 GRADIENT INTERVAL = -5.00/ 5.00

ALPHAR	BETAR	CNFRS	CAFRS	CLMFRS	CYFRS	CYNFRS	CBLRS	CABRS	CYNBRS	CP9	CP10
6.470	-7.877	.01610	.01480	-.00910	.00060	.01660	-.00330	.02740	.00530	-.34780	-.27670
6.456	-5.837	.01430	.01410	-.00580	-.00140	.01720	-.00290	.02750	.00530	-.34570	-.28050
6.452	-3.842	.01350	.01410	-.00360	-.00490	.01930	-.00270	.02800	.00540	-.34980	-.28880
6.205	.058	.01490	.01410	-.00240	-.01930	.02950	-.00300	.03070	.00600	-.37060	-.32900
6.115	3.889	.01660	.01460	-.00130	-.02930	.03650	-.00330	.03300	.00640	-.39380	-.35730
6.072	5.767	.01740	.01450	-.00060	-.03360	.03990	-.00350	.03450	.00670	-.41210	-.37390
6.132	8.015	.01850	.01520	.00010	-.03860	.04410	-.00370	.03540	.00690	-.42120	-.38510
	GRADIENT	.00040	.00006	.00030	-.00316	.00223	-.00008	.00065	.00013	-.00569	-.00886

RUN NO. 1121/ 0 RN/L = 3.50 GRADIENT INTERVAL = -5.00/ 5.00

ALPHAR	BETAR	CNFRS	CAFRS	CLMFRS	CYFRS	CYNFRS	CBLRS	CABRS	CYNBRS	CP9	CP10
8.401	-7.747	.01980	.01340	-.00910	.01550	.00830	-.00400	.02730	.00530	-.34570	-.27750
8.333	-5.702	.01860	.01330	-.00560	.01320	.00880	-.00380	.02740	.00530	-.34520	-.27990
8.340	-3.756	.01930	.01290	-.00390	.00910	.01140	-.00390	.02880	.00560	-.35840	-.29880
8.259	.082	.02440	.01380	-.00370	-.00310	.02050	-.00490	.03170	.00620	-.38410	-.33780
8.318	4.023	.03310	.01370	-.00610	-.01030	.02540	-.00660	.03390	.00660	-.41020	-.36170
8.286	5.992	.03740	.01390	-.00740	-.01550	.02930	-.00740	.03420	.00660	-.41090	-.36740
8.269	7.989	.03980	.01460	-.00790	-.02370	.03550	-.00790	.03480	.00680	-.41700	-.37580
	GRADIENT	.00178	.00010	-.00028	-.00249	.00180	-.00035	.00066	.00013	-.00666	-.00808

IA156A, AEDC PWT 16T-470, 0 T S W/SILTS (R8NR85) (10 MAY 80)

REFERENCE DATA

SREF = 2690.0000 SQ.FT. XMRP = 976.0000 IN. XT
LREF = 1290.3000 INCHES YMRP = .0000 IN. YT
BREF = 1290.3000 INCHES ZMRP = 400.0000 IN. ZT
SCALE = .0200

PARAMETRIC DATA

IB-ELV = 8.000 OB-ELV = 9.000
BDFLAP = .000 SPDBRK = .000
RUDDER = .000 SILTS = 1.000
MACH = .800 RN/L = 3.500

RUN NO. 1132/ 0 RN/L = 3.51 GRADIENT INTERVAL = -5.00/ 5.00

ALPHAR	BETAR	CNFRS	CAFRS	CLMFRS	CYFRS	CYNFRS	CBLRS	CABRS	CYNBRS	CP9	CP10
-8.436	-6.193	-.00810	.00960	-.01750	.03530	.00380	.00170	.02530	.00490	-.32340	-.25250
-8.458	-4.133	-.02710	.01200	-.00580	.04280	-.00200	.00540	.02920	.00570	-.36620	-.30000
-8.433	.132	-.06940	.01220	.02130	.04120	-.00380	.01360	.03370	.00650	-.41430	-.35310
-8.333	4.257	-.09980	.01180	.03640	.02820	.00490	.01960	.03640	.00710	-.42830	-.40050
-8.383	6.268	-.11820	.01230	.04520	.02000	.01060	.02320	.03760	.00730	-.43900	-.41710
	GRADIENT	-.00867	-.00002	.00504	-.00173	.00082	.00169	.00086	.00017	-.00742	-.01198

RUN NO. 1133/ 0 RN/L = 3.50 GRADIENT INTERVAL = -5.00/ 5.00

ALPHAR	BETAR	CNFRS	CAFRS	CLMFRS	CYFRS	CYNFRS	CBLRS	CABRS	CYNBRS	CP9	CP10
-6.323	-6.320	.00000	.01230	-.01730	.01300	.01490	.00010	.02470	.00480	-.30860	-.25480
-6.271	-4.314	-.01560	.01430	-.00760	.01790	.01020	.00310	.02730	.00530	-.34080	-.28220
-6.407	.018	-.05100	.01340	.01510	.01290	.01000	.01000	.03230	.00630	-.39360	-.34170
-6.228	4.289	-.07800	.01420	.03000	-.00050	.01860	.01530	.03480	.00680	-.41050	-.38270
-6.219	6.299	-.09540	.01440	.03870	-.00640	.02300	.01870	.03660	.00710	-.42860	-.40510
	GRADIENT	-.00726	-.00001	.00437	-.00214	.00097	.00142	.00087	.00017	-.00811	-.01169

RUN NO. 1134/ 0 RN/L = 3.50 GRADIENT INTERVAL = -5.00/ 5.00

ALPHAR	BETAR	CNFRS	CAFRS	CLMFRS	CYFRS	CYNFRS	CBLRS	CABRS	CYNBRS	CP9	CP10
-4.130	-6.405	.00300	.01420	-.01470	-.00520	.02380	-.00050	.02450	.00470	-.30440	-.25310
-4.364	-4.252	-.01170	.01510	-.00550	-.00070	.01940	.00230	.02750	.00530	-.34280	-.28490
-4.315	.282	-.03830	.01490	.01200	-.01090	.02360	.00750	.03160	.00610	-.38050	-.33820
-3.885	4.389	-.05890	.01590	.02470	-.02260	.03090	.01160	.03430	.00670	-.40840	-.37330
-3.967	6.237	-.07340	.01590	.03250	-.02570	.03300	.01440	.03600	.00700	-.42190	-.39690
	GRADIENT	-.00547	.00009	.00350	-.00253	.00132	.00108	.00079	.00016	-.00760	-.01026

RUN NO. 1135/ 0 RN/L = 3.50 GRADIENT INTERVAL = -5.00/ 5.00

ALPHAR	BETAR	CNFRS	CAFRS	CLMFRS	CYFRS	CYNFRS	CBLRS	CABRS	CYNBRS	CP9	CP10
-.249	-7.170	.01160	.01690	-.01460	-.02230	.03250	-.00220	.02550	.00500	-.32070	-.26140
-.253	-4.847	.00030	.01640	-.00670	-.02400	.03230	.00000	.02620	.00510	-.32480	-.27250
-.278	-.734	-.01630	.01620	.00480	-.03090	.03580	.00320	.02970	.00580	-.35910	-.31840
-.228	3.328	-.03230	.01720	.01600	-.04030	.04200	.00640	.03350	.00650	-.39910	-.36470
-.213	5.466	-.04220	.01820	.02270	-.04450	.04510	.00830	.03550	.00690	-.42100	-.38690
	GRADIENT	-.00399	.00010	.00278	-.00199	.00119	.00078	.00089	.00017	-.00909	-.01128

IA156A, AEDC PWT 16T-470, 0 T S W/SILTS (R8NR85) (10 MAY 80)

REFERENCE DATA

SREF = 2690.0000 SQ.FT. XMRP = 976.0000 IN. XT
LREF = 1290.3000 INCHES YMRP = .0000 IN. YT
BREF = 1290.3000 INCHES ZMRP = 400.0000 IN. ZT
SCALE = .0200

PARAMETRIC DATA

IB-ELV = 8.000 OB-ELV = 9.000
BDFLAP = .000 SPDBRK = .000
RUDDER = .000 SILTS = 1.000
MACH = .800 RN/L = 3.500

RUN NO. 1136/ 0 RN/L = 3.50 GRADIENT INTERVAL = -5.00/ 5.00

ALPHAR	BETAR	CNFRS	CAFRS	CLMFRS	CYFRS	CYNFRS	CBLRS	CABRS	CYNBRS	CP9	CP10
4.296	-5.794	.00950	.01680	-.00370	-.01200	.02530	-.00190	.02720	.00530	-.34180	-.27860
4.295	-3.699	.00730	.01620	-.00080	-.01730	.02780	-.00140	.02850	.00550	-.35270	-.29650
4.155	.100	.00620	.01610	.00120	-.03150	.03740	-.00120	.02990	.00580	-.36030	-.32170
4.098	3.724	.00260	.01710	.00460	-.03950	.04340	-.00050	.03400	.00660	-.40210	-.37170
4.070	5.817	-.00110	.01810	.00700	-.04560	.04850	.00020	.03610	.00700	-.42430	-.39770
	GRADIENT	-.00063	.00012	.00073	-.00300	.00211	.00012	.00074	.00015	-.00662	-.01011

RUN NO. 1137/ 0 RN/L = 3.50 GRADIENT INTERVAL = -5.00/ 5.00

ALPHAR	BETAR	CNFRS	CAFRS	CLMFRS	CYFRS	CYNFRS	CBLRS	CABRS	CYNBRS	CP9	CP10
6.431	-5.782	.01500	.01700	-.00580	.00110	.01770	-.00300	.02780	.00540	-.34830	-.28620
6.426	-3.769	.01360	.01630	-.00270	-.00200	.01940	-.00270	.02900	.00560	-.35880	-.30130
6.108	.051	.01560	.01600	-.00180	-.01850	.03090	-.00310	.03100	.00600	-.37100	-.33420
6.066	3.841	.01710	.01670	-.00070	-.02680	.03700	-.00340	.03400	.00660	-.40440	-.37020
6.137	5.765	.02010	.01720	-.00140	-.03140	.04090	-.00390	.03520	.00680	-.41750	-.38380
	GRADIENT	.00046	.00005	.00026	-.00326	.00231	-.00009	.00066	.00013	-.00599	-.00905

IA156A, AEDC PWT 16T-470, 0 T S W/SILTS (R8NR86) (10 MAY 80)

REFERENCE DATA

SREF = 2690.0000 SQ.FT. XMRP = 976.0000 IN. XT
LREF = 1290.3000 INCHES YMRP = .0000 IN. YT
BREF = 1290.3000 INCHES ZMRP = 400.0000 IN. ZT
SCALE = .0200

PARAMETRIC DATA

IB-ELV = 8.000 OB-ELV = 9.000
BDFLAP = .000 SPDBRK = .000
RUDDER = .000 SILTS = 1.000
MACH = .900 RN/L = 3.500

RUN NO. 1139/ 0 RN/L = 3.50 GRADIENT INTERVAL = -5.00/ 5.00

ALPHAR	BETAR	CNFRS	CAFRS	CLMFRS	CYFRS	CYNFRS	CBLRS	CABRS	CYNBRS	CP9	CP10
-8.351	-6.345	-.00820	.01300	-.01820	.04190	.00180	.00170	.02700	.00520	-.33750	-.27830
-8.548	-4.070	-.03040	.01490	-.00540	.05220	-.00540	.00610	.03130	.00610	-.38210	-.33020
-8.503	-.003	-.07040	.01440	.02040	.04720	-.00410	.01390	.03510	.00680	-.42330	-.37620
-8.396	4.319	-.10580	.01580	.03910	.03220	.00530	.02080	.03640	.00710	-.41400	-.41550
-8.458	6.241	-.12390	.01620	.04730	.02520	.01020	.02440	.03770	.00730	-.43010	-.42770
	GRADIENT	-.00898	.00011	.00529	-.00240	.00128	.00175	.00060	.00012	-.00374	-.01016

IA156A, AEDC PWT 16T-470, 0 T S W/SILTS (R8NR86) (10 MAY 80)

REFERENCE DATA

SREF = 2690.0000 SQ.FT. XMRP = 976.0000 IN. XT
LREF = 1290.3000 INCHES YMRP = .0000 IN. YT
BREF = 1290.3000 INCHES ZMRP = 400.0000 IN. ZT
SCALE = .0200

PARAMETRIC DATA

IB-ELV = 8.000 OB-ELV = 9.000
BDFLAP = .000 SPDBRK = .000
RUDDER = .000 SILTS = 1.000
MACH = .900 RN/L = 3.500

RUN NO. 1140/ 0 RN/L = 3.50 GRADIENT INTERVAL = -5.00/ 5.00

ALPHAR	BETAR	CNFRS	CAFRS	CLMFRS	CYFRS	CYNFRS	CBLRS	CABRS	CYNBRS	CP9	CP10
-6.369	-6.332	-.00050	.01540	-.01910	.02000	.01290	.00020	.02660	.00520	-.33040	-.27680
-6.331	-4.352	-.01650	.01720	-.00870	.02470	.00790	.00330	.02960	.00580	-.36670	-.30890
-6.485	-.041	-.05250	.01600	.01430	.02070	.00800	.01030	.03290	.00640	-.39370	-.35560
-6.326	4.253	-.08210	.01780	.03120	.00800	.01530	.01620	.03580	.00700	-.40980	-.40540
-6.050	6.406	-.09750	.01910	.04000	-.00260	.02200	.01920	.03690	.00720	-.41950	-.42020
	GRADIENT	-.00762	.00007	.00464	-.00194	.00086	.00150	.00072	.00014	-.00501	-.01121

RUN NO. 1141/ 0 RN/L = 3.50 GRADIENT INTERVAL = -5.00/ 5.00

ALPHAR	BETAR	CNFRS	CAFRS	CLMFRS	CYFRS	CYNFRS	CBLRS	CABRS	CYNBRS	CP9	CP10
-4.165	-6.432	.00340	.01770	-.01680	-.00060	.02350	-.00060	.02680	.00520	-.32480	-.28450
-4.410	-4.280	-.01050	.01870	-.00810	.00450	.01830	.00210	.02960	.00570	-.35950	-.31440
-4.391	.273	-.03840	.01740	.01040	-.00450	.02140	.00760	.03160	.00610	-.37430	-.34640
-3.918	4.385	-.06170	.01960	.02570	-.01600	.02770	.01210	.03510	.00680	-.40750	-.39090
-4.011	6.236	-.07580	.02010	.03320	-.02050	.03100	.01490	.03680	.00710	-.42790	-.41030
	GRADIENT	-.00591	.00010	.00390	-.00236	.00108	.00116	.00063	.00013	-.00550	-.00880

RUN NO. 1142/ 0 RN/L = 3.50 GRADIENT INTERVAL = -5.00/ 5.00

ALPHAR	BETAR	CNFRS	CAFRS	CLMFRS	CYFRS	CYNFRS	CBLRS	CABRS	CYNBRS	CP9	CP10
-.295	-7.289	.01270	.02040	-.01690	-.02070	.03380	-.00240	.02770	.00540	-.33900	-.29200
-.293	-5.125	.00360	.02040	-.01050	-.02050	.03230	-.00060	.02830	.00550	-.34320	-.30080
-.354	-.816	-.01390	.01920	.00200	-.02660	.03500	.00280	.03150	.00610	-.37820	-.33870
-.289	3.303	-.03110	.02070	.01460	-.03850	.04260	.00610	.03410	.00660	-.40470	-.37100
-.273	5.465	-.04110	.02150	.02150	-.04540	.04710	.00810	.03660	.00710	-.43330	-.39900
	GRADIENT	-.00418	.00036	.00306	-.00289	.00185	.00080	.00063	.00012	-.00643	-.00784

RUN NO. 1143/ 0 RN/L = 3.50 GRADIENT INTERVAL = -5.00/ 5.00

ALPHAR	BETAR	CNFRS	CAFRS	CLMFRS	CYFRS	CYNFRS	CBLRS	CABRS	CYNBRS	CP9	CP10
4.399	-5.670	.01060	.02060	-.00460	-.01220	.02660	-.00210	.02910	.00570	-.36030	-.30350
4.271	-3.730	.00820	.02050	-.00250	-.01790	.02900	-.00160	.03050	.00590	-.37390	-.32040
4.110	.082	.00520	.02020	.00040	-.03100	.03770	-.00100	.03180	.00620	-.38110	-.34230
4.068	3.654	-.00090	.02140	.00610	-.03970	.04370	.00020	.03550	.00690	-.42400	-.38380
4.040	5.784	-.00540	.02170	.00860	-.04640	.04930	-.00110	.03750	.00730	-.44620	-.40730
	GRADIENT	-.00123	.00012	.00116	-.00296	.00199	.00024	.00067	.00013	-.00673	-.00855

IA156A, AEDC PWT 16T-470, 0 T S W/SILTS (R8NR87) (10 MAY 80)

REFERENCE DATA

SREF = 2690.0000 SQ.FT. XMRP = 976.0000 IN. XT
LREF = 1290.3000 INCHES YMRP = .0000 IN. YT
BREF = 1290.3000 INCHES ZMRP = 400.0000 IN. ZT
SCALE = .0200

PARAMETRIC DATA

IB-ELV = 8.000 OB-ELV = 9.000
BDFLAP = .000 SPDBRK = .000
RUDDER = .000 SILTS = 1.000
MACH = .950 RN/L = 3.500

RUN NO. 1144/ 0 RN/L = 3.50 GRADIENT INTERVAL = -5.00/ 5.00

ALPHAR	BETAR	CNFRS	CAFRS	CLMFRS	CYFRS	CYNFRS	CBLRS	CABRS	CYNBRS	CP9	CP10
-8.603	-6.274	-.01060	.01380	-.01930	.04060	.00440	.00220	.02990	.00580	-.37460	-.30770
-8.620	-4.130	-.02900	.01700	-.00820	.04720	-.00150	.00580	.03340	.00650	-.40420	-.35760
-8.617	.197	-.07390	.01710	.01970	.04720	-.00270	.01460	.03840	.00750	-.45280	-.42270
-8.503	4.263	-.11070	.01810	.04030	.03500	.00520	.02180	.03900	.00760	-.44850	-.44000
-8.525	6.193	-.13170	.01870	.05030	.02810	.01050	.02590	.04060	.00790	-.46740	-.45770
	GRADIENT	-.00974	.00013	.00579	-.00144	.00079	.00191	.00067	.00013	-.00534	-.00987

RUN NO. 1145/ 0 RN/L = 3.50 GRADIENT INTERVAL = -5.00/ 5.00

ALPHAR	BETAR	CNFRS	CAFRS	CLMFRS	CYFRS	CYNFRS	CBLRS	CABRS	CYNBRS	CP9	CP10
-6.428	-6.342	-.00100	.01760	-.01950	.01470	.01730	.00030	.02890	.00560	-.35600	-.30150
-6.392	-4.358	-.01570	.01920	-.01020	.01980	.01170	.00320	.03310	.00640	-.40030	-.35280
-6.559	-.043	-.05320	.01990	.01320	.01980	.01090	.01050	.03710	.00720	-.43620	-.40790
-6.404	4.246	-.08750	.02020	.03350	.00770	.01670	.01720	.03920	.00760	-.44780	-.44330
-6.091	6.400	-.10300	.02170	.04300	-.00620	.02460	.02020	.04050	.00790	-.46510	-.45760
	GRADIENT	-.00835	.00012	.00508	-.00140	.00058	.00163	.00071	.00014	-.00552	-.01052

RUN NO. 1146/ 0 RN/L = 3.49 GRADIENT INTERVAL = -5.00/ 5.00

ALPHAR	BETAR	CNFRS	CAFRS	CLMFRS	CYFRS	CYNFRS	CBLRS	CABRS	CYNBRS	CP9	CP10
-4.192	-6.434	.00310	.02010	-.01650	-.00520	.02710	-.00050	.02870	.00560	-.34990	-.30450
-4.443	-4.281	-.01030	.02140	-.00850	-.00110	.02210	.00210	.03270	.00630	-.39190	-.35220
-4.418	.269	-.04110	.02000	.01260	-.01060	.02550	.00810	.03690	.00720	-.43250	-.40670
-3.937	4.395	-.06450	.02320	.02830	-.02420	.03290	.01270	.03860	.00750	-.44550	-.43330
-4.038	6.235	-.08050	.02290	.03640	-.02730	.03520	.01580	.04050	.00790	-.46940	-.45240
	GRADIENT	-.00626	.00020	.00425	-.00265	.00124	.00122	.00068	.00014	-.00623	-.00939

RUN NO. 1147/ 0 RN/L = 3.49 GRADIENT INTERVAL = -5.00/ 5.00

ALPHAR	BETAR	CNFRS	CAFRS	CLMFRS	CYFRS	CYNFRS	CBLRS	CABRS	CYNBRS	CP9	CP10
-.289	-7.322	.01020	.02180	-.01320	-.01940	.03540	-.00200	.02860	.00560	-.35230	-.30000
-.277	-5.143	.00070	.02250	-.00620	-.02010	.03400	-.00010	.03010	.00590	-.36720	-.31930
-.319	-.827	-.01500	.02260	.00510	-.03180	.03970	.00290	.03490	.00680	-.41880	-.37650
-.263	3.283	-.03210	.02460	.01710	-.04400	.04720	.00630	.03880	.00750	-.46210	-.42130
-.265	5.468	-.04290	.02480	.02360	-.05010	.05130	.00840	.04000	.00780	-.47700	-.43380
	GRADIENT	-.00416	.00049	.00292	-.00297	.00182	.00083	.00095	.00017	-.01054	-.01090

IA156A, AEDC PWT 16T-470, O T S W/SILTS (R8NR87) (10 MAY 80)

REFERENCE DATA

SREF = 2690.0000 SQ.FT. XMRP = 976.0000 IN. XT
LREF = 1290.3000 INCHES YMRP = .0000 IN. YT
BREF = 1290.3000 INCHES ZMRP = 400.0000 IN. ZT
SCALE = .0200

PARAMETRIC DATA

IB-ELV = 8.000 OB-ELV = 9.000
BDFLAP = .000 SPDBRK = .000
RUDDER = .000 SILTS = 1.000
MACH = .950 RN/L = 3.500

RUN NO. 1148/ 0 RN/L = 3.49 GRADIENT INTERVAL = -5.00/ 5.00

ALPHAR	BETAR	CNFRS	CAFRS	CLMFRS	CYFRS	CYNFRS	CBLRS	CABRS	CYNBRS	CP9	CP10
4.312	-5.806	.00970	.02210	-.00410	-.01270	.02840	-.00190	.03180	.00620	-.39290	-.33140
4.274	-3.719	.00720	.02240	-.00200	-.01810	.03080	-.00140	.03370	.00650	-.40990	-.35830
4.079	.068	.00310	.02340	.00090	-.03050	.03940	-.00060	.03540	.00690	-.42710	-.38020
4.093	3.687	-.00320	.02370	.00770	-.03740	.04410	.00060	.03890	.00760	-.46730	-.41940
4.083	5.776	-.00660	.02420	.01090	-.04570	.05080	.00130	.04070	.00790	-.48760	-.43840
	GRADIENT	-.00140	.00018	.00131	-.00261	.00180	.00027	.00070	.00015	-.00773	-.00823

IA156A, AEDC PWT 16T-470, O T S W/SILTS (R8NR88) (10 MAY 80)

REFERENCE DATA

SREF = 2690.0000 SQ.FT. XMRP = 976.0000 IN. XT
LREF = 1290.3000 INCHES YMRP = .0000 IN. YT
BREF = 1290.3000 INCHES ZMRP = 400.0000 IN. ZT
SCALE = .0200

PARAMETRIC DATA

IB-ELV = 8.000 OB-ELV = 9.000
BDFLAP = .000 SPDBRK = .000
RUDDER = .000 SILTS = 1.000
MACH = 1.050 RN/L = 3.500

RUN NO. 1149/ 0 RN/L = 3.50 GRADIENT INTERVAL = -5.00/ 5.00

ALPHAR	BETAR	CNFRS	CAFRS	CLMFRS	CYFRS	CYNFRS	CBLRS	CABRS	CYNBRS	CP9	CP10
-8.698	-6.334	-.00780	.02120	-.02610	.03640	.01070	.00170	.04110	.00800	-.49960	-.43650
-8.737	-4.188	-.02990	.02360	-.01230	.04440	.00490	.00600	.04610	.00890	-.54940	-.50020
-8.732	.165	-.08160	.02540	.02120	.04290	.00480	.01610	.05210	.01010	-.61460	-.57150
-8.576	4.217	-.12480	.02550	.04830	.02550	.01660	.02450	.05340	.01040	-.62570	-.58960
-8.613	6.187	-.14470	.02710	.05820	.01930	.02050	.02850	.05510	.01070	-.65270	-.60250
	GRADIENT	-.01130	.00023	.00722	-.00222	.00137	.00220	.00087	.00018	-.00915	-.01071

RUN NO. 1150/ 0 RN/L = 3.50 GRADIENT INTERVAL = -5.00/ 5.00

ALPHAR	BETAR	CNFRS	CAFRS	CLMFRS	CYFRS	CYNFRS	CBLRS	CABRS	CYNBRS	CP9	CP10
-6.495	-6.382	.00230	.02410	-.02530	.00780	.02440	-.00040	.04100	.00800	-.49310	-.43980
-6.427	-4.396	-.01480	.02620	-.01350	.01250	.01990	.00300	.04500	.00870	-.54240	-.48310
-6.630	-.090	-.05920	.02620	.01600	.01120	.02020	.01160	.05040	.00980	-.59590	-.55090
-6.416	4.238	-.09660	.02860	.04000	-.00300	.02730	.01900	.05330	.01030	-.62790	-.58480
-6.401	6.262	-.11650	.02950	.05080	-.01150	.03310	.02290	.05410	.01050	-.63730	-.59480
	GRADIENT	-.00947	.00028	.00620	-.00180	.00086	.00185	.00096	.00019	-.00990	-.01178

IA156A, AEDC PWT 16T-470, O T S W/SILTS (R8NR88) (10 MAY 80)

REFERENCE DATA

SREF = 2690.0000 SQ.FT. XMRP = 976.0000 IN. XT
LREF = 1290.3000 INCHES YMRP = .0000 IN. YT
BREF = 1290.3000 INCHES ZMRP = 400.0000 IN. ZT
SCALE = .0200

PARAMETRIC DATA

IB-ELV = 8.000 OB-ELV = 9.000
BDFLAP = .000 SPDBRK = .000
RUDDER = .000 SILTS = 1.000
MACH = 1.050 RN/L = 3.500

RUN NO. 1151/ 0 RN/L = 3.50 GRADIENT INTERVAL = -5.00/ 5.00

ALPHAR	BETAR	CNFRS	CAFRS	CLMFRS	CYFRS	CYNFRS	CBLRS	CABRS	CYNBRS	CP9	CP10
-4.243	-6.478	.00700	.02630	-.02180	-.01420	.03620	-.00130	.04110	.00800	-.49050	-.44480
-4.501	-4.330	-.00860	.02740	-.01180	-.00850	.03030	.00170	.04430	.00860	-.53400	-.47460
-4.470	.234	-.04440	.02740	.01430	-.02180	.03720	.00870	.04980	.00970	-.58940	-.54380
-3.952	4.357	-.07320	.03120	.03460	-.03500	.04460	.01430	.05160	.01000	-.61020	-.56360
-4.067	6.218	-.09060	.03080	.04410	-.03600	.04560	.01770	.05340	.01040	-.63220	-.58300
	GRADIENT	-.00744	.00043	.00535	-.00305	.00164	.00145	.00085	.00016	-.00883	-.01033

RUN NO. 1152/ 0 RN/L = 3.50 GRADIENT INTERVAL = -5.00/ 5.00

ALPHAR	BETAR	CNFRS	CAFRS	CLMFRS	CYFRS	CYNFRS	CBLRS	CABRS	CYNBRS	CP9	CP10
-.302	-7.413	.01280	.02760	-.01560	-.02800	.04400	-.00250	.03990	.00770	-.48040	-.42850
-.301	-5.211	.00280	.02770	-.00770	-.03040	.04340	-.00060	.04230	.00820	-.50600	-.45740
-.375	-.843	-.01610	.03000	.00640	-.04500	.05230	.00310	.04850	.00940	-.57500	-.52950
-.294	3.262	-.03710	.03240	.02210	-.05580	.05930	.00720	.05220	.01010	-.61790	-.57030
-.279	5.448	-.04880	.03270	.02970	-.06060	.06210	.00950	.05330	.01030	-.63120	-.58220
	GRADIENT	-.00512	.00058	.00382	-.00263	.00171	.00100	.00090	.00017	-.01045	-.00994

RUN NO. 1153/ 0 RN/L = 3.50 GRADIENT INTERVAL = -5.00/ 5.00

ALPHAR	BETAR	CNFRS	CAFRS	CLMFRS	CYFRS	CYNFRS	CBLRS	CABRS	CYNBRS	CP9	CP10
4.395	-5.710	.01240	.02880	-.00770	-.01590	.03430	-.00250	.04390	.00850	-.52470	-.47450
4.253	-3.712	.01010	.03030	-.00550	-.02300	.03830	-.00210	.04580	.00890	-.54260	-.50000
3.988	-.104	.00350	.03120	.00170	-.03690	.04710	-.00080	.04760	.00920	-.56490	-.51930
4.123	3.657	-.00420	.03160	.00990	-.04590	.05350	.00070	.05060	.00980	-.60360	-.54880
4.117	5.737	-.00820	.03120	.01350	-.05440	.06030	.00150	.05090	.00990	-.60780	-.55130
	GRADIENT	-.00194	.00018	.00209	-.00310	.00206	.00038	.00065	.00012	-.00829	-.00663

IA156A, AEDC PWT 16T-470, 0 T S W/SILTS (R8NR89) (10 MAY 80)

REFERENCE DATA

SREF = 2690.0000 SQ.FT. XMRP = 976.0000 IN. XT
LREF = 1290.3000 INCHES YMRP = .0000 IN. YT
BREF = 1290.3000 INCHES ZMRP = 400.0000 IN. ZT
SCALE = .0200

PARAMETRIC DATA

IB-ELV = 8.000 OB-ELV = 9.000
BDFLAP = .000 SPDBRK = .000
RUDDER = .000 SILTS = 1.000
MACH = 1.100 RN/L = 3.500

RUN NO. 1154/ 0 RN/L = 3.50 GRADIENT INTERVAL = -5.00/ 5.00

ALPHAR	BETAR	CNFRS	CAFRS	CLMFRS	CYFRS	CYNFRS	CBLRS	CABRS	CYNBRS	CP9	CP10
-8.684	-6.321	-.00990	.02340	-.02430	.03830	.00920	.00200	.03750	.00730	-.45560	-.39890
-8.732	-4.183	-.03120	.02580	-.01140	.04630	.00410	.00620	.04190	.00810	-.50140	-.45380
-8.760	-.064	-.07860	.02780	.01890	.04520	.00410	.01550	.04790	.00930	-.56670	-.52400
-8.593	4.241	-.12410	.02970	.04750	.02650	.01570	.02430	.05000	.00970	-.58990	-.54850
-8.615	6.185	-.14320	.03050	.05730	.01780	.02090	.02820	.05160	.01000	-.61310	-.56130
	GRADIENT	-.01102	.00046	.00699	-.00237	.00139	.00215	.00096	.00019	-.01047	-.01120

RUN NO. 1155/ 0 RN/L = 3.50 GRADIENT INTERVAL = -5.00/ 5.00

ALPHAR	BETAR	CNFRS	CAFRS	CLMFRS	CYFRS	CYNFRS	CBLRS	CABRS	CYNBRS	CP9	CP10
-6.513	-6.382	.00070	.02550	-.02490	.01150	.02210	-.00010	.03770	.00730	-.45470	-.40330
-6.505	-4.417	-.01640	.02730	-.01350	.01660	.01773	.00330	.04140	.00800	-.50130	-.44260
-6.677	-.089	-.05930	.02860	.01530	.01370	.01890	.01170	.04580	.00890	-.54200	-.49990
-6.445	4.261	-.09650	.03190	.03980	-.00580	.02840	.01890	.04890	.00950	-.57700	-.53620
-6.407	6.266	-.11650	.03290	.05070	-.01070	.03210	.02280	.04990	.00970	-.58650	-.54910
	GRADIENT	-.00923	.00053	.00614	-.00258	.00123	.00180	.00086	.00017	-.00872	-.01078

RUN NO. 1156/ 0 RN/L = 3.50 GRADIENT INTERVAL = -5.00/ 5.00

ALPHAR	BETAR	CNFRS	CAFRS	CLMFRS	CYFRS	CYNFRS	CBLRS	CABRS	CYNBRS	CP9	CP10
-4.265	-6.483	.00580	.02760	-.02150	-.01230	.03450	-.00110	.03800	.00740	-.45400	-.41080
-4.532	-4.334	-.00960	.02880	-.01210	-.00630	.02890	.00190	.04020	.00780	-.48960	-.42680
-4.480	.236	-.04500	.03020	.01430	-.02000	.03550	.00880	.04460	.00870	-.53000	-.48500
-3.946	4.371	-.07360	.03320	.03470	-.03190	.04230	.01440	.04730	.00920	-.56060	-.51580
-4.064	6.229	-.09090	.03420	.04440	-.03320	.04360	.01780	.04830	.00940	-.57400	-.52640
	GRADIENT	-.00736	.00050	.00538	-.00294	.00155	.00144	.00082	.00016	-.00817	-.01027

RUN NO. 1157/ 0 RN/L = 3.50 GRADIENT INTERVAL = -5.00/ 5.00

ALPHAR	BETAR	CNFRS	CAFRS	CLMFRS	CYFRS	CYNFRS	CBLRS	CABRS	CYNBRS	CP9	CP10
-.311	-7.410	.01190	.02910	-.01540	-.02890	.04450	-.00240	.03640	.00710	-.44000	-.38980
-.302	-5.238	.00130	.02900	-.00690	-.03050	.04300	-.00030	.03730	.00720	-.44800	-.40130
-.360	-.818	-.01780	.03150	.00730	-.04340	.05060	.00340	.04250	.00820	-.50760	-.45920
-.282	3.280	-.03910	.03470	.02320	-.05270	.05640	.00760	.04550	.00880	-.54150	-.49420
-.273	5.470	-.05100	.03510	.03090	-.05690	.05860	.00990	.04690	.00910	-.55780	-.51040
	GRADIENT	-.00520	.00078	.00388	-.00227	.00142	.00102	.00073	.00015	-.00827	-.00854

IA156A, AEDC PWT 16T-470, 0 T S W/SILTS (R8NR89) (10 MAY 80)

REFERENCE DATA

SREF = 2690.0000 SQ.FT. XMRP = 976.0000 IN. XT
LREF = 1290.3000 INCHES YMRP = .0000 IN. YT
BREF = 1290.3000 INCHES ZMRP = 400.0000 IN. ZT
SCALE = .0200

PARAMETRIC DATA

IB-ELV = 8.000 OB-ELV = 9.000
BDFLAP = .000 SPDBRK = .000
RUDDER = .000 SILTS = 1.000
MACH = 1.100 RN/L = 3.500

RUN NO. 1158/ 0 RN/L = 3.50 GRADIENT INTERVAL = -5.00/ 5.00

ALPHAR	BETAR	CNFRS	CAFRS	CLMFRS	CYFRS	CYNFRS	CBLRS	CABRS	CYNBRS	CP9	CP10
4.325	-5.823	.01190	.03010	-.00730	-.01430	.03340	-.00240	.03750	.00730	-.45050	-.40380
4.293	-3.732	.01000	.03190	-.00490	-.02030	.03640	-.00210	.03980	.00770	-.47370	-.43290
4.133	.054	.00290	.03260	.00300	-.03610	.04670	-.00070	.04180	.00810	-.49780	-.45490
4.155	3.652	-.00580	.03390	.01200	-.04440	.05210	.00100	.04400	.00850	-.52870	-.47400
4.151	5.755	-.01030	.03460	.01540	-.05320	.05920	.00190	.04440	.00060	-.53320	-.47830
	GRADIENT	-.00214	.00027	.00229	-.00327	.00213	.00042	.00057	.00011	-.00744	-.00557

IA156A, AEDC PWT 16T-470, 0 T S W/SILTS (R8NR90) (10 MAY 80)

REFERENCE DATA

SREF = 2690.0000 SQ.FT. XMRP = 976.0000 IN. XT
LREF = 1290.3000 INCHES YMRP = .0000 IN. YT
BREF = 1290.3000 INCHES ZMRP = 400.0000 IN. ZT
SCALE = .0200

PARAMETRIC DATA

IB-ELV = 8.000 OB-ELV = 9.000
BDFLAP = .000 SPDBRK = .000
RUDDER = .000 SILTS = 1.000
MACH = 1.150 RN/L = 3.500

RUN NO. 1159/ 0 RN/L = 3.49 GRADIENT INTERVAL = -5.00/ 5.00

ALPHAR	BETAR	CNFRS	CAFRS	CLMFRS	CYFRS	CYNFRS	CBLRS	CABRS	CYNBRS	CP9	CP10
-8.704	-6.356	-.00910	.02480	-.02680	.03750	.01030	.00190	.03580	.00700	-.43340	-.38230
-8.758	-4.195	-.03170	.02650	-.01280	.04810	.00290	.00630	.03930	.00760	-.46980	-.42630
-8.781	.169	-.08260	.02980	.02030	.04720	.00170	.01620	.04450	.00860	-.52680	-.48700
-8.578	4.254	-.12720	.03140	.04960	.02780	.01240	.02490	.04710	.00910	-.55610	-.51530
-8.609	6.219	-.14670	.03270	.05960	.01940	.01800	.02880	.04710	.00920	-.56060	-.51270
	GRADIENT	-.01131	.00058	.00739	-.00238	.00111	.00220	.00093	.00018	-.01025	-.01057

RUN NO. 1160/ 0 RN/L = 3.50 GRADIENT INTERVAL = -5.00/ 5.00

ALPHAR	BETAR	CNFRS	CAFRS	CLMFRS	CYFRS	CYNFRS	CBLRS	CABRS	CYNBRS	CP9	CP10
-6.514	-6.399	.00060	.02650	-.02560	.01140	.02230	-.00010	.03470	.00670	-.41860	-.37080
-6.475	-4.418	-.01650	.02850	-.01420	.01760	.01690	.00330	.03780	.00730	-.45890	-.40290
-6.665	-.071	-.06080	.03000	.01580	.01500	.01640	.01190	.04300	.00840	-.51040	-.46960
-6.422	4.281	-.09970	.03320	.04200	-.00210	.02490	.01950	.04570	.00890	-.54070	-.49920
-6.391	6.287	-.11920	.03490	.05280	-.00640	.02820	.02330	.04620	.00900	-.54550	-.50660
	GRADIENT	-.00956	.00054	.00646	-.00226	.00092	.00186	.00091	.00018	-.00940	-.01107

IA156A, AEDC PWT 16T-470, 0 T S W/SILTS (R8NR90) (10 MAY 80)

REFERENCE DATA

SREF = 2690.0000 SQ.FT. XMRP = 976.0000 IN. XT
LREF = 1290.3000 INCHES YMRP = .0000 IN. YT
BREF = 1290.3000 INCHES ZMRP = 400.0000 IN. ZT
SCALE = .0200

PARAMETRIC DATA

IB-ELV = 8.000 OB-ELV = 9.000
BDFLAP = .000 SPDBRK = .000
RUDDER = .000 SILTS = 1.000
MACH = 1.150 RN/L = 3.500

RUN NO. 1161/ 0 RN/L = 3.50 GRADIENT INTERVAL = -5.00/ 5.00

ALPHAR	BETAR	CNFRS	CAFRS	CLMFRS	CYFRS	CYNFRS	CBLRS	CABRS	CYNBRS	CP9	CP10
-4.240	-6.492	.00480	.02830	-.02090	-.01240	.03420	-.00090	.03460	.00670	-.41610	-.37140
-4.504	-4.331	-.00990	.02970	-.01200	-.00620	.02810	.00190	.03700	.00720	-.44890	-.39370
-4.478	.258	-.04740	.03150	.01600	-.01830	.03360	.00930	.04220	.00820	-.50290	-.45860
-3.930	4.377	-.07680	.03500	.03710	-.02810	.03940	.01500	.04440	.00860	-.52700	-.48350
-4.051	6.255	-.09330	.03570	.04650	-.02970	.04040	.01820	.04550	.00880	-.54170	-.49500
	GRADIENT	-.00769	.00060	.00565	-.00252	.00130	.00151	.00086	.00016	-.00902	-.01039

RUN NO. 1162/ 0 RN/L = 3.49 GRADIENT INTERVAL = -5.00/ 5.00

ALPHAR	BETAR	CNFRS	CAFRS	CLMFRS	CYFRS	CYNFRS	CBLRS	CABRS	CYNBRS	CP9	CP10
-.277	-7.434	.01060	.03000	-.01390	-.02660	.04240	-.00220	.03330	.00650	-.40430	-.35440
-.252	-5.258	.00050	.02970	-.00560	-.02900	.04180	-.00020	.03550	.00690	-.42960	-.37990
-.310	-.801	-.01880	.03300	.00870	-.04120	.04870	.00360	.04080	.00790	-.49060	-.43780
-.231	3.289	-.03900	.03600	.02400	-.05080	.05450	.00760	.04390	.00850	-.52520	-.47550
-.234	5.490	-.05150	.03660	.03220	-.05420	.05590	.01000	.04500	.00870	-.53790	-.48750
	GRADIENT	-.00494	.00073	.00374	-.00235	.00142	.00098	.00076	.00015	-.00846	-.00922

RUN NO. 1163/ 0 RN/L = 3.50 GRADIENT INTERVAL = -5.00/ 5.00

ALPHAR	BETAR	CNFRS	CAFRS	CLMFRS	CYFRS	CYNFRS	CBLRS	CABRS	CYNBRS	CP9	CP10
4.370	-5.824	.01140	.03130	-.00700	-.01340	.03320	-.00240	.03580	.00690	-.43080	-.38450
4.328	-3.710	.00890	.03260	-.00390	-.01870	.03530	-.00190	.03860	.00750	-.46130	-.41690
4.193	.071	.00120	.03410	.00500	-.03350	.04460	-.00040	.04040	.00780	-.48540	-.43520
4.227	3.688	-.00590	.03540	.01270	-.04380	.05200	.00100	.04270	.00830	-.51100	-.46040
4.136	5.695	-.01070	.03610	.01650	-.05160	.05810	.00200	.04290	.00830	-.51640	-.46180
	GRADIENT	-.00200	.00038	.00224	-.00340	.00226	.00039	.00055	.00011	-.00671	-.00587

IA156A, AEDC PWT 16T-470, 0 T S W/SILTS (R8NR91) (10 MAY 80)

REFERENCE DATA

SREF = 2690.0000 SQ.FT. XMRP = 976.0000 IN. XT
LREF = 1290.3000 INCHES YMRP = .0000 IN. YT
BREF = 1290.3000 INCHES ZMRP = 400.0000 IN. ZT
SCALE = .0200

PARAMETRIC DATA

IB-ELV = 8.000 OB-ELV = 9.000
BDFLAP = .000 SPDBRK = .000
RUDDER = .000 SILTS = 1.000
MACH = 1.250 RN/L = 3.500

RUN NO. 1164/ 0 RN/L = 3.50 GRADIENT INTERVAL = -5.00/ 5.00

ALPHAR	BETAR	CNFRS	CAFRS	CLMFRS	CYFRS	CYNFRS	CBLRS	CABRS	CYNBRS	CP9	CP10
-8.673	-6.345	-.01590	.02510	-.02300	.04150	.00550	.00320	.03290	.00640	-.39520	-.35300
-8.707	-4.184	-.03740	.02740	-.00890	.04830	.00030	.00740	.03550	.00690	-.42300	-.38470
-8.725	.198	-.08640	.03040	.02430	.04440	.00020	.01700	.04110	.00800	-.48680	-.45010
-8.533	4.323	-.12710	.03370	.05110	.02700	.00850	.02490	.04170	.00810	-.49610	-.45280
-8.600	6.275	-.14820	.03530	.06110	.02240	.01200	.02910	.04260	.00830	-.50970	-.46050
	GRADIENT	-.01055	.00074	.00706	-.00249	.00095	.00206	.00073	.00014	-.00866	-.00808

RUN NO. 1165/ 0 RN/L = 3.50 GRADIENT INTERVAL = -5.00/ 5.00

ALPHAR	BETAR	CNFRS	CAFRS	CLMFRS	CYFRS	CYNFRS	CBLRS	CABRS	CYNBRS	CP9	CP10
-6.512	-6.415	-.00490	.02670	-.02230	.01380	.01850	.00100	.03190	.00620	-.38290	-.34300
-6.451	-4.417	-.02260	.02880	-.00980	.01880	.01380	.00440	.03480	.00680	-.41840	-.37410
-6.608	-.043	-.06430	.03140	.01960	.01370	.01470	.01260	.03950	.00770	-.46890	-.42990
-6.392	4.308	-.10100	.03520	.04310	.00500	.01060	.01980	.04090	.00790	-.48710	-.44420
-6.385	6.330	-.11990	.03630	.05310	.00020	.02200	.02350	.04220	.00820	-.50620	-.45410
	GRADIENT	-.00899	.00073	.00606	-.00158	.00055	.00177	.00070	.00013	-.00788	-.00804

RUN NO. 1166/ 0 RN/L = 3.49 GRADIENT INTERVAL = -5.00/ 5.00

ALPHAR	BETAR	CNFRS	CAFRS	CLMFRS	CYFRS	CYNFRS	CBLRS	CABRS	CYNBRS	CP9	CP10
-4.214	-6.509	-.00010	.02820	-.01740	-.00970	.03050	.00000	.03170	.00610	-.38050	-.34070
-4.445	-4.317	-.01640	.03020	-.00630	-.00560	.02620	.00320	.03380	.00660	-.40830	-.36260
-4.422	.262	-.04960	.03230	.01800	-.01190	.02830	.00970	.03840	.00750	-.45980	-.41450
-3.906	4.394	-.07640	.03580	.03690	-.02000	.03310	.01490	.04030	.00780	-.48360	-.43500
-4.036	6.286	-.09280	.03720	.04600	-.02170	.03400	.01810	.04150	.00810	-.49900	-.44620
	GRADIENT	-.00689	.00064	.00497	-.00165	.00079	.00134	.00075	.00014	-.00869	-.00836

RUN NO. 1167/ 0 RN/L = 3.50 GRADIENT INTERVAL = -5.00/ 5.00

ALPHAR	BETAR	CNFRS	CAFRS	CLMFRS	CYFRS	CYNFRS	CBLRS	CABRS	CYNBRS	CP9	CP10
-.246	-7.458	.00640	.02970	-.01090	-.02420	.04020	-.00130	.03040	.00590	-.37240	-.32030
-.218	-5.234	-.00370	.03050	-.00250	-.02750	.04040	.00060	.03220	.00630	-.39210	-.34150
-.236	-.841	-.02310	.03430	.01290	-.03850	.04560	.00440	.03700	.00720	-.44910	-.39340
-.173	3.311	-.04180	.03620	.02720	-.04820	.05080	.00810	.04110	.00800	-.49690	-.43910
-.181	5.537	-.05280	.03870	.03440	-.05210	.05320	.01030	.04050	.00790	-.48950	-.43280
	GRADIENT	-.00450	.00046	.00344	-.00234	.00125	.00089	.00099	.00019	-.01151	-.01101

IA156A, AEDC PWT 16T-470, 0 T S W/SILTS (R8NR91) (10 MAY 80)

REFERENCE DATA

SREF = 2690.0000 SQ.FT. XMRP = 976.0000 IN. XT
LREF = 1290.3000 INCHES YMRP = .0000 IN. YT
BREF = 1290.3000 INCHES ZMRP = 400.0000 IN. ZT
SCALE = .0200

PARAMETRIC DATA

IB-ELV = 8.000 OB-ELV = 9.000
BDFLAP = .000 SPDBRK = .000
RUDDER = .000 SILTS = 1.000
MACH = 1.250 RN/L = 3.500

RUN NO. 1168/ 0 RN/L = 3.49 GRADIENT INTERVAL = -5.00/ 5.00

ALPHAR	BETAR	CNFRS	CAFRS	CLMFRS	CYFRS	CYNFRS	CBLRS	CABRS	CYNBRS	CP9	CP10
4.538	-5.690	.01060	.03190	-.00570	-.00950	.03060	-.00220	.03280	.00640	-.39800	-.34970
4.403	-3.759	.00760	.03340	-.00250	-.01440	.03270	-.00160	.03450	.00670	-.41530	-.36980
4.269	.052	-.00140	.03470	.00810	-.02950	.04230	.00010	.03720	.00720	-.45000	-.39660
4.241	3.583	-.00800	.03670	.01580	-.04170	.05110	.00140	.03890	.00760	-.47070	-.41530
4.274	5.770	-.01220	.03740	.01940	-.04970	.05690	.00230	.03960	.00770	-.47830	-.42330
	GRADIENT	-.00213	.00045	.00250	-.00372	.00251	.00041	.00060	.00012	-.00757	-.00621

IA156A, AEDC PWT 16T-470, 0 T S W/SILTS (R8NR92) (10 MAY 80)

REFERENCE DATA

SREF = 2690.0000 SQ.FT. XMRP = 976.0000 IN. XT
LREF = 1290.3000 INCHES YMRP = .0000 IN. YT
BREF = 1290.3000 INCHES ZMRP = 400.0000 IN. ZT
SCALE = .0200

PARAMETRIC DATA

IB-ELV = 8.000 OB-ELV = 5.000
BDFLAP = .000 SPDBRK = .000
RUDDER = .000 SILTS = 1.000
MACH = .600 RN/L = 3.500

RUN NO. 1173/ 0 RN/L = 3.50 GRADIENT INTERVAL = -5.00/ 5.00

ALPHAR	BETAR	CNFRS	CAFRS	CLMFRS	CYFRS	CYNFRS	CBLRS	CABRS	CYNBRS	CP9	CP10
-8.158	-8.250	.00960	.00770	-.02590	.01590	.01520	-.00180	.02490	.00480	-.31320	-.25360
-8.278	-6.073	-.00750	.00830	-.01630	.02670	.00630	.00150	.02720	.00530	-.34810	-.27100
-8.295	-4.027	-.02550	.01000	-.00500	.03260	.00000	.00510	.02950	.00570	-.37930	-.29420
-8.245	.188	-.06500	.00940	.01970	.02780	-.00050	.01280	.03330	.00650	-.41180	-.34620
-8.141	4.248	-.09400	.00970	.03480	.01250	.00970	.01850	.03610	.00700	-.42640	-.39460
-8.161	6.230	-.11180	.00950	.04400	.00390	.01540	.02200	.03830	.00740	-.45720	-.41430
-8.001	8.336	-.12910	.01060	.05310	-.00790	.02310	.02540	.03930	.00760	-.46480	-.42940
	GRADIENT	-.00828	-.00004	.00482	-.00242	.00116	.00162	.00080	.00016	-.00570	-.01213

RUN NO. 1174/ 0 RN/L = 3.49 GRADIENT INTERVAL = -5.00/ 5.00

ALPHAR	BETAR	CNFRS	CAFRS	CLMFRS	CYFRS	CYNFRS	CBLRS	CABRS	CYNBRS	CP9	CP10
-6.224	-8.246	.01310	.00960	-.02470	-.00160	.02350	-.00250	.02460	.00480	-.30750	-.25330
-6.205	-6.216	-.00080	.01010	-.01630	.00470	.01700	.00020	.02650	.00510	-.33580	-.26880
-6.170	-4.210	-.01600	.01160	-.00660	.00900	.01190	.00320	.02850	.00550	-.36260	-.28630
-6.240	.034	-.04800	.01070	.01380	.00420	.01210	.00950	.03200	.00620	-.39700	-.33180
-6.109	4.256	-.07530	.01130	.02950	-.00840	.02030	.01480	.03560	.00690	-.42620	-.38490
-5.894	6.344	-.08890	.01200	.03720	-.01750	.02640	.01750	.03680	.00720	-.43830	-.40070
-6.066	8.275	-.10660	.01180	.04570	-.02190	.02980	.02090	.03810	.00740	-.45360	-.41440
	GRADIENT	-.00700	-.00004	.00426	-.00205	.00099	.00137	.00084	.00017	-.00751	-.01165

IA156A, AEDC PWT 16T-470, O T S W/SILTS (R8NR92) (10 MAY 80)

REFERENCE DATA

SREF = 2690.0000 SQ.FT. XMRP = 976.0000 IN. XT
LREF = 1290.3000 INCHES YMRP = .0000 IN. YT
BREF = 1290.3000 INCHES ZMRP = 400.0000 IN. ZT
SCALE = .0200

PARAMETRIC DATA

IB-ELV = 8.000 OB-ELV = 5.000
BDFLAP = .000 SPDBRK = .000
RUDDER = .000 SILTS = 1.000
MACH = .600 RN/L = 3.500

RUN NO. 1175/ 0 RN/L = 3.49 GRADIENT INTERVAL = -5.00/ 5.00

ALPHAR	BETAR	CNFRS	CAFRS	CLMFRS	CYFRS	CYNFRS	CBLRS	CABRS	CYNBRS	CP9	CP10
-4.038	-8.364	.01460	.01110	-.02210	-.01430	.02960	-.00280	.02520	.00490	-.31520	-.25850
-4.256	-6.222	.00190	.01200	-.01380	-.01060	.02520	-.00030	.02540	.00490	-.31720	-.26230
-4.281	-4.130	-.01130	.01170	-.00540	-.00790	.02080	.00230	.02850	.00550	-.36150	-.28800
-4.094	.112	-.03530	.01190	.01070	-.01810	.02560	.00700	.03180	.00620	-.39030	-.33410
-3.749	4.375	-.05560	.01300	.02390	-.02890	.03220	.01100	.03480	.00680	-.41880	-.37480
-3.716	6.188	-.06680	.01330	.03010	-.03290	.03500	.01310	.03580	.00700	-.42620	-.39000
-3.912	8.177	-.08130	.01380	.03730	-.03720	.03840	.01600	.03700	.00720	-.43960	-.40200
	GRADIENT	-.00521	.00015	.00344	-.00247	.00134	.00102	.00074	.00015	-.00674	-.01020

RUN NO. 1176/ 0 RN/L = 3.49 GRADIENT INTERVAL = -5.00/ 5.00

ALPHAR	BETAR	CNFRS	CAFRS	CLMFRS	CYFRS	CYNFRS	CBLRS	CABRS	CYNBRS	CP9	CP10
-.277	-9.069	.01850	.01400	-.01980	-.02110	.03330	-.00360	.02600	.00500	-.32780	-.26500
-.259	-6.879	.00770	.01300	-.01110	-.02160	.03210	-.00150	.02550	.00490	-.31900	-.26140
-.255	-4.808	-.00070	.01340	-.00480	-.02370	.03210	.00020	.02640	.00510	-.33080	-.27150
-.254	-.646	-.01460	.01310	.00520	-.03400	.03730	.00290	.03130	.00610	-.38600	-.32780
-.210	3.442	-.02830	.01480	.01460	-.04310	.04300	.00560	.03410	.00660	-.40830	-.36750
-.214	5.559	-.03720	.01520	.02000	-.04710	.04550	.00730	.03510	.00680	-.41810	-.39180
-.207	7.642	-.04370	.01540	.02430	-.05210	.04920	.00860	.03670	.00710	-.43830	-.39780
	GRADIENT	-.00335	.00017	.00235	-.00235	.00132	.00065	.00093	.00018	-.00940	-.01164

RUN NO. 1177/ 0 RN/L = 3.50 GRADIENT INTERVAL = -5.00/ 5.00

ALPHAR	BETAR	CNFRS	CAFRS	CLMFRS	CYFRS	CYNFRS	CBLRS	CABRS	CYNBRS	CP9	CP10
4.313	-7.914	.01460	.01460	-.01080	-.00970	.02310	-.00290	.02710	.00530	-.34530	-.27170
4.318	-5.696	.01060	.01370	-.00620	-.01220	.02390	-.00210	.02720	.00530	-.34350	-.27640
4.293	-3.735	.00900	.01340	-.00380	-.01650	.02640	-.00180	.02810	.00540	-.35180	-.28770
4.066	.018	.00660	.01320	-.00130	-.02980	.03560	-.00130	.03040	.00590	-.36760	-.32500
4.149	3.852	.00530	.01420	.00190	-.03930	.04250	-.00100	.03360	.00650	-.40280	-.36280
4.087	5.933	.00170	.01450	.00490	-.04500	.04660	-.00030	.03550	.00690	-.42210	-.38720
4.069	7.917	-.00010	.01560	.00660	-.04870	.04980	.00010	.03580	.00690	-.42730	-.38770
	GRADIENT	-.00049	.00011	.00073	-.00300	.00212	.00011	.00073	.00015	-.00673	-.00990

IA156A, AEDC PWT 16T-470, O T S W/SILTS (R8NR92) (10 MAY 80)

REFERENCE DATA

SREF = 2690.0000 SQ.FT. XMRP = 976.0000 IN. XT
LREF = 1290.3000 INCHES YMRP = .0000 IN. YT
BREF = 1290.3000 INCHES ZMRP = 400.0000 IN. ZT
SCALE = .0200

PARAMETRIC DATA

IB-ELV = 8.000 OB-ELV = 5.000
BDFLAP = .000 SPDBRK = .000
RUDDER = .000 SILTS = 1.000
MACH = .600 RN/L = 3.500

RUN NO. 1178/ 0 RN/L = 3.51 GRADIENT INTERVAL = -5.00/ 5.00

ALPHAR	BETAR	CNFRS	CAFRS	CLMFRS	CYFRS	CYNFRS	CBLRS	CABRS	CYNBRS	CP9	CP10
6.468	-7.870	.01670	.01420	-.00980	.00130	.01600	-.00330	.02800	.00540	-.35520	-.28330
6.454	-5.814	.01510	.01410	-.00660	-.00130	.01710	-.00300	.02750	.00530	-.34620	-.27970
6.447	-3.789	.01440	.01370	-.00460	-.00530	.01940	-.00290	.02850	.00550	-.35380	-.29470
6.166	.111	.01580	.01360	-.00350	-.01970	.02970	-.00310	.03100	.00600	-.37640	-.32880
6.112	3.884	.01730	.01450	-.00200	-.02940	.03650	-.00340	.03290	.00640	-.39370	-.35630
6.066	5.766	.01800	.01440	-.00140	-.03340	.03970	-.00350	.03470	.00670	-.41530	-.37420
6.132	8.029	.01930	.01510	-.00070	-.03820	.04370	-.00380	.03540	.00690	-.42020	-.38650
	GRADIENT	.00038	.00010	.00034	-.00314	.00223	-.00007	.00057	.00012	-.00520	-.00803

RUN NO. 1179/ 0 RN/L = 3.50 GRADIENT INTERVAL = -5.00/ 5.00

ALPHAR	BETAR	CNFRS	CAFRS	CLMFRS	CYFRS	CYNFRS	CBLRS	CABRS	CYNBRS	CP9	CP10
8.394	-7.743	.02090	.01290	-.01000	.01640	.00740	-.00410	.02820	.00550	-.35490	-.28890
8.332	-5.710	.01960	.01310	-.00670	.01340	.00870	-.00390	.02790	.00540	-.35070	-.28520
8.321	-3.746	.02050	.01310	-.00510	.00930	.01120	-.00400	.02890	.00560	-.36100	-.29820
8.257	.085	.02550	.01380	-.00470	-.00220	.02000	-.00500	.03160	.00610	-.38130	-.33860
8.317	4.019	.03430	.01410	-.00720	-.00980	.02500	-.00670	.03340	.00650	-.40160	-.35840
8.280	5.993	.03780	.01370	-.00810	-.01550	.02920	-.00740	.03460	.00670	-.41540	-.37190
8.262	7.985	.03940	.01480	-.00820	-.02400	03550	-.00770	.03470	.00670	-.41510	-.37530
	GRADIENT	.00178	.00013	-.00027	-.00246	.00177	-.00035	.00058	.00012	-.00523	-.00774

IA156A, AEDC PWT 16T-470, O T S W/SILTS (R8NR93) (10 MAY 80)

REFERENCE DATA

SREF = 2690.0000 SQ.FT. XMRP = 976.0000 IN. XT
LREF = 1290.3000 INCHES YMRP = .0000 IN. YT
BREF = 1290.3000 INCHES ZMRP = 400.0000 IN. ZT
SCALE = .0200

PARAMETRIC DATA

IB-ELV = 8.000 OB-ELV = 5.000
BDFLAP = .000 SPDBRK = .000
RUDDER = .000 SILTS = 1.000
MACH = .800 RN/L = 3.500

RUN NO. 1180/ 0 RN/L = 3.49 GRADIENT INTERVAL = -5.00/ 5.00

ALPHAR	BETAR	CNFRS	CAFRS	CLMFRS	CYFRS	CYNFRS	CBLRS	CABRS	CYNBRS	CP9	CP10
-8.444	-6.217	-.00770	.01020	-.01800	.03530	.00360	.00160	.02490	.00480	-.31570	-.25250
-8.491	-4.098	-.02660	.01260	-.00660	.04340	-.00240	.00530	.02860	.00550	-.35610	-.29500
-8.439	.241	-.06950	.01250	.02110	.04150	-.00430	.01370	.03330	.00650	-.40920	-.34990
-8.327	4.332	-.09930	.01290	.03560	.02820	.00470	.01950	.03550	.00690	-.41380	-.39330
-8.381	6.280	-.11660	.01310	.04370	.02010	.01040	.02290	.03670	.00710	-.43100	-.40520
	GRADIENT	-.00864	.00003	.00502	-.00179	.00083	.00169	.00082	.00017	-.00690	-.01167

RUN NO. 1181/ 0 RN/L = 3.50 GRADIENT INTERVAL = -5.00/ 5.00

ALPHAR	BETAR	CNFRS	CAFRS	CLMFRS	CYFRS	CYNFRS	CBLRS	CABRS	CYNBRS	CP9	CP10
-6.322	-6.308	.00070	.01250	-.01830	.01410	.01410	-.00010	.02420	.00470	-.30170	-.24940
-6.275	-4.326	-.01500	.01360	-.00830	.01800	.00980	.00300	.02790	.00540	-.34720	-.28770
-6.420	-.004	-.05000	.01380	.01400	.01380	.00920	.00990	.03170	.00620	-.38920	-.33440
-6.271	4.283	-.07750	.01430	.02900	.00080	.01760	.01530	.03450	.00670	-.40650	-.37980
-5.990	6.413	-.09100	.01490	.03640	-.00950	.02430	.01790	.03590	.00700	-.41990	-.39820
	GRADIENT	-.00726	.00008	.00433	-.00200	.00090	.00143	.00077	.00015	-.00689	-.01070

RUN NO. 1182/ 0 RN/L = 3.50 GRADIENT INTERVAL = -5.00/ 5.00

ALPHAR	BETAR	CNFRS	CAFRS	CLMFRS	CYFRS	CYNFRS	CBLRS	CABRS	CYNBRS	CP9	CP10
-4.310	-6.340	.00340	.01440	-.01580	-.00300	.02260	-.00060	.02400	.00470	-.29780	-.24860
-4.354	-4.246	-.01090	.01540	-.00630	-.00040	.01900	.00220	.02710	.00530	-.33640	-.28090
-4.322	.294	-.03680	.01490	.01060	-.01000	.02290	.00730	.03120	.00610	-.37560	-.33480
-3.883	4.402	-.05750	.01620	.02340	-.02200	.03030	.01130	.03380	.00660	-.40290	-.36620
-3.967	6.249	-.07180	.01660	.03130	-.02500	.03240	.01410	.03520	.00680	-.41440	-.38800
	GRADIENT	-.00539	.00009	.00344	-.00249	.00130	.00105	.00078	.00015	-.00771	-.00990

RUN NO. 1183/ 0 RN/L = 3.50 GRADIENT INTERVAL = -5.00/ 5.00

ALPHAR	BETAR	CNFRS	CAFRS	CLMFRS	CYFRS	CYNFRS	CBLRS	CABRS	CYNBRS	CP9	CP10
-.269	-7.234	.01320	.01700	-.01610	-.02180	.03220	-.00250	.02530	.00490	-.31710	-.25950
-.277	-5.072	.00270	.01630	-.00870	-.02330	.03190	-.00050	.02600	.00510	-.32280	-.27040
-.298	-.781	-.01480	.01610	.00340	-.03010	.03500	.00290	.02940	.00570	-.35570	-.31360
-.254	3.323	-.03080	.01730	.01450	-.03940	.04130	.00610	.03290	.00640	-.39220	-.35810
-.242	5.463	-.04110	.01830	.02130	-.04430	.04480	.00810	.03500	.00680	-.41660	-.38140
	GRADIENT	-.00390	.00029	.00270	-.00227	.00154	.00078	.00085	.00017	-.00889	-.01084

IA156A, AEDC PWT 16T-470, 0 T S W/SILTS (R8NR93) (10 MAY 80)

REFERENCE DATA

SREF = 2690.0000 SQ.FT. XMRP = 976.0000 IN. XT
LREF = 1290.3000 INCHES YMRP = .0000 IN. YT
BREF = 1290.3000 INCHES ZMRP = 400.0000 IN. ZT
SCALE = .0200

PARAMETRIC DATA

IB-ELV = 8.000 OB-ELV = 5.000
BDFLAP = .000 SPDBRK = .000
RUDDER = .000 SILTS = 1.000
MACH = .800 RN/L = 3.500

RUN NO. 1184/ 0 RN/L = 3.50 GRADIENT INTERVAL = -5.00/ 5.00

ALPHAR	BETAR	CNFRS	CAFRS	CLMFRS	CYFRS	CYNFRS	CBLRS	CABRS	CYNBRS	CP9	CP10
4.396	-5.706	.01100	.01700	-.00480	-.01120	.02470	-.00220	.02700	.00520	-.33770	-.27720
4.272	-3.628	.00830	.01640	-.00190	-.01720	.02760	-.00160	.02800	.00540	-.34510	-.29250
3.994	.035	.00650	.01620	.00020	-.03160	.03720	-.00120	.02940	.00570	-.35470	-.31540
4.110	3.768	.00410	.01760	.00320	-.03910	.04320	-.00080	.03350	.00650	-.39300	-.36870
4.056	5.813	.00010	.01850	.00580	-.04510	.04820	.00000	.03520	.00680	-.41350	-.38790
	GRADIENT	-.00057	.00016	.00069	-.00296	.00211	.00011	.00074	.00015	-.00649	-.01032

RUN NO. 1185/ 0 RN/L = 3.50 GRADIENT INTERVAL = -5.00/ 5.00

ALPHAR	BETAR	CNFRS	CAFRS	CLMFRS	CYFRS	CYNFRS	CBLRS	CABRS	CYNBRS	CP9	CP10
6.434	-5.771	.01630	.01660	-.00710	.00120	.01720	-.00320	.02800	.00540	-.35260	-.28640
6.404	-3.770	.01480	.01680	-.00410	-.00170	.01920	-.00290	.02850	.00550	-.35280	-.29580
6.088	.053	.01670	.01610	-.00310	-.01810	.03060	-.00330	.03080	.00600	-.36770	-.33290
6.062	3.758	.01830	.01730	-.00180	-.02620	.03680	-.00360	.03340	.00650	-.39400	-.36590
6.207	5.890	.02210	.01740	-.00280	-.03060	.04060	-.00430	.03510	.00680	-.41500	-.38350
	GRADIENT	.00047	.00007	.00031	-.00326	.00234	-.00009	.00065	.00013	-.00546	-.00931

IA156A, AEDC PWT 16T-470, 0 T S W/SILTS (R8NR94) (10 MAY 80)

REFERENCE DATA

SREF = 2690.0000 SQ.FT. XMRP = 976.0000 IN. XT
LREF = 1290.3000 INCHES YMRP = .0000 IN. YT
BREF = 1290.3000 INCHES ZMRP = 400.0000 IN. ZT
SCALE = .0200

PARAMETRIC DATA

IB-ELV = 8.000 OB-ELV = 5.000
BDFLAP = .000 SPDBRK = .000
RUDDER = .000 SILTS = 1.000
MACH = .900 RN/L = 3.500

RUN NO. 1186/ 0 RN/L = 3.50 GRADIENT INTERVAL = -5.00/ 5.00

ALPHAR	BETAR	CNFRS	CAFRS	CLMFRS	CYFRS	CYNFRS	CBLRS	CABRS	CYNBRS	CP9	CP10
-8.449	-6.272	-.00760	.01270	-.01920	.04410	.00070	.00160	.02740	.00530	-.34290	-.28110
-8.547	-4.057	-.02910	.01500	-.00660	.05300	-.00670	.00580	.03120	.00610	-.38000	-.33100
-8.496	-.007	-.06950	.01470	.01950	.04760	-.00430	.01370	.03470	.00670	-.41930	-.37200
-8.406	4.349	-.10470	.01590	.03820	.03200	.00530	.02060	.03600	.00700	-.41220	-.40820
-8.451	6.236	-.12260	.01670	.04630	.02510	.01040	.02410	.03710	.00720	-.42460	-.42090
	GRADIENT	-.00898	.00011	.00532	-.00251	.00132	.00176	.00057	.00011	-.00376	-.00917

IA156A, AEDC PWT 16T-470, 0 T S W/SILTS (R8NR94) (10 MAY 80)

REFERENCE DATA

SREF = 2690.0000 SQ.FT. XMRP = 976.0000 IN. XT
LREF = 1290.3000 INCHES YMRP = .0000 IN. YT
BREF = 1290.3000 INCHES ZMRP = 400.0000 IN. ZT
SCALE = .0200

PARAMETRIC DATA

IB-ELV = 8.000 OB-ELV = 5.000
BDFLAP = .000 SPDBRK = .000
RUDDER = .000 SILTS = 1.000
MACH = .900 RN/L = 3.500

RUN NO. 1187/ 0 RN/L = 3.50 GRADIENT INTERVAL = -5.00/ 5.00

ALPHAR	BETAR	CNFRS	CAFRS	CLMFRS	CYFRS	CYNFRS	CBLRS	CABRS	CYNBRS	CP9	CP10
-6.375	-6.322	.00020	.01530	-.02000	.02090	.01210	.00010	.02670	.00520	-.32920	-.27930
-6.348	-4.352	-.01550	.01690	-.00970	.02540	.00730	.00310	.02970	.00580	-.36480	-.31090
-6.486	-.049	-.05170	.01620	.01370	.02070	.00790	.01020	.03280	.00640	-.39410	-.35370
-6.302	4.260	-.08140	.01790	.03090	.00770	.01540	.01600	.03560	.00690	-.40600	-.40490
-6.289	6.284	-.09940	.01830	.03990	.00230	.01940	.01960	.03730	.00720	-.42500	-.42330
	GRADIENT	-.00765	.00012	.00471	-.00206	.00094	.00150	.00069	.00013	-.00478	-.01092

RUN NO. 1188/ 0 RN/L = 3.50 GRADIENT INTERVAL = -5.00/ 5.00

ALPHAR	BETAR	CNFRS	CAFRS	CLMFRS	CYFRS	CYNFRS	CBLRS	CABRS	CYNBRS	CP9	CP10
-4.115	-6.450	.00450	.01810	-.01760	-.00070	.02330	-.00080	.02640	.00510	-.32120	-.28040
-4.413	-4.277	-.00960	.01870	-.00880	.00490	.01780	.00190	.02940	.00570	-.35700	-.31170
-4.387	.274	-.03750	.01750	.00980	-.00490	.02160	.00740	.03170	.00610	-.37100	-.34980
-3.912	4.372	-.06130	.01980	.02520	-.01590	.02750	.01210	.03490	.00680	-.40270	-.39240
-4.033	6.328	-.07610	.01970	.03280	-.02060	.03080	.01490	.03680	.00710	-.42790	-.41030
	GRADIENT	-.00598	.00012	.00393	-.00240	.00112	.00118	.00063	.00013	-.00524	-.00931

RUN NO. 1189/ 0 RN/L = 3.50 GRADIENT INTERVAL = -5.00/ 5.00

ALPHAR	BETAR	CNFRS	CAFRS	CLMFRS	CYFRS	CYNFRS	CBLRS	CABRS	CYNBRS	CP9	CP10
-.317	-7.321	.01390	.02060	-.01790	-.02020	.03330	-.00270	.02770	.00540	-.33900	-.29200
-.314	-5.147	.00460	.02050	-.01140	-.01980	.03160	-.00090	.02830	.00550	-.34320	-.30080
-.373	-.750	-.01290	.01910	.00100	-.02590	.03420	.00260	.03150	.00610	-.37820	-.33870
-.319	3.314	-.03020	.01980	.01330	-.03730	.04130	.00590	.03410	.00660	-.40470	-.37100
-.305	5.464	-.03980	.02060	.01980	-.04390	.04570	.00780	.03660	.00710	-.43330	-.39900
	GRADIENT	-.00426	.00017	.00303	-.00281	.00175	.00081	.00064	.00012	-.00652	-.00795

RUN NO. 1190/ 0 RN/L = 3.50 GRADIENT INTERVAL = -5.00/ 5.00

ALPHAR	BETAR	CNFRS	CAFRS	CLMFRS	CYFRS	CYNFRS	CBLRS	CABRS	CYNBRS	CP9	CP10
4.358	-5.654	.01180	.02060	-.00570	-.01220	.02620	-.00230	.02910	.00570	-.36030	-.30350
4.250	-3.659	.00940	.02010	-.00370	-.01730	.02810	-.00190	.03050	.00590	-.37390	-.32040
3.931	-.008	.00590	.01970	-.00160	-.03080	.03690	-.00120	.03180	.00620	-.38110	-.34230
4.089	3.712	.00080	.02090	.00450	-.03920	.04300	-.00020	.03550	.00690	-.42400	-.38380
4.034	5.792	-.00340	.02150	.00690	-.04590	.04880	.00070	.03750	.00730	-.44620	-.40730
	GRADIENT	-.00117	.00011	.00111	-.00297	.00202	.00023	.00068	.00014	-.00681	-.00861

IA156A, AEDC PWT 16T-470, 0 T S W/SILTS (R8NR95) (10 MAY 80)

REFERENCE DATA

SREF = 2690.0000 SQ.FT. XMRP = 976.0000 IN. XT
LREF = 1290.3000 INCHES YMRP = .0000 IN. YT
BREF = 1290.3000 INCHES ZMRP = 400.0000 IN. ZT
SCALE = .0200

PARAMETRIC DATA

IB-ELV = 8.000 OB-ELV = 5.000
BDFLAP = .000 SPDBRK = .000
RUDDER = .000 SILTS = 1.000
MACH = .950 RN/L = 3.500

RUN NO. 1191/ 0 RN/L = 3.50 GRADIENT INTERVAL = -5.00/ 5.00

ALPHAR	BETAR	CNFRS	CAFRS	CLMFRS	CYFRS	CYNFRS	CBLRS	CABRS	CYNBRS	CP9	CP10
-8.472	-6.287	-.00800	.01380	-.02090	.03870	.00490	.00170	.02990	.00580	-.37460	-.30770
-8.653	-4.067	-.02880	.01690	-.00910	.04800	-.00240	.00580	.03340	.00650	-.40420	-.35760
-8.617	-.025	-.06960	.01680	.01680	.04830	-.00390	.01370	.03850	.00750	-.45280	-.42270
-8.509	4.346	-.11070	.01760	.03970	.03550	.00470	.02180	.03900	.00760	-.44850	-.44000
-8.530	6.206	-.13030	.01800	.04910	.02840	.01010	.02560	.04060	.00790	-.46740	-.45770
	GRADIENT	-.00973	.00008	.00579	-.00151	.00086	.00190	.00066	.00013	-.00518	-.00971

RUN NO. 1192/ 0 RN/L = 3.49 GRADIENT INTERVAL = -5.00/ 5.00

ALPHAR	BETAR	CNFRS	CAFRS	CLMFRS	CYFRS	CYNFRS	CBLRS	CABRS	CYNBRS	CP9	CP10
-6.464	-6.355	.00010	.01750	-.02080	.01580	.01650	.00010	.02890	.00560	-.35600	-.30150
-6.389	-4.342	-.01490	.01890	-.01110	.02030	.01110	.00300	.03310	.00640	-.40030	-.35280
-6.570	-.052	-.05170	.01970	.01170	.02130	.00870	.01020	.03710	.00720	-.43620	-.40790
-6.379	4.258	-.08610	.01940	.03250	.00750	.01630	.01690	.03920	.00760	-.44780	-.44330
-6.358	6.280	-.10550	.02010	.04270	.00120	.02080	.02070	.04050	.00790	-.46510	-.45760
	GRADIENT	-.00828	.00006	.00507	-.00149	.00061	.00162	.00071	.00014	-.00552	-.01052

RUN NO. 1193/ 0 RN/L = 3.49 GRADIENT INTERVAL = -5.00/ 5.00

ALPHAR	BETAR	CNFRS	CAFRS	CLMFRS	CYFRS	CYNFRS	CBLRS	CABRS	CYNBRS	CP9	CP10
-4.152	-6.443	.00420	.02030	-.01750	-.00540	.02690	-.00070	.02870	.00560	-.34990	-.30450
-4.455	-4.279	-.00910	.02120	-.00980	-.00030	.02130	.00180	.03270	.00630	-.39190	-.35220
-4.431	.271	-.03970	.01970	.01130	-.01030	.02490	.00780	.03690	.00720	-.43250	-.40670
-3.935	4.392	-.06370	.02240	.02740	-.02380	.03230	.01250	.03860	.00750	-.44550	-.43330
-4.048	6.235	-.07970	.02230	.03550	-.02710	.03470	.01560	.04050	.00790	-.46940	-.45240
	GRADIENT	-.00630	.00013	.00430	-.00270	.00126	.00124	.00068	.00014	-.00623	-.00940

RUN NO. 1194/ 0 RN/L = 3.48 GRADIENT INTERVAL = -5.00/ 5.00

ALPHAR	BETAR	CNFRS	CAFRS	CLMFRS	CYFRS	CYNFRS	CBLRS	CABRS	CYNBRS	CP9	CP10
-.315	-7.349	.01120	.02200	-.01440	-.01850	.03460	-.00220	.02860	.00560	-.35230	-.30000
-.301	-5.151	.00180	.02220	-.00730	-.01920	.03290	-.00030	.03010	.00590	-.36720	-.31930
-.340	-.825	-.01410	.02260	.00410	-.03130	.03920	.00270	.03490	.00680	-.41880	-.37650
-.286	3.284	-.03070	.02360	.01570	-.04310	.04610	.00600	.03880	.00750	-.46210	-.42130
-.288	5.471	-.04080	.02360	.02160	-.04920	.05010	.00800	.04000	.00780	-.47700	-.43380
	GRADIENT	-.00404	.00024	.00282	-.00287	.00168	.00080	.00095	.00017	-.01054	-.01090

IA156A, AEDC PWT 16T-470, O T S W/SILTS (R8NR95) (10 MAY 80)

REFERENCE DATA

SREF = 2690.0000 SQ.FT. XMRP = 976.0000 IN. XT
LREF = 1290.3000 INCHES YMRP = .0000 IN. YT
BREF = 1290.3000 INCHES ZMRP = 400.0000 IN. ZT
SCALE = .0200

PARAMETRIC DATA

IB-ELV = 8.000 OB-ELV = 5.000
BDFLAP = .000 SPDBRK = .000
RUDDER = .000 SILTS = 1.000
MACH = .950 RN/L = 3.500

RUN NO. 1195/ 0 RN/L = 3.49 GRADIENT INTERVAL = -5.00/ 5.00

ALPHAR	BETAR	CNFRS	CAFRS	CLMFRS	CYFRS	CYNFRS	CBLRS	CABRS	CYNBRS	CP9	CP10
4.408	-5.710	.01070	.02180	-.00490	-.01140	.02710	-.00210	.03180	.00620	-.39290	-.33140
4.229	-3.620	.00810	.02200	-.00330	-.01730	.02950	-.00160	.03370	.00650	-.40990	-.35830
3.906	.014	.00420	.02250	-.00110	-.02990	.03850	-.00090	.03540	.00690	-.42710	-.38020
4.109	3.735	-.00190	.02400	.00660	-.03730	.04400	.00040	.03890	.00760	-.46730	-.41940
4.073	5.775	-.00560	.02470	.00990	-.04600	.05110	.00110	.04070	.00790	-.48760	-.43840
	GRADIENT	-.00136	.00027	.00135	-.00272	.00197	.00027	.00071	.00015	-.00782	-.00832

IA156A, AEDC PWT 16T-470, O T S W/SILTS (R8NR96) (10 MAY 80)

REFERENCE DATA

SREF = 2690.0000 SQ.FT. XMRP = 976.0000 IN. XT
LREF = 1290.3000 INCHES YMRP = .0000 IN. YT
BREF = 1290.3000 INCHES ZMRP = 400.0000 IN. ZT
SCALE = .0200

PARAMETRIC DATA

IB-ELV = 8.000 OB-ELV = 5.000
BDFLAP = .000 SPDBRK = .000
RUDDER = .000 SILTS = 1.000
MACH = 1.050 RN/L = 3.500

RUN NO. 1196/ 0 RN/L = 3.50 GRADIENT INTERVAL = -5.00/ 5.00

ALPHAR	BETAR	CNFRS	CAFRS	CLMFRS	CYFRS	CYNFRS	CBLRS	CABRS	CYNBRS	CP9	CP10
-8.585	-6.393	-.00470	.02070	-.02810	.03440	.01140	.00110	.04110	.00800	-.49960	-.43650
-8.747	-4.146	-.02880	.02280	-.01340	.04500	.00400	.00580	.04610	.00890	-.54940	-.50020
-8.761	-.057	-.07900	.02500	.01860	.04530	.00360	.01560	.05210	.01010	-.61460	-.57150
-8.570	4.209	-.12310	.02520	.04700	.02580	.01640	.02420	.05340	.01040	-.62570	-.58960
-8.621	6.169	-.14440	.02690	.05720	.02030	.02020	.02840	.05510	.01070	-.65270	-.60250
	GRADIENT	-.01128	.00029	.00723	-.00231	.00150	.00220	.00087	.00018	-.00909	-.01065

RUN NO. 1197/ 0 RN/L = 3.50 GRADIENT INTERVAL = -5.00/ 5.00

ALPHAR	BETAR	CNFRS	CAFRS	CLMFRS	CYFRS	CYNFRS	CBLRS	CABRS	CYNBRS	CP9	CP10
-6.506	-6.378	.00360	.02370	-.02680	.00880	.02370	-.00060	.04100	.00800	-.49310	-.43980
-6.458	-4.385	-.01380	.02570	-.01500	.01420	.01880	.00280	.04500	.00870	-.54240	-.48310
-6.643	-.028	-.05860	.02600	.01510	.01160	.01990	.01150	.05040	.00980	-.59590	-.55090
-6.445	4.251	-.09630	.02850	.03910	-.00210	.02690	.01890	.05330	.01030	-.62790	-.58480
-6.196	6.352	-.11280	.02950	.04910	-.01610	.03510	.02210	.05410	.01050	-.63730	-.59480
	GRADIENT	-.00956	.00032	.00627	-.00188	.00094	.00186	.00096	.00019	-.00991	-.01179

IA156A, AEDC PWT 16T-470, O T S W/SILTS (R8NR96) (10 MAY 80)

REFERENCE DATA

SREF = 2690.0000 SQ.FT. XMRP = 976.0000 IN. XT
LREF = 1290.3000 INCHES YMRP = .0000 IN. YT
BREF = 1290.3000 INCHES ZMRP = 400.0000 IN. ZT
SCALE = .0200

PARAMETRIC DATA

IB-ELV = 8.000 OB-ELV = 5.000
BDFLAP = .000 SPDBRK = .000
RUDDER = .000 SILTS = 1.000
MACH = 1.050 RN/L = 3.500

RUN NO. 1198/ 0 RN/L = 3.50 GRADIENT INTERVAL = -5.00/ 5.00

ALPHAR	BETAR	CNFRS	CAFRS	CLMFRS	CYFRS	CYNFRS	CBLRS	CABRS	CYNBRS	CP9	CP10
-4.252	-6.481	.00810	.02620	-.02290	-.01390	.03580	-.00150	.04110	.00800	-.49050	-.44480
-4.511	-4.330	-.00750	.02720	-.01310	-.00790	.02980	.00150	.04430	.00860	-.53400	-.47460
-4.479	.221	-.04330	.02710	.01310	-.02090	.03640	.00850	.04980	.00970	-.58940	-.54380
-3.952	4.350	-.07180	.03120	.03330	-.03430	.04420	.01400	.05160	.01000	-.61020	-.56370
-4.062	6.205	-.08800	.03030	.04220	-.03540	.04500	.01720	.05340	.01040	-.63220	-.58300
	GRADIENT	-.00742	.00045	.00535	-.00304	.00166	.00144	.00085	.00016	-.00884	-.01035

RUN NO. 1199/ 0 RN/L = 3.50 GRADIENT INTERVAL = -5.00/ 5.00

ALPHAR	BETAR	CNFRS	CAFRS	CLMFRS	CYFRS	CYNFRS	CBLRS	CABRS	CYNBRS	CP9	CP10
-.329	-7.430	.01380	.02750	-.01670	-.02760	.04340	-.00270	.03990	.00770	-.48040	-.42850
-.325	-5.211	.00390	.02740	-.00890	-.03000	.04270	-.00080	.04230	.00820	-.50600	-.45740
-.401	-.839	-.01510	.02950	.00520	-.04420	.05120	.00290	.04850	.00940	-.57500	-.52950
-.313	3.258	-.03610	.03230	.02110	-.05530	.05870	.00700	.05220	.01010	-.61790	-.57030
-.303	5.443	-.04790	.03280	.02860	-.06000	.06150	.00930	.05330	.01030	-.63120	-.58220
	GRADIENT	-.00513	.00068	.00388	-.00271	.00183	.00100	.00090	.00017	-.01047	-.00996

RUN NO. 1200/ 0 RN/L = 3.50 GRADIENT INTERVAL = -5.00/ 5.00

ALPHAR	BETAR	CNFRS	CAFRS	CLMFRS	CYFRS	CYNFRS	CBLRS	CABRS	CYNBRS	CP9	CP10
4.399	-5.722	.01380	.02900	-.00900	-.01510	.03350	-.00280	.04390	.00850	-.52470	-.47450
4.245	-3.656	.01070	.03000	-.00630	-.02280	.03750	-.00220	.04580	.00890	-.54260	-.50000
3.968	-.014	.00410	.03090	.00100	-.03700	.04700	-.00090	.04760	.00920	-.56490	-.51930
4.134	3.700	-.00300	.03170	.00920	-.04550	.05320	.00050	.05060	.00980	-.60360	-.54880
4.119	5.739	-.00720	.03110	.01280	-.05410	.05990	.00130	.05090	.00990	-.60780	-.55130
	GRADIENT	-.00186	.00023	.00211	-.00308	.00213	.00037	.00065	.00012	-.00830	-.00664

IA156A, AEDC PWT 16T-470, O T S W/SILTS (R8NR97) (10 MAY 80)

REFERENCE DATA

SREF = 2690.0000 SQ.FT. XMRP = 976.0000 IN. XT
LREF = 1290.3000 INCHES YMRP = .0000 IN. YT
BREF = 1290.3000 INCHES ZMRP = 400.0000 IN. ZT
SCALE = .0200

PARAMETRIC DATA

IB-ELV = 8.000 OB-ELV = 5.000
BDFLAP = .000 SPDBRK = .000
RUDDER = .000 SILTS = 1.000
MACH = 1.100 RN/L = 3.500

RUN NO. 1201/ 0 RN/L = 3.50 GRADIENT INTERVAL = -5.00/ 5.00

ALPHAR	BETAR	CNFRS	CAFRS	CLMFRS	CYFRS	CYNFRS	CBLRS	CABRS	CYNBRS	CP9	CP10
-8.633	-6.397	-.00750	.02260	-.02670	.03840	.00910	.00160	.03800	.00740	-.46080	-.40440
-8.762	-4.160	-.03090	.02620	-.01240	.04760	.00330	.00620	.04130	.00800	-.49260	-.44860
-8.768	-.056	-.07800	.02800	.01820	.04550	.00410	.01540	.04750	.00920	-.56240	-.51920
-8.611	4.214	-.12330	.03010	.04630	.02690	.01570	.02420	.04990	.00970	-.58790	-.54910
-8.617	6.181	-.14200	.03120	.05610	.01810	.02090	.02790	.05080	.00990	-.60400	-.55350
	GRADIENT	-.01103	.00047	.00701	-.00248	.00149	.00215	.00102	.00020	-.01134	-.01197

RUN NO. 1202/ 0 RN/L = 3.50 GRADIENT INTERVAL = -5.00/ 5.00

ALPHAR	BETAR	CNFRS	CAFRS	CLMFRS	CYFRS	CYNFRS	CBLRS	CABRS	CYNBRS	CP9	CP10
-6.527	-6.379	.00110	.02560	-.02540	.01170	.02140	-.00010	.03720	.00720	-.44860	-.39810
-6.503	-4.377	-.01530	.02780	-.01480	.01730	.01720	.00310	.04090	.00790	-.49500	-.43750
-6.710	-.035	-.05910	.02840	.01450	.01440	.01860	.01160	.04620	.00900	-.54660	-.50490
-6.455	4.271	-.09470	.03210	.03830	-.00580	.02840	.01860	.04820	.00930	-.56980	-.52680
-6.184	6.351	-.11310	.03330	.04910	-.01320	.03330	.02220	.04980	.00970	-.58810	-.54560
	GRADIENT	-.00918	.00050	.00614	-.00267	.00129	.00179	.00084	.00016	-.00865	-.01033

RUN NO. 1203/ 0 RN/L = 3.50 GRADIENT INTERVAL = -5.00/ 5.00

ALPHAR	BETAR	CNFRS	CAFRS	CLMFRS	CYFRS	CYNFRS	CBLRS	CABRS	CYNBRS	CP9	CP10
-4.261	-6.495	.00720	.02750	-.02300	-.01200	.03420	-.00140	.03760	.00730	-.44960	-.40760
-4.542	-4.337	-.00820	.02850	-.01340	-.00580	.02830	.00160	.04010	.00780	-.48780	-.42630
-4.491	.239	-.04450	.03030	.01350	-.01920	.03490	.00870	.04440	.00860	-.52760	-.48390
-3.959	4.362	-.07240	.03340	.03340	-.03080	.04160	.01410	.04690	.00910	-.55700	-.51040
-4.067	6.228	-.08920	.03390	.04300	-.03240	.04300	.01740	.04830	.00940	-.57350	-.52560
	GRADIENT	-.00739	.00056	.00539	-.00287	.00153	.00144	.00078	.00015	-.00797	-.00972

RUN NO. 1204/ 0 RN/L = 3.50 GRADIENT INTERVAL = -5.00/ 5.00

ALPHAR	BETAR	CNFRS	CAFRS	CLMFRS	CYFRS	CYNFRS	CBLRS	CABRS	CYNBRS	CP9	CP10
-.336	-7.430	.01270	.02880	-.01630	-.02850	.04370	-.00250	.03650	.00710	-.44200	-.39040
-.315	-5.231	.00270	.02900	-.00810	-.03030	.04260	-.00060	.03730	.00720	-.44980	-.40050
-.387	-.834	-.01660	.03150	.00600	-.04250	.04950	.00320	.04180	.00810	-.50050	-.45250
-.291	3.281	-.03810	.03450	.02230	-.05230	.05590	.00740	.04550	.00880	-.54120	-.49420
-.291	5.490	-.05030	.03530	.03010	-.05650	.05820	.00980	.04660	.00900	-.55390	-.50670
	GRADIENT	-.00522	.00073	.00396	-.00238	.00156	.00102	.00090	.00017	-.00989	-.01013

IA156A, AEDC PWT 16T-470, O T S W/SILTS (R8NR97) (10 MAY 80)

REFERENCE DATA

SREF = 2690.0000 SQ.FT. XMRP = 976.0000 IN. XT
LREF = 1290.3000 INCHES YMRP = .0000 IN. YT
BREF = 1290.3000 INCHES ZMRP = 400.0000 IN. ZT
SCALE = .0200

PARAMETRIC DATA

IB-ELV = 8.000 OB-ELV = 5.000
BDFLAP = .000 SPDBRK = .000
RUDDER = .000 SILTS = 1.000
MACH = 1.100 RN/L = 3.500

RUN NO. 1205/ 0 RN/L = 3.50 GRADIENT INTERVAL = -5.00/ 5.00

ALPHAR	BETAR	CNFRS	CAFRS	CLMFRS	CYFRS	CYNFRS	CBLRS	CABRS	CYNBRS	CP9	CP10
4.445	-5.739	.01340	.03060	-.00850	-.01270	.03210	-.00270	.03700	.00720	-.44620	-.39770
4.275	-3.646	.01040	.03170	-.00540	-.02000	.03560	-.00210	.03980	.00770	-.47240	-.43310
4.001	-.003	.00290	.03190	.00250	-.03560	.04580	-.00070	.04230	.00820	-.50520	-.45800
4.163	3.705	-.00520	.03370	.01150	-.04410	.05180	.00090	.04440	.00860	-.53290	-.47760
4.152	5.752	-.00940	.03450	.01490	-.05280	.05890	.00170	.04440	.00860	-.53420	-.47800
	GRADIENT	-.00212	.00027	.00230	-.00328	.00220	.00041	.00063	.00012	-.00823	-.00605

IA156A, AEDC PWT 16T-470, O T S W/SILTS (R8NR98) (28 MAY 80)

REFERENCE DATA

SREF = 2690.0000 SQ.FT. XMRP = 976.0000 IN. XT
LREF = 1290.3000 INCHES YMRP = .0000 IN. YT
BREF = 1290.3000 INCHES ZMRP = 400.0000 IN. ZT
SCALE = .0200

PARAMETRIC DATA

IB-ELV = 8.000 OB-ELV = 5.000
BDFLAP = .000 SPDBRK = .000
RUDDER = .000 SILTS = 1.000
MACH = 1.150 RN/L = 3.500

RUN NO. 1206/ 0 RN/L = 3.50 GRADIENT INTERVAL = -5.00/ 5.00

ALPHAR	BETAR	CNFRS	CAFRS	CLMFRS	CYFRS	CYNFRS	CBLRS	CABRS	CYNBRS	CP9	CP10
-8.579	-6.368	-.00730	.02460	-.02820	.03700	.01020	.00150	.03570	.00690	-.43420	-.37990
-8.785	-4.127	-.03180	.02660	-.01360	.04980	.00160	.00630	.03900	.00760	-.46700	-.42130
-8.779	-.058	-.07930	.02960	.01760	.04760	.00170	.01560	.04440	.00860	-.52540	-.48530
-8.577	4.317	-.12640	.03160	.04850	.02760	.01280	.02480	.04670	.00910	-.55200	-.51190
-8.641	6.231	-.14820	.03270	.05950	.02050	.01790	.02910	.04720	.00920	-.56040	-.51440
	GRADIENT	-.01120	.00059	.00735	-.00265	.00134	.00219	.00091	.00018	-.01002	-.01067

RUN NO. 1207/ 0 RN/L = 3.50 GRADIENT INTERVAL = -5.00/ 5.00

ALPHAR	BETAR	CNFRS	CAFRS	CLMFRS	CYFRS	CYNFRS	CBLRS	CABRS	CYNBRS	CP9	CP10
-6.529	-6.402	.00160	.02650	-.02680	.01180	.02200	-.00020	.03490	.00680	-.42080	-.37360
-6.462	-4.399	-.01550	.02890	-.01520	.01770	.01660	.00310	.03710	.00720	-.45040	-.39520
-6.681	-.086	-.06020	.03030	.01470	.01620	.01590	.01180	.04310	.00840	-.51190	-.47020
-6.414	4.271	-.09860	.03350	.04080	-.00120	.02440	.01930	.04510	.00880	-.53320	-.49430
-6.416	6.297	-.11890	.03460	.05200	-.00550	.02800	.02330	.04640	.00900	-.54840	-.50900
	GRADIENT	-.00958	.00053	.00646	-.00218	.00090	.00187	.00092	.00018	-.00954	-.01142

IA156A, AEDC PWT 16T-470, 0 T S W/SILTS (R8NR98) (28 MAY 80)

REFERENCE DATA

SREF = 2690.0000 SQ.FT. XMRP = 976.0000 IN. XT
LREF = 1290.3000 INCHES YMRP = .0000 IN. YT
BREF = 1290.3000 INCHES ZMRP = 400.0000 IN. ZT
SCALE = .0200

PARAMETRIC DATA

IB-ELV = 8.000 OB-ELV = 5.000
BDFLAP = .000 SPDBRK = .000
RUDDER = .000 SILTS = 1.000
MACH = 1.150 RN/L = 3.500

RUN NO. 1208/ 0 RN/L = 3.50 GRADIENT INTERVAL = -5.00/ 5.00

ALPHAR	BETAR	CNFRS	CAFRS	CLMFRS	CYFRS	CYNFRS	CBLRS	CABRS	CYNBRS	CP9	CP10
-4.226	-6.504	.00600	.02810	-.02210	-.01230	.03400	-.00120	.03460	.00670	-.41320	-.37370
-4.515	-4.322	-.00920	.02930	-.01290	-.00540	.02730	.00180	.03690	.00720	-.44830	-.39280
-4.488	.250	-.04620	.03100	.01470	-.01780	.03320	.00900	.04250	.00820	-.50530	-.46200
-3.930	4.390	-.07630	.03540	.03640	-.02790	.03930	.01490	.04450	.00860	-.52880	-.48400
-4.047	6.243	-.09130	.03500	.04490	-.02950	.04020	.01780	.04580	.00890	-.54530	-.49840
	GRADIENT	-.00771	.00069	.00567	-.00259	.00138	.00151	.00088	.00016	-.00930	-.01055

RUN NO. 1210/ 0 RN/L = 3.51 GRADIENT INTERVAL = -5.00/ 5.00

ALPHAR	BETAR	CNFRS	CAFRS	CLMFRS	CYFRS	CYNFRS	CBLRS	CABRS	CYNBRS	CP9	CP10
-.297	-7.393	.01110	.02980	-.01460	-.02630	.04170	-.00230	.03320	.00640	-.40160	-.35510
-.287	-5.127	.00050	.02990	-.00600	-.02910	.04140	-.00020	.03550	.00690	-.42830	-.37960
-.337	-.807	-.01810	.03350	.00770	-.04040	.04790	.00340	.04000	.00780	-.48050	-.43040
-.251	3.364	-.03910	.03610	.02370	-.05060	.05410	.00760	.04420	.00860	-.52800	-.47830
-.243	5.498	-.05090	.03690	.03160	-.05410	.05580	.00990	.04450	.00860	-.52980	-.48360
	GRADIENT	-.00503	.00062	.00384	-.00245	.00151	.00101	.00101	.00019	-.01139	-.01148

RUN NO. 1211/ 0 RN/L = 3.50 GRADIENT INTERVAL = -5.00/ 5.00

ALPHAR	BETAR	CNFRS	CAFRS	CLMFRS	CYFRS	CYNFRS	CBLRS	CABRS	CYNBRS	CP9	CP10
4.460	-5.727	.01260	.03140	-.00810	-.01150	.03150	-.00260	.03600	.00700	-.43270	-.38640
4.339	-3.620	.00930	.03290	-.00420	-.01800	.03440	-.00200	.03790	.00740	-.45160	-.41260
4.061	.055	.00100	.03410	.00480	-.03360	.04430	-.00040	.04050	.00790	-.48500	-.43760
4.191	3.725	-.00620	.03530	.01280	-.04330	.05150	.00110	.04280	.00830	-.51120	-.46350
4.175	5.753	-.01010	.03620	.01600	-.05080	.05740	.00180	.04280	.00830	-.51580	-.45980
	GRADIENT	-.00211	.00033	.00231	-.00344	.00233	.00042	.00067	.00012	-.00811	-.00693

IA156A, AEDC PWT 16T-470, O T S W/SILTS (R8NRA0) (10 MAY 80)

REFERENCE DATA

SREF = 2690.0000 SQ.FT. XMRP = 976.0000 IN. XT
LREF = 1290.3000 INCHES YMRP = .0000 IN. YT
BREF = 1290.3000 INCHES ZMRP = 400.0000 IN. ZT
SCALE = .0200

PARAMETRIC DATA

IB-ELV = 8.000 OB-ELV = 5.000
BDFLAP = .000 SPDBRK = .000
RUDDER = .000 SILTS = 1.000
MACH = 1.250 RN/L = 3.500

RUN NO. 1224/ 0 RN/L = 3.50 GRADIENT INTERVAL = -5.00/ 5.00

ALPHAR	BETAR	CNFRS	CAFRS	CLMFRS	CYFRS	CYNFRS	CBLRS	CABRS	CYNBRS	CP9	CP10
-8.695	-6.342	-.01560	.02480	-.02400	.04200	.00530	.00320	.03330	.00650	-.39890	-.35860
-8.702	-4.240	-.03600	.02690	-.01020	.04830	.00010	.00720	.03530	.00680	-.42030	-.38300
-8.724	.069	-.08340	.03010	.02180	.04470	-.00020	.01640	.04080	.00790	-.48340	-.44650
-8.530	4.260	-.12620	.03340	.04990	.02810	.00780	.02470	.04200	.00820	-.50150	-.45590
-8.622	6.271	-.14770	.03480	.06020	.02220	.01220	.02900	.04270	.00830	-.51050	-.46100
	GRADIENT	-.01061	.00076	.00707	-.00237	.00090	.00206	.00079	.00017	-.00958	-.00861

RUN NO. 1225/ 0 RN/L = 3.50 GRADIENT INTERVAL = -5.00/ 5.00

ALPHAR	BETAR	CNFRS	CAFRS	CLMFRS	CYFRS	CYNFRS	CBLRS	CABRS	CYNBRS	CP9	CP10
-6.524	-6.418	-.00470	.02660	-.02300	.01440	.01800	.00100	.03200	.00620	-.38430	-.34410
-6.451	-4.422	-.02180	.02830	-.01070	.01870	.01360	.00430	.03510	.00680	-.42140	-.37880
-6.600	-.033	-.06350	.03110	.01880	.01340	.01440	.01250	.03930	.00760	-.46880	-.42640
-6.402	4.302	-.10010	.03480	.04190	.00580	.01780	.01960	.04120	.00800	-.49160	-.44590
-6.179	6.446	-.11730	.03660	.05180	-.00200	.02310	.02300	.04200	.00820	-.50520	-.45220
	GRADIENT	-.00898	.00074	.00603	-.00148	.00048	.00175	.00070	.00014	-.00805	-.00770

RUN NO. 1226/ 0 RN/L = 3.50 GRADIENT INTERVAL = -5.00/ 5.00

ALPHAR	BETAR	CNFRS	CAFRS	CLMFRS	CYFRS	CYNFRS	CBLRS	CABRS	CYNBRS	CP9	CP10
-4.210	-6.507	.00050	.02820	-.01810	-.00960	.03020	.00000	.03160	.00610	-.37940	-.33940
-4.455	-4.328	-.01580	.02960	-.00700	-.00530	.02560	.00310	.03440	.00670	-.41470	-.36830
-4.427	.267	-.04940	.03150	.01720	-.01120	.02760	.00970	.03910	.00760	-.46870	-.42280
-3.902	4.387	-.07570	.03610	.03590	-.01950	.03270	.01480	.04030	.00780	-.48400	-.43490
-4.039	6.278	-.09170	.03720	.04490	-.02130	.03370	.01790	.04130	.00800	-.49650	-.44360
	GRADIENT	-.00688	.00074	.00493	-.00162	.00081	.00134	.00068	.00013	-.00803	-.00772

RUN NO. 1227/ 0 RN/L = 3.50 GRADIENT INTERVAL = -5.00/ 5.00

ALPHAR	BETAR	CNFRS	CAFRS	CLMFRS	CYFRS	CYNFRS	CBLRS	CABRS	CYNBRS	CP9	CP10
-.252	-7.446	.00630	.02960	-.01110	-.02380	.03970	-.00130	.03070	.00600	-.37660	-.32270
-.228	-5.224	-.00370	.03010	-.00280	-.02710	.03950	.00070	.03240	.00630	-.39590	-.34320
-.243	-.842	-.02240	.03370	.01200	-.03810	.04490	.00440	.03710	.00720	-.45120	-.39360
-.162	3.312	-.04120	.03740	.02680	-.04860	.05110	.00810	.04000	.00780	-.48280	-.42890
-.183	5.534	-.05200	.03800	.03380	-.05240	.05310	.01020	.04110	.00800	-.49700	-.43810
	GRADIENT	-.00453	.00089	.00356	-.00253	.00149	.00089	.00070	.00014	-.00761	-.00850

IA156A, AEDC PWT 16T-470, O T S W/SILTS (R8NRA0) (10 MAY 80)

REFERENCE DATA

SREF = 2690.0000 SQ.FT. XMRP = 976.0000 IN. XT
LREF = 1290.3000 INCHES YMRP = .0000 IN. YT
BREF = 1290.3000 INCHES ZMRP = 400.0000 IN. ZT
SCALE = .0200

PARAMETRIC DATA

IB-ELV = 8.000 OB-ELV = 5.000
BDFLAP = .000 SPDBRK = .000
RUDDER = .000 SILTS = 1.000
MACH = 1.250 RN/L = 3.500

RUN NO. 1228/ 0 RN/L = 3.50 GRADIENT INTERVAL = -5.00/ 5.00

ALPHAR	BETAR	CNFRS	CAFRS	CLMFRS	CYFRS	CYNFRS	CBLRS	CABRS	CYNBRS	CP9	CP10
4.346	-5.660	.01090	.03160	-.00660	-.00970	.03020	-.00220	.03310	.00640	-.40190	-.35230
4.377	-3.859	.00860	.03310	-.00390	-.01330	.03160	-.00170	.03480	.00680	-.41960	-.37230
4.285	.070	-.00090	.03480	.00740	-.02870	.04140	.00010	.03720	.00720	-.45100	-.39710
4.251	3.581	-.00760	.03680	.01510	-.04120	.05040	.00140	.03910	.00760	-.47350	-.41790
4.275	5.756	-.01150	.03650	.01870	-.04910	.05640	.00220	.04070	.00790	-.49300	-.43390
	GRADIENT	-.00218	.00050	.00256	-.00375	.00253	.00042	.00058	.00011	-.00726	-.00613

IA156A, AEDC PWT 16T-470, O T S W/SILTS (R8NRA1) (10 MAY 80)

REFERENCE DATA

SREF = 2690.0000 SQ.FT. XMRP = 976.0000 IN. XT
LREF = 1290.3000 INCHES YMRP = .0000 IN. YT
BREF = 1290.3000 INCHES ZMRP = 400.0000 IN. ZT
SCALE = .0200

PARAMETRIC DATA

IB-ELV = 8.000 OB-ELV = 5.000
BDFLAP = .000 SPDBRK = .000
RUDDER = .000 SILTS = 1.000
MACH = 1.400 RN/L = 3.500

RUN NO. 1229/ 0 RN/L = 3.50 GRADIENT INTERVAL = -5.00/ 5.00

ALPHAR	BETAR	CNFRS	CAFRS	CLMFRS	CYFRS	CYNFRS	CBLRS	CABRS	CYNBRS	CP9	CP10
-8.662	-6.369	-.02370	.02510	-.01870	.04340	.00310	.00470	.02960	.00580	-.35340	-.32170
-8.731	-4.179	-.04340	.02740	-.00600	.04840	-.00170	.00860	.03200	.00620	-.38240	-.34650
-8.701	.250	-.09190	.03160	.02710	.04750	-.00580	.01810	.03660	.00710	-.43690	-.39560
-8.512	4.416	-.13750	.03580	.05640	.03640	-.00110	.02690	.03870	.00750	-.46860	-.41240
-8.561	6.380	-.15560	.03690	.06510	.02540	.00640	.03050	.03820	.00740	-.46740	-.40240
	GRADIENT	-.01095	.00098	.00726	-.00138	.00006	.00213	.00078	.00015	-.01005	-.00770

RUN NO. 1230/ 0 RN/L = 3.50 GRADIENT INTERVAL = -5.00/ 5.00

ALPHAR	BETAR	CNFRS	CAFRS	CLMFRS	CYFRS	CYNFRS	CBLRS	CABRS	CYNBRS	CP9	CP10
-6.543	-6.446	-.01130	.02690	-.01850	.01860	.01510	.00230	.02870	.00560	-.34530	-.30790
-6.504	-4.438	-.02670	.02920	-.00800	.02290	.01100	.00530	.03160	.00610	-.37800	-.34120
-6.621	-.004	-.06780	.03190	.02010	.02380	.00640	.01330	.03490	.00680	-.42090	-.37490
-6.397	4.387	-.10350	.03600	.04280	.01430	.01070	.02030	.03650	.00710	-.44680	-.38490
-6.357	6.416	-.12080	.03780	.05240	.00780	.01430	.02370	.03760	.00730	-.46210	-.39460
	GRADIENT	-.00870	.00077	.00576	-.00097	-.00004	.00170	.00056	.00011	-.00780	-.00496

IA156A, AEDC PWT 16T-470, 0 T S W/SILTS (R8NRA1) (10 MAY 80)

REFERENCE DATA

SREF = 2690.0000 SQ.FT. XMRP = 976.0000 IN. XT
LREF = 1290.3000 INCHES YMRP = .0000 IN. YT
BREF = 1290.3000 INCHES ZMRP = 400.0000 IN. ZT
SCALE = .0200

PARAMETRIC DATA

IB-ELV = 8.000 OB-ELV = 5.000
BDFLAP = .000 SPDBRK = .000
RUDDER = .000 SILTS = 1.000
MACH = 1.400 RN/L = 3.500

RUN NO. 1231/ 0 RN/L = 3.50 GRADIENT INTERVAL = -5.00/ 5.00

ALPHAR	BETAR	CNFRS	CAFRS	CLMFRS	CYFRS	CYNFRS	CBLRS	CABRS	CYNBRS	CP9	CP10
-4.217	-6.548	-.00340	.02890	-.01510	-.00440	.02750	.00070	.02830	.00550	-.34370	-.30090
-4.508	-4.364	-.01890	.03040	-.00550	.00220	.02160	.00370	.03080	.00600	-.37220	-.33000
-4.414	.304	-.05220	.03310	.01850	-.00170	.02060	.01030	.03430	.00670	-.41840	-.36240
-3.863	4.471	-.07500	.03610	.03560	-.01470	.02810	.01470	.03600	.00700	-.44050	-.37910
-4.001	6.348	-.08990	.03790	.04380	-.01800	.03010	.01760	.03710	.00720	-.45500	-.38980
	GRADIENT	-.00637	.00064	.00466	-.00189	.00072	.00125	.00059	.00011	-.00777	-.00558

RUN NO. 1232/ 0 RN/L = 3.50 GRADIENT INTERVAL = -5.00/ 5.00

ALPHAR	BETAR	CNFRS	CAFRS	CLMFRS	CYFRS	CYNFRS	CBLRS	CABRS	CYNBRS	CP9	CP10
-.292	-7.500	.00330	.03010	-.00800	-.02010	.03760	-.00070	.02760	.00540	-.34210	-.28730
-.265	-5.284	-.00540	.03030	-.00070	-.02190	.03620	.00100	.02910	.00560	-.35550	-.30650
-.263	-.852	-.03360	.03430	.01380	-.03290	.04060	.00460	.03270	.00640	-.40280	-.34290
-.199	3.335	-.05180	.03640	.02680	-.04260	.04580	.00800	.03580	.00690	-.43800	-.37680
-.231	5.566	-.05080	.03840	.03320	-.04730	.04880	.01000	.03690	.00720	-.45270	-.38750
	GRADIENT	-.00413	.00058	.00310	-.00232	.00124	.00081	.00074	.00012	-.00841	-.00810

RUN NO. 1233/ 0 RN/L = 3.50 GRADIENT INTERVAL = -5.00/ 5.00

ALPHAR	BETAR	CNFRS	CAFRS	CLMFRS	CYFRS	CYNFRS	CBLRS	CABRS	CYNBRS	CP9	CP10
4.485	-5.662	.00990	.03110	-.00500	-.00430	.02720	-.00200	.02910	.00570	-.35680	-.30710
4.429	-3.646	.00660	.03190	-.00110	-.00910	.02950	-.00140	.03070	.00600	-.37620	-.32430
4.194	.089	-.00360	.03490	.01060	-.02510	.03980	.00060	.03310	.00640	-.40910	-.34490
4.303	3.759	-.00730	.03660	.01650	-.03720	.04870	.00140	.03520	.00680	-.43490	-.36660
4.274	5.767	-.01220	.03790	.02100	-.04520	.05410	.00230	.03640	.00710	-.44920	-.37960
	GRADIENT	-.00188	.00064	.00238	-.00380	.00259	.00038	.00061	.00011	-.00793	-.00571

IA156A, AEDC PWT 16T-470, 0 T S W/SILTS (R8NRA2) (10 MAY 80)

REFERENCE DATA

SREF = 2690.0000 SQ.FT. XMRP = 976.0000 IN. XT
LREF = 1290.3000 INCHES YMRP = .0000 IN. YT
BREF = 1290.3000 INCHES ZMRP = 400.0000 IN. ZT
SCALE = .0200

PARAMETRIC DATA

IB-ELV = 8.000 OB-ELV = 5.000
BDFLAP = .000 SPDBRK = .000
RUDDER = .000 SILTS = 1.000
MACH = 1.550 RN/L = 3.200

RUN NO. 1212/ 0 RN/L = 3.20 GRADIENT INTERVAL = -5.00/ 5.00

ALPHAR	BETAR	CNFRS	CAFRS	CLMFRS	CYFRS	CYNFRS	CBLRS	CABRS	CYNBRS	CP9	CP10
-8.614	-6.329	-.02540	.02450	-.01630	.04280	.00080	.00500	.02520	.00490	-.30090	-.27350
-8.737	-4.035	-.04630	.02580	-.00330	.05000	-.00630	.00900	.02770	.00540	-.32960	-.30160
-8.643	.189	-.09080	.03030	.02770	.04980	-.01090	.01780	.03140	.00610	-.38050	-.33580
-8.407	4.544	-.13720	.03380	.05850	.03420	-.00340	.02680	.03440	.00670	-.42010	-.36260
-8.414	6.514	-.15260	.03430	.06690	.02040	.00560	.02980	.03420	.00660	-.42140	-.35740
	GRADIENT	-.01060	.00093	.00720	-.00185	.00035	.00207	.00078	.00015	-.01054	-.00711

RUN NO. 1213/ 0 RN/L = 3.20 GRADIENT INTERVAL = -5.00/ 5.00

ALPHAR	BETAR	CNFRS	CAFRS	CLMFRS	CYFRS	CYNFRS	CBLRS	CABRS	CYNBRS	CP9	CP10
-6.579	-6.365	-.01280	.02580	-.01720	.02160	.01150	.00250	.02480	.00480	-.29790	-.26610
-6.517	-4.347	-.02820	.02750	-.00600	.02560	.00670	.00550	.02740	.00530	-.32770	-.29670
-6.566	.129	-.06700	.03050	.02050	.02690	.00190	.01310	.03040	.00590	-.36790	-.32550
-6.299	4.521	-.10280	.03430	.04360	.01690	.00610	.02010	.03260	.00630	-.40210	-.34170
-6.235	6.544	-.12010	.03580	.05420	.00820	.01130	.02350	.03420	.00660	-.42290	-.35650
	GRADIENT	-.00841	.00077	.00559	-.00098	-.00007	.00165	.00059	.00011	-.00839	-.00508

RUN NO. 1214/ 0 RN/L = 3.21 GRADIENT INTERVAL = -5.00/ 5.00

ALPHAR	BETAR	CNFRS	CAFRS	CLMFRS	CYFRS	CYNFRS	CBLRS	CABRS	CYNBRS	CP9	CP10
-4.323	-6.524	-.00400	.02710	-.01540	.00080	.02280	.00070	.02500	.00490	-.30220	-.26820
-4.591	-4.311	-.01950	.02840	-.00480	.00760	.01620	.00380	.02700	.00520	-.32680	-.28850
-4.470	.418	-.04980	.03130	.01700	.00300	.01610	.00970	.03000	.00580	-.37050	-.31200
-3.836	4.591	-.07260	.03450	.03360	-.01070	.02360	.01420	.03130	.00610	-.38760	-.32670
-3.923	6.462	-.08620	.03580	.04180	-.01420	.02560	.01680	.03210	.00620	-.39770	-.33480
	GRADIENT	-.00597	.00068	.00432	-.00203	.00081	.00117	.00049	.00010	-.00688	-.00431

RUN NO. 1215/ 0 RN/L = 3.20 GRADIENT INTERVAL = -5.00/ 5.00

ALPHAR	BETAR	CNFRS	CAFRS	CLMFRS	CYFRS	CYNFRS	CBLRS	CABRS	CYNBRS	CP9	CP10
-.359	-7.506	.00360	.02820	-.00770	-.01660	.03360	-.00080	.02440	.00470	-.30300	-.25290
-.337	-5.340	-.00530	.02970	-.00030	-.02010	.03420	.00090	.02610	.00510	-.31970	-.27580
-.338	-.883	-.02110	.03270	.01250	-.03100	.03830	.00400	.02840	.00550	-.34920	-.29770
-.321	3.256	-.03650	.03580	.02350	-.03960	.04350	.00710	.03220	.00630	-.40280	-.33170
-.354	5.455	-.04460	.03690	.02810	-.04410	.04680	.00870	.03360	.00650	-.42090	-.34570
	GRADIENT	-.00372	.00075	.00266	-.00208	.00126	.00075	.00092	.00019	-.01295	-.00821

IA156A, AEDC PWT 16T-470, O T S W/SILTS (R8NRA2) (10 MAY 80)

REFERENCE DATA

SREF = 2690.0000 SQ.FT. XMRP = 976.0000 IN. XT
LREF = 1290.3000 INCHES YMRP = .0000 IN. YT
BREF = 1290.3000 INCHES ZMRP = 400.0000 IN. ZT
SCALE = .0200

PARAMETRIC DATA

IB-ELV = 8.000 OB-ELV = 5.000
BDFLAP = .000 SPDBRK = .000
RUDDER = .000 SILTS = 1.000
MACH = 1.550 RN/L = 3.200

RUN NO. 1216/ 0 RN/L = 3.20 GRADIENT INTERVAL = -5.00/ 5.00

ALPHAR	BETAR	CNFRS	CAFRS	CLMFRS	CYFRS	CYNFRS	CBLRS	CABRS	CYNBRS	CP9	CP10
4.665	-5.584	.00860	.02920	-.00230	.00140	.02290	-.00190	.02630	.00510	-.32440	-.27390
4.469	-3.512	.00580	.03050	.00100	-.00490	.02590	-.00130	.02730	.00530	-.33850	-.28390
4.105	.140	-.00260	.03310	.01060	-.02040	.03620	.00030	.03000	.00580	-.37710	-.30650
4.140	3.742	-.00460	.03510	.01440	-.03270	.04500	.00070	.03180	.00620	-.39740	-.32670
4.141	5.785	-.00740	.03660	.01800	-.04210	.05190	.00130	.03330	.00650	-.41460	-.34360
	GRADIENT	-.00144	.00063	.00185	-.00383	.00263	.00028	.00062	.00012	-.00813	-.00590

IA156A, AEDC PWT 16T-470, O T S W/SILTS (R8NRA3) (10 MAY 80)

REFERENCE DATA

SREF = 2690.0000 SQ.FT. XMRP = 976.0000 IN. XT
LREF = 1290.3000 INCHES YMRP = .0000 IN. YT
BREF = 1290.3000 INCHES ZMRP = 400.0000 IN. ZT
SCALE = .0200

PARAMETRIC DATA

IB-ELV = 12.000 OB-ELV = 5.000
BDFLAP = .000 SPDBRK = .000
RUDDER = .000 SILTS = 1.000
MACH = .600 RN/L = 3.500

RUN NO. 1240/ 0 RN/L = 3.50 GRADIENT INTERVAL = -5.00/ 5.00

ALPHAR	BETAR	CNFRS	CAFRS	CLMFRS	CYFRS	CYNFRS	CBLRS	CABRS	CYNBRS	CP9	CP10
-8.279	-8.140	.00700	.00770	-.02360	.01840	.01360	-.00130	.02420	.00470	-.30770	-.24500
-8.207	-6.051	-.00940	.00790	-.01390	.02640	.00560	.00190	.02790	.00540	-.35820	-.27730
-8.242	-3.995	-.02760	.01090	-.00300	.03380	-.00100	.00550	.02930	.00570	-.37760	-.29050
-8.162	.212	-.06690	.00930	.02160	.02740	-.00060	.01310	.03380	.00660	-.41990	-.34990
-8.077	4.243	-.09530	.00950	.03640	.01190	.00940	.01870	.03680	.00710	-.43940	-.39880
-8.086	6.191	-.11190	.00990	.04490	.00380	.01490	.02200	.03800	.00740	-.44980	-.41550
-8.167	8.240	-.13260	.01010	.05510	-.00540	.02110	.02600	.03950	.00770	-.46840	-.43070
	GRADIENT	-.00823	-.00017	.00479	-.00265	.00125	.00160	.00091	.00017	-.00752	-.01315

RUN NO. 1241/ 0 RN/L = 3.50 GRADIENT INTERVAL = -5.00/ 5.00

ALPHAR	BETAR	CNFRS	CAFRS	CLMFRS	CYFRS	CYNFRS	CBLRS	CABRS	CYNBRS	CP9	CP10
-6.178	-8.188	.01090	.00980	-.02250	-.00050	.02230	-.00210	.02400	.00470	-.30240	-.24510
-6.164	-6.138	-.00230	.01050	-.01440	.00570	.01600	.00050	.02580	.00500	-.32880	-.26040
-6.087	-4.186	-.01740	.01140	-.00480	.00990	.01080	.00350	.02870	.00560	-.36670	-.28660
-6.155	.014	-.04990	.01070	.01580	.00410	.01180	.00980	.03220	.00620	-.39660	-.33610
-6.046	4.220	-.07630	.01150	.03070	-.00780	.01960	.01500	.03550	.00690	-.42470	-.38370
-5.989	6.215	-.09140	.01140	.03880	-.01410	.02370	.01800	.03730	.00720	-.44210	-.40660
-5.802	8.329	-.10440	.01230	.04620	-.02480	.03090	.02050	.03810	.00740	-.44920	-.41910
	GRADIENT	-.00701	.00001	.00422	-.00211	.00105	.00137	.00081	.00015	-.00690	-.01155

IA156A, AEDC PWT 16T-470, O T S W/SILTS (R8NRA3) (10 MAY 80)

REFERENCE DATA

SREF = 2690.0000 SQ.FT. XMRP = 976.0000 IN. XT
LREF = 1290.3000 INCHES YMRP = .0000 IN. YT
BREF = 1290.3000 INCHES ZMRP = 400.0000 IN. ZT
SCALE = .0200

PARAMETRIC DATA

IB-ELV = 12.000 OB-ELV = 5.000
BDFLAP = .000 SPDBRK = .000
RUDDER = .000 SILTS = 1.000
MACH = .600 RN/L = 3.500

RUN NO. 1242/ 0 RN/L = 3.49 GRADIENT INTERVAL = -5.00/ 5.00

ALPHAR	BETAR	CNFRS	CAFRS	CLMFRS	CYFRS	CYNFRS	CBLRS	CABRS	CYNBRS	CP9	CP10
-3.977	-8.247	.01240	.01140	-.01980	-.01370	.02870	-.00240	.02440	.00470	-.30420	-.25130
-4.219	-6.188	-.00010	.01200	-.01190	-.00930	.02390	.00010	.02550	.00490	-.31840	-.26190
-4.211	-4.080	-.01270	.01230	-.00360	-.00750	.02020	.00250	.02810	.00550	-.35490	-.28590
-4.016	.116	-.03690	.01230	.01250	-.01780	.02510	.00730	.03160	.00610	-.38760	-.33210
-3.700	4.305	-.05750	.01320	.02570	-.02800	.03130	.01130	.03490	.00680	-.42020	-.37400
-3.828	6.133	-.06990	.01320	.03230	-.03110	.03350	.01370	.03610	.00700	-.43140	-.39160
-3.978	8.132	-.08290	.01380	.03900	-.03620	.03720	.01630	.03690	.00720	-.44100	-.40020
	GRADIENT	-.00534	.00011	.00349	-.00244	.00132	.00105	.00081	.00016	-.00779	-.01051

RUN NO. 1243/ 0 RN/L = 3.50 GRADIENT INTERVAL = -5.00/ 5.00

ALPHAR	BETAR	CNFRS	CAFRS	CLMFRS	CYFRS	CYNFRS	CBLRS	CABRS	CYNBRS	CP9	CP10
-.245	-9.000	.01650	.01430	-.01780	-.02050	.03240	-.00320	.02550	.00500	-.32230	-.25930
-.237	-6.907	.00700	.01340	-.01020	-.02060	.03110	-.00140	.02500	.00480	-.31670	-.25260
-.229	-4.636	-.00260	.01340	-.00290	-.02280	.03090	.00050	.02660	.00520	-.33300	-.27250
-.226	-.560	-.01660	.01350	.00710	-.03310	.03640	.00330	.03070	.00600	-.37520	-.32340
-.181	3.514	-.02890	.01450	.01580	-.04180	.04170	.00570	.03420	.00660	-.41010	-.36820
-.181	5.624	-.03810	.01520	.02150	-.04630	.04460	.00750	.03540	.00690	-.42180	-.38540
-.180	7.721	-.04480	.01570	.02560	-.05130	.04830	.00880	.03660	.00710	-.43580	-.39750
	GRADIENT	-.00323	.00013	.00229	-.00233	.00133	.00064	.00093	.00017	-.00946	-.01174

RUN NO. 1244/ 0 RN/L = 3.50 GRADIENT INTERVAL = -5.00/ 5.00

ALPHAR	BETAR	CNFRS	CAFRS	CLMFRS	CYFRS	CYNFRS	CBLRS	CABRS	CYNBRS	CP9	CP10
4.522	-8.013	.01350	.01480	-.00940	-.00820	.02170	-.00270	.02700	.00520	-.34470	-.27010
4.354	-5.793	.00930	.01430	-.00470	-.01140	.02310	-.00190	.02660	.00520	-.33770	-.26880
4.347	-3.824	.00740	.01340	-.00220	-.01530	.02510	-.00150	.02770	.00540	-.34680	-.28470
4.149	-.062	.00540	.01340	.00020	-.02920	.03480	-.00110	.03030	.00590	-.36900	-.32150
4.199	3.876	.00390	.01430	.00330	-.03840	.04140	-.00080	.03330	.00650	-.40120	-.35760
4.139	5.993	.00080	.01510	.00600	-.04410	.04570	-.00010	.03480	.00670	-.41510	-.37670
4.120	7.986	-.00130	.01520	.00800	-.04790	.04870	.00030	.03610	.00700	-.42870	-.39230
	GRADIENT	-.00045	.00012	.00071	-.00299	.00211	.00009	.00073	.00014	-.00707	-.00946

IA156A, AEDC PWT 16T-470, 0 T S W/SILTS (R8NRA3) (10 MAY 80)

REFERENCE DATA

SREF = 2690.0000 SQ.FT. XMRP = 976.0000 IN. XT
LREF = 1290.3000 INCHES YMRP = .0000 IN. YT
BREF = 1290.3000 INCHES ZMRP = 400.0000 IN. ZT
SCALE = .0200

PARAMETRIC DATA

IB-ELV = 12.000 OB-ELV = 5.000
BDFLAP = .000 SPDBRK = .000
RUDDER = .000 SILTS = 1.000
MACH = .600 RN/L = 3.500

RUN NO. 1245/ 0 RN/L = 3.50 GRADIENT INTERVAL = -5.00/ 5.00

ALPHAR	BETAR	CNFRS	CAFRS	CLMFRS	CYFRS	CYNFRS	CBLRS	CABRS	CYNBRS	CP9	CP10
6.526	-7.926	.01540	.01460	-.00820	.00190	.01520	-.00310	.02730	.00530	-.34850	-.27340
6.517	-5.873	.01350	.01450	-.00490	-.00060	.01620	-.00270	.02690	.00520	-.34060	-.27250
6.516	-3.829	.01320	.01390	-.00300	-.00360	.01790	-.00260	.02810	.00550	-.35220	-.28800
6.240	.094	.01440	.01370	-.00180	-.01870	.02870	-.00290	.03080	.00600	-.37200	-.32940
6.177	3.919	.01620	.01450	-.00050	-.02840	.03550	-.00320	.03320	.00640	-.40150	-.35460
6.100	5.983	.01620	.01430	.00030	-.03340	.03920	-.00320	.03470	.00670	-.41780	-.37170
6.082	7.891	.01710	.01510	.00090	-.03780	.04290	-.00340	.03530	.00690	-.41940	-.38470
	GRADIENT	.00039	.00008	.00032	-.00320	.00227	-.00008	.00066	.00012	-.00636	-.00860

RUN NO. 1246/ 0 RN/L = 3.50 GRADIENT INTERVAL = -5.00/ 5.00

ALPHAR	BETAR	CNFRS	CAFRS	CLMFRS	CYFRS	CYNFRS	CBLRS	CABRS	CYNBRS	CP9	CP10
8.455	-7.793	.01930	.01300	-.00830	.01720	.00640	-.00390	.02790	.00540	-.35280	-.28340
8.392	-5.737	.01820	.01330	-.00510	.01470	.00720	-.00360	.02740	.00530	-.34470	-.28020
8.401	-3.786	.01930	.01320	-.00360	.01080	.00990	-.00380	.02850	.00550	-.35680	-.29350
8.336	.087	.02390	.01410	-.00310	-.00220	.01960	-.00470	.03140	.00610	-.37940	-.33590
8.394	4.059	.03230	.01370	-.00520	-.00930	.02410	-.00630	.03380	.00660	-.41070	-.36020
8.336	6.030	.03580	.01360	-.00630	-.01450	.02790	-.00700	.03450	.00670	-.41570	-.36980
8.334	8.045	.03860	.01430	-.00690	-.02210	.03380	-.00760	.03520	.00680	-.42140	-.38030
	GRADIENT	.00166	.00006	-.00021	-.00256	.00181	-.00032	.00068	.00014	-.00687	-.00849

IA156A, AEDC PWT 16T-470, O T S W/SILTS (R8NRA4) (10 MAY 80)

REFERENCE DATA

SREF = 2690.0000 SQ.FT. XMRP = 976.0000 IN. XT
LREF = 1290.3000 INCHES YMRP = .0000 IN. YT
BREF = 1290.3000 INCHES ZMRP = 400.0000 IN. ZT
SCALE = .0200

PARAMETRIC DATA

IB-ELV = 12.000 OB-ELV = 5.000
BDFLAP = .000 SPDBRK = .000
RUDDER = .000 SILTS = 1.000
MACH = .800 RN/L = 3.500

RUN NO. 1247/ 0 RN/L = 3.50 GRADIENT INTERVAL = -5.00/ 5.00

ALPHAR	BETAR	CNFRS	CAFRS	CLMFRS	CYFRS	CYNFRS	CBLRS	CABRS	CYNBRS	CP9	CP10
-8.375	-6.140	-.00920	.01080	-.01630	.03630	.00290	.00180	.02480	.00480	-.31600	-.24880
-8.404	-4.049	-.02850	.01240	-.00470	.04390	-.00300	.00560	.02920	.00570	-.36310	-.30160
-8.355	.247	-.07070	.01260	.02270	.04020	-.00350	.01390	.03360	.00650	-.41370	-.35240
-8.252	4.277	-.10020	.01260	.03720	.02670	.00540	.01970	.03640	.00710	-.42930	-.40010
-8.305	6.231	-.11830	.01300	.04580	.01960	.01040	.02320	.03740	.00730	-.43610	-.41470
	GRADIENT	-.00862	.00002	.00505	-.00205	.00100	.00170	.00087	.00017	-.00799	-.01183

RUN NO. 1248/ 0 RN/L = 3.50 GRADIENT INTERVAL = -5.00/ 5.00

ALPHAR	BETAR	CNFRS	CAFRS	CLMFRS	CYFRS	CYNFRS	CBLRS	CABRS	CYNBRS	CP9	CP10
-6.239	-6.248	-.00060	.01300	-.01640	.01460	.01360	.00010	.02430	.00470	-.30570	-.24890
-6.204	-4.294	-.01610	.01420	-.00670	.01830	.00940	.00320	.02770	.00540	-.34520	-.28710
-6.329	-.040	-.05130	.01420	.01560	.01340	.00960	.01000	.03200	.00620	-.39060	-.33740
-6.179	4.241	-.07860	.01470	.03070	.00020	.01810	.01540	.03480	.00680	-.41160	-.38030
-6.111	6.280	-.09430	.01490	.03870	-.00660	.02270	.01850	.03650	.00710	-.42940	-.40240
	GRADIENT	-.00732	.00006	.00438	-.00212	.00102	.00143	.00083	.00016	-.00778	-.01092

RUN NO. 1249/ 0 RN/L = 3.50 GRADIENT INTERVAL = -5.00/ 5.00

ALPHAR	BETAR	CNFRS	CAFRS	CLMFRS	CYFRS	CYNFRS	CBLRS	CABRS	CYNBRS	CP9	CP10
-4.089	-6.351	.00210	.01500	-.01380	-.00430	.02300	-.00040	.02380	.00460	-.29670	-.24630
-4.310	-4.190	-.01240	.01570	-.00480	.00020	.01840	.00240	.02700	.00520	-.33440	-.28100
-4.229	.323	-.03870	.01510	.01270	-.01020	.02310	.00760	.03150	.00610	-.37920	-.33820
-3.814	4.352	-.05960	.01560	.02550	-.02180	.03000	.01170	.03480	.00680	-.41470	-.37820
-3.913	6.207	-.07290	.01690	.03300	-.02510	.03240	.01430	.03530	.00690	-.42080	-.38380
	GRADIENT	-.00553	-.00001	.00355	-.00257	.00135	.00109	.00091	.00019	-.00941	-.01140

RUN NO. 1250/ 0 RN/L = 3.50 GRADIENT INTERVAL = -5.00/ 5.00

ALPHAR	BETAR	CNFRS	CAFRS	CLMFRS	CYFRS	CYNFRS	CBLRS	CABRS	CYNBRS	CP9	CP10
-.236	-7.162	.01120	.01700	-.01410	-.02120	.03140	-.00220	.02530	.00490	-.31850	-.25920
-.248	-4.987	.00050	.01680	-.00660	-.02260	.03110	-.00010	.02580	.00500	-.32140	-.26590
-.272	-.681	-.01650	.01640	.00510	-.02990	.03480	.00320	.02940	.00570	-.35560	-.31500
-.220	3.396	-.03220	.01740	.01630	-.03900	.04090	.00630	.03290	.00640	-.39250	-.35720
-.211	5.531	-.04200	.01830	.02280	-.04380	.04420	.00820	.03530	.00690	-.42190	-.38280
	GRADIENT	-.00390	.00007	.00273	-.00195	.00117	.00076	.00085	.00017	-.00848	-.01090

IA156A, AEDC PWT 16T-470, O T S W/SILTS (R8NRA4) (10 MAY 80)

REFERENCE DATA

SREF = 2690.0000 SQ.FT. XMRP = 976.0000 IN. XT
LREF = 1290.3000 INCHES YMRP = .0000 IN. YT
BREF = 1290.3000 INCHES ZMRP = 400.0000 IN. ZT
SCALE = .0200

PARAMETRIC DATA

IB-ELV = 12.000 OB-ELV = 5.000
BDFLAP = .000 SPDBRK = .000
RUDDER = .000 SILTS = 1.000
MACH = .800 RN/L = 3.500

RUN NO. 1251/ 0 RN/L = 3.50 GRADIENT INTERVAL = -5.00/ 5.00

ALPHAR	BETAR	CNFRS	CAFRS	CLMFRS	CYFRS	CYNFRS	CBLRS	CABRS	CYNBRS	CP9	CP10
4.456	-5.768	.00950	.01720	-.00320	-.01050	.02400	-.00190	.02680	.00520	-.33630	-.27460
4.329	-3.675	.00690	.01660	-.00040	-.01660	.02690	-.00140	.02790	.00540	-.34470	-.29020
4.061	.032	.00480	.01640	.00180	-.03130	.03680	-.00100	.02960	.00570	-.35620	-.31710
4.183	3.824	.00280	.01770	.00480	-.03820	.04250	-.00060	.03360	.00650	-.39780	-.36670
4.107	5.880	-.00130	.01810	.00740	-.04410	.04720	.00020	.03590	.00700	-.42310	-.39520
	GRADIENT	-.00055	.00015	.00069	-.00288	.00208	.00011	.00076	.00015	-.00710	-.01021

RUN NO. 1252/ 0 RN/L = 3.50 GRADIENT INTERVAL = -5.00/ 5.00

ALPHAR	BETAR	CNFRS	CAFRS	CLMFRS	CYFRS	CYNFRS	CBLRS	CABRS	CYNBRS	CP9	CP10
6.496	-5.815	.01510	.01720	-.00560	.00180	.01670	-.00310	.02760	.00540	-.34580	-.28290
6.487	-3.802	.01330	.01680	-.00240	-.00130	.01860	-.00270	.02820	.00550	-.34890	-.29330
6.168	.051	.01460	.01650	-.00120	-.01710	.02950	-.00290	.03040	.00590	-.36550	-.32740
6.131	3.799	.01670	.01680	-.00020	-.02560	.03600	-.00330	.03390	.00660	-.40420	-.36830
6.266	5.955	.02060	.01700	-.00120	-.02990	.03970	-.00410	.03550	.00690	-.42040	-.38810
	GRADIENT	.00045	-.00000	.00029	-.00320	.00229	-.00008	.00075	.00014	-.00726	-.00986

IA156A, AEDC PWT 16T-470, O T S W/SILTS (R8NRA5) (10 MAY 80)

REFERENCE DATA

SREF = 2690.0000 SQ.FT. XMRP = 976.0000 IN. XT
LREF = 1290.3000 INCHES YMRP = .0000 IN. YT
BREF = 1290.3000 INCHES ZMRP = 400.0000 IN. ZT
SCALE = .0200

PARAMETRIC DATA

IB-ELV = 12.000 OB-ELV = 5.000
BDFLAP = .000 SPDBRK = .000
RUDDER = .000 SILTS = 1.000
MACH = .900 RN/L = 3.500

RUN NO. 1253/ 0 RN/L = 3.50 GRADIENT INTERVAL = -5.00/ 5.00

ALPHAR	BETAR	CNFRS	CAFRS	CLMFRS	CYFRS	CYNFRS	CBLRS	CABRS	CYNBRS	CP9	CP10
-8.638	-6.310	-.00990	.01190	-.01760	.04650	-.00040	.00200	.02770	.00540	-.34770	-.28320
-8.392	-4.038	-.03020	.01560	-.00490	.05080	-.00480	.00590	.03110	.00600	-.38100	-.32730
-8.413	-.009	-.06960	.01500	.02030	.04610	-.00360	.01370	.03480	.00680	-.41980	-.37360
-8.322	4.349	-.10690	.01570	.04030	.03150	.00540	.02100	.03710	.00720	-.42620	-.41930
-8.397	6.213	-.12400	.01650	.04820	.02520	.00990	.02430	.03780	.00730	-.43200	-.42940
	GRADIENT	-.00914	.00001	.00538	-.00232	.00123	.00180	.00071	.00014	-.00534	-.01096

IA156A, AEDC PWT 16T-470, 0 T S W/SILTS (R8NRA5) (10 MAY 80)

REFERENCE DATA

SREF = 2690.0000 SQ.FT. XMRP = 976.0000 IN. XT
LREF = 1290.3000 INCHES YMRP = .0000 IN. YT
BREF = 1290.3000 INCHES ZMRP = 400.0000 IN. ZT
SCALE = .0200

PARAMETRIC DATA

IB-ELV = 12.000 OB-ELV = 5.000
BDFLAP = .000 SPDBRK = .000
RUDDER = .000 SILTS = 1.000
MACH = .900 RN/L = 3.500

RUN NO. 1254/ 0 RN/L = 3.50 GRADIENT INTERVAL = -5.00/ 5.00

ALPHAR	BETAR	CNFRS	CAFRS	CLMFRS	CYFRS	CYNFRS	CBLRS	CABRS	CYNBRS	CP9	CP10
-6.302	-6.271	-.00110	.01570	-.01820	.01980	.01260	.00020	.02650	.00510	-.32880	-.27550
-6.270	-4.269	-.01700	.01680	-.00830	.02530	.00720	.00330	.03000	.00580	-.36540	-.31690
-6.320	.127	-.05330	.01630	.01550	.01800	.00950	.01040	.03280	.00640	-.39210	-.35530
-6.247	4.223	-.08420	.01780	.03310	.00850	.01480	.01650	.03640	.00710	-.41800	-.41050
-6.220	6.240	-.10090	.01850	.04180	.00200	.01940	.01980	.03810	.00740	-.43410	-.43350
	GRADIENT	-.00792	.00011	.00488	-.00197	.00089	.00156	.00075	.00015	-.00619	-.01099

RUN NO. 1255/ 0 RN/L = 3.50 GRADIENT INTERVAL = -5.00/ 5.00

ALPHAR	BETAR	CNFRS	CAFRS	CLMFRS	CYFRS	CYNFRS	CBLRS	CABRS	CYNBRS	CP9	CP10
-4.085	-6.279	.00300	.01790	-.01610	-.00010	.02300	-.00060	.02650	.00510	-.32350	-.27970
-4.339	-4.223	-.01090	.01860	-.00740	.00450	.01780	.00210	.02950	.00570	-.35710	-.31470
-4.305	.258	-.03850	.01750	.01120	-.00540	.02200	.00750	.03180	.00620	-.37640	-.34860
-3.859	4.306	-.06200	.01950	.02640	-.01550	.02730	.01210	.03560	.00690	-.41220	-.39830
-3.967	6.185	-.07670	.02020	.03430	-.01970	.03050	.01500	.03740	.00730	-.43530	-.41710
	GRADIENT	-.00599	.00010	.00397	-.00234	.00111	.00117	.00071	.00014	-.00642	-.00976

RUN NO. 1256/ 0 RN/L = 3.50 GRADIENT INTERVAL = -5.00/ 5.00

ALPHAR	BETAR	CNFRS	CAFRS	CLMFRS	CYFRS	CYNFRS	CBLRS	CABRS	CYNBRS	CP9	CP10
-.288	-7.228	.01190	.02050	-.01600	-.01950	.03270	-.00240	.02750	.00530	-.33780	-.28960
-.280	-5.059	.00300	.02040	-.00950	-.01930	.03130	-.00060	.02810	.00540	-.34180	-.29740
-.335	-.701	-.01490	.01950	.00350	-.02630	.03470	.00290	.03110	.00600	-.37180	-.33640
-.273	3.382	-.03180	.02050	.01590	-.03810	.04220	.00620	.03470	.00670	-.41180	-.37830
-.262	5.536	-.04150	.02150	.02230	-.04440	.04640	.00810	.03700	.00720	-.44030	-.40300
	GRADIENT	-.00414	.00024	.00304	-.00289	.00184	.00081	.00088	.00017	-.00980	-.01026

RUN NO. 1257/ 0 RN/L = 3.50 GRADIENT INTERVAL = -5.00/ 5.00

ALPHAR	BETAR	CNFRS	CAFRS	CLMFRS	CYFRS	CYNFRS	CBLRS	CABRS	CYNBRS	CP9	CP10
4.452	-5.771	.01080	.02080	-.00480	-.01090	.02530	-.00220	.02870	.00560	-.35400	-.29960
4.312	-3.697	.00830	.02060	-.00270	-.01670	.02770	-.00170	.03010	.00580	-.36740	-.31810
4.009	-.012	.00440	.02040	-.00010	-.03040	.03680	-.00100	.03170	.00610	-.38180	-.33950
4.160	3.768	-.00130	.02100	.00630	-.03850	.04270	.00020	.03540	.00690	-.42230	-.38330
4.086	5.848	-.00570	.02160	.00920	-.04580	.04880	.00110	.03740	.00730	-.44620	-.40610
	GRADIENT	-.00129	.00005	.00121	-.00292	.00201	.00025	.00071	.00015	-.00737	-.00875

IA156A, AEDC PWT 16T-470, 0 T S W/SILTS (R8NRA6) (10 MAY 80)

REFERENCE DATA

SREF = 2690.0000 SQ.FT. XMRP = 976.0000 IN. XT
LREF = 1290.3000 INCHES YMRP = .0000 IN. YT
BREF = 1290.3000 INCHES ZMRP = 400.0000 IN. ZT
SCALE = .0200

PARAMETRIC DATA

IB-ELV = 12.000 OB-ELV = 5.000
BDFLAP = .000 SPDBRK = .000
RUDDER = .000 SILTS = 1.000
MACH = .950 RN/L = 3.500

RUN NO. 1258/ 0 RN/L = 3.50 GRADIENT INTERVAL = -5.00/ 5.00

ALPHAR	BETAR	CNFRS	CAFRS	CLMFRS	CYFRS	CYNFRS	CBLRS	CABRS	CYNBRS	CP9	CP10
-8.439	-6.262	-.01130	.01490	-.01760	.03870	.00490	.00220	.02860	.00560	-.35930	-.29320
-8.558	-4.103	-.03110	.01710	-.00660	.04840	-.00290	.00610	.03350	.00650	-.40640	-.35780
-8.544	.158	-.07420	.01720	.02090	.04640	-.00300	.01450	.03870	.00750	-.45870	-.42220
-8.407	4.234	-.11100	.01850	.04170	.03340	.00530	.02170	.03910	.00760	-.44870	-.44050
-8.454	6.182	-.13100	.01900	.05140	.02650	.01030	.02570	.04070	.00790	-.46970	-.45660
	GRADIENT	-.00959	.00017	.00580	-.00179	.00098	.00187	.00068	.00013	-.00513	-.00996

RUN NO. 1259/ 0 RN/L = 3.50 GRADIENT INTERVAL = -5.00/ 5.00

ALPHAR	BETAR	CNFRS	CAFRS	CLMFRS	CYFRS	CYNFRS	CBLRS	CABRS	CYNBRS	CP9	CP10
-6.372	-6.289	-.00250	.01790	-.01780	.01520	.01640	.00050	.02830	.00550	-.35150	-.29370
-6.320	-4.319	-.01690	.01930	-.00880	.02060	.01060	.00330	.03250	.00630	-.39520	-.34490
-6.470	-.057	-.05400	.01920	.01470	.02000	.00920	.01050	.03830	.00740	-.45270	-.41830
-6.309	4.210	-.08790	.02080	.03520	.00770	.01620	.01720	.03940	.00760	-.45210	-.44360
-6.033	6.341	-.10370	.02150	.04460	-.00410	.02300	.02030	.04150	.00810	-.47600	-.46800
	GRADIENT	-.00832	.00018	.00516	-.00151	.00066	.00163	.00081	.00015	-.00667	-.01157

RUN NO. 1260/ 0 RN/L = 3.50 GRADIENT INTERVAL = -5.00/ 5.00

ALPHAR	BETAR	CNFRS	CAFRS	CLMFRS	CYFRS	CYNFRS	CBLRS	CABRS	CYNBRS	CP9	CP10
-4.120	-6.386	.00160	.02010	-.01470	-.00490	.02620	-.00030	.02860	.00560	-.34900	-.30240
-4.381	-4.222	-.01170	.02140	-.00690	.00000	.02080	.00230	.03240	.00630	-.38970	-.34900
-4.319	.265	-.04220	.02070	.01450	-.01080	.02550	.00820	.03630	.00710	-.42900	-.39810
-3.857	4.330	-.06520	.02270	.03000	-.02480	.03300	.01270	.04010	.00780	-.46780	-.44420
-3.973	6.176	-.08110	.02310	.03810	-.02750	.03510	.01580	.04130	.00800	-.48310	-.45670
	GRADIENT	-.00627	.00015	.00432	-.00289	.00142	.00122	.00090	.00018	-.00913	-.01113

RUN NO. 1261/ 0 RN/L = 3.50 GRADIENT INTERVAL = -5.00/ 5.00

ALPHAR	BETAR	CNFRS	CAFRS	CLMFRS	CYFRS	CYNFRS	CBLRS	CABRS	CYNBRS	CP9	CP10
-.282	-7.267	.00920	.02200	-.01220	-.01850	.03440	-.00190	.02830	.00550	-.34790	-.29660
-.265	-5.093	-.00060	.02250	-.00470	-.01930	.03300	.00000	.02980	.00580	-.36300	-.31680
-.291	-.737	-.01700	.02300	.00750	-.03120	.03910	.00320	.03430	.00670	-.41220	-.36990
-.238	3.366	-.03370	.02450	.01920	-.04380	.04660	.00650	.03890	.00770	-.47580	-.43190
-.248	5.537	-.04340	.02450	.02490	-.04940	.05040	.00840	.04090	.00790	-.48870	-.44210
	GRADIENT	-.00407	.00037	.00285	-.00307	.00183	.00080	.00136	.00024	-.01550	-.01511

IA156A, AEDC PWT 16T-470, O T S W/SILTS (R8NRA6) (10 MAY 80)

REFERENCE DATA

SREF = 2690.0000 SQ.FT. XMRP = 976.0000 IN. XT
LREF = 1290.3000 INCHES YMRP = .0000 IN. YT
BREF = 1290.3000 INCHES ZMRP = 400.0000 IN. ZT
SCALE = .0200

PARAMETRIC DATA

IB-ELV = 12.000 OB-ELV = 5.000
BDFLAP = .000 SPDBRK = .000
RUDDER = .000 SILTS = 1.000
MACH = .950 RN/L = 3.500

RUN NO. 1262/ 0 RN/L = 3.50 GRADIENT INTERVAL = -5.00/ 5.00

ALPHAR	BETAR	CNFRS	CAFRS	CLMFRS	CYFRS	CYNFRS	CBLRS	CABRS	CYNBRS	CP9	CP10
4.451	-5.763	.00970	.02260	-.00390	-.01040	.02640	-.00210	.03080	.00600	-.38180	-.32100
4.299	-3.674	.00710	.02290	-.00210	-.01700	.02950	-.00150	.03300	.00640	-.40480	-.34670
3.989	.013	.00220	.02400	.00100	-.03030	.03900	-.00060	.03490	.00680	-.42230	-.37280
4.176	3.786	-.00350	.02300	.00840	-.03740	.04400	.00060	.03920	.00760	-.47240	-.42000
4.122	5.834	-.00790	.02220	.01200	-.04520	.05000	.00140	.04220	.00820	-.50560	-.45450
	GRADIENT	-.00142	.00001	.00141	-.00273	.00194	.00028	.00083	.00016	-.00900	-.00984

IA156A, AEDC PWT 16T-470, O T S W/SILTS (R8NRA7) (10 MAY 80)

REFERENCE DATA

SREF = 2690.0000 SQ.FT. XMRP = 976.0000 IN. XT
LREF = 1290.3000 INCHES YMRP = .0000 IN. YT
BREF = 1290.3000 INCHES ZMRP = 400.0000 IN. ZT
SCALE = .0200

PARAMETRIC DATA

IB-ELV = 12.000 OB-ELV = 5.000
BDFLAP = .000 SPDBRK = .000
RUDDER = .000 SILTS = 1.000
MACH = 1.050 RN/L = 3.500

RUN NO. 1263/ 0 RN/L = 3.50 GRADIENT INTERVAL = -5.00/ 5.00

ALPHAR	BETAR	CNFRS	CAFRS	CLMFRS	CYFRS	CYNFRS	CBLRS	CABRS	CYNBRS	CP9	CP10
-8.493	-6.347	-.00910	.02090	-.02350	.03510	.01010	.00180	.03990	.00780	-.48680	-.42320
-8.655	-4.089	-.03260	.02400	-.00970	.04580	.00310	.00640	.04540	.00880	-.54200	-.49280
-8.625	-.052	-.07890	.02670	.02060	.04330	.00340	.01540	.05030	.00980	-.59560	-.54970
-8.488	4.250	-.12390	.02570	.04890	.02520	.01520	.02420	.05290	.01030	-.62380	-.58120
-8.531	6.153	-.14380	.02720	.05870	.01940	.01920	.02820	.05470	.01060	-.64870	-.59700
	GRADIENT	-.01094	.00020	.00702	-.00249	.00147	.00213	.00090	.00018	-.00977	-.01057

RUN NO. 1264/ 0 RN/L = 3.50 GRADIENT INTERVAL = -5.00/ 5.00

ALPHAR	BETAR	CNFRS	CAFRS	CLMFRS	CYFRS	CYNFRS	CBLRS	CABRS	CYNBRS	CP9	CP10
-6.332	-6.307	.00110	.02470	-.02360	.00770	.02410	-.00020	.04080	.00790	-.49180	-.43730
-6.359	-4.356	-.01650	.02700	-.01200	.01370	.01890	.00320	.04520	.00880	-.54160	-.48730
-6.538	-.081	-.06020	.02670	.01750	.01220	.01870	.01170	.04990	.00970	-.59020	-.54580
-6.350	4.204	-.09710	.02880	.04100	-.00100	.02550	.01900	.05290	.01030	-.62560	-.57890
-6.341	6.216	-.11710	.02970	.05170	-.00920	.03090	.02290	.05390	.01050	-.63530	-.59090
	GRADIENT	-.00942	.00021	.00619	-.00172	.00077	.00185	.00090	.00018	-.00981	-.01070

IA156A, AEDC PWT 16T-470, 0 T S W/SILTS (R8NRA7) (10 MAY 80)

REFERENCE DATA

SREF = 2690.0000 SQ.FT. XMRP = 976.0000 IN. XT
LREF = 1290.3000 INCHES YMRP = .0000 IN. YT
BREF = 1290.3000 INCHES ZMRP = 400.0000 IN. ZT
SCALE = .0200

PARAMETRIC DATA

IB-ELV = 12.000 OB-ELV = 5.000
BDFLAP = .000 SPDBRK = .000
RUDDER = .000 SILTS = 1.000
MACH = 1.050 RN/L = 3.500

RUN NO. 1265/ 0 RN/L = 3.50 GRADIENT INTERVAL = -5.00/ 5.00

ALPHAR	BETAR	CNFRS	CAFRS	CLMFRS	CYFRS	CYNFRS	CBLRS	CABRS	CYNBRS	CP9	CP10
-4.281	-6.412	.00550	.02740	-.02040	-.01280	.03520	-.00110	.04040	.00790	-.48290	-.43810
-4.436	-4.272	-.01000	.02830	-.01030	-.00770	.02950	.00190	.04420	.00860	-.53000	-.47750
-4.388	.225	-.04540	.02780	.01570	-.02070	.03590	.00880	.04960	.00960	-.58890	-.54090
-3.894	4.308	-.07340	.03080	.03540	-.03410	.04330	.01430	.05220	.01010	-.61900	-.56990
-4.010	6.168	-.09020	.03120	.04440	-.03500	.04430	.01750	.05280	.01030	-.62700	-.57570
	GRADIENT	-.00740	.00028	.00533	-.00307	.00161	.00145	.00094	.00018	-.01042	-.01082

RUN NO. 1266/ 0 RN/L = 3.50 GRADIENT INTERVAL = -5.00/ 5.00

ALPHAR	BETAR	CNFRS	CAFRS	CLMFRS	CYFRS	CYNFRS	CBLRS	CABRS	CYNBRS	CP9	CP10
-.294	-7.340	.01150	.02800	-.01420	-.02730	.04300	-.00240	.03980	.00770	-.47940	-.42760
-.286	-5.153	.00160	.02840	-.00630	-.02930	.04210	-.00040	.04160	.00810	-.49820	-.44970
-.363	-.734	-.01710	.03040	.00750	-.04370	.05070	.00320	.04810	.00930	-.57170	-.52330
-.280	3.353	-.03790	.03330	.02320	-.05520	.05850	.00730	.05190	.01010	-.61590	-.56670
-.260	5.528	-.04910	.03100	.03040	-.05860	.05950	.00950	.05400	.01050	-.63980	-.59080
	GRADIENT	-.00509	.00071	.00384	-.00281	.00191	.00100	.00093	.00020	-.01081	-.01062

RUN NO. 1267/ 0 RN/L = 3.50 GRADIENT INTERVAL = -5.00/ 5.00

ALPHAR	BETAR	CNFRS	CAFRS	CLMFRS	CYFRS	CYNFRS	CBLRS	CABRS	CYNBRS	CP9	CP10
4.459	-5.783	.01210	.02940	-.00730	-.01450	.03300	-.00260	.04340	.00840	-.51790	-.46970
4.294	-3.690	.00940	.03020	-.00480	-.02240	.03700	-.00200	.04560	.00890	-.54140	-.49690
4.072	-.008	.00260	.03170	.00290	-.03630	.04630	-.00070	.04790	.00930	-.56880	-.52290
4.199	3.754	-.00460	.03180	.01100	-.04460	.05240	.00070	.05030	.00980	-.60020	-.54490
4.171	5.798	-.00890	.03120	.01470	-.05330	.05920	.00160	.05100	.00990	-.60820	-.55260
	GRADIENT	-.00188	.00021	.00212	-.00298	.00207	.00036	.00063	.00012	-.00790	-.00645

IA156A, AEDC PWT 16T-470, O T S W/SILTS (R8NRA8) (10 MAY 80)

REFERENCE DATA

SREF = 2690.0000 SQ.FT. XMRP = 976.0000 IN. XT
LREF = 1290.3000 INCHES YMRP = .0000 IN. YT
BREF = 1290.3000 INCHES ZMRP = 400.0000 IN. ZT
SCALE = .0200

PARAMETRIC DATA

IB-ELV = 12.000 OB-ELV = 5.000
BDFLAP = .000 SPDBRK = .000
RUDDER = .000 SILTS = 1.000
MACH = 1.100 RN/L = 3.500

RUN NO. 1268/ 0 RN/L = 3.50 GRADIENT INTERVAL = -5.00/ 5.00

ALPHAR	BETAR	CNFRS	CAFRS	CLMFRS	CYFRS	CYNFRS	CBLRS	CABRS	CYNBRS	CP9	CP10
-8.537	-6.348	-.00990	.02400	-.02380	.03710	.00970	.00190	.03730	.00720	-.45340	-.39530
-8.680	-4.115	-.03290	.02580	-.01010	.04710	.00340	.00640	.04290	.00830	-.50970	-.46720
-8.673	-.064	-.08020	.02830	.02080	.04540	.00370	.01570	.04800	.00930	-.56790	-.52570
-8.528	4.248	-.12480	.02990	.04840	.02710	.01520	.02440	.05060	.00980	-.59920	-.55360
-8.548	6.151	-.14410	.03150	.05820	.01950	.01970	.02820	.05090	.00990	-.60540	-.55410
	GRADIENT	-.01098	.00049	.00699	-.00241	.00142	.00215	.00092	.00018	-.01066	-.01029

RUN NO. 1269/ 0 RN/L = 3.50 GRADIENT INTERVAL = -5.00/ 5.00

ALPHAR	BETAR	CNFRS	CAFRS	CLMFRS	CYFRS	CYNFRS	CBLRS	CABRS	CYNBRS	CP9	CP10
-6.467	-6.347	-.00080	.02620	-.02340	.01180	.02170	.00010	.03770	.00730	-.45480	-.40290
-6.431	-4.380	-.01740	.02790	-.01240	.01730	.01700	.00340	.04150	.00810	-.49940	-.44600
-6.606	-.088	-.06120	.02890	.01680	.01520	.01760	.01190	.04600	.00890	-.54470	-.50200
-6.348	4.215	-.09680	.03210	.04060	-.00480	.02720	.01890	.04860	.00940	-.57610	-.53120
-6.375	6.240	-.11720	.03250	.05160	-.00940	.03080	.02290	.05060	.00980	-.59860	-.55440
	GRADIENT	-.00924	.00049	.00617	-.00257	.00119	.00180	.00083	.00015	-.00892	-.00991

RUN NO. 1270/ 0 RN/L = 3.50 GRADIENT INTERVAL = -5.00/ 5.00

ALPHAR	BETAR	CNFRS	CAFRS	CLMFRS	CYFRS	CYNFRS	CBLRS	CABRS	CYNBRS	CP9	CP10
-4.157	-6.436	.00510	.02790	-.02060	-.01250	.03440	-.00110	.03800	.00740	-.45440	-.41060
-4.465	-4.278	-.01080	.02910	-.01080	-.00560	.02800	.00200	.04060	.00790	-.48890	-.43580
-4.391	.240	-.04690	.03030	.01640	-.01860	.03390	.00910	.04430	.00860	-.52720	-.48240
-3.872	4.320	-.07350	.03370	.03530	-.03050	.04080	.01430	.04670	.00910	-.55600	-.50800
-4.022	6.180	-.09170	.03410	.04510	-.03150	.04170	.01780	.04830	.00940	-.57540	-.52490
	GRADIENT	-.00731	.00053	.00537	-.00290	.00149	.00143	.00071	.00014	-.00782	-.00843

RUN NO. 1271/ 0 RN/L = 3.50 GRADIENT INTERVAL = -5.00/ 5.00

ALPHAR	BETAR	CNFRS	CAFRS	CLMFRS	CYFRS	CYNFRS	CBLRS	CABRS	CYNBRS	CP9	CP10
-.302	-7.356	.01050	.02910	-.01400	-.02810	.04340	-.00220	.03650	.00710	-.44190	-.39040
-.285	-5.161	.00000	.02940	-.00550	-.02930	.04160	-.00010	.03670	.00710	-.44160	-.39400
-.337	-.764	-.01860	.03190	.00850	-.04170	.04880	.00350	.04190	.00810	-.50260	-.45210
-.247	3.360	-.03990	.03520	.02470	-.05190	.05530	.00760	.04560	.00890	-.54340	-.49480
-.258	5.538	-.05130	.03530	.03160	-.05560	.05730	.00990	.04650	.00900	-.55470	-.50450
	GRADIENT	-.00517	.00080	.00393	-.00247	.00158	.00099	.00090	.00019	-.00989	-.01036

IA156A, AEDC PWT 16T-470, O T S W/SILTS (R8NRA8) (10 MAY 80)

REFERENCE DATA

SREF = 2690.0000 SQ.FT. XMRP = 976.0000 IN. XT
LREF = 1290.3000 INCHES YMRP = .0000 IN. YT
BREF = 1290.3000 INCHES ZMRP = 400.0000 IN. ZT
SCALE = .0200

PARAMETRIC DATA

IB-ELV = 12.000 OB-ELV = 5.000
BDFLAP = .000 SPDBRK = .000
RUDDER = .000 SILTS = 1.000
MACH = 1.100 RN/L = 3.500

RUN NO. 1272/ 0 RN/L = 3.50 GRADIENT INTERVAL = -5.00/ 5.00

ALPHAR	BETAR	CNFRS	CAFRS	CLMFRS	CYFRS	CYNFRS	CBLRS	CABRS	CYNBRS	CP9	CP10
4.512	-5.806	.01180	.03020	-.00680	-.01220	.03150	-.00250	.03780	.00730	-.45340	-.40690
4.346	-3.702	.00900	.03200	-.00380	-.01950	.03510	-.00200	.03930	.00760	-.46860	-.42710
4.104	-.002	.00090	.03250	.00480	-.03500	.04520	-.00040	.04210	.00820	-.50290	-.45640
4.236	3.747	-.00680	.03470	.01340	-.04320	.05120	.00110	.04350	.00840	-.52160	-.46880
4.194	5.804	-.01100	.03430	.01680	-.05270	.05860	.00190	.04460	.00870	-.53510	-.48140
	GRADIENT	-.00212	.00036	.00231	-.00318	.00216	.00042	.00056	.00011	-.00711	-.00559

IA156A, AEDC PWT 16T-470, O T S W/SILTS (R8NRA9) (10 MAY 80)

REFERENCE DATA

SREF = 2690.0000 SQ.FT. XMRP = 976.0000 IN. XT
LREF = 1290.3000 INCHES YMRP = .0000 IN. YT
BREF = 1290.3000 INCHES ZMRP = 400.0000 IN. ZT
SCALE = .0200

PARAMETRIC DATA

IB-ELV = 12.000 OB-ELV = 5.000
BDFLAP = .000 SPDBRK = .000
RUDDER = .000 SILTS = 1.000
MACH = 1.150 RN/L = 3.500

RUN NO. 1273/ 0 RN/L = 3.50 GRADIENT INTERVAL = -5.00/ 5.00

ALPHAR	BETAR	CNFRS	CAFRS	CLMFRS	CYFRS	CYNFRS	CBLRS	CABRS	CYNBRS	CP9	CP10
-8.552	-6.373	-.00940	.02560	-.02620	.03740	.01030	.00180	.03560	.00690	-.43300	-.37730
-8.683	-4.112	-.03310	.02730	-.01120	.04820	.00250	.00650	.03880	.00750	-.46500	-.41940
-8.681	-.041	-.08240	.02930	.02060	.04850	.00080	.01610	.04600	.00890	-.54330	-.50410
-8.489	4.247	-.12750	.03220	.05030	.02850	.01190	.02490	.04620	.00900	-.54700	-.50590
-8.578	6.185	-.14920	.03260	.06090	.02130	.01680	.02920	.04750	.00920	-.56400	-.51790
	GRADIENT	-.01129	.00059	.00735	-.00238	.00114	.00220	.00088	.00018	-.00973	-.01026

RUN NO. 1274/ 0 RN/L = 3.51 GRADIENT INTERVAL = -5.00/ 5.00

ALPHAR	BETAR	CNFRS	CAFRS	CLMFRS	CYFRS	CYNFRS	CBLRS	CABRS	CYNBRS	CP9	CP10
-6.458	-6.350	-.00050	.02680	-.02460	.01210	.02180	.00000	.03510	.00680	-.42460	-.37550
-6.414	-4.372	-.01780	.02860	-.01310	.01860	.01590	.00340	.03840	.00750	-.46270	-.41130
-6.572	-.076	-.06280	.03040	.01760	.01630	.01530	.01220	.04320	.00840	-.51280	-.47150
-6.353	4.243	-.10070	.03340	.04290	-.00060	.02350	.01960	.04580	.00890	-.54360	-.49990
-6.357	6.252	-.12040	.03480	.05360	-.00440	.02670	.02350	.04650	.00900	-.55170	-.50700
	GRADIENT	-.00962	.00056	.00650	-.00223	.00088	.00188	.00086	.00016	-.00939	-.01028

IA156A, AEDC PWT 16T-470, 0 T S W/SILTS (R8NRA9) (10 MAY 80)

REFERENCE DATA

SREF = 2690.0000 SQ.FT. XMRP = 976.0000 IN. XT
LREF = 1290.3000 INCHES YMRP = .0000 IN. YT
BREF = 1290.3000 INCHES ZMRP = 400.0000 IN. ZT
SCALE = .0200

PARAMETRIC DATA

IB-ELV = 12.000 OB-ELV = 5.000
BDFLAP = .000 SPDBRK = .000
RUDDER = .000 SILTS = 1.000
MACH = 1.150 RN/L = 3.500

RUN NO. 1275/ 0 RN/L = 3.51 GRADIENT INTERVAL = -5.00/ 5.00

ALPHAR	BETAR	CNFRS	CAFRS	CLMFRS	CYFRS	CYNFRS	CBLRS	CABRS	CYNBRS	CP9	CP10
-4.149	-6.425	.00400	.02840	-.01970	-.01240	.03360	-.00090	.03470	.00670	-.41640	-.37470
-4.457	-4.272	-.01130	.03020	-.01070	-.00540	.02720	.00210	.03740	.00730	-.44980	-.40140
-4.381	.257	-.04820	.03150	.01740	-.01740	.03230	.00930	.04220	.00820	-.50220	-.45810
-3.868	4.329	-.07640	.03480	.03740	-.02710	.03780	.01480	.04460	.00870	-.53060	-.48440
-4.013	6.215	-.09450	.03580	.04730	-.02810	.03870	.01830	.04580	.00890	-.54590	-.49820
	GRADIENT	-.00758	.00053	.00560	-.00253	.00123	.00148	.00084	.00016	-.00943	-.00970

RUN NO. 1276/ 0 RN/L = 3.50 GRADIENT INTERVAL = -5.00/ 5.00

ALPHAR	BETAR	CNFRS	CAFRS	CLMFRS	CYFRS	CYNFRS	CBLRS	CABRS	CYNBRS	CP9	CP10
-.262	-7.376	.00980	.03000	-.01290	-.02560	.04120	-.00210	.03350	.00650	-.40750	-.35600
-.249	-5.140	-.00070	.03030	-.00440	-.02830	.04070	.00000	.03480	.00680	-.42140	-.37230
-.306	-.786	-.01930	.03330	.00920	-.03960	.04690	.00360	.04070	.00790	-.48910	-.43720
-.217	3.364	-.03980	.03680	.02490	-.05010	.05370	.00760	.04410	.00860	-.52770	-.47660
-.208	5.575	-.05140	.03700	.03270	-.05340	.05500	.00990	.04490	.00870	-.53690	-.48590
	GRADIENT	-.00494	.00084	.00378	-.00253	.00164	.00096	.00082	.00017	-.00930	-.00949

RUN NO. 1277/ 0 RN/L = 3.50 GRADIENT INTERVAL = -5.00/ 5.00

ALPHAR	BETAR	CNFRS	CAFRS	CLMFRS	CYFRS	CYNFRS	CBLRS	CABRS	CYNBRS	CP9	CP10
4.535	-5.783	.01140	.03160	-.00650	-.01100	.03110	-.00250	.03520	.00680	-.42530	-.37750
4.392	-3.687	.00840	.03320	-.00320	-.01750	.03400	-.00190	.03790	.00740	-.45340	-.40900
4.155	.017	-.00030	.03450	.00640	-.03260	.04350	-.00020	.04080	.00790	-.48850	-.43990
4.270	3.749	-.00640	.03620	.01370	-.04210	.05070	.00100	.04180	.00810	-.50110	-.45130
4.223	5.818	-.01130	.03690	.01730	-.05050	.05720	.00200	.04250	.00820	-.51080	-.45660
	GRADIENT	-.00199	.00040	.00227	-.00331	.00225	.00039	.00052	.00009	-.00641	-.00568

IA156A, AEDC PWT 16T-470, 0 T S W/SILTS (R8NRB0) (10 MAY 80)

REFERENCE DATA

SREF = 2690.0000 SQ.FT. XMRP = 976.0000 IN. XT
LREF = 1290.3000 INCHES YMRP = .0000 IN. YT
BREF = 1290.3000 INCHES ZMRP = 400.0000 IN. ZT
SCALE = .0200

PARAMETRIC DATA

IB-ELV = 12.000 OB-ELV = 5.000
BDFLAP = .000 SPDBRK = .000
RUDDER = .000 SILTS = 1.000
MACH = 1.250 RN/L = 3.500

RUN NO. 1278/ 0 RN/L = 3.50 GRADIENT INTERVAL = -5.00/ 5.00

ALPHAR	BETAR	CNFRS	CAFRS	CLMFRS	CYFRS	CYNFRS	CBLRS	CABRS	CYNBRS	CP9	CP10
-8.529	-6.370	-.01610	.02580	-.02240	.04110	.00560	.00310	.03320	.00640	-.40110	-.35480
-8.657	-4.107	-.03960	.02760	-.00730	.04980	-.00070	.00770	.03630	.00710	-.43260	-.39470
-8.620	-.024	-.08530	.03080	.02410	.04600	-.00080	.01660	.04120	.00800	-.48750	-.45140
-8.463	4.324	-.12980	.03400	.05250	.02900	.00760	.02530	.04260	.00830	-.50690	-.46420
-8.554	6.250	-.15060	.03590	.06250	.02380	.01120	.02940	.04290	.00830	-.51310	-.46490
	GRADIENT	-.01069	.00076	.00709	-.00248	.00099	.00209	.00074	.00014	-.00877	-.00819

RUN NO. 1279/ 0 RN/L = 3.50 GRADIENT INTERVAL = -5.00/ 5.00

ALPHAR	BETAR	CNFRS	CAFRS	CLMFRS	CYFRS	CYNFRS	CBLRS	CABRS	CYNBRS	CP9	CP10
-6.460	-6.373	-.00620	.02730	-.02100	.01460	.01780	.00110	.03180	.00620	-.38480	-.33980
-6.388	-4.364	-.02420	.02900	-.00820	.01960	.01310	.00460	.03550	.00690	-.42570	-.38240
-6.507	-.025	-.06560	.03200	.02130	.01370	.01420	.01270	.03980	.00770	-.47360	-.43190
-6.333	4.263	-.10290	.03550	.04450	.00590	.01790	.02000	.04130	.00800	-.49290	-.44820
-6.162	6.394	-.12000	.03710	.05420	-.00130	.02250	.02340	.04220	.00820	-.50540	-.45510
	GRADIENT	-.00912	.00075	.00611	-.00159	.00056	.00179	.00067	.00013	-.00780	-.00763

RUN NO. 1280/ 0 RN/L = 3.50 GRADIENT INTERVAL = -5.00/ 5.00

ALPHAR	BETAR	CNFRS	CAFRS	CLMFRS	CYFRS	CYNFRS	CBLRS	CABRS	CYNBRS	CP9	CP10
-4.252	-6.424	-.00120	.02870	-.01630	-.00820	.02920	.00010	.03160	.00610	-.38220	-.33860
-4.402	-4.282	-.01800	.03030	-.00470	-.00470	.02520	.00340	.03510	.00680	-.42180	-.37690
-4.327	.256	-.05090	.03270	.01940	-.01060	.02710	.00980	.03900	.00760	-.46780	-.42110
-3.849	4.341	-.07690	.03630	.03760	-.01920	.03210	.01490	.04010	.00780	-.48030	-.43310
-3.997	6.244	-.09410	.03770	.04710	-.02150	.03360	.01830	.04190	.00810	-.50390	-.45000
	GRADIENT	-.00684	.00069	.00491	-.00167	.00079	.00134	.00059	.00012	-.00685	-.00658

RUN NO. 1281/ 0 RN/L = 3.51 GRADIENT INTERVAL = -5.00/ 5.00

ALPHAR	BETAR	CNFRS	CAFRS	CLMFRS	CYFRS	CYNFRS	CBLRS	CABRS	CYNBRS	CP9	CP10
-.224	-7.400	.00520	.03000	-.00950	-.02320	.03900	-.00120	.03020	.00590	-.37040	-.31800
-.203	-5.153	-.00490	.03050	-.00130	-.02680	.03920	.00080	.03260	.00630	-.39640	-.34610
-.220	-.781	-.02370	.03470	.01360	-.03730	.04420	.00440	.03720	.00720	-.45120	-.39640
-.130	3.390	-.04180	.03770	.02810	-.04770	.05020	.00800	.04000	.00780	-.48280	-.42770
-.149	5.608	-.05270	.03820	.03510	-.05150	.05230	.01010	.04120	.00800	-.49890	-.44030
	GRADIENT	-.00434	.00072	.00348	-.00249	.00144	.00086	.00067	.00014	-.00758	-.00750

IA156A, AEDC PWT 16T-470, 0 T S W/SILTS (R8NRB0) (10 MAY 80)

REFERENCE DATA

SREF = 2690.0000 SQ.FT. XMRP = 976.0000 IN. XT
LREF = 1290.3000 INCHES YMRP = .0000 IN. YT
BREF = 1290.3000 INCHES ZMRP = 400.0000 IN. ZT
SCALE = .0200

PARAMETRIC DATA

IB-ELV = 12.000 OB-ELV = 5.000
BDFLAP = .000 SPDBRK = .000
RUDDER = .000 SILTS = 1.000
MACH = 1.250 RN/L = 3.500

RUN NO. 1282/ 0 RN/L = 3.51 GRADIENT INTERVAL = -5.00/ 5.00

ALPHAR	BETAR	CNFRS	CAFRS	CLMFRS	CYFRS	CYNFRS	CBLRS	CABRS	CYNBRS	CP9	CP10
4.597	-5.784	.01040	.03160	-.00550	-.00880	.02950	-.00230	.03290	.00640	-.39920	-.34910
4.462	-3.693	.00750	.03330	-.00240	-.01380	.03170	-.00170	.03450	.00670	-.41750	-.36790
4.239	.015	-.00270	.03520	.00910	-.02870	.04120	.00030	.03690	.00720	-.44670	-.39410
4.340	3.746	-.00870	.03650	.01670	-.04080	.05010	.00140	.03960	.00770	-.47890	-.42290
4.300	5.795	-.01280	.03750	.02030	-.04860	.05590	.00230	.03980	.00770	-.48030	-.42560
	GRADIENT	-.00218	.00043	.00257	-.00363	.00247	.00042	.00069	.00013	-.00825	-.00739

IA156A, AEDC PWT 16T-470, 0 T S W/SILTS (R8NRB1) (10 MAY 80)

REFERENCE DATA

SREF = 2690.0000 SQ.FT. XMRP = 976.0000 IN. XT
LREF = 1290.3000 INCHES YMRP = .0000 IN. YT
BREF = 1290.3000 INCHES ZMRP = 400.0000 IN. ZT
SCALE = .0200

PARAMETRIC DATA

IB-ELV = 12.000 OB-ELV = 5.000
BDFLAP = .000 SPDBRK = .000
RUDDER = .000 SILTS = 1.000
MACH = 1.400 RN/L = 3.500

RUN NO. 1283/ 0 RN/L = 3.49 GRADIENT INTERVAL = -5.00/ 5.00

ALPHAR	BETAR	CNFRS	CAFRS	CLMFRS	CYFRS	CYNFRS	CBLRS	CABRS	CYNBRS	CP9	CP10
-8.559	-6.382	-.02470	.02560	-.01730	.04460	.00230	.00470	.02950	.00570	-.35500	-.31760
-8.650	-4.096	-.04610	.02760	-.00390	.05040	-.00310	.00890	.03280	.00640	-.39230	-.35510
-8.623	.058	-.09200	.03230	.02760	.04930	-.00730	.01790	.03690	.00720	-.44120	-.39850
-8.434	4.440	-.13970	.03630	.05810	.03680	-.00160	.02720	.03880	.00750	-.47010	-.41280
-8.527	6.390	-.15890	.03710	.06780	.02520	.00620	.03100	.03870	.00750	-.47410	-.40770
	GRADIENT	-.01096	.00102	.00726	-.00160	.00019	.00214	.00070	.00013	-.00909	-.00673

RUN NO. 1284/ 0 RN/L = 3.50 GRADIENT INTERVAL = -5.00/ 5.00

ALPHAR	BETAR	CNFRS	CAFRS	CLMFRS	CYFRS	CYNFRS	CBLRS	CABRS	CYNBRS	CP9	CP10
-6.484	-6.396	-.01200	.02720	-.01740	.01900	.01470	.00220	.02900	.00560	-.34990	-.31010
-6.444	-4.389	-.02820	.02930	-.00660	.02410	.01000	.00540	.03200	.00620	-.38390	-.34530
-6.554	.012	-.07010	.03240	.02190	.02550	.00500	.01360	.03590	.00700	-.43350	-.38510
-6.312	4.360	-.10480	.03650	.04450	.01470	.00990	.02040	.03690	.00720	-.45170	-.38810
-6.311	6.389	-.12530	.03830	.05570	.00890	.01330	.02440	.03810	.00740	-.46860	-.39840
	GRADIENT	-.00876	.00082	.00584	-.00107	-.00001	.00171	.00056	.00011	-.00776	-.00490

IA156A, AEDC PWT 16T-470, O T S W/SILTS (R8NRB1) (10 MAY 80)

REFERENCE DATA

SREF = 2690.0000 SQ.FT. XMRP = 976.0000 IN. XT
LREF = 1290.3000 INCHES YMRP = .0000 IN. YT
BREF = 1290.3000 INCHES ZMRP = 400.0000 IN. ZT
SCALE = .0200

PARAMETRIC DATA

IB-ELV = 12.000 OB-ELV = 5.000
BDFLAP = .000 SPDBRK = .000
RUDDER = .000 SILTS = 1.000
MACH = 1.400 RN/L = 3.500

RUN NO. 1285/ 0 RN/L = 3.50 GRADIENT INTERVAL = -5.00/ 5.00

ALPHAR	BETAR	CNFRS	CAFRS	CLMFRS	CYFRS	CYNFRS	CBLRS	CABRS	CYNBRS	CP9	CP10
-4.396	-6.419	-.00520	.02900	-.01440	-.00150	.02560	.00090	.02870	.00560	-.34920	-.30480
-4.410	-4.311	-.01930	.03060	-.00450	.00230	.02140	.00360	.03160	.00610	-.38200	-.33730
-4.350	.324	-.05350	.03350	.01990	-.00010	.01900	.01030	.03440	.00670	-.41950	-.36390
-3.804	4.418	-.07670	.03680	.03740	-.01400	.02720	.01490	.03640	.00710	-.44630	-.38400
-3.952	6.309	-.09240	.03800	.04600	-.01710	.02910	.01790	.03730	.00720	-.45750	-.39300
	GRADIENT	-.00659	.00071	.00481	-.00184	.00064	.00130	.00055	.00011	-.00738	-.00536

RUN NO. 1286/ 0 RN/L = 3.50 GRADIENT INTERVAL = -5.00/ 5.00

ALPHAR	BETAR	CNFRS	CAFRS	CLMFRS	CYFRS	CYNFRS	CBLRS	CABRS	CYNBRS	CP9	CP10
-.256	-7.468	.00290	.03040	-.00690	-.01980	.03710	-.00080	.02790	.00540	-.34430	-.29080
-.243	-5.253	-.00570	.03050	.00020	-.02150	.03573	.00090	.02920	.00570	-.35530	-.30890
-.229	-.726	-.02430	.03480	.01510	-.03310	.04070	.00450	.03310	.00640	-.40690	-.34690
-.159	3.404	-.04200	.03730	.02860	-.04340	.04660	.00800	.03640	.00710	-.44710	-.38170
-.200	5.635	-.05190	.03900	.03460	-.04780	.04930	.01000	.03740	.00730	-.46080	-.39130
	GRADIENT	-.00429	.00061	.00327	-.00249	.00143	.00085	.00080	.00017	-.00973	-.00843

RUN NO. 1287/ 0 RN/L = 3.49 GRADIENT INTERVAL = -5.00/ 5.00

ALPHAR	BETAR	CNFRS	CAFRS	CLMFRS	CYFRS	CYNFRS	CBLRS	CABRS	CYNBRS	CP9	CP10
4.718	-5.754	.00900	.03100	-.00330	-.00220	.02570	-.00200	.02880	.00560	-.35290	-.30330
4.558	-3.563	.00610	.03200	.00000	-.00820	.02870	-.00150	.03040	.00590	-.37290	-.31990
4.298	.034	-.00450	.03520	.01220	-.02460	.03950	.00060	.03340	.00650	-.41320	-.34770
4.378	3.759	-.00780	.03740	.01770	-.03680	.04880	.00120	.03500	.00680	-.43470	-.36210
4.317	5.773	-.01230	.03850	.02200	-.04470	.05410	.00210	.03630	.00700	-.44980	-.37640
	GRADIENT	-.00187	.00073	.00238	-.00385	.00271	.00036	.00062	.00012	-.00832	-.00568

IA156A, AEDC PWT 16T-470, 0 T S W/SILTS (R8NRB2) (10 MAY 80)

REFERENCE DATA

SREF = 2690.0000 SQ.FT. XMRP = 976.0000 IN. XT
LREF = 1290.3000 INCHES YMRP = .0000 IN. YT
BREF = 1290.3000 INCHES ZMRP = 400.0000 IN. ZT
SCALE = .0200

PARAMETRIC DATA

IB-ELV = 12.000 OB-ELV = 5.000
BDFLAP = .000 SPDBRK = .000
RUDDER = .000 SILTS = 1.000
MACH = 1.550 RN/L = 3.200

RUN NO. 1288/ 0 RN/L = 3.00 GRADIENT INTERVAL = -5.00/ 5.00

ALPHAR	BETAR	CNFRS	CAFRS	CLMFRS	CYFRS	CYNFRS	CBLRS	CABRS	CYNBRS	CP9	CP10
-8.548	-6.277	-.02960	.02500	-.01330	.04590	-.00080	.00560	.02550	.00500	-.30600	-.27530
-8.631	-3.988	-.04940	.02670	-.00080	.05060	-.00670	.00950	.02830	.00550	-.33890	-.30510
-8.543	.201	-.09460	.03130	.03050	.05010	-.01090	.01840	.03200	.00620	-.38650	-.34350
-8.332	4.554	-.13950	.03470	.06040	.03310	-.00240	.02710	.03450	.00670	-.42160	-.36380
-8.313	6.464	-.15530	.03490	.06890	.01990	.00630	.03020	.03460	.00670	-.42480	-.36250
	GRADIENT	-.01055	.00094	.00716	-.00206	.00047	.00206	.00072	.00014	-.00967	-.00686

RUN NO. 1289/ 0 RN/L = 3.00 GRADIENT INTERVAL = -5.00/ 5.00

ALPHAR	BETAR	CNFRS	CAFRS	CLMFRS	CYFRS	CYNFRS	CBLRS	CABRS	CYNBRS	CP9	CP10
-6.504	-6.321	-.01580	.02620	-.01480	.02350	.01050	.00290	.02530	.00490	-.30420	-.27150
-6.459	-4.302	-.03160	.02770	-.00390	.02800	.00560	.00600	.02800	.00540	-.33460	-.30350
-6.483	.136	-.07070	.03160	.02360	.02730	.00170	.01370	.03120	.00610	-.37860	-.33250
-6.213	4.470	-.10470	.03510	.04570	.01570	.00700	.02030	.03310	.00640	-.40740	-.34790
-6.173	6.502	-.12320	.03700	.05660	.00690	.01270	.02390	.03430	.00670	-.42420	-.35850
	GRADIENT	-.00834	.00084	.00566	-.00140	.00016	.00163	.00058	.00011	-.00831	-.00507

RUN NO. 1290/ 0 RN/L = 3.00 GRADIENT INTERVAL = -5.00/ 5.00

ALPHAR	BETAR	CNFRS	CAFRS	CLMFRS	CYFRS	CYNFRS	CBLRS	CABRS	CYNBRS	CP9	CP10
-4.253	-6.433	-.00660	.02770	-.01320	.00260	.02150	.00110	.02520	.00490	-.30530	-.26770
-4.522	-4.249	-.02240	.02930	-.00230	.00860	.01580	.00420	.02760	.00540	-.33400	-.29490
-4.364	.425	-.05350	.03270	.02040	.00310	.01620	.01030	.03050	.00590	-.37650	-.31870
-3.765	4.535	-.07400	.03510	.03580	-.01160	.02450	.01430	.03230	.00630	-.39870	-.33690
-3.872	6.401	-.09010	.03680	.04510	-.01530	.02680	.01750	.03350	.00650	-.41350	-.34940
	GRADIENT	-.00589	.00066	.00435	-.00227	.00097	.00115	.00054	.00010	-.00740	-.00479

RUN NO. 1291/ 0 RN/L = 3.00 GRADIENT INTERVAL = -5.00/ 5.00

ALPHAR	BETAR	CNFRS	CAFRS	CLMFRS	CYFRS	CYNFRS	CBLRS	CABRS	CYNBRS	CP9	CP10
-.353	-7.425	.00150	.02840	-.00600	-.01580	.03300	-.00060	.02460	.00480	-.30460	-.25510
-.323	-5.233	-.00770	.02980	.00170	-.01940	.03340	.00120	.02610	.00510	-.32040	-.27500
-.317	-.828	-.02530	.03340	.01610	-.03110	.03880	.00470	.02950	.00570	-.36620	-.30570
-.304	3.325	-.03940	.03610	.02620	-.04000	.04420	.00750	.03230	.00630	-.40480	-.33210
-.333	5.500	-.04780	.03730	.03120	-.04430	.04730	.00910	.03350	.00650	-.42110	-.34220
	GRADIENT	-.00339	.00065	.00243	-.00214	.00130	.00067	.00067	.00014	-.00929	-.00636

IA156A, AEDC PWT 16T-470, 0 T S W/SILTS (R8NRB2) (10 MAY 80)

REFERENCE DATA

SREF = 2690.0000 SQ.FT. XMRP = 976.0000 IN. XT
LREF = 1290.3000 INCHES YMRP = .0000 IN. YT
BREF = 1290.3000 INCHES ZMRP = 400.0000 IN. ZT
SCALE = .0200

PARAMETRIC DATA

IB-ELV = 12.000 OB-ELV = 5.000
BDFLAP = .000 SPDBRK = .000
RUDDER = .000 SILTS = 1.000
MACH = 1.550 RN/L = 3.200

RUN NO. 1292/ 0 RN/L = 3.00 GRADIENT INTERVAL = -5.00/ 5.00

ALPHAR	BETAR	CNFRS	CAFRS	CLMFRS	CYFRS	CYNFRS	CBLRS	CABRS	CYNBRS	CP9	CP10
4.699	-5.651	.00760	.03040	-.00120	.00120	.02320	-.00180	.02620	.00510	-.32490	-.27150
4.464	-3.524	.00400	.03110	.00280	-.00520	.02650	-.00110	.02730	.00530	-.33850	-.28320
4.202	.132	-.00570	.03380	.01390	-.02100	.03730	.00080	.03030	.00590	-.37850	-.31280
4.183	3.794	-.00840	.03580	.01800	-.03410	.04670	.00140	.03250	.00630	-.40590	-.33380
4.151	5.833	-.01100	.03740	.02100	-.04390	.05370	.00190	.03320	.00640	-.41350	-.34320
	GRADIENT	-.00169	.00064	.00208	-.00395	.00276	.00034	.00071	.00014	-.00921	-.00691

IA156A, AEDC PWT 16T-470, 0 T S W/SILTS (R8NRB3) (10 MAY 80)

REFERENCE DATA

SREF = 2690.0000 SQ.FT. XMRP = 976.0000 IN. XT
LREF = 1290.3000 INCHES YMRP = .0000 IN. YT
BREF = 1290.3000 INCHES ZMRP = 400.0000 IN. ZT
SCALE = .0200

PARAMETRIC DATA

IB-ELV = 12.000 OB-ELV = 9.000
BDFLAP = .000 SPDBRK = .000
RUDDER = .000 SILTS = 1.000
MACH = .600 RN/L = 3.500

RUN NO. 1295/ 0 RN/L = 3.50 GRADIENT INTERVAL = -5.00/ 5.00

ALPHAR	BETAR	CNFRS	CAFRS	CLMFRS	CYFRS	CYNFRS	CBLRS	CABRS	CYNBRS	CP9	CP10
-8.240	-8.133	.00670	.00820	-.02310	.01630	.01490	-.00120	.02400	.00470	-.30510	-.24110
-8.227	-6.039	-.00980	.00900	-.01370	.02590	.00640	.00200	.02700	.00520	-.34590	-.26950
-8.230	-3.965	-.02770	.01040	-.00280	.03270	-.00020	.00550	.02980	.00580	-.39190	-.29790
-8.161	.275	-.06790	.01000	.02230	.02730	-.00010	.01330	.03360	.00650	-.41560	-.34900
-8.059	4.265	-.09690	.00960	.03740	.01140	.01010	.01900	.03710	.00720	-.44290	-.40130
-8.105	6.209	-.11360	.00980	.04590	.00340	.01540	.02230	.03850	.00750	-.45580	-.42020
-8.148	8.229	-.13230	.01000	.05530	-.00550	.02120	.02600	.03960	.00770	-.46630	-.43530
	GRADIENT	-.00842	-.00010	.00490	-.00257	.00124	.00164	.00089	.00017	-.00742	-.01256

RUN NO. 1296/ 0 RN/L = 3.49 GRADIENT INTERVAL = -5.00/ 5.00

ALPHAR	BETAR	CNFRS	CAFRS	CLMFRS	CYFRS	CYNFRS	CBLRS	CABRS	CYNBRS	CP9	CP10
-6.181	-8.199	.01100	.00980	-.02250	-.00210	.02360	-.00210	.02430	.00470	-.30550	-.24770
-6.148	-6.129	-.00240	.01070	-.01430	.00440	.01710	.00050	.02590	.00500	-.32960	-.26180
-6.083	-4.180	-.01770	.01180	-.00450	.00890	.01180	.00350	.02870	.00560	-.36820	-.28530
-6.146	.016	-.05020	.01110	.01610	.00340	.01250	.00990	.03210	.00620	-.39500	-.33550
-6.035	4.211	-.07680	.01110	.03120	-.00880	.02030	.01510	.03630	.00700	-.43280	-.39340
-5.959	6.218	-.09120	.01180	.03910	-.01590	.02510	.01790	.03750	.00730	-.44590	-.40770
-6.019	8.214	-.10850	.01160	.04770	-.02220	.02960	.02130	.03900	.00760	-.45990	-.42750
	GRADIENT	-.00704	-.00008	.00425	-.00211	.00101	.00138	.00091	.00017	-.00770	-.01288

IA156A, AEDC PWT 16T-470, O T S W/SILTS (R8NRB3) (10 MAY 80)

REFERENCE DATA

SREF = 2690.0000 SQ.FT. XMRP = 976.0000 IN. XT
LREF = 1290.3000 INCHES YMRP = .0000 IN. YT
BREF = 1290.3000 INCHES ZMRP = 400.0000 IN. ZT
SCALE = .0200

PARAMETRIC DATA

IB-ELV = 12.000 OB-ELV = 9.000
BDFLAP = .000 SPDBRK = .000
RUDDER = .000 SILTS = 1.000
MACH = .600 RN/L = 3.500

RUN NO. 1297/ 0 RN/L = 3.49 GRADIENT INTERVAL = -5.00/ 5.00

ALPHAR	BETAR	CNFRS	CAFRS	CLMFRS	CYFRS	CYNFRS	CBLRS	CABRS	CYNBRS	CP9	CP10
-4.190	-8.213	.01200	.01160	-.01990	-.01350	.02910	-.00230	.02410	.00470	-.30220	-.24660
-4.188	-6.182	.00000	.01190	-.01180	-.01060	.02490	.00010	.02560	.00500	-.31880	-.26350
-4.212	-4.080	-.01310	.01250	-.00340	-.00840	.02100	.00260	.02840	.00550	-.36030	-.28640
-4.010	.111	-.03750	.01220	.01310	-.01860	.02580	.00740	.03190	.00620	-.38970	-.33650
-3.698	4.310	-.05730	.01350	.02580	-.02920	.03230	.01130	.03490	.00680	-.41990	-.37430
-3.819	6.128	-.06940	.01300	.03230	-.03200	.03400	.01360	.03650	.00710	-.43410	-.39680
-3.972	8.122	-.08330	.01360	.03940	-.03730	.03810	.01640	.03770	.00730	-.44890	-.40910
	GRADIENT	-.00527	.00012	.00348	-.00248	.00135	.00104	.00077	.00015	-.00710	-.01048

RUN NO. 1298/ 0 RN/L = 3.49 GRADIENT INTERVAL = -5.00/ 5.00

ALPHAR	BETAR	CNFRS	CAFRS	CLMFRS	CYFRS	CYNFRS	CBLRS	CABRS	CYNBRS	CP9	CP10
-.232	-8.999	.01680	.01450	-.01810	-.02160	.03340	-.00330	.02560	.00500	-.32500	-.25920
-.219	-6.803	.00680	.01340	-.00990	-.02170	.03200	-.00130	.02500	.00490	-.31730	-.25350
-.208	-4.624	-.00240	.01340	-.00290	-.02390	.03190	.00050	.02660	.00520	-.33260	-.27470
-.204	-.556	-.01690	.01370	.00760	-.03430	.03700	.00330	.03080	.00600	-.37550	-.32510
-.163	3.525	-.02970	.01480	.01650	-.04320	.04290	.00590	.03430	.00670	-.41060	-.37110
-.163	5.625	-.03810	.01520	.02160	-.04730	.04550	.00750	.03570	.00690	-.42630	-.38720
-.160	7.724	-.04390	.01540	.02540	-.05200	.04880	.00860	.03680	.00710	-.43820	-.39920
	GRADIENT	-.00335	.00017	.00238	-.00237	.00135	.00066	.00094	.00018	-.00957	-.01183

RUN NO. 1299/ 0 RN/L = 3.49 GRADIENT INTERVAL = -5.00/ 5.00

ALPHAR	BETAR	CNFRS	CAFRS	CLMFRS	CYFRS	CYNFRS	CBLRS	CABRS	CYNBRS	CP9	CP10
4.439	-7.859	.01320	.01530	-.00900	-.01000	.02310	-.00260	.02640	.00510	-.33680	-.26410
4.355	-5.743	.00920	.01440	-.00470	-.01250	.02400	-.00180	.02640	.00510	-.33340	-.26760
4.349	-3.784	.00730	.01370	-.00210	-.01660	.02630	-.00140	.02760	.00540	-.34670	-.28340
4.153	.010	.00530	.01360	.00040	-.03030	.03580	-.00100	.03010	.00580	-.36680	-.31890
4.199	3.897	.00400	.01400	.00330	-.03930	.04220	-.00080	.03360	.00650	-.40350	-.36100
4.142	5.999	.00090	.01530	.00600	-.04520	.04680	-.00020	.03480	.00680	-.41670	-.37550
4.119	7.979	-.00120	.01560	.00790	-.04890	.04970	.00020	.03560	.00690	-.42590	-.38460
	GRADIENT	-.00043	.00004	.00070	-.00295	.00207	.00008	.00078	.00014	-.00740	-.01011

IA156A, AEDC PWT 16T-470, O T S W/SILTS (R8NRB3) (10 MAY 80)

REFERENCE DATA

SREF = 2690.0000 SQ.FT. XMRP = 976.0000 IN. XT
LREF = 1290.3000 INCHES YMRP = .0000 IN. YT
BREF = 1290.3000 INCHES ZMRP = 400.0000 IN. ZT
SCALE = .0200

PARAMETRIC DATA

IB-ELV = 12.000 OB-ELV = 9.000
BDFLAP = .000 SPDBRK = .000
RUDDER = .000 SILTS = 1.000
MACH = .600 RN/L = 3.500

RUN NO. 1300/ 0 RN/L = 3.50 GRADIENT INTERVAL = -5.00/ 5.00

ALPHAR	BETAR	CNFRS	CAFRS	CLMFRS	CYFRS	CYNFRS	CBLRS	CABRS	CYNBRS	CP9	CP10
6.521	-7.924	.01550	.01520	-.00830	.00070	.01630	-.00310	.02680	.00520	-.34250	-.26940
6.521	-5.866	.01370	.01450	-.00510	-.00100	.01650	-.00270	.02670	.00520	-.33930	-.26940
6.520	-3.824	.01310	.01390	-.00310	-.00480	.01890	-.00260	.02820	.00550	-.35290	-.28960
6.247	.119	.01450	.01380	-.00180	-.01990	.02980	-.00290	.03060	.00590	-.37070	-.32650
6.177	3.929	.01620	.01440	-.00060	-.02920	.03620	-.00320	.03300	.00640	-.39990	-.35220
6.148	5.838	.01730	.01480	-.00030	-.03320	.03950	-.00340	.03410	.00660	-.40900	-.36690
6.154	7.868	.01750	.01510	.00070	-.03780	.04310	-.00340	.03510	.00680	-.41830	-.38060
	GRADIENT	.00040	.00006	.00032	-.00315	.00223	-.00008	.00062	.00012	-.00605	-.00808

RUN NO. 1301/ 0 RN/L = 3.50 GRADIENT INTERVAL = -5.00/ 5.00

ALPHAR	BETAR	CNFRS	CAFRS	CLMFRS	CYFRS	CYNFRS	CBLRS	CABRS	CYNBRS	CP9	CP10
8.456	-7.798	.01950	.01310	-.00840	.01590	.00750	-.00390	.02780	.00540	-.35180	-.28160
8.381	-5.736	.01820	.01330	-.00520	.01330	.00830	-.00360	.02740	.00530	-.34460	-.27950
8.411	-3.793	.01920	.01380	-.00360	.00960	.01090	-.00380	.02770	.00540	-.34640	-.28430
8.337	.093	.02380	.01380	-.00300	-.00310	.02040	-.00470	.03180	.00620	-.38610	-.33910
8.385	4.046	.03230	.01460	-.00530	-.00980	.02480	-.00630	.03260	.00630	-.39660	-.34590
8.349	6.035	.03660	.01310	-.00670	-.01550	.02890	-.00720	.03530	.00690	-.42710	-.37750
8.327	8.043	.03920	.01410	-.00720	-.02320	.03480	-.00770	.03530	.00690	-.42290	-.38160
	GRADIENT	.00167	.00010	-.00022	-.00247	.00177	-.00032	.00062	.00011	-.00639	-.00784

IA156A, AEDC PWT 16T-470, 0 T S W/SILTS (R8NRB4) (10 MAY 80)

REFERENCE DATA

SREF = 2690.0000 SQ.FT. XMRP = 976.0000 IN. XT
LREF = 1290.3000 INCHES YMRP = .0000 IN. YT
BREF = 1290.3000 INCHES ZMRP = 400.0000 IN. ZT
SCALE = .0200

PARAMETRIC DATA

IB-ELV = 12.000 OB-ELV = 9.000
BDFLAP = .000 SPDBRK = .000
RUDDER = .000 SILTS = 1.000
MACH = .800 RN/L = 3.500

RUN NO. 1302/ 0 RN/L = 3.50 GRADIENT INTERVAL = -5.00/ 5.00

ALPHAR	BETAR	CNFRS	CAFRS	CLMFRS	CYFRS	CYNFRS	CBLRS	CABRS	CYNBRS	CP9	CP10
-8.394	-6.175	-.00930	.01150	-.01660	.03440	.00430	.00190	.02360	.00460	-.30210	-.23630
-8.237	-4.150	-.02610	.01270	-.00570	.03960	-.00060	.00520	.02880	.00560	-.35960	-.29640
-8.353	.235	-.07070	.01260	.02260	.03950	-.00280	.01390	.03410	.00660	-.41790	-.35800
-8.258	4.277	-.10030	.01300	.03720	.02630	.00600	.01970	.03610	.00700	-.42740	-.39490
-8.290	6.225	-.11870	.01290	.04610	.01910	.01090	.02330	.03790	.00740	-.44280	-.41970
	GRADIENT	-.00882	.00003	.00511	-.00156	.00077	.00172	.00087	.00017	-.00812	-.01172

RUN NO. 1303/ 0 RN/L = 3.50 GRADIENT INTERVAL = -5.00/ 5.00

ALPHAR	BETAR	CNFRS	CAFRS	CLMFRS	CYFRS	CYNFRS	CBLRS	CABRS	CYNBRS	CP9	CP10
-6.247	-6.252	-.00060	.01250	-.01690	.01270	.01480	.00020	.02440	.00470	-.30550	-.25030
-6.205	-4.273	-.01650	.01440	-.00660	.01690	.01050	.00330	.02760	.00540	-.34460	-.28490
-6.325	.008	-.05080	.01450	.01550	.01330	.01030	.01000	.03160	.00610	-.38510	-.33430
-6.187	4.246	-.07930	.01440	.03110	.00010	.01860	.01560	.03560	.00690	-.42060	-.39070
-5.992	6.369	-.09310	.01550	.03880	-.00910	.02450	.01830	.03620	.00700	-.42390	-.40090
	GRADIENT	-.00737	.00000	.00443	-.00197	.00095	.00144	.00094	.00018	-.00892	-.01242

RUN NO. 1304/ 0 RN/L = 3.50 GRADIENT INTERVAL = -5.00/ 5.00

ALPHAR	BETAR	CNFRS	CAFRS	CLMFRS	CYFRS	CYNFRS	CBLRS	CABRS	CYNBRS	CP9	CP10
-4.144	-6.348	.00260	.01460	-.01440	-.00470	.02360	-.00050	.02400	.00470	-.29880	-.24830
-4.298	-4.192	-.01210	.01550	-.00500	-.00110	.01950	.00240	.02740	.00530	-.34110	-.28390
-4.236	.284	-.03850	.01520	.01270	-.01130	.02420	.00760	.03140	.00610	-.37770	-.33740
-3.809	4.331	-.05920	.01630	.02560	-.02290	.03130	.01160	.03450	.00670	-.41010	-.37470
-3.904	6.192	-.07190	.01590	.03240	-.02690	.03380	.01410	.03640	.00710	-.42760	-.40090
	GRADIENT	-.00553	.00009	.00360	-.00255	.00138	.00108	.00083	.00016	-.00810	-.01068

RUN NO. 1306/ 0 RN/L = 3.50 GRADIENT INTERVAL = -5.00/ 5.00

ALPHAR	BETAR	CNFRS	CAFRS	CLMFRS	CYFRS	CYNFRS	CBLRS	CABRS	CYNBRS	CP9	CP10
-.230	-7.118	.01170	.01730	-.01460	-.02240	.03260	-.00230	.02490	.00480	-.31340	-.25320
-.231	-4.934	.00090	.01650	-.00690	-.02390	.03210	-.00010	.02560	.00500	-.31790	-.26540
-.248	-.748	-.01620	.01630	.00520	-.03110	.03580	.00320	.02920	.00570	-.35260	-.31320
-.201	3.423	-.03220	.01740	.01650	-.04070	.04230	.00630	.03360	.00650	-.39910	-.36570
-.190	5.543	-.04180	.01820	.02290	-.04500	.04530	.00820	.03590	.00700	-.42730	-.39020
	GRADIENT	-.00396	.00011	.00280	-.00201	.00122	.00077	.00096	.00018	-.00972	-.01200

IA156A, AEDC PWT 16T-470, 0 T S W/SILTS (R8NRB4) (10 MAY 80)

REFERENCE DATA

SREF = 2690.0000 SQ.FT. XMRP = 976.0000 IN. XT
LREF = 1290.3000 INCHES YMRP = .0000 IN. YT
BREF = 1290.3000 INCHES ZMRP = 400.0000 IN. ZT
SCALE = .0200

PARAMETRIC DATA

IB-ELV = 12.000 OB-ELV = 9.000
BDFLAP = .000 SPDBRK = .000
RUDDER = .000 SILTS = 1.000
MACH = .800 RN/L = 3.500

RUN NO. 1314/ 0 RN/L = 3.49 GRADIENT INTERVAL = -5.00/ 5.00

ALPHAR	BETAR	CNFRS	CAFRS	CLMFRS	CYFRS	CYNFRS	CBLRS	CABRS	CYNBRS	CP9	CP10
6.485	-5.834	.01500	.01730	-.00590	.00000	.01820	-.00300	.02750	.00530	-.34440	-.28160
6.478	-3.798	.01360	.01760	-.00270	-.00270	.01980	-.00270	.02720	.00530	-.33730	-.28350
6.183	.065	.01500	.01610	-.00120	-.01900	.03140	-.00300	.03150	.00610	-.37830	-.33890
6.153	3.809	.01710	.01660	-.00050	-.02620	.03640	-.00340	.03400	.00660	-.40680	-.36740
6.140	5.791	.01860	.01800	-.00050	-.03270	.04160	-.00370	.03480	.00670	-.41520	-.37640
	GRADIENT	.00046	-.00013	.00029	-.00310	.00219	-.00009	.00090	.00017	-.00914	-.01105

IA156A, AEDC PWT 16T-470, 0 T S W/SILTS (R8NRB5) (10 MAY 80)

REFERENCE DATA

SREF = 2690.0000 SQ.FT. XMRP = 976.0000 IN. XT
LREF = 1290.3000 INCHES YMRP = .0000 IN. YT
BREF = 1290.3000 INCHES ZMRP = 400.0000 IN. ZT
SCALE = .0200

PARAMETRIC DATA

IB-ELV = 12.000 OB-ELV = 9.000
BDFLAP = .000 SPDBRK = .000
RUDDER = .000 SILTS = 1.000
MACH = .800 RN/L = 3.500

RUN NO. 1313/ 0 RN/L = 3.49 GRADIENT INTERVAL = -5.00/ 5.00

ALPHAR	BETAR	CNFRS	CAFRS	CLMFRS	CYFRS	CYNFRS	CBLRS	CABRS	CYNBRS	CP9	CP10
-.236	-7.085	.01170	.01720	-.01460	-.02280	.03260	-.00230	.02510	.00490	-.31710	-.25590
-.235	-4.967	.00120	.01700	-.00720	-.02400	.03240	-.00020	.02580	.00500	-.32140	-.26690
-.254	-.743	-.01610	.01680	.00490	-.03130	.03620	.00320	.02960	.00570	-.35730	-.31700
-.202	3.428	-.03260	.01780	.01670	-.04080	.04260	.00640	.03380	.00660	-.40150	-.36740
-.195	5.554	-.04230	.01820	.02320	-.04520	.04530	.00830	.03610	.00700	-.43060	-.39250
	GRADIENT	-.00403	.00009	.00285	-.00200	.00121	.00079	.00095	.00019	-.00954	-.01197

IA156A, AEDC PWT 16T-470, 0 T S W/SILTS (R8NRB6) (10 MAY 80)

REFERENCE DATA

SREF = 2690.0000 SQ.FT. XMRP = 976.0000 IN. XT
LREF = 1290.3000 INCHES YMRP = .0000 IN. YT
BREF = 1290.3000 INCHES ZMRP = 400.0000 IN. ZT
SCALE = .0200

PARAMETRIC DATA

IB-ELV = 12.000 OB-ELV = 9.000
BDFLAP = .000 SPDBRK = .000
RUDDER = .000 SILTS = 1.000
MACH = .900 RN/L = 3.500

RUN NO. 1308/ 0 RN/L = 3.50 GRADIENT INTERVAL = -5.00/ 5.00

ALPHAR	BETAR	CNFRS	CAFRS	CLMFRS	CYFRS	CYNFRS	CBLRS	CABRS	CYNBRS	CP9	CP10
-8.367	-6.280	-.00740	.01370	-.01890	.04190	.00280	.00150	.02720	.00530	-.34140	-.27830
-8.394	-4.148	-.02840	.01510	-.00630	.05030	-.00380	.00560	.03150	.00610	-.38720	-.33150
-8.425	.103	-.07230	.01510	.02180	.04560	-.00230	.01420	.03520	.00680	-.42400	-.37810
-8.326	4.192	-.10470	.01590	.03910	.03160	.00590	.02060	.03700	.00720	-.42520	-.41670
-8.387	6.178	-.12380	.01590	.04770	.02550	.01020	.02430	.03870	.00750	-.44220	-.43770
	GRADIENT	-.00916	.00010	.00545	-.00223	.00116	.00180	.00066	.00013	-.00458	-.01022

RUN NO. 1309/ 0 RN/L = 3.50 GRADIENT INTERVAL = -5.00/ 5.00

ALPHAR	BETAR	CNFRS	CAFRS	CLMFRS	CYFRS	CYNFRS	CBLRS	CABRS	CYNBRS	CP9	CP10
-6.321	-6.287	-.00010	.01550	-.01950	.01920	.01370	.00010	.02730	.00530	-.33730	-.28480
-6.259	-4.308	-.01590	.01770	-.00900	.02350	.00890	.00320	.02930	.00570	-.35920	-.30740
-6.397	-.028	-.05310	.01670	.01500	.01950	.00960	.01040	.03340	.00650	-.40200	-.35920
-6.259	4.225	-.08320	.01770	.03240	.00770	.01570	.01630	.03710	.00720	-.42630	-.41810
-6.075	6.351	-.09890	.01930	.04090	-.00190	.02200	.01940	.03720	.00720	-.42630	-.41960
	GRADIENT	-.00789	-.00000	.00485	-.00185	.00080	.00154	.00091	.00018	-.00787	-.01297

RUN NO. 1310/ 0 RN/L = 3.49 GRADIENT INTERVAL = -5.00/ 5.00

ALPHAR	BETAR	CNFRS	CAFRS	CLMFRS	CYFRS	CYNFRS	CBLRS	CABRS	CYNBRS	CP9	CP10
-4.140	-6.384	.00410	.01810	-.01720	-.00130	.02430	-.00070	.02650	.00510	-.32300	-.27990
-4.358	-4.233	-.01010	.01900	-.00840	.00370	.01900	.00200	.02950	.00570	-.35850	-.31380
-4.310	.266	-.03880	.01780	.01120	-.00660	.02330	.00760	.03210	.00620	-.37990	-.35110
-3.851	4.331	-.06160	.01990	.02630	-.01770	.02890	.01210	.03590	.00700	-.41730	-.39950
-3.968	6.179	-.07600	.02030	.03390	-.02210	.03200	.01490	.03760	.00730	-.43770	-.41770
	GRADIENT	-.00602	.00010	.00406	-.00250	.00115	.00118	.00074	.00015	-.00683	-.00998

RUN NO. 1311/ 0 RN/L = 3.49 GRADIENT INTERVAL = -5.00/ 5.00

ALPHAR	BETAR	CNFRS	CAFRS	CLMFRS	CYFRS	CYNFRS	CBLRS	CABRS	CYNBRS	CP9	CP10
-.283	-7.233	.01320	.02060	-.01740	-.02160	.03440	-.00250	.02750	.00530	-.33670	-.29080
-.285	-5.054	.00380	.02060	-.01070	-.02100	.03250	-.00070	.02820	.00550	-.34320	-.29940
-.332	-.730	-.01420	.02020	.00250	-.02760	.03580	.00280	.03120	.00610	-.37430	-.33710
-.268	3.376	-.03210	.02110	.01600	-.03990	.04390	.00630	.03560	.00690	-.42250	-.38760
-.253	5.536	-.04190	.02170	.02260	-.04610	.04780	.00820	.03750	.00730	-.44690	-.40700
	GRADIENT	-.00436	.00022	.00329	-.00300	.00197	.00085	.00107	.00019	-.01174	-.01230

IA156A, AEDC PWT 16T-470, 0 T S W/SILTS (R8NRB6) (10 MAY 80)

REFERENCE DATA

SREF =	2690.0000 SQ.FT.	XMRP =	976.0000 IN. XT		
LREF =	1290.3000 INCHES	YMRP =	.0000 IN. YT		
BREF =	1290.3000 INCHES	ZMRP =	400.0000 IN. ZT		
SCALE =	.0200				

PARAMETRIC DATA

IB-ELV =	12.000	OB-ELV =	9.000
BDFLAP =	.000	SPDBRK =	.000
RUDDER =	.000	SILTS =	1.000
MACH =	.900	RN/L =	3.500

RUN NO. 1312/ 0 RN/L = 3.50 GRADIENT INTERVAL = -5.00/ 5.00

ALPHAR	BETAR	CNFRS	CAFRS	CLMFRS	CYFRS	CYNFRS	CBLRS	CABRS	CYNBRS	CP9	CP10
4.451	-5.769	.01110	.02090	-.00500	-.01300	.02730	-.00220	.02890	.00560	-.35720	-.30020
4.323	-3.701	.00860	.02090	-.00290	-.01890	.02970	-.00170	.03030	.00590	-.36980	-.32130
4.007	-.010	.00430	.02110	.00000	-.03280	.03910	-.00080	.03200	.00620	-.38410	-.34550
4.162	3.766	-.00100	.02150	.00630	-.04010	.04420	.00020	.03570	.00690	-.42820	-.38530
4.091	5.858	-.00540	.02200	.00910	-.04710	.04980	.00110	.03750	.00730	-.44620	-.40680
	GRADIENT	-.00129	.00008	.00123	-.00284	.00194	.00025	.00072	.00013	-.00784	-.00858

IA156A, AEDC PWT 16T-470, 0 T S (R8NRB7) (10 MAY 80)

REFERENCE DATA

SREF =	2690.0000 SQ.FT.	XMRP =	976.0000 IN. XT		
LREF =	1290.3000 INCHES	YMRP =	.0000 IN. YT		
BREF =	1290.3000 INCHES	ZMRP =	400.0000 IN. ZT		
SCALE =	.0200				

PARAMETRIC DATA

IB-ELV =	12.000	OB-ELV =	9.000
BDFLAP =	.000	SPDBRK =	.000
RUDDER =	.000	SILTS =	.000
MACH =	.800	RN/L =	3.500

RUN NO. 1324/ 0 RN/L = 3.50 GRADIENT INTERVAL = -5.00/ 5.00

ALPHAR	BETAR	CNFRS	CAFRS	CLMFRS	CYFRS	CYNFRS	CBLRS	CABRS	CYNBRS	CP9	CP10
4.517	-5.877	.00870	.01760	-.00230	-.01120	.02500	-.00170	.02660	.00520	-.33460	-.27230
4.321	-3.636	.00610	.01680	.00040	-.01790	.02800	-.00120	.02790	.00540	-.34510	-.28950
4.088	.080	.00410	.01720	.00260	-.03240	.03790	-.00080	.02910	.00560	-.35020	-.31200
4.172	3.873	.00170	.01760	.00560	-.03920	.04320	-.00030	.03370	.00650	-.40090	-.36710
4.111	5.899	-.00270	.01850	.00830	-.04500	.04790	.00050	.03570	.00690	-.42100	-.39260
	GRADIENT	-.00059	.00011	.00069	-.00283	.00202	.00012	.00077	.00015	-.00745	-.01035

IA156A, AEDC PWT 16T-470, O T S (R8NR88) (10 MAY 80)

REFERENCE DATA

SREF = 2690.0000 SQ.FT. XMRP = 976.0000 IN. XT
LREF = 1290.3000 INCHES YMRP = .0000 IN. YT
BREF = 1290.3000 INCHES ZMRP = 400.0000 IN. ZT
SCALE = .0200

PARAMETRIC DATA

IB-ELV = 12.000 OB-ELV = 9.000
BDFLAP = .000 SPDBRK = .000
RUDDER = .000 SILTS = .000
MACH = .950 RN/L = 3.500

RUN NO. 1325/ 0 RN/L = 3.51 GRADIENT INTERVAL = -5.00/ 5.00

ALPHAR	BETAR	CNFRS	CAFRS	CLMFRS	CYFRS	CYNFRS	CBLRS	CABRS	CYNBRS	CP9	CP10
-8.412	-6.301	-.01030	.01470	-.01830	.03710	.00580	.00210	.02850	.00550	-.35890	-.29000
-8.585	-4.037	-.03150	.01720	-.00700	.04720	-.00190	.00620	.03440	.00670	-.41770	-.36610
-8.536	-.031	-.07240	.01730	.01950	.04550	-.00200	.01420	.03970	.00770	-.47150	-.43290
-8.438	4.287	-.11420	.01920	.04280	.03330	.00640	.02240	.03980	.00770	-.45720	-.44920
-8.466	6.166	-.13280	.01990	.05190	.02700	.01090	.02610	.04130	.00800	-.47590	-.46340
	GRADIENT	-.00993	.00024	.00598	-.00168	.00101	.00195	.00064	.00012	-.00464	-.00990

RUN NO. 1326/ 0 RN/L = 3.50 GRADIENT INTERVAL = -5.00/ 5.00

ALPHAR	BETAR	CNFRS	CAFRS	CLMFRS	CYFRS	CYNFRS	CBLRS	CABRS	CYNBRS	CP9	CP10
-6.385	-6.298	-.00180	.01830	-.01890	.01380	.01800	.00040	.02850	.00550	-.35380	-.29640
-6.323	-4.315	-.01650	.02020	-.00950	.01850	.01250	.00330	.03240	.00630	-.39390	-.34330
-6.489	-.057	-.05470	.02010	.01450	.01920	.01060	.01070	.03810	.00740	-.45110	-.41650
-6.308	4.205	-.08870	.02200	.03540	.00610	.01760	.01740	.03930	.00760	-.45160	-.44290
-6.039	6.340	-.10510	.02250	.04510	-.00670	.02490	.02060	.04240	.00820	-.48990	-.47470
	GRADIENT	-.00847	.00021	.00527	-.00146	.00060	.00165	.00081	.00015	-.00677	-.01169

RUN NO. 1327/ 0 RN/L = 3.50 GRADIENT INTERVAL = -5.00/ 5.00

ALPHAR	BETAR	CNFRS	CAFRS	CLMFRS	CYFRS	CYNFRS	CBLRS	CABRS	CYNBRS	CP9	CP10
-4.160	-6.386	.00240	.02060	-.01590	-.00650	.02810	-.00040	.02860	.00560	-.34930	-.30290
-4.388	-4.229	-.01110	.02150	-.00780	-.00180	.02260	.00220	.03290	.00640	-.39360	-.35580
-4.337	.261	-.04260	.02150	.01430	-.01240	.02710	.00830	.03650	.00710	-.43130	-.39910
-3.856	4.319	-.06680	.02330	.03030	-.02450	.03320	.01310	.03980	.00770	-.46450	-.44260
-3.986	6.188	-.08190	.02350	.03810	-.02760	.03540	.01600	.04120	.00800	-.48190	-.45660
	GRADIENT	-.00652	.00021	.00447	-.00265	.00124	.00128	.00081	.00015	-.00830	-.01015

RUN NO. 1328/ 0 RN/L = 3.50 GRADIENT INTERVAL = -5.00/ 5.00

ALPHAR	BETAR	CNFRS	CAFRS	CLMFRS	CYFRS	CYNFRS	CBLRS	CABRS	CYNBRS	CP9	CP10
-.279	-7.254	.00950	.02270	-.01280	-.01980	.03590	-.00190	.02810	.00540	-.34600	-.29350
-.255	-5.084	.00020	.02280	-.00570	-.02050	.03420	-.00010	.03050	.00590	-.37170	-.32240
-.290	-.748	-.01630	.02360	.00660	-.03250	.04050	.00320	.03470	.00670	-.41640	-.37470
-.233	3.351	-.03350	.02530	.01890	-.04530	.04820	.00650	.03970	.00770	-.47540	-.42950
-.237	5.536	-.04380	.02540	.02500	-.05070	.05170	.00860	.04050	.00790	-.48490	-.43720
	GRADIENT	-.00420	.00041	.00300	-.00312	.00188	.00081	.00122	.00024	-.01439	-.01337

IA156A, AEDC PWT 16T-470, 0 T S (R8NRB8) (10 MAY 80)

REFERENCE DATA

SREF = 2690.0000 SQ.FT. XMRP = 976.0000 IN. XT
LREF = 1290.3000 INCHES YMRP = .0000 IN. YT
BREF = 1290.3000 INCHES ZMRP = 400.0000 IN. ZT
SCALE = .0200

PARAMETRIC DATA

IB-ELV = 12.000 OB-ELV = 9.000
BDFLAP = .000 SPDBRK = .000
RUDDER = .000 SILTS = .000
MACH = .950 RN/L = 3.500

RUN NO. 1329/ 0 RN/L = 3.50 GRADIENT INTERVAL = -5.00/ 5.00

ALPHAR	BETAR	CNFRS	CAFRS	CLMFRS	CYFRS	CYNFRS	CBLRS	CABRS	CYNBRS	CP9	CP10
4.260	-5.647	.00890	.02240	-.00390	-.01430	.02920	-.00180	.03150	.00610	-.38920	-.32770
4.283	-3.895	.00690	.02350	-.00200	-.01800	.03100	-.00140	.03250	.00630	-.39760	-.34270
4.170	.059	.00220	.02390	.00190	-.03120	.04030	-.00050	.03570	.00690	-.43050	-.38370
4.163	3.663	-.00480	.02560	.00960	-.03840	.04560	.00090	.03870	.00750	-.46600	-.41660
4.135	5.819	-.00870	.02460	.01270	-.04640	.05130	.00160	.04090	.00790	-.49140	-.44110
	GRADIENT	-.00154	.00028	.00153	-.00271	.00194	.00030	.00082	.00016	-.00904	-.00979

IA156A, AEDC PWT 16T-470, 0 T S (R8NRB9) (10 MAY 80)

REFERENCE DATA

SREF = 2690.0000 SQ.FT. XMRP = 976.0000 IN. XT
LREF = 1290.3000 INCHES YMRP = .0000 IN. YT
BREF = 1290.3000 INCHES ZMRP = 400.0000 IN. ZT
SCALE = .0200

PARAMETRIC DATA

IB-ELV = 12.000 OB-ELV = 9.000
BDFLAP = .000 SPDBRK = .000
RUDDER = .000 SILTS = .000
MACH = 1.050 RN/L = 3.500

RUN NO. 1330/ 0 RN/L = 3.50 GRADIENT INTERVAL = -5.00/ 5.00

ALPHAR	BETAR	CNFRS	CAFRS	CLMFRS	CYFRS	CYNFRS	CBLRS	CABRS	CYNBRS	CP9	CP10
-8.637	-6.318	-.00840	.02240	-.02560	.03630	.01080	.00170	.04060	.00790	-.49580	-.42960
-8.639	-4.185	-.03010	.02490	-.01190	.04340	.00570	.00600	.04610	.00890	-.54970	-.49910
-8.650	.092	-.08190	.02550	.02180	.04260	.00510	.01610	.05300	.01030	-.62600	-.58190
-8.493	4.180	-.12430	.02610	.04860	.02500	.01680	.02430	.05380	.01040	-.63290	-.59090
-8.541	6.140	-.14530	.02820	.05900	.01960	.02040	.02850	.05500	.01070	-.65240	-.59950
	GRADIENT	-.01127	.00014	.00724	-.00218	.00132	.00219	.00093	.00018	-.01001	-.01104

RUN NO. 1331/ 0 RN/L = 3.51 GRADIENT INTERVAL = -5.00/ 5.00

ALPHAR	BETAR	CNFRS	CAFRS	CLMFRS	CYFRS	CYNFRS	CBLRS	CABRS	CYNBRS	CP9	CP10
-6.450	-6.351	.00170	.02450	-.02490	.00830	.02420	-.00030	.04080	.00790	-.49140	-.43900
-6.355	-4.370	-.01580	.02710	-.01270	.01240	.02010	.00310	.04530	.00880	-.54230	-.48920
-6.543	-.081	-.05970	.02740	.01680	.01060	.02080	.01170	.05010	.00970	-.59180	-.54860
-6.380	4.185	-.09790	.02970	.04090	-.00190	.02710	.01920	.05310	.01030	-.62830	-.58090
-6.087	6.341	-.11420	.03000	.05110	-.01670	.03530	.02240	.05430	.01050	-.64050	-.59480
	GRADIENT	-.00960	.00030	.00627	-.00167	.00082	.00188	.00091	.00018	-.01005	-.01072

IA156A, AEDC PWT 16T-470, O T S (R8NR89) (10 MAY 80)

REFERENCE DATA

SREF = 2690.0000 SQ.FT. XMRP = 976.0000 IN. XT
LREF = 1290.3000 INCHES YMRP = .0000 IN. YT
BREF = 1290.3000 INCHES ZMRP = 400.0000 IN. ZT
SCALE = .0200

PARAMETRIC DATA

IB-ELV = 12.000 OB-ELV = 9.000
BDFLAP = .000 SPDBRK = .000
RUDDER = .000 SILTS = .000
MACH = 1.050 RN/L = 3.500

RUN NO. 1332/ 0 RN/L = 3.50 GRADIENT INTERVAL = -5.00/ 5.00

ALPHAR	BETAR	CNFRS	CAFRS	CLMFRS	CYFRS	CYNFRS	CBLRS	CABRS	CYNBRS	CP9	CP10
-4.206	-6.447	.00610	.02670	-.02090	-.01400	.03600	-.00110	.04110	.00800	-.49030	-.44490
-4.428	-4.271	-.00950	.02850	-.01090	-.00860	.03050	.00190	.04440	.00860	-.53140	-.47930
-4.380	.229	-.04540	.02860	.01550	-.02110	.03700	.00890	.04950	.00960	-.58730	-.54010
-3.881	4.308	-.07300	.03110	.03510	-.03520	.04450	.01430	.05220	.01010	-.61890	-.56940
-4.013	6.160	-.09050	.03130	.04440	-.03640	.04570	.01770	.05330	.01030	-.63200	-.58070
	GRADIENT	-.00741	.00030	.00537	-.00309	.00163	.00145	.00091	.00018	-.01024	-.01055

RUN NO. 1333/ 0 RN/L = 3.50 GRADIENT INTERVAL = -5.00/ 5.00

ALPHAR	BETAR	CNFRS	CAFRS	CLMFRS	CYFRS	CYNFRS	CBLRS	CABRS	CYNBRS	CP9	CP10
-.285	-7.363	.01170	.02820	-.01450	-.02800	.04390	-.00230	.03940	.00770	-.47510	-.42290
-.273	-5.149	.00180	.02840	-.00660	-.03010	.04300	-.00040	.04210	.00820	-.50450	-.45510
-.352	-.743	-.01680	.03100	.00730	-.04510	.05240	.00320	.04780	.00930	-.56790	-.52130
-.262	3.334	-.03740	.03320	.02280	-.05630	.05970	.00730	.05190	.01010	-.61600	-.56680
-.253	5.534	-.04950	.03310	.03060	-.06050	.06180	.00960	.05310	.01030	-.62930	-.58050
	GRADIENT	-.00505	.00054	.00380	-.00275	.00179	.00101	.00101	.00020	-.01180	-.01116

RUN NO. 1334/ 0 RN/L = 3.50 GRADIENT INTERVAL = -5.00/ 5.00

ALPHAR	BETAR	CNFRS	CAFRS	CLMFRS	CYFRS	CYNFRS	CBLRS	CABRS	CYNBRS	CP9	CP10
4.244	-5.707	.01120	.02870	-.00690	-.01760	.03520	-.00230	.04380	.00850	-.52380	-.47410
4.234	-3.883	.01020	.03120	-.00580	-.02250	.03800	-.00210	.04470	.00870	-.52710	-.48990
4.211	.048	.00330	.03210	.00270	-.03700	.04750	-.00080	.04760	.00920	-.56390	-.51930
4.184	3.633	-.00400	.03240	.01040	-.04540	.05340	.00070	.05010	.00970	-.59680	-.54400
4.165	5.771	-.00900	.03080	.01440	-.05420	.06000	.00170	.05110	.00990	-.60900	-.55500
	GRADIENT	-.00189	.00016	.00216	-.00306	.00205	.00037	.00072	.00013	-.00928	-.00720

IA156A, AEDC PWT 16T-470, O T S (R8NRC0) (10 MAY 80)

REFERENCE DATA

SREF = 2690.0000 SQ.FT. XMRP = 976.0000 IN. XT
LREF = 1290.3000 INCHES YMRP = .0000 IN. YT
BREF = 1290.3000 INCHES ZMRP = 400.0000 IN. ZT
SCALE = .0200

PARAMETRIC DATA

IB-ELV = 12.000 OB-ELV = 9.000
BDFLAP = .000 SPDBRK = .000
RUDDER = .000 SILTS = .000
MACH = 1.100 RN/L = 3.500

RUN NO. 1335/ 0 RN/L = 3.50 GRADIENT INTERVAL = -5.00/ 5.00

ALPHAR	BETAR	CNFRS	CAFRS	CLMFRS	CYFRS	CYNFRS	CBLRS	CABRS	CYNBRS	CP9	CP10
-8.518	-6.374	-.00920	.02380	-.02450	.03640	.01030	.00190	.03780	.00730	-.46020	-.40060
-8.682	-4.127	-.03250	.02600	-.01040	.04620	.00430	.00650	.04280	.00830	-.50870	-.46610
-8.678	-.068	-.08030	.02830	.02030	.04490	.00460	.01580	.04850	.00940	-.57380	-.53060
-8.495	4.220	-.12390	.03060	.04790	.02580	.01630	.02430	.05010	.00970	-.59230	-.54860
-8.548	6.142	-.14330	.03110	.05770	.01890	.02050	.02810	.05190	.01010	-.61700	-.56420
	GRADIENT	-.01093	.00055	.00698	-.00246	.00145	.00213	.00087	.00017	-.00996	-.00983

RUN NO. 1336/ 0 RN/L = 3.50 GRADIENT INTERVAL = -5.00/ 5.00

ALPHAR	BETAR	CNFRS	CAFRS	CLMFRS	CYFRS	CYNFRS	CBLRS	CABRS	CYNBRS	CP9	CP10
-6.451	-6.331	-.00080	.02640	-.02340	.01090	.02220	.00020	.03760	.00730	-.45400	-.40230
-6.415	-4.365	-.01720	.02800	-.01250	.01600	.01800	.00340	.04160	.00810	-.49940	-.44870
-6.610	-.100	-.06050	.02920	.01620	.01410	.01890	.01190	.04620	.00900	-.54730	-.50410
-6.360	4.220	-.09680	.03220	.04030	-.00590	.02840	.01890	.04920	.00950	-.58270	-.53680
-6.363	6.221	-.11770	.03310	.05160	-.01000	.03170	.02310	.05050	.00980	-.59830	-.55250
	GRADIENT	-.00927	.00049	.00615	-.00256	.00121	.00180	.00088	.00016	-.00970	-.01026

RUN NO. 1337/ 0 RN/L = 3.50 GRADIENT INTERVAL = -5.00/ 5.00

ALPHAR	BETAR	CNFRS	CAFRS	CLMFRS	CYFRS	CYNFRS	CBLRS	CABRS	CYNBRS	CP9	CP10
-4.217	-6.453	.00520	.02800	-.02110	-.01190	.03420	-.00100	.03790	.00730	-.45310	-.40900
-4.471	-4.286	-.01030	.02950	-.01130	-.00640	.02900	.00200	.04050	.00790	-.48770	-.43470
-4.388	.238	-.04660	.03080	.01610	-.01950	.03500	.00910	.04450	.00860	-.52870	-.48490
-3.894	4.333	-.07420	.03380	.03530	-.03170	.04210	.01450	.04700	.00910	-.55910	-.51220
-4.006	6.170	-.09050	.03410	.04450	-.03370	.04360	.01770	.04890	.00950	-.58160	-.53180
	GRADIENT	-.00742	.00050	.00542	-.00293	.00152	.00145	.00076	.00014	-.00830	-.00903

RUN NO. 1338/ 0 RN/L = 3.50 GRADIENT INTERVAL = -5.00/ 5.00

ALPHAR	BETAR	CNFRS	CAFRS	CLMFRS	CYFRS	CYNFRS	CBLRS	CABRS	CYNBRS	CP9	CP10
-.292	-7.364	.01070	.02920	-.01430	-.02900	.04440	-.00210	.03640	.00710	-.43980	-.38940
-.264	-5.149	.00060	.02970	-.00590	-.03020	.04270	-.00020	.03670	.00710	-.44210	-.39460
-.333	-.770	-.01870	.03240	.00830	-.04340	.05070	.00360	.04190	.00810	-.50250	-.45250
-.233	3.359	-.03970	.03530	.02450	-.05300	.05660	.00770	.04530	.00880	-.54010	-.49190
-.243	5.545	-.05110	.03550	.03150	-.05700	.05860	.01000	.04670	.00910	-.55620	-.50760
	GRADIENT	-.00509	.00070	.00392	-.00232	.00143	.00099	.00082	.00017	-.00911	-.00954

IA156A, AEDC PWT 16T-470, 0 T S (R8NRC0) (10 MAY 80)

REFERENCE DATA

SREF = 2690.0000 SQ.FT. XMRP = 976.0000 IN. XT
LREF = 1290.3000 INCHES YMRP = .0000 IN. YT
BREF = 1290.3000 INCHES ZMRP = 400.0000 IN. ZT
SCALE = .0200

PARAMETRIC DATA

IB-ELV = 12.000 OB-ELV = 9.000
BDFLAP = .000 SPDBRK = .000
RUDDER = .000 SILTS = .000
MACH = 1.100 RN/L = 3.500

RUN NO. 1339/ 0 RN/L = 3.48 GRADIENT INTERVAL = -5.00/ 5.00

ALPHAR	BETAR	CNFRS	CAFRS	CLMFRS	CYFRS	CYNFRS	CBLRS	CABRS	CYNBRS	CP9	CP10
4.305	-5.708	.01090	.03090	-.00640	-.01520	.03400	-.00230	.03710	.00720	-.44660	-.39840
4.273	-3.877	.00960	.03170	-.00460	-.02000	.03600	-.00200	.03980	.00770	-.47650	-.43110
4.231	.048	.00140	.03300	.00470	-.03590	.04660	-.00040	.04180	.00810	-.49960	-.45270
4.220	3.634	-.00640	.03440	.01300	-.04410	.05210	.00110	.04380	.00850	-.52580	-.47280
4.206	5.782	-.01050	.03440	.01620	-.05230	.05870	.00190	.04450	.00860	-.53360	-.48050
	GRADIENT	-.00213	.00036	.00234	-.00322	.00215	.00041	.00053	.00011	-.00655	-.00555

IA156A, AEDC PWT 16T-470, 0 T S (R8NRC1) (10 MAY 80)

REFERENCE DATA

SREF = 2690.0000 SQ.FT. XMRP = 976.0000 IN. XT
LREF = 1290.3000 INCHES YMRP = .0000 IN. YT
BREF = 1290.3000 INCHES ZMRP = 400.0000 IN. ZT
SCALE = .0200

PARAMETRIC DATA

IB-ELV = 12.000 OB-ELV = 9.000
BDFLAP = .000 SPDBRK = .000
RUDDER = .000 SILTS = .000
MACH = 1.150 RN/L = 3.500

RUN NO. 1341/ 0 RN/L = 3.50 GRADIENT INTERVAL = -5.00/ 5.00

ALPHAR	BETAR	CNFRS	CAFRS	CLMFRS	CYFRS	CYNFRS	CBLRS	CABRS	CYNBRS	CP9	CP10
-8.595	-6.397	-.00920	.02510	-.02660	.03710	.01050	.00190	.03570	.00690	-.43410	-.38000
-8.709	-4.145	-.03320	.02780	-.01190	.04850	.00300	.00660	.03910	.00760	-.46850	-.42270
-8.690	-.073	-.08100	.03020	.01950	.04760	.00210	.01590	.04480	.00870	-.53020	-.49070
-8.478	4.254	-.12890	.03290	.05090	.02760	.01320	.02520	.04620	.00900	-.54610	-.50530
-8.554	6.173	-.14840	.03280	.06050	.02020	.01790	.02910	.04810	.00930	-.57220	-.52300
	GRADIENT	-.01139	.00061	.00747	-.00251	.00123	.00221	.00084	.00017	-.00918	-.00977

RUN NO. 1342/ 0 RN/L = 3.50 GRADIENT INTERVAL = -5.00/ 5.00

ALPHAR	BETAR	CNFRS	CAFRS	CLMFRS	CYFRS	CYNFRS	CBLRS	CABRS	CYNBRS	CP9	CP10
-6.456	-6.355	.00000	.02680	-.02500	.01140	.02220	.00010	.03500	.00680	-.42220	-.37490
-6.413	-4.384	-.01750	.02920	-.01350	.01760	.01690	.00350	.03830	.00740	-.46210	-.41020
-6.579	-.073	-.06170	.03060	.01680	.01500	.01650	.01210	.04340	.00840	-.51470	-.47270
-6.378	4.230	-.10020	.03350	.04240	-.00090	.02440	.01960	.04580	.00890	-.54400	-.49980
-6.205	6.368	-.11980	.03510	.05390	-.00860	.02950	.02350	.04700	.00910	-.55810	-.51280
	GRADIENT	-.00960	.00050	.00649	-.00215	.00087	.00187	.00087	.00017	-.00951	-.01040

IA156A, AEDC PWT 16T-470, 0 T S (R8NRC1) (10 MAY 80)

REFERENCE DATA

SREF = 2690.0000 SQ.FT. XMRP = 976.0000 IN. XT
LREF = 1290.3000 INCHES YMRP = .0000 IN. YT
BREF = 1290.3000 INCHES ZMRP = 400.0000 IN. ZT
SCALE = .0200

PARAMETRIC DATA

IB-ELV = 12.000 OB-ELV = 9.000
BDFLAP = .000 SPDBRK = .000
RUDDER = .000 SILTS = .000
MACH = 1.150 RN/L = 3.500

RUN NO. 1343/ 0 RN/L = 3.50 GRADIENT INTERVAL = -5.00/ 5.00

ALPHAR	BETAR	CNFRS	CAFRS	CLMFRS	CYFRS	CYNFRS	CBLRS	CABRS	CYNBRS	CP9	CP10
-4.228	-6.447	.00390	.02820	-.02020	-.01210	.03380	-.00070	.03480	.00680	-.41780	-.37490
-4.464	-4.288	-.01100	.03040	-.01120	-.00590	.02810	.00220	.03760	.00730	-.45280	-.40310
-4.374	.256	-.04860	.03220	.01740	-.01850	.03370	.00950	.04240	.00820	-.50480	-.46040
-3.877	4.334	-.07630	.03520	.03720	-.02810	.03930	.01490	.04460	.00870	-.53060	-.48490
-3.995	6.199	-.09360	.03620	.04680	-.02970	.04050	.01830	.04600	.00890	-.54890	-.49930
	GRADIENT	-.00759	.00055	.00563	-.00258	.00130	.00148	.00082	.00016	-.00907	-.00955

RUN NO. 1344/ 0 RN/L = 3.50 GRADIENT INTERVAL = -5.00/ 5.00

ALPHAR	BETAR	CNFRS	CAFRS	CLMFRS	CYFRS	CYNFRS	CBLRS	CABRS	CYNBRS	CP9	CP10
-.255	-7.357	.00970	.02990	-.01310	-.02650	.04210	-.00200	.03370	.00650	-.40950	-.35820
-.242	-5.133	-.00090	.03050	-.00450	-.02930	.04180	.00010	.03500	.00680	-.42330	-.37470
-.294	-.783	-.01930	.03310	.00930	-.04130	.04860	.00370	.04110	.00800	-.49270	-.44230
-.209	3.361	-.03990	.03660	.02500	-.05130	.05500	.00770	.04420	.00860	-.52760	-.47900
-.194	5.558	-.05140	.03750	.03270	-.05470	.05640	.01000	.04470	.00870	-.53450	-.48340
	GRADIENT	-.00497	.00084	.00379	-.00241	.00150	.00097	.00075	.00014	-.00842	-.00886

RUN NO. 1345/ 0 RN/L = 3.50 GRADIENT INTERVAL = -5.00/ 5.00

ALPHAR	BETAR	CNFRS	CAFRS	CLMFRS	CYFRS	CYNFRS	CBLRS	CABRS	CYNBRS	CP9	CP10
4.409	-5.860	.01070	.03180	-.00620	-.01320	.03310	-.00220	.03540	.00690	-.42700	-.37850
4.417	-3.778	.00830	.03340	-.00330	-.01800	.03490	-.00180	.03760	.00730	-.45170	-.40580
4.294	.063	.00050	.03480	.00610	-.03350	.04500	-.00030	.04040	.00780	-.48440	-.43650
4.251	3.694	-.00640	.03600	.01370	-.04380	.05240	.00110	.04260	.00830	-.51000	-.46010
4.227	5.797	-.01060	.03610	.01680	-.05110	.05780	.00200	.04300	.00840	-.51630	-.46340
	GRADIENT	-.00197	.00035	.00228	-.00346	.00234	.00039	.00067	.00013	-.00781	-.00727

IA156A, AEDC PWT 16T-470, 0 T S (R8NRC2) (10 MAY 80)

REFERENCE DATA

SREF = 2690.0000 SQ.FT. XMRP = 976.0000 IN. XT
LREF = 1290.3000 INCHES YMRP = .0000 IN. YT
BREF = 1290.3000 INCHES ZMRP = 400.0000 IN. ZT
SCALE = .0200

PARAMETRIC DATA

IB-ELV = 12.000 OB-ELV = 9.000
BDFLAP = .000 SPDBRK = .000
RUDDER = .000 SILTS = .000
MACH = 1.250 RN/L = 3.500

RUN NO. 1346/ 0 RN/L = 3.50 GRADIENT INTERVAL = -5.00/ 5.00

ALPHAR	BETAR	CNFRS	CAFRS	CLMFRS	CYFRS	CYNFRS	CBLRS	CABRS	CYNBRS	CP9	CP10
-8.666	-6.331	-.01700	.02580	-.02280	.04310	.00510	.00340	.03320	.00650	-.40230	-.35470
-8.638	-4.150	-.03860	.02770	-.00810	.04850	.00050	.00760	.03640	.00710	-.43320	-.39540
-8.627	-.027	-.08580	.03100	.02400	.04500	.00040	.01680	.04160	.00810	-.49160	-.45610
-8.475	4.279	-.12930	.03440	.05220	.02840	.00850	.02530	.04220	.00820	-.50200	-.45990
-8.545	6.219	-.14960	.03620	.06200	.02330	.01210	.02930	.04280	.00830	-.51060	-.46300
	GRADIENT	-.01076	.00079	.00715	-.00240	.00096	.00210	.00068	.00013	-.00812	-.00760

RUN NO. 1347/ 0 RN/L = 3.50 GRADIENT INTERVAL = -5.00/ 5.00

ALPHAR	BETAR	CNFRS	CAFRS	CLMFRS	CYFRS	CYNFRS	CBLRS	CABRS	CYNBRS	CP9	CP10
-6.442	-6.346	-.00660	.02770	-.02100	.01410	.01840	.00130	.03190	.00620	-.38610	-.34020
-6.374	-4.381	-.02400	.02940	-.00860	.01840	.01430	.00470	.03530	.00690	-.42440	-.38050
-6.516	-.034	-.06570	.03210	.02100	.01240	.01560	.01290	.04000	.00780	-.47530	-.43540
-6.326	4.260	-.10230	.03570	.04400	.00510	.01910	.02000	.04140	.00800	-.49420	-.44960
-6.332	6.271	-.12260	.03690	.05460	.00040	.02240	.02400	.04310	.00840	-.51630	-.46510
	GRADIENT	-.00906	.00073	.00609	-.00154	.00056	.00177	.00071	.00013	-.00809	-.00801

RUN NO. 1348/ 0 RN/L = 3.49 GRADIENT INTERVAL = -5.00/ 5.00

ALPHAR	BETAR	CNFRS	CAFRS	CLMFRS	CYFRS	CYNFRS	CBLRS	CABRS	CYNBRS	CP9	CP10
-4.167	-6.462	-.00110	.02880	-.01640	-.00990	.03070	.00020	.03150	.00610	-.38020	-.33770
-4.391	-4.283	-.01770	.03060	-.00500	-.00610	.02660	.00340	.03500	.00680	-.42170	-.37590
-4.336	.250	-.05100	.03320	.01910	-.01120	.02840	.00990	.03900	.00760	-.46670	-.42080
-3.840	4.326	-.07760	.03630	.03780	-.02020	.03350	.01510	.04090	.00790	-.48930	-.44210
-3.985	6.215	-.09350	.03760	.04670	-.02180	.03440	.01820	.04170	.00810	-.50100	-.44900
	GRADIENT	-.00696	.00066	.00498	-.00163	.00079	.00136	.00069	.00013	-.00789	-.00773

RUN NO. 1349/ 0 RN/L = 3.49 GRADIENT INTERVAL = -5.00/ 5.00

ALPHAR	BETAR	CNFRS	CAFRS	CLMFRS	CYFRS	CYNFRS	CBLRS	CABRS	CYNBRS	CP9	CP10
-.208	-7.375	.00510	.03010	-.00950	-.02420	.04020	-.00110	.03070	.00600	-.37570	-.32320
-.187	-5.185	-.00500	.03080	-.00120	-.02780	.04040	.00090	.03240	.00630	-.39420	-.34400
-.203	-.745	-.02370	.03480	.01380	-.03920	.04620	.00450	.03760	.00730	-.45500	-.40130
-.121	3.385	-.04230	.03760	.02840	-.04930	.05200	.00820	.04090	.00790	-.49380	-.43790
-.133	5.585	-.05280	.03900	.03530	-.05310	.05410	.01030	.04110	.00800	-.49710	-.43860
	GRADIENT	-.00450	.00068	.00354	-.00245	.00140	.00090	.00080	.00015	-.00940	-.00886

IA156A, AEDC PWT 16T-470, 0 T S (R8NRC2) (10 MAY 80)

REFERENCE DATA

SREF = 2690.0000 SQ.FT. XMRP = 976.0000 IN. XT
LREF = 1290.3000 INCHES YMRP = .0000 IN. YT
BREF = 1290.3000 INCHES ZMRP = 400.0000 IN. ZT
SCALE = .0200

PARAMETRIC DATA

IB-ELV = 12.000 OB-ELV = 9.000
BDFLAP = .000 SPDBRK = .000
RUDDER = .000 SILTS = .000
MACH = 1.250 RN/L = 3.500

RUN NO. 1350/ 0 RN/L = 3.50 GRADIENT INTERVAL = -5.00/ 5.00

ALPHAR	BETAR	CNFRS	CAFRS	CLMFRS	CYFRS	CYNFRS	CBLRS	CABRS	CYNBRS	CP9	CP10
4.466	-5.856	.00970	.03200	-.00520	-.01040	.03120	-.00200	.03240	.00630	-.39450	-.34410
4.495	-3.783	.00750	.03340	-.00240	-.01410	.03260	-.00160	.03480	.00680	-.42120	-.37170
4.381	.065	-.00220	.03550	.00910	-.02940	.04240	.00030	.03710	.00720	-.44930	-.39620
4.322	3.671	-.00860	.03720	.01670	-.04180	.05130	.00150	.03920	.00760	-.47250	-.41940
4.320	5.808	-.01260	.03780	.02030	-.04950	.05710	.00230	.03960	.00770	-.47740	-.42470
	GRADIENT	-.00216	.00051	.00257	-.00372	.00251	.00042	.00059	.00011	-.00689	-.00640

IA156A, AEDC PWT 16T-470, 0 T S (R8NRC3) (10 MAY 80)

REFERENCE DATA

SREF = 2690.0000 SQ.FT. XMRP = 976.0000 IN. XT
LREF = 1290.3000 INCHES YMRP = .0000 IN. YT
BREF = 1290.3000 INCHES ZMRP = 400.0000 IN. ZT
SCALE = .0200

PARAMETRIC DATA

IB-ELV = 12.000 OB-ELV = -2.000
BDFLAP = .000 SPDBRK = .000
RUDDER = .000 SILTS = .000
MACH = 1.150 RN/L = 3.500

RUN NO. 1355/ 0 RN/L = 3.50 GRADIENT INTERVAL = -5.00/ 5.00

ALPHAR	BETAR	CNFRS	CAFRS	CLMFRS	CYFRS	CYNFRS	CBLRS	CABRS	CYNBRS	CP9	CP10
-8.466	-6.413	-.00880	.02450	-.02610	.03820	.00790	.00190	.03490	.00680	-.42360	-.37210
-8.696	-4.192	-.03170	.02630	-.01240	.05010	.00000	.00630	.03810	.00740	-.45730	-.41010
-8.721	.063	-.08150	.02950	.01940	.05020	-.00160	.01610	.04340	.00840	-.51640	-.47300
-8.518	4.200	-.12550	.03150	.04840	.03070	.00940	.02470	.04500	.00870	-.53280	-.49240
-8.561	6.180	-.14600	.03230	.05870	.02200	.01510	.02870	.04610	.00900	-.54800	-.50220
	GRADIENT	-.01118	.00062	.00725	-.00230	.00111	.00219	.00082	.00016	-.00902	-.00983

RUN NO. 1356/ 0 RN/L = 3.50 GRADIENT INTERVAL = -5.00/ 5.00

ALPHAR	BETAR	CNFRS	CAFRS	CLMFRS	CYFRS	CYNFRS	CBLRS	CABRS	CYNBRS	CP9	CP10
-6.480	-6.353	-.00010	.02650	-.02530	.01490	.01890	.00010	.03420	.00660	-.41220	-.36580
-6.421	-4.367	-.01690	.02800	-.01410	.02050	.01370	.00340	.03770	.00730	-.45470	-.40310
-6.595	-.056	-.06040	.02980	.01520	.01830	.01300	.01190	.04220	.00820	-.50270	-.45940
-6.397	4.243	-.09880	.03380	.04070	.00280	.02070	.01940	.04410	.00860	-.52330	-.48000
-6.123	6.376	-.11530	.03470	.05100	-.00680	.02660	.02260	.04510	.00880	-.53560	-.49150
	GRADIENT	-.00951	.00067	.00637	-.00206	.00081	.00186	.00074	.00015	-.00797	-.00893

IA156A, AEDC PWT 16T-470, 0 T S (R8NRC3) (10 MAY 80)

REFERENCE DATA

SREF = 2690.0000 SQ.FT. XMRP = 976.0000 IN. XT
LREF = 1290.3000 INCHES YMRP = .0000 IN. YT
BREF = 1290.3000 INCHES ZMRP = 400.0000 IN. ZT
SCALE = .0200

PARAMETRIC DATA

IB-ELV = 12.000 OB-ELV = -2.000
BDFLAP = .000 SPDBRK = .000
RUDDER = .000 SILTS = .000
MACH = 1.150 RN/L = 3.500

RUN NO. 1357/ 0 RN/L = 3.50 GRADIENT INTERVAL = -5.00/ 5.00

ALPHAR	BETAR	CNFRS	CAFRS	CLMFRS	CYFRS	CYNFRS	CBLRS	CABRS	CYNBRS	CP9	CP10
-4.226	-6.447	.00540	.02830	-.02180	-.00920	.03090	-.00100	.03410	.00660	-.40800	-.36840
-4.467	-4.279	-.01020	.02980	-.01220	-.00280	.02490	.00210	.03670	.00710	-.44350	-.39150
-4.390	.271	-.04720	.03150	.01570	-.01420	.02940	.00930	.04130	.00800	-.49340	-.44790
-3.880	4.344	-.07510	.03460	.03560	-.02430	.03520	.01470	.04360	.00850	-.51980	-.47250
-4.016	6.203	-.09220	.03570	.04500	-.02600	.03670	.01810	.04500	.00870	-.53700	-.48740
	GRADIENT	-.00754	.00055	.00555	-.00249	.00119	.00146	.00080	.00016	-.00889	-.00945

RUN NO. 1358/ 0 RN/L = 3.50 GRADIENT INTERVAL = -5.00/ 5.00

ALPHAR	BETAR	CNFRS	CAFRS	CLMFRS	CYFRS	CYNFRS	CBLRS	CABRS	CYNBRS	CP9	CP10
-.300	-7.376	.01110	.02950	-.01460	-.02420	.03940	-.00220	.03320	.00640	-.40360	-.35230
-.287	-5.147	.00110	.03020	-.00660	-.02650	.03880	-.00020	.03380	.00660	-.41000	-.36080
-.349	-.743	-.01740	.03280	.00690	-.03790	.04490	.00340	.03990	.00770	-.48200	-.42570
-.257	3.374	-.03860	.03680	.02310	-.04810	.05160	.00760	.04280	.00830	-.51200	-.46180
-.244	5.575	-.04970	.03680	.03060	-.05130	.05300	.00980	.04350	.00850	-.52150	-.46990
	GRADIENT	-.00515	.00097	.00393	-.00248	.00163	.00102	.00070	.00015	-.00729	-.00877

RUN NO. 1359/ 0 RN/L = 3.50 GRADIENT INTERVAL = -5.00/ 5.00

ALPHAR	BETAR	CNFRS	CAFRS	CLMFRS	CYFRS	CYNFRS	CBLRS	CABRS	CYNBRS	CP9	CP10
4.408	-5.862	.01240	.03170	-.00780	-.01140	.03080	-.00250	.03500	.00680	-.42300	-.37480
4.376	-3.738	.01020	.03300	-.00510	-.01600	.03230	-.00210	.03740	.00730	-.44890	-.40350
4.264	.073	.00290	.03380	.00370	-.03160	.04220	-.00060	.04030	.00780	-.48300	-.43400
4.252	3.720	-.00500	.03580	.01220	-.04190	.05000	.00090	.04220	.00820	-.50700	-.45380
4.206	5.810	-.00920	.03560	.01530	-.04930	.05540	.00180	.04240	.00820	-.51080	-.45480
	GRADIENT	-.00204	.00037	.00232	-.00348	.00237	.00040	.00064	.00012	-.00760	-.00675

IA156A, AEDC PWT 16T-470, 0 T S (R8NRC4) (10 MAY 80)

REFERENCE DATA

SREF = 2690.0000 SQ.FT. XMRP = 976.0000 IN. XT
LREF = 1290.3000 INCHES YMRP = .0000 IN. YT
BREF = 1290.3000 INCHES ZMRP = 400.0000 IN. ZT
SCALE = .0200

PARAMETRIC DATA

IB-ELV = 12.000 OB-ELV = -2.000
BDFLAP = .000 SPDBRK = .000
RUDDER = .000 SILTS = .000
MACH = 1.250 RN/L = 3.500

RUN NO. 1360/ 0 RN/L = 3.50 GRADIENT INTERVAL = -5.00/ 5.00

ALPHAR	BETAR	CNFRS	CAFRS	CLMFRS	CYFRS	CYNFRS	CBLRS	CABRS	CYNBRS	CP9	CP10
-8.523	-6.384	-.01480	.02590	-.02400	.04340	.00390	.00300	.03280	.00640	-.39620	-.35170
-8.660	-4.112	-.03810	.02760	-.00890	.05100	-.00200	.00760	.03560	.00690	-.42560	-.38540
-8.662	-.023	-.08460	.03050	.02240	.04870	-.00290	.01670	.04070	.00790	-.48060	-.44520
-8.480	4.326	-.12790	.03390	.05070	.02970	.00680	.02510	.04170	.00810	-.49620	-.45340
-8.570	6.231	-.14940	.03550	.06090	.02590	.00970	.02930	.04270	.00830	-.50950	-.46230
	GRADIENT	-.01063	.00075	.00706	-.00254	.00106	.00207	.00072	.00014	-.00832	-.00799

RUN NO. 1361/ 0 RN/L = 3.50 GRADIENT INTERVAL = -5.00/ 5.00

ALPHAR	BETAR	CNFRS	CAFRS	CLMFRS	CYFRS	CYNFRS	CBLRS	CABRS	CYNBRS	CP9	CP10
-6.475	-6.364	-.00470	.02740	-.02260	.01610	.01630	.00100	.03160	.00610	-.38060	-.33840
-6.381	-4.354	-.02220	.02900	-.01040	.02110	.01160	.00440	.03470	.00670	-.41730	-.37280
-6.537	-.040	-.06430	.03120	.01920	.01680	.01200	.01270	.04010	.00780	-.47870	-.43500
-6.339	4.272	-.10120	.03540	.04270	.00730	.01670	.01990	.04100	.00800	-.48960	-.44360
-6.350	6.280	-.12020	.03690	.05280	.00230	.02030	.02360	.04180	.00810	-.50180	-.44950
	GRADIENT	-.00916	.00074	.00616	-.00160	.00059	.00180	.00073	.00015	-.00838	-.00821

RUN NO. 1362/ 0 RN/L = 3.50 GRADIENT INTERVAL = -5.00/ 5.00

ALPHAR	BETAR	CNFRS	CAFRS	CLMFRS	CYFRS	CYNFRS	CBLRS	CABRS	CYNBRS	CP9	CP10
-4.143	-6.469	.00080	.02850	-.01810	-.00790	.02840	-.00010	.03130	.00610	-.37600	-.33590
-4.408	-4.268	-.01590	.03040	-.00680	-.00350	.02400	.00320	.03420	.00660	-.41330	-.36630
-4.350	.259	-.04910	.03240	.01730	-.00850	.02540	.00960	.03840	.00750	-.46210	-.41300
-3.882	4.373	-.07600	.03640	.03610	-.01730	.03060	.01490	.03960	.00770	-.47730	-.42530
-3.984	6.204	-.09130	.03730	.04470	-.01950	.03180	.01790	.04120	.00800	-.49750	-.44080
	GRADIENT	-.00696	.00069	.00497	-.00159	.00076	.00135	.00063	.00013	-.00746	-.00689

RUN NO. 1363/ 0 RN/L = 3.50 GRADIENT INTERVAL = -5.00/ 5.00

ALPHAR	BETAR	CNFRS	CAFRS	CLMFRS	CYFRS	CYNFRS	CBLRS	CABRS	CYNBRS	CP9	CP10
-.255	-7.408	.00710	.03000	-.01150	-.02240	.03790	-.00140	.03010	.00580	-.36990	-.31660
-.235	-5.100	-.00310	.03050	-.00320	-.02560	.03780	.00060	.03170	.00620	-.38720	-.33480
-.257	-.808	-.02140	.03450	.01120	-.03590	.04270	.00420	.03630	.00700	-.44290	-.38390
-.176	3.451	-.04100	.03750	.02640	-.04610	.04870	.00800	.03990	.00770	-.48170	-.42640
-.191	5.632	-.05240	.03840	.03380	-.05000	.05110	.01030	.04080	.00790	-.49410	-.43630
	GRADIENT	-.00460	.00070	.00357	-.00240	.00141	.00089	.00085	.00016	-.00911	-.00998

IA156A, AEDC PWT 16T-470, 0 T S (R8NRC4) (10 MAY 80)

REFERENCE DATA

SREF = 2690.0000 SQ.FT. XMRP = 976.0000 IN. XT
LREF = 1290.3000 INCHES YMRP = .0000 IN. YT
BREF = 1290.3000 INCHES ZMRP = 400.0000 IN. ZT
SCALE = .0200

PARAMETRIC DATA

IB-ELV = 12.000 OB-ELV = -2.000
BDFLAP = .000 SPDBRK = .000
RUDDER = .000 SILTS = .000
MACH = 1.250 RN/L = 3.500

RUN NO. 1364/ 0 RN/L = 3.50 GRADIENT INTERVAL = -5.00/ 5.00

ALPHAR	BETAR	CNFRS	CAFRS	CLMFRS	CYFRS	CYNFRS	CBLRS	CABRS	CYNBRS	CP9	CP10
4.557	-5.746	.01160	.03190	-.00660	-.00850	.02900	-.00230	.03250	.00630	-.39490	-.34650
4.442	-3.642	.00900	.03340	-.00380	-.01290	.03050	-.00180	.03440	.00670	-.41720	-.36730
4.224	.074	-.00040	.03550	.00710	-.02800	.04040	.00000	.03660	.00710	-.44390	-.38940
4.337	3.808	-.00670	.03710	.01510	-.04020	.04950	.00120	.03860	.00750	-.46690	-.41290
4.293	5.812	-.01130	.03790	.01890	-.04860	.05580	.00210	.03920	.00760	-.47330	-.42000
	GRADIENT	-.00211	.00050	.00254	-.00366	.00255	.00040	.00056	.00011	-.00667	-.00612

IA156A, AEDC PWT 16T-470, 0 T S (R8NRC5) (10 MAY 80)

REFERENCE DATA

SREF = 2690.0000 SQ.FT. XMRP = 976.0000 IN. XT
LREF = 1290.3000 INCHES YMRP = .0000 IN. YT
BREF = 1290.3000 INCHES ZMRP = 400.0000 IN. ZT
SCALE = .0200

PARAMETRIC DATA

IB-ELV = 12.000 OB-ELV = -2.000
BDFLAP = .000 SPDBRK = .000
RUDDER = .000 SILTS = .000
MACH = 1.400 RN/L = 3.500

RUN NO. 1365/ 0 RN/L = 3.00 GRADIENT INTERVAL = -5.00/ 5.00

ALPHAR	BETAR	CNFRS	CAFRS	CLMFRS	CYFRS	CYNFRS	CBLRS	CABRS	CYNBRS	CP9	CP10
-8.403	-6.330	-.02190	.02580	-.01920	.04470	.00160	.00440	.02940	.00570	-.35190	-.31670
-8.575	-4.067	-.04460	.02770	-.00540	.05180	-.00460	.00880	.03180	.00620	-.38070	-.34460
-8.564	.071	-.08980	.03180	.02570	.04990	-.00780	.01770	.03650	.00710	-.43560	-.39490
-8.395	4.507	-.13900	.03630	.05700	.03730	-.00210	.02720	.03800	.00740	-.46180	-.40360
-8.409	6.367	-.15650	.03690	.06570	.02510	.00590	.03060	.03770	.00730	-.46160	-.39660
	GRADIENT	-.01101	.00100	.00728	-.00170	.00030	.00215	.00072	.00014	-.00942	-.00682

RUN NO. 1366/ 0 RN/L = 3.00 GRADIENT INTERVAL = -5.00/ 5.00

ALPHAR	BETAR	CNFRS	CAFRS	CLMFRS	CYFRS	CYNFRS	CBLRS	CABRS	CYNBRS	CP9	CP10
-6.454	-6.335	-.01010	.02740	-.01960	.02100	.01330	.00200	.02880	.00560	-.34750	-.30890
-6.413	-4.359	-.02650	.02930	-.00800	.02470	.00930	.00530	.03150	.00610	-.37670	-.33990
-6.492	.025	-.06750	.03220	.02010	.02550	.00470	.01330	.03470	.00670	-.41660	-.37270
-6.264	4.356	-.10290	.03640	.04270	.01480	.00960	.02020	.03640	.00710	-.44510	-.38310
-6.267	6.400	-.12170	.03780	.05320	.00860	.01310	.02380	.03730	.00720	-.46010	-.39050
	GRADIENT	-.00877	.00081	.00582	-.00113	.00003	.00171	.00056	.00011	-.00785	-.00496

IA156A, AEDC PWT 16T-470, 0 T S

(R8NRC5) (10 MAY 80)

REFERENCE DATA

SREF = 2690.0000 SQ.FT. XMRP = 976.0000 IN. XT
LREF = 1290.3000 INCHES YMRP = .0000 IN. YT
BREF = 1290.3000 INCHES ZMRP = 400.0000 IN. ZT
SCALE = .0200

PARAMETRIC DATA

IB-ELV = 12.000 OB-ELV = -2.000
BDFLAP = .000 SPDBRK = .000
RUDDER = .000 SILTS = .000
MACH = 1.400 RN/L = 3.500

RUN NO. 1367/ 0 RN/L = 2.99 GRADIENT INTERVAL = -5.00/ 5.00

ALPHAR	BETAR	CNFRS	CAFRS	CLMFRS	CYFRS	CYNFRS	CBLRS	CABRS	CYNBRS	CP9	CP10
-4.153	-6.459	-.00280	.02950	-.01540	-.00350	.02640	.00060	.02790	.00540	-.33900	-.29560
-4.456	-4.270	-.01890	.03040	-.00570	.00390	.02010	.00370	.03090	.00600	-.37370	-.33120
-4.325	.325	-.05170	.03330	.01830	.00040	.01840	.01020	.03400	.00660	-.41610	-.35860
-3.821	4.455	-.07520	.03650	.03560	-.01260	.02570	.01480	.03550	.00690	-.43550	-.37320
-3.937	6.293	-.09060	.03770	.04410	-.01560	.02750	.01780	.03680	.00710	-.45150	-.38680
	GRADIENT	-.00647	.00070	.00474	-.00187	.00062	.00127	.00053	.00010	-.00712	-.00484

RUN NO. 1368/ 0 RN/L = 3.00 GRADIENT INTERVAL = -5.00/ 5.00

ALPHAR	BETAR	CNFRS	CAFRS	CLMFRS	CYFRS	CYNFRS	CBLRS	CABRS	CYNBRS	CP9	CP10
-.286	-7.359	.00450	.03020	-.00880	-.01960	.03640	-.00090	.02730	.00530	-.33760	-.28380
-.274	-5.153	.00460	.03040	-.00130	-.02120	.03510	.00090	.02870	.00560	-.35130	-.30300
-.262	-.757	-.02270	.03460	.01310	-.03160	.03910	.00440	.03250	.00630	-.39850	-.34100
-.203	3.391	-.04040	.03710	.02650	-.04130	.04460	.00790	.03550	.00690	-.43450	-.37470
-.251	5.584	-.05010	.03860	.03250	-.04590	.04730	.00980	.03650	.00710	-.44790	-.38270
	GRADIENT	-.00427	.00060	.00323	-.00234	.00133	.00084	.00072	.00014	-.00868	-.00812

RUN NO. 1369/ 0 RN/L = 3.00 GRADIENT INTERVAL = -5.00/ 5.00

ALPHAR	BETAR	CNFRS	CAFRS	CLMFRS	CYFRS	CYNFRS	CBLRS	CABRS	CYNBRS	CP9	CP10
4.525	-5.836	.00970	.03070	-.00460	-.00270	.02570	-.00200	.02860	.00550	-.35060	-.30070
4.457	-3.624	.00540	.03220	.00030	-.00860	.02840	-.00110	.02980	.00580	-.36700	-.31150
4.214	.067	-.00360	.03490	.01080	-.02410	.03830	.00060	.03310	.00640	-.40800	-.34560
4.279	3.790	-.00790	.03710	.01700	-.03690	.04810	.00150	.03460	.00670	-.42810	-.35990
4.252	5.837	-.01210	.03840	.02140	-.04470	.05360	.00230	.03580	.00700	-.44320	-.37290
	GRADIENT	-.00179	.00066	.00225	-.00382	.00266	.00035	.00065	.00012	-.00824	-.00652

IA156A, AEDC PWT 16T-470, 0 T S

(R8NRC6) (10 MAY 80)

REFERENCE DATA

SREF = 2690.0000 SQ.FT. XMRP = 976.0000 IN. XT
LREF = 1290.3000 INCHES YMRP = .0000 IN. YT
BREF = 1290.3000 INCHES ZMRP = 400.0000 IN. ZT
SCALE = .0200

PARAMETRIC DATA

IB-ELV = 12.000 OB-ELV = -2.000
BDFLAP = .000 SPDBRK = .000
RUDDER = .000 SILTS = .000
MACH = 1.550 RN/L = 3.200

RUN NO. 1370/ 0 RN/L = 2.99 GRADIENT INTERVAL = -5.00/ 5.00

ALPHAR	BETAR	CNFRS	CAFRS	CLMFRS	CYFRS	CYNFRS	CBLRS	CABRS	CYNBRS	CP9	CP10
-8.425	-6.294	-.02630	.02490	-.01540	.04430	-.00030	.00520	.02540	.00490	-.30370	-.27440
-8.611	-3.993	-.04760	.02650	-.00240	.05110	-.00700	.00940	.02770	.00540	-.33090	-.29940
-8.539	.179	-.09200	.03130	.02840	.05050	-.01140	.01800	.03130	.00610	-.37800	-.33600
-8.332	4.632	-.14010	.03430	.06010	.03340	-.00300	.02740	.03410	.00660	-.41640	-.36070
-8.334	6.489	-.15530	.03470	.06830	.02020	.00580	.03040	.03380	.00660	-.41550	-.35500
	GRADIENT	-.01073	.00090	.00724	-.00207	.00048	.00209	.00074	.00014	-.00990	-.00709

RUN NO. 1371/ 0 RN/L = 3.00 GRADIENT INTERVAL = -5.00/ 5.00

ALPHAR	BETAR	CNFRS	CAFRS	CLMFRS	CYFRS	CYNFRS	CBLRS	CABRS	CYNBRS	CP9	CP10
-6.534	-6.330	-.01390	.02630	-.01660	.02390	.01000	.00280	.02480	.00480	-.29830	-.26730
-6.431	-4.296	-.02950	.02780	-.00540	.02740	.00560	.00580	.02740	.00530	-.32640	-.29640
-6.500	.133	-.06920	.03150	.02190	.02810	.00190	.01360	.03080	.00600	-.37280	-.32930
-6.212	4.475	-.10240	.03470	.04370	.01660	.00580	.02000	.03220	.00620	-.39490	-.33810
-6.176	6.511	-.12120	.03640	.05470	.00850	.01110	.02370	.03410	.00660	-.42000	-.35600
	GRADIENT	-.00831	.00079	.00560	-.00123	.00002	.00162	.00055	.00010	-.00782	-.00476

RUN NO. 1372/ 0 RN/L = 3.00 GRADIENT INTERVAL = -5.00/ 5.00

ALPHAR	BETAR	CNFRS	CAFRS	CLMFRS	CYFRS	CYNFRS	CBLRS	CABRS	CYNBRS	CP9	CP10
-4.260	-6.465	-.00480	.02770	-.01500	.00290	.02120	.00100	.02480	.00480	-.30060	-.26420
-4.530	-4.248	-.02100	.02920	-.00370	.00900	.01530	.00410	.02710	.00530	-.32800	-.29010
-4.366	.426	-.05130	.03240	.01830	.00340	.01560	.01010	.03010	.00580	-.37160	-.31430
-3.785	4.540	-.07230	.03470	.03370	-.01030	.02310	.01420	.03160	.00610	-.39130	-.32830
-3.881	6.390	-.08810	.03630	.04290	-.01380	.02530	.01730	.03320	.00640	-.41020	-.34530
	GRADIENT	-.00585	.00063	.00427	-.00217	.00087	.00115	.00051	.00009	-.00725	-.00437

RUN NO. 1373/ 0 RN/L = 3.00 GRADIENT INTERVAL = -5.00/ 5.00

ALPHAR	BETAR	CNFRS	CAFRS	CLMFRS	CYFRS	CYNFRS	CBLRS	CABRS	CYNBRS	CP9	CP10
-.379	-7.382	.00300	.02850	-.00780	-.01530	.03220	-.00060	.02390	.00460	-.29730	-.24720
-.357	-5.223	-.00580	.02950	-.00040	-.01890	.03270	.00110	.02600	.00510	-.32000	-.27320
-.347	-.810	-.02260	.03310	.01330	-.02970	.03720	.00440	.02850	.00550	-.35340	-.29710
-.330	3.326	-.03800	.03620	.02420	-.03850	.04280	.00740	.03180	.00620	-.39630	-.32810
-.364	5.505	-.04640	.03740	.02920	-.04350	.04650	.00910	.03330	.00650	-.41840	-.34050
	GRADIENT	-.00372	.00075	.00264	-.00213	.00135	.00073	.00080	.00017	-.01037	-.00750

IA156A, AEDC PWT 16T-470, O T S (R8NRC6) (10 MAY 80)

REFERENCE DATA

SREF = 2690.0000 SQ.FT. XMRP = 976.0000 IN. XT
LREF = 1290.3000 INCHES YMRP = .0000 IN. YT
BREF = 1290.3000 INCHES ZMRP = 400.0000 IN. ZT
SCALE = .0200

PARAMETRIC DATA

IB-ELV = 12.000 OB-ELV = -2.000
BDFLAP = .000 SPDBRK = .000
RUDDER = .000 SILTS = .000
MACH = 1.550 RN/L = 3.200

RUN NO. 1374/ 0 RN/L = 3.01 GRADIENT INTERVAL = -5.00/ 5.00

ALPHAR	BETAR	CNFRS	CAFRS	CLMFRS	CYFRS	CYNFRS	CBLRS	CABRS	CYNBRS	CP9	CP10
4.681	-5.655	.00960	.03030	-.00330	.00170	.02280	-.00200	.02580	.00500	-.32080	-.26730
4.474	-3.535	.00620	.03120	.00040	-.00420	.02550	-.00130	.02660	.00520	-.33250	-.27440
4.163	.141	-.00350	.03380	.01150	-.02030	.03650	.00060	.02980	.00580	-.37270	-.30670
4.174	3.791	-.00560	.03570	.01530	-.03320	.04580	.00100	.03180	.00620	-.39910	-.32650
4.127	5.836	-.00860	.03720	.01850	-.04340	.05300	.00160	.03310	.00640	-.41340	-.34040
	GRADIENT	-.00161	.00061	.00203	-.00396	.00277	.00031	.00071	.00014	-.00909	-.00711

IA156A, AEDC PWT 16T-470, O T S W/SILTS (R8NRC7) (10 MAY 80)

REFERENCE DATA

SREF = 2690.0000 SQ.FT. XMRP = 976.0000 IN. XT
LREF = 1290.3000 INCHES YMRP = .0000 IN. YT
BREF = 1290.3000 INCHES ZMRP = 400.0000 IN. ZT
SCALE = .0200

PARAMETRIC DATA

IB-ELV = 9.000 OB-ELV = -2.000
BDFLAP = .000 SPDBRK = .000
RUDDER = .000 SILTS = 1.000
MACH = 1.150 RN/L = 3.500
IB-AIL = 1.000

RUN NO. 1377/ 0 RN/L = 3.50 GRADIENT INTERVAL = -5.00/ 5.00

ALPHAR	BETAR	CNFRS	CAFRS	CLMFRS	CYFRS	CYNFRS	CBLRS	CABRS	CYNBRS	CP9	CP10
-8.625	-6.297	-.00840	.02310	-.02720	.03970	.00690	.00180	.03580	.00700	-.43370	-.38230
-8.663	-4.199	-.02900	.02490	-.01400	.04810	.00080	.00580	.03830	.00740	-.45990	-.41190
-8.722	.055	-.07670	.02750	.01610	.04850	-.00060	.01510	.04350	.00840	-.51580	-.47420
-8.539	4.172	-.12320	.03030	.04630	.03050	.00960	.02420	.04570	.00890	-.54020	-.50050
-8.559	6.166	-.14280	.03140	.05600	.02260	.01480	.02810	.04640	.00900	-.55120	-.50640
	GRADIENT	-.01125	.00064	.00720	-.00209	.00104	.00220	.00089	.00018	-.00961	-.01061

RUN NO. 1378/ 0 RN/L = 3.50 GRADIENT INTERVAL = -5.00/ 5.00

ALPHAR	BETAR	CNFRS	CAFRS	CLMFRS	CYFRS	CYNFRS	CBLRS	CABRS	CYNBRS	CP9	CP10
-6.493	-6.364	.00220	.02610	-.02730	.01430	.01950	-.00030	.03390	.00660	-.40810	-.36400
-6.422	-4.361	-.01480	.02740	-.01560	.01910	.01450	.00300	.03720	.00720	-.45040	-.39610
-6.595	-.058	-.05650	.02840	.01240	.01670	.01400	.01110	.04190	.00810	-.49840	-.45560
-6.401	4.235	-.09640	.03210	.03850	.00260	.02080	.01890	.04490	.00870	-.53260	-.48890
-6.176	6.392	-.11360	.03360	.04920	-.00640	.02660	.02230	.04520	.00880	-.53600	-.49280
	GRADIENT	-.00949	.00055	.00629	-.00192	.00073	.00185	.00090	.00017	-.00956	-.01080

IA156A, AEDC PWT 16T-470, O T S W/SILTS (R8NRC7) (10 MAY 80)

REFERENCE DATA

SREF = 2690.0000 SQ.FT. XMRP = 976.0000 IN. XT
LREF = 1290.3000 INCHES YMRP = .0000 IN. YT
BREF = 1290.3000 INCHES ZMRP = 400.0000 IN. ZT
SCALE = .0200

PARAMETRIC DATA

IB-ELV = 9.000 OB-ELV = -2.000
BDFLAP = .000 SPDBRK = .000
RUDDER = .000 SILTS = 1.000
MACH = 1.150 RN/L = 3.500
IB-AIL = 1.000

RUN NO. 1379/ 0 RN/L = 3.50 GRADIENT INTERVAL = -5.00/ 5.00

ALPHAR	BETAR	CNFRS	CAFRS	CLMFRS	CYFRS	CYNFRS	CBLRS	CABRS	CYNBRS	CP9	CP10
-4.233	-6.462	.00720	.02740	-.02330	-.01010	.03160	-.00130	.03440	.00670	-.41150	-.37270
-4.470	-4.272	-.00830	.02900	-.01370	-.00380	.02550	.00170	.03610	.00700	-.43950	-.38360
-4.409	.267	-.04470	.03080	.01350	-.01500	.02990	.00880	.04080	.00790	-.48740	-.44170
-3.892	4.335	-.07280	.03400	.03360	-.02520	.03600	.01430	.04360	.00850	-.52080	-.47180
-4.027	6.200	-.08970	.03500	.04300	-.02690	.03740	.01760	.04490	.00870	-.53570	-.48580
	GRADIENT	-.00750	.00058	.00550	-.00249	.00121	.00147	.00087	.00017	-.00947	-.01030

RUN NO. 1380/ 0 RN/L = 3.50 GRADIENT INTERVAL = -5.00/ 5.00

ALPHAR	BETAR	CNFRS	CAFRS	CLMFRS	CYFRS	CYNFRS	CBLRS	CABRS	CYNBRS	CP9	CP10
-.318	-7.377	.01250	.02940	-.01610	-.02470	.03990	-.00250	.03310	.00640	-.40300	-.35050
-.306	-5.156	.00240	.02960	-.00800	-.02720	.03940	-.00050	.03440	.00670	-.41760	-.36670
-.373	-.748	-.01610	.03250	.00540	-.03790	.04490	.00310	.03930	.00760	-.47650	-.41950
-.283	3.373	-.03690	.03620	.02120	-.04810	.05170	.00720	.04290	.00830	-.51490	-.46280
-.277	5.578	-.04900	.03620	.02930	-.05160	.05320	.00960	.04410	.00860	-.52760	-.47580
	GRADIENT	-.00505	.00090	.00383	-.00250	.00165	.00100	.00087	.00017	-.00932	-.01051

RUN NO. 1381/ 0 RN/L = 3.50 GRADIENT INTERVAL = -5.00/ 5.00

ALPHAR	BETAR	CNFRS	CAFRS	CLMFRS	CYFRS	CYNFRS	CBLRS	CABRS	CYNBRS	CP9	CP10
4.517	-5.802	.01380	.03120	-.00900	-.01140	.03090	-.00270	.03560	.00690	-.42920	-.38100
4.343	-3.662	.01090	.03240	-.00600	-.01700	.03290	-.00220	.03800	.00740	-.45480	-.41060
4.146	.012	.00380	.03370	.00220	-.03170	.04220	-.00080	.04010	.00780	-.48020	-.43200
4.233	3.764	-.00380	.03520	.01040	-.04200	.04990	.00070	.04240	.00820	-.51030	-.45490
4.203	5.834	-.00740	.03520	.01330	-.04960	.05550	.00140	.04290	.00830	-.51850	-.45860
	GRADIENT	-.00198	.00038	.00221	-.00336	.00229	.00039	.00059	.00011	-.00748	-.00597

IA156A, AEDC PWT 16T-470, O T S W/SILTS (R8NRC8) (10 MAY 80)

REFERENCE DATA

SREF = 2690.0000 SQ.FT. XMRP = 976.0000 IN. XT
LREF = 1290.3000 INCHES YMRP = .0000 IN. YT
BREF = 1290.3000 INCHES ZMRP = 400.0000 IN. ZT
SCALE = .0200

PARAMETRIC DATA

IB-ELV = 9.000 OB-ELV = -2.000
BDFLAP = .000 SPDBRK = .000
RUDDER = .000 SILTS = 1.000
MACH = 1.250 RN/L = 3.500
IB-AIL = 1.000

RUN NO. 1382/ 0 RN/L = 3.50 GRADIENT INTERVAL = -5.00/ 5.00

ALPHAR	BETAR	CNFRS	CAFRS	CLMFRS	CYFRS	CYNFRS	CBLRS	CABRS	CYNBRS	CP9	CP10
-8.610	-6.276	-.01460	.02500	-.02480	.04410	.00320	.00300	.03320	.00650	-.39860	-.35840
-8.674	-4.140	-.03630	.02700	-.01070	.05120	-.00230	.00720	.03490	.00680	-.41650	-.37850
-8.666	-.022	-.08230	.02950	.02050	.04730	-.00220	.01620	.04080	.00790	-.48280	-.44650
-8.494	4.303	-.12600	.03300	.04870	.03030	.00610	.02470	.04200	.00810	-.50060	-.45510
-8.549	6.223	-.14580	.03510	.05850	.02480	.00990	.02860	.04190	.00810	-.50310	-.45210
	GRADIENT	-.01062	.00071	.00703	-.00249	.00100	.00207	.00084	.00015	-.00991	-.00901

RUN NO. 1383/ 0 RN/L = 3.50 GRADIENT INTERVAL = -5.00/ 5.00

ALPHAR	BETAR	CNFRS	CAFRS	CLMFRS	CYFRS	CYNFRS	CBLRS	CABRS	CYNBRS	CP9	CP10
-6.485	-6.351	-.00330	.02660	-.02440	.01640	.01620	.00070	.03200	.00620	-.38450	-.34470
-6.416	-4.373	-.02050	.02820	-.01250	.02170	.01140	.00410	.03460	.00670	-.41630	-.37250
-6.544	-.036	-.06230	.03110	.01740	.01560	.01270	.01230	.03880	.00750	-.46350	-.41930
-6.346	4.266	-.09890	.03460	.04050	.00790	.01620	.01940	.04060	.00790	-.48560	-.43840
-6.359	6.289	-.11810	.03600	.05080	.00260	.01990	.02320	.04200	.00820	-.50610	-.45030
	GRADIENT	-.00908	.00074	.00614	-.00160	.00056	.00177	.00069	.00014	-.00803	-.00763

RUN NO. 1384/ 0 RN/L = 3.50 GRADIENT INTERVAL = -5.00/ 5.00

ALPHAR	BETAR	CNFRS	CAFRS	CLMFRS	CYFRS	CYNFRS	CBLRS	CABRS	CYNBRS	CP9	CP10
-4.160	-6.474	.00200	.02780	-.01960	-.00850	.02890	-.00030	.03170	.00620	-.37990	-.34170
-4.427	-4.270	-.01440	.02970	-.00860	-.00340	.02390	.00290	.03380	.00660	-.40850	-.36150
-4.354	.261	-.04740	.03180	.01550	-.00890	.02560	.00930	.03780	.00730	-.45550	-.40660
-3.886	4.359	-.07560	.03550	.03460	-.01720	.03050	.01470	.04000	.00780	-.48300	-.42910
-4.011	6.225	-.09090	.03690	.04350	-.01930	.03170	.01780	.04090	.00790	-.49530	-.43740
	GRADIENT	-.00703	.00067	.00501	-.00159	.00076	.00137	.00072	.00014	-.00866	-.00787

RUN NO. 1385/ 0 RN/L = 3.50 GRADIENT INTERVAL = -5.00/ 5.00

ALPHAR	BETAR	CNFRS	CAFRS	CLMFRS	CYFRS	CYNFRS	CBLRS	CABRS	CYNBRS	CP9	CP10
-.275	-7.337	.00840	.02930	-.01300	-.02270	.03820	-.00170	.03040	.00590	-.37400	-.31900
-.256	-5.140	-.00160	.02990	-.00490	-.02590	.03810	.00030	.03190	.00620	-.38980	-.33630
-.282	-.810	-.02010	.03400	.00950	-.03590	.04270	.00390	.03610	.00700	-.44170	-.38010
-.193	3.455	-.03940	.03670	.02470	-.04600	.04850	.00770	.03960	.00770	-.47900	-.42240
-.209	5.631	-.05060	.03800	.03200	-.05020	.05120	.00990	.04050	.00790	-.49120	-.43190
	GRADIENT	-.00453	.00063	.00356	-.00237	.00136	.00089	.00082	.00016	-.00875	-.00992

IA156A, AEDC PWT 16T-470, O T S W/SILTS (R8NRC8) (10 MAY 80)

REFERENCE DATA

SREF = 2690.0000 SQ.FT. XMRP = 976.0000 IN. XT
LREF = 1290.3000 INCHES YMRP = .0000 IN. YT
BREF = 1290.3000 INCHES ZMRP = 400.0000 IN. ZT
SCALE = .0200

PARAMETRIC DATA

IB-ELV = 9.000 OB-ELV = -2.000
BDFLAP = .000 SPDBRK = .000
RUDDER = .000 SILTS = 1.000
MACH = 1.250 RN/L = 3.500
IB-AIL = 1.000

RUN NO. 1386/ 0 RN/L = 3.50 GRADIENT INTERVAL = -5.00/ 5.00

ALPHAR	BETAR	CNFRS	CAFRS	CLMFRS	CYFRS	CYNFRS	CBLRS	CABRS	CYNBRS	CP9	CP10
4.628	-5.783	.01260	.03150	-.00760	-.00810	.02880	-.00250	.03290	.00640	-.39910	-.35100
4.415	-3.631	.00990	.03320	-.00490	-.01350	.03090	-.00200	.03460	.00670	-.41820	-.36940
4.217	.089	.00020	.03460	.00600	-.02890	.04050	-.00010	.03680	.00710	-.44640	-.39180
4.331	3.798	-.00530	.03640	.01340	-.04030	.04950	.00100	.03910	.00760	-.47350	-.41710
4.292	5.823	-.00950	.03710	.01730	-.04850	.05570	.00180	.03980	.00770	-.48190	-.42520
	GRADIENT	-.00205	.00043	.00246	-.00361	.00250	.00040	.00061	.00012	-.00744	-.00642

IA156A, AEDC PWT 16T-470, O T S W/SILTS (R8NRC9) (10 MAY 80)

REFERENCE DATA

SREF = 2690.0000 SQ.FT. XMRP = 976.0000 IN. XT
LREF = 1290.3000 INCHES YMRP = .0000 IN. YT
BREF = 1290.3000 INCHES ZMRP = 400.0000 IN. ZT
SCALE = .0200

PARAMETRIC DATA

IB-ELV = 9.000 OB-ELV = -2.000
BDFLAP = .000 SPDBRK = .000
RUDDER = .000 SILTS = 1.000
MACH = 1.400 RN/L = 3.500
IB-AIL = 1.000

RUN NO. 1387/ 0 RN/L = 2.99 GRADIENT INTERVAL = -5.00/ 5.00

ALPHAR	BETAR	CNFRS	CAFRS	CLMFRS	CYFRS	CYNFRS	CBLRS	CABRS	CYNBRS	CP9	CP10
-8.417	-6.335	-.02070	.02500	-.02060	.04390	.00190	.00410	.02930	.00570	-.34820	-.31830
-8.575	-4.070	-.04290	.02680	-.00750	.05220	-.00460	.00850	.03220	.00620	-.38360	-.34950
-8.571	.074	-.08780	.03110	.02380	.04920	-.00750	.01720	.03590	.00700	-.42910	-.38910
-8.415	4.506	-.13770	.03500	.05540	.03720	-.00220	.02690	.03880	.00750	-.47110	-.41170
-8.413	6.363	-.15380	.03590	.06350	.02520	.00550	.03010	.03790	.00740	-.46480	-.39820
	GRADIENT	-.01106	.00096	.00733	-.00176	.00029	.00215	.00077	.00015	-.01019	-.00723

RUN NO. 1388/ 0 RN/L = 3.00 GRADIENT INTERVAL = -5.00/ 5.00

ALPHAR	BETAR	CNFRS	CAFRS	CLMFRS	CYFRS	CYNFRS	CBLRS	CABRS	CYNBRS	CP9	CP10
-6.494	-6.369	-.00930	.02650	-.02080	.02070	.01340	.00190	.02920	.00570	-.35080	-.31520
-6.400	-4.331	-.02540	.02860	-.00940	.02430	.00950	.00500	.03130	.00610	-.37290	-.33980
-6.512	.019	-.06650	.03140	.01850	.02570	.00470	.01310	.03480	.00680	-.42050	-.37270
-6.279	4.362	-.09960	.03540	.04030	.01430	.00960	.01950	.03520	.00680	-.43130	-.37170
-6.281	6.408	-.12190	.03720	.05210	.00910	.01280	.02390	.03740	.00730	-.46130	-.39130
	GRADIENT	-.00854	.00078	.00572	-.00115	.00001	.00167	.00045	.00008	-.00672	-.00367

IA156A, AEDC PWT 16T-470, 0 T S W/SILTS (R8NRC9) (10 MAY 80)

REFERENCE DATA

SREF = 2690.0000 SQ.FT. XMRP = 976.0000 IN. XT
LREF = 1290.3000 INCHES YMRP = .0000 IN. YT
BREF = 1290.3000 INCHES ZMRP = 400.0000 IN. ZT
SCALE = .0200

PARAMETRIC DATA

IB-ELV = 9.000 OB-ELV = -2.000
BDFLAP = .000 SPDBRK = .000
RUDDER = .000 SILTS = 1.000
MACH = 1.400 RN/L = 3.500
IB-AIL = 1.000

RUN NO. 1389/ 0 RN/L = 3.01 GRADIENT INTERVAL = -5.00/ 5.00

ALPHAR	BETAR	CNFRS	CAFRS	CLMFRS	CYFRS	CYNFRS	CBLRS	CABRS	CYNBRS	CP9	CP10
-4.338	-6.469	-.00190	.02860	-.01720	-.00240	.02590	.00040	.02820	.00550	-.34250	-.30040
-4.456	-4.279	-.01740	.03000	-.00740	.00350	.02040	.00340	.03070	.00600	-.37080	-.32870
-4.350	.322	-.05050	.03230	.01670	.00020	.01850	.00990	.03420	.00660	-.41910	-.35960
-3.849	4.439	-.07450	.03550	.03400	-.01200	.02520	.01460	.03590	.00700	-.44030	-.37710
-3.933	6.301	-.08770	.03680	.04170	-.01590	.02750	.01720	.03580	.00700	-.44070	-.37600
	GRADIENT	-.00656	.00063	.00476	-.00176	.00053	.00129	.00060	.00011	-.00802	-.00557

RUN NO. 1390/ 0 RN/L = 3.00 GRADIENT INTERVAL = -5.00/ 5.00

ALPHAR	BETAR	CNFRS	CAFRS	CLMFRS	CYFRS	CYNFRS	CBLRS	CABRS	CYNBRS	CP9	CP10
-.298	-7.325	.00540	.02990	-.00970	-.02010	.03703	-.00110	.02760	.00540	-.34270	-.28570
-.282	-5.160	-.00350	.02990	-.00240	-.02150	.03530	.00070	.02900	.00560	-.35540	-.30600
[illegible]	.715	[illegible]	[illegible]	.01170	-.03140	[illegible]	[illegible]	.03200	.00620	-.39280	-.33660
-.225	3.408	-.03920	.03620	.02480	-.04150	.04450	.00770	.03550	.00690	-.43450	-.37480
-.244	5.587	-.04830	.03800	.03070	-.04630	.04760	.00950	.03640	.00710	-.44660	-.38180
	GRADIENT	-.00427	.00056	.00318	-.00245	.00138	.00085	.00085	.00017	-.01011	-.00926

RUN NO. 1391/ 0 RN/L = 3.01 GRADIENT INTERVAL = -5.00/ 5.00

ALPHAR	BETAR	CNFRS	CAFRS	CLMFRS	CYFRS	CYNFRS	CBLRS	CABRS	CYNBRS	CP9	CP10
4.629	-5.741	.01040	.03070	-.00490	-.00270	.02580	-.00210	.02870	.00560	-.35230	-.30180
4.467	-3.633	.00670	.03150	-.00090	-.00840	.02820	-.00140	.03080	.00600	-.37820	-.32290
4.196	.072	-.00180	.03430	.00880	-.02390	.03790	.00030	.03290	.00640	-.40650	-.34290
4.264	3.800	-.00620	.03640	.01500	-.03680	.04770	.00120	.03470	.00670	-.42880	-.36120
4.236	5.832	-.01090	.03770	.01990	-.04530	.05380	.00210	.03680	.00720	-.45420	-.38500
	GRADIENT	-.00173	.00066	.00214	-.00382	.00262	.00035	.00052	.00009	-.00681	-.00515

IA156A, AEDC PWT 16T-470, 0 T S W/SILTS (R8NRD0) (10 MAY 80)

REFERENCE DATA

SREF = 2690.0000 SQ.FT. XMRP = 976.0000 IN. XT
LREF = 1290.3000 INCHES YMRP = .0000 IN. YT
BREF = 1290.3000 INCHES ZMRP = 400.0000 IN. ZT
SCALE = .0200

PARAMETRIC DATA

IB-ELV = 9.000 OB-ELV = -2.000
BDFLAP = .000 SPDBRK = .000
RUDDER = .000 SILTS = 1.000
MACH = 1.550 RN/L = 3.200
IB-AIL = 1.000

RUN NO. 1392/ 0 RN/L = 3.00 GRADIENT INTERVAL = -5.00/ 5.00

ALPHAR	BETAR	CNFRS	CAFRS	CLMFRS	CYFRS	CYNFRS	CBLRS	CABRS	CYNBRS	CP9	CP10
-8.441	-6.298	-.02520	.02440	-.01670	.04420	-.00030	.00500	.02540	.00490	-.30230	-.27590
-8.613	-3.992	-.04640	.02600	-.00400	.05110	-.00710	.00910	.02740	.00530	-.32590	-.29820
-8.545	.193	-.09140	.03050	.02700	.05070	-.01160	.01790	.03180	.00620	-.38520	-.34010
-8.366	4.629	-.13820	.03360	.05800	.03380	-.00340	.02700	.03410	.00660	-.41680	-.36060
-8.348	6.483	-.15280	.03390	.06590	.02060	.00530	.02990	.03380	.00660	-.41470	-.35490
	GRADIENT	-.01065	.00088	.00719	-.00202	.00044	.00208	.00077	.00015	-.01051	-.00721

RUN NO. 1393/ 0 RN/L = 3.00 GRADIENT INTERVAL = -5.00/ 5.00

ALPHAR	BETAR	CNFRS	CAFRS	CLMFRS	CYFRS	CYNFRS	CBLRS	CABRS	CYNBRS	CP9	CP10
-6.519	-6.322	-.01280	.02580	-.01780	.02340	.01020	.00260	.02510	.00490	-.30050	-.27120
-6.454	-4.287	-.02860	.02720	-.00700	.02770	.00540	.00570	.02740	.00530	-.32470	-.29890
-6.502	.128	-.06760	.03060	.02000	.02810	.00080	.01330	.03050	.00590	-.36950	-.32440
-6.253	4.475	-.10160	.03390	.04210	.01710	.00550	.01980	.03240	.00630	-.39790	-.33980
-6.188	6.510	-.11930	.03550	.05270	.00830	.01090	.02340	.03400	.00660	-.41910	-.35630
	GRADIENT	-.00833	.00076	.00561	-.00121	.00031	.00162	.00057	.00011	-.00836	-.00467

RUN NO. 1394/ 0 RN/L = 3.00 GRADIENT INTERVAL = -5.00/ 5.00

ALPHAR	BETAR	CNFRS	CAFRS	CLMFRS	CYFRS	CYNFRS	CBLRS	CABRS	CYNBRS	CP9	CP10
-4.271	-6.464	-.00340	.02700	-.01630	.00240	.02150	.00070	.02490	.00480	-.30130	-.26690
-4.544	-4.245	-.01980	.02850	-.00520	.00870	.01540	.00390	.02710	.00530	-.32690	-.29060
-4.388	.426	-.04980	.03140	.01640	.00360	.01530	.00980	.02980	.00580	-.36940	-.31000
-3.790	4.539	-.07060	.03400	.03180	-.01050	.02320	.01390	.03150	.00610	-.38940	-.32790
-3.902	6.414	-.08660	.03550	.04110	-.01410	.02540	.01700	.03290	.00640	-.40740	-.34320
	GRADIENT	-.00580	.00063	.00422	-.00216	.00087	.00114	.00050	.00009	-.00716	-.00424

RUN NO. 1395/ 0 RN/L = 3.00 GRADIENT INTERVAL = -5.00/ 5.00

ALPHAR	BETAR	CNFRS	CAFRS	CLMFRS	CYFRS	CYNFRS	CBLRS	CABRS	CYNBRS	CP9	CP10
-.386	-7.378	.00400	.02800	-.00890	-.01580	.03270	-.00080	.02420	.00470	-.30210	-.25040
-.368	-5.224	-.00480	.02930	-.00140	-.01920	.03300	.00090	.02600	.00500	-.31970	-.27200
-.363	-.821	-.02120	.03230	.01160	-.02960	.03700	.00410	.02850	.00550	-.35290	-.29740
-.349	3.332	-.03620	.03530	.02240	-.03850	.04260	.00710	.03190	.00620	-.39640	-.32980
-.380	5.511	-.04460	.03650	.02730	-.04330	.04620	.00880	.03330	.00650	-.41720	-.34100
	GRADIENT	-.00361	.00072	.00260	-.00214	.00135	.00072	.00082	.00017	-.01047	-.00780

IA156A, AEDC PWT 16T-470, 0 T S W/SILTS (R8NRD0) (10 MAY 80)

REFERENCE DATA

SREF = 2690.0000 SQ.FT. XMRP = 976.0000 IN. XT
LREF = 1290.3000 INCHES YMRP = .0000 IN. YT
BREF = 1290.3000 INCHES ZMRP = 400.0000 IN. ZT
SCALE = .0200

PARAMETRIC DATA

IB-ELV = 9.000 OB-ELV = -2.000
BDFLAP = .000 SPDBRK = .000
RUDDER = .000 SILTS = 1.000
MACH = 1.550 RN/L = 3.200
IB-AIL = 1.000

RUN NO. 1396/ 0 RN/L = 3.00 GRADIENT INTERVAL = -5.00/ 5.00

ALPHAR	BETAR	CNFRS	CAFRS	CLMFRS	CYFRS	CYNFRS	CBLRS	CABRS	CYNBRS	CP9	CP10
4.658	-5.640	.01040	.02990	-.00430	.00160	.02280	-.00210	.02620	.00510	-.32550	-.27260
4.445	-3.522	.00690	.03030	-.00050	-.00480	.02560	-.00140	.02720	.00530	-.33820	-.28060
4.155	.143	-.00170	.03290	.00960	-.02000	.03600	.00030	.02970	.00580	-.37120	-.30660
4.149	3.794	-.00430	.03450	.01350	-.03330	.04540	.00080	.03180	.00620	-.39670	-.32810
4.132	5.841	-.00670	.03630	.01650	-.04330	.05280	.00130	.03280	.00640	-.40760	-.33950
	GRADIENT	-.00153	.00057	.00191	-.00390	.00271	.00030	.00063	.00012	-.00800	-.00649

IA156A, AEDC PWT 16T-470, 0 T S W/SILTS (R8NRD1) (10 MAY 80)

REFERENCE DATA

SREF = 2690.0000 SQ.FT. XMRP = 976.0000 IN. XT
LREF = 1290.3000 INCHES YMRP = .0000 IN. YT
BREF = 1290.3000 INCHES ZMRP = 400.0000 IN. ZT
SCALE = .0200

PARAMETRIC DATA

IB-ELV = 8.000 OB-ELV = -2.000
BDFLAP = .000 SPDBRK = .000
RUDDER = .000 SILTS = 1.000
MACH = 1.150 RN/L = 3.500

RUN NO. 1399/ 0 RN/L = 3.50 GRADIENT INTERVAL = -5.00/ 5.00

ALPHAR	BETAR	CNFRS	CAFRS	CLMFRS	CYFRS	CYNFRS	CBLRS	CABRS	CYNBRS	CP9	CP10
-8.647	-6.307	-.00700	.02300	-.02780	.03890	.00710	.00150	.03540	.00690	-.42680	-.37850
-8.657	-4.184	-.02920	.02610	-.01390	.04800	.00110	.00590	.03740	.00730	-.44980	-.40110
-8.715	.042	-.07630	.02830	.01610	.04790	-.00020	.01510	.04230	.00820	-.50330	-.46030
-8.551	4.174	-.12130	.03080	.04530	.03040	.00990	.02380	.04450	.00860	-.52550	-.48740
-8.567	6.169	-.13980	.03140	.05470	.02220	.01490	.02750	.04560	.00890	-.54200	-.49740
	GRADIENT	-.01102	.00056	.00708	-.00210	.00105	.00214	.00085	.00016	-.00907	-.01034

RUN NO. 1400/ 0 RN/L = 3.51 GRADIENT INTERVAL = -5.00/ 5.00

ALPHAR	BETAR	CNFRS	CAFRS	CLMFRS	CYFRS	CYNFRS	CBLRS	CABRS	CYNBRS	CP9	CP10
-6.466	-6.346	.00260	.02530	-.02680	.01320	.01950	-.00040	.03400	.00660	-.40900	-.36510
-6.431	-4.369	-.01440	.02720	-.01550	.01940	.01420	.00290	.03640	.00710	-.44130	-.38820
-6.607	-.062	-.05670	.02840	.01260	.01680	.01400	.01120	.04200	.00810	-.49950	-.45620
-6.405	4.232	-.09450	.03220	.03780	.00260	.02070	.01850	.04360	.00850	-.51730	-.47570
-6.186	6.398	-.11270	.03300	.04880	-.00650	.02650	.02210	.04530	.00880	-.53840	-.49380
	GRADIENT	-.00931	.00058	.00620	-.00195	.00076	.00181	.00084	.00016	-.00884	-.01018

IA156A, AEDC PWT 16T-470, O T S W/SILTS (R8NRD1) (10 MAY 80)

REFERENCE DATA

SREF = 2690.0000 SQ.FT. XMRP = 976.0000 IN. XT
LREF = 1290.3000 INCHES YMRP = .0000 IN. YT
BREF = 1290.3000 INCHES ZMRP = 400.0000 IN. ZT
SCALE = .0200

PARAMETRIC DATA

IB-ELV = 8.000 OB-ELV = -2.000
BDFLAP = .000 SPDBRK = .000
RUDDER = .000 SILTS = 1.000
MACH = 1.150 RN/L = 3.500

RUN NO. 1401/ 0 RN/L = 3.50 GRADIENT INTERVAL = -5.00/ 5.00

ALPHAR	BETAR	CNFRS	CAFRS	CLMFRS	CYFRS	CYNFRS	CBLRS	CABRS	CYNBRS	CP9	CP10
-4.228	-6.466	.00670	.02750	-.02270	-.00990	.03130	-.00120	.03390	.00660	-.40470	-.36630
-4.461	-4.270	-.00880	.02900	-.01310	-.00370	.02520	.00180	.03590	.00700	-.43620	-.38130
-4.404	.262	-.04420	.03070	.01340	-.01520	.03000	.00870	.04080	.00790	-.48670	-.44180
-3.892	4.331	-.07210	.03360	.03320	-.02520	.03580	.01410	.04320	.00840	-.51660	-.46740
-4.046	6.221	-.09000	.03490	.04320	-.02640	.03700	.01760	.04460	.00870	-.53290	-.48300
	GRADIENT	-.00737	.00053	.00539	-.00250	.00123	.00143	.00085	.00016	-.00938	-.01007

RUN NO. 1402/ 0 RN/L = 3.51 GRADIENT INTERVAL = -5.00/ 5.00

ALPHAR	BETAR	CNFRS	CAFRS	CLMFRS	CYFRS	CYNFRS	CBLRS	CABRS	CYNBRS	CP9	CP10
-.321	-7.344	.01270	.02930	-.01620	-.02460	.03990	-.00250	.03270	.00630	-.39770	-.34690
-.304	-5.155	.00240	.02940	-.00790	-.02710	.03930	-.00050	.03460	.00670	-.41980	-.36760
-.368	-.765	-.01630	.03250	.00580	-.03750	.04460	.00310	.03910	.00760	-.47270	-.41690
-.281	3.382	-.03730	.03610	.02160	-.04810	.05150	.00730	.04280	.00830	-.51270	-.46230
-.277	5.581	-.04890	.03630	.02940	-.05160	.05320	.00960	.04370	.00850	-.52320	-.47190
	GRADIENT	-.00506	.00087	.00381	-.00256	.00166	.00101	.00089	.00017	-.00965	-.01095

RUN NO. 1403/ 0 RN/L = 3.50 GRADIENT INTERVAL = -5.00/ 5.00

ALPHAR	BETAR	CNFRS	CAFRS	CLMFRS	CYFRS	CYNFRS	CBLRS	CABRS	CYNBRS	CP9	CP10
4.501	-5.786	.01360	.03120	-.00870	-.01150	.03090	-.00270	.03550	.00690	-.42730	-.38110
4.348	-3.665	.01090	.03260	-.00530	-.01690	.03290	-.00220	.03810	.00740	-.45550	-.41210
4.149	.013	.00350	.03380	.00240	-.03200	.04250	-.00080	.04020	.00780	-.48290	-.43210
4.246	3.772	-.00340	.03560	.01040	-.04230	.05020	.00060	.04210	.00820	-.50690	-.45170
4.201	5.831	-.00780	.03580	.01370	-.04990	.05590	.00150	.04220	.00820	-.50870	-.45160
	GRADIENT	-.00192	.00040	.00219	-.00341	.00233	.00038	.00054	.00011	-.00691	-.00532

IA156A, AEDC PWT 16T-470, 0 T S W/SILTS (R8NRD2) (10 MAY 80)

REFERENCE DATA

SREF = 2690.0000 SQ.FT. XMRP = 976.0000 IN. XT
LREF = 1290.3000 INCHES YMRP = .0000 IN. YT
BREF = 1290.3000 INCHES ZMRP = 400.0000 IN. ZT
SCALE = .0200

PARAMETRIC DATA

IB-ELV = 8.000 OB-ELV = -2.000
BDFLAP = .000 SPDBRK = .000
RUDDER = .000 SILTS = 1.000
MACH = 1.250 RN/L = 3.500

RUN NO. 1404/ 0 RN/L = 3.50 GRADIENT INTERVAL = -5.00/ 5.00

ALPHAR	BETAR	CNFRS	CAFRS	CLMFRS	CYFRS	CYNFRS	CBLRS	CABRS	CYNBRS	CP9	CP10
-8.487	-6.314	-.01310	.02510	-.02530	.04160	.00460	.00270	.03330	.00650	-.39880	-.35920
-8.671	-4.093	-.03660	.02690	-.01040	.05080	-.00200	.00730	.03520	.00680	-.41930	-.38120
-8.668	-.027	-.08180	.03010	.02040	.04680	-.00190	.01610	.04000	.00780	-.47330	-.43770
-8.520	4.370	-.12710	.03340	.04920	.03040	.00630	.02490	.04160	.00810	-.49560	-.45070
-8.566	6.242	-.14780	.03510	.05930	.02530	.00990	.02900	.04260	.00830	-.51060	-.45870
	GRADIENT	-.01069	.00077	.00704	-.00243	.00099	.00208	.00075	.00015	-.00896	-.00814

RUN NO. 1405/ 0 RN/L = 3.49 GRADIENT INTERVAL = -5.00/ 5.00

ALPHAR	BETAR	CNFRS	CAFRS	CLMFRS	CYFRS	CYNFRS	CBLRS	CABRS	CYNBRS	CP9	CP10
-6.476	-6.352	-.00310	.02690	-.02460	.01640	.01630	.00070	.03160	.00610	-.38000	-.34040
-6.423	-4.381	-.02040	.02860	-.01240	.02140	.01180	.00410	.03430	.00670	-.41310	-.36920
-6.569	-.021	-.06330	.03100	.01780	.01550	.01260	.01240	.03970	.00770	-.47350	-.43040
-6.366	4.272	-.09960	.03480	.04080	.00820	.01610	.01950	.04080	.00790	-.48840	-.44070
-6.234	6.415	-.11860	.03640	.05130	.00110	.02080	.02330	.04210	.00820	-.50780	-.45170
	GRADIENT	-.00915	.00072	.00615	-.00153	.00050	.00178	.00075	.00014	-.00872	-.00828

RUN NO. 1406/ 0 RN/L = 3.50 GRADIENT INTERVAL = -5.00/ 5.00

ALPHAR	BETAR	CNFRS	CAFRS	CLMFRS	CYFRS	CYNFRS	CBLRS	CABRS	CYNBRS	CP9	CP10
-4.319	-6.456	.00180	.02820	-.01980	-.00720	.02830	-.00030	.03100	.00600	-.37250	-.33400
-4.441	-4.290	-.01480	.02980	-.00850	-.00320	.02390	.00290	.03400	.00660	-.41110	-.36410
-4.368	.255	-.04780	.03190	.01570	-.00880	.02570	.00940	.03820	.00740	-.45980	-.41030
-3.887	4.348	-.07440	.03570	.03440	-.01740	.03060	.01460	.03960	.00770	-.47760	-.42500
-4.012	6.218	-.09080	.03700	.04340	-.01870	.03130	.01780	.04050	.00790	-.48930	-.43310
	GRADIENT	-.00691	.00068	.00497	-.00164	.00077	.00136	.00065	.00013	-.00775	-.00711

RUN NO. 1407/ 0 RN/L = 3.51 GRADIENT INTERVAL = -5.00/ 5.00

ALPHAR	BETAR	CNFRS	CAFRS	CLMFRS	CYFRS	CYNFRS	CBLRS	CABRS	CYNBRS	CP9	CP10
-.280	-7.359	.00810	.03010	-.01260	-.02270	.03820	-.00160	.02910	.00570	-.35810	-.30580
-.263	-5.186	-.00130	.02970	-.00520	-.02620	.03860	.00030	.03300	.00640	-.40460	-.34810
-.291	-.721	-.02060	.03420	.00990	-.03610	.04290	.00400	.03590	.00700	-.43890	-.37890
-.197	3.407	-.03970	.03700	.02490	-.04620	.04870	.00780	.03930	.00760	-.47580	-.42020
-.219	5.618	-.05090	.03840	.03210	-.05000	.05110	.01000	.03990	.00780	-.48460	-.42500
	GRADIENT	-.00463	.00068	.00363	-.00245	.00140	.00092	.00082	.00015	-.00894	-.01000

IA156A, AEDC PWT 16T-470, O T S W/SILTS (R8NRD2) (10 MAY 80)

REFERENCE DATA

SREF = 2690.0000 SQ.FT. XMRP = 976.0000 IN. XT
LREF = 1290.3000 INCHES YMRP = .0000 IN. YT
BREF = 1290.3000 INCHES ZMRP = 400.0000 IN. ZT
SCALE = .0200

PARAMETRIC DATA

IB-ELV = 8.000 OB-ELV = -2.000
BDFLAP = .000 SPDBRK = .000
RUDDER = .000 SILTS = 1.000
MACH = 1.250 RN/L = 3.500

RUN NO. 1408/ 0 RN/L = 3.50 GRADIENT INTERVAL = -5.00/ 5.00

ALPHAR	BETAR	CNFRS	CAFRS	CLMFRS	CYFRS	CYNFRS	CBLRS	CABRS	CYNBRS	CP9	CP10
4.618	-5.780	.01250	.03170	-.00750	-.00860	.02930	-.00250	.03290	.00640	-.40000	-.35040
4.421	-3.643	.00970	.03330	-.00480	-.01350	.03100	-.00200	.03450	.00670	-.41710	-.36840
4.219	.089	.00020	.03440	.00610	-.02880	.04050	-.00010	.03710	.00720	-.44920	-.39500
4.337	3.796	-.00520	.03750	.01350	-.04050	.05000	.00090	.03830	.00740	-.46250	-.40870
4.290	5.826	-.00950	.03750	.01720	-.04840	.05560	.00180	.03910	.00760	-.47300	-.41810
	GRADIENT	-.00200	.00056	.00246	-.00363	.00255	.00039	.00051	.00009	-.00611	-.00542

IA156A, AEDC PWT 16T-470, O T S W/SILTS (R8NRD3) (10 MAY 80)

REFERENCE DATA

SREF = 2690.0000 SQ.FT. XMRP = 976.0000 IN. XT
LREF = 1290.3000 INCHES YMRP = .0000 IN. YT
BREF = 1290.3000 INCHES ZMRP = 400.0000 IN. ZT
SCALE = .0200

PARAMETRIC DATA

IB-ELV = 8.000 OB-ELV = -2.000
BDFLAP = .000 SPDBRK = .000
RUDDER = .000 SILTS = 1.000
MACH = 1.400 RN/L = 3.500

RUN NO. 1409/ 0 RN/L = 3.00 GRADIENT INTERVAL = -5.00/ 5.00

ALPHAR	BETAR	CNFRS	CAFRS	CLMFRS	CYFRS	CYNFRS	CBLRS	CABRS	CYNBRS	CP9	CP10
-8.419	-6.334	-.02050	.02500	-.02080	.04350	.00230	.00410	.02970	.00580	-.35380	-.32290
-8.590	-4.074	-.04220	.02720	-.00730	.05120	-.00420	.00830	.03100	.00600	-.37000	-.33650
-8.581	.079	-.08770	.03090	.02380	.04910	-.00750	.01730	.03620	.00700	-.43310	-.39220
-9.389	4.488	-.13800	.03560	.05560	.03730	-.00220	.02700	.03830	.00740	-.46620	-.40730
-8.454	6.380	-.15470	.03630	.06400	.02540	.00570	.03030	.03710	.00720	-.45500	-.38960
	GRADIENT	-.01119	.00098	.00734	-.00163	.00024	.00218	.00085	.00016	-.01120	-.00822

RUN NO. 1410/ 0 RN/L = 2.99 GRADIENT INTERVAL = -5.00/ 5.00

ALPHAR	BETAR	CNFRS	CAFRS	CLMFRS	CYFRS	CYNFRS	CBLRS	CABRS	CYNBRS	CP9	CP10
-6.499	-6.363	-.00900	.02680	-.02090	.02050	.01360	.00180	.02880	.00560	-.34580	-.30980
-6.411	-4.341	-.02520	.02900	-.00940	.02370	.00990	.00500	.03120	.00610	-.37200	-.33800
-6.497	.024	-.06650	.03160	.01860	.02530	.00500	.01310	.03450	.00670	-.41650	-.37010
-6.289	4.361	-.10100	.03590	.04080	.01520	.00930	.01980	.03570	.00690	-.43790	-.37580
-6.284	6.392	-.12170	.03730	.05200	.00920	.01270	.02390	.03740	.00730	-.46120	-.39080
	GRADIENT	-.00871	.00079	.00577	-.00098	-.00007	.00170	.00052	.00009	-.00758	-.00435

IA156A. AEDC PWT 16T-470. 0 T S W/SILTS (R8NRD3) (10 MAY 80)

REFERENCE DATA

SREF = 2690.0000 SQ.FT. XMRP = 976.0000 IN. XT
LREF = 1290.3000 INCHES YMRP = .0000 IN. YT
BREF = 1290.3000 INCHES ZMRP = 400.0000 IN. ZT
SCALE = .0200

PARAMETRIC DATA

IB-ELV = 8.000 OB-ELV = -2.000
BDFLAP = .000 SPDBRK = .000
RUDDER = .000 SILTS = 1.000
MACH = 1.400 RN/L = 3.500

RUN NO. 1411/ 0 RN/L = 2.99 GRADIENT INTERVAL = -5.00/ 5.00

ALPHAR	BETAR	CNFRS	CAFRS	CLMFRS	CYFRS	CYNFRS	CBLRS	CABRS	CYNBRS	CP9	CP10
-4.149	-6.457	-.00180	.02900	-.01670	-.00410	.02700	.00040	.02860	.00560	-.34740	-.30460
-4.473	-4.278	-.01750	.03020	-.00730	.00350	.02040	.00350	.03060	.00590	-.36980	-.32770
-4.336	.330	-.05020	.03280	.01670	-.00030	.01880	.00990	.03350	.00650	-.41170	-.35260
-3.843	4.445	-.07360	.03580	.03390	-.01280	.02580	.01440	.03520	.00680	-.43240	-.37040
-3.949	6.299	-.08880	.03730	.04220	-.01630	.02800	.01740	.03650	.00710	-.44900	-.38360
	GRADIENT	-.00644	.00064	.00473	-.00185	.00060	.00125	.00053	.00010	-.00721	-.00491

RUN NO. 1412/ 0 RN/L = 2.99 GRADIENT INTERVAL = -5.00/ 5.00

ALPHAR	BETAR	CNFRS	CAFRS	CLMFRS	CYFRS	CYNFRS	CBLRS	CABRS	CYNBRS	CP9	CP10
-.308	-7.367	.00530	.03020	-.00970	-.02030	.03720	-.00110	.02750	.00530	-.34180	-.28460
-.296	-5.149	-.00360	.03030	-.00250	-.02170	.03560	.00070	.02880	.00560	-.35280	-.30390
-.290	-.765	-.02170	.03410	.01170	-.03150	.03900	.00420	.03200	.00620	-.39140	-.33670
-.229	3.396	-.03940	.03630	.02490	-.04160	.04460	.00770	.03560	.00690	-.43450	-.37610
-.254	5.587	-.04890	.03810	.03100	-.04620	.04750	.00960	.03650	.00710	-.44790	-.38390
	GRADIENT	-.00425	.00053	.00317	-.00243	.00135	.00084	.00087	.00017	-.01036	-.00947

RUN NO. 1413/ 0 RN/L = 2.99 GRADIENT INTERVAL = -5.00/ 5.00

ALPHAR	BETAR	CNFRS	CAFRS	CLMFRS	CYFRS	CYNFRS	CBLRS	CABRS	CYNBRS	CP9	CP10
4.613	-5.735	.01060	.03080	-.00530	-.00280	.02580	-.00210	.02880	.00560	-.35310	-.30380
4.443	-3.625	.00680	.03190	-.00110	-.00870	.02860	-.00140	.03020	.00590	-.37140	-.31630
4.215	.076	-.00190	.03450	.00890	-.02400	.03800	.00030	.03280	.00640	-.40650	-.34170
4.273	3.781	-.00610	.03640	.01510	-.03690	.04800	.00110	.03500	.00680	-.43270	-.36470
4.227	5.827	-.01030	.03780	.01950	-.04450	.05320	.00200	.03570	.00690	-.44070	-.37180
	GRADIENT	-.00174	.00061	.00219	-.00381	.00262	.00034	.00065	.00012	-.00828	-.00653

IA156A, AEDC PWT 16T-470, O T S W/SILTS (R8NRD4) (10 MAY 80)

REFERENCE DATA

SREF = 2690.0000 SQ.FT. XMRP = 976.0000 IN. XT
LREF = 1290.3000 INCHES YMRP = .0000 IN. YT
BREF = 1290.3000 INCHES ZMRP = 400.0000 IN. ZT
SCALE = .0200

PARAMETRIC DATA

IB-ELV = 8.000 OB-ELV = -2.000
BDFLAP = .000 SPDBRK = .000
RUDDER = .000 SILTS = 1.000
MACH = 1.550 RN/L = 3.200

RUN NO. 1414/ 0 RN/L = 3.00 GRADIENT INTERVAL = -5.00/ 5.00

ALPHAR	BETAR	CNFRS	CAFRS	CLMFRS	CYFRS	CYNFRS	CBLRS	CABRS	CYNBRS	CP9	CP10
-8.446	-6.291	-.02610	.02460	-.01650	.04490	-.00050	.00520	.02530	.00490	-.30120	-.27390
-8.628	-3.996	-.04700	.02630	-.00380	.05150	-.00710	.00930	.02740	.00530	-.32640	-.29800
-8.569	.179	-.09050	.03070	.02660	.05060	-.01140	.01780	.03140	.00610	-.37980	-.33520
-8.367	4.640	-.13890	.03380	.05840	.03360	-.00320	.02720	.03410	.00660	-.41670	-.36020
-8.361	6.484	-.15440	.03440	.06670	.02070	.00550	.03020	.03420	.00660	-.42050	-.35930
	GRADIENT	-.01064	.00087	.00720	-.00209	.00047	.00207	.00077	.00015	-.01043	-.00718

RUN NO. 1415/ 0 RN/L = 3.00 GRADIENT INTERVAL = -5.00/ 5.00

ALPHAR	BETAR	CNFRS	CAFRS	CLMFRS	CYFRS	CYNFRS	CBLRS	CABRS	CYNBRS	CP9	CP10
-6.555	-6.336	-.01330	.02590	-.01780	.02390	.01020	.00270	.02510	.00490	-.30010	-.27100
-6.460	-4.283	-.02850	.02730	-.00700	.02750	.00560	.00560	.02730	.00530	-.32430	-.29790
-6.512	.113	-.06740	.03090	.02000	.02790	.00110	.01330	.03050	.00590	-.36940	-.32440
-6.226	4.470	-.10140	.03420	.04220	.01710	.00540	.01990	.03230	.00630	-.39760	-.33920
-6.200	6.500	-.12040	.03590	.05320	.00880	.01060	.02360	.03390	.00660	-.41860	-.35440
	GRADIENT	-.00833	.00079	.00562	-.00119	-.00002	.00163	.00057	.00011	-.00838	-.00472

RUN NO. 1416/ 0 RN/L = 3.00 GRADIENT INTERVAL = -5.00/ 5.00

ALPHAR	BETAR	CNFRS	CAFRS	CLMFRS	CYFRS	CYNFRS	CBLRS	CABRS	CYNBRS	CP9	CP10
-4.264	-6.458	-.00370	.02730	-.01610	.00240	.02150	.00080	.02460	.00480	-.29770	-.26320
-4.550	-4.255	-.02000	.02890	-.00520	.00880	.01560	.00390	.02700	.00520	-.32560	-.28950
-4.397	.422	-.05030	.03190	.01680	.00350	.01550	.00990	.02980	.00580	-.36960	-.30970
-3.800	4.544	-.07140	.03420	.03220	-.01010	.02300	.01400	.03120	.00610	-.38630	-.32510
-3.898	6.396	-.08690	.03590	.04120	-.01370	.02530	.01710	.03300	.00640	-.40830	-.34330
	GRADIENT	-.00586	.00060	.00426	-.00213	.00082	.00115	.00048	.00010	-.00695	-.00405

RUN NO. 1417/ 0 RN/L = 3.00 GRADIENT INTERVAL = -5.00/ 5.00

ALPHAR	BETAR	CNFRS	CAFRS	CLMFRS	CYFRS	CYNFRS	CBLRS	CABRS	CYNBRS	CP9	CP10
-.394	-7.431	.00400	.02820	-.00880	-.01600	.03290	-.00080	.02380	.00460	-.29730	-.24590
-.383	-5.212	-.00470	.02950	-.00170	-.01910	.03310	.00090	.02610	.00510	-.32110	-.27330
-.371	-.838	-.02140	.03230	.01170	-.02970	.03710	.00420	.02880	.00560	-.35610	-.30060
-.354	3.326	-.03650	.03570	.02260	-.03860	.04270	.00720	.03160	.00610	-.39280	-.32700
-.387	5.512	-.04490	.03680	.02740	-.04330	.04610	.00880	.03330	.00650	-.41690	-.34200
	GRADIENT	-.00363	.00082	.00262	-.00214	.00135	.00072	.00067	.00012	-.00881	-.00634

IA156A, AEDC PWT 16T-470, O T S W/SILTS (R8NRD4) (10 MAY 80)

REFERENCE DATA

SREF = 2690.0000 SQ.FT. XMRP = 976.0000 IN. XT
LREF = 1290.3000 INCHES YMRP = .0000 IN. YT
BREF = 1290.3000 INCHES ZMRP = 400.0000 IN. ZT
SCALE = .0200

PARAMETRIC DATA

IB-ELV = 8.000 OB-ELV = -2.000
BDFLAP = .000 SPDBRK = .000
RUDDER = .000 SILTS = 1.000
MACH = 1.550 RN/L = 3.200

RUN NO. 1418/ 0 RN/L = 3.00 GRADIENT INTERVAL = -5.00/ 5.00

ALPHAR	BETAR	CNFRS	CAFRS	CLMFRS	CYFRS	CYNFRS	CBLRS	CABRS	CYNBRS	CP9	CP10
4.661	-5.641	.01050	.03020	-.00430	.00160	.02300	-.00210	.02620	.00510	-.32530	-.27200
4.429	-3.513	.00650	.03070	-.00020	-.00510	.02590	-.00140	.02680	.00520	-.33380	-.27600
4.168	.142	-.00190	.03350	.00960	-.02050	.03640	.00030	.02950	.00570	-.36920	-.30370
4.174	3.805	-.00410	.03490	.01350	-.03370	.04600	.00070	.03210	.00620	-.40070	-.33150
4.107	5.810	-.00730	.03670	.01700	-.04390	.05320	.00140	.03280	.00640	-.40860	-.33950
	GRADIENT	-.00145	.00057	.00187	-.00391	.00275	.00029	.00072	.00014	-.00914	-.00758

IA156A, AEDC PWT 16T-470, O T S W/SILTS (R8NRD5) (10 MAY 80)

REFERENCE DATA

SREF = 2690.0000 SQ.FT. XMRP = 976.0000 IN. XT
LREF = 1290.3000 INCHES YMRP = .0000 IN. YT
BREF = 1290.3000 INCHES ZMRP = 400.0000 IN. ZT
SCALE = .0200

PARAMETRIC DATA

IB-ELV = 8.000 OB-ELV = -2.000
BDFLAP = .000 SPDBRK = .000
RUDDER = .000 SILTS = 1.000
MACH = 1.550 RN/L = 3.200

RUN NO. 1419/ 0 RN/L = 3.00 GRADIENT INTERVAL = -5.00/ 5.00

ALPHAR	BETAR	CNFRS	CAFRS	CLMFRS	CYFRS	CYNFRS	CBLRS	CABRS	CYNBRS	CP9	CP10
-8.617	-6.204	-.02730	.02450	-.01600	.04660	-.00150	.00540	.02540	.00490	-.30250	-.27610
-8.656	-4.028	-.04620	.02620	-.00420	.05140	-.00710	.00910	.02740	.00530	-.32580	-.29740
-8.548	.430	-.09380	.03100	.02870	.05010	-.01120	.01840	.03180	.00620	-.38470	-.33900
-8.362	4.528	-.13710	.03370	.05750	.03460	-.00390	.02680	.03400	.00660	-.41490	-.35910
-8.365	6.471	-.15400	.03420	.06650	.02080	.00540	.03020	.03390	.00660	-.41630	-.35610
	GRADIENT	-.01062	.00098	.00721	-.00194	.00036	.00207	.00077	.00015	-.01045	-.00724

IA156A, AEDC PWT 16T-470, O T S W/SILTS (R8NRD6) (10 MAY 80)

REFERENCE DATA

SREF = 2690.0000 SQ.FT. XMRP = 976.0000 IN. XT
LREF = 1290.3000 INCHES YMRP = .0000 IN. YT
BREF = 1290.3000 INCHES ZMRP = 400.0000 IN. ZT
SCALE = .0200

PARAMETRIC DATA

IB-ELV = 10.000 OB-ELV = -2.000
BDFLAP = .000 SPDBRK = .000
RUDDER = .000 SILTS = 1.000
MACH = 1.150 RN/L = 3.500

RUN NO. 1432/ 0 RN/L = 3.50 GRADIENT INTERVAL = -5.00/ 5.00

ALPHAR	BETAR	CNFRS	CAFRS	CLMFRS	CYFRS	CYNFRS	CBLRS	CABRS	CYNBRS	CP9	CP10
-8.488	-6.329	-.00760	.02480	-.02760	.03860	.00800	.00160	.03520	.00680	-.42540	-.37540
-8.709	-4.164	-.03020	.02580	-.01390	.05020	.00020	.00610	.03870	.00750	-.46360	-.41770
-8.747	.133	-.08110	.02930	.01840	.05080	-.00170	.01600	.04380	.00850	-.52050	-.47760
-8.535	4.226	-.12620	.03120	.04820	.03100	.00960	.02480	.04590	.00890	-.54260	-.50200
-8.586	6.199	-.14510	.03250	.05770	.02240	.01520	.02850	.04640	.00900	-.55130	-.50600
	GRADIENT	-.01145	.00065	.00740	-.00227	.00111	.00223	.00086	.00017	-.00945	-.01008

RUN NO. 1433/ 0 RN/L = 3.50 GRADIENT INTERVAL = -5.00/ 5.00

ALPHAR	BETAR	CNFRS	CAFRS	CLMFRS	CYFRS	CYNFRS	CBLRS	CABRS	CYNBRS	CP9	CP10
-6.502	-6.366	.00180	.02660	-.02700	.01470	.01920	-.00020	.03420	.00660	-.41260	-.36590
-6.424	-4.376	-.01550	.02860	-.01540	.02000	.01430	.00310	.03730	.00720	-.45150	-.39750
-6.607	-.062	-.05990	.02970	.01460	.01820	.01320	.01180	.04240	.00820	-.50490	-.46140
-6.403	4.255	-.09850	.03340	.04020	.00290	.02080	.01940	.04450	.00860	-.52830	-.48500
-6.355	6.245	-.11700	.03400	.05060	-.00320	.02500	.02300	.04620	.00900	-.54930	-.50190
	GRADIENT	-.00962	.00056	.00644	-.00198	.00075	.00189	.00083	.00016	-.00890	-.01014

RUN NO. 1434/ 0 RN/L = 3.50 GRADIENT INTERVAL = -5.00/ 5.00

ALPHAR	BETAR	CNFRS	CAFRS	CLMFRS	CYFRS	CYNFRS	CBLRS	CABRS	CYNBRS	CP9	CP10
-4.237	-6.459	.00640	.02810	-.02260	-.00980	.03140	-.00120	.03430	.00670	-.41100	-.37120
-4.479	-4.282	-.00940	.02960	-.01300	-.00320	.02510	.00190	.03660	.00710	-.44480	-.38990
-4.402	.264	-.04660	.03190	.01520	-.01430	.02960	.00920	.04110	.00800	-.49070	-.44440
-3.898	4.358	-.07450	.03460	.03480	-.02420	.03530	.01460	.04380	.00850	-.52320	-.47530
-4.020	6.206	-.09080	.03550	.04400	-.02620	.03700	.01780	.04500	.00870	-.53710	-.48770
	GRADIENT	-.00755	.00058	.00555	-.00243	.00118	.00147	.00084	.00016	-.00909	-.00992

RUN NO. 1435/ 0 RN/L = 3.50 GRADIENT INTERVAL = -5.00/ 5.00

ALPHAR	BETAR	CNFRS	CAFRS	CLMFRS	CYFRS	CYNFRS	CBLRS	CABRS	CYNBRS	CP9	CP10
-.305	-7.414	.01220	.03010	-.01560	-.02410	.03960	-.00240	.03260	.00630	-.39820	-.34510
-.293	-5.160	.00140	.03000	-.00700	-.02660	.03880	-.00030	.03420	.00660	-.41580	-.36380
-.365	-.737	-.01710	.03280	.00630	-.03730	.04440	.00330	.03950	.00770	-.47820	-.42090
-.271	3.376	-.03830	.03580	.02260	-.04760	.05110	.00750	.04350	.00840	-.52080	-.46920
-.262	5.566	-.05020	.03650	.03040	-.05110	.05270	.00980	.04400	.00850	-.52810	-.47480
	GRADIENT	-.00515	.00073	.00396	-.00250	.00163	.00102	.00097	.00017	-.01036	-.01174

IA156A, AEDC PWT 16T-470, 0 T S W/SILTS (R8NRD6) (10 MAY 80)

REFERENCE DATA

SREF = 2690.0000 SQ.FT. XMRP = 976.0000 IN. XT
LREF = 1290.3000 INCHES YMRP = .0000 IN. YT
BREF = 1290.3000 INCHES ZMRP = 400.0000 IN. ZT
SCALE = .0200

PARAMETRIC DATA

IB-ELV = 10.000 OB-ELV = -2.000
BDFLAP = .000 SPDBRK = .000
RUDDER = .000 SILTS = 1.000
MACH = 1.150 RN/L = 3.500

RUN NO. 1436/ 0 RN/L = 3.50 GRADIENT INTERVAL = -5.00/ 5.00

ALPHAR	BETAR	CNFRS	CAFRS	CLMFRS	CYFRS	CYNFRS	CBLRS	CABRS	CYNBRS	CP9	CP10
4.384	-5.844	.01250	.03150	-.00810	-.01100	.03050	-.00250	.03540	.00690	-.42680	-.37940
4.404	-3.765	.01070	.03280	-.00550	-.01550	.03200	-.00210	.03770	.00730	-.45260	-.40720
4.263	.076	.00280	.03430	.00370	-.03110	.04200	-.00060	.04000	.00780	-.48000	-.43080
4.238	3.718	-.00520	.03590	.01190	-.04180	.04980	.00100	.04210	.00820	-.50630	-.45150
4.202	5.797	-.00890	.03580	.01490	-.04950	.05570	.00170	.04250	.00820	-.51240	-.45510
	GRADIENT	-.00212	.00040	.00233	-.00352	.00238	.00041	.00059	.00012	-.00718	-.00592

IA156A, AEDC PWT 16T-470, 0 T S W/SILTS (R8NRD7) (10 MAY 80)

REFERENCE DATA

SREF = 2690.0000 SQ.FT. XMRP = 976.0000 IN. XT
LREF = 1290.3000 INCHES YMRP = .0000 IN. YT
BREF = 1290.3000 INCHES ZMRP = 400.0000 IN. ZT
SCALE = .0200

PARAMETRIC DATA

IB-ELV = 10.000 OB-ELV = -2.000
BDFLAP = .000 SPDBRK = .000
RUDDER = .000 SILTS = 1.000
MACH = 1.250 RN/L = 3.500

RUN NO. 1437/ 0 RN/L = 3.50 GRADIENT INTERVAL = -5.00/ 5.00

ALPHAR	BETAR	CNFRS	CAFRS	CLMFRS	CYFRS	CYNFRS	CBLRS	CABRS	CYNBRS	CP9	CP10
-8.639	-6.300	-.01530	.02540	-.02400	.04440	.00300	.00310	.03270	.00630	-.39400	-.35090
-8.669	-4.163	-.03670	.02700	-.01000	.05120	-.00240	.00730	.03550	.00690	-.42410	-.38520
-8.653	-.030	-.08310	.03030	.02140	.04790	-.00270	.01640	.04060	.00790	-.48070	-.44360
-8.520	4.307	-.12720	.03360	.04980	.03110	.00570	.02500	.04170	.00810	-.49730	-.45310
-8.564	6.232	-.14840	.03560	.06010	.02610	.00930	.02910	.04210	.00820	-.50470	-.45530
	GRADIENT	-.01068	.00078	.00706	-.00239	.00096	.00209	.00073	.00014	-.00860	-.00797

RUN NO. 1438/ 0 RN/L = 3.50 GRADIENT INTERVAL = -5.00/ 5.00

ALPHAR	BETAR	CNFRS	CAFRS	CLMFRS	CYFRS	CYNFRS	CBLRS	CABRS	CYNBRS	CP9	CP10
-6.470	-6.352	-.00450	.02690	-.02310	.01630	.01600	.00100	.03180	.00620	-.38190	-.34190
-6.411	-4.377	-.02220	.02870	-.01070	.02160	.01130	.00450	.03480	.00680	-.41860	-.37500
-6.553	-.031	-.06380	.03110	.01860	.01650	.01180	.01260	.03940	.00770	-.47040	-.42790
-6.354	4.272	-.10100	.03520	.04210	.00830	.01590	.01980	.04080	.00790	-.48780	-.44130
-6.374	6.306	-.12050	.03660	.05250	.00280	.01980	.02360	.04180	.00810	-.50210	-.44980
	GRADIENT	-.00911	.00075	.00611	-.00154	.00053	.00177	.00069	.00013	-.00801	-.00767

IA156A, AEDC PWT 16T-470, 0 T S W/SILTS (R8NRD7) (10 MAY 80)

REFERENCE DATA

SREF = 2690.0000 SQ.FT. XMRP = 976.0000 IN. XT
LREF = 1290.3000 INCHES YMRP = .0000 IN. YT
BREF = 1290.3000 INCHES ZMRP = 400.0000 IN. ZT
SCALE = .0200

PARAMETRIC DATA

IB-ELV = 10.000 OB-ELV = -2.000
BDFLAP = .000 SPDBRK = .000
RUDDER = .000 SILTS = 1.000
MACH = 1.250 RN/L = 3.500

RUN NO. 1439/ 0 RN/L = 3.50 GRADIENT INTERVAL = -5.00/ 5.00

ALPHAR	BETAR	CNFRS	CAFRS	CLMFRS	CYFRS	CYNFRS	CBLRS	CABRS	CYNBRS	CP9	CP10
-4.182	-6.460	.00080	.02830	-.01830	-.00790	.02840	-.00010	.03140	.00610	-.37750	-.33690
-4.412	-4.273	-.01560	.02990	-.00720	-.00340	.02370	.00310	.03410	.00660	-.41140	-.36530
-4.373	.266	-.04910	.03220	.01680	-.00770	.02480	.00970	.03810	.00740	-.45800	-.40880
-3.884	4.365	-.07570	.03580	.03550	-.01640	.02980	.01490	.04000	.00780	-.48160	-.43010
-4.039	6.262	-.09260	.03750	.04480	-.01810	.03090	.01820	.04080	.00790	-.49260	-.43670
	GRADIENT	-.00696	.00068	.00495	-.00149	.00070	.00137	.00069	.00014	-.00816	-.00754

RUN NO. 1440/ 0 RN/L = 3.50 GRADIENT INTERVAL = -5.00/ 5.00

ALPHAR	BETAR	CNFRS	CAFRS	CLMFRS	CYFRS	CYNFRS	CBLRS	CABRS	CYNBRS	CP9	CP10
-.261	-7.461	.00750	.02990	-.01200	-.02190	.03770	-.00150	.03010	.00580	-.36990	-.31540
-.245	-5.156	-.00270	.03020	-.00380	-.02520	.03750	.00050	.03180	.00620	-.38930	-.33590
-.267	-.761	-.02150	.03400	.01100	-.03550	.04220	.00420	.03650	.00710	-.44660	-.38520
-.192	3.396	-.04110	.03700	.02600	-.04560	.04820	.00810	.04000	.00780	-.48380	-.42790
-.208	5.594	-.05190	.03810	.03300	-.04900	.05010	.01020	.04040	.00780	-.48910	-.43160
	GRADIENT	-.00471	.00072	.00361	-.00243	.00144	.00094	.00084	.00017	-.00895	-.01027

RUN NO. 1441/ 0 RN/L = 3.50 GRADIENT INTERVAL = -5.00/ 5.00

ALPHAR	BETAR	CNFRS	CAFRS	CLMFRS	CYFRS	CYNFRS	CBLRS	CABRS	CYNBRS	CP9	CP10
4.449	-5.837	.01180	.03150	-.00730	-.00800	.02860	-.00240	.03280	.00640	-.39910	-.34710
4.462	-3.769	.00950	.03300	-.00430	-.01190	.02990	-.00190	.03460	.00670	-.41860	-.36890
4.350	.075	.00010	.03480	.00660	-.02710	.03970	-.00010	.03680	.00720	-.44670	-.39230
4.319	3.703	-.00660	.03680	.01470	-.03970	.04920	.00120	.03900	.00760	-.47120	-.41630
4.290	5.800	-.01130	.03760	.01860	-.04780	.05500	.00220	.03920	.00760	-.47380	-.41840
	GRADIENT	-.00216	.00051	.00255	-.00372	.00258	.00042	.00059	.00012	-.00704	-.00634

IA156A, AEDC PWT 16T-470, 0 T S W/SILTS (R8NRD8) (10 MAY 80)

REFERENCE DATA

SREF = 2690.0000 SQ.FT. XMRP = 976.0000 IN. XT
LREF = 1290.3000 INCHES YMRP = .0000 IN. YT
BREF = 1290.3000 INCHES ZMRP = 400.0000 IN. ZT
SCALE = .0200

PARAMETRIC DATA

IB-ELV = 10.000 OB-ELV = -2.000
BDFLAP = .000 SPDBRK = .000
RUDDER = .000 SILTS = 1.000
MACH = 1.400 RN/L = 3.500

RUN NO. 1442/ 0 RN/L = 3.00 GRADIENT INTERVAL = -5.00/ 5.00

ALPHAR	BETAR	CNFRS	CAFRS	CLMFRS	CYFRS	CYNFRS	CBLRS	CABRS	CYNBRS	CP9	CP10
-8.587	-6.270	-.02330	.02530	-.01920	.04700	.00030	.00470	.02950	.00570	-.35250	-.32030
-8.616	-4.115	-.04310	.02720	-.00650	.05150	-.00450	.00850	.03160	.00610	-.37720	-.34210
-8.570	.303	-.09160	.03170	.02690	.04930	-.00800	.01800	.03620	.00700	-.43280	-.39150
-8.422	4.399	-.13700	.03560	.05570	.03820	-.00290	.02680	.03760	.00730	-.45750	-.39970
-8.442	6.369	-.15570	.03590	.06520	.02620	.00500	.03050	.03770	.00730	-.46180	-.39650
	GRADIENT	-.01103	.00099	.00731	-.00155	.00018	.00215	.00071	.00014	-.00947	-.00682

RUN NO. 1443/ 0 RN/L = 3.00 GRADIENT INTERVAL = -5.00/ 5.00

ALPHAR	BETAR	CNFRS	CAFRS	CLMFRS	CYFRS	CYNFRS	CBLRS	CABRS	CYNBRS	CP9	CP10
-6.462	-6.353	-.01020	.02690	-.01910	.02000	.01340	.00210	.02850	.00550	-.34320	-.30680
-6.415	-4.362	-.02670	.02900	-.00810	.02460	.00910	.00530	.03160	.00610	-.37850	-.34230
-6.498	.033	-.06660	.03160	.01930	.02590	.00430	.01310	.03450	.00670	-.41620	-.37000
-6.323	4.368	-.10300	.03610	.04220	.01650	.00840	.02020	.03600	.00700	-.44140	-.37970
-6.027	6.507	-.11880	.03770	.05210	.00640	.01420	.02330	.03690	.00720	-.45490	-.38480
	GRADIENT	-.00874	.00081	.00576	-.00093	-.00008	.00171	.00050	.00010	-.00721	-.00429

RUN NO. 1444/ 0 RN/L = 3.00 GRADIENT INTERVAL = -5.00/ 5.00

ALPHAR	BETAR	CNFRS	CAFRS	CLMFRS	CYFRS	CYNFRS	CBLRS	CABRS	CYNBRS	CP9	CP10
-4.201	-6.457	-.00280	.02900	-.01580	-.00280	.02600	.00060	.02830	.00550	-.34360	-.30010
-4.453	-4.283	-.01850	.03020	-.00600	.00420	.01970	.00370	.03070	.00600	-.37100	-.32840
-4.336	.335	-.05140	.03290	.01800	.00050	.01800	.01010	.03370	.00650	-.41340	-.35490
-3.856	4.456	-.07560	.03600	.03540	-.01120	.02460	.01490	.03530	.00690	-.43360	-.37060
-3.954	6.320	-.09060	.03740	.04370	-.01510	.02700	.01780	.03650	.00710	-.44920	-.38280
	GRADIENT	-.00655	.00066	.00475	-.00174	.00054	.00128	.00053	.00010	-.00720	-.00485

RUN NO. 1445/ 0 RN/L = 3.00 GRADIENT INTERVAL = -5.00/ 5.00

ALPHAR	BETAR	CNFRS	CAFRS	CLMFRS	CYFRS	CYNFRS	CBLRS	CABRS	CYNBRS	CP9	CP10
-.288	-7.337	.00440	.02990	-.00870	-.01900	.03610	-.00090	.02730	.00530	-.33860	-.28340
-.270	-5.157	-.00480	.03010	-.00110	-.02080	.03470	.00090	.02880	.00560	-.35220	-.30340
-.268	-.759	-.02290	.03420	.01310	-.03080	.03840	.00450	.03230	.00630	-.39540	-.33980
-.211	3.388	-.04070	.03690	.02640	-.04090	.04410	.00800	.03530	.00690	-.43180	-.37280
-.233	5.580	-.04990	.03810	.03220	-.04540	.04690	.00980	.03670	.00710	-.45060	-.38550
	GRADIENT	-.00429	.00065	.00321	-.00244	.00137	.00084	.00072	.00014	-.00878	-.00796

IA156A, AEDC PWT 16T-470, 0 T S W/SILTS (R8NRD8) (10 MAY 80)

REFERENCE DATA

SREF = 2690.0000 SQ.FT. XMRP = 976.0000 IN. XT
LREF = 1290.3000 INCHES YMRP = .0000 IN. YT
BREF = 1290.3000 INCHES ZMRP = 400.0000 IN. ZT
SCALE = .0200

PARAMETRIC DATA

IB-ELV = 10.000 OB-ELV = -2.000
BDFLAP = .000 SPDBRK = .000
RUDDER = .000 SILTS = 1.000
MACH = 1.400 RN/L = 3.500

RUN NO. 1446/ 0 RN/L = 3.00 GRADIENT INTERVAL = -5.00/ 5.00

ALPHAR	BETAR	CNFRS	CAFRS	CLMFRS	CYFRS	CYNFRS	CBLRS	CABRS	CYNBRS	CP9	CP10
4.503	-5.806	.00930	.03060	-.00430	-.00260	.02540	-.00190	.02860	.00550	-.35020	-.30090
4.461	-3.697	.00590	.03170	-.00010	-.00770	.02790	-.00120	.03020	.00590	-.37070	-.31630
4.347	.118	-.00260	.03490	.01000	-.02260	.03750	.00050	.03260	.00630	-.40410	-.33920
4.254	3.743	-.00780	.03660	.01670	-.03620	.04750	.00150	.03500	.00680	-.43350	-.36500
4.238	5.826	-.01240	.03790	.02130	-.04410	.05300	.00240	.03590	.00700	-.44460	-.37450
	GRADIENT	-.00184	.00066	.00226	-.00383	.00263	.00036	.00065	.00012	-.00844	-.00654

IA156A, AEDC PWT 16T-470, 0 T S W/SILTS (R8NRD9) (10 MAY 80)

REFERENCE DATA

SREF = 2690.0000 SQ.FT. XMRP = 976.0000 IN. XT
LREF = 1290.3000 INCHES YMRP = .0000 IN. YT
BREF = 1290.3000 INCHES ZMRP = 400.0000 IN. ZT
SCALE = .0200

PARAMETRIC DATA

IB-ELV = 10.000 OB-ELV = -2.000
BDFLAP = .000 SPDBRK = .000
RUDDER = .000 SILTS = 1.000
MACH = 1.550 RN/L = 3.200

RUN NO. 1447/ 0 RN/L = 3.00 GRADIENT INTERVAL = -5.00/ 5.00

ALPHAR	BETAR	CNFRS	CAFRS	CLMFRS	CYFRS	CYNFRS	CBLRS	CABRS	CYNBRS	CP9	CP10
-8.617	-6.212	-.02800	.02430	-.01510	.04640	-.00170	.00560	.02570	.00500	-.30640	-.27920
-8.651	-4.035	-.04730	.02630	-.00290	.05170	-.00750	.00940	.02780	.00540	-.33090	-.30120
-8.552	.398	-.09510	.03120	.03000	.05120	-.01200	.01870	.03190	.00620	-.38490	-.34070
-8.356	4.542	-.13860	.03400	.05910	.03520	-.00440	.02710	.03390	.00660	-.41390	-.35800
-8.358	6.480	-.15580	.03410	.06810	.02180	.00460	.03050	.03430	.00670	-.42170	-.36020
	GRADIENT	-.01065	.00090	.00723	-.00190	.00035	.00206	.00071	.00014	-.00971	-.00665

RUN NO. 1448/ 0 RN/L = 3.00 GRADIENT INTERVAL = -5.00/ 5.00

ALPHAR	BETAR	CNFRS	CAFRS	CLMFRS	CYFRS	CYNFRS	CBLRS	CABRS	CYNBRS	CP9	CP10
-6.543	-6.347	-.01410	.02580	-.01680	.02430	.00960	.00280	.02510	.00490	-.30080	-.27110
-6.455	-4.289	-.02960	.02750	-.00570	.02800	.00500	.00590	.02730	.00530	-.32490	-.29590
-6.505	.132	-.06930	.03120	.02170	.02870	.00040	.01360	.03050	.00590	-.36840	-.32690
-6.257	4.479	-.10340	.03440	.04380	.01810	.00480	.02030	.03220	.00620	-.39540	-.33790
-5.944	6.619	-.11800	.03600	.05340	.00690	.01170	.02310	.03400	.00660	-.41910	-.35500
	GRADIENT	-.00842	.00079	.00565	-.00113	-.00003	.00164	.00056	.00010	-.00805	-.00480

IA156A, AEDC PWT 16T-470, 0 T S W/SILTS (R8NRD9) (10 MAY 80)

REFERENCE DATA

SREF = 2690.0000 SQ.FT. XMRP = 976.0000 IN. XT
LREF = 1290.3000 INCHES YMRP = .0000 IN. YT
BREF = 1290.3000 INCHES ZMRP = 400.0000 IN. ZT
SCALE = .0200

PARAMETRIC DATA

IB-ELV = 10.000 OB-ELV = -2.000
BDFLAP = .000 SPDBRK = .000
RUDDER = .000 SILTS = 1.000
MACH = 1.550 RN/L = 3.200

RUN NO. 1449/ 0 RN/L = 3.00 GRADIENT INTERVAL = -5.00/ 5.00

ALPHAR	BETAR	CNFRS	CAFRS	CLMFRS	CYFRS	CYNFRS	CBLRS	CABRS	CYNBRS	CP9	CP10
-4.504	-6.394	-.00590	.02700	-.01540	.00570	.01940	.00120	.02510	.00490	-.30360	-.26890
-4.503	-4.245	-.02110	.02870	-.00380	.00920	.01490	.00420	.02720	.00530	-.32900	-.29090
-4.385	.443	-.05180	.03200	.01840	.00440	.01450	.01020	.03010	.00580	-.37180	-.31330
-3.810	4.566	-.07280	.03410	.03370	-.00930	.02220	.01430	.03150	.00610	-.39070	-.32800
-3.881	6.404	-.08800	.03580	.04270	-.01370	.02510	.01730	.03320	.00640	-.41130	-.34490
	GRADIENT	-.00588	.00061	.00427	-.00208	.00081	.00115	.00049	.00009	-.00705	-.00422

RUN NO. 1450/ 0 RN/L = 3.00 GRADIENT INTERVAL = -5.00/ 5.00

ALPHAR	BETAR	CNFRS	CAFRS	CLMFRS	CYFRS	CYNFRS	CBLRS	CABRS	CYNBRS	CP9	CP10
-.379	-7.391	.00310	.02800	-.00810	-.01490	.03190	-.00060	.02420	.00470	-.30180	-.25000
-.367	-5.203	-.00630	.02940	-.00020	-.01830	.03220	.00120	.02590	.00500	-.31850	-.27140
-.356	-.874	-.02250	.03270	.01290	-.02890	.03650	.00440	.02860	.00560	-.35380	-.29760
-.343	3.370	-.03810	.03580	.02400	-.03800	.04230	.00750	.03170	.00620	-.39500	-.32740
-.373	5.503	-.04670	.03680	.02900	-.04270	.04570	.00920	.03340	.00650	-.41880	-.34210
	GRADIENT	-.00368	.00073	.00262	-.00214	.00137	.00073	.00073	.00014	-.00971	-.00702

RUN NO. 1451/ 0 RN/L = 3.00 GRADIENT INTERVAL = -5.00/ 5.00

ALPHAR	BETAR	CNFRS	CAFRS	CLMFRS	CYFRS	CYNFRS	CBLRS	CABRS	CYNBRS	CP9	CP10
4.541	-5.707	.00900	.03000	-.00320	.00210	.02220	-.00180	.02600	.00500	-.32230	-.26910
4.475	-3.510	.00600	.03070	.00050	-.00350	.02480	-.00120	.02700	.00520	-.33600	-.27880
4.140	.185	-.00360	.03380	.01130	-.02000	.03620	.00070	.02980	.00580	-.37270	-.30550
4.168	3.834	-.00610	.03500	.01520	-.03300	.04530	.00120	.03190	.00620	-.39960	-.32800
4.103	5.803	-.00880	.03670	.01840	-.04270	.05230	.00170	.03310	.00640	-.41260	-.34120
	GRADIENT	-.00165	.00059	.00200	-.00402	.00279	.00033	.00067	.00014	-.00866	-.00670

IA156A, AEDC PWT 16T-470, 0 T S W/SILTS (R8NRE0) (10 MAY 80)

REFERENCE DATA

SREF = 2690.0000 SQ.FT. XMRP = 976.0000 IN. XT
LREF = 1290.3000 INCHES YMRP = .0000 IN. YT
BREF = 1290.3000 INCHES ZMRP = 400.0000 IN. ZT
SCALE = .0200

PARAMETRIC DATA

IB-ELV = 10.000 OB-ELV = -7.000
BDFLAP = .000 SPDBRK = .000
RUDDER = .000 SILTS = 1.000
MACH = 1.400 RN/L = 3.500

RUN NO. 1456/ 0 RN/L = 3.00 GRADIENT INTERVAL = -5.00/ 5.00

ALPHAR	BETAR	CNFRS	CAFRS	CLMFRS	CYFRS	CYNFRS	CBLRS	CABRS	CYNBRS	CP9	CP10
-8.587	-6.246	-.02280	.02500	-.01980	.04770	-.00050	.00460	.02970	.00580	-.35320	-.32210
-8.626	-4.105	-.04260	.02690	-.00690	.05190	-.00520	.00850	.03150	.00610	-.37570	-.34140
-8.573	.320	-.09020	.03110	.02580	.04930	-.00830	.01780	.03630	.00700	-.43330	-.39270
-8.434	4.426	-.13620	.03520	.05480	.03840	-.00340	.02670	.03820	.00740	-.46500	-.40590
-8.417	6.349	-.15390	.03600	.06370	.02660	.00440	.03020	.03730	.00720	-.45810	-.39220
	GRADIENT	-.01097	.00097	.00723	-.00157	.00020	.00213	.00079	.00015	-.01050	-.00761

RUN NO. 1457/ 0 RN/L = 3.00 GRADIENT INTERVAL = -5.00/ 5.00

ALPHAR	BETAR	CNFRS	CAFRS	CLMFRS	CYFRS	CYNFRS	CBLRS	CABRS	CYNBRS	CP9	CP10
-6.477	-6.353	-.00920	.02670	-.02020	.02040	.01300	.00190	.02890	.00560	-.34720	-.31210
-6.405	-4.332	-.02540	.02870	-.00920	.02530	.00850	.00510	.03140	.00610	-.37400	-.34040
-6.529	.048	-.06640	.03160	.01880	.02620	.00400	.01310	.03430	.00670	-.41320	-.36840
-6.277	4.355	-.10080	.03580	.04100	.01560	.00860	.01980	.03580	.00700	-.43890	-.37780
-6.273	6.409	-.11910	.03700	.05140	.00880	.01240	.02340	.03710	.00720	-.45650	-.38830
	GRADIENT	-.00868	.00082	.00578	-.00111	.00001	.00169	.00051	.00010	-.00748	-.00431

RUN NO. 1458/ 0 RN/L = 3.00 GRADIENT INTERVAL = -5.00/ 5.00

ALPHAR	BETAR	CNFRS	CAFRS	CLMFRS	CYFRS	CYNFRS	CBLRS	CABRS	CYNBRS	CP9	CP10
-4.200	-6.465	-.00160	.02870	-.01690	-.00220	.02530	.00040	.02830	.00550	-.34260	-.30150
-4.458	-4.274	-.01750	.03020	-.00710	.00480	.01930	.00350	.03060	.00590	-.37010	-.32780
-4.359	.326	-.05020	.03290	.01680	.00100	.01770	.00990	.03350	.00650	-.41150	-.35230
-3.832	4.445	-.07320	.03580	.03370	-.01160	.02460	.01440	.03530	.00680	-.43300	-.37060
-3.978	6.343	-.08930	.03730	.04250	-.01480	.02660	.01760	.03630	.00710	-.44620	-.38160
	GRADIENT	-.00640	.00064	.00469	-.00186	.00059	.00125	.00054	.00010	-.00725	-.00492

RUN NO. 1459/ 0 RN/L = 3.00 GRADIENT INTERVAL = -5.00/ 5.00

ALPHAR	BETAR	CNFRS	CAFRS	CLMFRS	CYFRS	CYNFRS	CBLRS	CABRS	CYNBRS	CP9	CP10
-.308	-7.335	.00550	.02980	-.00980	-.01910	.03590	-.00110	.02740	.00530	-.33930	-.28440
-.291	-5.168	-.00340	.03020	-.00230	-.02070	.03440	.00070	.02870	.00560	-.35160	-.30140
-.286	-.750	-.02150	.03390	.01170	-.03070	.03800	.00420	.03220	.00620	-.39500	-.33800
-.228	3.385	-.03920	.03660	.02490	-.04070	.04370	.00770	.03530	.00680	-.42990	-.37370
-.259	5.581	-.04900	.03750	.03100	-.04500	.04620	.00970	.03670	.00710	-.44890	-.38650
	GRADIENT	-.00428	.00065	.00319	-.00242	.00138	.00085	.00075	.00015	-.00844	-.00863

IA156A, AEDC PWT 16T-470, O T S W/SILTS (R8NRE0) (10 MAY 80)

REFERENCE DATA

SREF = 2690.0000 SQ.FT. XMRP = 976.0000 IN. XT
LREF = 1290.3000 INCHES YMRP = .0000 IN. YT
BREF = 1290.3000 INCHES ZMRP = 400.0000 IN. ZT
SCALE = .0200

PARAMETRIC DATA

IB-ELV = 10.000 OB-ELV = -7.000
BDFLAP = .000 SPDBRK = .000
RUDDER = .000 SILTS = 1.000
MACH = 1.400 RN/L = 3.500

RUN NO. 1460/ 0 RN/L = 3.00 GRADIENT INTERVAL = -5.00/ 5.00

ALPHAR	BETAR	CNFRS	CAFRS	CLMFRS	CYFRS	CYNFRS	CBLRS	CABRS	CYNBRS	CP9	CP10
4.611	-5.735	.01090	.03070	-.00540	-.00190	.02500	-.00220	.02880	.00560	-.35290	-.30290
4.455	-3.631	.00710	.03170	-.00120	-.00790	.02770	-.00140	.03010	.00590	-.37120	-.31550
4.201	.072	-.00210	.03460	.00920	-.02350	.03760	.00040	.03280	.00640	-.40460	-.34210
4.257	3.789	-.00620	.03630	.01520	-.03630	.04720	.00120	.03470	.00670	-.42900	-.36270
4.225	5.819	-.01050	.03770	.01960	-.04410	.05280	.00200	.03600	.00700	-.44460	-.37650
	GRADIENT	-.00179	.00062	.00221	-.00383	.00263	.00035	.00062	.00011	-.00779	-.00636

IA156A, AEDC PWT 16T-470, O T S W/SILTS (R8NRE1) (10 MAY 80)

REFERENCE DATA

SREF = 2690.0000 SQ.FT. XMRP = 976.0000 IN. XT
LREF = 1290.3000 INCHES YMRP = .0000 IN. YT
BREF = 1290.3000 INCHES ZMRP = 400.0000 IN. ZT
SCALE = .0200

PARAMETRIC DATA

IB-ELV = 10.000 OB-ELV = -7.000
BDFLAP = .000 SPDBRK = .000
RUDDER = .000 SILTS = 1.000
MACH = 1.550 RN/L = 3.200

RUN NO. 1461/ 0 RN/L = 3.00 GRADIENT INTERVAL = -5.00/ 5.00

ALPHAR	BETAR	CNFRS	CAFRS	CLMFRS	CYFRS	CYNFRS	CBLRS	CABRS	CYNBRS	CP9	CP10
-8.546	-6.193	-.02730	.02490	-.01550	.04620	-.00160	.00540	.02520	.00490	-.30060	-.27370
-8.629	-4.136	-.04560	.02630	-.00450	.05190	-.00740	.00900	.02770	.00540	-.33050	-.30120
-8.563	.296	-.09210	.03110	.02790	.05120	-.01200	.01810	.03190	.00620	-.38480	-.34090
-8.383	4.416	-.13660	.03350	.05760	.03610	-.00510	.02680	.03450	.00670	-.42120	-.36430
-8.372	6.482	-.15480	.03440	.06710	.02220	.00440	.03030	.03410	.00660	-.41920	-.35760
	GRADIENT	-.01064	.00084	.00726	-.00183	.00025	.00208	.00080	.00015	-.01063	-.00740

RUN NO. 1462/ 0 RN/L = 3.00 GRADIENT INTERVAL = -5.00/ 5.00

ALPHAR	BETAR	CNFRS	CAFRS	CLMFRS	CYFRS	CYNFRS	CBLRS	CABRS	CYNBRS	CP9	CP10
-6.545	-6.342	-.01370	.02610	-.01710	.02430	.00950	.00280	.02510	.00490	-.30070	-.27150
-6.454	-4.304	-.02890	.02750	-.00630	.02790	.00510	.00570	.02750	.00530	-.32710	-.29980
-6.512	.137	-.06820	.03120	.02080	.02850	.00040	.01340	.03070	.00600	-.37080	-.32910
-6.258	4.488	-.10230	.03410	.04290	.01790	.00470	.02010	.03240	.00630	-.39770	-.34110
-6.085	6.648	-.11880	.03600	.05310	.00750	.01110	.02330	.03380	.00660	-.41620	-.35380
	GRADIENT	-.00835	.00075	.00560	-.00113	-.00005	.00164	.00056	.00011	-.00804	-.00470

IA156A, AEDC PWT 16T-470, O T S W/SILTS (R8NRE1) (10 MAY 80)

REFERENCE DATA

SREF = 2690.0000 SQ.FT. XMRP = 976.0000 IN. XT
LREF = 1290.3000 INCHES YMRP = .0000 IN. YT
BREF = 1290.3000 INCHES ZMRP = 400.0000 IN. ZT
SCALE = .0200

PARAMETRIC DATA

IB-ELV = 10.000 OB-ELV = -7.000
BDFLAP = .000 SPDBRK = .000
RUDDER = .000 SILTS = 1.000
MACH = 1.550 RN/L = 3.200

RUN NO. 1463/ 0 RN/L = 3.00 GRADIENT INTERVAL = -5.00/ 5.00

ALPHAR	BETAR	CNFRS	CAFRS	CLMFRS	CYFRS	CYNFRS	CBLRS	CABRS	CYNBRS	CP9	CP10
-4.395	-6.474	-.00470	.02680	-.01570	.00470	.01970	.00100	.02490	.00480	-.30020	-.26740
-4.545	-4.261	-.02070	.02890	-.00450	.00960	.01470	.00410	.02740	.00530	-.33100	-.29330
-4.380	.432	-.05050	.03200	.01740	.00400	.01490	.01000	.02980	.00580	-.36800	-.31040
-3.811	4.560	-.07220	.03430	.03280	-.00910	.02200	.01420	.03140	.00610	-.38940	-.32720
-3.894	6.405	-.08650	.03600	.04140	-.01350	.02490	.01700	.03300	.00640	-.40910	-.34350
	GRADIENT	-.00585	.00061	.00424	-.00210	.00081	.00115	.00045	.00009	-.00665	-.00384

RUN NO. 1464/ 0 RN/L = 3.00 GRADIENT INTERVAL = -5.00/ 5.00

ALPHAR	BETAR	CNFRS	CAFRS	CLMFRS	CYFRS	CYNFRS	CBLRS	CABRS	CYNBRS	CP9	CP10
-.402	-7.445	.00390	.02820	-.00890	-.01490	.03180	-.00080	.02410	.00470	-.29920	-.25030
-.384	-5.233	-.00500	.02930	-.00140	-.01820	.03210	.00100	.02590	.00500	-.31950	-.27060
-.379	-.850	-.02200	.03300	.01220	-.02860	.03630	.00430	.02840	.00550	-.34880	-.29720
-.365	3.326	-.03730	.03560	.02290	-.03750	.04160	.00740	.03170	.00610	-.39340	-.32850
-.393	5.507	-.04560	.03660	.02790	-.04250	.04530	.00900	.03340	.00650	-.41730	-.34300
	GRADIENT	-.00366	.00062	.00256	-.00213	.00127	.00074	.00079	.00014	-.01068	-.00750

RUN NO. 1465/ 0 RN/L = 3.00 GRADIENT INTERVAL = -5.00/ 5.00

ALPHAR	BETAR	CNFRS	CAFRS	CLMFRS	CYFRS	CYNFRS	CBLRS	CABRS	CYNBRS	CP9	CP10
4.657	-5.636	.01050	.03010	-.00430	.00230	.02230	-.00210	.02600	.00510	-.32220	-.27060
4.447	-3.530	.00740	.03070	-.00080	-.00390	.02510	-.00150	.02680	.00520	-.33450	-.27700
4.146	.143	-.00180	.03370	.00970	-.01990	.03620	.00030	.02960	.00570	-.36900	-.30490
4.142	3.789	-.00450	.03530	.01390	-.03350	.04570	.00090	.03180	.00620	-.39670	-.32790
4.109	5.812	-.00710	.03660	.01690	-.04360	.05290	.00140	.03310	.00640	-.41220	-.34300
	GRADIENT	-.00163	.00063	.00201	-.00404	.00281	.00033	.00068	.00014	-.00850	-.00696

IA156A, AEDC PWT 16T-470, 0 T S W/SILTS (R8NRE2) (10 MAY 80)

REFERENCE DATA

SREF = 2690.0000 SQ.FT. XMRP = 976.0000 IN. XT
LREF = 1290.3000 INCHES YMRP = .0000 IN. YT
BREF = 1290.3000 INCHES ZMRP = 400.0000 IN. ZT
SCALE = .0200

PARAMETRIC DATA

IB-ELV = 12.000 OB-ELV = -7.000
BDFLAP = .000 SPDBRK = .000
RUDDER = .000 SILTS = 1.000
MACH = 1.400 RN/L = 3.500

RUN NO. 1469/ 0 RN/L = 3.01 GRADIENT INTERVAL = -5.00/ 5.00

ALPHAR	BETAR	CNFRS	CAFRS	CLMFRS	CYFRS	CYNFRS	CBLRS	CABRS	CYNBRS	CP9	CP10
-8.558	-6.268	-.02310	.02550	-.01940	.04760	-.00010	.00460	.02950	.00570	-.35310	-.31910
-8.602	-4.152	-.04210	.02700	-.00690	.05160	-.00490	.00830	.03160	.00610	-.37840	-.34220
-8.572	.173	-.08940	.03140	.02550	.04980	-.00850	.01760	.03630	.00700	-.43250	-.39320
-8.408	4.366	-.13640	.03570	.05520	.03830	-.00320	.02670	.03790	.00740	-.46080	-.40340
-8.430	6.354	-.15490	.03640	.06440	.02640	.00470	.03030	.03750	.00730	-.46000	-.39530
	GRADIENT	-.01107	.00102	.00729	-.00156	.00019	.00216	.00074	.00015	-.00969	-.00721

RUN NO. 1470/ 0 RN/L = 3.00 GRADIENT INTERVAL = -5.00/ 5.00

ALPHAR	BETAR	CNFRS	CAFRS	CLMFRS	CYFRS	CYNFRS	CBLRS	CABRS	CYNBRS	CP9	CP10
-6.464	-6.355	-.00960	.02720	-.01960	.02030	.01300	.00190	.02870	.00560	-.34420	-.30950
-6.391	-4.337	-.02600	.02900	-.00860	.02500	.00880	.00510	.03150	.00610	-.37710	-.34040
-6.510	.053	-.06730	.03190	.01960	.02620	.00390	.01320	.03480	.00680	-.41800	-.37400
-6.311	4.372	-.10240	.03600	.04180	.01650	.00810	.02010	.03590	.00700	-.43930	-.37880
-6.098	6.525	-.11920	.03760	.05190	.00720	.01350	.02330	.03710	.00720	-.45750	-.38660
	GRADIENT	-.00877	.00080	.00579	-.00097	-.00008	.00172	.00051	.00010	-.00715	-.00442

RUN NO. 1471/ 0 RN/L = 3.00 GRADIENT INTERVAL = -5.00/ 5.00

ALPHAR	BETAR	CNFRS	CAFRS	CLMFRS	CYFRS	CYNFRS	CBLRS	CABRS	CYNBRS	CP9	CP10
-4.218	-6.471	-.00200	.02890	-.01660	-.00210	.02530	.00040	.02850	.00550	-.34560	-.30260
-4.454	-4.277	-.01810	.03040	-.00650	.00480	.01920	.00350	.03070	.00600	-.37170	-.32860
-4.338	.327	-.05090	.03320	.01740	.00120	.01760	.01000	.03360	.00650	-.40990	-.35510
-3.840	4.463	-.07450	.03620	.03460	-.01150	.02460	.01460	.03540	.00690	-.43470	-.37170
-3.972	6.335	-.08980	.03750	.04300	-.01480	.02660	.01760	.03650	.00710	-.44750	-.38300
	GRADIENT	-.00647	.00066	.00471	-.00184	.00060	.00127	.00054	.00010	-.00723	-.00495

RUN NO. 1472/ 0 RN/L = 2.99 GRADIENT INTERVAL = -5.00/ 5.00

ALPHAR	BETAR	CNFRS	CAFRS	CLMFRS	CYFRS	CYNFRS	CBLRS	CABRS	CYNBRS	CP9	CP10
-.295	-7.328	.00490	.03010	-.00920	-.01880	.03550	-.00100	.02720	.00530	-.33550	-.28400
-.284	-5.163	-.00390	.03020	-.00210	-.02080	.03450	.00070	.02910	.00560	-.35550	-.30640
-.277	-.763	-.02220	.03440	.01230	-.03070	.03810	.00430	.03210	.00620	-.39270	-.33840
-.215	3.400	-.03960	.03680	.02540	-.04100	.04390	.00770	.03540	.00690	-.43270	-.37480
-.241	5.576	-.04890	.03840	.03120	-.04520	.04650	.00960	.03610	.00700	-.44310	-.38040
	GRADIENT	-.00418	.00058	.00315	-.00247	.00139	.00082	.00079	.00017	-.00961	-.00874

IA156A, AEDC PWT 16T-470, 0 T S W/SILTS (R8NRE2) (10 MAY 80)

REFERENCE DATA

SREF = 2690.0000 SQ.FT. XMRP = 976.0000 IN. XT
LREF = 1290.3000 INCHES YMRP = .0000 IN. YT
BREF = 1290.3000 INCHES ZMRP = 400.0000 IN. ZT
SCALE = .0200

PARAMETRIC DATA

IB-ELV = 12.000 OB-ELV = -7.000
BDFLAP = .000 SPDBRK = .000
RUDDER = .000 SILTS = 1.000
MACH = 1.400 RN/L = 3.500

RUN NO. 1473/ 0 RN/L = 3.00 GRADIENT INTERVAL = -5.00/ 5.00

ALPHAR	BETAR	CNFRS	CAFRS	CLMFRS	CYFRS	CYNFRS	CBLRS	CABRS	CYNBRS	CP9	CP10
4.612	-5.722	.01070	.03090	-.00530	-.00190	.02490	-.00220	.02830	.00550	-.34650	-.29750
4.445	-3.623	.00660	.03180	-.00080	-.00840	.02810	-.00140	.03000	.00580	-.37010	-.31360
4.207	.064	-.00270	.03540	.00980	-.02380	.03820	.00040	.03230	.00630	-.39740	-.33760
4.257	3.784	-.00680	.03650	.01580	-.03650	.04750	.00120	.03480	.00680	-.43110	-.36290
4.236	5.837	-.01140	.03760	.02030	-.04460	.05300	.00220	.03610	.00700	-.44510	-.37770
	GRADIENT	-.00181	.00063	.00224	-.00379	.00262	.00035	.00065	.00013	-.00824	-.00666

IA156A, AEDC PWT 16T-470, 0 T S W/SILTS (R8NRE3) (10 MAY 80)

REFERENCE DATA

SREF = 2690.0000 SQ.FT. XMRP = 976.0000 IN. XT
LREF = 1290.3000 INCHES YMRP = .0000 IN. YT
BREF = 1290.3000 INCHES ZMRP = 400.0000 IN. ZT
SCALE = .0200

PARAMETRIC DATA

IB-ELV = 12.000 OB-ELV = -7.000
BDFLAP = .000 SPDBRK = .000
RUDDER = .000 SILTS = 1.000
MACH = 1.550 RN/L = 3.200

RUN NO. 1474/ 0 RN/L = 3.01 GRADIENT INTERVAL = -5.00/ 5.00

ALPHAR	BETAR	CNFRS	CAFRS	CLMFRS	CYFRS	CYNFRS	CBLRS	CABRS	CYNBRS	CP9	CP10
-8.592	-6.216	-.02790	.02500	-.01520	.04690	-.00200	.00550	.02540	.00490	-.30310	-.27460
-8.646	-4.028	-.04760	.02660	-.00280	.05210	-.00780	.00940	.02780	.00540	-.33210	-.30110
-8.554	.203	-.09[illegible]	.03130	.02770	.05100	-.01190	.01790	.03160	.00610	-.38180	-.33890
-8.360	4.545	-.13840	.03440	.05880	.03530	-.00450	.02710	.03420	.00660	-.41810	-.36090
-8.352	6.484	-.15500	.03470	.06760	.02190	.00440	.03030	.03400	.00660	-.41790	-.35650
	GRADIENT	-.01059	.00091	.00718	-.00197	.00039	.00206	.00075	.00014	-.01002	-.00697

RUN NO. 1475/ 0 RN/L = 3.01 GRADIENT INTERVAL = -5.00/ 5.00

ALPHAR	BETAR	CNFRS	CAFRS	CLMFRS	CYFRS	CYNFRS	CBLRS	CABRS	CYNBRS	CP9	CP10
-6.541	-6.340	-.01380	.02620	-.01690	.02420	.00960	.00270	.02530	.00490	-.30360	-.27250
-6.453	-4.292	-.02890	.02770	-.00600	.02740	.00540	.00570	.02770	.00540	-.33060	-.30120
-6.496	.149	-.06820	.03150	.02100	.02840	.00060	.01340	.03090	.00600	-.37290	-.33030
-6.226	4.471	-.10210	.03490	.04300	.01780	.00500	.02000	.03240	.00630	-.39710	-.34050
-5.955	6.666	-.11810	.03620	.05300	.00690	.01160	.02310	.03410	.00660	-.42040	-.35710
	GRADIENT	-.00836	.00082	.00559	-.00109	-.00005	.00163	.00054	.00010	-.00760	-.00449

IA156A, AEDC PWT 16T-470, O T S W/SILTS (R8NRE3) (10 MAY 80)

REFERENCE DATA

SREF = 2690.0000 SQ.FT. XMRP = 976.0000 IN. XT
LREF = 1290.3000 INCHES YMRP = .0000 IN. YT
BREF = 1290.3000 INCHES ZMRP = 400.0000 IN. ZT
SCALE = .0200

PARAMETRIC DATA

IB-ELV = 12.000 OB-ELV = -7.000
BDFLAP = .000 SPDBRK = .000
RUDDER = .000 SILTS = 1.000
MACH = 1.550 RN/L = 3.200

RUN NO. 1476/ 0 RN/L = 3.01 GRADIENT INTERVAL = -5.00/ 5.00

ALPHAR	BETAR	CNFRS	CAFRS	CLMFRS	CYFRS	CYNFRS	CBLRS	CABRS	CYNBRS	CP9	CP10
-4.252	-6.499	-.00440	.02740	-.01530	.00350	.02040	.00090	.02480	.00480	-.29960	-.26540
-4.538	-4.253	-.02100	.02940	-.00420	.00980	.01470	.00410	.02730	.00530	-.33050	-.29240
-4.357	.421	-.05050	.03250	.01770	.00350	.01530	.00990	.03000	.00580	-.36940	-.31310
-3.812	4.552	-.07140	.03450	.03260	-.00930	.02220	.01400	.03160	.00610	-.39090	-.32850
-3.890	6.400	-.08680	.03620	.04160	-.01330	.02480	.01700	.03300	.00640	-.40780	-.34370
	GRADIENT	-.00574	.00058	.00419	-.00215	.00084	.00113	.00049	.00009	-.00689	-.00411

RUN NO. 1477/ 0 RN/L = 3.01 GRADIENT INTERVAL = -5.00/ 5.00

ALPHAR	BETAR	CNFRS	CAFRS	CLMFRS	CYFRS	CYNFRS	CBLRS	CABRS	CYNBRS	CP9	CP10
-.384	-7.394	.00360	.02830	-.00850	-.01470	.03170	-.00080	.02420	.00470	-.30020	-.25120
-.375	-5.230	-.00550	.02950	-.00100	-.01830	.03210	.00100	.02590	.00500	-.31900	-.27080
-.365	-.825	-.02240	.03300	.01270	-.02910	.03660	.00430	.02880	.00560	-.35560	-.30020
-.352	3.322	-.03740	.03590	.02320	-.03810	.04220	.00730	.03180	.00620	-.39530	-.32950
-.373	5.500	-.04570	.03680	.02820	-.04270	.04550	.00890	.03310	.00640	-.41610	-.33780
	GRADIENT	-.00362	.00070	.00253	-.00217	.00135	.00072	.00072	.00014	-.00957	-.00707

RUN NO. 1478/ 0 RN/L = 3.01 GRADIENT INTERVAL = -5.00/ 5.00

ALPHAR	BETAR	CNFRS	CAFRS	CLMFRS	CYFRS	CYNFRS	CBLRS	CABRS	CYNBRS	CP9	CP10
4.670	-5.644	.01040	.03010	-.00420	.00240	.02230	-.00210	.02620	.00510	-.32450	-.27200
4.455	-3.528	.00690	.03070	-.00040	-.00430	.02540	-.00150	.02690	.00520	-.33480	-.27710
4.160	.136	-.00250	.03360	.01040	-.02000	.03620	.00040	.02930	.00570	-.36370	-.30340
4.154	3.790	-.00450	.03510	.01410	-.03350	.04580	.00080	.03210	.00620	-.40030	-.33110
4.125	5.826	-.00750	.03680	.01730	-.04350	.05290	.00140	.03300	.00640	-.41100	-.34120
	GRADIENT	-.00156	.00060	.00198	-.00399	.00279	.00031	.00071	.00014	-.00895	-.00738

IA156A, AEDC PWT 16T-470, 0 T S W/SILTS (R8NRE4) (10 MAY 80)

REFERENCE DATA

SREF = 2690.0000 SQ.FT. XMRP = 976.0000 IN. XT
LREF = 1290.3000 INCHES YMRP = .0000 IN. YT
BREF = 1290.3000 INCHES ZMRP = 400.0000 IN. ZT
SCALE = .0200

PARAMETRIC DATA

IB-ELV = 8.000 OB-ELV = -7.000
BDFLAP = .000 SPDBRK = .000
RUDDER = .000 SILTS = 1.000
MACH = 1.400 RN/L = 3.500

RUN NO. 1482/ 0 RN/L = 3.00 GRADIENT INTERVAL = -5.00/ 5.00

ALPHAR	BETAR	CNFRS	CAFRS	CLMFRS	CYFRS	CYNFRS	CBLRS	CABRS	CYNBRS	CP9	CP10
-8.522	-6.142	-.02220	.02490	-.02030	.04640	.00020	.00450	.02980	.00580	-.35330	-.32450
-8.613	-4.090	-.04210	.02660	-.00800	.05200	-.00490	.00840	.03160	.00610	-.37610	-.34340
-8.587	.079	-.08780	.03070	.02350	.05030	-.00840	.01730	.03640	.00710	-.43490	-.39450
-8.445	4.517	-.13770	.03530	.05510	.03800	-.00300	.02700	.03810	.00740	-.46270	-.40480
-8.422	6.368	-.15430	.03620	.06360	.02600	.00470	.03020	.03770	.00730	-.46200	-.39600
	GRADIENT	-.01111	.00101	.00733	-.00164	.00023	.00216	.00075	.00015	-.01002	-.00708

RUN NO. 1483/ 0 RN/L = 3.00 GRADIENT INTERVAL = -5.00/ 5.00

ALPHAR	BETAR	CNFRS	CAFRS	CLMFRS	CYFRS	CYNFRS	CBLRS	CABRS	CYNBRS	CP9	CP10
-6.508	-6.370	-.00860	.02650	-.02120	.02080	.01310	.00180	.02900	.00560	-.34760	-.31260
-6.404	-4.350	-.02410	.02860	-.01020	.02390	.00950	.00480	.03120	.00610	-.37170	-.33830
-6.521	.021	-.06590	.03140	.01790	.02610	.00420	.01300	.03440	.00670	-.41560	-.36870
-6.328	4.363	-.10120	.03530	.04050	.01620	.00830	.01990	.03600	.00700	-.44010	-.37960
-6.063	6.550	-.11[illegible]	.03700	.05060	.00690	.01350	.02310	.03710	.00720	-.45850	-.38780
	GRADIENT	-.00[illegible]	.00077	.00582	-.00088	-.00014	.00173	.00055	.00010	-.00785	-.00474

RUN NO. 1484/ 0 RN/L = 3.00 GRADIENT INTERVAL = -5.00/ 5.00

ALPHAR	BETAR	CNFRS	CAFRS	CLMFRS	CYFRS	CYNFRS	CBLRS	CABRS	CYNBRS	CP9	CP10
-4.193	-6.501	-.00070	.02860	-.01770	-.00320	.02620	.00020	.02830	.00550	-.34330	-.30160
-4.469	-4.271	-.01690	.03000	-.00780	.00430	.01960	.00340	.03050	.00590	-.36820	-.32610
-4.361	.333	-.04990	.03260	.01610	.00070	.01790	.00980	.03360	.00650	-.41270	-.35280
-3.875	4.467	-.07300	.03540	.03290	-.01120	.02430	.01440	.03510	.00680	-.43[illegible]50	-.36820
-3.972	6.311	-.08820	.03650	.04130	-.01480	.02650	.01730	.03650	.00710	-.44800	-.38260
	GRADIENT	-.00643	.00062	.00467	-.00176	.00052	.00126	.00053	.00010	-.00718	-.00484

RUN NO. 1485/ 0 RN/L = 3.00 GRADIENT INTERVAL = -5.00/ 5.00

ALPHAR	BETAR	CNFRS	CAFRS	CLMFRS	CYFRS	CYNFRS	CBLRS	CABRS	CYNBRS	CP9	CP10
-.321	-7.375	.00630	.02980	-.01060	-.01950	.03630	-.00120	.02720	.00530	-.33700	-.28240
-.308	-5.169	-.00300	.02990	-.00290	-.02110	.03470	.00060	.02880	.00560	-.35310	-.30230
-.293	-.761	-.02080	.03420	.01090	-.03120	.03850	.00410	.03180	.00620	-.39010	-.33520
-.250	3.385	-.03860	.03590	.02380	-.04030	.04320	.00760	.03510	.00680	-.42860	-.37200
-.282	5.583	-.04850	.03740	.03000	-.04510	.04620	.00950	.03660	.00710	-.44810	-.38620
	GRADIENT	-.00429	.00041	.00311	-.00219	.00113	.00084	.00080	.00014	-.00929	-.00888

IA156A, AEDC PWT 16T-470, 0 T S W/SILTS (R8NRE4) (10 MAY 80)

REFERENCE DATA

SREF = 2690.0000 SQ.FT. XMRP = 976.0000 IN. XT
LREF = 1290.3000 INCHES YMRP = .0000 IN. YT
BREF = 1290.3000 INCHES ZMRP = 400.0000 IN. ZT
SCALE = .0200

PARAMETRIC DATA

IB-ELV = 8.000 OB-ELV = -7.000
BDFLAP = .000 SPDBRK = .000
RUDDER = .000 SILTS = 1.000
MACH = 1.400 RN/L = 3.500

RUN NO. 1486/ 0 RN/L = 3.00 GRADIENT INTERVAL = -5.00/ 5.00

ALPHAR	BETAR	CNFRS	CAFRS	CLMFRS	CYFRS	CYNFRS	CBLRS	CABRS	CYNBRS	CP9	CP10
4.616	-5.713	.01150	.03070	-.00610	-.00210	.02530	-.00230	.02950	.00570	-.36070	-.31030
4.419	-3.659	.00790	.03150	-.00200	-.00780	.02770	-.00160	.02990	.00580	-.36930	-.31290
4.212	-.019	-.00100	.03420	.00810	-.02340	.03750	.00020	.03280	.00640	-.40500	-.34320
4.245	3.745	-.00530	.03600	.01420	-.03640	.04730	.00100	.03490	.00680	-.43080	-.36460
4.213	5.829	-.01010	.03720	.01890	-.04470	.05300	.00190	.03630	.00700	-.44630	-.37980
	GRADIENT	-.00178	.00061	.00218	-.00386	.00265	.00035	.00067	.00013	-.00830	-.00697

IA156A, AEDC PWT 16T-470, 0 T S W/SILTS (R8NRE5) (10 MAY 80)

REFERENCE DATA

SREF = 2690.0000 SQ.FT. XMRP = 976.0000 IN. XT
LREF = 1290.3000 INCHES YMRP = .0000 IN. YT
BREF = 1290.3000 INCHES ZMRP = 400.0000 IN. ZT
SCALE = .0200

PARAMETRIC DATA

IB-ELV = 8.000 OB-ELV = -7.000
BDFLAP = .000 SPDBRK = .000
RUDDER = .000 SILTS = 1.000
MACH = 1.550 RN/L = 3.200

RUN NO. 1487/ 0 RN/L = 3.00 GRADIENT INTERVAL = -5.00/ 5.00

ALPHAR	BETAR	CNFRS	CAFRS	CLMFRS	CYFRS	CYNFRS	CBLRS	CABRS	CYNBRS	CP9	CP10
-8.576	-6.206	-.02700	.02460	-.01610	.04600	-.00150	.00540	.02550	.00490	-.30230	-.27800
-8.643	-4.027	-.04580	.02620	-.00450	.05150	-.00740	.00900	.02740	.00530	-.32450	-.29840
-8.577	.177	-.09070	.03060	.02630	.05140	-.01210	.01780	.03170	.00620	-.38360	-.33820
-8.346	4.629	-.13700	.03360	.05720	.03450	-.00410	.02680	.03390	.00660	-.41430	-.35880
-8.398	6.518	-.15360	.03400	.06600	.02130	.00470	.03010	.03370	.00660	-.41440	-.35440
	GRADIENT	-.01053	.00085	.00713	-.00198	.00040	.00206	.00075	.00015	-.01034	-.00695

RUN NO. 1488/ 0 RN/L = 3.00 GRADIENT INTERVAL = -5.00/ 5.00

ALPHAR	BETAR	CNFRS	CAFRS	CLMFRS	CYFRS	CYNFRS	CBLRS	CABRS	CYNBRS	CP9	CP10
-6.544	-6.333	-.01330	.02560	-.01750	.02380	.00980	.00270	.02530	.00490	-.30230	-.27450
-6.471	-4.292	-.02840	.02710	-.00700	.02780	.00510	.00560	.02740	.00530	-.32420	-.29970
-6.506	.128	-.06680	.03090	.01950	.02820	.00060	.01310	.03010	.00580	-.36380	-.32130
-6.263	4.488	-.10140	.03420	.04180	.01760	.00510	.01990	.03230	.00630	-.39610	-.33960
-6.198	6.508	-.11930	.03570	.05220	.00960	.00990	.02340	.03370	.00650	-.41450	-.35350
	GRADIENT	-.00831	.00081	.00556	-.00116	-.00000	.00163	.00056	.00011	-.00819	-.00454

IA156A, AEDC PWT 16T-470, 0 T S W/SILTS (R8NRE5) (10 MAY 80)

REFERENCE DATA

SREF = 2690.0000 SQ.FT. XMRP = 976.0000 IN. XT
LREF = 1290.3000 INCHES YMRP = .0000 IN. YT
BREF = 1290.3000 INCHES ZMRP = 400.0000 IN. ZT
SCALE = .0200

PARAMETRIC DATA

IB-ELV = 8.000 OB-ELV = -7.000
BDFLAP = .000 SPDBRK = .000
RUDDER = .000 SILTS = 1.000
MACH = 1.550 RN/L = 3.200

RUN NO. 1489/ 0 RN/L = 3.01 GRADIENT INTERVAL = -5.00/ 5.00

ALPHAR	BETAR	CNFRS	CAFRS	CLMFRS	CYFRS	CYNFRS	CBLRS	CABRS	CYNBRS	CP9	CP10
-4.292	-6.497	-.00370	.02690	-.01630	.00330	.02080	.00080	.02510	.00490	-.30200	-.26940
-4.555	-4.257	-.02000	.02890	-.00540	.00940	.01500	.00400	.02690	.00520	-.32480	-.28870
-4.390	.429	-.04960	.03190	.01640	.00330	.01540	.00980	.02960	.00570	-.36690	-.30760
-3.818	4.553	-.07110	.03420	.03170	-.00960	.02250	.01400	.03120	.00610	-.38630	-.32540
-3.910	6.400	-.08510	.03560	.04000	-.01340	.02480	.01670	.03260	.00630	-.40290	-.33990
	GRADIENT	-.00581	.00060	.00422	-.00214	.00083	.00114	.00049	.00010	-.00703	-.00416

RUN NO. 1490/ 0 RN/L = 3.00 GRADIENT INTERVAL = -5.00/ 5.00

ALPHAR	BETAR	CNFRS	CAFRS	CLMFRS	CYFRS	CYNFRS	CBLRS	CABRS	CYNBRS	CP9	CP10
-.409	-7.394	.00400	.02820	-.00910	-.01560	.03250	-.00080	.02450	.00480	-.30450	-.25430
-.397	-5.234	-.00480	.02930	-.00180	-.01860	.03243	.00090	.02580	.00500	-.31780	-.26970
-.383	-.827	-.02130	.03260	.01150	-.02900	.03650	.00420	.02850	.00550	-.34960	-.29870
-.378	3.322	-.03650	.03550	.02200	-.03800	.04200	.00720	.03190	.00620	-.39510	-.33160
-.400	5.512	-.04480	.03610	.02690	-.04280	.04540	.00880	.03350	.00650	-.41900	-.34550
	GRADIENT	-.00366	.00070	.00253	-.00217	.00133	.00072	.00082	.00017	-.01097	-.00793

RUN NO. 1491/ 0 RN/L = 3.00 GRADIENT INTERVAL = -5.00/ 5.00

ALPHAR	BETAR	CNFRS	CAFRS	CLMFRS	CYFRS	CYNFRS	CBLRS	CABRS	CYNBRS	CP9	CP10
4.653	-5.637	.01110	.03000	-.00490	.00190	.02250	-.00220	.02580	.00500	-.31960	-.26870
4.432	-3.522	.00790	.03050	-.00140	-.00450	.02530	-.00160	.02680	.00520	-.33470	-.27690
4.148	.143	-.00090	.03340	.00880	-.02010	.03620	.00010	.02970	.00580	-.36810	-.30880
4.148	3.794	-.00320	.03460	.01270	-.03380	.04590	.00060	.03200	.00620	-.39850	-.33180
4.102	5.812	-.00610	.03600	.01580	-.04390	.05310	.00120	.03320	.00640	-.41150	-.34450
	GRADIENT	-.00152	.00056	.00193	-.00401	.00282	.00030	.00071	.00014	-.00872	-.00751

IA156A, AEDC PWT 16T-470, 0 T S W/SILTS (R8NRE6) (10 MAY 80)

REFERENCE DATA

SREF = 2690.0000 SQ.FT. XMRP = 976.0000 IN. XT
LREF = 1290.3000 INCHES YMRP = .0000 IN. YT
BREF = 1290.3000 INCHES ZMRP = 400.0000 IN. ZT
SCALE = .0200

PARAMETRIC DATA

IB-ELV = 10.000 OB-ELV = 2.000
BDFLAP = .000 SPDBRK = .000
RUDDER = .000 SILTS = 1.000
MACH = 1.050 RN/L = 3.500

RUN NO. 1494/ 0 RN/L = 3.50 GRADIENT INTERVAL = -5.00/ 5.00

ALPHAR	BETAR	CNFRS	CAFRS	CLMFRS	CYFRS	CYNFRS	CBLRS	CABRS	CYNBRS	CP9	CP10
-8.648	-6.289	-.00650	.02130	-.02740	.03750	.00960	.00140	.04070	.00790	-.49510	-.43150
-8.633	-4.124	-.02900	.02340	-.01320	.04500	.00420	.00580	.04540	.00880	-.54310	-.49190
-8.677	-.062	-.07660	.02550	.01770	.04450	.00330	.01510	.05110	.00990	-.60530	-.55810
-8.534	4.208	-.12320	.02540	.04680	.02670	.01560	.02420	.05310	.01030	-.62500	-.58470
-8.563	6.150	-.14340	.02660	.05690	.02130	.01890	.02820	.05530	.01070	-.65500	-.60440
	GRADIENT	-.01130	.00024	.00720	-.00221	.00138	.00221	.00092	.00018	-.00979	-.01110

RUN NO. 1495/ 0 RN/L = 3.50 GRADIENT INTERVAL = -5.00/ 5.00

ALPHAR	BETAR	CNFRS	CAFRS	CLMFRS	CYFRS	CYNFRS	CBLRS	CABRS	CYNBRS	CP9	CP10
-6.449	-6.334	.00290	.02440	-.02620	.00920	.02310	-.00050	.04050	.00790	-.48680	-.43480
-6.415	-4.381	-.01390	.02630	-.01480	.01420	.01860	.00280	.04470	.00870	-.53750	-.48020
-6.575	-.078	-.05770	.02660	.01470	.01200	.01930	.01130	.04960	.00960	-.58790	-.54210
-6.382	4.206	-.09550	.02910	.03890	-.00120	.02600	.01870	.05260	.01020	-.62140	-.57630
-6.363	6.205	-.11540	.02960	.04960	-.00910	.03150	.02260	.05410	.01050	-.63870	-.59270
	GRADIENT	-.00950	.00033	.00625	-.00179	.00086	.00185	.00092	.00017	-.00977	-.01119

RUN NO. 1496/ 0 RN/L = 3.50 GRADIENT INTERVAL = -5.00/ 5.00

ALPHAR	BETAR	CNFRS	CAFRS	CLMFRS	CYFRS	CYNFRS	CBLRS	CABRS	CYNBRS	CP9	CP10
-4.196	-6.490	.00800	.02660	-.02260	-.01310	.03510	-.00150	.04060	.00790	-.48410	-.44140
-4.466	-4.277	-.00790	.02780	-.01260	-.00720	.02910	.00160	.04350	.00840	-.52460	-.46610
-4.408	.232	-.04380	.02780	.01360	-.01920	.03500	.00860	.04890	.00950	-.57940	-.53310
-3.910	4.324	-.07170	.03130	.03330	-.03340	.04320	.01400	.05160	.01000	-.61140	-.56310
-4.028	6.164	-.08740	.03100	.04190	-.03500	.04430	.01710	.05260	.01020	-.62550	-.57250
	GRADIENT	-.00743	.00040	.00534	-.00304	.00163	.00144	.00095	.00019	-.01013	-.01134

RUN NO. 1497/ 0 RN/L = 3.50 GRADIENT INTERVAL = -5.00/ 5.00

ALPHAR	BETAR	CNFRS	CAFRS	CLMFRS	CYFRS	CYNFRS	CBLRS	CABRS	CYNBRS	CP9	CP10
-.319	-7.357	.01330	.02790	-.01620	-.02670	.04250	-.00260	.03950	.00770	-.47630	-.42330
-.323	-5.155	.00330	.02830	-.00840	-.02900	.04170	-.00070	.04150	.00810	-.49780	-.44680
-.403	-.770	-.01510	.03050	.00510	-.04310	.05020	.00290	.04730	.00920	-.56300	-.51420
-.315	3.327	-.03620	.03310	.02090	-.05430	.05790	.00710	.05190	.01010	-.61570	-.56570
-.301	5.512	-.04830	.03260	.02860	-.05810	.05970	.00940	.05270	.01020	-.62480	-.57500
	GRADIENT	-.00515	.00063	.00386	-.00273	.00188	.00103	.00112	.00022	-.01286	-.01257

IA156A, AEDC PWT 16T-470, 0 T S W/SILTS (R8NRE6) (10 MAY 80)

REFERENCE DATA

SREF = 2690.0000 SQ.FT. XMRP = 976.0000 IN. XT
LREF = 1290.3000 INCHES YMRP = .0000 IN. YT
BREF = 1290.3000 INCHES ZMRP = 400.0000 IN. ZT
SCALE = .0200

PARAMETRIC DATA

IB-ELV = 10.000 OB-ELV = 2.000
BDFLAP = .000 SPDBRK = .000
RUDDER = .000 SILTS = 1.000
MACH = 1.050 RN/L = 3.500

RUN NO. 1498/ 0 RN/L = 3.50 GRADIENT INTERVAL = -5.00/ 5.00

ALPHAR	BETAR	CNFRS	CAFRS	CLMFRS	CYFRS	CYNFRS	CBLRS	CABRS	CYNBRS	CP9	CP10
4.444	-5.772	.01290	.02890	-.00820	-.01520	.03310	-.00260	.04310	.00840	-.51580	-.46690
4.286	-3.691	.01100	.03020	-.00640	-.02110	.03600	-.00220	.04540	.00880	-.53850	-.49520
4.045	-.008	.00440	.03130	.00090	-.03620	.04610	-.00100	.04750	.00920	-.56370	-.51790
4.187	3.758	-.00320	.03200	.00940	-.04520	.05270	.00060	.05040	.00980	-.60140	-.54590
4.151	5.784	-.00760	.03170	.01310	-.05360	.05940	.00140	.05060	.00980	-.60350	-.54780
	GRADIENT	-.00191	.00024	.00212	-.00323	.00224	.00038	.00067	.00013	-.00845	-.00681

IA156A, AEDC PWT 16T-470, 0 T S W/SILTS (R8NRE7) (10 MAY 80)

REFERENCE DATA

SREF = 2690.0000 SQ.FT. XMRP = 976.0000 IN. XT
LREF = 1290.3000 INCHES YMRP = .0000 IN. YT
BREF = 1290.3000 INCHES ZMRP = 400.0000 IN. ZT
SCALE = .0200

PARAMETRIC DATA

IB-ELV = 10.000 OB-ELV = 2.000
BDFLAP = .000 SPDBRK = .000
RUDDER = .000 SILTS = 1.000
MACH = 1.100 RN/L = 3.500

RUN NO. 1499/ 0 RN/L = 3.50 GRADIENT INTERVAL = -5.00/ 5.00

ALPHAR	BETAR	CNFRS	CAFRS	CLMFRS	CYFRS	CYNFRS	CBLRS	CABRS	CYNBRS	CP9	CP10
-8.667	-6.293	-.00890	.02250	-.02560	.04000	.00760	.00180	.03780	.00730	-.45910	-.40300
-8.690	-4.149	-.03000	.02560	-.01290	.04700	.00310	.00600	.04210	.00820	-.50240	-.45640
-8.697	-.079	-.07750	.02830	.01760	.04620	.00340	.01530	.04740	.00920	-.56260	-.51710
-8.526	4.312	-.12250	.03010	.04620	.02630	.01570	.02400	.05000	.00970	-.59090	-.54860
-8.573	6.157	-.14170	.03130	.05590	.01980	.01990	.02780	.05110	.00990	-.60720	-.55620
	GRADIENT	-.01092	.00053	.00698	-.00247	.00151	.00213	.00093	.00018	-.01041	-.01085

RUN NO. 1500/ 0 RN/L = 3.50 GRADIENT INTERVAL = -5.00/ 5.00

ALPHAR	BETAR	CNFRS	CAFRS	CLMFRS	CYFRS	CYNFRS	CBLRS	CABRS	CYNBRS	CP9	CP10
-6.475	-6.333	.00150	.02580	-.02550	.01210	.02110	-.00020	.03730	.00720	-.45040	-.39880
-6.477	-4.388	-.01540	.02770	-.01460	.01760	.01670	.00310	.04100	.00800	-.49460	-.43990
-6.635	-.100	-.05800	.02880	.01380	.01510	.01770	.01140	.04570	.00890	-.54200	-.49790
-6.385	4.220	-.09430	.03220	.03800	-.00360	.02690	.01850	.04840	.00940	-.57310	-.52950
-6.374	6.214	-.11450	.03310	.04890	-.00840	.03070	.02240	.05000	.00970	-.59240	-.54640
	GRADIENT	-.00916	.00052	.00611	-.00246	.00119	.00179	.00086	.00016	-.00912	-.01040

IA156A, AEDC PWT 16T-470, O T S W/SILTS (R8NRE7) (10 MAY 80)

REFERENCE DATA

SREF = 2690.0000 SQ.FT. XMRP = 976.0000 IN. XT
LREF = 1290.3000 INCHES YMRP = .0000 IN. YT
BREF = 1290.3000 INCHES ZMRP = 400.0000 IN. ZT
SCALE = .0200

PARAMETRIC DATA

IB-ELV = 10.000 OB-ELV = 2.000
BDFLAP = .000 SPDBRK = .000
RUDDER = .000 SILTS = 1.000
MACH = 1.100 RN/L = 3.500

RUN NO. 1501/ 0 RN/L = 3.51 GRADIENT INTERVAL = -5.00/ 5.00

ALPHAR	BETAR	CNFRS	CAFRS	CLMFRS	CYFRS	CYNFRS	CBLRS	CABRS	CYNBRS	CP9	CP10
-4.210	-6.499	.00720	.02780	-.02280	-.01120	.03340	-.00130	.03730	.00730	-.44620	-.40430
-4.496	-4.285	-.00860	.02910	-.01320	-.00520	.02780	.00170	.03980	.00770	-.48170	-.42390
-4.418	.247	-.04430	.03030	.01350	-.01830	.03380	.00860	.04400	.00850	-.52280	-.47950
-3.900	4.318	-.07120	.03350	.03290	-.03040	.04080	.01390	.04670	.00910	-.55510	-.50770
-4.042	6.195	-.08900	.03400	.04270	-.03190	.04220	.01740	.04840	.00940	-.57580	-.52630
	GRADIENT	-.00729	.00051	.00537	-.00293	.00151	.00142	.00080	.00016	-.00854	-.00979

RUN NO. 1502/ 0 RN/L = 3.49 GRADIENT INTERVAL = -5.00/ 5.00

ALPHAR	BETAR	CNFRS	CAFRS	CLMFRS	CYFRS	CYNFRS	CBLRS	CABRS	CYNBRS	CP9	CP10
-.330	-7.364	.01230	.02890	-.01600	-.02790	.04300	-.00240	.03650	.00710	-.44110	-.38940
-.313	-5.169	.00250	.02940	-.00810	-.02930	.04160	-.00050	.03690	.00720	-.44490	-.39470
-.385	-.773	-.01660	.03180	.00580	-.04110	.04820	.00320	.04150	.00800	-.49760	-.44650
-.288	3.348	-.03810	.03390	.02210	-.05100	.05440	.00740	.04610	.00890	-.55030	-.49940
-.277	5.537	-.04980	.03560	.02980	-.05530	.05710	.00970	.04620	.00900	-.55140	-.50050
	GRADIENT	-.00522	.00051	.00396	-.00240	.00150	.00102	.00112	.00022	-.01279	-.01284

RUN NO. 1503/ 0 RN/L = 3.50 GRADIENT INTERVAL = -5.00/ 5.00

ALPHAR	BETAR	CNFRS	CAFRS	CLMFRS	CYFRS	CYNFRS	CBLRS	CABRS	CYNBRS	CP9	CP10
4.467	-5.788	.01300	.03050	-.00800	-.01300	.03180	-.00260	.03680	.00710	-.44350	-.39500
4.311	-3.676	.01100	.03170	-.00590	-.01890	.03450	-.00220	.03970	.00770	-.47360	-.43060
4.102	.001	.00360	.03240	.00220	-.03500	.04520	-.00080	.04190	.00810	-.50080	-.45370
4.214	3.760	-.00560	.03390	.01180	-.04410	.05160	.00100	.04450	.00860	-.53480	-.47900
4.183	5.777	-.00950	.03540	.01510	-.05230	.05850	.00180	.04390	.00850	-.52640	-.47250
	GRADIENT	-.00223	.00030	.00238	-.00339	.00230	.00043	.00065	.00012	-.00823	-.00651

IA156A, AEDC PWT 16T-470, 0 T S W/SILTS (R8NRE8) (10 MAY 80)

REFERENCE DATA

SREF = 2690.0000 SQ.FT. XMRP = 976.0000 IN. XT
LREF = 1290.3000 INCHES YMRP = .0000 IN. YT
BREF = 1290.3000 INCHES ZMRP = 400.0000 IN. ZT
SCALE = .0200

PARAMETRIC DATA

IB-ELV = 10.000 OB-ELV = 2.000
BDFLAP = .000 SPDBRK = .000
RUDDER = .000 SILTS = 1.000
MACH = 1.150 RN/L = 3.500

RUN NO. 1504/ 0 RN/L = 3.50 GRADIENT INTERVAL = -5.00/ 5.00

ALPHAR	BETAR	CNFRS	CAFRS	CLMFRS	CYFRS	CYNFRS	CBLRS	CABRS	CYNBRS	CP9	CP10
-8.693	-6.316	-.00840	.02470	-.02770	.03960	.00850	.00170	.03560	.00690	-.43190	-.37860
-8.705	-4.137	-.03100	.02670	-.01400	.04990	.00150	.00620	.03910	.00760	-.47020	-.42110
-8.719	-.080	-.07890	.02960	.01720	.04930	.00040	.01550	.04450	.00860	-.52720	-.48520
-8.589	4.116	-.12620	.03180	.04830	.03010	.01140	.02470	.04640	.00900	-.54800	-.50830
-8.587	6.197	-.14760	.03300	.05890	.02150	.01700	.02900	.04720	.00920	-.56090	-.51360
	GRADIENT	-.01153	.00062	.00755	-.00241	.00121	.00224	.00088	.00017	-.00940	-.01054

RUN NO. 1505/ 0 RN/L = 3.51 GRADIENT INTERVAL = -5.00/ 5.00

ALPHAR	BETAR	CNFRS	CAFRS	CLMFRS	CYFRS	CYNFRS	CBLRS	CABRS	CYNBRS	CP9	CP10
-6.474	-6.356	.00170	.02720	-.02680	.01230	.02140	-.00030	.03430	.00670	-.41390	-.36780
-6.437	-4.377	-.01550	.02870	-.01560	.01890	.01560	.00310	.03780	.00730	-.45890	-.40320
-6.591	-.080	-.05980	.03020	.01500	.01570	.01540	.01170	.04270	.00830	-.50740	-.46450
-6.420	4.257	-.10010	.03410	.04120	.00170	.02260	.01960	.04470	.00870	-.53060	-.48840
-6.363	6.245	-.11900	.03480	.05180	-.00480	.02700	.02330	.04630	.00900	-.54990	-.50490
	GRADIENT	-.00980	.00063	.00658	-.00199	.00081	.00191	.00080	.00016	-.00830	-.00986

RUN NO. 1506/ 0 RN/L = 3.50 GRADIENT INTERVAL = -5.00/ 5.00

ALPHAR	BETAR	CNFRS	CAFRS	CLMFRS	CYFRS	CYNFRS	CBLRS	CABRS	CYNBRS	CP9	CP10
-4.178	-6.462	.00620	.02840	-.02230	-.01170	.03320	-.00120	.03460	.00670	-.41410	-.37330
-4.482	-4.280	-.00960	.03000	-.01290	-.00450	.02660	.00190	.03690	.00720	-.44670	-.39360
-4.403	.250	-.04630	.03160	.01500	-.01610	.03140	.00900	.04160	.00810	-.49500	-.45120
-3.896	4.349	-.07500	.03470	.03560	-.02620	.03750	.01470	.04440	.00860	-.52870	-.48140
-4.024	6.210	-.09120	.03560	.04470	-.02810	.03900	.01780	.04550	.00880	-.54240	-.49320
	GRADIENT	-.00759	.00054	.00563	-.00252	.00126	.00148	.00087	.00016	-.00952	-.01022

RUN NO. 1507/ 0 RN/L = 3.51 GRADIENT INTERVAL = -5.00/ 5.00

ALPHAR	BETAR	CNFRS	CAFRS	CLMFRS	CYFRS	CYNFRS	CBLRS	CABRS	CYNBRS	CP9	CP10
-.290	-7.357	.01160	.02960	-.01490	-.02540	.04080	-.00230	.03340	.00650	-.40500	-.35470
-.278	-5.172	.00140	.02990	-.00670	-.02790	.04020	-.00030	.03480	.00680	-.42200	-.37060
-.346	-.776	-.01740	.03290	.00690	-.03900	.04630	.00330	.04040	.00780	-.48820	-.43100
-.253	3.343	-.03860	.03660	.02300	-.04930	.05310	.00750	.04390	.00850	-.52440	-.47530
-.242	5.566	-.05050	.03740	.03100	-.05260	.05460	.00990	.04410	.00860	-.52780	-.47590
	GRADIENT	-.00515	.00090	.00391	-.00250	.00165	.00102	.00085	.00017	-.00879	-.01076

IA156A, AEDC PWT 16T-470, 0 T S W/SILTS (R8NRE8) (10 MAY 80)

REFERENCE DATA

SREF = 2690.0000 SQ.FT. XMRP = 976.0000 IN. XT
LREF = 1290.3000 INCHES YMRP = .0000 IN. YT
BREF = 1290.3000 INCHES ZMRP = 400.0000 IN. ZT
SCALE = .0200

PARAMETRIC DATA

IB-ELV = 10.000 OB-ELV = 2.000
BDFLAP = .000 SPDBRK = .000
RUDDER = .000 SILTS = 1.000
MACH = 1.150 RN/L = 3.500

RUN NO. 1508/ 0 RN/L = 3.50 GRADIENT INTERVAL = -5.00/ 5.00

ALPHAR	BETAR	CNFRS	CAFRS	CLMFRS	CYFRS	CYNFRS	CBLRS	CABRS	CYNBRS	CP9	CP10
4.504	-5.767	.01280	.03190	-.00800	-.01170	.03160	-.00260	.03490	.00680	-.42140	-.37280
4.400	-3.689	.01040	.03360	-.00510	-.01690	.03350	-.00210	.03750	.00730	-.44900	-.40580
4.121	.007	.00220	.03370	.00390	-.03270	.04330	-.00050	.04080	.00790	-.48930	-.43960
4.249	3.760	-.00490	.03590	.01210	-.04330	.05150	.00090	.04270	.00830	-.51210	-.45930
4.204	5.793	-.00920	.03700	.01540	-.05110	.05760	.00170	.04230	.00820	-.50920	-.45320
	GRADIENT	-.00205	.00031	.00231	-.00354	.00242	.00040	.00070	.00013	-.00847	-.00718

IA156A, AEDC PWT 16T-470, 0 T S W/SILTS (R8NRE9) (10 MAY 80)

REFERENCE DATA

SREF = 2690.0000 SQ.FT. XMRP = 976.0000 IN. XT
LREF = 1290.3000 INCHES YMRP = .0000 IN. YT
BREF = 1290.3000 INCHES ZMRP = 400.0000 IN. ZT
SCALE = .0200

PARAMETRIC DATA

IB-ELV = 10.000 OB-ELV = 2.000
BDFLAP = .000 SPDBRK = .000
RUDDER = .000 SILTS = 1.000
MACH = 1.150 RN/L = 3.500

RUN NO. 1509/ 0 RN/L = 3.51 GRADIENT INTERVAL = -5.00/ 5.00

ALPHAR	BETAR	CNFRS	CAFRS	CLMFRS	CYFRS	CYNFRS	CBLRS	CABRS	CYNBRS	CP9	CP10
-.294	-7.308	.01160	.03030	-.01500	-.02530	.04090	-.00230	.03320	.00640	-.40360	-.35260
-.278	-5.104	.00130	.03030	-.00670	-.02790	.04020	-.00030	.03460	.00670	-.41930	-.36900
-.339	-.827	-.01670	.03300	.00660	-.03890	.04620	.00320	.04020	.00780	-.48420	-.43150
-.251	3.415	-.03810	.03510	.02280	-.04900	.05250	.00740	.04460	.00870	-.53370	-.48270
-.239	5.580	-.05020	.03750	.03080	-.05290	.05480	.00980	.04420	.00860	-.52900	-.47810
	GRADIENT	-.00504	.00050	.00382	-.00238	.00149	.00099	.00104	.00021	-.01167	-.01207

IA156A, AEDC PWT 16T-470, O T S (R8NN01) (10 MAY 80)

REFERENCE DATA

SREF =	2690.0000 SQ.FT.	XMRP =	976.0000 IN. XT		
LREF =	1290.3000 INCHES	YMRP =	.0000 IN. YT		
BREF =	1290.3000 INCHES	ZMRP =	400.0000 IN. ZT		
SCALE =	.0200				

PARAMETRIC DATA

IB-ELV =	10.000	OB-ELV =	5.000
BDFLAP =	.000	SPDBRK =	.000
RUDDER =	.000	SILTS =	.000
MACH =	.600	RN/L =	3.500

RUN NO. 801/ 0 RN/L = 3.51 GRADIENT INTERVAL = -5.00/ 5.00

ALPHAL	BETAL	CALS	CYNLS	ALFLSU	BETLSU
-.225	-6.492	.05190	-.05380	-.02830	-6.56880
-.218	-.205	.04500	-.04420	-.02150	-.28190
-.225	6.025	.04010	-.03470	-.02820	5.94860
	GRADIENT	.00000	.00000	.00000	.00000

IA156A, AEDC PWT 16T-470, O T S (R8NN02) (10 MAY 80)

REFERENCE DATA

SREF =	2690.0000 SQ.FT.	XMRP =	976.0000 IN. XT		
LREF =	1290.3000 INCHES	YMRP =	.0000 IN. YT		
BREF =	1290.3000 INCHES	ZMRP =	400.0000 IN. ZT		
SCALE =	.0200				

PARAMETRIC DATA

IB-ELV =	10.000	OB-ELV =	5.000
BDFLAP =	.000	SPDBRK =	.000
RUDDER =	.000	SILTS =	.000
MACH =	.700	RN/L =	3.500

RUN NO. 803/ 0 RN/L = 3.50 GRADIENT INTERVAL = -5.00/ 5.00

ALPHAL	BETAL	CALS	CYNLS	ALFLSU	BETLSU
-.199	-6.648	.05360	-.05390	.00480	-6.64220
-.215	-.287	.04640	-.04300	-.01070	-.28200
-.244	5.990	.04100	-.03480	-.04030	5.99500
	GRADIENT	.00000	.00000	.00000	.00000

IA156A, AEDC PWT 16T-470, 0 T S (R8NN03) (10 MAY 80)

REFERENCE DATA

SREF =	2690.0000 SQ.FT.	XMRP =	976.0000 IN. XT		
LREF =	1290.3000 INCHES	YMRP =	.0000 IN. YT		
BREF =	1290.3000 INCHES	ZMRP =	400.0000 IN. ZT		
SCALE =	.0200				

PARAMETRIC DATA

IB-ELV =	10.000	OB-ELV =	5.000
BDFLAP =	.000	SPDBRK =	.000
RUDDER =	.000	SILTS =	.000
MACH =	.800	RN/L =	3.500

RUN NO. 804/ 0 RN/L = 3.50 GRADIENT INTERVAL = -5.00/ 5.00

ALPHAL	BETAL	CALS	CYNLS	ALFLSU	BETLSU
-.204	-6.715	.05590	-.05360	.00000	-6.67580
-.249	-.339	.04890	-.04130	-.04540	-.30000
-.271	5.997	.04280	-.03450	-.06670	6.03590
	GRADIENT	.00000	.00000	.00000	.00000

IA156A, AEDC PWT 16T-470, 0 T S (R8NN04) (10 MAY 80)

REFERENCE DATA

SREF =	2690.0000 SQ.FT.	XMRP =	976.0000 IN. XT		
LREF =	1290.3000 INCHES	YMRP =	.0000 IN. YT		
BREF =	1290.3000 INCHES	ZMRP =	400.0000 IN. ZT		
SCALE =	.0200				

PARAMETRIC DATA

IB-ELV =	10.000	OB-ELV =	5.000
BDFLAP =	.000	SPDBRK =	.000
RUDDER =	.000	SILTS =	.000
MACH =	.850	RN/L =	3.500

RUN NO. 805/ 0 RN/L = 3.50 GRADIENT INTERVAL = -5.00/ 5.00

ALPHAL	BETAL	CALS	CYNLS	ALFLSU	BETLSU
-.217	-6.618	.05810	-.05480	-.01520	-6.57110
-.276	-.351	.05080	-.04150	-.07420	-.30390
-.301	5.878	.04490	-.03600	-.09850	5.92530
	GRADIENT	.00000	.00000	.00000	.00000

IA156A, AEDC PWT 16T-470, 0 T S (R8NN05) (10 MAY 80)

REFERENCE DATA

SREF =	2690.0000 SQ.FT.	XMRP =	976.0000 IN. XT		
LREF =	1290.3000 INCHES	YMRP =	.0000 IN. YT		
BREF =	1290.3000 INCHES	ZMRP =	400.0000 IN. ZT		
SCALE =	.0200				

PARAMETRIC DATA

IB-ELV =	10.000	OB-ELV =	5.000
BDFLAP =	.000	SPDBRK =	.000
RUDDER =	.000	SILTS =	.000
MACH =	.900	RN/L =	3.500

RUN NO. 806/ 0 RN/L = 3.50 GRADIENT INTERVAL = -5.00/ 5.00

ALPHAL	BETAL	CALS	CYNLS	ALFLSU	BETLSU
-.236	-6.619	.06050	-.05510	-.03640	-6.56660
-.313	-.340	.05390	-.04240	-.11280	-.28740
-.336	5.919	.04770	-.03720	-.13640	5.97110
	GRADIENT	.00000	.00000	.00000	.00000

IA156A, AEDC PWT 16T-470, 0 T S (R8NN06) (10 MAY 80)

REFERENCE DATA

SREF =	2690.0000 SQ.FT.	XMRP =	976.0000 IN. XT		
LREF =	1290.3000 INCHES	YMRP =	.0000 IN. YT		
BREF =	1290.3000 INCHES	ZMRP =	400.0000 IN. ZT		
SCALE =	.0200				

PARAMETRIC DATA

IB-ELV =	10.000	OB-ELV =	5.000
BDFLAP =	.000	SPDBRK =	.000
RUDDER =	.000	SILTS =	.000
MACH =	.920	RN/L =	3.500

RUN NO. 807/ 0 RN/L = 3.50 GRADIENT INTERVAL = -5.00/ 5.00

ALPHAL	BETAL	CALS	CYNLS	ALFLSU	BETLSU
-.246	-6.619	.06250	-.05610	-.04710	-6.56500
-.305	-.359	.05610	-.04400	-.10620	-.30520
-.328	5.913	.04910	-.03860	-.12940	5.96680
	GRADIENT	.00000	.00000	.00000	.00000

IA156A, AEDC PWT 16T-470, 0 T S (R8NN07) (10 MAY 80)

REFERENCE DATA

SREF = 2690.0000 SQ.FT. XMRP = 976.0000 IN. XT
LREF = 1290.3000 INCHES YMRP = .0000 IN. YT
BREF = 1290.3000 INCHES ZMRP = 400.0000 IN. ZT
SCALE = .0200

PARAMETRIC DATA

IB-ELV = 10.000 OB-ELV = 5.000
BDFLAP = .000 SPDBRK = .000
RUDDER = .000 SILTS = .000
MACH = .940 RN/L = 3.500

RUN NO. 808/ 0 RN/L = 3.50 GRADIENT INTERVAL = -5.00/ 5.00

ALPHAL	BETAL	CALS	CYNLS	ALFLSU	BETLSU
-.240	-6.596	.06560	-.05840	-.04220	-6.54040
-.276	-.380	.05960	-.04700	-.07800	-.32440
-.317	6.024	.05030	-.03960	-.11860	6.07980
	GRADIENT	.00000	.00000	.00000	.00000

IA156A, AEDC PWT 16T-470, 0 T S (R8NN08) (10 MAY 80)

REFERENCE DATA

SREF = 2690.0000 SQ.FT. XMRP = 976.0000 IN. XT
LREF = 1290.3000 INCHES YMRP = .0000 IN. YT
BREF = 1290.3000 INCHES ZMRP = 400.0000 IN. ZT
SCALE = .0200

PARAMETRIC DATA

IB-ELV = 10.000 OB-ELV = 5.000
BDFLAP = .000 SPDBRK = .000
RUDDER = .000 SILTS = .000
MACH = .950 RN/L = 3.500

RUN NO. 816/ 0 RN/L = 3.50 GRADIENT INTERVAL = -5.00/ 5.00

BETAL	ALPHAL	CALS	CYNLS	ALFLSU	BETLSU
.717	-6.139	.05660	-.02030	-6.09680	.51650
.376	-1.018	.05720	-.04670	-.97590	.17550
.313	.126	.05660	-.04810	.16860	.11190
-.031	6.101	.05840	-.04060	6.14330	-.23160
	GRADIENT	-.00052	-.00122	1.00000	-.05557

IA156A, AEDC PWT 16T-470, 0 T S (R8NN09) (10 MAY 80)

REFERENCE DATA

SREF =	2690.0000 SQ.FT.	XMRP =	976.0000 IN. XT		
LREF =	1290.3000 INCHES	YMRP =	.0000 IN. YT		
BREF =	1290.3000 INCHES	ZMRP =	400.0000 IN. ZT		
SCALE =	.0200				

PARAMETRIC DATA

IB-ELV =	10.000	OB-ELV =	5.000
BDFLAP =	.000	SPDBRK =	.000
RUDDER =	.000	SILTS =	.000
MACH =	.950	RN/L =	3.500

RUN NO. 820/ 0 RN/L = 3.50 GRADIENT INTERVAL = -5.00/ 5.00

ALPHAL	BETAL	CALS	CYNLS	ALFLSU	BETLSU
-.349	-6.738	.06660	-.05720	-.15100	-6.68260
-.312	.012	.05820	-.04850	-.11470	.06770
-.221	6.063	.05070	-.03980	-.02360	6.11860
	GRADIENT	.00000	.00000	.00000	.00000

IA156A, AEDC PWT 16T-470, 0 T S (R8NN10) (10 MAY 80)

REFERENCE DATA

SREF =	2690.0000 SQ.FT.	XMRP =	976.0000 IN. XT		
LREF =	1290.3000 INCHES	YMRP =	.0000 IN. YT		
BREF =	1290.3000 INCHES	ZMRP =	400.0000 IN. ZT		
SCALE =	.0200				

PARAMETRIC DATA

IB-ELV =	10.000	OB-ELV =	5.000
BDFLAP =	.000	SPDBRK =	.000
RUDDER =	.000	SILTS =	.000
MACH =	.960	RN/L =	3.500

RUN NO. 818/ 0 RN/L = 3.50 GRADIENT INTERVAL = -5.00/ 5.00

ALPHAL	BETAL	CALS	CYNLS	ALFLSU	BETLSU
-.351	-6.724	.06870	-.05870	-.15380	-6.66770
-.319	-.333	.06280	-.05010	-.12210	-.27680
-.233	6.057	.05190	-.04100	-.03530	6.11340
	GRADIENT	.00000	.00000	.00000	.00000

IA156A, AEDC PWT 16T-470, 0 T S (R8NN11) (10 MAY 80)

REFERENCE DATA

SREF = 2690.0000 SQ.FT. XMRP = 976.0000 IN. XT
LREF = 1290.3000 INCHES YMRP = .0000 IN. YT
BREF = 1290.3000 INCHES ZMRP = 400.0000 IN. ZT
SCALE = .0200

PARAMETRIC DATA

IB-ELV = 10.000 OB-ELV = 5.000
BDFLAP = .000 SPDBRK = .000
RUDDER = .000 SILTS = .000
MACH = .970 RN/L = 3.500

RUN NO. 821/ 0 RN/L = 3.50 GRADIENT INTERVAL = -5.00/ 5.00

ALPHAL	BETAL	CALS	CYNLS	ALFLSU	BETLSU
-.376	-6.550	.07160	-.06010	-.17860	-6.49380
-.347	-.120	.06470	-.05180	-.15030	-.06400
-.237	6.178	.05230	-.04160	-.03990	6.23480
	GRADIENT	.00000	.00000	.00000	.00000

IA156A, AEDC PWT 16T-470, 0 T S (R8NN12) (10 MAY 80)

REFERENCE DATA

SREF = 2690.0000 SQ.FT. XMRP = 976.0000 IN. XT
LREF = 1290.3000 INCHES YMRP = .0000 IN. YT
BREF = 1290.3000 INCHES ZMRP = 400.0000 IN. ZT
SCALE = .0200

PARAMETRIC DATA

IB-ELV = 10.000 OB-ELV = 5.000
BDFLAP = .000 SPDBRK = .000
RUDDER = .000 SILTS = .000
MACH = .980 RN/L = 3.500

RUN NO. 822/ 0 RN/L = 3.51 GRADIENT INTERVAL = -5.00/ 5.00

ALPHAL	BETAL	CALS	CYNLS	ALFLSU	BETLSU
-.076	-6.000	.07330	-.06150	.11780	-5.93520
-.362	.223	.06610	-.05410	-.15850	.20260
.100	6.162	.05650	-.04440	.29970	6.20850
	GRADIENT	.00000	.00000	.00000	.00000

IA156A, AEDC PWT 16T-470, O T S (R8NN13) (10 MAY 80)

REFERENCE DATA

SREF =	2690.0000 SQ.FT.	XMRP =	976.0000 IN. XT		
LREF =	1290.3000 INCHES	YMRP =	.0000 IN. YT		
BREF =	1290.3000 INCHES	ZMRP =	400.0000 IN. ZT		
SCALE =	.0200				

PARAMETRIC DATA

IB-ELV =	10.000	OB-ELV =	5.000
BDFLAP =	.000	SPDBRK =	.000
RUDDER =	.000	SILTS =	.000
MACH =	.990	RN/L =	3.500

RUN NO. 823/ 0 RN/L = 3.50 GRADIENT INTERVAL = -5.00/ 5.00

ALPHAL	BETAL	CALS	CYNLS	ALFLSU	BETLSU
.014	-6.011	.07540	-.06290	.20680	-5.94330
-.326	.322	.06480	-.05450	-.12310	.29740
.043	5.905	.05820	-.04480	.24180	5.95410
	GRADIENT	.00000	.00000	.00000	.00000

IA156A, AEDC PWT 16T-470, O T S (R8NN14) (10 MAY 80)

REFERENCE DATA

SREF =	2690.0000 SQ.FT.	XMRP =	976.0000 IN. XT		
LREF =	1290.3000 INCHES	YMRP =	.0000 IN. YT		
BREF =	1290.3000 INCHES	ZMRP =	400.0000 IN. ZT		
SCALE =	.0200				

PARAMETRIC DATA

IB-ELV =	10.000	OB-ELV =	5.000
BDFLAP =	.000	SPDBRK =	.000
RUDDER =	.000	SILTS =	.000
MACH =	1.010	RN/L =	3.500

RUN NO. 824/ 0 RN/L = 3.51 GRADIENT INTERVAL = -5.00/ 5.00

ALPHAL	BETAL	CALS	CYNLS	ALFLSU	BETLSU
.161	-5.947	.07930	-.06500	.35160	-5.87440
-.205	.504	.06800	-.05600	-.00490	.46290
.005	6.256	.06200	-.04630	.20210	6.30710
	GRADIENT	.00000	.00000	.00000	.00000

IA156A, AEDC PWT 16T-470, 0 T S (R8NN15) (10 MAY 80)

REFERENCE DATA

SREF =	2690.0000 SQ.FT.	XMRP =	976.0000 IN. XT		
LREF =	1290.3000 INCHES	YMRP =	.0000 IN. YT		
BREF =	1290.3000 INCHES	ZMRP =	400.0000 IN. ZT		
SCALE =	.0200				

PARAMETRIC DATA

IB-ELV =	10.000	OB-ELV =	5.000
BDFLAP =	.000	SPDBRK =	.000
RUDDER =	.000	SILTS =	.000
MACH =	1.020	RN/L =	3.500

RUN NO. 825/ 0 RN/L = 3.51 GRADIENT INTERVAL = -5.00/ 5.00

ALPHAL	BETAL	CALS	CYNLS	ALFLSU	BETLSU
.103	-6.010	.08120	-.06630	.29380	-5.93860
-.317	.348	.07230	-.05900	-.11510	.31990
.071	6.303	.06460	-.04750	.26900	6.35300
	GRADIENT	.00000	.00000	.00000	.00000

IA156A, AEDC PWT 16T-470, 0 T S (R8NN16) (10 MAY 80)

REFERENCE DATA

SREF =	2690.0000 SQ.FT.	XMRP =	976.0000 IN. XT		
LREF =	1290.3000 INCHES	YMRP =	.0000 IN. YT		
BREF =	1290.3000 INCHES	ZMRP =	400.0000 IN. ZT		
SCALE =	.0200				

PARAMETRIC DATA

IB-ELV =	10.000	OB-ELV =	5.000
BDFLAP =	.000	SPDBRK =	.000
RUDDER =	.000	SILTS =	.000
MACH =	1.030	RN/L =	3.500

RUN NO. 826/ 0 RN/L = 3.51 GRADIENT INTERVAL = -5.00/ 5.00

ALPHAL	BETAL	CALS	CYNLS	ALFLSU	BETLSU
.126	-6.301	.08290	-.06750	.31680	-6.22960
-.277	.392	.07380	-.05960	-.07600	.35990
.034	6.504	.06630	-.04790	.23070	6.55630
	GRADIENT	.00000	.00000	.00000	.00000

IA156A, AEDC PWT 16T-470, 0 T S (R8NN17) (10 MAY 80)

REFERENCE DATA

SREF =	2690.0000 SQ.FT.	XMRP =	976.0000 IN. XT		
LREF =	1290.3000 INCHES	YMRP =	.0000 IN. YT		
BREF =	1290.3000 INCHES	ZMRP =	400.0000 IN. ZT		
SCALE =	.0200				

PARAMETRIC DATA

IB-ELV =	10.000	OB-ELV =	5.000
BDFLAP =	.000	SPDBRK =	.000
RUDDER =	.000	SILTS =	.000
MACH =	1.040	RN/L =	3.500

RUN NO. 827/ 0 RN/L = 3.51 GRADIENT INTERVAL = -5.00/ 5.00

ALPHAL	BETAL	CALS	CYNLS	ALFLSU	BETLSU
-.092	-6.184	.08480	-.06850	.10030	-6.11710
-.306	.382	.07620	-.06130	-.10290	.37360
.101	6.380	.06930	-.04930	.29810	6.43030
	GRADIENT	.00000	.00000	.00000	.00000

IA156A, AEDC PWT 16T-470, 0 T S (R8NN18) (10 MAY 80)

REFERENCE DATA

SREF =	2690.0000 SQ.FT.	XMRP =	976.0000 IN. XT		
LREF =	1290.3000 INCHES	YMRP =	.0000 IN. YT		
BREF =	1290.3000 INCHES	ZMRP =	400.0000 IN. ZT		
SCALE =	.0200				

PARAMETRIC DATA

IB-ELV =	10.000	OB-ELV =	5.000
BDFLAP =	.000	SPDBRK =	.000
RUDDER =	.000	SILTS =	.000
MACH =	1.050	RN/L =	3.500

RUN NO. 828/ 0 RN/L = 3.51 GRADIENT INTERVAL = -5.00/ 5.00

ALPHAL	BETAL	CALS	CYNLS	ALFLSU	BETLSU
.012	-6.160	.08470	-.06950	.20380	-6.09030
-.247	.492	.07700	-.06250	-.04420	.46900
-.011	6.449	.06980	-.05000	.18520	6.50330
	GRADIENT	.00000	.00000	.00000	.00000

IA156A, AEDC PWT 16T-470, 0 T S (R8NN19) (10 MAY 80)

REFERENCE DATA

SREF = 2690.0000 SQ.FT. XMRP = 976.0000 IN. XT
LREF = 1290.3000 INCHES YMRP = .0000 IN. YT
BREF = 1290.3000 INCHES ZMRP = 400.0000 IN. ZT
SCALE = .0200

PARAMETRIC DATA

IB-ELV = 10.000 OB-ELV = 5.000
BDFLAP = .000 SPDBRK = .000
RUDDER = .000 SILTS = .000
MACH = 1.060 RN/L = 3.500

RUN NO. 829/ 0 RN/L = 3.50 GRADIENT INTERVAL = -5.00/ 5.00

ALPHAL	BETAL	CALS	CYNLS	ALFLSU	BETLSU
.111	-6.127	.08510	-.07040	.30130	-6.05400
-.246	.513	.07650	-.06240	-.04350	.49190
-.046	6.439	.06950	-.05020	.14980	6.49470
	GRADIENT	.00000	.00000	.00000	.00000

IA156A, AEDC PWT 16T-470, 0 T S (R8NN20) (10 MAY 80)

REFERENCE DATA

SREF = 2690.0000 SQ.FT. XMRP = 976.0000 IN. XT
LREF = 1290.3000 INCHES YMRP = .0000 IN. YT
BREF = 1290.3000 INCHES ZMRP = 400.0000 IN. ZT
SCALE = .0200

PARAMETRIC DATA

IB-ELV = 10.000 OB-ELV = 5.000
BDFLAP = .000 SPDBRK = .000
RUDDER = .000 SILTS = .000
MACH = 1.080 RN/L = 3.500

RUN NO. 830/ 0 RN/L = 3.48 GRADIENT INTERVAL = -5.00/ 5.00

ALPHAL	BETAL	CALS	CYNLS	ALFLSU	BETLSU
-.040	-6.258	.08350	-.06870	.15150	-6.18820
-.283	.407	.07320	-.06020	-.08030	.38460
-.089	6.433	.06490	-.04780	.10670	6.49090
	GRADIENT	.00000	.00000	.00000	.00000

IA156A, AEDC PWT 16T-470, 0 T S (R8NN21) (10 MAY 80)

REFERENCE DATA

SREF = 2690.0000 SQ.FT. XMRP = 976.0000 IN. XT
LREF = 1290.3000 INCHES YMRP = .0000 IN. YT
BREF = 1290.3000 INCHES ZMRP = 400.0000 IN. ZT
SCALE = .0200

PARAMETRIC DATA

IB-ELV = 10.000 OB-ELV = 5.000
BDFLAP = .000 SPDBRK = .000
RUDDER = .000 SILTS = .000
MACH = 1.100 RN/L = 3.500

RUN NO. 831/ 0 RN/L = 3.50 GRADIENT INTERVAL = -5.00/ 5.00

ALPHAL	BETAL	CALS	CYNLS	ALFLSU	BETLSU
-.092	-6.020	.08220	-.06590	.10030	-5.95040
-.303	.355	.07220	-.05900	-.10010	.33150
.134	6.324	.06430	-.04700	.33210	6.37670
	GRADIENT	.00000	.00000	.00000	.00000

IA156A, AEDC PWT 16T-470, 0 T S (R8NN22) (10 MAY 80)

REFERENCE DATA

SREF = 2690.0000 SQ.FT. XMRP = 976.0000 IN. XT
LREF = 1290.3000 INCHES YMRP = .0000 IN. YT
BREF = 1290.3000 INCHES ZMRP = 400.0000 IN. ZT
SCALE = .0200

PARAMETRIC DATA

IB-ELV = 10.000 OB-ELV = 5.000
BDFLAP = .000 SPDBRK = .000
RUDDER = .000 SILTS = .000
MACH = 1.150 RN/L = 3.500

RUN NO. 836/ 0 RN/L = 3.50 GRADIENT INTERVAL = -5.00/ 5.00

ALPHAL	BETAL	CALS	CYNLS	ALFLSU	BETLSU
.380	-5.917	.08120	-.06550	.18530	-5.98750
-.277	.324	.07170	-.05740	-.07770	.26730
-.029	6.211	.06410	-.04690	.16900	6.27120
	GRADIENT	.00000	.00000	.00000	.00000

IA156A, AEDC PWT 16T-470, O T S (R8NN23) (10 MAY 80)

REFERENCE DATA

SREF =	2690.0000 SQ.FT.	XMRP =	976.0000 IN. XT		
LREF =	1290.3000 INCHES	YMRP =	.0000 IN. YT		
BREF =	1290.3000 INCHES	ZMRP =	400.0000 IN. ZT		
SCALE =	.0200				

PARAMETRIC DATA

IB-ELV =	10.000	OB-ELV =	5.000
BDFLAP =	.000	SPDBRK =	.000
RUDDER =	.000	SILTS =	.000
MACH =	1.200	RN/L =	3.500

RUN NO. 837/ 0 RN/L = 3.51 GRADIENT INTERVAL = -5.00/ 5.00

ALPHAL	BETAL	CALS	CYNLS	ALFLSU	BETLSU
.312	-5.903	.07990	-.06230	.11280	-5.97280
-.091	.468	.07070	-.05540	.10330	.38650
-.043	6.281	.06150	-.04520	.15850	6.34410
	GRADIENT	.00000	.00000	.00000	.00000

IA156A, AEDC PWT 16T-470, O T S (R8NN24) (10 MAY 80)

REFERENCE DATA

SREF =	2690.0000 SQ.FT.	XMRP =	976.0000 IN. XT		
LREF =	1290.3000 INCHES	YMRP =	.0000 IN. YT		
BREF =	1290.3000 INCHES	ZMRP =	400.0000 IN. ZT		
SCALE =	.0200				

PARAMETRIC DATA

IB-ELV =	10.000	OB-ELV =	5.000
BDFLAP =	.000	SPDBRK =	.000
RUDDER =	.000	SILTS =	.000
MACH =	1.250	RN/L =	3.500

RUN NO. 838/ 0 RN/L = 3.50 GRADIENT INTERVAL = -5.00/ 5.00

ALPHAL	BETAL	CALS	CYNLS	ALFLSU	BETLSU
.077	-6.248	.07870	-.06070	.27980	-6.16890
-.095	.480	.07010	-.05350	.12100	.45580
.005	6.221	.06070	-.04530	.21290	6.28560
	GRADIENT	.00000	.00000	.00000	.00000

IA156A, AEDC PWT 16T-470, 0 T S (R8NN25) (10 MAY 80)

REFERENCE DATA

SREF = 2690.0000 SQ.FT. XMRP = 976.0000 IN. XT
LREF = 1290.3000 INCHES YMRP = .0000 IN. YT
BREF = 1290.3000 INCHES ZMRP = 400.0000 IN. ZT
SCALE = .0200

PARAMETRIC DATA

IB-ELV = 10.000 OB-ELV = 5.000
BDFLAP = .000 SPDBRK = .000
RUDDER = .000 SILTS = .000
MACH = 1.300 RN/L = 3.500

RUN NO. 839/ 0 RN/L = 3.50 GRADIENT INTERVAL = -5.00/ 5.00

ALPHAL	BETAL	CALS	CYNLS	ALFLSU	BETLSU
.066	-6.254	.07680	-.05860	.27870	-6.17240
-.130	.377	.06880	-.05210	.09810	.37740
.034	6.444	.05900	-.04430	.25180	6.51190
	GRADIENT	.00000	.00000	.00000	.00000

IA156A, AEDC PWT 16T-470, 0 T S (R8NN26) (10 MAY 80)

REFERENCE DATA

SREF = 2690.0000 SQ.FT. XMRP = 976.0000 IN. XT
LREF = 1290.3000 INCHES YMRP = .0000 IN. YT
BREF = 1290.3000 INCHES ZMRP = 400.0000 IN. ZT
SCALE = .0200

PARAMETRIC DATA

IB-ELV = 10.000 OB-ELV = 5.000
BDFLAP = .000 SPDBRK = .000
RUDDER = .000 SILTS = .000
MACH = 1.400 RN/L = 3.500

RUN NO. 840/ 0 RN/L = 3.50 GRADIENT INTERVAL = -5.00/ 5.00

ALPHAL	BETAL	CALS	CYNLS	ALFLSU	BETLSU
.078	-6.316	.07430	-.05640	.31920	-6.21920
-.129	.455	.06680	-.04820	.12930	.43160
.045	6.456	.05820	-.04300	.29340	6.53190
	GRADIENT	.00000	.00000	.00000	.00000

IA156A, AEDC PWT 16T-470, O T S (R8NN27) (10 MAY 80)

REFERENCE DATA

SREF =	2690.0000 SQ.FT.	XMRP =	976.0000 IN. XT		
LREF =	1290.3000 INCHES	YMRP =	.0000 IN. YT		
BREF =	1290.3000 INCHES	ZMRP =	400.0000 IN. ZT		
SCALE =	.0200				

PARAMETRIC DATA

IB-ELV =	10.000	OB-ELV =	5.000
BDFLAP =	.000	SPDBRK =	.000
RUDDER =	.000	SILTS =	.000
MACH =	1.550	RN/L =	3.200

RUN NO. 841/ 0 RN/L = 3.19 GRADIENT INTERVAL = -5.00/ 5.00

ALPHAL	BETAL	CALS	CYNLS	ALFLSU	BETLSU
.084	-6.325	.07080	-.05560	.39810	-6.15740
-.228	.444	.06290	-.04610	.12850	.44590
-.108	6.364	.05440	-.03880	.22070	6.50100
	GRADIENT	.00000	.00000	.00000	.00000

IA156A, AEDC PWT 16T-470, O T S (R8NN28) (10 MAY 80)

REFERENCE DATA

SREF =	2690.0000 SQ.FT.	XMRP =	976.0000 IN. XT		
LREF =	1290.3000 INCHES	YMRP =	.0000 IN. YT		
BREF =	1290.3000 INCHES	ZMRP =	400.0000 IN. ZT		
SCALE =	.0200				

PARAMETRIC DATA

IB-ELV =	10.000	OB-ELV =	5.000
BDFLAP =	.000	SPDBRK =	.000
RUDDER =	.000	SILTS =	.000
MACH =	.600	RN/L =	3.500

RUN NO. 846/ 0 RN/L = 3.50 GRADIENT INTERVAL = -5.00/ 5.00

ALPHAL	BETAL	CALS	CYNLS	ALFLSU	BETLSU
-.272	-6.458	.05030	-.05060	-.07560	-6.53620
.216	-5.909	.05080	-.05180	.01980	-5.83250
.200	.083	.04360	-.04470	.00350	.15920
-.167	6.053	.03960	-.03540	.02880	5.97500
.230	6.571	.03940	-.03490	.03370	6.64780
	GRADIENT	.00000	.00000	.00000	.00000

IA156A, AEDC PWT 16T-470, 0 T S (R8NN29) (10 MAY 80)

REFERENCE DATA

SREF = 2690.0000 SQ.FT. XMRP = 976.0000 IN. XT
LREF = 1290.3000 INCHES YMRP = .0000 IN. YT
BREF = 1290.3000 INCHES ZMRP = 400.0000 IN. ZT
SCALE = .0200

PARAMETRIC DATA

IB-ELV = 10.000 OB-ELV = 5.000
BDFLAP = .000 SPDBRK = .000
RUDDER = .000 SILTS = .000
MACH = .900 RN/L = 3.500

RUN NO. 845/ 0 RN/L = 3.51 GRADIENT INTERVAL = -5.00/ 5.00

ALPHAL	BETAL	CALS	CYNLS	ALFLSU	BETLSU
-.322	-6.682	.06000	-.05230	-.12190	-6.63010
.164	-5.822	.05980	-.05210	-.03570	-5.87460
-.357	-.065	.05190	-.04330	-.15660	-.01410
.081	.304	.05170	-.04330	-.11960	.25230
-.223	6.024	.04770	-.03800	-.02220	6.07490
.147	6.865	.04780	-.03850	-.05260	6.81320
	GRADIENT	-.00054	.00000	.10027	.72195

IA156A, AEDC PWT 16T-470, 0 T S (R8NN30) (10 MAY 80)

REFERENCE DATA

SREF = 2690.0000 SQ.FT. XMRP = 976.0000 IN. XT
LREF = 1290.3000 INCHES YMRP = .0000 IN. YT
BREF = 1290.3000 INCHES ZMRP = 400.0000 IN. ZT
SCALE = .0200

PARAMETRIC DATA

IB-ELV = 10.000 OB-ELV = 5.000
BDFLAP = .000 SPDBRK = .000
RUDDER = .000 SILTS = .000
MACH = 1.100 RN/L = 3.500

RUN NO. 844/ 0 RN/L = 3.50 GRADIENT INTERVAL = -5.00/ 5.00

ALPHAL	BETAL	CALS	CYNLS	ALFLSU	BETLSU
-.411	-6.659	.08260	-.06550	-.21580	-6.59790
.199	-5.811	.08210	-.06650	.00470	-5.87450
-.371	.039	.07370	-.05960	-.17670	.10180
.098	.262	.07280	-.05960	-.09570	.19820
-.199	6.090	.06460	-.04730	-.00410	6.15170
.151	6.913	.06690	-.04770	-.04300	6.84870
	GRADIENT	-.00403	.00000	.36258	.43151

IA156A, AEDC PWT 16T-470, O T S (R8NN31) (10 MAY 80)

REFERENCE DATA

SREF =	2690.0000 SQ.FT.	XMRP =	976.0000 IN. XT		
LREF =	1290.3000 INCHES	YMRP =	.0000 IN. YT		
BREF =	1290.3000 INCHES	ZMRP =	400.0000 IN. ZT		
SCALE =	.0200				

PARAMETRIC DATA

IB-ELV =	10.000	OB-ELV =	5.000
BDFLAP =	.000	SPDBRK =	.000
RUDDER =	.000	SILTS =	.000
MACH =	1.550	RN/L =	3.200

RUN NO. 842/ 0 RN/L = 3.20 GRADIENT INTERVAL = -5.00/ 5.00

ALPHAL	BETAL	CALS	CYNLS	ALFLSU	BETLSU
-.406	-6.672	.07090	-.05370	-.08040	-6.52350
.466	-6.050	.06980	-.05600	.14220	-6.20020
-.347	-.127	.06280	-.04540	-.02200	.02000
.429	.380	.06280	-.04710	.10560	.22980
-.290	6.082	.05430	-.03840	.03490	6.22810
-.308	6.316	.05440	-.03860	.01740	6.46300
.358	6.895	.05360	-.03790	.03380	6.74440
	GRADIENT	-.00000	-.00335	.25168	.41381

IA156A, AEDC PWT 16T-470, O T S (R8NN34) (10 MAY 80)

REFERENCE DATA

SREF =	2690.0000 SQ.FT.	XMRP =	976.0000 IN. XT		
LREF =	1290.3000 INCHES	YMRP =	.0000 IN. YT		
BREF =	1290.3000 INCHES	ZMRP =	400.0000 IN. ZT		
SCALE =	.0200				

PARAMETRIC DATA

IB-ELV =	10.000	OB-ELV =	5.000
BDFLAP =	.000	SPDBRK =	.000
RUDDER =	.000	SILTS =	.000
MACH =	1.100	RN/L =	3.500
Z =	4.500		

RUN NO. 835/ 0 RN/L = 3.51 GRADIENT INTERVAL = -5.00/ 5.00

ALPHAL	BETAL	CALS	CYNLS	ALFLSU	BETLSU
.328	-5.895	.08250	-.06900	.13400	-5.96000
-.284	.404	.07500	-.06120	-.07980	.38730
-.026	6.350	.06460	-.04770	.17040	6.40470
	GRADIENT	.00000	.00000	.00000	.00000

IA156A, AEDC PWT 16T-470, O T S (R8NN35) (10 MAY 80)

REFERENCE DATA

SREF =	2690.0000 SQ.FT.	XMRP =	976.0000 IN. XT		
LREF =	1290.3000 INCHES	YMRP =	.0000 IN. YT		
BREF =	1290.3000 INCHES	ZMRP =	400.0000 IN. ZT		
SCALE =	.0200				

PARAMETRIC DATA

IB-ELV =	10.000	OB-ELV =	5.000
BDFLAP =	.000	SPDBRK =	.000
RUDDER =	.000	SILTS =	.000
MACH =	1.100	RN/L =	3.500
Z =	5.500		

RUN NO. 834/ 0 RN/L = 3.51 GRADIENT INTERVAL = -5.00/ 5.00

ALPHAL	BETAL	CALS	CYNLS	ALFLSU	BETLSU
.375	-5.930	.08180	-.06770	.18230	-5.99850
-.193	.531	.07250	-.05900	.01280	.47290
-.110	6.233	.06400	-.04740	.08610	6.29170
	GRADIENT	.00000	.00000	.00000	.00000

IA156A, AEDC PWT 16T-470, O T S (R8NN36) (10 MAY 80)

REFERENCE DATA

SREF =	2690.0000 SQ.FT.	XMRP =	976.0000 IN. XT		
LREF =	1290.3000 INCHES	YMRP =	.0000 IN. YT		
BREF =	1290.3000 INCHES	ZMRP =	400.0000 IN. ZT		
SCALE =	.0200				

PARAMETRIC DATA

IB-ELV =	10.000	OB-ELV =	5.000
BDFLAP =	.000	SPDBRK =	.000
RUDDER =	.000	SILTS =	.000
MACH =	1.100	RN/L =	3.500
Z =	6.500		

RUN NO. 832/ 0 RN/L = 3.50 GRADIENT INTERVAL = -5.00/ 5.00

ALPHAL	BETAL	CALS	CYNLS	ALFLSU	BETLSU
-.017	-6.222	.08240	-.06640	.17430	-6.15040
-.260	.457	.07210	-.05900	-.05670	.43520
.055	6.443	.06450	-.04720	.25220	6.49820
	GRADIENT	.00000	.00000	.00000	.00000

IA156A, AEDC PWT 16T-470, O T S (R8NN37) (10 MAY 80)

REFERENCE DATA

SREF = 2690.0000 SQ.FT. XMRP = 976.0000 IN. XT
LREF = 1290.3000 INCHES YMRP = .0000 IN. YT
BREF = 1290.3000 INCHES ZMRP = 400.0000 IN. ZT
SCALE = .0200

PARAMETRIC DATA

IB-ELV = 10.000 OB-ELV = 5.000
BDFLAP = .000 SPDBRK = .000
RUDDER = .000 SILTS = .000
MACH = 1.550 RN/L = 3.200

RUN NO. 843/ 0 RN/L = 3.19 GRADIENT INTERVAL = -5.00/ 5.00

ALPHAL	BETAL	CALS	CYNLS	ALFLSU	BETLSU
.435	.337	.06270	-.04750	.11130	.18620
-.352	-.072	.06350	-.04560	-.02830	.07520
-.359	-.094	.06360	-.04600	-.03430	.05480
.463	.310	.06310	-.04780	.13990	.16030
.416	.310	.06310	-.04710	.09270	.16070
-.323	-.083	.06390	-.04650	.00080	.06460
	GRADIENT	-.00177	-.00354	.33548	.26140

IA156A, AEDC PWT 16T-470, O T S W/SILTS (R8NN40) (10 MAY 80)

REFERENCE DATA

SREF = 2690.0000 SQ.FT. XMRP = 976.0000 IN. XT
LREF = 1290.3000 INCHES YMRP = .0000 IN. YT
BREF = 1290.3000 INCHES ZMRP = 400.0000 IN. ZT
SCALE = .0200

PARAMETRIC DATA

IB-ELV = 10.000 OB-ELV = 5.000
BDFLAP = .000 SPDBRK = .000
RUDDER = .000 SILTS = 1.000
MACH = .300 RN/L = 3.500

RUN NO. 862/ 0 RN/L = 2.70 GRADIENT INTERVAL = -5.00/ 5.00

ALPHAL	BETAL	CALS	CYNLS	ALFLSU	BETLSU
-5.979	-9.880	.05070	-.04480	-5.84130	-10.04370
-6.207	-5.836	.04830	-.02950	-6.11640	-6.02990
-6.297	.435	.04180	-.01790	-6.38010	.23810
-5.814	6.201	.03870	-.02280	-6.01170	6.11800
-5.915	10.184	.03540	-.02910	-6.12620	10.14950
	GRADIENT	.00000	.00000	.00000	.00000

RUN NO. 863/ 0 RN/L = 2.68 GRADIENT INTERVAL = -5.00/ 5.00

ALPHAL	BETAL	CALS	CYNLS	ALFLSU	BETLSU
-.303	-10.477	.05350	-.05880	-.10350	-10.55400
-.279	-6.399	.05040	-.05070	-.07930	-6.47640
-.228	-.291	.04440	-.04330	-.02860	-.36850
-.176	5.794	.04020	-.03450	.02370	5.71690
-.163	9.862	.04070	-.03590	.03660	9.78570
	GRADIENT	.00000	.00000	.00000	.00000

IA156A, AEDC PWT 16T-470, O T S W/SILTS (R8NN40) (10 MAY 80)

REFERENCE DATA

SREF = 2690.0000 SQ.FT. XMRP = 976.0000 IN. XT
LREF = 1290.3000 INCHES YMRP = .0000 IN. YT
BREF = 1290.3000 INCHES ZMRP = 400.0000 IN. ZT
SCALE = .0200

PARAMETRIC DATA

IB-ELV = 10.000 OB-ELV = 5.000
BDFLAP = .000 SPDBRK = .000
RUDDER = .000 SILTS = 1.000
MACH = .300 RN/L = 3.500

RUN NO. 865/ 0 RN/L = 2.67 GRADIENT INTERVAL = -5.00/ 5.00

ALPHAL	BETAL	CALS	CYNLS	ALFLSU	BETLSU
6.453	-10.007	.05130	-.05290	6.24220	-10.04450
6.126	-5.675	.04810	-.04520	5.93020	-5.76260
6.266	.095	.04450	-.03260	6.18520	-.10280
5.793	6.142	.04070	-.02180	5.88270	5.94820
5.886	10.238	.04250	-.02090	6.02000	10.07100
	GRADIENT	.00000	.00000	.00000	.00000

IA156A, AEDC PWT 16T-470, O T S W/SILTS (R8NN41) (10 MAY 80)

REFERENCE DATA

SREF = 2690.0000 SQ.FT. XMRP = 976.0000 IN. XT
LREF = 1290.3000 INCHES YMRP = .0000 IN. YT
BREF = 1290.3000 INCHES ZMRP = 400.0000 IN. ZT
SCALE = .0200

PARAMETRIC DATA

IB-ELV = 10.000 OB-ELV = 5.000
BDFLAP = .000 SPDBRK = .000
RUDDER = .000 SILTS = 1.000
MACH = .300 RN/L = 3.500

RUN NO. 861/ 0 RN/L = 2.74 GRADIENT INTERVAL = -5.00/ 5.00

ALPHAL	BETAL	CALS	CYNLS	ALFLSU	BETLSU
-10.203	-5.968	.04650	-.01740	-10.16020	-6.17760
-10.137	.405	.04270	.00580	-10.21610	.20680
-9.965	6.306	.03700	-.00240	-10.13550	6.17700
	GRADIENT	.00000	.00000	.00000	.00000

RUN NO. 866/ 0 RN/L = 2.66 GRADIENT INTERVAL = -5.00/ 5.00

ALPHAL	BETAL	CALS	CYNLS	ALFLSU	BETLSU
10.244	-5.835	.04900	-.02430	10.07450	-5.96540
10.065	.271	.04510	-.01240	9.98950	.07090
10.179	6.365	.04010	.00110	10.21830	6.15520
	GRADIENT	.00000	.00000	.00000	.00000

IA156A, AEDC PWT 16T-470, 0 T S W/SILTS (R8NN42) (10 MAY 80)

REFERENCE DATA

SREF = 2690.0000 SQ.FT. XMRP = 976.0000 IN. XT
LREF = 1290.3000 INCHES YMRP = .0000 IN. YT
BREF = 1290.3000 INCHES ZMRP = 400.0000 IN. ZT
SCALE = .0200

PARAMETRIC DATA

IB-ELV = 10.000 OB-ELV = 5.000
BDFLAP = .000 SPDBRK = .000
RUDDER = .000 SILTS = 1.000
MACH = .600 RN/L = 3.500

RUN NO. 867/ 0 RN/L = 3.50 GRADIENT INTERVAL = -5.00/ 5.00

ALPHAL	BETAL	CALS	CYNLS	ALFLSU	BETLSU
-8.311	-7.631	.05040	-.02450	-8.22160	-7.82180
-8.456	-5.724	.04710	-.01620	-8.39630	-5.92610
-8.292	-3.671	.04580	-.01120	-8.26810	-3.88050
-8.371	.431	.04270	-.00300	-8.44910	.23590
-8.000	4.270	.04090	-.00690	-8.15760	4.13060
-7.930	6.174	.03650	-.01170	-8.10930	6.06460
-8.153	8.410	.03320	-.01590	-8.34710	8.32830
	GRADIENT	-.00062	.00056	.01325	1.00873

RUN NO. 868/ 0 RN/L = 3.50 GRADIENT INTERVAL = -5.00/ 5.00

ALPHAL	BETAL	CALS	CYNLS	ALFLSU	BETLSU
-6.358	-7.860	.05030	-.03260	-6.24170	-8.03610
-6.275	-5.696	.04810	-.02600	-6.18570	-5.88660
-6.107	-3.749	.04620	-.02150	-6.05350	-3.95270
-6.206	.149	.04230	-.01680	-6.27700	-.04880
-6.150	4.354	.04040	-.01770	-6.32310	4.23510
-5.914	6.207	.03740	-.02140	-6.10820	6.12620
-5.883	8.420	.03500	-.02490	-6.08680	8.36920
	GRADIENT	-.00071	.00046	-.03298	1.01056

RUN NO. 869/ 0 RN/L = 3.50 GRADIENT INTERVAL = -5.00/ 5.00

ALPHAL	BETAL	CALS	CYNLS	ALFLSU	BETLSU
-4.270	-8.058	.05080	-.04090	-4.12260	-8.20850
-4.342	-6.040	.04900	-.03490	-4.21520	-6.20770
-4.287	-3.817	.04690	-.03080	-4.19740	-4.00720
-4.002	.286	.04240	-.03000	-4.07690	.08970
-3.784	4.174	.04090	-.02910	-3.97920	4.09430
-3.901	6.157	.03840	-.02980	-4.10710	6.11390
-3.775	8.095	.03690	-.03130	-3.98510	8.08050
	GRADIENT	-.00075	.00021	.02733	1.01375

IA156A, AEDC PWT 16T-470, O T S W/SILTS (R8NN42) (10 MAY 80)

REFERENCE DATA

SREF =	2690.0000 SQ.FT.	XMRP =	976.0000 IN. XT		
LREF =	1290.3000 INCHES	YMRP =	.0000 IN. YT		
BREF =	1290.3000 INCHES	ZMRP =	400.0000 IN. ZT		
SCALE =	.0200				

PARAMETRIC DATA

IB-ELV =	10.000	OB-ELV =	5.000
BDFLAP =	.000	SPDBRK =	.000
RUDDER =	.000	SILTS =	1.000
MACH =	.600	RN/L =	3.500

RUN NO. 870/ 0 RN/L = 3.50 GRADIENT INTERVAL = -5.00/ 5.00

ALPHAL	BETAL	CALS	CYNLS	ALFLSU	BETLSU
-.310	-8.667	.05240	-.05580	-.11370	-8.74300
-.286	-6.538	.05120	-.05100	-.08980	-6.61380
-.266	-4.473	.04960	-.04710	-.06930	-4.54850
-.237	-.236	.04400	-.04410	-.04080	-.31060
-.169	3.888	.04080	-.03780	.02770	3.81240
-.160	5.969	.03950	-.03520	.03630	5.89290
-.165	8.076	.03910	-.03560	.03170	8.00110
	GRADIENT	-.00105	.00111	.01158	.99998

RUN NO. 871/ 0 RN/L = 3.50 GRADIENT INTERVAL = -5.00/ 5.00

ALPHAL	BETAL	CALS	CYNLS	ALFLSU	BETLSU
4.391	-7.776	.05090	-.05600	4.18090	-7.79610
4.497	-5.960	.04940	-.05150	4.29150	-6.00610
4.212	-3.808	.04790	-.04830	4.01670	-3.88830
4.349	.079	.04350	-.04120	4.26260	-.11370
4.180	4.261	.04120	-.03270	4.26330	4.06730
4.036	6.316	.03980	-.02920	4.15960	6.14490
3.886	8.082	.03970	-.02870	4.03020	7.92850
	GRADIENT	-.00083	.00193	.03017	.98603

RUN NO. 872/ 0 RN/L = 3.50 GRADIENT INTERVAL = -5.00/ 5.00

ALPHAL	BETAL	CALS	CYNLS	ALFLSU	BETLSU
6.618	-7.962	.05010	-.05090	6.41490	-8.01820
6.497	-5.921	.04890	-.04660	6.30320	-6.00280
6.616	-3.817	.04760	-.04040	6.44340	-3.93790
6.147	.296	.04360	-.03450	6.07140	.09980
6.140	4.248	.04080	-.02550	6.18650	4.04250
6.209	6.414	.03990	-.02070	6.29700	6.22250
5.866	8.140	.04020	-.02090	5.98070	7.96330
	GRADIENT	-.00084	.00184	-.03225	.98947

IA156A, AEDC PWT 16T-470, O T S W/SILTS (R8NN42) (10 MAY 80)

REFERENCE DATA

SREF =	2690.0000 SQ.FT.	XMRP =	976.0000 IN. XT		
LREF =	1290.3000 INCHES	YMRP =	.0000 IN. YT		
BREF =	1290.3000 INCHES	ZMRP =	400.0000 IN. ZT		
SCALE =	.0200				

PARAMETRIC DATA

IB-ELV =	10.000	OB-ELV =	5.000
BDFLAP =	.000	SPDBRK =	.000
RUDDER =	.000	SILTS =	1.000
MACH =	.600	RN/L =	3.500

RUN NO. 873/ 0 RN/L = 3.50 GRADIENT INTERVAL = -5.00/ 5.00

ALPHAL	BETAL	CALS	CYNLS	ALFLSU	BETLSU
8.535	-7.904	.04920	-.04220	8.34020	-7.98460
8.412	-5.622	.04790	-.03520	8.23320	-5.73270
8.397	-3.655	.04740	-.02980	8.23990	-3.79550
8.439	.274	.04460	-.02380	8.36080	.07820
8.195	4.300	.04010	-.01450	8.21800	4.09080
8.294	6.375	.03940	-.01090	8.35340	6.17310
8.139	8.372	.03940	-.01050	8.22900	8.18170
	GRADIENT	-.00092	.00192	-.00289	.99139

IA156A, AEDC PWT 16T-470, O T S W/SILTS (R8NN43) (10 MAY 80)

REFERENCE DATA

SREF =	2690.0000 SQ.FT.	XMRP =	976.0000 IN. XT		
LREF =	1290.3000 INCHES	YMRP =	.0000 IN. YT		
BREF =	1290.3000 INCHES	ZMRP =	400.0000 IN. ZT		
SCALE =	.0200				

PARAMETRIC DATA

IB-ELV =	10.000	OB-ELV =	5.000
BDFLAP =	.000	SPDBRK =	.000
RUDDER =	.000	SILTS =	1.000
MACH =	.800	RN/L =	3.500

RUN NO. 874/ 0 RN/L = 3.50 GRADIENT INTERVAL = -5.00/ 5.00

ALPHAL	BETAL	CALS	CYNLS	ALFLSU	BETLSU
-8.660	-5.955	.05140	-.01530	-8.50110	-6.08910
-8.712	-3.692	.04940	-.00660	-8.58430	-3.85600
-8.354	.425	.04610	-.00090	-8.31650	.22120
-8.231	4.485	.04200	-.00490	-8.29380	4.28680
-8.145	6.412	.03660	-.01020	-8.24240	6.22880
	GRADIENT	-.00090	.00021	.03560	.99579

RUN NO. 875/ 0 RN/L = 3.50 GRADIENT INTERVAL = -5.00/ 5.00

ALPHAL	BETAL	CALS	CYNLS	ALFLSU	BETLSU
-6.401	-5.744	.05240	-.02420	-6.22600	-5.85650
-6.269	-3.711	.05030	-.01940	-6.11890	-3.85480
-6.367	.273	.04600	-.01440	-6.32570	.06910
-6.011	4.255	.04240	-.01770	-6.09640	4.06600
-6.026	6.509	.03770	-.02110	-6.15010	6.34310
	GRADIENT	-.00099	.00021	.00282	.99426

IA156A, AEDC PWT 16T-470, O T S W/SILTS (R8NN43) (10 MAY 80)

REFERENCE DATA

SREF = 2690.0000 SQ.FT. XMRP = 976.0000 IN. XT
LREF = 1290.3000 INCHES YMRP = .0000 IN. YT
BREF = 1290.3000 INCHES ZMRP = 400.0000 IN. ZT
SCALE = .0200

PARAMETRIC DATA

IB-ELV = 10.000 OB-ELV = 5.000
BDFLAP = .000 SPDBRK = .000
RUDDER = .000 SILTS = 1.000
MACH = .800 RN/L = 3.500

RUN NO. 876/ 0 RN/L = 3.50 GRADIENT INTERVAL = -5.00/ 5.00

ALPHAL	BETAL	CALS	CYNLS	ALFLSU	BETLSU
-4.207	-5.732	.05310	-.03430	-4.01280	-5.80610
-4.237	-3.696	.05110	-.03030	-4.06240	-3.80880
-4.361	.486	.04560	-.02690	-4.33120	.28020
-3.799	4.186	.04290	-.02780	-3.92150	4.01830
-3.859	6.224	.03960	-.02870	-4.01150	6.08300
	GRADIENT	-.00105	.00033	.01610	.99268

RUN NO. 877/ 0 RN/L = 3.50 GRADIENT INTERVAL = -5.00/ 5.00

ALPHAL	BETAL	CALS	CYNLS	ALFLSU	BETLSU
-.317	-6.739	.05520	-.05140	-.11270	-6.70180
-.293	-4.617	.05300	-.04650	-.08860	-4.57910
-.270	-.376	.04740	-.04220	-.06550	-.33870
-.189	3.866	.04330	-.03710	.01560	3.90410
-.166	5.969	.04210	-.03520	.03790	6.00670
	GRADIENT	-.00114	.00111	.01228	1.00002

RUN NO. 878/ 0 RN/L = 3.50 GRADIENT INTERVAL = -5.00/ 5.00

ALPHAL	BETAL	CALS	CYNLS	ALFLSU	BETLSU
4.384	-5.746	.05340	-.05240	4.23370	-5.88920
4.341	-3.850	.05180	-.04800	4.21860	-4.01780
4.047	.273	.04570	-.04250	4.08370	.06880
3.918	4.122	.04410	-.03440	4.09110	4.00710
4.104	6.339	.04280	-.03060	4.29560	6.25960
	GRADIENT	-.00097	.00170	-.01619	1.00651

RUN NO. 879/ 0 RN/L = 3.50 GRADIENT INTERVAL = -5.00/ 5.00

ALPHAL	BETAL	CALS	CYNLS	ALFLSU	BETLSU
6.534	-5.726	.05250	-.04770	6.41580	-5.89670
6.211	-3.583	.05120	-.04240	6.12660	-3.77230
6.060	.364	.04660	-.03630	6.09920	.16030
6.179	4.290	.04400	-.02660	6.32640	4.14310
6.040	6.130	.04330	-.02400	6.21270	6.01410
	GRADIENT	-.00091	.00201	.02535	1.00547

IA156A, AEDC PWT 16T-470, 0 T S W/SILTS (R8NN44) (10 MAY 80)

REFERENCE DATA

SREF = 2690.0000 SQ.FT. XMRP = 976.0000 IN. XT
LREF = 1290.3000 INCHES YMRP = .0000 IN. YT
BREF = 1290.3000 INCHES ZMRP = 400.0000 IN. ZT
SCALE = .0200

PARAMETRIC DATA

IB-ELV = 10.000 OB-ELV = 5.000
BDFLAP = .000 SPDBRK = .000
RUDDER = .000 SILTS = 1.000
MACH = .900 RN/L = 3.500

RUN NO. 880/ 0 RN/L = 3.50 GRADIENT INTERVAL = -5.00/ 5.00

ALPHAL	BETAL	CALS	CYNLS	ALFLSU	BETLSU
-8.706	-5.879	.05580	-.01410	-8.53890	-6.00130
-8.660	-3.594	.05310	-.00720	-8.52210	-3.74770
-8.387	.515	.05130	-.00320	-8.33770	.31470
-8.251	4.515	.04510	-.00510	-8.30130	4.31430
-8.182	6.442	.04050	-.00970	-8.26700	6.25330
	GRADIENT	-.00098	.00026	.02731	.99415

RUN NO. 881/ 0 RN/L = 3.50 GRADIENT INTERVAL = -5.00/ 5.00

ALPHAL	BETAL	CALS	CYNLS	ALFLSU	BETLSU
-6.368	-5.631	.05700	.00300	-6.19650	-5.72980
-6.518	-3.797	.05440	-.01690	-6.35850	-3.92880
-6.295	.212	.05210	-.01560	-6.23780	.01390
-6.192	4.499	.04640	-.01710	-6.26700	4.30660
-6.264	6.537	.04210	-.02060	-6.37420	6.36260
	GRADIENT	-.00097	-.00003	.01082	.99280

RUN NO. 882/ 0 RN/L = 3.50 GRADIENT INTERVAL = -5.00/ 5.00

ALPHAL	BETAL	CALS	CYNLS	ALFLSU	BETLSU
-4.402	-6.036	.05870	-.03370	-4.20330	-6.09410
-4.266	-3.714	.05560	-.02930	-4.08340	-3.81150
-4.309	.385	.05030	-.02760	-4.25910	.18450
-3.958	4.418	.04750	-.02840	-4.07090	4.24520
-3.823	6.235	.04480	-.03100	-3.96630	6.08620
	GRADIENT	-.00100	.00011	.00142	.99070

RUN NO. 883/ 0 RN/L = 3.50 GRADIENT INTERVAL = -5.00/ 5.00

ALPHAL	BETAL	CALS	CYNLS	ALFLSU	BETLSU
-.360	-6.775	.06010	-.05320	-.15960	-6.72470
-.329	-4.656	.05850	-.04850	-.12850	-4.60540
-.341	-.315	.05240	-.04340	-.14070	-.26450
-.246	3.866	.04850	-.03870	-.04580	3.91670
-.227	5.980	.04690	-.03770	-.02700	6.03090
	GRADIENT	-.00117	.00115	.00962	1.00000

IA156A, AEDC PWT 16T-470, 0 T S W/SILTS (R8NN44) (10 MAY 80)

REFERENCE DATA

SREF = 2690.0000 SQ.FT. XMRP = 976.0000 IN. XT
LREF = 1290.3000 INCHES YMRP = .0000 IN. YT
BREF = 1290.3000 INCHES ZMRP = 400.0000 IN. ZT
SCALE = .0200

PARAMETRIC DATA

IB-ELV = 10.000 OB-ELV = 5.000
BDFLAP = .000 SPDBRK = .000
RUDDER = .000 SILTS = 1.000
MACH = .900 RN/L = 3.500

RUN NO. 884/ 0 RN/L = 3.50 GRADIENT INTERVAL = -5.00/ 5.00

ALPHAL	BETAL	CALS	CYNLS	ALFLSU	BETLSU
4.321	-5.657	.05870	-.05400	4.18220	-5.80980
4.187	-3.806	.05740	-.04900	4.07540	-3.97970
4.034	.277	.05250	-.04390	4.08440	.07700
3.981	4.122	.05010	-.03650	4.15910	4.01760
3.885	6.075	.04830	-.03420	4.08110	6.00970
	GRADIENT	-.00092	.00157	.01047	1.00858

IA156A, AEDC PWT 16T-470, 0 T S W/SILTS (R8NN45) (10 MAY 80)

REFERENCE DATA

SREF = 2690.0000 SQ.FT. XMRP = 976.0000 IN. XT
LREF = 1290.3000 INCHES YMRP = .0000 IN. YT
BREF = 1290.3000 INCHES ZMRP = 400.0000 IN. ZT
SCALE = .0200

PARAMETRIC DATA

IB-ELV = 10.000 OB-ELV = 5.000
BDFLAP = .000 SPDBRK = .000
RUDDER = .000 SILTS = 1.000
MACH = .950 RN/L = 3.500

RUN NO. 885/ 0 RN/L = 3.50 GRADIENT INTERVAL = -5.00/ 5.00

ALPHAL	BETAL	CALS	CYNLS	ALFLSU	BETLSU
-8.876	-5.899	.06070	-.01460	-8.70790	-6.01630
-8.828	-3.609	.05850	-.00680	-8.68700	-3.75870
-8.458	.421	.05600	-.00480	-8.40290	.22290
-8.315	4.493	.05010	-.00820	-8.36080	4.29270
-8.239	6.406	.04380	-.01170	-8.31950	6.21750
	GRADIENT	-.00104	-.00017	.04021	.99378

RUN NO. 886/ 0 RN/L = 3.50 GRADIENT INTERVAL = -5.00/ 5.00

ALPHAL	BETAL	CALS	CYNLS	ALFLSU	BETLSU
-6.505	-5.685	.06040	-.02370	-6.32260	-5.77890
-6.401	-3.666	.06020	-.01900	-6.23970	-3.79380
-6.519	.262	.05790	-.01590	-6.45980	.06560
-6.094	4.334	.05260	-.02160	-6.16440	4.14060
-6.142	6.560	.04640	-.02480	-6.25170	6.38650
	GRADIENT	-.00095	-.00033	.00979	.99186

IA156A, AEDC PWT 16T-470, O T S W/SILTS (R8NN45) (10 MAY 80)

REFERENCE DATA

SREF = 2690.0000 SQ.FT. XMRP = 976.0000 IN. XT
LREF = 1290.3000 INCHES YMRP = .0000 IN. YT
BREF = 1290.3000 INCHES ZMRP = 400.0000 IN. ZT
SCALE = .0200

PARAMETRIC DATA

IB-ELV = 10.000 OB-ELV = 5.000
BDFLAP = .000 SPDBRK = .000
RUDDER = .000 SILTS = 1.000
MACH = .950 RN/L = 3.500

RUN NO. 887/ 0 RN/L = 3.50 GRADIENT INTERVAL = -5.00/ 5.00

ALPHAL	BETAL	CALS	CYNLS	ALFLSU	BETLSU
-4.493	-6.113	.06420	-.03870	-4.29490	-6.16670
-4.441	-3.840	.06250	-.03430	-4.25760	-3.93280
-4.290	.530	.05670	-.03330	-4.24450	.32990
-3.954	4.395	.05350	-.03290	-4.06390	4.22160
-4.117	6.398	.04920	-.03390	-4.25400	6.24510
	GRADIENT	-.00110	.00017	.02308	.98990

RUN NO. 888/ 0 RN/L = 3.50 GRADIENT INTERVAL = -5.00/ 5.00

ALPHAL	BETAL	CALS	CYNLS	ALFLSU	BETLSU
[illegible]	-6.807	.06720	-.05790	-.10950	-6.75230
-.327	-4.639	.06570	-.05330	-.12890	-4.58460
-.308	-.356	.06050	-.04910	-.10990	-.30170
-.212	3.887	.05360	-.04090	-.01440	3.94130
-.202	6.017	.05050	-.04020	-.00440	6.07190
	GRADIENT	-.00142	.00145	.01342	.00004

RUN NO. 889/ 0 RN/L = 3.50 GRADIENT INTERVAL = -5.00/ 5.00

ALPHAL	BETAL	CALS	CYNLS	ALFLSU	BETLSU
4.381	-5.551	.06550	-.05760	4.24740	-5.70710
4.193	-3.709	.06380	-.05130	4.08800	-3.88550
3.909	.349	.05760	-.04630	3.96580	.15180
4.110	4.227	.05420	-.03730	4.28890	4.12610
4.071	6.265	.05140	-.03460	4.26690	6.20300
	GRADIENT	-.00121	.00176	.02489	1.00940

IA156A, AEDC PWT 16T-470, O T S W/SILTS (R8NN46) (10 MAY 80)

REFERENCE DATA

SREF = 2690.0000 SQ.FT. XMRP = 976.0000 IN. XT
LREF = 1290.3000 INCHES YMRP = .0000 IN. YT
BREF = 1290.3000 INCHES ZMRP = 400.0000 IN. ZT
SCALE = .0200

PARAMETRIC DATA

IB-ELV = 10.000 OB-ELV = 5.000
SDFLAP = .000 SPDBRK = .000
RUDDER = .000 SILTS = 1.000
MACH = 1.050 RN/L = 3.500

RUN NO. 892/ 0 RN/L = 3.50 GRADIENT INTERVAL = -5.00/ 5.00

ALPHAL	BETAL	CALS	CYNLS	ALFLSU	BETLSU
-8.957	-5.793	.07960	-.02360	-8.78640	-5.90540
-8.913	-3.656	.07730	-.01860	-8.76760	-3.79860
-8.688	.601	.07520	-.01310	-8.63140	.40510
-8.500	4.597	.06800	-.01800	-8.54090	4.39760
-8.398	6.515	.06270	-.02090	-8.47420	6.32610
	GRADIENT	-.00112	.00009	.02752	.99305

RUN NO. 893/ 0 RN/L = 3.50 GRADIENT INTERVAL = -5.00/ 5.00

ALPHAL	BETAL	CALS	CYNLS	ALFLSU	BETLSU
-6.[illegible]	-5.[illegible]	.08[illegible]	-.03[illegible]	-6.[illegible]	-5.98490
-6.591	-3.779	.08040	-.02980	-6.42610	-3.89910
-6.390	.362	.07550	-.02980	-6.32830	.16740
-6.377	4.514	.07090	-.03040	-6.44280	4.32080
-6.017	6.405	.06460	-.03400	-6.12160	6.22960
	GRADIENT	-.00115	-.00007	-.00203	.99125

RUN NO. 894/ 0 RN/L = 3.50 GRADIENT INTERVAL = -5.00/ 5.00

ALPHAL	BETAL	CALS	CYNLS	ALFLSU	BETLSU
-4.381	-5.698	.08310	-.05010	-4.18340	-5.74570
-4.625	-3.934	.08160	-.04440	-4.43970	-4.01970
-4.537	.329	.07610	-.04160	-4.47430	.13530
-4.136	4.486	.07190	-.04280	-4.24040	4.31050
-3.896	6.359	.06760	-.04460	-4.03200	6.20780
	GRADIENT	-.00115	.00019	.02353	.98928

RUN NO. 895/ 0 RN/L = 3.50 GRADIENT INTERVAL = -5.00/ 5.00

ALPHAL	BETAL	CALS	CYNLS	ALFLSU	BETLSU
-.390	-6.787	.08520	-.06960	-.19500	-6.72720
-.354	-4.640	.08430	-.06690	-.15940	-4.58000
-.366	-.347	.07950	-.06380	-.17140	-.28720
-.250	3.877	.07250	-.05400	-.05480	3.93670
-.225	6.030	.06980	-.05040	-.03040	6.09020
	GRADIENT	-.00138	.00151	.01224	1.00002

IA156A, AEDC PWT 16T-470, 0 T S W/SILTS (R8NN46) (10 MAY 80)

REFERENCE DATA

SREF =	2690.0000 SQ.FT.	XMRP =	976.0000 IN. XT		
LREF =	1290.3000 INCHES	YMRP =	.0000 IN. YT		
BREF =	1290.3000 INCHES	ZMRP =	400.0000 IN. ZT		
SCALE =	.0200				

PARAMETRIC DATA

IB-ELV =	10.000	OB-ELV =	5.000
BDFLAP =	.000	SPDBRK =	.000
RUDDER =	.000	SILTS =	1.000
MACH =	1.050	RN/L =	3.500

RUN NO. 896/ 0 RN/L = 3.50 GRADIENT INTERVAL = -5.00/ 5.00

ALPHAL	BETAL	CALS	CYNLS	ALFLSU	BETLSU
4.348	-5.747	.08290	-.07380	4.21710	-5.90360
4.400	-3.700	.08140	-.06530	4.30470	-3.88040
3.948	.318	.07880	-.05790	4.00750	.12290
3.920	4.134	.07480	-.04750	4.10070	4.04040
4.165	6.331	.07120	-.04360	4.36030	6.27360
	GRADIENT	-.00084	.00227	-.02646	1.01091

IA156A, AEDC PWT 16T-470, 0 T S W/SILTS (R8NN47) (10 MAY 80)

REFERENCE DATA

SREF =	2690.0000 SQ.FT.	XMRP =	976.0000 IN. XT		
LREF =	1290.3000 INCHES	YMRP =	.0000 IN. YT		
BREF =	1290.3000 INCHES	ZMRP =	400.0000 IN. ZT		
SCALE =	.0200				

PARAMETRIC DATA

IB-ELV =	10.000	OB-ELV =	5.000
BDFLAP =	.000	SPDBRK =	.000
RUDDER =	.000	SILTS =	1.000
MACH =	1.100	RN/L =	3.500

RUN NO. 897/ 0 RN/L = 3.49 GRADIENT INTERVAL = -5.00/ 5.00

ALPHAL	BETAL	CALS	CYNLS	ALFLSU	BETLSU
-8.960	-5.862	.08170	-.02490	-8.78670	-5.97090
-8.982	-3.649	.07970	-.01670	-8.83430	-3.79040
-8.768	.487	.07490	-.01360	-8.70560	.29270
-8.575	4.617	.06740	-.01870	-8.61360	4.41670
-8.506	6.569	.06130	-.02050	-8.57950	6.37830
	GRADIENT	-.00149	-.00024	.02670	.99285

RUN NO. 898/ 0 RN/L = 3.50 GRADIENT INTERVAL = -5.00/ 5.00

ALPHAL	BETAL	CALS	CYNLS	ALFLSU	BETLSU
-6.647	-5.769	.08260	-.03430	-6.46070	-5.85220
-6.862	-3.809	.08000	-.02790	-6.69690	-3.92930
-6.579	.336	.07420	-.02820	-6.51300	.14220
-6.420	4.539	.06930	-.03050	-6.48290	4.34440
-6.090	6.454	.06310	-.03380	-6.19220	6.27680
	GRADIENT	-.00128	-.00031	.02559	.99114

IA156A, AEDC PWT 16T-470, 0 T S W/SILTS (R8NN47) (10 MAY 80)

REFERENCE DATA

SREF = 2690.0000 SQ.FT. XMRP = 976.0000 IN. XT
LREF = 1290.3000 INCHES YMRP = .0000 IN. YT
BREF = 1290.3000 INCHES ZMRP = 400.0000 IN. ZT
SCALE = .0200

PARAMETRIC DATA

IB-ELV = 10.000 OB-ELV = 5.000
BDFLAP = .000 SPDBRK = .000
RUDDER = .000 SILTS = 1.000
MACH = 1.100 RN/L = 3.500

RUN NO. 899/ 0 RN/L = 3.50 GRADIENT INTERVAL = -5.00/ 5.00

ALPHAL	BETAL	CALS	CYNLS	ALFLSU	BETLSU
-4.347	-5.874	.08200	-.04780	-4.14690	-5.91670
-4.474	-3.793	.07960	-.04370	-4.28710	-3.87600
-4.321	.553	.07240	-.04280	-4.26750	.35580
-3.953	4.382	.06970	-.04340	-4.05630	4.20570
-4.098	6.363	.06630	-.04350	-4.22990	6.20720
	GRADIENT	-.00122	.00004	.02770	.98828

RUN NO. 900/ 0 RN/L = 3.50 GRADIENT INTERVAL = -5.00/ 5.00

ALPHAL	BETAL	CALS	CYNLS	ALFLSU	BETLSU
-.273	-6.883	.08260	-.06630	-.07870	-6.81800
-.309	-4.778	.08100	-.06330	-.11500	-4.71410
-.356	-.412	.07470	-.06020	-.16120	-.34830
-.282	3.692	.06730	-.05160	-.08770	3.75550
-.224	6.220	.06400	-.04770	-.02960	6.28210
	GRADIENT	-.00162	.00137	.00308	1.00005

RUN NO. 901/ 0 RN/L = 3.50 GRADIENT INTERVAL = -5.00/ 5.00

ALPHAL	BETAL	CALS	CYNLS	ALFLSU	BETLSU
4.626	-5.790	.07890	-.06830	4.49940	-5.95040
4.257	-3.597	.07730	-.06290	4.16070	-3.77720
3.956	.369	.07420	-.05650	4.01940	.17450
4.150	4.241	.06960	-.04490	4.33130	4.14760
4.105	6.289	.06590	-.04220	4.30170	6.23470
	GRADIENT	-.00098	.00229	.02154	1.01104

IA156A, AEDC PWT 16T-470, O T S W/SILTS (R8NN48) (10 MAY 80)

REFERENCE DATA

SREF = 2690.0000 SQ.FT. XMRP = 976.0000 IN. XT
LREF = 1290.3000 INCHES YMRP = .0000 IN. YT
BREF = 1290.3000 INCHES ZMRP = 400.0000 IN. ZT
SCALE = .0200

PARAMETRIC DATA

IB-ELV = 10.000 OB-ELV = 5.000
BDFLAP = .000 SPDBRK = .000
RUDDER = .000 SILTS = 1.000
MACH = 1.150 RN/L = 3.500

RUN NO. 902/ 0 RN/L = 3.50 GRADIENT INTERVAL = -5.00/ 5.00

ALPHAL	BETAL	CALS	CYNLS	ALFLSU	BETLSU
-9.026	-5.762	.07990	-.02130	-8.85120	-5.87230
-8.993	-3.632	.07790	-.01460	-8.84280	-3.77440
-8.758	.639	.07360	-.01020	-8.69760	.44100
-8.614	4.615	.06600	-.01550	-8.65080	4.41190
-8.512	6.545	.06050	-.01990	-8.58490	6.35100
	GRADIENT	-.00144	-.00010	.02341	.99257

RUN NO. 903/ 0 RN/L = 3.49 GRADIENT INTERVAL = -5.00/ 5.00

ALPHAL	BETAL	CALS	CYNLS	ALFLSU	BETLSU
-6.850	-5.923	.08120	-.03130	-6.66100	-6.00690
-6.431	-3.641	.07800	-.02850	-6.26190	-3.76040
-6.546	.334	.07250	-.02600	-6.47780	.13910
-6.415	4.549	.06760	-.02810	-6.47790	4.35200
-6.156	6.543	.06160	-.03210	-6.25920	6.36300
	GRADIENT	-.00127	.00004	-.02611	.99060

RUN NO. 904/ 0 RN/L = 3.50 GRADIENT INTERVAL = -5.00/ 5.00

ALPHAL	BETAL	CALS	CYNLS	ALFLSU	BETLSU
-4.497	-6.064	.08090	-.04350	-4.29490	-6.10660
-4.501	-3.748	.07790	-.04070	-4.31280	-3.83310
-4.181	.401	.07170	-.04170	-4.11760	.20440
-3.846	4.294	.06820	-.04200	-3.94970	4.11500
-4.014	6.278	.06430	-.04230	-4.14620	6.11870
	GRADIENT	-.00121	-.00016	.04517	.98816

RUN NO. 905/ 0 RN/L = 3.50 GRADIENT INTERVAL = -5.00/ 5.00

ALPHAL	BETAL	CALS	CYNLS	ALFLSU	BETLSU
-.236	-6.888	.08150	-.06400	-.04000	-6.82040
-.277	-4.513	.07980	-.06090	-.08120	-4.44680
-.322	-.443	.07480	-.05880	-.12540	-.37860
-.236	3.709	.06700	-.05080	-.03960	3.77480
-.225	5.968	.06370	-.04720	-.02870	6.03410
	GRADIENT	-.00156	.00123	.00511	1.00003

IA156A, AEDC PWT 16T-470, 0 T S W/SILTS (R8NN48) (10 MAY 80)

REFERENCE DATA

SREF = 2690.0000 SQ.FT. XMRP = 976.0000 IN. XT
LREF = 1290.3000 INCHES YMRP = .0000 IN. YT
BREF = 1290.3000 INCHES ZMRP = 400.0000 IN. ZT
SCALE = .0200

PARAMETRIC DATA

IB-ELV = 10.000 OB-ELV = 5.000
BDFLAP = .000 SPDBRK = .000
RUDDER = .000 SILTS = 1.000
MACH = 1.150 RN/L = 3.500

RUN NO. 906/ 0 RN/L = 3.50 GRADIENT INTERVAL = -5.00/ 5.00

ALPHAL	BETAL	CALS	CYNLS	ALFLSU	BETLSU
4.563	-5.605	.07890	-.06830	4.43720	-5.76940
4.299	-3.432	.07730	-.06310	4.20820	-3.61760
4.120	.365	.07450	-.05490	4.18550	.16920
4.263	4.404	.06920	-.04290	4.45820	4.31230
4.047	6.130	.06630	-.04210	4.24630	6.07590
	GRADIENT	-.00104	.00258	.03228	1.01218

IA156A, AEDC PWT 16T-470, 0 T S W/SILTS (R8NN49) (10 MAY 80)

REFERENCE DATA

SREF = 2690.0000 SQ.FT. XMRP = 976.0000 IN. XT
LREF = 1290.3000 INCHES YMRP = .0000 IN. YT
BREF = 1290.3000 INCHES ZMRP = 400.0000 IN. ZT
SCALE = .0200

PARAMETRIC DATA

IB-ELV = 10.000 OB-ELV = 5.000
BDFLAP = .000 SPDBRK = .000
RUDDER = .000 SILTS = 1.000
MACH = 1.250 RN/L = 3.500

RUN NO. 907/ 0 RN/L = 3.50 GRADIENT INTERVAL = -5.00/ 5.00

ALPHAL	BETAL	CALS	CYNLS	ALFLSU	BETLSU
-8.718	-5.657	.07780	-.01660	-8.53310	-5.77150
-8.993	-3.731	.07640	-.00940	-8.83380	-3.87940
-8.765	.603	.07180	-.00730	-8.69870	.39500
-8.581	4.669	.06360	-.01060	-8.62030	4.45500
-8.482	6.608	.05820	-.01470	-8.55900	6.40390
	GRADIENT	-.00152	-.00014	.02548	.99204

RUN NO. 908/ 0 RN/L = 3.50 GRADIENT INTERVAL = -5.00/ 5.00

ALPHAL	BETAL	CALS	CYNLS	ALFLSU	BETLSU
-6.586	-5.779	.07790	-.02630	-6.38570	-5.86520
-6.806	-3.861	.07570	-.02150	-6.62820	-3.98580
-6.516	.295	.07120	-.02110	-6.44120	.09020
-6.396	4.573	.06450	-.02290	-6.46110	4.36540
-6.079	6.493	.05950	-.02760	-6.18630	6.30280
	GRADIENT	-.00133	-.00017	.01969	.99025

IA156A, AEDC PWT 16T-470, 0 T S W/SILTS (R8NN49) (10 MAY 80)

REFERENCE DATA

SREF = 2690.0000 SQ.FT. XMRP = 976.0000 IN. XT
LREF = 1290.3000 INCHES YMRP = .0000 IN. YT
BREF = 1290.3000 INCHES ZMRP = 400.0000 IN. ZT
SCALE = .0200

PARAMETRIC DATA

IB-ELV = 10.000 OB-ELV = 5.000
BDFLAP = .000 SPDBRK = .000
RUDDER = .000 SILTS = 1.000
MACH = 1.250 RN/L = 3.500

RUN NO. 909/ 0 RN/L = 3.50 GRADIENT INTERVAL = -5.00/ 5.00

ALPHAL	BETAL	CALS	CYNLS	ALFLSU	BETLSU
-4.575	-6.086	.07820	-.03620	-4.36130	-6.13050
-4.440	-3.855	.07530	-.03440	-4.23960	-3.93960
-4.300	.535	.07050	-.03540	-4.23860	.32620
-3.971	4.396	.06580	-.03660	-4.07740	4.20590
-4.075	6.446	.06080	-.03740	-4.21430	6.27790
	GRADIENT	-.00115	-.00027	.01922	.98691

RUN NO. 910/ 0 RN/L = 3.50 GRADIENT INTERVAL = -5.00/ 5.00

ALPHAL	BETAL	CALS	CYNLS	ALFLSU	BETLSU
-.206	-6.300	.07320	-.06040	.00010	-6.89000
-.237	-4.632	.07750	-.05750	-.03130	-4.56200
-.239	-.422	.07210	-.05480	-.03250	-.35180
-.155	4.058	.06360	-.04710	.05150	4.12850
-.129	5.998	.06070	-.04530	.07720	6.06660
	GRADIENT	-.00160	.00120	.00951	1.00001

RUN NO. 911/ 0 RN/L = 3.50 GRADIENT INTERVAL = -5.00/ 5.00

ALPHAL	BETAL	CALS	CYNLS	ALFLSU	BETLSU
4.620	-5.641	.07680	-.06440	4.48690	-5.81410
4.493	-3.720	.07540	-.05920	4.39340	-3.91370
4.160	.313	.07110	-.05170	4.22650	.10520
4.016	4.039	.06580	-.04170	4.21050	3.94230
4.231	6.369	.06280	-.03890	4.44150	6.31390
	GRADIENT	-.00123	.00225	-.02381	1.01222

IA156A, AEDC PWT 16T-470, 0 T S W/SILTS (R8NN50) (10 MAY 80)

REFERENCE DATA

SREF = 2690.0000 SQ.FT. XMRP = 976.0000 IN. XT
LREF = 1290.3000 INCHES YMRP = .0000 IN. YT
BREF = 1290.3000 INCHES ZMRP = 400.0000 IN. ZT
SCALE = .0200

PARAMETRIC DATA

IB-ELV = 10.000 OB-ELV = 5.000
BDFLAP = .000 SPDBRK = .000
RUDDER = .000 SILTS = 1.000
MACH = 1.400 RN/L = 3.500

RUN NO. 912/ 0 RN/L = 3.50 GRADIENT INTERVAL = -5.00/ 5.00

ALPHAL	BETAL	CALS	CYNLS	ALFLSU	BETLSU
-8.975	-5.930	.07440	-.00900	-8.75230	-6.06410
-8.953	-3.788	.07360	.00000	-8.76050	-3.96240
-8.588	.500	.06750	-.00160	-8.50310	.25350
-8.382	4.647	.06040	-.00890	-8.42710	4.39050
-8.316	6.567	.05570	-.01240	-8.40510	6.32340
	GRADIENT	-.00156	-.00105	.03964	.99029

RUN NO. 913/ 0 RN/L = 3.51 GRADIENT INTERVAL = -5.00/ 5.00

ALPHAL	BETAL	CALS	CYNLS	ALFLSU	BETLSU
-6.712	-5.805	.07380	-.01510	-6.47380	-5.90810
-6.530	-3.807	.07170	-.01160	-6.31390	-3.95180
-6.609	.412	.06670	-.01200	-6.52260	.16740
-6.269	4.565	.06190	-.02030	-6.34480	4.31710
-6.110	6.768	.05620	-.02410	-6.23920	6.54240
	GRADIENT	-.00117	-.00104	-.00381	.98761

RUN NO. 914/ 0 RN/L = 3.50 GRADIENT INTERVAL = -5.00/ 5.00

ALPHAL	BETAL	CALS	CYNLS	ALFLSU	BETLSU
-4.368	-5.800	.07350	-.02920	-4.11380	-5.85030
-4.327	-3.743	.07080	-.02670	-4.08670	-3.84210
-4.338	.447	.06590	-.02620	-4.25560	.20120
-3.905	4.502	.06290	-.03400	-4.03250	4.27540
-4.044	6.596	.05820	-.03470	-4.21010	6.39570
	GRADIENT	-.00096	-.00088	.00631	.98437

RUN NO. 915/ 0 RN/L = 3.50 GRADIENT INTERVAL = -5.00/ 5.00

ALPHAL	BETAL	CALS	CYNLS	ALFLSU	BETLSU
-.370	-6.994	.07510	-.05580	-.12400	-6.91060
-.273	-4.544	.07310	-.05210	-.02750	-4.45840
-.256	-.534	.06860	-.04940	-.00990	-.44810
-.186	4.084	.06080	-.04430	.05950	4.16990
-.228	6.024	.05850	-.04310	.01690	6.10930
	GRADIENT	-.00143	.00091	.01021	1.00003

IA156A, AEDC PWT 16T-470, 0 T S W/SILTS (R8NN50) (10 MAY 80)

REFERENCE DATA

SREF = 2690.0000 SQ.FT. XMRP = 976.0000 IN. XT
LREF = 1290.3000 INCHES YMRP = .0000 IN. YT
BREF = 1290.3000 INCHES ZMRP = 400.0000 IN. ZT
SCALE = .0200

PARAMETRIC DATA

IB-ELV = 10.000 OB-ELV = 5.000
BDFLAP = .000 SPDBRK = .000
RUDDER = .000 SILTS = 1.000
MACH = 1.400 RN/L = 3.500

RUN NO. 916/ 0 RN/L = 3.50 GRADIENT INTERVAL = -5.00/ 5.00

ALPHAL	BETAL	CALS	CYNLS	ALFLSU	BETLSU
4.727	-5.622	.07330	-.06280	4.56900	-5.82810
4.618	-3.643	.07140	-.05700	4.50080	-3.87540
4.223	.349	.06690	-.04810	4.30260	.10130
4.118	4.177	.06220	-.03880	4.35150	4.06270
4.049	6.136	.06030	-.03700	4.30100	6.07220
	GRADIENT	-.00118	.00233	-.01931	1.01501

IA156A, AEDC PWT 16T-470, 0 T S W/SILTS (R8NN51) (10 MAY 80)

REFERENCE DATA

SREF = 2690.0000 SQ.FT. XMRP = 976.0000 IN. XT
LREF = 1290.3000 INCHES YMRP = .0000 IN. YT
BREF = 1290.3000 INCHES ZMRP = 400.0000 IN. ZT
SCALE = .0200

PARAMETRIC DATA

IB-ELV = 10.000 OB-ELV = 5.000
BDFLAP = .000 SPDBRK = .000
RUDDER = .000 SILTS = 1.000
MACH = 1.550 RN/L = 3.200

RUN NO. 917/ 0 RN/L = 3.19 GRADIENT INTERVAL = -5.00/ 5.00

ALPHAL	BETAL	CALS	CYNLS	ALFLSU	BETLSU
-8.951	-5.916	.06830	-.01040	-8.63130	-6.07230
-8.952	-3.763	.06770	.00130	-8.66750	-3.97740
-8.549	.601	.06140	.00280	-8.40380	.27580
-8.309	4.744	.05440	-.00300	-8.33660	4.38830
-8.297	6.599	.05110	-.00620	-8.38390	6.25410
	GRADIENT	-.00156	-.00050	.03909	.98340

RUN NO. 918/ 0 RN/L = 3.19 GRADIENT INTERVAL = -5.00/ 5.00

ALPHAL	BETAL	CALS	CYNLS	ALFLSU	BETLSU
-6.534	-5.736	.06950	-.01390	-6.19330	-5.84370
-6.686	-3.869	.06690	-.00910	-6.37360	-4.03960
-6.408	.376	.06110	-.01070	-6.25210	.05510
-6.227	4.678	.05610	-.01510	-6.29850	4.32940
-6.125	6.837	.05250	-.01840	-6.26860	6.51100
	GRADIENT	-.00126	-.00070	.00874	.97923

IA156A, AEDC PWT 16T-470, 0 T S W/SILTS (R8NN51) (10 MAY 80)

REFERENCE DATA

SREF = 2690.0000 SQ.FT. XMRP = 976.0000 IN. XT
LREF = 1290.3000 INCHES YMRP = .0000 IN. YT
BREF = 1290.3000 INCHES ZMRP = 400.0000 IN. ZT
SCALE = .0200

PARAMETRIC DATA

IB-ELV = 10.000 OB-ELV = 5.000
BDFLAP = .000 SPDBRK = .000
RUDDER = .000 SILTS = 1.000
MACH = 1.550 RN/L = 3.200

RUN NO. 919/ 0 RN/L = 3.20 GRADIENT INTERVAL = -5.00/ 5.00

ALPHAL	BETAL	CALS	CYNLS	ALFLSU	BETLSU
-4.448	-5.817	.06900	-.02770	-4.09370	-5.85430
-4.692	-4.017	.06680	-.02350	-4.35200	-4.12200
-4.163	.457	.06110	-.02520	-4.01340	.13430
-3.819	4.748	.05670	-.02800	-3.97140	4.42550
-3.787	6.419	.05380	-.02990	-3.98780	6.12510
	GRADIENT	-.00115	-.00051	.04365	.97498

RUN NO. 920/ 0 RN/L = 3.19 GRADIENT INTERVAL = -5.00/ 5.00

ALPHAL	BETAL	CALS	CYNLS	ALFLSU	BETLSU
-.446	-6.358	.07120	-.05480	-.12340	-6.84050
-.393	-4.587	.06830	-.05040	-.06850	-4.44130
-.337	-.499	.06400	-.04700	-.01290	-.35030
-.324	3.665	.05860	-.04050	-.00010	3.81360
-.356	5.828	.05500	-.03900	-.03250	5.97760
	GRADIENT	-.00118	.00120	.00827	1.00034

RUN NO. 921/ 0 RN/L = 3.19 GRADIENT INTERVAL = -5.00/ 5.00

ALPHAL	BETAL	CALS	CYNLS	ALFLSU	BETLSU
4.612	-5.368	.06980	-.05990	4.42410	-5.67030
4.453	-3.408	.06760	-.05360	4.32540	-3.74100
4.059	.508	.06200	-.04580	4.20750	.18350
4.1.9	4.294	.05850	-.03620	4.45280	4.16720
3.996	6.352	.05630	-.03470	4.34800	6.30020
	GRADIENT	-.00118	.00226	.01627	1.02658

IA156A, AEDC PWT 16T-470, 0 T S W/SILTS (R8NN52) (10 MAY 80)

REFERENCE DATA

SREF =	2690.0000 SQ.FT.	XMRP =	976.0000 IN. XT		
LREF =	1290.3000 INCHES	YMRP =	.0000 IN. YT		
BREF =	1290.3000 INCHES	ZMRP =	400.0000 IN. ZT		
SCALE =	.0200				

PARAMETRIC DATA

IB-ELV =	10.000	OB-ELV =	9.000
BDFLAP =	.000	SPDBRK =	.000
RUDDER =	.000	SILTS =	1.000
MACH =	.300	RN/L =	3.500

RUN NO. 928/ 0 RN/L = 2.68 GRADIENT INTERVAL = -5.00/ 5.00

ALPHAL	BETAL	CALS	CYNLS	ALFLSU	BETLSU
-6.060	-10.004	.05140	-.04280	-5.92240	-10.16820
-6.387	-5.989	.04830	-.02740	-6.29760	-6.18310
-6.220	.378	.04230	-.01940	-6.30150	.18040
-5.748	6.147	.03850	-.02480	-5.94580	6.06430
-5.856	10.091	.03470	-.02830	-6.06770	10.05610
	GRADIENT	.00000	.00000	.00000	.00000

RUN NO. 929/ 0 RN/L = 2.68 GRADIENT INTERVAL = -5.00/ 5.00

ALPHAL	BETAL	CALS	CYNLS	ALFLSU	BETLSU
-.316	-10.464	.05360	-.05930	-.11610	-10.54100
-.282	-6.381	.05020	-.05180	-.08200	-6.45830
-.221	-.413	.04530	-.04530	-.02090	-.48980
-.190	5.674	.03980	-.03500	.00970	5.59800
-.141	10.048	.04020	-.03540	.05890	9.97100
	GRADIENT	.00000	.00000	.00000	.00000

RUN NO. 930/ 0 RN/L = 2.68 GRADIENT INTERVAL = -5.00/ 5.00

ALPHAL	BETAL	CALS	CYNLS	ALFLSU	BETLSU
6.259	-9.993	.05110	-.05420	6.04810	-10.02800
6.088	-5.879	.04790	-.04650	5.89060	-5.96220
5.938	.274	.04390	-.03380	5.86360	.07380
6.141	6.310	.04070	-.01930	6.22830	6.11440
5.902	10.185	.04100	-.02020	6.03610	10.01760
	GRADIENT	.00000	.00000	.00000	.00000

IA156A, AEDC PWT 16T-470, O T S W/SILTS (R8NN53) (10 MAY 80)

REFERENCE DATA

SREF =	2690.0000 SQ.FT.	XMRP =	976.0000 IN. XT		
LREF =	1290.3000 INCHES	YMRP =	.0000 IN. YT		
BREF =	1290.3000 INCHES	ZMRP =	400.0000 IN. ZT		
SCALE =	.0200				

PARAMETRIC DATA

IB-ELV =	10.000	OB-ELV =	9.000
BDFLAP =	.000	SPDBRK =	.000
RUDDER =	.000	SILTS =	1.000
MACH =	.300	RN/L =	3.500

RUN NO. 927/ 0 RN/L = 2.67 GRADIENT INTERVAL = -5.00/ 5.00

ALPHAL	BETAL	CALS	CYNLS	ALFLSU	BETLSU
-10.226	-7.831	.04890	-.02230	-10.15670	-8.03400
-10.213	-5.678	.04680	-.01270	-10.17450	-5.88820
-9.923	.282	.04260	.00520	-10.00000	.08250
-10.030	6.345	.03710	-.00430	-10.20050	6.21580
-10.031	8.147	.03270	-.00920	-10.21580	8.03990
	GRADIENT	.00000	.00000	.00000	.00000

RUN NO. 931/ 0 RN/L = 2.68 GRADIENT INTERVAL = -5.00/ 5.00

ALPHAL	BETAL	CALS	CYNLS	ALFLSU	BETLSU
10.126	-7.952	.04810	-.03260	9.93820	-8.05540
10.192	-5.620	.04790	-.02590	10.02380	-5.75260
10.060	.326	.04490	-.01420	9.98560	.12570
10.118	6.370	.03930	-.00160	10.15830	6.15940
9.880	8.214	.03870	-.00160	9.94840	8.01080
	GRADIENT	.00000	.00000	.00000	.00000

IA156A, AEDC PWT 16T-470, O T S W/SILTS (R8NN54) (10 MAY 80)

REFERENCE DATA

SREF =	2690.0000 SQ.FT.	XMRP =	976.0000 IN. XT		
LREF =	1290.3000 INCHES	YMRP =	.0000 IN. YT		
BREF =	1290.3000 INCHES	ZMRP =	400.0000 IN. ZT		
SCALE =	.0200				

PARAMETRIC DATA

IB-ELV =	10.000	OB-ELV =	9.000
BDFLAP =	.000	SPDBRK =	.000
RUDDER =	.000	SILTS =	1.000
MACH =	.600	RN/L =	3.500

RUN NO. 932/ 0 RN/L = 3.50 GRADIENT INTERVAL = -5.00/ 5.00

ALPHAL	BETAL	CALS	CYNLS	ALFLSU	BETLSU
-8.401	-7.767	.04940	-.02390	-8.31010	-7.95660
-8.329	-5.661	.04820	-.01680	-8.26830	-5.86210
-8.176	-3.596	.04610	-.01130	-8.15260	-3.80500
-8.130	.380	.04310	-.00480	-8.20910	.18490
-8.064	4.315	.04110	-.00730	-8.22280	4.17670
-7.989	6.234	.03710	-.01240	-8.17050	6.12610
-7.882	8.326	.03360	-.01720	-8.07700	8.24740
	GRADIENT	-.00063	.00051	-.00888	1.00886

IA156A, AEDC PWT 16T-470, O T S W/SILTS (R8NN54) (10 MAY 80)

REFERENCE DATA

SREF =	2690.0000 SQ.FT.	XMRP =	976.0000 IN. XT		
LREF =	1290.3000 INCHES	YMRP =	.0000 IN. YT		
BREF =	1290.3000 INCHES	ZMRP =	400.0000 IN. ZT		
SCALE =	.0200				

PARAMETRIC DATA

IB-ELV =	10.000	OB-ELV =	9.000
BDFLAP =	.000	SPDBRK =	.000
RUDDER =	.000	SILTS =	1.000
MACH =	.600	RN/L =	3.500

RUN NO. 933/ 0 RN/L = 3.51 GRADIENT INTERVAL = -5.00/ 5.00

ALPHAL	BETAL	CALS	CYNLS	ALFLSU	BETLSU
-6.181	-7.672	.05040	-.03240	-6.06450	-7.84710
-6.317	-5.771	.04870	-.02630	-6.22770	-5.96180
-6.219	-3.745	.04670	-.02100	-6.16780	-3.94980
-6.290	.204	.04250	-.01660	-6.36260	.00670
-6.032	4.296	.04090	-.01940	-6.20610	4.17820
-5.814	6.131	.03770	-.02280	-6.00910	6.05110
-5.809	8.454	.03520	-.02610	-6.01420	8.40580
	GRADIENT	-.00072	.00019	-.00451	1.01081

RUN NO. 934/ 0 RN/L = 3.51 GRADIENT INTERVAL = -5.00/ 5.00

ALPHAL	BETAL	CALS	CYNLS	ALFLSU	BETLSU
-4.213	-7.822	.05110	-.04030	-4.06680	-7.97350
-4.162	-5.714	.04900	-.03490	-4.03570	-5.88290
-4.201	-3.711	.04720	-.03130	-4.11150	-3.90120
-3.910	.283	.04240	-.03040	-3.98490	.08650
-3.948	4.349	.04050	-.02850	-4.14300	4.26950
-3.840	6.078	.03840	-.03010	-4.04640	6.03540
-3.733	8.016	.03670	-.03160	-3.94280	8.00120
	GRADIENT	-.00083	.00035	-.00401	1.01383

RUN NO. 935/ 0 RN/L = 3.51 GRADIENT INTERVAL = -5.00/ 5.00

ALPHAL	BETAL	CALS	CYNLS	ALFLSU	BETLSU
-.205	-8.679	.05230	-.05640	-.00790	-8.75420
-.250	-6.669	.05140	-.05200	-.05360	-6.74510
-.232	-4.338	.04930	-.04780	-.03530	-4.41270
-.207	-.062	.04430	-.04520	-.01070	-.13800
-.157	3.977	.04060	-.03810	.03980	3.90160
-.105	5.833	.03920	-.03560	.09120	5.75580
-.179	7.985	.03860	-.03570	.01830	7.91210
	GRADIENT	-.00105	.00116	.00900	.99988

IA156A, AEDC PWT 16T-470, 0 T S W/SILTS (R8NN54) (10 MAY 80)

REFERENCE DATA

SREF = 2690.0000 SQ.FT. XMRP = 976.0000 IN. XT
LREF = 1290.3000 INCHES YMRP = .0000 IN. YT
BREF = 1290.3000 INCHES ZMRP = 400.0000 IN. ZT
SCALE = .0200

PARAMETRIC DATA

IB-ELV = 10.000 OB-ELV = 9.000
BDFLAP = .000 SPDBRK = .000
RUDDER = .000 SILTS = 1.000
MACH = .600 RN/L = 3.500

RUN NO. 936/ 0 RN/L = 3.51 GRADIENT INTERVAL = -5.00/ 5.00

ALPHAL	BETAL	CALS	CYNLS	ALFLSU	BETLSU
4.302	-7.747	.05070	-.05660	4.09200	-7.76510
4.344	-5.661	.04930	-.05160	4.13660	-5.70780
4.308	-3.702	.04770	-.04810	4.11500	-3.78670
4.100	.287	.04340	-.04230	4.02330	.09030
4.125	4.289	.04090	-.03290	4.21020	4.09670
4.056	6.234	.03980	-.02890	4.17850	6.06350
3.943	8.087	.03970	-.02800	4.08580	7.93220
	GRADIENT	-.00085	.00190	.01193	.98652

RUN NO. 937/ 0 RN/L = 3.51 GRADIENT INTERVAL = -5.00/ 5.00

ALPHAL	BETAL	CALS	CYNLS	ALFLSU	BETLSU
6.513	-7.906	.04990	-.04970	6.31020	-7.96260
6.342	-5.738	.04870	-.04530	6.14930	-5.82130
6.465	-3.793	.04750	-.03990	6.29230	-3.91360
6.240	.299	.04470	-.03410	6.16490	.10280
6.009	4.172	.04060	-.02560	6.05700	3.96690
6.157	6.244	.03980	-.02140	6.24510	6.05300
5.988	8.333	.04000	-.02060	6.10410	8.15810
	GRADIENT	-.00086	.00179	-.02956	.98932

RUN NO. 938/ 0 RN/L = 3.51 GRADIENT INTERVAL = -5.00/ 5.00

ALPHAL	BETAL	CALS	CYNLS	ALFLSU	BETLSU
8.441	-7.967	.04930	-.04220	8.24750	-8.04790
8.354	-5.695	.04810	-.03590	8.17520	-5.80570
8.567	-3.866	.04790	-.03010	8.40970	-4.00550
8.225	.278	.04480	-.02560	8.14950	.08210
8.373	4.290	.03990	-.01530	8.39330	4.08060
8.029	6.210	.03930	-.01310	8.09100	6.00880
8.286	8.355	.03930	-.01040	8.37480	8.16490
	GRADIENT	-.00098	.00181	-.00234	.99143

IA156A, AEDC PWT 16T-470, O T S W/SILTS (R8NN55) (10 MAY 80)

REFERENCE DATA

SREF = 2690.0000 SQ.FT. XMRP = 976.0000 IN. XT
LREF = 1290.3000 INCHES YMRP = .0000 IN. YT
BREF = 1290.3000 INCHES ZMRP = 400.0000 IN. ZT
SCALE = .0200

PARAMETRIC DATA

IB-ELV = 10.000 OB-ELV = 9.000
BDFLAP = .000 SPDBRK = .000
RUDDER = .000 SILTS = 1.000
MACH = .800 RN/L = 3.500

RUN NO. 939/ 0 RN/L = 3.51 GRADIENT INTERVAL = -5.00/ 5.00

ALPHAL	BETAL	CALS	CYNLS	ALFLSU	BETLSU
-8.749	-5.841	.05120	-.01420	-8.59190	-5.97700
-8.613	-3.701	.05070	-.00770	-8.48460	-3.86350
-8.371	.546	.04670	-.00230	-8.33590	.34140
-8.286	4.465	.04210	-.00610	-8.34830	4.26630
-8.176	6.399	.03660	-.01190	-8.27270	6.21520
	GRADIENT	-.00105	.00021	.01695	.99561

RUN NO. 940/ 0 RN/L = 3.50 GRADIENT INTERVAL = -5.00/ 5.00

ALPHAL	BETAL	CALS	CYNLS	ALFLSU	BETLSU
-6.538	-5.890	.05290	-.02420	-6.36300	-6.00260
-6.405	-3.802	.05080	-.01930	-6.25570	-3.94590
-6.183	.285	.04650	-.01680	-6.14250	.08150
-6.217	4.438	.04230	-.01720	-6.30330	4.24910
-5.899	6.358	.03820	-.02150	-6.02280	6.19120
	GRADIENT	-.00103	.00025	-.00586	.99451

RUN NO. 941/ 0 RN/L = 3.50 GRADIENT INTERVAL = -5.00/ 5.00

ALPHAL	BETAL	CALS	CYNLS	ALFLSU	BETLSU
-4.413	-6.039	.05380	-.03400	-4.21920	-6.11300
-4.348	-3.802	.05160	-.03050	-4.17380	-3.91450
-4.058	.358	.04630	-.02990	-4.02190	.15390
-3.780	4.254	.04330	-.02890	-3.90370	4.08790
-3.967	6.230	.03960	-.02900	-4.11770	6.08650
	GRADIENT	-.00103	.00020	.03356	.99315

RUN NO. 942/ 0 RN/L = 3.51 GRADIENT INTERVAL = -5.00/ 5.00

ALPHAL	BETAL	CALS	CYNLS	ALFLSU	BETLSU
-.245	-6.590	.05540	-.05150	-.04100	-6.55070
-.277	-4.645	.05340	-.04720	-.07250	-4.60740
-.251	-.201	.04730	-.04290	-.04680	-.16300
-.198	3.890	.04330	-.03770	.00590	3.92950
-.201	5.753	.04230	-.03550	.00320	5.79190
	GRADIENT	-.00119	.00111	.00914	1.00018

IA156A, AEDC PWT 16T-470, O T S W/SILTS (R8NN55) (10 MAY 80)

REFERENCE DATA

SREF = 2690.0000 SQ.FT. XMRP = 976.0000 IN. XT
LREF = 1290.3000 INCHES YMRP = .0000 IN. YT
BREF = 1290.3000 INCHES ZMRP = 400.0000 IN. ZT
SCALE = .0200

PARAMETRIC DATA

IB-ELV = 10.000 OB-ELV = 9.000
BDFLAP = .000 SPDBRK = .000
RUDDER = .000 SILTS = 1.000
MACH = .800 RN/L = 3.500

RUN NO. 943/ 0 RN/L = 3.50 GRADIENT INTERVAL = -5.00/ 5.00

ALPHAL	BETAL	CALS	CYNLS	ALFLSU	BETLSU
4.243	-5.604	.05330	-.05390	4.09280	-5.74730
4.239	-3.607	.05170	-.04930	4.11970	-3.77680
4.232	.219	.04630	-.04340	4.26540	.01380
4.080	4.226	.04420	-.03460	4.25270	4.11070
3.984	6.234	.04310	-.03150	4.17610	6.15690
	GRADIENT	-.00095	.00188	.01682	1.00711

RUN NO. 944/ 0 RN/L = 3.51 GRADIENT INTERVAL = -5.00/ 5.00

ALPHAL	BETAL	CALS	CYNLS	ALFLSU	BETLSU
6.478	-5.757	.05260	-.04840	6.35800	-5.92690
6.534	-3.750	.05170	-.04030	6.45050	-3.93970
6.270	.311	.04780	-.03650	6.30770	.10640
6.090	4.141	.04430	-.02710	6.23550	3.99230
6.204	6.281	.04350	-.02280	6.37630	6.16540
	GRADIENT	-.00094	.00174	-.02733	1.00522

IA156A, AEDC PWT 16T-470, O T S W/SILTS (R8NN56) (10 MAY 80)

REFERENCE DATA

SREF = 2690.0000 SQ.FT. XMRP = 976.0000 IN. XT
LREF = 1290.3000 INCHES YMRP = .0000 IN. YT
BREF = 1290.3000 INCHES ZMRP = 400.0000 IN. ZT
SCALE = .0200

PARAMETRIC DATA

IB-ELV = 10.000 OB-ELV = 9.000
BDFLAP = .000 SPDBRK = .000
RUDDER = .000 SILTS = 1.000
MACH = .900 RN/L = 3.500

RUN NO. 952/ 0 RN/L = 3.51 GRADIENT INTERVAL = -5.00/ 5.00

ALPHAL	BETAL	CALS	CYNLS	ALFLSU	BETLSU
-8.658	-5.706	.05630	-.01280	-8.49260	-5.83020
-8.384	-3.527	.05400	-.00820	-8.24530	-3.68010
-8.476	.482	.05270	-.00380	-8.42550	.28150
-8.370	4.582	.04570	-.00630	-8.42010	4.38170
-8.349	6.445	.04060	-.01040	-8.43210	6.25520
	GRADIENT	-.00103	.00023	-.02147	.99418

IA156A, AEDC PWT 16T-470, O T S W/SILTS (R8NN56) (10 MAY 80)

REFERENCE DATA

SREF =	2690.0000 SQ.FT.	XMRP =	976.0000 IN. XT		
LREF =	1290.3000 INCHES	YMRP =	.0000 IN. YT		
BREF =	1290.3000 INCHES	ZMRP =	400.0000 IN. ZT		
SCALE =	.0200				

PARAMETRIC DATA

IB-ELV =	10.000	OB-ELV =	9.000
BDFLAP =	.000	SPDBRK =	.000
RUDDER =	.000	SILTS =	1.000
MACH =	.900	RN/L =	3.500

RUN NO. 953/ 0 RN/L = 3.50 GRADIENT INTERVAL = -5.00/ 5.00

ALPHAL	BETAL	CALS	CYNLS	ALFLSU	BETLSU
-6.486	-5.851	.05750	-.02330	-6.30370	-5.94870
-6.326	-3.815	.05540	-.01920	-6.16510	-3.94430
-6.216	.318	.05220	-.01700	-6.16220	.11830
-6.185	4.374	.04750	-.01780	-6.25740	4.18050
-5.982	6.374	.04320	-.02240	-6.09340	6.19990
	GRADIENT	-.00096	.00017	-.01123	.99218

RUN NO. 954/ 0 RN/L = 3.50 GRADIENT INTERVAL = -5.00/ 5.00

ALPHAL	BETAL	CALS	CYNLS	ALFLSU	BETLSU
-4.368	-6.068	.05930	-.03440	-4.16960	-6.12540
-4.330	-3.810	.05680	-.03010	-4.14760	-3.90750
-4.080	.371	.05150	-.02960	-4.02960	.17040
-4.110	4.525	.04800	-.02860	-4.22150	4.35170
-3.903	6.432	.04490	-.03170	-4.04670	6.28380
	GRADIENT	-.00106	.00018	-.00883	.99081

RUN NO. 955/ 0 RN/L = 3.50 GRADIENT INTERVAL = -5.00/ 5.00

ALPHAL	BETAL	CALS	CYNLS	ALFLSU	BETLSU
-.339	-6.824	.06080	-.05320	-.13840	-6.77260
-.306	-4.750	.05950	-.04920	-.10580	-4.69900
-.319	-.407	.05380	-.04470	-.11870	-.35580
-.241	3.679	.04940	-.03980	-.04080	3.73080
-.221	5.915	.04780	-.03890	-.02080	5.96680
	GRADIENT	-.00120	.00111	.00760	1.00002

RUN NO. 956/ 0 RN/L = 3.50 GRADIENT INTERVAL = -5.00/ 5.00

ALPHAL	BETAL	CALS	CYNLS	ALFLSU	BETLSU
4.435	-5.873	.05950	-.05640	4.29500	-6.02480
4.515	-3.864	.05830	-.05080	4.40840	-4.04100
3.977	.296	.05260	-.04540	4.02810	.09550
4.176	4.168	.05000	-.03670	4.35290	4.06110
3.967	6.287	.04810	-.03460	4.16390	6.22300
	GRADIENT	-.00104	.00175	-.00795	1.00855

IA156A, AEDC PWT 16T-470, O T S W/SILTS (R8NN57) (10 MAY 80)

REFERENCE DATA

SREF = 2690.0000 SQ.FT. XMRP = 976.0000 IN. XT
LREF = 1290.3000 INCHES YMRP = .0000 IN. YT
BREF = 1290.3000 INCHES ZMRP = 400.0000 IN. ZT
SCALE = .0200

PARAMETRIC DATA

IB-ELV = 10.000 OB-ELV = 9.000
BDFLAP = .000 SPDBRK = .000
RUDDER = .000 SILTS = 1.000
MACH = .950 RN/L = 3.500

RUN NO. 957/ 0 RN/L = 3.50 GRADIENT INTERVAL = -5.00/ 5.00

ALPHAL	BETAL	CALS	CYNLS	ALFLSU	BETLSU
-8.654	-5.781	.06050	-.01590	-8.48510	-5.89810
-8.679	-3.579	.05890	-.00730	-8.53750	-3.72770
-8.426	.488	.05740	-.00490	-8.37210	.29020
-8.257	4.455	.05140	-.00900	-8.30270	4.25430
-8.172	6.370	.04550	-.01330	-8.25300	6.18090
	GRADIENT	-.00093	-.00021	.02928	.99361

RUN NO. 959/ 0 RN/L = 3.49 GRADIENT INTERVAL = -5.00/ 5.00

ALPHAL	BETAL	CALS	CYNLS	ALFLSU	BETLSU
-6.537	-5.786	.06200	-.02530	-6.35420	-5.87830
-6.477	-3.851	.06160	-.02010	-6.31430	-3.97560
-6.535	.312	.05850	-.01710	-6.47760	.11480
-6.256	4.445	.05310	-.02210	-6.32590	4.25230
-5.978	6.579	.04750	-.02680	-6.08900	6.40630
	GRADIENT	-.00102	-.00024	-.00144	.99177

RUN NO. 958/ 0 RN/L = 3.49 GRADIENT INTERVAL = -5.00/ 5.00

ALPHAL	BETAL	CALS	CYNLS	ALFLSU	BETLSU
-4.445	-6.014	.06460	-.03650	-4.24630	-6.06800
-4.482	-3.833	.06270	-.03180	-4.29890	-3.92660
-4.388	.510	.05810	-.03240	-4.34090	.30980
-3.859	4.460	.05400	-.03430	-3.97180	4.28840
-3.905	6.300	.05010	-.03540	-4.04400	6.14910
	GRADIENT	-.00105	-.00030	.03863	.99035

RUN NO. 960/ 0 RN/L = 3.50 GRADIENT INTERVAL = -5.00/ 5.00

ALPHAL	BETAL	CALS	CYNLS	ALFLSU	BETLSU
-.331	-6.699	.06730	-.05780	-.13300	-6.64380
-.296	-4.666	.06670	-.05440	-.09780	-4.61080
-.296	-.467	.06160	-.05000	-.09830	-.41210
-.213	3.724	.05450	-.04200	-.01560	3.77910
-.207	5.950	.05110	-.04120	-.00910	6.00500
	GRADIENT	-.00145	.00148	.00979	1.00002

IA156A, AEDC PWT 16T-470, O T S W/SILTS (R8NN57) (10 MAY 80)

REFERENCE DATA

SREF = 2690.0000 SQ.FT. XMRP = 976.0000 IN. XT
LREF = 1290.3000 INCHES YMRP = .0000 IN. YT
BREF = 1290.3000 INCHES ZMRP = 400.0000 IN. ZT
SCALE = .0200

PARAMETRIC DATA

IB-ELV = 10.000 OB-ELV = 9.000
BDFLAP = .000 SPDBRK = .000
RUDDER = .000 SILTS = 1.000
MACH = .950 RN/L = 3.500

RUN NO. 961/ 0 RN/L = 3.49 GRADIENT INTERVAL = -5.00/ 5.00

ALPHAL	BETAL	CALS	CYNLS	ALFLSU	BETLSU
4.262	-5.700	.06590	-.05900	4.12470	-5.85230
4.282	-3.657	.06420	-.05190	4.17960	-3.83500
3.917	.144	.05930	-.04780	3.96330	-.05670
4.111	4.102	.05560	-.03900	4.28820	3.99850
4.072	6.260	.05150	-.03560	4.26760	6.19880
	GRADIENT	-.00111	.00167	.01447	1.00974

IA156A, AEDC PWT 16T-470, O T S W/SILTS (R8NN58) (10 MAY 80)

REFERENCE DATA

SREF = 2690.0000 SQ.FT. XMRP = 976.0000 IN. XT
LREF = 1290.3000 INCHES YMRP = .0000 IN. YT
BREF = 1290.3000 INCHES ZMRP = 400.0000 IN. ZT
SCALE = .0200

PARAMETRIC DATA

IB-ELV = 10.000 OB-ELV = 9.000
BDFLAP = .000 SPDBRK = .000
RUDDER = .000 SILTS = 1.000
MACH = 1.050 RN/L = 3.500

RUN NO. 962/ 0 RN/L = 3.50 GRADIENT INTERVAL = -5.00/ 5.00

ALPHAL	BETAL	CALS	CYNLS	ALFLSU	BETLSU
-8.685	-5.747	.08240	-.02630	-8.51380	-5.85730
-8.808	-3.517	.08000	-.02070	-8.66350	-3.66130
-8.671	.444	.07780	-.01440	-8.61040	.24930
-8.400	4.638	.07030	-.02010	-8.44240	4.43840
-8.376	6.547	.06460	-.02280	-8.45270	6.35760
	GRADIENT	-.00120	.00006	.02724	.99327

RUN NO. 963/ 0 RN/L = 3.50 GRADIENT INTERVAL = -5.00/ 5.00

ALPHAL	BETAL	CALS	CYNLS	ALFLSU	BETLSU
-6.602	-5.787	.08430	-.03610	-6.41680	-5.87260
-6.487	-3.860	.08210	-.03180	-6.32050	-3.97680
-6.589	.317	.07710	-.02920	-6.52470	.12400
-6.324	4.470	.07310	-.03220	-6.38850	4.27650
-5.974	6.595	.06610	-.03680	-6.08160	6.42200
	GRADIENT	-.00108	-.00005	-.00820	.99085

IA156A, AEDC PWT 16T-470, O T S W/SILTS (R8NN58) (10 MAY 80)

REFERENCE DATA

SREF = 2690.0000 SQ.FT. XMRP = 976.0000 IN. XT
LREF = 1290.3000 INCHES YMRP = .0000 IN. YT
BREF = 1290.3000 INCHES ZMRP = 400.0000 IN. ZT
SCALE = .0200

PARAMETRIC DATA

IB-ELV = 10.000 OB-ELV = 9.000
BDFLAP = .000 SPDBRK = .000
RUDDER = .000 SILTS = 1.000
MACH = 1.050 RN/L = 3.500

RUN NO. 964/ 0 RN/L = 3.50 GRADIENT INTERVAL = -5.00/ 5.00

ALPHAL	BETAL	CALS	CYNLS	ALFLSU	BETLSU
-4.322	-5.959	.08470	-.05120	-4.12260	-6.00260
-4.528	-3.816	.08270	-.04540	-4.34360	-3.90210
-4.446	.543	.07680	-.04450	-4.39380	.34580
-3.866	4.463	.07290	-.04580	-3.97510	4.29090
-3.955	6.329	.06870	-.04590	-4.08950	6.17660
	GRADIENT	-.00119	-.00004	.04347	.98932

RUN NO. 965/ 0 RN/L = 3.50 GRADIENT INTERVAL = -5.00/ 5.00

ALPHAL	BETAL	CALS	CYNLS	ALFLSU	BETLSU
-.349	-6.758	.08590	-.07060	-.15440	-6.69790
-.328	-4.618	.08510	-.06790	-.13390	-4.55760
-.352	-.378	.08030	-.06540	-.15720	-.31740
-.253	3.885	.07280	-.05500	-.05810	3.94570
-.237	6.040	.07000	-.05150	-.04230	6.10080
	GRADIENT	-.00144	.00152	.00893	1.00001

RUN NO. 966/ 0 RN/L = 3.50 GRADIENT INTERVAL = -5.00/ 5.00

ALPHAL	BETAL	CALS	CYNLS	ALFLSU	BETLSU
4.336	-5.689	.08290	-.07450	4.20500	-5.84570
4.294	-3.527	.08150	-.06630	4.20050	-3.70770
3.980	.325	.07950	-.05890	4.03910	.13010
4.099	4.231	.07500	-.04800	4.27870	4.13630
4.078	6.301	.07130	-.04520	4.27380	6.24530
	GRADIENT	-.00084	.00236	.01020	1.01109

IA156A, AEDC PWT 16T-470, 0 T S W/SILTS (R8NN59) (10 MAY 80)

REFERENCE DATA

SREF = 2690.0000 SQ.FT. XMRP = 976.0000 IN. XT
LREF = 1290.3000 INCHES YMRP = .0000 IN. YT
BREF = 1290.3000 INCHES ZMRP = 400.0000 IN. ZT
SCALE = .0200

PARAMETRIC DATA

IB-ELV = 10.000 OB-ELV = 9.000
BDFLAP = .000 SPDBRK = .000
RUDDER = .000 SILTS = 1.000
MACH = 1.100 RN/L = 3 500

RUN NO. 967/ 0 RN/L = 3.49 GRADIENT INTERVAL = -5.00/ 5.00

ALPHAL	BETAL	CALS	CYNLS	ALFLSU	BETLSU
-8.738	-5.718	.08210	-.02580	-8.56480	-5.82690
-8.800	-3.497	.08030	-.01770	-8.65310	-3.63960
-8.697	.462	.07620	-.01450	-8.63290	.26720
-8.403	4.674	.06790	-.01970	-8.44370	4.47400
-8.370	6.572	.06230	-.02180	-8.44500	6.38210
	GRADIENT	-.00152	-.00026	.02583	.99301

RUN NO. 968/ 0 RN/L = 3.49 GRADIENT INTERVAL = -5.00/ 5.00

ALPHAL	BETAL	CALS	CYNLS	ALFLSU	BETLSU
-6.622	-5.786	.08330	-.03410	-6.43560	-5.86940
-6.547	-3.853	.08070	-.02980	-6.37820	-3.96880
-6.635	.321	.07500	-.02820	-6.56770	.12790
-6.328	4.492	.07020	-.03110	-6.39060	4.29710
-6.218	6.484	.06390	-.03410	-6.31850	6.30630
	GRADIENT	-.00126	-.00016	-.00149	.99056

RUN NO. 969/ 0 RN/L = 3.49 GRADIENT INTERVAL = -5.00/ 5.00

ALPHAL	BETAL	CALS	CYNLS	ALFLSU	BETLSU
-4.341	-5.971	.08250	-.04810	-4.14050	-6.01230
-4.555	-3.827	.08030	-.04340	-4.36860	-3.91100
-4.442	.542	.07340	-.04310	-4.38690	.34470
-3.866	4.479	.07030	-.04500	-3.97310	4.30430
-3.942	6.325	.06680	-.04500	-4.07510	6.17030
	GRADIENT	-.00121	-.00019	.04668	.98886

RUN NO. 970/ 0 RN/L = 3.49 GRADIENT INTERVAL = -5.00/ 5.00

ALPHAL	BETAL	CALS	CYNLS	ALFLSU	BETLSU
-.358	-6.893	.08310	-.06690	-.16330	-6.83090
-.325	-4.662	.08110	-.06370	-.13020	-4.59940
-.344	-.295	.07510	-.06130	-.14910	-.23240
-.239	3.827	.06760	-.05230	-.04430	3.89020
-.220	6.027	.06430	-.04850	-.02580	6.09020
	GRADIENT	-.00159	.00134	.00998	1.00001

IA156A, AEDC PWT 16T-470, O T S W/SILTS (R8NN59) (10 MAY 80)

REFERENCE DATA

SREF = 2690.0000 SQ.FT. XMRP = 976.0000 IN. XT
LREF = 1290.3000 INCHES YMRP = .0000 IN. YT
BREF = 1290.3000 INCHES ZMRP = 400.0000 IN. ZT
SCALE = .0200

PARAMETRIC DATA

IB-ELV = 10.000 OB-ELV = 9.000
BDFLAP = .000 SPDBRK = .000
RUDDER = .000 SILTS = 1.000
MACH = 1.100 RN/L = 3.500

RUN NO. 971/ 0 RN/L = 3.49 GRADIENT INTERVAL = -5.00/ 5.00

ALPHAL	BETAL	CALS	CYNLS	ALFLSU	BETLSU
4.493	-5.632	.07910	-.06930	4.36610	-5.79200
4.342	-3.548	.07780	-.06360	4.24860	-3.72990
4.005	.283	.07490	-.05730	4.06400	.08690
4.130	4.178	.07000	-.04580	4.31120	4.08390
4.095	6.288	.06640	-.04330	4.29200	6.23430
	GRADIENT	-.00101	.00231	.00826	1.01137

IA156A, AEDC PWT 16T-470, O T S W/SILTS (R8NN60) (10 MAY 80)

REFERENCE DATA

SREF = 2690.0000 SQ.FT. XMRP = 976.0000 IN. XT
LREF = 1290.3000 INCHES YMRP = .0000 IN. YT
BREF = 1290.3000 INCHES ZMRP = 400.0000 IN. ZT
SCALE = .0200

PARAMETRIC DATA

IB-ELV = 10.000 OB-ELV = 9.000
BDFLAP = .000 SPDBRK = .000
RUDDER = .000 SILTS = 1.000
MACH = 1.150 RN/L = 3.500

RUN NO. 972/ 0 RN/L = 3.49 GRADIENT INTERVAL = -5.00/ 5.00

ALPHAL	BETAL	CALS	CYNLS	ALFLSU	BETLSU
-8.729	-5.758	.08010	-.02190	-8.55270	-5.86630
-8.822	-3.527	.07830	-.01500	-8.67260	-3.66970
-8.704	.464	.07410	-.01040	-8.63910	.26840
-8.413	4.682	.06620	-.01670	-8.45350	4.47880
-8.376	6.569	.06090	-.02090	-8.44990	6.37570
	GRADIENT	-.00148	-.00022	.02685	.99278

RUN NO. 973/ 0 RN/L = 3.49 GRADIENT INTERVAL = -5.00/ 5.00

ALPHAL	BETAL	CALS	CYNLS	ALFLSU	BETLSU
-6.613	-5.833	.08120	-.03170	-6.42320	-5.91540
-6.499	-3.878	.07860	-.02830	-6.32770	-3.99320
-6.617	.333	.07270	-.02430	-6.54830	.13770
-6.317	4.498	.06780	-.02790	-6.37900	4.30120
-6.224	6.499	.06200	-.03150	-6.32430	6.31830
	GRADIENT	-.00129	.00005	-.00621	.99023

IA156A, AEDC PWT 16T-470, 0 T S W/SILTS (R8NN60) (10 MAY 80)

REFERENCE DATA

SREF = 2690.0000 SQ.FT. XMRP = 976.0000 IN. XT
LREF = 1290.3000 INCHES YMRP = .0000 IN. YT
BREF = 1290.3000 INCHES ZMRP = 400.0000 IN. ZT
SCALE = .0200

PARAMETRIC DATA

IB-ELV = 10.000 OB-ELV = 9.000
BDFLAP = .000 SPDBRK = .000
RUDDER = .000 SILTS = 1.000
MACH = 1.150 RN/L = 3.500

RUN NO. 974/ 0 RN/L = 3.49 GRADIENT INTERVAL = -5.00/ 5.00

ALPHAL	BETAL	CALS	CYNLS	ALFLSU	BETLSU
-4.328	-5.972	.08090	-.04400	-4.12480	-6.01180
-4.527	-3.844	.07850	-.04100	-4.33790	-3.92810
-4.434	.539	.07230	-.04060	-4.37660	.34050
-3.842	4.474	.06800	-.04250	-3.94850	4.29710
-3.949	6.351	.06460	-.04310	-4.08300	6.19380
	GRADIENT	-.00127	-.00018	.04576	.98849

RUN NO. 975/ 0 RN/L = 3.49 GRADIENT INTERVAL = -5.00/ 5.00

ALPHAL	BETAL	CALS	CYNLS	ALFLSU	BETLSU
-.319	-6.779	.08180	-.06430	-.12230	-6.71440
.286	-4.668	.08010	-.06160	-.08930	-4.60280
-.293	-.386	.07520	-.05990	-.09720	-.32080
-.200	3.817	.06720	-.05130	-.00410	3.86240
-.180	6.034	.06420	-.04780	.01670	6.09860
	GRADIENT	-.00152	.00121	.01000	1.00004

RUN NO. 976/ 0 RN/L = 3.49 GRADIENT INTERVAL = -5.00/ 5.00

ALPHAL	BETAL	CALS	CYNLS	ALFLSU	BETLSU
4.396	-5.682	.07910	-.06940	4.26580	-5.84250
4.397	-3.611	.07740	-.06360	4.30300	-3.79500
4.204	.364	.07480	-.05530	4.26900	.16820
4.148	4.151	.06990	-.04430	4.33200	4.05700
4.108	6.299	.06620	-.04230	4.30840	6.24680
	GRADIENT	-.00096	.00248	.00363	1.01146

IA156A, AEDC PWT 16T-470, 0 T S W/SILTS (R8NN61) (10 MAY 80)

REFERENCE DATA

SREF = 2690.0000 SQ.FT. XMRP = 976.0000 IN. XT
LREF = 1290.3000 INCHES YMRP = .0000 IN. YT
BREF = 1290.3000 INCHES ZMRP = 400.0000 IN. ZT
SCALE = .0200

PARAMETRIC DATA

IB-ELV = 10.000 OB-ELV = 9.000
BDFLAP = .000 SPDBRK = .000
RUDDER = .000 SILTS = 1.000
MACH = 1.250 RN/L = 3.500

RUN NO. 977/ 0 RN/L = 3.51 GRADIENT INTERVAL = -5.00/ 5.00

ALPHAL	BETAL	CALS	CYNLS	ALFLSU	BETLSU
-8.675	-5.808	.07750	-.01800	-8.48780	-5.92080
-8.791	-3.583	.07560	-.01020	-8.63250	-3.73290
-8.657	.449	.07180	-.00790	-8.58630	.24250
-8.398	4.658	.06390	-.01170	-8.43820	4.44340
-8.391	6.605	.05810	-.01520	-8.46850	6.40080
	GRADIENT	-.00142	-.00019	.02366	.99219

RUN NO. 978/ 0 RN/L = 3.51 GRADIENT INTERVAL = -5.00/ 5.00

ALPHAL	BETAL	CALS	CYNLS	ALFLSU	BETLSU
-6.573	-5.860	.07780	-.02700	-6.37230	-5.94530
-6.471	-3.921	.07580	-.02390	-6.28960	-4.04080
-6.559	.313	.07130	-.02210	-6.48540	.10790
-6.284	4.517	.06470	-.02370	-6.34890	4.30860
-6.216	6.504	.05960	-.02660	-6.32080	6.31330
	GRADIENT	-.00132	.00002	-.00708	.98958

RUN NO. 979/ 0 RN/L = 3.52 GRADIENT INTERVAL = -5.00/ 5.00

ALPHAL	BETAL	CALS	CYNLS	ALFLSU	BETLSU
-4.299	-6.006	.07790	-.03840	-4.08520	-6.04640
-4.485	-3.849	.07540	-.03460	-4.28440	-3.93480
-4.377	.534	.07030	-.03510	-4.31490	.32460
-3.829	4.492	.06540	-.03820	-3.94040	4.30470
-3.914	6.351	.06170	-.03880	-4.05440	6.18430
	GRADIENT	-.00120	-.00043	.04039	.98761

RUN NO. 980/ 0 RN/L = 3.50 GRADIENT INTERVAL = -5.00/ 5.00

ALPHAL	BETAL	CALS	CYNLS	ALFLSU	BETLSU
-.263	-6.816	.07900	-.06030	-.05690	-6.74600
-.232	-4.704	.07750	-.05800	-.02630	-4.63390
-.230	-.396	.07210	-.05530	-.02370	-.32630
-.141	3.819	.06410	-.04790	.06580	3.88870
-.160	6.066	.06080	-.04580	.04620	6.13610
	GRADIENT	-.00157	.00118	.01077	1.00002

IA156A, AEDC PWT 16T-470, 0 T S W/SILTS (R8NN61) (10 MAY 80)

REFERENCE DATA

SREF = 2690.0000 SQ.FT. XMRP = 976.0000 IN. XT
LREF = 1290.3000 INCHES YMRP = .0000 IN. YT
BREF = 1290.3000 INCHES ZMRP = 400.0000 IN. ZT
SCALE = .0200

PARAMETRIC DATA

IB-ELV = 10.000 OB-ELV = 9.000
BDFLAP = .000 SPDBRK = .000
RUDDER = .000 SILTS = 1.000
MACH = 1.250 RN/L = 3.500

RUN NO. 981/ 0 RN/L = 3.50 GRADIENT INTERVAL = -5.00/ 5.00

ALPHAL	BETAL	CALS	CYNLS	ALFLSU	BETLSU
4.476	-5.686	.07700	-.06570	4.33960	-5.85660
4.445	-3.604	.07490	-.05940	4.34620	-3.79830
4.271	.374	.07130	-.05210	4.34010	.16760
4.197	4.149	.06600	-.04160	4.39170	4.05040
4.172	6.308	.06280	-.03920	4.38270	6.25320
	GRADIENT	-.00115	.00229	.00580	1.01221

IA156A, AEDC PWT 16T-470, 0 T S W/SILTS (R8NN62) (10 MAY 80)

REFERENCE DATA

SREF = 2690.0000 SQ.FT. XMRP = 976.0000 IN. XT
LREF = 1290.3000 INCHES YMRP = .0000 IN. YT
BREF = 1290.3000 INCHES ZMRP = 400.0000 IN. ZT
SCALE = .0200

PARAMETRIC DATA

IB-ELV = 10.000 OB-ELV = 11.000
BDFLAP = .000 SPDBRK = .000
RUDDER = .000 SILTS = 1.000
MACH = .300 RN/L = 3.500

RUN NO. 985/ 0 RN/L = 2.62 GRADIENT INTERVAL = -5.00/ 5.00

ALPHAL	BETAL	CALS	CYNLS	ALFLSU	BETLSU
-6.251	-9.857	.05190	-.04100	-6.11640	-10.02400
-6.186	-5.735	.04870	-.02680	-6.09740	-5.92950
-6.061	.213	.04320	-.02050	-6.13690	.01300
-5.769	6.284	.03850	-.02520	-5.96740	6.20240
-5.908	10.178	.03480	-.02940	-6.11910	10.14370
	GRADIENT	.00000	.00000	.00000	.00000

RUN NO. 986/ 0 RN/L = 2.62 GRADIENT INTERVAL = -5.00/ 5.00

ALPHAL	BETAL	CALS	CYNLS	ALFLSU	BETLSU
-.255	-10.491	.05440	-.05950	-.05500	-10.56680
-.246	-6.438	.05080	-.05200	-.04580	-6.51440
-.213	-.253	.04540	-.04470	-.01280	-.32890
-.175	5.735	.04030	-.03470	.02510	5.65900
-.168	9.910	.04090	-.03720	.03190	9.83380
	GRADIENT	.00000	.00000	.00000	.00000

IA156A, AEDC PWT 16T-470, 0 T S W/SILTS (R8NN62) (10 MAY 80)

REFERENCE DATA

SREF = 2690.0000 SQ.FT. XMRP = 976.0000 IN. XT
LREF = 1290.3000 INCHES YMRP = .0000 IN. YT
BREF = 1290.3000 INCHES ZMRP = 400.0000 IN. ZT
SCALE = .0200

PARAMETRIC DATA

IB-ELV = 10.000 OB-ELV = 11.000
BDFLAP = .000 SPDBRK = .000
RUDDER = .000 SILTS = 1.000
MACH = .300 RN/L = 3.500

RUN NO. 987/ 0 RN/L = 2.62 GRADIENT INTERVAL = -5.00/ 5.00

ALPHAL	BETAL	CALS	CYNLS	ALFLSU	BETLSU
6.297	-9.908	.05190	-.05400	6.08540	-9.94400
6.062	-5.694	.04820	-.04500	5.86600	-5.78000
5.937	.162	.04460	-.03420	5.85800	-.03660
6.006	6.235	.04100	-.01960	6.09420	6.03960
5.866	10.125	.04230	-.02100	5.99980	9.95770
	GRADIENT	.00000	.00000	.00000	.00000

IA156A, AEDC PWT 16T-470, 0 T S W/SILTS (R8NN63) (10 MAY 80)

REFERENCE DATA

SREF = 2690.0000 SQ.FT. XMRP = 976.0000 IN. XT
LREF = 1290.3000 INCHES YMRP = .0000 IN. YT
BREF = 1290.3000 INCHES ZMRP = 400.0000 IN. ZT
SCALE = .0200

PARAMETRIC DATA

IB-ELV = 10.000 OB-ELV = 11.000
BDFLAP = .000 SPDBRK = .000
RUDDER = .000 SILTS = 1.000
MACH = .300 RN/L = 3.500

RUN NO. 984/ 0 RN/L = 2.64 GRADIENT INTERVAL = -5.00/ 5.00

ALPHAL	BETAL	CALS	CYNLS	ALFLSU	BETLSU
-10.456	-7.837	.04890	-.02110	-10.38930	-8.04080
-10.114	-5.678	.04690	-.01220	-10.07520	-5.88890
-10.029	.363	.04300	.00670	-10.10780	.16420
-10.028	6.333	.03710	-.00320	-10.19820	6.20380
-10.066	8.291	.03340	-.00980	-10.25210	8.18530
	GRADIENT	.00000	.00000	.00000	.00000

RUN NO. 988/ 0 RN/L = 2.63 GRADIENT INTERVAL = -5.00/ 5.00

ALPHAL	BETAL	CALS	CYNLS	ALFLSU	BETLSU
10.260	-7.800	.04850	-.03090	10.07470	-7.90650
10.135	-5.723	.04830	-.02490	9.96570	-5.85390
9.967	.276	.04500	-.01420	9.89080	.07610
10.137	6.372	.03950	-.00010	10.17770	6.16150
10.081	8.353	.03950	-.00050	10.14880	8.15030
	GRADIENT	.00000	.00000	.00000	.00000

IA156A, AEDC PWT 16T-470, 0 T S W/SILTS (R8NN64) (10 MAY 80)

REFERENCE DATA

SREF = 2690.0000 SQ.FT. XMRP = 976.0000 IN. XT
LREF = 1290.3000 INCHES YMRP = .0000 IN. YT
BREF = 1290.3000 INCHES ZMRP = 400.0000 IN. ZT
SCALE = .0200

PARAMETRIC DATA

IB-ELV = 10.000 OB-ELV = 11.000
BDFLAP = .000 SPDBRK = .000
RUDDER = .000 SILTS = 1.000
MACH = .600 RN/L = 3.500

RUN NO. 989/ 0 RN/L = 3.51 GRADIENT INTERVAL = -5.00/ 5.00

ALPHAL	BETAL	CALS	CYNLS	ALFLSU	BETLSU
-8.375	-7.713	.05010	-.02370	-8.28470	-7.90270
-8.373	-5.646	.04840	-.01610	-8.31360	-5.84860
-8.372	-3.635	.04670	-.01030	-8.34900	-3.84370
-8.203	.291	.04360	-.00500	-8.27990	.09500
-8.039	4.434	.04130	-.00800	-8.19990	4.29830
-8.021	6.319	.03690	-.01260	-8.20160	6.21100
-8.032	8.345	.03360	-.01710	-8.22720	8.26520
	GRADIENT	-.00067	.00028	.01849	1.00907

RUN NO. 990/ 0 RN/L = 3.50 GRADIENT INTERVAL = -5.00/ 5.00

ALPHAL	BETAL	CALS	CYNLS	ALFLSU	BETLSU
-6.325	-7.839	.05060	-.03210	-6.20860	-8.01390
-6.289	-5.817	.04880	-.02580	-6.19950	-6.00730
-6.181	-3.908	.04720	-.02190	-6.12600	-4.11170
-6.213	.152	.04300	-.01740	-6.28420	-.04640
-6.007	4.264	.04100	-.01990	-6.18220	4.14640
-5.923	6.269	.03770	-.02310	-6.11790	6.18950
-5.930	8.262	.03510	-.02560	-6.13450	8.20970
	GRADIENT	-.00076	.00024	-.00681	1.01046

RUN NO. 991/ 0 RN/L = 3.50 GRADIENT INTERVAL = -5.00/ 5.00

ALPHAL	BETAL	CALS	CYNLS	ALFLSU	BETLSU
-4.079	-7.973	.05160	-.04140	-3.93040	-8.12290
-4.317	-5.865	.04930	-.03440	-4.19160	-6.03470
-4.211	-3.860	.04750	-.03160	-4.11850	-4.04940
-4.149	.404	.04270	-.03000	-4.23060	.21010
-3.720	4.256	.04090	-.02970	-3.91640	4.17970
-3.787	6.115	.03850	-.03040	-3.99340	6.07440
-3.813	8.115	.03650	-.03180	-4.02300	8.09910
	GRADIENT	-.00082	.00024	.02399	1.01367

IA156A, AEDC PWT 16T-470, O T S W/SILTS (R8NN64) (10 MAY 80)

REFERENCE DATA

SREF =	2690.0000 SQ.FT.	XMRP =	976.0000 IN. XT		
LREF =	1290.3000 INCHES	YMRP =	.0000 IN. YT		
BREF =	1290.3000 INCHES	ZMRP =	400.0000 IN. ZT		
SCALE =	.0200				

PARAMETRIC DATA

IB-ELV =	10.000	OB-ELV =	11.000
BDFLAP =	.000	SPDBRK =	.000
RUDDER =	.000	SILTS =	1.000
MACH =	.600	RN/L =	3.500

RUN NO. 992/ 0 RN/L = 3.50 GRADIENT INTERVAL = -5.00/ 5.00

ALPHAL	BETAL	CALS	CYNLS	ALFLSU	BETLSU
-.266	-8.652	.05270	-.05620	-.06920	-8.72860
-.244	-6.567	.05160	-.05180	-.04770	-6.64370
-.223	-4.317	.04990	-.04810	-.02680	-4.39430
-.199	-.226	.04470	-.04550	-.00240	-.30160
-.139	3.861	.04100	-.03840	.05700	3.78500
-.140	5.969	.03930	-.03570	.05670	5.89410
-.135	8.070	.03910	-.03630	.06190	7.99520
	GRADIENT	-.00109	.00119	.01025	1.00016

RUN NO. 993/ 0 RN/L = 3.50 GRADIENT INTERVAL = -5.00/ 5.00

ALPHAL	BETAL	CALS	CYNLS	ALFLSU	BETLSU
4.430	-7.877	.05120	-.05680	4.22060	-7.89500
4.356	-5.772	.04930	-.05170	4.14970	-5.81590
4.303	-3.782	.04770	-.04820	4.10850	-3.86450
4.083	.158	.04390	-.04250	3.99920	-.03570
4.132	4.198	.04100	-.03290	4.21490	4.00390
4.067	6.317	.03990	-.02900	4.19060	6.14630
4.044	8.323	.04020	-.02790	4.18810	8.16910
	GRADIENT	-.00084	.00192	.01350	.98607

RUN NO. 994/ 0 RN/L = 3.50 GRADIENT INTERVAL = -5.00/ 5.00

ALPHAL	BETAL	CALS	CYNLS	ALFLSU	BETLSU
6.526	-7.920	.05030	-.05050	6.32270	-7.97530
6.505	-5.841	.04870	-.04420	6.31230	-5.92550
6.498	-3.782	.04800	-.03990	6.32450	-3.90220
6.179	.269	.04490	-.03460	6.10150	.07310
6.084	4.201	.04080	-.02560	6.13130	3.99600
6.051	6.123	.03990	-.02180	6.13830	5.93200
6.056	8.375	.04010	-.02090	6.17240	8.20020
	GRADIENT	-.00090	.00179	-.02436	.98924

IA156A, AEDC PWT 16T-470, O T S W/SILTS (R8NN64) (10 MAY 80)

REFERENCE DATA

SREF =	2690.0000 SQ.FT.	XMRP =	976.0000 IN. XT		
LREF =	1290.3000 INCHES	YMRP =	.0000 IN. YT		
BREF =	1290.3000 INCHES	ZMRP =	400.0000 IN. ZT		
SCALE =	.0200				

PARAMETRIC DATA

IB-ELV =	10.000	OB-ELV =	11.000
BDFLAP =	.000	SPDBRK =	.000
RUDDER =	.000	SILTS =	1.000
MACH =	.600	RN/L =	3.500

RUN NO. 995/ 0 RN/L = 3.50 GRADIENT INTERVAL = -5.00/ 5.00

ALPHAL	BETAL	CALS	CYNLS	ALFLSU	BETLSU
8.504	-7.759	.04870	-.04040	8.31050	-7.84180
8.398	-5.671	.04830	-.03490	8.21690	-5.77960
8.376	-3.708	.04780	-.03050	8.21870	-3.84740
8.268	.282	.04510	-.02580	8.19030	.08620
8.171	4.241	.04000	-.01670	8.19140	4.03110
8.232	6.371	.03930	-.01190	8.29210	6.16920
8.185	8.378	.03940	-.01120	8.27400	8.18730
	GRADIENT	-.00098	.00174	-.00344	.99120

IA156A, AEDC PWT 16T-470, O T S W/SILTS (R8NN65) (10 MAY 80)

REFERENCE DATA

SREF =	2690.0000 SQ.FT.	XMRP =	976.0000 IN. XT		
LREF =	1290.3000 INCHES	YMRP =	.0000 IN. YT		
BREF =	1290.3000 INCHES	ZMRP =	400.0000 IN. ZT		
SCALE =	.0200				

PARAMETRIC DATA

IB-ELV =	10.000	OB-ELV =	11.000
BDFLAP =	.000	SPDBRK =	.000
RUDDER =	.000	SILTS =	1.000
MACH =	.800	RN/L =	3.500

RUN NO. 996/ 0 RN/L = 3.50 GRADIENT INTERVAL = -5.00/ 5.00

ALPHAL	BETAL	CALS	CYNLS	ALFLSU	BETLSU
-8.508	-5.813	.05210	-.01430	-8.35050	-5.94750
-8.521	-3.572	.05030	-.00760	-8.39450	-3.73670
-8.397	.365	.04730	-.00240	-8.35790	.16100
-8.207	4.615	.04240	-.00550	-8.27220	4.41740
-8.150	6.451	.03740	-.01050	-8.24650	6.26780
	GRADIENT	-.00097	.00024	.01501	.99606

RUN NO. 997/ 0 RN/L = 3.50 GRADIENT INTERVAL = -5.00/ 5.00

ALPHAL	BETAL	CALS	CYNLS	ALFLSU	BETLSU
-6.404	-5.831	.05310	-.02440	-6.22870	-5.94240
-6.322	-3.911	.05120	-.02020	-6.17010	-4.05190
-6.372	.258	.04710	-.01560	-6.33010	.05450
-6.163	4.388	.04320	-.01760	-6.24880	4.19840
-5.831	6.536	.03840	-.02240	-5.95720	6.37180
	GRADIENT	-.00096	.00031	-.00953	.99419

IA156A, AEDC PWT 16T-470, 0 T S W/SILTS (R8NN65) (10 MAY 80)

REFERENCE DATA

SREF = 2690.0000 SQ.FT. XMRP = 976.0000 IN. XT
LREF = 1290.3000 INCHES YMRP = .0000 IN. YT
BREF = 1290.3000 INCHES ZMRP = 400.0000 IN. ZT
SCALE = .0200

PARAMETRIC DATA

IB-ELV = 10.000 OB-ELV = 11.000
BDFLAP = .000 SPDBRK = .000
RUDDER = .000 SILTS = 1.000
MACH = .800 RN/L = 3.500

RUN NO. 998/ 0 RN/L = 3.50 GRADIENT INTERVAL = -5.00/ 5.00

ALPHAL	BETAL	CALS	CYNLS	ALFLSU	BETLSU
-4.157	-6.001	.05430	-.03540	-3.96180	-6.07160
-4.392	-3.836	.05220	-.03010	-4.21840	-3.94910
-4.287	.484	.04650	-.02880	-4.25660	.27910
-3.797	4.414	.04300	-.02900	-3.92320	4.24970
-3.852	6.255	.04000	-.02940	-4.00470	6.11410
	GRADIENT	-.00112	.00014	.03504	.99350

RUN NO. 999/ 0 RN/L = 3.50 GRADIENT INTERVAL = -5.00/ 5.00

ALPHAL	BETAL	CALS	CYNLS	ALFLSU	BETLSU
-.247	-6.763	.05580	-.05240	-.04270	-6.72480
-.242	-4.620	.05390	-.04740	-.03840	-4.58130
-.238	-.341	.04800	-.04280	-.03390	-.30230
-.166	3.773	.04370	-.03810	.03790	3.81130
-.157	5.926	.04250	-.03560	.04690	5.96460
	GRADIENT	-.00122	.00111	.00904	1.00000

RUN NO. 1000/ 0 RN/L = 3.51 GRADIENT INTERVAL = -5.00/ 5.00

ALPHAL	BETAL	CALS	CYNLS	ALFLSU	BETLSU
4.418	-5.731	.05380	-.05410	4.26870	-5.87450
4.277	-3.609	.05200	-.04920	4.15850	-3.77950
3.996	.230	.04660	-.04420	4.03050	.02560
4.109	4.166	.04440	-.03470	4.28010	4.04890
4.037	6.254	.04330	-.03150	4.22950	6.17620
	GRADIENT	-.00098	.00187	.01584	1.00692

RUN NO. 1001/ 0 RN/L = 3.51 GRADIENT INTERVAL = -5.00/ 5.00

ALPHAL	BETAL	CALS	CYNLS	ALFLSU	BETLSU
6.476	-5.739	.05280	-.04820	6.35590	-5.90830
6.459	-3.691	.05180	-.04110	6.37580	-3.88150
6.087	.288	.04750	-.03740	6.12410	.08410
6.008	4.127	.04430	-.02770	6.15400	3.97900
6.116	6.306	.04340	-.02370	6.28960	6.19200
	GRADIENT	-.00096	.00171	-.02858	1.00538

IA156A, AEDC PWT 16T-470, 0 T S W/SILTS (R8NN66) (10 MAY 80)

REFERENCE DATA

SREF =	2690.0000 SQ.FT.	XMRP =	976.0000 IN. XT		
LREF =	1290.3000 INCHES	YMRP =	.0000 IN. YT		
BREF =	1290.3000 INCHES	ZMRP =	400.0000 IN. ZT		
SCALE =	.0200				

PARAMETRIC DATA

IB-ELV =	10.000	OB-ELV =	11.000
BDFLAP =	.000	SPDBRK =	.000
RUDDER =	.000	SILTS =	1.000
MACH =	.900	RN/L =	3.500

RUN NO. 1002/ 0 RN/L = 3.50 GRADIENT INTERVAL = -5.00/ 5.00

ALPHAL	BETAL	CALS	CYNLS	ALFLSU	BETLSU
-8.519	-5.790	.05630	-.01380	-8.35170	-5.91150
-8.605	-3.533	.05420	-.00730	-8.46700	-3.68770
-8.459	.402	.05330	-.00340	-8.40720	.20220
-8.253	4.621	.04610	-.00560	-8.30520	4.42110
-8.275	6.531	.04120	-.00980	-8.35950	6.34230
	GRADIENT	-.00100	.00020	.01989	.99444

RUN NO. 1003/ 0 RN/L = 3.50 GRADIENT INTERVAL = -5.00/ 5.00

ALPHAL	BETAL	CALS	CYNLS	ALFLSU	BETLSU
-6.468	-5.800	.05790	-.02290	-6.28580	-5.89830
-6.379	-3.880	.05590	-.01860	-6.21780	-4.00960
-6.445	.279	.05280	-.01530	-6.38940	.08030
-6.197	4.436	.04770	-.01790	-6.27080	4.24250
-6.113	6.441	.04320	-.02200	-6.22340	6.26660
	GRADIENT	-.00099	.00008	-.00638	.99231

RUN NO. 1004/ 0 RN/L = 3.49 GRADIENT INTERVAL = -5.00/ 5.00

ALPHAL	BETAL	CALS	CYNLS	ALFLSU	BETLSU
-4.177	1.991	.05930	-.03500	-3.97780	-6.04600
-4.452	-3.840	.05710	-.02920	-4.27110	-3.93890
-4.345	.514	.05150	-.02820	-4.30200	.31230
-3.835	4.444	.04860	-.02990	-3.95060	4.27300
-3.901	6.299	.04500	-.03110	-4.04390	6.14880
	GRADIENT	-.00103	-.00008	.03787	.99104

RUN NO. 1005/ 0 RN/L = 3.49 GRADIENT INTERVAL = -5.00/ 5.00

ALPHAL	BETAL	CALS	CYNLS	ALFLSU	BETLSU
-.299	-6.820	.06100	-.05360	-.09950	-6.76860
-.285	-4.659	.05970	-.04920	-.08490	-4.60720
-.304	-.326	.05340	-.04490	-.10430	-.27470
-.229	3.794	.04930	-.03950	-.02860	3.84630
-.207	5.954	.04770	-.03890	-.00740	6.00570
	GRADIENT	-.00123	.00115	.00656	1.00001

IA156A, AEDC PWT 16T-470, O T S W/SILTS (R8NN66) (10 MAY 80)

REFERENCE DATA

SREF = 2690.0000 SQ.FT. XMRP = 976.0000 IN. XT
LREF = 1290.3000 INCHES YMRP = .0000 IN. YT
BREF = 1290.3000 INCHES ZMRP = 400.0000 IN. ZT
SCALE = .0200

PARAMETRIC DATA

IB-ELV = 10.000 OB-ELV = 11.000
BDFLAP = .000 SPDBRK = .000
RUDDER = .000 SILTS = 1.000
MACH = .900 RN/L = 3.500

RUN NO. 1006/ 0 RN/L = 3.50 GRADIENT INTERVAL = -5.00/ 5.00

ALPHAL	BETAL	CALS	CYNLS	ALFLSU	BETLSU
4.423	-5.717	.05960	-.05580	4.28440	-5.87070
4.264	-3.608	.05800	-.05040	4.15840	-3.78540
3.954	.239	.05310	-.04570	4.00170	.03750
4.094	4.158	.05020	-.03710	4.27210	4.05310
4.015	6.255	.04820	-.03480	4.21150	6.19020
	GRADIENT	-.00100	.00171	.01481	1.00934

IA156A, AEDC PWT 16T-470, O T S W/SILTS (R8NN67) (10 MAY 80)

REFERENCE DATA

SREF = 2690.0000 SQ.FT. XMRP = 976.0000 IN. XT
LREF = 1290.3000 INCHES YMRP = .0000 IN. YT
BREF = 1290.3000 INCHES ZMRP = 400.0000 IN. ZT
SCALE = .0200

PARAMETRIC DATA

IB-ELV = 10.000 OB-ELV = 11.000
BDFLAP = .000 SPDBRK = .000
RUDDER = .000 SILTS = 1.000
MACH = .950 RN/L = 3.500

RUN NO. 1007/ 0 RN/L = 3.49 GRADIENT INTERVAL = -5.00/ 5.00

ALPHAL	BETAL	CALS	CYNLS	ALFLSU	BETLSU
-8.662	-5.750	.06060	-.01520	-8.49390	-5.86710
-8.716	-3.524	.05900	-.00710	-8.57570	-3.67440
-8.572	.404	.05760	-.00420	-8.51650	.20640
-8.335	4.624	.05140	-.00910	-8.38350	4.42470
-8.324	6.522	.04510	-.01300	-8.40510	6.33370
	GRADIENT	-.00094	-.00026	.02368	.99399

RUN NO. 1008/ 0 RN/L = 3.50 GRADIENT INTERVAL = -5.00/ 5.00

ALPHAL	BETAL	CALS	CYNLS	ALFLSU	BETLSU
-6.563	-5.794	.06230	-.02510	-6.37960	-5.88660
-6.466	-3.872	.06090	-.01970	-6.30280	-3.99620
-6.529	.278	.05900	-.01720	-6.47000	.08110
-6.283	4.433	.05360	-.02190	-6.35260	4.23960
-5.924	6.593	.04770	-.02690	-6.03610	6.42090
	GRADIENT	-.00088	-.00027	-.00599	.99172

IA156A, AEDC PWT 16T-470, O T S W/SILTS (R8NN67) (10 MAY 80)

REFERENCE DATA

SREF =	2690.0000 SQ.FT.	XMRP =	976.0000 IN. XT		
LREF =	1290.3000 INCHES	YMRP =	.0000 IN. YT		
BREF =	1290.3000 INCHES	ZMRP =	400.0000 IN. ZT		
SCALE =	.0200				

PARAMETRIC DATA

IB-ELV =	10.000	OB-ELV =	11.000
BDFLAP =	.000	SPDBRK =	.000
RUDDER =	.000	SILTS =	1.000
MACH =	.950	RN/L =	3.500

RUN NO. 1009/ 0 RN/L = 3.50 GRADIENT INTERVAL = -5.00/ 5.00

ALPHAL	BETAL	CALS	CYNLS	ALFLSU	BETLSU
-4.247	-5.984	.06530	-.03830	-4.04790	-6.03360
-4.493	-3.826	.06290	-.03160	-4.31090	-3.92030
-4.392	.507	.05840	-.03210	-4.34490	.30760
-3.853	4.447	.05450	-.03450	-3.96500	4.27550
-3.928	6.296	.05010	-.03560	-4.06710	6.14510
	GRADIENT	-.00102	-.00035	.04098	.99036

RUN NO. 1010/ 0 RN/L = 3.50 GRADIENT INTERVAL = -5.00/ 5.00

ALPHAL	BETAL	CALS	CYNLS	ALFLSU	BETLSU
-.314	-6.814	.06780	-.05850	-.11650	-6.75820
-.284	-4.626	.06670	-.05460	-.08600	-4.57090
-.289	-.366	.06170	-.05000	-.09080	-.31050
-.205	3.846	.05460	-.04210	-.00760	3.90170
-.192	6.004	.05130	-.04140	.00610	6.05930
	GRADIENT	-.00143	.00147	.00923	1.00001

RUN NO. 1011/ 0 RN/L = 3.49 GRADIENT INTERVAL = -5.00/ 5.00

ALPHAL	BETAL	CALS	CYNLS	ALFLSU	BETLSU
4.449	-5.858	.06600	-.05840	4.31360	-6.01190
4.244	-3.529	.06440	-.05180	4.14390	-3.70800
3.931	.323	.05940	-.04840	3.98680	.12540
4.106	4.234	.05540	-.03910	4.28540	4.13360
4.061	6.283	.05180	-.03600	4.25740	6.22150
	GRADIENT	-.00116	.00164	.01838	1.01023

IA156A, AEDC PWT 16T-470, 0 T S W/SILTS (R8NN68' (10 MAY 80)

REFERENCE DATA

SREF = 2690.0000 SQ.FT. XMRP = 976.0000 IN. XT
LREF = 1290.3000 INCHES YMRP = .0000 IN. YT
BREF = 1290.3000 INCHES ZMRP = 400.0000 IN. ZT
SCALE = .0200

PARAMETRIC DATA

IB-ELV = 10.000 OB-ELV = 11.000
BDFLAP = .000 SPDBRK = .000
RUDDER = .000 SILTS = 1.000
MACH = 1.050 RN/L = 3.500

RUN NO. 1012/ 0 RN/L = 3.52 GRADIENT INTERVAL = -5.00/ 5.00

ALPHAL	BETAL	CALS	CYNLS	ALFLSU	BETLSU
-8.707	-5.739	.08240	-.02650	-8.53600	-5.84880
-8.812	-3.500	.07910	-.02010	-8.66780	-3.64440
-8.679	.441	.07900	-.01520	-8.61760	.24680
-8.370	4.670	.07060	-.02130	-8.41320	4.47130
-8.379	6.557	.06470	-.02340	-8.45560	6.36790
	GRADIENT	-.00105	-.00016	.03137	.99337

RUN NO. 1013/ 0 RN/L = 3.50 GRADIENT INTERVAL = -5.00/ 5.00

ALPHAL	BETAL	CALS	CYNLS	ALFLSU	BETLSU
-6.601	-5.788	.08460	-.03650	-6.41610	-5.87300
-6.494	-3.864	.08240	-.03170	-6.32780	-3.98110
-6.591	.327	.07730	-.02900	-6.52680	.13320
-6.313	4.481	.07320	-.03210	-6.37810	4.28830
-6.224	6.481	.06650	-.03460	-6.32610	6.30440
	GRADIENT	-.00110	-.00005	-.00609	.99090

RUN NO. 1014/ 0 RN/L = 3.50 GRADIENT INTERVAL = -5.00/ 5.00

ALPHAL	BETAL	CALS	CYNLS	ALFLSU	BETLSU
-4.288	-5.979	.08470	-.05130	-4.08900	-6.02160
-4.530	-3.828	.08280	-.04590	-4.34500	-3.91460
-4.310	.361	.07740	-.04620	-4.24820	.16690
-4.109	4.396	.07300	-.04480	-4.21080	4.22020
-3.935	6.320	.06900	-.04650	-4.07040	6.16730
	GRADIENT	-.00119	.00013	.01636	.98896

RUN NO. 1015/ 0 RN/L = 3.50 GRADIENT INTERVAL = -5.00/ 5.00

ALPHAL	BETAL	CALS	CYNLS	ALFLSU	BETLSU
-.321	-6.791	.08590	-.07080	-.12700	-6.73040
-.304	-4.613	.08500	-.06820	-.10940	-4.55190
-.342	-.376	.08030	-.06570	-.14750	-.31460
-.253	3.801	.07300	-.05540	-.05850	3.86150
-.236	6.006	.07020	-.05170	-.04150	6.06650
	GRADIENT	-.00143	.00152	.00601	1.00001

IA156A, AEDC PWT 16T-470, 0 T S W/SILTS (R8NN68) (10 MAY 80)

REFERENCE DATA

SREF = 2690.0000 SQ.FT. XMRP = 976.0000 IN. XT
LREF = 1290.3000 INCHES YMRP = .0000 IN. YT
BREF = 1290.3000 INCHES ZMRP = 400.0000 IN. ZT
SCALE = .0200

PARAMETRIC DATA

IB-ELV = 10.000 OB-ELV = 11.000
BDFLAP = .000 SPDBRK = .000
RUDDER = .000 SILTS = 1.000
MACH = 1.050 RN/L = 3.500

RUN NO. 1016/ 0 RN/L = 3.50 GRADIENT INTERVAL = -5.00/ 5.00

ALPHAL	BETAL	CALS	CYNLS	ALFLSU	BETLSU
4.457	-5.625	.08260	-.07330	4.32920	-5.78390
4.299	-3.562	.08150	-.06660	4.20490	-3.74290
3.955	.306	.07970	-.05890	4.01360	.11070
4.103	4.288	.07470	-.04800	4.28350	4.19370
4.047	6.294	.07140	-.04520	4.24290	6.23820
	GRADIENT	-.00087	.00237	.01030	1.01113

IA156A, AEDC PWT 16T-470, 0 T S W/SILTS (R8NN69) (10 MAY 80)

REFERENCE DATA

SREF = 2690.0000 SQ.FT. XMRP = 976.0000 IN. XT
LREF = 1290.3000 INCHES YMRP = .0000 IN. YT
BREF = 1290.3000 INCHES ZMRP = 400.0000 IN. ZT
SCALE = .0200

PARAMETRIC DATA

IB-ELV = 10.000 OB-ELV = 11.000
BDFLAP = .000 SPDBRK = .000
RUDDER = .000 SILTS = 1.000
MACH = 1.100 RN/L = 3.500

RUN NO. 1017/ 0 RN/L = 3.50 GRADIENT INTERVAL = -5.00/ 5.00

ALPHAL	BETAL	CALS	CYNLS	ALFLSU	BETLSU
-8.670	-5.654	.08220	-.02540	-8.49730	-5.76240
-8.823	-3.479	.08050	-.01810	-8.67680	-3.62200
-8.709	.453	.07630	-.01430	-8.64520	.25840
-8.418	4.715	.06810	-.01940	-8.45950	4.51530
-8.361	6.568	.06290	-.02180	-8.43540	6.37760
	GRADIENT	-.00152	-.00017	.02676	.99310

RUN NO. 1018/ 0 RN/L = 3.50 GRADIENT INTERVAL = -5.00/ 5.00

ALPHAL	BETAL	CALS	CYNLS	ALFLSU	BETLSU
-6.602	-5.789	.08340	-.03470	-6.41490	-5.87160
-6.551	-3.875	.08090	-.03020	-6.38210	-3.99070
-6.641	.357	.07510	-.02810	-6.57440	.16370
-6.326	4.492	.07020	-.03110	-6.38910	4.29790
-6.104	6.623	.06400	-.03410	-6.20860	6.44740
	GRADIENT	-.00128	-.00011	-.00101	.99052

IA156A, AEDC PWT 16T-470, 0 T S W/SILTS (R8NN69) (10 MAY 80)

REFERENCE DATA

SREF = 2690.0000 SQ.FT. XMRP = 976.0000 IN. XT
LREF = 1290.3000 INCHES YMRP = .0000 IN. YT
BREF = 1290.3000 INCHES ZMRP = 400.0000 IN. ZT
SCALE = .0200

PARAMETRIC DATA

IB-ELV = 10.000 OB-ELV = 11.000
BDFLAP = .000 SPDBRK = .000
RUDDER = .000 SILTS = 1.000
MACH = 1.100 RN/L = 3.500

RUN NO. 1019/ 0 RN/L = 3.50 GRADIENT INTERVAL = -5.00/ 5.00

ALPHAL	BETAL	CALS	CYNLS	ALFLSU	BETLSU
-4.460	-5.976	.08290	-.04720	-4.26060	-6.01920
-4.544	-3.835	.08030	-.04370	-4.35770	-3.91940
-4.449	.431	.07380	-.04320	-4.38780	.23610
-3.878	4.424	.07030	-.04520	-3.98290	4.24860
-3.934	6.308	.06700	-.04520	-4.06730	6.15330
	GRADIENT	-.00121	-.00018	.04478	.98877

RUN NO. 1020/ 0 RN/L = 3.50 GRADIENT INTERVAL = -5.00/ 5.00

ALPHAL	BETAL	CALS	CYNLS	ALFLSU	BETLSU
-.326	-6.822	.08290	-.06680	-.13170	-6.75900
-.312	-4.645	.08120	-.06380	-.11800	-4.58160
-.335	-.267	.07490	-.06170	-.14090	-.20420
-.235	3.906	.06750	-.05220	-.04090	3.96910
-.230	6.042	.06450	-.04860	-.03570	6.10510
	GRADIENT	-.00160	.00135	.00890	1.00000

RUN NO. 1021/ 0 RN/L = 3.50 GRADIENT INTERVAL = -5.00/ 5.00

ALPHAL	BETAL	CALS	CYNLS	ALFLSU	BETLSU
4.480	-5.813	.08000	-.07090	4.35010	-5.97140
4.296	-3.478	.07760	-.06350	4.20400	-3.66040
3.999	.361	.07500	-.05760	4.06220	.16630
4.124	4.252	.06980	-.04590	4.30610	4.15920
4.083	6.293	.06620	-.04320	4.28050	6.23910
	GRADIENT	-.00101	.00228	.01332	1.01164

IA156A, AEDC PWT 16T-470, O T S W/SILTS (R8NN70) (10 MAY 80)

REFERENCE DATA

SREF = 2690.0000 SQ.FT. XMRP = 976.0000 IN. XT
LREF = 1290.3000 INCHES YMRP = .0000 IN. YT
BREF = 1290.3000 INCHES ZMRP = 400.0000 IN. ZT
SCALE = .0200

PARAMETRIC DATA

IB-ELV = 10.000 OB-ELV = 11.000
BDFLAP = .000 SPDBRK = .000
RUDDER = .000 SILTS = 1.000
MACH = 1.150 RN/L = 3.500

RUN NO. 1022/ 0 RN/L = 3.50 GRADIENT INTERVAL = -5.00/ 5.00

ALPHAL	BETAL	CALS	CYNLS	ALFLSU	BETLSU
-8.715	-5.693	.08060	-.02210	-8.53940	-5.80210
-8.832	-3.498	.07860	-.01490	-8.68240	-3.64090
-8.706	.466	.07460	-.01050	-8.64050	.26950
-8.419	4.709	.06650	-.01720	-8.45990	4.50610
-8.398	6.595	.06100	-.02050	-8.47210	6.40210
	GRADIENT	-.00148	-.00030	.02729	.99282

RUN NO. 1023/ 0 RN/L = 3.50 GRADIENT INTERVAL = -5.00/ 5.00

ALPHAL	BETAL	CALS	CYNLS	ALFLSU	BETLSU
-6.601	-5.811	.08150	-.03190	-6.41110	-5.89320
-6.500	-3.881	.07900	-.02860	-6.32810	-3.99680
-6.627	.338	.07270	-.02440	-6.55860	.14280
-6.322	4.502	.06830	-.02860	-6.38440	4.30500
-6.092	6.639	.06230	-.03270	-6.19620	6.46080
	GRADIENT	-.00128	.00000	-.00682	.99023

RUN NO. 1024/ 0 RN/L = 3.50 GRADIENT INTERVAL = -5.00/ 5.00

ALPHAL	BETAL	CALS	CYNLS	ALFLSU	BETLSU
-4.453	-5.986	.08130	-.04330	-4.25080	-6.02830
-4.533	-3.841	.07900	-.04140	-4.34390	-3.92460
-4.434	.542	.07250	-.04120	-4.37740	.34300
-3.861	4.470	.06840	-.04290	-3.96740	4.29230
-3.940	6.343	.06500	-.04360	-4.07350	6.18590
	GRADIENT	-.00128	-.00018	.04429	.98846

RUN NO. 1025/ 0 RN/L = 3.50 GRADIENT INTERVAL = -5.00/ 5.00

ALPHAL	BETAL	CALS	CYNLS	ALFLSU	BETLSU
-.291	-6.864	.08180	-.06460	-.09480	-6.79840
-.267	-4.688	.08040	-.06210	-.07110	-4.62250
-.294	-.313	.07540	-.06040	-.09760	-.24760
-.200	3.835	.06740	-.05170	-.00360	3.90010
-.191	6.048	.06420	-.04790	.00470	6.11340
	GRADIENT	-.00152	.00121	.00779	1.00001

IA156A, AEDC PWT 16T-470, O T S W/SILTS (R8NN70) (10 MAY 80)

REFERENCE DATA

SREF = 2690.0000 SQ.FT. XMRP = 976.0000 IN. XT
LREF = 1290.3000 INCHES YMRP = .0000 IN. YT
BREF = 1290.3000 INCHES ZMRP = 400.0000 IN. ZT
SCALE = .0200

PARAMETRIC DATA

IB-ELV = 10.000 OB-ELV = 11.000
BDFLAP = .000 SPDBRK = .000
RUDDER = .000 SILTS = 1.000
MACH = 1.150 RN/L = 3.500

RUN NO. 1026/ 0 RN/L = 3.50 GRADIENT INTERVAL = -5.00/ 5.00

ALPHAL	BETAL	CALS	CYNLS	ALFLSU	BETLSU
4.546	-5.629	.07910	-.06950	4.41930	-5.79250
4.364	-3.518	.07770	-.06400	4.27120	-3.70310
4.072	.297	.07530	-.05620	4.13400	.09920
4.160	4.201	.07000	-.04460	4.34460	4.10800
4.101	6.293	.06650	-.04260	4.30150	6.24080
	GRADIENT	-.00100	.00251	.00968	1.01192

IA156A, AEDC PWT 16T-470, O T S W/SILTS (R8NN71) (10 MAY 80)

REFERENCE DATA

SREF = 2690.0000 SQ.FT. XMRP = 976.0000 IN. XT
LREF = 1290.3000 INCHES YMRP = .0000 IN. YT
BREF = 1290.3000 INCHES ZMRP = 400.0000 IN. ZT
SCALE = .0200

PARAMETRIC DATA

IB-ELV = 12.000 OB-ELV = 11.000
BDFLAP = .000 SPDBRK = .000
RUDDER = .000 SILTS = 1.000
MACH = .600 RN/L = 3.500

RUN NO. 1030/ 0 RN/L = 3.50 GRADIENT INTERVAL = -5.00/ 5.00

ALPHAL	BETAL	CALS	CYNLS	ALFLSU	BETLSU
-8.497	-7.741	.05010	-.02290	-8.40950	-7.93230
-8.348	-5.715	.04860	-.01620	-8.28800	-5.91700
-8.348	-3.692	.04690	-.01050	-8.32720	-3.90180
-8.204	.413	.04360	-.00420	-8.28350	.21770
-8.045	4.364	.04130	-.00730	-8.20460	4.22640
-7.882	6.425	.03700	-.01350	-8.06610	6.32150
-7.882	8.475	.03370	-.01780	-8.07810	8.39880
	GRADIENT	-.00070	.00040	.01519	1.00895

RUN NO. 1031/ 0 RN/L = 3.49 GRADIENT INTERVAL = -5.00/ 5.00

ALPHAL	BETAL	CALS	CYNLS	ALFLSU	BETLSU
-6.338	-7.853	.05090	-.03190	-6.22180	-8.02850
-6.275	-5.816	.04920	-.02540	-6.18500	-6.00650
-6.182	-3.902	.04730	-.02090	-6.12920	-4.10620
-6.205	.163	.04310	-.01740	-6.27710	-.03470
-6.001	4.269	.04130	-.01970	-6.17540	4.15040
-5.930	6.264	.03770	-.02250	-6.12570	6.18430
-5.719	8.431	.03530	-.02670	-5.92460	8.38450
	GRADIENT	-.00073	.00015	-.00560	1.01053

IA156A, AEDC PWT 16T-470, 0 T S W/SILTS (R8NN71) (10 MAY 80)

REFERENCE DATA

SREF = 2690.0000 SQ.FT. XMRP = 976.0000 IN. XT
LREF = 1290.3000 INCHES YMRP = .0000 IN. YT
BREF = 1290.3000 INCHES ZMRP = 400.0000 IN. ZT
SCALE = .0200

PARAMETRIC DATA

IB-ELV = 12.000 OB-ELV = 11.000
BDFLAP = .000 SPDBRK = .000
RUDDER = .000 SILTS = 1.000
MACH = .600 RN/L = 3.500

RUN NO. 1042/ 0 RN/L = 3.50 GRADIENT INTERVAL = -5.00/ 5.00

ALPHAL	BETAL	CALS	CYNLS	ALFLSU	BETLSU
-4.213	-7.773	.05150	-.04030	-4.06870	-7.92670
-4.268	-5.857	.04970	-.03470	-4.14430	-6.02820
-4.281	-3.823	.04720	-.03120	-4.19130	-4.01300
-4.141	.440	.04310	-.03000	-4.22500	.24660
-3.711	4.271	.04110	-.02980	-3.90680	4.19470
-3.778	6.124	.03840	-.03070	-3.98400	6.08250
-3.810	8.119	.03670	-.03200	-4.02040	8.10450
	GRADIENT	-.00076	.00018	.03435	1.01381

RUN NO. 1043/ 0 RN/L = 3.50 GRADIENT INTERVAL = -5.00/ 5.00

ALPHAL	BETAL	CALS	CYNLS	ALFLSU	BETLSU
-.255	-8.656	.05300	-.05630	-.05840	-8.73310
-.232	-6.453	.05170	-.05200	-.03550	-6.53000
-.211	-4.411	.05030	-.04850	-.01470	-4.48740
-.188	-.229	.04520	-.04580	.00880	-.30480
-.125	3.860	.04150	-.03870	.07090	3.78300
-.128	5.967	.03960	-.03570	.06820	5.89120
-.129	8.081	.03910	-.03620	.06750	8.00590
	GRADIENT	-.00106	.00118	.01033	.99996

RUN NO. 1044/ 0 RN/L = 3.50 GRADIENT INTERVAL = -5.00/ 5.00

ALPHAL	BETAL	CALS	CYNLS	ALFLSU	BETLSU
4.281	-7.993	.05130	-.05700	4.07210	-8.00950
4.354	-5.814	.04970	-.05200	4.14860	-5.85910
4.322	-3.817	.04810	-.04780	4.12820	-3.90020
4.220	.265	.04400	-.04160	4.14360	.06860
4.135	4.267	.04110	-.03290	4.22090	4.07520
4.074	6.329	.04020	-.02890	4.19820	6.15930
4.053	8.322	.04050	-.02770	4.19750	8.16890
	GRADIENT	-.00087	.00184	.01144	.98645

IA156A, AEDC PWT 16T-470, O T S W/SILTS (R8NN71) (10 MAY 80)

REFERENCE DATA

SREF =	2690.0000 SQ.FT.	XMRP =	976.0000 IN. XT		
LREF =	1290.3000 INCHES	YMRP =	.0000 IN. YT		
BREF =	1290.3000 INCHES	ZMRP =	400.0000 IN. ZT		
SCALE =	.0200				

PARAMETRIC DATA

IB-ELV =	12.000	OB-ELV =	11.000
BDFLAP =	.000	SPDBRK =	.000
RUDDER =	.000	SILTS =	1.000
MACH =	.600	RN/L =	3.500

RUN NO. 1045/ 0 RN/L = 3.51 GRADIENT INTERVAL = -5.00/ 5.00

ALPHAL	BETAL	CALS	CYNLS	ALFLSU	BETLSU
6.533	-7.903	.05010	-.05000	6.33170	-7.96030
6.525	-5.846	.04880	-.04400	6.33250	-5.93080
6.495	-3.783	.04780	-.03970	6.32250	-3.90420
6.183	.277	.04500	-.03430	6.10720	.08090
6.091	4.203	.04090	-.02520	6.13980	3.99840
6.013	6.288	.04020	-.02160	6.10420	6.09870
6.051	8.318	.04050	-.02060	6.16720	8.14330
	GRADIENT	-.00086	.00181	-.02305	.98949

RUN NO. 1046/ 0 RN/L = 3.51 GRADIENT INTERVAL = -5.00/ 5.00

ALPHAL	BETAL	CALS	CYNLS	ALFLSU	BETLSU
8.479	-7.736	.04880	-.04070	8.28730	-7.82140
8.393	-5.669	.04790	-.03520	8.21430	-5.78000
8.389	-3.695	.04760	-.03000	8.23260	-3.83620
8.271	.282	.04460	-.02580	8.19440	.08540
8.286	4.337	.03990	-.01530	8.30920	4.12780
8.224	6.345	.03950	-.01190	8.28550	6.14420
8.204	8.399	.03960	-.01070	8.29500	8.20990
	GRADIENT	-.00096	.00183	.00960	.99150

IA156A, AEDC PWT 16T-470, O T S W/SILTS (R8NN72) (10 MAY 80)

REFERENCE DATA

SREF = 2690.0000 SQ.FT. XMRP = 976.0000 IN. XT
LREF = 1290.3000 INCHES YMRP = .0000 IN. YT
BREF = 1290.3000 INCHES ZMRP = 400.0000 IN. ZT
SCALE = .0200

PARAMETRIC DATA

IB-ELV = 12.000 OB-ELV = 11.000
BDFLAP = .000 SPDBRK = .000
RUDDER = .000 SILTS = 1.000
MACH = .800 RN/L = 3.500

RUN NO. 1047/ 0 RN/L = 3.50 GRADIENT INTERVAL = -5.00/ 5.00

ALPHAL	BETAL	CALS	CYNLS	ALFLSU	BETLSU
-8.610	-5.706	.05240	-.01430	-8.45450	-5.84270
-8.525	-3.650	.05060	-.00830	-8.39640	-3.81300
-8.385	.519	.04720	-.00250	-8.35070	.31480
-8.192	4.514	.04250	-.00660	-8.25550	4.31610
-8.162	6.454	.03680	-.01190	-8.25870	6.27010
	GRADIENT	-.00099	.00022	.01721	.99576

RUN NO. 1048/ 0 RN/L = 3.50 GRADIENT INTERVAL = -5.00/ 5.00

ALPHAL	BETAL	CALS	CYNLS	ALFLSU	BETLSU
-6.388	-5.831	.05350	-.02480	-6.21290	-5.94220
-6.294	-3.904	.05170	-.02070	-6.14230	-4.04500
-6.372	.255	.04730	-.01560	-6.33010	.05180
-6.143	4.388	.04340	-.01820	-6.22860	4.19930
-5.855	6.491	.03830	-.02290	-5.98060	6.32580
	GRADIENT	-.00100	.00030	-.01044	.99420

RUN NO. 1049/ 0 RN/L = 3.50 GRADIENT INTERVAL = -5.00/ 5.00

ALPHAL	BETAL	CALS	CYNLS	ALFLSU	BETLSU
-4.202	-5.948	.05450	-.03490	-4.00780	-6.01990
-4.388	-3.848	.05240	-.03040	-4.21360	-3.96090
-4.281	.480	.04710	-.02900	-4.25100	.27450
-3.775	4.397	.04330	-.02890	-3.90200	4.23220
-3.849	6.258	.04010	-.02940	-4.00140	6.11640
-3.802	6.465	.03970	-.02950	-3.95700	6.32720
	GRADIENT	-.00111	.00018	.03698	.99348

RUN NO. 1050/ 0 RN/L = 3.50 GRADIENT INTERVAL = -5.00/ 5.00

ALPHAL	BETAL	CALS	CYNLS	ALFLSU	BETLSU
-.243	-6.719	.05610	-.05210	-.03870	-6.68090
-.228	-4.600	.05400	-.04740	-.02400	-4.56190
-.226	-.367	.04840	-.04340	-.02170	-.32910
-.156	3.811	.04390	-.03850	.04790	3.84950
-.139	5.927	.04260	-.03610	.06480	5.96570
	GRADIENT	-.00120	.00106	.00853	1.00000

IA156A, AEDC PWT 16T-470, 0 T S W/SILTS (R8NN72) (10 MAY 80)

REFERENCE DATA

SREF =	2690.0000 SQ.FT.	XMRP =	976.0000 IN. XT		
LREF =	1290.3000 INCHES	YMRP =	.0000 IN. YT		
BREF =	1290.3000 INCHES	ZMRP =	400.0000 IN. ZT		
SCALE =	.0200				

PARAMETRIC DATA

IB-ELV =	12.000	OB-ELV =	11.000
BDFLAP =	.000	SPDBRK =	.000
RUDDER =	.000	SILTS =	1.000
MACH =	.800	RN/L =	3.500

RUN NO. 1051/ 0 RN/L = 3.49 GRADIENT INTERVAL = -5.00/ 5.00

ALPHAL	BETAL	CALS	CYNLS	ALFLSU	BETLSU
4.419	-5.703	.05380	-.05400	4.26980	-5.84700
4.297	-3.683	.05200	-.04910	4.17680	-3.85250
4.156	.296	.04660	-.04380	4.19410	.09200
4.087	4.128	.04480	-.03520	4.25810	4.01070
4.044	6.256	.04360	-.03190	4.23640	6.17810
	GRADIENT	-.00092	.00178	.01037	1.00655

RUN NO. 1052/ 0 RN/L = 3.50 GRADIENT INTERVAL = -5.00/ 5.00

ALPHAL	BETAL	CALS	CYNLS	ALFLSU	BETLSU
6.502	-5.731	.05270	-.04790	6.38200	-5.90070
6.462	-3.689	.05160	-.04210	6.37900	-3.87900
6.105	.291	.04810	-.03760	6.14190	.08630
6.015	4.224	.04450	-.02800	6.16290	4.07810
6.081	6.181	.04370	-.02400	6.25380	6.06630
	GRADIENT	-.00090	.00178	-.02737	1.00558

IA156A, AEDC PWT 16T-470, 0 T S W/SILTS (R8NN73) (10 MAY 80)

REFERENCE DATA

SREF =	2690.0000 SQ.FT.	XMRP =	976.0000 IN. XT		
LREF =	1290.3000 INCHES	YMRP =	.0000 IN. YT		
BREF =	1290.3000 INCHES	ZMRP =	400.0000 IN. ZT		
SCALE =	.0200				

PARAMETRIC DATA

IB-ELV =	12.000	OB-ELV =	11.000
BDFLAP =	.000	SPDBRK =	.000
RUDDER =	.000	SILTS =	1.000
MACH =	.900	RN/L =	3.500

RUN NO. 1053/ 0 RN/L = 3.50 GRADIENT INTERVAL = -5.00/ 5.00

ALPHAL	BETAL	CALS	CYNLS	ALFLSU	BETLSU
-8.643	-5.681	.05690	-.01330	-8.47810	-5.80500
-8.565	-3.579	.05490	-.00810	-8.42620	-3.73270
-8.473	.564	.05290	-.00410	-8.42450	.36320
-8.239	4.526	.04660	-.00680	-8.28930	4.32530
	GRADIENT	-.00102	.00017	.01676	.99416

IA156A, AEDC PWT 16T-470, 0 T S W/SILTS (R8NN73) (10 MAY 80)

REFERENCE DATA

SREF = 2690.0000 SQ.FT. XMRP = 976.0000 IN. XT
LREF = 1290.3000 INCHES YMRP = .0000 IN. YT
BREF = 1290.3000 INCHES ZMRP = 400.0000 IN. ZT
SCALE = .0200

PARAMETRIC DATA

IB-ELV = 12.000 OB-ELV = 11.000
BDFLAP = .000 SPDBRK = .000
RUDDER = .000 SILTS = 1.000
MACH = .900 RN/L = 3.500

RUN NO. 1054/ 0 RN/L = 3.50 GRADIENT INTERVAL = -5.00/ 5.00

ALPHAL	BETAL	CALS	CYNLS	ALFLSU	BETLSU
-6.451	-5.790	.05820	-.02350	-6.26870	-5.88790
-6.382	-3.879	.05630	-.01940	-6.22100	-4.00810
-6.440	.295	.05250	-.01670	-6.38510	.09550
-6.197	4.437	.04740	-.01880	-6.27080	4.24430
-5.957	6.549	.04320	-.02380	-6.07160	6.37690
	GRADIENT	-.00107	.00007	-.00603	.99233

RUN NO. 1055/ 0 RN/L = 3.50 GRADIENT INTERVAL = -5.00/ 5.00

ALPHAL	BETAL	CALS	CYNLS	ALFLSU	BETLSU
-4.268	-5.945	.06000	-.03510	-4.06950	-6.00240
-4.433	-3.840	.05760	-.03000	-4.25180	-3.93960
-4.344	.514	.05180	-.02900	-4.30060	.31240
-3.826	4.441	.04890	-.03040	-3.94180	4.26940
-3.899	6.310	.04530	-.03220	-4.04160	6.16020
	GRADIENT	-.00106	-.00004	.03655	.99101

RUN NO. 1056/ 0 RN/L = 3.50 GRADIENT INTERVAL = -5.00/ 5.00

ALPHAL	BETAL	CALS	CYNLS	ALFLSU	BETLSU
-.291	-6.847	.06150	-.05450	-.09080	-6.79510
-.271	-4.643	.06020	-.04970	-.07040	-4.59140
-.290	-.302	.05380	-.04560	-.08970	-.25040
-.212	3.789	.04960	-.03990	-.01210	3.84130
-.194	5.968	.04780	-.03920	.00620	6.02020
	GRADIENT	-.00126	.00116	.00680	1.00000

RUN NO. 1058/ 0 RN/L = 3.51 GRADIENT INTERVAL = -5.00/ 5.00

ALPHAL	BETAL	CALS	CYNLS	ALFLSU	BETLSU
4.439	-5.719	.05960	-.05630	4.30000	-5.87260
4.287	-3.622	.05830	-.05080	4.18090	-3.79950
3.951	.217	.05360	-.04630	3.99810	.01590
4.096	4.154	.05030	-.03780	4.27370	4.04880
4.027	6.247	.04850	-.03530	4.22330	6.18120
	GRADIENT	-.00103	.00167	.01218	1.00932

IA156A, AEDC PWT 16T-470, O T S W/SILTS (R8NN74) (10 MAY 80)

REFERENCE DATA

SREF = 2690.0000 SQ.FT. XMRP = 976.0000 IN. XT
LREF = 1290.3000 INCHES YMRP = .0000 IN. YT
BREF = 1290.3000 INCHES ZMRP = 400.0000 IN. ZT
SCALE = .0200

PARAMETRIC DATA

IB-ELV = 12.000 OB-ELV = 11.000
BDFLAP = .000 SPDBRK = .000
RUDDER = .000 SILTS = 1.000
MACH = .950 RN/L = 3.500

RUN NO. 1059/ 0 RN/L = 3.50 GRADIENT INTERVAL = -5.00/ 5.00

ALPHAL	BETAL	CALS	CYNLS	ALFLSU	BETLSU
-8.720	-5.638	.06140	-.01490	-8.55350	-5.75760
-8.707	-3.571	.06000	-.00750	-8.56630	-3.72030
-8.556	.625	.05760	-.00570	-8.50590	.42580
-8.322	4.580	.05140	-.01060	-8.36920	4.37980
-8.326	6.524	.04480	-.01380	-8.40710	6.33500
	GRADIENT	-.00105	-.00037	.02408	.99377

RUN NO. 1060/ 0 RN/L = 3.50 GRADIENT INTERVAL = -5.00/ 5.00

ALPHAL	BETAL	CALS	CYNLS	ALFLSU	BETLSU
-6.549	-5.789	.06260	-.02570	-6.36610	-5.88180
-6.456	-3.870	.06190	-.02030	-6.29320	-3.99500
-6.511	.280	.05970	-.01820	-6.45260	.08330
-6.264	4.435	.05360	-.02260	-6.33370	4.24170
-5.926	6.557	.04820	-.02790	-6.03750	6.38490
	GRADIENT	-.00100	-.00028	-.00487	.99175

RUN NO. 1061/ 0 RN/L = 3.50 GRADIENT INTERVAL = -5.00/ 5.00

ALPHAL	BETAL	CALS	CYNLS	ALFLSU	BETLSU
-4.271	-5.930	.06570	-.03800	-4.07220	-5.98130
-4.482	-3.832	.06400	-.03240	-4.29990	-3.92660
-4.376	.511	.05880	-.03330	-4.32880	.31150
-3.845	4.452	.05460	-.03550	-3.95740	4.28030
-3.907	6.296	.04990	-.03650	-4.04570	6.14510
	GRADIENT	-.00114	-.00037	.04053	.99037

RUN NO. 1062/ 0 RN/L = 3.50 GRADIENT INTERVAL = -5.00/ 5.00

ALPHAL	BETAL	CALS	CYNLS	ALFLSU	BETLSU
-.299	-6.820	.06850	-.05930	-.10140	-6.76450
-.267	-4.653	.06770	-.05560	-.06890	-4.59790
-.265	-.320	.06190	-.05130	-.06720	-.26480
-.179	3.793	.05480	-.04270	.01850	3.84880
-.172	5.979	.05110	-.04170	.02600	6.03430
	GRADIENT	-.00153	.00152	.01026	1.00001

IA156A, AEDC PWT 16T-470, 0 T S W/SILTS (R8NN74) (10 MAY 80)

REFERENCE DATA

SREF =	2690.0000 SQ.FT.	XMRP =	976.0000 IN. XT		
LREF =	1290.3000 INCHES	YMRP =	.0000 IN. YT		
BREF =	1290.3000 INCHES	ZMRP =	400.0000 IN. ZT		
SCALE =	.0200				

PARAMETRIC DATA

IB-ELV =	12.000	OB-ELV =	11.000
BDFLAP =	.000	SPDBRK =	.000
RUDDER =	.000	SILTS =	1.000
MACH =	.950	RN/L =	3.500

RUN NO. 1063/ 0 RN/L = 3.50 GRADIENT INTERVAL = -5.00/ 5.00

ALPHAL	BETAL	CALS	CYNLS	ALFLSU	BETLSU
4.331	-5.769	.06570	-.05880	4.19380	-5.92170
4.300	-3.672	.06440	-.05260	4.19690	-3.84970
4.114	.317	.05950	-.04880	4.16920	.11870
4.077	4.110	.05570	-.03990	4.25540	4.00800
4.061	6.263	.05180	-.03650	4.25660	6.20210
	GRADIENT	-.00112	.00163	.00739	1.00955

IA156A, AEDC PWT 16T-470, 0 T S W/SILTS (R8NN75) (10 MAY 80)

REFERENCE DATA

SREF =	2690.0000 SQ.FT.	XMRP =	976.0000 IN. XT		
LREF =	1290.3000 INCHES	YMRP =	.0000 IN. YT		
BREF =	1290.3000 INCHES	ZMRP =	400.0000 IN. ZT		
SCALE =	.0200				

PARAMETRIC DATA

IB-ELV =	12.000	OB-ELV =	11.000
BDFLAP =	.000	SPDBRK =	.000
RUDDER =	.000	SILTS =	1.000
MACH =	1.050	RN/L =	3.500

RUN NO. 1064/ 0 RN/L = 3.50 GRADIENT INTERVAL = -5.00/ 5.00

ALPHAL	BETAL	CALS	CYNLS	ALFLSU	BETLSU
-8.783	-5.627	.08300	-.02630	-8.61300	-5.74010
-8.771	-3.540	.07990	-.02090	-8.62580	-3.68370
-8.653	.658	.07760	-.01500	-8.59760	.46200
-8.401	4.612	.07140	-.02000	-8.44290	4.41220
-8.386	6.569	.06500	-.02320	-8.46280	6.38030
	GRADIENT	-.00104	.00012	.02227	.99306

RUN NO. 1065/ 0 RN/L = 3.51 GRADIENT INTERVAL = -5.00/ 5.00

ALPHAL	BETAL	CALS	CYNLS	ALFLSU	BETLSU
-6.597	-5.798	.08490	-.03640	-6.41210	-5.88340
-6.488	-3.850	.08280	-.03130	-6.32130	-3.96690
-6.583	.316	.07790	-.02960	-6.51910	.12310
-6.278	4.470	.07340	-.03260	-6.34270	4.27690
-6.232	6.489	.06660	-.03520	-6.33390	6.31300
	GRADIENT	-.00113	-.00016	-.00259	.99088

IA156A, AEDC PWT 16T-470, O T S W/SILTS (R8NN75) (10 MAY 80)

REFERENCE DATA

SREF =	2690.0000 SQ.FT.	XMRP =	976.0000 IN. XT		
LREF =	1290.3000 INCHES	YMRP =	.0000 IN. YT		
BREF =	1290.3000 INCHES	ZMRP =	400.0000 IN. ZT		
SCALE =	.0200				

PARAMETRIC DATA

IB-ELV =	12.000	OB-ELV =	11.000
BDFLAP =	.000	SPDBRK =	.000
RUDDER =	.000	SILTS =	1.000
MACH =	1.050	RN/L =	3.500

RUN NO. 1066/ 0 RN/L = 3.50 GRADIENT INTERVAL = -5.00/ 5.00

ALPHAL	BETAL	CALS	CYNLS	ALFLSU	BETLSU
-4.315	-5.939	.08510	-.05100	-4.11580	-5.98340
-4.509	-3.831	.08330	-.04670	-4.32420	-3.91710
-4.430	.523	.07770	-.04660	-4.37710	.32650
-3.864	4.472	.07350	-.04640	-3.97220	4.29960
-3.940	6.330	.06900	-.04660	-4.07540	6.17750
	GRADIENT	-.00118	.00004	.04147	.98937

RUN NO. 1067/ 0 RN/L = 3.50 GRADIENT INTERVAL = -5.00/ 5.00

ALPHAL	BETAL	CALS	CYNLS	ALFLSU	BETLSU
-.310	-6.839	.08600	-.07120	-.11580	-6.77830
-.288	-4.662	.08520	-.06870	-.09350	-4.60160
-.329	-.292	.08060	-.06600	-.13480	-.23120
-.236	3.825	.07320	-.05590	-.04130	3.88610
-.217	6.006	.07040	-.05210	-.02240	6.06700
	GRADIENT	-.00141	.00150	.00599	1.00001

RUN NO. 1068/ 0 RN/L = 3.50 GRADIENT INTERVAL = -5.00/ 5.00

ALPHAL	BETAL	CALS	CYNLS	ALFLSU	BETLSU
4.363	-5.717	.08300	-.07510	4.23190	-5.87310
4.307	-3.620	.08160	-.06670	4.21040	-3.79930
4.112	.349	.07980	-.05890	4.17230	.15460
4.096	4.142	.07540	-.04870	4.27510	4.04510
4.075	6.288	.07180	-.04580	4.27120	6.23250
	GRADIENT	-.00080	.00232	.00820	1.01056

IA156A, AEDC PWT 16T-470, 0 T S W/SILTS (R8NN76) (10 MAY 80)

REFERENCE DATA

SREF = 2690.0000 SQ.FT. XMRP = 976.0000 IN. XT
LREF = 1290.3000 INCHES YMRP = .0000 IN. YT
BREF = 1290.3000 INCHES ZMRP = 400.0000 IN. ZT
SCALE = .0200

PARAMETRIC DATA

IB-ELV = 12.000 OB-ELV = 11.000
BDFLAP = .000 SPDBRK = .000
RUDDER = .000 SILTS = 1.000
MACH = 1.100 RN/L = 3.500

RUN NO. 1069/ 0 RN/L = 3.50 GRADIENT INTERVAL = -5.00/ 5.00

ALPHAL	BETAL	CALS	CYNLS	ALFLSU	BETLSU
-8.804	-5.732	.08260	-.02470	-8.63170	-5.84100
-8.806	-3.590	.08060	-.01790	-8.65830	-3.73080
-8.698	.568	.07650	-.01460	-8.63680	.37340
-8.418	4.591	.06880	-.02010	-8.45680	4.39010
-8.363	6.549	.06280	-.02230	-8.43750	6.35860
	GRADIENT	-.00144	-.00026	.02452	.99269

RUN NO. 1070/ 0 RN/L = 3.50 GRADIENT INTERVAL = -5.00/ 5.00

ALPHAL	BETAL	CALS	CYNLS	ALFLSU	BETLSU
-6.611	-5.809	.08370	-.03470	-6.42400	-5.89250
-6.519	-3.875	.08120	-.03030	-6.35040	-3.99000
-6.643	.348	.07520	-.02710	-6.57670	.15470
-6.318	4.486	.07080	-.03130	-6.38090	4.29120
-6.060	6.591	.06430	-.03480	-6.16420	6.41540
	GRADIENT	-.00124	-.00012	-.00382	.99050

RUN NO. 1071/ 0 RN/L = 3.50 GRADIENT INTERVAL = -5.00/ 5.00

ALPHAL	BETAL	CALS	CYNLS	ALFLSU	BETLSU
-4.353	-5.945	.08310	-.04630	-4.15270	-5.98690
-4.545	-3.839	.08050	-.04270	-4.35930	-3.92260
-4.446	.547	.07440	-.04370	-4.39070	.35030
-3.872	4.482	.07100	-.04540	-3.97810	4.30710
-3.930	6.324	.06720	-.04540	-4.06320	6.16940
	GRADIENT	-.00115	-.00032	.04481	.98885

RUN NO. 1072/ 0 RN/L = 3.50 GRADIENT INTERVAL = -5.00/ 5.00

ALPHAL	BETAL	CALS	CYNLS	ALFLSU	BETLSU
-.310	-6.865	.08300	-.06670	-.11600	-6.80130
-.299	-4.688	.08140	-.06420	-.10400	-4.62520
-.315	-.299	.07580	-.06230	-.12030	-.23620
-.225	3.827	.06810	-.05320	-.03030	3.89070
-.206	6.034	.06480	-.04940	-.01140	6.09720
	GRADIENT	-.00156	.00128	.00852	1.00004

IA156A, AEDC PWT 16T-470, O T S W/SILTS (R8NN76) (10 MAY 80)

REFERENCE DATA

SREF = 2690.0000 SQ.FT. XMRP = 976.0000 IN. XT
LREF = 1290.3000 INCHES YMRP = .0000 IN. YT
BREF = 1290.3000 INCHES ZMRP = 400.0000 IN. ZT
SCALE = .0200

PARAMETRIC DATA

IB-ELV = 12.000 OB-ELV = 11.000
BDFLAP = .000 SPDBRK = .000
RUDDER = .000 SILTS = 1.000
MACH = 1.100 RN/L = 3.500

RUN NO. 1073/ 0 RN/L = 3.51 GRADIENT INTERVAL = -5.00/ 5.00

ALPHAL	BETAL	CALS	CYNLS	ALFLSU	BETLSU
4.523	-5.612	.07910	-.06950	4.39630	-5.77230
4.329	-3.607	.07780	-.06380	4.23330	-3.78830
4.152	.354	.07510	-.05740	4.21390	.15960
4.132	4.121	.07050	-.04630	4.31270	4.02530
4.088	6.275	.06670	-.04360	4.28520	6.22080
	GRADIENT	-.00094	.00226	.01014	1.01085

IA156A, AEDC PWT 16T-470, O T S W/SILTS (R8NN77) (10 MAY 80)

REFERENCE DATA

SREF = 2690.0000 SQ.FT. XMRP = 976.0000 IN. XT
LREF = 1290.3000 INCHES YMRP = .0000 IN. YT
BREF = 1290.3000 INCHES ZMRP = 400.0000 IN. ZT
SCALE = .0200

PARAMETRIC DATA

IB-ELV = 8.000 OB-ELV = 11.000
BDFLAP = .000 SPDBRK = .000
RUDDER = .000 SILTS = 1.000
MACH = .600 RN/L = 3.500

RUN NO. 1077/ 0 RN/L = 3.50 GRADIENT INTERVAL = -5.00/ 5.00

ALPHAL	BETAL	CALS	CYNLS	ALFLSU	BETLSU
-8.510	-7.764	.05000	-.02530	-8.42310	-7.95640
-8.352	-5.706	.04780	-.01770	-8.29160	-5.90820
-8.357	-3.692	.04670	-.01180	-8.33720	-3.90260
-8.209	.401	.04220	-.00570	-8.28730	.20570
-8.059	4.368	.04090	-.00880	-8.21630	4.22950
-8.024	6.312	.03670	-.01360	-8.20700	6.20640
-8.023	8.337	.03270	-.01820	-8.21910	8.25920
	GRADIENT	-.00072	.00038	.01498	1.00888

RUN NO. 1078/ 0 RN/L = 3.50 GRADIENT INTERVAL = -5.00/ 5.00

ALPHAL	BETAL	CALS	CYNLS	ALFLSU	BETLSU
-6.339	-7.850	.05040	-.03370	-6.22240	-8.02610
-6.288	-5.816	.04860	-.02730	-6.19710	-6.00660
-6.187	-3.904	.04680	-.02300	-6.13250	-4.10800
-6.218	.166	.04250	-.01810	-6.29080	-.03150
-6.022	4.265	.04080	-.02080	-6.19650	4.14760
-5.932	6.263	.03720	-.02410	-6.12710	6.18300
-5.725	8.413	.03490	-.02760	-5.93040	8.36650
	GRADIENT	-.00073	.00027	-.00780	1.01054

IA156A, AEDC PWT 16T-470, O T S W/SILTS (R8NN77) (10 MAY 80)

REFERENCE DATA

SREF = 2690.0000 SQ.FT. XMRP = 976.0000 IN. XT
LREF = 1290.3000 INCHES YMRP = .0000 IN. YT
BREF = 1290.3000 INCHES ZMRP = 400.0000 IN. ZT
SCALE = .0200

PARAMETRIC DATA

IB-ELV = 8.000 OB-ELV = 11.000
BDFLAP = .000 SPDBRK = .000
RUDDER = .000 SILTS = 1.000
MACH = .600 RN/L = 3.500

RUN NO. 1079/ 0 RN/L = 3.50 GRADIENT INTERVAL = -5.00/ 5.00

ALPHAL	BETAL	CALS	CYNLS	ALFLSU	BETLSU
-4.093	-7.954	.05160	-.04250	-3.94510	-8.10500
-4.309	-5.855	.04940	-.03580	-4.18440	-6.02510
-4.300	-3.804	.04720	-.03190	-4.21070	-3.99460
-4.075	.268	.04280	-.03130	-4.15090	.06090
-3.704	4.312	.04100	-.03130	-3.90160	4.23920
-3.789	6.121	.03820	-.03150	-3.99630	6.08180
-3.829	8.124	.03650	-.03260	-4.03960	8.11040
	GRADIENT	-.00076	.00007	.03808	1.01452

RUN NO. 1080/ 0 RN/L = 3.50 GRADIENT INTERVAL = -5.00/ 5.00

ALPHAL	BETAL	CALS	CYNLS	ALFLSU	BETLSU
-.278	-8.612	.05250	-.05670	-.08170	-8.68830
-.263	-6.387	.05150	-.05220	-.06640	-6.46400
-.242	-4.402	.05000	-.04890	-.04590	-4.47940
-.218	-.253	.04470	-.04610	-.02190	-.33010
-.162	3.863	.04110	-.03920	.03430	3.78570
-.155	5.967	.03910	-.03610	.04180	5.89210
-.155	8.081	.03910	-.03700	.04140	8.00440
	GRADIENT	-.00108	.00117	.00970	1.00006

RUN NO. 1081/ 0 RN/L = 3.50 GRADIENT INTERVAL = -5.00/ 5.00

ALPHAL	BETAL	CALS	CYNLS	ALFLSU	BETLSU
4.427	-7.872	.05090	-.05760	4.21820	-7.89200
4.355	-5.774	.04930	-.05250	4.14980	-5.81990
4.292	-3.770	.04800	-.04920	4.09890	-3.85340
4.089	.163	.04400	-.04310	4.00710	-.03070
4.125	4.200	.04100	-.03360	4.20890	4.00680
4.064	6.320	.03990	-.02980	4.18700	6.14970
4.044	8.320	.04000	-.02860	4.18710	8.16630
	GRADIENT	-.00088	.00196	.01396	.98635

IA156A, AEDC PWT 16T-470, O T S W/SILTS (R8NN77) (10 MAY 80)

REFERENCE DATA

SREF = 2690.0000 SQ.FT. XMRP = 976.0000 IN. XT
LREF = 1290.3000 INCHES YMRP = .0000 IN. YT
BREF = 1290.3000 INCHES ZMRP = 400.0000 IN. ZT
SCALE = .0200

PARAMETRIC DATA

IB-ELV = 8.000 OB-ELV = 11.000
BDFLAP = .000 SPDBRK = .000
RUDDER = .000 SILTS = 1.000
MACH = .600 RN/L = 3.500

RUN NO. 1082/ 0 RN/L = 3.50 GRADIENT INTERVAL = -5.00/ 5.00

ALPHAL	BETAL	CALS	CYNLS	ALFLSU	BETLSU
6.512	-7.906	.05030	-.05110	6.30910	-7.96130
6.507	-5.845	.04890	-.04540	6.31430	-5.92970
6.477	-3.771	.04780	-.04070	6.30470	-3.89260
6.174	.278	.04460	-.03540	6.09790	.08170
6.089	4.210	.04080	-.02640	6.13620	4.00510
6.035	6.134	.04000	-.02250	6.12250	5.94260
6.090	8.411	.04010	-.02060	6.20620	8.23580
	GRADIENT	-.00088	.00179	-.02126	.98944

RUN NO. 1083/ 0 RN/L = 3.50 GRADIENT INTERVAL = -5.00/ 5.00

ALPHAL	BETAL	CALS	CYNLS	ALFLSU	BETLSU
8.481	-7.733	.04920	-.04170	8.28860	-7.81750
8.387	-5.672	.04810	-.03620	8.20820	-5.78230
8.379	-3.694	.04770	-.03100	8.22400	-3.83520
8.255	.288	.04460	-.02710	8.17930	.09130
8.279	4.340	.03990	-.01690	8.30290	4.13140
8.202	6.344	.03940	-.01270	8.26480	6.14340
8.197	8.392	.03960	-.01150	8.28750	8.20250
	GRADIENT	-.00097	.00176	.00988	.99164

IA156A, AEDC PWT 16T-470, 0 T S W/SILTS (R8NN78) (10 MAY 80)

REFERENCE DATA

SREF =	2690.0000 SQ.FT.	XMRP =	976.0000 IN. XT		
LREF =	1290.3000 INCHES	YMRP =	.0000 IN. YT		
BREF =	1290.3000 INCHES	ZMRP =	400.0000 IN. ZT		
SCALE =	.0200				

PARAMETRIC DATA

IB-ELV =	8.000	OB-ELV =	11.000
BDFLAP =	.000	SPDBRK =	.000
RUDDER =	.000	SILTS =	1.000
MACH =	.800	RN/L =	3.500

RUN NO. 1084/ 0 RN/L = 3.50 GRADIENT INTERVAL = -5.00/ 5.00

ALPHAL	BETAL	CALS	CYNLS	ALFLSU	BETLSU
-8.532	-5.654	.05140	-.01400	-8.37580	-5.79100
-8.547	-3.610	.04960	-.00760	-8.41960	-3.77340
-8.396	.372	.04660	-.00180	-8.35750	.16850
-8.192	4.550	.04180	-.00630	-8.25640	4.35260
-8.180	6.459	.03610	-.01190	-8.27720	6.27550
	GRADIENT	-.00096	.00015	.02004	.99593

RUN NO. 1085/ 0 RN/L = 3.50 GRADIENT INTERVAL = -5.00/ 5.00

ALPHAL	BETAL	CALS	CYNLS	ALFLSU	BETLSU
-6.432	-5.847	.05260	-.02440	-6.25670	-5.95820
-6.327	-3.896	.05060	-.02040	-6.17520	-4.03740
-6.376	.247	.04640	-.01590	-6.33410	.04370
-6.140	4.400	.04240	-.01820	-6.22630	4.21060
-6.077	6.401	.03750	-.02160	-6.19880	6.23320
	GRADIENT	-.00099	.00026	-.00615	.99425

RUN NO. 1086/ 0 RN/L = 3.50 GRADIENT INTERVAL = -5.00/ 5.00

ALPHAL	BETAL	CALS	CYNLS	ALFLSU	BETLSU
-4.289	-5.971	.05360	-.03470	-4.09470	-6.04420
-4.396	-3.854	.05160	-.03070	-4.22190	-3.96660
-4.293	.468	.04590	-.02870	-4.26250	.26300
-3.798	4.398	.04270	-.02920	-3.92430	4.23320
-3.844	6.269	.03940	-.03010	-3.99710	6.12850
	GRADIENT	-.00108	.00019	.03531	.99343

RUN NO. 1087/ 0 RN/L = 3.50 GRADIENT INTERVAL = -5.00/ 5.00

ALPHAL	BETAL	CALS	CYNLS	ALFLSU	BETLSU
-.275	-6.739	.05580	-.05260	-.07080	-6.70020
-.261	-4.611	.05340	-.04770	-.05680	-4.57310
-.250	-.304	.04750	-.04320	-.04560	-.26600
-.186	3.792	.04330	-.03840	.01820	3.83080
-.176	5.903	.04210	-.03600	.02830	5.94180
	GRADIENT	-.00120	.00111	.00887	1.00002

IA156A, AEDC PWT 16T-470, 0 T S W/SILTS (R8NN78) (10 MAY 80)

REFERENCE DATA

SREF =	2690.0000 SQ.FT.	XMRP =	976.0000 IN. XT		
LREF =	1290.3000 INCHES	YMRP =	.0000 IN. YT		
BREF =	1290.3000 INCHES	ZMRP =	400.0000 IN. ZT		
SCALE =	.0200				

PARAMETRIC DATA

IB-ELV =	8.000	OB-ELV =	11.000
BDFLAP =	.000	SPDBRK =	.000
RUDDER =	.000	SILTS =	1.000
MACH =	.800	RN/L =	3.500

RUN NO. 1088/ 0 RN/L = 3.50 GRADIENT INTERVAL = -5.00/ 5.00

ALPHAL	BETAL	CALS	CYNLS	ALFLSU	BETLSU
4.419	-5.725	.05350	-.05470	4.26990	-5.86920
4.276	-3.615	.05150	-.04970	4.15750	-3.78510
4.007	.236	.04630	-.04440	4.04130	.03080
4.104	4.165	.04430	-.03570	4.27490	4.04830
4.019	6.258	.04320	-.03240	4.21160	6.17980
	GRADIENT	-.00092	.00180	.01524	1.00692

RUN NO. 1089/ 0 RN/L = 3.50 GRADIENT INTERVAL = -5.00/ 5.00

ALPHAL	BETAL	CALS	CYNLS	ALFLSU	BETLSU
6.411	-5.637	.05240	-.04900	6.29190	-5.80750
6.456	-3.672	.05170	-.04210	6.37270	-3.86250
6.083	.291	.04800	-.03750	6.12020	.08630
6.016	4.136	.04410	-.02810	6.16240	3.98820
6.032	6.332	.04320	-.02450	6.20650	6.21910
	GRADIENT	-.00097	.00179	-.02712	1.00542

IA156A, AEDC PWT 16T-470, 0 T S W/SILTS (R8NN79) (10 MAY 80)

REFERENCE DATA

SREF =	2690.0000 SQ.FT.	XMRP =	976.0000 IN. XT		
LREF =	1290.3000 INCHES	YMRP =	.0000 IN. YT		
BREF =	1290.3000 INCHES	ZMRP =	400.0000 IN. ZT		
SCALE =	.0200				

PARAMETRIC DATA

IB-ELV =	8.000	OB-ELV =	11.000
BDFLAP =	.000	SPDBRK =	.000
RUDDER =	.000	SILTS =	1.000
MACH =	.900	RN/L =	3.500

RUN NO. 1090/ 0 RN/L = 3.50 GRADIENT INTERVAL = -5.00/ 5.00

ALPHAL	BETAL	CALS	CYNLS	ALFLSU	BETLSU
-8.544	-5.766	.05630	-.01450	-8.37770	-5.88810
-8.599	-3.538	.05390	-.00790	-8.46100	-3.69200
-8.459	.400	.05260	-.00440	-8.40720	.19970
-8.252	4.608	.04560	-.00630	-8.30370	4.40830
-8.249	6.516	.04040	-.01050	-8.33370	6.32790
	GRADIENT	-.00103	.00019	.01937	.99443

IA156A, AEDC PWT 16T-470, 0 T S W/SILTS (R8NN79) (10 MAY 80)

REFERENCE DATA

SREF =	2690.0000 SQ.FT.	XMRP =	976.0000 IN. XT		
LREF =	1290.3000 INCHES	YMRP =	.0000 IN. YT		
BREF =	1290.3000 INCHES	ZMRP =	400.0000 IN. ZT		
SCALE =	.0200				

PARAMETRIC DATA

IB-ELV =	8.000	OB-ELV =	11.000
BDFLAP =	.000	SPDBRK =	.000
RUDDER =	.000	SILTS =	1.000
MACH =	.900	RN/L =	3.500

RUN NO. 1091/ 0 RN/L = 3.50 GRADIENT INTERVAL = -5.00/ 5.00

ALPHAL	BETAL	CALS	CYNLS	ALFLSU	BETLSU
-6.467	-5.796	.05760	-.02370	-6.28450	-5.89400
-6.382	-3.874	.05550	-.01930	-6.22100	-4.00290
-6.442	.274	.05270	-.01620	-6.38690	.07530
-6.199	4.431	.04720	-.01810	-6.27260	4.23750
-6.119	6.433	.04270	-.02200	-6.22950	6.25890
	GRADIENT	-.00100	.00014	-.00620	.99231

RUN NO. 1092/ 0 RN/L = 3.50 GRADIENT INTERVAL = -5.00/ 5.00

ALPHAL	BETAL	CALS	CYNLS	ALFLSU	BETLSU
-4.183	-5.960	.05960	-.03550	-3.98420	-6.01490
-4.438	-3.828	.05680	-.02950	-4.25700	-3.92690
-4.363	.515	.05110	-.02810	-4.31910	.31280
-3.819	4.439	.04820	-.02990	-3.93470	4.26840
-3.905	6.309	.04500	-.03160	-4.04750	6.15940
	GRADIENT	-.00105	-.00004	.03804	.99105

RUN NO. 1093/ 0 RN/L = 3.50 GRADIENT INTERVAL = -5.00/ 5.00

ALPHAL	BETAL	CALS	CYNLS	ALFLSU	BETLSU
-.301	-6.824	.06080	-.05480	-.10060	-6.77200
-.281	-4.660	.05990	-.05020	-.08100	-4.60770
-.308	-.325	.05280	-.04500	-.10760	-.27300
-.230	3.780	.04900	-.03920	-.02950	3.83160
-.213	5.970	.04740	-.03860	-.01310	6.02170
	GRADIENT	-.00129	.00130	.00599	1.00000

RUN NO. 1094/ 0 RN/L = 3.50 GRADIENT INTERVAL = -5.00/ 5.00

ALPHAL	BETAL	CALS	CYNLS	ALFLSU	BETLSU
4.407	-5.704	.05900	-.05590	4.26850	-5.85760
4.252	-3.601	.05710	-.04980	4.14680	-3.77890
3.938	.239	.05280	-.04570	3.98650	.03760
4.084	4.157	.05000	-.03730	4.26210	4.05140
4.014	6.271	.04800	-.03500	4.21010	6.20530
	GRADIENT	-.00091	.00161	.01505	1.00936

IA156A, AEDC PWT 16T-470, 0 T S W/SILTS (R8NN80) (10 MAY 80)

REFERENCE DATA

SREF =	2690.0000 SQ.FT.	XMRP =	976.0000 IN. XT		
LREF =	1290.3000 INCHES	YMRP =	.0000 IN. YT		
BREF =	1290.3000 INCHES	ZMRP =	400.0000 IN. ZT		
SCALE =	.0200				

PARAMETRIC DATA

IB-ELV =	8.000	OB-ELV =	11.000
BDFLAP =	.000	SPDBRK =	.000
RUDDER =	.000	SILTS =	1.000
MACH =	.950	RN/L =	3.500

RUN NO. 1095/ 0 RN/L = 3.50 GRADIENT INTERVAL = -5.00/ 5.00

ALPHAL	BETAL	CALS	CYNLS	ALFLSU	BETLSU
-8.793	-5.801	.06120	-.01570	-8.62500	-5.91860
-8.641	-3.531	.05900	-.00810	-8.50080	-3.68060
-8.585	.400	.05760	-.00540	-8.52910	.20290
-8.332	4.679	.05050	-.01000	-8.38100	4.47950
-8.313	6.519	.04430	-.01320	-8.39470	6.33090
	GRADIENT	-.00104	-.00024	.01489	.99403

RUN NO. 1096/ 0 RN/L = 3.50 GRADIENT INTERVAL = -5.00/ 5.00

ALPHAL	BETAL	CALS	CYNLS	ALFLSU	BETLSU
-6.556	-5.792	.06250	-.02590	-6.37250	-5.88480
-6.465	-3.858	.06090	-.02000	-6.30130	-3.98260
-6.534	.292	.05910	-.01770	-6.47510	.09480
-6.241	4.433	.05310	-.02280	-6.31110	4.24020
-6.184	6.467	.04700	-.02560	-6.29100	6.29200
	GRADIENT	-.00094	-.00034	-.00120	.99176

RUN NO. 1097/ 0 RN/L = 3.50 GRADIENT INTERVAL = -5.00/ 5.00

ALPHAL	BETAL	CALS	CYNLS	ALFLSU	BETLSU
-4.227	-5.998	.06530	-.03850	-4.02760	-6.04670
-4.485	-3.819	.06280	-.03230	-4.30290	-3.91270
-4.401	.516	.05870	-.03270	-4.35430	.31650
-3.848	4.451	.05400	-.03490	-3.96080	4.27970
-3.932	6.310	.04950	-.03600	-4.07170	6.15880
	GRADIENT	-.00106	-.00031	.04047	.99039

RUN NO. 1098/ 0 RN/L = 3.51 GRADIENT INTERVAL = -5.00/ 5.00

ALPHAL	BETAL	CALS	CYNLS	ALFLSU	BETLSU
-.325	-6.853	.06760	-.05950	-.12740	-6.79710
-.290	-4.640	.06670	-.05630	-.09210	-4.58490
-.294	-.347	.06130	-.05110	-.09670	-.29180
-.212	3.794	.05430	-.04250	-.01430	3.85000
-.209	5.990	.05120	-.04160	-.01090	6.04550
	GRADIENT	-.00147	.00163	.00916	1.00001

IA156A, AEDC PWT 16T-470, O T S W/SILTS (R8NN80) (10 MAY 80)

REFERENCE DATA

SREF = 2690.0000 SQ.FT. XMRP = 976.0000 IN. XT
LREF = 1290.3000 INCHES YMRP = .0000 IN. YT
BREF = 1290.3000 INCHES ZMRP = 400.0000 IN. ZT
SCALE = .0200

PARAMETRIC DATA

IB-ELV = 8.000 OB-ELV = 11.000
BDFLAP = .000 SPDBRK = .000
RUDDER = .000 SILTS = 1.000
MACH = .950 RN/L = 3.500

RUN NO. 1099/ 0 RN/L = 3.50 GRADIENT INTERVAL = -5.00/ 5.00

ALPHAL	BETAL	CALS	CYNLS	ALFLSU	BETLSU
4.428	-5.648	.06560	-.05800	4.29380	-5.80390
4.268	-3.665	.06390	-.05190	4.16520	-3.84310
4.072	.319	.05900	-.04830	4.12690	.12170
4.074	4.115	.05540	-.04020	4.25160	4.01260
4.055	6.256	.05170	-.03690	4.25080	6.19440
	GRADIENT	-.00109	.00150	.01093	1.00952

IA156A, AEDC PWT 16T-470, O T S W/SILTS (R8NN81) (10 MAY 80)

REFERENCE DATA

SREF = 2690.0000 SQ.FT. XMRP = 976.0000 IN. XT
LREF = 1290.3000 INCHES YMRP = .0000 IN. YT
BREF = 1290.3000 INCHES ZMRP = 400.0000 IN. ZT
SCALE = .0200

PARAMETRIC DATA

IB-ELV = 8.000 OB-ELV = 11.000
BDFLAP = .000 SPDBRK = .000
RUDDER = .000 SILTS = 1.000
MACH = 1.050 RN/L = 3.500

RUN NO. 1102/ 0 RN/L = 3.50 GRADIENT INTERVAL = -5.00/ 5.00

ALPHAL	BETAL	CALS	CYNLS	ALFLSU	BETLSU
-8.766	-5.728	.08070	-.02620	-8.59510	-5.83910
-8.776	-3.600	.07880	-.02120	-8.63060	-3.74220
-8.683	.542	.07620	-.01390	-8.62420	.34640
-8.431	4.570	.06940	-.01930	-8.47160	4.37050
-8.372	6.555	.06350	-.02210	-8.44840	6.36680
	GRADIENT	-.00115	.00024	.01938	.99296

RUN NO. 1103/ 0 RN/L = 3.50 GRADIENT INTERVAL = -5.00/ 5.00

ALPHAL	BETAL	CALS	CYNLS	ALFLSU	BETLSU
-6.594	-5.775	.08370	-.03650	-6.40830	-5.86010
-6.518	-3.860	.08150	-.03150	-6.35170	-3.97750
-6.609	.319	.07650	-.02890	-6.54450	.12540
-6.320	4.474	.07170	-.03190	-6.38530	4.28090
-6.068	6.590	.06550	-.03610	-6.17420	6.41580
	GRADIENT	-.00118	-.00005	-.00407	.99088

IA156A, AEDC PWT 16T-470, 0 T S W/SILTS (R8NN81) (10 MAY 80)

REFERENCE DATA

SREF =	2690.0000 SQ.FT.	XMRP =	976.0000 IN. XT		
LREF =	1290.3000 INCHES	YMRP =	.0000 IN. YT		
BREF =	1290.3000 INCHES	ZMRP =	400.0000 IN. ZT		
SCALE =	.0200				

PARAMETRIC DATA

IB-ELV =	8.000	OB-ELV =	11.000
BDFLAP =	.000	SPDBRK =	.000
RUDDER =	.000	SILTS =	1.000
MACH =	1.050	RN/L =	3.500

RUN NO. 1104/ 0 RN/L = 3.50 GRADIENT INTERVAL = -5.00/ 5.00

ALPHAL	BETAL	CALS	CYNLS	ALFLSU	BETLSU
-4.314	-5.945	.08390	-.05090	-4.11510	-5.98800
-4.534	-3.818	.08210	-.04590	-4.34940	-3.90440
-4.455	.539	.07680	-.04470	-4.40250	.34220
-3.882	4.471	.07230	-.04590	-3.99030	4.29860
-3.948	6.311	.06790	-.04600	-4.08310	6.15840
	GRADIENT	-.00118	.00000	.04232	.98934

RUN NO. 1105/ 0 RN/L = 3.49 GRADIENT INTERVAL = -5.00/ 5.00

ALPHAL	BETAL	CALS	CYNLS	ALFLSU	BETLSU
-.342	-6.848	.08560	-.07160	-.14770	-6.78690
-.318	-4.670	.08480	-.06920	-.12340	-4.60950
-.357	-.306	.08010	-.06620	-.16280	-.24530
-.273	3.819	.07270	-.05620	-.07860	3.88010
-.254	6.013	.06990	-.05230	-.05950	6.07390
	GRADIENT	-.00142	.00152	.00514	1.00001

RUN NO. 1106/ 0 RN/L = 3.49 GRADIENT INTERVAL = -5.00/ 5.00

ALPHAL	BETAL	CALS	CYNLS	ALFLSU	BETLSU
4.469	-5.621	.08230	-.07410	4.34200	-5.78040
4.254	-3.518	.08120	-.06720	4.15950	-3.69900
4.004	.280	.07920	-.05970	4.06160	.08400
4.089	4.192	.07500	-.04870	4.26870	4.09610
4.058	6.282	.07150	-.04570	4.25440	6.22640
	GRADIENT	-.00081	.00240	.01436	1.01106

IA156A, AEDC PWT 16T-470, 0 T S W/SILTS (R8NN82) (10 MAY 80)

REFERENCE DATA

SREF = 2690.0000 SQ.FT. XMRP = 976.0000 IN. XT
LREF = 1290.3000 INCHES YMRP = .0000 IN. YT
BREF = 1290.3000 INCHES ZMRP = 400.0000 IN. ZT
SCALE = .0200

PARAMETRIC DATA

IB-ELV = 8.000 OB-ELV = 11.000
BOFLAP = .000 SPDBRK = .000
RUDDER = .000 SILTS = 1.000
MACH = 1.100 RN/L = 3.500

RUN NO. 1107/ 0 RN/L = 3.51 GRADIENT INTERVAL = -5.00/ 5.00

ALPHAL	BETAL	CALS	CYNLS	ALFLSU	BETLSU
-8.829	-5.626	.08200	-.02530	-8.65670	-5.73640
-8.803	-3.546	.08010	-.01900	-8.65550	-3.68740
-8.716	.477	.07570	-.01500	-8.65250	.28290
-8.428	4.638	.06770	-.02020	-8.46830	4.43770
-8.397	6.570	.06190	-.02170	-8.47210	6.37990
	GRADIENT	-.00152	-.00015	.02300	.99287

RUN NO. 1108/ 0 RN/L = 3.50 GRADIENT INTERVAL = -5.00/ 5.00

ALPHAL	BETAL	CALS	CYNLS	ALFLSU	BETLSU
-6.633	-5.787	.08300	-.03450	-6.44580	-5.87020
-6.556	-3.859	.08050	-.03000	-6.38710	-3.97480
-6.656	.356	.07450	-.02850	-6.58970	.16270
-6.309	4.473	.06960	-.03160	-6.37230	4.27810
-6.248	6.481	.06350	-.03410	-6.34840	6.30330
	GRADIENT	-.00131	-.00019	.00158	.99047

RUN NO. 1109/ 0 RN/L = 3.51 GRADIENT INTERVAL = -5.00/ 5.00

ALPHAL	BETAL	CALS	CYNLS	ALFLSU	BETLSU
-4.539	-5.866	.08230	-.04540	-4.33960	-5.91200
-4.536	-3.831	.07970	-.04380	-4.34930	-3.91430
-4.463	.523	.07360	-.04340	-4.40720	.32660
-3.869	4.463	.06980	-.04550	-3.97580	4.28840
-3.971	6.334	.06630	-.04540	-4.10460	6.17900
	GRADIENT	-.00120	-.00020	.04401	.98875

RUN NO. 1110/ 0 RN/L = 3.50 GRADIENT INTERVAL = -5.00/ 5.00

ALPHAL	BETAL	CALS	CYNLS	ALFLSU	BETLSU
-.350	-6.874	.08300	-.06770	-.15510	-6.81100
-.330	-4.691	.08090	-.06450	-.13510	-4.62810
-.357	-.248	.07510	-.06260	-.16250	-.18420
-.254	3.839	.06740	-.05320	-.05990	3.90230
-.240	6.024	.06420	-.04930	-.04520	6.08750
	GRADIENT	-.00158	.00131	.00860	1.00001

IA156A, AEDC PWT 16T-470, O T S W/SILTS (R8NN82) (10 MAY 80)

REFERENCE DATA

SREF = 2690.0000 SQ.FT. XMRP = 976.0000 IN. XT
LREF = 1290.3000 INCHES YMRP = .0000 IN. YT
BREF = 1290.3000 INCHES ZMRP = 400.0000 IN. ZT
SCALE = .0200

PARAMETRIC DATA

IB-ELV = 8.000 OB-ELV = 11.000
BDFLAP = .000 SPDBRK = .000
RUDDER = .000 SILTS = 1.000
MACH = 1.100 RN/L = 3.500

RUN NO. 1111/ 0 RN/L = 3.50 GRADIENT INTERVAL = -5.00/ 5.00

ALPHAL	BETAL	CALS	CYNLS	ALFLSU	BETLSU
4.493	-5.629	.07850	-.06910	4.36690	-5.79000
4.332	-3.548	.07730	-.06370	4.23860	-3.73010
3.980	.297	.07460	-.05800	4.03920	.10140
4.110	4.190	.07020	-.04650	4.29120	4.09530
4.085	6.302	.06610	-.04350	4.28230	6.24750
	GRADIENT	-.00092	.00222	.00692	1.01135

IA156A, AEDC PWT 16T-470, O T S W/SILTS (R8NN83) (10 MAY 80)

REFERENCE DATA

SREF = 2690.0000 SQ.FT. XMRP = 976.0000 IN. XT
LREF = 1290.3000 INCHES YMRP = .0000 IN. YT
BREF = 1290.3000 INCHES ZMRP = 400.0000 IN. ZT
SCALE = .0200

PARAMETRIC DATA

IB-ELV = 8.000 OB-ELV = 9.000
BDFLAP = .000 SPDBRK = .000
RUDDER = .000 SILTS = 1.000
MACH = .600 RN/L = 3.500

RUN NO. 1114/ 0 RN/L = 3.51 GRADIENT INTERVAL = -5.00/ 5.00

ALPHAL	BETAL	CALS	CYNLS	ALFLSU	BETLSU
-8.496	-7.745	.05000	-.02470	-8.40780	-7.93600
-8.351	-5.791	.04810	-.01850	-8.28810	-5.99170
-8.364	-3.683	.04590	-.01170	-8.34050	-3.89180
-8.223	.410	.04270	-.00520	-8.30060	.21450
-8.052	4.360	.04080	-.00890	-8.21200	4.22280
-8.022	6.321	.03630	-.01360	-8.20270	6.21330
-8.039	8.336	.03290	-.01790	-8.23430	8.25610
	GRADIENT	-.00063	.00036	.01594	1.00887

RUN NO. 1115/ 0 RN/L = 3.51 GRADIENT INTERVAL = -5.00/ 5.00

ALPHAL	BETAL	CALS	CYNLS	ALFLSU	BETLSU
-6.339	-7.847	.05050	-.03340	-6.22230	-8.02280
-6.294	-5.820	.04860	-.02700	-6.20300	-6.01020
-6.194	-3.911	.04660	-.02240	-6.13910	-4.11400
-6.220	.164	.04260	-.01820	-6.29190	-.03390
-6.010	4.271	.04090	-.02090	-6.18250	4.15140
-5.944	6.264	.03750	-.02360	-6.13750	6.18170
-5.732	8.419	.03480	-.02710	-5.93680	8.37150
	GRADIENT	-.00070	.00018	-.00526	1.01023

IA156A, AEDC PWT 16T-470, 0 T S W/SILTS (R8NN83) (10 MAY 80)

REFERENCE DATA

SREF = 2690.0000 SQ.FT. XMRP = 976.0000 IN. XT
LREF = 1290.3000 INCHES YMRP = .0000 IN. YT
BREF = 1290.3000 INCHES ZMRP = 400.0000 IN. ZT
SCALE = .0200

PARAMETRIC DATA

IB-ELV = 8.000 OB-ELV = 9.000
BDFLAP = .000 SPDBRK = .000
RUDDER = .000 SILTS = 1.000
MACH = .600 RN/L = 3.500

RUN NO. 1117/ 0 RN/L = 3.49 GRADIENT INTERVAL = -5.00/ 5.00

ALPHAL	BETAL	CALS	CYNLS	ALFLSU	BETLSU
-4.089	-7.872	.05140	-.04240	-3.94190	-8.02310
-4.310	-5.852	.04910	-.03520	-4.18530	-6.02120
-4.299	-3.792	.04700	-.03170	-4.21000	-3.98310
-4.079	.251	.04260	-.03110	-4.15330	.05390
-3.703	4.311	.04090	-.03100	-3.90090	4.23800
-3.778	6.116	.03820	-.03150	-3.98490	6.07600
-3.821	8.126	.03660	-.03260	-4.03190	8.11220
	GRADIENT	-.00075	.00009	.03816	1.01455

RUN NO. 1118/ 0 RN/L = 3.50 GRADIENT INTERVAL = -5.00/ 5.00

ALPHAL	BETAL	CALS	CYNLS	ALFLSU	BETLSU
-.283	-8.657	.05240	-.05709	-.08680	-8.73290
-.268	-6.578	.05150	-.05270	-.07200	-6.65390
-.251	-4.289	.04980	-.04870	-.05490	-4.36530
-.223	-.222	.04470	-.04610	-.02690	-.29740
-.168	3.860	.04100	-.03910	.02850	3.78460
-.161	5.955	.03930	-.03610	.03520	5.87940
-.161	8.066	.03900	-.03670	.03550	7.99100
	GRADIENT	-.00108	.00118	.01024	1.00010

RUN NO. 1119/ 0 RN/L = 3.49 GRADIENT INTERVAL = -5.00/ 5.00

ALPHAL	BETAL	CALS	CYNLS	ALFLSU	BETLSU
4.313	-8.050	.05140	-.05830	4.10320	-8.06570
4.324	-5.737	.04960	-.05300	4.11800	-5.78060
4.304	-3.739	.04770	-.04860	4.11120	-3.82320
4.055	.230	.04330	-.04300	3.97480	.03470
4.124	4.248	.04100	-.03340	4.20680	4.05360
4.067	6.335	.03990	-.02990	4.18940	6.16290
4.038	8.328	.03980	-.02860	4.18040	8.17300
	GRADIENT	-.00084	.00190	.01206	.98622

IA156A, AEDC PWT 16T-470, O T S W/SILTS (R8NN83) (10 MAY 80)

REFERENCE DATA

SREF =	2690.0000 SQ.FT.	XMRP =	976.0000 IN. XT		
LREF =	1290.3000 INCHES	YMRP =	.0000 IN. YT		
BREF =	1290.3000 INCHES	ZMRP =	400.0000 IN. ZT		
SCALE =	.0200				

PARAMETRIC DATA

IB-ELV =	8.000	OB-ELV =	9.000
BDFLAP =	.000	SPDBRK =	.000
RUDDER =	.000	SILTS =	1.000
MACH =	.600	RN/L =	3.500

RUN NO. 1120/ 0 RN/L = 3.49 GRADIENT INTERVAL = -5.00/ 5.00

ALPHAL	BETAL	CALS	CYNLS	ALFLSU	BETLSU
6.523	-7.915	.05030	-.05060	6.31920	-7.97010
6.496	-5.859	.04900	-.04520	6.30220	-5.94170
6.479	-3.829	.04810	-.04100	6.30410	-3.94730
6.206	.224	.04470	-.03520	6.12520	.02860
6.088	4.208	.04090	-.02600	6.13400	4.00270
6.030	6.132	.04010	-.02250	6.11560	5.93940
6.073	8.419	.04030	-.02060	6.18740	8.24170
	GRADIENT	-.00090	.00187	-.02123	.98915

RUN NO. 1121/ 0 RN/L = 3.50 GRADIENT INTERVAL = -5.00/ 5.00

ALPHAL	BETAL	CALS	CYNLS	ALFLSU	BETLSU
8.476	-7.741	.04920	-.04140	8.28260	-7.82390
8.386	-5.677	.04830	-.03590	8.20680	-5.78700
8.373	-3.694	.04770	-.03120	8.21670	-3.83460
8.251	.276	.04450	-.02710	8.17460	.08000
8.267	4.339	.04010	-.01660	8.28850	4.12930
8.214	6.352	.03930	-.01280	8.27400	6.14980
8.177	8.385	.03950	-.01170	8.26670	8.19500
	GRADIENT	-.00095	.00182	.00901	.99144

IA156A, AEDC PWT 16T-470, 0 T S W/SILTS (R8NN85) (10 MAY 80)

REFERENCE DATA

SREF = 2690.0000 SQ.FT. XMRP = 976.0000 IN. XT
LREF = 1290.3000 INCHES YMRP = .0000 IN. YT
BREF = 1290.3000 INCHES ZMRP = 400.0000 IN. ZT
SCALE = .0200

PARAMETRIC DATA

IB-ELV = 8.000 OB-ELV = 9.000
BDFLAP = .000 SPDBRK = .000
RUDDER = .000 SILTS = 1.000
MACH = .800 RN/L = 3.500

RUN NO. 1132/ 0 RN/L = 3.51 GRADIENT INTERVAL = -5.00/ 5.00

ALPHAL	BETAL	CALS	CYNLS	ALFLSU	BETLSU
-8.559	-5.638	.05130	-.01380	-8.40220	-5.82400
-8.523	-3.679	.04940	-.00860	-8.39440	-3.84220
-8.410	.449	.04640	-.00340	-8.37380	.24420
-8.209	4.474	.04140	-.00710	-8.27200	4.27640
-8.206	6.464	.03630	-.01180	-8.30270	6.28030
	GRADIENT	-.00098	.00019	.01497	.99568

RUN NO. 1133/ 0 RN/L = 3.50 GRADIENT INTERVAL = -5.00/ 5.00

ALPHAL	BETAL	CALS	CYNLS	ALFLSU	BETLSU
-6.422	-5.854	.05260	-.02570	-6.24660	-5.96460
-6.327	-3.896	.05040	-.02100	-6.17470	-4.03770
-6.387	.265	.04590	-.01690	-6.34610	.06150
-6.135	4.396	.04190	-.01800	-6.22080	4.20710
-6.086	6.386	.03780	-.02140	-6.20780	6.21780
	GRADIENT	-.00103	.00036	-.00560	.99426

RUN NO. 1134/ 0 RN/L = 3.50 GRADIENT INTERVAL = -5.00/ 5.00

ALPHAL	BETAL	CALS	CYNLS	ALFLSU	BETLSU
-4.204	-5.959	.05370	-.03630	-4.00940	-6.03010
-4.404	-3.851	.05140	-.03130	-4.22970	-3.96330
-4.298	.477	.04600	-.02820	-4.26730	.27160
-3.823	4.404	.04260	-.02840	-3.94980	4.23990
-3.878	6.239	.04000	-.02940	-4.03030	6.09860
	GRADIENT	-.00107	.00036	.03319	.99348

RUN NO. 1135/ 0 RN/L = 3.50 GRADIENT INTERVAL = -5.00/ 5.00

ALPHAL	BETAL	CALS	CYNLS	ALFLSU	BETLSU
-.288	-6.718	.05590	-.05180	-.08440	-6.67960
-.279	-4.406	.05320	-.04620	-.07480	-4.36820
-.275	-.294	.04770	-.04240	-.07120	-.25590
-.207	3.771	.04380	-.03820	-.00290	3.80960
-.184	5.914	.04260	-.03630	.02040	5.95210
	GRADIENT	-.00115	.00098	.00878	.99999

IA156A, AEDC PWT 16T-470, 0 T S W/SILTS (R8NN85) (10 MAY 80)

REFERENCE DATA

SREF = 2690.0000 SQ.FT. XMRP = 976.0000 IN. XT
LREF = 1290.3000 INCHES YMRP = .0000 IN. YT
BREF = 1290.3000 INCHES ZMRP = 400.0000 IN. ZT
SCALE = .0200

PARAMETRIC DATA

IB-ELV = 8.000 OB-ELV = 9.000
BDFLAP = .000 SPDBRK = .000
RUDDER = .000 SILTS = 1.000
MACH = .800 RN/L = 3.500

RUN NO. 1136/ 0 RN/L = 3.50 GRADIENT INTERVAL = -5.00/ 5.00

ALPHAL	BETAL	CALS	CYNLS	ALFLSU	BETLSU
4.305	-5.817	.05350	-.05550	4.15330	-5.95880
4.302	-3.695	.05150	-.05050	4.18250	-3.86510
4.153	.302	.04610	-.04390	4.19060	.09840
4.082	4.119	.04450	-.03520	4.25280	4.00070
4.048	6.260	.04330	-.03210	4.23990	6.18150
	GRADIENT	-.00090	.00196	.00894	1.00651

RUN NO. 1137/ 0 RN/L = 3.50 GRADIENT INTERVAL = -5.00/ 5.00

ALPHAL	BETAL	CALS	CYNLS	ALFLSU	BETLSU
6.482	-5.740	.05260	-.04930	6.36280	-5.90940
6.460	-3.694	.05130	-.04260	6.37690	-3.88390
6.108	.286	.04690	-.03750	6.14450	.08160
6.032	4.234	.04440	-.02880	6.17930	4.08800
6.085	6.206	.04330	-.02500	6.25750	6.09090
	GRADIENT	-.00087	.00174	-.02497	1.00555

IA156A, AEDC PWT 16T-470, 0 T S W/SILTS (R8NN86) (10 MAY 80)

REFERENCE DATA

SREF = 2690.0000 SQ.FT. XMRP = 976.0000 IN. XT
LREF = 1290.3000 INCHES YMRP = .0000 IN. YT
BREF = 1290.3000 INCHES ZMRP = 400.0000 IN. ZT
SCALE = .0200

PARAMETRIC DATA

IB-ELV = 8.000 OB-ELV = 9.000
BDFLAP = .000 SPDBRK = .000
RUDDER = .000 SILTS = 1.000
MACH = .900 RN/L = 3.500

RUN NO. 1139/ 0 RN/L = 3.50 GRADIENT INTERVAL = -5.00/ 5.00

ALPHAL	BETAL	CALS	CYNLS	ALFLSU	BETLSU
-8.482	-5.787	.05590	-.01580	-8.31540	-5.90840
-8.611	-3.554	.05340	-.00900	-8.47380	-3.70850
-8.472	.393	.05180	-.00520	-8.42010	.19300
-8.256	4.605	.04510	-.00690	-8.30760	4.40490
-8.255	6.511	.04020	-.01090	-8.34040	6.32300
	GRADIENT	-.00102	.00025	.02044	.99444

IA156A, AEDC PWT 16T-470, 0 T S W/SILTS (R8NN86) (10 MAY 80)

REFERENCE DATA

SREF =	2690.0000 SQ.FT.	XMRP =	976.0000 IN. XT		
LREF =	1290.3000 INCHES	YMRP =	.0000 IN. YT		
BREF =	1290.3000 INCHES	ZMRP =	400.0000 IN. ZT		
SCALE =	.0200				

PARAMETRIC DATA

IB-ELV =	8.000	OB-ELV =	9.000
BDFLAP =	.000	SPDBRK =	.000
RUDDER =	.000	SILTS =	1.000
MACH =	.900	RN/L =	3.500

RUN NO. 1140/ 0 RN/L = 3.50 GRADIENT INTERVAL = -5.00/ 5.00

ALPHAL	BETAL	CALS	CYNLS	ALFLSU	BETLSU
-6.473	-5.814	.05720	-.02460	-6.29040	-5.91140
-6.386	-3.887	.05480	-.02020	-6.22500	-4.01620
-6.457	.270	.05130	-.01690	-6.40130	.07100
-6.217	4.420	.04620	-.01800	-6.29030	4.22670
-5.900	6.545	.04230	-.02360	-6.01480	6.37330
	GRADIENT	-.00104	.00026	-.00787	.99228

RUN NO. 1141/ 0 RN/L = 3.50 GRADIENT INTERVAL = -5.00/ 5.00

ALPHAL	BETAL	CALS	CYNLS	ALFLSU	BETLSU
-4.241	-5.942	.05910	-.03520	-4.04250	-5.99890
-4.450	-3.837	.05640	-.03000	-4.26880	-3.93570
-4.364	.516	.05030	-.02840	-4.32040	.31420
-3.844	4.448	.04740	-.02950	-3.96040	4.27760
-3.908	6.293	.04480	-.03160	-4.05110	6.14390
	GRADIENT	-.00109	.00007	.03635	.99107

RUN NO. 1142/ 0 RN/L = 3.50 GRADIENT INTERVAL = -5.00/ 5.00

ALPHAL	BETAL	CALS	CYNLS	ALFLSU	BETLSU
-.328	-6.806	.06050	-.05400	-.12780	-6.75410
-.308	-4.654	.05930	-.04880	-.10790	-4.60230
-.348	-.339	.05300	-.04330	-.14810	-.28740
-.270	3.780	.04880	-.03960	-.07010	3.83210
-.245	5.947	.04750	-.03920	-.04470	5.99940
	GRADIENT	-.00125	.00109	.00437	1.00002

RUN NO. 1143/ 0 RN/L = 3.50 GRADIENT INTERVAL = -5.00/ 5.00

ALPHAL	BETAL	CALS	CYNLS	ALFLSU	BETLSU
4.405	-5.667	.05880	-.05560	4.26690	-5.82120
4.274	-3.714	.05710	-.05020	4.16640	-3.89060
4.107	.298	.05190	-.04530	4.15830	.09770
4.051	4.058	.05010	-.03740	4.22790	3.95140
4.023	6.245	.04810	-.03480	4.21870	6.17900
	GRADIENT	-.00090	.00164	.00780	1.00875

IA156A, AEDC PWT 16T-470, 0 T S W/SILTS (R8NN87) (10 MAY 80)

REFERENCE DATA

SREF =	2690.0000 SQ.FT.	XMRP =	976.0000 IN. XT		
LREF =	1290.3000 INCHES	YMRP =	.0000 IN. YT		
BREF =	1290.3000 INCHES	ZMRP =	400.0000 IN. ZT		
SCALE =	.0200				

PARAMETRIC DATA

IB-ELV =	8.000	OB-ELV =	9.000
BDFLAP =	.000	SPDBRK =	.000
RUDDER =	.000	SILTS =	1.000
MACH =	.950	RN/L =	3.500

RUN NO. 1144/ 0 RN/L = 3.50 GRADIENT INTERVAL = -5.00/ 5.00

ALPHAL	BETAL	CALS	CYNLS	ALFLSU	BETLSU
-8.748	-5.663	.06060	-.01600	-8.58110	-5.78290
-8.694	-3.586	.05820	-.00930	-8.55270	-3.73540
-8.576	.608	.05590	-.00630	-8.52580	.40940
-8.350	4.573	.05020	-.00950	-8.39770	4.37300
-8.307	6.493	.04400	-.01300	-8.38820	6.30410
	GRADIENT	-.00098	-.00002	.01888	.99377

RUN NO. 1145/ 0 RN/L = 3.50 GRADIENT INTERVAL = -5.00/ 5.00

ALPHAL	BETAL	CALS	CYNLS	ALFLSU	BETLSU
-6.544	-5.800	.06270	-.02680	-6.36130	-5.89260
-6.455	-3.880	.06070	-.02200	-6.29170	-4.00450
-6.524	.282	.05790	-.02050	-6.46530	.08500
-6.283	4.428	.05230	-.02250	-6.35270	4.23500
-5.933	6.543	.04660	-.02700	-6.04420	6.37080
	GRADIENT	-.00101	-.00006	-.00736	.99173

RUN NO. 1146/ 0 RN/L = 3.49 GRADIENT INTERVAL = -5.00/ 5.00

ALPHAL	BETAL	CALS	CYNLS	ALFLSU	BETLSU
-4.278	-5.933	.06450	-.03890	-4.07960	-5.98380
-4.486	-3.835	.06260	-.03390	-4.30350	-3.92890
-4.393	.515	.05770	-.03400	-4.34580	.31470
-3.861	4.451	.05310	-.03410	-3.97390	4.27960
-3.927	6.292	.04890	-.03480	-4.06630	6.14080
	GRADIENT	-.00115	-.00002	.03891	.99035

RUN NO. 1147/ 0 RN/L = 3.49 GRADIENT INTERVAL = -5.00/ 5.00

ALPHAL	BETAL	CALS	CYNLS	ALFLSU	BETLSU
-.338	-6.806	.06700	-.05820	-.14010	-6.75040
-.305	-4.645	.06600	-.05430	-.10750	-4.58960
-.316	-.329	.06090	-.04940	-.11800	-.27350
-.244	3.784	.05440	-.04200	-.04660	3.83950
-.230	5.983	.05110	-.04120	-.03270	6.03870
	GRADIENT	-.00137	.00146	.00715	1.00001

IA156A, AEDC PWT 16T-470, 0 T S W/SILTS (R8NN87) (10 MAY 80)

REFERENCE DATA

SREF = 2690.0000 SQ.FT. XMRP = 976.0000 IN. XT
LREF = 1290.3000 INCHES YMRP = .0000 IN. YT
BREF = 1290.3000 INCHES ZMRP = 400.0000 IN. ZT
SCALE = .0200

PARAMETRIC DATA

IB-ELV = 8.000 OB-ELV = 9.000
BDFLAP = .000 SPDBRK = .000
RUDDER = .000 SILTS = 1.000
MACH = .950 RN/L = 3.500

RUN NO. 1148/ 0 RN/L = 3.49 GRADIENT INTERVAL = -5.00/ 5.00

ALPHAL	BETAL	CALS	CYNLS	ALFLSU	BETLSU
4.320	-5.774	.06540	-.05930	4.18360	-5.92750
4.277	-3.669	.06350	-.05160	4.17490	-3.84750
4.073	.313	.05870	-.04710	4.12830	.11490
4.072	4.120	.05470	-.03880	4.25000	4.01750
4.055	6.266	.05150	-.03600	4.25070	6.20450
	GRADIENT	-.00113	.00164	.00948	1.00959

IA156A, AEDC PWT 16T-470, 0 T S W/SILTS (R8NN88) (10 MAY 80)

REFERENCE DATA

SREF = 2690.0000 SQ.FT. XMRP = 976.0000 IN. XT
LREF = 1290.3000 INCHES YMRP = .0000 IN. YT
BREF = 1290.3000 INCHES ZMRP = 400.0000 IN. ZT
SCALE = .0200

PARAMETRIC DATA

IB-ELV = 8.000 OB-ELV = 9.000
BDFLAP = .000 SPDBRK = .000
RUDDER = .000 SILTS = 1.000
MACH = 1.050 RN/L = 3.500

RUN NO. 1149/ 0 RN/L = 3.50 GRADIENT INTERVAL = -5.00/ 5.00

ALPHAL	BETAL	CALS	CYNLS	ALFLSU	BETLSU
-8.836	-5.658	.08160	-.02700	-8.66570	-5.77000
-8.805	-3.562	.07900	-.02110	-8.66010	-3.70560
-8.685	.654	.07630	-.01510	-8.62990	.45830
-8.429	4.619	.06990	-.01960	-8.47130	4.41930
-8.397	6.559	.06380	-.02290	-8.47370	6.37020
	GRADIENT	-.00111	.00020	.02291	.99308

RUN NO. 1150/ 0 RN/L = 3.50 GRADIENT INTERVAL = -5.00/ 5.00

ALPHAL	BETAL	CALS	CYNLS	ALFLSU	BETLSU
-6.601	-5.790	.08370	-.03750	-6.41570	-5.87520
-6.484	-3.861	.08150	-.03320	-6.31690	-3.97790
-6.601	.308	.07640	-.03060	-6.53650	.11510
-6.306	4.473	.07170	-.03280	-6.37090	4.27990
-6.239	6.479	.06520	-.03550	-6.34120	6.30260
	GRADIENT	-.00118	.00005	-.00649	.99091

IA156A, AEDC PWT 16T-470, 0 T S W/SILTS (R8NN88) (10 MAY 80)

REFERENCE DATA

SREF = 2690.0000 SQ.FT. XMRP = 976.0000 IN. XT
LREF = 1290.3000 INCHES YMRP = .0000 IN. YT
BREF = 1290.3000 INCHES ZMRP = 400.0000 IN. ZT
SCALE = .0200

PARAMETRIC DATA

IB-ELV = 8.000 OB-ELV = 9.000
BDFLAP = .000 SPDBRK = .000
RUDDER = .000 SILTS = 1.000
MACH = 1.050 RN/L = 3.500

RUN NO. 1151/ 0 RN/L = 3.50 GRADIENT INTERVAL = -5.00/ 5.00

ALPHAL	BETAL	CALS	CYNLS	ALFLSU	BETLSU
-4.321	-5.919	.08430	-.05080	-4.12210	-5.96290
-4.538	-3.827	.08210	-.04650	-4.35320	-3.91260
-4.447	.534	.07600	-.04640	-4.39470	.33710
-3.882	4.462	.07160	-.04610	-3.99050	4.28990
-3.961	6.321	.06750	-.04650	-4.09600	6.16890
	GRADIENT	-.00127	.00005	.04278	.98931

RUN NO. 1152/ 0 RN/L = 3.50 GRADIENT INTERVAL = -5.00/ 5.00

ALPHAL	BETAL	CALS	CYNLS	ALFLSU	BETLSU
-.345	-6.849	.08580	-.07060	-.15110	-6.78790
-.329	-4.662	.08480	-.06800	-.13420	-4.60130
-.374	-.287	.07950	-.06480	-.17920	-.22640
-.282	3.818	.07260	-.05500	-.08710	3.87890
-.256	6.010	.06990	-.05160	-.06140	6.07040
	GRADIENT	-.00144	.00152	.00538	1.00000

RUN NO. 1153/ 0 RN/L = 3.50 GRADIENT INTERVAL = -5.00/ 5.00

ALPHAL	BETAL	CALS	CYNLS	ALFLSU	BETLSU
4.425	-5.613	.08210	-.07110	4.29760	-5.77210
4.277	-3.600	.08100	-.06500	4.18200	-3.77980
3.989	.179	.07910	-.05990	4.04060	-.01810
4.089	4.143	.07490	-.04940	4.26850	4.04610
4.072	6.283	.07140	-.04600	4.26780	6.22680
	GRADIENT	-.00079	.00202	.01155	1.01085

IA156A, AEDC PWT 16T-470, 0 T S W/SILTS (R8NN89) (10 MAY 80)

REFERENCE DATA

SREF = 2690.0000 SQ.FT. XMRP = 976.0000 IN. XT
LREF = 1290.3000 INCHES YMRP = .0000 IN. YT
BREF = 1290.3000 INCHES ZMRP = 400.0000 IN. ZT
SCALE = .0200

PARAMETRIC DATA

IB-ELV = 8.000 OB-ELV = 9.000
BDFLAP = .000 SPDBRK = .000
RUDDER = .000 SILTS = 1.000
MACH = 1.100 RN/L = 3.500

RUN NO. 1154/ 0 RN/L = 3.50 GRADIENT INTERVAL = -5.00/ 5.00

ALPHAL	BETAL	CALS	CYNLS	ALFLSU	BETLSU
-8.821	-5.637	.08090	-.02650	-8.64930	-5.74790
-8.801	-3.550	.07940	-.01880	-8.65410	-3.69150
-8.714	.456	.07520	-.01480	-8.65000	.26190
-8.434	4.646	.06740	-.01880	-8.47430	4.44530
-8.392	6.555	.06170	-.02130	-8.46640	6.36440
	GRADIENT	-.00147	-.00001	.02209	.99289

RUN NO. 1155/ 0 RN/L = 3.50 GRADIENT INTERVAL = -5.00/ 5.00

ALPHAL	BETAL	CALS	CYNLS	ALFLSU	BETLSU
-6.624	-5.782	.08280	-.03480	-6.43760	-5.86450
-6.564	-3.865	.07970	-.03030	-6.39520	-3.98090
-6.643	.323	.07370	-.02860	-6.57670	.12960
-6.331	4.489	.06900	-.03170	-6.39450	4.29420
-6.235	6.475	.06220	-.03390	-6.33600	6.29660
	GRADIENT	-.00128	-.00017	.00005	.99056

RUN NO. 1156/ 0 RN/L = 3.50 GRADIENT INTERVAL = -5.00/ 5.00

ALPHAL	BETAL	CALS	CYNLS	ALFLSU	BETLSU
-4.345	-5.927	.08220	-.04730	-4.14450	-5.96790
-4.567	-3.827	.07930	-.04290	-4.38070	-3.91120
-4.455	.532	.07270	-.04370	-4.39980	.33500
-3.871	4.476	.06900	-.04510	-3.97840	4.30170
-3.956	6.326	.06540	-.04490	-4.08920	6.17100
	GRADIENT	-.00125	-.00026	.04753	.98886

RUN NO. 1157/ 0 RN/L = 3.50 GRADIENT INTERVAL = -5.00/ 5.00

ALPHAL	BETAL	CALS	CYNLS	ALFLSU	BETLSU
-.356	-6.850	.08290	-.06680	-.16120	-6.78640
-.333	-4.698	.08070	-.06340	-.13890	-4.63530
-.360	-.273	.07450	-.06070	-.16560	-.20960
-.268	3.824	.06740	-.05220	-.07370	3.88720
-.247	6.018	.06420	-.04870	-.05220	6.08080
	GRADIENT	-.00156	.00130	.00747	1.00002

IA156A, AEDC PWT 16T-470, 0 T S W/SILTS (R8NN89) (10 MAY 80)

REFERENCE DATA

SREF = 2690.0000 SQ.FT. XMRP = 976.0000 IN. XT
LREF = 1290.3000 INCHES YMRP = .0000 IN. YT
BREF = 1290.3000 INCHES ZMRP = 400.0000 IN. ZT
SCALE = .0200

PARAMETRIC DATA

IB-ELV = 8.000 OB-ELV = 9.000
BDFLAP = .000 SPDBRK = .000
RUDDER = .000 SILTS = 1.000
MACH = 1.100 RN/L = 3.500

RUN NO. 1158/ 0 RN/L = 3.50 GRADIENT INTERVAL = -5.00/ 5.00

ALPHAL	BETAL	CALS	CYNLS	ALFLSU	BETLSU
4.356	-5.729	.07880	-.06810	4.22650	-5.88690
4.320	-3.621	.07740	-.06240	4.22550	-3.80210
4.131	.356	.07430	-.05800	4.19340	.16110
4.113	4.141	.06990	-.04700	4.29370	4.04520
4.100	6.300	.06660	-.04410	4.29680	6.24640
	GRADIENT	-.00096	.00198	.00865	1.01097

IA156A, AEDC PWT 16T-470, 0 T S W/SILTS (R8NN90) (10 MAY 80)

REFERENCE DATA

SREF = 2690.0000 SQ.FT. XMRP = 976.0000 IN. XT
LREF = 1290.3000 INCHES YMRP = .0000 IN. YT
BREF = 1290.3000 INCHES ZMRP = 400.0000 IN. ZT
SCALE = .0200

PARAMETRIC DATA

IB-ELV = 8.000 OB-ELV = 9.000
BDFLAP = .000 SPDBRK = .000
RUDDER = .000 SILTS = 1.000
MACH = 1.150 RN/L = 3.500

RUN NO. 1159/ 0 RN/L = 3.49 GRADIENT INTERVAL = -5.00/ 5.00

ALPHAL	BETAL	CALS	CYNLS	ALFLSU	BETLSU
-8.834	-5.684	.07950	-.02280	-8.65960	-5.79430
-8.817	-3.571	.07740	-.01560	-8.66720	-3.71300
-8.727	.664	.07250	-.01090	-8.66710	.46620
-8.427	4.632	.06560	-.01610	-8.46680	4.42850
-8.389	6.570	.06000	-.02040	-8.46330	6.37680
	GRADIENT	-.00144	-.00005	.02416	.99255

RUN NO. 1160/ 0 RN/L = 3.50 GRADIENT INTERVAL = -5.00/ 5.00

ALPHAL	BETAL	CALS	CYNLS	ALFLSU	BETLSU
-6.617	-5.809	.08050	-.03140	-6.42720	-5.89130
-6.527	-3.876	.07790	-.02720	-6.35530	-3.99130
-6.631	.315	.07160	-.02470	-6.56180	.11950
-6.312	4.496	.06670	-.02900	-6.37430	4.29840
-6.230	6.481	.06100	-.03230	-6.33050	6.30050
	GRADIENT	-.00134	-.00021	-.00229	.99023

IA156A, AEDC PWT 16T-470, 0 T S W/SILTS (R8NN90) (10 MAY 80)

REFERENCE DATA

SREF = 2690.0000 SQ.FT. XMRP = 976.0000 IN. XT
LREF = 1290.3000 INCHES YMRP = .0000 IN. YT
BREF = 1290.3000 INCHES ZMRP = 400.0000 IN. ZT
SCALE = .0200

PARAMETRIC DATA

IB-ELV = 8.000 OB-ELV = 9.000
BDFLAP = .000 SPDBRK = .000
RUDDER = .000 SILTS = 1.000
MACH = 1.150 RN/L = 3.500

RUN NO. 1161/ 0 RN/L = 3.50 GRADIENT INTERVAL = -5.00/ 5.00

ALPHAL	BETAL	CALS	CYNLS	ALFLSU	BETLSU
-4.315	-5.948	.08020	-.04440	-4.11230	-5.98830
-4.533	-3.839	.07740	-.04090	-4.34440	-3.92230
-4.454	.541	.07110	-.04000	-4.39710	.34170
-3.860	4.473	.06720	-.04230	-3.96720	4.29580
-3.949	6.344	.06340	-.04280	-4.08340	6.18610
	GRADIENT	-.00123	-.00016	.04430	.98849

RUN NO. 1162/ 0 RN/L = 3.49 GRADIENT INTERVAL = -5.00/ 5.00

ALPHAL	BETAL	CALS	CYNLS	ALFLSU	BETLSU
-.321	-6.884	.08140	-.06420	-.12470	-6.81830
-.282	-4.725	.07980	-.06150	-.08570	-4.65970
-.312	-.264	.07440	-.05910	-.11560	-.19890
-.221	3.828	.06690	-.05140	-.02530	3.89310
-.212	6.033	.06390	-.04810	-.01620	6.09860
	GRADIENT	-.00150	.00117	.00686	.99999

RUN NO. 1163/ 0 RN/L = 3.50 GRADIENT INTERVAL = -5.00/ 5.00

ALPHAL	BETAL	CALS	CYNLS	ALFLSU	BETLSU
4.408	-5.724	.07870	-.06810	4.27810	-5.88480
4.359	-3.596	.07730	-.06290	4.26520	-3.78010
4.187	.370	.07450	-.05660	4.25280	.17360
4.181	4.181	.06990	-.04540	4.36490	4.08590
4.079	6.246	.06670	-.04330	4.27920	6.19310
	GRADIENT	-.00095	.00225	.01271	1.01144

IA156A, AEDC PWT 16T-470, 0 T S W/SILTS (R8NN91) (10 MAY 80)

REFERENCE DATA

SREF = 2690.0000 SQ.FT. XMRP = 976.0000 IN. XT
LREF = 1290.3000 INCHES YMRP = .0000 IN. YT
BREF = 1290.3000 INCHES ZMRP = 400.0000 IN. ZT
SCALE = .0200

PARAMETRIC DATA

IB-ELV = 8.000 OB-ELV = 9.000
BDFLAP = .000 SPDBRK = .000
RUDDER = .000 SILTS = 1.000
MACH = 1.250 RN/L = 3.500

RUN NO. 1164/ 0 RN/L = 3.50 GRADIENT INTERVAL = -5.00/ 5.00

ALPHAL	BETAL	CALS	CYNLS	ALFLSU	BETLSU
-8.789	-5.722	.07640	-.01780	-8.60340	-5.83670
-8.759	-3.613	.07520	-.01100	-8.59980	-3.76180
-8.685	.652	.07040	-.00810	-8.61990	.44420
-8.399	4.647	.06300	-.01300	-8.43930	4.43260
-8.395	6.586	.05760	-.01570	-8.47200	6.38240
	GRADIENT	-.00147	-.00023	.01916	.99203

RUN NO. 1165/ 0 RN/L = 3.50 GRADIENT INTERVAL = -5.00/ 5.00

ALPHAL	BETAL	CALS	CYNLS	ALFLSU	BETLSU
-6.605	-5.865	.07720	-.02670	-6.40420	-5.95070
-6.500	-3.909	.07470	-.02310	-6.31800	-4.02920
-6.587	.314	.07000	-.02070	-6.51360	.10900
-6.286	4.506	.06380	-.02490	-6.35080	4.29730
-6.226	6.505	.05880	-.02790	-6.33150	6.31410
	GRADIENT	-.00130	-.00021	-.00395	.98957

RUN NO. 1166/ 0 RN/L = 3.49 GRADIENT INTERVAL = -5.00/ 5.00

ALPHAL	BETAL	CALS	CYNLS	ALFLSU	BETLSU
-4.292	-5.983	.07750	-.03850	-4.07790	-6.02270
-4.489	-3.833	.07420	-.03430	-4.28920	-3.91940
-4.405	.537	.06900	-.03420	-4.34360	.32830
-3.838	4.484	.06500	-.03830	-3.94930	4.29690
-3.934	6.364	.06060	-.03870	-4.07450	6.19690
	GRADIENT	-.00111	-.00047	.03992	.98756

RUN NO. 1167/ 0 RN/L = 3.50 GRADIENT INTERVAL = -5.00/ 5.00

ALPHAL	BETAL	CALS	CYNLS	ALFLSU	BETLSU
-.284	-6.918	.07880	-.06040	-.07770	-6.84800
-.242	-4.713	.07700	-.05800	-.03610	-4.64280
-.245	-.326	.07150	-.05460	-.03900	-.25580
-.174	3.831	.06390	-.04830	.03270	3.90090
-.172	6.070	.06080	-.04640	.03460	6.14040
	GRADIENT	-.00153	.00113	.00797	1.00002

IA156A, AEDC PWT 16T-470, 0 T S W/SILTS (R8NN91) (10 MAY 80)

REFERENCE DATA

SREF =	2690.0000 SQ.FT.	XMRP =	976.0000 IN. XT		
LREF =	1290.3000 INCHES	YMRP =	.0000 IN. YT		
BREF =	1290.3000 INCHES	ZMRP =	400.0000 IN. ZT		
SCALE =	.0200				

PARAMETRIC DATA

IB-ELV =	8.000	OB-ELV =	9.000
BDFLAP =	.000	SPDBRK =	.000
RUDDER =	.000	SILTS =	1.000
MACH =	1.250	RN/L =	3.500

RUN NO. 1168/ 0 RN/L = 3.49 GRADIENT INTERVAL = -5.00/ 5.00

ALPHAL	BETAL	CALS	CYNLS	ALFLSU	BETLSU
4.585	-5.584	.07620	-.06390	4.45280	-5.75690
4.441	-3.640	.07490	-.05890	4.34210	-3.83420
4.259	.365	.07140	-.05300	4.32740	.15810
4.175	4.093	.06620	-.04240	4.36880	3.99310
4.195	6.336	.06290	-.04010	4.40560	6.28110
	GRADIENT	-.00112	.00213	.00336	1.01200

IA156A, AEDC PWT 16T-470, 0 T S W/SILTS (R8NN92) (10 MAY 80)

REFERENCE DATA

SREF =	2690.0000 SQ.FT.	XMRP =	976.0000 IN. XT		
LREF =	1290.3000 INCHES	YMRP =	.0000 IN. YT		
BREF =	1290.3000 INCHES	ZMRP =	400.0000 IN. ZT		
SCALE =	.0200				

PARAMETRIC DATA

IB-ELV =	8.000	OB-ELV =	5.000
BDFLAP =	.000	SPDBRK =	.000
RUDDER =	.000	SILTS =	1.000
MACH =	.600	RN/L =	3.500

RUN NO. 1173/ 0 RN/L = 3.50 GRADIENT INTERVAL = -5.00/ 5.00

ALPHAL	BETAL	CALS	CYNLS	ALFLSU	BETLSU
-8.295	-7.824	.04960	-.02560	-8.20570	-8.01570
-8.373	-5.684	.04750	-.01720	-8.31370	-5.88670
-8.348	-3.696	.04520	-.01160	-8.32690	-3.90560
-8.225	.384	.04190	-.00500	-8.30500	.18860
-8.048	4.343	.03980	-.00780	-8.20800	4.20560
-8.029	6.302	.03590	-.01240	-8.21150	6.19600
-7.833	8.386	.03340	-.01810	-8.03030	8.31030
	GRADIENT	-.00067	.00048	.01474	1.00903

RUN NO. 1174/ 0 RN/L = 3.49 GRADIENT INTERVAL = -5.00/ 5.00

ALPHAL	BETAL	CALS	CYNLS	ALFLSU	BETLSU
-6.336	-7.836	.05010	-.03330	-6.22160	-8.01370
-6.284	-5.840	.04830	-.02680	-6.19460	-6.03220
-6.215	-3.888	.04620	-.02230	-6.16290	-4.09310
-6.225	.197	.04190	-.01750	-6.29960	-.00080
-6.037	4.278	.04030	-.01930	-6.21340	4.16130
-5.796	6.334	.03710	-.02340	-5.99340	6.25940
-5.936	8.265	.03480	-.02540	-6.14090	8.21480
	GRADIENT	-.00072	.00037	-.00619	1.01081

IA156A, AEDC PWT 16T-470, O T S W/SILTS (R8NN92) (10 MAY 80)

REFERENCE DATA

SREF = 2690.0000 SQ.FT. XMRP = 976.0000 IN. XT
LREF = 1290.3000 INCHES YMRP = .0000 IN. YT
BREF = 1290.3000 INCHES ZMRP = 400.0000 IN. ZT
SCALE = .0200

PARAMETRIC DATA

IB-ELV = 8.000 OB-ELV = 5.000
BDFLAP = .000 SPDBRK = .000
RUDDER = .000 SILTS = 1.000
MACH = .600 RN/L = 3.500

RUN NO. 1175/ 0 RN/L = 3.49 GRADIENT INTERVAL = -5.00/ 5.00

ALPHAL	BETAL	CALS	CYNLS	ALFLSU	BETLSU
-4.122	-7.957	.05110	-.04200	-3.97440	-8.10750
-4.318	-5.844	.04860	-.03520	-4.19320	-6.01420
-4.316	-3.799	.04680	-.03150	-4.22670	-3.98980
-4.082	.254	.04230	-.03030	-4.15700	.05680
-3.701	4.324	.04050	-.03020	-3.89840	4.25170
-3.652	6.120	.03840	-.03130	-3.85950	6.08430
-3.825	8.111	.03690	-.03250	-4.03580	8.09740
	GRADIENT	-.00078	.00016	.04043	1.01458

RUN NO. 1176/ 0 RN/L = 3.49 GRADIENT INTERVAL = -5.00/ 5.00

ALPHAL	BETAL	CALS	CYNLS	ALFLSU	BETLSU
-.319	-8.646	.05230	-.05520	-.12290	-8.72350
-.293	-6.465	.05120	-.05050	-.09650	-6.54240
-.280	-4.405	.04920	-.04700	-.08310	-4.48030
-.258	-.243	.04410	-.04470	-.06130	-.31990
-.198	3.845	.04050	-.03810	-.00190	3.76970
-.193	5.965	.03940	-.03560	.00330	5.88940
-.182	8.061	.03920	-.03630	.01390	7.98400
	GRADIENT	-.00106	.00108	.00983	1.00000

RUN NO. 1177/ 0 RN/L = 3.50 GRADIENT INTERVAL = -5.00/ 5.00

ALPHAL	BETAL	CALS	CYNLS	ALFLSU	BETLSU
4.342	-7.997	.05080	-.05750	4.13210	-8.01380
4.341	-5.769	.04930	-.05280	4.13430	-5.81260
4.312	-3.778	.04770	-.04870	4.11660	-3.86000
4.073	.162	.04320	-.04280	3.99980	-.03200
4.138	4.195	.04080	-.03410	4.22060	4.00030
4.069	6.319	.03980	-.03030	4.19150	6.14790
4.043	8.332	.03960	-.02910	4.18610	8.17750
	GRADIENT	-.00086	.00183	.01322	.98594

IA156A, AEDC PWT 16T-470, O T S W/SILTS (R8NN92) (10 MAY 80)

REFERENCE DATA

SREF =	2690.0000 SQ.FT.	XMRP =	976.0000 IN. XT		
LREF =	1290.3000 INCHES	YMRP =	.0000 IN. YT		
BREF =	1290.3000 INCHES	ZMRP =	400.0000 IN. ZT		
SCALE =	.0200				

PARAMETRIC DATA

IB-ELV =	8.000	OB-ELV =	5.000
BDFLAP =	.000	SPDBRK =	.000
RUDDER =	.000	SILTS =	1.000
MACH =	.600	RN/L =	3.500

RUN NO. 1178/ 0 RN/L = 3.51 GRADIENT INTERVAL = -5.00/ 5.00

ALPHAL	BETAL	CALS	CYNLS	ALFLSU	BETLSU
6.530	-7.911	.05030	-.05280	6.32740	-7.96730
6.503	-5.836	.04890	-.04700	6.31060	-5.92090
6.482	-3.775	.04750	-.04230	6.31020	-3.89560
6.175	.280	.04390	-.03580	6.09890	.08380
6.090	4.205	.04090	-.02690	6.13780	4.00000
6.029	6.132	.04000	-.02310	6.11600	5.94050
6.075	8.432	.04020	-.02090	6.19090	8.25690
	GRADIENT	-.00083	.00193	-.02178	.98950

RUN NO. 1179/ 0 RN/L = 3.50 GRADIENT INTERVAL = -5.00/ 5.00

ALPHAL	BETAL	CALS	CYNLS	ALFLSU	BETLSU
8.478	-7.736	.04910	-.04220	8.28530	-7.82020
8.394	-5.683	.04810	-.03690	8.21440	-5.79320
8.362	-3.682	.04750	-.03100	8.20540	-3.82310
8.258	.281	.04460	-.02520	8.18290	.08480
8.273	4.339	.04050	-.01550	8.29670	4.12990
8.213	6.355	.03960	-.01250	8.27400	6.15410
8.175	8.381	.03990	-.01180	8.26390	8.19060
	GRADIENT	-.00087	.00193	.01145	.99157

IA156A, AEDC PWT 16T-470, O T S W/SILTS (R8NN93) (10 MAY 80)

REFERENCE DATA

SREF =	2690.0000 SQ.FT.	XMRP =	976.0000 IN. XT		
LREF =	1290.3000 INCHES	YMRP =	.0000 IN. YT		
BREF =	1290.3000 INCHES	ZMRP =	400.0000 IN. ZT		
SCALE =	.0200				

PARAMETRIC DATA

IB-ELV =	8.000	OB-ELV =	5.000
BDFLAP =	.000	SPDBRK =	.000
RUDDER =	.000	SILTS =	1.000
MACH =	.800	RN/L =	3.500

RUN NO. 1180/ 0 RN/L = 3.49 GRADIENT INTERVAL = -5.00/ 5.00

ALPHAL	BETAL	CALS	CYNLS	ALFLSU	BETLSU
-8.563	-5.711	.05070	-.01280	-8.40640	-5.84750
-8.555	-3.642	.04880	-.00700	-8.42690	-3.80590
-8.412	.551	.04560	-.00150	-8.37880	.34620
-8.201	4.541	.04060	-.00640	-8.26490	4.34360
-8.202	6.469	.03590	-.01110	-8.29930	6.28600
	GRADIENT	-.00100	.00008	.01973	.99581

RUN NO. 1181/ 0 RN/L = 3.50 GRADIENT INTERVAL = -5.00/ 5.00

ALPHAL	BETAL	CALS	CYNLS	ALFLSU	BETLSU
-6.420	-5.841	.05190	-.02480	-6.24480	-5.95160
-6.330	-3.909	.04960	-.02040	-6.17690	-4.05000
-6.400	.241	.04510	-.01550	-6.35780	.03760
-6.173	4.390	.04150	-.01700	-6.25920	4.20120
-5.857	6.485	.03770	-.02180	-5.98360	6.32000
	GRADIENT	-.00098	.00041	-.00992	.99418

RUN NO. 1182/ 0 RN/L = 3.50 GRADIENT INTERVAL = -5.00/ 5.00

ALPHAL	BETAL	CALS	CYNLS	ALFLSU	BETLSU
-4.386	-5.893	.05290	-.03410	-4.19220	-5.96860
-4.395	-3.845	.05060	-.03040	-4.22020	-3.95700
-4.303	.486	.04520	-.02730	-4.27310	.28050
-3.818	4.414	.04220	-.02790	-3.94520	4.25040
-3.876	6.248	.03950	-.02880	-4.02890	6.10760
	GRADIENT	-.00102	.00031	.03252	.99346

RUN NO. 1183/ 0 RN/L = 3.50 GRADIENT INTERVAL = -5.00/ 5.00

ALPHAL	BETAL	CALS	CYNLS	ALFLSU	BETLSU
-.308	-6.783	.05540	-.05170	-.10360	-6.74450
-.303	-4.632	.05290	-.04640	-.09930	-4.59360
-.296	-.344	.04720	-.04180	-.09160	-.30590
-.232	3.764	.04330	-.03730	-.02820	3.80200
-.211	5.907	.04240	-.03580	-.00710	5.94530
	GRADIENT	-.00114	.00108	.00842	1.00002

IA156A, AEDC PWT 16T-470, O T S W/SILTS (R8NN93) (10 MAY 80)

REFERENCE DATA

SREF = 2690.0000 SQ.FT. XMRP = 976.0000 IN. XT
LREF = 1290.3000 INCHES YMRP = .0000 IN. YT
BREF = 1290.3000 INCHES ZMRP = 400.0000 IN. ZT
SCALE = .0200

PARAMETRIC DATA

IB-ELV = 8.000 OB-ELV = -5.000
BDFLAP = .000 SPDBRK = .000
RUDDER = .000 SILTS = 1.000
MACH = .800 RN/L = 3.500

RUN NO. 1184/ 0 RN/L = 3.50 GRADIENT INTERVAL = -5.00/ 5.00

ALPHAL	BETAL	CALS	CYNLS	ALFLSU	BETLSU
4.405	-5.722	.05340	-.05420	4.25560	-5.86710
4.277	-3.626	.05120	-.04900	4.15930	-3.79700
3.992	.226	.04560	-.04370	4.02590	.02090
4.093	4.160	.04400	-.03420	4.26400	4.04240
4.034	6.253	.04300	-.03120	4.22600	6.17420
	GRADIENT	-.00092	.00190	.01362	1.00690

RUN NO. 1185/ 0 RN/L = 3.50 GRADIENT INTERVAL = -5.00/ 5.00

ALPHAL	BETAL	CALS	CYNLS	ALFLSU	BETLSU
6.485	-5.730	.05220	-.04820	6.36620	-5.90060
6.437	-3.694	.05110	-.04240	6.35370	-3.88450
6.089	.284	.04620	-.03660	6.12580	.08020
6.027	4.143	.04410	-.02780	6.17300	3.99530
6.149	6.327	.04340	-.02340	6.32190	6.21310
	GRADIENT	-.00089	.00186	-.02323	1.00539

IA156A, AEDC PWT 16T-470, O T S W/SILTS (R8NN94) (10 MAY 80)

REFERENCE DATA

SREF = 2690.0000 SQ.FT. XMRP = 976.0000 IN. XT
LREF = 1290.3000 INCHES YMRP = .0000 IN. YT
BREF = 1290.3000 INCHES ZMRP = 400.0000 IN. ZT
SCALE = .0200

PARAMETRIC DATA

IB-ELV = 8.000 OB-ELV = 5.000
BDFLAP = .000 SPDBRK = .000
RUDDER = .000 SILTS = 1.000
MACH = .900 RN/L = 3.500

RUN NO. 1186/ 0 RN/L = 3.50 GRADIENT INTERVAL = -5.00/ 5.00

ALPHAL	BETAL	CALS	CYNLS	ALFLSU	BETLSU
-8.580	-5.704	.05520	-.01420	-8.41430	-5.82720
-8.614	-3.533	.05280	-.00730	-8.47640	-3.68750
-8.466	.391	.05120	-.00400	-8.41360	.19150
-8.266	4.637	.04460	-.00570	-8.31810	4.43710
-8.249	6.505	.04000	-.01030	-8.33430	6.31680
	GRADIENT	-.00101	.00019	.01942	.99448

IA156A, AEDC PWT 16T-470, O T S W/SILTS (R8NN94) (10 MAY 80)

REFERENCE DATA

SREF = 2690.0000 SQ.FT. XMRP = 976.0000 IN. XT
LREF = 1290.3000 INCHES YMRP = .0000 IN. YT
BREF = 1290.3000 INCHES ZMRP = 400.0000 IN. ZT
SCALE = .0200

PARAMETRIC DATA

IB-ELV = 8.000 OB-ELV = 5.000
BDFLAP = .000 SPDBRK = .000
RUDDER = .000 SILTS = 1.000
MACH = .900 RN/L = 3.500

RUN NO. 1187/ 0 RN/L = 3.50 GRADIENT INTERVAL = -5.00/ 5.00

ALPHAL	BETAL	CALS	CYNLS	ALFLSU	BETLSU
-6.479	-5.799	.05660	-.02330	-6.29660	-5.89640
-6.406	-3.881	.05440	-.01860	-6.24420	-4.00980
-6.459	.264	.05130	-.01530	-6.40380	.06450
-6.195	4.424	.04590	-.01730	-6.26870	4.23100
-6.134	6.437	.04170	-.02110	-6.24430	6.26220
	GRADIENT	-.00102	.00016	-.00293	.99229

RUN NO. 1188/ 0 RN/L = 3.50 GRADIENT INTERVAL = -5.00/ 5.00

ALPHAL	BETAL	CALS	CYNLS	ALFLSU	BETLSU
-4.191	-5.959	.05870	-.03440	-3.99190	-6.01410
-4.451	-3.833	.05590	-.02910	-4.27000	-3.93240
-4.361	.516	.05010	-.02790	-4.31750	.31410
-3.837	4.433	.04710	-.02880	-3.95330	4.26240
-3.926	6.385	.04430	-.03090	-4.06980	6.23660
	GRADIENT	-.00107	.00004	.03741	.99102

RUN NO. 1189/ 0 RN/L = 3.50 GRADIENT INTERVAL = -5.00/ 5.00

ALPHAL	BETAL	CALS	CYNLS	ALFLSU	BETLSU
-.351	-6.841	.06030	-.05310	-.15090	-6.78950
-.331	-4.678	.05860	-.04770	-.13090	-4.62610
-.370	-.278	.05260	-.04210	-.16990	-.22580
-.299	3.787	.04860	-.03880	-.09890	3.83870
-.274	5.944	.04740	-.03840	-.07420	5.99540
	GRADIENT	-.00118	.00105	.00361	1.00001

RUN NO. 1190/ 0 RN/L = 3.50 GRADIENT INTERVAL = -5.00/ 5.00

ALPHAL	BETAL	CALS	CYNLS	ALFLSU	BETLSU
4.363	-5.657	.05860	-.05490	4.22550	-5.81040
4.253	-3.647	.05680	-.04910	4.14740	-3.82490
3.931	.191	.05180	-.04430	3.97710	-.01100
4.074	4.112	.04980	-.03590	4.25120	4.00540
4.018	6.250	.04790	-.03330	4.21360	6.18350
	GRADIENT	-.00090	.00170	.01358	1.00918

IA156A, AEDC PWT 16T-470, 0 T S W/SILTS (R8NN95) (10 MAY 80)

REFERENCE DATA

SREF = 2690.0000 SQ.FT. XMRP = 976.0000 IN. XT
LREF = 1290.3000 INCHES YMRP = .0000 IN. YT
BREF = 1290.3000 INCHES ZMRP = 400.0000 IN. ZT
SCALE = .0200

PARAMETRIC DATA

IB-ELV = 8.000 OB-ELV = 5.000
BDFLAP = .000 SPDBRK = .000
RUDDER = .000 SILTS = 1.000
MACH = .950 RN/L = 3.500

RUN NO. 1191/ 0 RN/L = 3.50 GRADIENT INTERVAL = -5.00/ 5.00

ALPHAL	BETAL	CALS	CYNLS	ALFLSU	BETLSU
-8.615	-5.689	.06050	-.01580	-8.44750	-5.80660
-8.722	-3.529	.05800	-.00780	-8.58220	-3.67960
-8.581	.390	.05610	-.00450	-8.52510	.19280
-8.357	4.657	.04960	-.00780	-8.40640	4.45760
-8.314	6.506	.04350	-.01200	-8.39600	6.31730
	GRADIENT	-.00103	-.00001	.02157	.99407

RUN NO. 1192/ 0 RN/L = 3.49 GRADIENT INTERVAL = -5.00/ 5.00

ALPHAL	BETAL	CALS	CYNLS	ALFLSU	BETLSU
-6.581	-5.807	.06220	-.02510	-6.39740	-5.89970
-6.450	-3.862	.06010	-.02020	-6.28710	-3.98680
-6.536	.269	.05800	-.01720	-6.47740	.07280
-6.261	4.434	.05170	-.02130	-6.33100	4.24110
-6.191	6.443	.04600	-.02430	-6.29940	6.26830
	GRADIENT	-.00101	-.00013	-.00524	.99176

RUN NO. 1193/ 0 RN/L = 3.49 GRADIENT INTERVAL = -5.00/ 5.00

ALPHAL	BETAL	CALS	CYNLS	ALFLSU	BETLSU
-4.238	-5.944	.06470	-.03800	-4.03920	-5.99400
-4.497	-3.835	.06210	-.03280	-4.31390	-3.92890
-4.405	.513	.05750	-.03300	-4.35760	.31270
-3.859	4.446	.05290	-.03350	-3.97160	4.27400
-3.936	6.289	.04860	-.03400	-4.07530	6.13800
	GRADIENT	-.00111	-.00008	.04044	.99035

RUN NO. 1194/ 0 RN/L = 3.48 GRADIENT INTERVAL = -5.00/ 5.00

ALPHAL	BETAL	CALS	CYNLS	ALFLSU	BETLSU
-.363	-6.836	.06700	-.05700	-.16570	-6.78020
-.330	-4.659	.06520	-.05250	-.13210	-4.60300
-.336	-.330	.06090	-.04860	-.13830	-.27440
-.266	3.779	.05410	-.04100	-.06860	3.83420
-.252	5.983	.05070	-.04000	-.05380	6.03860
	GRADIENT	-.00131	.00136	.00745	.99999

IA156A, AEDC PWT 16T-470, O T S W/SILTS (R8NN95) (10 MAY 80)

REFERENCE DATA

SREF =	2690.0000 SQ.FT.	XMRP =	976.0000 IN. XT		
LREF =	1290.3000 INCHES	YMRP =	.0000 IN. YT		
BREF =	1290.3000 INCHES	ZMRP =	400.0000 IN. ZT		
SCALE =	.0200				

PARAMETRIC DATA

IB-ELV =	8.000	OB-ELV =	5.000
BDFLAP =	.000	SPDBRK =	.000
RUDDER =	.000	SILTS =	1.000
MACH =	.950	RN/L =	3.500

RUN NO. 1195/ 0 RN/L = 3.49 GRADIENT INTERVAL = -5.00/ 5.00

ALPHAL	BETAL	CALS	CYNLS	ALFLSU	BETLSU
4.415	-5.680	.06490	-.05760	4.28110	-5.83630
4.234	-3.577	.06280	-.05040	4.13350	-3.75580
3.905	.249	.05800	-.04620	3.95710	.05070
4.090	4.165	.05450	-.03740	4.26780	4.06310
4.047	6.263	.05140	-.03500	4.24230	6.20100
	GRADIENT	-.00107	.00168	.01759	1.00999

IA156A, AEDC PWT 16T-470, O T S W/SILTS (R8NN96) (10 MAY 80)

REFERENCE DATA

SREF =	2690.0000 SQ.FT.	XMRP =	976.0000 IN. XT		
LREF =	1290.3000 INCHES	YMRP =	.0000 IN. YT		
BREF =	1290.3000 INCHES	ZMRP =	400.0000 IN. ZT		
SCALE =	.0200				

PARAMETRIC DATA

IB-ELV =	8.000	OB-ELV =	5.000
BDFLAP =	.000	SPDBRK =	.000
RUDDER =	.000	SILTS =	1.000
MACH =	1.050	RN/L =	3.500

RUN NO. 1196/ 0 RN/L = 3.50 GRADIENT INTERVAL = -5.00/ 5.00

ALPHAL	BETAL	CALS	CYNLS	ALFLSU	BETLSU
-8.723	-5.723	.08170	-.02740	-8.55160	-5.83340
-8.813	-3.525	.07850	-.02010	-8.66850	-3.66830
-8.718	.448	.07670	-.01380	-8.65670	.25310
-8.424	4.609	.06960	-.01900	-8.46650	4.40960
-8.402	6.545	.06330	-.02190	-8.47840	6.35580
	GRADIENT	-.00110	.00012	.02500	.99321

RUN NO. 1197/ 0 RN/L = 3.50 GRADIENT INTERVAL = -5.00/ 5.00

ALPHAL	BETAL	CALS	CYNLS	ALFLSU	BETLSU
-6.612	-5.783	.08380	-.03690	-6.42700	-5.86780
-6.513	-3.843	.08140	-.03200	-6.34640	-3.96070
-6.612	.373	.07610	-.02900	-6.55010	.17860
-6.333	4.490	.07150	-.03170	-6.39840	4.29700
-6.039	6.555	.06490	-.03560	-6.14540	6.38090
	GRADIENT	-.00119	.00004	-.00641	.99090

IA156A, AEDC PWT 16T-470, O T S W/SILTS (R8NN96) (10 MAY 80)

REFERENCE DATA

SREF =	2690.0000 SQ.FT.	XMRP =	976.0000 IN. XT		
LREF =	1290.3000 INCHES	YMRP =	.0000 IN. YT		
BREF =	1290.3000 INCHES	ZMRP =	400.0000 IN. ZT		
SCALE =	.0200				

PARAMETRIC DATA

IB-ELV =	8.000	OB-ELV =	5.000
BDFLAP =	.000	SPDBRK =	.000
RUDDER =	.000	SILTS =	1.000
MACH =	1.050	RN/L =	3.500

RUN NO. 1198/ 0 RN/L = 3.50 GRADIENT INTERVAL = -5.00/ 5.00

ALPHAL	BETAL	CALS	CYNLS	ALFLSU	BETLSU
-4.330	-5.922	.08430	-.05000	-4.13050	-5.96530
-4.546	-3.827	.08220	-.04560	-4.36120	-3.91220
-4.455	.521	.07580	-.04540	-4.40230	.32390
-3.882	4.453	.07160	-.04540	-3.99080	4.28100
-3.956	6.305	.06710	-.04550	-4.09160	6.15230
	GRADIENT	-.00128	.00002	.04379	.98930

RUN NO. 1199/ 0 RN/L = 3.50 GRADIENT INTERVAL = -5.00/ 5.00

ALPHAL	BETAL	CALS	CYNLS	ALFLSU	BETLSU
-.373	-6.868	.08550	-.06960	-.17870	-6.80670
-.352	-4.666	.08430	-.06670	-.15770	-4.60530
-.399	-.289	.07880	-.06330	-.20500	-.22810
-.299	3.809	.07240	-.05390	-.10500	3.87010
-.278	6.000	.07000	-.05070	-.08350	6.06080
	GRADIENT	-.00140	.00150	.00603	1.00002

RUN NO. 1200/ 0 RN/L = 3.50 GRADIENT INTERVAL = -5.00/ 5.00

ALPHAL	BETAL	CALS	CYNLS	ALFLSU	BETLSU
4.430	-5.629	.08250	-.07140	4.30290	-5.78800
4.269	-3.550	.08090	-.06470	4.17590	-3.73100
3.968	.273	.07840	-.05930	4.02490	.07790
4.099	4.186	.07480	-.04840	4.27810	4.08920
4.073	6.282	.07100	-.04470	4.26890	6.22530
	GRADIENT	-.00079	.00211	.01341	1.01101

IA156A, AEDC PWT 16T-470, O T S W/SILTS (R8NN97) (10 MAY 80)

REFERENCE DATA

SREF = 2690.0000 SQ.FT. XMRP = 976.0000 IN. XT
LREF = 1290.3000 INCHES YMRP = .0000 IN. YT
BREF = 1290.3000 INCHES ZMRP = 400.0000 IN. ZT
SCALE = .0200

PARAMETRIC DATA

IB-ELV = 8.000 OB-ELV = 5.000
BDFLAP = .000 SPDBRK = .000
RUDDER = .000 SILTS = 1.000
MACH = 1.100 RN/L = 3.500

RUN NO. 1201/ 0 RN/L = 3.50 GRADIENT INTERVAL = -5.00/ 5.00

ALPHAL	BETAL	CALS	CYNLS	ALFLSU	BETLSU
-8.775	-5.709	.08180	-.02620	-8.60160	-5.81770
-8.830	-3.524	.07970	-.01770	-8.68310	-3.66640
-8.718	.469	.07470	-.01440	-8.65460	.27440
-8.453	4.620	.06750	-.01790	-8.49300	4.41970
-8.392	6.550	.06120	-.02080	-8.46650	6.36020
	GRADIENT	-.00150	-.00003	.02344	.99288

RUN NO. 1202/ 0 RN/L = 3.50 GRADIENT INTERVAL = -5.00/ 5.00

ALPHAL	BETAL	CALS	CYNLS	ALFLSU	BETLSU
-6.631	-5.784	.08230	-.03440	-6.44420	-5.86700
-6.558	-3.829	.08010	-.03020	-6.38930	-3.94540
-6.675	.382	.07380	-.02750	-6.60990	.18850
-6.340	4.497	.06840	-.03080	-6.40380	4.30290
-6.020	6.544	.06240	-.03420	-6.12490	6.36900
	GRADIENT	-.00141	-.00007	-.00194	.99057

RUN NO. 1203/ 0 RN/L = 3.50 GRADIENT INTERVAL = -5.00/ 5.00

ALPHAL	BETAL	CALS	CYNLS	ALFLSU	BETLSU
-4.340	-5.940	.08220	-.04670	-4.13920	-5.98030
-4.575	-3.831	.07920	-.04230	-4.38850	-3.91480
-4.464	.534	.07240	-.04290	-4.40880	.33690
-3.884	4.466	.06910	-.04430	-3.99080	4.29170
-3.958	6.323	.06530	-.04420	-4.09230	6.16860
	GRADIENT	-.00122	-.00024	.04697	.98879

RUN NO. 1204/ 0 RN/L = 3.50 GRADIENT INTERVAL = -5.00/ 5.00

ALPHAL	BETAL	CALS	CYNLS	ALFLSU	BETLSU
-.381	-6.875	.08250	-.06570	-.18620	-6.81170
-.343	-4.696	.08080	-.06290	-.14890	-4.63230
-.385	-.296	.07370	-.05920	-.19090	-.23270
-.278	3.820	.06720	-.05100	-.08360	3.88320
-.264	6.034	.06410	-.04770	-.06950	6.09760
	GRADIENT	-.00160	.00139	.00747	1.00001

IA156A, AEDC PWT 16T-470, 0 T S W/SILTS (R8NN97) (10 MAY 80)

REFERENCE DATA

SREF = 2690.0000 SQ.FT. XMRP = 976.0000 IN. XT
LREF = 1290.3000 INCHES YMRP = .0000 IN. YT
BREF = 1290.3000 INCHES ZMRP = 400.0000 IN. ZT
SCALE = .0200

PARAMETRIC DATA

IB-ELV = 8.000 OB-ELV = 5.000
BDFLAP = .000 SPDBRK = .000
RUDDER = .000 SILTS = 1.000
MACH = 1.100 RN/L = 3.500

RUN NO. 1205/ 0 RN/L = 3.50 GRADIENT INTERVAL = -5.00/ 5.00

ALPHAL	BETAL	CALS	CYNLS	ALFLSU	BETLSU
4.479	-5.647	.07860	-.06690	4.35320	-5.80760
4.301	-3.542	.07690	-.06130	4.20880	-3.72390
3.999	.286	.07400	-.05740	4.05870	.09050
4.120	4.191	.06970	-.04600	4.30100	4.09620
4.099	6.294	.06630	-.04300	4.29560	6.23930
	GRADIENT	-.00093	.00198	.01209	1.01139

IA156A, AEDC PWT 16T-470, 0 T S W/SILTS (R8NN98) (28 MAY 80)

REFERENCE DATA

SREF = 2690.0000 SQ.FT. XMRP = 976.0000 IN. XT
LREF = 1290.3000 INCHES YMRP = .0000 IN. YT
BREF = 1290.3000 INCHES ZMRP = 400.0000 IN. ZT
SCALE = .0200

PARAMETRIC DATA

IB-ELV = 8.000 OB-ELV = 5.000
BDFLAP = .000 SPDBRK = .000
RUDDER = .000 SILTS = 1.000
MACH = 1.150 RN/L = 3.500

RUN NO. 1206/ 0 RN/L = 3.50 GRADIENT INTERVAL = -5.00/ 5.00

ALPHAL	BETAL	CALS	CYNLS	ALFLSU	BETLSU
-8.705	-5.700	.07990	-.02270	-8.52880	-5.80900
-8.841	-3.501	.07740	-.01430	-8.69220	-3.64380
-8.729	.449	.07290	-.01000	-8.66270	.25350
-8.424	4.693	.06530	-.01510	-8.46480	4.49020
-8.415	6.589	.05990	-.01940	-8.49030	6.39590
	GRADIENT	-.00148	-.00011	.02799	.99282

RUN NO. 1207/ 0 RN/L = 3.50 GRADIENT INTERVAL = -5.00/ 5.00

ALPHAL	BETAL	CALS	CYNLS	ALFLSU	BETLSU
-6.629	-5.812	.08110	-.03140	-6.43910	-5.89450
-6.507	-3.863	.07770	-.02730	-6.33580	-3.97820
-6.647	.307	.07180	-.02340	-6.57750	.11220
-6.304	4.488	.06650	-.02800	-6.36690	4.29150
-6.253	6.494	.06070	-.03100	-6.35360	6.31380
	GRADIENT	-.00134	-.00008	-.00370	.99026

IA156A, AEDC PWT 16T-470, O T S W/SILTS (R8NN98) (28 MAY 80)

REFERENCE DATA

SREF = 2690.0000 SQ.FT. XMRP = 976.0000 IN. XT
LREF = 1290.3000 INCHES YMRP = .0000 IN. YT
BREF = 1290.3000 INCHES ZMRP = 400.0000 IN. ZT
SCALE = .0200

PARAMETRIC DATA

IB-ELV = 8.000 OB-ELV = 5.000
BDFLAP = .000 SPDBRK = .000
RUDDER = .000 SILTS = 1.000
MACH = 1.150 RN/L = 3.500

RUN NO. 1208/ 0 RN/L = 3.50 GRADIENT INTERVAL = -5.00/ 5.00

ALPHAL	BETAL	CALS	CYNLS	ALFLSU	BETLSU
-4.302	-5.961	.08040	-.04370	-4.09870	-5.99960
-4.543	-3.830	.07710	-.03980	-4.35420	-3.91290
-4.464	.531	.07110	-.03950	-4.40670	.33220
-3.860	4.483	.06760	-.04200	-3.96740	4.30600
-3.946	6.329	.06310	-.04190	-4.08020	6.17150
	GRADIENT	-.00115	-.00026	.04553	.98852

RUN NO. 1210/ 0 RN/L = 3.51 GRADIENT INTERVAL = -5.00/ 5.00

ALPHAL	BETAL	CALS	CYNLS	ALFLSU	BETLSU
-.340	-5.847	.08110	-.06320	-.14430	-6.78090
-.316	-4.600	.07990	-.06050	-.11970	-4.53390
-.337	-.277	.07420	-.05780	-.14110	-.21150
-.239	3.896	.06680	-.05020	-.04280	3.96170
-.222	6.037	.06370	-.04710	-.02580	6.10220
	GRADIENT	-.00154	.00121	.00897	.99999

RUN NO. 1211/ 0 RN/L = 3.50 GRADIENT INTERVAL = -5.00/ 5.00

ALPHAL	BETAL	CALS	CYNLS	ALFLSU	BETLSU
4.500	-5.630	.07850	-.06670	4.37390	-5.79410
4.369	-3.511	.07680	-.06120	4.27800	-3.69630
4.054	.344	.07440	-.05610	4.11880	.14740
4.142	4.214	.06960	-.04450	4.32710	4.12090
4.118	6.300	.06630	-.04230	4.31800	6.24730
	GRADIENT	-.00093	.00216	.00639	1.01198

IA156A. AEDC PWT 16T-470, O T S W/SILTS (R8NNA0) (10 MAY 80)

REFERENCE DATA

SREF = 2690.0000 SQ.FT. XMRP = 976.0000 IN. XT
LREF = 1290.3000 INCHES YMRP = .0000 IN. YT
BREF = 1290.3000 INCHES ZMRP = 400.0000 IN. ZT
SCALE = .0200

PARAMETRIC DATA

IB-ELV = 8.000 OB-ELV = 5.000
BDFLAP = .000 SPDBRK = .000
RUDDER = .000 SILTS = 1.000
MACH = 1.250 RN/L = 3.500

RUN NO. 1224/ 0 RN/L = 3.50 GRADIENT INTERVAL = -5.00/ 5.00

ALPHAL	BETAL	CALS	CYNLS	ALFLSU	BETLSU
-8.807	-5.718	.07630	-.01700	-8.62220	-5.83270
-8.753	-3.670	.07450	-.01040	-8.59290	-3.81780
-8.683	.520	.07020	-.00670	-8.61470	.31270
-8.394	4.581	.06260	-.01170	-8.43280	4.36600
-8.416	6.579	.05740	-.01380	-8.49350	6.37520
	GRADIENT	-.00144	-.00015	.01927	.99186

RUN NO. 1225/ 0 RN/L = 3.50 GRADIENT INTERVAL = -5.00/ 5.00

ALPHAL	BETAL	CALS	CYNLS	ALFLSU	BETLSU
-6.612	-5.874	.07700	-.02610	-6.41120	-5.95890
-6.495	-3.922	.07450	-.02270	-6.31290	-4.04240
-6.577	.316	.06940	-.01960	-6.50350	.11030
-6.293	4.492	.06360	-.02340	-6.35750	4.28350
-6.020	6.605	.05820	-.02750	-6.13020	6.41680
	GRADIENT	-.00130	-.00008	-.00540	.98945

RUN NO. 1226/ 0 RN/L = 3.50 GRADIENT INTERVAL = -5.00/ 5.00

ALPHAL	BETAL	CALS	CYNLS	ALFLSU	BETLSU
-4.285	-5.984	.07730	-.03770	-4.07080	-6.02390
-4.498	-3.848	.07400	-.03350	-4.29700	-3.93390
-4.406	.535	.06900	-.03310	-4.34440	.32540
-3.830	4.470	.06530	-.03720	-3.94180	4.28320
-3.934	6.351	.06020	-.03710	-4.07510	6.18430
	GRADIENT	-.00105	-.00043	.04169	.98753

RUN NO. 1227/ 0 RN/L = 3.50 GRADIENT INTERVAL = -5.00/ 5.00

ALPHAL	BETAL	CALS	CYNLS	ALFLSU	BETLSU
-.286	-6.910	.07850	-.05970	-.07900	-6.84030
-.250	-4.708	.07680	-.05710	-.04310	-4.63750
-.248	-.333	.07120	-.05390	-.04150	-.26270
-.162	3.825	.06340	-.04700	.04440	3.89540
-.173	6.064	.06060	-.04510	.03350	6.13410
	GRADIENT	-.00157	.00118	.01017	.99999

IA156A, AEDC PWT 16T-470, 0 T S W/SILTS (R8NNA0) (10 MAY 80)

REFERENCE DATA

SREF = 2690.0000 SQ.FT. XMRP = 976.0000 IN. XT
LREF = 1290.3000 INCHES YMRP = .0000 IN. YT
BREF = 1290.3000 INCHES ZMRP = 400.0000 IN. ZT
SCALE = .0200

PARAMETRIC DATA

IB-ELV = 8.000 OB-ELV = 5.000
BDFLAP = .000 SPDBRK = .000
RUDDER = .000 SILTS = 1.000
MACH = 1.250 RN/L = 3.500

RUN NO. 1228/ 0 RN/L = 3.50 GRADIENT INTERVAL = -5.00/ 5.00

ALPHAL	BETAL	CALS	CYNLS	ALFLSU	BETLSU
4.394	-5.561	.07630	-.06380	4.25840	-5.73230
4.420	-3.747	.07520	-.05880	4.31770	-3.94030
4.277	.376	.07140	-.05240	4.34590	.16990
4.189	4.084	.06610	-.04160	4.38190	3.98340
4.197	6.321	.06260	-.03920	4.40850	6.26590
	GRADIENT	-.00116	.00218	.00817	1.01150

IA156A, AEDC PWT 16T-470, 0 T S W/SILTS (R8NNA1) (10 MAY 80)

REFERENCE DATA

SREF = 2690.0000 SQ.FT. XMRP = 976.0000 IN. XT
LREF = 1290.3000 INCHES YMRP = .0000 IN. YT
BREF = 1290.3000 INCHES ZMRP = 400.0000 IN. ZT
SCALE = .0200

PARAMETRIC DATA

IB-ELV = 8.000 OB-ELV = 5.000
BDFLAP = .000 SPDBRK = .000
RUDDER = .000 SILTS = 1.000
MACH = 1.400 RN/L = 3.500

RUN NO. 1229/ 0 RN/L = 3.50 GRADIENT INTERVAL = -5.00/ 5.00

ALPHAL	BETAL	CALS	CYNLS	ALFLSU	BETLSU
-8.789	-5.784	.07320	-.00870	-8.56590	-5.91850
-8.792	-3.641	.07140	-.00110	-8.59980	-3.81760
-8.654	.640	.06670	-.00090	-8.57430	.39150
-8.364	4.703	.05930	-.00690	-8.41100	4.44650
-8.346	6.652	.05520	-.01110	-8.43730	6.40820
	GRADIENT	-.00145	-.00069	.02248	.99034

RUN NO. 1230/ 0 RN/L = 3.50 GRADIENT INTERVAL = -5.00/ 5.00

ALPHAL	BETAL	CALS	CYNLS	ALFLSU	BETLSU
-6.648	-5.916	.07280	-.01460	-6.40750	-6.01570
-6.558	-3.948	.07080	-.01160	-6.33900	-4.08980
-6.588	.326	.06590	-.01140	-6.49810	.08160
-6.276	4.574	.06130	-.01950	-6.35300	4.32500
-6.186	6.573	.05700	-.02320	-6.31040	6.34400
	GRADIENT	-.00111	-.00093	-.00168	.98736

IA156A, AEDC PWT 16T-470, 0 T S W/SILTS (R8NNA1) (10 MAY 80)

REFERENCE DATA

SREF =	2690.0000 SQ.FT.	XMRP =	976.0000 IN. XT		
LREF =	1290.3000 INCHES	YMRP =	.0000 IN. YT		
BREF =	1290.3000 INCHES	ZMRP =	400.0000 IN. ZT		
SCALE =	.0200				

PARAMETRIC DATA

IB-ELV =	8.000	OB-ELV =	5.000
BDFLAP =	.000	SPDBRK =	.000
RUDDER =	.000	SILTS =	1.000
MACH =	1.400	RN/L =	3.500

RUN NO. 1231/ 0 RN/L = 3.50 GRADIENT INTERVAL = -5.00/ 5.00

ALPHAL	BETAL	CALS	CYNLS	ALFLSU	BETLSU
-4.297	-6.035	.07260	-.02970	-4.03980	-6.07880
-4.550	-3.891	.06990	-.02780	-4.31120	-3.99040
-4.390	.563	.06520	-.02540	-4.31490	.31400
-3.789	4.555	.06210	-.03420	-3.92110	4.33190
-3.894	6.422	.05860	-.03500	-4.06050	6.22270
	GRADIENT	-.00093	-.00109	.04529	.98501

RUN NO. 1232/ 0 RN/L = 3.50 GRADIENT INTERVAL = -5.00/ 5.00

ALPHAL	BETAL	CALS	CYNLS	ALFLSU	BETLSU
-.331	-6.961	.07410	-.05490	-.08610	-6.87650
-.291	-4.771	.07230	-.05130	-.04510	-4.68570
-.275	-.354	.06770	-.04810	-.02970	-.26890
-.197	3.846	.06060	-.04390	.04910	3.93170
-.220	6.093	.05790	-.04240	.02510	6.17830
	GRADIENT	-.00136	.00086	.01087	1.00002

RUN NO. 1233/ 0 RN/L = 3.50 GRADIENT INTERVAL = -5.00/ 5.00

ALPHAL	BETAL	CALS	CYNLS	ALFLSU	BETLSU
4.556	-5.530	.07330	-.06260	4.39650	-5.73430
4.477	-3.496	.07130	-.05620	4.36110	-3.72800
4.177	.420	.06670	-.04800	4.26120	.17380
4.232	4.296	.06230	-.03830	4.46560	4.18160
4.183	6.348	.05970	-.03660	4.43620	6.28390
	GRADIENT	-.00116	.00230	.01334	1.01511

IA156A, AEDC PWT 16T-470, O T S W/SILTS (R8NNA2) (10 MAY 80)

REFERENCE DATA

SREF = 2690.0000 SQ.FT. XMRP = 976.0000 IN. XT
LREF = 1290.3000 INCHES YMRP = .0000 IN. YT
BREF = 1290.3000 INCHES ZMRP = 400.0000 IN. ZT
SCALE = .0200

PARAMETRIC DATA

IB-ELV = 8.000 OB-ELV = 5.000
BDFLAP = .000 SPDBRK = .000
RUDDER = .000 SILTS = 1.000
MACH = 1.550 RN/L = 3.200

RUN NO. 1212/ 0 RN/L = 3.20 GRADIENT INTERVAL = -5.00/ 5.00

ALPHAL	BETAL	CALS	CYNLS	ALFLSU	BETLSU
-8.712	-5.820	.06790	-.01160	-8.38940	-5.97360
-8.786	-3.589	.06670	.00040	-8.50320	-3.80660
-8.605	.504	.06070	.00270	-8.45600	.18070
-8.291	4.745	.05410	-.00340	-8.32030	4.39040
-8.253	6.701	.05120	-.00700	-8.34340	6.35670
	GRADIENT	-.00151	-.00046	.02201	.98356

RUN NO. 1213/ 0 RN/L = 3.20 GRADIENT INTERVAL = -5.00/ 5.00

ALPHAL	BETAL	CALS	CYNLS	ALFLSU	BETLSU
-6.659	-5.889	.06870	-.01460	-6.31880	-5.99490
-6.562	-3.915	.06590	-.01120	-6.24660	-4.08150
-6.539	.404	.06010	-.00980	-6.38500	.08160
-6.200	4.643	.05590	-.01530	-6.27070	4.29510
-6.100	6.638	.05240	-.01840	-6.23890	6.31020
	GRADIENT	-.00117	-.00048	-.00291	.97671

RUN NO. 1214/ 0 RN/L = 3.21 GRADIENT INTERVAL = -5.00/ 5.00

ALPHAL	BETAL	CALS	CYNLS	ALFLSU	BETLSU
-4.382	-6.042	.06860	-.02970	-4.02710	-6.07110
-4.626	-3.877	.06540	-.02440	-4.28650	-3.98490
-4.449	.645	.06010	-.02410	-4.31360	.31540
-3.773	4.631	.05580	-.02780	-3.92350	4.30790
-3.838	6.488	.05260	-.02900	-4.03880	6.19430
	GRADIENT	-.00113	-.00039	.04158	.97417

RUN NO. 1215/ 0 RN/L = 3.20 GRADIENT INTERVAL = -5.00/ 5.00

ALPHAL	BETAL	CALS	CYNLS	ALFLSU	BETLSU
-.394	-6.994	.07010	-.05400	-.07190	-6.84740
-.362	-4.850	.06810	-.04960	-.03870	-4.70160
-.353	-.408	.06280	-.04610	-.02970	-.25990
-.322	3.738	.05800	-.03990	.00140	3.88690
-.343	5.957	.05410	-.03800	-.01890	6.10510
	GRADIENT	-.00118	.00113	.00464	1.00004

IA156A, AEDC PWT 16T-470, 0 T S W/SILTS (R8NNA2) (10 MAY 80)

REFERENCE DATA

SREF = 2690.0000 SQ.FT. XMRP = 976.0000 IN. XT
LREF = 1290.3000 INCHES YMRP = .0000 IN. YT
BREF = 1290.3000 INCHES ZMRP = 400.0000 IN. ZT
SCALE = .0200

PARAMETRIC DATA

IB-ELV = 8.000 OB-ELV = 5.000
BDFLAP = .000 SPDBRK = .000
RUDDER = .000 SILTS = 1.000
MACH = 1.550 RN/L = 3.200

RUN NO. 1216/ 0 RN/L = 3.20 GRADIENT INTERVAL = -5.00/ 5.00

ALPHAL	BETAL	CALS	CYNLS	ALFLSU	BETLSU
4.722	-5.470	.06840	-.05880	4.53600	-5.77380
4.503	-3.385	.06630	-.05250	4.37920	-3.71890
4.085	.445	.06290	-.04670	4.22690	.11870
4.076	4.248	.05840	-.03650	4.40910	4.12010
4.058	6.341	.05620	-.03460	4.41000	6.28710
	GRADIENT	-.00103	.00210	.00387	1.02700

IA156A, AEDC PWT 16T-470, 0 T S W/SILTS (R8NNA3) (10 MAY 80)

REFERENCE DATA

SREF = 2690.0000 SQ.FT. XMRP = 976.0000 IN. XT
LREF = 1290.3000 INCHES YMRP = .0000 IN. YT
BREF = 1290.3000 INCHES ZMRP = 400.0000 IN. ZT
SCALE = .0200

PARAMETRIC DATA

IB-ELV = 12.000 OB-ELV = 5.000
BDFLAP = .000 SPDBRK = .000
RUDDER = .000 SILTS = 1.000
MACH = .600 RN/L = 3.500

RUN NO. 1240/ 0 RN/L = 3.50 GRADIENT INTERVAL = -5.00/ 5.00

ALPHAL	BETAL	CALS	CYNLS	ALFLSU	BETLSU
-8.421	-7.717	.04900	-.02330	-8.33330	-7.90910
-8.302	-5.672	.04750	-.01630	-8.24030	-5.87270
-8.296	-3.668	.04580	-.01060	-8.27450	-3.87770
-8.143	.403	.04260	-.00460	-8.22250	.20810
-7.985	4.333	.04030	-.00770	-8.14320	4.19490
-7.956	6.256	.03630	-.01230	-8.13820	6.14900
-7.994	8.294	.03320	-.01660	-8.19000	8.21510
	GRADIENT	-.00069	.00037	.01639	1.00890

RUN NO. 1241/ 0 RN/L = 3.50 GRADIENT INTERVAL = -5.00/ 5.00

ALPHAL	BETAL	CALS	CYNLS	ALFLSU	BETLSU
-6.293	-7.783	.04990	-.03150	-6.17630	-7.95800
-6.244	-5.770	.04800	-.02500	-6.15310	-5.95940
-6.133	-3.869	.04650	-.02090	-6.07710	-4.07210
-6.140	.174	.04240	-.01700	-6.21110	-.02420
-5.975	4.239	.04050	-.01880	-6.14900	4.12090
-5.888	6.209	.03700	-.02200	-6.08250	6.12770
-5.677	8.306	.03530	-.02650	-5.88220	8.25820
	GRADIENT	-.00074	.00026	-.00885	1.01045

IA156A, AEDC PWT 16T-470, 0 T S W/SILTS (R8NNA3) (10 MAY 80)

REFERENCE DATA

SREF = 2690.0000 SQ.FT. XMRP = 976.0000 IN. XT
LREF = 1290.3000 INCHES YMRP = .0000 IN. YT
BREF = 1290.3000 INCHES ZMRP = 400.0000 IN. ZT
SCALE = .0200

PARAMETRIC DATA

IB-ELV = 12.000 OB-ELV = 5.000
BDFLAP = .000 SPDBRK = .000
RUDDER = .000 SILTS = 1.000
MACH = .600 RN/L = 3.500

RUN NO. 1242/ 0 RN/L = 3.49 GRADIENT INTERVAL = -5.00/ 5.00

ALPHAL	BETAL	CALS	CYNLS	ALFLSU	BETLSU
-4.062	-7.846	.05080	-.04050	-3.91350	-7.99540
-4.283	-5.817	.04880	-.03380	-4.15740	-5.98610
-4.247	-3.755	.04690	-.03020	-4.15720	-3.94560
-4.005	.253	.04250	-.02910	-4.07990	.05600
-3.654	4.251	.04070	-.02910	-3.85100	4.17640
-3.764	6.065	.03850	-.02980	-3.97060	6.02510
-3.792	8.062	.03680	-.03160	-4.00190	8.04710
	GRADIENT	-.00077	.00014	.03824	1.01452

RUN NO. 1243/ 0 RN/L = 3.50 GRADIENT INTERVAL = -5.00/ 5.00

ALPHAL	BETAL	CALS	CYNLS	ALFLSU	BETLSU
-.289	-8.584	.05230	-.05360	-.09240	-8.66040
-.274	-6.499	.05110	-.04930	-.07740	-6.57620
-.255	-4.238	.04900	-.04550	-.05900	-4.31470
-.230	-.161	.04400	-.04340	-.03380	-.23700
-.171	3.913	.04070	-.03720	.02570	3.83730
-.163	6.027	.03950	-.03480	.03380	5.95120
-.156	8.136	.03920	-.03530	.04060	8.06060
	GRADIENT	-.00102	.00102	.01039	1.00013

RUN NO. 1244/ 0 RN/L = 3.50 GRADIENT INTERVAL = -5.00/ 5.00

ALPHAL	BETAL	CALS	CYNLS	ALFLSU	BETLSU
4.552	-8.098	.05080	-.05620	4.34330	-8.11960
4.376	-5.872	.04930	-.05150	4.16920	-5.91510
4.363	-3.875	.04740	-.04740	4.16890	-3.95750
4.155	.072	.04310	-.04170	4.06840	-.11980
4.187	4.214	.04070	-.03320	4.26890	4.02000
4.119	6.377	.03960	-.02960	4.24300	6.20680
4.092	8.396	.03930	-.02820	4.23560	8.24230
	GRADIENT	-.00083	.00176	.01266	.98623

IA156A, AEDC PWT 16T-470, 0 T S W/SILTS (R8NNA3) (10 MAY 80)

REFERENCE DATA

SREF = 2690.0000 SQ.FT. XMRP = 976.0000 IN. XT
LREF = 1290.3000 INCHES YMRP = .0000 IN. YT
BREF = 1290.3000 INCHES ZMRP = 400.0000 IN. ZT
SCALE = .0200

PARAMETRIC DATA

IB-ELV =	12.000	OB-ELV =	5.000
BDFLAP =	.000	SPDBRK =	.000
RUDDER =	.000	SILTS =	1.000
MACH =	.600	RN/L =	3.500

RUN NO. 1245/ 0 RN/L = 3.50 GRADIENT INTERVAL = -5.00/ 5.00

ALPHAL	BETAL	CALS	CYNLS	ALFLSU	BETLSU
6.585	-7.971	.04990	-.05130	6.38160	-8.02670
6.562	-5.902	.04860	-.04580	6.36840	-5.98540
6.548	-3.820	.04740	-.04060	6.37490	-3.94040
6.246	.258	.04390	-.03480	6.16820	.06220
6.153	4.235	.04060	-.02560	6.19730	4.02840
6.060	6.346	.03990	-.02200	6.15020	6.15610
6.028	8.290	.03980	-.02070	6.14340	8.11400
	GRADIENT	-.00084	.00186	-.02217	.98928

RUN NO. 1246/ 0 RN/L = 3.50 GRADIENT INTERVAL = -5.00/ 5.00

ALPHAL	BETAL	CALS	CYNLS	ALFLSU	BETLSU
8.535	-7.794	.04880	-.04130	8.34160	-7.87620
8.452	-5.716	.04780	-.03550	8.27130	-5.82570
8.440	-3.727	.04710	-.02990	8.28260	-3.86740
8.334	.278	.04410	-.02470	8.25580	.08180
8.347	4.373	.04000	-.01470	8.36880	4.16290
8.267	6.383	.03930	-.01170	8.32720	6.18110
8.245	8.435	.03970	-.01010	8.33290	8.24360
	GRADIENT	-.00088	.00188	.01071	.99144

IA156A, AEDC PWT 16T-470, 0 T S W/SILTS (R8NNA4) (10 MAY 80)

REFERENCE DATA

SREF = 2690.0000 SQ.FT. XMRP = 976.0000 IN. XT
LREF = 1290.3000 INCHES YMRP = .0000 IN. YT
BREF = 1290.3000 INCHES ZMRP = 400.0000 IN. ZT
SCALE = .0200

PARAMETRIC DATA

IB-ELV = 12.000 OB-ELV = 5.000
BDFLAP = .000 SPDBRK = .000
RUDDER = .000 SILTS = 1.000
MACH = .800 RN/L = 3.500

RUN NO. 1247/ 0 RN/L = 3.50 GRADIENT INTERVAL = -5.00/ 5.00

ALPHAL	BETAL	CALS	CYNLS	ALFLSU	BETLSU
-8.498	-5.639	.05160	-.01230	-8.34150	-5.77590
-8.469	-3.598	.04960	-.00710	-8.34120	-3.76190
-8.331	.556	.04620	-.00250	-8.29770	.35080
-8.129	4.485	.04090	-.00670	-8.19280	4.28730
-8.129	6.419	.03590	-.01080	-8.22630	6.23530
	GRADIENT	-.00107	.00006	.01828	.99576

RUN NO. 1248/ 0 RN/L = 3.50 GRADIENT INTERVAL = -5.00/ 5.00

ALPHAL	BETAL	CALS	CYNLS	ALFLSU	BETLSU
-6.339	-5.787	.05240	-.02430	-6.16330	-5.89860
-6.260	-3.884	.05050	-.02020	-6.10750	-4.02460
-6.312	.204	.04600	-.01640	-6.26870	.00120
-6.085	4.345	.04170	-.01700	-6.17140	4.15630
-5.978	6.360	.03760	-.02100	-6.10060	6.19310
	GRADIENT	-.00107	.00039	-.00770	.99419

RUN NO. 1249/ 0 RN/L = 3.50 GRADIENT INTERVAL = -5.00/ 5.00

ALPHAL	BETAL	CALS	CYNLS	ALFLSU	BETLSU
-4.165	-5.912	.05350	-.03410	-3.97020	-5.98340
-4.352	-3.795	.05160	-.02950	-4.17800	-3.90780
-4.211	.513	.04590	-.02740	-4.18360	.30680
-3.749	4.365	.04250	-.02800	-3.87660	4.20100
-3.826	6.206	.03960	-.02890	-3.97820	6.06510
	GRADIENT	-.00112	.00019	.03619	.99345

RUN NO. 1250/ 0 RN/L = 3.50 GRADIENT INTERVAL = -5.00/ 5.00

ALPHAL	BETAL	CALS	CYNLS	ALFLSU	BETLSU
-.277	-6.717	.05560	-.05030	-.07300	-6.67920
-.276	-4.554	.05310	-.04490	-.07190	-4.51560
-.270	-.250	.04770	-.04110	-.06600	-.21150
-.201	3.831	.04350	-.03700	.00340	3.86970
-.183	5.971	.04250	-.03560	.02100	6.00910
	GRADIENT	-.00115	.00094	.00891	1.00004

IA156A, AEDC PWT 16T-470, 0 T S W/SILTS (R8NNA4) (10 MAY 80)

REFERENCE DATA

SREF =	2690.0000 SQ.FT.	XMRP =	976.0000 IN. XT		
LREF =	1290.3000 INCHES	YMRP =	.0000 IN. YT		
BREF =	1290.3000 INCHES	ZMRP =	400.0000 IN. ZT		
SCALE =	.0200				

PARAMETRIC DATA

IB-ELV =	12.000	OB-ELV =	5.000
BDFLAP =	.000	SPDBRK =	.000
RUDDER =	.000	SILTS =	1.000
MACH =	.800	RN/L =	3.500

RUN NO. 1251/ 0 RN/L = 3.50 GRADIENT INTERVAL = -5.00/ 5.00

ALPHAL	BETAL	CALS	CYNLS	ALFLSU	BETLSU
4.464	-5.790	.05350	-.05340	4.31480	-5.93380
4.333	-3.676	.05130	-.04830	4.21390	-3.84650
4.058	.221	.04570	-.04310	4.09220	.01600
4.163	4.215	.04400	-.03370	4.33460	4.09740
4.082	6.317	.04290	-.03070	4.27440	6.23870
	GRADIENT	-.00092	.00185	.01548	1.00677

RUN NO. 1252/ 0 RN/L = 3.50 GRADIENT INTERVAL = -5.00/ 5.00

ALPHAL	BETAL	CALS	CYNLS	ALFLSU	BETLSU
6.546	-5.777	.05240	-.04750	6.42670	-5.94670
6.517	-3.731	.05110	-.04160	6.43370	-3.92120
6.168	.279	.04660	-.03640	6.20480	.07490
6.095	4.182	.04400	-.02750	6.24090	4.03450
6.206	6.391	.04330	-.02300	6.37940	6.27760
	GRADIENT	-.00090	.00178	-.02451	1.00532

IA156A, AEDC PWT 16T-470, 0 T S W/SILTS (R8NNA5) (10 MAY 80)

REFERENCE DATA

SREF =	2690.0000 SQ.FT.	XMRP =	976.0000 IN. XT		
LREF =	1290.3000 INCHES	YMRP =	.0000 IN. YT		
BREF =	1290.3000 INCHES	ZMRP =	400.0000 IN. ZT		
SCALE =	.0200				

PARAMETRIC DATA

IB-ELV =	12.000	OB-ELV =	5.000
BDFLAP =	.000	SPDBRK =	.000
RUDDER =	.000	SILTS =	1.000
MACH =	.900	RN/L =	3.500

RUN NO. 1253/ 0 RN/L = 3.50 GRADIENT INTERVAL = -5.00/ 5.00

ALPHAL	BETAL	CALS	CYNLS	ALFLSU	BETLSU
-8.781	-5.729	.05550	-.01210	-8.61650	-5.85440
-8.461	-3.518	.05380	-.00710	-8.32270	-3.67160
-8.385	.390	.05170	-.00370	-8.33280	.18960
-8.182	4.635	.04460	-.00600	-8.23530	4.43490
-8.199	6.481	.04000	-.01030	-8.28430	6.29230
	GRADIENT	-.00114	.00013	.01090	.99442

IA156A, AEDC PWT 16T-470, 0 T S W/SILTS (R8NNA5) (10 MAY 80)

REFERENCE DATA

SREF = 2690.0000 SQ.FT. XMRP = 976.0000 IN. XT
LREF = 1290.3000 INCHES YMRP = .0000 IN. YT
BREF = 1290.3000 INCHES ZMRP = 400.0000 IN. ZT
SCALE = .0200

PARAMETRIC DATA

IB-ELV = 12.000 OB-ELV = 5.000
BDFLAP = .000 SPDBRK = .000
RUDDER = .000 SILTS = 1.000
MACH = .900 RN/L = 3.500

RUN NO. 1254/ 0 RN/L = 3.50 GRADIENT INTERVAL = -5.00/ 5.00

ALPHAL	BETAL	CALS	CYNLS	ALFLSU	BETLSU
-6.408	-5.755	.05770	-.02300	-6.22580	-5.85210
-6.327	-3.803	.05520	-.01840	-6.16570	-3.93250
-6.292	.429	.05100	-.01670	-6.24170	.22860
-6.141	4.387	.04590	-.01740	-6.21460	4.19390
-6.068	6.389	.04200	-.02130	-6.17900	6.21460
	GRADIENT	-.00113	.00013	-.00611	.99216

RUN NO. 1255/ 0 RN/L = 3.50 GRADIENT INTERVAL = -5.00/ 5.00

ALPHAL	BETAL	CALS	CYNLS	ALFLSU	BETLSU
-4.162	-5.791	.05960	-.03400	-3.96290	-5.84780
-4.378	-3.783	.05670	-.02890	-4.19660	-3.88210
-4.281	.501	.05070	-.02820	-4.23740	.29930
-3.787	4.368	.04740	-.02890	-3.90300	4.19610
-3.866	6.242	.04460	-.03080	-4.00840	6.09240
	GRADIENT	-.00115	.00000	.03520	.99081

RUN NO. 1256/ 0 RN/L = 3.50 GRADIENT INTERVAL = -5.00/ 5.00

ALPHAL	BETAL	CALS	CYNLS	ALFLSU	BETLSU
-.321	-6.748	.06080	-.05230	-.12120	-6.69580
-.296	-4.590	.05960	-.04800	-.09590	-4.53810
-.333	-.228	.05320	-.04250	-.13280	-.17580
-.259	3.857	.04880	-.03900	-.05880	3.90870
-.237	6.015	.04730	-.03850	-.03720	6.06630
	GRADIENT	-.00128	.00107	.00425	1.00004

RUN NO. 1257/ 0 RN/L = 3.50 GRADIENT INTERVAL = -5.00/ 5.00

ALPHAL	BETAL	CALS	CYNLS	ALFLSU	BETLSU
4.454	-5.775	.05850	-.05400	4.31550	-5.92850
4.313	-3.688	.05650	-.04820	4.20710	-3.86520
4.009	.186	.05220	-.04400	4.05430	-.01540
4.143	4.171	.05010	-.03600	4.32030	4.06440
4.065	6.307	.04790	-.03360	4.26140	6.24120
	GRADIENT	-.00081	.00155	.01465	1.00911

IA156A, AEDC PWT 16T-470, 0 T S W/SILTS (R8NNA6) (10 MAY 80)

REFERENCE DATA

SREF = 2690.0000 SQ.FT. XMRP = 976.0000 IN. XT
LREF = 1290.3000 INCHES YMRP = .0000 IN. YT
BREF = 1290.3000 INCHES ZMRP = 400.0000 IN. ZT
SCALE = .0200

PARAMETRIC DATA

IB-ELV = 12.000 OB-ELV = 5.000
BDFLAP = .000 SPDBRK = .000
RUDDER = .000 SILTS = 1.000
MACH = .950 RN/L = 3.500

RUN NO. 1258/ 0 RN/L = 3.50 GRADIENT INTERVAL = -5.00/ 5.00

ALPHAL	BETAL	CALS	CYNLS	ALFLSU	BETLSU
-8.589	-5.671	.06060	-.01430	-8.42070	-5.78920
-8.634	-3.570	.05880	-.00650	-8.49270	-3.71930
-8.511	.567	.05590	-.00300	-8.45950	.36790
-8.266	4.534	.04930	-.00770	-8.31320	4.33410
-8.249	6.469	.04320	-.01220	-8.33060	6.28040
	GRADIENT	-.00117	-.00014	.02205	.99372

RUN NO. 1259/ 0 RN/L = 3.50 GRADIENT INTERVAL = -5.00/ 5.00

ALPHAL	BETAL	CALS	CYNLS	ALFLSU	BETLSU
-6.493	-5.749	.06210	-.02420	-6.31030	-5.84220
-6.389	-3.845	.06060	-.01930	-6.22540	-3.96900
-6.441	.261	.05860	-.01770	-6.38190	.06410
-6.197	4.382	.05140	-.02100	-6.26650	4.18870
-5.881	6.477	.04600	-.02560	-5.99200	6.30430
	GRADIENT	-.00112	-.00021	-.00498	.99164

RUN NO. 1260/ 0 RN/L = 3.50 GRADIENT INTERVAL = -5.00/ 5.00

ALPHAL	BETAL	CALS	CYNLS	ALFLSU	BETLSU
-4.212	-5.888	.06510	-.03680	-4.01300	-5.93850
-4.426	-3.781	.06310	-.03210	-4.24320	-3.87490
-4.299	.503	.05750	-.03250	-4.25160	.30360
-3.789	4.380	.05250	-.03260	-3.90160	4.20860
-3.870	6.225	.04810	-.03290	-4.00880	6.07360
	GRADIENT	-.00130	-.00006	.04109	.99020

RUN NO. 1261/ 0 RN/L = 3.50 GRADIENT INTERVAL = -5.00/ 5.00

ALPHAL	BETAL	CALS	CYNLS	ALFLSU	BETLSU
-.332	-6.755	.06740	-.05650	-.13460	-6.69980
-.296	-4.598	.06650	-.05240	-.09800	-4.54270
-.292	-.243	.06080	-.04800	-.09400	-.18760
-.224	3.863	.05430	-.04080	-.02630	3.91880
-.220	6.048	.05080	-.03960	-.02250	6.10360
	GRADIENT	-.00144	.00137	.00840	1.00002

IA156A, AEDC PWT 16T-470, 0 T S W/SILTS (R8NNA6) (10 MAY 80)

REFERENCE DATA

SREF = 2690.0000 SQ.FT. XMRP = 976.0000 IN. XT
LREF = 1290.3000 INCHES YMRP = .0000 IN. YT
BREF = 1290.3000 INCHES ZMRP = 400.0000 IN. ZT
SCALE = .0200

PARAMETRIC DATA

IB-ELV = 12.000 OB-ELV = 5.000
BDFLAP = .000 SPDBRK = .000
RUDDER = .000 SILTS = 1.000
MACH = .950 RN/L = 3.500

RUN NO. 1262/ 0 RN/L = 3.50 GRADIENT INTERVAL = -5.00/ 5.00

ALPHAL	BETAL	CALS	CYNLS	ALFLSU	BETLSU
4.456	-5.734	.06470	-.05710	4.32210	-5.89000
4.303	-3.631	.06270	-.05080	4.20200	-3.80990
3.986	.246	.05880	-.04640	4.03760	.04760
4.154	4.217	.05430	-.03730	4.33200	4.11540
4.093	6.319	.05090	-.03460	4.28840	6.25740
	GRADIENT	-.00107	.00172	.01580	1.00987

IA156A, AEDC PWT 16T-470, 0 T S W/SILTS (R8NNA7) (10 MAY 80)

REFERENCE DATA

SREF = 2690.0000 SQ.FT. XMRP = 976.0000 IN. XT
LREF = 1290.3000 INCHES YMRP = .0000 IN. YT
BREF = 1290.3000 INCHES ZMRP = 400.0000 IN. ZT
SCALE = .0200

PARAMETRIC DATA

IB-ELV = 12.000 OB-ELV = 5.000
BDFLAP = .000 SPDBRK = .000
RUDDER = .000 SILTS = 1.000
MACH = 1.050 RN/L = 3.500

RUN NO. 1263/ 0 RN/L = 3.50 GRADIENT INTERVAL = -5.00/ 5.00

ALPHAL	BETAL	CALS	CYNLS	ALFLSU	BETLSU
-8.636	-5.695	.08030	-.02400	-8.46440	-5.80560
-8.725	-3.481	.07810	-.01770	-8.58130	-3.62480
-8.591	.426	.07690	-.01200	-8.53010	.23120
-8.345	4.627	.06950	-.01750	-8.38790	4.42790
-8.323	6.508	.06390	-.02060	-8.39950	6.31950
	GRADIENT	-.00107	.00001	.02398	.99328

RUN NO. 1264/ 0 RN/L = 3.50 GRADIENT INTERVAL = -5.00/ 5.00

ALPHAL	BETAL	CALS	CYNLS	ALFLSU	BETLSU
-6.442	-5.725	.08390	-.03570	-6.25620	-5.80910
-6.418	-3.827	.08200	-.03110	-6.25100	-3.94420
-6.515	.307	.07630	-.02680	-6.45110	.11390
-6.245	4.430	.07190	-.03020	-6.31020	4.23650
-6.184	6.425	.06560	-.03270	-6.28670	6.24890
	GRADIENT	-.00122	.00011	-.00719	.99079

IA156A, AEDC PWT 16T-470, 0 T S W/SILTS (R8NNA7) (10 MAY 80)

REFERENCE DATA

SREF = 2690.0000 SQ.FT. XMRP = 976.0000 IN. XT
LREF = 1290.3000 INCHES YMRP = .0000 IN. YT
BREF = 1290.3000 INCHES ZMRP = 400.0000 IN. ZT
SCALE = .0200

PARAMETRIC DATA

IB-ELV = 12.000 OB-ELV = 5.000
BDFLAP = .000 SPDBRK = .000
RUDDER = .000 SILTS = 1.000
MACH = 1.050 RN/L = 3.500

RUN NO. 1265/ 0 RN/L = 3.50 GRADIENT INTERVAL = -5.00/ 5.00

ALPHAL	BETAL	CALS	CYNLS	ALFLSU	BETLSU
-4.365	-5.859	.08460	-.04780	-4.16680	-5.90500
-4.476	-3.776	.08240	-.04400	-4.29150	-3.86210
-4.369	.514	.07670	-.04470	-4.31590	.31730
-3.828	4.404	.07260	-.04470	-3.93610	4.23100
-3.908	6.261	.06790	-.04480	-4.04280	6.10850
	GRADIENT	-.00120	-.00009	.04261	.98916

RUN NO. 1266/ 0 RN/L = 3.50 GRADIENT INTERVAL = -5.00/ 5.00

ALPHAL	BETAL	CALS	CYNLS	ALFLSU	BETLSU
-.341	-6.782	.08540	-.06840	-.14690	-6.72130
-.317	-4.613	.08440	-.06550	-.12300	-4.55200
-.366	-.189	.07940	-.06220	-.17180	-.12780
-.271	3.900	.07320	-.05340	-.07650	3.96100
-.239	6.078	.06940	-.04910	-.04470	6.13870
	GRADIENT	-.00131	.00141	.00524	.99998

RUN NO. 1267/ 0 RN/L = 3.50 GRADIENT INTERVAL = -5.00/ 5.00

ALPHAL	BETAL	CALS	CYNLS	ALFLSU	BETLSU
4.486	-5.595	.08250	-.06990	4.35900	-5.85380
4.316	-3.587	.08120	-.06410	4.22180	-3.76770
4.068	.273	.07950	-.05860	4.12550	.07760
4.159	4.236	.07450	-.04730	4.33900	4.14000
4.120	6.336	.07120	-.04420	4.31630	6.27990
	GRADIENT	-.00086	.00215	.01515	1.01090

IA156A, AEDC PWT 16T-470, 0 T S W/SILTS (R8NNA8) (10 MAY 80)

REFERENCE DATA

SREF = 2690.0000 SQ.FT. XMRP = 976.0000 IN. XT
LREF = 1290.3000 INCHES YMRP = .0000 IN. YT
BREF = 1290.3000 INCHES ZMRP = 400.0000 IN. ZT
SCALE = .0200

PARAMETRIC DATA

IB-ELV = 12.000 OB-ELV = 5.000
BDFLAP = .000 SPDBRK = .000
RUDDER = .000 SILTS = 1.000
MACH = 1.100 RN/L = 3.500

RUN NO. 1268/ 0 RN/L = 3.50 GRADIENT INTERVAL = -5.00/ 5.00

ALPHAL	BETAL	CALS	CYNLS	ALFLSU	BETLSU
-8.680	-5.672	.08120	-.02410	-8.50700	-5.78050
-8.750	-3.484	.07990	-.01690	-8.60390	-3.62670
-8.630	.453	.07540	-.01310	-8.56580	.25880
-8.374	4.646	.06810	-.01750	-8.41460	4.44620
-8.330	6.517	.06240	-.01950	-8.40490	6.32620
	GRADIENT	-.00145	-.00008	.02342	.99296

RUN NO. 1269/ 0 RN/L = 3.50 GRADIENT INTERVAL = -5.00/ 5.00

ALPHAL	BETAL	CALS	CYNLS	ALFLSU	BETLSU
-6.581	-5.754	.08280	-.03260	-6.39360	-5.83720
-6.493	-3.836	.07990	-.02810	-6.32370	-3.95110
-6.576	.322	.07410	-.02590	-6.50890	.12900
-6.239	4.434	.06940	-.03020	-6.30210	4.23950
-6.210	6.443	.06310	-.03200	-6.31070	6.26450
	GRADIENT	-.00127	-.00025	.00252	.99042

RUN NO. 1270/ 0 RN/L = 3.50 GRADIENT INTERVAL = -5.00/ 5.00

ALPHAL	BETAL	CALS	CYNLS	ALFLSU	BETLSU
-4.241	-5.885	.08240	-.04440	-4.04050	-5.92440
-4.504	-3.781	.07960	-.04070	-4.31700	-3.86520
-4.372	.522	.07270	-.04140	-4.31600	.32510
-3.803	4.412	.06970	-.04340	-3.90990	4.23780
-3.915	6.268	.06580	-.04350	-4.04810	6.11260
	GRADIENT	-.00122	-.00033	.04881	.98867

RUN NO. 1271/ 0 RN/L = 3.50 GRADIENT INTERVAL = -5.00/ 5.00

ALPHAL	BETAL	CALS	CYNLS	ALFLSU	BETLSU
-.351	-6.804	.08260	-.06450	-.15690	-6.74070
-.319	-4.632	.08060	-.06130	-.12430	-4.56890
-.340	-.231	.07470	-.05840	-.14590	-.16780
-.239	3.894	.06800	-.05060	-.04500	3.95680
-.235	6.078	.06450	-.04700	-.04020	6.14080
	GRADIENT	-.00148	.00125	.00914	1.00000

IA156A, AEDC PWT 16T-470, 0 T S W/SILTS (R8NNA8) (10 MAY 80)

REFERENCE DATA

SREF =	2690.0000 SQ.FT.	XMRP =	976.0000 IN. XT		
LREF =	1290.3000 INCHES	YMRP =	.0000 IN. YT		
BREF =	1290.3000 INCHES	ZMRP =	400.0000 IN. ZT		
SCALE =	.0200				

PARAMETRIC DATA

IB-ELV =	12.000	OB-ELV =	5.000
BDFLAP =	.000	SPDBRK =	.000
RUDDER =	.000	SILTS =	1.000
MACH =	1.100	RN/L =	3.500

RUN NO. 1272/ 0 RN/L = 3.50 GRADIENT INTERVAL = -5.00/ 5.00

ALPHAL	BETAL	CALS	CYNLS	ALFLSU	BETLSU
4.544	-5.717	.07890	-.06620	4.41780	-5.87750
4.370	-3.600	.07710	-.06090	4.27680	-3.78200
4.096	.283	.07460	-.05650	4.15570	.08760
4.188	4.229	.06990	-.04500	4.36940	4.13500
4.135	6.344	.06640	-.04230	4.33200	6.28990
	GRADIENT	-.00092	.00203	.01194	1.01124

IA156A, AEDC PWT 16T-470, 0 T S W/SILTS (R8NNA9) (10 MAY 80)

REFERENCE DATA

SREF =	2690.0000 SQ.FT.	XMRP =	976.0000 IN. XT		
LREF =	1290.3000 INCHES	YMRP =	.0000 IN. YT		
BREF =	1290.3000 INCHES	ZMRP =	400.0000 IN. ZT		
SCALE =	.0200				

PARAMETRIC DATA

IB-ELV =	12.000	OB-ELV =	5.000
BDFLAP =	.000	SPDBRK =	.000
RUDDER =	.000	SILTS =	1.000
MACH =	1.150	RN/L =	3.500

RUN NO. 1273/ 0 RN/L = 3.50 GRADIENT INTERVAL = -5.00/ 5.00

ALPHAL	BETAL	CALS	CYNLS	ALFLSU	BETLSU
-8.682	-5.711	.08070	-.02170	-8.50610	-5.81990
-8.743	-3.493	.07740	-.01440	-8.59350	-3.63620
-8.638	.466	.07460	-.00920	-8.57210	.26970
-8.342	4.617	.06630	-.01510	-8.38190	4.41390
-8.359	6.539	.06100	-.01830	-8.43320	6.34590
	GRADIENT	-.00137	-.00010	.02625	.99269

RUN NO. 1274/ 0 RN/L = 3.51 GRADIENT INTERVAL = -5.00/ 5.00

ALPHAL	BETAL	CALS	CYNLS	ALFLSU	BETLSU
-6.564	-5.763	.08120	-.03000	-6.37400	-5.84530
-6.466	-3.836	.07830	-.02600	-6.29440	-3.95090
-6.543	.311	.07230	-.02290	-6.47410	.11580
-6.247	4.457	.06770	-.02720	-6.31000	4.25950
-6.196	6.447	.06170	-.03080	-6.29610	6.26590
	GRADIENT	-.00128	-.00014	-.00188	.99015

IA156A, AEDC PWT 16T-470, O T S W/SILTS (R8NNA9) (10 MAY 80)

REFERENCE DATA

SREF =	2690.0000 SQ.FT.	XMRP =	976.0000 IN. XT		
LREF =	1290.3000 INCHES	YMRP =	.0000 IN. YT		
BREF =	1290.3000 INCHES	ZMRP =	400.0000 IN. ZT		
SCALE =	.0200				

PARAMETRIC DATA

IB-ELV =	12.000	OB-ELV =	5.000
BDFLAP =	.000	SPDBRK =	.000
RUDDER =	.000	SILTS =	1.000
MACH =	1.150	RN/L =	3.500

RUN NO. 1275/ 0 RN/L = 3.51 GRADIENT INTERVAL = -5.00/ 5.00

ALPHAL	BETAL	CALS	CYNLS	ALFLSU	BETLSU
-4.231	-5.882	.08060	-.04140	-4.02770	-5.92110
-4.493	-3.783	.07790	-.03810	-4.30360	-3.86650
-4.363	.529	.07190	-.03890	-4.30560	.32980
-3.801	4.415	.06840	-.04150	-3.90800	4.23740
-3.910	6.299	.06420	-.04170	-4.04420	6.14130
	GRADIENT	-.00116	-.00041	.04737	.98833

RUN NO. 1276/ 0 RN/L = 3.50 GRADIENT INTERVAL = -5.00/ 5.00

ALPHAL	BETAL	CALS	CYNLS	ALFLSU	BETLSU
-.309	-6.833	.08160	-.06250	-.11310	-6.76780
-.283	-4.616	.07960	-.05940	-.08650	-4.55040
-.311	-.260	.07470	-.05690	-.11440	-.19440
-.210	3.894	.06750	-.04970	-.01390	3.95930
-.192	6.109	.06420	-.04640	.00450	6.17440
	GRADIENT	-.00142	.00114	.00841	.99999

RUN NO. 1277/ 0 RN/L = 3.50 GRADIENT INTERVAL = -5.00/ 5.00

ALPHAL	BETAL	CALS	CYNLS	ALFLSU	BETLSU
4.573	-5.688	.07840	-.06570	4.44680	-5.85150
4.421	-3.577	.07760	-.06150	4.32890	-3.76250
4.145	.300	.07510	-.05550	4.20720	.10280
4.219	4.233	.06950	-.04360	4.40250	4.13940
4.163	6.362	.06660	-.04120	4.36250	6.30900
	GRADIENT	-.00104	.00229	.00952	1.01174

REFERENCE DATA

SREF = 2690.0000 SQ.FT. XMRP = 976.0000 IN. XT
LREF = 1290.3000 INCHES YMRP = .0000 IN. YT
BREF = 1290.3000 INCHES ZMRP = 400.0000 IN. ZT
SCALE = .0200

PARAMETRIC DATA

IB-ELV = 12.000 OB-ELV = 5.000
BDFLAP = .000 SPDBRK = .000
RUDDER = .000 SILTS = 1.000
MACH = 1.250 RN/L = 3.500

RUN NO. 1278/ 0 RN/L = 3.50 GRADIENT INTERVAL = -5.00/ 5.00

ALPHAL	BETAL	CALS	CYNLS	ALFLSU	BETLSU
-8.651	-5.749	.07770	-.01680	-8.46470	-5.86200
-8.713	-3.536	.07610	-.00960	-8.55480	-3.68580
-8.587	.429	.07200	-.00700	-8.51660	.22290
-8.329	4.655	.06390	-.01140	-8.37040	4.44100
-8.349	6.564	.05850	-.01440	-8.42600	6.35960
	GRADIENT	-.00149	-.00023	.02264	.99222

RUN NO. 1279/ 0 RN/L = 3.50 GRADIENT INTERVAL = -5.00/ 5.00

ALPHAL	BETAL	CALS	CYNLS	ALFLSU	BETLSU
-6.561	-5.821	.07810	-.02540	-6.35970	-5.90650
-6.442	-3.857	.07570	-.02190	-6.26050	-3.97760
-6.493	.323	.07060	-.01940	-6.41890	.11690
-6.230	4.459	.06490	-.02310	-6.29510	4.25080
-6.009	6.558	.05940	-.02740	-6.11840	6.36920
	GRADIENT	-.00130	-.00014	-.00422	.98949

RUN NO. 1280/ 0 RN/L = 3.50 GRADIENT INTERVAL = -5.00/ 5.00

ALPHAL	BETAL	CALS	CYNLS	ALFLSU	BETLSU
-4.337	-5.901	.07830	-.03640	-4.12340	-5.94370
-4.454	-3.801	.07570	-.03310	-4.25340	-3.88700
-4.316	.524	.07030	-.03250	-4.25350	.31460
-3.782	4.423	.06570	-.03700	-3.89340	4.23510
-3.895	6.317	.06140	-.03780	-4.03560	6.15030
	GRADIENT	-.00122	-.00046	.04298	.98740

RUN NO. 1281/ 0 RN/L = 3.51 GRADIENT INTERVAL = -5.00/ 5.00

ALPHAL	BETAL	CALS	CYNLS	ALFLSU	BETLSU
-.266	-6.869	.07880	-.05850	-.05910	-6.79880
-.233	-4.640	.07790	-.05660	-.02620	-4.56990
-.233	-.276	.07210	-.05350	-.02660	-.20530
-.137	3.900	.06410	-.04650	.06940	3.97020
-.145	6.134	.06090	-.04450	.06190	6.20450
	GRADIENT	-.00161	.00118	.01111	1.00002

IA156A, AEDC PWT 16T-470, 0 T S W/SILTS (R8NNB0) (10 MAY 80)

REFERENCE DATA

SREF =	2690.0000 SQ.FT.	XMRP =	976.0000 IN. XT		
LREF =	1290.3000 INCHES	YMRP =	.0000 IN. YT		
BREF =	1290.3000 INCHES	ZMRP =	400.0000 IN. ZT		
SCALE =	.0200				

PARAMETRIC DATA

IB-ELV =	12.000	OB-ELV =	5.000
BDFLAP =	.000	SPDBRK =	.000
RUDDER =	.000	SILTS =	1.000
MACH =	1.250	RN/L =	3.500

RUN NO. 1282/ 0 RN/L = 3.51 GRADIENT INTERVAL = -5.00/ 5.00

ALPHAL	BETAL	CALS	CYNLS	ALFLSU	BETLSU
4.643	-5.685	.07660	-.06280	4.51020	-5.85780
4.500	-3.578	.07540	-.05800	4.40370	-3.77380
4.225	.314	.07190	-.05240	4.29150	.10620
4.270	4.253	.06620	-.04100	4.46580	4.15460
4.216	6.356	.06280	-.03870	4.42690	6.30080
	GRADIENT	-.00118	.00217	.00800	1.01249

IA156A, AEDC PWT 16T-470, 0 T S W/SILTS (R8NNB1) (10 MAY 80)

REFERENCE DATA

SREF =	2690.0000 SQ.FT.	XMRP =	976.0000 IN. XT		
LREF =	1290.3000 INCHES	YMRP =	.0000 IN. YT		
BREF =	1290.3000 INCHES	ZMRP =	400.0000 IN. ZT		
SCALE =	.0200				

PARAMETRIC DATA

IB-ELV =	12.000	OB-ELV =	5.000
BDFLAP =	.000	SPDBRK =	.000
RUDDER =	.000	SILTS =	1.000
MACH =	1.400	RN/L =	3.500

RUN NO. 1283/ 0 RN/L = 3.49 GRADIENT INTERVAL = -5.00/ 5.00

ALPHAL	BETAL	CALS	CYNLS	ALFLSU	BETLSU
-8.698	-5.795	.07440	-.00810	-8.47450	-5.92830
-8.712	-3.563	.07290	-.00110	-8.52110	-3.74020
-8.584	.454	.06810	-.00060	-8.49760	.20960
-8.284	4.730	.06040	-.00780	-8.33210	4.47550
-8.313	6.665	.05610	-.01160	-8.40370	6.42260
	GRADIENT	-.00151	-.00082	.02296	.99071

RUN NO. 1284/ 0 RN/L = 3.50 GRADIENT INTERVAL = -5.00/ 5.00

ALPHAL	BETAL	CALS	CYNLS	ALFLSU	BETLSU
-6.600	-5.868	.07410	-.01430	-6.36020	-5.96740
-6.506	-3.900	.07210	-.01130	-6.28820	-4.04160
-6.527	.342	.06750	-.01110	-6.43720	.09770
-6.195	4.545	.06210	-.02000	-6.27110	4.29570
-6.139	6.544	.05720	-.02330	-6.26290	6.31590
	GRADIENT	-.00118	-.00103	.00197	.98729

IA156A, AEDC PWT 16T-470, 0 T S W/SILTS (R8NNB1) (10 MAY 80)

REFERENCE DATA

SREF = 2690.0000 SQ.FT. XMRP = 976.0000 IN. XT
LREF = 1290.3000 INCHES YMRP = .0000 IN. YT
BREF = 1290.3000 INCHES ZMRP = 400.0000 IN. ZT
SCALE = .0200

PARAMETRIC DATA

IB-ELV = 12.000 OB-ELV = 5.000
BDFLAP = .000 SPDBRK = .000
RUDDER = .000 SILTS = 1.000
MACH = 1.400 RN/L = 3.500

RUN NO. 1285/ 0 RN/L = 3.50 GRADIENT INTERVAL = -5.00/ 5.00

ALPHAL	BETAL	CALS	CYNLS	ALFLSU	BETLSU
-4.484	-5.908	.07400	-.02770	-4.22780	-5.95870
-4.458	-3.839	.07160	-.02570	-4.21670	-3.93880
-4.332	.576	.06600	-.02480	-4.25670	.32590
-3.736	4.499	.06330	-.03410	-3.86860	4.27440
-3.849	6.381	.05880	-.03490	-4.01600	6.18090
	GRADIENT	-.00100	-.00098	.04069	.98457

RUN NO. 1286/ 0 RN/L = 3.50 GRADIENT INTERVAL = -5.00/ 5.00

ALPHAL	BETAL	CALS	CYNLS	ALFLSU	BETLSU
-.301	-6.933	.07510	-.05520	-.05500	-6.84770
-.276	-4.743	.07350	-.05160	-.02950	-4.65770
-.247	-.229	.06850	-.04860	-.00100	-.14270
-.166	3.917	.06190	-.04420	.08070	4.00280
-.195	6.162	.05880	-.04240	.04870	6.24610
	GRADIENT	-.00134	.00085	.01263	1.00006

RUN NO. 1287/ 0 RN/L = 3.49 GRADIENT INTERVAL = -5.00/ 5.00

ALPHAL	BETAL	CALS	CYNLS	ALFLSU	BETLSU
4.782	-5.618	.07340	-.06210	4.62490	-5.82460
4.600	-3.508	.07200	-.05700	4.48670	-3.74140
4.272	.361	.06760	-.04870	4.35250	.11260
4.299	4.297	.06270	-.03840	4.53100	4.18120
4.218	6.354	.06040	-.03660	4.46840	6.29050
	GRADIENT	-.00119	.00238	.00579	1.01519

IA156A, AEDC PWT 16T-470, 0 T S W/SILTS (R8NNB2) (10 MAY 80)

REFERENCE DATA

SREF = 2690.0000 SQ.FT. XMRP = 976.0000 IN. XT
LREF = 1290.3000 INCHES YMRP = .0000 IN. YT
BREF = 1290.3000 INCHES ZMRP = 400.0000 IN. ZT
SCALE = .0200

PARAMETRIC DATA

IB-ELV = 12.000 OB-ELV = 5.000
BDFLAP = .000 SPDBRK = .000
RUDDER = .000 SILTS = 1.000
MACH = 1.550 RN/L = 3.200

RUN NO. 1288/ 0 RN/L = 3.00 GRADIENT INTERVAL = -5.00/ 5.00

ALPHAL	BETAL	CALS	CYNLS	ALFLSU	BETLSU
-8.646	-5.785	.06840	-.01090	-8.32340	-5.93960
-8.679	-3.555	.06720	.00010	-8.39560	-3.77330
-8.510	.502	.06200	.00320	-8.35910	.17670
-8.225	4.745	.05490	-.00250	-8.25290	4.38900
-8.164	6.642	.05160	-.00610	-8.25410	6.29650
	GRADIENT	-.00148	-.00032	.01725	.98341

RUN NO. 1289/ 0 RN/L = 3.00 GRADIENT INTERVAL = -5.00/ 5.00

ALPHAL	BETAL	CALS	CYNLS	ALFLSU	BETLSU
-6.586	-5.861	.06980	-.01400	-6.24530	-5.96780
-6.506	-3.886	.06710	-.00910	-6.19040	-4.05280
-6.460	.394	.06150	-.00940	-6.30420	.07140
-6.124	4.579	.05620	-.01530	-6.19250	4.22790
-6.048	6.588	.05280	-.01850	-6.18570	6.25910
	GRADIENT	-.00129	-.00073	-.00035	.97823

RUN NO. 1290/ 0 RN/L = 3.00 GRADIENT INTERVAL = -5.00/ 5.00

ALPHAL	BETAL	CALS	CYNLS	ALFLSU	BETLSU
-4.313	-5.971	.07000	-.02820	-3.95620	-6.00040
-4.559	-3.831	.06710	-.02340	-4.21830	-3.93880
-4.349	.636	.06110	-.02320	-4.21150	.30370
-3.712	4.562	.05690	-.02760	-3.86040	4.23550
-3.794	6.418	.05350	-.02920	-3.99420	6.12240
	GRADIENT	-.00122	-.00049	.04171	.97350

RUN NO. 1291/ 0 RN/L = 3.00 GRADIENT INTERVAL = -5.00/ 5.00

ALPHAL	BETAL	CALS	CYNLS	ALFLSU	BETLSU
-.388	-6.930	.07120	-.05390	-.06440	-6.78170
-.349	-4.759	.06890	-.04930	-.02420	-4.60960
-.334	-.364	.06410	-.04650	-.00860	-.21310
-.307	3.799	.05910	-.03990	.01930	3.95080
-.328	5.990	.05490	-.03770	-.00460	6.13810
	GRADIENT	-.00114	.00109	.00507	1.00020

IA156A, AEDC PWT 16T-470, O T S W/SILTS (R8NNB2) (10 MAY 80)

REFERENCE DATA

SREF =	2690.0000 SQ.FT.	XMRP =	976.0000 IN. XT		
LREF =	1290.3000 INCHES	YMRP =	.0000 IN. YT		
BREF =	1290.3000 INCHES	ZMRP =	400.0000 IN. ZT		
SCALE =	.0200				

PARAMETRIC DATA

IB-ELV =	12.000	OB-ELV =	5.000
BDFLAP =	.000	SPDBRK =	.000
RUDDER =	.000	SILTS =	1.000
MACH =	1.550	RN/L =	3.200

RUN NO. 1292/ 0 RN/L = 3.00 GRADIENT INTERVAL = -5.00/ 5.00

ALPHAL	BETAL	CALS	CYNLS	ALFLSU	BETLSU
4.752	-5.557	.07020	-.05910	4.56500	-5.86030
4.493	-3.412	.06800	-.05330	4.36840	-3.74580
4.176	.427	.06340	-.04640	4.31590	.10150
4.117	4.284	.05890	-.03640	4.44790	4.15650
4.070	6.374	.05610	-.03480	4.42430	6.31980
	GRADIENT	-.00118	.00220	.01035	1.02688

IA156A, AEDC PWT 16T-470, O T S W/SILTS (R8NNB3) (10 MAY 80)

REFERENCE DATA

SREF =	2690.0000 SQ.FT.	XMRP =	976.0000 IN. XT		
LREF =	1290.3000 INCHES	YMRP =	.0000 IN. YT		
BREF =	1290.3000 INCHES	ZMRP =	400.0000 IN. ZT		
SCALE =	.0200				

PARAMETRIC DATA

IB-ELV =	12.000	OB-ELV =	9.000
BDFLAP =	.000	SPDBRK =	.000
RUDDER =	.000	SILTS =	1.000
MACH =	.600	RN/L =	3.500

RUN NO. 1295/ 0 RN/L = 3.50 GRADIENT INTERVAL = -5.00/ 5.00

ALPHAL	BETAL	CALS	CYNLS	ALFLSU	BETLSU
-8.382	-7.710	.04920	-.02330	-8.29370	-7.90160
-8.324	-5.655	.04780	-.01600	-8.26370	-5.85730
-8.286	-3.635	.04590	-.01070	-8.26440	-3.84480
-8.142	.468	.04310	-.00470	-8.22350	.27330
-7.967	4.357	.04080	-.00780	-8.12850	4.22040
-7.976	6.277	.03640	-.01210	-8.15860	6.17120
-7.979	8.283	.03330	-.01670	-8.17490	8.20350
	GRADIENT	-.00064	.00037	.01694	1.00912

RUN NO. 1296/ 0 RN/L = 3.49 GRADIENT INTERVAL = -5.00/ 5.00

ALPHAL	BETAL	CALS	CYNLS	ALFLSU	BETLSU
-6.296	-7.793	.05010	-.03160	-6.18080	-7.96960
-6.228	-5.761	.04850	-.02520	-6.13950	-5.95280
-6.131	-3.862	.04670	-.02110	-6.07820	-4.06670
-6.132	.177	.04260	-.01700	-6.20490	-.02090
-5.965	4.231	.04090	-.01890	-6.14070	4.11350
-5.861	6.210	.03750	-.02260	-6.05730	6.13160
-5.891	8.200	.03510	-.02560	-6.09540	8.14940
	GRADIENT	-.00072	.00027	-.00771	1.01081

IA156A, AEDC PWT 16T-470, 0 T S W/SILTS (R8NNB3) (10 MAY 80)

REFERENCE DATA

SREF = 2690.0000 SQ.FT. XMRP = 976.0000 IN. XT
LREF = 1290.3000 INCHES YMRP = .0000 IN. YT
BREF = 1290.3000 INCHES ZMRP = 400.0000 IN. ZT
SCALE = .0200

PARAMETRIC DATA

IB-ELV = 12.000 OB-ELV = 9.000
BDFLAP = .000 SPDBRK = .000
RUDDER = .000 SILTS = 1.000
MACH = .600 RN/L = 3.500

RUN NO. 1297/ 0 RN/L = 3.49 GRADIENT INTERVAL = -5.00/ 5.00

ALPHAL	BETAL	CALS	CYNLS	ALFLSU	BETLSU
-4.279	-7.811	.05090	-.03950	-4.13530	-7.96520
-4.252	-5.809	.04910	-.03400	-4.12760	-5.97980
-4.249	-3.753	.04720	-.03030	-4.16180	-3.94560
-4.000	.250	.04290	-.02960	-4.07560	.05290
-3.652	4.257	.04090	-.02950	-3.84990	4.18400
-3.755	6.061	.03820	-.03010	-3.96220	6.02050
-3.787	8.054	.03670	-.03190	-3.99730	8.03980
	GRADIENT	-.00079	.00010	.03894	1.01483

RUN NO. 1298/ 0 RN/L = 3.49 GRADIENT INTERVAL = -5.00/ 5.00

ALPHAL	BETAL	CALS	CYNLS	ALFLSU	BETLSU
-.274	-8.581	.05240	-.05470	-.07770	-8.65980
-.255	-6.494	.05110	-.04970	-.05820	-6.57040
-.233	-4.224	.04920	-.04630	-.03640	-4.30100
-.208	-.154	.04420	-.04390	-.01230	-.23190
-.154	3.926	.04070	-.03740	.04210	3.84840
-.146	6.030	.03940	-.03510	.05020	5.95330
-.139	8.140	.03900	-.03530	.05770	8.06430
	GRADIENT	-.00104	.00109	.00963	1.00000

RUN NO. 1299/ 0 RN/L = 3.49 GRADIENT INTERVAL = -5.00/ 5.00

ALPHAL	BETAL	CALS	CYNLS	ALFLSU	BETLSU
4.467	-7.945	.05060	-.05610	4.25780	-7.96470
4.376	-5.821	.04890	-.05130	4.17020	-5.86600
4.364	-3.833	.04740	-.04750	4.17020	-3.91550
4.158	.151	.04320	-.04180	4.07440	-.04290
4.186	4.238	.04060	-.03340	4.26930	4.04420
4.121	6.383	.03960	-.02970	4.24380	6.21250
4.091	8.391	.03920	-.02840	4.23460	8.23690
	GRADIENT	-.00084	.00175	.01243	.98626

IA156A, AEDC PWT 16T-470, 0 T S W/SILTS (R8NNB3) (10 MAY 80)

REFERENCE DATA

SREF = 2690.0000 SQ.FT. XMRP = 976.0000 IN. XT
LREF = 1290.3000 INCHES YMRP = .0000 IN. YT
BREF = 1290.3000 INCHES ZMRP = 400.0000 IN. ZT
SCALE = .0200

PARAMETRIC DATA

IB-ELV = 12.000 OB-ELV = 9.000
BDFLAP = .000 SPDBRK = .000
RUDDER = .000 SILTS = 1.000
MACH = .600 RN/L = 3.500

RUN NO. 1300/ 0 RN/L = 3.50 GRADIENT INTERVAL = -5.00/ 5.00

ALPHAL	BETAL	CALS	CYNLS	ALFLSU	BETLSU
6.579	-7.967	.04990	-.05130	6.37640	-8.02260
6.566	-5.893	.04830	-.04530	6.37400	-5.97800
6.552	-3.815	.04700	-.04080	6.37860	-3.93530
6.252	.286	.04400	-.03490	6.17540	.09010
6.153	4.249	.04060	-.02590	6.20080	4.04400
6.109	6.201	.03990	-.02200	6.19590	6.01020
6.097	8.264	.03980	-.02020	6.21160	8.08820
	GRADIENT	-.00079	.00185	-.02221	.98947

RUN NO. 1301/ 0 RN/L = 3.50 GRADIENT INTERVAL = -5.00/ 5.00

ALPHAL	BETAL	CALS	CYNLS	ALFLSU	BETLSU
8.537	-7.795	.04870	-.04130	8.34340	-7.87800
8.440	-5.715	.04760	-.03590	8.26010	-5.82450
8.449	-3.733	.04680	-.02980	8.29330	-3.87340
8.335	.285	.04440	-.02470	8.25760	.08910
8.336	4.358	.03960	-.01500	8.35840	4.14810
8.278	6.390	.03940	-.01170	8.33840	6.18790
8.236	8.434	.03950	-.01040	8.32470	8.24250
	GRADIENT	-.00089	.00183	.00808	.99153

IA156A, AEDC PWT 16T-470, 0 T S W/SILTS (R8NNB4) (10 MAY 80)

REFERENCE DATA

SREF = 2690.0000 SQ.FT. XMRP = 976.0000 IN. XT
LREF = 1290.3000 INCHES YMRP = .0000 IN. YT
BREF = 1290.3000 INCHES ZMRP = 400.0000 IN. ZT
SCALE = .0200

PARAMETRIC DATA

IB-ELV = 12.000 OB-ELV = 9.000
BDFLAP = .000 SPDBRK = .000
RUDDER = .000 SILTS = 1.000
MACH = .800 RN/L = 3.500

RUN NO. 1302/ 0 RN/L = 3.50 GRADIENT INTERVAL = -5.00/ 5.00

ALPHAL	BETAL	CALS	CYNLS	ALFLSU	BETLSU
-8.515	-5.674	.05140	-.01260	-8.35890	-5.81080
-8.303	-3.701	.05010	-.00840	-8.17230	-3.86230
-8.328	.548	.04650	-.00280	-8.29480	.34280
-8.136	4.491	.04120	-.00600	-8.19970	4.29330
-8.116	6.415	.03600	-.01200	-8.21340	6.23120
	GRADIENT	-.00108	.00021	-.00367	.99551

RUN NO. 1303/ 0 RN/L = 3.50 GRADIENT INTERVAL = -5.00/ 5.00

ALPHAL	BETAL	CALS	CYNLS	ALFLSU	BETLSU
-6.346	-5.790	.05240	-.02450	-6.17030	-5.90140
-6.260	-3.862	.05050	-.02020	-6.10790	-4.00330
-6.307	.258	.04570	-.01640	-6.26600	.05430
-6.095	4.355	.04190	-.01770	-6.18080	4.16660
-5.865	6.446	.03760	-.02230	-5.99060	6.28030
	GRADIENT	-.00105	.00030	-.00890	.99422

RUN NO. 1304/ 0 RN/L = 3.50 GRADIENT INTERVAL = -5.00/ 5.00

ALPHAL	BETAL	CALS	CYNLS	ALFLSU	BETLSU
-4.221	-5.903	.05370	-.03450	-4.02640	-5.97610
-4.340	-3.792	.05180	-.02990	-4.16630	-3.90520
-4.221	.482	.04570	-.02780	-4.19100	.27650
-3.748	4.349	.04260	-.02830	-3.87480	4.18480
-3.819	6.195	.03950	-.02920	-3.97100	6.05450
	GRADIENT	-.00114	.00020	.03508	.99342

RUN NO. 1306/ 0 RN/L = 3.50 GRADIENT INTERVAL = -5.00/ 5.00

ALPHAL	BETAL	CALS	CYNLS	ALFLSU	BETLSU
-.272	-6.669	.05550	-.05030	-.06810	-6.63080
-.259	-4.499	.05350	-.04530	-.05450	-4.46110
-.248	-.314	.04750	-.04180	-.04410	-.27560
-.184	3.861	.04340	-.03760	.01960	3.89980
-.164	5.985	.04220	-.03580	.04020	6.02330
	GRADIENT	-.00121	.00092	.00886	1.00004

IA156A, AEDC PWT 16T-470, O T S W/SILTS (R8NNB4) (10 MAY 80)

REFERENCE DATA

SREF =	2690.0000 SQ.FT.	XMRP =	976.0000 IN. XT		
LREF =	1290.3000 INCHES	YMRP =	.0000 IN. YT		
BREF =	1290.3000 INCHES	ZMRP =	400.0000 IN. ZT		
SCALE =	.0200				

PARAMETRIC DATA

IB-ELV =	12.000	OB-ELV =	9.000
BDFLAP =	.000	SPDBRK =	.000
RUDDER =	.000	SILTS =	1.000
MACH =	.800	RN/L =	3.500

RUN NO. 1314/ 0 RN/L = 3.49 GRADIENT INTERVAL = -5.00/ 5.00

ALPHAL	BETAL	CALS	CYNLS	ALFLSU	BETLSU
6.533	-5.795	.05260	-.04840	6.41320	-5.96500
6.508	-3.725	.05090	-.04130	6.42480	-3.91530
6.182	.298	.04730	-.03740	6.21900	.09390
6.115	4.192	.04400	-.02790	6.26130	4.04490
6.083	6.223	.04360	-.02460	6.25600	6.10840
	GRADIENT	-.00087	.00169	-.02082	1.00533

IA156A, AEDC PWT 16T-470, O T S W/SILTS (R8NNB5) (10 MAY 80)

REFERENCE DATA

SREF =	2690.0000 SQ.FT.	XMRP =	976.0000 IN. XT		
LREF =	1290.3000 INCHES	YMRP =	.0000 IN. YT		
BREF =	1290.3000 INCHES	ZMRP =	400.0000 IN. ZT		
SCALE =	.0200				

PARAMETRIC DATA

IB-ELV =	12.000	OB-ELV =	9.000
BDFLAP =	.000	SPDBRK =	.000
RUDDER =	.000	SILTS =	1.000
MACH =	.800	RN/L =	3.500

RUN NO. 1313/ 0 RN/L = 3.49 GRADIENT INTERVAL = -5.00/ 5.00

ALPHAL	BETAL	CALS	CYNLS	ALFLSU	BETLSU
-.277	-6.637	.05560	-.05080	-.07260	-6.59900
-.262	-4.530	.05370	-.04550	-.05840	-4.49260
-.252	-.307	.04820	-.04200	-.04840	-.26860
-.184	3.870	.04430	-.03820	.02040	3.90860
-.168	5.998	.04260	-.03590	.03580	6.03650
	GRADIENT	-.00112	.00087	.00937	1.00005

IA156A, AEDC PWT 16T-470, 0 T S W/SILTS (R8NNB6) (10 MAY 80)

REFERENCE DATA

SREF = 2690.0000 SQ.FT. XMRP = 976.0000 IN. XT
LREF = 1290.3000 INCHES YMRP = .0000 IN. YT
BREF = 1290.3000 INCHES ZMRP = 400.0000 IN. ZT
SCALE = .0200

PARAMETRIC DATA

IB-ELV = 12.000 OB-ELV = 9.000
BDFLAP = .000 SPDBRK = .000
RUDDER = .000 SILTS = 1.000
MACH = .900 RN/L = 3.500

RUN NO. 1308/ 0 RN/L = 3.50 GRADIENT INTERVAL = -5.00/ 5.00

ALPHAL	BETAL	CALS	CYNLS	ALFLSU	BETLSU
-8.507	-5.698	.05630	-.01370	-8.34070	-5.82010
-8.465	-3.617	.05410	-.00760	-8.32470	-3.76880
-8.397	.510	.05190	-.00390	-8.34770	.30940
-8.194	4.488	.04540	-.00630	-8.24340	4.28790
-8.189	6.457	.04040	-.01070	-8.27350	6.26820
	GRADIENT	-.00107	.00016	.00993	.99393

RUN NO. 1309/ 0 RN/L = 3.50 GRADIENT INTERVAL = -5.00/ 5.00

ALPHAL	BETAL	CALS	CYNLS	ALFLSU	BETLSU
-6.428	-5.760	.05780	-.02280	-6.24540	-5.85730
-6.316	-3.838	.05510	-.01850	-6.15460	-3.96670
-6.373	.293	.05210	-.01650	-6.31780	.09350
-6.156	4.396	.04640	-.01800	-6.22920	4.20230
-5.928	6.497	.04240	-.02330	-6.04200	6.32400
	GRADIENT	-.00106	.00006	-.00910	.99222

RUN NO. 1310/ 0 RN/L = 3.49 GRADIENT INTERVAL = -5.00/ 5.00

ALPHAL	BETAL	CALS	CYNLS	ALFLSU	BETLSU
-4.219	-5.892	.05950	-.03450	-4.02040	-5.94940
-4.397	-3.788	.05680	-.02940	-4.21580	-3.88730
-4.288	.514	.05090	-.02850	-4.24430	.31180
-3.783	4.395	.04790	-.02980	-3.89850	4.22410
-3.869	6.237	.04470	-.03130	-4.01170	6.08760
	GRADIENT	-.00109	-.00004	.03796	.99094

RUN NO. 1311/ 0 RN/L = 3.49 GRADIENT INTERVAL = -5.00/ 5.00

ALPHAL	BETAL	CALS	CYNLS	ALFLSU	BETLSU
-.315	-6.751	.06090	-.05300	-.11520	-6.69910
-.299	-4.584	.05970	-.04770	-.09920	-4.53250
-.329	-.255	.05370	-.04280	-.12900	-.20280
-.254	3.856	.04960	-.04010	-.05450	3.90750
-.230	6.018	.04780	-.03920	-.03020	6.06980
	GRADIENT	-.00120	.00090	.00519	1.00004

IA156A, AEDC PWT 16T-470, O T S W/SILTS (R8NNB6) (10 MAY 80)

REFERENCE DATA

SREF =	2690.0000 SQ.FT.	XMRP =	976.0000 IN. XT		
LREF =	1290.3000 INCHES	YMRP =	.0000 IN. YT		
BREF =	1290.3000 INCHES	ZMRP =	400.0000 IN. ZT		
SCALE =	.0200				

PARAMETRIC DATA

IB-ELV =	12.000	OB-ELV =	9.000
BDFLAP =	.000	SPDBRK =	.000
RUDDER =	.000	SILTS =	1.000
MACH =	.900	RN/L =	3.500

RUN NO. 1312/ 0 RN/L = 3.50 GRADIENT INTERVAL = -5.00/ 5.00

ALPHAL	BETAL	CALS	CYNLS	ALFLSU	BETLSU
4.455	-5.768	.05910	-.05560	4.31610	-5.92170
4.327	-3.686	.05750	-.04970	4.22080	-3.86310
4.008	.198	.05280	-.04560	4.05400	-.00340
4.143	4.176	.05030	-.03690	4.32090	4.07000
4.071	6.320	.04810	-.03410	4.26670	6.25450
	GRADIENT	-.00091	.00163	.01295	1.00918

IA156A, AEDC PWT 16T-470, O T S (R8NNB7) (10 MAY 80)

REFERENCE DATA

SREF =	2690.0000 SQ.FT.	XMRP =	976.0000 IN. XT		
LREF =	1290.3000 INCHES	YMRP =	.0000 IN. YT		
BREF =	1290.3000 INCHES	ZMRP =	400.0000 IN. ZT		
SCALE =	.0200				

PARAMETRIC DATA

IB-ELV =	12.000	OB-ELV =	9.000
BDFLAP =	.000	SPDBRK =	.000
RUDDER =	.000	SILTS =	.000
MACH =	.800	RN/L =	3.500

RUN NO. 1324/ 0 RN/L = 3.50 GRADIENT INTERVAL = -5.00/ 5.00

ALPHAL	BETAL	CALS	CYNLS	ALFLSU	BETLSU
4.529	-5.894	.05380	-.05480	4.37860	-6.03760
4.324	-3.633	.05160	-.04970	4.20510	-3.80390
4.082	.278	.04640	-.04390	4.11920	.07330
4.151	4.268	.04440	-.03470	4.32380	4.15250
4.088	6.337	.04310	-.03170	4.28020	6.25900
	GRADIENT	-.00091	.00190	.01515	1.00699

IA156A, AEDC PWT 16T-470, 0 T S (R8NNB8) (10 MAY 80)

REFERENCE DATA

SREF = 2690.0000 SQ.FT. XMRP = 976.0000 IN. XT
LREF = 1290.3000 INCHES YMRP = .0000 IN. YT
BREF = 1290.3000 INCHES ZMRP = 400.0000 IN. ZT
SCALE = .0200

PARAMETRIC DATA

IB-ELV = 12.000 OB-ELV = 9.000
BDFLAP = .000 SPDBRK = .000
RUDDER = .000 SILTS = .000
MACH = .950 RN/L = 3.500

RUN NO. 1325/ 0 RN/L = 3.51 GRADIENT INTERVAL = -5.00/ 5.00

ALPHAL	BETAL	CALS	CYNLS	ALFLSU	BETLSU
-8.562	-5.704	.06080	-.01420	-8.39360	-5.82160
-8.659	-3.496	.06020	-.00650	-8.51920	-3.64610
-8.507	.390	.05720	-.00390	-8.45040	.19250
-8.291	4.600	.05060	-.00900	-8.33900	4.40090
-8.257	6.464	.04430	-.01290	-8.33840	6.27530
	GRADIENT	-.00119	-.00032	.02231	.99395

RUN NO. 1326/ 0 RN/L = 3.50 GRADIENT INTERVAL = -5.00/ 5.00

ALPHAL	BETAL	CALS	CYNLS	ALFLSU	BETLSU
-6.505	-5.750	.06300	-.02440	-6.32150	-5.84240
-6.387	-3.836	.06130	-.02000	-6.22410	-3.96030
-6.460	.271	.05920	-.01780	-6.40060	.07490
-6.197	4.383	.05280	-.02200	-6.26660	4.19020
-5.887	6.480	.04730	-.02710	-5.99800	6.30740
	GRADIENT	-.00103	-.00024	-.00516	.99164

RUN NO. 1327/ 0 RN/L = 3.50 GRADIENT INTERVAL = -5.00/ 5.00

ALPHAL	BETAL	CALS	CYNLS	ALFLSU	BETLSU
-4.249	-5.883	.06560	-.03740	-4.05060	-5.93430
-4.432	-3.783	.06350	-.03240	-4.24920	-3.87680
-4.316	.508	.05830	-.03370	-4.26830	.30770
-3.782	4.378	.05340	-.03400	-3.89450	4.20600
-3.880	6.244	.04910	-.03460	-4.01890	6.09330
	GRADIENT	-.00124	-.00020	.04260	.99019

RUN NO. 1328/ 0 RN/L = 3.50 GRADIENT INTERVAL = -5.00/ 5.00

ALPHAL	BETAL	CALS	CYNLS	ALFLSU	BETLSU
-.327	-6.737	.06820	-.05700	-.12950	-6.68210
-.282	-4.587	.06740	-.05350	-.08460	-4.53100
-.288	-.248	.06170	-.04890	-.09010	-.19230
-.218	3.854	.05520	-.04230	-.02030	3.90990
-.209	6.052	.05150	-.04090	-.01090	6.10710
	GRADIENT	-.00144	.00132	.00753	1.00001

IA156A, AEDC PWT 16T-470, 0 T S (R8NNB8) (10 MAY 80)

REFERENCE DATA

SREF = 2690.0000 SQ.FT. XMRP = 976.0000 IN. XT
LREF = 1290.3000 INCHES YMRP = .0000 IN. YT
BREF = 1290.3000 INCHES ZMRP = 400.0000 IN. ZT
SCALE = .0200

PARAMETRIC DATA

IB-ELV = 12.000 OB-ELV = 9.000
BDFLAP = .000 SPDBRK = .000
RUDDER = .000 SILTS = .000
MACH = .950 RN/L = 3.500

RUN NO. 1329/ 0 RN/L = 3.50 GRADIENT INTERVAL = -5.00/ 5.00

ALPHAL	BETAL	CALS	CYNLS	ALFLSU	BETLSU
4.268	-5.618	.06570	-.05850	4.13160	-5.77130
4.289	-3.849	.06400	-.05230	4.18200	-4.02450
4.165	.312	.05930	-.04740	4.21990	.11380
4.138	4.101	.05590	-.03900	4.31530	3.99720
4.105	6.308	.05180	-.03590	4.30100	6.24670
	GRADIENT	-.00102	.00166	.01664	1.00881

IA156A, AEDC PWT 16T-470, 0 T S (R8NNB9) (10 MAY 80)

REFERENCE DATA

SREF = 2690.0000 SQ.FT. XMRP = 976.0000 IN. XT
LREF = 1290.3000 INCHES YMRP = .0000 IN. YT
BREF = 1290.3000 INCHES ZMRP = 400.0000 IN. ZT
SCALE = .0200

PARAMETRIC DATA

IB-ELV = 12.000 OB-ELV = 9.000
BDFLAP = .000 SPDBRK = .000
RUDDER = .000 SILTS = .000
MACH = 1.050 RN/L = 3.500

RUN NO. 1330/ 0 RN/L = 3.50 GRADIENT INTERVAL = -5.00/ 5.00

ALPHAL	BETAL	CALS	CYNLS	ALFLSU	BETLSU
-8.774	-5.635	.08240	-.02520	-8.60410	-5.74680
-8.709	-3.551	.08000	-.02070	-8.56340	-3.69330
-8.609	.597	.07740	-.01350	-8.55180	.40100
-8.349	4.580	.07090	-.01890	-8.39120	4.38050
-8.330	6.513	.06490	-.02190	-8.40640	6.32450
	GRADIENT	-.00112	.00023	.02105	.99297

RUN NO. 1331/ 0 RN/L = 3.51 GRADIENT INTERVAL = -5.00/ 5.00

ALPHAL	BETAL	CALS	CYNLS	ALFLSU	BETLSU
-6.558	-5.756	.08440	-.03550	-6.37310	-5.84110
-6.413	-3.832	.08250	-.03160	-6.24610	-3.94850
-6.518	.323	.07730	-.02860	-6.45370	.13000
-6.272	4.427	.07330	-.03190	-6.33620	4.23400
-5.935	6.542	.06600	-.03560	-6.04240	6.36820
	GRADIENT	-.00111	-.00003	-.01099	.99074

IA156A, AEDC PWT 16T-470, 0 T S (R8NNB9) (10 MAY 80)

REFERENCE DATA

SREF = 2690.0000 SQ.FT. XMRP = 976.0000 IN. XT
LREF = 1290.3000 INCHES YMRP = .0000 IN. YT
BREF = 1290.3000 INCHES ZMRP = 400.0000 IN. ZT
SCALE = .0200

PARAMETRIC DATA

IB-ELV = 12.000 OB-ELV = 9.000
BDFLAP = .000 SPDBRK = .000
RUDDER = .000 SILTS = .000
MACH = 1.050 RN/L = 3.500

RUN NO. 1332/ 0 RN/L = 3.50 GRADIENT INTERVAL = -5.00/ 5.00

ALPHAL	BETAL	CALS	CYNLS	ALFLSU	BETLSU
-4.286	-5.891	.08490	-.04870	-4.08700	-5.93430
-4.466	-3.769	.08290	-.04510	-4.28120	-3.85460
-4.359	.530	.07730	-.04560	-4.30720	.33260
-3.814	4.413	.07320	-.04550	-3.92270	4.24060
-3.909	6.263	.06840	-.04560	-4.04430	6.11000
	GRADIENT	-.00119	-.00005	.04293	.98918

RUN NO. 1333/ 0 RN/L = 3.50 GRADIENT INTERVAL = -5.00/ 5.00

ALPHAL	BETAL	CALS	CYNLS	ALFLSU	BETLSU
-.330	-6.799	.08560	-.06910	-.13570	-6.73830
-.300	-4.601	.08520	-.06700	-.10540	-4.54060
-.352	-.186	.08020	-.06410	-.15810	-.12520
-.251	3.891	.07330	-.05420	-.05670	3.95190
-.231	6.094	.07060	-.05060	-.03640	6.15470
	GRADIENT	-.00140	.00150	.00549	1.00000

RUN NO. 1334/ 0 RN/L = 3.50 GRADIENT INTERVAL = -5.00/ 5.00

ALPHAL	BETAL	CALS	CYNLS	ALFLSU	BETLSU
4.271	-5.616	.08270	-.07070	4.14020	-5.77280
4.259	-3.777	.08180	-.06530	4.15990	-3.95520
4.209	.345	.07970	-.05910	4.26950	.15050
4.149	4.120	.07540	-.04870	4.32700	4.02200
4.118	6.316	.07150	-.04510	4.31380	6.26030
	GRADIENT	-.00081	.00209	.02124	1.00985

IA156A, AEDC PWT 16T-470, 0 T S (R8NNC0) (10 MAY 80)

REFERENCE DATA

SREF =	2690.0000 SQ.FT.	XMRP =	976.0000 IN. XT		
LREF =	1290.3000 INCHES	YMRP =	.0000 IN. YT		
BREF =	1290.3000 INCHES	ZMRP =	400.0000 IN. ZT		
SCALE =	.0200				

PARAMETRIC DATA

IB-ELV =	12.000	OB-ELV =	9.000
BDFLAP =	.000	SPDBRK =	.000
RUDDER =	.000	SILTS =	.000
MACH =	1.100	RN/L =	3.500

RUN NO. 1335/ 0 RN/L = 3.50 GRADIENT INTERVAL = -5.00/ 5.00

ALPHAL	BETAL	CALS	CYNLS	ALFLSU	BETLSU
-8.661	-5.689	.08230	-.02520	-8.48730	-5.79740
-8.754	-3.483	.08020	-.01750	-8.60730	-3.62560
-8.635	.464	.07630	-.01350	-8.57090	.26930
-8.339	4.623	.06830	-.01830	-8.37960	4.42280
-8.330	6.515	.06310	-.02010	-8.40480	6.32430
	GRADIENT	-.00147	-.00011	.02825	.99291

RUN NO. 1336/ 0 RN/L = 3.50 GRADIENT INTERVAL = -5.00/ 5.00

ALPHAL	BETAL	CALS	CYNLS	ALFLSU	BETLSU
-6.559	-5.735	.08340	-.03320	-6.37270	-5.81780
-6.474	-3.813	.08060	-.02930	-6.30530	-3.92930
-6.579	.322	.07480	-.02690	-6.51230	.12910
-6.248	4.449	.07010	-.03090	-6.31090	4.25460
-6.195	6.434	.06350	-.03240	-6.29540	6.25650
	GRADIENT	-.00127	-.00019	-.00070	.99047

RUN NO. 1337/ 0 RN/L = 3.50 GRADIENT INTERVAL = -5.00/ 5.00

ALPHAL	BETAL	CALS	CYNLS	ALFLSU	BETLSU
-4.300	-5.896	.08310	-.04530	-4.09980	-5.93640
-4.508	-3.780	.08020	-.04180	-4.32130	-3.86400
-4.368	.531	.07350	-.04240	-4.31270	.33420
-3.821	4.437	.07040	-.04430	-3.92770	4.26270
-3.900	6.263	.06660	-.04430	-4.03300	6.10840
	GRADIENT	-.00120	-.00030	.04711	.98876

RUN NO. 1338/ 0 RN/L = 3.50 GRADIENT INTERVAL = -5.00/ 5.00

ALPHAL	BETAL	CALS	CYNLS	ALFLSU	BETLSU
-.338	-6.805	.08310	-.06550	-.14380	-6.74210
-.295	-4.613	.08130	-.06280	-.10030	-4.54980
-.333	-.225	.07540	-.05990	-.13900	-.16170
-.223	3.903	.06820	-.05130	-.02870	3.96590
-.219	6.093	.06500	-.04780	-.02450	6.15650
	GRADIENT	-.00154	.00134	.00823	.99999

IA156A, AEDC PWT 16T-470, 0 T S (R8NNC0) (10 MAY 80)

REFERENCE DATA

SREF = 2690.0000 SQ.FT. XMRP = 976.0000 IN. XT
LREF = 1290.3000 INCHES YMRP = .0000 IN. YT
BREF = 1290.3000 INCHES ZMRP = 400.0000 IN. ZT
SCALE = .0200

PARAMETRIC DATA

IB-ELV = 12.000 OB-ELV = 9.000
BDFLAP = .000 SPDBRK = .000
RUDDER = .000 SILTS = .000
MACH = 1.100 RN/L = 3.500

RUN NO. 1339/ 0 RN/L = 3.48 GRADIENT INTERVAL = -5.00/ 5.00

ALPHAL	BETAL	CALS	CYNLS	ALFLSU	BETLSU
4.336	-5.616	.07940	-.06700	4.20650	-5.77480
4.300	-3.774	.07800	-.06220	4.20140	-3.95300
4.226	.346	.07510	-.05730	4.28820	.15100
4.176	4.119	.07050	-.04640	4.35620	4.02280
4.152	6.327	.06660	-.04290	4.34940	6.27320
	GRADIENT	-.00095	.00199	.01963	1.01025

IA156A, AEDC PWT 16T-470, 0 T S (R8NNC1) (10 MAY 80)

REFERENCE DATA

SREF = 2690.0000 SQ.FT. XMRP = 976.0000 IN. XT
LREF = 1290.3000 INCHES YMRP = .0000 IN. YT
BREF = 1290.3000 INCHES ZMRP = 400.0000 IN. ZT
SCALE = .0200

PARAMETRIC DATA

IB-ELV = 12.000 OB-ELV = 9.000
BDFLAP = .000 SPDBRK = .000
RUDDER = .000 SILTS = .000
MACH = 1.150 RN/L = 3.500

RUN NO. 1341/ 0 RN/L = 3.50 GRADIENT INTERVAL = -5.00/ 5.00

ALPHAL	BETAL	CALS	CYNLS	ALFLSU	BETLSU
-8.727	-5.723	.08030	-.02180	-8.55050	-5.83120
-8.768	-3.512	.07830	-.01440	-8.61890	-3.65520
-8.644	.444	.07440	-.00960	-8.57810	.24850
-8.329	4.639	.06750	-.01610	-8.36920	4.43600
-8.336	6.534	.06150	-.01900	-8.41010	6.34040
	GRADIENT	-.00133	-.00022	.03083	.99268

RUN NO. 1342/ 0 RN/L = 3.50 GRADIENT INTERVAL = -5.00/ 5.00

ALPHAL	BETAL	CALS	CYNLS	ALFLSU	BETLSU
-6.560	-5.765	.08140	-.03020	-6.37060	-5.84700
-6.463	-3.842	.07680	-.02680	-6.29160	-3.95680
-6.549	.324	.07220	-.02320	-6.48030	.12910
-6.270	4.454	.06770	-.02750	-6.33200	4.25650
-6.047	6.557	.06190	-.03200	-6.15120	6.37840
	GRADIENT	-.00134	-.00008	-.00493	.99009

IA156A, AEDC PWT 16T-470, 0 T S (R8NNC1) (10 MAY 80)

REFERENCE DATA

SREF = 2690.0000 SQ.FT. XMRP = 976.0000 IN. XT
LREF = 1290.3000 INCHES YMRP = .0000 IN. YT
BREF = 1290.3000 INCHES ZMRP = 400.0000 IN. ZT
SCALE = .0200

PARAMETRIC DATA

IB-ELV = 12.000 OB-ELV = 9.000
BDFLAP = .000 SPDBRK = .000
RUDDER = .000 SILTS = .000
MACH = 1.150 RN/L = 3.500

RUN NO. 1343/ 0 RN/L = 3.50 GRADIENT INTERVAL = -5.00/ 5.00

ALPHAL	BETAL	CALS	CYNLS	ALFLSU	BETLSU
-4.308	-5.899	.08110	-.04180	-4.10510	-5.93960
-4.497	-3.791	.07860	-.03940	-4.30760	-3.87500
-4.354	.538	.07250	-.03990	-4.29780	.33870
-3.808	4.430	.06860	-.04200	-3.91500	4.25250
-3.894	6.289	.06500	-.04280	-4.02770	6.13120
	GRADIENT	-.00122	-.00031	.04691	.98837

RUN NO. 1344/ 0 RN/L = 3.50 GRADIENT INTERVAL = -5.00/ 5.00

ALPHAL	BETAL	CALS	CYNLS	ALFLSU	BETLSU
-.299	-6.808	.08190	-.06340	-.10280	-6.74280
-.273	-4.600	.08020	-.06060	-.07710	-4.53450
-.296	-.243	.07520	-.05860	-.10000	-.17730
-.200	3.900	.06760	-.05040	-.00380	3.96600
-.176	6.101	.06460	-.04710	.02050	6.16640
	GRADIENT	-.00148	.00119	.00850	1.00001

RUN NO. 1345/ 0 RN/L = 3.50 GRADIENT INTERVAL = -5.00/ 5.00

ALPHAL	BETAL	CALS	CYNLS	ALFLSU	BETLSU
4.446	-5.760	.07930	-.06730	4.31640	-5.92090
4.449	-3.662	.07820	-.06280	4.35520	-3.84680
4.286	.365	.07520	-.05620	4.35150	.16850
4.202	4.189	.07020	-.04480	4.38580	4.09470
4.169	6.349	.06670	-.04200	4.36950	6.29700
	GRADIENT	-.00102	.00229	.00385	1.01135

IA156A, AEDC PWT 16T-470, 0 T S (R8NNC2) (10 MAY 80)

REFERENCE DATA

SREF = 2690.0000 SQ.FT. XMRP = 976.0000 IN. XT
LREF = 1290.3000 INCHES YMRP = .0000 IN. YT
BREF = 1290.3000 INCHES ZMRP = 400.0000 IN. ZT
SCALE = .0200

PARAMETRIC DATA

IB-ELV = 12.000 OB-ELV = 9.000
BDFLAP = .000 SPDBRK = .000
RUDDER = .000 SILTS = .000
MACH = 1.250 RN/L = 3.500

RUN NO. 1346/ 0 RN/L = 3.50 GRADIENT INTERVAL = -5.00/ 5.00

ALPHAL	BETAL	CALS	CYNLS	ALFLSU	BETLSU
-8.786	-5.696	.07800	-.01670	-8.60120	-5.81050
-8.692	-3.575	.07630	-.01210	-8.53260	-3.72400
-8.592	.442	.07240	-.00700	-8.52150	.23540
-8.342	4.625	.06410	-.01110	-8.38220	4.41090
-8.341	6.540	.05900	-.01490	-8.41840	6.33540
	GRADIENT	-.00149	.00011	.01844	.99209

RUN NO. 1347/ 0 RN/L = 3.50 GRADIENT INTERVAL = -5.00/ 5.00

ALPHAL	BETAL	CALS	CYNLS	ALFLSU	BETLSU
-6.537	-5.788	.07840	-.02550	-6.33640	-5.87390
-6.427	-3.864	.07600	-.02240	-6.24450	-3.98430
-6.501	.333	.07070	-.01930	-6.42720	.12760
-6.222	4.470	.06520	-.02330	-6.28740	4.26150
-6.174	6.458	.06000	-.02680	-6.27980	6.26660
	GRADIENT	-.00130	-.00011	-.00524	.98941

RUN NO. 1348/ 0 RN/L = 3.49 GRADIENT INTERVAL = -5.00/ 5.00

ALPHAL	BETAL	CALS	CYNLS	ALFLSU	BETLSU
-4.246	-5.939	.07870	-.03810	-4.03180	-5.97900
-4.440	-3.796	.07610	-.03410	-4.23990	-3.88300
-4.322	.530	.07070	-.03320	-4.26040	.32080
-3.771	4.420	.06650	-.03810	-3.88220	4.23170
-3.884	6.297	.06170	-.03830	-4.02450	6.13000
	GRADIENT	-.00117	-.00047	.04264	.98738

RUN NO. 1349/ 0 RN/L = 3.49 GRADIENT INTERVAL = -5.00/ 5.00

ALPHAL	BETAL	CALS	CYNLS	ALFLSU	BETLSU
-.246	-6.836	.07980	-.06020	-.03930	-6.76580
-.214	-4.665	.07810	-.05770	-.00690	-4.59460
-.213	-.228	.07250	-.05480	-.00690	-.15740
-.126	3.907	.06470	-.04780	.08080	3.97730
-.129	6.121	.06140	-.04550	.07820	6.19150
	GRADIENT	-.00156	.00115	.01011	1.00001

IA156A, AEDC PWT 16T-470, O T S (R8NNC2) (10 MAY 80)

REFERENCE DATA

SREF =	2690.0000 SQ.FT.	XMRP =	976.0000 IN. XT		
LREF =	1290.3000 INCHES	YMRP =	.0000 IN. YT		
BREF =	1290.3000 INCHES	ZMRP =	400.0000 IN. ZT		
SCALE =	.0200				

PARAMETRIC DATA

IB-ELV =	12.000	OB-ELV =	9.000
BDFLAP =	.000	SPDBRK =	.000
RUDDER =	.000	SILTS =	.000
MACH =	1.250	RN/L =	3.500

RUN NO. 1350/ 0 RN/L = 3.50 GRADIENT INTERVAL = -5.00/ 5.00

ALPHAL	BETAL	CALS	CYNLS	ALFLSU	BETLSU
4.511	-5.753	.07700	-.06400	4.37510	-5.92330
4.536	-3.662	.07640	-.05950	4.43830	-3.85650
4.369	.379	.07240	-.05300	4.43840	.17260
4.256	4.182	.06690	-.04240	4.45030	4.08300
4.238	6.377	.06320	-.03930	4.44980	6.32230
	GRADIENT	-.00121	.00217	.00151	1.01209

IA156A, AEDC PWT 16T-470, O T S (R8NNC3) (10 MAY 80)

REFERENCE DATA

SREF =	2690.0000 SQ.FT.	XMRP =	976.0000 IN. XT		
LREF =	1290.3000 INCHES	YMRP =	.0000 IN. YT		
BREF =	1290.3000 INCHES	ZMRP =	400.0000 IN. ZT		
SCALE =	.0200				

PARAMETRIC DATA

IB-ELV =	12.000	OB-ELV =	-2.000
BDFLAP =	.000	SPDBRK =	.000
RUDDER =	.000	SILTS =	.000
MACH =	1.150	RN/L =	3.500

RUN NO. 1355/ 0 RN/L = 3.50 GRADIENT INTERVAL = -5.00/ 5.00

ALPHAL	BETAL	CALS	CYNLS	ALFLSU	BETLSU
-8.606	-5.768	.07850	-.01880	-8.42830	-5.87500
-8.765	-3.586	.07590	-.01060	-8.61390	-3.72730
-8.673	.544	.07160	-.00560	-8.60940	.34680
-8.369	4.558	.06450	-.01180	-8.40740	4.35490
-8.342	6.514	.05970	-.01630	-8.41620	6.32120
	GRADIENT	-.00140	-.00014	.02524	.99241

RUN NO. 1356/ 0 RN/L = 3.50 GRADIENT INTERVAL = -5.00/ 5.00

ALPHAL	BETAL	CALS	CYNLS	ALFLSU	BETLSU
-6.586	-5.782	.07960	-.02670	-6.39640	-5.86420
-6.474	-3.847	.07670	-.02260	-6.30200	-3.96270
-6.563	.314	.07030	-.01920	-6.49500	.11920
-6.287	4.442	.06650	-.02440	-6.34950	4.24490
-5.965	6.536	.06050	-.02930	-6.07180	6.35800
	GRADIENT	-.00123	-.00022	-.00579	.99012

IA156A, AEDC PWT 16T-470, 0 T S (R8NNC3) (10 MAY 80)

REFERENCE DATA

SREF = 2690.0000 SQ.FT. XMRP = 976.0000 IN. XT
LREF = 1290.3000 INCHES YMRP = .0000 IN. YT
BREF = 1290.3000 INCHES ZMRP = 400.0000 IN. ZT
SCALE = .0200

PARAMETRIC DATA

IB-ELV = 12.000 OB-ELV = -2.000
BDFLAP = .000 SPDBRK = .000
RUDDER = .000 SILTS = .000
MACH = 1.150 RN/L = 3.500

RUN NO. 1357/ 0 RN/L = 3.50 GRADIENT INTERVAL = -5.00/ 5.00

ALPHAL	BETAL	CALS	CYNLS	ALFLSU	BETLSU
-4.309	-5.919	.07980	-.03850	-4.10580	-5.95790
-4.502	-3.802	.07660	-.03510	-4.31220	-3.88530
-4.369	.527	.07060	-.03580	-4.31230	.32740
-3.808	4.415	.06710	-.03900	-3.91540	4.23770
-3.910	6.272	.06350	-.03960	-4.04470	6.11520
	GRADIENT	-.00115	-.00047	.04738	.98831

RUN NO. 1358/ 0 RN/L = 3.50 GRADIENT INTERVAL = -5.00/ 5.00

ALPHAL	BETAL	CALS	CYNLS	ALFLSU	BETLSU
-.346	-6.847	.08050	-.06000	-.15000	-6.78190
-.319	-4.638	.07850	-.05690	-.12230	-4.57240
-.349	-.232	.07370	-.05450	-.15250	-.16680
-.244	3.891	.06660	-.04720	-.04830	3.95610
-.221	6.097	.06340	-.04420	-.02520	6.16220
	GRADIENT	-.00139	.00113	.00850	1.00001

RUN NO. 1359/ 0 RN/L = 3.50 GRADIENT INTERVAL = -5.00/ 5.00

ALPHAL	BETAL	CALS	CYNLS	ALFLSU	BETLSU
4.445	-5.782	.07810	-.06460	4.31570	-5.94310
4.408	-3.646	.07710	-.05970	4.31500	-3.83030
4.258	.350	.07330	-.05310	4.32330	.15400
4.203	4.193	.06910	-.04210	4.38640	4.09810
4.148	6.342	.06570	-.04010	4.34810	6.28870
	GRADIENT	-.00102	.00224	.00906	1.01137

IA156A, AEDC PWT 16T-470, 0 T S (R8NNC4) (10 MAY 80)

REFERENCE DATA

SREF = 2690.0000 SQ.FT. XMRP = 976.0000 IN. XT
LREF = 1290.3000 INCHES YMRP = .0000 IN. YT
BREF = 1290.3000 INCHES ZMRP = 400.0000 IN. ZT
SCALE = .0200

PARAMETRIC DATA

IB-ELV = 12.000 OB-ELV = -2.000
BDFLAP = .000 SPDBRK = .000
RUDDER = .000 SILTS = .000
MACH = 1.250 RN/L = 3.500

RUN NO. 1360/ 0 RN/L = 3.50 GRADIENT INTERVAL = -5.00/ 5.00

ALPHAL	BETAL	CALS	CYNLS	ALFLSU	BETLSU
-8.646	-5.769	.07720	-.01510	-8.45960	-5.88100
-8.713	-3.553	.07540	-.00860	-8.55420	-3.70190
-8.627	.430	.07110	-.00360	-8.55690	.22360
-8.345	4.650	.06310	-.00870	-8.38660	4.43630
-8.362	6.540	.05830	-.01220	-8.43960	6.33640
	GRADIENT	-.00150	-.00002	.02063	.99215

RUN NO. 1361/ 0 RN/L = 3.50 GRADIENT INTERVAL = -5.00/ 5.00

ALPHAL	BETAL	CALS	CYNLS	ALFLSU	BETLSU
-6.575	-5.822	.07750	-.02330	-6.37410	-5.90700
-6.433	-3.856	.07480	-.01990	-6.25130	-3.97660
-6.521	.310	.07020	-.01630	-6.44730	.10490
-6.235	4.463	.06420	-.02060	-6.30060	4.25550
-6.193	6.449	.05900	-.02420	-6.29850	6.25830
	GRADIENT	-.00127	-.00008	-.00595	.98945

RUN NO. 1362/ 0 RN/L = 3.50 GRADIENT INTERVAL = -5.00/ 5.00

ALPHAL	BETAL	CALS	CYNLS	ALFLSU	BETLSU
-4.225	-5.960	.07770	-.03520	-4.01050	-5.99800
-4.455	-3.799	.07500	-.03120	-4.25480	-3.88520
-4.337	.519	.06930	-.03000	-4.27490	.30960
-3.812	4.446	.06510	-.03490	-3.92370	4.25860
-3.882	6.266	.06110	-.03570	-4.02320	6.09940
	GRADIENT	-.00120	-.00044	.03942	.98747

RUN NO. 1363/ 0 RN/L = 3.50 GRADIENT INTERVAL = -5.00/ 5.00

ALPHAL	BETAL	CALS	CYNLS	ALFLSU	BETLSU
-.295	-6.890	.07860	-.05700	-.08920	-6.81990
-.263	-4.602	.07680	-.05430	-.05610	-4.53160
-.265	-.316	.07120	-.05140	-.05900	-.24590
-.175	3.952	.06410	-.04520	.03150	4.02220
-.180	6.150	.06090	-.04330	.02730	6.22000
	GRADIENT	-.00148	.00106	.01023	.99999

IA156A, AEDC PWT 16T-470, O T S (R8NNC4) (10 MAY 80)

REFERENCE DATA

SREF = 2690.0000 SQ.FT. XMRP = 976.0000 IN. XT
LREF = 1290.3000 INCHES YMRP = .0000 IN. YT
BREF = 1290.3000 INCHES ZMRP = 400.0000 IN. ZT
SCALE = .0200

PARAMETRIC DATA

IB-ELV = 12.000 OB-ELV = -2.000
BDFLAP = .000 SPDBRK = .000
RUDDER = .000 SILTS = .000
MACH = 1.250 RN/L = 3.500

RUN NO. 1364/ 0 RN/L = 3.50 GRADIENT INTERVAL = -5.00/ 5.00

ALPHAL	BETAL	CALS	CYNLS	ALFLSU	BETLSU
4.604	-5.657	.07630	-.06190	4.47170	-5.82950
4.482	-3.539	.07550	-.05700	4.38730	-3.73440
4.212	.365	.07150	-.05070	4.28220	.15850
4.271	4.305	.06540	-.03970	4.46630	4.20850
4.212	6.365	.06280	-.03760	4.42290	6.31050
	GRADIENT	-.00129	.00221	.01013	1.01267

IA156A, AEDC PWT 16T-470, O T S (R8NNC5) (10 MAY 80)

REFERENCE DATA

SREF = 2690.0000 SQ.FT. XMRP = 976.0000 IN. XT
LREF = 1290.3000 INCHES YMRP = .0000 IN. YT
BREF = 1290.3000 INCHES ZMRP = 400.0000 IN. ZT
SCALE = .0200

PARAMETRIC DATA

IB-ELV = 12.000 OB-ELV = -2.000
BDFLAP = .000 SPDBRK = .000
RUDDER = .000 SILTS = .000
MACH = 1.400 RN/L = 3.500

RUN NO. 1365/ 0 RN/L = 3.00 GRADIENT INTERVAL = -5.00/ 5.00

ALPHAL	BETAL	CALS	CYNLS	ALFLSU	BETLSU
-8.519	-5.812	.07340	-.01010	-8.29590	-5.94420
-8.628	-3.607	.07300	.00110	-8.43880	-3.78360
-8.531	.411	.06750	.00130	-8.44490	.16520
-8.266	4.733	.05970	-.00600	-8.31390	4.47870
-8.224	6.571	.05580	-.01020	-8.31360	6.32770
	GRADIENT	-.00160	-.00086	.01517	.99076

RUN NO. 1366/ 0 RN/L = 3.00 GRADIENT INTERVAL = -5.00/ 5.00

ALPHAL	BETAL	CALS	CYNLS	ALFLSU	BETLSU
-6.549	-5.864	.07390	-.01340	-6.31070	-5.96450
-6.464	-3.926	.07140	-.01040	-6.24660	-4.06880
-6.468	.302	.06630	-.01010	-6.37780	.05770
-6.163	4.486	.06210	-.01850	-6.23760	4.23690
-6.121	6.500	.05720	-.02190	-6.24390	6.27130
	GRADIENT	-.00111	-.00096	.00102	.98734

IA156A, AEDC PWT 16T-470, 0 T S (R8NNC5) (10 MAY 80)

REFERENCE DATA

SREF = 2690.0000 SQ.FT. XMRP = 976.0000 IN. XT
LREF = 1290.3000 INCHES YMRP = .0000 IN. YT
BREF = 1290.3000 INCHES ZMRP = 400.0000 IN. ZT
SCALE = .0200

PARAMETRIC DATA

IB-ELV = 12.000 OB-ELV = -2.000
BDFLAP = .000 SPDBRK = .000
RUDDER = .000 SILTS = .000
MACH = 1.400 RN/L = 3.500

RUN NO. 1367/ 0 RN/L = 2.99 GRADIENT INTERVAL = -5.00/ 5.00

ALPHAL	BETAL	CALS	CYNLS	ALFLSU	BETLSU
-4.225	-5.999	.07330	-.02840	-3.97030	-6.04430
-4.495	-3.847	.07050	-.02320	-4.25570	-3.94920
-4.308	.531	.06550	-.02350	-4.23250	.28190
-3.759	4.486	.06260	-.03220	-3.89030	4.26150
-3.846	6.314	.05860	-.03340	-4.01190	6.11310
	GRADIENT	-.00095	-.00106	.04317	.98499

RUN NO. 1368/ 0 RN/L = 3.00 GRADIENT INTERVAL = -5.00/ 5.00

ALPHAL	BETAL	CALS	CYNLS	ALFLSU	BETLSU
-.324	-6.874	.07430	-.05320	-.07810	-6.78850
-.300	-4.688	.07270	-.04960	-.05400	-4.60180
-.275	-.305	.06790	-.04640	-.02830	-.21890
-.204	3.857	.06150	-.04280	.04190	3.94250
-.222	6.073	.05810	-.04100	.02380	6.15800
	GRADIENT	-.00131	.00080	.01118	1.00001

RUN NO. 1369/ 0 RN/L = 3.00 GRADIENT INTERVAL = -5.00/ 5.00

ALPHAL	BETAL	CALS	CYNLS	ALFLSU	BETLSU
4.579	-5.764	.07270	-.06180	4.41770	-5.96900
4.488	-3.534	.07100	-.05510	4.37540	-3.76860
4.195	.330	.06690	-.04730	4.27510	.08270
4.216	4.263	.06210	-.03760	4.44860	4.14780
4.169	6.358	.05980	-.03540	4.42120	6.29350
	GRADIENT	-.00114	.00224	.00949	1.01529

IA156A, AEDC PWT 16T-470, 0 T S (R8NNC6) (10 MAY 80)

REFERENCE DATA

SREF = 2690.0000 SQ.FT. XMRP = 976.0000 IN. XT
LREF = 1290.3000 INCHES YMRP = .0000 IN. YT
BREF = 1290.3000 INCHES ZMRP = 400.0000 IN. ZT
SCALE = .0200

PARAMETRIC DATA

IB-ELV = 12.000 OB-ELV = -2.000
BDFLAP = .000 SPDBRK = .000
RUDDER = .000 SILTS = .000
MACH = 1.550 RN/L = 3.200

RUN NO. 1370/ 0 RN/L = 2.99 GRADIENT INTERVAL = -5.00/ 5.00

ALPHAL	BETAL	CALS	CYNLS	ALFLSU	BETLSU
-8.523	-5.814	.06820	-.01010	-8.19910	-5.96600
-8.662	-3.576	.06730	.00270	-8.37840	-3.79310
-8.506	.473	.06140	.00450	-8.35520	.14890
-8.221	4.817	.05430	-.00130	-8.25260	4.46050
-8.181	6.662	.05100	-.00500	-8.27080	6.31570
	GRADIENT	-.00155	-.00049	.01509	.98358

RUN NO. 1371/ 0 RN/L = 3.00 GRADIENT INTERVAL = -5.00/ 5.00

ALPHAL	BETAL	CALS	CYNLS	ALFLSU	BETLSU
-6.616	-5.879	.06890	-.01210	-6.27660	-5.98620
-6.476	-3.888	.06610	-.00810	-6.15940	-4.05490
-6.475	.384	.06110	-.00790	-6.31940	.06210
-6.120	4.574	.05530	-.01410	-6.18900	4.22110
-6.049	6.587	.05260	-.01750	-6.18660	6.25650
	GRADIENT	-.00128	-.00071	-.00361	.97794

RUN NO. 1372/ 0 RN/L = 3.00 GRADIENT INTERVAL = -5.00/ 5.00

ALPHAL	BETAL	CALS	CYNLS	ALFLSU	BETLSU
-4.319	-6.009	.06900	-.02700	-3.96210	-6.03730
-4.566	-3.837	.06580	-.02180	-4.22410	-3.94460
-4.349	.628	.06060	-.02200	-4.21140	.29670
-3.728	4.558	.05630	-.02620	-3.87690	4.23400
-3.800	6.398	.05330	-.02770	-3.99990	6.10320
	GRADIENT	-.00113	-.00051	.04049	.97369

RUN NO. 1373/ 0 RN/L = 3.00 GRADIENT INTERVAL = -5.00/ 5.00

ALPHAL	BETAL	CALS	CYNLS	ALFLSU	BETLSU
-.411	-6.896	.07030	-.05170	-.08680	-6.74690
-.381	-4.757	.06810	-.04750	-.05530	-4.60580
-.360	-.357	.06310	-.04430	-.03420	-.20570
-.329	3.790	.05870	-.03840	-.00530	3.93820
-.354	5.988	.05460	-.03650	-.02840	6.13850
	GRADIENT	-.00110	.00106	.00584	.99969

IA156A, AEDC PWT 16T-470, 0 T S (R8NNC6) (10 MAY 80)

REFERENCE DATA

SREF =	2690.0000 SQ.FT.	XMRP =	976.0000 IN. XT		
LREF =	1290.3000 INCHES	YMRP =	.0000 IN. YT		
BREF =	1290.3000 INCHES	ZMRP =	400.0000 IN. ZT		
SCALE =	.0200				

PARAMETRIC DATA

IB-ELV =	12.000	OB-ELV =	-2.000
BDFLAP =	.000	SPDBRK =	.000
RUDDER =	.000	SILTS =	.000
MACH =	1.550	RN/L =	3.200

RUN NO. 1374/ 0 RN/L = 3.01 GRADIENT INTERVAL = -5.00/ 5.00

ALPHAL	BETAL	CALS	CYNLS	ALFLSU	BETLSU
4.737	-5.565	.06930	-.05800	4.55050	-5.86640
4.508	-3.431	.06710	-.05190	4.38440	-3.76420
4.141	.425	.06270	-.04500	4.28320	.09780
4.114	4.272	.05850	-.03510	4.44560	4.14380
4.051	6.366	.05610	-.03340	4.40570	6.31220
	GRADIENT	-.00112	.00218	.00793	1.02662

IA156A, AEDC PWT 16T-470, 0 T S W/SILTS (R8NNC7) (10 MAY 80)

REFERENCE DATA

SREF =	2690.0000 SQ.FT.	XMRP =	976.0000 IN. XT		
LREF =	1290.3000 INCHES	YMRP =	.0000 IN. YT		
BREF =	1290.3000 INCHES	ZMRP =	400.0000 IN. ZT		
SCALE =	.0200				

PARAMETRIC DATA

IB-ELV =	9.000	OB-ELV =	-2.000
BDFLAP =	.000	SPDBRK =	.000
RUDDER =	.000	SILTS =	1.000
MACH =	1.150	RN/L =	3.500
IB-AIL =	1.000		

RUN NO. 1377/ 0 RN/L = 3.50 GRADIENT INTERVAL = -5.00/ 5.00

ALPHAL	BETAL	CALS	CYNLS	ALFLSU	BETLSU
-8.751	-5.650	.07780	-.01970	-8.57600	-5.75970
-8.726	-3.603	.07550	-.01230	-8.57450	-3.74480
-8.671	.540	.07050	-.00700	-8.60780	.34320
-8.386	4.534	.06350	-.01170	-8.42410	4.33080
-8.340	6.501	.05900	-.01590	-8.41440	6.30820
	GRADIENT	-.00147	.00008	.01832	.99233

RUN NO. 1378/ 0 RN/L = 3.50 GRADIENT INTERVAL = -5.00/ 5.00

ALPHAL	BETAL	CALS	CYNLS	ALFLSU	BETLSU
-6.594	-5.792	.07920	-.02720	-6.40370	-5.87400
-6.470	-3.843	.07610	-.02320	-6.29810	-3.95880
-6.560	.310	.06920	-.01980	-6.49190	.11520
-6.287	4.437	.06540	-.02440	-6.34930	4.23950
-6.015	6.558	.05950	-.02900	-6.12010	6.38070
	GRADIENT	-.00129	-.00014	-.00623	.99012

IA156A, AEDC PWT 16T-470, 0 T S W/SILTS (R8NNC7) (10 MAY 80)

REFERENCE DATA

SREF = 2690.0000 SQ.FT. XMRP = 976.0000 IN. XT
LREF = 1290.3000 INCHES YMRP = .0000 IN. YT
BREF = 1290.3000 INCHES ZMRP = 400.0000 IN. ZT
SCALE = .0200

PARAMETRIC DATA

IB-ELV =	9.000	OB-ELV =	-2.000
BDFLAP =	.000	SPDBRK =	.000
RUDDER =	.000	SILTS =	1.000
MACH =	1.150	RN/L =	3.500
IB-AIL =	1.000		

RUN NO. 1379/ 0 RN/L = 3.50 GRADIENT INTERVAL = -5.00/ 5.00

ALPHAL	BETAL	CALS	CYNLS	ALFLSU	BETLSU
-4.310	-5.932	.07910	-.03890	-4.10660	-5.97090
-4.501	-3.797	.07610	-.03550	-4.31110	-3.88000
-4.383	.522	.06940	-.03570	-4.32700	.32330
-3.818	4.408	.06670	-.03910	-3.92560	4.23080
-3.920	6.270	.06310	-.03970	-4.05480	6.11270
	GRADIENT	-.00115	-.00043	.04605	.98831

RUN NO. 1380/ 0 RN/L = 3.50 GRADIENT INTERVAL = -5.00/ 5.00

ALPHAL	BETAL	CALS	CYNLS	ALFLSU	BETLSU
-.360	-6.847	.08010	-.06030	-.16360	-6.78110
-.334	-4.645	.07860	-.05720	-.13840	-4.57910
-.368	-.235	.07300	-.05450	-.17220	-.16900
-.266	3.891	.06650	-.04750	-.06950	3.95700
-.249	6.103	.06350	-.04480	-.05250	6.16840
	GRADIENT	-.00142	.00113	.00789	1.00002

RUN NO. 1381/ 0 RN/L = 3.50 GRADIENT INTERVAL = -5.00/ 5.00

ALPHAL	BETAL	CALS	CYNLS	ALFLSU	BETLSU
4.557	-5.716	.07800	-.06480	4.43140	-5.87980
4.376	-3.568	.07650	-.05960	4.28480	-3.75370
4.145	.283	.07390	-.05370	4.20670	.08580
4.190	4.236	.06930	-.04250	4.37420	4.14220
4.151	6.366	.06600	-.04040	4.35130	6.31280
	GRADIENT	-.00092	.00219	.01159	1.01179

IA156A, AEDC PWT 16T-470, O T S W/SILTS (R8NNC8) (10 MAY 80)

REFERENCE DATA

SREF = 2690.0000 SQ.FT. XMRP = 976.0000 IN. XT
LREF = 1290.3000 INCHES YMRP = .0000 IN. YT
BREF = 1290.3000 INCHES ZMRP = 400.0000 IN. ZT
SCALE = .0200

PARAMETRIC DATA

IB-ELV = 9.000 OB-ELV = -2.000
BDFLAP = .000 SPDBRK = .000
RUDDER = .000 SILTS = 1.000
MACH = 1.250 RN/L = 3.500
IB-AIL = 1.000

RUN NO. 1382/ 0 RN/L = 3.50 GRADIENT INTERVAL = -5.00/ 5.00

ALPHAL	BETAL	CALS	CYNLS	ALFLSU	BETLSU
-8.722	-5.665	.07640	-.01480	-8.53650	-5.77980
-8.724	-3.578	.07490	-.00780	-8.56480	-3.72690
-8.624	.425	.07110	-.00490	-8.55310	.21920
-8.356	4.627	.06290	-.00880	-8.39660	4.41280
-8.341	6.526	.05760	-.01240	-8.41840	6.32200
	GRADIENT	-.00147	-.00013	.02064	.99209

RUN NO. 1383/ 0 RN/L = 3.50 GRADIENT INTERVAL = -5.00/ 5.00

ALPHAL	BETAL	CALS	CYNLS	ALFLSU	BETLSU
-6.578	-5.805	.07710	-.02330	-6.37710	-5.88970
-6.463	-3.871	.07460	-.01980	-6.28090	-3.99150
-6.523	.311	.06930	-.01670	-6.44870	.10620
-6.237	4.458	.06360	-.02080	-6.30300	4.24950
-6.200	6.455	.05900	-.02430	-6.30540	6.26400
	GRADIENT	-.00132	-.00012	-.00271	.98940

RUN NO. 1384/ 0 RN/L = 3.50 GRADIENT INTERVAL = -5.00/ 5.00

ALPHAL	BETAL	CALS	CYNLS	ALFLSU	BETLSU
-4.236	-5.962	.07720	-.03550	-4.02150	-6.00010
-4.470	-3.798	.07440	-.03140	-4.26970	-3.88380
-4.334	.522	.06890	-.03070	-4.27200	.31310
-3.810	4.434	.06500	-.03530	-3.92260	4.24700
-3.902	6.289	.06060	-.03580	-4.04290	6.12300
	GRADIENT	-.00114	-.00046	.04142	.98745

RUN NO. 1385/ 0 RN/L = 3.50 GRADIENT INTERVAL = -5.00/ 5.00

ALPHAL	BETAL	CALS	CYNLS	ALFLSU	BETLSU
-.312	-6.816	.07810	-.05710	-.10560	-6.74560
-.279	-4.639	.07650	-.05440	-.07310	-4.56840
-.285	-.315	.07100	-.05150	-.07900	-.24470
-.188	3.957	.06340	-.04500	.01820	4.02720
-.195	6.149	.06080	-.04340	.01190	6.21910
	GRADIENT	-.00152	.00109	.01060	1.00000

IA156A, AEDC PWT 16T-470, O T S W/SILTS (R8NNC8) (10 MAY 80)

REFERENCE DATA

SREF = 2690.0000 SQ.FT. XMRP = 976.0000 IN. XT
LREF = 1290.3000 INCHES YMRP = .0000 IN. YT
BREF = 1290.3000 INCHES ZMRP = 400.0000 IN. ZT
SCALE = .0200

PARAMETRIC DATA

IB-ELV = 9.000 OB-ELV = -2.000
BDFLAP = .000 SPDBRK = .000
RUDDER = .000 SILTS = 1.000
MACH = 1.250 RN/L = 3.500
IB-AIL = 1.000

RUN NO. 1386/ 0. RN/L = 3.50 GRADIENT INTERVAL = -5.00/ 5.00

ALPHAL	BETAL	CALS	CYNLS	ALFLSU	BETLSU
4.678	-5.689	.07610	-.06200	4.54740	-5.86220
4.457	-3.526	.07520	-.05710	4.36210	-3.72260
4.209	.378	.07090	-.05060	4.27930	.17220
4.271	4.296	.06570	-.04040	4.46580	4.19880
4.215	6.377	.06270	-.03790	4.42660	6.32250
	GRADIENT	-.00121	.00214	.01328	1.01268

IA156A, AEDC PWT 16T-470, O T S W/SILTS (R8NNC9) (10 MAY 80)

REFERENCE DATA

SREF = 2690.0000 SQ.FT. XMRP = 976.0000 IN. XT
LREF = 1290.3000 INCHES YMRP = .0000 IN. YT
BREF = 1290.3000 INCHES ZMRP = 400.0000 IN. ZT
SCALE = .0200

PARAMETRIC DATA

IB-ELV = 9.000 OB-ELV = -2.000
BDFLAP = .000 SPDBRK = .000
RUDDER = .000 SILTS = 1.000
MACH = 1.400 RN/L = 3.500
IB-AIL = 1.000

RUN NO. 1387/ 0 RN/L = 2.99 GRADIENT INTERVAL = -5.00/ 5.00

ALPHAL	BETAL	CALS	CYNLS	ALFLSU	BETLSU
-8.528	-5.821	.07280	-.00970	-8.30500	-5.95320
-8.625	-3.609	.07330	.00090	-8.43430	-3.78660
-8.535	.412	.06700	.00120	-8.44860	.16680
-8.282	4.732	.05970	-.00610	-8.32940	4.47660
-8.227	6.565	.05540	-.01040	-8.31640	6.32130
	GRADIENT	-.00163	-.00085	.01276	.99074

RUN NO. 1388/ 0 RN/L = 3.00 GRADIENT INTERVAL = -5.00/ 5.00

ALPHAL	BETAL	CALS	CYNLS	ALFLSU	BETLSU
-6.587	-5.894	.07350	-.01310	-6.34720	-5.99460
-6.445	-3.896	.07080	-.01010	-6.22800	-4.03970
-6.483	.299	.06650	-.01010	-6.39260	.05430
-6.175	4.492	.06100	-.01840	-6.25030	4.24300
-6.129	6.510	.05720	-.02190	-6.25200	6.28090
	GRADIENT	-.00117	-.00099	-.00266	.98736

IA156A, AEDC PWT 16T-470, 0 T S W/SILTS (R8NNC9) (10 MAY 80)

REFERENCE DATA

SREF =	2690.0000 SQ.FT.	XMRP =	976.0000 IN. XT		
LREF =	1290.3000 INCHES	YMRP =	.0000 IN. YT		
BREF =	1290.3000 INCHES	ZMRP =	400.0000 IN. ZT		
SCALE =	.0200				

PARAMETRIC DATA

IB-ELV =	9.000	OB-ELV =	-2.000
BDFLAP =	.000	SPDBRK =	.000
RUDDER =	.000	SILTS =	1.000
MACH =	1.400	RN/L =	3.500
IB-AIL =	1.000		

RUN NO. 1389/ 0 RN/L = 3.01 GRADIENT INTERVAL = -5.00/ 5.00

ALPHAL	BETAL	CALS	CYNLS	ALFLSU	BETLSU
-4.408	-6.004	.07260	-.02720	-4.15250	-6.05380
-4.489	-3.852	.07010	-.02350	-4.24960	-3.95450
-4.327	.531	.06550	-.02360	-4.25090	.28150
-3.782	4.474	.06280	-.03230	-3.91270	4.24840
-3.839	6.322	.05800	-.03340	-4.00540	6.12190
	GRADIENT	-.00088	-.00104	.03970	.98478

RUN NO. 1390/ 0 RN/L = 3.00 GRADIENT INTERVAL = -5.00/ 5.00

ALPHAL	BETAL	CALS	CYNLS	ALFLSU	BETLSU
-.332	-6.838	.07390	-.05330	-.08570	-6.75240
-.306	-4.694	.07230	-.04960	-.05930	-4.60810
-.291	-.263	.06740	-.04650	-.04450	-.17730
-.220	3.875	.06130	-.04320	.02570	3.96070
-.231	6.067	.05830	-.04140	.01440	6.15230
	GRADIENT	-.00128	.00075	.00984	.99995

RUN NO. 1391/ 0 RN/L = 3.01 GRADIENT INTERVAL = -5.00/ 5.00

ALPHAL	BETAL	CALS	CYNLS	ALFLSU	BETLSU
4.682	-5.664	.07200	-.06070	4.52580	-5.87080
4.500	-3.540	.07120	-.05540	4.38710	-3.77430
4.181	.334	.06660	-.04730	4.26120	.08720
4.205	4.273	.06200	-.03780	4.43760	4.15750
4.160	6.351	.06030	-.03620	4.41090	6.28680
	GRADIENT	-.00118	.00225	.00657	1.01530

IA156A, AEDC PWT 16T-470, 0 T S W/SILTS (R8NND0) (10 MAY 80)

REFERENCE DATA

SREF = 2690.0000 SQ.FT. XMRP = 976.0000 IN. XT
LREF = 1290.3000 INCHES YMRP = .0000 IN. YT
BREF = 1290.3000 INCHES ZMRP = 400.0000 IN. ZT
SCALE = .0200

PARAMETRIC DATA

IB-ELV = 9.000 OB-ELV = -2.000
BDFLAP = .000 SPDBRK = .000
RUDDER = .000 SILTS = 1.000
MACH = 1.550 RN/L = 3.200
IB-AIL = 1.000

RUN NO. 1392/ 0 RN/L = 3.00 GRADIENT INTERVAL = -5.00/ 5.00

ALPHAL	BETAL	CALS	CYNLS	ALFLSU	BETLSU
-8.535	-5.817	.06800	-.00970	-8.21310	-5.96880
-8.660	-3.574	.06680	.00300	-8.37720	-3.79100
-8.505	.489	.06160	.00460	-8.35460	.16460
-8.251	4.814	.05420	-.00130	-8.28220	4.45890
-8.191	6.656	.05100	-.00480	-8.28110	6.31230
	GRADIENT	-.00150	-.00052	.01138	.98361

RUN NO. 1393/ 0 RN/L = 3.00 GRADIENT INTERVAL = -5.00/ 5.00

ALPHAL	BETAL	CALS	CYNLS	ALFLSU	BETLSU
-6.596	-5.870	.06840	-.01240	-6.25510	-5.97650
-6.496	-3.877	.06570	-.00770	-6.17960	-4.04390
-6.472	.380	.06060	-.00780	-6.31540	.05770
-6.136	4.577	.05550	-.01410	-6.20600	4.22670
-6.056	6.586	.05250	-.01780	-6.19380	6.25710
	GRADIENT	-.00121	-.00076	-.00319	.97825

RUN NO. 1394/ 0 RN/L = 3.00 GRADIENT INTERVAL = -5.00/ 5.00

ALPHAL	BETAL	CALS	CYNLS	ALFLSU	BETLSU
-4.326	-6.007	.06830	-.02690	-3.97030	-6.03560
-4.577	-3.832	.06540	-.02160	-4.23540	-3.93960
-4.365	.629	.06020	-.02190	-4.22740	.29740
-3.727	4.558	.05610	-.02640	-3.87600	4.23330
-3.816	6.424	.05300	-.02790	-4.01610	6.12800
	GRADIENT	-.00111	-.00056	.04192	.97359

RUN NO. 1395/ 0 RN/L = 3.00 GRADIENT INTERVAL = -5.00/ 5.00

ALPHAL	BETAL	CALS	CYNLS	ALFLSU	BETLSU
-.415	-6.889	.07020	-.05220	-.09050	-6.73910
-.390	-4.757	.06750	-.04760	-.06450	-4.60660
-.372	-.370	.06290	-.04440	-.04720	-.21980
-.343	3.796	.05850	-.03840	-.01840	3.94570
-.365	5.993	.05420	-.03660	-.04050	6.14240
	GRADIENT	-.00105	.00107	.00538	.99996

IA156A, AEDC PWT 16T-470, O T S W/SILTS (R8NND0) (10 MAY 80)

REFERENCE DATA

SREF = 2690.0000 SQ.FT. XMRP = 976.0000 IN. XT
LREF = 1290.3000 INCHES YMRP = .0000 IN. YT
BREF = 1290.3000 INCHES ZMRP = 400.0000 IN. ZT
SCALE = .0200

PARAMETRIC DATA

IB-ELV = 9.000 OB-ELV = -2.000
BDFLAP = .000 SPDBRK = .000
RUDDER = .000 SILTS = 1.000
MACH = 1.550 RN/L = 3.200
IB-AIL = 1.000

RUN NO. 1396/ 0 RN/L = 3.00 GRADIENT INTERVAL = -5.00/ 5.00

ALPHAL	BETAL	CALS	CYNLS	ALFLSU	BETLSU
4.714	-5.552	.06880	-.05830	4.52820	-5.85580
4.479	-3.422	.06670	-.05200	4.35610	-3.75760
4.137	.424	.06240	-.04500	4.28130	.09540
4.095	4.272	.05820	-.03530	4.42870	4.14440
4.060	6.376	.05570	-.03320	4.41470	6.32100
	GRADIENT	-.00110	.00217	.00944	1.02696

IA156A, AEDC PWT 16T-470, O T S W/SILTS (R8NND1) (10 MAY 80)

REFERENCE DATA

SREF = 2690.0000 SQ.FT. XMRP = 976.0000 IN. XT
LREF = 1290.3000 INCHES YMRP = .0000 IN. YT
BREF = 1290.3000 INCHES ZMRP = 400.0000 IN. ZT
SCALE = .0200

PARAMETRIC DATA

IB-ELV = 8.000 OB-ELV = -2.000
BDFLAP = .000 SPDBRK = .000
RUDDER = .000 SILTS = 1.000
MACH = 1.150 RN/L = 3.500

RUN NO. 1399/ 0 RN/L = 3.50 GRADIENT INTERVAL = -5.00/ 5.00

ALPHAL	BETAL	CALS	CYNLS	ALFLSU	BETLSU
-8.776	-5.661	.07680	-.01890	-8.60130	-5.77130
-8.717	-3.588	.07530	-.01260	-8.56610	-3.72920
-8.665	.521	.06960	-.00690	-8.60140	.32440
-8.399	4.535	.06290	-.01160	-8.43750	4.33170
-8.351	6.503	.05840	-.01600	-8.42530	6.31010
	GRADIENT	-.00153	.00013	.01573	.99234

RUN NO. 1400/ 0 RN/L = 3.51 GRADIENT INTERVAL = -5.00/ 5.00

ALPHAL	BETAL	CALS	CYNLS	ALFLSU	BETLSU
-6.570	-5.778	.07870	-.02830	-6.37980	-5.85980
-6.485	-3.850	.07540	-.02340	-6.31350	-3.96550
-6.575	.310	.06890	-.01990	-6.50590	.11510
-6.296	4.432	.06400	-.02370	-6.35860	4.23490
-6.028	6.564	.05880	-.02880	-6.13320	6.38620
	GRADIENT	-.00138	-.00003	-.00551	.99011

IA156A, AEDC PWT 16T-470, 0 T S W/SILTS (R8NND1) (10 MAY 80)

REFERENCE DATA

SREF = 2690.0000 SQ.FT. XMRP = 976.0000 IN. XT
LREF = 1290.3000 INCHES YMRP = .0000 IN. YT
BREF = 1290.3000 INCHES ZMRP = 400.0000 IN. ZT
SCALE = .0200

PARAMETRIC DATA

IB-ELV = 8.000 OB-ELV = -2.000
BDFLAP = .000 SPDBRK = .000
RUDDER = .000 SILTS = 1.000
MACH = 1.150 RN/L = 3.500

RUN NO. 1401/ 0 RN/L = 3.50 GRADIENT INTERVAL = -5.00/ 5.00

ALPHAL	BETAL	CALS	CYNLS	ALFLSU	BETLSU
-4.305	-5.936	.07860	-.03910	-4.10170	-5.97520
-4.492	-3.797	.07540	-.03550	-4.30280	-3.87960
-4.380	.517	.06870	-.03520	-4.32310	.31750
-3.817	4.401	.06510	-.03800	-3.92450	4.22390
-3.938	6.291	.06220	-.03900	-4.07230	6.13350
	GRADIENT	-.00126	-.00039	.04522	.98826

RUN NO. 1402/ 0 RN/L = 3.51 GRADIENT INTERVAL = -5.00/ 5.00

ALPHAL	BETAL	CALS	CYNLS	ALFLSU	BETLSU
-.364	-6.813	.07950	-.05980	-.16770	-6.74790
-.333	-4.644	.07820	-.05710	-.13710	-4.57800
-.365	-.253	.07220	-.05410	-.16860	-.18710
-.265	3.900	.06590	-.04720	-.06920	3.96550
-.251	6.106	.06300	-.04440	-.05500	6.17160
	GRADIENT	-.00144	.00115	.00780	1.00001

RUN NO. 1403/ 0 RN/L = 3.50 GRADIENT INTERVAL = -5.00/ 5.00

ALPHAL	BETAL	CALS	CYNLS	ALFLSU	BETLSU
4.540	-5.702	.07740	-.06420	4.41400	-5.86590
4.381	-3.570	.07660	-.05970	4.28910	-3.75580
4.146	.286	.07380	-.05360	4.20850	.08810
4.201	4.246	.06900	-.04220	4.38500	4.15200
4.148	6.364	.06560	-.04020	4.34740	6.31100
	GRADIENT	-.00097	.00224	.01242	1.01178

IA156A. AEDC PWT 16T-470. O T S W/SILTS (R0NN02) (10 MAY 80)

REFERENCE DATA

SREF = 2590.0000 SQ.FT. XMRP = 976.0000 IN. XT
LREF = 1290.3000 INCHES YMRP = .0000 IN. YT
BREF = 1290.3000 INCHES ZMRP = 400.0000 IN. ZT
SCALE = .0200

PARAMETRIC DATA

IB-ELV = 8.000 OB-ELV = -2.000
BDFLAP = .000 SPDBRK = .000
RUDDER = .000 SILTS = 1.000
MACH = 1.250 RN/L = 3.500

RUN NO. 1404/ 0 RN/L = 3.50 GRADIENT INTERVAL = -5.00/ 5.00

ALPHAL	BETAL	CALS	CYNLS	ALFLSU	BETLSU
-8.602	-5.704	.07660	-.01520	-8.41570	-5.81710
-8.721	-3.532	.07470	-.00790	-8.56210	-3.68200
-8.631	.422	.07010	-.00430	-8.56020	.21540
-8.380	4.697	.06220	-.00810	-8.42220	4.48290
-8.358	6.545	.05770	-.01190	-8.43540	6.34180
	GRADIENT	-.00152	-.00004	.01721	.99229

RUN NO. 1405/ 0 RN/L = 3.49 GRADIENT INTERVAL = -5.00/ 5.00

ALPHAL	BETAL	CALS	CYNLS	ALFLSU	BETLSU
-6.573	-5.803	.07680	-.02310	-6.37210	-5.88780
-6.472	-3.876	.07430	-.01960	-6.28990	-3.99610
-6.549	.333	.06930	-.01650	-6.47560	.12820
-6.260	4.463	.06350	-.02010	-6.32490	4.25500
-6.071	6.576	.05850	-.02500	-6.18090	6.38740
	GRADIENT	-.00129	-.00006	-.00433	.98933

RUN NO. 1406/ 0 RN/L = 3.50 GRADIENT INTERVAL = -5.00/ 5.00

ALPHAL	BETAL	CALS	CYNLS	ALFLSU	BETLSU
-4.398	-5.943	.07630	-.03430	-4.18380	-5.98530
-4.485	-3.815	.07420	-.03100	-4.28430	-3.90020
-4.351	.518	.06880	-.03060	-4.28850	.30950
-3.814	4.421	.06440	-.03510	-3.92580	4.23350
-3.904	6.281	.06010	-.03540	-4.04510	6.11490
	GRADIENT	-.00119	-.00049	.04272	.98734

RUN NO. 1407/ 0 RN/L = 3.51 GRADIENT INTERVAL = -5.00/ 5.00

ALPHAL	BETAL	CALS	CYNLS	ALFLSU	BETLSU
-.317	-6.839	.07700	-.05620	-.11050	-6.76890
-.288	-4.679	.07730	-.05500	-.08200	-4.60880
-.296	-.227	.07040	-.05110	-.08930	-.15630
-.193	3.909	.06310	-.04480	.01380	3.97970
-.205	6.137	.06030	-.04320	.00110	6.20670
	GRADIENT	-.00165	.00118	.01099	1.00002

IA156A, AEDC PWT 16T-470, 0 T S W/SILTS (R8NND2) (10 MAY 80)

REFERENCE DATA

SREF = 2690.0000 SQ.FT. XMRP = 976.0000 IN. XT
LREF = 1290.3000 INCHES YMRP = .0000 IN. YT
BREF = 1290.3000 INCHES ZMRP = 400.0000 IN. ZT
SCALE = .0200

PARAMETRIC DATA

IB-ELV = 8.000 OB-ELV = -2.000
BDFLAP = .000 SPDBRK = .000
RUDDER = .000 SILTS = 1.000
MACH = 1.250 RN/L = 3.500

RUN NO. 1408/ 0 RN/L = 3.50 GRADIENT INTERVAL = -5.00/ 5.00

ALPHAL	BETAL	CALS	CYNLS	ALFLSU	BETLSU
4.666	-5.686	.07600	-.06190	4.53470	-5.86080
4.461	-3.541	.07480	-.05670	4.36660	-3.73730
4.209	.378	.07080	-.05050	4.27920	.17190
4.275	4.294	.06570	-.04050	4.46950	4.19700
4.213	6.380	.06250	-.03780	4.42410	6.32490
	GRADIENT	-.00116	.00207	.01313	1.01267

IA156A, AEDC PWT 16T-470, 0 T S W/SILTS (R8NND3) (10 MAY 80)

REFERENCE DATA

SREF = 2690.0000 SQ.FT. XMRP = 976.0000 IN. XT
LREF = 1290.3000 INCHES YMRP = .0000 IN. YT
BREF = 1290.3000 INCHES ZMRP = 400.0000 IN. ZT
SCALE = .0200

PARAMETRIC DATA

IB-ELV = 8.000 OB-ELV = -2.000
BDFLAP = .000 SPDBRK = .000
RUDDER = .000 SILTS = 1.000
MACH = 1.400 RN/L = 3.500

RUN NO. 1409/ 0 RN/L = 3.00 GRADIENT INTERVAL = -5.00/ 5.00

ALPHAL	BETAL	CALS	CYNLS	ALFLSU	BETLSU
-8.531	-5.820	.07290	-.00960	-8.30660	-5.95380
-8.642	-3.616	.07180	.00110	-8.45160	-3.79310
-8.545	.416	.06680	.00120	-8.45820	.16970
-8.259	4.710	.05940	-.00600	-8.30640	4.45390
-8.267	6.591	.05450	-.00940	-8.35710	6.34680
	GRADIENT	-.00149	-.00086	.01763	.99065

RUN NO. 1410/ 0 RN/L = 2.99 GRADIENT INTERVAL = -5.00/ 5.00

ALPHAL	BETAL	CALS	CYNLS	ALFLSU	BETLSU
-6.592	-5.888	.07270	-.01290	-6.35350	-5.98860
-6.459	-3.907	.07060	-.01030	-6.24270	-4.05020
-6.469	.303	.06590	-.01010	-6.37860	.05890
-6.188	4.492	.06130	-.01820	-6.26300	4.24230
-6.134	6.494	.05710	-.02160	-6.25750	6.26410
	GRADIENT	-.00111	-.00094	-.00244	.98723

IA156A, AEDC PWT 16T-470, 0 T S W/SILTS (R8NND3) (10 MAY 80)

REFERENCE DATA

SREF =	2690.0000 SQ.FT.	XMRP =	976.0000 IN. XT		
LREF =	1290.3000 INCHES	YMRP =	.0000 IN. YT		
BREF =	1290.3000 INCHES	ZMRP =	400.0000 IN. ZT		
SCALE =	.0200				

PARAMETRIC DATA

IB-ELV =	8.000	OB-ELV =	-2.000
BDFLAP =	.000	SPDBRK =	.000
RUDDER =	.000	SILTS =	1.000
MACH =	1.400	RN/L =	3.500

RUN NO. 1411/ 0 RN/L = 2.99 GRADIENT INTERVAL = -5.00/ 5.00

ALPHAL	BETAL	CALS	CYNLS	ALFLSU	BETLSU
-4.218	-5.993	.07280	-.02850	-3.96260	-6.03720
-4.508	-3.852	.06980	-.02320	-4.26930	-3.95440
-4.315	.537	.06470	-.02370	-4.23950	.28760
-3.778	4.481	.06200	-.03250	-3.90880	4.25530
-3.855	6.321	.05860	-.03380	-4.02100	6.12130
	GRADIENT	-.00094	-.00110	.04258	.98488

RUN NO. 1412/ 0 RN/L = 2.99 GRADIENT INTERVAL = -5.00/ 5.00

ALPHAL	BETAL	CALS	CYNLS	ALFLSU	BETLSU
-.344	-6.881	.07360	-.05280	-.09860	-6.79590
-.322	-4.683	.07170	-.04890	-.07640	-4.59810
-.299	-.312	.06710	-.04630	-.05280	-.22670
-.226	3.864	.06110	-.04290	.02080	3.94970
-.241	6.066	.05830	-.04150	.00410	6.15090
	GRADIENT	-.00124	.00070	.01133	1.00008

RUN NO. 1413/ 0 RN/L = 2.99 GRADIENT INTERVAL = -5.00/ 5.00

ALPHAL	BETAL	CALS	CYNLS	ALFLSU	BETLSU
4.666	-5.661	.07210	-.06040	4.50960	-5.86860
4.475	-3.537	.07060	-.05460	4.36260	-3.77080
4.199	.337	.06630	-.04700	4.27890	.09080
4.214	4.253	.06240	-.03810	4.44750	4.13610
4.150	6.345	.05950	-.03580	4.40220	6.28060
	GRADIENT	-.00105	.00212	.01096	1.01510

IA156A, AEDC PWT 16T-470, 0 T S W/SILTS (R8NND4) (10 MAY 80)

REFERENCE DATA

SREF =	2690.0000 SQ.FT.	XMRP =	976.0000 IN. XT		
LREF =	1290.3000 INCHES	YMRP =	.0000 IN. YT		
BREF =	1290.3000 INCHES	ZMRP =	400.0000 IN. ZT		
SCALE =	.0200				

PARAMETRIC DATA

IB-ELV =	8.000	OB-ELV =	-2.000
BDFLAP =	.000	SPDBRK =	.000
RUDDER =	.000	SILTS =	1.000
MACH =	1.550	RN/L =	3.200

RUN NO. 1414/ 0 RN/L = 3.00 GRADIENT INTERVAL = -5.00/ 5.00

ALPHAL	BETAL	CALS	CYNLS	ALFLSU	BETLSU
-8.541	-5.807	.06780	-.01000	-8.21690	-5.95930
-8.675	-3.577	.06660	.00340	-8.38990	-3.79400
-8.532	.476	.06080	.00520	-8.38130	.15160
-8.252	4.828	.05380	-.00080	-8.28410	4.47360
-8.205	6.657	.05140	-.00430	-8.29510	6.31310
	GRADIENT	-.00152	-.00051	.01271	.98380

RUN NO. 1415/ 0 RN/L = 3.00 GRADIENT INTERVAL = -5.00/ 5.00

ALPHAL	BETAL	CALS	CYNLS	ALFLSU	BETLSU
-6.636	-5.881	.06820	-.01210	-6.29510	-5.98700
-6.503	-3.873	.06520	-.00760	-6.18760	-4.04030
-6.484	.366	.06040	-.00760	-6.32800	.04500
-6.131	4.570	.05550	-.01370	-6.20050	4.21920
-6.069	6.576	.05240	-.01680	-6.20670	6.24770
	GRADIENT	-.00115	-.00072	-.00157	.97822

RUN NO. 1416/ 0 RN/L = 3.00 GRADIENT INTERVAL = -5.00/ 5.00

ALPHAL	BETAL	CALS	CYNLS	ALFLSU	BETLSU
-4.320	-6.000	.06770	-.02660	-3.96280	-6.02760
-4.583	-3.840	.06500	-.02140	-4.24050	-3.94790
-4.375	.626	.05990	-.02170	-4.23760	.29520
-3.737	4.565	.05560	-.02620	-3.88620	4.23850
-3.813	6.406	.05350	-.02790	-4.01360	6.11050
	GRADIENT	-.00112	-.00056	.04123	.97340

RUN NO. 1417/ 0 RN/L = 3.00 GRADIENT INTERVAL = -5.00/ 5.00

ALPHAL	BETAL	CALS	CYNLS	ALFLSU	BETLSU
-.426	-6.939	.06940	-.05210	-.10150	-6.78970
-.406	-4.745	.06740	-.04720	-.08150	-4.59630
-.380	-.386	.06280	-.04420	-.05470	-.23510
-.349	3.790	.05800	-.03840	-.02290	3.94120
-.371	5.995	.05430	-.03660	-.04740	6.14410
	GRADIENT	-.00110	.00103	.00686	1.00021

IA156A, AEDC PWT 16T-470, 0 T S W/SILTS (R8NND4) (10 MAY 80)

REFERENCE DATA

SREF =	2690.0000 SQ.FT.	XMRP =	976.0000 IN. XT		
LREF =	1290.3000 INCHES	YMRP =	.0000 IN. YT		
BREF =	1290.3000 INCHES	ZMRP =	400.0000 IN. ZT		
SCALE =	.0200				

PARAMETRIC DATA

IB-ELV =	8.000	OB-ELV =	-2.000
BDFLAP =	.000	SPDBRK =	.000
RUDDER =	.000	SILTS =	1.000
MACH =	1.550	RN/L =	3.200

RUN NO. 1418/ 0 RN/L = 3.00 GRADIENT INTERVAL = -5.00/ 5.00

ALPHAL	BETAL	CALS	CYNLS	ALFLSU	BETLSU
4.716	-5.550	.06860	-.05810	4.52950	-5.85480
4.461	-3.413	.06620	-.05160	4.33760	-3.74780
4.150	.423	.06200	-.04450	4.29300	.09500
4.119	4.286	.05840	-.03520	4.45170	4.15710
4.034	6.342	.05580	-.03380	4.38760	6.28670
	GRADIENT	-.00101	.00213	.01485	1.02687

IA156A, AEDC PWT 16T-470, 0 T S W/SILTS (R8NND5) (10 MAY 80)

REFERENCE DATA

SREF =	2690.0000 SQ.FT.	XMRP =	976.0000 IN. XT		
LREF =	1290.3000 INCHES	YMRP =	.0000 IN. YT		
BREF =	1290.3000 INCHES	ZMRP =	400.0000 IN. ZT		
SCALE =	.0200				

PARAMETRIC DATA

IB-ELV =	8.000	OB-ELV =	-2.000
BDFLAP =	.000	SPDBRK =	.000
RUDDER =	.000	SILTS =	1.000
MACH =	1.550	RN/L =	3.200

RUN NO. 1419/ 0 RN/L = 3.00 GRADIENT INTERVAL = -5.00/ 5.00

ALPHAL	BETAL	CALS	CYNLS	ALFLSU	BETLSU
-8.712	-5.719	.06770	-.00890	-8.39360	-5.87630
-8.704	-3.607	.06650	.00310	-8.41920	-3.82400
-8.507	.718	.06090	.00480	-8.36530	.38870
-8.250	4.714	.05400	-.00070	-8.27800	4.35800
-8.209	6.645	.05110	-.00410	-8.29870	6.30170
	GRADIENT	-.00150	-.00045	.01691	.98318

IA156A, AEDC PWT 16T-470, O T S W/SILTS (R8NND6) (10 MAY 80)

REFERENCE DATA

SREF = 2690.0000 SQ.FT. XMRP = 976.0000 IN. XT
LREF = 1290.3000 INCHES YMRP = .0000 IN. YT
BREF = 1290.3000 INCHES ZMRP = 400.0000 IN. ZT
SCALE = .0200

PARAMETRIC DATA

IB-ELV = 10.000 OB-ELV = -2.000
BDFLAP = .000 SPDBRK = .000
RUDDER = .000 SILTS = 1.000
MACH = 1.150 RN/L = 3.500

RUN NO. 1432/ 0 RN/L = 3.50 GRADIENT INTERVAL = -5.00/ 5.00

ALPHAL	BETAL	CALS	CYNLS	ALFLSU	BETLSU
-8.619	-5.680	.07860	-.01920	-8.44270	-5.78780
-8.771	-3.559	.07650	-.01100	-8.62130	-3.70150
-8.693	.620	.07150	-.00660	-8.63210	.42260
-8.382	4.590	.06460	-.01210	-8.42180	4.38730
-8.366	6.538	.06000	-.01670	-8.44040	6.34550
	GRADIENT	-.00146	-.00012	.02424	.99249

RUN NO. 1433/ 0 RN/L = 3.50 GRADIENT INTERVAL = -5.00/ 5.00

ALPHAL	BETAL	CALS	CYNLS	ALFLSU	BETLSU
-6.603	-5.788	.08010	-.02810	-6.41350	-5.87050
-6.472	-3.851	.07730	-.02420	-6.30070	-3.96580
-6.573	.313	.07050	-.02030	-6.50440	.11760
-6.291	4.459	.06610	-.02490	-6.35380	4.26220
-6.192	6.428	.06100	-.02910	-6.29330	6.24780
	GRADIENT	-.00135	-.00008	-.00642	.99011

RUN NO. 1434/ 0 RN/L = 3.50 GRADIENT INTERVAL = -5.00/ 5.00

ALPHAL	BETAL	CALS	CYNLS	ALFLSU	BETLSU
-4.315	-5.927	.08000	-.03980	-4.11230	-5.96600
-4.510	-3.803	.07680	-.03650	-4.32110	-3.88640
-4.380	.523	.07040	-.03640	-4.32300	.32450
-3.825	4.432	.06730	-.03950	-3.93290	4.25550
-3.914	6.278	.06370	-.04040	-4.04870	6.12090
	GRADIENT	-.00116	-.00036	.04629	.98836

RUN NO. 1435/ 0 RN/L = 3.50 GRADIENT INTERVAL = -5.00/ 5.00

ALPHAL	BETAL	CALS	CYNLS	ALFLSU	BETLSU
-.347	-6.882	.08100	-.06110	-.15130	-6.81680
-.321	-4.648	.07900	-.05780	-.12540	-4.58250
-.361	-.225	.07310	-.05480	-.16480	-.15920
-.254	3.893	.06640	-.04760	-.05820	3.95830
-.235	6.089	.06350	-.04470	-.03890	6.15460
	GRADIENT	-.00147	.00119	.00766	1.00001

IA156A, AEDC PWT 16T-470, O T S W/SILTS (R8NND6) (10 MAY 80)

REFERENCE DATA

SREF =	2690.0000 SQ.FT.	XMRP =	976.0000 IN. XT		
LREF =	1290.3000 INCHES	YMRP =	.0000 IN. YT		
BREF =	1290.3000 INCHES	ZMRP =	400.0000 IN. ZT		
SCALE =	.0200				

PARAMETRIC DATA

IB-ELV =	10.000	OB-ELV =	-2.000
BDFLAP =	.000	SPDBRK =	.000
RUDDER =	.000	SILTS =	1.000
MACH =	1.150	RN/L =	3.500

RUN NO. 1436/ 0 RN/L = 3.50 GRADIENT INTERVAL = -5.00/ 5.00

ALPHAL	BETAL	CALS	CYNLS	ALFLSU	BETLSU
4.423	-5.761	.07820	-.06500	4.29360	-5.92240
4.439	-3.670	.07710	-.05990	4.34590	-3.85420
4.259	.354	.07400	-.05330	4.32440	.15750
4.192	4.191	.06920	-.04260	4.37550	4.09560
4.148	6.330	.06580	-.04020	4.34740	6.27720
	GRADIENT	-.00100	.00220	.00369	1.01128

IA156A, AEDC PWT 16T-470, O T S W/SILTS (R8NND7) (10 MAY 80)

REFERENCE DATA

SREF =	2690.0000 SQ.FT.	XMRP =	976.0000 IN. XT		
LREF =	1290.3000 INCHES	YMRP =	.0000 IN. YT		
BREF =	1290.3000 INCHES	ZMRP =	400.0000 IN. ZT		
SCALE =	.0200				

PARAMETRIC DATA

IB-ELV =	10.000	OB-ELV =	-2.000
BDFLAP =	.000	SPDBRK =	.000
RUDDER =	.000	SILTS =	1.000
MACH =	1.250	RN/L =	3.500

RUN NO. 1437/ 0 RN/L = 3.50 GRADIENT INTERVAL = -5.00/ 5.00

ALPHAL	BETAL	CALS	CYNLS	ALFLSU	BETLSU
-8.754	-5.685	.07620	-.01430	-8.56870	-5.80020
-8.723	-3.604	.07580	-.00730	-8.56390	-3.75220
-8.615	.419	.07100	-.00410	-8.54460	.21300
-8.384	4.634	.06280	-.00810	-8.42460	4.41990
-8.356	6.538	.05810	-.01200	-8.43320	6.33410
	GRADIENT	-.00158	-.00010	.01700	.99207

RUN NO. 1438/ 0 RN/L = 3.50 GRADIENT INTERVAL = -5.00/ 5.00

ALPHAL	BETAL	CALS	CYNLS	ALFLSU	BETLSU
-6.566	-5.806	.07710	-.02330	-6.36500	-5.89120
-6.460	-3.876	.07500	-.01970	-6.27820	-3.99560
-6.532	.317	.06950	-.01650	-6.45790	.11170
-6.246	4.464	.06400	-.02060	-6.31130	4.25620
-6.212	6.476	.05890	-.02420	-6.31770	6.28560
	GRADIENT	-.00132	-.00011	-.00404	.98944

IA156A, AEDC PWT 16T-470, 0 T S W/SILTS (R8NND7) (10 MAY 80)

REFERENCE DATA

SREF = 2690.0000 SQ.FT. XMRP = 976.0000 IN. XT
LREF = 1290.3000 INCHES YMRP = .0000 IN. YT
BREF = 1290.3000 INCHES ZMRP = 400.0000 IN. ZT
SCALE = .0200

PARAMETRIC DATA

IB-ELV =	10.000	OB-ELV =	-2.000
BDFLAP =	.000	SPDBRK =	.000
RUDDER =	.000	SILTS =	1.000
MACH =	1.250	RN/L =	3.500

RUN NO. 1439/ 0 RN/L = 3.50 GRADIENT INTERVAL = -5.00/ 5.00

ALPHAL	BETAL	CALS	CYNLS	ALFLSU	BETLSU
-4.259	-5.952	.07720	-.03560	-4.04440	-5.99160
-4.456	-3.804	.07450	-.03150	-4.25570	-3.89030
-4.354	.527	.06920	-.03030	-4.29260	.31850
-3.810	4.438	.06500	-.03510	-3.92150	4.25140
-3.930	6.326	.06080	-.03560	-4.07030	6.16010
	GRADIENT	-.00115	-.00042	.03967	.98745

RUN NO. 1440/ 0 RN/L = 3.50 GRADIENT INTERVAL = -5.00/ 5.00

ALPHAL	BETAL	CALS	CYNLS	ALFLSU	BETLSU
-.298	-6.940	.07850	-.05740	-.09170	-6.86990
-.269	-4.656	.07670	-.05450	-.06250	-4.58590
-.272	-.268	.07100	-.05140	-.06590	-.19800
-.187	3.898	.06400	-.04530	.01920	3.96850
-.192	6.111	.06070	-.04330	.01430	6.18080
	GRADIENT	-.00148	.00107	.00946	1.00000

RUN NO. 1441/ 0 RN/L = 3.50 GRADIENT INTERVAL = -5.00/ 5.00

ALPHAL	BETAL	CALS	CYNLS	ALFLSU	BETLSU
4.499	-5.748	07630	-.06220	4.36410	-5.91850
4.506	-3.665	.07540	-.05710	4.40860	-3.86020
4.343	.370	.07130	-.05050	4.41270	.16350
4.258	4.199	.06600	-.04050	4.45170	4.10020
4.215	6.352	.06290	-.03800	4.42530	6.29710
	GRADIENT	-.00119	.00211	.00544	1.01207

IA156A, AEDC PWT 16T-470, 0 T S W/SILTS (R8NND8) (10 MAY 80)

REFERENCE DATA

SREF = 2690.0000 SQ.FT. XMRP = 976.0000 IN. XT
LREF = 1290.3000 INCHES YMRP = .0000 IN. YT
BREF = 1290.3000 INCHES ZMRP = 400.0000 IN. ZT
SCALE = .0200

PARAMETRIC DATA

IB-ELV = 10.000 OB-ELV = -2.000
BDFLAP = .000 SPDBRK = .000
RUDDER = .000 SILTS = 1.000
MACH = 1.400 RN/L = 3.500

RUN NO. 1442/ 0 RN/L = 3.00 GRADIENT INTERVAL = -5.00/ 5.00

ALPHAL	BETAL	CALS	CYNLS	ALFLSU	BETLSU
-8.699	-5.750	.07320	-.00850	-8.47800	-5.88630
-8.670	-3.656	.07290	.00110	-8.47950	-3.83260
-8.531	.632	.06680	.00120	-8.45200	.38320
-8.293	4.628	.05920	-.00530	-8.33820	4.37110
-8.257	6.578	.05520	-.01000	-8.34640	6.33350
	GRADIENT	-.00165	-.00076	.01693	.99026

RUN NO. 1443/ 0 RN/L = 3.00 GRADIENT INTERVAL = -5.00/ 5.00

ALPHAL	BETAL	CALS	CYNLS	ALFLSU	BETLSU
-6.554	-5.884	.07290	-.01310	-6.31460	-5.98540
-6.462	-3.930	.07130	-.01030	-6.24490	-4.07320
-6.470	.310	.06590	-.01010	-6.38000	.06510
-6.219	4.501	.06190	-.01800	-6.29400	4.25090
-5.880	6.599	.05700	-.02340	-6.01010	6.37250
	GRADIENT	-.00112	-.00091	-.00587	.98730

RUN NO. 1444/ 0 RN/L = 3.00 GRADIENT INTERVAL = -5.00/ 5.00

ALPHAL	BETAL	CALS	CYNLS	ALFLSU	BETLSU
-4.270	-5.995	.07310	-.02820	-4.01410	-6.04180
-4.488	-3.861	.07010	-.02360	-4.24830	-3.96360
-4.315	.541	.06520	-.02370	-4.23950	.29060
-3.789	4.491	.06240	-.03220	-3.92030	4.26530
-3.859	6.344	.05860	-.03350	-4.02490	6.14380
	GRADIENT	-.00093	-.00101	.03856	.98487

RUN NO. 1445/ 0 RN/L = 3.00 GRADIENT INTERVAL = -5.00/ 5.00

ALPHAL	BETAL	CALS	CYNLS	ALFLSU	BETLSU
-.322	-6.850	.07390	-.05340	-.07570	-6.76460
-.294	-4.693	.07230	-.04960	-.04760	-4.60700
-.277	-.307	.06760	-.04650	-.03020	-.22150
-.208	3.854	.06130	-.04290	.03750	3.93890
-.220	6.061	.05830	-.04140	.02490	6.14560
	GRADIENT	-.00129	.00078	.00990	.99998

IA156A, AEDC PWT 16T-470, O T S W/SILTS (R8NND8) (10 MAY 80)

REFERENCE DATA

SREF = 2690.0000 SQ.FT. XMRP = 976.0000 IN. XT
LREF = 1290.3000 INCHES YMRP = .0000 IN. YT
BREF = 1290.3000 INCHES ZMRP = 400.0000 IN. ZT
SCALE = .0200

PARAMETRIC DATA

IB-ELV = 10.000 OB-ELV = -2.000
BDFLAP = .000 SPDBRK = .000
RUDDER = .000 SILTS = 1.000
MACH = 1.400 RN/L = 3.500

RUN NO. 1446/ 0 RN/L = 3.00 GRADIENT INTERVAL = -5.00/ 5.00

ALPHAL	BETAL	CALS	CYNLS	ALFLSU	BETLSU
4.557	-5.736	.07250	-.06140	4.39670	-5.93990
4.495	-3.605	.07100	-.05530	4.38040	-3.83730
4.332	.390	.06650	-.04680	4.41630	.14330
4.195	4.216	.06260	-.03820	4.42730	4.09900
4.160	6.347	.05970	-.03620	4.41240	6.28260
	GRADIENT	-.00107	.00219	.00602	1.01469

IA156A, AEDC PWT 16T-470, O T S W/SILTS (R8NND9) (10 MAY 80)

REFERENCE DATA

SREF = 2690.0000 SQ.FT. XMRP = 976.0000 IN. XT
LREF = 1290.3000 INCHES YMRP = .0000 IN. YT
BREF = 1290.3000 INCHES ZMRP = 400.0000 IN. ZT
SCALE = .0200

PARAMETRIC DATA

IB-ELV = 10.000 OB-ELV = -2.000
BDFLAP = .000 SPDBRK = .000
RUDDER = .000 SILTS = 1.000
MACH = 1.550 RN/L = 3.200

RUN NO. 1447/ 0 RN/L = 3.00 GRADIENT INTERVAL = -5.00/ 5.00

ALPHAL	BETAL	CALS	CYNLS	ALFLSU	BETLSU
-8.710	-5.730	.06790	-.00870	-8.39160	-5.88710
-8.699	-3.616	.06730	.00320	-8.41680	-3.83210
-8.509	.668	.06140	.00410	-8.36820	.36120
-8.244	4.727	.05430	-.00130	-8.27210	4.37270
-8.201	6.656	.05130	-.00470	-8.29170	6.31340
	GRADIENT	-.00156	-.00053	.01728	.98331

RUN NO. 1448/ 0 RN/L = 3.00 GRADIENT INTERVAL = -5.00/ 5.00

ALPHAL	BETAL	CALS	CYNLS	ALFLSU	BETLSU
-6.622	-5.892	.06820	-.01300	-6.28250	-5.99800
-6.496	-3.881	.06550	-.00770	-6.18130	-4.04760
-6.476	.385	.06080	-.00810	-6.32020	.06270
-6.161	4.583	.05550	-.01420	-6.22990	4.23260
-5.815	6.686	.05260	-.01920	-5.96230	6.36130
	GRADIENT	-.00118	-.00077	-.00581	.97834

IA156A, AEDC PWT 16T-470, 0 T S W/SILTS (R8NND9) (10 MAY 80)

REFERENCE DATA

SREF =	2690.0000 SQ.FT.	XMRP =	976.0000 IN. XT		
LREF =	1290.3000 INCHES	YMRP =	.0000 IN. YT		
BREF =	1290.3000 INCHES	ZMRP =	400.0000 IN. ZT		
SCALE =	.0200				

PARAMETRIC DATA

IB-ELV =	10.000	OB-ELV =	-2.000
BDFLAP =	.000	SPDBRK =	.000
RUDDER =	.000	SILTS =	1.000
MACH =	1.550	RN/L =	3.200

RUN NO. 1449/ 0 RN/L = 3.00 GRADIENT INTERVAL = -5.00/ 5.00

ALPHAL	BETAL	CALS	CYNLS	ALFLSU	BETLSU
-4.562	-5.940	.06860	-.02470	-4.20690	-5.97860
-4.535	-3.833	.06530	-.02180	-4.19310	-3.93990
-4.363	.643	.06020	-.02200	-4.22730	.31170
-3.747	4.584	.05600	-.02610	-3.89640	4.25880
-3.797	6.414	.05350	-.02820	-3.99740	6.11820
	GRADIENT	-.00111	-.00050	.03428	.97346

RUN NO. 1450/ 0 RN/L = 3.00 GRADIENT INTERVAL = -5.00/ 5.00

ALPHAL	BETAL	CALS	CYNLS	ALFLSU	BETLSU
-.408	-6.903	.07040	-.05230	-.08390	-6.75330
-.388	-4.737	.06750	-.04740	-.06270	-4.58580
-.365	-.421	.06320	-.04470	-.04070	-.27130
-.337	3.835	.05850	-.03860	-.01130	3.98640
-.357	5.987	.05450	-.03680	-.03250	6.13630
	GRADIENT	-.00105	.00103	.00599	1.00009

RUN NO. 1451/ 0 RN/L = 3.00 GRADIENT INTERVAL = -5.00/ 5.00

ALPHAL	BETAL	CALS	CYNLS	ALFLSU	BETLSU
4.598	-5.623	.06880	-.05850	4.40520	-5.92620
4.510	-3.407	.06690	-.05180	4.38840	-3.74290
4.121	.472	.06240	-.04490	4.26870	.14510
4.113	4.315	.05830	-.03540	4.44760	4.18850
4.032	6.333	.05590	-.03410	4.38540	6.27890
	GRADIENT	-.00111	.00212	.00761	1.02708

IA156A, AEDC PWT 16T-470, 0 T S W/SILTS (R8NNE0) (10 MAY 80)

REFERENCE DATA

SREF = 2690.0000 SQ.FT. XMRP = 976.0000 IN. XT
LREF = 1290.3000 INCHES YMRP = .0000 IN. YT
BREF = 1290.3000 INCHES ZMRP = 400.0000 IN. ZT
SCALE = .0200

PARAMETRIC DATA

IB-ELV = 10.000 OB-ELV = -7.000
BDFLAP = .000 SPDBRK = .000
RUDDER = .000 SILTS = 1.000
MACH = 1.400 RN/L = 3.500

RUN NO. 1456/ 0 RN/L = 3.00 GRADIENT INTERVAL = -5.00/ 5.00

ALPHAL	BETAL	CALS	CYNLS	ALFLSU	BETLSU
-8.699	-5.735	.07250	-.00690	-8.47820	-5.87080
-8.679	-3.652	.07190	.00240	-8.48870	-3.82920
-8.534	.640	.06620	.00210	-8.45530	.39200
-8.306	4.647	.05900	-.00460	-8.35130	4.39020
-8.233	6.548	.05470	-.00890	-8.32230	6.30400
	GRADIENT	-.00155	-.00083	.01645	.99029

RUN NO. 1457/ 0 RN/L = 3.00 GRADIENT INTERVAL = -5.00/ 5.00

ALPHAL	BETAL	CALS	CYNLS	ALFLSU	BETLSU
-6.574	-5.890	.07300	-.01180	-6.33530	-5.99030
-6.455	-3.905	.07070	-.00910	-6.23870	-4.04760
-6.502	.320	.06550	-.00910	-6.41310	.07600
-6.174	4.478	.06130	-.01780	-6.24880	4.22950
-6.124	6.500	.05660	-.02150	-6.24720	6.27180
	GRADIENT	-.00112	-.00104	-.00131	.98737

RUN NO. 1458/ 0 RN/L = 3.00 GRADIENT INTERVAL = -5.00/ 5.00

ALPHAL	BETAL	CALS	CYNLS	ALFLSU	BETLSU
-4.270	-6.008	.07260	-.02710	-4.01460	-6.05360
-4.494	-3.856	.07000	-.02260	-4.25540	-3.95770
-4.340	.528	.06480	-.02280	-4.26460	.27860
-3.769	4.471	.06220	-.03130	-3.90040	4.24670
-3.883	6.359	.05850	-.03280	-4.04900	6.15890
	GRADIENT	-.00094	-.00103	.04180	.98493

RUN NO. 1459/ 0 RN/L = 3.00 GRADIENT INTERVAL = -5.00/ 5.00

ALPHAL	BETAL	CALS	CYNLS	ALFLSU	BETLSU
-.345	-6.855	.07350	-.05200	-.09950	-6.76950
-.317	-4.709	.07200	-.04850	-.07070	-4.62330
-.296	-.304	.06710	-.04540	-.04970	-.21850
-.225	3.846	.06120	-.04220	.02100	3.93130
-.246	6.054	.05800	-.04060	-.00120	6.13910
	GRADIENT	-.00126	.00074	.01066	1.00002

IA156A, AEDC PWT 16T-470, O T S W/SILTS (R8NNE0) (10 MAY 80)

REFERENCE DATA

SREF =	2690.0000 SQ.FT.	XMRP =	976.0000 IN. XT		
LREF =	1290.3000 INCHES	YMRP =	.0000 IN. YT		
BREF =	1290.3000 INCHES	ZMRP =	400.0000 IN. ZT		
SCALE =	.0200				

PARAMETRIC DATA

IB-ELV =	10.000	OB-ELV =	-7.000
BDFLAP =	.000	SPDBRK =	.000
RUDDER =	.000	SILTS =	1.000
MACH =	1.400	RN/L =	3.500

RUN NO. 1460/ 0 RN/L = 3.00 GRADIENT INTERVAL = -5.00/ 5.00

ALPHAL	BETAL	CALS	CYNLS	ALFLSU	BETLSU
4.664	-5.666	.07190	-.05370	4.50740	-5.87310
4.488	-3.543	.07040	-.05410	4.37500	-3.77670
4.184	.329	.06610	-.04640	4.26400	.08140
4.198	4.256	.06190	-.03740	4.43060	4.13980
4.149	6.334	.05970	-.03570	4.40100	6.26890
	GRADIENT	-.00109	.00214	.00721	1.01515

IA156A, AEDC PWT 16T-470, O T S W/SILTS (R8NNE1) (10 MAY 80)

REFERENCE DATA

SREF =	2690.0000 SQ.FT.	XMRP =	976.0000 IN. XT		
LREF =	1290.3000 INCHES	YMRP =	.0000 IN. YT		
BREF =	1290.3000 INCHES	ZMRP =	400.0000 IN. ZT		
SCALE =	.0200				

PARAMETRIC DATA

IB-ELV =	10.000	OB-ELV =	-7.000
BDFLAP =	.000	SPDBRK =	.000
RUDDER =	.000	SILTS =	1.000
MACH =	1.550	RN/L =	3.200

RUN NO. 1461/ 0 RN/L = 3.00 GRADIENT INTERVAL = -5.00/ 5.00

ALPHAL	BETAL	CALS	CYNLS	ALFLSU	BETLSU
-8.642	-5.716	.06770	-.00810	-8.32270	-5.87270
-8.681	-3.718	.06740	.00390	-8.39720	-3.93060
-8.527	.584	.06140	.00530	-8.38270	.25890
-8.276	4.600	.05460	.00010	-8.29990	4.24550
-8.218	6.654	.05130	-.00370	-8.30890	6.31060
	GRADIENT	-.00154	-.00045	.01160	.98280

RUN NO. 1462/ 0 RN/L = 3.00 GRADIENT INTERVAL = -5.00/ 5.00

ALPHAL	BETAL	CALS	CYNLS	ALFLSU	BETLSU
-6.627	-5.893	.06810	-.01190	-6.28660	-5.99920
-6.498	-3.900	.06580	-.00690	-6.18270	-4.06640
-6.485	.385	.06080	-.00720	-6.32990	.06290
-6.165	4.587	.05530	-.01340	-6.23430	4.23700
-5.956	6.714	.05230	-.01780	-6.10040	6.38860
	GRADIENT	-.00124	-.00076	-.00617	.97831

IA156A, AEDC PWT 16T-470, O T S W/SILTS (R8NNE1) (10 MAY 80)

REFERENCE DATA

SREF = 2690.0000 SQ.FT. XMRP = 976.0000 IN. XT
LREF = 1290.3000 INCHES YMRP = .0000 IN. YT
BREF = 1290.3000 INCHES ZMRP = 400.0000 IN. ZT
SCALE = .0200

PARAMETRIC DATA

IB-ELV = 10.000 OB-ELV = -7.000
BDFLAP = .000 SPDBRK = .000
RUDDER = .000 SILTS = 1.000
MACH = 1.550 RN/L = 3.200

RUN NO. 1463/ 0 RN/L = 3.00 GRADIENT INTERVAL = -5.00/ 5.00

ALPHAL	BETAL	CALS	CYNLS	ALFLSU	BETLSU
-4.454	-6.024	.06800	-.02460	-4.09810	-6.05580
-4.579	-3.852	.06570	-.02060	-4.23750	-3.95890
-4.359	.630	.06000	-.02130	-4.22270	.29890
-3.749	4.576	.05590	-.02560	-3.89850	4.24990
-3.811	6.411	.05350	-.02750	-4.01230	6.11470
	GRADIENT	-.00117	-.00058	.03939	.97352

RUN NO. 1464/ 0 RN/L = 3.00 GRADIENT INTERVAL = -5.00/ 5.00

ALPHAL	BETAL	CALS	CYNLS	ALFLSU	BETLSU
-.435	-6.963	.06980	-.05060	-.11010	-6.81330
-.407	-4.771	.06740	-.04630	-.08240	-4.62050
-.389	-.402	.06290	-.04350	-.06430	-.25230
-.358	3.786	.05840	-.03790	-.03350	3.93560
-.377	5.986	.05430	-.03610	-.05390	6.13350
	GRADIENT	-.00105	.00098	.00570	.99993

RUN NO. 1465/ 0 RN/L = 3.00 GRADIENT INTERVAL = -5.00/ 5.00

ALPHAL	BETAL	CALS	CYNLS	ALFLSU	BETLSU
4.712	-5.548	.06820	-.05730	4.52600	-5.85190
4.481	-3.430	.06660	-.05130	4.35770	-3.76410
4.127	.425	.06220	-.04430	4.27070	.09680
4.085	4.267	.05830	-.03490	4.41770	4.13870
4.038	6.342	.05580	-.03360	4.39000	6.28630
	GRADIENT	-.00108	.00213	.00778	1.02676

IA156A, AEDC PWT 16T-470, 0 T S W/SILTS (R8NNE2) (10 MAY 80)

REFERENCE DATA

SREF =	2690.0000 SQ.FT.	XMRP =	976.0000 IN. XT		
LREF =	1290.3000 INCHES	YMRP =	.0000 IN. YT		
BREF =	1290.3000 INCHES	ZMRP =	400.0000 IN. ZT		
SCALE =	.0200				

PARAMETRIC DATA

IB-ELV =	12.000	OB-ELV =	-7.000
BDFLAP =	.000	SPDBRK =	.000
RUDDER =	.000	SILTS =	1.000
MACH =	1.400	RN/L =	3.500

RUN NO. 1469/ 0 RN/L = 3.01 GRADIENT INTERVAL = -5.00/ 5.00

ALPHAL	BETAL	CALS	CYNLS	ALFLSU	BETLSU
-8.671	-5.754	.07330	-.00720	-8.45010	-5.88980
-8.660	-3.699	.07240	.00220	-8.46790	-3.87500
-8.538	.498	.06700	.00260	-8.45520	.25150
-8.281	4.587	.05960	-.00460	-8.32500	4.33070
-8.246	6.556	.05560	-.00890	-8.33540	6.31150
	GRADIENT	-.00154	-.00082	.01718	.99031

RUN NO. 1470/ 0 RN/L = 3.00 GRADIENT INTERVAL = -5.00/ 5.00

ALPHAL	BETAL	CALS	CYNLS	ALFLSU	BETLSU
-6.560	-5.892	.07340	-.01200	-6.32050	-5.99330
-6.440	-3.911	.07110	-.00900	-6.22250	-4.05470
-6.483	.324	.06610	-.00890	-6.39430	.07890
-6.208	4.497	.06160	-.01680	-6.28310	4.24590
-5.952	6.611	.05710	-.02190	-6.08080	6.38390
	GRADIENT	-.00113	-.00093	-.00729	.98721

RUN NO. 1471/ 0 RN/L = 3.00 GRADIENT INTERVAL = -5.00/ 5.00

ALPHAL	BETAL	CALS	CYNLS	ALFLSU	BETLSU
-4.290	-6.014	.07350	-.02710	-4.03350	-6.06100
-4.490	-3.860	.07060	-.02270	-4.25020	-3.96180
-4.319	.528	.06540	-.02250	-4.24350	.27860
-3.776	4.489	.06260	-.03100	-3.90690	4.26380
-3.878	6.351	.05880	-.03240	-4.04390	6.15020
	GRADIENT	-.00096	-.00098	.04041	.98491

RUN NO. 1472/ 0 RN/L = 2.99 GRADIENT INTERVAL = -5.00/ 5.00

ALPHAL	BETAL	CALS	CYNLS	ALFLSU	BETLSU
-.332	-6.847	.07400	-.05220	-.08580	-6.76190
-.309	-4.704	.07300	-.04880	-.06350	-4.61880
-.286	-.317	.06760	-.04570	-.04030	-.23190
-.213	3.859	.06160	-.04200	.03270	3.94450
-.229	6.049	.05830	-.04030	.01620	6.13440
	GRADIENT	-.00133	.00079	.01118	1.00005

IA156A, AEDC PWT 16T-470, O T S W/SILTS (R8NNE2) (10 MAY 80)

REFERENCE DATA

SREF = 2690.0000 SQ.FT. XMRP = 976.0000 IN. XT
LREF = 1290.3000 INCHES YMRP = .0000 IN. YT
BREF = 1290.3000 INCHES ZMRP = 400.0000 IN. ZT
SCALE = .0200

PARAMETRIC DATA

IB-ELV = 12.000 OB-ELV = -7.000
BDFLAP = .000 SPDBRK = .000
RUDDER = .000 SILTS = 1.000
MACH = 1.400 RN/L = 3.500

RUN NO. 1473/ 0 RN/L = 3.00 GRADIENT INTERVAL = -5.00/ 5.00

ALPHAL	BETAL	CALS	CYNLS	ALFLSU	BETLSU
4.665	-5.654	.07180	-.05950	4.50850	-5.86110
4.477	-3.536	.07060	-.05440	4.36430	-3.77010
4.190	.323	.06640	-.04650	4.27030	.07670
4.197	4.251	.06210	-.03740	4.42850	4.13560
4.159	6.350	.05940	-.03550	4.41010	6.28610
	GRADIENT	-.00109	.00218	.00834	1.01528

IA156A, AEDC PWT 16T-470, O T S W/SILTS (R8NNE3) (10 MAY 80)

REFERENCE DATA

SREF = 2690.0000 SQ.FT. XMRP = 976.0000 IN. XT
LREF = 1290.3000 INCHES YMRP = .0000 IN. YT
BREF = 1290.3000 INCHES ZMRP = 400.0000 IN. ZT
SCALE = .0200

PARAMETRIC DATA

IB-ELV = 12.000 OB-ELV = -7.000
BDFLAP = .000 SPDBRK = .000
RUDDER = .000 SILTS = 1.000
MACH = 1.550 RN/L = 3.200

RUN NO. 1474/ 0 RN/L = 3.01 GRADIENT INTERVAL = -5.00/ 5.00

ALPHAL	BETAL	CALS	CYNLS	ALFLSU	BETLSU
-8.687	-5.737	.06830	-.00780	-8.36710	-5.89390
-8.696	-3.615	.06770	.00420	-8.41330	-3.83150
-8.519	.493	.06180	.00540	-8.36830	.16800
-8.250	4.726	.05490	.00000	-8.27890	4.37150
-8.199	6.655	.05130	-.00380	-8.28910	6.31020
	GRADIENT	-.00154	-.00051	.01614	.98348

RUN NO. 1475/ 0 RN/L = 3.01 GRADIENT INTERVAL = -5.00/ 5.00

ALPHAL	BETAL	CALS	CYNLS	ALFLSU	BETLSU
-6.626	-5.890	.06900	-.01210	-6.28810	-5.99720
-6.499	-3.889	.06640	-.00680	-6.18450	-4.05550
-6.468	.396	.06130	-.00730	-6.31670	.07520
-6.134	4.567	.05600	-.01310	-6.20330	4.21700
-5.826	6.730	.05280	-.01800	-5.97460	6.40400
	GRADIENT	-.00123	-.00074	-.00235	.97821

IA156A, AEDC PWT 16T-470, O T S W/SILTS (R8NNE3) (10 MAY 80)

REFERENCE DATA

SREF =	2690.0000 SQ.FT.	XMRP =	976.0000 IN. XT		
LREF =	1290.3000 INCHES	YMRP =	.0000 IN. YT		
BREF =	1290.3000 INCHES	ZMRP =	400.0000 IN. ZT		
SCALE =	.0200				

PARAMETRIC DATA

IB-ELV =	12.000	OB-ELV =	-7.000
BDFLAP =	.000	SPDBRK =	.000
RUDDER =	.000	SILTS =	1.000
MACH =	1.550	RN/L =	3.200

RUN NO. 1476/ 0 RN/L = 3.01 GRADIENT INTERVAL = -5.00/ 5.00

ALPHAL	BETAL	CALS	CYNLS	ALFLSU	BETLSU
-4.308	-6.048	.06910	-.02610	-3.95340	-6.07490
-4.571	-3.846	.06640	-.02080	-4.23160	-3.95410
-4.337	.618	.06070	-.02150	-4.20090	.28800
-3.752	4.566	.05640	-.02530	-3.90130	4.24120
-3.807	6.405	.05360	-.02710	-4.00750	6.11210
	GRADIENT	-.00119	-.00053	.03856	.97372

RUN NO. 1477/ 0 RN/L = 3.01 GRADIENT INTERVAL = -5.00/ 5.00

ALPHAL	BETAL	CALS	CYNLS	ALFLSU	BETLSU
-.417	-6.911	.07040	-.05080	-.09260	-6.76240
-.398	-4.768	.06810	-.04650	-.07290	-4.61860
-.375	-.376	.06330	-.04350	-.05100	-.22660
-.347	3.782	.05900	-.03780	-.02210	3.93200
-.358	5.978	.05420	-.03550	-.03520	6.12620
	GRADIENT	-.00106	.00101	.00593	1.00002

RUN NO. 1478/ 0 RN/L = 3.01 GRADIENT INTERVAL = -5.00/ 5.00

ALPHAL	BETAL	CALS	CYNLS	ALFLSU	BETLSU
4.725	-5.557	.06900	-.05750	4.53910	-5.85980
4.488	-3.428	.06710	-.05160	4.36510	-3.76160
4.141	.418	.06250	-.04440	4.28340	.08950
4.096	4.270	.05840	-.03470	4.42900	4.14250
4.052	6.355	.05590	-.03350	4.40360	6.29960
	GRADIENT	-.00113	.00220	.00831	1.02670

IA156A, AEDC PWT 16T-470, O T S W/SILTS (R8NNE4) (10 MAY 80)

REFERENCE DATA

SREF = 2690.0000 SQ.FT. XMRP = 976.0000 IN. XT
LREF = 1290.3000 INCHES YMRP = .0000 IN. YT
BREF = 1290.3000 INCHES ZMRP = 400.0000 IN. ZT
SCALE = .0200

PARAMETRIC DATA

IB-ELV = 8.000 OB-ELV = -7.000
BDFLAP = .000 SPDBRK = .000
RUDDER = .000 SILTS = 1.000
MACH = 1.400 RN/L = 3.500

RUN NO. 1482/ 0 RN/L = 3.00 GRADIENT INTERVAL = -5.00/ 5.00

ALPHAL	BETAL	CALS	CYNLS	ALFLSU	BETLSU
-8.628	-5.635	.07220	-.00650	-8.40730	-5.77210
-8.665	-3.636	.07200	.00240	-8.47420	-3.81300
-8.552	.416	.06630	.00260	-8.46570	.17090
-8.312	4.739	.05870	-.00470	-8.36000	4.48470
-8.233	6.567	.05490	-.00920	-8.32330	6.32350
	GRADIENT	-.00159	-.00086	.01376	.99087

RUN NO. 1483/ 0 RN/L = 3.00 GRADIENT INTERVAL = -5.00/ 5.00

ALPHAL	BETAL	CALS	CYNLS	ALFLSU	BETLSU
-6.603	-5.903	.07250	-.01160	-6.36300	-6.00410
-6.453	-3.924	.07030	-.00900	-6.23550	-4.06650
-6.493	.297	.06550	-.00900	-6.40320	.05220
-6.223	4.493	.06100	-.01710	-6.29810	4.24320
-5.914	6.637	.05660	-.02230	-6.04470	6.41130
	GRADIENT	-.00111	-.00096	-.00747	.98735

RUN NO. 1484/ 0 RN/L = 3.00 GRADIENT INTERVAL = -5.00/ 5.00

ALPHAL	BETAL	CALS	CYNLS	ALFLSU	BETLSU
-4.263	-6.041	.07190	-.02700	-4.00710	-6.08590
-4.503	-3.851	.06920	-.02240	-4.26340	-3.95300
-4.340	.536	.06450	-.02280	-4.26420	.28590
-3.809	4.496	.06170	-.03090	-3.94020	4.27070
-3.876	6.330	.05840	-.03260	-4.04210	6.12950
	GRADIENT	-.00090	-.00100	.03802	.98493

RUN NO. 1485/ 0 RN/L = 3.00 GRADIENT INTERVAL = -5.00/ 5.00

ALPHAL	BETAL	CALS	CYNLS	ALFLSU	BETLSU
-.358	-6.893	.07270	-.05170	-.11200	-6.80740
-.334	-4.709	.07110	-.04780	-.08790	-4.62340
-.301	-.315	.06690	-.04570	-.05690	-.22980
-.244	3.845	.06060	-.04200	.00190	3.93070
-.266	6.057	.05800	-.04060	-.02110	6.14210
	GRADIENT	-.00122	.00068	.01047	.99997

IA156A, AEDC PWT 16T-470, 0 T S W/SILTS (R8NNE4) (10 MAY 80)

REFERENCE DATA

SREF =	2690.0000 SQ.FT.	XMRP =	976.0000 IN. XT		
LREF =	1290.3000 INCHES	YMRP =	.0000 IN. YT		
BREF =	1290.3000 INCHES	ZMRP =	400.0000 IN. ZT		
SCALE =	.0200				

PARAMETRIC DATA

IB-ELV =	8.000	OB-ELV =	-7.000
BDFLAP =	.000	SPDBRK =	.000
RUDDER =	.000	SILTS =	1.000
MACH =	1.400	RN/L =	3.500

RUN NO. 1486/ 0 RN/L = 3.00 GRADIENT INTERVAL = -5.00/ 5.00

ALPHAL	BETAL	CALS	CYNLS	ALFLSU	BETLSU
4.670	-5.641	.07200	-.05960	4.51490	-5.84780
4.453	-3.572	.06950	-.05350	4.33910	-3.80450
4.198	.234	.06590	-.04630	4.27220	-.01660
4.188	4.211	.06200	-.03750	4.42060	4.09340
4.138	6.342	.05920	-.03540	4.39080	6.27770
	GRADIENT	-.00096	.00206	.01067	1.01490

IA156A, AEDC PWT 16T-470, 0 T S W/SILTS (R8NNE5) (10 MAY 80)

REFERENCE DATA

SREF =	2690.0000 SQ.FT.	XMRP =	976.0000 IN. XT		
LREF =	1290.3000 INCHES	YMRP =	.0000 IN. YT		
BREF =	1290.3000 INCHES	ZMRP =	400.0000 IN. ZT		
SCALE =	.0200				

PARAMETRIC DATA

IB-ELV =	8.000	OB-ELV =	-7.000
BDFLAP =	.000	SPDBRK =	.000
RUDDER =	.000	SILTS =	1.000
MACH =	1.550	RN/L =	3.200

RUN NO. 1487/ 0 RN/L = 3.00 GRADIENT INTERVAL = -5.00/ 5.00

ALPHAL	BETAL	CALS	CYNLS	ALFLSU	BETLSU
-8.670	-5.728	.06740	-.00770	-8.35140	-5.88450
-8.693	-3.613	.06650	.00430	-8.40870	-3.82970
-8.540	.468	.06090	.00630	-8.38940	.14460
-8.235	4.809	.05360	.00020	-8.26600	4.45240
-8.241	6.689	.05060	-.00330	-8.33180	6.34540
	GRADIENT	-.00153	-.00050	.01707	.98351

RUN NO. 1488/ 0 RN/L = 3.00 GRADIENT INTERVAL = -5.00/ 5.00

ALPHAL	BETAL	CALS	CYNLS	ALFLSU	BETLSU
-6.626	-5.885	.06730	-.01130	-6.28660	-5.99080
-6.516	-3.889	.06490	-.00620	-6.20040	-4.05570
-6.477	.374	.06000	-.00680	-6.32130	.05170
-6.169	4.588	.05520	-.01300	-6.23870	4.23650
-6.067	6.582	.05220	-.01650	-6.20610	6.25180
	GRADIENT	-.00114	-.00080	-.00456	.97822

IA156A, AEDC PWT 16T-470, O T S W/SILTS (R8NNE5) (10 MAY 80)

REFERENCE DATA

SREF = 2690.0000 SQ.FT. XMRP = 976.0000 IN. XT
LREF = 1290.3000 INCHES YMRP = .0000 IN. YT
BREF = 1290.3000 INCHES ZMRP = 400.0000 IN. ZT
SCALE = .0200

PARAMETRIC DATA

IB-ELV = 8.000 OB-ELV = -7.000
BDFLAP = .000 SPDBRK = .000
RUDDER = .000 SILTS = 1.000
MACH = 1.550 RN/L = 3.200

RUN NO. 1489/ 0 RN/L = 3.01 GRADIENT INTERVAL = -5.00/ 5.00

ALPHAL	BETAL	CALS	CYNLS	ALFLSU	BETLSU
-4.350	-6.043	.06770	-.02550	-3.99320	-6.07040
-4.590	-3.847	.06470	-.01980	-4.24810	-3.95450
-4.369	.628	.05960	-.02110	-4.23150	.29640
-3.755	4.570	.05570	-.02560	-3.90440	4.24480
-3.825	6.407	.05300	-.02710	-4.02560	6.11230
	GRADIENT	-.00107	-.00068	.04000	.97353

RUN NO. 1490/ 0 RN/L = 3.00 GRADIENT INTERVAL = -5.00/ 5.00

ALPHAL	BETAL	CALS	CYNLS	ALFLSU	BETLSU
-.442	-6.908	.06980	-.05100	-.11710	-6.75840
-.421	-4.771	.06670	-.04610	-.09570	-4.62070
-.393	-.378	.06250	-.04330	-.06720	-.22730
-.370	3.783	.05820	-.03780	-.04460	3.93320
-.382	5.992	.05390	-.03590	-.05940	6.13900
	GRADIENT	-.00099	.00097	.00598	1.00004

RUN NO. 1491/ 0 RN/L = 3.00 GRADIENT INTERVAL = -5.00/ 5.00

ALPHAL	BETAL	CALS	CYNLS	ALFLSU	BETLSU
4.706	-5.550	.06740	-.05730	4.52080	-5.85570
4.466	-3.422	.06600	-.05130	4.34290	-3.75550
4.131	.425	.06220	-.04430	4.27540	.09590
4.093	4.273	.05790	-.03460	4.42400	4.14410
4.032	6.344	.05540	-.03340	4.38410	6.28810
	GRADIENT	-.00105	.00217	.01054	1.02664

IA156A, AEDC PWT 16T-470, O T S W/SILTS (R8NNE6) (10 MAY 80)

REFERENCE DATA

SREF = 2690.0000 SQ.FT. XMRP = 976.0000 IN. XT
LREF = 1290.3000 INCHES YMRP = .0000 IN. YT
BREF = 1290.3000 INCHES ZMRP = 400.0000 IN. ZT
SCALE = .0200

PARAMETRIC DATA

IB-ELV = 10.000 OB-ELV = 2.000
BDFLAP = .000 SPDBRK = .000
RUDDER = .000 SILTS = 1.000
MACH = 1.050 RN/L = 3.500

RUN NO. 1494/ 0 RN/L = 3.50 GRADIENT INTERVAL = -5.00/ 5.00

ALPHAL	BETAL	CALS	CYNLS	ALFLSU	BETLSU
-8.787	-5.614	.08070	-.02560	-8.61730	-5.72630
-8.703	-3.499	.07810	-.01830	-8.55760	-3.64250
-8.639	.431	.07610	-.01180	-8.57790	.23680
-8.388	4.603	.06920	-.01680	-8.43080	4.40420
-8.350	6.517	.06320	-.01980	-8.42620	6.32820
	GRADIENT	-.00110	.00017	.01585	.99315

RUN NO. 1495/ 0 RN/L = 3.50 GRADIENT INTERVAL = -5.00/ 5.00

ALPHAL	BETAL	CALS	CYNLS	ALFLSU	BETLSU
-6.555	-5.749	.08350	-.03500	-6.36930	-5.83340
-6.476	-3.845	.08110	-.03010	-6.30880	-3.96160
-6.548	.317	.07560	-.02680	-6.48400	.12380
-6.274	4.437	.07150	-.02980	-6.33910	4.24370
-6.204	6.423	.06540	-.03250	-6.30600	6.24690
	GRADIENT	-.00116	.00004	-.00373	.99079

RUN NO. 1496/ 0 RN/L = 3.50 GRADIENT INTERVAL = -5.00/ 5.00

ALPHAL	BETAL	CALS	CYNLS	ALFLSU	BETLSU
-4.276	-5.940	.08410	-.04850	-4.07710	-5.98170
-4.504	-3.782	.08180	-.04390	-4.31930	-3.86730
-4.385	.522	.07540	-.04360	-4.33250	.32520
-3.840	4.420	.07210	-.04410	-3.94940	4.24780
-3.924	6.256	.06770	-.04430	-4.05940	6.10350
	GRADIENT	-.00119	-.00002	.04427	.98921

RUN NO. 1497/ 0 RN/L = 3.50 GRADIENT INTERVAL = -5.00/ 5.00

ALPHAL	BETAL	CALS	CYNLS	ALFLSU	BETLSU
-.365	-6.803	.08530	-.06810	-.17030	-6.74180
-.351	-4.618	.08410	-.06510	-.15670	-4.55750
-.401	-.227	.07850	-.06160	-.20630	-.16660
-.299	3.874	.07290	-.05280	-.10430	3.93450
-.273	6.061	.06960	-.04880	-.07860	6.12220
	GRADIENT	-.00132	.00144	.00597	.99999

IA156A, AEDC PWT 16T-470, 0 T S W/SILTS (R8NNE6) (10 MAY 80)

REFERENCE DATA

SREF = 2690.0000 SQ.FT. XMRP = 976.0000 IN. XT
LREF = 1290.3000 INCHES YMRP = .0000 IN. YT
BREF = 1290.3000 INCHES ZMRP = 400.0000 IN. ZT
SCALE = .0200

PARAMETRIC DATA

IB-ELV = 10.000 OB-ELV = 2.000
BDFLAP = .000 SPDBRK = .000
RUDDER = .000 SILTS = 1.000
MACH = 1.050 RN/L = 3.500

RUN NO. 1498/ 0 RN/L = 3.50 GRADIENT INTERVAL = -5.00/ 5.00

ALPHAL	BETAL	CALS	CYNLS	ALFLSU	BETLSU
4.473	-5.686	.08210	-.06950	4.34550	-5.84480
4.312	-3.791	.08090	-.06340	4.21800	-3.77210
4.044	.271	.07870	-.05780	4.10180	.07590
4.150	4.238	.07420	-.04670	4.33000	4.14230
4.104	6.318	.07080	-.04330	4.30030	6.26160
	GRADIENT	-.00086	.00214	.01450	1.01089

IA156A, AEDC PWT 16T-470, 0 T S W/SILTS (R8NNE7) (10 MAY 80)

REFERENCE DATA

SREF = 2690.0000 SQ.FT. XMRP = 976.0000 IN. XT
LREF = 1290.3000 INCHES YMRP = .0000 IN. YT
BREF = 1290.3000 INCHES ZMRP = 400.0000 IN. ZT
SCALE = .0200

PARAMETRIC DATA

IB-ELV = 10.000 OB-ELV = 2.000
BDFLAP = .000 SPDBRK = .000
RUDDER = .000 SILTS = 1.000
MACH = 1.100 RN/L = 3.500

RUN NO. 1499/ 0 RN/L = 3.50 GRADIENT INTERVAL = -5.00/ 5.00

ALPHAL	BETAL	CALS	CYNLS	ALFLSU	BETLSU
-8.807	-5.605	.08000	-.02420	-8.63460	-5.71560
-8.762	-3.515	.07920	-.01570	-8.61500	-3.65640
-8.651	.445	.07470	-.01210	-8.58720	.25100
-8.367	4.704	.06680	-.01650	-8.40960	4.50430
-8.354	6.524	.06160	-.01840	-8.42880	6.33390
	GRADIENT	-.00151	-.00011	.02520	.99299

RUN NO. 1500/ 0 RN/L = 3.50 GRADIENT INTERVAL = -5.00/ 5.00

ALPHAL	BETAL	CALS	CYNLS	ALFLSU	BETLSU
-6.587	-5.738	.08270	-.03270	-6.39970	-5.82110
-6.536	-3.838	.07960	-.02790	-6.36760	-3.95380
-6.603	.312	.07350	-.02560	-6.53550	.11860
-6.272	4.442	.06890	-.02930	-6.33520	4.24770
-6.208	6.422	.06260	-.03090	-6.30870	6.24430
	GRADIENT	-.00129	-.00017	.00388	.99048

IA156A, AEDC PWT 16T-470, 0 T S W/SILTS (R8NNE7) (10 MAY 80)

REFERENCE DATA

SREF = 2690.0000 SQ.FT. XMRP = 976.0000 IN. XT
LREF = 1290.3000 INCHES YMRP = .0000 IN. YT
BREF = 1290.3000 INCHES ZMRP = 400.0000 IN. ZT
SCALE = .0200

PARAMETRIC DATA

IB-ELV = 10.000 OB-ELV = 2.000
BDFLAP = .000 SPDBRK = .000
RUDDER = .000 SILTS = 1.000
MACH = 1.100 RN/L = 3.500

RUN NO. 1501/ 0 RN/L = 3.51 GRADIENT INTERVAL = -5.00/ 5.00

ALPHAL	BETAL	CALS	CYNLS	ALFLSU	BETLSU
-4.292	-5.952	.08200	-.04500	-4.09130	-5.99080
-4.532	-3.787	.07910	-.04010	-4.34590	-3.87040
-4.394	.532	.07220	-.04070	-4.33950	.33480
-3.827	4.412	.06940	-.04310	-3.93400	4.23700
-3.933	6.284	.06580	-.04310	-4.06630	6.12940
	GRADIENT	-.00119	-.00036	.04932	.98867

RUN NO. 1502/ 0 RN/L = 3.49 GRADIENT INTERVAL = -5.00/ 5.00

ALPHAL	BETAL	CALS	CYNLS	ALFLSU	BETLSU
-.377	-6.815	.08240	-.06430	-.18230	-6.75170
-.344	-4.643	.08060	-.06130	-.14920	-4.57940
-.382	-.245	.07390	-.05810	-.18720	-.18160
-.272	3.878	.06730	-.04960	-.07790	3.94100
-.250	6.074	.06440	-.04620	-.05570	6.13690
	GRADIENT	-.00156	.00137	.00818	1.00000

RUN NO. 1503/ 0 RN/L = 3.50 GRADIENT INTERVAL = -5.00/ 5.00

ALPHAL	BETAL	CALS	CYNLS	ALFLSU	BETLSU
4.498	-5.703	.07810	-.06530	4.37170	-5.86370
4.338	-3.578	.07700	-.06020	4.24580	-3.76030
4.098	.284	.07400	-.05560	4.15790	.08830
4.170	4.238	.06950	-.04480	4.35120	4.14390
4.128	6.312	.06650	-.04180	4.32490	6.25810
	GRADIENT	-.00096	.00197	.01363	1.01132

IA156A, AEDC PWT 16T-470, O T S W/SILTS (R8NNE8) (10 MAY 80)

REFERENCE DATA

SREF = 2690.0000 SQ.FT. XMRP = 976.0000 IN. XT
LREF = 1290.3000 INCHES YMRP = .0000 IN. YT
BREF = 1290.3000 INCHES ZMRP = 400.0000 IN. ZT
SCALE = .0200

PARAMETRIC DATA

IB-ELV =	10.000	OB-ELV =	2.000
BDFLAP =	.000	SPDBRK =	.000
RUDDER =	.000	SILTS =	1.000
MACH =	1.150	RN/L =	3.500

RUN NO. 1504/ 0 RN/L = 3.50 GRADIENT INTERVAL = -5.00/ 5.00

ALPHAL	BETAL	CALS	CYNLS	ALFLSU	BETLSU
-8.825	-5.646	.07940	-.01840	-8.65030	-5.75630
-8.767	-3.508	.07750	-.01250	-8.61730	-3.65040
-8.674	.434	.07300	-.00790	-8.60740	.23790
-8.442	4.499	.06580	-.01310	-8.47880	4.29550
-8.365	6.555	.06050	-.01730	-8.44030	6.36200
	GRADIENT	-.00146	-.00008	.01737	.99240

RUN NO. 1505/ 0 RN/L = 3.51 GRADIENT INTERVAL = -5.00/ 5.00

ALPHAL	BETAL	CALS	CYNLS	ALFLSU	BETLSU
-6.574	-5.771	.08070	-.02960	-6.38450	-5.85290
-6.489	-3.837	.07810	-.02520	-6.31710	-3.95200
-6.560	.307	.07100	-.02180	-6.49080	.11230
-6.309	4.477	.06670	-.02580	-6.37190	4.28040
-6.201	6.441	.06110	-.02980	-6.30140	6.26060
	GRADIENT	-.00137	-.00007	-.00655	.99017

RUN NO. 1506/ 0 RN/L = 3.50 GRADIENT INTERVAL = -5.00/ 5.00

ALPHAL	BETAL	CALS	CYNLS	ALFLSU	BETLSU
-4.255	-5.926	.08050	-.04240	-4.05180	-5.96450
-4.512	-3.794	.07740	-.03820	-4.32320	-3.87770
-4.382	.520	.07110	-.03820	-4.32520	.32110
-3.826	4.434	.06730	-.04040	-3.93360	4.25730
-3.922	6.292	.06380	-.04120	-4.05610	6.13510
	GRADIENT	-.00123	-.00026	.04654	.98840

RUN NO. 1507/ 0 RN/L = 3.51 GRADIENT INTERVAL = -5.00/ 5.00

ALPHAL	BETAL	CALS	CYNLS	ALFLSU	BETLSU
-.335	-6.817	.08110	-.06200	-.13920	-6.75170
-.310	-4.651	.07940	-.05900	-.11420	-4.58510
-.345	-.253	.07380	-.05640	-.14860	-.18690
-.239	3.871	.06700	-.04870	-.04330	3.93640
-.218	6.099	.06370	-.04540	-.02220	6.16480
	GRADIENT	-.00145	.00120	.00814	1.00000

IA156A, AEDC PWT 16T-470, 0 T S W/SILTS (R8NNE8) (10 MAY 80)

REFERENCE DATA

SREF =	2690.0000 SQ.FT.	XMRP =	976.0000 IN. XT		
LREF =	1290.3000 INCHES	YMRP =	.0000 IN. YT		
BREF =	1290.3000 INCHES	ZMRP =	400.0000 IN. ZT		
SCALE =	.0200				

PARAMETRIC DATA

IB-ELV =	10.000	OB-ELV =	2.000
BDFLAP =	.000	SPDBRK =	.000
RUDDER =	.000	SILTS =	1.000
MACH =	1.150	RN/L =	3.500

RUN NO. 1508/ 0 RN/L = 3.50 GRADIENT INTERVAL = -5.00/ 5.00

ALPHAL	BETAL	CALS	CYNLS	ALFLSU	BETLSU
4.543	-5.674	.07800	-.06500	4.41660	-5.83780
4.433	-3.584	.07760	-.06080	4.34140	-3.76910
4.114	.285	.07390	-.05410	4.17660	.08780
4.200	4.242	.06950	-.04310	4.38410	4.14830
4.146	6.330	.06650	-.04100	4.34580	6.27720
	GRADIENT	-.00104	.00226	.00563	1.01177

IA156A, AEDC PWT 16T-470, 0 T S W/SILTS (R8NNE9) (10 MAY 80)

REFERENCE DATA

SREF =	2690.0000 SQ.FT.	XMRP =	976.0000 IN. XT		
LREF =	1290.3000 INCHES	YMRP =	.0000 IN. YT		
BREF =	1290.3000 INCHES	ZMRP =	400.0000 IN. ZT		
SCALE =	.0200				

PARAMETRIC DATA

IB-ELV =	10.000	OB-ELV =	2.000
BDFLAP =	.000	SPDBRK =	.000
RUDDER =	.000	SILTS =	1.000
MACH =	1.150	RN/L =	3.500

RUN NO. 1509/ 0 RN/L = 3.51 GRADIENT INTERVAL = -5.00/ 5.00

ALPHAL	BETAL	CALS	CYNLS	ALFLSU	BETLSU
-.337	-6.770	.08130	-.06220	-.14080	-6.70490
-.307	-4.586	.07920	-.05890	-.11110	-4.52030
-.339	-.305	.07400	-.05640	-.14230	-.23930
-.239	3.942	.06650	-.04840	-.04240	4.00820
-.215	6.114	.06370	-.04520	-.01890	6.17960
	GRADIENT	-.00149	.00123	.00804	1.00000

IA156A, AEDC PWT 16T-470, O T S (R8NP01) (10 MAY 80)

REFERENCE DATA

SREF =	2690.0000 SQ.FT.	XMRP =	976.0000 IN. XT		
LREF =	1290.3000 INCHES	YMRP =	.0000 IN. YT		
BREF =	1290.3000 INCHES	ZMRP =	400.0000 IN. ZT		
SCALE =	.0200				

PARAMETRIC DATA

IB-ELV =	10.000	OB-ELV =	5.000
BDFLAP =	.000	SPDBRK =	.000
RUDDER =	.000	SILTS =	.000
MACH =	.600	RN/L =	3.500

RUN NO. 801/ 0 RN/L = 3.51 GRADIENT INTERVAL = -5.00/ 5.00

ALPHAR	BETAR	CARS	CYNRS	ALFRSU	BETRSU
-.198	-6.904	.03880	.03590	-.00190	-6.98060
-.211	-.607	.04360	.04190	-.01440	-.68390
-.251	5.621	.05020	.05010	-.05440	5.54390
	GRADIENT	.00000	.00000	.00000	.00000

IA156A, AEDC PWT 16T-470, O T S (R8NP02) (10 MAY 80)

REFERENCE DATA

SREF =	2690.0000 SQ.FT.	XMRP =	976.0000 IN. XT		
LREF =	1290.3000 INCHES	YMRP =	.0000 IN. YT		
BREF =	1290.3000 INCHES	ZMRP =	400.0000 IN. ZT		
SCALE =	.0200				

PARAMETRIC DATA

IB-ELV =	10.000	OB-ELV =	5.000
BDFLAP =	.000	SPDBRK =	.000
RUDDER =	.000	SILTS =	.000
MACH =	.700	RN/L =	3.500

RUN NO. 803/ 0 RN/L = 3.50 GRADIENT INTERVAL = -5.00/ 5.00

ALPHAR	BETAR	CARS	CYNRS	ALFRSU	BETRSU
-.170	-7.080	.04050	.03590	.03420	-7.07500
-.209	-.706	.04420	.04190	-.00500	-.70060
-.275	5.562	.05160	.05040	-.07130	5.56670
	GRADIENT	.00000	.00000	.00000	.00000

IA156A, AEDC PWT 16T-470, O T S (R8NP03) (10 MAY 80)

REFERENCE DATA

SREF =	2690.0000 SQ.FT.	XMRP =	976.0000 IN. XT		
LREF =	1290.3000 INCHES	YMRP =	.0000 IN. YT		
BREF =	1290.3000 INCHES	ZMRP =	400.0000 IN. ZT		
SCALE =	.0200				

PARAMETRIC DATA

IB-ELV =	10.000	OB-ELV =	5.000
BDFLAP =	.000	SPDBRK =	.000
RUDDER =	.000	SILTS =	.000
MACH =	.800	RN/L =	3.500

RUN NO. 804/ 0 RN/L = 3.50 GRADIENT INTERVAL = -5.00/ 5.00

ALPHAR	BETAR	CARS	CYNRS	ALFRSU	BETRSU
-.172	-7.160	.04330	.03660	.03230	-7.12120
-.248	-.772	.04600	.04060	-.04440	-.73260
-.307	5.546	.05340	.05020	-.10300	5.58480
	GRADIENT	.00000	.00000	.00000	.00000

IA156A, AEDC PWT 16T-470, O T S (R8NP04) (10 MAY 80)

REFERENCE DATA

SREF =	2690.0000 SQ.FT.	XMRP =	976.0000 IN. XT		
LREF =	1290.3000 INCHES	YMRP =	.0000 IN. YT		
BREF =	1290.3000 INCHES	ZMRP =	400.0000 IN. ZT		
SCALE =	.0200				

PARAMETRIC DATA

IB-ELV =	10.000	OB-ELV =	5.000
BDFLAP =	.000	SPDBRK =	.000
RUDDER =	.000	SILTS =	.000
MACH =	.850	RN/L =	3.500

RUN NO. 805/ 0 RN/L = 3.50 GRADIENT INTERVAL = -5.00/ 5.00

ALPHAR	BETAR	CARS	CYNRS	ALFRSU	BETRSU
-.191	-7.070	.04640	.03810	.01140	-7.02230
-.280	-.796	.04820	.04020	-.07790	-.74900
-.337	5.415	.05480	.05050	-.13470	5.46250
	GRADIENT	.00000	.00000	.00000	.00000

IA156A, AEDC PWT 16T-470, O T S (R8NP05) (10 MAY 80)

REFERENCE DATA

SREF = 2690.0000 SQ.FT. XMRP = 976.0000 IN. XT
LREF = 1290.3000 INCHES YMRP = .0000 IN. YT
BREF = 1290.3000 INCHES ZMRP = 400.0000 IN. ZT
SCALE = .0200

PARAMETRIC DATA

IB-ELV = 10.000 OB-ELV = 5.000
BDFLAP = .000 SPDBRK = .000
RUDDER = .000 SILTS = .000
MACH = .900 RN/L = 3.500

RUN NO. 806/ 0 RN/L = 3.50 GRADIENT INTERVAL = -5.00/ 5.00

ALPHAR	BETAR	CARS	CYNRS	ALFRSU	BETRSU
-.216	-7.091	.04900	.03840	-.01660	-7.03880
-.319	-.807	.05120	.04080	-.11960	-.75480
-.372	5.432	.05760	.05230	-.17190	5.48470
	GRADIENT	.00000	.00000	.00000	.00000

IA156A, AEDC PWT 16T-470, O T S (R8NP06) (10 MAY 80)

REFERENCE DATA

SREF = 2690.0000 SQ.FT. XMRP = 976.0000 IN. XT
LREF = 1290.3000 INCHES YMRP = .0000 IN. YT
BREF = 1290.3000 INCHES ZMRP = 400.0000 IN. ZT
SCALE = .0200

PARAMETRIC DATA

IB-ELV = 10.000 OB-ELV = 5.000
BDFLAP = .000 SPDBRK = .000
RUDDER = .000 SILTS = .000
MACH = .920 RN/L = 3.500

RUN NO. 807/ 0 RN/L = 3.50 GRADIENT INTERVAL = -5.00/ 5.00

ALPHAR	BETAR	CARS	CYNRS	ALFRSU	BETRSU
-.221	-7.106	.05040	.03940	-.02250	-7.05190
-.310	-.840	.05330	.04220	-.11070	-.78600
-.365	5.414	.06010	.05330	-.16640	5.46780
	GRADIENT	.00000	.00000	.00000	.00000

IA156A, AEDC PWT 16T-470, O T S (R8NP07) (10 MAY 80)

REFERENCE DATA

SREF =	2690.0000 SQ.FT	XMRP =	976.0000 IN. XT		
LREF =	1290.3000 INCHES	YMRP =	.0000 IN. YT		
BREF =	1290.3000 INCHES	ZMRP =	400.0000 IN. ZT		
SCALE =	.0200				

PARAMETRIC DATA

IB-ELV =	10.000	OB-ELV =	5.000
BDFLAP =	.000	SPDBRK =	.000
RUDDER =	.000	SILTS =	.000
MACH =	.940	RN/L =	3.500

RUN NO. 808/ 0 RN/L = 3.50 GRADIENT INTERVAL = -5.00/ 5.00

ALPHAR	BETAR	CARS	CYNRS	ALFRSU	BETRSU
-.208	-7.100	.05130	.04030	-.00980	-7.04480
-.277	-.872	.05610	.04470	-.07950	-.81700
-.359	5.513	.06330	.05560	-.16060	5.56900
	GRADIENT	.00000	.00000	.00000	.00000

IA156A, AEDC PWT 16T-470, O T S (R8NP08) (10 MAY 80)

REFERENCE DATA

SREF =	2690.0000 SQ.FT.	XMRP =	976.0000 IN. XT		
LREF =	1290.3000 INCHES	YMRP =	.0000 IN. YT		
BREF =	1290.3000 INCHES	ZMRP =	400.0000 IN. ZT		
SCALE =	.0200				

PARAMETRIC DATA

IB-ELV =	10.000	OB-ELV =	5.000
BDFLAP =	.000	SPDBRK =	.000
RUDDER =	.000	SILTS =	.000
MACH =	.950	RN/L =	3.500

RUN NO. 816/ 0 RN/L = 3.50 GRADIENT INTERVAL = -5.00/ 5.00

BETAR	ALPHAR	CARS	CYNRS	ALFRSU	BETRSU
.439	-6.180	.05680	.01910	-6.13770	.23770
.173	-1.025	.05720	.04790	-.98310	-.02820
.096	.124	.05600	.04860	.16620	-.10510
-.291	6.100	.05860	.03870	6.14190	-.48190
	GRADIENT	-.00104	.00061	1.00000	-.06691

IA156A, AEDC PWT 16T-470, 0 T S (R8NP09) (10 MAY 80)

REFERENCE DATA

SREF =	2690.0000 SQ.FT.	XMRP =	976.0000 IN. XT		
LREF =	1290.3000 INCHES	YMRP =	.0000 IN. YT		
BREF =	1290.3000 INCHES	ZMRP =	400.0000 IN. ZT		
SCALE =	.0200				

PARAMETRIC DATA

IB-ELV =	10.000	OB-ELV =	5.000
BDFLAP =	.000	SPDBRK =	.000
RUDDER =	.000	SILTS =	.000
MACH =	.950	RN/L =	3.500

RUN NO. 820/ 0 RN/L = 3.50 GRADIENT INTERVAL = -5.00/ 5.00

ALPHAR	BETAR	CARS	CYNRS	ALFRSU	BETRSU
-.300	-7.245	.05100	.04060	-.10210	-7.18970
-.319	-.482	.05590	.04680	-.12090	-.42670
-.258	5.553	.06520	.05850	-.05990	5.60840
	GRADIENT	.00000	.00000	.00000	.00000

IA156A, AEDC PWT 16T-470, 0 T S (R8NP10) (10 MAY 80)

REFERENCE DATA

SREF =	2690.0000 SQ.FT.	XMRP =	976.0000 IN. XT		
LREF =	1290.3000 INCHES	YMRP =	.0000 IN. YT		
BREF =	1290.3000 INCHES	ZMRP =	400.0000 IN. ZT		
SCALE =	.0200				

PARAMETRIC DATA

IB-ELV =	10.000	OB-ELV =	5.000
BDFLAP =	.000	SPDBRK =	.000
RUDDER =	.000	SILTS =	.000
MACH =	.960	RN/L =	3.500

RUN NO. 818/ 0 RN/L = 3.50 GRADIENT INTERVAL = -5.00/ 5.00

ALPHAR	BETAR	CARS	CYNRS	ALFRSU	BETRSU
-.299	-7.232	.05190	.04160	-.10130	-7.17570
-.323	-.817	.05940	.04780	-.12570	-.76140
-.270	5.546	.06730	.06040	-.07280	5.60180
	GRADIENT	.00000	.00000	.00000	.00000

IA156A, AEDC PWT 16T-470, 0 T S (R8NP11) (10 MAY 80)

REFERENCE DATA

SREF =	2690.0000 SQ.FT.	XMRP =	976.0000 IN. XT		
LREF =	1290.3000 INCHES	YMRP =	.0000 IN. YT		
BREF =	1290.3000 INCHES	ZMRP =	400.0000 IN. ZT		
SCALE =	.0200				

PARAMETRIC DATA

IB-ELV =	10.000	OB-ELV =	5.000
BDFLAP =	.000	SPDBRK =	.000
RUDDER =	.000	SILTS =	.000
MACH =	.970	RN/L =	3.500

RUN NO. 821/ 0 RN/L = 3.50 GRADIENT INTERVAL = -5.00/ 5.00

ALPHAR	BETAR	CARS	CYNRS	ALFRSU	BETRSU
-.324	-7.066	.05480	.04420	-.12710	-7.00990
-.355	-.612	.06240	.05060	-.15770	-.55610
-.276	5.663	.06840	.06140	-.07920	5.71940
	GRADIENT	.00000	.00000	.00000	.00000

IA156A, AEDC PWT 16T-470, 0 T S (R8NP12) (10 MAY 80)

REFERENCE DATA

SREF =	2690.0000 SQ.FT.	XMRP =	976.0000 IN. XT		
LREF =	1290.3000 INCHES	YMRP =	.0000 IN. YT		
BREF =	1290.3000 INCHES	ZMRP =	400.0000 IN. ZT		
SCALE =	.0200				

PARAMETRIC DATA

IB-ELV =	10.000	OB-ELV =	5.000
BDFLAP =	.000	SPDBRK =	.000
RUDDER =	.000	SILTS =	.000
MACH =	.980	RN/L =	3.500

RUN NO. 822/ 0 RN/L = 3.51 GRADIENT INTERVAL = -5.00/ 5.00

ALPHAR	BETAR	CARS	CYNRS	ALFRSU	BETRSU
-.037	-6.518	.05750	.04540	.15670	-6.45330
-.371	-.263	.06530	.05440	-.16750	-.28280
.071	5.634	.07240	.06540	.27030	5.68040
	GRADIENT	.00000	.00000	.00000	.00000

IA156A, AEDC PWT 16T-470, 0 T S (R8NP13) (10 MAY 80)

REFERENCE DATA

SREF =	2690.0000 SQ.FT.	XMRP =	976.0000 IN. XT		
LREF =	1290.3000 INCHES	YMRP =	.0000 IN. YT		
BREF =	1290.3000 INCHES	ZMRP =	400.0000 IN. ZT		
SCALE =	.0200				

PARAMETRIC DATA

IB-ELV =	10.000	OB-ELV =	5.000
BDFLAP =	.000	SPDBRK =	.000
RUDDER =	.000	SILTS =	.000
MACH =	.990	RN/L =	3.500

RUN NO. 823/ 0 RN/L = 3.50 GRADIENT INTERVAL = -5.00/ 5.00

ALPHAR	BETAR	CARS	CYNRS	ALFRSU	BETRSU
.051	-6.534	.05940	.04650	.24360	-6.46620
-.334	-.168	.06560	.05560	-.13160	-.19290
.013	5.378	.07350	.06520	.21170	5.42640
	GRADIENT	.00000	.00000	.00000	.00000

IA156A, AEDC PWT 16T-470, 0 T S (R8NP14) (10 MAY 80)

REFERENCE DATA

SREF =	2690.0000 SQ.FT.	XMRP =	976.0000 IN. XT		
LREF =	1290.3000 INCHES	YMRP =	.0000 IN. YT		
BREF =	1290.3000 INCHES	ZMRP =	400.0000 IN. ZT		
SCALE =	.0200				

PARAMETRIC DATA

IB-ELV =	10.000	OB-ELV =	5.000
BDFLAP =	.000	SPDBRK =	.000
RUDDER =	.000	SILTS =	.000
MACH =	1.010	RN/L =	3.500

RUN NO. 824/ 0 RN/L = 3.51 GRADIENT INTERVAL = -5.00/ 5.00

ALPHAR	BETAR	CARS	CYNRS	ALFRSU	BETRSU
.191	-6.472	.06250	.04700	.38150	-6.39980
-.210	.015	.06960	.05790	-.00980	-.02610
-.022	5.720	.07840	.06830	.17490	5.77140
	GRADIENT	.00000	.00000	.00000	.00000

IA156A, AEDC PWT 16T-470, O T S (R8NP15) (10 MAY 80)

REFERENCE DATA

SREF =	2690.0000	SQ.FT.	XMRP =	976.0000	IN. XT	IB-ELV =	10.000	OB-ELV =	5.000
LREF =	1290.3000	INCHES	YMRP =	.0000	IN. YT	BDFLAP =	.000	SPDBRK =	.000
BREF =	1290.3000	INCHES	ZMRP =	400.0000	IN. ZT	RUDDER =	.000	SILTS =	.000
SCALE =	.0200					MACH =	1.020	RN/L =	3.500

PARAMETRIC DATA

RUN NO. 825/ 0 RN/L = 3.51 GRADIENT INTERVAL = -5.00/ 5.00

ALPHAR	BETAR	CARS	CYNRS	ALFRSU	BETRSU
.133	-6.541	.06460	.04800	.32420	-6.46920
-.321	-.160	.07310	.06010	-.11930	-.18770
.048	5.762	.08100	.06980	.24540	5.81130
	GRADIENT	.00000	.00000	.00000	.00000

IA156A, AEDC PWT 16T-470, O T S (R8NP16) (10 MAY 80)

REFERENCE DATA

SREF =	2690.0000	SQ.FT.	XMRP =	976.0000	IN. XT	IB-ELV =	10.000	OB-ELV =	5.000
LREF =	1290.3000	INCHES	YMRP =	.0000	IN. YT	BDFLAP =	.000	SPDBRK =	.000
BREF =	1290.3000	INCHES	ZMRP =	400.0000	IN. ZT	RUDDER =	.000	SILTS =	.000
SCALE =	.0200					MACH =	1.030	RN/L =	3.500

PARAMETRIC DATA

RUN NO. 826/ 0 RN/L = 3.51 GRADIENT INTERVAL = -5.00/ 5.00

ALPHAR	BETAR	CARS	CYNRS	ALFRSU	BETRSU
.156	-6.838	.06650	.04940	.34680	-6.76580
-.280	-.116	.07520	.06120	-.07900	-.14810
.011	5.960	.08310	.07060	.20810	6.01210
	GRADIENT	.00000	.00000	.00000	.00000

IA156A, AEDC PWT 16T-470, O T S (R8NP17) (10 MAY 80)

REFERENCE DATA

SREF =	2690.0000 SQ.FT.	XMRP =	976.0000 IN. XT		
LREF =	1290.3000 INCHES	YMRP =	.0000 IN. YT		
BREF =	1290.3000 INCHES	ZMRP =	400.0000 IN. ZT		
SCALE =	.0200				

PARAMETRIC DATA

IB-ELV =	10.000	OB-ELV =	5.000
BDFLAP =	.000	SPDBRK =	.000
RUDDER =	.000	SILTS =	.000
MACH =	1.040	RN/L =	3.500

RUN NO. 827/ 0 RN/L = 3.51 GRADIENT INTERVAL = -5.00/ 5.00

ALPHAR	BETAR	CARS	CYNRS	ALFRSU	BETRSU
-.057	-6.725	.06760	.04950	.13560	-6.65810
-.308	-.146	.07790	.06290	-.10470	-.15490
.083	5.830	.08570	.07240	.28000	5.88010
	GRADIENT	.00000	.00000	.00000	.00000

IA156A, AEDC PWT 16T-470, O T S (R8NP18) (10 MAY 80)

REFERENCE DATA

SREF =	2690.0000 SQ.FT.	XMRP =	976.0000 IN. XT		
LREF =	1290.3000 INCHES	YMRP =	.0000 IN. YT		
BREF =	1290.3000 INCHES	ZMRP =	400.0000 IN. ZT		
SCALE =	.0200				

PARAMETRIC DATA

IB-ELV =	10.000	OB-ELV =	5.000
BDFLAP =	.000	SPDBRK =	.000
RUDDER =	.000	SILTS =	.000
MACH =	1.050	RN/L =	3.500

RUN NO. 828/ 0 RN/L = 3.51 GRADIENT INTERVAL = -5.00/ 5.00

ALPHAR	BETAR	CARS	CYNRS	ALFRSU	BETRSU
.042	-6.704	.06870	.04970	.23350	-6.63380
-.249	-.036	.07850	.06340	-.04620	-.05870
-.032	5.896	.08650	.07280	.16450	5.94970
	GRADIENT	.00000	.00000	.00000	.00000

IA156A, AEDC PWT 16T-470, 0 T S (R8NP19) (10 MAY 80)

REFERENCE DATA

SREF =	2690.0000 SQ.FT.	XMRP =	976.0000 IN. XT		
LREF =	1290.3000 INCHES	YMRP =	.0000 IN. YT		
BREF =	1290.3000 INCHES	ZMRP =	400.0000 IN. ZT		
SCALE =	.0200				

PARAMETRIC DATA

IB-ELV =	10.000	OB-ELV =	5.000
BDFLAP =	.000	SPDBRK =	.000
RUDDER =	.000	SILTS =	.000
MACH =	1.060	RN/L =	3.500

RUN NO. 829/ 0 RN/L = 3.50 GRADIENT INTERVAL = -5.00/ 5.00

ALPHAR	BETAR	CARS	CYNRS	ALFRSU	BETRSU
.139	-6.672	.06860	.04930	.32910	-6.59890
-.248	-.016	.07850	.06320	-.04530	-.03740
-.069	5.883	.08630	.07280	.12740	5.93800
	GRADIENT	.00000	.00000	.00000	.00000

IA156A, AEDC PWT 16T-470, 0 T S (R8NP20) (10 MAY 80)

REFERENCE DATA

SREF =	2690.0000 SQ.FT.	XMRP =	976.0000 IN. XT		
LREF =	1290.3000 INCHES	YMRP =	.0000 IN. YT		
BREF =	1290.3000 INCHES	ZMRP =	400.0000 IN. ZT		
SCALE =	.0200				

PARAMETRIC DATA

IB-ELV =	10.000	OB-ELV =	5.000
BDFLAP =	.000	SPDBRK =	.000
RUDDER =	.000	SILTS =	.000
MACH =	1.080	RN/L =	3.500

RUN NO. 830/ 0 RN/L = 3.48 GRADIENT INTERVAL = -5.00/ 5.00

ALPHAR	BETAR	CARS	CYNRS	ALFRSU	BETRSU
-.008	-6.798	.06720	.04880	.18380	-6.72820
-.286	-.115	.07580	.06170	-.08330	-.13790
-.112	5.886	.08270	.06950	.08320	5.94380
	GRADIENT	.00000	.00000	.00000	.00000

IA156A, AEDC PWT 16T-470, 0 T S (R8NP21) (10 MAY 80)

REFERENCE DATA

SREF =	2690.0000	SQ.FT.	XMRP =	976.0000	IN. XT	IB-ELV =	10.000	OB-ELV =	5.000
LREF =	1290.3000	INCHES	YMRP =	.0000	IN. YT	BDFLAP =	.000	SPDBRK =	.000
BREF =	1290.3000	INCHES	ZMRP =	400.0000	IN. ZT	RUDDER =	.000	SILTS =	.000
SCALE =	.0200					MACH =	1.100	RN/L =	3.500

PARAMETRIC DATA

RUN NO. 831/ 0 RN/L = 3.50 GRADIENT INTERVAL = -5.00/ 5.00

ALPHAR	BETAR	CARS	CYNRS	ALFRSU	BETRSU
-.059	-6.563	.06680	.05020	.13370	-6.49360
-.304	-.160	.07400	.05980	-.10140	-.18350
.117	5.783	.08240	.06650	.31480	5.83560
	GRADIENT	.00000	.00000	.00000	.00000

IA156A, AEDC PWT 16T-470, 0 T S (R8NP22) (10 MAY 80)

REFERENCE DATA

SREF =	2690.0000	SQ.FT.	XMRP =	976.0000	IN. XT	IB-ELV =	10.000	OB-ELV =	5.000
LREF =	1290.3000	INCHES	YMRP =	.0000	IN. YT	BDFLAP =	.000	SPDBRK =	.000
BREF =	1290.3000	INCHES	ZMRP =	400.0000	IN. ZT	RUDDER =	.000	SILTS =	.000
SCALE =	.0200					MACH =	1.150	RN/L =	3.500

PARAMETRIC DATA

RUN NO. 836/ 0 RN/L = 3.50 GRADIENT INTERVAL = -5.00/ 5.00

ALPHAR	BETAR	CARS	CYNRS	ALFRSU	BETRSU
.399	-5.923	.06520	.04660	.20520	-5.99370
-.277	-.168	.07450	.05830	-.07810	-.22450
-.046	5.672	.08230	.06520	.15210	5.73240
	GRADIENT	.00000	.00000	.00000	.00000

IA156A, AEDC PWT 16T-470, 0 T S (R8NP23) (10 MAY 80)

REFERENCE DATA

SREF =	2690.0000 SQ.FT.	XMRP =	976.0000 IN. XT		
LREF =	1290.3000 INCHES	YMRP =	.0000 IN. YT		
BREF =	1290.3000 INCHES	ZMRP =	400.0000 IN. ZT		
SCALE =	.0200				

PARAMETRIC DATA

IB-ELV =	10.000	OB-ELV =	5.000
BDFLAP =	.000	SPDBRK =	000
RUDDER =	.000	SILTS =	.000
MACH =	1.200	RN/L =	3.500

RUN NO. 837/ 0 RN/L = 3.51 GRADIENT INTERVAL = -5.00/ 5.00

ALPHAR	BETAR	CARS	CYNRS	ALFRSU	BETRSU
.330	-5.899	.06350	.04470	.13110	-5.96850
-.083	.005	.07390	.05700	.11140	-.07710
-.057	5.749	.08110	.06250	.14400	5.81180
	GRADIENT	.00000	.00000	.00000	.00000

IA156A, AEDC PWT 16T-470, 0 T S (R8NP24) (10 MAY 80)

REFERENCE DATA

SREF =	2690.0000 SQ.FT.	XMRP =	976.0000 IN. XT		
LREF =	1290.3000 INCHES	YMRP =	.0000 IN. YT		
BREF =	1290.3000 INCHES	ZMRP =	400.0000 IN. ZT		
SCALE =	.0200				

PARAMETRIC DATA

IB-ELV =	10.000	OB-ELV =	5.000
BDFLAP =	.000	SPDBRK =	.000
RUDDER =	.000	SILTS =	.000
MACH =	1.250	RN/L =	3.500

RUN NO. 838/ 0 RN/L = 3.50 GRADIENT INTERVAL = -5.00/ 5.00

ALPHAR	BETAR	CARS	CYNRS	ALFRSU	BETRSU
.103	-6.775	.06140	.04500	.30600	-6.69560
-.084	-.006	.07340	.05510	.13260	-.03050
.000	5.687	.08000	.06220	.20830	5.75180
	GRADIENT	.00000	.00000	.00000	.00000

IA156A, AEDC PWT 16T-470, 0 T S (R8NP25) (10 MAY 80)

REFERENCE DATA

SREF = 2690.0000 SQ.FT. XMRP = 976.0000 IN. XT
LREF = 1290.3000 INCHES YMRP = .0000 IN. YT
BREF = 1290.3000 INCHES ZMRP = 400.0000 IN. ZT
SCALE = .0200

PARAMETRIC DATA

IB-ELV = 10.000 OB-ELV = 5.000
BDFLAP = .000 SPDBRK = .000
RJDDER = .000 SILTS = .000
MACH = 1.300 RN/L = 3.500

RUN NO. 839/ 0 RN/L = 3.50 GRADIENT INTERVAL = -5.00/ 5.00

ALPHAR	BETAR	CARS	CYNRS	ALFRSU	BETRSU
.095	-6.778	.05990	.04360	.30750	-6.69650
-.118	-.118	.07090	.05290	.10940	-.11780
.033	5.909	.07820	.06100	.25050	5.97690
	GRADIENT	.00000	.00000	.00000	.00000

IA156A, AEDC PWT 16T-470, 0 T S (R8NP26) (10 MAY 80)

REFERENCE DATA

SREF = 2690.0000 SQ.FT. XMRP = 976.0000 IN. XT
LREF = 1290.3000 INCHES YMRP = .0000 IN. YT
BREF = 1290.3000 INCHES ZMRP = 400.0000 IN. ZT
SCALE = .0200

PARAMETRIC DATA

IB-ELV = 10.000 OB-ELV = 5.000
BDFLAP = .000 SPDBRK = .000
RUDDER = .000 SILTS = .000
MACH = 1.400 RN/L = 3.500

RUN NO. 840/ 0 RN/L = 3.50 GRADIENT INTERVAL = -5.00/ 5.00

ALPHAR	BETAR	CARS	CYNRS	ALFRSU	BETRSU
.112	-6.847	.05890	.04200	.35320	-6.75000
-.114	-.026	.06910	.04980	.14420	-.04900
.042	5.919	.07670	.05860	.29070	5.99470
	GRADIENT	.00000	.00000	.00000	.00000

IA156A, AEDC PWT 16T-470, O T S (R8NP27) (10 MAY 80)

REFERENCE DATA

SREF =	2690.0000 SQ.FT.	XMRP =	976.0000 IN. XT		
LREF =	1290.3000 INCHES	YMRP =	.0000 IN. YT		
BREF =	1290.3000 INCHES	ZMRP =	400.0000 IN. ZT		
SCALE =	.0200				

PARAMETRIC DATA

IB-ELV =	10.000	OB-ELV =	5.000
BDFLAP =	.000	SPDBRK =	.000
RUDDER =	.000	SILTS =	.000
MACH =	1.550	RN/L =	3.200

RUN NO. 841/ 0 RN/L = 3.19 GRADIENT INTERVAL = -5.00/ 5.00

ALPHAR	BETAR	CARS	CYNRS	ALFRSU	BETRSU
.111	-6.840	.05480	.03950	.42540	-6.67280
-.216	-.013	.06390	.04560	.14100	-.01070
-.117	5.849	.07190	.05610	.21140	5.98580
	GRADIENT	.00000	.00000	.00000	.00000

IA156A, AEDC PWT 16T-470, O T S (R8NP28) (10 MAY 80)

REFERENCE DATA

SREF =	2690.0000 SQ.FT.	XMRP =	976.0000 IN. XT		
LREF =	1290.3000 INCHES	YMRP =	.0000 IN. YT		
BREF =	1290.3000 INCHES	ZMRP =	400.0000 IN. ZT		
SCALE =	.0200				

PARAMETRIC DATA

IB-ELV =	10.000	OB-ELV =	5.000
BDFLAP =	.000	SPDBRK =	.000
RUDDER =	.000	SILTS =	.000
MACH =	.600	RN/L =	3.500

RUN NO. 846/ 0 RN/L = 3.50 GRADIENT INTERVAL = -5.00/ 5.00

ALPHAR	BETAR	CARS	CYNRS	ALFRSU	BETRSU
-.238	-6.869	.03810	.03620	-.04220	-6.94740
.236	-5.792	.03890	.03530	.03990	-5.71550
-.235	-.329	.04480	.04290	-.03830	-.40720
.200	.199	.04390	.04370	.00320	.27580
-.190	5.644	.05090	.05210	.00660	5.56680
.216	6.680	.05060	.05420	.02010	6.75750
	GRADIENT	-.00170	.00151	.07857	1.29307

IA156A, AEDC PWT 16T-470, O T S (R8NP29) (10 MAY 80)

REFERENCE DATA

SREF = 2690.0000 SQ.FT. XMRP = 976.0000 IN. XT
LREF = 1290.3000 INCHES YMRP = .0000 IN. YT
BREF = 1290.3000 INCHES ZMRP = 400.0000 IN. ZT
SCALE = .0200

PARAMETRIC DATA

IB-ELV =	10.000	OB-ELV =	5.000
BDFLAP =	.000	SPDBRK =	.000
RUDDER =	.000	SILTS =	.000
MACH =	.900	RN/L =	3.500

RUN NO. 845/ 0 RN/L = 3.51 GRADIENT INTERVAL = -5.00/ 5.00

ALPHAR	BETAR	CARS	CYNRS	ALFRSU	BETRSU
-.293	-7.160	.04840	.03830	-.09320	-7.10850
.176	-5.765	.04890	.03760	-.02400	-5.81690
-.369	-.549	.05030	.04180	-.16910	-.49870
.067	.349	.05090	.04240	-.13310	.29720
-.256	5.535	.05860	.05360	-.05540	5.58620
.122	6.896	.05980	.05700	-.07800	6.84430
	GRADIENT	.00067	.00067	.04007	.88581

IA156A, AEDC PWT 16T-470, O T S (R8NP30) (10 MAY 80)

REFERENCE DATA

SREF = 2690.0000 SQ.FT. XMRP = 976.0000 IN. XT
LREF = 1290.3000 INCHES YMRP = .0000 IN. YT
BREF = 1290.3000 INCHES ZMRP = 400.0000 IN. ZT
SCALE = .0200

PARAMETRIC DATA

IB-ELV =	10.000	OB-ELV =	5.000
BDFLAP =	.000	SPDBRK =	.000
RUDDER =	.000	SILTS =	.000
MACH =	1.100	RN/L =	3.500

RUN NO. 844/ 0 RN/L = 3.50 GRADIENT INTERVAL = -5.00/ 5.00

ALPHAR	BETAR	CARS	CYNRS	ALFRSU	BETRSU
-.369	-7.209	.06660	.05070	-.17410	-7.14740
.220	-5.823	.06620	.04700	.02560	-5.88680
-.374	-.503	.07430	.05920	-.17910	-.43990
.099	.238	.07470	.05930	-.09480	.17400
-.225	5.547	.08240	.06720	-.02960	5.60900
.142	6.883	.08340	.06960	-.05180	6.81930
	GRADIENT	.00054	.00013	.11377	.82848

IA156A, AEDC PWT 16T-470, 0 T S (R8NP31) (10 MAY 80)

REFERENCE DATA

SREF =	2690.0000 SQ.FT.	XMRP =	976.0000 IN. XT		
LREF =	1290.3000 INCHES	YMRP =	.0000 IN. YT		
BREF =	1290.3000 INCHES	ZMRP =	400.0000 IN. ZT		
SCALE =	.0200				

PARAMETRIC DATA

IB-ELV =	10.000	OB-ELV =	5.000
BDFLAP =	.000	SPDBRK =	.000
RUDDER =	.000	SILTS =	.000
MACH =	1.550	RN/L =	3.200

RUN NO. 842/ 0 RN/L = 3.20 GRADIENT INTERVAL = -5.00/ 5.00

ALPHAR	BETAR	CARS	CYNRS	ALFRSU	BETRSU
-.372	-7.186	.05390	.03940	-.04620	-7.03660
.489	-6.040	.05490	.03730	.16490	-6.19030
-.333	-.605	.06290	.04490	-.00720	-.45840
.448	.415	.06460	.04700	.12450	.26440
-.301	5.572	.07110	.05460	.02370	5.71800
-.321	5.803	.07200	.05530	.00400	5.94920
.364	6.890	.07150	.05860	.04060	6.73960
	GRADIENT	.00167	.00206	.12913	.70870

IA156A, AEDC PWT 16T-470, 0 T S (R8NP34) (10 MAY 80)

REFERENCE DATA

SREF =	2690.0000 SQ.FT.	XMRP =	976.0000 IN. XT		
LREF =	1290.3000 INCHES	YMRP =	.0000 IN. YT		
BREF =	1290.3000 INCHES	ZMRP =	400.0000 IN. ZT		
SCALE =	.0200				

PARAMETRIC DATA

IB-ELV =	10.000	OB-ELV =	5.000
BDFLAP =	.000	SPDBRK =	.000
RUDDER =	.000	SILTS =	.000
MACH =	1.100	RN/L =	3.500
Z =	4.500		

RUN NO. 835/ 0 RN/L = 3.51 GRADIENT INTERVAL = -5.00/ 5.00

ALPHAR	BETAR	CARS	CYNRS	ALFRSU	BETRSU
.338	-5.907	.06680	.04720	.14420	-5.97190
-.281	-.115	.07350	.05760	-.07760	-.13240
-.055	5.803	.08290	.06730	.14200	5.85830
	GRADIENT	.00000	.00000	.00000	.00000

IA156A, AEDC PWT 16T-470, O T S (R8NP35) (10 MAY 80)

REFERENCE DATA

SREF =	2690.0000 SQ.FT.	XMRP =	976.0000 IN. XT		
LREF =	1290.3000 INCHES	YMRP =	.0000 IN. YT		
BREF =	1290.3000 INCHES	ZMRP =	400.0000 IN. ZT		
SCALE =	.0200				

PARAMETRIC DATA

IB-ELV =	10.000	OB-ELV =	5.000
BDFLAP =	.000	SPDBRK =	.000
RUDDER =	.000	SILTS =	.000
MACH =	1.100	RN/L =	3.500
Z =	5.500		

RUN NO. 834/ 0 RN/L = 3.51 GRADIENT INTERVAL = -5.00/ 5.00

ALPHAR	BETAR	CARS	CYNRS	ALFRSU	BETRSU
.391	-5.939	.06570	.04700	.19800	-6.00670
-.182	.033	.07620	.06120	.01390	-.02480
-.138	5.693	.08220	.06690	.05760	5.75110
	GRADIENT	.00000	.00000	.00000	.00000

IA156A, AEDC PWT 16T-470, O T S (R8NP36) (10 MAY 80)

REFERENCE DATA

SREF =	2690.0000 SQ.FT.	XMRP =	976.0000 IN. XT		
LREF =	1290.3000 INCHES	YMRP =	.0000 IN. YT		
BREF =	1290.3000 INCHES	ZMRP =	400.0000 IN. ZT		
SCALE =	.0200				

PARAMETRIC DATA

IB-ELV =	10.000	OB-ELV =	5.000
BDFLAP =	.000	SPDBRK =	.000
RUDDER =	.000	SILTS =	.000
MACH =	1.100	RN/L =	3.500
Z =	6.500		

RUN NO. 832/ 0 RN/L = 3.50 GRADIENT INTERVAL = -5.00/ 5.00

ALPHAR	BETAR	CARS	CYNRS	ALFRSU	BETRSU
.016	-6.765	.06690	.05000	.20770	-6.69380
-.261	-.059	.07430	.06020	-.05740	-.08110
.039	5.899	.08260	.06900	.23640	5.95460
	GRADIENT	.00000	.00000	.00000	.00000

IA156A, AEDC PWT 16T-470, 0 T S (R8NP37) (10 MAY 80)

REFERENCE DATA

SREF = 2690.0000 SQ.FT. XMRP = 976.0000 IN. XT
LREF = 1290.3000 INCHES YMRP = .0000 IN. YT
BREF = 1290.3000 INCHES ZMRP = 400.0000 IN. ZT
SCALE = .0200

PARAMETRIC DATA

IB-ELV = 10.000 OB-ELV = 5.000
BDFLAP = .000 SPDBRK = .000
RUDDER = .000 SILTS = .000
MACH = 1.550 RN/L = 3.200

RUN NO. 843/ 0 RN/L = 3.19 GRADIENT INTERVAL = -5.00/ 5.00

ALPHAR	BETAR	CARS	CYNRS	ALFRSU	BETRSU
.455	-.368	.06460	.04700	.13080	.21770
-.338	-.551	.06350	.04530	-.01460	-.40360
-.344	-.574	.06350	.04490	-.01940	-.42510
.486	.345	.06390	.04760	.16300	.19580
.435	.347	.06450	.04790	.11130	.19710
-.306	-.566	.06410	.04600	.01790	-.41890
	GRADIENT	.00069	.00228	.15290	.67562

IA156A, AEDC PWT 16T-470, 0 T S W/SILTS (R8NP40) (10 MAY 80)

REFERENCE DATA

SREF = 2690.0000 SQ.FT. XMRP = 976.0000 IN. XT
LREF = 1290.3000 INCHES YMRP = .0000 IN. YT
BREF = 1290.3000 INCHES ZMRP = 400.0000 IN. ZT
SCALE = .0200

PARAMETRIC DATA

IB-ELV = 10.000 OB-ELV = 5.000
BDFLAP = .000 SPDBRK = .000
RUDDER = .000 SILTS = 1.000
MACH = .300 RN/L = 3.500

RUN NO. 862/ 0 RN/L = 2.70 GRADIENT INTERVAL = -5.00/ 5.00

ALPHAR	BETAR	CARS	CYNRS	ALFRSU	BETRSU
-5.928	-10.181	.03550	.03380	-5.78960	-10.34470
-6.178	-6.087	.03880	.02260	-6.08710	-6.28110
-6.306	.388	.04310	.02180	-6.38930	.19080
-5.853	6.325	.04890	.03530	-6.05000	6.24180
-5.978	10.332	.05140	.04590	-6.18950	10.29750
	GRADIENT	.00000	.00000	.00000	.00000

RUN NO. 863/ 0 RN/L = 2.68 GRADIENT INTERVAL = -5.00/ 5.00

ALPHAR	BETAR	CARS	CYNRS	ALFRSU	BETRSU
-.286	-10.799	.04220	.03670	-.08610	-10.87630
-.266	-6.718	.03910	.03550	-.06660	-6.79480
-.231	-.605	.04430	.04120	-.03110	-.68170
-.189	5.478	.05040	.05030	.01070	5.40150
-.182	9.537	.05330	.05830	.01760	9.46050
	GRADIENT	.00000	.00000	.00000	.00000

IA156A, AEDC PWT 16T-470, O T S W/SILTS (R8NP40) (10 MAY 80)

REFERENCE DATA

SREF = 2690.0000 SQ.FT. XMRP = 976.0000 IN. XT
LREF = 1290.3000 INCHES YMRP = .0000 IN. YT
BREF = 1290.3000 INCHES ZMRP = 400.0000 IN. ZT
SCALE = .0200

PARAMETRIC DATA

IB-ELV = 10.000 OB-ELV = 5.000
BDFLAP = .000 SPDBRK = .000
RUDDER = .000 SILTS = 1.000
MACH = .300 RN/L = 3.500

RUN NO. 865/ 0 RN/L = 2.67 GRADIENT INTERVAL = -5.00/ 5.00

ALPHAR	BETAR	CARS	CYNRS	ALFRSU	BETRSU
6.423	-9.851	.04270	.01560	6.21200	-9.88780
6.110	-5.552	.04110	.01950	5.91430	-5.63950
6.264	.039	.04460	.03210	6.18320	-.15920
5.806	5.891	.04850	.04710	5.89580	5.69730
5.909	9.939	.05190	.05420	6.04300	9.77230
	GRADIENT	.00000	.00000	.00000	.00000

IA156A, AEDC PWT 16T-470, O T S W/SILTS (R8NP41) (10 MAY 80)

REFERENCE DATA

SREF = 2690.0000 SQ.FT. XMRP = 976.0000 IN. XT
LREF = 1290.3000 INCHES YMRP = .0000 IN. YT
BREF = 1290.3000 INCHES ZMRP = 400.0000 IN. ZT
SCALE = .0200

PARAMETRIC DATA

IB-ELV = 10.000 OB-ELV = 5.000
BDFLAP = .000 SPDBRK = .000
RUDDER = .000 SILTS = 1.000
MACH = .300 RN/L = 3.500

RUN NO. 861/ 0 RN/L = 2.74 GRADIENT INTERVAL = -5.00/ 5.00

ALPHAR	BETAR	CARS	CYNRS	ALFRSU	BETRSU
-10.157	-6.209	.03630	.00390	-10.11390	-6.41840
-10.147	.317	.04380	-.00290	-10.22650	.11860
-10.028	6.338	.04740	.01980	-10.19880	6.20930
	GRADIENT	.00000	.00000	.00000	.00000

RUN NO. 866/ 0 RN/L = 2.66 GRADIENT INTERVAL = -5.00/ 5.00

ALPHAR	BETAR	CARS	CYNRS	ALFRSU	BETRSU
10.211	-5.781	.04080	.00140	10.04130	-5.91180
10.067	.187	.04580	.01290	9.99100	-.01300
10.213	6.144	.04760	.02420	10.25280	5.93340
	GRADIENT	.00000	.00000	.00000	.00000

IA156A, AEDC PWT 16T-470, 0 T S W/SILTS (R8NP42) (10 MAY 80)

REFERENCE DATA

SREF =	2690.0000 SQ.FT.	XMRP =	976.0000 IN. XT		
LREF =	1290.3000 INCHES	YMRP =	.0000 IN. YT		
BREF =	1290.3000 INCHES	ZMRP =	400.0000 IN. ZT		
SCALE =	.0200				

PARAMETRIC DATA

IB-ELV =	10.000	OB-ELV =	5.000
BDFLAP =	.000	SPDBRK =	.000
RUDDER =	.000	SILTS =	1.000
MACH =	.600	RN/L =	3.500

RUN NO. 867/ 0 RN/L = 3.50 GRADIENT INTERVAL = -5.00/ 5.00

ALPHAR	BETAR	CARS	CYNRS	ALFRSU	BETRSU
-8.175	-8.057	.03310	.01900	-8.08520	-8.24750
-8.359	-6.113	.03470	.01040	-8.29910	-6.31500
-8.240	-4.003	.03980	.00500	-8.21610	-4.21170
-8.392	.234	.04300	.00510	-8.46990	.03810
-8.093	4.176	.04620	.01630	-8.25070	4.03700
-8.059	6.107	.04770	.02240	-8.23860	5.99730
-8.332	8.351	.04940	.02900	-8.52550	8.26920
	GRADIENT	.00078	.00136	-.00492	1.00844

RUN NO. 868/ 0 RN/L = 3.50 GRADIENT INTERVAL = -5.00/ 5.00

ALPHAR	BETAR	CARS	CYNRS	ALFRSU	BETRSU
-6.246	-8.270	.03390	.02750	-6.13000	-8.44620
-6.201	-6.066	.03640	.02150	-6.11120	-6.25600
-6.066	-4.064	.04010	.01700	-6.01310	-4.26820
-6.223	-.015	.04270	.01800	-6.29390	-.21340
-6.226	4.329	.04660	.02610	-6.39950	4.21010
-6.015	6.212	.04850	.03140	-6.20920	6.13080
-6.014	8.436	.05000	.03740	-6.21840	8.38540
	GRADIENT	.00078	.00109	-.04577	1.01019

RUN NO. 869/ 0 RN/L = 3.50 GRADIENT INTERVAL = -5.00/ 5.00

ALPHAR	BETAR	CARS	CYNRS	ALFRSU	BETRSU
-4.183	-8.465	.03560	.03360	-4.03550	-8.61520
-4.278	-6.419	.03670	.02970	-4.15110	-6.58690
-4.253	-4.146	.04010	.02570	-4.16300	-4.33630
-4.013	.150	.04350	.03180	-4.08870	-.04650
-3.832	4.222	.04760	.03770	-4.02690	4.14230
-3.970	6.221	.04890	.04040	-4.17580	6.17790
-3.861	8.165	.05050	.04500	-4.07160	8.15000
	GRADIENT	.00090	.00143	.01627	1.01313

IA156A, AEDC PWT 16T-470, 0 T S W/SILTS (R8NP42) (10 MAY 80)

REFERENCE DATA

SREF = 2690.0000 SQ.FT. XMRP = 976.0000 IN. XT
LREF = 1290.3000 INCHES YMRP = .0000 IN. YT
BREF = 1290.3000 INCHES ZMRP = 400.0000 IN. ZT
SCALE = .0200

PARAMETRIC DATA

IB-ELV = 10.000 OB-ELV = 5.000
BDFLAP = .000 SPDBRK = .000
RUDDER = .000 SILTS = 1.000
MACH = .600 RN/L = 3.500

RUN NO. 870/ 0 RN/L = 3.50 GRADIENT INTERVAL = -5.00/ 5.00

ALPHAR	BETAR	CARS	CYNRS	ALFRSU	BETRSU
-.272	-9.086	.03980	.03750	-.07560	-9.16160
-.255	-6.948	.03820	.03630	-.05850	-7.02420
-.243	-4.874	.03950	.03630	-.04710	-4.95000
-.236	-.638	.04410	.04260	-.03910	-.71310
-.182	3.485	.04890	.04910	.01400	3.40940
-.181	5.562	.05030	.05170	.01540	5.48610
-.193	7.658	.05160	.05520	.00360	7.58310
	GRADIENT	.00112	.00153	.00728	.99996

RUN NO. 871/ 0 RN/L = 3.50 GRADIENT INTERVAL = -5.00/ 5.00

ALPHAR	BETAR	CARS	CYNRS	ALFRSU	BETRSU
4.365	-7.698	.04150	.02750	4.15510	-7.71730
4.477	-5.891	.04060	.02780	4.27130	-5.93710
4.201	-3.762	.04110	.03160	4.00580	-3.84240
4.345	-.061	.04330	.04050	4.25890	-.25390
4.194	3.920	.04750	.04900	4.27710	3.72560
4.058	5.933	.04940	.05280	4.18060	5.76200
3.910	7.675	.05110	.05660	4.05360	7.52120
	GRADIENT	.00084	.00226	.03493	.98534

RUN NO. 872/ 0 RN/L = 3.50 GRADIENT INTERVAL = -5.00/ 5.00

ALPHAR	BETAR	CARS	CYNRS	ALFRSU	BETRSU
6.557	-7.921	.04170	.01990	6.35360	-7.97730
6.452	-5.895	.04110	.02110	6.25840	-5.97650
6.584	-3.832	.04190	.02260	6.41080	-3.95290
6.143	.127	.04410	.03430	6.06720	-.06960
6.166	3.928	.04670	.04140	6.21320	3.72300
6.255	6.046	.04850	.04600	6.34340	5.85460
5.921	7.743	.05010	.05090	6.03600	7.56630
	GRADIENT	.00062	.00243	-.02589	.98905

IA156A, AEDC PWT 16T-470, O T S W/SILTS (R8NP42) (10 MAY 80)

REFERENCE DATA

SREF =	2690.0000 SQ.FT.	XMRP =	976.0000 IN. XT		
LREF =	1290.3000 INCHES	YMRP =	.0000 IN. YT		
BREF =	1290.3000 INCHES	ZMRP =	400.0000 IN. ZT		
SCALE =	.0200				

PARAMETRIC DATA

IB-ELV =	10.000	OB-ELV =	5.000
BDFLAP =	.000	SPDBRK =	.000
RUDDER =	.000	SILTS =	1.000
MACH =	.600	RN/L =	3.500

RUN NO. 873/ 0 RN/L = 3.50 GRADIENT INTERVAL = -5.00/ 5.00

ALPHAR	BETAR	CARS	CYNRS	ALFRSU	BETRSU
8.446	-7.909	.04060	.01110	8.25150	-7.99000
8.350	-5.649	.04040	.01190	8.17080	-5.75920
8.356	-3.720	.04160	.01500	8.19860	-3.86100
8.440	.077	.04510	.02410	8.36190	-.11850
8.239	3.983	.04690	.03110	8.26210	3.77350
8.363	6.016	.04770	.03470	8.42260	5.81360
8.226	7.977	.04890	.04100	8.31630	7.78700
	GRADIENT	.00069	.00209	.00808	.99112

IA156A, AEDC PWT 16T-470, O T S W/SILTS (R8NP43) (10 MAY 80)

REFERENCE DATA

SREF =	2690.0000 SQ.FT.	XMRP =	976.0000 IN. XT		
LREF =	1290.3000 INCHES	YMRP =	.0000 IN. YT		
BREF =	1290.3000 INCHES	ZMRP =	400.0000 IN. ZT		
SCALE =	.0200				

PARAMETRIC DATA

IB-ELV =	10.000	OB-ELV =	5.000
BDFLAP =	.000	SPDBRK =	.000
RUDDER =	.000	SILTS =	1.000
MACH =	.800	RN/L =	3.500

RUN NO. 874/ 0 RN/L = 3.50 GRADIENT INTERVAL = -5.00/ 5.00

ALPHAR	BETAR	CARS	CYNRS	ALFRSU	BETRSU
-8.531	-6.471	.03400	.00880	-8.37290	-6.60520
-8.646	-4.159	.04090	.00180	-8.51870	-4.32240
-8.378	.100	.04560	.00150	-8.34080	-.10400
-8.357	4.267	.04840	.01180	-8.42020	4.06920
-8.327	6.219	.04990	.01740	-8.42350	6.03500
	GRADIENT	.00089	.00118	.01180	.99591

RUN NO. 875/ 0 RN/L = 3.50 GRADIENT INTERVAL = -5.00/ 5.00

ALPHAR	BETAR	CARS	CYNRS	ALFRSU	BETRSU
-6.303	-6.216	.03660	.01860	-6.12780	-6.32820
-6.220	-4.123	.04210	.01470	-6.07040	-4.26730
-6.388	.022	.04550	.01540	-6.34730	-.18100
-6.104	4.156	.04890	.02500	-6.18860	3.96660
-6.165	6.430	.05110	.02990	-6.28980	6.26420
	GRADIENT	.00082	.00124	-.01430	.99449

IA156A, AEDC PWT 16T-470, O T S W/SILTS (R8NP43) (10 MAY 80)

REFERENCE DATA

SREF = 2690.0000 SQ.FT. XMRP = 976.0000 IN. XT
LREF = 1290.3000 INCHES YMRP = .0000 IN. YT
BREF = 1290.3000 INCHES ZMRP = 400.0000 IN. ZT
SCALE = .0200

PARAMETRIC DATA

IB-ELV = 10.000 OB-ELV = 5.000
BDFLAP = .000 SPDBRK = .000
RUDDER = .000 SILTS = 1.000
MACH = .800 RN/L = 3.500

RUN NO. 876/ 0 RN/L = 3.50 GRADIENT INTERVAL = -5.00/ 5.00

ALPHAR	BETAR	CARS	CYNRS	ALFRSU	BETRSU
-4.135	-6.175	.03850	.02740	-3.94140	-6.24890
-4.199	-4.091	.04250	.02470	-4.02400	-4.20320
-4.380	.293	.04610	.02870	-4.35000	.08750
-3.863	4.171	.04970	.03600	-3.98560	4.00310
-3.952	6.223	.05150	.03940	-4.10390	6.08170
	GRADIENT	.00087	.00136	.00294	.99300

RUN NO. 877/ 0 RN/L = 3.50 GRADIENT INTERVAL = -5.00/ 5.00

ALPHAR	BETAR	CARS	CYNRS	ALFRSU	BETRSU
-.279	-7.185	.04210	.03650	-.07520	-7.14770
-.273	-5.050	.04210	.03600	-.06840	-5.01270
-.276	-.814	.04520	.04060	-.07200	-.77610
-.211	3.422	.05060	.04810	-.00700	3.45940
-.197	5.517	.05340	.05180	.00670	5.55510
	GRADIENT	.00127	.00177	.01535	1.00002

RUN NO. 878/ 0 RN/L = 3.50 GRADIENT INTERVAL = -5.00/ 5.00

ALPHAR	BETAR	CARS	CYNRS	ALFRSU	BETRSU
4.382	-5.731	.04380	.02940	4.23180	-5.87490
4.342	-3.851	.04430	.03150	4.21980	-4.01910
4.053	.084	.04570	.04210	4.08990	-.12080
3.934	3.734	.05080	.04940	4.10680	3.61980
4.127	5.902	.05370	.05440	4.31900	5.82330
	GRADIENT	.00085	.00236	-.01513	1.00683

RUN NO. 879/ 0 RN/L = 3.50 GRADIENT INTERVAL = -5.00/ 5.00

ALPHAR	BETAR	CARS	CYNRS	ALFRSU	BETRSU
6.488	-5.768	.04460	.02170	6.36900	-5.93850
6.186	-3.653	.04480	.02530	6.10210	-3.84230
6.062	.133	.04670	.03610	6.10110	-.07140
6.216	3.909	.05030	.04200	6.36270	3.76210
6.095	5.699	.05230	.04790	6.26690	5.58300
	GRADIENT	.00073	.00221	.03445	1.00570

IA156A, AEDC PWT 16T-470, 0 T S W/SILTS (R8NP44) (10 MAY 80)

REFERENCE DATA

SREF =	2690.0000 SQ.FT.	XMRP =	976.0000 IN. XT		
LREF =	1290.3000 INCHES	YMRP =	.0000 IN. YT		
BREF =	1290.3000 INCHES	ZMRP =	400.0000 IN. ZT		
SCALE =	.0200				

PARAMETRIC DATA

IB-ELV =	10.000	OB-ELV =	5.000
BDFLAP =	.000	SPDBRK =	.000
RUDDER =	.000	SILTS =	1.000
MACH =	.900	RN/L =	3.500

RUN NO. 880/ 0 RN/L = 3.50 GRADIENT INTERVAL = -5.00/ 5.00

ALPHAR	BETAR	CARS	CYNRS	ALFRSU	BETRSU
-8.567	-6.452	.03900	.00570	-8.40040	-6.57450
-8.593	-4.118	.04560	-.00010	-8.45450	-4.27130
-8.419	.118	.04910	.00320	-8.36950	-.08230
-8.386	4.230	.05190	.01200	-8.43660	4.02930
-8.380	6.180	.05370	.01740	-8.46500	5.99120
	GRADIENT	.00076	.00145	.00223	.99435

RUN NO. 881/ 0 RN/L = 3.50 GRADIENT INTERVAL = -5.00/ 5.00

ALPHAR	BETAR	CARS	CYNRS	ALFRSU	BETRSU
-6.267	-6.150	.04230	.01760	-6.08530	-6.24830
-6.461	-4.267	.04660	.01220	-6.30190	-4.39950
-6.321	-.097	.04900	.01500	-6.26310	-.29560
-6.302	4.334	.05360	.02250	-6.37700	4.14190
-6.423	6.383	.05590	.02630	-6.53320	6.20830
	GRADIENT	.00082	.00120	-.00891	.99307

RUN NO. 882/ 0 RN/L = 3.50 GRADIENT INTERVAL = -5.00/ 5.00

ALPHAR	BETAR	CARS	CYNRS	ALFRSU	BETRSU
-4.318	-6.531	.04400	.02790	-4.11950	-6.58910
-4.228	-4.154	.04800	.02410	-4.04600	-4.25170
-4.333	.136	.04880	.02750	-4.28280	-.06460
-4.033	4.356	.05450	.03390	-4.14610	4.18290
-3.924	6.185	.05680	.03830	-4.06770	6.03650
	GRADIENT	.00076	.00115	-.01188	.99111

RUN NO. 883/ 0 RN/L = 3.50 GRADIENT INTERVAL = -5.00/ 5.00

ALPHAR	BETAR	CARS	CYNRS	ALFRSU	BETRSU
-.330	-7.250	.04800	.03830	-.12940	-7.19880
-.319	-5.123	.04830	.03690	-.11840	-5.07260
-.353	-.796	.05020	.04110	-.15230	-.74470
-.267	3.387	.05490	.04890	-.06640	3.43750
-.258	5.495	.05790	.05310	-.05750	5.54620
	GRADIENT	.00112	.00187	.02054	1.00002

IA156A, AEDC PWT 16T-470, O T S W/SILTS (R8NP44) (10 MAY 80)

REFERENCE DATA

SREF = 2690.0000 SQ.FT. XMRP = 976.0000 IN. XT
LREF = 1290.3000 INCHES YMRP = .0000 IN. YT
BREF = 1290.3000 INCHES ZMRP = 400.0000 IN. ZT
SCALE = .0200

PARAMETRIC DATA

IB-ELV = 10.000 OB-ELV = 5.000
BDFLAP = .000 SPDBRK = .000
RUDDER = .000 SILTS = 1.000
MACH = .900 RN/L = 3.500

RUN NO. 884/ 0 RN/L = 3.50 GRADIENT INTERVAL = -5.00/ 5.00

ALPHAR	BETAR	CARS	CYNRS	ALFRSU	BETRSU
4.322	-5.655	.04960	.03140	4.18260	-5.80840
4.188	-3.814	.05090	.03380	4.07590	-3.98820
4.040	.068	.05220	.04320	4.08970	-.13280
3.999	3.721	.05650	.05010	4.17760	3.61630
3.902	5.623	.05880	.05560	4.09790	5.55780
	GRADIENT	.00074	.00217	.01339	1.00904

IA156A, AEDC PWT 16T-470, O T S W/SILTS (R8NP45) (10 MAY 80)

REFERENCE DATA

SREF = 2690.0000 SQ.FT. XMRP = 976.0000 IN. XT
LREF = 1290.3000 INCHES YMRP = .0000 IN. YT
BREF = 1290.3000 INCHES ZMRP = 400.0000 IN. ZT
SCALE = .0200

PARAMETRIC DATA

IB-ELV = 10.000 OB-ELV = 5.000
BDFLAP = .000 SPDBRK = .000
RUDDER = .000 SILTS = 1.000
MACH = .950 RN/L = 3.500

RUN NO. 885/ 0 RN/L = 3.50 GRADIENT INTERVAL = -5.00/ 5.00

ALPHAR	BETAR	CARS	CYNRS	ALFRSU	BETRSU
-8.725	-6.511	.04300	.00970	-8.55670	-6.62860
-8.755	-4.159	.05070	.00350	-8.61410	-4.30880
-8.497	.003	.05570	.00400	-8.44160	-.19440
-8.466	4.184	.05700	.01200	-8.51230	3.98440
-8.454	6.111	.05870	.01780	-8.53480	5.92250
	GRADIENT	.00075	.00102	.01218	.99395

RUN NO. 886/ 0 RN/L = 3.50 GRADIENT INTERVAL = -5.00/ 5.00

ALPHAR	BETAR	CARS	CYNRS	ALFRSU	BETRSU
-6.388	-6.229	.04600	.02170	-6.20550	-6.32280
-6.341	-4.142	.05290	.01750	-6.17980	-4.26970
-6.549	-.066	.05720	.01650	-6.48960	-.26280
-6.206	4.161	.06000	.02530	-6.27570	3.96810
-6.310	6.400	.06170	.02970	-6.41890	6.22590
	GRADIENT	.00085	.00095	-.01117	.99217

REFERENCE DATA

SREF =	2690.0000 SQ.FT.	XMRP =	976.0000 IN. XT		
LREF =	1290.3000 INCHES	YMRP =	.0000 IN. YT		
BREF =	1290.3000 INCHES	ZMRP =	400.0000 IN. ZT		
SCALE =	.0200				

PARAMETRIC DATA

IB-ELV =	10.000	OB-ELV =	5.000
BDFLAP =	.000	SPDBRK =	.000
RUDDER =	.000	SILTS =	1.000
MACH =	.950	RN/L =	3.500

RUN NO. 887/ 0 RN/L = 3.50 GRADIENT INTERVAL = -5.00/ 5.00

ALPHAR	BETAR	CARS	CYNRS	ALFRSU	BETRSU
-4.400	-6.613	.04850	.03170	-4.20170	-6.66580
-4.399	-4.279	.05410	.02830	-4.21560	-4.37150
-4.312	.297	.05650	.03360	-4.26620	.09650
-4.031	4.339	.06200	.03910	-4.14100	4.16540
-4.233	6.340	.06390	.04170	-4.37020	6.18760
	GRADIENT	.00091	.00125	.00823	.99034

RUN NO. 888/ 0 RN/L = 3.50 GRADIENT INTERVAL = -5.00/ 5.00

ALPHAR	BETAR	CARS	CYNRS	ALFRSU	BETRSU
-.318	-7.312	.05100	.04050	-.12030	-7.25720
-.299	-5.129	.05280	.03920	-.10150	-5.07440
-.313	-.849	.05710	.04590	-.11540	-.79470
-.234	3.388	.06340	.05410	-.03600	3.44310
-.239	5.500	.06470	.05830	-.04160	5.55500
	GRADIENT	.00149	.00194	.01874	1.00007

RUN NO. 889/ 0 RN/L = 3.50 GRADIENT INTERVAL = -5.00/ 5.00

ALPHAR	BETAR	CARS	CYNRS	ALFRSU	BETRSU
4.372	-5.584	.05400	.03330	4.23890	-5.73970
4.189	-3.751	.05580	.03590	4.08410	-3.92740
3.909	.104	.05850	.04580	3.96560	-.09380
4.130	3.792	.06320	.05180	4.30910	3.69140
4.100	5.777	.06530	.05870	4.29560	5.71500
	GRADIENT	.00098	.00211	.02937	1.00989

IA156A, AEDC PWT 16T-470, 0 T S W/SILTS (R8NP46) (10 MAY 80)

REFERENCE DATA

SREF = 2690.0000 SQ.FT. XMRP = 976.0000 IN. XT
LREF = 1290.3000 INCHES YMRP = .0000 IN. YT
BREF = 1290.3000 INCHES ZMRP = 400.0000 IN. ZT
SCALE = .0200

PARAMETRIC DATA

IB-ELV = 10.000 OB-ELV = 5.000
BDFLAP = .000 SPDBRK = .000
RUDDER = .000 SILTS = 1.000
MACH = 1.050 RN/L = 3.500

RUN NO. 892/ 0 RN/L = 3.50 GRADIENT INTERVAL = -5.00/ 5.00

ALPHAR	BETAR	CARS	CYNRS	ALFRSU	BETRSU
-8.811	-6.454	.05940	.01550	-8.64120	-6.56590
-8.842	-4.269	.06720	.01060	-8.69610	-4.41190
-8.733	.134	.07570	.01310	-8.67670	-.06210
-8.651	4.225	.07690	.02460	-8.69240	4.02500
-8.615	6.177	.08020	.02900	-8.69070	5.98780
	GRADIENT	.00115	.00163	.00049	.99322

RUN NO. 893/ 0 RN/L = 3.50 GRADIENT INTERVAL = -5.00/ 5.00

ALPHAR	BETAR	CARS	CYNRS	ALFRSU	BETRSU
-6.580	-6.484	.06410	.03070	-6.39480	-6.56860
-6.535	-4.299	.07040	.02570	-6.37110	-4.41980
-6.420	-.008	.07540	.02950	-6.35880	-.20250
-6.496	4.294	.08000	.03520	-6.56180	4.10140
-6.175	6.224	.08170	.04270	-6.27980	6.04900
	GRADIENT	.00112	.00111	-.02220	.99154

RUN NO. 894/ 0 RN/L = 3.50 GRADIENT INTERVAL = -5.00/ 5.00

ALPHAR	BETAR	CARS	CYNRS	ALFRSU	BETRSU
-4.308	-6.235	.06700	.04140	-4.11010	-6.28350
-4.585	-4.432	.07060	.03660	-4.39980	-4.51710
-4.555	.022	.07680	.04420	-4.49280	-.17230
-4.211	4.381	.08230	.05140	-4.31480	4.20560
-4.002	6.269	.08350	.05490	-4.13820	6.11740
	GRADIENT	.00133	.00168	.00954	.98976

RUN NO. 895/ 0 RN/L = 3.50 GRADIENT INTERVAL = -5.00/ 5.00

ALPHAR	BETAR	CARS	CYNRS	ALFRSU	BETRSU
-.347	-7.339	.06790	.05100	-.15200	-7.27990
-.327	-5.175	.07000	.05060	-.13240	-5.11580
-.368	-.891	.07800	.06050	-.17330	-.83120
-.263	3.328	.08470	.06900	-.06820	3.38800
-.250	5.476	.08580	.07150	-.05510	5.53570
	GRADIENT	.00159	.00201	.02491	1.00002

IA156A, AEDC PWT 16T-470, O T S W/SILTS (R8NP46) (10 MAY 80)

REFERENCE DATA

SREF = 2690.0000 SQ.FT. XMRP = 976.0000 IN. XT
LREF = 1290.3000 INCHES YMRP = .0000 IN. YT
BREF = 1290.3000 INCHES ZMRP = 400.0000 IN. ZT
SCALE = .0200

PARAMETRIC DATA

IB-ELV = 10.000 OB-ELV = 5.000
BDFLAP = .000 SPDBRK = .000
RUDDER = .000 SILTS = 1.000
MACH = 1.050 RN/L = 3.500

RUN NO. 896/ 0 RN/L = 3.50 GRADIENT INTERVAL = -5.00/ 5.00

ALPHAR	BETAR	CARS	CYNRS	ALFRSU	BETRSU
4.315	-5.836	.07300	.04220	4.18450	-5.99210
4.373	-3.809	.07570	.04530	4.27780	-3.98930
3.952	.027	.07900	.05600	4.01210	-.16740
3.958	3.646	.08230	.06310	4.13920	3.55270
4.215	5.787	.08240	.06940	4.41070	5.72960
	GRADIENT	.00089	.00239	-.01910	1.01145

IA156A, AEDC PWT 16T-470, O T S W/SILTS (R8NP47) (10 MAY 80)

REFERENCE DATA

SREF = 2690.0000 SQ.FT. XMRP = 976.0000 IN. XT
LREF = 1290.3000 INCHES YMRP = .0000 IN. YT
BREF = 1290.3000 INCHES ZMRP = 400.0000 IN. ZT
SCALE = .0200

PARAMETRIC DATA

IB-ELV = 10.000 OB-ELV = 5.000
BDFLAP = .000 SPDBRK = .000
RUDDER = .000 SILTS = 1.000
MACH = 1.100 RN/L = 3.500

RUN NO. 897/ 0 RN/L = 3.49 GRADIENT INTERVAL = -5.00/ 5.00

ALPHAR	BETAR	CARS	CYNRS	ALFRSU	BETRSU
-8.811	-6.557	.06030	.01550	-8.63740	-6.66540
-8.911	-4.290	.06700	.01010	-8.76350	-4.43170
-8.819	-.027	.07580	.01290	-8.75570	-.22150
-8.738	4.223	.07940	.02470	-8.77710	4.02200
-8.740	6.201	.08180	.03030	-8.81330	6.01020
	GRADIENT	.00146	.00171	-.00160	.99304

RUN NO. 898/ 0 RN/L = 3.50 GRADIENT INTERVAL = -5.00/ 5.00

ALPHAR	BETAR	CARS	CYNRS	ALFRSU	BETRSU
-6.541	-6.357	.06350	.02870	-6.35460	-6.44090
-6.803	-4.364	.06890	.02340	-6.63810	-4.48430
-6.613	-.070	.07460	.02820	-6.54650	-.26380
-6.539	4.312	.08080	.03740	-6.60220	4.11770
-6.258	6.260	.08310	.04160	-6.36080	6.08350
	GRADIENT	.00137	.00162	.00408	.99149

IA156A, AEDC PWT 16T-470, 0 T S W/SILTS (R8NP47) (10 MAY 80)

REFERENCE DATA

SREF = 2690.0000 SQ.FT. XMRP = 976.0000 IN. XT
LREF = 1290.3000 INCHES YMRP = .0000 IN. YT
BREF = 1290.3000 INCHES ZMRP = 400.0000 IN. ZT
SCALE = .0200

PARAMETRIC DATA

IB-ELV = 10.000 OB-ELV = 5.000
BOFLAP = .000 SPDBRK = .000
RUDDER = .000 SILTS = 1.000
MACH = 1.100 RN/L = 3.500

RUN NO. 899/ 0 RN/L = 3.50 GRADIENT INTERVAL = -5.00/ 5.00

ALPHAR	BETAR	CARS	CYNRS	ALFRSU	BETRSU
-4.270	-6.416	.06570	.04130	-4.07020	-6.45870
-4.441	-4.288	.06910	.03650	-4.25440	-4.37090
-4.342	.265	.07490	.04450	-4.28810	.06740
-4.025	4.275	.08030	.04950	-4.12850	4.09820
-4.210	6.263	.08280	.05120	-4.34140	6.10720
	GRADIENT	.00131	.00152	.01421	.98881

RUN NO. 900/ 0 RN/L = 3.50 GRADIENT INTERVAL = -5.00/ 5.00

ALPHAR	BETAR	CARS	CYNRS	ALFRSU	BETRSU
-.229	-7.433	.06600	.05070	-.03480	-7.36840
-.278	-5.308	.06630	.04950	-.08340	-5.24410
-.357	-.946	.07350	.05750	-.16270	-.88190
-.295	3.153	.08000	.06450	-.10030	3.21730
-.252	5.674	.08220	.06730	-.05710	5.73600
	GRADIENT	.00159	.00171	.01522	1.00002

RUN NO. 901/ 0 RN/L = 3.50 GRADIENT INTERVAL = -5.00/ 5.00

ALPHAR	BETAR	CARS	CYNRS	ALFRSU	BETRSU
4.589	-5.889	.06800	.03870	4.46280	-6.04960
4.227	-3.707	.07150	.04320	4.13130	-3.88750
3.963	.067	.07450	.05450	4.02720	-.12740
4.198	3.751	.07840	.06030	4.37990	3.65740
4.162	5.744	.07920	.06740	4.35900	5.68990
	GRADIENT	.00092	.00230	.03309	1.01160

REFERENCE DATA

SREF = 2690.0000 SQ.FT. XMRP = 976.0000 IN. XT
LREF = 1290.3000 INCHES YMRP = .0000 IN. YT
BREF = 1290.3000 INCHES ZMRP = 400.0000 IN. ZT
SCALE = .0200

PARAMETRIC DATA

IB-ELV = 10.000 OB-ELV = 5.000
BDFLAP = .000 SPDBRK = .000
RUDDER = .000 SILTS = 1.000
MACH = 1.150 RN/L = 3.500

RUN NO. 902/ 0 RN/L = 3.50 GRADIENT INTERVAL = -5.00/ 5.00

ALPHAR	BETAR	CARS	CYNRS	ALFRSU	BETRSU
-8.894	-6.449	.06060	.01550	-8.71940	-6.56020
-8.933	-4.272	.06560	.00870	-8.78310	-4.41420
-8.814	.138	.07470	.01020	-8.75360	-.05920
-8.771	4.228	.07830	.02070	-8.80840	4.02430
-8.743	6.184	.07980	.02640	-8.81620	5.99010
	GRADIENT	.00150	.00140	-.00285	.99278

RUN NO. 903/ 0 RN/L = 3.49 GRADIENT INTERVAL = -5.00/ 5.00

ALPHAR	BETAR	CARS	CYNRS	ALFRSU	BETRSU
-6.748	-6.509	.06130	.02760	-6.55900	-6.59300
-6.394	-4.162	.06720	.02380	-6.22500	-4.28090
-6.578	-.044	.07350	.02640	-6.50990	-.23900
-6.532	4.322	.07940	.03150	-6.59480	4.12540
-6.323	6.350	.08190	.03700	-6.42530	6.17060
	GRADIENT	.00144	.00091	-.04335	.99094

RUN NO. 904/ 0 RN/L = 3.50 GRADIENT INTERVAL = -5.00/ 5.00

ALPHAR	BETAR	CARS	CYNRS	ALFRSU	BETRSU
-4.418	-6.604	.06280	.03960	-4.21560	-6.64610
-4.474	-4.232	.06710	.03470	-4.28530	-4.31740
-4.200	.117	.07370	.04300	-4.13640	-.08010
-3.912	4.199	.07950	.04720	-4.01610	4.02050
-4.118	6.188	.08180	.04840	-4.25050	6.02940
	GRADIENT	.00147	.00149	.03195	.98871

RUN NO. 905/ 0 RN/L = 3.50 GRADIENT INTERVAL = -5.00/ 5.00

ALPHAR	BETAR	CARS	CYNRS	ALFRSU	BETRSU
-.194	-7.429	.06390	.04780	.00170	-7.36180
-.248	-5.036	.06550	.04820	-.05220	-4.97080
-.322	-.972	.07360	.05560	-.12530	-.90800
-.246	3.174	.08040	.06270	-.04960	3.24050
-.245	5.428	.08190	.06440	-.04920	5.49440
	GRADIENT	.00164	.00171	.01825	1.00036

IA156A, AEDC PWT 16T-470, 0 T S W/SILTS (R8NP48) (10 MAY 80)

REFERENCE DATA

SREF = 2690.0000 SQ.FT. XMRP = 976.0000 IN. XT
LREF = 1290.3000 INCHES YMRP = .0000 IN. YT
BREF = 1290.3000 INCHES ZMRP = 400.0000 IN. ZT
SCALE = .0200

PARAMETRIC DATA

IB-ELV = 10.000 OB-ELV = 5.000
BDFLAP = .000 SPDBRK = .000
RUDDER = .000 SILTS = 1.000
MACH = 1.150 RN/L = 3.500

RUN NO. 906/ 0 RN/L = 3.50 GRADIENT INTERVAL = -5.00/ 5.00

ALPHAR	BETAR	CARS	CYNRS	ALFRSU	BETRSU
4.520	-5.710	.06750	.03840	4.39410	-5.87370
4.270	-3.552	.07120	.04220	4.17840	-3.73730
4.132	.067	.07510	.05210	4.19810	-.12880
4.327	3.905	.07880	.06000	4.51270	3.81410
4.105	5.584	.07920	.06530	4.30490	5.53030
	GRADIENT	.00102	.00238	.04520	1.01278

IA156A, AEDC PWT 16T-470, 0 T S W/SILTS (R8NP49) (10 MAY 80)

REFERENCE DATA

SREF = 2690.0000 SQ.FT. XMRP = 976.0000 IN. XT
LREF = 1290.3000 INCHES YMRP = .0000 IN. YT
BREF = 1290.3000 INCHES ZMRP = 400.0000 IN. ZT
SCALE = .0200

PARAMETRIC DATA

IB-ELV = 10.000 OB-ELV = 5.000
BDFLAP = .000 SPDBRK = .000
RUDDER = .000 SILTS = 1.000
MACH = 1.250 RN/L = 3.500

RUN NO. 907/ 0 RN/L = 3.50 GRADIENT INTERVAL = -5.00/ 5.00

ALPHAR	BETAR	CARS	CYNRS	ALFRSU	BETRSU
-8.598	-6.287	.05930	.01160	-8.41260	-6.40120
-8.930	-4.328	.06290	.00550	-8.77070	-4.47570
-8.808	.137	.07230	.00730	-8.74210	-.07030
-8.727	4.317	.07620	.01540	-8.76600	4.10220
-8.698	6.284	.07880	.01970	-8.77490	6.08030
	GRADIENT	.00155	.00114	.00061	.99227

RUN NO. 908/ 0 RN/L = 3.50 GRADIENT INTERVAL = -5.00/ 5.00

ALPHAR	BETAR	CARS	CYNRS	ALFRSU	BETRSU
-6.493	-6.323	.05910	.02360	-6.29320	-6.40960
-6.758	-4.374	.06380	.01780	-6.57980	-4.49930
-6.535	-.062	.07150	.02310	-6.46010	-.26700
-6.507	4.366	.07710	.02610	-6.57250	4.15860
-6.236	6.322	.07930	.03110	-6.34310	6.13250
	GRADIENT	.00152	.00095	.00072	.99060

IA156A, AEDC PWT 16T-470, O T S W/SILTS (R8NP49) (10 MAY 80)

REFERENCE DATA

SREF = 2690.0000 SQ.FT. XMRP = 976.0000 IN. XT
LREF = 1290.3000 INCHES YMRP = .0000 IN. YT
BREF = 1290.3000 INCHES ZMRP = 400.0000 IN. ZT
SCALE = .0200

PARAMETRIC DATA

.IB-ELV =	10.000	OB-ELV =	5.000
BDFLAP =	.000	SPDBRK =	.000
RUDDER =	.000	SILTS =	1.000
MACH =	1.250	RN/L =	3.500

RUN NO. 909/ 0 RN/L = 3.50 GRADIENT INTERVAL = -5.00/ 5.00

ALPHAR	BETAR	CARS	CYNRS	ALFRSU	BETRSU
-4.490	-6.614	.05970	.03490	-4.27700	-6.65830
-4.396	-4.335	.06460	.03260	-4.19520	-4.41970
-4.316	.264	.07140	.03610	-4.25450	.05480
-4.039	4.302	.07670	.04000	-4.14530	4.11180
-4.184	6.364	.07930	.04150	-4.32340	6.19600
	GRADIENT	.00140	.00085	.00535	.98749

RUN NO. 910/ 0 RN/L = 3.50 GRADIENT INTERVAL = -5.00/ 5.00

ALPHAR	BETAR	CARS	CYNRS	ALFRSU	BETRSU
-.169	-7.494	.06060	.04550	.03710	-7.42270
-.211	-5.146	.06270	.04600	-.00440	-5.07540
-.228	-.934	.07160	.05260	-.02160	-.86410
-.151	3.538	.07830	.05950	.05550	3.60830
-.135	5.465	.07970	.06120	.07150	5.53370
	GRADIENT	.00150	.00154	.01724	1.00002

RUN NO. 911/ 0 RN/L = 3.50 GRADIENT INTERVAL = -5.00/ 5.00

ALPHAR	BETAR	CARS	CYNRS	ALFRSU	BETRSU
4.571	-5.750	.06470	.03600	4.43780	-5.92280
4.456	-3.844	.06810	.03890	4.35620	-4.03730
4.179	.006	.07230	.04910	4.24540	-.20130
4.083	3.535	.07610	.05870	4.27790	3.43730
4.313	5.805	.07750	.06420	4.52400	5.75040
	GRADIENT	.00108	.00268	-.01089	1.01281

IA156A, AEDC PWT 16T-470, 0 T S W/SILTS (R8NP50) (10 MAY 80)

REFERENCE DATA

SREF = 2690.0000 SQ.FT. XMRP = 976.0000 IN. XT
LREF = 1290.3000 INCHES YMRP = .0000 IN. YT
BREF = 1290.3000 INCHES ZMRP = 400.0000 IN. ZT
SCALE = .0200

PARAMETRIC DATA

IB-ELV = 10.000 OB-ELV = 5.000
BDFLAP = .000 SPDBRK = .000
RUDDER = .000 SILTS = 1.000
MACH = 1.400 RN/L = 3.500

RUN NO. 912/ 0 RN/L = 3.50 GRADIENT INTERVAL = -5.00/ 5.00

ALPHAR	BETAR	CARS	CYNRS	ALFRSU	BETRSU
-8.832	-6.523	.05470	.00690	-8.60970	-6.65750
-8.881	-4.324	.05900	.00190	-8.68840	-4.49900
-8.629	.104	.06850	.00130	-8.54460	-.14300
-8.533	4.360	.07450	.00620	-8.57770	4.10390
-8.531	6.300	.07510	.01380	-8.61980	6.05650
	GRADIENT	.00179	.00049	.01288	.99058

RUN NO. 913/ 0 RN/L = 3.51 GRADIENT INTERVAL = -5.00/ 5.00

ALPHAR	BETAR	CARS	CYNRS	ALFRSU	BETRSU
-6.600	-6.332	.05590	.01960	-6.36170	-6.43470
-6.473	-4.291	.06110	.01610	-6.25660	-4.43620
-6.637	.084	.06720	.01300	-6.55100	-.16080
-6.389	4.377	.07270	.01750	-6.46440	4.12930
-6.287	6.617	.07560	.02190	-6.41580	6.39140
	GRADIENT	.00134	.00016	-.02411	.98803

RUN NO. 914/ 0 RN/L = 3.50 GRADIENT INTERVAL = -5.00/ 5.00

ALPHAR	BETAR	CARS	CYNRS	ALFRSU	BETRSU
-4.287	-6.309	.05740	.03190	-4.03230	-6.35950
-4.286	-4.209	.06140	.02810	-4.04570	-4.30760
-4.356	.186	.06740	.02700	-4.27360	-.05980
-3.974	4.417	.07240	.03420	-4.10160	4.19000
-4.152	6.522	.07500	.03620	-4.31820	6.32170
	GRADIENT	.00128	.00070	-.00677	.98502

RUN NO. 915/ 0 RN/L = 3.50 GRADIENT INTERVAL = -5.00/ 5.00

ALPHAR	BETAR	CARS	CYNRS	ALFRSU	BETRSU
-.325	-7.526	.05800	.04280	-.07890	-7.44240
-.243	-5.052	.05980	.04240	.00300	-4.96700
-.238	-1.035	.06710	.04760	.00820	-.94900
-.181	3.568	.07340	.05370	.06420	3.65390
-.235	5.493	.07630	.05670	.01090	5.57810
	GRADIENT	.00137	.00133	.01217	1.00002

IA156A, AEDC PWT 16T-470, O T S W/SILTS (R8NP50) (10 MAY 80)

REFERENCE DATA

SREF = 2690.0000 SQ.FT. XMRP = 976.0000 IN. XT
LREF = 1290.3000 INCHES YMRP = .0000 IN. YT
BREF = 1290.3000 INCHES ZMRP = 400.0000 IN. ZT
SCALE = .0200

PARAMETRIC DATA

IB-ELV = 10.000 OB-ELV = 5.000
BDFLAP = .000 SPDBRK = .000
RUDDER = .000 SILTS = 1.000
MACH = 1.400 RN/L = 3.500

RUN NO. 916/ 0 RN/L = 3.50 GRADIENT INTERVAL = -5.00/ 5.00

ALPHAR	BETAR	CARS	CYNRS	ALFRSU	BETRSU
4.665	-5.760	.05940	.03210	4.50710	-5.96620
4.579	-3.802	.06230	.03510	4.46230	-4.03430
4.248	.025	.06840	.04560	4.32770	-.22270
4.194	3.646	.07230	.05600	4.42750	3.53190
4.144	5.561	.07480	.06120	4.39560	5.49670
	GRADIENT	.00135	.00281	-.00496	1.01571

IA156A, AEDC PWT 16T-470, O T S W/SILTS (R8NP51) (10 MAY 80)

REFERENCE DATA

SREF = 2690.0000 SQ.FT. XMRP = 976.0000 IN. XT
LREF = 1290.3000 INCHES YMRP = .0000 IN. YT
BREF = 1290.3000 INCHES ZMRP = 400.0000 IN. ZT
SCALE = .0200

PARAMETRIC DATA

IB-ELV = 10.000 OB-ELV = 5.000
BDFLAP = .000 SPDBRK = .000
RUDDER = .000 SILTS = 1.000
MACH = 1.550 RN/L = 3.200

RUN NO. 917/ 0 RN/L = 3.19 GRADIENT INTERVAL = -5.00/ 5.00

ALPHAR	BETAR	CARS	CYNRS	ALFRSU	BETRSU
-8.843	-6.431	.04970	.00370	-8.52360	-6.58680
-8.894	-4.216	.05360	-.00130	-8.61000	-4.43080
-8.587	.286	.06310	-.00430	-8.44260	-.04010
-8.425	4.535	.06860	.00360	-8.45290	4.17990
-8.458	6.400	.06840	.01240	-8.54460	6.05530
	GRADIENT	.00172	.00055	.01814	.98387

RUN NO. 918/ 0 RN/L = 3.19 GRADIENT INTERVAL = -5.00/ 5.00

ALPHAR	BETAR	CARS	CYNRS	ALFRSU	BETRSU
-6.454	-6.209	.05150	.01610	-6.11300	-6.31650
-6.638	-4.301	.05530	.01100	-6.32600	-4.47210
-6.432	.103	.06200	.00920	-6.27590	-.21820
-6.325	4.555	.06800	.01280	-6.39630	4.20660
-6.264	6.739	.07120	.01910	-6.40750	6.41310
	GRADIENT	.00143	.00020	-.00797	.97995

IA156A, AEDC PWT 16T-470, O T S W/SILTS (R8NP51) (10 MAY 80)

REFERENCE DATA

SREF = 2690.0000 SQ.FT. XMRP = 976.0000 IN. XT
LREF = 1290.3000 INCHES YMRP = .0000 IN. YT
BREF = 1290.3000 INCHES ZMRP = 400.0000 IN. ZT
SCALE = .0200

PARAMETRIC DATA

IB-ELV = 10.000 OB-ELV = 5.000
BDFLAP = .000 SPDBRK = .000
RUDDER = .000 SILTS = 1.000
MACH = 1.550 RN/L = 3.200

RUN NO. 919/ 0 RN/L = 3.20 GRADIENT INTERVAL = -5.00/ 5.00

ALPHAR	BETAR	CARS	CYNRS	ALFRSU	BETRSU
-4.388	-6.297	.05270	.02630	-4.03370	-6.33390
-4.652	-4.459	.05590	.02140	-4.31200	-4.56400
-4.177	.223	.06260	.02410	-4.02750	-.10000
-3.880	4.707	.06750	.03040	-4.03300	4.38440
-3.869	6.391	.07000	.03300	-4.06940	6.09680
	GRADIENT	.00127	.00098	.03066	.97607

RUN NO. 920/ 0 RN/L = 3.19 GRADIENT INTERVAL = -5.00/ 5.00

ALPHAR	BETAR	CARS	CYNRS	ALFRSU	BETRSU
-.411	-7.494	.05330	.03850	-.08690	-7.34800
-.367	-5.072	.05620	.03960	-.04240	-4.92610
-.319	-.977	.06250	.04490	.00460	-.82870
-.321	3.177	.06850	.05030	.00230	3.32590
-.365	5.322	.07110	.05370	-.04150	5.47150
	GRADIENT	.00144	.00130	-.00055	1.00000

RUN NO. 921/ 0 RN/L = 3.19 GRADIENT INTERVAL = -5.00/ 5.00

ALPHAR	BETAR	CARS	CYNRS	ALFRSU	BETRSU
4.560	-5.486	.05680	.02990	4.37150	-5.78870
4.423	-3.545	.05840	.03280	4.29590	-3.87790
4.087	.189	.06430	.04340	4.23520	-.13520
4.186	3.782	.06830	.05300	4.51970	3.65510
4.081	5.789	.07070	.06060	4.43310	5.73740
	GRADIENT	.00135	.00276	.03024	1.02792

IA156A, AEDC PWT 16T-470, 0 T S W/SILTS (R8NP52) (10 MAY 80)

REFERENCE DATA

SREF = 2690.0000 SQ.FT. XMRP = 976.0000 IN. XT
LREF = 1290.3000 INCHES YMRP = .0000 IN. YT
BREF = 1290.3000 INCHES ZMRP = 400.0000 IN. ZT
SCALE = .0200

PARAMETRIC DATA

IB-ELV = 10.000 OB-ELV = 9.000
BDFLAP = .000 SPDBRK = .000
RUDDER = .000 SILTS = 1.000
MACH = .300 RN/L = 3.500

RUN NO. 928/ 0 RN/L = 2.68 GRADIENT INTERVAL = -5.00/ 5.00

ALPHAR	BETAR	CARS	CYNRS	ALFRSU	BETRSU
-6.008	-10.307	.03590	.03450	-5.86960	-10.47070
-6.357	-6.240	.03880	.02280	-6.26700	-6.43430
-6.231	.332	.04410	.02310	-6.31210	.13340
-5.789	6.274	.04990	.03550	-5.98690	6.19100
-5.920	10.242	.05240	.04640	-6.13090	10.20770
	GRADIENT	.00000	.00000	.00000	.00000

RUN NO. 929/ 0 RN/L = 2.68 GRADIENT INTERVAL = -5.00/ 5.00

ALPHAR	BETAR	CARS	CYNRS	ALFRSU	BETRSU
-.301	-10.786	.04240	.03780	-.10120	-10.86300
-.271	-6.700	.03950	.03640	-.07140	-6.77700
-.224	-.729	.04530	.04300	-.02380	-.80610
-.201	5.354	.05060	.05200	-.00100	5.27820
-.156	9.719	.05340	.06000	.04370	9.64170
	GRADIENT	.00000	.00000	.00000	.00000

RUN NO. 930/ 0 RN/L = 2.68 GRADIENT INTERVAL = -5.00/ 5.00

ALPHAR	BETAR	CARS	CYNRS	ALFRSU	BETRSU
6.235	-9.836	.04240	.01830	6.02330	-9.87030
6.074	-5.754	.04060	.02100	5.87700	-5.83740
5.939	.210	.04420	.03400	5.86440	.00970
6.159	6.060	.04880	.04520	6.24700	5.86430
5.927	9.888	.05110	.05340	6.06130	9.72040
	GRADIENT	.00000	.00000	.00000	.00000

IA156A, AEDC PWT 16T-470, O T S W/SILTS (R8NP53) (10 MAY 80)

REFERENCE DATA

SREF = 2690.0000 SQ.FT. XMRP = 976.0000 IN. XT
LREF = 1290.3000 INCHES YMRP = .0000 IN. YT
BREF = 1290.3000 INCHES ZMRP = 400.0000 IN. ZT
SCALE = .0200

PARAMETRIC DATA

IB-ELV = 10.000 OB-ELV = 9.000
BDFLAP = .000 SPDBRK = .000
RUDDER = .000 SILTS = 1.000
MACH = .300 RN/L = 3.500

RUN NO. 927/ 0 RN/L = 2.67 GRADIENT INTERVAL = -5.00/ 5.00

ALPHAR	BETAR	CARS	CYNRS	ALFRSU	BETRSU
-10.162	-8.104	.03270	.01130	-10.09260	-8.30680
-10.170	-5.914	.03750	.00310	-10.13120	-6.12480
-9.933	.195	.04410	-.00170	-10.01060	-.00430
-10.096	6.380	.04840	.02060	-10.26640	6.25130
-10.115	8.205	.04970	.02760	-10.30010	8.09750
	GRADIENT	.00000	.00000	.00000	.00000

RUN NO. 931/ 0 RN/L = 2.68 GRADIENT INTERVAL = -5.00/ 5.00

ALPHAR	BETAR	CARS	CYNRS	ALFRSU	BETRSU
10.082	-7.867	.03940	.00170	9.89520	-7.97060
10.161	-5.568	.03950	.00280	9.99270	-5.70080
10.063	.240	.04510	.01300	9.98790	.03980
10.151	6.147	.04740	.02470	10.19190	5.93700
9.921	7.962	.04760	.03150	9.98930	7.75950
	GRADIENT	.00000	.00000	.00000	.00000

IA156A, AEDC PWT 16T-470, O T S W/SILTS (R8NP54) (10 MAY 80)

REFERENCE DATA

SREF = 2690.0000 SQ.FT. XMRP = 976.0000 IN. XT
LREF = 1290.3000 INCHES YMRP = .0000 IN. YT
BREF = 1290.3000 INCHES ZMRP = 400.0000 IN. ZT
SCALE = .0200

PARAMETRIC DATA

IB-ELV = 10.000 OB-ELV = 9.000
BDFLAP = .000 SPDBRK = .000
RUDDER = .000 SILTS = 1.000
MACH = .600 RN/L = 3.500

RUN NO. 932/ 0 RN/L = 3.50 GRADIENT INTERVAL = -5.00/ 5.00

ALPHAR	BETAR	CARS	CYNRS	ALFRSU	BETRSU
-8.262	-8.196	.03220	.01970	-8.17110	-8.38560
-8.234	-6.051	.03600	.01280	-8.17300	-6.25230
-8.124	-3.927	.04050	.00700	-8.10020	-4.13610
-8.148	.179	.04370	.00700	-8.22720	-.01650
-8.155	4.218	.04670	.01740	-8.31360	4.07950
-8.117	6.161	.04850	.02340	-8.29890	6.05350
-8.050	8.274	.05010	.03050	-8.24520	8.19510
	GRADIENT	.00076	.00127	-.02621	1.00860

IA156A, AEDC PWT 16T-470, O T S W/SILTS (R8NP54) (10 MAY 80)

REFERENCE DATA

SREF =	2690.0000 SQ.FT.	XMRP =	976.0000 IN. XT		
LREF =	1290.3000 INCHES	YMRP =	.0000 IN. YT		
BREF =	1290.3000 INCHES	ZMRP =	400.0000 IN. ZT		
SCALE =	.0200				

PARAMETRIC DATA

IB-ELV =	10.000	OB-ELV =	9.000
BDFLAP =	.000	SPDBRK =	.000
RUDDER =	.000	SILTS =	1.000
MACH =	.600	RN/L =	3.500

RUN NO. 933/ 0 RN/L = 3.51 GRADIENT INTERVAL = -5.00/ 5.00

ALPHAR	BETAR	CARS	CYNRS	ALFRSU	BETRSU
-6.073	-8.060	.03430	.02870	-5.95690	-8.25560
-6.240	-6.144	.03670	.02260	-6.15070	-6.33520
-6.175	-4.065	.04070	.01760	-6.12420	-4.26920
-6.306	.037	.04330	.01910	-6.37800	-.16060
-6.103	4.272	.04740	.02810	-6.27730	4.15450
-5.911	6.136	.04910	.03290	-6.10610	6.05580
-5.938	8.469	.05100	.03910	-6.14290	8.42120
	GRADIENT	.00080	.00126	-.01814	1.01042

RUN NO. 934/ 0 RN/L = 3.51 GRADIENT INTERVAL = -5.00/ 5.00

ALPHAR	BETAR	CARS	CYNRS	ALFRSU	BETRSU
-4.127	-8.230	.03580	.03400	-3.98120	-8.38150
-4.101	-6.091	.03790	.03090	-3.97540	-6.26000
-4.167	-4.041	.04070	.02710	-4.07760	-4.23150
-3.920	.143	.04410	.03310	-3.99500	-.05370
-3.997	4.392	.04800	.03820	-4.19240	4.31240
-3.904	6.141	.04950	.04180	-4.11000	6.09860
-3.816	8.084	.05090	.04590	-4.02590	8.06840
	GRADIENT	.00087	.00132	-.01370	1.01321

RUN NO. 935/ 0 RN/L = 3.51 GRADIENT INTERVAL = -5.00/ 5.00

ALPHAR	BETAR	CARS	CYNRS	ALFRSU	BETRSU
-.169	-9.101	.04020	.03880	.02780	-9.17560
-.220	-7.081	.03860	.03730	-.02370	-7.15790
-.213	-4.743	.03990	.03750	-.01600	-4.81720
-.207	-.471	.04490	.04430	-.01010	-.54680
-.170	3.567	.04930	.05040	.02690	3.49110
-.120	5.417	.05080	.05340	.07550	5.34010
-.206	7.559	.05210	.05640	-.00890	7.48610
	GRADIENT	.00113	.00155	.00513	.99989

IA,56A, AEDC PWT 16T-470, 0 T S W/SILTS (R8NP54) (10 MAY 80)

REFERENCE DATA

SREF =	2690.0000 SQ.FT.	XMRP =	976.0000 IN. XT		
LREF =	1290.3000 INCHES	YMRP =	.0000 IN. YT		
BREF =	1290.3000 INCHES	ZMRP =	400.0000 IN. ZT		
SCALE =	.0200				

PARAMETRIC DATA

IB-ELV =	10.000	OB-ELV =	9.000
BDFLAP =	.000	SPDBRK =	.000
RUDDER =	.000	SILTS =	1.000
MACH =	.600	RN/L =	3.500

RUN NO. 936/ 0 RN/L = 3.51 GRADIENT INTERVAL = -5.00/ 5.00

ALPHAR	BETAR	CARS	CYNRS	ALFRSU	BETRSU
4.276	-7.672	.04170	.02910	4.06680	-7.69050
4.325	-5.597	.04100	.02930	4.11980	-5.64400
4.295	-3.667	.04160	.03230	4.10240	-3.75230
4.101	.128	.04380	.04240	4.02330	-.06860
4.142	3.942	.04760	.04930	4.22710	3.74980
4.080	5.851	.04980	.05340	4.20260	5.67990
3.973	7.678	.05130	.05680	4.11570	7.52400
	GRADIENT	.00079	.00223	.01642	.98583

RUN NO. 937/ 0 RN/L = 3.51 GRADIENT INTERVAL = -5.00/ 5.00

ALPHAR	BETAR	CARS	CYNRS	ALFRSU	BETRSU
6.460	-7.867	.04170	.02160	6.25760	-7.92370
6.307	-5.712	.04120	.02320	6.11370	-5.79610
6.441	-3.806	.04190	.02440	6.26850	-3.92600
6.245	.131	.04460	.03500	6.16940	-.06570
6.042	3.856	.04760	.04240	6.08980	3.65090
6.205	5.882	.04900	.04640	6.29260	5.69180
6.050	7.936	.05040	.05090	6.16620	7.76060
	GRADIENT	.00074	.00235	-.02334	.98888

RUN NO. 938/ 0 RN/L = 3.51 GRADIENT INTERVAL = -5.00/ 5.00

ALPHAR	BETAR	CARS	CYNRS	ALFRSU	BETRSU
8.364	-7.970	.04070	.01320	8.16970	-8.05080
8.299	-5.720	.04020	.01350	8.12100	-5.83070
8.530	-3.930	.04140	.01530	8.37280	-4.06980
8.233	.085	.04520	.02590	8.15730	-.11090
8.424	3.975	.04740	.03080	8.44500	3.76550
8.097	5.855	.04790	.03720	8.15850	5.65460
8.377	7.961	.04890	.04090	8.46640	7.77030
	GRADIENT	.00076	.00196	.00880	.99115

IA156A, AEDC PWT 16T-470, O T S W/SILTS (R8NP55) (10 MAY 80)

REFERENCE DATA

SREF = 2690.0000 SQ.FT. XMRP = 976.0000 IN. XT
LREF = 1290.3000 INCHES YMRP = .0000 IN. YT
BREF = 1290.3000 INCHES ZMRP = 400.0000 IN. ZT
SCALE = .0200

PARAMETRIC DATA

IB-ELV = 10.000 OB-ELV = 9.000
BDFLAP = .000 SPDBRK = .000
RUDDER = .000 SILTS = 1.000
MACH = .800 RN/L = 3.500

RUN NO. 939/ 0 RN/L = 3.51 GRADIENT INTERVAL = -5.00/ 5.00

ALPHAR	BETAR	CARS	CYNRS	ALFRSU	BETRSU
-8.625	-6.353	.03430	.00870	-8.46780	-6.48860
-8.544	-4.171	.04180	.00400	-8.41520	-4.33410
-8.396	.222	.04620	.00380	-8.36160	.01760
-8.410	4.243	.04900	.01220	-8.47230	4.04500
-8.362	6.209	.05030	.01850	-8.44780	6.02520
	GRADIENT	.00086	.00096	-.00649	.99573

RUN NO. 940/ 0 RN/L = 3.50 GRADIENT INTERVAL = -5.00/ 5.00

ALPHAR	BETAR	CARS	CYNRS	ALFRSU	BETRSU
-6.435	-6.366	.03680	.01960	-6.26020	-6.47780
-6.352	-4.223	.04220	.01560	-6.20190	-4.36660
-6.203	.035	.04620	.01830	-6.16240	-.16840
-6.312	4.327	.04970	.02580	-6.39780	4.13800
-6.028	6.280	.05160	.03140	-6.15140	6.11320
	GRADIENT	.00088	.00119	-.02295	.99471

RUN NO. 941/ 0 RN/L = 3.50 GRADIENT INTERVAL = -5.00/ 5.00

ALPHAR	BETAR	CARS	CYNRS	ALFRSU	BETRSU
-4.335	-6.493	.03830	.02820	-4.14070	-6.56720
-4.305	-4.204	.04280	.02550	-4.13310	-4.31700
-4.073	.155	.04640	.03150	-4.03700	-.04930
-3.842	4.236	.05040	.03750	-3.96590	4.06950
-4.058	6.221	.05220	.04000	-4.20880	6.07820
	GRADIENT	.00090	.00142	.01984	.99346

RUN NO. 942/ 0 RN/L = 3.51 GRADIENT INTERVAL = -5.00/ 5.00

ALPHAR	BETAR	CARS	CYNRS	ALFRSU	BETRSU
-.208	-7.043	.04230	.03770	-.00460	-7.00380
-.253	-5.088	.04240	.03770	-.04860	-5.05000
-.256	-.646	.04580	.04270	-.05190	-.60850
-.217	3.439	.05110	.04930	-.01350	3.47830
-.228	5.298	.05370	.05210	-.02410	5.33740
	GRADIENT	.00130	.00162	.00940	1.00039

IA156A, AEDC PWT 16T-470, O T S W/SILTS (R8NP55) (10 MAY 80)

REFERENCE DATA

SREF = 2690.0000 SQ.FT. XMRP = 976.0000 IN. XT
LREF = 1290.3000 INCHES YMRP = .0000 IN. YT
BREF = 1290.3000 INCHES ZMRP = 400.0000 IN. ZT
SCALE = .0200

PARAMETRIC DATA

IB-ELV = 10.000 OB-ELV = 9.000
BDFLAP = .000 SPDBRK = .000
RUDDER = .000 SILTS = 1.000
MACH = .800 RN/L = 3.500

RUN NO. 943/ 0 RN/L = 3.50 GRADIENT INTERVAL = -5.00/ 5.00

ALPHAR	BETAR	CARS	CYNRS	ALFRSU	BETRSU
4.240	-5.589	.04410	.03100	4.08930	-5.73230
4.238	-3.614	.04480	.03350	4.11930	-3.78400
4.238	.021	.04620	.04310	4.27220	-.18420
4.103	3.830	.05130	.05060	4.27540	3.71430
4.008	5.795	.05420	.05550	4.20110	5.71770
	GRADIENT	.00088	.00229	.02081	1.00748

RUN NO. 944/ 0 RN/L = 3.51 GRADIENT INTERVAL = -5.00/ 5.00

ALPHAR	BETAR	CARS	CYNRS	ALFRSU	BETRSU
6.434	-5.802	.04480	.02350	6.31410	-5.97160
6.507	-3.830	.04520	.02450	6.42370	-4.02020
6.282	.072	.04720	.03610	6.31960	-.13210
6.133	3.764	.05070	.04300	6.27790	3.61530
6.268	5.848	.05280	.04720	6.44070	5.73280
	GRADIENT	.00072	.00244	-.01927	1.00543

IA156A, AEDC PWT 16T-470, O T S W/SILTS (R8NP56) (10 MAY 80)

REFERENCE DATA

SREF = 2690.0000 SQ.FT. XMRP = 976.0000 IN. XT
LREF = 1290.3000 INCHES YMRP = .0000 IN. YT
BREF = 1290.3000 INCHES ZMRP = 400.0000 IN. ZT
SCALE = .0200

PARAMETRIC DATA

IB-ELV = 10.000 OB-ELV = 9.000
BDFLAP = .000 SPDBRK = .000
RUDDER = .000 SILTS = 1.000
MACH = .900 RN/L = 3.500

RUN NO. 952/ 0 RN/L = 3.51 GRADIENT INTERVAL = -5.00/ 5.00

ALPHAR	BETAR	CARS	CYNRS	ALFRSU	BETRSU
-8.520	-6.291	.04010	.00610	-8.35440	-6.41460
-8.319	-4.050	.04700	.00220	-8.18050	-4.20270
-8.505	.077	.04980	.00330	-8.45460	-.12330
-8.508	4.282	.05180	.01160	-8.55810	4.08140
-8.552	6.160	.05330	.01670	-8.63510	5.97120
	GRADIENT	.00058	.00113	-.04526	.99433

IA156A, AEDC PWT 16T-470, 0 T S W/SILTS (R8NP56) (10 MAY 80)

REFERENCE DATA

SREF = 2690.0000 SQ.FT. XMRP = 976.0000 IN. XT
LREF = 1290.3000 INCHES YMRP = .0000 IN. YT
BREF = 1290.3000 INCHES ZMRP = 400.0000 IN. ZT
SCALE = .0200

PARAMETRIC DATA

IB-ELV = 10.000 OB-ELV = 9.000
BDFLAP = .000 SPDBRK = .000
RUDDER = .000 SILTS = 1.000
MACH = .900 RN/L = 3.500

RUN NO. 953/ 0 RN/L = 3.50 GRADIENT INTERVAL = -5.00/ 5.00

ALPHAR	BETAR	CARS	CYNRS	ALFRSU	BETRSU
-6.380	-6.382	.04230	.01860	-6.19790	-6.47940
-6.271	-4.281	.04750	.01470	-6.11070	-4.41130
-6.242	.008	.04930	.01620	-6.18850	-.19180
-6.289	4.201	.05390	.02210	-6.36100	4.00690
-6.130	6.222	.05610	.02720	-6.24200	6.04840
	GRADIENT	.00075	.00087	-.02947	.99244

RUN NO. 954/ 0 RN/L = 3.50 GRADIENT INTERVAL = -5.00/ 5.00

ALPHAR	BETAR	CARS	CYNRS	ALFRSU	BETRSU
-4.287	-6.564	.04450	.02900	-4.08830	-6.62210
-4.291	-4.254	.04880	.02510	-4.10870	-4.35150
-4.101	.122	.04930	.02970	-4.05080	-.07870
-4.188	4.454	.05530	.03310	-4.29990	4.27990
-4.009	6.375	.05730	.03840	-4.15290	6.22690
	GRADIENT	.00075	.00092	-.02190	.99119

RUN NO. 955/ 0 RN/L = 3.50 GRADIENT INTERVAL = -5.00/ 5.00

ALPHAR	BETAR	CARS	CYNRS	ALFRSU	BETRSU
-.307	-7.306	.04830	.03930	-.10660	-7.25510
-.295	-5.224	.04870	.03790	-.09480	-5.17260
-.329	-.891	.05100	.04190	-.12910	-.83940
-.258	3.195	.05540	.04960	-.05810	3.24690
-.248	5.423	.05880	.05440	-.04830	5.47460
	GRADIENT	.00108	.00188	.01738	1.00007

RUN NO. 956/ 0 RN/L = 3.50 GRADIENT INTERVAL = -5.00/ 5.00

ALPHAR	BETAR	CARS	CYNRS	ALFRSU	BETRSU
4.431	-5.879	.04980	.03190	4.29120	-6.03110
4.511	-3.887	.05090	.03390	4.40420	-4.06400
3.981	.080	.05250	.04430	4.03170	-.12030
4.197	3.761	.05690	.05060	4.37440	3.65370
3.988	5.826	.05930	.05690	4.18440	5.76160
	GRADIENT	.00078	.00219	-.00506	1.00896

REFERENCE DATA

SREF = 2690.0000 SQ.FT. XMRP = 976.0000 IN. XT
LREF = 1290.3000 INCHES YMRP = .0000 IN. YT
BREF = 1290.3000 INCHES ZMRP = 400.0000 IN. ZT
SCALE = .0200

PARAMETRIC DATA

IB-ELV = 10.000 OB-ELV = 9.000
BDFLAP = .000 SPDBRK = .000
RUDDER = .000 SILTS = 1.000
MACH = .950 RN/L = 3.500

RUN NO. 957/ 0 RN/L = 3.50 GRADIENT INTERVAL = -5.00/ 5.00

ALPHAR	BETAR	CARS	CYNRS	ALFRSU	BETRSU
-8.503	-6.400	.04380	.01250	-8.33400	-6.51720
-8.602	-4.133	.05110	.00610	-8.46120	-4.28230
-8.459	.071	.05650	.00610	-8.40510	-.12760
-8.400	4.140	.05700	.01300	-8.44570	3.93990
-8.375	6.075	.05900	.01850	-8.45560	5.88620
	GRADIENT	.00072	.00083	.00194	.99379

RUN NO. 959/ 0 RN/L = 3.49 GRADIENT INTERVAL = -5.00/ 5.00

ALPHAR	BETAR	CARS	CYNRS	ALFRSU	BETRSU
-6.420	-6.341	.04680	.02380	-6.23670	-6.43380
-6.411	-4.342	.05310	.01900	-6.24840	-4.46680
-6.564	-.019	.05720	.01740	-6.50670	-.21590
-6.366	4.268	.06030	.02570	-6.43530	4.07480
-6.131	6.437	.06270	.03300	-6.24200	6.26390
	GRADIENT	.00084	.00078	-.02176	.99207

RUN NO. 958/ 0 RN/L = 3.49 GRADIENT INTERVAL = -5.00/ 5.00

ALPHAR	BETAR	CARS	CYNRS	ALFRSU	BETRSU
-4.352	-6.530	.04880	.03280	-4.15400	-6.58400
-4.436	-4.285	.05450	.02870	-4.25370	-4.37900
-4.408	.270	.05700	.03370	-4.36090	.07030
-3.933	4.406	.06250	.04080	-4.04530	4.23390
-4.012	6.248	.06470	.04350	-4.15170	6.09760
	GRADIENT	.00091	.00139	.02318	.99078

RUN NO. 960/ 0 RN/L = 3.50 GRADIENT INTERVAL = -5.00/ 5.00

ALPHAR	BETAR	CARS	CYNRS	ALFRSU	BETRSU
-.285	-7.212	.05100	.04110	-.08720	-7.15740
-.270	-5.164	.05300	.04040	-.07260	-5.10910
-.301	-.966	.05770	.04650	-.10280	-.91110
-.233	3.220	.06360	.05430	-.03510	3.27520
-.240	5.427	.06510	.05870	-.04210	5.48230
	GRADIENT	.00141	.00186	.01617	1.00002

IA156A, AEDC PWT 16T-470, O T S W/SILTS (R8NP57) (10 MAY 80)

REFERENCE DATA

SREF = 2690.0000 SQ.FT. XMRP = 976.0000 IN. XT
LREF = 1290.3000 INCHES YMRP = .0000 IN. YT
BREF = 1290.3000 INCHES ZMRP = 400.0000 IN. ZT
SCALE = .0200

PARAMETRIC DATA

IB-ELV = 10.000 OB-ELV = 9.000
BDFLAP = .000 SPDBRK = .000
RUDDER = .000 SILTS = 1.000
MACH = .950 RN/L = 3.500

RUN NO. 961/ 0 RN/L = 3.49 GRADIENT INTERVAL = -5.00/ 5.00

ALPHAR	BETAR	CARS	CYNRS	ALFRSU	BETRSU
4.250	-5.729	.05460	.03520	4.11300	-5.88170
4.272	-3.705	.05650	.03760	4.16990	-3.88330
3.915	-.093	.05980	.04700	3.96110	-.29270
4.138	3.664	.06340	.05230	4.31510	3.56110
4.107	5.769	.06560	.05930	4.30290	5.70730
	GRADIENT	.00094	.00199	.02020	1.01027

IA156A, AEDC PWT 16T-470, O T S W/SILTS (R8NP58) (10 MAY 80)

REFERENCE DATA

SREF = 2690.0000 SQ.FT. XMRP = 976.0000 IN. XT
LREF = 1290.3000 INCHES YMRP = .0000 IN. YT
BREF = 1290.3000 INCHES ZMRP = 400.0000 IN. ZT
SCALE = .0200

PARAMETRIC DATA

IB-ELV = 10.000 OB-ELV = 9.000
BDFLAP = .000 SPDBRK = .000
RUDDER = .000 SILTS = 1.000
MACH = 1.050 RN/L = 3.500

RUN NO. 962/ 0 RN/L = 3.50 GRADIENT INTERVAL = -5.00/ 5.00

ALPHAR	BETAR	CARS	CYNRS	ALFRSU	BETRSU
-8.549	-6.423	.06230	.01980	-8.37780	-6.53270
-8.744	-4.151	.07050	.01380	-8.59990	-4.29530
-8.714	-.064	.07750	.01500	-8.65240	-.25860
-8.552	4.238	.07910	.02690	-8.59420	4.03880
-8.596	6.177	.08250	.03050	-8.67270	5.98840
	GRADIENT	.00102	.00157	.00079	.99346

RUN NO. 963/ 0 RN/L = 3.50 GRADIENT INTERVAL = -5.00/ 5.00

ALPHAR	BETAR	CARS	CYNRS	ALFRSU	BETRSU
-6.496	-6.388	.06560	.03220	-6.31050	-6.47360
-6.429	-4.405	.07190	.02840	-6.26260	-4.52230
-6.617	-.090	.07700	.03040	-6.55310	-.28300
-6.433	4.231	.08230	.03770	-6.49770	4.03760
-6.131	6.397	.08400	.04640	-6.23790	6.22350
	GRADIENT	.00120	.00108	-.02722	.99120

IA156A, AEDC PWT 16T-470, 0 T S W/SILTS (R8NP58) (10 MAY 80)

REFERENCE DATA

SREF = 2690.0000 SQ.FT. XMRP = 976.0000 IN. XT
LREF = 1290.3000 INCHES YMRP = .0000 IN. YT
BREF = 1290.3000 INCHES ZMRP = 400.0000 IN. ZT
SCALE = .0200

PARAMETRIC DATA

IB-ELV =	10.000	OB-ELV =	9.000
BDFLAP =	.000	SPDBRK =	.000
RUDDER =	.000	SILTS =	1.000
MACH =	1.050	RN/L =	3.500

RUN NO. 964/ 0 RN/L = 3.50 GRADIENT INTERVAL = -5.00/ 5.00

ALPHAR	BETAR	CARS	CYNRS	ALFRSU	BETRSU
-4.244	-6.513	.06760	.04420	-4.04530	-6.55650
-4.409	-4.321	.07250	.03930	-4.30480	-4.40730
-4.467	.238	.07780	.04640	-4.41450	.04090
-3.932	4.357	.08310	.05470	-4.04050	4.18430
-4.055	6.225	.08410	.05570	-4.19050	6.07210
	GRADIENT	.00122	.00177	.02949	.98981

RUN NO. 965/ 0 RN/L = 3.50 GRADIENT INTERVAL = -5.00/ 5.00

ALPHAR	BETAR	CARS	CYNRS	ALFRSU	BETRSU
-.307	-7.318	.06800	.05150	-.11240	-7.25790
-.302	-5.163	.07040	.05140	-.10740	-5.10230
-.353	-.933	.07860	.06150	-.15820	-.87290
-.265	3.328	.08490	.06960	-.07060	3.38830
-.261	5.476	.08600	.07220	-.06620	5.53680
	GRADIENT	.00148	.00190	.02056	1.00002

RUN NO. 966/ 0 RN/L = 3.50 GRADIENT INTERVAL = -5.00/ 5.00

ALPHAR	BETAR	CARS	CYNRS	ALFRSU	BETRSU
4.300	-5.789	.07280	.04230	4.16920	-5.94520
4.266	-3.648	.07580	.04650	4.17270	-3.82880
3.985	.026	.07940	.05650	4.04470	-.16870
4.138	3.736	.08250	.06340	4.31800	3.64130
4.126	5.751	.08240	.07040	4.32220	5.69530
	GRADIENT	.00091	.00229	.01977	1.01166

IA156A, AEDC PWT 16T-470, O T S W/SILTS (R8NP59) (10 MAY 80)

REFERENCE DATA

SREF = 2690.0000 SQ.FT. XMRP = 976.0000 IN. XT
LREF = 1290.3000 INCHES YMRP = .0000 IN. YT
BREF = 1290.3000 INCHES ZMRP = 400.0000 IN. ZT
SCALE = .0200

PARAMETRIC DATA

IB-ELV = 10.000 OB-ELV = 9.000
BDFLAP = .000 SPDBRK = .000
RUDDER = .000 SILTS = 1.000
MACH = 1.100 RN/L = 3.500

RUN NO. 967/ 0 RN/L = 3.49 GRADIENT INTERVAL = -5.00/ 5.00

ALPHAR	BETAR	CARS	CYNRS	ALFRSU	BETRSU
-8.596	-6.409	.06130	.01720	-8.42300	-6.51710
-8.733	-4.141	.06850	.01210	-8.58630	-4.28380
-8.743	-.071	.07630	.01380	-8.67890	-.26550
-8.565	4.267	.08010	.02590	-8.60660	4.06730
-8.597	6.203	.08250	.03090	-8.67170	6.01250
	GRADIENT	.00137	.00165	-.00220	.99321

RUN NO. 968/ 0 RN/L = 3.49 GRADIENT INTERVAL = -5.00/ 5.00

ALPHAR	BETAR	CARS	CYNRS	ALFRSU	BETRSU
-6.513	-6.386	.06380	.02950	-6.32580	-6.46920
-6.488	-4.408	.06940	.02600	-6.31960	-4.52360
-6.667	-.103	.07500	.02820	-6.60020	-.29630
-6.440	4.258	.08110	.03810	-6.50310	4.06340
-6.385	6.276	.08330	.04200	-6.48570	6.09840
	GRADIENT	.00135	.00140	-.02108	.99095

RUN NO. 969/ 0 RN/L = 3.49 GRADIENT INTERVAL = -5.00/ 5.00

ALPHAR	BETAR	CARS	CYNRS	ALFRSU	BETRSU
-4.263	-6.521	.06560	.04180	-4.06260	-6.56200
-4.520	-4.331	.06970	.03690	-4.33320	-4.41500
-4.464	.243	.07530	.04390	-4.40870	.04590
-3.937	4.373	.08070	.05140	-4.04350	4.19920
-4.046	6.227	.08280	.05280	-4.17930	6.07240
	GRADIENT	.00126	.00166	.03240	.98938

RUN NO. 970/ 0 RN/L = 3.49 GRADIENT INTERVAL = -5.00/ 5.00

ALPHAR	BETAR	CARS	CYNRS	ALFRSU	BETRSU
-.313	-7.451	.06580	.05120	-.11850	-7.38880
-.295	-5.197	.06640	.05000	-.10030	-5.13470
-.345	-.839	.07390	.05860	-.15020	-.77610
-.251	3.282	.08050	.06550	-.05630	3.34530
-.246	5.476	.08200	.06750	-.05150	5.53940
	GRADIENT	.00160	.00157	.02278	1.00000

IA156A, AEDC PWT 16T-470, 0 T S W/SILTS (R8NP59) (10 MAY 80)

REFERENCE DATA

SREF = 2690.0000 SQ.FT. XMRP = 976.0000 IN. XT
LREF = 1290.3000 INCHES YMRP = .0000 IN. YT
BREF = 1290.3000 INCHES ZMRP = 400.0000 IN. ZT
SCALE = .0200

PARAMETRIC DATA

IB-ELV = 10.000 OB-ELV = 9.000
BDFLAP = .000 SPDBRK = .000
RUDDER = .000 SILTS = 1.000
MACH = 1.100 RN/L = 3.500

RUN NO. 971/ 0 RN/L = 3.49 GRADIENT INTERVAL = -5.00/ 5.00

ALPHAR	BETAR	CARS	CYNRS	ALFRSU	BETRSU
4.453	-5.734	.06800	.03940	4.32660	-5.89380
4.312	-3.669	.07170	.04370	4.21900	-3.85060
4.012	-.017	.07470	.05450	4.07120	-.21240
4.176	3.686	.07820	.06040	4.35710	3.59140
4.150	5.738	.07910	.06770	4.34670	5.68380
	GRADIENT	.00088	.00227	.01891	1.01192

IA156A, AEDC PWT 16T-470, 0 T S W/SILTS (R8NP60) (10 MAY 80)

REFERENCE DATA

SREF = 2690.0000 SQ.FT. XMRP = 976.0000 IN. XT
LREF = 1290.3000 INCHES YMRP = .0000 IN. YT
BREF = 1290.3000 INCHES ZMRP = 400.0000 IN. ZT
SCALE = .0200

PARAMETRIC DATA

IB-ELV = 10.000 OB-ELV = 9.000
BDFLAP = .000 SPDBRK = .000
RUDDER = .000 SILTS = 1.000
MACH = 1.150 RN/L = 3.500

RUN NO. 972/ 0 RN/L = 3.49 GRADIENT INTERVAL = -5.00/ 5.00

ALPHAR	BETAR	CARS	CYNRS	ALFRSU	BETRSU
-8.595	-6.437	.06060	.01750	-8.41870	-6.54470
-8.765	-4.156	.06670	.01020	-8.61560	-4.29910
-8.754	-.043	.07440	.01040	-8.68850	-.23940
-8.569	4.302	.07840	.02200	-8.60910	4.09880
-8.600	6.215	.08050	.02760	-8.67420	6.02170
	GRADIENT	.00138	.00141	.00093	.99298

RUN NO. 973/ 0 RN/L = 3.49 GRADIENT INTERVAL = -5.00/ 5.00

ALPHAR	BETAR	CARS	CYNRS	ALFRSU	BETRSU
-6.514	-6.416	.06160	.02900	-6.32400	-6.49890
-6.451	-4.414	.06700	.02440	-6.27940	-4.52960
-6.648	-.062	.07380	.02510	-6.57960	-.25680
-6.423	4.275	.07910	.03320	-6.48600	4.07750
-6.387	6.298	.08150	.03680	-6.48830	6.11730
	GRADIENT	.00139	.00101	-.02381	.99059

IA156A, AEDC PWT 16T-470, O T S W/SILTS (R8NP60) (10 MAY 80)

REFERENCE DATA

SREF = 2690.0000 SQ.FT. XMRP = 976.0000 IN. XT
LREF = 1290.3000 INCHES YMRP = .0000 IN. YT
BREF = 1290.3000 INCHES ZMRP = 400.0000 IN. ZT
SCALE = .0200

PARAMETRIC DATA

IB-ELV =	10.000	OB-ELV =	9.000
BDFLAP =	.000	SPDBRK =	.000
RUDDER =	.000	SILTS =	1.000
MACH =	1.150	RN/L =	3.500

RUN NO. 974/ 0 RN/L = 3.49 GRADIENT INTERVAL = -5.00/ 5.00

ALPHAR	BETAR	CARS	CYNRS	ALFRSU	BETRSU
-4.249	-6.514	.06290	.04080	-4.04640	-6.55420
-4.497	-4.335	.06730	.03530	-4.30830	-4.41850
-4.453	.257	.07430	.04170	-4.39620	.05790
-3.908	4.381	.07940	.04790	-4.01520	4.20420
-4.051	6.261	.08160	.04890	-4.18480	6.10330
	GRADIENT	.00139	.00144	.03264	.98903

RUN NO. 975/ 0 RN/L = 3.49 GRADIENT INTERVAL = -5.00/ 5.00

ALPHAR	BETAR	CARS	CYNRS	ALFRSU	BETRSU
-.277	-7.326	.06380	.04840	-.08020	-7.26130
-.256	-5.198	.06540	.04860	-.05930	-5.13320
-.293	-.924	.07400	.05650	-.09680	-.85880
-.210	3.276	.08080	.06360	-.01370	3.34090
-.198	5.488	.08210	.06510	-.00160	5.55310
	GRADIENT	.00162	.00169	.01979	1.00002

RUN NO. 976/ 0 RN/L = 3.49 GRADIENT INTERVAL = -5.00/ 5.00

ALPHAR	BETAR	CARS	CYNRS	ALFRSU	BETRSU
4.352	-5.785	.06740	.03900	4.22240	-5.94560
4.364	-3.736	.07070	.04200	4.27010	-3.92020
4.215	.060	.07510	.05200	4.28060	-.13590
4.198	3.655	.07880	.06040	4.38250	3.56020
4.167	5.746	.07900	.06600	4.36700	5.69340
	GRADIENT	.00110	.00249	.01509	1.01201

IA156A, AEDC PWT 16T-470, O T S W/SILTS (R8NP61) (10 MAY 80)

REFERENCE DATA

SREF = 2690.0000 SQ.FT. XMRP = 976.0000 IN. XT
LREF = 1290.3000 INCHES YMRP = .0000 IN. YT
BREF = 1290.3000 INCHES ZMRP = 400.0000 IN. ZT
SCALE = .0200

PARAMETRIC DATA

IB-ELV = 10.000 OB-ELV = 9.000
BDFLAP = .000 SPDBRK = .000
RUDDER = .000 SILTS = 1.000
MACH = 1.250 RN/L = 3.500

RUN NO. 977/ 0 RN/L = 3.51 GRADIENT INTERVAL = -5.00/ 5.00

ALPHAR	BETAR	CARS	CYNRS	ALFRSU	BETRSU
-8.553	-6.434	.05840	.01250	-8.36590	-6.54610
-8.734	-4.162	.06320	.00670	-8.57560	-4.31170
-8.693	-.012	.07170	.00810	-8.62300	-.21850
-8.532	4.323	.07580	.01650	-8.57220	4.10900
-8.600	6.287	.07820	.02030	-8.67710	6.08310
	GRADIENT	.00148	.00116	.00048	.99243

RUN NO. 978/ 0 RN/L = 3.51 GRADIENT INTERVAL = -5.00/ 5.00

ALPHAR	BETAR	CARS	CYNRS	ALFRSU	BETRSU
-6.481	-6.401	.05900	.02430	-6.28010	-6.48690
-6.424	-4.421	.06410	.02050	-6.24240	-4.54140
-6.581	-.040	.07120	.02280	-6.50680	-.24500
-6.389	4.311	.07650	.02670	-6.45350	4.10320
-6.368	6.325	.07880	.03030	-6.47340	6.13420
	GRADIENT	.00142	.00071	-.02422	.98993

RUN NO. 979/ 0 RN/L = 3.52 GRADIENT INTERVAL = -5.00/ 5.00

ALPHAR	BETAR	CARS	CYNRS	ALFRSU	BETRSU
-4.220	-6.530	.05950	.03620	-4.00570	-6.57070
-4.439	-4.330	.06470	.03270	-4.23850	-4.41620
-4.392	.262	.07080	.03570	-4.33060	.05340
-3.896	4.402	.07630	.04120	-4.00720	4.21440
-4.015	6.269	.07960	.04270	-4.15480	6.10210
	GRADIENT	.00133	.00097	.02564	.98817

RUN NO. 980/ 0 RN/L = 3.50 GRADIENT INTERVAL = -5.00/ 5.00

ALPHAR	BETAR	CARS	CYNRS	ALFRSU	BETRSU
-.226	-7.351	.06030	.04580	-.01950	-7.28150
-.207	-5.223	.06260	.04630	-.00030	-5.15270
-.219	-.914	.07170	.05290	-.01290	-.84440
-.136	3.293	.07800	.05960	.07000	3.36340
-.166	5.527	.07970	.06160	.04010	5.59690
	GRADIENT	.00150	.00159	.01970	1.00002

IA156A, AEDC PWT 16T-470, O T S W/SILTS (R8NP61) (10 MAY 80)

REFERENCE DATA

SREF =	2690.0000 SQ.FT.	XMRP =	976.0000 IN. XT		
LREF =	1290.3000 INCHES	YMRP =	.0000 IN. YT		
BREF =	1290.3000 INCHES	ZMRP =	400.0000 IN. ZT		
SCALE =	.0200				

PARAMETRIC DATA

IB-ELV =	10.000	OB-ELV =	9.000
BDFLAP =	.000	SPDBRK =	.000
RUDDER =	.000	SILTS =	1.000
MACH =	1.250	RN/L =	3.500

RUN NO. 981/ 0 RN/L = 3.50 GRADIENT INTERVAL = -5.00/ 5.00

ALPHAR	BETAR	CARS	CYNRS	ALFRSU	BETRSU
4.427	-5.795	.06440	.03680	4.29040	-5.96490
4.405	-3.734	.06760	.03910	4.30710	-3.92870
4.287	.055	.07230	.04920	4.35670	-.15120
4.265	3.637	.07610	.05860	4.45980	3.53780
4.254	5.743	.07740	.06470	4.46470	5.68840
	GRADIENT	.00115	.00265	.02064	1.01283

IA156A, AEDC PWT 16T-470, O T S W/SILTS (R8NP62) (10 MAY 80)

REFERENCE DATA

SREF =	2690.0000 SQ.FT.	XMRP =	976.0000 IN. XT		
LREF =	1290.3000 INCHES	YMRP =	.0000 IN. YT		
BREF =	1290.3000 INCHES	ZMRP =	400.0000 IN. ZT		
SCALE =	.0200				

PARAMETRIC DATA

IB-ELV =	10.000	OB-ELV =	11.000
BDFLAP =	.000	SPDBRK =	.000
RUDDER =	.000	SILTS =	1.000
MACH =	.300	RN/L =	3.500

RUN NO. 985/ 0 RN/L = 2.62 GRADIENT INTERVAL = -5.00/ 5.00

ALPHAR	BETAR	CARS	CYNRS	ALFRSU	BETRSU
-6.197	-10.157	.03560	.03430	-6.06270	-10.32360
-6.159	-5.981	.03960	.02270	-6.06970	-6.17580
-6.069	.162	.04430	.02370	-6.14460	-.03820
-5.809	6.414	.04980	.03580	-6.00750	6.33280
-5.970	10.331	.05270	.04640	-6.18090	10.29660
	GRADIENT	.00000	.00000	.00000	.00000

RUN NO. 986/ 0 RN/L = 2.62 GRADIENT INTERVAL = -5.00/ 5.00

ALPHAR	BETAR	CARS	CYNRS	ALFRSU	BETRSU
-.239	-10.811	.04250	.03860	-.03950	-10.88720
-.235	-6.755	.03940	.03660	-.03460	-6.83110
-.215	-.567	.04520	.04340	-.01480	-.64310
-.185	5.418	.05070	.05200	.01510	5.34120
-.183	9.582	.05380	.06020	.01680	9.50570
	GRADIENT	.00000	.00000	.00000	.00000

IA156A, AEDC PWT 16T-470, O T S W/SILTS (R8NP62) (10 MAY 80)

REFERENCE DATA

SREF = 2690.0000 SQ.FT. XMRP = 976.0000 IN. XT
LREF = 1290.3000 INCHES YMRP = .0000 IN. YT
BREF = 1290.3000 INCHES ZMRP = 400.0000 IN. ZT
SCALE = .0200

PARAMETRIC DATA

IB-ELV = 10.000 OB-ELV = 11.000
BDFLAP = .000 SPDBRK = .000
RUDDER = .000 SILTS = 1.000
MACH = .300 RN/L = 3.500

RUN NO. 987/ 0 RN/L = 2.62 GRADIENT INTERVAL = -5.00/ 5.00

ALPHAR	BETAR	CARS	CYNRS	ALFRSU	BETRSU
6.272	-9.749	.04290	.01900	6.06070	-9.78500
6.050	-5.570	.04090	.02140	5.85360	-5.65550
5.938	.105	.04430	.03510	5.85910	-.09410
6.024	5.986	.04860	.04670	6.11250	5.79120
5.891	9.829	.05180	.05520	6.02480	9.66230
	GRADIENT	.00000	.00000	.00000	.00000

IA156A, AEDC PWT 16T-470, O T S W/SILTS (R8NP63) (10 MAY 80)

REFERENCE DATA

SREF = 2690.0000 SQ.FT. XMRP = 976.0000 IN. XT
LREF = 1290.3000 INCHES YMRP = .0000 IN. YT
BREF = 1290.3000 INCHES ZMRP = 400.0000 IN. ZT
SCALE = .0200

PARAMETRIC DATA

IB-ELV = 10.000 OB-ELV = 11.000
BDFLAP = .000 SPDBRK = .000
RUDDER = .000 SILTS = 1.000
MACH = .300 RN/L = 3.500

RUN NO. 984/ 0 RN/L = 2.64 GRADIENT INTERVAL = -5.00/ 5.00

ALPHAR	BETAR	CARS	CYNRS	ALFRSU	BETRSU
-10.391	-8.110	.03250	.01120	-10.32430	-8.31340
-10.072	-5.913	.03740	.00430	-10.03250	-6.12360
-10.037	.280	.04390	-.00110	-10.11620	.08050
-10.091	6.369	.04780	.02010	-10.26170	6.24020
-10.148	8.352	.04990	.02780	-10.33350	8.24570
	GRADIENT	.00000	.00000	.00000	.00000

RUN NO. 988/ 0 RN/L = 2.63 GRADIENT INTERVAL = -5.00/ 5.00

ALPHAR	BETAR	CARS	CYNRS	ALFRSU	BETRSU
10.219	-7.717	.03920	.00280	10.03380	-7.82360
10.106	-5.667	.03960	.00340	9.93660	-5.79770
9.969	.194	.04530	.01490	9.89360	-.00580
10.174	6.150	.04720	.02530	10.21390	5.93960
10.126	8.101	.04800	.03320	10.19390	7.89830
	GRADIENT	.00000	.00000	.00000	.00000

IA156A, AEDC PWT 16T-470, O T S W/SILTS (R8NP64) (10 MAY 80)

REFERENCE DATA

SREF = 2690.0000 SQ.FT. XMRP = 976.0000 IN. XT
LREF = 1290.3000 INCHES YMRP = .0000 IN. YT
BREF = 1290.3000 INCHES ZMRP = 400.0000 IN. ZT
SCALE = .0200

PARAMETRIC DATA

IB-ELV =	10.000	OB-ELV =	11.000
BDFLAP =	.000	SPDBRK =	.000
RUDDER =	.000	SILTS =	1.000
MACH =	.600	RN/L =	3.500

RUN NO. 989/ 0 RN/L = 3.51 GRADIENT INTERVAL = -5.00/ 5.00

ALPHAR	BETAR	CARS	CYNRS	ALFRSU	BETRSU
-8.236	-8.143	.03280	.02030	-8.14560	-8.33340
-8.276	-6.039	.03600	.01240	-8.21620	-6.24060
-8.316	-3.970	.04050	.00640	-8.29370	-4.17870
-8.218	.088	.04390	.00730	-8.29420	-.10890
-8.132	4.339	.04720	.01840	-8.29240	4.20220
-8.150	6.246	.04870	.02360	-8.33130	6.13850
-8.203	8.287	.05010	.02990	-8.39790	8.20690
	GRADIENT	.00081	.00145	.00016	1.00879

RUN NO. 990/ 0 RN/L = 3.50 GRADIENT INTERVAL = -5.00/ 5.00

ALPHAR	BETAR	CARS	CYNRS	ALFRSU	BETRSU
-6.212	-8.251	.03410	.02890	-6.09510	-8.42600
-6.209	-6.191	.03680	.02280	-6.11900	-6.38140
-6.136	-4.229	.04050	.01840	-6.08120	-4.43260
-6.227	-.015	.04330	.01960	-6.29770	-.21310
-6.076	4.243	.04750	.02830	-6.25060	4.12500
-6.020	6.274	.04920	.03290	-6.21460	6.19430
-6.058	8.273	.05060	.03770	-6.26260	8.22120
	GRADIENT	.00083	.00117	-.01994	1.01008

RUN NO. 991/ 0 RN/L = 3.50 GRADIENT INTERVAL = -5.00/ 5.00

ALPHAR	BETAR	CARS	CYNRS	ALFRSU	BETRSU
-3.994	-8.379	.03610	.03530	-3.84590	-8.52880
-4.252	-6.242	.03740	.03060	-4.12730	-6.41180
-4.174	-4.192	.04060	.02770	-4.08200	-4.38160
-4.160	.273	.04430	.03300	-4.24150	.07890
-3.764	4.304	.04830	.03960	-3.96050	4.22790
-3.850	6.180	.04960	.04210	-4.05630	6.13880
-3.897	8.181	.05100	.04590	-4.10740	8.16540
	GRADIENT	.00090	.00140	.01341	1.01308

REFERENCE DATA

SREF = 2690.0000 SQ.FT. XMRP = 976.0000 IN. XT
LREF = 1290.3000 INCHES YMRP = .0000 IN. YT
BREF = 1290.3000 INCHES ZMRP = 400.0000 IN. ZT
SCALE = .0200

PARAMETRIC DATA

IB-ELV = 10.000 OB-ELV = 11.000
BDFLAP = .000 SPDBRK = .000
RUDDER = .000 SILTS = 1.000
MACH = .600 RN/L = 3.500

RUN NO. 992/ 0 RN/L = 3.50 GRADIENT INTERVAL = -5.00/ 5.00

ALPHAR	BETAR	CARS	CYNRS	ALFRSU	BETRSU
-.228	-9.074	.04010	.03930	-.03200	-9.15060
-.213	-6.979	.03870	.03760	-.01670	-7.05600
-.203	-4.721	.04010	.03780	-.00650	-4.79830
-.197	-.634	.04470	.04440	-.00030	-.71040
-.149	3.451	.04930	.05050	.04700	3.37500
-.157	5.553	.05090	.05360	.03930	5.47820
-.156	7.642	.05250	.05750	.04070	7.56740
	GRADIENT	.00113	.00155	.00655	1.00018

RUN NO. 993/ 0 RN/L = 3.50 GRADIENT INTERVAL = -5.00/ 5.00

ALPHAR	BETAR	CARS	CYNRS	ALFRSU	BETRSU
4.404	-7.803	.04210	.02890	4.19440	-7.82150
4.339	-5.706	.04090	.02970	4.13270	-5.74970
4.293	-3.745	.04130	.03250	4.09860	-3.82720
4.084	.009	.04370	.04230	3.99990	-.18480
4.151	3.853	.04760	.04960	4.23390	3.65900
4.094	5.932	.04990	.05380	4.21780	5.76110
4.080	7.913	.05150	.05700	4.22330	7.75910
	GRADIENT	.00083	.00225	.01798	.98536

RUN NO. 994/ 0 RN/L = 3.50 GRADIENT INTERVAL = -5.00/ 5.00

ALPHAR	BETAR	CARS	CYNRS	ALFRSU	BETRSU
6.475	-7.882	.04200	.02220	6.27120	-7.93690
6.467	-5.820	.04120	.02230	6.27430	-5.90380
6.475	-3.797	.04210	.02450	6.30140	-3.91640
6.184	.103	.04460	.03510	6.10690	-.09280
6.119	3.835	.04750	.04280	6.16550	3.68000
6.099	5.763	.04870	.04620	6.18640	5.57200
6.121	7.979	.05030	.05110	6.23680	7.80340
	GRADIENT	.00070	.00238	-.01786	.98880

IA156A, AEDC PWT 16T-470, O T S W/SILTS (R8NP64) (10 MAY 80)

REFERENCE DATA

SREF =	2690.0000 SQ.FT.	XMRP =	976.0000 IN. XT		
LREF =	1290.3000 INCHES	YMRP =	.0000 IN. YT		
BREF =	1290.3000 INCHES	ZMRP =	400.0000 IN. ZT		
SCALE =	.0200				

PARAMETRIC DATA

IB-ELV =	10.000	OB-ELV =	11.000
BDFLAP =	.000	SPDBRK =	.000
RUDDER =	.000	SILTS =	1.000
MACH =	.600	RN/L =	3.500

RUN NO. 995/ 0 RN/L = 3.50 GRADIENT INTERVAL = -5.00/ 5.00

ALPHAR	BETAR	CARS	CYNRS	ALFRSU	BETRSU
8.429	-7.765	.04020	.01310	8.23530	-7.84760
8.345	-5.697	.04030	.01380	8.16460	-5.80580
8.344	-3.769	.04140	.01670	8.18650	-3.90940
8.278	.089	.04550	.02680	8.19990	-.10680
8.222	3.930	.04740	.03260	8.24230	3.72010
8.305	6.013	.04790	.03630	8.36580	5.81130
8.277	7.985	.04900	.04190	8.36590	7.79440
	GRADIENT	.00078	.00207	.00724	.99092

IA156A, AEDC PWT 16T-470, O T S W/SILTS (R8NP65) (10 MAY 80)

REFERENCE DATA

SREF =	2690.0000 SQ.FT.	XMRP =	976.0000 IN. XT		
LREF =	1290.3000 INCHES	YMRP =	.0000 IN. YT		
BREF =	1290.3000 INCHES	ZMRP =	400.0000 IN. ZT		
SCALE =	.0200				

PARAMETRIC DATA

IB-ELV =	10.000	OB-ELV =	11.000
BDFLAP =	.000	SPDBRK =	.000
RUDDER =	.000	SILTS =	1.000
MACH =	.800	RN/L =	3.500

RUN NO. 996/ 0 RN/L = 3.50 GRADIENT INTERVAL = -5.00/ 5.00

ALPHAR	BETAR	CARS	CYNRS	ALFRSU	BETRSU
-8.381	-6.327	.03510	.01050	-8.22340	-6.46200
-8.456	-4.032	.04180	.00460	-8.32890	-4.19670
-8.415	.034	.04640	.00450	-8.37610	-.16950
-8.329	4.395	.04910	.01400	-8.39450	4.19820
-8.325	6.252	.05080	.01890	-8.42220	6.06880
	GRADIENT	.00086	.00113	-.00774	.99616

RUN NO. 997/ 0 RN/L = 3.50 GRADIENT INTERVAL = -5.00/ 5.00

ALPHAR	BETAR	CARS	CYNRS	ALFRSU	BETRSU
-6.303	-6.303	.03700	.02010	-6.12800	-6.41440
-6.264	-4.335	.04230	.01640	-6.11160	-4.47610
-6.389	.001	.04630	.01740	-6.34780	-.20200
-6.255	4.275	.04990	.02620	-6.34040	4.08530
-5.958	6.461	.05200	.03280	-6.08500	6.29610
	GRADIENT	.00088	.00114	-.02664	.99439

REFERENCE DATA

SREF =	2690.0000 SQ.FT.	XMRP =	976.0000 IN. XT		
LREF =	1290.3000 INCHES	YMRP =	.0000 IN. YT		
BREF =	1290.3000 INCHES	ZMRP =	400.0000 IN. ZT		
SCALE =	.0200				

PARAMETRIC DATA

IB-ELV =	10.000	OB-ELV =	11.000
BDFLAP =	.000	SPDBRK =	.000
RUDDER =	.000	SILTS =	1.000
MACH =	.800	RN/L =	3.500

RUN NO 998/ 0 RN/L = 3.50 GRADIENT INTERVAL = -5.00/ 5.00

ALPHAR	BETAR	CARS	CYNRS	ALFRSU	BETRSU
-4.081	-6.452	.03890	.02960	-3.88520	-6.52210
-4.349	-4.237	.04300	.02590	-4.17530	-4.35060
-4.302	.286	.04680	.03100	-4.27220	.08020
-3.860	4.397	.05070	.03810	-3.98610	4.23270
-3.941	6.250	.05250	.04080	-4.09280	6.10860
	GRADIENT	.00089	.00141	.02119	.99380

RUN NO. 999/ 0 RN/L = 3.50 GRADIENT INTERVAL = -5.00/ 5.00

ALPHAR	BETAR	CARS	CYNRS	ALFRSU	BETRSU
-.208	-7.219	.04240	.03820	-.00410	-7.18040
-.217	-5.063	.04250	.03810	-.01260	-5.02490
-.241	-.785	.04610	.04260	-.03700	-.74720
-.182	3.321	.05120	.04970	.02210	3.35910
-.181	5.470	.05420	.05330	.02260	5.50810
	GRADIENT	.00124	.00173	.01439	1.00000

RUN NO. 1000/ 0 RN/L = 3.51 GRADIENT INTERVAL = -5.00/ 5.00

ALPHAR	BETAR	CARS	CYNRS	ALFRSU	BETRSU
4.415	-5.722	.04410	.03110	4.26490	-5.86610
4.278	-3.620	.04480	.03420	4.15920	-3.79070
4.005	.033	.04610	.04420	4.03940	-.17200
4.134	3.769	.05130	.05090	4.30510	3.65240
4.068	5.815	.05420	.05580	4.26040	5.73660
	GRADIENT	.00088	.00226	.01994	1.00726

RUN NO. 1001/ 0 RN/L = 3.51 GRADIENT INTERVAL = -5.00/ 5.00

ALPHAR	BETAR	CARS	CYNRS	ALFRSU	BETRSU
6.431	-5.787	.04490	.02400	6.31150	-5.95710
6.435	-3.773	.04520	.02570	6.35140	-3.96330
6.100	.051	.04720	.03750	6.13680	-.15300
6.053	3.746	.05100	.04350	6.19860	3.59890
6.180	5.873	.05290	.04810	6.35340	5.75960
	GRADIENT	.00077	.00237	-.02053	1.00562

IA156A, AEDC PWT 16T-470, O T S W/SILTS (R8NP66) (10 MAY 80)

REFERENCE DATA

SREF = 2690.0000 SQ.FT. XMRP = 976.0000 IN. XT
LREF = 1290.3000 INCHES YMRP = .0000 IN. YT
BREF = 1290.3000 INCHES ZMRP = 400.0000 IN. ZT
SCALE = .0200

PARAMETRIC DATA

IB-ELV = 10.000 OB-ELV = 11.000
BDFLAP = .000 SPDBRK = .000
RUDDER = .000 SILTS = 1.000
MACH = .900 RN/L = 3.500

RUN NO. 1002/ 0 RN/L = 3.50 GRADIENT INTERVAL = -5.00/ 5.00

ALPHAR	BETAR	CARS	CYNRS	ALFRSU	BETRSU
-8.382	-6.374	.04070	.00850	-8.21480	-6.49580
-8.536	-4.069	.04720	.00220	-8.39790	-4.22290
-8.484	-.010	.05060	.00390	-8.43190	-.20940
-8.385	4.325	.05250	.01350	-8.43710	4.12450
-8.474	6.244	.05420	.01810	-8.55920	6.05600
	GRADIENT	.00063	.00136	-.00463	.99459

RUN NO. 1003/ 0 RN/L = 3.50 GRADIENT INTERVAL = -5.00/ 5.00

ALPHAR	BETAR	CARS	CYNRS	ALFRSU	BETRSU
-6.361	-6.330	.04270	.01940	-6.17930	-6.42730
-6.319	-4.357	.04750	.01490	-6.15800	-4.48590
-6.468	-.044	.05000	.01600	-6.41220	-.24300
-6.300	4.261	.05460	.02340	-6.37340	4.06760
-6.261	6.284	.05660	.02780	-6.37170	6.10930
	GRADIENT	.00082	.00099	-.02501	.99258

RUN NO. 1004/ 0 RN/L = 3.49 GRADIENT INTERVAL = -5.00/ 5.00

ALPHAR	BETAR	CARS	CYNRS	ALFRSU	BETRSU
-4.098	-6.486	.04470	.03050	-3.89820	-6.54060
-4.410	-4.287	.04900	.02550	-4.22910	-4.38680
-4.367	.267	.04990	.02980	-4.32320	.06540
-3.903	4.384	.05570	.03620	-4.01820	4.21250
-4.001	6.242	.05750	.03900	-4.14370	6.09260
	GRADIENT	.00076	.00123	.02353	.99146

RUN NO. 1005/ 0 RN/L = 3.49 GRADIENT INTERVAL = -5.00/ 5.00

ALPHAR	BETAR	CARS	CYNRS	ALFRSU	BETRSU
-.266	-7.306	.04820	.04020	-.06610	-7.25440
-.272	-5.135	.04890	.03890	-.07180	-5.08340
-.313	-.815	.05130	.04330	-.11240	-.76320
-.245	3.308	.05630	.05070	-.04490	3.35950
-.232	5.457	.05930	.05580	-.03160	5.50850
	GRADIENT	.00121	.00179	.01637	1.00002

IA156A, AEDC PWT 16T-470, 0 T S W/SILTS (R8NP66) (10 MAY 80)

REFERENCE DATA

SREF = 2690.0000 SQ.FT. XMRP = 976.0000 IN. XT
LREF = 1290.3000 INCHES YMRP = .0000 IN. YT
BREF = 1290.3000 INCHES ZMRP = 400.0000 IN. ZT
SCALE = .0200

PARAMETRIC DATA

IB-ELV = 10.000 OB-ELV = 11.000
BDFLAP = .000 SPDBRK = .000
RUDDER = .000 SILTS = 1.000
MACH = .900 RN/L = 3.500

RUN NO. 1006/ 0 RN/L = 3.50 GRADIENT INTERVAL = -5.00/ 5.00

ALPHAR	BETAR	CARS	CYNRS	ALFRSU	BETRSU
4.423	-5.725	.04990	.03340	4.28470	-5.87880
4.265	-3.630	.05130	.03630	4.15910	-3.80710
3.961	.025	.05280	.04550	4.00900	-.17580
4.122	3.746	.05760	.05230	4.29950	3.64130
4.043	5.793	.05980	.05820	4.23910	5.72770
	GRADIENT	.00086	.00217	.01921	1.00984

IA156A, AEDC PWT 16T-470, 0 T S W/SILTS (R8NP67) (10 MAY 80)

REFERENCE DATA

SREF = 2690.0000 SQ.FT. XMRP = 976.0000 IN. XT
LREF = 1290.3000 INCHES YMRP = .0000 IN. YT
BREF = 1290.3000 INCHES ZMRP = 400.0000 IN. ZT
SCALE = .0200

PARAMETRIC DATA

IB-ELV = 10.000 OB-ELV = 11.000
BDFLAP = .000 SPDBRK = .000
RUDDER = .000 SILTS = 1.000
MACH = .950 RN/L = 3.500

RUN NO. 1007/ 0 RN/L = 3.49 GRADIENT INTERVAL = -5.00/ 5.00

ALPHAR	BETAR	CARS	CYNRS	ALFRSU	BETRSU
-8.508	-6.373	.04380	.01290	-8.33930	-6.49050
-8.640	-4.081	.05160	.00640	-8.50040	-4.23060
-8.601	-.027	.05660	.00570	-8.54500	-.22440
-8.480	4.307	.05760	.01370	-8.52820	4.10740
-8.534	6.217	.05940	.01900	-8.61500	6.02870
	GRADIENT	.00071	.00088	-.00323	.99416

RUN NO. 1008/ 0 RN/L = 3.50 GRADIENT INTERVAL = -5.00/ 5.00

ALPHAR	BETAR	CARS	CYNRS	ALFRSU	BETRSU
-6.438	-6.356	.04690	.02460	-6.25530	-6.44860
-6.394	-4.366	.05270	.01940	-6.23110	-4.49060
-6.555	-.057	.05770	.01850	-6.49640	-.25400
-6.394	4.245	.06060	.02550	-6.46310	4.05120
-6.075	6.447	.06290	.03330	-6.18680	6.27550
	GRADIENT	.00092	.00071	-.02695	.99200

IA156A, AEDC PWT 16T-470, 0 T S W/SILTS (R8NP67) (10 MAY 80)

REFERENCE DATA

SREF =	2690.0000 SQ.FT.	XMRP =	976.0000 IN. XT		
LREF =	1290.3000 INCHES	YMRP =	.0000 IN. YT		
BREF =	1290.3000 INCHES	ZMRP =	400.0000 IN. ZT		
SCALE =	.0200				

PARAMETRIC DATA

IB-ELV =	10.000	OB-ELV =	11.000
BDFLAP =	.000	SPDBRK =	.000
RUDDER =	.000	SILTS =	1.000
MACH =	.950	RN/L =	3.500

RUN NO. 1009/ 0 RN/L = 3.50 GRADIENT INTERVAL = -5.00/ 5.00

ALPHAR	BETAR	CARS	CYNRS	ALFRSU	BETRSU
-4.155	-6.494	.04960	.03480	-3.95630	-6.54440
-4.445	-4.279	.05490	.02970	-4.26250	-4.37320
-4.410	.265	.05720	.03390	-4.36290	.06510
-3.922	4.390	.06290	.04190	-4.03420	4.21820
-4.035	6.237	.06470	.04400	-4.17380	6.09630
	GRADIENT	.00092	.00140	.02552	.99079

RUN NO. 1010/ 0 RN/L = 3.50 GRADIENT INTERVAL = -5.00/ 5.00

ALPHAR	BETAR	CARS	CYNRS	ALFRSU	BETRSU
-.263	-7.333	.05090	.04230	-.06570	-7.27760
-.254	-5.128	.05310	.04120	-.05600	-5.07300
-.289	-.869	.05840	.04790	-.09140	-.81330
-.220	3.337	.06450	.05640	-.02200	3.39260
-.219	5.477	.06600	.06080	-.02140	5.53260
	GRADIENT	.00145	.00202	.01650	1.00002

RUN NO. 1011/ 0 RN/L = 3.49 GRADIENT INTERVAL = -5.00/ 5.00

ALPHAR	BETAR	CARS	CYNRS	ALFRSU	BETRSU
4.448	-5.899	.05390	.03560	4.31240	-6.05320
4.247	-3.586	.05700	.03910	4.14670	-3.76530
3.940	.069	.05970	.04870	3.99580	-.12900
4.135	3.789	.06410	.05390	4.31400	3.68860
4.096	5.789	.06610	.06030	4.29170	5.72750
	GRADIENT	.00096	.00201	.02287	1.01077

IA156A, AEDC PWT 16T-470, O T S W/SILTS (R8NP68) (10 MAY 80)

REFERENCE DATA

SREF = 2690.0000 SQ.FT. XMRP = 976.0000 IN. XT
LREF = 1290.3000 INCHES YMRP = .0000 IN. YT
BREF = 1290.3000 INCHES ZMRP = 400.0000 IN. ZT
SCALE = .0200

PARAMETRIC DATA

IB-ELV = 10.000 OB-ELV = 11.000
BDFLAP = .000 SPDBRK = .000
RUDDER = .000 SILTS = 1.000
MACH = 1.050 RN/L = 3.500

RUN NO. 1012/ 0 RN/L = 3.52 GRADIENT INTERVAL = -5.00/ 5.00

ALPHAR	BETAR	CARS	CYNRS	ALFRSU	BETRSU
-8.563	-6.419	.06240	.02100	-8.39210	-6.52930
-8.742	-4.137	.06950	.01460	-8.59860	-4.28130
-8.718	-.078	.07880	.01620	-8.65660	-.27250
-8.519	4.271	.07970	.02840	-8.56290	4.07230
-8.594	6.185	.08280	.03200	-8.67030	5.99640
	GRADIENT	.00120	.00166	.00445	.99355

RUN NO. 1013/ 0 RN/L = 3.50 GRADIENT INTERVAL = -5.00/ 5.00

ALPHAR	BETAR	CARS	CYNRS	ALFRSU	BETRSU
-6.492	-6.390	.06590	.03340	-6.30680	-6.47520
-6.433	-4.413	.07210	.02950	-6.26610	-4.53000
-6.614	-.087	.07720	.03160	-6.55000	-.28070
-6.417	4.237	.08250	.03880	-6.48240	4.04390
-6.381	6.255	.08420	.04460	-6.48310	6.07840
	GRADIENT	.00120	.00108	-.02501	.99122

RUN NO. 1014/ 0 RN/L = 3.50 GRADIENT INTERVAL = -5.00/ 5.00

ALPHAR	BETAR	CARS	CYNRS	ALFRSU	BETRSU
-4.208	-6.537	.06780	.04540	-4.00830	-6.57980
-4.489	-4.335	.07260	.04020	-4.30460	-4.42130
-4.325	.043	.07800	.04880	-4.26350	-.15120
-4.172	4.273	.08330	.05450	-4.27410	4.09630
-4.033	6.209	.08460	.05720	-4.16780	6.05680
	GRADIENT	.00124	.00166	.00358	.98946

RUN NO. 1015/ 0 RN/L = 3.50 GRADIENT INTERVAL = -5.00/ 5.00

ALPHAR	BETAR	CARS	CYNRS	ALFRSU	BETRSU
-.277	-7.355	.06810	.05240	-.08290	-7.29450
-.275	-5.161	.07060	.05240	-.08090	-5.10030
-.340	-.936	.07890	.06280	-.14540	-.87490
-.260	3.237	.08510	.07080	-.06590	3.29820
-.255	5.437	.08630	.07340	-.06030	5.49840
	GRADIENT	.00149	.00192	.01905	1.00000

IA156A, AEDC PWT 16T-470, O T S W/SILTS (R8NP68) (10 MAY 80)

REFERENCE DATA

SREF = 2690.0000 SQ.FT. XMRP = 976.0000 IN. XT
LREF = 1290.3000 INCHES YMRP = .0000 IN. YT
BREF = 1290.3000 INCHES ZMRP = 400.0000 IN. ZT
SCALE = .0200

PARAMETRIC DATA

IB-ELV = 10.000 OB-ELV = 11.000
BDFLAP = .000 SPDBRK = .000
RUDDER = .000 SILTS = 1.000
MACH = 1.050 RN/L = 3.500

RUN NO. 1016/ 0 RN/L = 3.50 GRADIENT INTERVAL = -5.00/ 5.00

ALPHAR	BETAR	CARS	CYNRS	ALFRSU	BETRSU
4.427	-5.734	.07260	.04380	4.29910	-5.89300
4.273	-3.687	.07610	.04770	4.17890	-3.86810
3.964	.004	.07980	.05790	4.02230	-.19070
4.145	3.787	.08280	.06470	4.32560	3.69370
4.099	5.740	.08260	.07140	4.29470	5.68470
	GRADIENT	.00090	.00227	.01987	1.01169

IA156A, AEDC PWT 16T-470, O T S W/SILTS (R8NP69) (10 MAY 80)

REFERENCE DATA

SREF = 2690.0000 SQ.FT. XMRP = 976.0000 IN. XT
LREF = 1290.3000 INCHES YMRP = .0000 IN. YT
BREF = 1290.3000 INCHES ZMRP = 400.0000 IN. ZT
SCALE = .0200

PARAMETRIC DATA

IB-ELV = 10.000 OB-ELV = 11.000
BDFLAP = .000 SPDBRK = .000
RUDDER = .000 SILTS = 1.000
MACH = 1.100 RN/L = 3.500

RUN NO. 1017/ 0 RN/L = 3.50 GRADIENT INTERVAL = -5.00/ 5.00

ALPHAR	BETAR	CARS	CYNRS	ALFRSU	BETRSU
-8.528	-6.340	.06190	.01880	-8.35530	-6.44870
-8.754	-4.130	.06920	.01320	-8.60770	-4.27280
-8.751	-.087	.07630	.01460	-8.68730	-.28100
-8.577	4.303	.08050	.02670	-8.61880	4.10290
-8.580	6.195	.08340	.03180	-8.65510	6.00440
	GRADIENT	.00133	.00162	-.00107	.99329

RUN NO. 1018/ 0 RN/L = 3.50 GRADIENT INTERVAL = -5.00/ 5.00

ALPHAR	BETAR	CARS	CYNRS	ALFRSU	BETRSU
-6.491	-6.386	.06400	.03090	-6.30370	-6.46860
-6.490	-4.432	.06980	.02700	-6.32120	-4.54780
-6.669	-.071	.07550	.02950	-6.60310	-.26400
-6.434	4.257	.08120	.03920	-6.49680	4.06210
-6.266	6.415	.08400	.04400	-6.37030	6.23920
	GRADIENT	.00131	.00140	-.02027	.99088

IA156A, AEDC PWT 16T-470, 0 T S W/SILTS (R8NP69) (10 MAY 80)

REFERENCE DATA

SREF =	2690.0000 SQ.FT.	XMRP =	976.0000 IN. XT		
LREF =	1290.3000 INCHES	YMRP =	.0000 IN. YT		
BREF =	1290.3000 INCHES	ZMRP =	400.0000 IN. ZT		
SCALE =	.0200				

PARAMETRIC DATA

IB-ELV =	10.000	OB-ELV =	11.000
BDFLAP =	.000	SPDBRK =	.000
RUDDER =	.000	SILTS =	1.000
MACH =	1.100	RN/L =	3.500

RUN NO. 1019/ 0 RN/L = 3.50 GRADIENT INTERVAL = -5.00/ 5.00

ALPHAR	BETAR	CARS	CYNRS	ALFRSU	BETRSU
-4.378	-6.531	.06590	.04240	-4.17810	-6.57470
-4.507	-4.341	.07000	.03810	-4.32020	-4.42470
-4.468	.119	.07520	.04510	-4.40670	-.07620
-3.944	4.311	.08080	.05250	-4.04910	4.13610
-4.035	6.206	.08310	.05410	-4.16850	6.05100
	GRADIENT	.00125	.00166	.03080	.98930

RUN NO. 1020/ 0 RN/L = 3.50 GRADIENT INTERVAL = -5.00/ 5.00

ALPHAR	BETAR	CARS	CYNRS	ALFRSU	BETRSU
-.281	-7.382	.06580	.05220	-.08670	-7.31860
-.281	-5.184	.06700	.05120	-.08620	-5.12110
-.333	-.818	.07430	.06020	-.13860	-.75480
-.244	3.355	.08060	.06670	-.04990	3.41800
-.252	5.487	.08230	.06860	-.05770	5.54980
	GRADIENT	.00151	.00156	.02126	1.00000

RUN NO. 1021/ 0 RN/L = 3.50 GRADIENT INTERVAL = -5.00/ 5.00

ALPHAR	BETAR	CARS	CYNRS	ALFRSU	BETRSU
4.443	-5.924	.06840	.04140	4.31370	-6.08260
4.269	-3.604	.07180	.04480	4.17670	-3.78600
4.010	.049	.07520	.05620	4.07250	-.14540
4.173	3.754	.07850	.06170	4.35480	3.66080
4.141	5.739	.07920	.06840	4.33790	5.68520
	GRADIENT	.00091	.00230	.02433	1.01223

IA156A, AEDC PWT 16T-470, 0 T S W/SILTS (R8NP70) (10 MAY 80)

REFERENCE DATA

SREF = 2690.0000 SQ.FT. XMRP = 976.0000 IN. XT
LREF = 1290.3000 INCHES YMRP = .0000 IN. YT
BREF = 1290.3000 INCHES ZMRP = 400.0000 IN. ZT
SCALE = .0200

PARAMETRIC DATA

IB-ELV = 10.000 OB-ELV = 11.000
BDFLAP = .000 SPDBRK = .000
RUDDER = .000 SILTS = 1.000
MACH = 1.150 RN/L = 3.500

RUN NO. 1022/ 0 RN/L = 3.50 GRADIENT INTERVAL = -5.00/ 5.00

ALPHAR	BETAR	CARS	CYNRS	ALFRSU	BETRSU
-8.583	-6.368	.06120	.01890	-8.40770	-6.47710
-8.770	-4.141	.06730	.01170	-8.62070	-4.28410
-8.751	-.053	.07500	.01180	-8.68590	-.24900
-8.571	4.325	.07900	.02310	-8.61140	4.12240
-8.617	6.232	.08070	.02820	-8.69150	6.03930
	GRADIENT	.00138	.00136	.00129	.99305

RUN NO. 1023/ 0 RN/L = 3.50 GRADIENT INTERVAL = -5.00/ 5.00

ALPHAR	BETAR	CARS	CYNRS	ALFRSU	BETRSU
-6.499	-6.399	.06180	.03000	-6.30960	-6.48190
-6.451	-4.422	.06730	.02570	-6.27900	-4.53700
-6.655	-.062	.07410	.02650	-6.58670	-.25730
-6.427	4.271	.07990	.03480	-6.48900	4.07410
-6.250	6.442	.08230	.03950	-6.35420	6.26410
	GRADIENT	.00145	.00105	-.02420	.99059

RUN NO. 1024/ 0 RN/L = 3.50 GRADIENT INTERVAL = -5.00/ 5.00

ALPHAR	BETAR	CARS	CYNRS	ALFRSU	BETRSU
-4.372	-6.536	.06330	.04150	-4.16940	-6.57890
-4.501	-4.337	.06800	.03650	-4.31200	-4.42120
-4.453	.253	.07450	.04350	-4.39600	.05450
-3.925	4.367	.07980	.04930	-4.03130	4.18970
-4.039	6.247	.08230	.05050	-4.17250	6.08960
	GRADIENT	.00136	.00147	.03128	.98898

RUN NO. 1025/ 0 RN/L = 3.50 GRADIENT INTERVAL = -5.00/ 5.00

ALPHAR	BETAR	CARS	CYNRS	ALFRSU	BETRSU
-.247	-7.417	.06390	.04960	-.05040	-7.35160
-.235	-5.225	.06590	.04990	-.03930	-5.15900
-.291	-.858	.07430	.05790	-.09550	-.79270
-.206	3.287	.08090	.06480	-.00990	3.35250
-.207	5.498	.08230	.06620	-.01080	5.56330
	GRADIENT	.00159	.00166	.02065	1.00002

IA156A, AEDC PWT 16T-470, 0 T S W/SILTS (R8NP70) (10 MAY 80)

REFERENCE DATA

SREF = 2690.0000 SQ.FT. XMRP = 976.0000 IN. XT
LREF = 1290.3000 INCHES YMRP = .0000 IN. YT
BREF = 1290.3000 INCHES ZMRP = 400.0000 IN. ZT
SCALE = .0200

PARAMETRIC DATA

IB-ELV = 10.000 OB-ELV = 11.000
BDFLAP = .000 SPDBRK = .000
RUDDER = .000 SILTS = 1.000
MACH = 1.150 RN/L = 3.500

RUN NO. 1026/ 0 RN/L = 3.50 GRADIENT INTERVAL = -5.00/ 5.00

ALPHAR	BETAR	CARS	CYNRS	ALFRSU	BETRSU
4.504	-5.745	.06740	.04030	4.37700	-5.90810
4.333	-3.650	.07120	.04330	4.24080	-3.83490
4.085	-.007	.07550	.05360	4.14720	-.20390
4.212	3.700	.07890	.06140	4.39680	3.60700
4.163	5.735	.07950	.06730	4.36320	5.68320
	GRADIENT	.00105	.00246	.02136	1.01251

IA156A, AEDC PWT 16T-470, 0 T S W/SILTS (R8NP71) (10 MAY 80)

REFERENCE DATA

SREF = 2690.0000 SQ.FT. XMRP = 976.0000 IN. XT
LREF = 1290.3000 INCHES YMRP = .0000 IN. YT
BREF = 1290.3000 INCHES ZMRP = 400.0000 IN. ZT
SCALE = .0200

PARAMETRIC DATA

IB-ELV = 12.000 OB-ELV = 11.000
BDFLAP = .000 SPDBRK = .000
RUDDER = .000 SILTS = 1.000
MACH = .600 RN/L = 3.500

RUN NO. 1030/ 0 RN/L = 3.50 GRADIENT INTERVAL = -5.00/ 5.00

ALPHAR	BETAR	CARS	CYNRS	ALFRSU	BETRSU
-8.353	-8.174	.03200	.01920	-8.26480	-8.36540
-8.250	-6.102	.03580	.01220	-8.19070	-6.30490
-8.291	-4.026	.04060	.00590	-8.27030	-4.23610
-8.220	.215	.04350	.00700	-8.29990	.02010
-8.135	4.267	.04660	.01720	-8.29480	4.12960
-8.009	6.363	.04860	.02400	-8.19300	6.25960
-8.049	8.426	.04990	.02990	-8.24530	8.34940
	GRADIENT	.00072	.00135	-.00299	1.00869

RUN NO. 1031/ 0 RN/L = 3.49 GRADIENT INTERVAL = -5.00/ 5.00

ALPHAR	BETAR	CARS	CYNRS	ALFRSU	BETRSU
-6.222	-8.263	.03390	.02850	-6.10580	-8.43930
-6.193	-6.188	.03650	.02240	-6.10390	-6.37900
-6.134	-4.223	.04050	.01750	-6.08090	-4.42710
-6.216	.000	.04330	.01890	-6.28850	-.19770
-6.069	4.249	.04720	.02770	-6.24300	4.13020
-6.027	6.271	.04900	.03180	-6.22190	6.19060
-5.844	8.452	.05080	.03860	-6.04960	8.40490
	GRADIENT	.00079	.00120	-.01911	1.01016

IA156A, AEDC PWT 16T-470, 0 T S W/SILTS (R8NP71) (10 MAY 80)

REFERENCE DATA

SREF = 2690.0000 SQ.FT. XMRP = 976.0000 IN. XT
LREF = 1290.3000 INCHES YMRP = .0000 IN. YT
BREF = 1290.3000 INCHES ZMRP = 400.0000 IN. ZT
SCALE = .0200

PARAMETRIC DATA

IB-ELV = 12.000 OB-ELV = 11.000
BDFLAP = .000 SPDBRK = .000
RUDDER = .000 SILTS = 1.000
MACH = .600 RN/L = 3.500

RUN NO. 1042/ 0 RN/L = 3.50 GRADIENT INTERVAL = -5.00/ 5.00

ALPHAR	BETAR	CARS	CYNRS	ALFRSU	BETRSU
-4.131	-8.172	.03580	.03340	-3.98680	-8.32550
-4.207	-6.226	.03740	.02970	-4.08340	-6.39770
-4.247	-4.145	.04020	.02610	-4.15740	-4.33540
-4.155	.318	.04410	.03190	-4.23890	.12440
-3.758	4.325	.04820	.03850	-3.95420	4.24880
-3.844	6.194	.04950	.04080	-4.05000	6.15230
-3.896	8.191	.05110	.04450	-4.10680	8.17660
	GRADIENT	.00094	.00146	.02319	1.01319

RUN NO. 1043/ 0 RN/L = 3.50 GRADIENT INTERVAL = -5.00/ 5.00

ALPHAR	BETAR	CARS	CYNRS	ALFRSU	BETRSU
-.220	-9.073	.04020	.03800	-.02420	-9.14980
-.204	-6.861	.03870	.03680	-.00750	-6.93860
-.193	-4.812	.03990	.03660	.00280	-4.88820
-.188	-.635	.04450	.04310	.00860	-.71060
-.138	3.452	.04920	.04930	.05820	3.37500
-.148	5.554	.05080	.05220	.04850	5.47810
-.153	7.655	.05230	.05610	.04360	7.58010
	GRADIENT	.00113	.00154	.00668	.99996

RUN NO. 1044/ 0 RN/L = 3.50 GRADIENT INTERVAL = -5.00/ 5.00

ALPHAR	BETAR	CARS	CYNRS	ALFRSU	BETRSU
4.255	-7.916	.04180	.02840	4.04570	-7.93280
4.335	-5.748	.04090	.02900	4.12970	-5.79240
4.309	-3.779	.04140	.03150	4.11550	-3.86160
4.220	.108	.04370	.04110	4.14320	-.08820
4.152	3.921	.04750	.04840	4.23830	3.72860
4.099	5.943	.04980	.05270	4.22390	5.77380
4.087	7.912	.05150	.05610	4.23140	7.75850
	GRADIENT	.00079	.00220	.01592	.98578

REFERENCE DATA

SREF =	2690.0000 SQ.FT.	XMRP =	976.0000 IN. XT		
LREF =	1290.3000 INCHES	YMRP =	.0000 IN. YT		
BREF =	1290.3000 INCHES	ZMRP =	400.0000 IN. ZT		
SCALE =	.0200				

PARAMETRIC DATA

IB-ELV =	12.000	OB-ELV =	11.000
BDFLAP =	.000	SPDBRK =	.000
RUDDER =	.000	SILTS =	1.000
MACH =	.600	RN/L =	3.500

RUN NO. 1045/ 0 RN/L = 3.51 GRADIENT INTERVAL = -5.00/ 5.00

ALPHAR	BETAR	CARS	CYNRS	ALFRSU	BETRSU
6.477	-7.864	.04170	.02110	6.27580	-7.92220
6.483	-5.824	.04120	.02150	6.29100	-5.90890
6.469	-3.798	.04200	.02370	6.29630	-3.91870
6.185	.110	.04460	.03460	6.10920	-.08630
6.123	3.885	.04730	.04190	6.17150	3.68100
6.060	5.925	.04880	.04580	6.15050	5.73520
6.113	7.921	.05020	.05000	6.22930	7.74670
	GRADIENT	.00069	.00237	-.01643	.98908

RUN NO. 1046/ 0 RN/L = 3.51 GRADIENT INTERVAL = -5.00/ 5.00

ALPHAR	BETAR	CARS	CYNRS	ALFRSU	BETRSU
8.399	-7.743	.04060	.01250	8.20720	-7.82860
8.336	-5.695	.04040	.01330	8.15770	-5.80590
8.353	-3.759	.04170	.01620	8.19630	-3.89960
8.378	.087	.04530	.02600	8.20150	-.10910
8.337	4.022	.04720	.03070	8.35980	3.81240
8.296	5.986	.04770	.03500	8.35720	5.78500
8.296	8.003	.04880	.04090	8.38650	7.81380
	GRADIENT	.00071	.00186	.02109	.99122

IA156A, AEDC PWT 16T-470, 0 T S W/SILTS (R8NP72) (10 MAY 80)

REFERENCE DATA

SREF = 2690.0000 SQ.FT. XMRP = 976.0000 IN. XT
LREF = 1290.3000 INCHES YMRP = .0000 IN. YT
BREF = 1290.3000 INCHES ZMRP = 400.0000 IN. ZT
SCALE = .0200

PARAMETRIC DATA

IB-ELV = 12.000 OB-ELV = 11.000
BDFLAP = .000 SPDBRK = .000
RUDDER = .000 SILTS = 1.000
MACH = .800 RN/L = 3.500

RUN NO. 1047/ 0 RN/L = 3.50 GRADIENT INTERVAL = -5.00/ 5.00

ALPHAR	BETAR	CARS	CYNRS	ALFRSU	BETRSU
-8.495	-6.205	.03490	.00890	-8.33900	-6.34180
-8.461	-4.106	.04150	.00370	-8.33310	-4.26940
-8.411	.198	.04650	.00390	-8.37580	-.00680
-8.316	4.300	.04920	.01330	-8.37930	4.10230
-8.340	6.264	.05050	.01810	-8.43690	6.08070
	GRADIENT	.00092	.00113	-.00553	.99587

RUN NO. 1048/ 0 RN/L = 3.50 GRADIENT INTERVAL = -5.00/ 5.00

ALPHAR	BETAR	CARS	CYNRS	ALFRSU	BETRSU
-6.292	-6.299	.03700	.01910	-6.11650	-6.41080
-6.242	-4.325	.04230	.01560	-6.08930	-4.46630
-6.393	-.004	.04630	.01590	-6.35100	-.20740
-6.240	4.275	.04970	.02510	-6.32570	4.08610
-5.989	6.416	.05180	.03130	-6.11500	6.25120
	GRADIENT	.00086	.00110	-.02754	.99440

RUN NO. 1049/ 0 RN/L = 3.50 GRADIENT INTERVAL = -5.00/ 5.00

ALPHAR	BETAR	CARS	CYNRS	ALFRSU	BETRSU
-4.128	-6.395	.03850	.02830	-3.93380	-6.46680
-4.348	-4.248	.04280	.02460	-4.17340	-4.36110
-4.300	.283	.04680	.03000	-4.26960	.07730
-3.839	4.381	.05050	.03750	-3.96530	4.21670
-3.938	6.255	.05260	.04000	-4.08990	6.11350
-3.891	6.465	.05300	.04040	-4.04620	6.32700
	GRADIENT	.00089	.00149	.02332	.99377

RUN NO. 1050/ 0 RN/L = 3.50 GRADIENT INTERVAL = -5.00/ 5.00

ALPHAR	BETAR	CARS	CYNRS	ALFRSU	BETRSU
-.208	-7.170	.04200	.03700	-.00430	-7.13180
-.207	-5.042	.04250	.03680	-.00290	-5.00330
-.231	-.812	.04590	.04190	-.02680	-.77410
-.175	3.361	.05090	.04830	.02920	3.39920
-.166	5.472	.05390	.05200	.03840	5.51050
	GRADIENT	.00120	.00153	.01342	1.00002

IA156A, AEDC PWT 16T-470, O T S W/SILTS (R8NP72) (10 MAY 80)

REFERENCE DATA

SREF =	2690.0000 SQ.FT.	XMRP =	976.0000 IN. XT		
LREF =	1290.3000 INCHES	YMRP =	.0000 IN. YT		
BREF =	1290.3000 INCHES	ZMRP =	400.0000 IN. ZT		
SCALE =	.0200				

PARAMETRIC DATA

IB-ELV =	12.000	OB-ELV =	11.000
BDFLAP =	.000	SPDBRK =	.000
RUDDER =	.000	SILTS =	1.000
MACH =	.800	RN/L =	3.500

RUN NO. 1051/ 0 RN/L = 3.49 GRADIENT INTERVAL = -5.00/ 5.00

ALPHAR	BETAR	CARS	CYNRS	ALFRSU	BETRSU
4.411	-5.689	.04400	.03000	4.26170	-5.83310
4.295	-3.690	.04450	.03320	4.17440	-3.85860
4.165	.094	.04610	.04290	4.20300	-.11010
4.110	3.733	.05120	.04970	4.28150	3.61580
4.074	5.817	.05400	.05480	4.26810	5.73930
	GRADIENT	.00090	.00223	.01438	1.00687

RUN NO. 1052/ 0 RN/L = 3.50 GRADIENT INTERVAL = -5.00/ 5.00

ALPHAR	BETAR	CARS	CYNRS	ALFRSU	BETRSU
6.455	-5.776	.04460	.02300	6.33570	-5.94560
6.433	-3.769	.04510	.02490	6.34950	-3.95970
6.114	.054	.04690	.03610	6.15100	-.15030
6.059	3.840	.05070	.04280	6.20660	3.69390
6.143	5.750	.05250	.04660	6.31550	5.63500
	GRADIENT	.00074	.00235	-.01883	1.00581

IA156A, AEDC PWT 16T-470, O T S W/SILTS (R8NP73) (10 MAY 80)

REFERENCE DATA

SREF =	2690.0000 SQ.FT.	XMRP =	976.0000 IN. XT		
LREF =	1290.3000 INCHES	YMRP =	.0000 IN. YT		
BREF =	1290.3000 INCHES	ZMRP =	400.0000 IN. ZT		
SCALE =	.0200				

PARAMETRIC DATA

IB-ELV =	12.000	OB-ELV =	11.000
BDFLAP =	.000	SPDBRK =	.000
RUDDER =	.000	SILTS =	1.000
MACH =	.900	RN/L =	3.500

RUN NO. 1053/ 0 RN/L = 3.50 GRADIENT INTERVAL = -5.00/ 5.00

ALPHAR	BETAR	CARS	CYNRS	ALFRSU	BETRSU
-8.513	-6.270	.04090	.00680	-8.34800	-6.39390
-8.499	-4.111	.04690	.00190	-8.36020	-4.26460
-8.506	.151	.05030	.00380	-8.45750	-.04940
-8.373	4.228	.05280	.01260	-8.42340	4.02740
	GRADIENT	.00071	.00128	-.00769	.99431

IA156A, AEDC PWT 16T-470, O T S W/SILTS (R8NP73) (10 MAY 80)

REFERENCE DATA

SREF = 2690.0000 SQ.FT. XMRP = 976.0000 IN. XT
LREF = 1290.3000 INCHES YMRP = .0000 IN. YT
BREF = 1290.3000 INCHES ZMRP = 400.0000 IN. ZT
SCALE = .0200

PARAMETRIC DATA

IB-ELV = 12.000 OB-ELV = 11.000
BDFLAP = .000 SPDBRK = .000
RUDDER = .000 SILTS = 1.000
MACH = .900 RN/L = 3.500

RUN NO. 1054/ 0 RN/L = 3.50 GRADIENT INTERVAL = -5.00/ 5.00

ALPHAR	BETAR	CARS	CYNRS	ALFRSU	BETRSU
-6.348	-6.322	.04240	.01880	-6.16600	-6.41960
-6.327	-4.352	.04710	.01440	-6.16590	-4.48180
-6.466	-.027	.04950	.01550	-6.41120	-.22620
-6.304	4.268	.05440	.02240	-6.37700	4.07440
-6.108	6.406	.05680	.02840	-6.22230	6.23400
	GRADIENT	.00085	.00093	-.02453	.99260

RUN NO. 1055/ 0 RN/L = 3.50 GRADIENT INTERVAL = -5.00/ 5.00

ALPHAR	BETAR	CARS	CYNRS	ALFRSU	BETRSU
-4.192	-6.438	.04470	.02910	-3.99380	-6.49540
-4.396	-4.286	.04870	.02440	-4.21470	-4.38500
-4.367	.267	.04990	.02910	-4.32330	.06500
-3.898	4.377	.05590	.03520	-4.01390	4.20600
-4.002	6.252	.05780	.03830	-4.14480	6.10190
	GRADIENT	.00082	.00124	.02234	.99142

RUN NO. 1056/ 0 RN/L = 3.50 GRADIENT INTERVAL = -5.00/ 5.00

ALPHAR	BETAR	CARS	CYNRS	ALFRSU	BETRSU
-.260	-7.331	.04800	.03950	-.05980	-7.27920
-.258	-5.116	.04880	.03800	-.05840	-5.06460
-.300	-.792	.05130	.04260	-.09990	-.74020
-.230	3.301	.05610	.04980	-.02960	3.35260
-.219	5.468	.05900	.05460	-.01930	5.52010
	GRADIENT	.00117	.00176	.01718	1.00002

RUN NO. 1058/ 0 RN/L = 3.51 GRADIENT INTERVAL = -5.00/ 5.00

ALPHAR	BETAR	CARS	CYNRS	ALFRSU	BETRSU
4.435	-5.728	.04970	.03220	4.29640	-5.88110
4.283	-3.646	.05140	.03540	4.17670	-3.82260
3.956	.003	.05280	.04470	4.00300	-.13830
4.119	3.741	.05720	.05120	4.29720	3.63590
4.052	5.783	.05990	.05730	4.24840	5.71720
	GRADIENT	.00079	.00214	.01657	1.00980

REFERENCE DATA

SREF =	2690.0000 SQ.FT.	XMRP =	976.0000 IN. XT		
LREF =	1290.3000 INCHES	YMRP =	.0000 IN. YT		
BREF =	1290.3000 INCHES	ZMRP =	400.0000 IN. ZT		
SCALE =	.0200				

PARAMETRIC DATA

IB-ELV =	12.000	OB-ELV =	11.000
BDFLAP =	.000	SPDBRK =	.000
RUDDER =	.000	SILTS =	1.000
MACH =	.950	RN/L =	3.500

RUN NO. 1059/ 0 RN/L = 3.50 GRADIENT INTERVAL = -5.00/ 5.00

ALPHAR	BETAR	CARS	CYNRS	ALFRSU	BETRSU
-8.577	-6.257	.04420	.01130	-8.41040	-6.37700
-8.635	-4.127	.05130	.00530	-8.49460	-4.27690
-8.600	.204	.05620	.00520	-8.54950	.00450
-8.474	4.266	.05750	.01280	-8.52150	4.06600
-8.543	6.219	.05960	.01780	-8.62440	6.03000
	GRADIENT	.00074	.00088	-.00331	.99395

RUN NO. 1060/ 0 RN/L = 3.50 GRADIENT INTERVAL = -5.00/ 5.00

ALPHAR	BETAR	CARS	CYNRS	ALFRSU	BETRSU
-6.430	-6.353	.04660	.02400	-6.24700	-6.44570
-6.390	-4.363	.05270	.01860	-6.22650	-4.48760
-6.540	-.055	.05770	.01790	-6.48140	-.25170
-6.378	4.248	.06080	.02450	-6.44750	4.05490
-6.081	6.411	.06350	.03230	-6.19240	6.23900
	GRADIENT	.00094	.00069	-.02567	.99203

RUN NO. 1061/ 0 RN/L = 3.50 GRADIENT INTERVAL = -5.00/ 5.00

ALPHAR	BETAR	CARS	CYNRS	ALFRSU	BETRSU
-4.181	-6.441	.04940	.03380	-3.98270	-6.49230
-4.436	-4.285	.05470	.02900	-4.25380	-4.37940
-4.396	.267	.05740	.03320	-4.34930	.06710
-3.920	4.396	.06310	.04040	-4.03240	4.22350
-4.017	6.241	.06460	.04280	-4.15580	6.08970
	GRADIENT	.00096	.00131	.02471	.99079

RUN NO. 1062/ 0 RN/L = 3.50 GRADIENT INTERVAL = -5.00/ 5.00

ALPHAR	BETAR	CARS	CYNRS	ALFRSU	BETRSU
-.253	-7.335	.05050	.04140	-.05480	-7.27970
-.239	-5.153	.05300	.04060	-.04170	-5.09720
-.267	-.823	.05820	.04750	-.06970	-.76790
-.193	3.285	.06390	.05560	.00450	3.34020
-.197	5.453	.06510	.05950	.00030	5.50850
	GRADIENT	.00139	.00197	.01806	1.00000

IA156A, AEDC PWT 16T-470, 0 T S W/SILTS (R8NP74) (10 MAY 80)

REFERENCE DATA

SREF =	2690.0000 SQ.FT.	XMRP =	976.0000 IN. XT		
LREF =	1290.3000 INCHES	YMRP =	.0000 IN. YT		
BREF =	1290.3000 INCHES	ZMRP =	400.0000 IN. ZT		
SCALE =	.0200				

PARAMETRIC DATA

IB-ELV =	12.000	OB-ELV =	11.000
BDFLAP =	.000	SPDBRK =	.000
RUDDER =	.000	SILTS =	1.000
MACH =	.950	RN/L =	3.500

RUN NO. 1063/ 0 RN/L = 3.50 GRADIENT INTERVAL = -5.00/ 5.00

ALPHAR	BETAR	CARS	CYNRS	ALFRSU	BETRSU
4.326	-5.804	.05350	.03470	4.18890	-5.95640
4.298	-3.728	.05640	.03780	4.19430	-3.90540
4.122	.060	.05950	.04750	4.17670	-.13780
4.104	3.667	.06360	.05290	4.28170	3.56500
4.090	5.768	.06520	.05880	4.28570	5.70670
	GRADIENT	.00097	.00205	.01168	1.01005

IA156A, AEDC PWT 16T-470, 0 T S W/SILTS (R8NP75) (10 MAY 80)

REFERENCE DATA

SREF =	2690.0000 SQ.FT.	XMRP =	976.0000 IN. XT		
LREF =	1290.3000 INCHES	YMRP =	.0000 IN. YT		
BREF =	1290.3000 INCHES	ZMRP =	400.0000 IN. ZT		
SCALE =	.0200				

PARAMETRIC DATA

IB-ELV =	12.000	OB-ELV =	11.000
BDFLAP =	.000	SPDBRK =	.000
RUDDER =	.000	SILTS =	1.000
MACH =	1.050	RN/L =	3.500

RUN NO. 1064/ 0 RN/L = 3.50 GRADIENT INTERVAL = -5.00/ 5.00

ALPHAR	BETAR	CARS	CYNRS	ALFRSU	BETRSU
-8.653	-6.306	.06300	.01880	-8.48290	-6.41870
-8.705	-4.180	.06980	.01370	-8.56000	-4.32340
-8.702	.158	.07800	.01550	-8.64600	-.03760
-8.548	4.209	.08040	.02790	-8.59040	4.00920
-8.606	6.192	.08270	.03090	-8.68260	6.00320
	GRADIENT	.00127	.00168	-.00382	.99326

RUN NO. 1065/ 0 RN/L = 3.51 GRADIENT INTERVAL = -5.00/ 5.00

ALPHAR	BETAR	CARS	CYNRS	ALFRSU	BETRSU
-6.489	-6.400	.06570	.03230	-6.30420	-6.48530
-6.428	-4.400	.07220	.02810	-6.26190	-4.51740
-6.614	-.093	.07720	.03050	-6.54960	-.28680
-6.388	4.230	.08230	.03780	-6.45280	4.03740
-6.394	6.268	.08380	.04320	-6.49650	6.09210
	GRADIENT	.00117	.00112	-.02209	.99122

IA156A, AEDC PWT 16T-470, O T S W/SILTS (R8NP75) (10 MAY 80)

REFERENCE DATA

SREF = 2690.0000 SQ.FT. XMRP = 976.0000 IN. XT
LREF = 1290.3000 INCHES YMRP = .0000 IN. YT
BREF = 1290.3000 INCHES ZMRP = 400.0000 IN. ZT
SCALE = .0200

PARAMETRIC DATA

IB-ELV = 12.000 OB-ELV = 11.000
BDFLAP = .000 SPDBRK = .000
RUDDER = .000 SILTS = 1.000
MACH = 1.050 RN/L = 3.500

RUN NO. 1066/ 0 RN/L = 3.50 GRADIENT INTERVAL = -5.00/ 5.00

ALPHAR	BETAR	CARS	CYNRS	ALFRSU	BETRSU
-4.236	-6.492	.06780	.04420	-4.03740	-6.53590
-4.472	-4.330	.07300	.03940	-4.28740	-4.41640
-4.451	.221	.07770	.04650	-4.39880	.02470
-3.933	4.367	.08310	.05450	-4.04100	4.19440
-4.045	6.227	.08410	.05550	-4.18010	6.07410
	GRADIENT	.00116	.00173	.02747	.98987

RUN NO. 1067/ 0 RN/L = 3.50 GRADIENT INTERVAL = -5.00/ 5.00

ALPHAR	BETAR	CARS	CYNRS	ALFRSU	BETRSU
-.266	-7.399	.06790	.05160	-.07180	-7.33810
-.260	-5.205	.07030	.05140	-.06540	-5.14410
-.331	-.847	.07840	.06170	-.13630	-.78040
-.245	3.265	.08440	.06960	-.05040	3.32600
-.236	5.442	.08600	.07220	-.04170	5.50320
	GRADIENT	.00146	.00192	.02089	1.00000

RUN NO. 1068/ 0 RN/L = 3.50 GRADIENT INTERVAL = -5.00/ 5.00

ALPHAR	BETAR	CARS	CYNRS	ALFRSU	BETRSU
4.329	-5.819	.07230	.04320	4.19790	-5.97550
4.279	-3.741	.07580	.04650	4.18300	-3.92080
4.119	.043	.07950	.05670	4.17940	-.15140
4.135	3.648	.08250	.06330	4.31440	3.55130
4.125	5.739	.08240	.06980	4.32080	5.68320
	GRADIENT	.00091	.00228	.01763	1.01108

IA156A, AEDC PWT 16T-470, O T S W/SILTS (R8NP76) (10 MAY 80)

REFERENCE DATA

SREF = 2690.0000 SQ.FT. XMRP = 976.0000 IN. XT
LREF = 1290.3000 INCHES YMRP = .0000 IN. YT
BREF = 1290.3000 INCHES ZMRP = 400.0000 IN. ZT
SCALE = .0200

PARAMETRIC DATA

IB-ELV = 12.000 OB-ELV = 11.000
BDFLAP = .000 SPDBRK = .000
RUDDER = .000 SILTS = 1.000
MACH = 1.100 RN/L = 3.500

RUN NO. 1069/ 0 RN/L = 3.50 GRADIENT INTERVAL = -5.00/ 5.00

ALPHAR	BETAR	CARS	CYNRS	ALFRSU	BETRSU
-8.661	-6.424	.06130	.01710	-8.48770	-6.53340
-8.738	-4.239	.06860	.01250	-8.59050	-4.38040
-8.750	.040	.07680	.01380	-8.68900	-.15510
-8.579	4.180	.08030	.02540	-8.61860	3.97980
-8.589	6.172	.08240	.03090	-8.66390	5.98160
	GRADIENT	.00139	.00153	-.00345	.99291

RUN NO. 1070/ 0 RN/L = 3.50 GRADIENT INTERVAL = -5.00/ 5.00

ALPHAR	BETAR	CARS	CYNRS	ALFRSU	BETRSU
-6.503	-6.404	.06390	.02980	-6.31670	-6.48720
-6.462	-4.428	.06980	.02610	-6.29300	-4.54320
-6.676	-.076	.07500	.02750	-6.61000	-.26940
-6.432	4.250	.08110	.03760	-6.49430	4.05530
-6.225	6.391	.08340	.04300	-6.32890	6.21500
	GRADIENT	.00130	.00132	-.02325	.99086

RUN NO. 1071/ 0 RN/L = 3.50 GRADIENT INTERVAL = -5.00/ 5.00

ALPHAR	BETAR	CARS	CYNRS	ALFRSU	BETRSU
-4.272	-6.500	.06580	.04180	-4.07200	-6.54160
-4.507	-4.343	.07020	.03710	-4.32070	-4.42740
-4.469	.243	.07500	.04410	-4.41430	.04660
-3.943	4.375	.08060	.05100	-4.04960	4.20000
-4.035	6.227	.08260	.05250	-4.16880	6.07230
	GRADIENT	.00119	.00159	.03015	.98938

RUN NO. 1072/ 0 RN/L = 3.50 GRADIENT INTERVAL = -5.00/ 5.00

ALPHAR	BETAR	CARS	CYNRS	ALFRSU	BETRSU
-.266	-7.421	.06570	.05110	-.07130	-7.35770
-.266	-5.225	.06670	.05030	-.07170	-5.16220
-.315	-.845	.07370	.05880	-.12070	-.78190
-.235	3.280	.08020	.06550	-.04020	3.34360
-.228	5.484	.08210	.06750	-.03350	5.54730
	GRADIENT	.00158	.00162	.01951	1.00005

IA156A, AEDC PWT 16T-470, O T S W/SILTS (R8NP76) (10 MAY 80)

REFERENCE DATA

SREF = 2690.0000 SQ.FT. XMRP = 976.0000 IN. XT
LREF = 1290.3000 INCHES YMRP = .0000 IN. YT
BREF = 1290.3000 INCHES ZMRP = 400.0000 IN. ZT
SCALE = .0200

PARAMETRIC DATA

IB-ELV = 12.000 OB-ELV = 11.000
BDFLAP = .000 SPDBRK = .000
RUDDER = .000 SILTS = 1.000
MACH = 1.100 RN/L = 3.500

RUN NO. 1073/ 0 RN/L = 3.51 GRADIENT INTERVAL = -5.00/ 5.00

ALPHAR	BETAR	CARS	CYNRS	ALFRSU	BETRSU
4.484	-5.719	.06800	.04050	4.35780	-5.87980
4.299	-3.731	.07170	.04390	4.20370	-3.91190
4.161	.041	.07490	.05490	4.22360	-.15430
4.181	3.626	.07830	.06060	4.36130	3.52990
4.145	5.723	.07910	.06760	4.34290	5.66850
	GRADIENT	.00090	.00228	.02128	1.01138

IA156A, AEDC PWT 16T-470, O T S W/SILTS (R8NP77) (10 MAY 80)

REFERENCE DATA

SREF = 2690.0000 SQ.FT. XMRP = 976.0000 IN. XT
LREF = 1290.3000 INCHES YMRP = .0000 IN. YT
BREF = 1290.3000 INCHES ZMRP = 400.0000 IN. ZT
SCALE = .0200

PARAMETRIC DATA

IB-ELV = 8.000 OB-ELV = 11.000
BDFLAP = .000 SPDBRK = .000
RUDDER = .000 SILTS = 1.000
MACH = .600 RN/L = 3.500

RUN NO. 1077/ 0 RN/L = 3.50 GRADIENT INTERVAL = -5.00/ 5.00

ALPHAR	BETAR	CARS	CYNRS	ALFRSU	BETRSU
-8.370	-8.200	.03250	.02010	-8.28340	-8.39240
-8.258	-6.099	.03560	.01270	-8.19730	-6.30130
-8.304	-4.029	.04060	.00630	-8.28460	-4.23990
-8.230	.205	.04280	.00720	-8.30780	.00900
-8.154	4.269	.04690	.01770	-8.31130	4.12980
-8.156	6.241	.04860	.02350	-8.33930	6.13550
-8.196	8.283	.04970	.02980	-8.39240	8.20510
	GRADIENT	.00076	.00137	-.00323	1.00862

RUN NO. 1078/ 0 RN/L = 3.50 GRADIENT INTERVAL = -5.00/ 5.00

ALPHAR	BETAR	CARS	CYNRS	ALFRSU	BETRSU
-6.228	-8.261	.03430	.02940	-6.11170	-8.43650
-6.210	-6.191	.03630	.02290	-6.11950	-6.38150
-6.143	-4.228	.04020	.01830	-6.08840	-4.43160
-6.234	-.000	.04340	.01950	-6.30650	-.19830
-6.094	4.243	.04720	.02810	-6.26870	4.12500
-6.033	6.268	.04870	.03240	-6.22800	6.18750
-5.853	8.432	.05060	.03930	-6.05860	8.38560
	GRADIENT	.00083	.00116	-.02127	1.01017

IA156A, AEDC PWT 16T-470, O T S W/SILTS (R8NP77) (10 MAY 80)

REFERENCE DATA

SREF = 2690.0000 SQ.FT. XMRP = 976.0000 IN. XT
LREF = 1290.3000 INCHES YMRP = .0000 IN. YT
BREF = 1290.3000 INCHES ZMRP = 400.0000 IN. ZT
SCALE = .0200

PARAMETRIC DATA

IB-ELV = 8.000 OB-ELV = 11.000
BDFLAP = .000 SPDBRK = .000
RUDDER = .000 SILTS = 1.000
MACH = .600 RN/L = 3.500

RUN NO. 1079/ 0 RN/L = 3.50 GRADIENT INTERVAL = -5.00/ 5.00

ALPHAR	BETAR	CARS	CYNRS	ALFRSU	BETRSU
-4.012	-8.362	.03620	.03550	-3.86360	-8.51300
-4.247	-6.234	.03740	.03100	-4.12260	-6.40420
-4.266	-4.135	.04030	.02720	-4.17740	-4.32550
-4.086	.117	.04420	.03290	-4.16190	-.07990
-3.752	4.360	.04850	.03980	-3.94980	4.28760
-3.856	6.184	.04970	.04210	-4.06310	6.14500
-3.916	8.188	.05120	.04610	-4.12700	8.17470
	GRADIENT	.00097	.00148	.02678	1.01389

RUN NO. 1080/ 0 RN/L = 3.50 GRADIENT INTERVAL = -5.00/ 5.00

ALPHAR	BETAR	CARS	CYNRS	ALFRSU	BETRSU
-.241	-9.035	.04010	.03940	-.04500	-9.11170
-.233	-6.801	.03870	.03780	-.03720	-6.87810
-.223	-4.809	.04010	.03810	-.02650	-4.88620
-.217	-.663	.04480	.04440	-.02090	-.74020
-.174	3.450	.04910	.05050	.02230	3.37310
-.174	5.550	.05060	.05330	.02290	5.47540
-.177	7.651	.05230	.05760	.01890	7.57450
	GRADIENT	.00109	.00150	.00590	1.00006

RUN NO. 1081/ 0 RN/L = 3.50 GRADIENT INTERVAL = -5.00/ 5.00

ALPHAR	BETAR	CARS	CYNRS	ALFRSU	BETRSU
4.400	-7.803	.04190	.02950	4.19080	-7.82280
4.336	-5.713	.04100	.03000	4.13140	-5.75890
4.281	-3.737	.04160	.03310	4.08800	-3.82090
4.090	.011	.04390	.04260	4.00770	-.18360
4.143	3.851	.04760	.04950	4.22660	3.65810
4.090	5.930	.05010	.05420	4.21300	5.75950
4.078	7.905	.05160	.05720	4.22150	7.75110
	GRADIENT	.00079	.00216	.01843	.98567

IA156A, AEDC PWT 16T-470, O T S W/SILTS (R8NP77) (10 MAY 80)

REFERENCE DATA

SREF =	2690.0000 SQ.FT.	XMRP =	976.0000 IN. XT		
LREF =	1290.3000 INCHES	YMRP =	.0000 IN. YT		
BREF =	1290.3000 INCHES	ZMRP =	400.0000 IN. ZT		
SCALE =	.0200				

PARAMETRIC DATA

IB-ELV =	8.000	OB-ELV =	11.000
BDFLAP =	.000	SPDBRK =	.000
RUDDER =	.000	SILTS =	1.000
MACH =	.600	RN/L =	3.500

RUN NO. 1082/ 0 RN/L = 3.50 GRADIENT INTERVAL = -5.00/ 5.00

ALPHAR	BETAR	CARS	CYNRS	ALFRSU	BETRSU
6.459	-7.872	.04220	.02260	6.25550	-7.92680
6.468	-5.827	.04160	.02310	6.27550	-5.91100
6.452	-3.789	.04220	.02540	6.28030	-3.91010
6.175	.106	.04480	.03600	6.09880	-.08980
6.119	3.888	.04750	.04330	6.16660	3.68320
6.078	5.766	.04880	.04690	6.16560	5.57410
6.151	8.003	.05040	.05120	6.26710	7.82840
	GRADIENT	.00069	.00233	-.01497	.98903

RUN NO. 1083/ 0 RN/L = 3.50 GRADIENT INTERVAL = -5.00/ 5.00

ALPHAR	BETAR	CARS	CYNRS	ALFRSU	BETRSU
8.404	-7.744	.04090	.01400	8.21120	-7.82880
8.333	-5.700	.04080	.01490	8.15440	-5.81090
8.347	-3.760	.04190	.01770	8.19140	-3.90120
8.263	.089	.04550	.02710	8.18770	-.10720
8.332	4.022	.04720	.03210	8.35540	3.81300
8.274	5.979	.04770	.03630	8.33630	5.77860
8.290	7.990	.04910	.04200	8.38020	7.80050
	GRADIENT	.00068	.00185	.02115	.99136

REFERENCE DATA

SREF = 2690.0000 SQ.FT. XMRP = 976.0000 IN. XT
LREF = 1290.3000 INCHES YMRP = .0000 IN. YT
BREF = 1290.3000 INCHES ZMRP = 400.0000 IN. ZT
SCALE = .0200

PARAMETRIC DATA

IB-ELV =	8.000	OB-ELV =	11.000
BDFLAP =	.000	SPDBRK =	.000
RUDDER =	.000	SILTS =	1.000
MACH =	.800	RN/L =	3.500

RUN NO. 1084/ 0 RN/L = 3.50 GRADIENT INTERVAL = -5.00/ 5.00

ALPHAR	BETAR	CARS	CYNRS	ALFRSU	BETRSU
-8.414	-6.165	.03530	.00960	-8.25770	-6.30210
-8.483	-4.073	.04130	.00430	-8.35570	-4.23740
-8.419	.037	.04580	.00280	-8.38020	-.16690
-8.319	4.330	.04860	.01300	-8.38380	4.13280
-8.360	6.266	.04980	.01800	-8.45660	6.08240
	GRADIENT	.00087	.00105	-.00333	.99605

RUN NO. 1085/ 0 RN/L = 3.50 GRADIENT INTERVAL = -5.00/ 5.00

ALPHAR	BETAR	CARS	CYNRS	ALFRSU	BETRSU
-6.335	-6.319	.03650	.02030	-6.15930	-6.43010
-6.272	-4.320	.04160	.01660	-6.12030	-4.46080
-6.397	-.012	.04570	.01630	-6.35540	-.21530
-6.236	4.287	.04920	.02540	-6.32230	4.09830
-6.215	6.312	.05110	.02980	-6.33680	6.14340
	GRADIENT	.00088	.00102	-.02348	.99447

RUN NO. 1086/ 0 RN/L = 3.50 GRADIENT INTERVAL = -5.00/ 5.00

ALPHAR	BETAR	CARS	CYNRS	ALFRSU	BETRSU
-4.212	-6.425	.03840	.02920	-4.01730	-6.49840
-4.353	-4.259	.04250	.02570	-4.17840	-4.37160
-4.311	.268	.04630	.03050	-4.28060	.06310
-3.865	4.378	.05010	.03750	-3.99150	4.21340
-3.935	6.262	.05220	.04050	-4.08740	6.12180
	GRADIENT	.00088	.00136	.02089	.99372

RUN NO. 1087/ 0 RN/L = 3.50 GRADIENT INTERVAL = -5.00/ 5.00

ALPHAR	BETAR	CARS	CYNRS	ALFRSU	BETRSU
-.237	-7.194	.04210	.03790	-.03340	-7.15540
-.237	-5.055	.04200	.03780	-.03330	-5.01670
-.253	-.750	.04560	.04250	-.04940	-.71200
-.205	3.339	.05060	.04940	-.00080	3.37750
-.203	5.445	.05350	.05270	.00120	5.48320
	GRADIENT	.00122	.00169	.01188	1.00002

IA156A, AEDC PWT 16T-470, 0 T S W/SILTS (R8NP78) (10 MAY 80)

REFERENCE DATA

SREF = 2690.0000 SQ.FT. XMRP = 976.0000 IN. XT
LREF = 1290.3000 INCHES YMRP = .0000 IN. YT
BREF = 1290.3000 INCHES ZMRP = 400.0000 IN. ZT
SCALE = .0200

PARAMETRIC DATA

IB-ELV = 8.000 OB-ELV = 11.000
BDFLAP = .000 SPDBRK = .000
RUDDER = .000 SILTS = 1.000
MACH = .800 RN/L = 3.500

RUN NO. 1088/ 0 RN/L = 3.50 GRADIENT INTERVAL = -5.00/ 5.00

ALPHAR	BETAR	CARS	CYNRS	ALFRSU	BETRSU
4.415	-5.717	.04410	.03110	4.26610	-5.86130
4.276	-3.623	.04490	.03460	4.15800	-3.79390
4.014	.042	.04580	.04360	4.04820	-.16220
4.127	3.769	.05080	.05080	4.29820	3.65190
4.047	5.821	.05370	.05600	4.23960	5.74240
	GRADIENT	.00080	.00219	.01910	1.00728

RUN NO. 1089/ 0 RN/L = 3.50 GRADIENT INTERVAL = -5.00/ 5.00

ALPHAR	BETAR	CARS	CYNRS	ALFRSU	BETRSU
6.369	-5.683	.04480	.02480	6.25020	-5.85280
6.430	-3.755	.04530	.02630	6.34770	-3.94530
6.093	.061	.04760	.03760	6.13050	-.14310
6.055	3.758	.05060	.04410	6.20150	3.61050
6.093	5.895	.05280	.04870	6.26710	5.78210
	GRADIENT	.00070	.00237	-.01966	1.00563

IA156A, AEDC PWT 16T-470, 0 T S W/SILTS (R8NP79) (10 MAY 80)

REFERENCE DATA

SREF = 2690.0000 SQ.FT. XMRP = 976.0000 IN. XT
LREF = 1290.3000 INCHES YMRP = .0000 IN. YT
BREF = 1290.3000 INCHES ZMRP = 400.0000 IN. ZT
SCALE = .0200

PARAMETRIC DATA

IB-ELV = 8.000 OB-ELV = 11.000
BDFLAP = .000 SPDBRK = .000
RUDDER = .000 SILTS = 1.000
MACH = .900 RN/L = 3.500

RUN NO. 1090/ 0 RN/L = 3.50 GRADIENT INTERVAL = -5.00/ 5.00

ALPHAR	BETAR	CARS	CYNRS	ALFRSU	BETRSU
-8.410	-6.340	.03990	.00820	-8.24290	-6.46250
-8.531	-4.064	.04640	.00190	-8.39370	-4.21820
-8.487	.001	.05020	.00440	-8.43520	-.19950
-8.388	4.323	.05290	.01360	-8.44000	4.12310
-8.450	6.246	.05450	.01850	-8.53520	6.05760
	GRADIENT	.00077	.00140	-.00547	.99459

IA156A, AEDC PWT 16T-470, 0 T S W/SILTS (R8NP79) (10 MAY 80)

REFERENCE DATA

SREF = 2690.0000 SQ.FT. XMRP = 976.0000 IN. XT
LREF = 1290.3000 INCHES YMRP = .0000 IN. YT
BREF = 1290.3000 INCHES ZMRP = 400.0000 IN. ZT
SCALE = .0200

PARAMETRIC DATA

IB-ELV = 8.000 OB-ELV = 11.000
BDFLAP = .000 SPDBRK = .000
RUDDER = .000 SILTS = 1.000
MACH = .900 RN/L = 3.500

RUN NO. 1091/ 0 RN/L = 3.50 GRADIENT INTERVAL = -5.00/ 5.00

ALPHAR	BETAR	CARS	CYNRS	ALFRSU	BETRSU
-6.359	-6.328	.04210	.01910	-6.17700	-6.42530
-6.323	-4.348	.04700	.01480	-6.16170	-4.47680
-6.467	-.043	.04970	.01580	-6.41170	-.24210
-6.305	4.262	.05470	.02300	-6.37840	4.06850
-6.272	6.281	.05640	.02780	-6.38260	6.10620
	GRADIENT	.00089	.00095	-.02517	.99258

RUN NO. 1092/ 0 RN/L = 3.50 GRADIENT INTERVAL = -5.00/ 5.00

ALPHAR	BETAR	CARS	CYNRS	ALFRSU	BETRSU
-4.105	-6.456	.04460	.03030	-3.90610	-6.51100
-4.396	-4.275	.04860	.02530	-4.21420	-4.37440
-4.385	.269	.04950	.02940	-4.34200	.06660
-3.891	4.379	.05540	.03580	-4.00710	4.20790
-4.009	6.252	.05730	.03930	-4.15170	6.10260
	GRADIENT	.00078	.00121	.02302	.99146

RUN NO. 1093/ 0 RN/L = 3.50 GRADIENT INTERVAL = -5.00/ 5.00

ALPHAR	BETAR	CARS	CYNRS	ALFRSU	BETRSU
-.268	-7.310	.04810	.03990	-.06790	-7.25810
-.267	-5.137	.04860	.03870	-.06730	-5.08500
-.316	-.815	.05070	.04300	-.11630	-.76370
-.248	3.289	.05570	.05060	-.04780	3.34080
-.240	5.467	.05850	.05560	-.03970	5.51890
	GRADIENT	.00122	.00185	.01669	1.00002

RUN NO. 1094/ 0 RN/L = 3.50 GRADIENT INTERVAL = -5.00/ 5.00

ALPHAR	BETAR	CARS	CYNRS	ALFRSU	BETRSU
4.406	-5.713	.04980	.03320	4.26760	-5.86670
4.253	-3.623	.05100	.03610	4.14740	-3.80110
3.944	.026	.05270	.04510	3.99180	-.17530
4.106	3.744	.05700	.05170	4.28360	3.63850
4.036	5.807	.05940	.05780	4.23240	5.74140
	GRADIENT	.00082	.00212	.01868	1.00985

IA156A, AEDC PWT 16T-470, O T S W/SILTS (R8NP80) (10 MAY 80)

REFERENCE DATA

SREF = 2690.0000 SQ.FT. XMRP = 976.0000 IN. XT
LREF = 1290.3000 INCHES YMRP = .0000 IN. YT
BREF = 1290.3000 INCHES ZMRP = 400.0000 IN. ZT
SCALE = .0200

PARAMETRIC DATA

IB-ELV = 8.000 OB-ELV = 11.000
BDFLAP = .000 SPDBRK = .000
RUDDER = .000 SILTS = 1.000
MACH = .950 RN/L = 3.500

RUN NO. 1095/ 0 RN/L = 3.50 GRADIENT INTERVAL = -5.00/ 5.00

ALPHAR	BETAR	CARS	CYNRS	ALFRSU	BETRSU
-8.643	-6.425	.04340	.01160	-8.47460	-6.54310
-8.571	-4.078	.05110	.00670	-8.43030	-4.22810
-8.623	-.024	.05580	.00510	-8.56700	-.22200
-8.487	4.368	.05730	.01390	-8.53670	4.16880
-8.531	6.218	.05940	.01900	-8.61200	6.02990
	GRADIENT	.00073	.00087	-.01233	.99420

RUN NO. 1096/ 0 RN/L = 3.50 GRADIENT INTERVAL = -5.00/ 5.00

ALPHAR	BETAR	CARS	CYNRS	ALFRSU	BETRSU
-6.436	-6.353	.04640	.02420	-6.25270	-6.44590
-6.396	-4.353	.05210	.01890	-6.23270	-4.47770
-6.564	-.042	.05700	.01790	-6.50600	-.23880
-6.358	4.250	.05960	.02580	-6.42840	4.05710
-6.351	6.299	.06150	.03010	-6.45790	6.12410
	GRADIENT	.00087	.00080	-.02278	.99205

RUN NO. 1097/ 0 RN/L = 3.50 GRADIENT INTERVAL = -5.00/ 5.00

ALPHAR	BETAR	CARS	CYNRS	ALFRSU	BETRSU
-4.135	-6.513	.04910	.03460	-3.93580	-6.56220
-4.437	-4.274	.05430	.02940	-4.25500	-4.36760
-4.424	.273	.05690	.03310	-4.37720	.07360
-3.924	4.393	.06220	.04100	-4.03730	4.22160
-4.044	6.252	.06340	.04370	-4.18300	6.10070
	GRADIENT	.00091	.00133	.02422	.99081

RUN NO. 1098/ 0 RN/L = 3.51 GRADIENT INTERVAL = -5.00/ 5.00

ALPHAR	BETAR	CARS	CYNRS	ALFRSU	BETRSU
-.276	-7.371	.05050	.04180	-.07860	-7.31500
-.262	-5.142	.05260	.04090	-.06410	-5.08680
-.299	-.850	.05770	.04740	-.10160	-.79480
-.232	3.285	.06330	.05590	-.03460	3.34000
-.240	5.463	.06500	.06050	-.04260	5.51840
	GRADIENT	.00135	.00206	.01620	1.00002

IA156A, AEDC PWT 16T-470, 0 T S W/SILTS (R8NP80) (10 MAY 80)

REFERENCE DATA

SREF = 2690.0000 SQ.FT. XMRP = 976.0000 IN. XT
LREF = 1290.3000 INCHES YMRP = .0000 IN. YT
BREF = 1290.3000 INCHES ZMRP = 400.0000 IN. ZT
SCALE = .0200

PARAMETRIC DATA

IB-ELV =	8.000	OB-ELV =	11.000
BDFLAP =	.000	SPDBRK =	.000
RUDDER =	.000	SILTS =	1.000
MACH =	.950	RN/L =	3.500

RUN NO. 1099/ 0 RN/L = 3.50 GRADIENT INTERVAL = -5.00/ 5.00

ALPHAR	BETAR	CARS	CYNRS	ALFRSU	BETRSU
4.423	-5.688	.05380	.03540	4.28930	-5.84400
4.266	-3.720	.05640	.03850	4.16320	-3.89810
4.077	.062	.05920	.04750	4.13250	-.13540
4.099	3.671	.06350	.05350	4.27670	3.56840
4.086	5.759	.06560	.06010	4.28130	5.69710
	GRADIENT	.00096	.00203	.01517	1.01005

IA156A, AEDC PWT 16T-470, 0 T S W/SILTS (R8NP81) (10 MAY 80)

REFERENCE DATA

SREF = 2690.0000 SQ.FT. XMRP = 976.0000 IN. XT
LREF = 1290.3000 INCHES YMRP = .0000 IN. YT
BREF = 1290.3000 INCHES ZMRP = 400.0000 IN. ZT
SCALE = .0200

PARAMETRIC DATA

IB-ELV =	8.000	OB-ELV =	11.000
BDFLAP =	.000	SPDBRK =	.000
RUDDER =	.000	SILTS =	1.000
MACH =	1.050	RN/L =	3.500

RUN NO. 1102/ 0 RN/L = 3.50 GRADIENT INTERVAL = -5.00/ 5.00

ALPHAR	BETAR	CARS	CYNRS	ALFRSU	BETRSU
-8.630	-6.396	.06100	.01920	-8.45900	-6.50730
-8.710	-4.227	.06910	.01460	-8.56440	-4.36910
-8.726	.048	.07640	.01500	-8.66740	-.14690
-8.579	4.174	.07850	.02700	-8.62020	3.97420
-8.586	6.191	.08190	.03130	-8.66310	6.00230
	GRADIENT	.00112	.00147	-.00675	.99316

RUN NO. 1103/ 0 RN/L = 3.50 GRADIENT INTERVAL = -5.00/ 5.00

ALPHAR	BETAR	CARS	CYNRS	ALFRSU	BETRSU
-6.484	-6.382	.06520	.03340	-6.29860	-6.46700
-6.456	-4.414	.07120	.02880	-6.28950	-4.53160
-6.636	-.090	.07650	.03080	-6.57180	-.28310
-6.431	4.235	.08130	.03770	-6.49620	4.04220
-6.227	6.386	.08380	.04600	-6.33300	6.21210
	GRADIENT	.00117	.00103	-.02390	.99124

IA156A, AEDC PWT 16T-470, 0 T S W/SILTS (R8NP81) (10 MAY 80)

REFERENCE DATA

SREF =	2690.0000 SQ.FT.	XMRP =	976.0000 IN. XT		
LREF =	1290.3000 INCHES	YMRP =	.0000 IN. YT		
BREF =	1290.3000 INCHES	ZMRP =	400.0000 IN. ZT		
SCALE =	.0200				

PARAMETRIC DATA

IB-ELV =	8.000	OB-ELV =	11.000
BDFLAP =	.000	SPDBRK =	.000
RUDDER =	.000	SILTS =	1.000
MACH =	1.050	RN/L =	3.500

RUN NO. 1104/ 0 RN/L = 3.50 GRADIENT INTERVAL = -5.00/ 5.00

ALPHAR	BETAR	CARS	CYNRS	ALFRSU	BETRSU
-4.235	-6.507	.06720	.04530	-4.03580	-6.55040
-4.495	-4.327	.07190	.03990	-4.31050	-4.41330
-4.474	.231	.07800	.04810	-4.42160	.03370
-3.947	4.359	.08330	.05620	-4.05530	4.18730
-4.049	6.203	.08360	.05680	-4.18430	6.05080
	GRADIENT	.00131	.00188	.02845	.98985

RUN NO. 1105/ 0 RN/L = 3.49 GRADIENT INTERVAL = -5.00/ 5.00

ALPHAR	BETAR	CARS	CYNRS	ALFRSU	BETRSU
-.297	-7.412	.06760	.05260	-.10280	-7.35130
-.289	-5.218	.07010	.05260	-.09440	-5.15740
-.359	-.865	.07840	.06270	-.16400	-.80410
-.284	3.256	.08430	.07060	-.08980	3.31700
-.276	5.445	.08590	.07330	-.08140	5.50580
	GRADIENT	.00143	.00192	.01800	1.00000

RUN NO. 1106/ 0 RN/L = 3.49 GRADIENT INTERVAL = -5.00/ 5.00

ALPHAR	BETAR	CARS	CYNRS	ALFRSU	BETRSU
4.436	-5.728	.07280	.04350	4.30910	-5.88670
4.228	-3.644	.07600	.04830	4.13350	-3.82480
4.009	-.023	.07910	.05790	4.06640	-.21830
4.129	3.695	.08230	.06450	4.30900	3.59850
4.110	5.730	.08240	.07160	4.30810	5.67390
	GRADIENT	.00086	.00221	.02410	1.01160

IA156A, AEDC PWT 16T-470, O T S W/SILTS (R8NP82) (10 MAY 80)

REFERENCE DATA

SREF = 2690.0000 SQ.FT. XMRP = 976.0000 IN. XT
LREF = 1290.3000 INCHES YMRP = .0000 IN. YT
BREF = 1290.3000 INCHES ZMRP = 400.0000 IN. ZT
SCALE = .0200

PARAMETRIC DATA

IB-ELV = 8.000 OB-ELV = 11.000
BDFLAP = .000 SPDBRK = .000
RUDDER = .000 SILTS = 1.000
MACH = 1.100 RN/L = 3.500

RUN NO. 1107/ 0 RN/L = 3.51 GRADIENT INTERVAL = -5.00/ 5.00

ALPHAR	BETAR	CARS	CYNRS	ALFRSU	BETRSU
-8.691	-6.322	.06160	.01790	-8.51950	-6.43280
-8.736	-4.193	.06840	.01380	-8.58890	-4.33530
-8.766	-.058	.07620	.01480	-8.70310	-.25200
-8.590	4.231	.08000	.02640	-8.63050	4.03020
-8.622	6.192	.08220	.03130	-8.69730	6.00130
	GRADIENT	.00137	.00150	-.00480	.99308

RUN NO. 1108/ 0 RN/L = 3.50 GRADIENT INTERVAL = -5.00/ 5.00

ALPHAR	BETAR	CARS	CYNRS	ALFRSU	BETRSU
-6.523	-6.393	.06360	.03080	-6.33640	-6.47630
-6.496	-4.424	.06940	.02710	-6.32700	-4.53950
-6.689	-.074	.07500	.02930	-6.62310	-.26710
-6.420	4.237	.08100	.03970	-6.48320	4.04270
-6.416	6.264	.08310	.04220	-6.51680	6.08580
	GRADIENT	.00134	.00145	-.01811	.99087

RUN NO. 1109/ 0 RN/L = 3.51 GRADIENT INTERVAL = -5.00/ 5.00

ALPHAR	BETAR	CARS	CYNRS	ALFRSU	BETRSU
-4.455	-6.433	.06550	.04210	-4.25610	-6.47840
-4.500	-4.344	.06950	.03820	-4.31300	-4.42670
-4.486	.212	.07520	.04570	-4.43000	.01510
-3.940	4.349	.08080	.05270	-4.04640	4.17490
-4.076	6.227	.08260	.05380	-4.20910	6.07260
	GRADIENT	.00130	.00167	.02972	.98927

RUN NO. 1110/ 0 RN/L = 3.50 GRADIENT INTERVAL = -5.00/ 5.00

ALPHAR	BETAR	CARS	CYNRS	ALFRSU	BETRSU
-.304	-7.436	.06580	.05260	-.10920	-7.37240
-.297	-5.232	.06660	.05150	-.10310	-5.16850
-.358	-.798	.07400	.06020	-.16350	-.73490
-.265	3.288	.08010	.06640	-.07070	3.35150
-.262	5.468	.08200	.06880	-.06770	5.53170
	GRADIENT	.00149	.00152	.02271	1.00002

IA156A, AEDC PWT 16T-470, O T S W/SILTS (R8NP82) (10 MAY 80)

REFERENCE DATA

SREF =	2690.0000 SQ.FT.	XMRP =	976.0000 IN. XT		
LREF =	1290.3000 INCHES	YMRP =	.0000 IN. YT		
BREF =	1290.3000 INCHES	ZMRP =	400.0000 IN. ZT		
SCALE =	.0200				

PARAMETRIC DATA

IB-ELV =	8.000	OB-ELV =	11.000
BDFLAP =	.000	SPDBRK =	.000
RUDDER =	.000	SILTS =	1.000
MACH =	1.100	RN/L =	3.500

RUN NO. 1111/ 0 RN/L = 3.50 GRADIENT INTERVAL = -5.00/ 5.00

ALPHAR	BETAR	CARS	CYNRS	ALFRSU	BETRSU
4.457	-5.736	.06810	.04110	4.33060	-5.89650
4.305	-3.674	.07190	.04530	4.21160	-3.85630
3.987	-.011	.07460	.05590	4.04670	-.20700
4.158	3.691	.07840	.06190	4.33910	3.59640
4.143	5.746	.07890	.06880	4.34010	5.69240
	GRADIENT	.00088	.00225	.01742	1.01194

IA156A, AEDC PWT 16T-470, O T S W/SILTS (R8NP83) (10 MAY 80)

REFERENCE DATA

SREF =	2690.0000 SQ.FT.	XMRP =	976.0000 IN. XT		
LREF =	1290.3000 INCHES	YMRP =	.0000 IN. YT		
BREF =	1290.3000 INCHES	ZMRP =	400.0000 IN. ZT		
SCALE =	.0200				

PARAMETRIC DATA

IB-ELV =	8.000	OB-ELV =	9.000
BDFLAP =	.000	SPDBRK =	.000
RUDDER =	.000	SILTS =	1.000
MACH =	.600	RN/L =	3.500

RUN NO. 1114/ 0 RN/L = 3.51 GRADIENT INTERVAL = -5.00/ 5.00

ALPHAR	BETAR	CARS	CYNRS	ALFRSU	BETRSU
-8.354	-8.180	.03250	.01990	-8.26560	-8.37120
-8.253	-6.183	.03520	.01320	-8.19050	-6.38450
-8.311	-4.016	.04020	.00620	-8.28820	-4.22550
-8.243	.214	.04330	.00710	-8.32080	.01800
-8.147	4.265	.04680	.01760	-8.30630	4.12730
-8.155	6.251	.04820	.02350	-8.33580	6.14340
-8.214	8.280	.05000	.02970	-8.40910	8.20050
	GRADIENT	.00080	.00137	-.00223	1.00862

RUN NO. 1115/ 0 RN/L = 3.51 GRADIENT INTERVAL = -5.00/ 5.00

ALPHAR	BETAR	CARS	CYNRS	ALFRSU	BETRSU
-6.226	-8.259	.03430	.02910	-6.10990	-8.43420
-6.215	-6.195	.03650	.02280	-6.12440	-6.38520
-6.150	-4.234	.04020	.01780	-6.09450	-4.43690
-6.235	-.001	.04340	.01920	-6.30710	-.19880
-6.082	4.250	.04740	.02810	-6.25520	4.13060
-6.047	6.267	.04900	.03240	-6.24060	6.18470
-5.862	8.438	.05050	.03910	-6.06670	8.39040
	GRADIENT	.00085	.00121	-.01892	1.00987

IA156A, AEDC PWT 16T-470, O T S W/SILTS (R8NP83) (10 MAY 80)

REFERENCE DATA

SREF = 2690.0000 SQ.FT. XMRP = 976.0000 IN. XT
LREF = 1290.3000 INCHES YMRP = .0000 IN. YT
BREF = 1290.3000 INCHES ZMRP = 400.0000 IN. ZT
SCALE = .0200

PARAMETRIC DATA

IB-ELV = 8.000 OB-ELV = 9.000
BDFLAP = .000 SPDBRK = .000
RUDDER = .000 SILTS = 1.000
MACH = .600 RN/L = 3.500

RUN NO. 1117/ 0 RN/L = 3.49 GRADIENT INTERVAL = -5.00/ 5.00

ALPHAR	BETAR	CARS	CYNRS	ALFRSU	BETRSU
-4.008	-8.277	.03620	.03510	-3.86050	-8.42820
-4.250	-6.227	.03750	.03060	-4.12460	-6.39630
-4.266	-4.120	.04040	.02680	-4.17670	-4.31120
-4.090	.112	.04400	.03250	-4.16480	-.08490
-3.752	4.362	.04830	.03950	-3.95000	4.28930
-3.845	6.181	.04920	.04180	-4.05210	6.14110
-3.909	8.193	.05090	.04580	-4.11960	8.17870
	GRADIENT	.00093	.00150	.02674	1.01391

RUN NO. 1118/ 0 RN/L = 3.50 GRADIENT INTERVAL = -5.00/ 5.00

ALPHAR	BETAR	CARS	CYNRS	ALFRSU	BETRSU
-.247	-9.079	.04020	.03910	-.05050	-9.15530
-.239	-6.991	.03850	.03750	-.04300	-7.06730
-.233	-4.694	.04010	.03790	-.03640	-4.77020
-.223	-.631	.04480	.04430	-.02680	-.70660
-.181	3.449	.04910	.05030	.01590	3.37340
-.180	5.539	.05070	.05310	.01620	5.46390
-.184	7.638	.05230	.05710	.01230	7.56280
	GRADIENT	.00111	.00152	.00643	1.00009

RUN NO. 1119/ 0 RN/L = 3.49 GRADIENT INTERVAL = -5.00/ 5.00

ALPHAR	BETAR	CARS	CYNRS	ALFRSU	BETRSU
4.286	-7.978	.04220	.02940	4.07650	-7.99290
4.306	-5.674	.04110	.03020	4.10010	-5.71740
4.292	-3.706	.04160	.03270	4.09890	-3.78960
4.054	.073	.04400	.04260	3.97370	-.12200
4.141	3.901	.04780	.04930	4.22350	3.70650
4.090	5.945	.05020	.05400	4.21250	5.77330
4.070	7.912	.05170	.05710	4.21210	7.75710
	GRADIENT	.00082	.00218	.01649	.98554

IA156A, AEDC PWT 16T-470, O T S W/SILTS (R8NP83) (10 MAY 80)

REFERENCE DATA

SREF =	2690.0000 SQ.FT.	XMRP =	976.0000 IN. XT		
LREF =	1290.3000 INCHES	YMRP =	.0000 IN. YT		
BREF =	1290.3000 INCHES	ZMRP =	400.0000 IN. ZT		
SCALE =	.0200				

PARAMETRIC DATA

IB-ELV =	8.000	OB-ELV =	9.000
BDFLAP =	.000	SPDBRK =	.000
RUDDER =	.000	SILTS =	1.000
MACH =	.600	RN/L =	3.500

RUN NO. 1120/ 0 RN/L = 3.49 GRADIENT INTERVAL = -5.00/ 5.00

ALPHAR	BETAR	CARS	CYNRS	ALFRSU	BETRSU
6.470	-7.877	.04220	.02190	6.26650	-7.93230
6.456	-5.837	.04160	.02250	6.26250	-5.91980
6.452	-3.842	.04210	.02470	6.27780	-3.96050
6.205	.058	.04480	.03540	6.12410	-.13690
6.115	3.889	.04760	.04290	6.16150	3.68360
6.072	5.767	.04900	.04660	6.15720	5.57460
6.132	8.015	.05060	.05090	6.24710	7.83790
	GRADIENT	.00071	.00236	-.01512	.98873

RUN NO. 1121/ 0 RN/L = 3.50 GRADIENT INTERVAL = -5.00/ 5.00

ALPHAR	BETAR	CARS	CYNRS	ALFRSU	BETRSU
8.401	-7.747	.04080	.01360	8.20720	-7.82990
8.333	-5.702	.04070	.01420	8.15400	-5.81210
8.340	-3.756	.04170	.01700	8.18360	-3.89690
8.259	.082	.04550	.02670	8.18280	-.11410
8.318	4.023	.04760	.03200	8.33910	3.81320
8.286	5.992	.04800	.03600	8.34550	5.79000
8.269	7.989	.04940	.04230	8.35850	7.79820
	GRADIENT	.00076	.00193	.02008	.99118

REFERENCE DATA

SREF = 2690.0000 SQ.FT. XMRP = 976.0000 IN. XT
LREF = 1290.3000 INCHES YMRP = .0000 IN. YT
BREF = 1290.3000 INCHES ZMRP = 400.0000 IN. ZT
SCALE = .0200

PARAMETRIC DATA

IB-ELV = 8.000 OB-ELV = 9.000
BDFLAP = .000 SPDBRK = .000
RUDDER = .000 SILTS = 1.000
MACH = .800 RN/L = 3.500

RUN NO. 1132/ 0 RN/L = 3.51 GRADIENT INTERVAL = -5.00/ 5.00

ALPHAR	BETAR	CARS	CYNRS	ALFRSU	BETRSU
-8.436	-6.193	.03490	.00870	-8.27930	-6.32970
-8.458	-4.133	.04120	.00370	-8.32930	-4.29580
-8.433	.132	.04590	.00270	-8.39680	-.07280
-8.333	4.257	.04820	.01190	-8.39560	4.05930
-8.383	6.268	.04990	.01790	-8.47980	6.08480
	GRADIENT	.00084	.00097	-.00795	.99580

RUN NO. 1133/ 0 RN/L = 3.50 GRADIENT INTERVAL = -5.00/ 5.00

ALPHAR	BETAR	CARS	CYNRS	ALFRSU	BETRSU
-6.323	-6.320	.03700	.01970	-6.14750	-6.43100
-6.271	-4.314	.04160	.01550	-6.11930	-4.45520
-6.407	.018	.04570	.01630	-6.36610	-.18550
-6.228	4.289	.04910	.02540	-6.31460	4.10000
-6.219	6.299	.05100	.03010	-6.34070	6.13120
	GRADIENT	.00087	.00115	-.02278	.99445

RUN NO. 1134/ 0 RN/L = 3.50 GRADIENT INTERVAL = -5.00/ 5.00

ALPHAR	BETAR	CARS	CYNRS	ALFRSU	BETRSU
-4.130	-6.405	.03870	.02860	-3.93510	-6.47680
-4.364	-4.252	.04270	.02470	-4.18930	-4.36420
-4.315	.282	.04640	.02970	-4.28480	.07680
-3.885	4.389	.05020	.03760	-4.01210	4.22430
-3.967	6.237	.05180	.04000	-4.11940	6.09600
	GRADIENT	.00087	.00149	.01979	.99377

RUN NO. 1135/ 0 RN/L = 3.50 GRADIENT INTERVAL = -5.00/ 5.00

ALPHAR	BETAR	CARS	CYNRS	ALFRSU	BETRSU
-.249	-7.170	.04240	.03750	-.04460	-7.13190
-.253	-4.847	.04260	.03740	-.04900	-4.80880
-.278	-.734	.04590	.04160	-.07390	-.69560
-.228	3.328	.05080	.04850	-.02360	3.36650
-.213	5.466	.05370	.05200	-.00910	5.50480
	GRADIENT	.00100	.00136	.00309	.99999

IA156A, AEDC PWT 16T-470, O T S W/SILTS (R8NP85) (10 MAY 80)

REFERENCE DATA

SREF = 2690.0000 SQ.FT. XMRP = 976.0000 IN. XT
LREF = 1290.3000 INCHES YMRP = .0000 IN. YT
BREF = 1290.3000 INCHES ZMRP = 400.0000 IN. ZT
SCALE = .0200

PARAMETRIC DATA

IB-ELV = 8.000 OB-ELV = 9.000
BDFLAP = .000 SPDBRK = .000
RUDDER = .000 SILTS = 1.000
MACH = .800 RN/L = 3.500

RUN NO. 1136/ 0 RN/L = 3.50 GRADIENT INTERVAL = -5.00/ 5.00

ALPHAR	BETAR	CARS	CYNRS	ALFRSU	BETRSU
4.296	-5.794	.04410	.03060	4.14410	-5.93590
4.295	-3.698	.04470	.03330	4.17530	-3.86740
4.155	.100	.04600	.04320	4.19340	-.10430
4.098	3.724	.05110	.05000	4.26930	3.60560
4.070	5.817	.05420	.05550	4.26200	5.73840
	GRADIENT	.00086	.00225	.01260	1.00684

RUN NO. 1137/ 0 RN/L = 3.50 GRADIENT INTERVAL = -5.00/ 5.00

ALPHAR	BETAR	CARS	CYNRS	ALFRSU	BETRSU
6.431	-5.782	.04490	.02310	6.31190	-5.95190
6.426	-3.769	.04520	.02510	6.34310	-3.95930
6.108	.051	.04700	.03690	6.14420	-.15340
6.066	3.841	.05070	.04360	6.21380	3.69480
6.137	5.765	.05240	.04770	6.31040	5.65030
	GRADIENT	.00072	.00243	-.01704	1.00578

IA156A, AEDC PWT 16T-470, O T S W/SILTS (R8NP86) (10 MAY 80)

REFERENCE DATA

SREF = 2690.0000 SQ.FT. XMRP = 976.0000 IN. XT
LREF = 1290.3000 INCHES YMRP = .0000 IN. YT
BREF = 1290.3000 INCHES ZMRP = 400.0000 IN. ZT
SCALE = .0200

PARAMETRIC DATA

IB-ELV = 8.000 OB-ELV = 9.000
BDFLAP = .000 SPDBRK = .000
RUDDER = .000 SILTS = 1.000
MACH = .900 RN/L = 3.500

RUN NO. 1139/ 0 RN/L = 3.50 GRADIENT INTERVAL = -5.00/ 5.00

ALPHAR	BETAR	CARS	CYNRS	ALFRSU	BETRSU
-8.351	-6.345	.04010	.00710	-8.18400	-6.46660
-8.548	-4.070	.04620	.00070	-8.41070	-4.22430
-8.503	-.003	.04950	.00270	-8.45100	-.20330
-8.396	4.319	.05220	.01230	-8.44850	4.11860
-8.458	6.241	.05390	.01750	-8.54330	6.05280
	GRADIENT	.00071	.00139	-.00445	.99459

IA156A, AEDC PWT 16T-470, 0 T S W/SILTS (R8NP86) (10 MAY 80)

REFERENCE DATA

SREF =	2690.0000 SQ.FT.	XMRP =	976.0000 IN. XT		
LREF =	1290.3000 INCHES	YMRP =	.0000 IN. YT		
BREF =	1290.3000 INCHES	ZMRP =	400.0000 IN. ZT		
SCALE =	.0200				

PARAMETRIC DATA

IB-ELV =	8.000	OB-ELV =	9.000
BDFLAP =	.000	SPDBRK =	.000
RUDDER =	.000	SILTS =	1.000
MACH =	.900	RN/L =	3.500

RUN NO. 1140/ 0 RN/L = 3.50 GRADIENT INTERVAL = -5.00/ 5.00

ALPHAR	BETAR	CARS	CYNRS	ALFRSU	BETRSU
-6.369	-6.332	.04210	.01810	-6.18740	-6.43010
-6.331	-4.352	.04680	.01370	-6.16970	-4.48140
-6.485	-.041	.04890	.01440	-6.42950	-.23970
-6.326	4.253	.05360	.02230	-6.39940	4.05950
-6.050	6.406	.05600	.02910	-6.16490	6.23460
	GRADIENT	.00079	.00100	-.02672	.99254

RUN NO. 1141/ 0 RN/L = 3.50 GRADIENT INTERVAL = -5.00/ 5.00

ALPHAR	BETAR	CARS	CYNRS	ALFRSU	BETRSU
-4.165	-6.432	.04440	.02870	-3.96670	-6.48890
-4.410	-4.280	.04830	.02400	-4.22920	-4.37870
-4.391	.273	.04900	.02760	-4.34800	.07120
-3.918	4.385	.05470	.03450	-4.03450	4.21410
-4.011	6.236	.05700	.03820	-4.15360	6.08640
	GRADIENT	.00073	.00120	.02161	.99146

RUN NO. 1142/ 0 RN/L = 3.50 GRADIENT INTERVAL = -5.00/ 5.00

ALPHAR	BETAR	CARS	CYNRS	ALFRSU	BETRSU
-.295	-7.289	.04810	.03920	-.09500	-7.23700
-.293	-5.125	.04870	.03780	-.09280	-5.07330
-.354	-.816	.05070	.04110	-.15370	-.76420
-.289	3.303	.05470	.04930	-.08880	3.35490
-.273	5.465	.05810	.05420	-.07240	5.51690
	GRADIENT	.00097	.00199	.01576	1.00002

RUN NO. 1143/ 0 RN/L = 3.50 GRADIENT INTERVAL = -5.00/ 5.00

ALPHAR	BETAR	CARS	CYNRS	ALFRSU	BETRSU
4.399	-5.670	.04980	.03230	4.26140	-5.82430
4.271	-3.730	.05090	.03490	4.16260	-3.90610
4.110	.082	.05200	.04390	4.16120	-.11870
4.068	3.654	.05680	.05060	4.24450	3.54690
4.040	5.784	.05910	.05660	4.23560	5.71850
	GRADIENT	.00079	.00213	.01096	1.00920

IA156A, AEDC PWT 16T-470, 0 T S W/SILTS (R8NP87) (10 MAY 80)

REFERENCE DATA

SREF = 2690.0000 SQ.FT. XMRP = 976.0000 IN. XT
LREF = 1290.3000 INCHES YMRP = .0000 IN. YT
BREF = 1290.3000 INCHES ZMRP = 400.0000 IN. ZT
SCALE = .0200

PARAMETRIC DATA

IB-ELV = 8.000 OB-ELV = 9.000
BDFLAP = .000 SPDBRK = .000
RUDDER = .000 SILTS = 1.000
MACH = .950 RN/L = 3.500

RUN NO. 1144/ 0 RN/L = 3.50 GRADIENT INTERVAL = -5.00/ 5.00

ALPHAR	BETAR	CARS	CYNRS	ALFRSU	BETRSU
-8.603	-6.274	.04380	.01030	-8.43570	-6.39370
-8.620	-4.130	.05040	.00500	-8.47960	-4.27910
-8.617	.197	.05550	.00480	-8.56720	-.00210
-8.503	4.263	.05720	.01280	-8.55050	4.06350
-8.525	6.193	.05940	.01840	-8.60630	6.00470
	GRADIENT	.00081	.00092	-.00857	.99394

RUN NO. 1145/ 0 RN/L = 3.50 GRADIENT INTERVAL = -5.00/ 5.00

ALPHAR	BETAR	CARS	CYNRS	ALFRSU	BETRSU
-6.428	-6.342	.04640	.02290	-6.24450	-6.43450
-6.392	-4.358	.05220	.01810	-6.22840	-4.48270
-6.559	-.043	.05690	.01720	-6.50030	-.23990
-6.404	4.246	.05940	.02430	-6.47360	4.05290
-6.091	6.400	.06230	.03240	-6.20300	6.22800
	GRADIENT	.00084	.00072	-.02853	.99201

RUN NO. 1146/ 0 RN/L = 3.49 GRADIENT INTERVAL = -5.00/ 5.00

ALPHAR	BETAR	CARS	CYNRS	ALFRSU	BETRSU
-4.192	-6.434	.04880	.03270	-3.99320	-6.48520
-4.443	-4.281	.05410	.02840	-4.26010	-4.37500
-4.418	.269	.05690	.03270	-4.37150	.06930
-3.937	4.395	.06180	.04040	-4.04960	4.22300
-4.038	6.235	.06340	.04300	-4.17730	6.08420
	GRADIENT	.00088	.00138	.02343	.99079

RUN NO. 1147/ 0 RN/L = 3.49 GRADIENT INTERVAL = -5.00/ 5.00

ALPHAR	BETAR	CARS	CYNRS	ALFRSU	BETRSU
-.289	-7.322	.05040	.04100	-.09110	-7.26720
-.277	-5.143	.05270	.03980	-.07900	-5.08780
-.319	-.827	.05750	.04650	-.12170	-.77140
-.263	3.283	.06340	.05470	-.06570	3.33860
-.265	5.468	.06470	.05910	-.06740	5.52320
	GRADIENT	.00144	.00200	.01363	1.00000

IA156A, AEDC PWT 16T-470, O T S W/SILTS (R8NP87) (10 MAY 80)

REFERENCE DATA

SREF =	2690.0000 SQ.FT.	XMRP =	976.0000 IN. XT		
LREF =	1290.3000 INCHES	YMRP =	.0000 IN. YT		
BREF =	1290.3000 INCHES	ZMRP =	400.0000 IN. ZT		
SCALE =	.0200				

PARAMETRIC DATA

IB-ELV =	8.000	OB-ELV =	9.000
BDFLAP =	.000	SPDBRK =	.000
RUDDER =	.000	SILTS =	1.000
MACH =	.950	RN/L =	3.500

RUN NO. 1148/ 0 RN/L = 3.49 GRADIENT INTERVAL = -5.00/ 5.00

ALPHAR	BETAR	CARS	CYNRS	ALFRSU	BETRSU
4.312	-5.806	.05390	.03460	4.17580	-5.95890
4.274	-3.719	.05610	.03730	4.17150	-3.89670
4.079	.068	.05890	.04630	4.13390	-.12970
4.093	3.687	.06260	.05160	4.27050	3.58460
4.083	5.776	.06490	.05870	4.27890	5.71450
	GRADIENT	.00088	.00193	.01319	1.01008

IA156A, AEDC PWT 16T-470, O T S W/SILTS (R8NP88) (10 MAY 80)

REFERENCE DATA

SREF =	2690.0000 SQ.FT.	XMRP =	976.0000 IN. XT		
LREF =	1290.3000 INCHES	YMRP =	.0000 IN. YT		
BREF =	1290.3000 INCHES	ZMRP =	400.0000 IN. ZT		
SCALE =	.0200				

PARAMETRIC DATA

IB-ELV =	8.000	OB-ELV =	9.000
BDFLAP =	.000	SPDBRK =	.000
RUDDER =	.000	SILTS =	1.000
MACH =	1.050	RN/L =	3.500

RUN NO. 1149/ 0 RN/L = 3.50 GRADIENT INTERVAL = -5.00/ 5.00

ALPHAR	BETAR	CARS	CYNRS	ALFRSU	BETRSU
-8.698	-6.334	.06230	.01860	-8.52770	-6.44660
-8.737	-4.188	.06970	.01390	-8.59240	-4.33160
-8.732	.165	.07750	.01490	-8.67600	-.03120
-8.576	4.217	.07890	.02700	-8.61810	4.01800
-8.613	6.187	.08220	.03120	-8.68980	5.99870
	GRADIENT	.00110	.00154	-.00326	.99323

RUN NO. 1150/ 0 RN/L = 3.50 GRADIENT INTERVAL = -5.00/ 5.00

ALPHAR	BETAR	CARS	CYNRS	ALFRSU	BETRSU
-6.495	-6.382	.06510	.03240	-6.30980	-6.46680
-6.427	-4.396	.07120	.02860	-6.26050	-4.51290
-6.630	-.090	.07650	.03000	-6.56590	-.28360
-6.416	4.238	.08180	.03770	-6.48120	4.04520
-6.401	6.262	.08360	.04360	-6.50370	6.08550
	GRADIENT	.00123	.00105	-.02552	.99123

IA156A, AEDC PWT 16T-470, O T S W/SILTS (R8NP88) (10 MAY 80)

REFERENCE DATA

SREF = 2690.0000 SQ.FT. XMRP = 976.0000 IN. XT
LREF = 1290.3000 INCHES YMRP = .0000 IN. YT
BREF = 1290.3000 INCHES ZMRP = 400.0000 IN. ZT
SCALE = .0200

PARAMETRIC DATA

IB-ELV =	8.000	OB-ELV =	9.000
BDFLAP =	.000	SPDBRK =	.000
RUDDER =	.000	SILTS =	1.000
MACH =	1.050	RN/L =	3.500

RUN NO. 1151/ 0 RN/L = 3.50 GRADIENT INTERVAL = -5.00/ 5.00

ALPHAR	BETAR	CARS	CYNRS	ALFRSU	BETRSU
-4.243	-6.478	.06740	.04420	-4.04410	-6.52170
-4.501	-4.330	.07170	.03890	-4.31670	-4.41620
-4.470	.234	.07720	.04680	-4.41800	.03660
-3.952	4.357	.08270	.05460	-4.06060	4.18420
-4.067	6.218	.08410	.05600	-4.20220	6.06530
	GRADIENT	.00127	.00181	.02856	.98981

RUN NO. 1152/ 0 RN/L = 3.50 GRADIENT INTERVAL = -5.00/ 5.00

ALPHAR	BETAR	CARS	CYNRS	ALFRSU	BETRSU
-.302	-7.413	.06750	.05180	-.10810	-7.35230
-.301	-5.211	.07000	.05160	-.10670	-5.15010
-.375	-.843	.07850	.06170	-.18010	-.78190
-.294	3.262	.08460	.06940	-.09980	3.32290
-.279	5.448	.08600	.07240	-.08500	5.50840
	GRADIENT	.00149	.00188	.01956	1.00000

RUN NO. 1153/ 0 RN/L = 3.50 GRADIENT INTERVAL = -5.00/ 5.00

ALPHAR	BETAR	CARS	CYNRS	ALFRSU	BETRSU
4.395	-5.710	.07270	.04280	4.26760	-5.86860
4.253	-3.712	.07610	.04720	4.15790	-3.89230
3.988	-.104	.07880	.05640	4.03990	-.30080
4.123	3.657	.08220	.06330	4.30210	3.55940
4.117	5.737	.08210	.07020	4.31260	5.68060
	GRADIENT	.00083	.00218	.01992	1.01138

IA156A, AEDC PWT 16T-470, 0 T S W/SILTS (R8NP89) (10 MAY 80)

REFERENCE DATA

SREF =	2690.0000 SQ.FT.	XMRP =	976.0000 IN. XT		
LREF =	1290.3000 INCHES	YMRP =	.0000 IN. YT		
BREF =	1290.3000 INCHES	ZMRP =	400.0000 IN. ZT		
SCALE =	.0200				

PARAMETRIC DATA

IB-ELV =	8.000	OB-ELV =	9.000
BDFLAP =	.000	SPDBRK =	.000
RUDDER =	.000	SILTS =	1.000
MACH =	1.100	RN/L =	3.500

RUN NO. 1154/ 0 RN/L = 3.50 GRADIENT INTERVAL = -5.00/ 5.00

ALPHAR	BETAR	CARS	CYNRS	ALFRSU	BETRSU
-8.684	-6.321	.06090	.01650	-8.51210	-6.43110
-8.732	-4.183	.06780	.01220	-8.58500	-4.32450
-8.760	-.064	.07570	.01340	-8.69660	-.25800
-8.593	4.241	.07970	.02540	-8.63340	4.04100
-8.615	6.185	.08210	.03090	-8.68970	5.99500
	GRADIENT	.00141	.00158	-.00559	.99310

RUN NO. 1155/ 0 RN/L = 3.50 GRADIENT INTERVAL = -5.00/ 5.00

ALPHAR	BETAR	CARS	CYNRS	ALFRSU	BETRSU
-6.513	-6.382	.06320	.02940	-6.32570	-6.46500
-6.505	-4.417	.06880	.02570	-6.33650	-4.53290
-6.677	-.089	.07440	.02780	-6.61030	-.28260
-6.445	4.261	.08080	.03790	-6.50840	4.06610
-6.407	6.266	.08280	.04180	-6.50740	6.08830
	GRADIENT	.00138	.00141	-.01977	.99094

RUN NO. 1156/ 0 RN/L = 3.50 GRADIENT INTERVAL = -5.00/ 5.00

ALPHAR	BETAR	CARS	CYNRS	ALFRSU	BETRSU
-4.265	-6.483	.06550	.04190	-4.06490	-6.52410
-4.532	-4.334	.06910	.03660	-4.34600	-4.41790
-4.480	.236	.07480	.04410	-4.42470	.03870
-3.946	4.371	.08040	.05150	-4.05280	4.19650
-4.064	6.229	.08250	.05290	-4.19780	6.07470
	GRADIENT	.00130	.00171	.03279	.98937

RUN NO. 1157/ 0 RN/L = 3.50 GRADIENT INTERVAL = -5.00/ 5.00

ALPHAR	BETAR	CARS	CYNRS	ALFRSU	BETRSU
-.311	-7.410	.06560	.05150	-.11650	-7.34630
-.302	-5.238	.06630	.05020	-.10790	-5.17460
-.360	-.818	.07400	.05890	-.16530	-.75510
-.282	3.280	.08010	.06520	-.08780	3.34330
-.273	5.470	.08200	.06770	-.07810	5.53270
	GRADIENT	.00149	.00154	.01891	1.00000

IA156A, AEDC PWT 16T-470, O T S W/SILTS (R8NP89) (10 MAY 80)

REFERENCE DATA

SREF = 2690.0000 SQ.FT. XMRP = 976.0000 IN. XT
LREF = 1290.3000 INCHES YMRP = .0000 IN. YT
BREF = 1290.3000 INCHES ZMRP = 400.0000 IN. ZT
SCALE = .0200

PARAMETRIC DATA

IB-ELV = 8.000 OB-ELV = 9.000
BDFLAP = .000 SPDBRK = .000
RUDDER = .000 SILTS = 1.000
MACH = 1.100 RN/L = 3.500

RUN NO. 1158/ 0 RN/L = 3.50 GRADIENT INTERVAL = -5.00/ 5.00

ALPHAR	BETAR	CARS	CYNRS	ALFRSU	BETRSU
4.325	-5.823	.06760	.04070	4.19490	-5.98130
4.293	-3.732	.07180	.04410	4.19850	-3.91350
4.133	.054	.07440	.05480	4.19570	-.14070
4.155	3.652	.07790	.06070	4.33570	3.55710
4.151	5.755	.07900	.06780	4.34820	5.70100
	GRADIENT	.00082	.00225	.01841	1.01153

IA156A, AEDC PWT 16T-470, O T S W/SILTS (R8NP90) (10 MAY 80)

REFERENCE DATA

SREF = 2690.0000 SQ.FT. XMRP = 976.0000 IN. XT
LREF = 1290.3000 INCHES YMRP = .0000 IN. YT
BREF = 1290.3000 INCHES ZMRP = 400.0000 IN. ZT
SCALE = .0200

PARAMETRIC DATA

IB-ELV = 8.000 OB-ELV = 9.000
BDFLAP = .000 SPDBRK = .000
RUDDER = .000 SILTS = 1.000
MACH = 1.150 RN/L = 3.500

RUN NO. 1159/ 0 RN/L = 3.49 GRADIENT INTERVAL = -5.00/ 5.00

ALPHAR	BETAR	CARS	CYNRS	ALFRSU	BETRSU
-8.704	-6.356	.06060	.01730	-8.52940	-6.46650
-8.758	-4.195	.06590	.01050	-8.60740	-4.33750
-8.781	.169	.07430	.01040	-8.72060	-.02870
-8.578	4.254	.07840	.02150	-8.61760	4.05130
-8.609	6.219	.07980	.02710	-8.68300	6.02630
	GRADIENT	.00148	.00129	-.00149	.99275

RUN NO. 1160/ 0 RN/L = 3.50 GRADIENT INTERVAL = -5.00/ 5.00

ALPHAR	BETAR	CARS	CYNRS	ALFRSU	BETRSU
-6.514	-6.399	.06110	.02910	-6.32460	-6.48190
-6.475	-4.418	.06640	.02430	-6.30300	-4.53350
-6.665	-.071	.07300	.02470	-6.59590	-.26620
-6.422	4.281	.07880	.03370	-6.48430	4.08360
-6.391	6.287	.08110	.03720	-6.49190	6.10590
	GRADIENT	.00143	.00108	-.02083	.99061

IA156A, AEDC PWT 16T-470, 0 T S W/SILTS (R8NP90) (10 MAY 80)

REFERENCE DATA

SREF = 2690.0000 SQ.FT. XMRP = 976.0000 IN. XT
LREF = 1290.3000 INCHES YMRP = .0000 IN. YT
BREF = 1290.3000 INCHES ZMRP = 400.0000 IN. ZT
SCALE = .0200

PARAMETRIC DATA

IB-ELV = 8.000 OB-ELV = 9.000
BDFLAP = .000 SPDBRK = .000
RUDDER = .000 SILTS = 1.000
MACH = 1.150 RN/L = 3.500

RUN NO. 1161/ 0 RN/L = 3.50 GRADIENT INTERVAL = -5.00/ 5.00

ALPHAR	BETAR	CARS	CYNRS	ALFRSU	BETRSU
-4.240	-6.492	.06290	.04090	-4.03680	-6.53210
-4.504	-4.331	.06670	.03520	-4.31470	-4.41450
-4.478	.258	.07370	.04180	-4.42070	.05930
-3.930	4.377	.07940	.04800	-4.03710	4.19970
-4.051	6.255	.08120	.04920	-4.18530	6.09780
	GRADIENT	.00146	.00147	.03084	.98901

RUN NO. 1162/ 0 RN/L = 3.49 GRADIENT INTERVAL = -5.00/ 5.00

ALPHAR	BETAR	CARS	CYNRS	ALFRSU	BETRSU
-.277	-7.434	.06330	.04890	-.08120	-7.36910
-.252	-5.258	.06530	.04870	-.05620	-5.19230
-.310	-.801	.07370	.05660	-.11430	-.73570
-.231	3.289	.08000	.06310	-.03540	3.35480
-.234	5.490	.08170	.06470	-.03740	5.55580
	GRADIENT	.00154	.00159	.01929	1.00000

RUN NO. 1163/ 0 RN/L = 3.50 GRADIENT INTERVAL = -5.00/ 5.00

ALPHAR	BETAR	CARS	CYNRS	ALFRSU	BETRSU
4.370	-5.824	.06710	.04010	4.24090	-5.98510
4.328	-3.710	.07110	.04280	4.23480	-3.89460
4.193	.071	.07450	.05250	4.25820	-.12500
4.227	3.688	.07810	.06030	4.41110	3.59370
4.136	5.695	.07910	.06640	4.33550	5.64270
	GRADIENT	.00095	.00237	.02370	1.01201

IA156A, AEDC PWT 16T-470, 0 T S W/SILTS (R8NP91) (10 MAY 80)

REFERENCE DATA

SREF = 2690.0000 SQ.FT. XMRP = 976.0000 IN. XT
LREF = 1290.3000 INCHES YMRP = .0000 IN. YT
BREF = 1290.3000 INCHES ZMRP = 400.0000 IN. ZT
SCALE = .0200

PARAMETRIC DATA

IB-ELV = 8.000 OB-ELV = 9.000
BDFLAP = .000 SPDBRK = .000
RUDDER = .000 SILTS = 1.000
MACH = 1.250 RN/L = 3.500

RUN NO. 1164/ 0 RN/L = 3.50 GRADIENT INTERVAL = -5.00/ 5.00

ALPHAR	BETAR	CARS	CYNRS	ALFRSU	BETRSU
-8.673	-6.345	.05800	.01190	-8.48800	-6.46000
-8.707	-4.184	.06280	.00720	-8.54770	-4.33300
-8.725	.198	.07150	.00820	-8.66030	-.00990
-8.533	4.323	.07540	.01660	-8.57300	4.10840
-8.600	6.275	.07790	.02030	-8.67710	6.07170
	GRADIENT	.00149	.00110	-.00321	.99226

RUN NO. 1165/ 0 RN/L = 3.50 GRADIENT INTERVAL = -5.00/ 5.00

ALPHAR	BETAR	CARS	CYNRS	ALFRSU	BETRSU
-6.512	-6.415	.05860	.02470	-6.31140	-6.50080
-6.451	-4.417	.06360	.02060	-6.26950	-4.53750
-6.608	-.043	.07090	.02230	-6.53440	-.24830
-6.392	4.308	.07610	.02660	-6.45740	4.09960
-6.385	6.330	.07850	.03020	-6.48950	6.13880
	GRADIENT	.00143	.00069	-.02157	.98995

RUN NO. 1166/ 0 RN/L = 3.49 GRADIENT INTERVAL = -5.00/ 5.00

ALPHAR	BETAR	CARS	CYNRS	ALFRSU	BETRSU
-4.214	-6.509	.05980	.03670	-4.00020	-6.54890
-4.445	-4.317	.06400	.03270	-4.24440	-4.40380
-4.422	.262	.07070	.03580	-4.36040	.05240
-3.906	4.394	.07610	.04090	-4.01760	4.20690
-4.036	6.286	.07870	.04210	-4.17660	6.11920
	GRADIENT	.00139	.00094	.02511	.98812

RUN NO. 1167/ 0 RN/L = 3.50 GRADIENT INTERVAL = -5.00/ 5.00

ALPHAR	BETAR	CARS	CYNRS	ALFRSU	BETRSU
-.246	-7.458	.06010	.04610	-.03980	-7.38770
-.218	-5.234	.06270	.04660	-.01130	-5.16390
-.236	-.841	.07130	.05280	-.02940	-.77070
-.173	3.311	.07730	.05880	.03350	3.38100
-.181	5.537	.07920	.06110	.02580	5.60740
	GRADIENT	.00145	.00145	.01515	.99998

IA156A, AEDC PWT 16T-470, 0 T S W/SILTS (R8NP91) (10 MAY 80)

REFERENCE DATA

SREF = 2690.0000 SQ.FT. XMRP = 976.0000 IN. XT
LREF = 1290.3000 INCHES YMRP = .0000 IN. YT
BREF = 1290.3000 INCHES ZMRP = 400.0000 IN. ZT
SCALE = .0200

PARAMETRIC DATA

IB-ELV =	8.000	OB-ELV =	9.000
BDFLAP =	.000	SPDBRK =	.000
RUDDER =	.000	SILTS =	1.000
MACH =	1.250	RN/L =	3.500

RUN NO. 1168/ 0 RN/L = 3.49 GRADIENT INTERVAL = -5.00/ 5.00

ALPHAR	BETAR	CARS	CYNRS	ALFRSU	BETRSU
4.538	-5.690	.06480	.03700	4.40540	-5.86330
4.403	-3.758	.06790	.03940	4.30380	-3.95210
4.269	.052	.07180	.04950	4.33810	-.15480
4.241	3.583	.07560	.05860	4.43440	3.48260
4.274	5.770	.07700	.06460	4.48490	5.71460
	GRADIENT	.00105	.00262	.01768	1.01263

IA156A, AEDC PWT 16T-470, 0 T S W/SILTS (R8NP92) (10 MAY 80)

REFERENCE DATA

SREF = 2690.0000 SQ.FT. XMRP = 976.0000 IN. XT
LREF = 1290.3000 INCHES YMRP = .0000 IN. YT
BREF = 1290.3000 INCHES ZMRP = 400.0000 IN. ZT
SCALE = .0200

PARAMETRIC DATA

IB-ELV =	8.000	OB-ELV =	5.000
BDFLAP =	.000	SPDBRK =	.000
RUDDER =	.000	SILTS =	1.000
MACH =	.600	RN/L =	3.500

RUN NO. 1173/ 0 RN/L = 3.50 GRADIENT INTERVAL = -5.00/ 5.00

ALPHAR	BETAR	CARS	CYNRS	ALFRSU	BETRSU
-8.158	-8.250	.03260	.02000	-8.06880	-8.44200
-8.278	-6.073	.03550	.01160	-8.21920	-6.27550
-8.295	-4.027	.03950	.00570	-8.27410	-4.23740
-8.245	.188	.04270	.00600	-8.32500	-.00700
-8.141	4.248	.04570	.01670	-8.30150	4.11120
-8.161	6.230	.04780	.02280	-8.34340	6.12360
-8.001	8.336	.04990	.03070	-8.19820	8.26080
	GRADIENT	.00075	.00132	-.00337	1.00877

RUN NO. 1174/ 0 RN/L = 3.49 GRADIENT INTERVAL = -5.00/ 5.00

ALPHAR	BETAR	CARS	CYNRS	ALFRSU	BETRSU
-6.224	-8.246	.03420	.02820	-6.10960	-8.42370
-6.205	-6.216	.03660	.02220	-6.11550	-6.40750
-6.170	-4.210	.04000	.01750	-6.11800	-4.41510
-6.240	.034	.04260	.01830	-6.31480	-.16340
-6.109	4.256	.04700	.02720	-6.28500	4.13950
-5.894	6.344	.04890	.03360	-6.09130	6.26870
-6.066	8.275	.04990	.03720	-6.27100	8.22510
	GRADIENT	.00083	.00114	-.01975	1.01042

IA156A, AEDC PWT 16T-470, 0 T S W/SILTS (R8NP92) (10 MAY 80)

REFERENCE DATA

SREF = 2690.0000 SQ.FT. XMRP = 976.0000 IN. XT
LREF = 1290.3000 INCHES YMRP = .0000 IN. YT
BREF = 1290.3000 INCHES ZMRP = 400.0000 IN. ZT
SCALE = .0200

PARAMETRIC DATA

IB-ELV = 8.000 OB-ELV = 5.000
BDFLAP = .000 SPDBRK = .000
RUDDER = .000 SILTS = 1.000
MACH = .600 RN/L = 3.500

RUN NO. 1175/ 0 RN/L = 3.49 GRADIENT INTERVAL = -5.00/ 5.00

ALPHAR	BETAR	CARS	CYNRS	ALFRSU	BETRSU
-4.038	-8.364	.03630	.03450	-3.89040	-8.51510
-4.256	-6.222	.03740	.03010	-4.13160	-6.39170
-4.281	-4.130	.04020	.02630	-4.19250	-4.32120
-4.094	.112	.04370	.03180	-4.16920	-.08470
-3.749	4.375	.04790	.03900	-3.94660	4.30270
-3.716	6.188	.04910	.04200	-3.92370	6.15230
-3.912	8.177	.05070	.04560	-4.12280	8.16310
	GRADIENT	.00091	.00149	.02893	1.01393

RUN NO. 1176/ 0 RN/L = 3.49 GRADIENT INTERVAL = -5.00/ 5.00

ALPHAR	BETAR	CARS	CYNRS	ALFRSU	BETRSU
-.277	-9.069	.04000	.03830	-.08020	-9.14640
-.259	-6.879	.03850	.03700	-.06250	-6.95540
-.255	-4.808	.03990	.03720	-.05800	-4.88410
-.254	-.646	.04440	.04340	-.05750	-.72270
-.210	3.442	.04880	.04960	-.01390	3.36670
-.214	5.559	.05030	.05240	-.01740	5.48350
-.207	7.642	.05210	.05630	-.01110	7.56580
	GRADIENT	.00108	.00150	.00533	1.00000

RUN NO. 1177/ 0 RN/L = 3.50 GRADIENT INTERVAL = -5.00/ 5.00

ALPHAR	BETAR	CARS	CYNRS	ALFRSU	BETRSU
4.313	-7.914	.04170	.02830	4.10330	-7.93000
4.318	-5.696	.04090	.02920	4.11160	-5.73970
4.293	-3.735	.04150	.03190	4.09860	-3.81640
4.066	.018	.04360	.04150	3.98300	-.17610
4.149	3.852	.04780	.04900	4.23090	3.65750
4.087	5.933	.05010	.05350	4.20960	5.76180
4.069	7.917	.05140	.05670	4.21220	7.76320
	GRADIENT	.00083	.00225	.01761	.98521

IA156A, AEDC PWT 16T-470, O T S W/SILTS (R8NP92) (10 MAY 80)

REFERENCE DATA

SREF = 2690.0000 SQ.FT. XMRP = 976.0000 IN. XT
LREF = 1290.3000 INCHES YMRP = .0000 IN. YT
BREF = 1290.3000 INCHES ZMRP = 400.0000 IN. ZT
SCALE = .0200

PARAMETRIC DATA

IB-ELV = 8.000 OB-ELV = 5.000
BDFLAP = .000 SPDBRK = .000
RUDDER = .000 SILTS = 1.000
MACH = .600 RN/L = 3.500

RUN NO. 1178/ 0 RN/L = 3.51 GRADIENT INTERVAL = -5.00/ 5.00

ALPHAR	BETAR	CARS	CYNRS	ALFRSU	BETRSU
6.468	-7.870	.04220	.02140	6.26570	-7.92610
6.454	-5.814	.04150	.02240	6.26180	-5.89860
6.447	-3.789	.04220	.02490	6.27470	-3.90970
6.166	.111	.04450	.03570	6.08930	-.08570
6.112	3.884	.04740	.04290	6.15960	3.67920
6.066	5.766	.04910	.04650	6.15270	5.57440
6.132	8.029	.05060	.05060	6.24750	7.85350
	GRADIENT	.00068	.00235	-.01518	.98910

RUN NO. 1179/ 0 RN/L = 3.50 GRADIENT INTERVAL = -5.00/ 5.00

ALPHAR	BETAR	CARS	CYNRS	ALFRSU	BETRSU
8.394	-7.743	.04110	.01290	8.20170	-7.82730
8.332	-5.710	.04100	.01410	8.15300	-5.81990
8.321	-3.746	.04210	.01690	8.16450	-3.88720
8.257	.085	.04540	.02610	8.18180	-.11140
8.317	4.019	.04740	.03150	8.34090	3.81050
8.280	5.993	.04830	.03590	8.34050	5.79150
8.262	7.985	.04950	.04220	8.35090	7.79490
	GRADIENT	.00068	.00188	.02280	.99129

IA156A, AEDC PWT 16T-470, 0 T S W/SILTS (R8NP93) (10 MAY 80)

REFERENCE DATA

SREF = 2690.0000 SQ.FT. XMRP = 976.0000 IN. XT
LREF = 1290.3000 INCHES YMRP = .0000 IN. YT
BREF = 1290.3000 INCHES ZMRP = 400.0000 IN. ZT
SCALE = .0200

PARAMETRIC DATA

IB-ELV = 8.000 OB-ELV = 5.000
BDFLAP = .000 SPDBRK = .000
RUDDER = .000 SILTS = 1.000
MACH = .800 RN/L = 3.500

RUN NO. 1180/ 0 RN/L = 3.49 GRADIENT INTERVAL = -5.00/ 5.00

ALPHAR	BETAR	CARS	CYNRS	ALFRSU	BETRSU
-8.444	-6.217	.03510	.00840	-8.28690	-6.35340
-8.491	-4.098	.04120	.00320	-8.36330	-4.26140
-8.439	.241	.04580	.00220	-8.40510	.03590
-8.327	4.332	.04830	.01160	-8.39140	4.13470
-8.381	6.280	.04990	.01750	-8.47810	6.09660
	GRADIENT	.00084	.00098	-.00340	.99592

RUN NO. 1181/ 0 RN/L = 3.50 GRADIENT INTERVAL = -5.00/ 5.00

ALPHAR	BETAR	CARS	CYNRS	ALFRSU	BETRSU
-6.322	-6.308	.03670	.01880	-6.14680	-6.41880
-6.275	-4.326	.04150	.01520	-6.12290	-4.46710
-6.420	-.004	.04550	.01530	-6.37850	-.20780
-6.271	4.283	.04880	.02430	-6.35720	4.09390
-5.990	6.413	.05080	.03130	-6.11660	6.24770
	GRADIENT	.00085	.00106	-.02726	.99439

RUN NO. 1182/ 0 RN/L = 3.50 GRADIENT INTERVAL = -5.00/ 5.00

ALPHAR	BETAR	CARS	CYNRS	ALFRSU	BETRSU
-4.310	-6.340	.03840	.02720	-4.11650	-6.41530
-4.354	-4.246	.04250	.02430	-4.17970	-4.35780
-4.322	.294	.04610	.02890	-4.29220	.08880
-3.883	4.402	.05000	.03690	-4.01060	4.23820
-3.967	6.249	.05190	.03930	-4.11950	6.10810
	GRADIENT	.00087	.00145	.01878	.99374

RUN NO. 1183/ 0 RN/L = 3.50 GRADIENT INTERVAL = -5.00/ 5.00

ALPHAR	BETAR	CARS	CYNRS	ALFRSU	BETRSU
-.269	-7.234	.04230	.03710	-.06500	-7.19580
-.277	-5.072	.04230	.03700	-.07250	-5.03370
-.298	-.781	.04550	.04080	-.09430	-.74230
-.254	3.323	.05020	.04770	-.04970	3.36160
-.242	5.463	.05330	.05160	-.03800	5.50090
	GRADIENT	.00115	.00168	.01087	1.00002

IA156A, AEDC PWT 16T-470, 0 T S W/SILTS (R8NP93) (10 MAY 80)

REFERENCE DATA

SREF = 2690.0000 SQ.FT. XMRP = 976.0000 IN. XT
LREF = 1290.3000 INCHES YMRP = .0000 IN. YT
BREF = 1290.3000 INCHES ZMRP = 400.0000 IN. ZT
SCALE = .0200

PARAMETRIC DATA

IB-ELV = 8.000 OB-ELV = 5.000
BDFLAP = .000 SPDBRK = .000
RUDDER = .000 SILTS = 1.000
MACH = .800 RN/L = 3.500

RUN NO. 1184/ 0 RN/L = 3.50 GRADIENT INTERVAL = -5.00/ 5.00

ALPHAR	BETAR	CARS	CYNRS	ALFRSU	BETRSU
4.396	-5.706	.04400	.03000	4.24660	-5.85030
4.272	-3.628	.04440	.03300	4.15450	-3.79930
3.994	.035	.04560	.04290	4.02850	-.17020
4.110	3.768	.05100	.04970	4.28090	3.65000
4.056	5.813	.05370	.05500	4.24780	5.73460
	GRADIENT	.00089	.00226	.01725	1.00724

RUN NO. 1185/ 0 RN/L = 3.50 GRADIENT INTERVAL = -5.00/ 5.00

ALPHAR	BETAR	CARS	CYNRS	ALFRSU	BETRSU
6.434	-5.771	.04460	.02270	6.31500	-5.94150
6.404	-3.770	.04520	.02470	6.32150	-3.96050
6.088	.053	.04680	.03660	6.12450	-.15110
6.062	3.758	.05060	.04320	6.20760	3.61000
6.207	5.890	.05250	.04740	6.37980	5.77550
	GRADIENT	.00072	.00246	-.01532	1.00561

IA156A, AEDC PWT 16T-470, 0 T S W/SILTS (R8NP94) (10 MAY 80)

REFERENCE DATA

SREF = 2690.0000 SQ.FT. XMRP = 976.0000 IN. XT
LREF = 1290.3000 INCHES YMRP = .0000 IN. YT
BREF = 1290.3000 INCHES ZMRP = 400.0000 IN. ZT
SCALE = .0200

PARAMETRIC DATA

IB-ELV = 8.000 OB-ELV = 5.000
BDFLAP = .000 SPDBRK = .000
RUDDER = .000 SILTS = 1.000
MACH = .900 RN/L = 3.500

RUN NO. 1186/ 0 RN/L = 3.50 GRADIENT INTERVAL = -5.00/ 5.00

ALPHAR	BETAR	CARS	CYNRS	ALFRSU	BETRSU
-8.449	-6.272	.04010	.00600	-8.28270	-6.39520
-8.547	-4.057	.04620	.00030	-8.40970	-4.21150
-8.496	-.007	.04950	.00240	-8.44370	-.20730
-8.406	4.349	.05190	.01230	-8.45860	4.14860
-8.451	6.236	.05380	.01760	-8.53640	6.04760
	GRADIENT	.00068	.00144	-.00579	.99462

IA156A, AEDC PWT 16T-470, O T S W/SILTS (R8NP94) (10 MAY 80)

REFERENCE DATA

SREF =	2690.0000 SQ.FT.	XMRP =	976.0000 IN. XT		
LREF =	1290.3000 INCHES	YMRP =	.0000 IN. YT		
BREF =	1290.3000 INCHES	ZMRP =	400.0000 IN. ZT		
SCALE =	.0200				

PARAMETRIC DATA

IB-ELV =	8.000	OB-ELV =	5.000
BDFLAP =	.000	SPDBRK =	.000
RUDDER =	.000	SILTS =	1.000
MACH =	.900	RN/L =	3.500

RUN NO. 1187/ 0 RN/L = 3.50 GRADIENT INTERVAL = -5.00/ 5.00

ALPHAR	BETAR	CARS	CYNRS	ALFRSU	BETRSU
-6.375	-6.322	.04200	.01730	-6.19270	-6.41960
-6.348	-4.352	.04650	.01310	-6.18640	-4.48090
-6.486	-.049	.04910	.01430	-6.43010	-.24800
-6.302	4.260	.05360	.02230	-6.37520	4.06660
-6.289	6.284	.05560	.02670	-6.39940	6.10970
	GRADIENT	.00082	.00107	-.02192	.99257

RUN NO. 1188/ 0 RN/L = 3.50 GRADIENT INTERVAL = -5.00/ 5.00

ALPHAR	BETAR	CARS	CYNRS	ALFRSU	BETRSU
-4.115	-6.460	.04450	.02840	-3.91550	-6.50460
-4.413	-4.277	.04800	.02350	-4.23110	-4.37570
-4.387	.274	.04910	.02780	-4.34380	.07190
-3.912	4.372	.05470	.03430	-4.02780	4.20070
-4.033	6.328	.05650	.03790	-4.17670	6.17960
	GRADIENT	.00076	.00124	.02262	.99141

RUN NO. 1189/ 0 RN/L = 3.50 GRADIENT INTERVAL = -5.00/ 5.00

ALPHAR	BETAR	CARS	CYNRS	ALFRSU	BETRSU
-.317	-7.321	.04830	.03860	-.11740	-7.26960
-.314	-5.147	.04870	.03710	-.11420	-5.09490
-.373	-.750	.05060	.04030	-.17330	-.69770
-.319	3.314	.05390	.04790	-.11950	3.36580
-.305	5.464	.05710	.05280	-.10490	5.51550
	GRADIENT	.00081	.00187	.01324	1.00000

RUN NO. 1190/ 0 RN/L = 3.50 GRADIENT INTERVAL = -5.00/ 5.00

ALPHAR	BETAR	CARS	CYNRS	ALFRSU	BETRSU
4.358	-5.654	.04970	.03190	4.21960	-5.80770
4.250	-3.659	.05060	.03410	4.14370	-3.83630
3.931	-.008	.05150	.04310	3.97640	-.21000
4.089	3.712	.05640	.04990	4.26610	3.60480
4.034	5.792	.05890	.05610	4.22940	5.72570
	GRADIENT	.00079	.00214	.01680	1.00964

IA156A, AEDC PWT 16T-470, O T S W/SILTS (R8NP95) (10 MAY 80)

REFERENCE DATA

SREF = 2690.0000 SQ.FT. XMRP = 976.0000 IN. XT
LREF = 1290.3000 INCHES YMRP = .0000 IN. YT
BREF = 1290.3000 INCHES ZMRP = 400.0000 IN. ZT
SCALE = .0200

PARAMETRIC DATA

IB-ELV =	8.000	OB-ELV =	5.000
BDFLAP =	.000	SPDBRK =	.000
RUDDER =	.000	SILTS =	1.000
MACH =	.950	RN/L =	3.500

RUN NO. 1191/ 0 RN/L = 3.50 GRADIENT INTERVAL = -5.00/ 5.00

ALPHAR	BETAR	CARS	CYNRS	ALFRSU	BETRSU
-8.472	-6.287	.04370	.01070	-8.30400	-6.40500
-8.653	-4.067	.05030	.00410	-8.51280	-4.21750
-8.617	-.025	.05530	.00350	-8.56100	-.22300
-8.509	4.346	.05660	.01230	-8.55840	4.14700
-8.530	6.206	.05860	.01800	-8.61160	6.01800
	GRADIENT	.00074	.00099	-.00534	.99423

RUN NO. 1192/ 0 RN/L = 3.49 GRADIENT INTERVAL = -5.00/ 5.00

ALPHAR	BETAR	CARS	CYNRS	ALFRSU	BETRSU
-6.464	-6.355	.04630	.02210	-6.28090	-6.44770
-6.389	-4.342	.05190	.01750	-6.22530	-4.46700
-6.570	-.052	.05680	.01590	-6.51100	-.24900
-6.379	4.258	.05860	.02390	-6.44890	4.06480
-6.358	6.280	.06070	.02870	-6.46530	6.10470
	GRADIENT	.00078	.00075	-.02597	.99207

RUN NO. 1193/ 0 RN/L = 3.49 GRADIENT INTERVAL = -5.00/ 5.00

ALPHAR	BETAR	CARS	CYNRS	ALFRSU	BETRSU
-4.152	-6.443	.04900	.03240	-3.95300	-6.49340
-4.455	-4.279	.05390	.02760	-4.27280	-4.37270
-4.431	.271	.05650	.03210	-4.38360	.07160
-3.935	4.392	.06100	.03980	-4.04790	4.22030
-4.048	6.235	.06280	.04260	-4.18770	6.08460
	GRADIENT	.00081	.00140	.02507	.99078

RUN NO. 1194/ 0 RN/L = 3.48 GRADIENT INTERVAL = -5.00/ 5.00

ALPHAR	BETAR	CARS	CYNRS	ALFRSU	BETRSU
-.315	-7.349	.05060	.04020	-.11740	-7.29310
-.301	-5.151	.05230	.03880	-.10340	-5.09540
-.340	-.825	.05750	.04600	-.14260	-.76910
-.286	3.284	.06240	.05360	-.08870	3.33920
-.288	5.471	.06350	.05790	-.09030	5.52630
	GRADIENT	.00119	.00185	.01312	.99998

IA156A, AEDC PWT 16T-470, O T S W/SILTS (R8NP95) (10 MAY 80)

REFERENCE DATA

SREF = 2690.0000 SQ.FT. XMRP = 976.0000 IN. XT
LREF = 1290.3000 INCHES YMRP = .0000 IN. YT
BREF = 1290.3000 INCHES ZMRP = 400.0000 IN. ZT
SCALE = .0200

PARAMETRIC DATA

IB-ELV = 8.000 OB-ELV = 5.000
BDFLAP = .000 SPDBRK = .000
RUDDER = .000 SILTS = 1.000
MACH = .950 RN/L = 3.500

RUN NO. 1195/ 0 RN/L = 3.49 GRADIENT INTERVAL = -5.00/ 5.00

ALPHAR	BETAR	CARS	CYNRS	ALFRSU	BETRSU
4.408	-5.710	.05360	.03330	4.27430	-5.86590
4.2[illegible]	-3.620	.05570	.03610	4.12900	-3.79890
3.906	.014	.05800	.04540	3.95820	-.18450
4.109	3.735	.06290	.05160	4.28750	3.63260
4.073	5.775	.06530	.05900	4.26920	5.71340
	GRADIENT	.00098	.00211	.02182	1.01052

IA156A, AEDC PWT 16T-470, O T S W/SILTS (R8NP96) (10 MAY 80)

REFERENCE DATA

SREF = 2690.0000 SQ.FT. XMRP = 976.0000 IN. XT
LREF = 1290.3000 INCHES YMRP = .0000 IN. YT
BREF = 1290.3000 INCHES ZMRP = 400.0000 IN. ZT
SCALE = .0200

PARAMETRIC DATA

IB-ELV = 8.000 OB-ELV = 5.000
BDFLAP = .000 SPDBRK = .000
RUDDER = .000 SILTS = 1.000
MACH = 1.050 RN/L = 3.500

RUN NO. 1196/ 0 RN/L = 3.50 GRADIENT INTERVAL = -5.00/ 5.00

ALPHAR	BETAR	CARS	CYNRS	ALFRSU	BETRSU
-8.585	-6.393	.06180	.01940	-8.41400	-6.50310
-8.747	-4.146	.06890	.01300	-8.60290	-4.28970
-8.761	-.057	.07710	.01380	-8.70030	-.25160
-8.570	4.209	.07860	.02680	-8.61260	4.00950
-8.621	6.169	.08210	.03090	-8.69740	5.97990
	GRADIENT	.00116	.00166	-.00100	.99337

RUN NO. 1197/ 0 RN/L = 3.50 GRADIENT INTERVAL = -5.00/ 5.00

ALPHAR	BETAR	CARS	CYNRS	ALFRSU	BETRSU
-6.506	-6.378	.06470	.03160	-6.32100	-6.46290
-6.458	-4.385	.07070	.02750	-6.29120	-4.50190
-6.643	-.028	.07630	.02960	-6.58060	-.22240
-6.445	4.251	.08180	.03720	-6.51060	4.05850
-6.196	6.352	.08360	.04560	-6.30220	6.17820
	GRADIENT	.00129	.00112	-.02553	.99123

IA156A, AEDC PWT 16T-470, 0 T S W/SILTS (R8NP96) (10 MAY 80)

REFERENCE DATA

SREF = 2690.0000 SQ.FT. XMRP = 976.0000 IN. XT
LREF = 1290.3000 INCHES YMRP = .0000 IN. YT
BREF = 1290.3000 INCHES ZMRP = 400.0000 IN. ZT
SCALE = .0200

PARAMETRIC DATA

IB-ELV = 8.000 OB-ELV = 5.000
BDFLAP = .000 SPDBRK = .000
RUDDER = .000 SILTS = 1.000
MACH = 1.050 RN/L = 3.500

RUN NO. 1198/ 0 RN/L = 3.50 GRADIENT INTERVAL = -5.00/ 5.00

ALPHAR	BETAR	CARS	CYNRS	ALFRSU	BETRSU
-4.252	-6.481	.06720	.04380	-4.05260	-6.52420
-4.511	-4.330	.07150	.03840	-4.32620	-4.41510
-4.479	.221	.07680	.04610	-4.42660	.02430
-3.952	4.350	.08270	.05420	-4.06080	4.17850
-4.062	6.205	.08370	.05530	-4.19760	6.05240
	GRADIENT	.00129	.00182	.02968	.98980

RUN NO. 1199/ 0 RN/L = 3.50 GRADIENT INTERVAL = -5.00/ 5.00

ALPHAR	BETAR	CARS	CYNRS	ALFRSU	BETRSU
-.329	-7.430	.06740	.05110	-.13490	-7.36880
-.325	-5.211	.06970	.05090	-.13100	-5.14970
-.401	-.839	.07800	.06060	-.20700	-.77770
-.313	3.258	.08450	.06880	-.11830	3.31860
-.303	5.443	.08610	.07190	-.10890	5.50420
	GRADIENT	.00159	.00200	.02165	1.00002

RUN NO. 1200/ 0 RN/L = 3.50 GRADIENT INTERVAL = -5.00/ 5.00

ALPHAR	BETAR	CARS	CYNRS	ALFRSU	BETRSU
4.399	-5.722	.07290	.04210	4.27210	-5.88140
4.245	-3.656	.07580	.04640	4.15130	-3.83690
3.968	-.014	.07850	.05630	4.02480	-.20930
4.134	3.700	.08230	.06300	4.31310	3.60320
4.119	5.739	.08200	.06980	4.31520	5.68310
	GRADIENT	.00088	.00226	.02218	1.01156

REFERENCE DATA

SREF = 2690.0000 SQ.FT. XMRP = 976.0000 IN. XT
LREF = 1290.3000 INCHES YMRP = .0000 IN. YT
BREF = 1290.3000 INCHES ZMRP = 400.0000 IN. ZT
SCALE = .0200

PARAMETRIC DATA

IB-ELV =	8.000	OB-ELV =	5.000
BDFLAP =	.000	SPDBRK =	.000
RUDDER =	.000	SILTS =	1.000
MACH =	1.100	RN/L =	3.500

RUN NO. 1201/ 0 RN/L = 3.50 GRADIENT INTERVAL = -5.00/ 5.00

ALPHAR	BETAR	CARS	CYNRS	ALFRSU	BETRSU
-8.633	-6.397	.06050	.01650	-8.45930	-6.50580
-8.762	-4.160	.06760	.01130	-8.61550	-4.30170
-8.768	-.056	.07550	.01340	-8.70420	-.25020
-8.611	4.214	.08000	.02540	-8.65110	4.01360
-8.617	6.181	.08200	.03080	-8.69140	5.99080
	GRADIENT	.00148	.00169	-.00414	.99307

RUN NO. 1202/ 0 RN/L = 3.50 GRADIENT INTERVAL = -5.00/ 5.00

ALPHAR	BETAR	CARS	CYNRS	ALFRSU	BETRSU
-6.527	-6.379	.06270	.02870	-6.33970	-6.46150
-6.503	-4.377	.06870	.02520	-6.33470	-4.49330
-6.710	-.035	.07460	.02760	-6.64550	-.22900
-6.455	4.271	.08030	.03770	-6.51900	4.07640
-6.184	6.351	.08310	.04300	-6.28880	6.17600
	GRADIENT	.00134	.00144	-.02138	.99094

RUN NO. 1203/ 0 RN/L = 3.50 GRADIENT INTERVAL = -5.00/ 5.00

ALPHAR	BETAR	CARS	CYNRS	ALFRSU	BETRSU
-4.261	-6.495	.06520	.04150	-4.06090	-6.53520
-4.542	-4.337	.06860	.03610	-4.35490	-4.42020
-4.491	.239	.07470	.04360	-4.43560	.04160
-3.959	4.362	.08030	.05070	-4.06570	4.18810
-4.067	6.228	.08220	.05230	-4.20100	6.07380
	GRADIENT	.00134	.00168	.03232	.98934

RUN NO. 1204/ 0 RN/L = 3.50 GRADIENT INTERVAL = -5.00/ 5.00

ALPHAR	BETAR	CARS	CYNRS	ALFRSU	BETRSU
-.336	-7.430	.06530	.05080	-.14120	-7.36690
-.315	-5.231	.06640	.04990	-.12000	-5.16810
-.387	-.834	.07340	.05770	-.19270	-.77070
-.291	3.281	.08000	.06470	-.09680	3.34410
-.291	5.490	.08190	.06720	-.09620	5.55280
	GRADIENT	.00160	.00170	.02331	.99998

IA156A, AEDC PWT 16T-470, 0 T S W/SILTS (R8NP97) (10 MAY 80)

REFERENCE DATA

SREF = 2690.0000 SQ.FT. XMRP = 976.0000 IN. XT
LREF = 1290.3000 INCHES YMRP = .0000 IN. YT
BREF = 1290.3000 INCHES ZMRP = 400.0000 IN. ZT
SCALE = .0200

PARAMETRIC DATA

IB-ELV =	8.000	OB-ELV =	5.000
BDFLAP =	.000	SPDBRK =	.000
RUDDER =	.000	SILTS =	1.000
MACH =	1.100	RN/L =	3.500

RUN NO. 1205/ 0 RN/L = 3.50 GRADIENT INTERVAL = -5.00/ 5.00

ALPHAR	BETAR	CARS	CYNRS	ALFRSU	BETRSU
4.445	-5.739	.06760	.03930	4.31880	-5.90000
4.275	-3.646	.07150	.04330	4.18240	-3.82840
4.001	-.003	.07420	.05400	4.06090	-.19910
4.163	3.705	.07810	.06040	4.34440	3.61070
4.152	5.752	.07900	.06750	4.34900	5.69750
	GRADIENT	.00090	.00232	.02220	1.01199

IA156A, AEDC PWT 16T-470, 0 T S W/SILTS (R8NP98) (28 MAY 80)

REFERENCE DATA

SREF = 2690.0000 SQ.FT. XMRP = 976.0000 IN. XT
LREF = 1290.3000 INCHES YMRP = .0000 IN. YT
BREF = 1290.3000 INCHES ZMRP = 400.0000 IN. ZT
SCALE = .0200

PARAMETRIC DATA

IB-ELV =	8.000	OB-ELV =	5.000
BDFLAP =	.000	SPDBRK =	.000
RUDDER =	.000	SILTS =	1.000
MACH =	1.150	RN/L =	3.500

RUN NO. 1206/ 0 RN/L = 3.50 GRADIENT INTERVAL = -5.00/ 5.00

ALPHAR	BETAR	CARS	CYNRS	ALFRSU	BETRSU
-8.579	-6.368	.06030	.01720	-8.40280	-6.47600
-8.785	-4.127	.06560	.00920	-8.63590	-4.27050
-8.779	-.058	.07400	.01040	-8.71360	-.25370
-8.577	4.317	.07840	.02190	-8.61800	4.11460
-8.641	6.231	.07990	.02700	-8.71560	6.03830
	GRADIENT	.00151	.00152	.00237	.99302

RUN NO. 1207/ 0 RN/L = 3.50 GRADIENT INTERVAL = -5.00/ 5.00

ALPHAR	BETAR	CARS	CYNRS	ALFRSU	BETRSU
-6.529	-6.402	.06140	.02880	-6.33940	-6.48390
-6.462	-4.399	.06600	.02380	-6.29010	-4.51430
-6.681	-.086	.07340	.02430	-6.61180	-.28080
-6.414	4.271	.07870	.03320	-6.47720	4.07400
-6.416	6.297	.08110	.03700	-6.51740	6.11620
	GRADIENT	.00146	.00109	-.02149	.99061

IA156A, AEDC PWT 16T-470, O T S W/SILTS (R8NP98) (28 MAY 80)

REFERENCE DATA

SREF =	2690.0000 SQ.FT.	XMRP =	976.0000 IN. XT		
LREF =	1290.3000 INCHES	YMRP =	.0000 IN. YT		
BREF =	1290.3000 INCHES	ZMRP =	400.0000 IN. ZT		
SCALE =	.0200				

PARAMETRIC DATA

IB-ELV =	8.000	OB-ELV =	5.000
BDFLAP =	.000	SPDBRK =	.000
RUDDER =	.000	SILTS =	1.000
MACH =	1.150	RN/L =	3.500

RUN NO. 1208/ 0 RN/L = 3.50 GRADIENT INTERVAL = -5.00/ 5.00

ALPHAR	BETAR	CARS	CYNRS	ALFRSU	BETRSU
-4.226	-6.504	.06270	.04070	-4.02300	-6.54320
-4.515	-4.322	.06620	.03450	-4.32590	-4.40520
-4.488	.250	.07350	.04140	-4.43110	.05080
-3.930	4.390	.07980	.04790	-4.03740	4.21300
-4.047	6.243	.08090	.04910	-4.18150	6.08530
	GRADIENT	.00156	.00154	.03215	.98905

RUN NO. 1210/ 0 RN/L = 3.51 GRADIENT INTERVAL = -5.00/ 5.00

ALPHAR	BETAR	CARS	CYNRS	ALFRSU	BETRSU
-.297	-7.393	.06300	.04820	-.10130	-7.32700
-.287	-5.127	.06540	.04830	-.09060	-5.06150
-.337	-.807	.07350	.05560	-.14080	-.74150
-.251	3.364	.08030	.06270	-.05450	3.42940
-.243	5.498	.08140	.06440	-.04680	5.56340
	GRADIENT	.00163	.00170	.02069	.99998

RUN NO. 1211/ 0 RN/L = 3.50 GRADIENT INTERVAL = -5.00/ 5.00

ALPHAR	BETAR	CARS	CYNRS	ALFRSU	BETRSU
4.460	-5.727	.06730	.03850	4.33310	-5.89060
4.339	-3.620	.07090	.04180	4.24800	-3.80580
4.061	.055	.07460	.05220	4.12520	-.14180
4.191	3.725	.07810	.05980	4.37530	3.63190
4.175	5.753	.07910	.06570	4.37520	5.70050
	GRADIENT	.00098	.00245	.01732	1.01260

IA156A, AEDC PWT 16T-470, 0 T S W/SILTS (R8NPA0) (10 MAY 80)

REFERENCE DATA

SREF =	2690.0000 SQ.FT.	XMRP =	976.0000 IN. XT		
LREF =	1290.3000 INCHES	YMRP =	.0000 IN. YT		
BREF =	1290.3000 INCHES	ZMRP =	400.0000 IN. ZT		
SCALE =	.0200				

PARAMETRIC DATA

IB-ELV =	8.000	OB-ELV =	5.000
BDFLAP =	.000	SPDBRK =	.000
RUDDER =	.000	SILTS =	1.000
MACH =	1.250	RN/L =	3.500

RUN NO. 1224/ 0 RN/L = 3.50 GRADIENT INTERVAL = -5.00/ 5.00

ALPHAR	BETAR	CARS	CYNRS	ALFRSU	BETRSU
-8.695	-6.342	.05810	.01170	-8.51000	-6.45740
-8.702	-4.240	.06220	.00690	-8.54210	-4.38770
-8.724	.069	.07100	.00770	-8.65510	-.13790
-8.530	4.260	.07540	.01590	-8.56910	4.04560
-8.622	6.271	.07740	.02050	-8.69900	6.06710
	GRADIENT	.00156	.00105	-.00328	.99210

RUN NO. 1225/ 0 RN/L = 3.50 GRADIENT INTERVAL = -5.00/ 5.00

ALPHAR	BETAR	CARS	CYNRS	ALFRSU	BETRSU
-6.524	-6.418	.05860	.02420	-6.32300	-6.50330
-6.451	-4.422	.06340	.02050	-6.26940	-4.54250
-6.600	-.033	.07040	.02200	-6.52670	-.23820
-6.402	4.302	.07600	.02580	-6.46720	4.09280
-6.179	6.446	.07860	.03130	-6.28940	6.25760
	GRADIENT	.00144	.00061	-.02275	.98982

RUN NO. 1226/ 0 RN/L = 3.50 GRADIENT INTERVAL = -5.00/ 5.00

ALPHAR	BETAR	CARS	CYNRS	ALFRSU	BETRSU
-4.210	-6.507	.05970	.03640	-3.99530	-6.54700
-4.455	-4.328	.06400	.03230	-4.25440	-4.41390
-4.427	.267	.07060	.03520	-4.36520	.05740
-3.902	4.387	.07650	.04060	-4.01340	4.19930
-4.039	6.278	.07850	.04170	-4.17960	6.11110
	GRADIENT	.00143	.00095	.02666	.98811

RUN NO. 1227/ 0 RN/L = 3.50 GRADIENT INTERVAL = -5.00/ 5.00

ALPHAR	BETAR	CARS	CYNRS	ALFRSU	BETRSU
-.252	-7.446	.06030	.04570	-.04580	-7.37570
-.228	-5.224	.06250	.04580	-.02140	-5.15330
-.243	-.842	.07080	.05210	-.03650	-.77160
-.162	3.312	.07740	.05880	.04400	3.38190
-.183	5.534	.07900	.06110	.02390	5.60460
	GRADIENT	.00159	.00161	.01938	.99993

IA156A, AEDC PWT 16T-470, O T S W/SILTS (R8NPA0) (10 MAY 80)

REFERENCE DATA

SREF = 2690.0000 SQ.FT. XMRP = 976.0000 IN. XT
LREF = 1290.3000 INCHES YMRP = .0000 IN. YT
BREF = 1290.3000 INCHES ZMRP = 400.0000 IN. ZT
SCALE = .0200

PARAMETRIC DATA

IB-ELV = 8.000 OB-ELV = 5.000
BDFLAP = .000 SPDBRK = .000
RUDDER = .000 SILTS = 1.000
MACH = 1.250 RN/L = 3.500

RUN NO. 1228/ 0 RN/L = 3.50 GRADIENT INTERVAL = -5.00/ 5.00

ALPHAR	BETAR	CARS	CYNRS	ALFRSU	BETRSU
4.346	-5.660	.06470	.03660	4.21090	-5.83110
4.377	-3.859	.06780	.03830	4.27490	-4.05150
4.285	.070	.07210	.04860	4.35420	-.13700
4.251	3.581	.07590	.05800	4.44430	3.48000
4.275	5.756	.07720	.06430	4.48590	5.70080
	GRADIENT	.00109	.00265	.02272	1.01208

IA156A, AEDC PWT 16T-470, O T S W/SILTS (R8NPA1) (10 MAY 80)

REFERENCE DATA

SREF = 2690.0000 SQ.FT. XMRP = 976.0000 IN. XT
LREF = 1290.3000 INCHES YMRP = .0000 IN. YT
BREF = 1290.3000 INCHES ZMRP = 400.0000 IN. ZT
SCALE = .0200

PARAMETRIC DATA

IB-ELV = 8.000 OB-ELV = 5.000
BDFLAP = .000 SPDBRK = .000
RUDDER = .000 SILTS = 1.000
MACH = 1.400 RN/L = 3.500

RUN NO. 1229/ 0 RN/L = 3.50 GRADIENT INTERVAL = -5.00/ 5.00

ALPHAR	BETAR	CARS	CYNRS	ALFRSU	BETRSU
-8.662	-6.369	.05480	.00880	-8.43880	-6.50390
-8.731	-4.179	.05940	.00450	-8.53900	-4.35500
-8.701	.250	.06820	.00130	-8.62090	.00180
-8.512	4.416	.07450	.00640	-8.55920	4.16000
-8.561	6.380	.07510	.01380	-8.65160	6.13690
	GRADIENT	.00176	.00021	-.00252	.99061

RUN NO. 1230/ 0 RN/L = 3.50 GRADIENT INTERVAL = -5.00/ 5.00

ALPHAR	BETAR	CARS	CYNRS	ALFRSU	BETRSU
-6.543	-6.446	.05560	.02060	-6.30230	-6.54520
-6.504	-4.438	.06080	.01720	-6.28520	-4.58020
-6.621	-.004	.06680	.01320	-6.53040	-.24910
-6.397	4.387	.07250	.01780	-6.47410	4.13780
-6.357	6.416	.07540	.02160	-6.48190	6.18730
	GRADIENT	.00133	.00007	-.02146	.98779

IA156A, AEDC PWT 16T-470, 0 T S W/SILTS (R8NPAI) (10 MAY 80)

REFERENCE DATA

SREF = 2690.0000 SQ.FT. XMRP = 976.0000 IN. XT
LREF = 1290.3000 INCHES YMRP = .0000 IN. YT
BREF = 1290.3000 INCHES ZMRP = 400.0000 IN. ZT
SCALE = .0200

PARAMETRIC DATA

IB-ELV = 8.000 OB-ELV = 5.000
BDFLAP = .000 SPDBRK = .000
RUDDER = .000 SILTS = 1.000
MACH = 1.400 RN/L = 3.500

RUN NO. 1231/ 0 RN/L = 3.50 GRADIENT INTERVAL = -5.00/ 5.00

ALPHAR	BETAR	CARS	CYNRS	ALFRSU	BETRSU
-4.217	-6.548	.05720	.03300	-3.95970	-6.59230
-4.508	-4.364	.06120	.02760	-4.26930	-4.46360
-4.414	.304	.06740	.02730	-4.33880	.05590
-3.863	4.471	.07210	.03500	-3.99540	4.24810
-4.001	6.348	.07500	.03730	-4.16750	6.14920
	GRADIENT	.00124	.00082	.03008	.98565

RUN NO. 1232/ 0 RN/L = 3.50 GRADIENT INTERVAL = -5.00/ 5.00

ALPHAR	BETAR	CARS	CYNRS	ALFRSU	BETRSU
-.292	-7.500	.05780	.04300	-.04720	-7.41480
-.265	-5.284	.05940	.04180	-.01970	-5.19860
-.263	-.852	.06710	.04690	-.01840	-.76730
-.199	3.335	.07220	.05270	.04710	3.42040
-.231	5.566	.07520	.05600	.01380	5.65040
	GRADIENT	.00122	.00139	.01564	1.00007

RUN NO. 1233/ 0 RN/L = 3.50 GRADIENT INTERVAL = -5.00/ 5.00

ALPHAR	BETAR	CARS	CYNRS	ALFRSU	BETRSU
4.485	-5.662	.06030	.03290	4.32580	-5.86610
4.429	-3.646	.06260	.03540	4.31330	-3.87800
4.194	.089	.06800	.04620	4.27760	-.15700
4.303	3.759	.07180	.05560	4.53670	3.64470
4.274	5.767	.07430	.06120	4.52650	5.70310
	GRADIENT	.00124	.00273	.03005	1.01586

IA156A, AEDC PWT 16T-470, O T S W/SILTS (R8NPA2) (10 MAY 80)

REFERENCE DATA

SREF =	2690.0000 SQ.FT.	XMRP =	976.0000 IN. XT		
LREF =	1290.3000 INCHES	YMRP =	.0000 IN. YT		
BREF =	1290.3000 INCHES	ZMRP =	400.0000 IN. ZT		
SCALE =	.0200				

PARAMETRIC DATA

IB-ELV =	8.000	OB-ELV =	5.000
BDFLAP =	.000	SPDBRK =	.000
RUDDER =	.000	SILTS =	1.000
MACH =	1.550	RN/L =	3.200

RUN NO. 1212/ 0 RN/L = 3.20 GRADIENT INTERVAL = -5.00/ 5.00

ALPHAR	BETAR	CARS	CYNRS	ALFRSU	BETRSU
-8.614	-6.329	.04970	.00570	-8.29120	-6.48270
-8.737	-4.035	.05350	-.00090	-8.45420	-4.25280
-8.643	.189	.06170	-.00480	-8.49420	-.13430
-8.407	4.544	.06820	.00330	-8.43610	4.18900
-8.414	6.514	.06850	.01230	-8.50520	6.17000
	GRADIENT	.00171	.00050	.00217	.98402

RUN NO. 1213/ 0 RN/L = 3.20 GRADIENT INTERVAL = -5.00/ 5.00

ALPHAR	BETAR	CARS	CYNRS	ALFRSU	BETRSU
-6.579	-6.365	.05060	.01630	-6.23900	-6.47180
-6.517	-4.347	.05490	.01200	-6.20120	-4.51340
-6.566	.129	.06100	.00780	-6.41150	-.19260
-6.299	4.521	.06700	.01240	-6.37060	4.17290
-6.235	6.544	.07000	.01800	-6.37390	6.21570
	GRADIENT	.00136	.00004	-.01919	.97945

RUN NO. 1214/ 0 RN/L = 3.21 GRADIENT INTERVAL = -5.00/ 5.00

ALPHAR	BETAR	CARS	CYNRS	ALFRSU	BETRSU
-4.323	-6.524	.05220	.02770	-3.96790	-6.55350
-4.591	-4.311	.05540	.02150	-4.25150	-4.41920
-4.470	.418	.06130	.02190	-4.33480	.08820
-3.836	4.501	.06590	.02970	-3.98660	4.26810
-3.923	6.462	.06790	.03180	-4.12430	6.16790
	GRADIENT	.00118	.00090	.02871	.97531

RUN NO. 1215/ 0 RN/L = 3.20 GRADIENT INTERVAL = -5.00/ 5.00

ALPHAR	BETAR	CARS	CYNRS	ALFRSU	BETRSU
-.359	-7.506	.05260	.03830	-.03670	-7.35890
-.337	-5.340	.05580	.03930	-.01350	-5.19170
-.338	-.883	.06110	.04390	-.01470	-.73520
-.321	3.256	.06800	.04980	.10210	3.40520
-.354	5.455	.07050	.05340	-.03000	5.60350
	GRADIENT	.00167	.00143	.00406	1.00019

IA156A, AEDC PWT 16T-470, O T S W/SILTS (R8NPA2) (10 MAY 80)

REFERENCE DATA

SREF = 2690.0000 SQ.FT. XMRP = 976.0000 IN. XT
LREF = 1290.3000 INCHES YMRP = .0000 IN. YT
BREF = 1290.3000 INCHES ZMRP = 400.0000 IN. ZT
SCALE = .0200

PARAMETRIC DATA

IB-ELV = 8.000 OB-ELV = 5.000
BDFLAP = .000 SPDBRK = .000
RUDDER = .000 SILTS = 1.000
MACH = 1.550 RN/L = 3.200

RUN NO. 1216/ 0 RN/L = 3.20 GRADIENT INTERVAL = -5.00/ 5.00

ALPHAR	BETAR	CARS	CYNRS	ALFRSU	BETRSU
4.665	-5.584	.05540	.02800	4.47830	-5.88780
4.469	-3.512	.05780	.03120	4.34570	-3.84540
4.105	.140	.06310	.04200	4.24680	-.18600
4.140	3.742	.06690	.05120	4.47310	3.61480
4.141	5.785	.06980	.05830	4.49300	5.73040
	GRADIENT	.00125	.00276	.01746	1.02838

IA156A, AEDC PWT 16T-470, O T S W/SILTS (R8NPA3) (10 MAY 80)

REFERENCE DATA

SREF = 2690.0000 SQ.FT. XMRP = 976.0000 IN. XT
LREF = 1290.3000 INCHES YMRP = .0000 IN. YT
BREF = 1290.3000 INCHES ZMRP = 400.0000 IN. ZT
SCALE = .0200

PARAMETRIC DATA

IB-ELV = 12.000 OB-ELV = 5.000
BDFLAP = .000 SPDBRK = .000
RUDDER = .000 SILTS = 1.000
MACH = .600 RN/L = 3.500

RUN NO. 1240/ 0 RN/L = 3.50 GRADIENT INTERVAL = -5.00/ 5.00

ALPHAR	BETAR	CARS	CYNRS	ALFRSU	BETRSU
-8.279	-8.140	.03200	.01830	-8.19110	-8.33220
-8.207	-6.051	.03580	.01100	-8.14540	-6.25200
-8.242	-3.995	.04020	.00470	-8.21970	-4.20470
-8.162	.212	.04310	.00590	-8.24170	.01710
-8.077	4.243	.04630	.01660	-8.23590	4.10440
-8.086	6.191	.04790	.02230	-8.26760	6.08380
-8.167	8.240	.04960	.02880	-8.36230	8.16070
	GRADIENT	.00074	.00144	-.00199	1.00863

RUN NO. 1241/ 0 RN/L = 3.50 GRADIENT INTERVAL = -5.00/ 5.00

ALPHAR	BETAR	CARS	CYNRS	ALFRSU	BETRSU
-6.178	-8.188	.03300	.02700	-6.06170	-8.36370
-6.164	-6.138	.03630	.02100	-6.07250	-6.32780
-6.087	-4.186	.04010	.01640	-6.03140	-4.38870
-6.155	.014	.04280	.01800	-6.22590	-.18460
-6.046	4.220	.04700	.02640	-6.22060	4.10150
-5.989	6.215	.04860	.03100	-6.18290	6.13430
-5.802	8.329	.05040	.03830	-6.00670	8.28060
	GRADIENT	.00082	.00119	-.02250	1.01008

IA156A, AEDC PWT 16T-470, O T S W/SILTS (R8NPA3) (10 MAY 80)

REFERENCE DATA

SREF =	2690.0000 SQ.FT.	XMRP =	976.0000 IN. XT		
LREF =	1290.3000 INCHES	YMRP =	.0000 IN. YT		
BREF =	1290.3000 INCHES	ZMRP =	400.0000 IN. ZT		
SCALE =	.0200				

PARAMETRIC DATA

IB-ELV =	12.000	OB-ELV =	5.000
BDFLAP =	.000	SPDBRK =	.000
RUDDER =	.000	SILTS =	1.000
MACH =	.600	RN/L =	3.500

RUN NO. 1242/ 0 RN/L = 3.49 GRADIENT INTERVAL = -5.00/ 5.00

ALPHAR	BETAR	CARS	CYNRS	ALFRSU	BETRSU
-3.977	-8.247	.03580	.03340	-3.82850	-8.39600
-4.219	-6.188	.03740	.02880	-4.09400	-6.35730
-4.211	-4.080	.04040	.02560	-4.12160	-4.27020
-4.016	.116	.04390	.03120	-4.03090	-.08100
-3.700	4.305	.04810	.03800	-3.89680	4.23100
-3.828	6.133	.04930	.04050	-4.03530	6.09300
-3.878	8.132	.05070	.04440	-4.08780	8.11730
	GRADIENT	.00092	.00148	.02680	1.01387

RUN NO. 1243/ 0 RN/L = 3.50 GRADIENT INTERVAL = -5.00/ 5.00

ALPHAR	BETAR	CARS	CYNRS	ALFRSU	BETRSU
-.245	-9.000	.03980	.03730	-.04900	-9.07720
-.237	-6.907	.03840	.03600	-.04030	-6.98380
-.229	-4.636	.03990	.03610	-.03310	-4.71220
-.226	-.560	.04420	.04240	-.02970	-.63570
-.181	3.514	.04870	.04830	.01550	3.43860
-.181	5.624	.05060	.05150	.01550	5.54800
-.180	7.721	.05230	.05540	.01630	7.64600
	GRADIENT	.00108	.00150	.00596	1.00013

RUN NO. 1244/ 0 RN/L = 3.50 GRADIENT INTERVAL = -5.00/ 5.00

ALPHAR	BETAR	CARS	CYNRS	ALFRSU	BETRSU
4.522	-8.013	.04180	.02690	4.31280	-8.03390
4.354	-5.793	.04090	.02830	4.14810	-5.83600
4.347	-3.824	.04110	.03040	4.15320	-3.90640
4.149	-.062	.04370	.04070	4.06180	-.25430
4.199	3.876	.04760	.04790	4.28060	3.68130
4.139	5.993	.04990	.05250	4.26240	5.82300
4.120	7.986	.05120	.05570	4.26340	7.83190
	GRADIENT	.00085	.00227	.01685	.98554

IA156A, AEDC PWT 16T-470, O T S W/SILTS (R8NPA3) (10 MAY 80)

REFERENCE DATA

SREF = 2690.0000 SQ.FT. XMRP = 976.0000 IN. XT
LREF = 1290.3000 INCHES YMRP = .0000 IN. YT
BREF = 1290.3000 INCHES ZMRP = 400.0000 IN. ZT
SCALE = .0200

PARAMETRIC DATA

IB-ELV = 12.000 OB-ELV = 5.000
BDFLAP = .000 SPDBRK = .000
RUDDER = .000 SILTS = 1.000
MACH = .600 RN/L = 3.500

RUN NO. 1245/ 0 RN/L = 3.50 GRADIENT INTERVAL = -5.00/ 5.00

ALPHAR	BETAR	CARS	CYNRS	ALFRSU	BETRSU
6.526	-7.926	.04190	.02050	6.32360	-7.98160
6.517	-5.873	.04140	.02140	6.32380	-5.95640
6.516	-3.829	.04200	.02340	6.34300	-3.94940
6.240	.094	.04450	.03460	6.16220	-.10230
6.177	3.919	.04760	.04190	6.22210	3.71270
6.100	5.983	.04900	.04590	6.18990	5.79280
6.082	7.891	.05040	.04980	6.19730	7.71570
	GRADIENT	.00072	.00239	-.01573	.98887

RUN NO. 1246/ 0 RN/L = 3.50 GRADIENT INTERVAL = -5.00/ 5.00

ALPHAR	BETAR	CARS	CYNRS	ALFRSU	BETRSU
8.455	-7.793	.04090	.01180	8.26110	-7.87590
8.392	-5.737	.04080	.01250	8.21210	-5.84570
8.401	-3.786	.04170	.01540	8.24350	-3.92620
8.336	.087	.04550	.02570	8.25760	-.10910
8.394	4.059	.04750	.03070	8.41560	3.84990
8.336	6.030	.04810	.03460	8.39620	5.82820
8.334	8.045	.04950	.04070	8.42280	7.85400
	GRADIENT	.00074	.00195	.02201	.99115

IA156A, AEDC PWT 16T-470, O T S W/SILTS (R8NPA4) (10 MAY 80)

REFERENCE DATA

SREF = 2690.0000 SQ.FT. XMRP = 976.0000 IN. XT
LREF = 1290.3000 INCHES YMRP = .0000 IN. YT
BREF = 1290.3000 INCHES ZMRP = 400.0000 IN. ZT
SCALE = .0200

PARAMETRIC DATA

IB-ELV = 12.000 OB-ELV = 5.000
BDFLAP = .000 SPDBRK = .000
RUDDER = .000 SILTS = 1.000
MACH = .800 RN/L = 3.500

RUN NO. 1247/ 0 RN/L = 3.50 GRADIENT INTERVAL = -5.00/ 5.00

ALPHAR	BETAR	CARS	CYNRS	ALFRSU	BETRSU
-8.375	-6.140	.03550	.00780	-8.21920	-6.27670
-8.404	-4.049	.04150	.00260	-8.27620	-4.21290
-8.355	.247	.04620	.00300	-8.32180	.04220
-8.252	4.277	.04910	.01250	-8.31620	4.07940
-8.305	6.231	.05030	.01770	-8.40260	6.04730
	GRADIENT	.00091	.00118	-.00487	.99588

RUN NO. 1248/ 0 RN/L = 3.50 GRADIENT INTERVAL = -5.00/ 5.00

ALPHAR	BETAR	CARS	CYNRS	ALFRSU	BETRSU
-6.239	-6.248	.03730	.01830	-6.06410	-6.35890
-6.204	-4.294	.04200	.01480	-6.05130	-4.43460
-6.329	-.040	.04610	.01580	-6.28580	-.24330
-6.179	4.241	.04950	.02480	-6.26520	4.05190
-6.111	6.280	.05140	.02980	-6.23380	6.11300
	GRADIENT	.00088	.00117	-.02503	.99440

RUN NO. 1249/ 0 RN/L = 3.50 GRADIENT INTERVAL = -5.00/ 5.00

ALPHAR	BETAR	CARS	CYNRS	ALFRSU	BETRSU
-4.089	-6.351	.03880	.02760	-3.89450	-6.42280
-4.310	-4.190	.04270	.02360	-4.13600	-4.30300
-4.229	.323	.04660	.02920	-4.20140	.11700
-3.814	4.352	.05050	.03680	-3.94090	4.18830
-3.913	6.207	.05230	.03920	-4.06600	6.06600
	GRADIENT	.00091	.00154	.02210	.99374

RUN NO. 1250/ 0 RN/L = 3.50 GRADIENT INTERVAL = -5.00/ 5.00

ALPHAR	BETAR	CARS	CYNRS	ALFRSU	BETRSU
-.236	-7.162	.04240	.03630	-.03200	-7.12360
-.248	-4.987	.04260	.03610	-.04360	-4.94860
-.272	-.681	.04580	.04050	-.06800	-.64320
-.220	3.396	.05040	.04730	-.01560	3.43380
-.211	5.531	.05360	.05100	-.00720	5.56890
	GRADIENT	.00093	.00133	.00326	1.00005

IA156A, AEDC PWT 16T-470, O T S W/SILTS (R8NPA4) (10 MAY 80)

REFERENCE DATA

SREF = 2690.0000 SQ.FT. XMRP = 976.0000 IN. XT
LREF = 1290.3000 INCHES YMRP = .0000 IN. YT
BREF = 1290.3000 INCHES ZMRP = 400.0000 IN. ZT
SCALE = .0200

PARAMETRIC DATA

IB-ELV = 12.000 OB-ELV = 5.000
BDFLAP = .000 SPDBRK = .000
RUDDER = .000 SILTS = 1.000
MACH = .800 RN/L = 3.500

RUN NO. 1251/ 0 RN/L = 3.50 GRADIENT INTERVAL = -5.00/ 5.00

ALPHAR	BETAR	CARS	CYNRS	ALFRSU	BETRSU
4.456	-5.768	.04400	.02920	4.30660	-5.91180
4.329	-3.675	.04450	.03230	4.21030	-3.84510
4.061	.032	.04590	.04250	4.09540	-.17240
4.183	3.824	.05120	.04900	4.35410	3.70630
4.107	5.880	.05400	.05420	4.29890	5.80130
	GRADIENT	.00090	.00223	.01936	1.00710

RUN NO. 1252/ 0 RN/L = 3.50 GRADIENT INTERVAL = -5.00/ 5.00

ALPHAR	BETAR	CARS	CYNRS	ALFRSU	BETRSU
6.496	-5.815	.04480	.02210	6.37640	-5.98470
6.487	-3.802	.04500	.02410	6.40330	-3.99240
6.168	.051	.04700	.03570	6.20430	-.15330
6.131	3.799	.05070	.04260	6.27720	3.65170
6.266	5.955	.05260	.04660	6.43910	5.84140
	GRADIENT	.00075	.00244	-.01675	1.00553

IA156A, AEDC PWT 16T-470, O T S W/SILTS (R8NPA5) (10 MAY 80)

REFERENCE DATA

SREF = 2690.0000 SQ.FT. XMRP = 976.0000 IN. XT
LREF = 1290.3000 INCHES YMRP = .0000 IN. YT
BREF = 1290.3000 INCHES ZMRP = 400.0000 IN. ZT
SCALE = .0200

PARAMETRIC DATA

IB-ELV = 12.000 OB-ELV = 5.000
BDFLAP = .000 SPDBRK = .000
RUDDER = .000 SILTS = 1.000
MACH = .900 RN/L = 3.500

RUN NO. 1253/ 0 RN/L = 3.50 GRADIENT INTERVAL = -5.00/ 5.00

ALPHAR	BETAR	CARS	CYNRS	ALFRSU	BETRSU
-8.638	-6.310	.03960	.00500	-8.47360	-6.43500
-8.392	-4.038	.04670	.00120	-8.25380	-4.19130
-8.413	-.009	.04990	.00320	-8.36040	-.20900
-8.322	4.349	.05290	.01260	-8.37500	4.14940
-8.397	6.213	.05440	.01730	-8.48200	6.02460
	GRADIENT	.00074	.00137	-.01430	.99457

IA156A, AEDC PWT 16T-470, O T S W/SILTS

(R8NPA5) (10 MAY 80)

REFERENCE DATA

SREF = 2690.0000 SQ.FT. XMRP = 976.0000 IN. XT
LREF = 1290.3000 INCHES YMRP = .0000 IN. YT
BREF = 1290.3000 INCHES ZMRP = 400.0000 IN. ZT
SCALE = .0200

PARAMETRIC DATA

IB-ELV =	12.000	OB-ELV =	5.000
BDFLAP =	.000	SPDBRK =	.000
RUDDER =	.000	SILTS =	1.000
MACH =	.900	RN/L =	3.500

RUN NO. 1254/ 0 RN/L = 3.50 GRADIENT INTERVAL = -5.00/ 5.00

ALPHAR	BETAR	CARS	CYNRS	ALFRSU	BETRSU
-6.302	-6.271	.04220	.01770	-6.12020	-6.36900
-6.270	-4.269	.04670	.01300	-6.10930	-4.39840
-6.320	.127	.04910	.01580	-6.26960	-.07320
-6.247	4.223	.05420	.02190	-6.32020	4.03000
-6.220	6.240	.05660	.02680	-6.33030	6.06550
	GRADIENT	.00088	.00104	-.02498	.99242

RUN NO. 1255/ 0 RN/L = 3.50 GRADIENT INTERVAL = -5.00/ 5.00

ALPHAR	BETAR	CARS	CYNRS	ALFRSU	BETRSU
-4.085	-6.279	.04440	.02810	-3.88590	-6.33550
-4.339	-4.223	.04810	.02350	-4.15740	-4.32160
-4.305	.258	.04940	.02810	-4.26120	.05610
-3.859	4.306	.05510	.03420	-3.97450	4.13450
-3.967	6.185	.05760	.03780	-4.10930	6.03580
	GRADIENT	.00081	.00125	.02065	.99122

RUN NO. 1256/ 0 RN/L = 3.50 GRADIENT INTERVAL = -5.00/ 5.00

ALPHAR	BETAR	CARS	CYNRS	ALFRSU	BETRSU
-.288	-7.228	.04800	.03800	-.08770	-7.17670
-.280	-5.059	.04840	.03670	-.07960	-5.00780
-.335	-.701	.05060	.04070	-.13450	-.64890
-.273	3.382	.05520	.04900	-.07310	3.43430
-.262	5.536	.05850	.05360	-.06200	5.58740
	GRADIENT	.00113	.00203	.01504	1.00007

RUN NO. 1257/ 0 RN/L = 3.50 GRADIENT INTERVAL = -5.00/ 5.00

ALPHAR	BETAR	CARS	CYNRS	ALFRSU	BETRSU
4.452	-5.771	.04950	.03090	4.31410	-5.92530
4.312	-3.697	.05070	.03360	4.20540	-3.87450
4.009	-.012	.05210	.04290	4.05480	-.21350
4.160	3.768	.05640	.04960	4.33680	3.66140
4.086	5.848	.05910	.05610	4.28220	5.78200
	GRADIENT	.00077	.00214	.01785	1.00959

IA156A, AEDC PWT 16T-470, O T S W/SILTS (R8NPA6) (10 MAY 80)

REFERENCE DATA

SREF = 2690.0000 SQ.FT. XMRP = 976.0000 IN. XT
LREF = 1290.3000 INCHES YMRP = .0000 IN. YT
BREF = 1290.3000 INCHES ZMRP = 400.0000 IN. ZT
SCALE = .0200

PARAMETRIC DATA

IB-ELV = 12.000 OB-ELV = 5.000
BDFLAP = .000 SPDBRK = .000
RUDDER = .000 SILTS = 1.000
MACH = .950 RN/L = 3.500

RUN NO. 1258/ 0 RN/L = 3.50 GRADIENT INTERVAL = -5.00/ 5.00

ALPHAR	BETAR	CARS	CYNRS	ALFRSU	BETRSU
-8.439	-6.262	.04360	.01050	-8.27100	-6.38050
-8.558	-4.103	.05060	.00360	-8.41660	-4.25210
-8.544	.158	.05590	.00460	-8.49220	-.04120
-8.407	4.234	.05750	.01290	-8.45460	4.03430
-8.454	6.182	.05970	.01820	-8.53560	5.99370
	GRADIENT	.00083	.00111	-.00466	.99389

RUN NO. 1259/ 0 RN/L = 3.50 GRADIENT INTERVAL = -5.00/ 5.00

ALPHAR	BETAR	CARS	CYNRS	ALFRSU	BETRSU
-6.372	-6.289	.04620	.02190	-6.18860	-6.38180
-6.320	-4.319	.05180	.01690	-6.15660	-4.44350
-6.470	-.057	.05750	.01670	-6.41050	-.25390
-6.309	4.210	.06010	.02380	-6.37830	4.01720
-6.033	6.341	.06300	.03100	-6.14430	6.16840
	GRADIENT	.00097	.00081	-.02598	.99195

RUN NO. 1260/ 0 RN/L = 3.50 GRADIENT INTERVAL = -5.00/ 5.00

ALPHAR	BETAR	CARS	CYNRS	ALFRSU	BETRSU
-4.120	-6.386	.04870	.03170	-3.92090	-6.43630
-4.381	-4.222	.05380	.02710	-4.19790	-4.31560
-4.319	.265	.05700	.03260	-4.27190	.06510
-3.857	4.330	.06280	.04080	-3.96920	4.15770
-3.973	6.176	.06430	.04310	-4.11230	6.02490
	GRADIENT	.00105	.00160	.02600	.99065

RUN NO. 1261/ 0 RN/L = 3.50 GRADIENT INTERVAL = -5.00/ 5.00

ALPHAR	BETAR	CARS	CYNRS	ALFRSU	BETRSU
-.282	-7.267	.05030	.03990	-.08440	-7.21170
-.265	-5.093	.05230	.03880	-.06680	-5.03740
-.291	-.737	.05730	.04570	-.09300	-.68150
-.238	3.366	.06440	.05440	-.04030	3.42190
-.248	5.537	.06540	.05830	-.05060	5.59250
	GRADIENT	.00173	.00212	.01284	1.00000

IA156A, AEDC PWT 16T-470, O T S W/SILTS (R8NPA6) (10 MAY 80)

REFERENCE DATA

SREF = 2690.0000 SQ.FT. XMRP = 976.0000 IN. XT
LREF = 1290.3000 INCHES YMRP = .0000 IN. YT
BREF = 1290.3000 INCHES ZMRP = 400.0000 IN. ZT
SCALE = .0200

PARAMETRIC DATA

IB-ELV = 12.000 OB-ELV = 5.000
BDFLAP = .000 SPDBRK = .000
RUDDER = .000 SILTS = 1.000
MACH = .950 RN/L = 3.500

RUN NO. 1262/ 0 RN/L = 3.50 GRADIENT INTERVAL = -5.00/ 5.00

ALPHAR	BETAR	CARS	CYNRS	ALFRSU	BETRSU
4.451	-5.763	.05340	.03240	4.31720	-5.91890
4.299	-3.674	.05590	.03590	4.19820	-3.85320
3.989	.013	.05890	.04580	4.04100	-.18630
4.176	3.786	.06220	.05160	4.35430	3.68410
4.122	5.834	.06430	.05810	4.31830	5.77270
	GRADIENT	.00084	.00210	.02117	1.01038

IA156A, AEDC PWT 16T-470, O T S W/SILTS (R8NPA7) (10 MAY 80)

REFERENCE DATA

SREF = 2690.0000 SQ.FT. XMRP = 976.0000 IN. XT
LREF = 1290.3000 INCHES YMRP = .0000 IN. YT
BREF = 1290.3000 INCHES ZMRP = 400.0000 IN. ZT
SCALE = .0200

PARAMETRIC DATA

IB-ELV = 12.000 OB-ELV = 5.000
BDFLAP = .000 SPDBRK = .000
RUDDER = .000 SILTS = 1.000
MACH = 1.050 RN/L = 3.500

RUN NO. 1263/ 0 RN/L = 3.50 GRADIENT INTERVAL = -5.00/ 5.00

ALPHAR	BETAR	CARS	CYNRS	ALFRSU	BETRSU
-8.493	-6.347	.06090	.01790	-8.32200	-6.45730
-8.655	-4.089	.06940	.01200	-8.51110	-4.23250
-8.625	-.052	.07700	.01320	-8.56420	-.24580
-8.488	4.250	.07860	.02550	-8.53150	4.05070
-8.531	6.153	.08190	.02980	-8.60720	5.96370
	GRADIENT	.00110	.00163	-.00234	.99343

RUN NO. 1264/ 0 RN/L = 3.50 GRADIENT INTERVAL = -5.00/ 5.00

ALPHAR	BETAR	CARS	CYNRS	ALFRSU	BETRSU
-6.332	-6.307	.06550	.03200	-6.14690	-6.39100
-6.359	-4.356	.07210	.02760	-6.19210	-4.47310
-6.538	-.081	.07660	.02840	-6.47400	-.27440
-6.350	4.204	.08170	.03580	-6.41510	4.01070
-6.341	6.216	.08360	.04140	-6.44360	6.03970
	GRADIENT	.00112	.00096	-.02604	.99111

REFERENCE DATA

SREF = 2690.0000 SQ.FT. XMRP = 976.0000 IN. XT
LREF = 1290.3000 INCHES YMRP = .0000 IN. YT
BREF = 1290.3000 INCHES ZMRP = 400.0000 IN. ZT
SCALE = .0200

PARAMETRIC DATA

IB-ELV =	12.000	OB-ELV =	5.000
BDFLAP =	.000	SPDBRK =	.000
RUDDER =	.000	SILTS =	1.000
MACH =	1.050	RN/L =	3.500

RUN NO. 1265/ 0 RN/L = 3.50 GRADIENT INTERVAL = -5.00/ 5.00

ALPHAR	BETAR	CARS	CYNRS	ALFRSU	BETRSU
-4.281	-6.412	.06780	.04310	-4.08240	-6.45770
-4.436	-4.272	.07250	.03810	-4.25090	-4.35800
-4.388	.225	.07740	.04550	-4.33540	.02780
-3.894	4.308	.08300	.05350	-4.00260	4.13590
-4.010	6.168	.08400	.05450	-4.14530	6.01590
	GRADIENT	.00122	.00179	.02814	.98967

RUN NO. 1266/ 0 RN/L = 3.50 GRADIENT INTERVAL = -5.00/ 5.00

ALPHAR	BETAR	CARS	CYNRS	ALFRSU	BETRSU
-.294	-7.340	.06780	.05070	-.09920	-7.27870
-.286	-5.153	.07000	.05010	-.09160	-5.09180
-.363	-.734	.07850	.06000	-.16880	-.67290
-.280	3.353	.08520	.06860	-.08570	3.41380
-.260	5.528	.08510	.07000	-.06530	5.58860
	GRADIENT	.00164	.00210	.02033	.99990

RUN NO. 1267/ 0 RN/L = 3.50 GRADIENT INTERVAL = -5.00/ 5.00

ALPHAR	BETAR	CARS	CYNRS	ALFRSU	BETRSU
4.459	-5.783	.07280	.04140	4.33140	-5.94200
4.294	-3.690	.07580	.04590	4.19980	-3.87050
4.072	-.008	.07970	.05560	4.12940	-.20330
4.199	3.754	.08210	.06220	4.37890	3.65830
4.171	5.798	.08210	.06910	4.36670	5.74150
	GRADIENT	.00085	.00219	.02421	1.01146

IA156A, AEDC PWT 16T-470, 0 T S W/SILTS (R8NPA8) (10 MAY 80)

REFERENCE DATA

SREF = 2690.0000 SQ.FT. XMRP = 976.0000 IN. XT
LREF = 1290.3000 INCHES YMRP = .0000 IN. YT
BREF = 1290.3000 INCHES ZMRP = 400.0000 IN. ZT
SCALE = .0200

PARAMETRIC DATA

IB-ELV = 12.000 OB-ELV = 5.000
BDFLAP = .000 SPDBRK = .000
RUDDER = .000 SILTS = 1.000
MACH = 1.100 RN/L = 3.500

RUN NO. 1268/ 0 RN/L = 3.50 GRADIENT INTERVAL = -5.00/ 5.00

ALPHAR	BETAR	CARS	CYNRS	ALFRSU	BETRSU
-8.537	-6.348	.06130	.01690	-8.36380	-6.45640
-8.680	-4.115	.06870	.01180	-8.53340	-4.25720
-8.673	-.064	.07630	.01300	-8.60890	-.25840
-8.528	4.248	.08060	.02510	-8.56940	4.04800
-8.548	6.151	.08240	.02960	-8.62290	5.96060
	GRADIENT	.00142	.00160	-.00416	.99316

RUN NO. 1269/ 0 RN/L = 3.50 GRADIENT INTERVAL = -5.00/ 5.00

ALPHAR	BETAR	CARS	CYNRS	ALFRSU	BETRSU
-6.467	-6.347	.06390	.02900	-6.28000	-6.43000
-6.431	-4.380	.06940	.02500	-6.26190	-4.49570
-6.606	-.088	.07490	.02650	-6.53910	-.28130
-6.348	4.215	.08080	.03660	-6.41080	4.02020
-6.375	6.240	.08320	.04060	-6.47550	6.06160
	GRADIENT	.00133	.00135	-.01730	.99080

RUN NO. 1270/ 0 RN/L = 3.50 GRADIENT INTERVAL = -5.00/ 5.00

ALPHAR	BETAR	CARS	CYNRS	ALFRSU	BETRSU
-4.157	-6.436	.06590	.04170	-3.95600	-6.47570
-4.465	-4.278	.06970	.03580	-4.27800	-4.36200
-4.391	.240	.07460	.04250	-4.33510	.04290
-3.872	4.320	.08040	.04980	-3.97860	4.14520
-4.022	6.180	.08250	.05110	-4.15560	6.02460
	GRADIENT	.00124	.00163	.03398	.98920

RUN NO. 1271/ 0 RN/L = 3.50 GRADIENT INTERVAL = -5.00/ 5.00

ALPHAR	BETAR	CARS	CYNRS	ALFRSU	BETRSU
-.302	-7.356	.06570	.05050	-.10770	-7.29290
-.285	-5.161	.06610	.04870	-.09030	-5.09800
-.337	-.764	.07380	.05690	-.14290	-.70030
-.247	3.360	.08070	.06420	-.05230	3.42280
-.258	5.538	.08190	.06630	-.06350	5.60140
	GRADIENT	.00167	.00177	.02197	.99995

IA156A, AEDC PWT 16T-470, 0 T S W/SILTS (R8NPA8) (10 MAY 80)

REFERENCE DATA

SREF = 2690.0000 SQ.FT. XMRP = 976.0000 IN. XT
LREF = 1290.3000 INCHES YMRP = .0000 IN. YT
BREF = 1290.3000 INCHES ZMRP = 400.0000 IN. ZT
SCALE = .0200

PARAMETRIC DATA

IB-ELV = 12.000 OB-ELV = 5.000
BDFLAP = .000 SPDBRK = .000
RUDDER = .000 SILTS = 1.000
MACH = 1.100 RN/L = 3.500

RUN NO. 1272/ 0 RN/L = 3.50 GRADIENT INTERVAL = -5.00/ 5.00

ALPHAR	BETAR	CARS	CYNRS	ALFRSU	BETRSU
4.512	-5.806	.06800	.03890	4.38520	-5.96680
4.346	-3.702	.07140	.04270	4.25250	-3.88380
4.104	-.002	.07470	.05330	4.16290	-.19810
4.236	3.747	.07820	.05960	4.41750	3.65270
4.194	5.804	.07890	.06730	4.39110	5.75020
	GRADIENT	.00091	.00227	.02225	1.01179

IA156A, AEDC PWT 16T-470, 0 T S W/SILTS (R8NPA9) (10 MAY 80)

REFERENCE DATA

SREF = 2690.0000 SQ.FT. XMRP = 976.0000 IN. XT
LREF = 1290.3000 INCHES YMRP = .0000 IN. YT
BREF = 1290.3000 INCHES ZMRP = 400.0000 IN. ZT
SCALE = .0200

PARAMETRIC DATA

IB-ELV = 12.000 OB-ELV = 5.000
BDFLAP = .000 SPDBRK = .000
RUDDER = .000 SILTS = 1.000
MACH = 1.150 RN/L = 3.500

RUN NO. 1273/ 0 RN/L = 3.50 GRADIENT INTERVAL = -5.00/ 5.00

ALPHAR	BETAR	CARS	CYNRS	ALFRSU	BETRSU
-8.552	-6.373	.06110	.01720	-8.37600	-6.48200
-8.683	-4.112	.06620	.01000	-8.53350	-4.25520
-8.681	-.041	.07530	.00980	-8.61550	-.23730
-8.489	4.247	.07850	.02090	-8.52880	4.04370
-8.578	6.185	.08010	.02610	-8.65210	5.99190
	GRADIENT	.00147	.00132	.00074	.99290

RUN NO. 1274/ 0 RN/L = 3.51 GRADIENT INTERVAL = -5.00/ 5.00

ALPHAR	BETAR	CARS	CYNRS	ALFRSU	BETRSU
-6.458	-6.350	.06190	.02860	-6.26780	-6.43210
-6.414	-4.372	.06690	.02340	-6.24230	-4.48770
-6.572	-.076	.07360	.02370	-6.50310	-.27060
-6.353	4.243	.07930	.03240	-6.41550	4.04570
-6.357	6.252	.08130	.03570	-6.45710	6.07170
	GRADIENT	.00144	.00105	-.02007	.99052

IA156A, AEDC PWT 16T-470, O T S W/SILTS (R8NPA9) (10 MAY 80)

REFERENCE DATA

SREF = 2690.0000 SQ.FT. XMRP = 976.0000 IN. XT
LREF = 1290.3000 INCHES YMRP = .0000 IN. YT
BREF = 1290.3000 INCHES ZMRP = 460.0000 IN. ZT
SCALE = .0200

PARAMETRIC DATA

IB-ELV = 12.000 OB-ELV = 5.000
BDFLAP = .000 SPDBRK = .000
RUDDER = .000 SILTS = 1.000
MACH = 1.150 RN/L = 3.500

RUN NO. 1275/ 0 RN/L = 3.51 GRADIENT INTERVAL = -5.00/ 5.00

ALPHAR	BETAR	CARS	CYNRS	ALFRSU	BETRSU
-4.149	-6.425	.06320	.04040	-3.94530	-6.46410
-4.457	-4.272	.06760	.03450	-4.26760	-4.35590
-4.381	.257	.07360	.04040	-4.32350	.05820
-3.868	4.329	.07940	.04640	-3.97440	4.15180
-4.013	6.215	.08160	.04760	-4.14730	6.05790
	GRADIENT	.00137	.00138	.03322	.98886

RUN NO. 1276/ 0 RN/L = 3.50 GRADIENT INTERVAL = -5.00/ 5.00

ALPHAR	BETAR	CARS	CYNRS	ALFRSU	BETRSU
-.262	-7.376	.06350	.04770	-.06620	-7.31010
-.249	-5.140	.06520	.04740	-.05310	-5.07400
-.306	-.786	.07400	.05480	-.11030	-.72050
-.217	3.364	.08090	.06230	-.02100	3.42970
-.208	5.575	.08190	.06370	-.01240	5.64080
	GRADIENT	.00166	.00181	.02152	.99993

RUN NO. 1277/ 0 RN/L = 3.50 GRADIENT INTERVAL = -5.00/ 5.00

ALPHAR	BETAR	CARS	CYNRS	ALFRSU	BETRSU
4.535	-5.783	.06690	.03790	4.40830	-5.94640
4.392	-3.687	.07110	.04130	4.29950	-3.87230
4.155	.017	.07530	.05140	4.21700	-.17970
4.270	3.749	.07800	.05880	4.45420	3.65560
4.223	5.818	.07940	.06540	4.42300	5.76530
	GRADIENT	.00093	.00235	.02086	1.01231

IA156A, AEDC PWT 16T-470, O T S W/SILTS (R8NPB0) (10 MAY 80)

REFERENCE DATA

SREF = 2690.0000 SQ.FT. XMRP = 976.0000 IN. XT
LREF = 1290.3000 INCHES YMRP = .0000 IN. YT
BREF = 1290.3000 INCHES ZMRP = 400.0000 IN. ZT
SCALE = .0200

PARAMETRIC DATA

IB-ELV = 12.000 OB-ELV = 5.000
BDFLAP = .000 SPDBRK = .000
RUDDER = .000 SILTS = 1.000
MACH = 1.250 RN/L = 3.500

RUN NO. 1278/ 0 RN/L = 3.50 GRADIENT INTERVAL = -5.00/ 5.00

ALPHAR	BETAR	CARS	CYNRS	ALFRSU	BETRSU
-8.529	-6.370	.05900	.01210	-8.34280	-6.48270
-8.657	-4.107	.06390	.00630	-8.49870	-4.25710
-8.620	-.024	.07200	.00720	-8.54980	-.23030
-8.463	4.324	.07670	.01590	-8.50410	4.10970
-8.554	6.250	.07890	.01950	-8.63150	6.04560
	GRADIENT	.00151	.00115	-.00052	.99246

RUN NO. 1279/ 0 RN/L = 3.50 GRADIENT INTERVAL = -5.00/ 5.00

ALPHAR	BETAR	CARS	CYNRS	ALFRSU	BETRSU
-6.460	-6.373	.05910	.02390	-6.25950	-6.45800
-6.388	-4.364	.06450	.02000	-6.20580	-4.48470
-6.507	-.025	.07170	.02190	-6.43360	-.23050
-6.333	4.263	.07680	.02590	-6.39830	4.05490
-6.162	6.394	.07930	.03070	-6.27110	6.20510
	GRADIENT	.00143	.00068	-.02237	.98986

RUN NO. 1280/ 0 RN/L = 3.50 GRADIENT INTERVAL = -5.00/ 5.00

ALPHAR	BETAR	CARS	CYNRS	ALFRSU	BETRSU
-4.252	-6.424	.06030	.03530	-4.03830	-6.46660
-4.402	-4.282	.06540	.03200	-4.20150	-4.36790
-4.327	.256	.07170	.03470	-4.26430	.04720
-3.849	4.341	.07640	.03990	-3.95980	4.15360
-3.997	6.244	.07960	.04170	-4.13720	6.07750
	GRADIENT	.00128	.00091	.02726	.98796

RUN NO. 1281/ 0 RN/L = 3.51 GRADIENT INTERVAL = -5.00/ 5.00

ALPHAR	BETAR	CARS	CYNRS	ALFRSU	BETRSU
-.224	-7.400	.06020	.04480	-.01760	-7.33000
-.203	-5.153	.06310	.04550	.00310	-5.08270
-.220	-.781	.07190	.05140	-.01400	-.71030
-.130	3.390	.07770	.05800	.07640	3.46060
-.149	5.608	.07940	.06030	.05780	5.67830
	GRADIENT	.00139	.00158	.02167	1.00000

IA156A, AEDC PWT 16T-470, O T S W/SILTS (R8NPB0) (10 MAY 80)

REFERENCE DATA

SREF = 2690.0000 SQ.FT. XMRP = 976.0000 IN. XT
LREF = 1290.3000 INCHES YMRP = .0000 IN. YT
BREF = 1290.3000 INCHES ZMRP = 400.0000 IN. ZT
SCALE = .0200

PARAMETRIC DATA

IB-ELV = 12.000 OB-ELV = 5.000
BDFLAP = .000 SPDBRK = .000
RUDDER = .000 SILTS = 1.000
MACH = 1.250 RN/L = 3.500

RUN NO. 1282/ 0 RN/L = 3.51 GRADIENT INTERVAL = -5.00/ 5.00

ALPHAR	BETAR	CARS	CYNRS	ALFRSU	BETRSU
4.597	-5.784	.06450	.03590	4.46460	-5.95740
4.462	-3.693	.06770	.03840	4.36600	-3.88830
4.239	.015	.07210	.04840	4.30520	-.19290
4.340	3.746	.07610	.05780	4.53510	3.64770
4.300	5.795	.07730	.06360	4.51100	5.74010
	GRADIENT	.00113	.00261	.02278	1.01314

IA156A, AEDC PWT 16T-470, O T S W/SILTS (R8NPB1) (10 MAY 80)

REFERENCE DATA

SREF = 2690.0000 SQ.FT. XMRP = 976.0000 IN. XT
LREF = 1290.3000 INCHES YMRP = .0000 IN. YT
BREF = 1290.3000 INCHES ZMRP = 400.0000 IN. ZT
SCALE = .0200

PARAMETRIC DATA

IB-ELV = 12.000 OB-ELV = 5.000
BDFLAP = .000 SPDBRK = .000
RUDDER = .000 SILTS = 1.000
MACH = 1.400 RN/L = 3.500

RUN NO. 1283/ 0 RN/L = 3.49 GRADIENT INTERVAL = -5.00/ 5.00

ALPHAR	BETAR	CARS	CYNRS	ALFRSU	BETRSU
-8.559	-6.382	.05510	.00800	-8.33490	-6.51550
-8.650	-4.096	.06040	.00320	-8.45940	-4.27290
-8.623	.058	.06920	-.00020	-8.53750	-.18690
-8.434	4.440	.07510	.00590	-8.48150	4.18530
-8.527	6.390	.07580	.01370	-8.61770	6.14740
	GRADIENT	.00172	.00033	-.00245	.99097

RUN NO. 1284/ 0 RN/L = 3.50 GRADIENT INTERVAL = -5.00/ 5.00

ALPHAR	BETAR	CARS	CYNRS	ALFRSU	BETRSU
-6.484	-6.396	.05620	.02030	-6.24430	-6.49550
-6.444	-4.389	.06130	.01620	-6.22630	-4.53090
-6.554	.012	.06830	.01200	-6.46380	-.23280
-6.312	4.360	.07330	.01700	-6.38850	4.11150
-6.311	6.389	.07630	.02060	-6.43540	6.16120
	GRADIENT	.00137	.00009	-.01861	.98773

IA156A, AEDC PWT 16T-470, 0 T S W/SILTS (R8NPB1) (10 MAY 80)

REFERENCE DATA

SREF = 2690.0000 SQ.FT. XMRP = 976.0000 IN. XT
LREF = 1290.3000 INCHES YMRP = .0000 IN. YT
BREF = 1290.3000 INCHES ZMRP = 400.0000 IN. ZT
SCALE = .0200

PARAMETRIC DATA

IB-ELV = 12.000 OB-ELV = 5.000
BDFLAP = .000 SPDBRK = .000
RUDDER = .000 SILTS = 1.000
MACH = 1.400 RN/L = 3.500

RUN NO. 1285/ 0 RN/L = 3.50 GRADIENT INTERVAL = -5.00/ 5.00

ALPHAR	BETAR	CARS	CYNRS	ALFRSU	BETRSU
-4.396	-6.419	.05770	.03120	-4.13990	-6.47020
-4.410	-4.311	.06220	.02750	-4.16930	-4.41020
-4.350	.324	.06790	.02570	-4.27500	.07410
-3.804	4.418	.07320	.03430	-3.93640	4.19260
-3.952	6.309	.07540	.03630	-4.11890	6.10970
	GRADIENT	.00126	.00075	.02560	.98524

RUN NO. 1286/ 0 RN/L = 3.50 GRADIENT INTERVAL = -5.00/ 5.00

ALPHAR	BETAR	CARS	CYNRS	ALFRSU	BETRSU
-.256	-7.468	.05820	.04260	-.00990	-7.38220
-.243	-5.253	.05960	.04140	.00320	-5.16720
-.229	-.726	.06780	.04710	.01740	-.63990
-.159	3.404	.07370	.05370	.08790	3.49010
-.200	5.635	.07640	.05660	.04400	5.71960
	GRADIENT	.00143	.00160	.01707	1.00005

RUN NO. 1287/ 0 RN/L = 3.49 GRADIENT INTERVAL = -5.00/ 5.00

ALPHAR	BETAR	CARS	CYNRS	ALFRSU	BETRSU
4.718	-5.754	.05980	.03130	4.56140	-5.96120
4.558	-3.663	.06240	.03460	4.44470	-3.89640
4.296	.034	.06860	.04600	4.37640	-.21430
4.378	3.759	.07240	.05560	4.60990	3.64410
4.317	5.773	.07480	.06120	4.56650	5.70940
	GRADIENT	.00135	.00283	.02231	1.01594

IA156A, AEDC PWT 16T-470, 0 T S W/SILTS (R8NPB2) (10 MAY 80)

REFERENCE DATA

SREF = 2690.0000 SQ.FT. XMRP = 976.0000 IN. XT
LREF = 1290.3000 INCHES YMRP = .0000 IN. YT
BREF = 1290.3000 INCHES ZMRP = 400.0000 IN. ZT
SCALE = .0200

PARAMETRIC DATA

IB-ELV = 12.000 OB-ELV = 5.000
BDFLAP = .000 SPDBRK = .000
RUDDER = .000 SILTS = 1.000
MACH = 1.550 RN/L = 3.200

RUN NO. 1288/ 0 RN/L = 3.00 GRADIENT INTERVAL = -5.00/ 5.00

ALPHAR	BETAR	CARS	CYNRS	ALFRSU	BETRSU
-8.548	-6.277	.05050	.00410	-8.22500	-6.43200
-8.631	-3.988	.05490	-.00080	-8.34680	-4.20640
-8.543	.201	.06340	-.00470	-8.39220	-.12390
-8.332	4.554	.06920	.00430	-8.36000	4.19780
-8.313	6.464	.06940	.01300	-8.40270	6.11930
	GRADIENT	.00167	.00061	-.00149	.98388

RUN NO. 1289/ 0 RN/L = 3.00 GRADIENT INTERVAL = -5.00/ 5.00

ALPHAR	BETAR	CARS	CYNRS	ALFRSU	BETRSU
-6.504	-6.321	.05150	.01540	-6.16360	-6.42730
-6.459	-4.302	.05580	.01100	-6.14320	-4.46920
-6.483	.136	.06280	.00780	-6.32710	-.18650
-6.213	4.470	.06830	.01340	-6.28170	4.11860
-6.173	6.502	.07130	.01930	-6.31070	6.17270
	GRADIENT	.00143	.00027	-.01589	.97899

RUN NO. 1290/ 0 RN/L = 3.00 GRADIENT INTERVAL = -5.00/ 5.00

ALPHAR	BETAR	CARS	CYNRS	ALFRSU	BETRSU
-4.253	-6.433	.05280	.02640	-3.89700	-6.46260
-4.522	-4.249	.05690	.02120	-4.18140	-4.35790
-4.364	.425	.06320	.02210	-4.22640	.09300
-3.765	4.535	.06740	.03080	-3.91360	4.20920
-3.872	6.401	.07030	.03330	-4.07150	6.10530
	GRADIENT	.00120	.00107	.02957	.97471

RUN NO. 1291/ 0 RN/L = 3.00 GRADIENT INTERVAL = -5.00/ 5.00

ALPHAR	BETAR	CARS	CYNRS	ALFRSU	BETRSU
-.353	-7.425	.05300	.03770	-.02870	-7.27680
-.323	-5.233	.05600	.03850	.00160	-5.08370
-.317	-.828	.06290	.04450	.00830	-.67740
-.304	3.325	.06840	.05050	.02220	3.47640
-.333	5.500	.07070	.05380	-.00980	5.64800
	GRADIENT	.00132	.00144	.00335	1.00007

IA156A, AEDC PWT 16T-470, 0 T S W/SILTS (R8NPB2) (10 MAY 80)

REFERENCE DATA

SREF =	2690.0000 SQ.FT.	XMRP =	976.0000 IN. XT		
LREF =	1290.3000 INCHES	YMRP =	.0000 IN. YT		
BREF =	1290.3000 INCHES	ZMRP =	400.0000 IN. ZT		
SCALE =	.0200				

PARAMETRIC DATA

IB-ELV =	12.000	OB-ELV =	5.000
BDFLAP =	.000	SPDBRK =	.000
RUDDER =	.000	SILTS =	1.000
MACH =	1.550	RN/L =	3.200

RUN NO. 1292/ 0 RN/L = 3.00 GRADIENT INTERVAL = -5.00/ 5.00

ALPHAR	BETAR	CARS	CYNRS	ALFRSU	BETRSU
4.699	-5.651	.05650	.02830	4.51230	-5.95420
4.464	-3.524	.05840	.03180	4.33970	-3.85800
4.202	.132	.06410	.04320	4.34230	-.19350
4.183	3.794	.06830	.05300	4.51330	3.66630
4.151	5.833	.07060	.06020	4.50540	5.77930
	GRADIENT	.00135	.00290	.02373	1.02825

IA156A, AEDC PWT 16T-470, 0 T S W/SILTS (R8NPB3) (10 MAY 80)

REFERENCE DATA

SREF =	2690.0000 SQ.FT.	XMRP =	976.0000 IN. XT		
LREF =	1290.3000 INCHES	YMRP =	.0000 IN. YT		
BREF =	1290.3000 INCHES	ZMRP =	400.0000 IN. ZT		
SCALE =	.0200				

PARAMETRIC DATA

IB-ELV =	12.000	OB-ELV =	9.000
BDFLAP =	.000	SPDBRK =	.000
RUDDER =	.000	SILTS =	1.000
MACH =	.600	RN/L =	3.500

RUN NO. 1295/ 0 RN/L = 3.50 GRADIENT INTERVAL = -5.00/ 5.00

ALPHAR	BETAR	CARS	CYNRS	ALFRSU	BETRSU
-8.240	-8.133	.03210	.01950	-8.15230	-8.32480
-8.227	-6.039	.03600	.01170	-8.16710	-6.24120
-8.230	-3.965	.04030	.00560	-8.20880	-4.17460
-8.161	.275	.04350	.00640	-8.24280	.08020
-8.059	4.265	.04660	.01730	-8.22040	4.12870
-8.105	6.209	.04830	.02290	-8.28780	6.10270
-8.148	8.229	.04960	.02890	-8.34370	8.15010
	GRADIENT	.00077	.00141	-.00148	1.00885

RUN NO. 1296/ 0 RN/L = 3.49 GRADIENT INTERVAL = -5.00/ 5.00

ALPHAR	BETAR	CARS	CYNRS	ALFRSU	BETRSU
-6.181	-8.199	.03400	.02830	-6.06610	-8.37580
-6.148	-6.129	.03670	.02210	-6.05910	-6.32080
-6.083	-4.180	.04050	.01740	-6.03030	-4.38420
-6.146	.016	.04310	.01880	-6.21910	-.18160
-6.035	4.211	.04740	.02730	-6.21030	4.09420
-5.959	6.218	.04930	.03240	-6.15490	6.13920
-6.019	8.214	.05060	.03720	-6.22420	8.16290
	GRADIENT	.00082	.00118	-.02145	1.01042

IA156A, AEDC PWT 16T-470, 0 T S W/SILTS (R8NPB3) (10 MAY 80)

REFERENCE DATA

SREF = 2690.0000 SQ.FT. XMRP = 976.0000 IN. XT
LREF = 1290.3000 INCHES YMRP = .0000 IN. YT
BREF = 1290.3000 INCHES ZMRP = 400.0000 IN. ZT
SCALE = .0200

PARAMETRIC DATA

IB-ELV = 12.000 OB-ELV = 9.000
BDFLAP = .000 SPDBRK = .000
RUDDER = .000 SILTS = 1.000
MACH = .600 RN/L = 3.500

RUN NO. 1297/ 0 RN/L = 3.49 GRADIENT INTERVAL = -5.00/ 5.00

ALPHAR	BETAR	CARS	CYNRS	ALFRSU	BETRSU
-4.190	-8.213	.03570	.03380	-4.04640	-8.36780
-4.188	-6.182	.03750	.02980	-4.06400	-6.35220
-4.212	-4.080	.04080	.02650	-4.12500	-4.27180
-4.010	.111	.04410	.03200	-4.08620	-.08560
-3.698	4.310	.04830	.03900	-3.89550	4.23710
-3.819	6.128	.04950	.04110	-4.02550	6.08760
-3.872	8.122	.05130	.04540	-4.08250	8.10820
	GRADIENT	.00089	.00149	.02736	1.01418

RUN NO. 1298/ 0 RN/L = 3.49 GRADIENT INTERVAL = -5.00/ 5.00

ALPHAR	BETAR	CARS	CYNRS	ALFRSU	BETRSU
-.232	-8.999	.04010	.03840	-.03610	-9.07780
-.219	-6.903	.03840	.03680	-.02310	-6.97950
-.208	-4.624	.04010	.03710	-.01210	-4.70100
-.204	-.556	.04440	.04350	-.00800	-.63330
-.163	3.525	.04910	.04960	.03330	3.44750
-.163	5.625	.05100	.05240	.03360	5.54830
-.160	7.724	.05220	.05590	.03660	7.64840
	GRADIENT	.00110	.00153	.00557	.99999

RUN NO. 1299/ 0 RN/L = 3.49 GRADIENT INTERVAL = -5.00/ 5.00

ALPHAR	BETAR	CARS	CYNRS	ALFRSU	BETRSU
4.439	-7.859	.04170	.02830	4.22930	-7.87820
4.355	-5.743	.04080	.02920	4.14950	-5.78800
4.349	-3.784	.04130	.03160	4.15490	-3.86590
4.153	.010	.04360	.04170	4.06970	-.18360
4.199	3.897	.04760	.04870	4.28210	3.70300
4.142	5.999	.05010	.05350	4.26500	5.82770
4.119	7.979	.05120	.05660	4.26290	7.82530
	GRADIENT	.00082	.00222	.01672	.98555

IA156A, AEDC PWT 16T-470, O T S W/SILTS (R8NPB3) (10 MAY 80)

REFERENCE DATA

SREF = 2690.0000 SQ.FT. XMRP = 976.0000 IN. XT
LREF = 1290.3000 INCHES YMRP = .0000 IN. YT
BREF = 1290.3000 INCHES ZMRP = 400.0000 IN. ZT
SCALE = .0200

PARAMETRIC DATA

IB-ELV = 12.000 OB-ELV = 9.000
BDFLAP = .000 SPDBRK = .000
RUDDER = .000 SILTS = 1.000
MACH = .600 RN/L = 3.500

RUN NO. 1300/ 0 RN/L = 3.50 GRADIENT INTERVAL = -5.00/ 5.00

ALPHAR	BETAR	CARS	CYNRS	ALFRSU	BETRSU
6.521	-7.924	.04200	.02160	6.31830	-7.97980
6.521	-5.866	.04120	.02180	6.32870	-5.95130
6.520	-3.824	.04210	.02440	6.34690	-3.94470
6.247	.119	.04440	.03580	6.17030	-.07730
6.177	3.929	.04750	.04260	6.22510	3.72460
6.148	5.838	.04890	.04610	6.23560	5.64670
6.154	7.868	.05020	.04990	6.26840	7.69190
	GRADIENT	.00070	.00235	-.01588	.98905

RUN NO. 1301/ 0 RN/L = 3.50 GRADIENT INTERVAL = -5.00/ 5.00

ALPHAR	BETAR	CARS	CYNRS	ALFRSU	BETRSU
8.456	-7.798	.04090	.01290	8.26290	-7.88070
8.381	-5.736	.04070	.01360	8.20170	-5.84580
8.411	-3.793	.04150	.01630	8.25490	-3.93370
8.337	.093	.04570	.02660	8.25950	-.10310
8.385	4.046	.04720	.03110	8.40720	3.83660
8.349	6.035	.04840	.03570	8.40860	5.83290
8.327	8.043	.04940	.04160	8.41560	7.85170
	GRADIENT	.00073	.00189	.01948	.99128

IA156A, AEDC PWT 16T-470, O T S W/SILTS (R8NPB4) (10 MAY 80)

REFERENCE DATA

SREF = 2690.0000 SQ.FT. XMRP = 976.0000 IN. XT
LREF = 1290.3000 INCHES YMRP = .0000 IN. YT
BREF = 1290.3000 INCHES ZMRP = 400.0000 IN. ZT
SCALE = .0200

PARAMETRIC DATA

IB-ELV = 12.000 OB-ELV = 9.000
BDFLAP = .000 SPDBRK = .000
RUDDER = .000 SILTS = 1.000
MACH = .800 RN/L = 3.500

RUN NO. 1302/ 0 RN/L = 3.50 GRADIENT INTERVAL = -5.00/ 5.00

ALPHAR	BETAR	CARS	CYNRS	ALFRSU	BETRSU
-8.394	-6.175	.03510	.00890	-8.23800	-6.31200
-8.237	-4.150	.04150	.00500	-8.10600	-4.31170
-8.353	.235	.04670	.00390	-8.31960	.03010
-8.258	4.277	.04910	.01300	-8.32150	4.07990
-8.290	6.225	.05070	.01830	-8.38710	6.04130
	GRADIENT	.00091	.00093	-.02590	.99563

RUN NO. 1303/ 0 RN/L = 3.50 GRADIENT INTERVAL = -5.00/ 5.00

ALPHAR	BETAR	CARS	CYNRS	ALFRSU	BETRSU
-6.247	-6.252	.03690	.01950	-6.07180	-6.36350
-6.205	-4.273	.04200	.01590	-6.05310	-4.41420
-6.325	.008	.04600	.01640	-6.28340	-.19540
-6.187	4.246	.05010	.02560	-6.27260	4.05730
-5.992	6.369	.05170	.03150	-6.11730	6.20390
	GRADIENT	.00095	.00114	-.02581	.99442

RUN NO. 1304/ 0 RN/L = 3.50 GRADIENT INTERVAL = -5.00/ 5.00

ALPHAR	BETAR	CARS	CYNRS	ALFRSU	BETRSU
-4.144	-6.348	.03870	.02820	-3.94970	-6.42060
-4.298	-4.192	.04290	.02480	-4.12370	-4.30460
-4.236	.284	.04660	.03030	-4.20630	.07840
-3.809	4.331	.05080	.03790	-3.93550	4.16660
-3.904	6.192	.05230	.04090	-4.05630	6.05130
	GRADIENT	.00093	.00153	.02137	.99372

RUN NO. 1306/ 0 RN/L = 3.50 GRADIENT INTERVAL = -5.00/ 5.00

ALPHAR	BETAR	CARS	CYNRS	ALFRSU	BETRSU
-.230	-7.118	.04220	.03740	-.02550	-7.08050
-.231	-4.934	.04210	.03700	-.02730	-4.89600
-.248	-.748	.04550	.04150	-.04440	-.70980
-.201	3.423	.05100	.04880	.00280	3.46160
-.190	5.543	.05410	.05220	.01410	5.58060
	GRADIENT	.00106	.00141	.00360	1.00005

IA156A, AEDC PWT 16T-470, O T S W/SILTS (R8NPB4) (10 MAY 80)

REFERENCE DATA

SREF =	2690.0000 SQ.FT.	XMRP =	976.0000 IN. XT		
LREF =	1290.3000 INCHES	YMRP =	.0000 IN. YT		
BREF =	1290.3000 INCHES	ZMRP =	400.0000 IN. ZT		
SCALE =	.0200				

PARAMETRIC DATA

IB-ELV =	12.000	OB-ELV =	9.000
BDFLAP =	.000	SPDBRK =	.000
RUDDER =	.000	SILTS =	1.000
MACH =	.800	RN/L =	3.500

RUN NO. 1314/ 0 RN/L = 3.49 GRADIENT INTERVAL = -5.00/ 5.00

ALPHAR	BETAR	CARS	CYNRS	ALFRSU	BETRSU
6.485	-5.834	.04470	.02350	6.36560	-6.00350
6.478	-3.798	.04480	.02510	6.39430	-3.98780
6.183	.065	.04760	.03760	6.22020	-.13950
6.153	3.809	.05050	.04300	6.29900	3.66140
6.140	5.791	.05280	.04830	6.31300	5.67640
	GRADIENT	.00075	.00236	-.01270	1.00555

IA156A, AEDC PWT 16T-470, O T S W/SILTS (R8NPB5) (10 MAY 80)

REFERENCE DATA

SREF =	2690.0000 SQ.FT.	XMRP =	976.0000 IN. XT		
LREF =	1290.3000 INCHES	YMRP =	.0000 IN. YT		
BREF =	1290.3000 INCHES	ZMRP =	400.0000 IN. ZT		
SCALE =	.0200				

PARAMETRIC DATA

IB-ELV =	12.000	OB-ELV =	9.000
BDFLAP =	.000	SPDBRK =	.000
RUDDER =	.000	SILTS =	1.000
MACH =	.800	RN/L =	3.500

RUN NO. 1313/ 0 RN/L = 3.49 GRADIENT INTERVAL = -5.00/ 5.00

ALPHAR	BETAR	CARS	CYNRS	ALFRSU	BETRSU
-.236	-7.085	.04240	.03750	-.03190	-7.04680
-.235	-4.967	.04290	.03740	-.03090	-4.92910
-.254	-.743	.04640	.04190	-.05000	-.70540
-.202	3.428	.05160	.04910	.00240	3.46660
-.195	5.554	.05430	.05230	.00920	5.59210
	GRADIENT	.00104	.00139	.00395	1.00006

IA156A, AEDC PWT 16T-470, O T S W/SILTS (R8NPB6) (10 MAY 80)

REFERENCE DATA

SREF = 2690.0000 SQ.FT. XMRP = 976.0000 IN. XT
LREF = 1290.3000 INCHES YMRP = .0000 IN. YT
BREF = 1290.3000 INCHES ZMRP = 400.0000 IN. ZT
SCALE = .0200

PARAMETRIC DATA

IB-ELV = 12.000 OB-ELV = 9.000
BDFLAP = .000 SPDBRK = .000
RUDDER = .000 SILTS = 1.000
MACH = .900 RN/L = 3.500

RUN NO. 1308/ 0 RN/L = 3.50 GRADIENT INTERVAL = -5.00/ 5.00

ALPHAR	BETAR	CARS	CYNRS	ALFRSU	BETRSU
-8.367	-6.280	.04080	.00810	-8.20110	-6.40210
-8.394	-4.148	.04660	.00230	-8.25340	-4.30010
-8.425	.103	.05030	.00450	-8.37580	-.09800
-8.326	4.192	.05290	.01310	-8.37590	3.99100
-8.387	6.178	.05460	.01770	-8.47140	5.98910
	GRADIENT	.00076	.00129	-.01478	.99410

RUN NO. 1309/ 0 RN/L = 3.50 GRADIENT INTERVAL = -5.00/ 5.00

ALPHAR	BETAR	CARS	CYNRS	ALFRSU	BETRSU
-6.321	-6.287	.04280	.01900	-6.13860	-6.38480
-6.259	-4.308	.04690	.01460	-6.09770	-4.43670
-6.397	-.028	.05010	.01610	-6.34220	-.22750
-6.259	4.225	.05480	.02300	-6.33230	4.03160
-6.075	6.351	.05710	.02920	-6.18920	6.17830
	GRADIENT	.00093	.00098	-.02753	.99249

RUN NO. 1310/ 0 RN/L = 3.49 GRADIENT INTERVAL = -5.00/ 5.00

ALPHAR	BETAR	CARS	CYNRS	ALFRSU	BETRSU
-4.140	-6.384	.04460	.02940	-3.94170	-6.44120
-4.358	-4.233	.04860	.02470	-4.17640	-4.33200
-4.310	.266	.04990	.02950	-4.26660	.06350
-3.851	4.331	.05570	.03590	-3.96700	4.15950
-3.968	6.179	.05780	.03930	-4.11030	6.02900
	GRADIENT	.00082	.00130	.02366	.99134

RUN NO. 1311/ 0 RN/L = 3.49 GRADIENT INTERVAL = -5.00/ 5.00

ALPHAR	BETAR	CARS	CYNRS	ALFRSU	BETRSU
-.283	-7.233	.04820	.03970	-.08270	-7.18160
-.285	-5.054	.04880	.03800	-.08480	-5.00250
-.332	-.730	.05150	.04190	-.13200	-.67780
-.268	3.376	.05670	.05080	-.06790	3.42800
-.253	5.536	.05920	.05510	-.05320	5.58830
	GRADIENT	.00127	.00217	.01561	1.00007

IA156A, AEDC PWT 16T-470, O T S W/SILTS (R8NPB6) (10 MAY 80)

REFERENCE DATA

SREF = 2690.0000 SQ.FT. XMRP = 976.0000 IN. XT
LREF = 1290.3000 INCHES YMRP = .0000 IN. YT
BREF = 1290.3000 INCHES ZMRP = 400.0000 IN. ZT
SCALE = .0200

PARAMETRIC DATA

IB-ELV = 12.000 OB-ELV = 9.000
BDFLAP = .000 SPDBRK = .000
RUDDER = .000 SILTS = 1.000
MACH = .900 RN/L = 3.500

RUN NO. 1312/ 0 RN/L = 3.50 GRADIENT INTERVAL = -5.00/ 5.00

ALPHAR	BETAR	CARS	CYNRS	ALFRSU	BETRSU
4.451	-5.769	.04970	.03290	4.31240	-5.92260
4.323	-3.701	.05120	.03560	4.21700	-3.87840
4.007	-.010	.05310	.04530	4.05350	-.21120
4.162	3.766	.05720	.05110	4.33940	3.66090
4.091	5.858	.05950	.05700	4.28750	5.79310
	GRADIENT	.00080	.00207	.01662	1.00966

IA156A, AEDC PWT 16T-470, O T S (R8NPB7) (10 MAY 80)

REFERENCE DATA

SREF = 2690.0000 SQ.FT. XMRP = 976.0000 IN. XT
LREF = 1290.3000 INCHES YMRP = .0000 IN. YT
BREF = 1290.3000 INCHES ZMRP = 400.0000 IN. ZT
SCALE = .0200

PARAMETRIC DATA

IB-ELV = 12.000 OB-ELV = 9.000
BDFLAP = .000 SPDBRK = .000
RUDDER = .000 SILTS = .000
MACH = .800 RN/L = 3.500

RUN NO. 1324/ 0 RN/L = 3.50 GRADIENT INTERVAL = -5.00/ 5.00

ALPHAR	BETAR	CARS	CYNRS	ALFRSU	BETRSU
4.517	-5.877	.04420	.03020	4.36700	-6.02060
4.321	-3.636	.04470	.03340	4.20230	-3.80600
4.088	.080	.04630	.04360	4.12500	-.12410
4.172	3.873	.05140	.04980	4.34390	3.75760
4.111	5.899	.05420	.05480	4.30360	5.82040
	GRADIENT	.00089	.00218	.01899	1.00734

IA156A, AEDC PWT 16T-470, 0 T S (R8NP88) (10 MAY 80)

REFERENCE DATA

SREF = 2690.0000 SQ.FT. XMRP = 976.0000 IN. XT
LREF = 1290.3000 INCHES YMRP = .0000 IN. YT
BREF = 1290.3000 INCHES ZMRP = 400.0000 IN. ZT
SCALE = .0200

PARAMETRIC DATA

IB-ELV = 12.000 OB-ELV = 9.000
BDFLAP = .000 SPDBRK = .000
RUDDER = .000 SILTS = .000
MACH = .950 RN/L = 3.500

RUN NO. 1325/ 0 RN/L = 3.51 GRADIENT INTERVAL = -5.00/ 5.00

ALPHAR	BETAR	CARS	CYNRS	ALFRSU	BETRSU
-8.412	-6.301	.04320	.01130	-8.24340	-6.41830
-8.585	-4.037	.05160	.00480	-8.44460	-4.18740
-8.536	-.031	.05700	.00580	-8.48030	-.22800
-8.438	4.287	.05910	.01410	-8.48650	4.08720
-8.466	6.166	.06120	.01890	-8.54680	5.97780
	GRADIENT	.00090	.00113	-.00499	.99411

RUN NO. 1326/ 0 RN/L = 3.50 GRADIENT INTERVAL = -5.00/ 5.00

ALPHAR	BETAR	CARS	CYNRS	ALFRSU	BETRSU
-6.385	-6.298	.04680	.02350	-6.20130	-6.39030
-6.323	-4.315	.05260	.01880	-6.15950	-4.43970
-6.489	-.057	.05820	.01800	-6.43050	-.25380
-6.308	4.205	.06130	.02530	-6.37760	4.01200
-6.039	6.340	.06490	.03310	-6.15070	6.16710
	GRADIENT	.00102	.00076	-.02559	.99194

RUN NO. 1327/ 0 RN/L = 3.50 GRADIENT INTERVAL = -5.00/ 5.00

ALPHAR	BETAR	CARS	CYNRS	ALFRSU	BETRSU
-4.160	-6.386	.04920	.03360	-3.96120	-6.43760
-4.388	-4.229	.05440	.02900	-4.20520	-4.32340
-4.337	.261	.05800	.03420	-4.28960	.06090
-3.856	4.319	.06310	.04090	-3.96820	4.14690
-3.986	6.188	.06470	.04340	-4.12570	6.03740
	GRADIENT	.00101	.00139	.02690	.99063

RUN NO. 1328/ 0 RN/L = 3.50 GRADIENT INTERVAL = -5.00/ 5.00

ALPHAR	BETAR	CARS	CYNRS	ALFRSU	BETRSU
-.279	-7.254	.05080	.04130	-.08130	-7.19900
-.255	-5.084	.05330	.04020	-.05720	-5.02840
-.290	-.748	.05830	.04730	-.09180	-.69240
-.233	3.351	.06510	.05590	-.03540	3.40630
-.237	5.536	.06590	.05950	-.03960	5.59180
	GRADIENT	.00166	.00210	.01376	1.00000

IA156A, AEDC PWT 16T-470, 0 T S (R8NPB8) (10 MAY 80)

REFERENCE DATA

SREF =	2690.0000 SQ.FT.	XMRP =	976.0000 IN. XT		
LREF =	1290.3000 INCHES	YMRP =	.0000 IN. YT		
BREF =	1290.3000 INCHES	ZMRP =	400.0000 IN. ZT		
SCALE =	.0200				

PARAMETRIC DATA

IB-ELV =	12.000	OB-ELV =	9.000
BDFLAP =	.000	SPDBRK =	.000
RUDDER =	.000	SILTS =	.000
MACH =	.950	RN/L =	3.500

RUN NO. 1329/ 0 RN/L = 3.50 GRADIENT INTERVAL = -5.00/ 5.00

ALPHAR	BETAR	CARS	CYNRS	ALFRSU	BETRSU
4.260	-5.647	.05390	.03530	4.12370	-5.80080
4.283	-3.895	.05600	.03730	4.17660	-4.07010
4.170	.059	.05970	.04720	4.22460	-.13850
4.163	3.663	.06440	.05310	4.34000	3.55970
4.135	5.819	.06550	.05930	4.33120	5.75720
	GRADIENT	.00111	.00210	.02147	1.00928

IA156A, AEDC PWT 16T-470, 0 T S (R8NPB9) (10 MAY 80)

REFERENCE DATA

SREF =	2690.0000 SQ.FT.	XMRP =	976.0000 IN. XT		
LREF =	1290.3000 INCHES	YMRP =	.0000 IN. YT		
BREF =	1290.3000 INCHES	ZMRP =	400.0000 IN. ZT		
SCALE =	.0200				

PARAMETRIC DATA

IB-ELV =	12.000	OB-ELV =	9.000
BDFLAP =	.000	SPDBRK =	.000
RUDDER =	.000	SILTS =	.000
MACH =	1.050	RN/L =	3.500

RUN NO. 1330/ 0 RN/L = 3.50 GRADIENT INTERVAL = -5.00/ 5.00

ALPHAR	BETAR	CARS	CYNRS	ALFRSU	BETRSU
-8.637	-6.318	.06310	.01870	-8.46640	-6.43050
-8.639	-4.185	.07100	.01460	-8.49320	-4.32740
-8.650	.092	.07860	.01540	-8.59240	-.10330
-8.493	4.180	.07990	.02720	-8.53450	3.98100
-8.541	6.140	.08320	.03110	-8.61700	5.95130
	GRADIENT	.00107	.00150	-.00508	.99317

RUN NO. 1331/ 0 RN/L = 3.51 GRADIENT INTERVAL = -5.00/ 5.00

ALPHAR	BETAR	CARS	CYNRS	ALFRSU	BETRSU
-6.450	-6.351	.06540	.03210	-6.26530	-6.43570
-6.355	-4.370	.07240	.02890	-6.18840	-4.48680
-6.543	-.081	.07740	.03060	-6.47920	-.27450
-6.380	4.185	.08280	.03740	-6.44490	3.99210
-6.087	6.341	.08420	.04530	-6.19380	6.16730
	GRADIENT	.00122	.00099	-.03001	.99105

IA156A, AEDC PWT 16T-470, 0 T S (R8NP89) (10 MAY 80)

REFERENCE DATA

SREF =	2690.0000 SQ.FT.	XMRP =	976.0000 IN. XT		
LREF =	1290.3000 INCHES	YMRP =	.0000 IN. YT		
BREF =	1290.3000 INCHES	ZMRP =	400.0000 IN. ZT		
SCALE =	.0200				

PARAMETRIC DATA

IB-ELV =	12.000	OB-ELV =	9.000
BDFLAP =	.000	SPDBRK =	.000
RUDDER =	.000	SILTS =	.000
MACH =	1.050	RN/L =	3.500

RUN NO. 1332/ 0 RN/L = 3.50 GRADIENT INTERVAL = -5.00/ 5.00

ALPHAR	BETAR	CARS	CYNRS	ALFRSU	BETRSU
-4.206	-6.447	.06780	.04390	-4.00660	-6.49090
-4.428	-4.271	.07280	.03910	-4.24380	-4.35740
-4.380	.229	.07810	.04660	-4.32810	.03180
-3.881	4.308	.08330	.05470	-3.98980	4.13600
-4.013	6.160	.08460	.05610	-4.14800	6.00750
	GRADIENT	.00122	.00182	.02878	.98968

RUN NO. 1333/ 0 RN/L = 3.50 GRADIENT INTERVAL = -5.00/ 5.00

ALPHAR	BETAR	CARS	CYNRS	ALFRSU	BETRSU
-.285	-7.363	.06770	.05150	-.09020	-7.30190
-.273	-5.149	.07060	.05120	-.07820	-5.08760
-.352	-.743	.07880	.06170	-.15770	-.68190
-.262	3.334	.08510	.06980	-.06710	3.39470
-.253	5.534	.08620	.07210	-.05850	5.59430
	GRADIENT	.00155	.00199	.02222	.99995

RUN NO. 1334/ 0 RN/L = 3.50 GRADIENT INTERVAL = -5.00/ 5.00

ALPHAR	BETAR	CARS	CYNRS	ALFRSU	BETRSU
4.244	-5.707	.07260	.04370	4.11420	-5.86320
4.234	-3.883	.07580	.04670	4.13450	-4.06070
4.211	.048	.07970	.05670	4.27130	-.14620
4.184	3.633	.08250	.06310	4.36260	3.53460
4.165	5.771	.08190	.06990	4.36140	5.71490
	GRADIENT	.00089	.00219	.03042	1.01033

IA156A, AEDC PWT 16T-470, 0 T S (R8NPC0) (10 MAY 80)

REFERENCE DATA

SREF = 2690.0000 SQ.FT. XMRP = 976.0000 IN. XT
LREF = 1290.3000 INCHES YMRP = .0000 IN. YT
BREF = 1290.3000 INCHES ZMRP = 400.0000 IN. ZT
SCALE = .0200

PARAMETRIC DATA

IB-ELV = 12.000 OB-ELV = 9.000
BDFLAP = .000 SPDBRK = .000
RUDDER = .000 SILTS = .000
MACH = 1.100 RN/L = 3.500

RUN NO. 1335/ 0 RN/L = 3.50 GRADIENT INTERVAL = -5.00/ 5.00

ALPHAR	BETAR	CARS	CYNRS	ALFRSU	BETRSU
-8.518	-6.374	.06160	.01770	-8.34440	-6.48260
-8.682	-4.127	.06880	.01260	-8.53530	-4.27000
-8.678	-.068	.07680	.01400	-8.61450	-.26210
-8.495	4.220	.08070	.02600	-8.53610	4.01930
-8.548	6.142	.08300	.03060	-8.62230	5.95120
	GRADIENT	.00142	.00162	.00008	.99311

RUN NO. 1336/ 0 RN/L = 3.50 GRADIENT INTERVAL = -5.00/ 5.00

ALPHAR	BETAR	CARS	CYNRS	ALFRSU	BETRSU
-6.451	-6.331	.06400	.02950	-6.26460	-6.41370
-6.415	-4.365	.06960	.02600	-6.24650	-4.48120
-6.610	-.100	.07540	.02790	-6.54300	-.29290
-6.360	4.220	.08140	.03790	-6.42290	4.02590
-6.363	6.221	.08360	.04150	-6.46340	6.04290
	GRADIENT	.00137	.00139	-.02044	.99084

RUN NO. 1337/ 0 RN/L = 3.50 GRADIENT INTERVAL = -5.00/ 5.00

ALPHAR	BETAR	CARS	CYNRS	ALFRSU	BETRSU
-4.217	-6.453	.06590	.04160	-4.01710	-6.49400
-4.471	-4.286	.07000	.03690	-4.28450	-4.37040
-4.388	.238	.07540	.04360	-4.33330	.04120
-3.894	4.333	.08090	.05120	-4.00070	4.15840
-4.006	6.170	.08300	.05310	-4.13980	6.01490
	GRADIENT	.00126	.00166	.03216	.98927

RUN NO. 1338/ 0 RN/L = 3.50 GRADIENT INTERVAL = -5.00/ 5.00

ALPHAR	BETAR	CARS	CYNRS	ALFRSU	BETRSU
-.292	-7.364	.06560	.05140	-.09770	-7.30070
-.264	-5.149	.06650	.04980	-.06950	-5.08620
-.333	-.770	.07430	.05890	-.13830	-.70650
-.233	3.359	.08060	.06540	-.03820	3.42240
-.243	5.545	.08220	.06770	-.04830	5.60860
	GRADIENT	.00153	.00157	.02424	.99995

IA156A, AEDC PWT 16T-470, O T S (R8NPC0) (10 MAY 80)

REFERENCE DATA

SREF = 2690.0000 SQ.FT. XMRP = 976.0000 IN. XT
LREF = 1290.3000 INCHES YMRP = .0000 IN. YT
BREF = 1290.3000 INCHES ZMRP = 400.0000 IN. ZT
SCALE = .0200

PARAMETRIC DATA

IB-ELV = 12.000 OB-ELV = 9.000
BDFLAP = .000 SPDBRK = .000
RUDDER = .000 SILTS = .000
MACH = 1.100 RN/L = 3.500

RUN NO. 1339/ 0 RN/L = 3.48 GRADIENT INTERVAL = -5.00/ 5.00

ALPHAR	BETAR	CARS	CYNRS	ALFRSU	BETRSU
4.305	-5.708	.06800	.04120	4.17620	-5.86700
4.273	-3.877	.07150	.04380	4.17450	-4.05650
4.231	.048	.07480	.05470	4.29360	-.14700
4.220	3.634	.07820	.06060	4.40020	3.53750
4.206	5.782	.07900	.06730	4.40370	5.72810
	GRADIENT	.00089	.00225	.03005	1.01077

IA156A, AEDC PWT 16T-470, O T S (R8NPC1) (10 MAY 80)

REFERENCE DATA

SREF = 2690.0000 SQ.FT. XMRP = 976.0000 IN. XT
LREF = 1290.3000 INCHES YMRP = .0000 IN. YT
BREF = 1290.3000 INCHES ZMRP = 400.0000 IN. ZT
SCALE = .0200

PARAMETRIC DATA

IB-ELV = 12.000 OB-ELV = 9.000
BDFLAP = .000 SPDBRK = .000
RUDDER = .000 SILTS = .000
MACH = 1.150 RN/L = 3.500

RUN NO. 1341/ 0 RN/L = 3.50 GRADIENT INTERVAL = -5.00/ 5.00

ALPHAR	BETAR	CARS	CYNRS	ALFRSU	BETRSU
-8.595	-6.397	.06090	.01740	-8.41920	-6.50560
-8.709	-4.145	.06690	.01050	-8.55970	-4.28780
-8.690	-.073	.07500	.01080	-8.62390	-.26920
-8.478	4.254	.07910	.02210	-8.51810	4.05130
-8.554	6.173	.08090	.02720	-8.62780	5.98010
	GRADIENT	.00145	.00139	.00516	.99291

RUN NO. 1342/ 0 RN/L = 3.50 GRADIENT INTERVAL = -5.00/ 5.00

ALPHAR	BETAR	CARS	CYNRS	ALFRSU	BETRSU
-6.456	-6.355	.06180	.02900	-6.26590	-6.43700
-6.413	-4.384	.06750	.02440	-6.24130	-4.49980
-6.579	-.073	.07390	.02500	-6.51030	-.26830
-6.378	4.230	.07940	.03330	-6.44010	4.03300
-6.205	6.368	.08210	.03860	-6.30930	6.18920
	GRADIENT	.00138	.00103	-.02309	.99049

IA156A, AEDC PWT 16T-470, O T S (R8NPC1) (10 MAY 80)

REFERENCE DATA

SREF = 2690.0000 SQ.FT. XMRP = 976.0000 IN. XT
LREF = 1290.3000 INCHES YMRP = .0000 IN. YT
BREF = 1290.3000 INCHES ZMRP = 400.0000 IN. ZT
SCALE = .0200

PARAMETRIC DATA

IB-ELV = 12.000 OB-ELV = 9.000
BDFLAP = .000 SPDBRK = .000
RUDDER = .000 SILTS = .000
MACH = 1.150 RN/L = 3.500

RUN NO. 1343/ 0 RN/L = 3.50 GRADIENT INTERVAL = -5.00/ 5.00

ALPHAR	BETAR	CARS	CYNRS	ALFRSU	BETRSU
-4.228	-6.447	.06300	.04050	-4.02480	-6.48740
-4.464	-4.288	.06800	.03540	-4.27480	-4.37220
-4.374	.256	.07450	.04190	-4.31730	.05740
-3.877	4.334	.07980	.04800	-3.98330	4.15720
-3.995	6.199	.08220	.04940	-4.12930	6.04130
	GRADIENT	.00137	.00146	.03299	.98891

RUN NO. 1344/ 0 RN/L = 3.50 GRADIENT INTERVAL = -5.00/ 5.00

ALPHAR	BETAR	CARS	CYNRS	ALFRSU	BETRSU
-.255	-7.357	.06360	.04860	-.05910	-7.29180
-.242	-5.133	.06550	.04860	-.04590	-5.06700
-.294	-.783	.07420	.05680	-.09780	-.71710
-.209	3.361	.08080	.06350	-.01270	3.42640
-.194	5.558	.08220	.06510	.00190	5.62340
	GRADIENT	.00159	.00162	.02054	1.00002

RUN NO. 1345/ 0 RN/L = 3.50 GRADIENT INTERVAL = -5.00/ 5.00

ALPHAR	BETAR	CARS	CYNRS	ALFRSU	BETRSU
4.409	-5.860	.06710	.03990	4.27900	-6.02090
4.417	-3.778	.07100	.04230	4.32370	-3.96230
4.294	.063	.07530	.05280	4.35920	-.13320
4.251	3.694	.07860	.06060	4.43530	3.60030
4.227	5.797	.07920	.06610	4.42750	5.74490
	GRADIENT	.00102	.00245	.01488	1.01191

IA156A, AEDC PWT 16T-470, 0 T S (R8NPC2) (10 MAY 80)

REFERENCE DATA

SREF = 2690.0000 SQ.FT. XMRP = 976.0000 IN. XT
LREF = 1290.3000 INCHES YMRP = .0000 IN. YT
BREF = 1290.3000 INCHES ZMRP = 400.0000 IN. ZT
SCALE = .0200

PARAMETRIC DATA

IB-ELV = 12.000 OB-ELV = 9.000
BDFLAP = .000 SPDBRK = .000
RUDDER = .000 SILTS = .000
MACH = 1.250 RN/L = 3.500

RUN NO. 1346/ 0 RN/L = 3.50 GRADIENT INTERVAL = -5.00/ 5.00

ALPHAR	BETAR	CARS	CYNRS	ALFRSU	BETRSU
-8.666	-6.331	.05900	.01150	-8.48100	-6.44570
-8.638	-4.150	.06410	.00760	-8.47940	-4.29920
-8.627	-.027	.07260	.00850	-8.55650	-.23300
-8.475	4.279	.07660	.01670	-8.51510	4.06500
-8.545	6.219	.07900	.02040	-8.62220	6.01500
	GRADIENT	.00148	.00109	-.00413	.99231

RUN NO. 1347/ 0 RN/L = 3.50 GRADIENT INTERVAL = -5.00/ 5.00

ALPHAR	BETAR	CARS	CYNRS	ALFRSU	BETRSU
-6.442	-6.346	.05960	.02460	-6.24070	-6.43180
-6.374	-4.381	.06480	.02120	-6.19230	-4.50100
-6.516	-.034	.07210	.02330	-6.44200	-.23940
-6.326	4.260	.07720	.02720	-6.39080	4.05090
-6.332	6.271	.08000	.03070	-6.43730	6.07920
	GRADIENT	.00144	.00069	-.02305	.98978

RUN NO. 1348/ 0 RN/L = 3.49 GRADIENT INTERVAL = -5.00/ 5.00

ALPHAR	BETAR	CARS	CYNRS	ALFRSU	BETRSU
-4.167	-6.462	.06030	.03680	-3.95240	-6.50250
-4.391	-4.283	.06560	.03340	-4.19080	-4.36950
-4.336	.250	.07210	.03590	-4.27400	.04050
-3.840	4.326	.07720	.04150	-3.95100	4.13850
-3.985	6.215	.07940	.04250	-4.12550	6.04780
	GRADIENT	.00135	.00093	.02699	.98795

RUN NO. 1349/ 0 RN/L = 3.49 GRADIENT INTERVAL = -5.00/ 5.00

ALPHAR	BETAR	CARS	CYNRS	ALFRSU	BETRSU
-.208	-7.375	.06080	.04620	-.00140	-7.30440
-.187	-5.185	.06320	.04670	.01970	-5.11490
-.203	-.745	.07240	.05350	.00380	-.67460
-.121	3.385	.07850	.05990	.08570	3.45500
-.133	5.585	.08010	.06210	.07380	5.65520
	GRADIENT	.00148	.00155	.01983	.99998

IA156A, AEDC PWT 16T-470, O T S (R8NPC2) (10 MAY 80)

REFERENCE DATA

SREF = 2690.0000 SQ.FT. XMRP = 976.0000 IN. XT
LREF = 1290.3000 INCHES YMRP = .0000 IN. YT
BREF = 1290.3000 INCHES ZMRP = 400.0000 IN. ZT
SCALE = .0200

PARAMETRIC DATA

IB-ELV = 12.000 OB-ELV = 9.000
BDFLAP = .000 SPDBRK = .000
RUDDER = .000 SILTS = .000
MACH = 1.250 RN/L = 3.500

RUN NO. 1350/ 0 RN/L = 3.50 GRADIENT INTERVAL = -5.00/ 5.00

ALPHAR	BETAR	CARS	CYNRS	ALFRSU	BETRSU
4.466	-5.856	.06450	.03740	4.33020	-6.02640
4.495	-3.783	.06820	.03930	4.39680	-3.97800
4.381	.065	.07260	.04960	4.44970	-.14110
4.322	3.671	.07640	.05890	4.51550	3.57190
4.320	5.808	.07740	.06480	4.53100	5.75300
	GRADIENT	.00110	.00263	.01590	1.01271

IA156A, AEDC PWT 16T-470, O T S (R8NPC3) (10 MAY 80)

REFERENCE DATA

SREF = 2690.0000 SQ.FT. XMRP = 976.0000 IN. XT
LREF = 1290.3000 INCHES YMRP = .0000 IN. YT
BREF = 1290.3000 INCHES ZMRP = 400.0000 IN. ZT
SCALE = .0200

PARAMETRIC DATA

IB-ELV = 12.000 OB-ELV = -2.000
BDFLAP = .000 SPDBRK = .000
RUDDER = .000 SILTS = .000
MACH = 1.150 RN/L = 3.500

RUN NO. 1355/ 0 RN/L = 3.50 GRADIENT INTERVAL = -5.00/ 5.00

ALPHAR	BETAR	CARS	CYNRS	ALFRSU	BETRSU
-8.466	-6.413	.05940	.01470	-8.28900	-6.51970
-8.696	-4.192	.06430	.00740	-8.54470	-4.33360
-8.721	.063	.07290	.00680	-8.65780	-.13450
-8.518	4.200	.07650	.01820	-8.55730	3.99660
-8.561	6.180	.07840	.02400	-8.63560	5.98660
	GRADIENT	.00146	.00128	-.00162	.99263

RUN NO. 1356/ 0 RN/L = 3.50 GRADIENT INTERVAL = -5.00/ 5.00

ALPHAR	BETAR	CARS	CYNRS	ALFRSU	BETRSU
-6.480	-6.353	.06070	.02550	-6.29070	-6.43490
-6.421	-4.367	.06570	.02100	-6.24890	-4.48200
-6.595	-.056	.07210	.02120	-6.52620	-.25090
-6.397	4.243	.07790	.02930	-6.45960	4.04540
-6.123	6.376	.07980	.03530	-6.22820	6.19810
	GRADIENT	.00142	.00096	-.02449	.99048

IA156A, AEDC PWT 16T-470, 0 T S (R8NPC3) (10 MAY 80)

REFERENCE DATA

SREF =	2690.0000 SQ.FT.	XMRP =	976.0000 IN. XT		
LREF =	1290.3000 INCHES	YMRP =	.0000 IN. YT		
BREF =	1290.3000 INCHES	ZMRP =	400.0000 IN. ZT		
SCALE =	.0200				

PARAMETRIC DATA

IB-ELV =	12.000	OB-ELV =	-2.000
BDFLAP =	.000	SPDBRK =	.000
RUDDER =	.000	SILTS =	.000
MACH =	1.150	RN/L =	3.500

RUN NO. 1357/ 0 RN/L = 3.50 GRADIENT INTERVAL = -5.00/ 5.00

ALPHAR	BETAR	CARS	CYNRS	ALFRSU	BETRSU
-4.226	-6.447	.06240	.03750	-4.02340	-6.48650
-4.467	-4.279	.06650	.03210	-4.27710	-4.36200
-4.390	.271	.07280	.03740	-4.33270	.07160
-3.880	4.344	.07820	.04370	-3.98700	4.16720
-4.016	6.203	.08060	.04540	-4.15040	6.04550
	GRADIENT	.00136	.00134	.03275	.98884

RUN NO. 1358/ 0 RN/L = 3.50 GRADIENT INTERVAL = -5.00/ 5.00

ALPHAR	BETAR	CARS	CYNRS	ALFRSU	BETRSU
-.300	-7.376	.06260	.04590	-.10390	-7.31020
-.287	-5.147	.06400	.04540	-.09040	-5.08140
-.349	-.743	.07270	.05270	-.15320	-.67770
-.257	3.374	.07950	.05990	-.06080	3.43950
-.244	5.575	.08030	.06140	-.04780	5.64060
	GRADIENT	.00165	.00175	.02244	1.00000

RUN NO. 1359/ 0 RN/L = 3.50 GRADIENT INTERVAL = -5.00/ 5.00

ALPHAR	BETAR	CARS	CYNRS	ALFRSU	BETRSU
4.408	-5.862	.06680	.03760	4.27830	-6.02370
4.376	-3.738	.07050	.03960	4.28280	-3.92260
4.264	.073	.07410	.05000	4.32900	-.12310
4.252	3.720	.07800	.05820	4.43570	3.62570
4.206	5.810	.07800	.06370	4.40590	5.75700
	GRADIENT	.00101	.00250	.02044	1.01194

IA156A, AEDC PWT 16T-470, 0 T S (R8NPC4) (10 MAY 80)

REFERENCE DATA

SREF = 2690.0000 SQ.FT. XMRP = 976.0000 IN. XT
LREF = 1290.3000 INCHES YMRP = .0000 IN. YT
BREF = 1290.3000 INCHES ZMRP = 400.0000 IN. ZT
SCALE = .0200

PARAMETRIC DATA

IB-ELV =	12.000	OB-ELV =	-2.000
BDFLAP =	.000	SPDBRK =	.000
RUDDER =	.000	SILTS =	.000
MACH =	1.250	RN/L =	3.500

RUN NO. 1360/ 0 RN/L = 3.50 GRADIENT INTERVAL = -5.00/ 5.00

ALPHAR	BETAR	CARS	CYNRS	ALFRSU	BETRSU
-8.523	-6.384	.05870	.01030	-8.33650	-6.49600
-8.660	-4.112	.06330	.00490	-8.50110	-4.26150
-8.662	-.023	.07120	.00500	-8.59170	-.22960
-8.480	4.326	.07560	.01490	-8.52160	4.11210
-8.570	6.231	.07810	.01800	-8.64720	6.02680
	GRADIENT	.00145	.00120	-.00223	.99237

RUN NO. 1361/ 0 RN/L = 3.50 GRADIENT INTERVAL = -5.00/ 5.00

ALPHAR	BETAR	CARS	CYNRS	ALFRSU	BETRSU
-6.475	-6.364	.05900	.02240	-6.27490	-6.44900
-6.381	-4.354	.06370	.01840	-6.19960	-4.47450
-6.537	-.040	.07140	.01980	-6.46280	-.24540
-6.339	4.272	.07640	.02470	-6.40420	4.06390
-6.350	6.280	.07870	.02840	-6.45550	6.08960
	GRADIENT	.00147	.00073	-.02372	.98982

RUN NO. 1362/ 0 RN/L = 3.50 GRADIENT INTERVAL = -5.00/ 5.00

ALPHAR	BETAR	CARS	CYNRS	ALFRSU	BETRSU
-4.143	-6.469	.05970	.03450	-3.92840	-6.50740
-4.408	-4.268	.06460	.03060	-4.20730	-4.35410
-4.350	.259	.07080	.03290	-4.28820	.05010
-3.882	4.373	.07600	.03830	-3.90350	4.18630
-3.984	6.204	.07850	.03980	-4.12470	6.03770
	GRADIENT	.00132	.00088	.02403	.98804

RUN NO. 1363/ 0 RN/L = 3.50 GRADIENT INTERVAL = -5.00/ 5.00

ALPHAR	BETAR	CARS	CYNRS	ALFRSU	BETRSU
-.255	-7.408	.06010	.04380	-.04840	-7.33770
-.235	-5.100	.06220	.04400	-.02890	-5.02950
-.257	-.808	.07080	.04970	-.05110	-.73770
-.176	3.451	.07740	.05650	.03050	3.52080
-.191	5.632	.07920	.05900	.01610	5.70290
	GRADIENT	.00155	.00160	.01916	1.00000

IA156A, AEDC PWT 16T-470, 0 T S (R8NPC4) (10 MAY 80)

REFERENCE DATA

SREF = 2690.0000 SQ.FT. XMRP = 976.0000 IN. XT
LREF = 1290.3000 INCHES YMRP = .0000 IN. YT
BREF = 1290.3000 INCHES ZMRP = 400.0000 IN. ZT
SCALE = .0200

PARAMETRIC DATA

IB-ELV = 12.000 OB-ELV = -2.000
BDFLAP = .000 SPDBRK = .000
RUDDER = .000 SILTS = .000
MACH = 1.250 RN/L = 3.500

RUN NO. 1364/ 0 RN/L = 3.50 GRADIENT INTERVAL = -5.00/ 5.00

ALPHAR	BETAR	CARS	CYNRS	ALFRSU	BETRSU
4.557	-5.746	.06440	.03530	4.42470	-5.91900
4.442	-3.642	.06780	.03720	4.34700	-3.83780
4.224	.074	.07200	.04750	4.29350	-.13270
4.337	3.808	.07570	.05700	4.53260	3.71140
4.293	5.812	.07710	.06340	4.50350	5.75740
	GRADIENT	.00106	.00266	.02494	1.01333

IA156A, AEDC PWT 16T-470, 0 T S (R8NPC5) (10 MAY 80)

REFERENCE DATA

SREF = 2690.0000 SQ.FT. XMRP = 976.0000 IN. XT
LREF = 1290.3000 INCHES YMRP = .0000 IN. YT
BREF = 1290.3000 INCHES ZMRP = 400.0000 IN. ZT
SCALE = .0200

PARAMETRIC DATA

IB-ELV = 12.000 OB-ELV = -2.000
BDFLAP = .000 SPDBRK = .000
RUDDER = .000 SILTS = .000
MACH = 1.400 RN/L = 3.500

RUN NO. 1365/ 0 RN/L = 3.00 GRADIENT INTERVAL = -5.00/ 5.00

ALPHAR	BETAR	CARS	CYNRS	ALFRSU	BETRSU
-8.403	-6.330	.05510	.00730	-8.18020	-6.46240
-8.575	-4.067	.05960	.00160	-8.38530	-4.24360
-8.564	.071	.06830	-.00080	-8.47780	-.17400
-8.395	4.507	.07420	.00530	-8.44320	4.25270
-8.409	6.367	.07460	.01320	-8.49900	6.12310
	GRADIENT	.00170	.00044	-.00658	.99101

RUN NO. 1366/ 0 RN/L = 3.00 GRADIENT INTERVAL = -5.00/ 5.00

ALPHAR	BETAR	CARS	CYNRS	ALFRSU	BETRSU
-6.454	-6.335	.05620	.01890	-6.21520	-6.43610
-6.413	-4.359	.06080	.01540	-6.19600	-4.50170
-6.492	.025	.06680	.01140	-6.40240	-.21900
-6.264	4.356	.07270	.01660	-6.33890	4.10660
-6.267	6.400	.07510	.02040	-6.39000	6.17090
	GRADIENT	.00137	.00014	-.01646	.98778

IA156A, AEDC PWT 16T-470, 0 T S (R8NPC5) (10 MAY 80)

REFERENCE DATA

SREF = 2690.0000 SQ.FT. XMRP = 976.0000 IN. XT
LREF = 1290.3000 INCHES YMRP = .0000 IN. YT
BREF = 1290.3000 INCHES ZMRP = 400.0000 IN. ZT
SCALE = .0200

PARAMETRIC DATA

IB-ELV = 12.000 OB-ELV = -2.000
BDFLAP = .000 SPDBRK = .000
RUDDER = .000 SILTS = .000
MACH = 1.400 RN/L = 3.500

RUN NO. 1367/ 0 RN/L = 2.99 GRADIENT INTERVAL = -5.00/ 5.00

ALPHAR	BETAR	CARS	CYNRS	ALFRSU	BETRSU
-4.153	-6.459	.05730	.03180	-3.89830	-6.50440
-4.456	-4.270	.06140	.02610	-4.21720	-4.37230
-4.325	.325	.06730	.02500	-4.24990	.07610
-3.821	4.455	.07200	.03260	-3.95160	4.22970
-3.937	6.293	.07450	.03460	-4.10300	6.09240
	GRADIENT	.00122	.00073	.02974	.98564

RUN NO. 1368/ 0 RN/L = 3.00 GRADIENT INTERVAL = -5.00/ 5.00

ALPHAR	BETAR	CARS	CYNRS	ALFRSU	BETRSU
-.286	-7.359	.05750	.04170	-.04060	-7.27360
-.274	-5.153	.05910	.04070	-.02780	-5.06730
-.262	-.757	.06700	.04540	-.01590	-.67130
-.203	3.391	.07260	.05150	.04270	3.47660
-.231	5.594	.07500	.05440	.01470	5.67950
	GRADIENT	.00135	.00147	.01413	1.00000

RUN NO. 1369/ 0 RN/L = 3.00 GRADIENT INTERVAL = -5.00/ 5.00

ALPHAR	BETAR	CARS	CYNRS	ALFRSU	BETRSU
4.525	-5.836	.05930	.03130	4.36420	-6.04060
4.457	-3.624	.06190	.03420	4.34430	-3.85810
4.214	.067	.06800	.04470	4.29420	-.18080
4.279	3.790	.07170	.05480	4.51190	3.67490
4.252	5.837	.07420	.06060	4.50390	5.77280
	GRADIENT	.00132	.00278	.02266	1.01605

IA156A, AEDC PWT 16T-470, 0 T S (R8NPC6) (10 MAY 80)

REFERENCE DATA

SREF =	2690.0000 SQ.FT.	XMRP =	976.0000 IN. XT		
LREF =	1290.3000 INCHES	YMRP =	.0000 IN. YT		
BREF =	1290.3000 INCHES	ZMRP =	400.0000 IN. ZT		
SCALE =	.0200				

PARAMETRIC DATA

IB-ELV =	12.000	OB-ELV =	-2.000
BDFLAP =	.000	SPDBRK =	.000
RUDDER =	.000	SILTS =	.000
MACH =	1.550	RN/L =	3.200

RUN NO. 1370/ 0 RN/L = 2.99 GRADIENT INTERVAL = -5.00/ 5.00

ALPHAR	BETAR	CARS	CYNRS	ALFRSU	BETRSU
-8.425	-6.294	.05020	.00460	-8.10090	-6.44610
-8.611	-3.993	.05420	-.00170	-8.32740	-4.21050
-8.539	.179	.06260	-.00530	-8.38850	-.14530
-8.332	4.632	.06840	.00360	-8.36370	4.27590
-8.334	6.489	.06850	.01240	-8.42360	6.14330
	GRADIENT	.00164	.00063	-.00410	.98403

RUN NO. 1371/ 0 RN/L = 3.00 GRADIENT INTERVAL = -5.00/ 5.00

ALPHAR	BETAR	CARS	CYNRS	ALFRSU	BETRSU
-6.534	-6.330	.05120	.01480	-6.19410	-6.43690
-6.431	-4.296	.05510	.01090	-6.11490	-4.46210
-6.500	.133	.06240	.00709	-6.34390	-.18940
-6.212	4.475	.06690	.01210	-6.28100	4.12170
-6.176	6.511	.07050	.01770	-6.31450	6.18000
	GRADIENT	.00135	.00013	-.01905	.97871

RUN NO. 1372/ 0 RN/L = 3.00 GRADIENT INTERVAL = -5.00/ 5.00

ALPHAR	BETAR	CARS	CYNRS	ALFRSU	BETRSU
-4.260	-6.465	.05250	.02600	-3.90370	-6.49290
-4.530	-4.248	.05630	.02050	-4.18860	-4.35650
-4.366	.426	.06250	.02140	-4.22910	.09430
-3.785	4.540	.06630	.02930	-3.93440	4.21610
-3.881	6.390	.06950	.03170	-4.08110	6.09460
	GRADIENT	.00114	.00098	.02808	.97488

RUN NO. 1373/ 0 RN/L = 3.00 GRADIENT INTERVAL = -5.00/ 5.00

ALPHAR	BETAR	CARS	CYNRS	ALFRSU	BETRSU
-.379	-7.382	.05240	.03680	-.05440	-7.23320
-.357	-5.223	.05550	.03780	-.03120	-5.07180
-.347	-.810	.06170	.04280	-.02100	-.65810
-.330	3.326	.06790	.04900	-.00660	3.47400
-.364	5.505	.07070	.05290	-.03890	5.65590
	GRADIENT	.00150	.00150	.00348	.99925

IA156A, AEDC PWT 16T-470, O T S (R8NPC6) (10 MAY 80)

REFERENCE DATA

SREF =	2690.0000 SQ.FT.	XMRP =	976.0000 IN. XT		
LREF =	1290.3000 INCHES	YMRP =	.0000 IN. YT		
BREF =	1290.3000 INCHES	ZMRP =	400.0000 IN. ZT		
SCALE =	.0200				

PARAMETRIC DATA

IB-ELV =	12.000	OB-ELV =	-2.000
BDFLAP =	.000	SPDBRK =	.000
RUDDER =	.000	SILTS =	.000
MACH =	1.550	RN/L =	3.200

RUN NO. 1374/ 0 RN/L = 3.01 GRADIENT INTERVAL = -5.00/ 5.00

ALPHAR	BETAR	CARS	CYNRS	ALFRSU	BETRSU
4.681	-5.655	.05610	.02780	4.49530	-5.95640
4.474	-3.535	.05780	.03060	4.35100	-3.86770
4.163	.141	.06360	.04230	4.30550	-.18640
4.174	3.791	.06760	.05190	4.50560	3.66330
4.127	5.836	.07030	.05940	4.48220	5.78170
	GRADIENT	.00134	.00291	.02107	1.02795

IA156A, AEDC PWT 16T-470, O T S W/SILTS (R8NPC7) (10 MAY 80)

REFERENCE DATA

SREF =	2690.0000 SQ.FT.	XMRP =	976.0000 IN. XT		
LREF =	1290.3000 INCHES	YMRP =	.0000 IN. YT		
BREF =	1290.3000 INCHES	ZMRP =	400.0000 IN. ZT		
SCALE =	.0200				

PARAMETRIC DATA

IB-ELV =	9.000	OB-ELV =	-2.000
BDFLAP =	.000	SPDBRK =	.000
RUDDER =	.000	SILTS =	1.000
MACH =	1.150	RN/L =	3.500
IB-AIL =	1.000		

RUN NO. 1377/ 0 RN/L = 3.50 GRADIENT INTERVAL = -5.00/ 5.00

ALPHAR	BETAR	CARS	CYNRS	ALFRSU	BETRSU
-8.625	-6.297	.05890	.01390	-8.44960	-6.40660
-8.663	-4.199	.06320	.00820	-8.51190	-4.34080
-8.722	.055	.07100	.00780	-8.65860	-.14210
-8.539	4.172	.07600	.01840	-8.57760	3.96820
-8.559	6.166	.07790	.02380	-8.63380	5.97330
	GRADIENT	.00153	.00121	-.00800	.99255

RUN NO. 1378/ 0 RN/L = 3.50 GRADIENT INTERVAL = -5.00/ 5.00

ALPHAR	BETAR	CARS	CYNRS	ALFRSU	BETRSU
-6.493	-6.364	.06000	.02600	-6.30350	-6.44580
-6.422	-4.361	.06460	.02180	-6.24980	-4.47600
-6.595	-.058	.07030	.02210	-6.52680	-.25330
-6.401	4.235	.07690	.02960	-6.46330	4.03770
-6.176	6.392	.07880	.03530	-6.28150	6.21440
	GRADIENT	.00143	.00091	-.02485	.99049

IA156A, AEDC PWT 16T-470, 0 T S W/SILTS (R8NPC7) (10 MAY 80)

REFERENCE DATA

SREF =	2690.0000 SQ.FT.	XMRP =	976.0000 IN. XT		
LREF =	1290.3000 INCHES	YMRP =	.0000 IN. YT		
BREF =	1290.3000 INCHES	ZMRP =	400.0000 IN. ZT		
SCALE =	.0200				

PARAMETRIC DATA

IB-ELV =	9.000	OB-ELV =	-2.000
BDFLAP =	.000	SPDBRK =	.000
RUDDER =	.000	SILTS =	1.000
MACH =	1.150	RN/L =	3.500
IB-AIL =	1.000		

RUN NO. 1379/ 0 RN/L = 3.50 GRADIENT INTERVAL = -5.00/ 5.00

ALPHAR	BETAR	CARS	CYNRS	ALFRSU	BETRSU
-4.233	-6.462	.06180	.03820	-4.02950	-6.50090
-4.470	-4.272	.06520	.03250	-4.28010	-4.35550
-4.409	.267	.07160	.03780	-4.35280	.06790
-3.892	4.335	.07760	.04440	-3.99990	4.15870
-4.027	6.200	.07980	.04610	-4.16120	6.04260
	GRADIENT	.00144	.00138	.03162	.98883

RUN NO. 1380/ 0 RN/L = 3.50 GRADIENT INTERVAL = -5.00/ 5.00

ALPHAR	BETAR	CARS	CYNRS	ALFRSU	BETRSU
-.318	-7.377	.06250	.04640	-.12210	-7.31150
-.306	-5.156	.06410	.04610	-.11050	-5.09080
-.373	-.748	.07190	.05250	-.17700	-.68190
-.283	3.373	.07910	.06000	-.08660	3.43820
-.277	5.578	.08020	.06180	-.08070	5.64350
	GRADIENT	.00175	.00182	.02194	.99998

RUN NO. 1381/ 0 RN/L = 3.50 GRADIENT INTERVAL = -5.00/ 5.00

ALPHAR	BETAR	CARS	CYNRS	ALFRSU	BETRSU
4.517	-5.802	.06680	.03780	4.39120	-5.96530
4.343	-3.662	.07040	.04020	4.25170	-3.84790
4.146	.012	.07380	.05000	4.20800	-.18520
4.233	3.764	.07760	.05810	4.41730	3.66980
4.203	5.834	.07810	.06390	4.40250	5.78040
	GRADIENT	.00097	.00241	.02242	1.01237

IA156A, AEDC PWT 16T-470, O T S W/SILTS (R8NPC8) (10 MAY 80)

REFERENCE DATA

SREF =	2690.0000 SQ.FT.	XMRP =	976.0000 IN. XT		
LREF =	1290.3000 INCHES	YMRP =	.0000 IN. YT		
BREF =	1290.3000 INCHES	ZMRP =	400.0000 IN. ZT		
SCALE =	.0200				

PARAMETRIC DATA

IB-ELV =	9.000	OB-ELV =	-2.000
BDFLAP =	.000	SPDBRK =	.000
RUDDER =	.000	SILTS =	1.000
MACH =	1.250	RN/L =	3.500
IB-AIL =	1.000		

RUN NO. 1382/ 0 RN/L = 3.50 GRADIENT INTERVAL = -5.00/ 5.00

ALPHAR	BETAR	CARS	CYNRS	ALFRSU	BETRSU
-8.610	-6.276	.05820	.00970	-8.42490	-6.39100
-8.674	-4.140	.06190	.00450	-8.51490	-4.28900
-8.666	-.022	.07030	.00580	-8.59550	-.22860
-8.494	4.303	.07500	.01430	-8.53490	4.08870
-8.549	6.223	.07710	.01810	-8.62690	6.01860
	GRADIENT	.00155	.00117	-.00223	.99233

RUN NO. 1383/ 0 RN/L = 3.50 GRADIENT INTERVAL = -5.00/ 5.00

ALPHAR	BETAR	CARS	CYNRS	ALFRSU	BETRSU
-6.485	-6.351	.05860	.02240	-6.28430	-6.43630
-6.416	-4.373	.06280	.01810	-6.23380	-4.49340
-6.544	-.036	.06990	.02020	-6.47040	-.24070
-6.346	4.266	.07510	.02410	-6.41200	4.05800
-6.359	6.289	.07800	.02810	-6.46470	6.09780
	GRADIENT	.00142	.00069	-.02067	.98979

RUN NO. 1384/ 0 RN/L = 3.50 GRADIENT INTERVAL = -5.00/ 5.00

ALPHAR	BETAR	CARS	CYNRS	ALFRSU	BETRSU
-4.160	-6.474	.05950	.03510	-3.94570	-6.51200
-4.427	-4.270	.06350	.03050	-4.22690	-4.35600
-4.354	.261	.06960	.03300	-4.29210	.05190
-3.886	4.359	.07550	.03830	-3.99790	4.17200
-4.011	6.225	.07780	.03960	-4.15170	6.05910
	GRADIENT	.00139	.00090	.02582	.98801

RUN NO. 1385/ 0 RN/L = 3.50 GRADIENT INTERVAL = -5.00/ 5.00

ALPHAR	BETAR	CARS	CYNRS	ALFRSU	BETRSU
-.275	-7.337	.05970	.04420	-.06880	-7.26650
-.256	-5.140	.06180	.04430	-.05020	-5.06930
-.282	-.810	.07010	.04970	-.07610	-.73950
-.193	3.455	.07630	.05620	.01350	3.52530
-.209	5.631	.07850	.05910	-.00280	5.70090
	GRADIENT	.00145	.00152	.02101	1.00000

IA156A, AEDC PWT 16T-470, O T S W/SILTS (R8NPC8) (10 MAY 80)

REFERENCE DATA

SREF = 2690.0000 SQ.FT. XMRP = 976.0000 IN. XT
LREF = 1290.3000 INCHES YMRP = .0000 IN. YT
BREF = 1290.3000 INCHES ZMRP = 400.0000 IN. ZT
SCALE = .0200

PARAMETRIC DATA

IB-ELV = 9.000 OB-ELV = -2.000
BDFLAP = .000 SPDBRK = .000
RUDDER = .000 SILTS = 1.000
MACH = 1.250 RN/L = 3.500
IB-AIL = 1.000

RUN NO. 1386/ 0 RN/L = 3.50 GRADIENT INTERVAL = -5.00/ 5.00

ALPHAR	BETAR	CARS	CYNRS	ALFRSU	BETRSU
4.628	-5.783	.06450	.03520	4.49720	-5.95650
4.415	-3.631	.06780	.03770	4.32030	-3.82710
4.217	.089	.07140	.04760	4.28720	-.11640
4.331	3.798	.07550	.05700	4.52640	3.70090
4.292	5.823	.07690	.06340	4.50330	5.76850
	GRADIENT	.00104	.00260	.02772	1.01332

IA156A, AEDC PWT 16T-470, O T S W/SILTS (R8NPC9) (10 MAY 80)

REFERENCE DATA

SREF = 2690.0000 SQ.FT. XMRP = 976.0000 IN. XT
LREF = 1290.3000 INCHES YMRP = .0000 IN. YT
BREF = 1290.3000 INCHES ZMRP = 400.0000 IN. ZT
SCALE = .0200

PARAMETRIC DATA

IB-ELV = 9.000 OB-ELV = -2.000
BDFLAP = .000 SPDBRK = .000
RUDDER = .000 SILTS = 1.000
MACH = 1.400 RN/L = 3.500
IB-AIL = 1.000

RUN NO. 1387/ 0 RN/L = 2.99 GRADIENT INTERVAL = -5.00/ 5.00

ALPHAR	BETAR	CARS	CYNRS	ALFRSU	BETRSU
-8.417	-6.335	.05430	.00760	-8.19390	-6.46730
-8.575	-4.070	.05900	.00170	-8.38440	-4.24730
-8.571	.074	.06700	-.00050	-8.48560	-.17110
-8.415	4.506	.07380	.00530	-8.46260	4.25050
-8.413	6.363	.07380	.01290	-8.50310	6.11960
	GRADIENT	.00172	.00043	-.00895	.99099

RUN NO. 1388/ 0 RN/L = 3.00 GRADIENT INTERVAL = -5.00/ 5.00

ALPHAR	BETAR	CARS	CYNRS	ALFRSU	BETRSU
-6.494	-6.369	.05580	.01910	-6.25470	-6.47030
-6.400	-4.331	.05990	.01550	-6.18230	-4.47380
-6.512	.019	.06620	.01150	-6.42220	-.22590
-6.279	4.362	.07070	.01640	-6.35450	4.11260
-6.281	6.408	.07460	.02010	-6.40440	6.17950
	GRADIENT	.00124	.00310	-.01982	.98780

IA156A, AEDC PWT 16T-470, 0 T S W/SILTS (R8NPC9) (10 MAY 80)

REFERENCE DATA

SREF =	2690.0000 SQ.FT.	XMRP =	976.0000 IN. XT		
LREF =	1290.3000 INCHES	YMRP =	.0000 IN. YT		
BREF =	1290.3000 INCHES	ZMRP =	400.0000 IN. ZT		
SCALE =	.0200				

PARAMETRIC DATA

IB-ELV =	9.000	OB-ELV =	-2.000
BDFLAP =	.000	SPDBRK =	.000
RUDDER =	.000	SILTS =	1.000
MACH =	1.400	RN/L =	3.500
IB-AIL =	1.000		

RUN NO. 1389/ 0 RN/L = 3.01 GRADIENT INTERVAL = -5.00/ 5.00

ALPHAR	BETAR	CARS	CYNRS	ALFRSU	BETRSU
-4.338	-6.469	.05690	.03140	-4.08220	-6.51910
-4.456	-4.279	.06070	.02630	-4.21580	-4.38130
-4.350	.322	.06650	.02510	-4.27340	.07180
-3.849	4.439	.07130	.03220	-3.97970	4.21380
-3.933	6.301	.07270	.03440	-4.10020	6.10070
	GRADIENT	.00122	.00066	.02631	.98545

RUN NO. 1390/ 0 RN/L = 3.00 GRADIENT INTERVAL = -5.00/ 5.00

ALPHAR	BETAR	CARS	CYNRS	ALFRSU	BETRSU
-.298	-7.325	.05750	.04230	-.05140	-7.23960
-.282	-5.160	.05890	.04100	-.03550	-5.07400
-.284	-.715	.06590	.04500	-.03720	-.62940
-.225	3.408	.07170	.05130	.02090	3.49350
-.244	5.587	.07440	.05470	.00150	5.67250
	GRADIENT	.00141	.00153	.01409	.99990

RUN NO. 1391/ 0 RN/L = 3.01 GRADIENT INTERVAL = -5.00/ 5.00

ALPHAR	BETAR	CARS	CYNRS	ALFRSU	BETRSU
4.629	-5.741	.05940	.03130	4.47290	-5.94790
4.467	-3.633	.06220	.03420	4.35360	-3.36740
4.196	.072	.06720	.04430	4.27570	-.17440
4.264	3.800	.07110	.05440	4.49590	3.68470
4.236	5.832	.07450	.06090	4.48740	5.76750
	GRADIENT	.00120	.00272	.01918	1.01604

IA156A, AEDC PWT 16T-470, 0 T S W/SILTS (R8NPD0) (10 MAY 80)

REFERENCE DATA

SREF = 2690.0000 SQ.FT. XMRP = 976.0000 IN. XT
LREF = 1290.3000 INCHES YMRP = .0000 IN. YT
BREF = 1290.3000 INCHES ZMRP = 400.0000 IN. ZT
SCALE = .0200

PARAMETRIC DATA

IB-ELV =	9.000	OB-ELV =	-2.000
BDFLAP =	.000	SPDBRK =	.000
RUDDER =	.000	SILTS =	1.000
MACH =	1.550	RN/L =	3.200
IB-AIL =	1.000		

RUN NO. 1392/ 0 RN/L = 3.00 GRADIENT INTERVAL = -5.00/ 5.00

ALPHAR	BETAR	CARS	CYNRS	ALFRSU	BETRSU
-8.441	-6.298	.04980	.00460	-8.11890	-6.44930
-8.613	-3.992	.05340	-.00180	-8.33050	-4.20900
-8.545	.193	.06230	-.00540	-8.39440	-.13110
-8.366	4.629	.06770	.00320	-8.39730	4.27390
-8.348	6.483	.06770	.01190	-8.43860	6.13970
	GRADIENT	.00165	.00059	-.00768	.98405

RUN NO. 1393/ 0 RN/L = 3.00 GRADIENT INTERVAL = -5.00/ 5.00

ALPHAR	BETAR	CARS	CYNRS	ALFRSU	BETRSU
-6.519	-6.322	.05090	.01510	-6.17830	-6.42770
-6.454	-4.287	.05460	.01070	-6.13790	-4.45330
-6.502	.128	.06100	.00670	-6.34580	-.19460
-6.233	4.475	.06620	.01180	-6.30290	4.12440
-6.188	6.510	.06960	.01750	-6.32650	6.18050
	GRADIENT	.00132	.00012	-.01891	.97901

RUN NO. 1394/ 0 RN/L = 3.00 GRADIENT INTERVAL = -5.00/ 5.00

ALPHAR	BETAR	CARS	CYNRS	ALFRSU	BETRSU
-4.271	-6.464	.05200	.02630	-3.91460	-6.49260
-4.544	-4.245	.05560	.02070	-4.20290	-4.35310
-4.388	.426	.06120	.02110	-4.25070	.09430
-3.790	4.539	.06540	.02930	-3.93920	4.21420
-3.902	6.414	.06840	.03180	-4.10260	6.11800
	GRADIENT	.00112	.00096	.02912	.97479

RUN NO. 1395/ 0 RN/L = 3.00 GRADIENT INTERVAL = -5.00/ 5.00

ALPHAR	BETAR	CARS	CYNRS	ALFRSU	BETRSU
-.386	-7.378	.05230	.03740	-.06100	-7.22820
-.368	-5.224	.05520	.03810	-.04290	-5.07380
-.363	-.821	.06080	.04250	-.03880	-.67150
-.349	3.332	.06720	.04880	-.02380	3.48230
-.380	5.511	.06980	.05260	-.05630	5.65970
	GRADIENT	.00154	.00152	.00361	1.00012

IA156A, AEDC PWT 16T-470, 0 T S W/SILTS (R8NPD0) (10 MAY 80)

REFERENCE DATA

SREF =	2690.0000 SQ.FT.	XMRP =	976.0000 IN. XT		
LREF =	1290.3000 INCHES	YMRP =	.0000 IN. YT		
BREF =	1290.3000 INCHES	ZMRP =	400.0000 IN. ZT		
SCALE =	.0200				

PARAMETRIC DATA

IB-ELV =	9.000	OB-ELV =	-2.000
BDFLAP =	.000	SPDBRK =	.000
RUDDER =	.000	SILTS =	1.000
MACH =	1.550	RN/L =	3.200
IB-AIL =	1.000		

RUN NO. 1396/ 0 RN/L = 3.00 GRADIENT INTERVAL = -5.00/ 5.00

ALPHAR	BETAR	CARS	CYNRS	ALFRSU	BETRSU
4.658	-5.640	.05610	.02790	4.47210	-5.94360
4.445	-3.522	.05750	.03080	4.32210	-3.85750
4.155	.143	.06260	.04170	4.29840	-.18540
4.149	3.794	.06630	.05160	4.48260	3.66590
4.132	5.841	.06910	.05920	4.48600	5.78660
	GRADIENT	.00120	.00284	.02192	1.02832

IA156A, AEDC PWT 16T-470, 0 T S W/SILTS (R8NPD1) (10 MAY 80)

REFERENCE DATA

SREF =	2690.0000 SQ.FT.	XMRP =	976.0000 IN. XT		
LREF =	1290.3000 INCHES	YMRP =	.0000 IN. YT		
BREF =	1290.3000 INCHES	ZMRP =	400.0000 IN. ZT		
SCALE =	.0200				

PARAMETRIC DATA

IB-ELV =	8.000	OB-ELV =	-2.000
BDFLAP =	.000	SPDBRK =	.000
RUDDER =	.000	SILTS =	1.000
MACH =	1.150	RN/L =	3.500

RUN NO. 1399/ 0 RN/L = 3.50 GRADIENT INTERVAL = -5.00/ 5.00

ALPHAR	BETAR	CARS	CYNRS	ALFRSU	BETRSU
-8.647	-6.307	.05840	.01400	-8.47140	-6.41730
-8.657	-4.184	.06340	.00830	-8.50610	-4.32540
-8.715	.042	.07070	.00800	-8.65140	-.15520
-8.551	4.174	.07530	.01850	-8.58930	3.97080
-8.567	6.169	.07710	.02370	-8.64160	5.97610
	GRADIENT	.00142	.00122	-.01005	.99256

RUN NO. 1400/ 0 RN/L = 3.51 GRADIENT INTERVAL = -5.00/ 5.00

ALPHAR	BETAR	CARS	CYNRS	ALFRSU	BETRSU
-6.466	-6.346	.05930	.02610	-6.27620	-6.42830
-6.431	-4.369	.06360	.02120	-6.25910	-4.48470
-6.607	-.062	.07030	.02210	-6.53790	-.25700
-6.405	4.232	.07580	.02920	-6.46750	4.03500
-6.186	6.398	.07830	.03530	-6.29130	6.22000
	GRADIENT	.00142	.00093	-.02425	.99047

IA156A, AEDC PWT 16T-470, O T S W/SILTS (R8NPD1) (10 MAY 80)

REFERENCE DATA

SREF =	2690.0000 SQ.FT.	XMRP =	976.0000 IN. XT		
LREF =	1290.3000 INCHES	YMRP =	.0000 IN. YT		
BREF =	1290.3000 INCHES	ZMRP =	400.0000 IN. ZT		
SCALE =	.0200				

PARAMETRIC DATA

IB-ELV =	8.000	OB-ELV =	-2.000
BDFLAP =	.000	SPDBRK =	.000
RUDDER =	.000	SILTS =	1.000
MACH =	1.150	RN/L =	3.500

RUN NO. 1401/ 0 RN/L = 3.50 GRADIENT INTERVAL = -5.00/ 5.00

ALPHAR	BETAR	CARS	CYNRS	ALFRSU	BETRSU
-4.228	-6.466	.06140	.03790	-4.02460	-6.50500
-4.461	-4.270	.06490	.03220	-4.27130	-4.35240
-4.404	.262	.07150	.03790	-4.34760	.06290
-3.892	4.331	.07680	.04420	-3.99940	4.15410
-4.046	6.221	.07950	.04570	-4.18060	6.06400
	GRADIENT	.00138	.00139	.03070	.98878

RUN NO. 1402/ 0 RN/L = 3.51 GRADIENT INTERVAL = -5.00/ 5.00

ALPHAR	BETAR	CARS	CYNRS	ALFRSU	BETRSU
-.321	-7.344	.06200	.04620	-.12510	-7.27880
-.304	-5.155	.06390	.04600	-.10830	-5.08960
-.368	-.765	.07160	.05210	-.17120	-.69900
-.281	3.382	.07890	.05980	-.08490	3.44730
-.277	5.581	.07990	.06160	-.08080	5.64640
	GRADIENT	.00176	.00186	.02081	.99998

RUN NO. 1403/ 0 RN/L = 3.50 GRADIENT INTERVAL = -5.00/ 5.00

ALPHAR	BETAR	CARS	CYNRS	ALFRSU	BETRSU
4.501	-5.786	.06670	.03780	4.37480	-5.94950
4.348	-3.665	.07070	.04030	4.25670	-3.85040
4.149	.013	.07390	.05030	4.21090	-.18410
4.246	3.772	.07770	.05840	4.42980	3.67790
4.201	5.831	.07790	.06410	4.40060	5.77830
	GRADIENT	.00094	.00243	.02340	1.01239

IA156A, AEDC PWT 16T-470, 0 T S W/SILTS (R8NPD2) (10 MAY 80)

REFERENCE DATA

SREF = 2690.0000 SQ.FT. XMRP = 976.0000 IN. XT
LREF = 1290.3000 INCHES YMRP = .0000 IN. YT
BREF = 1290.3000 INCHES ZMRP = 400.0000 IN. ZT
SCALE = .0200

PARAMETRIC DATA

IB-ELV = 8.000 OB-ELV = -2.000
BDFLAP = .000 SPDBRK = .000
RUDDER = .000 SILTS = 1.000
MACH = 1.250 RN/L = 3.500

RUN NO. 1404/ 0 RN/L = 3.50 GRADIENT INTERVAL = -5.00/ 5.00

ALPHAR	BETAR	CARS	CYNRS	ALFRSU	BETRSU
-8.487	-6.314	.05840	.01110	-8.29980	-6.42650
-8.671	-4.093	.06210	.00480	-8.51220	-4.24270
-8.668	-.027	.07010	.00590	-8.59760	-.23340
-8.520	4.370	.07500	.01440	-8.56240	4.15630
-8.566	6.242	.07760	.01820	-8.64370	6.03800
	GRADIENT	.00152	.00115	-.00574	.99252

RUN NO. 1405/ 0 RN/L = 3.49 GRADIENT INTERVAL = -5.00/ 5.00

ALPHAR	BETAR	CARS	CYNRS	ALFRSU	BETRSU
-6.476	-6.352	.05850	.02250	-6.27590	-6.43630
-6.423	-4.381	.06300	.01840	-6.24150	-4.50030
-6.569	-.021	.07070	.02050	-6.49600	-.22650
-6.366	4.272	.07560	.02400	-6.43180	4.06410
-6.234	6.415	.07850	.02900	-6.34330	6.22570
	GRADIENT	.00146	.00065	-.02208	.98973

RUN NO. 1406/ 0 RN/L = 3.50 GRADIENT INTERVAL = -5.00/ 5.00

ALPHAR	BETAR	CARS	CYNRS	ALFRSU	BETRSU
-4.319	-6.456	.05920	.03430	-4.10480	-6.49780
-4.441	-4.290	.06380	.03050	-4.24030	-4.37550
-4.368	.255	.07010	.03320	-4.30630	.04570
-3.887	4.348	.07540	.03830	-3.99850	4.16040
-4.012	6.218	.07750	.03920	-4.15280	6.05150
	GRADIENT	.00134	.00090	.02721	.98794

RUN NO. 1407/ 0 RN/L = 3.51 GRADIENT INTERVAL = -5.00/ 5.00

ALPHAR	BETAR	CARS	CYNRS	ALFRSU	BETRSU
-.280	-7.359	.05920	.04390	-.07350	-7.28930
-.263	-5.186	.06280	.04500	-.05650	-5.11610
-.291	-.721	.07010	.04980	-.08470	-.65080
-.197	3.407	.07640	.05630	.01010	3.47750
-.219	5.618	.07840	.05880	-.01340	5.68810
	GRADIENT	.00153	.00157	.02296	1.00000

IA156A, AEDC PWT 16T-470, 0 T S W/SILTS (R8NPD2) (10 MAY 80)

REFERENCE DATA

SREF = 2690.0000 SQ.FT. XMRP = 976.0000 IN. XT
LREF = 1290.3000 INCHES YMRP = .0000 IN. YT
BREF = 1290.3000 INCHES ZMRP = 400.0000 IN. ZT
SCALE = .0200

PARAMETRIC DATA

IB-ELV = 8.000 OB-ELV = -2.000
BDFLAP = .000 SPDBRK = .000
RUDDER = .000 SILTS = 1.000
MACH = 1.250 RN/L = 3.500

RUN NO. 1408/ 0 RN/L = 3.50 GRADIENT INTERVAL = -5.00/ 5.00

ALPHAR	BETAR	CARS	CYNRS	ALFRSU	BETRSU
4.618	-5.780	.06460	.03570	4.48650	-5.95450
4.421	-3.643	.06780	.03770	4.32610	-3.83900
4.219	.089	.07150	.04770	4.28880	-.11720
4.337	3.796	.07570	.05740	4.53150	3.69870
4.290	5.826	.07660	.06320	4.50090	5.77060
	GRADIENT	.00106	.00265	.02757	1.01334

IA156A, AEDC PWT 16T-470, 0 T S W/SILTS (R8NPD3) (10 MAY 80)

REFERENCE DATA

SREF = 2690.0000 SQ.FT. XMRP = 976.0000 IN. XT
LREF = 1290.3000 INCHES YMRP = .0000 IN. YT
BREF = 1290.3000 INCHES ZMRP = 400.0000 IN. ZT
SCALE = .0200

PARAMETRIC DATA

IB-ELV = 8.000 OB-ELV = -2.000
BDFLAP = .000 SPDBRK = .000
RUDDER = .000 SILTS = 1.000
MACH = 1.400 RN/L = 3.500

RUN NO. 1409/ 0 RN/L = 3.00 GRADIENT INTERVAL = -5.00/ 5.00

ALPHAR	BETAR	CARS	CYNRS	ALFRSU	BETRSU
-8.419	-6.334	.05470	.00800	-8.19400	-6.46740
-8.590	-4.074	.05820	.00190	-8.40010	-4.25160
-8.581	.079	.06710	-.00040	-8.49410	-.16730
-8.389	4.488	.07390	.00530	-8.43700	4.23230
-8.454	6.380	.07340	.01290	-8.54400	6.13640
	GRADIENT	.00183	.00041	-.00413	.99089

RUN NO. 1410/ 0 RN/L = 2.99 GRADIENT INTERVAL = -5.00/ 5.00

ALPHAR	BETAR	CARS	CYNRS	ALFRSU	BETRSU
-6.499	-6.363	.05560	.01920	-6.25970	-6.46430
-6.411	-4.341	.06020	.01590	-6.19480	-4.48340
-6.497	.024	.06620	.01170	-6.40680	-.22040
-6.289	4.361	.07160	.01620	-6.36470	4.11080
-6.284	6.392	.07470	.02000	-6.40770	6.16180
	GRADIENT	.00131	.00003	-.01956	.98766

IA156A, AEDC PWT 16T-470, 0 T S W/SILTS (R8NPD3) (10 MAY 80)

REFERENCE DATA

SREF =	2690.0000 SQ.FT.	XMRP =	976.0000 IN. XT		
LREF =	1290.3000 INCHES	YMRP =	.0000 IN. YT		
BREF =	1290.3000 INCHES	ZMRP =	400.0000 IN. ZT		
SCALE =	.0200				

PARAMETRIC DATA

IB-ELV =	8.000	OB-ELV =	-2.000
BDFLAP =	.000	SPDBRK =	.000
RUDDER =	.000	SILTS =	1.000
MACH =	1.400	RN/L =	3.500

RUN NO. 1411/ 0 RN/L = 2.99 GRADIENT INTERVAL = -5.00/ 5.00

ALPHAR	BETAR	CARS	CYNRS	ALFRSU	BETRSU
-4.149	-6.457	.05770	.03260	-3.89390	-6.50160
-4.473	-4.278	.06080	.02640	-4.23440	-4.38000
-4.336	.330	.06640	.02530	-4.26080	.08060
-3.843	4.445	.07100	.03260	-3.97370	4.22010
-3.949	6.299	.07380	.03510	-4.11520	6.09850
	GRADIENT	.00117	.00069	.02918	.98553

RUN NO. 1412/ 0 RN/L = 2.99 GRADIENT INTERVAL = -5.00/ 5.00

ALPHAR	BETAR	CARS	CYNRS	ALFRSU	BETRSU
-.308	-7.367	.05770	.04260	-.06240	-7.28220
-.296	-5.149	.05910	.04120	-.05080	-5.06350
-.290	-.765	.06600	.04520	-.04410	-.67960
-.229	3.396	.07190	.05150	.01740	3.43220
-.254	5.587	.07460	.05460	-.00830	5.67200
	GRADIENT	.00142	.00151	.01478	1.00012

RUN NO. 1413/ 0 RN/L = 2.99 GRADIENT INTERVAL = -5.00/ 5.00

ALPHAR	BETAR	CARS	CYNRS	ALFRSU	BETRSU
4.613	-5.735	.05960	.03140	4.45650	-5.94250
4.443	-3.625	.06210	.03440	4.33050	-3.85960
4.215	.076	.06730	.04440	4.29520	-.17010
4.273	3.781	.07140	.05480	4.50600	3.66440
4.227	5.827	.07350	.06010	4.47920	5.76230
	GRADIENT	.00126	.00275	.02370	1.01585

IA156A, AEDC PWT 16T-470, 0 T S W/SILTS (R8NPD4) (10 MAY 80)

REFERENCE DATA

SREF = 2690.0000 SQ.FT. XMRP = 976.0000 IN. XT
LREF = 1290.3000 INCHES YMRP = .0000 IN. YT
BREF = 1290.3000 INCHES ZMRP = 400.0000 IN. ZT
SCALE = .0200

PARAMETRIC DATA

IB-ELV = 8.000 OB-ELV = -2.000
BDFLAP = .000 SPDBRK = .000
RUDDER = .000 SILTS = 1.000
MACH = 1.550 RN/L = 3.200

RUN NO. 1414/ 0 RN/L = 3.00 GRADIENT INTERVAL = -5.00/ 5.00

ALPHAR	BETAR	CARS	CYNRS	ALFRSU	BETRSU
-8.446	-6.291	.04990	.00440	-8.12150	-6.44280
-8.628	-3.996	.05380	-.00180	-8.34220	-4.21370
-8.569	.179	.06210	-.00530	-8.41810	-.14480
-8.367	4.640	.06790	.00350	-8.39920	4.28550
-8.361	6.484	.06860	.01210	-8.45090	6.14010
	GRADIENT	.00163	.00063	-.00648	.98424

RUN NO. 1415/ 0 RN/L = 3.00 GRADIENT INTERVAL = -5.00/ 5.00

ALPHAR	BETAR	CARS	CYNRS	ALFRSU	BETRSU
-6.555	-6.336	.05100	.01510	-6.21430	-6.44250
-6.460	-4.283	.05460	.01090	-6.14430	-4.45000
-6.512	.113	.06140	.00700	-6.35620	-.20870
-6.226	4.470	.06650	.01170	-6.29560	4.11960
-6.200	6.500	.06980	.01720	-6.33820	6.17110
	GRADIENT	.00136	.00009	-.01733	.97899

RUN NO. 1416/ 0 RN/L = 3.00 GRADIENT INTERVAL = -5.00/ 5.00

ALPHAR	BETAR	CARS	CYNRS	ALFRSU	BETRSU
-4.264	-6.458	.05190	.02630	-3.90680	-6.48540
-4.550	-4.255	.05590	.02080	-4.20780	-4.36210
-4.397	.422	.06170	.02130	-4.25950	.09140
-3.800	4.544	.06540	.02900	-3.94980	4.21790
-3.898	6.396	.06890	.03170	-4.09870	6.10030
	GRADIENT	.00108	.00091	.02842	.97459

RUN NO. 1417/ 0 RN/L = 3.00 GRADIENT INTERVAL = -5.00/ 5.00

ALPHAR	BETAR	CARS	CYNRS	ALFRSU	BETRSU
-.394	-7.431	.05210	.03760	-.06920	-7.28160
-.383	-5.212	.05560	.03820	-.05850	-5.06320
-.371	-.838	.06110	.04270	-.04530	-.68650
-.354	3.326	.06730	.04880	-.02780	3.47670
-.387	5.512	.07010	.05260	-.06330	5.66130
	GRADIENT	.00149	.00147	.00420	.99993

IA156A, AEDC PWT 16T-470, 0 T S W/SILTS (R8NPD4) (10 MAY 80)

REFERENCE DATA

SREF =	2690.0000 SQ.FT.	XMRP =	976.0000 IN. XT		
LREF =	1290.3000 INCHES	YMRP =	.0000 IN. YT		
BREF =	1290.3000 INCHES	ZMRP =	400.0000 IN. ZT		
SCALE =	.0200				

PARAMETRIC DATA

IB-ELV =	8.000	OB-ELV =	-2.000
BDFLAP =	.000	SPDBRK =	.000
RUDDER =	.000	SILTS =	1.000
MACH =	1.550	RN/L =	3.200

RUN NO. 1418/ 0 RN/L = 3.00 GRADIENT INTERVAL = -5.00/ 5.00

ALPHAR	BETAR	CARS	CYNRS	ALFRSU	BETRSU
4.661	-5.641	.05640	.02800	4.47480	-5.94500
4.429	-3.513	.05750	.03110	4.30570	-3.84780
4.168	.142	.06300	.04210	4.31080	-.18620
4.174	3.805	.06700	.05230	4.50710	3.67600
4.107	5.810	.06950	.05960	4.45980	5.75540
	GRADIENT	.00130	.00290	.02753	1.02823

IA156A, AEDC PWT 16T-470, 0 T S W/SILTS (R8NPD5) (10 MAY 80)

REFERENCE DATA

SREF =	2690.0000 SQ.FT.	XMRP =	976.0000 IN. XT		
LREF =	1290.3000 INCHES	YMRP =	.0000 IN. YT		
BREF =	1290.3000 INCHES	ZMRP =	400.0000 IN. ZT		
SCALE =	.0200				

PARAMETRIC DATA

IB-ELV =	8.000	OB-ELV =	-2.000
BDFLAP =	.000	SPDBRK =	.000
RUDDER =	.000	SILTS =	1.000
MACH =	1.550	RN/L =	3.200

RUN NO. 1419/ 0 RN/L = 3.00 GRADIENT INTERVAL = -5.00/ 5.00

ALPHAR	BETAR	CARS	CYNRS	ALFRSU	BETRSU
-8.617	-6.204	.04990	.00350	-8.29920	-6.36130
-8.656	-4.028	.05360	-.00180	-8.37180	-4.24500
-8.548	.430	.06280	-.00500	-8.40710	.10070
-8.362	4.528	.06770	.00270	-8.38940	4.17280
-8.365	6.471	.06810	.01200	-8.45450	6.12760
	GRADIENT	.00165	.00051	-.00214	.98363

IA156A, AEDC PWT 16T-470, O T S W/SILTS (R8NPD6) (10 MAY 80)

REFERENCE DATA

SREF = 2690.0000 SQ.FT. XMRP = 976.0000 IN. XT
LREF = 1290.3000 INCHES YMRP = .0000 IN. YT
BREF = 1290.3000 INCHES ZMRP = 400.0000 IN. ZT
SCALE = .0200

PARAMETRIC DATA

IB-ELV =	10.000	OB-ELV =	-2.000
BDFLAP =	.000	SPDBRK =	.000
RUDDER =	.000	SILTS =	1.000
MACH =	1.150	RN/L =	3.500

RUN NO. 1432/ 0 RN/L = 3.50 GRADIENT INTERVAL = -5.00/ 5.00

ALPHAR	BETAR	CARS	CYNRS	ALFRSU	BETRSU
-8.488	-6.329	.05990	.01480	-8.31190	-6.43660
-8.709	-4.164	.06450	.00770	-8.55890	-4.30610
-8.747	.133	.07310	.00680	-8.68580	-.06420
-8.535	4.226	.07710	.01850	-8.57460	4.02310
-8.586	6.199	.07890	.02420	-8.66030	6.00630
	GRADIENT	.00151	.00127	-.00210	.99272

RUN NO. 1433/ 0 RN/L = 3.50 GRADIENT INTERVAL = -5.00/ 5.00

ALPHAR	BETAR	CARS	CYNRS	ALFRSU	BETRSU
-6.502	-6.366	.06080	.02580	-6.31170	-6.44780
-6.424	-4.376	.06590	.02150	-6.25180	-4.49090
-6.607	-.062	.07220	.02140	-6.53790	-.25680
-6.403	4.255	.07790	.02940	-6.46630	4.05760
-6.355	6.245	.08020	.03400	-6.45590	6.06450
	GRADIENT	.00139	.00092	-.02485	.99050

RUN NO. 1434/ 0 RN/L = 3.50 GRADIENT INTERVAL = -5.00/ 5.00

ALPHAR	BETAR	CARS	CYNRS	ALFRSU	BETRSU
-4.237	-6.459	.06240	.03800	-4.03420	-6.49840
-4.479	-4.282	.06630	.03220	-4.29010	-4.36490
-4.402	.264	.07290	.03750	-4.34480	.06570
-3.898	4.358	.07840	.04380	-4.00570	4.18080
-4.020	6.206	.08050	.04570	-4.15440	6.04880
	GRADIENT	.00140	.00134	.03209	.98890

RUN NO. 1435/ 0 RN/L = 3.50 GRADIENT INTERVAL = -5.00/ 5.00

ALPHAR	BETAR	CARS	CYNRS	ALFRSU	BETRSU
-.305	-7.414	.06270	.04600	-.10850	-7.34870
-.293	-5.160	.06420	.04550	-.09680	-5.09430
-.365	-.737	.07220	.05210	-.16880	-.67110
-.271	3.376	.07930	.05950	-.07440	3.44170
-.262	5.566	.08060	.06120	-.06620	5.63110
	GRADIENT	.00173	.00180	.02295	.99998

IA156A, AEDC PWT 16T-470, O T S W/SILTS (R8NPD6) (10 MAY 80)

REFERENCE DATA

SREF =	2690.0000 SQ.FT.	XMRP =	976.0000 IN. XT		
LREF =	1290.3000 INCHES	YMRP =	.0000 IN. YT		
BREF =	1290.3000 INCHES	ZMRP =	400.0000 IN. ZT		
SCALE =	.0200				

PARAMETRIC DATA

IB-ELV =	10.000	OB-ELV =	-2.000
BDFLAP =	.000	SPDBRK =	.000
RUDDER =	.000	SILTS =	1.000
MACH =	1.150	RN/L =	3.500

RUN NO. 1436/ 0 RN/L = 3.50 GRADIENT INTERVAL = -5.00/ 5.00

ALPHAR	BETAR	CARS	CYNRS	ALFRSU	BETRSU
4.384	-5.844	.06690	.03740	4.25430	-6.00530
4.404	-3.766	.07060	.03930	4.31080	-3.95020
4.263	.076	.07430	.04970	4.32830	-.12060
4.238	3.718	.07780	.05800	4.42140	3.62300
4.202	5.797	.07830	.06390	4.40230	5.74360
	GRADIENT	.00096	.00250	.01469	1.01184

IA156A, AEDC PWT 16T-470, O T S W/SILTS (R8NPD7) (10 MAY 80)

REFERENCE DATA

SREF =	2690.0000 SQ.FT.	XMRP =	976.0000 IN. XT		
LREF =	1290.3000 INCHES	YMRP =	.0000 IN. YT		
BREF =	1290.3000 INCHES	ZMRP =	400.0000 IN. ZT		
SCALE =	.0200				

PARAMETRIC DATA

IB-ELV =	10.000	OB-ELV =	-2.000
BDFLAP =	.000	SPDBRK =	.000
RUDDER =	.000	SILTS =	1.000
MACH =	1.250	RN/L =	3.500

RUN NO. 1437/ 0 RN/L = 3.50 GRADIENT INTERVAL = -5.00/ 5.00

ALPHAR	BETAR	CARS	CYNRS	ALFRSU	BETRSU
-8.639	-6.300	.05810	.00940	-8.45410	-6.41460
-8.669	-4.163	.06250	.00450	-8.51000	-4.31190
-8.653	-.030	.07090	.00520	-8.58260	-.23610
-8.520	4.307	.07530	.01380	-8.56100	4.09240
-8.564	6.232	.07780	.01750	-8.64170	6.02780
	GRADIENT	.00151	.00111	-.00593	.99230

RUN NO. 1438/ 0 RN/L = 3.50 GRADIENT INTERVAL = -5.00/ 5.00

ALPHAR	BETAR	CARS	CYNRS	ALFRSU	BETRSU
-6.470	-6.352	.05870	.02220	-6.26940	-6.43680
-6.411	-4.377	.06360	.01810	-6.22890	-4.49650
-6.553	-.031	.07060	.01950	-6.47900	-.23560
-6.354	4.272	.07590	.02380	-6.41880	4.06440
-6.374	6.306	.07840	.02790	-6.47930	6.11580
	GRADIENT	.00142	.00066	-.02201	.98982

IA156A, AEDC PWT 16T-470, 0 T S W/SILTS (R8NPD7) (10 MAY 80)

REFERENCE DATA

SREF =	2690.0000 SQ.FT.	XMRP =	976.0000 IN. XT		
LREF =	1290.3000 INCHES	YMRP =	.0000 IN. YT		
BREF =	1290.3000 INCHES	ZMRP =	400.0000 IN. ZT		
SCALE =	.0200				

PARAMETRIC DATA

IB-ELV =	10.000	OB-ELV =	-2.000
BDFLAP =	.000	SPDBRK =	.000
RUDDER =	.000	SILTS =	1.000
MACH =	1.250	RN/L =	3.500

RUN NO. 1439/ 0 RN/L = 3.50 GRADIENT INTERVAL = -5.00/ 5.00

ALPHAR	BETAR	CARS	CYNRS	ALFRSU	BETRSU
-4.182	-6.460	.05970	.03450	-3.96750	-6.49940
-4.412	-4.273	.06400	.03030	-4.21130	-4.35920
-4.373	.266	.07030	.03220	-4.31130	.05720
-3.884	4.365	.07580	.03760	-3.99580	4.17830
-4.039	6.262	.07830	.03880	-4.17950	6.09520
	GRADIENT	.00137	.00084	.02411	.98802

RUN NO. 1440/ 0 RN/L = 3.50 GRADIENT INTERVAL = -5.00/ 5.00

ALPHAR	BETAR	CARS	CYNRS	ALFRSU	BETRSU
-.261	-7.461	.06000	.04350	-.05460	-7.39090
-.245	-5.156	.06210	.04370	-.03910	-5.08620
-.267	-.761	.07050	.04930	-.06110	-.69110
-.192	3.396	.07700	.05590	.01420	3.46610
-.208	5.594	.07850	.05800	-.00120	5.66420
	GRADIENT	.00156	.00159	.01811	1.00000

RUN NO. 1441/ 0 RN/L = 3.50 GRADIENT INTERVAL = -5.00/ 5.00

ALPHAR	BETAR	CARS	CYNRS	ALFRSU	BETRSU
4.449	-5.837	.06430	.03500	4.31400	-6.00780
4.462	-3.769	.06760	.03660	4.36450	-3.96390
4.350	.075	.07160	.04680	4.41890	-.13160
4.319	3.703	.07570	.05670	4.51310	3.60410
4.290	5.800	.07670	.06260	4.50120	5.74520
	GRADIENT	.00108	.00269	.01983	1.01266

IA156A, AEDC PWT 16T-470, O T S W/SILTS (R8NPD8) (10 MAY 80)

REFERENCE DATA

SREF =	2690.0000 SQ.FT.	XMRP =	976.0000 IN. XT		
LREF =	1290.3000 INCHES	YMRP =	.0000 IN. YT		
BREF =	1290.3000 INCHES	ZMRP =	400.0000 IN. ZT		
SCALE =	.0200				

PARAMETRIC DATA

IB-ELV =	10.000	OB-ELV =	-2.000
BDFLAP =	.000	SPDBRK =	.000
RUDDER =	.000	SILTS =	1.000
MACH =	1.400	RN/L =	3.500

RUN NO. 1442/ 0 RN/L = 3.00 GRADIENT INTERVAL = -5.00/ 5.00

ALPHAR	BETAR	CARS	CYNRS	ALFRSU	BETRSU
-8.587	-6.270	.05490	.00600	-8.36640	-6.40570
-8.616	-4.115	.05880	.00160	-8.42530	-4.29160
-8.570	.303	.06780	-.00090	-8.49050	.05450
-8.422	4.399	.07320	.00440	-8.46660	4.14260
-8.442	6.369	.07360	.01230	-8.53200	6.12420
	GRADIENT	.00170	.00032	-.00498	.99051

RUN NO. 1443/ 0 RN/L = 3.00 GRADIENT INTERVAL = -5.00/ 5.00

ALPHAR	BETAR	CARS	CYNRS	ALFRSU	BETRSU
-6.462	-6.353	.05540	.01890	-6.22290	-6.45360
-6.415	-4.362	.06060	.01530	-6.19780	-4.50460
-6.498	.033	.06610	.01100	-6.40850	-.21170
-6.323	4.368	.07210	.01540	-6.39820	4.11740
-6.027	6.507	.07460	.02140	-6.15670	6.28090
	GRADIENT	.00132	.00001	-.02302	.98772

RUN NO. 1444/ 0 RN/L = 3.00 GRADIENT INTERVAL = -5.00/ 5.00

ALPHAR	BETAR	CARS	CYNRS	ALFRSU	BETRSU
-4.201	-6.457	.05730	.03150	-3.94560	-6.50370
-4.453	-4.283	.06090	.02570	-4.21380	-4.38560
-4.336	.335	.06660	.02460	-4.26030	.08540
-3.856	4.456	.07130	.03140	-3.98660	4.23080
-3.954	6.320	.07390	.03410	-4.12040	6.11970
	GRADIENT	.00119	.00063	.02527	.98553

RUN NO. 1445/ 0 RN/L = 3.00 GRADIENT INTERVAL = -5.00/ 5.00

ALPHAR	BETAR	CARS	CYNRS	ALFRSU	BETRSU
-.288	-7.337	.05720	.04140	-.04150	-7.25140
-.270	-5.157	.05890	.04030	-.02350	-5.07150
-.268	-.759	.06640	.04460	-.02160	-.67320
-.211	3.388	.07220	.05100	.03450	3.47300
-.233	5.580	.07480	.05400	.01250	5.66530
	GRADIENT	.00140	.00154	.01353	.99990

IA156A, AEDC PWT 16T-470, O T S W/SILTS (R8NPD8) (10 MAY 80)

REFERENCE DATA

SREF = 2690.0000 SQ.FT. XMRP = 976.0000 IN. XT
LREF = 1290.3000 INCHES YMRP = .0000 IN. YT
BREF = 1290.3000 INCHES ZMRP = 400.0000 IN. ZT
SCALE = .0200

PARAMETRIC DATA

IB-ELV = 10.000 OB-ELV = -2.000
BDFLAP = .000 SPDBRK = .000
RUDDER = .000 SILTS = 1.000
MACH = 1.400 RN/L = 3.500

RUN NO. 1446/ 0 RN/L = 3.00 GRADIENT INTERVAL = -5.00/ 5.00

ALPHAR	BETAR	CARS	CYNRS	ALFRSU	BETRSU
4.503	-5.806	.05920	.03100	4.34300	-6.01000
4.461	-3.697	.06190	.03370	4.34630	-3.92900
4.347	.118	.06760	.04390	4.43110	-.12840
4.254	3.743	.07160	.05430	4.48610	3.62690
4.238	5.826	.07380	.06000	4.49010	5.76200
	GRADIENT	.00131	.00277	.01882	1.01542

IA156A, AEDC PWT 16T-470, O T S W/SILTS (R8NPD9) (10 MAY 80)

REFERENCE DATA

SREF = 2690.0000 SQ.FT. XMRP = 976.0000 IN. XT
LREF = 1290.3000 INCHES YMRP = .0000 IN. YT
BREF = 1290.3000 INCHES ZMRP = 400.0000 IN. ZT
SCALE = .0200

PARAMETRIC DATA

IB-ELV = 10.000 OB-ELV = -2.000
BDFLAP = .000 SPDBRK = .000
RUDDER = .000 SILTS = 1.000
MACH = 1.550 RN/L = 3.200

RUN NO. 1447/ 0 RN/L = 3.00 GRADIENT INTERVAL = -5.00/ 5.00

ALPHAR	BETAR	CARS	CYNRS	ALFRSU	BETRSU
-8.617	-6.212	.05000	.00320	-8.29820	-6.36920
-8.651	-4.035	.05400	-.00210	-8.36870	-4.25120
-8.552	.398	.06310	-.00580	-8.41100	.07050
-8.356	4.542	.06790	.00220	-8.38440	4.18740
-8.358	6.480	.06840	.01130	-8.44840	6.13750
	GRADIENT	.00163	.00049	-.00192	.98376

RUN NO. 1448/ 0 RN/L = 3.00 GRADIENT INTERVAL = -5.00/ 5.00

ALPHAR	BETAR	CARS	CYNRS	ALFRSU	BETRSU
-6.543	-6.347	.05090	.01450	-6.20330	-6.45320
-6.455	-4.289	.05470	.01030	-6.13970	-4.45590
-6.505	.132	.06170	.00630	-6.34950	-.18960
-6.257	4.479	.06660	.01100	-6.32570	4.12930
-5.944	6.619	.07000	.01830	-6.09070	6.29440
	GRADIENT	.00136	.00008	-.02129	.97909

IA156A, AEDC PWT 16T-470, O T S W/SILTS (R8NPD9) (10 MAY 80)

REFERENCE DATA

SREF =	2690.0000 SQ.FT.	XMRP =	976.0000 IN. XT		
LREF =	1290.3000 INCHES	YMRP =	.0000 IN. YT		
BREF =	1290.3000 INCHES	ZMRP =	400.0000 IN. ZT		
SCALE =	.0200				

PARAMETRIC DATA

IB-ELV =	10.000	OB-ELV =	-2.000
BDFLAP =	.000	SPDBRK =	.000
RUDDER =	.000	SILTS =	1.000
MACH =	1.550	RN/L =	3.200

RUN NO. 1449/ 0 RN/L = 3.00 GRADIENT INTERVAL = -5.00/ 5.00

ALPHAR	BETAR	CARS	CYNRS	ALFRSU	BETRSU
-4.504	-6.394	.05210	.02430	-4.14920	-6.43280
-4.503	-4.245	.05590	.02020	-4.16140	-4.35190
-4.385	.443	.06200	.02040	-4.24920	.11150
-3.810	4.566	.06570	.02830	-3.95930	4.24050
-3.881	6.404	.06900	.03150	-4.08140	6.10820
	GRADIENT	.00112	.00090	.02199	.97464

RUN NO. 1450/ 0 RN/L = 3.00 GRADIENT INTERVAL = -5.00/ 5.00

ALPHAR	BETAR	CARS	CYNRS	ALFRSU	BETRSU
-.379	-7.391	.05230	.03660	-.05470	-7.24210
-.367	-5.203	.05530	.03730	-.04170	-5.05220
-.356	-.874	.06130	.04210	-.03170	-.72400
-.343	3.370	.06750	.04840	-.01680	3.52120
-.373	5.503	.07020	.05220	-.04810	5.65270
	GRADIENT	.00146	.00148	.00351	1.00042

RUN NO. 1451/ 0 RN/L = 3.00 GRADIENT INTERVAL = -5.00/ 5.00

ALPHAR	BETAR	CARS	CYNRS	ALFRSU	BETRSU
4.541	-5.707	.05590	.02730	4.34890	-6.00960
4.475	-3.510	.05770	.03000	4.35260	-3.84650
4.140	.185	.06350	.04190	4.28710	-.14120
4.168	3.834	.06690	.05150	4.50280	3.70710
4.103	5.803	.06980	.05870	4.45700	5.74800
	GRADIENT	.00125	.00293	.02037	1.02848

IA156A, AEDC PWT 16T-470, 0 T S W/SILTS (R8NPE0) (10 MAY 80)

REFERENCE DATA

SREF = 2690.0000 SQ.FT. XMRP = 976.0000 IN. XT
LREF = 1290.3000 INCHES YMRP = .0000 IN. YT
BREF = 1290.3000 INCHES ZMRP = 400.0000 IN. ZT
SCALE = .0200

PARAMETRIC DATA

IB-ELV = 10.000 OB-ELV = -7.000
BDFLAP = .000 SPDBRK = .000
RUDDER = .000 SILTS = 1.000
MACH = 1.400 RN/L = 3.500

RUN NO. 1456/ 0 RN/L = 3.00 GRADIENT INTERVAL = -5.00/ 5.00

ALPHAR	BETAR	CARS	CYNRS	ALFRSU	BETRSU
-8.587	-6.246	.05470	.00530	-8.36690	-6.38180
-8.626	-4.105	.05840	.00090	-8.43520	-4.28140
-8.573	.320	.06740	-.00130	-8.49450	.07130
-8.434	4.426	.07340	.00400	-8.47960	4.16930
-8.417	6.349	.07330	.01170	-8.50660	6.10490
	GRADIENT	.00176	.00035	-.00531	.99053

RUN NO. 1457/ 0 RN/L = 3.00 GRADIENT INTERVAL = -5.00/ 5.00

ALPHAR	BETAR	CARS	CYNRS	ALFRSU	BETRSU
-6.477	-6.353	.05570	.01860	-6.23810	-6.45420
-6.405	-4.332	.06010	.01460	-6.18820	-4.47520
-6.529	.048	.06590	.01060	-6.43970	-.19630
-6.277	4.355	.07170	.01550	-6.35200	4.10620
-6.273	6.409	.07410	.01960	-6.39580	6.18080
	GRADIENT	.00134	.00010	-.01896	.98782

RUN NO. 1458/ 0 RN/L = 3.00 GRADIENT INTERVAL = -5.00/ 5.00

ALPHAR	BETAR	CARS	CYNRS	ALFRSU	BETRSU
-4.200	-6.465	.05700	.03080	-3.94460	-6.51050
-4.458	-4.274	.06090	.02520	-4.21940	-4.37590
-4.359	.326	.06640	.02420	-4.28390	.07660
-3.832	4.445	.07110	.03140	-3.96320	4.22070
-3.978	6.343	.07360	.03360	-4.14430	6.14270
	GRADIENT	.00117	.00069	.02855	.98562

RUN NO. 1459/ 0 RN/L = 3.00 GRADIENT INTERVAL = -5.00/ 5.00

ALPHAR	BETAR	CARS	CYNRS	ALFRSU	BETRSU
-.308	-7.335	.05710	.04120	-.06220	-7.24960
-.291	-5.168	.05880	.04000	-.04500	-5.08260
-.286	-.750	.06610	.04420	-.04000	-.66450
-.228	3.385	.07180	.05050	.01810	3.47050
-.259	5.581	.07420	.05330	-.01450	5.66550
	GRADIENT	.00138	.00152	.01405	.99998

IA156A, AEDC PWT 16T-470, 0 T S W/SILTS (R8NPE0) (10 MAY 80)

REFERENCE DATA

SREF =	2690.0000 SQ.FT.	XMRP =	976.0000 IN. XT		
LREF =	1290.3000 INCHES	YMRP =	.0000 IN. YT		
BREF =	1290.3000 INCHES	ZMRP =	400.0000 IN. ZT		
SCALE =	.0200				

PARAMETRIC DATA

IB-ELV =	10.000	OB-ELV =	-7.000
BDFLAP =	.000	SPDBRK =	.000
RUDDER =	.000	SILTS =	1.000
MACH =	1.400	RN/L =	3.500

RUN NO. 1460/ 0 RN/L = 3.00 GRADIENT INTERVAL = -5.00/ 5.00

ALPHAR	BETAR	CARS	CYNRS	ALFRSU	BETRSU
4.611	-5.735	.05950	.03060	4.45470	-5.94220
4.455	-3.631	.06180	.03360	4.34240	-3.86450
4.201	.072	.06730	.04390	4.28100	-.17580
4.257	3.789	.07110	.05400	4.48970	3.67270
4.225	5.819	.07380	.05980	4.47750	5.75480
	GRADIENT	.00125	.00275	.01988	1.01588

IA156A, AEDC PWT 16T-470, 0 T S W/SILTS (R8NPE1) (10 MAY 80)

REFERENCE DATA

SREF =	2690.0000 SQ.FT.	XMRP =	976.0000 IN. XT		
LREF =	1290.3000 INCHES	YMRP =	.0000 IN. YT		
BREF =	1290.3000 INCHES	ZMRP =	400.0000 IN. ZT		
SCALE =	.0200				

PARAMETRIC DATA

IB-ELV =	10.000	OB-ELV =	-7.000
BDFLAP =	.000	SPDBRK =	.000
RUDDER =	.000	SILTS =	1.000
MACH =	1.550	RN/L =	3.200

RUN NO. 1461/ 0 RN/L = 3.00 GRADIENT INTERVAL = -5.00/ 5.00

ALPHAR	BETAR	CARS	CYNRS	ALFRSU	BETRSU
-8.546	-6.193	.05010	.00320	-8.22700	-6.34970
-8.629	-4.136	.05400	-.00200	-8.34450	-4.34870
-8.563	.296	.06290	-.00580	-8.41890	-.02920
-8.383	4.416	.06800	.00160	-8.40680	4.06180
-8.372	6.482	.06850	.01100	-8.46250	6.13890
	GRADIENT	.00164	.00040	-.00740	.98327

RUN NO. 1462/ 0 RN/L = 3.00 GRADIENT INTERVAL = -5.00/ 5.00

ALPHAR	BETAR	CARS	CYNRS	ALFRSU	BETRSU
-6.545	-6.342	.05130	.01440	-6.20420	-6.44790
-6.454	-4.304	.05500	.01050	-6.13800	-4.47080
-6.512	.137	.06190	.00640	-6.35660	-.18460
-6.258	4.488	.06660	.01100	-6.32780	4.13790
-6.085	6.648	.06980	.01770	-6.22930	6.32240
	GRADIENT	.00132	.00005	-.02168	.97907

IA156A, AEDC PWT 16T-470, O T S W/SILTS (R8NPE1) (10 MAY 80)

REFERENCE DATA

SREF = 2690.0000 SQ.FT. XMRP = 976.0000 IN. XT
LREF = 1290.3000 INCHES YMRP = .0000 IN. YT
BREF = 1290.3000 INCHES ZMRP = 400.0000 IN. ZT
SCALE = .0200

PARAMETRIC DATA

IB-ELV = 10.000 OB-ELV = -7.000
BDFLAP = .000 SPDBRK = .000
RUDDER = .000 SILTS = 1.000
MACH = 1.550 RN/L = 3.200

RUN NO. 1463/ 0 RN/L = 3.00 GRADIENT INTERVAL = -5.00/ 5.00

ALPHAR	BETAR	CARS	CYNRS	ALFRSU	BETRSU
-4.395	-6.474	.05170	.02450	-4.03900	-6.50600
-4.545	-4.261	.05630	.02010	-4.20330	-4.36790
-4.380	.432	.06180	.02070	-4.24290	.10090
-3.811	4.560	.06580	.02810	-3.96080	4.23420
-3.894	6.405	.06900	.03130	-4.09520	6.10880
	GRADIENT	.00108	.00099	.02668	.97471

RUN NO. 1464/ 0 RN/L = 3.00 GRADIENT INTERVAL = -5.00/ 5.00

ALPHAR	BETAR	CARS	CYNRS	ALFRSU	BETRSU
-.402	-7.445	.05230	.03650	-.07720	-7.29500
-.384	-5.233	.05520	.03710	-.05870	-5.08270
-.379	-.850	.06130	.04180	-.05380	-.69990
-.365	3.326	.06730	.04780	-.04030	3.47550
-.393	5.507	.07000	.05180	-.07020	5.65460
	GRADIENT	.00144	.00144	.00323	.99986

RUN NO. 1465/ 0 RN/L = 3.00 GRADIENT INTERVAL = -5.00/ 5.00

ALPHAR	BETAR	CARS	CYNRS	ALFRSU	BETRSU
4.657	-5.636	.05610	.02740	4.47160	-5.93890
4.447	-3.530	.05750	.03030	4.32430	-3.86440
4.146	.143	.06320	.04190	4.28900	-.18560
4.142	3.789	.06710	.05190	4.47490	3.66030
4.109	5.812	.06980	.05940	4.46170	5.75650
	GRADIENT	.00131	.00295	.02054	1.02811

IA156A, AEDC PWT 16T-470, 0 T S W/SILTS (R8NPE2) (10 MAY 80)

REFERENCE DATA

SREF = 2690.0000 SQ.FT. XMRP = 976.0000 IN. XT
LREF = 1290.3000 INCHES YMRP = .0000 IN. YT
BREF = 1290.3000 INCHES ZMRP = 400.0000 IN. ZT
SCALE = .0200

PARAMETRIC DATA

IB-ELV = 12.000 OB-ELV = -7.000
BDFLAP = .000 SPDBRK = .000
RUDDER = .000 SILTS = 1.000
MACH = 1.400 RN/L = 3.500

RUN NO. 1469/ 0 RN/L = 3.01 GRADIENT INTERVAL = -5.00/ 5.00

ALPHAR	BETAR	CARS	CYNRS	ALFRSU	BETRSU
-8.558	-6.268	.05500	.00560	-8.33760	-6.40340
-8.602	-4.152	.05860	.00120	-8.41010	-4.32780
-8.572	.173	.06770	-.00140	-8.48920	-.07350
-8.408	4.366	.07370	.00420	-8.45250	4.10990
-8.430	6.354	.07390	.01200	-8.52000	6.10920
	GRADIENT	.00177	.00035	-.00505	.99056

RUN NO. 1470/ 0 RN/L = 3.00 GRADIENT INTERVAL = -5.00/ 5.00

ALPHAR	BETAR	CARS	CYNRS	ALFRSU	BETRSU
-6.464	-6.355	.05590	.01860	-6.22430	-6.45630
-6.391	-4.337	.06050	.01490	-6.17320	-4.48020
-6.510	.053	.06670	.01070	-6.42060	-.19170
-6.311	4.372	.07190	.01510	-6.38660	4.12140
-6.098	6.525	.07480	.02070	-6.22710	6.29810
	GRADIENT	.00131	.00002	-.02459	.98765

RUN NO. 1471/ 0 RN/L = 3.00 GRADIENT INTERVAL = -5.00/ 5.00

ALPHAR	BETAR	CARS	CYNRS	ALFRSU	BETRSU
-4.218	-6.471	.05730	.03090	-3.96230	-6.51800
-4.454	-4.277	.06120	.02520	-4.21450	-4.37950
-4.338	.327	.06680	.02410	-4.26220	.07780
-3.840	4.463	.07160	.03150	-3.97100	4.23790
-3.972	6.335	.07400	.03370	-4.13840	6.13460
	GRADIENT	.00119	.00070	.02714	.98557

RUN NO. 1472/ 0 RN/L = 2.99 GRADIENT INTERVAL = -5.00/ 5.00

ALPHAR	BETAR	CARS	CYNRS	ALFRSU	BETRSU
-.295	-7.328	.05730	.04080	-.04920	-7.24220
-.284	-5.163	.05920	.04020	-.03860	-5.07760
-.277	-.763	.06650	.04430	-.03100	-.67690
-.215	3.400	.07230	.05080	.03090	3.48550
-.241	5.576	.07450	.05350	.00410	5.66160
	GRADIENT	.00139	.00156	.01487	1.00000

IA156A, AEDC PWT 16T-470, 0 T S W/SILTS (R8NPE2) (10 MAY 80)

REFERENCE DATA

SREF = 2690.0000 SQ.FT. XMRP = 976.0000 IN. XT
LREF = 1290.3000 INCHES YMRP = .0000 IN. YT
BREF = 1290.3000 INCHES ZMRP = 400.0000 IN. ZT
SCALE = .0200

PARAMETRIC DATA

IB-ELV = 12.000 OB-ELV = -7.000
BDFLAP = .000 SPDBRK = .000
RUDDER = .000 SILTS = 1.000
MACH = 1.400 RN/L = 3.500

RUN NO. 1473/ 0 RN L = 3.00 GRADIENT INTERVAL = -5.00/ 5.00

ALPHAR	BETAR	CARS	CYNRS	ALFRSU	BETRSU
4.612	-5.722	.05920	.03040	4.45550	-5.92900
4.445	-3.623	.06180	.03390	4.33180	-3.85710
4.207	.064	.06770	.04440	4.28730	-.18240
4.257	3.784	.07140	.05430	4.48870	3.66890
4.236	5.837	.07370	.06000	4.48720	5.77250
	GRADIENT	.00130	.00275	.02123	1.01603

IA156A, AEDC PWT 16T-470, 0 T S W/SILTS (R8NPE3) (10 MAY 80)

REFERENCE DATA

SREF = 2690.0000 SQ.FT. XMRP = 976.0000 IN. XT
LREF = 1290.3000 INCHES YMRP = .0000 IN. YT
BREF = 1290.3000 INCHES ZMRP = 400.0000 IN. ZT
SCALE = .0200

PARAMETRIC DATA

IB-ELV = 12.000 OB-ELV = -7.000
BDFLAP = .000 SPDBRK = .000
RUDDER = .000 SILTS = 1.000
MACH = 1.550 RN/L = 3.200

RUN NO. 1474/ 0 RN/L = 3.01 GRADIENT INTERVAL = -5.00/ 5.00

ALPHAR	BETAR	CARS	CYNRS	ALFRSU	BETRSU
-8.592	-6.216	.05040	.00290	-8.27200	-6.37250
-8.646	-4.028	.05440	-.00240	-8.36260	-4.24460
-8.554	.203	.06290	-.00580	-8.40370	-.12200
-8.360	4.545	.06860	.00220	-8.38840	4.19080
-8.352	6.484	.06870	.01100	-8.44260	6.14010
	GRADIENT	.00165	.00054	-.00298	.98393

RUN NO. 1475/ 0 RN/L = 3.01 GRADIENT INTERVAL = -5.00/ 5.00

ALPHAR	BETAR	CARS	CYNRS	ALFRSU	BETRSU
-6.541	-6.340	.05150	.01450	-6.20370	-6.44680
-6.453	-4.292	.05540	.01080	-6.13860	-4.45930
-6.496	.149	.06230	.00660	-6.34450	-.17140
-6.226	4.471	.06730	.01120	-6.29590	4.12010
-5.955	6.666	.07030	.01820	-6.10300	6.34020
	GRADIENT	.00136	.00004	-.01808	.97899

IA156A, AEDC PWT 16T-470, 0 T S W/SILTS (R8NPE3) (10 MAY 80)

REFERENCE DATA

SREF = 2690.0000 SQ.FT. XMRP = 976.0000 IN. XT
LREF = 1290.3000 INCHES YMRP = .0000 IN. YT
BREF = 1290.3000 INCHES ZMRP = 400.0000 IN. ZT
SCALE = .0200

PARAMETRIC DATA

IB-ELV = 12.000 OB-ELV = -7.000
BDFLAP = .000 SPDBRK = .000
RUDDER = .000 SILTS = 1.000
MACH = 1.550 RN/L = 3.200

RUN NO. 1476/ 0 RN/L = 3.01 GRADIENT INTERVAL = -5.00/ 5.00

ALPHAR	BETAR	CARS	CYNRS	ALFRSU	BETRSU
-4.252	-6.499	.05220	.02520	-3.89650	-6.52580
-4.538	-4.253	.05670	.02000	-4.19820	-4.36130
-4.357	.421	.06250	.02110	-4.22010	.09080
-3.812	4.552	.06600	.02830	-3.96110	4.22720
-3.890	6.400	.06910	.03120	-4.09050	6.10640
	GRADIENT	.00106	.00093	.02624	.97489

RUN NO. 1477/ 0 RN/L = 3.01 GRADIENT INTERVAL = -5.00/ 5.00

ALPHAR	BETAR	CARS	CYNRS	ALFRSU	BETRSU
-.384	-7.394	.05250	.03640	-.05980	-7.24490
-.375	-5.230	.05540	.03710	-.04980	-5.08060
-.365	-.825	.06170	.04220	-.04020	-.67580
-.352	3.322	.06770	.04830	-.02760	3.47160
-.373	5.500	.06980	.05190	-.05020	5.64820
	GRADIENT	.00145	.00147	.00304	1.00012

RUN NO. 1478/ 0 RN/L = 3.01 GRADIENT INTERVAL = -5.00/ 5.00

ALPHAR	BETAR	CARS	CYNRS	ALFRSU	BETRSU
4.670	-5.644	.05630	.02740	4.48400	-5.94720
4.455	-3.528	.05760	.03060	4.33180	-3.86190
4.160	.136	.06290	.04180	4.30270	-.19200
4.154	3.790	.06720	.05210	4.48680	3.66250
4.125	5.826	.06980	.05930	4.47650	5.77050
	GRADIENT	.00131	.00294	.02116	1.02807

IA156A, AEDC PWT 16T-470, O T S W/SILTS (R8NPE4) (10 MAY 80)

REFERENCE DATA

SREF = 2690.0000 SQ.FT. XMRP = 976.0000 IN. XT
LREF = 1290.3000 INCHES YMRP = .0000 IN. YT
BREF = 1290.3000 INCHES ZMRP = 400.0000 IN. ZT
SCALE = .0200

PARAMETRIC DATA

IB-ELV = 8.000 OB-ELV = -7.000
BDFLAP = .000 SPDBRK = .000
RUDDER = .000 SILTS = 1.000
MACH = 1.400 RN/L = 3.500

RUN NO. 1482/ 0 RN/L = 3.00 GRADIENT INTERVAL = -5.00/ 5.00

ALPHAR	BETAR	CARS	CYNRS	ALFRSU	BETRSU
-8.522	-6.142	.05470	.00600	-8.30090	-6.27930
-8.613	-4.090	.05820	.00120	-8.42230	-4.26760
-8.587	.079	.06720	-.00130	-8.50140	-.16570
-8.445	4.517	.07340	.00440	-8.49330	4.26220
-8.422	6.368	.07390	.01200	-8.51210	6.12430
	GRADIENT	.00176	.00038	-.00814	.99112

RUN NO. 1483/ 0 RN/L = 3.00 GRADIENT INTERVAL = -5.00/ 5.00

ALPHAR	BETAR	CARS	CYNRS	ALFRSU	BETRSU
-6.508	-6.370	.05550	.01870	-6.26840	-6.47120
-6.404	-4.350	.05980	.01560	-6.18600	-4.49310
-6.521	.021	.06590	.01090	-6.43120	-.22340
-6.328	4.363	.07130	.01530	-6.40260	4.11380
-6.063	6.550	.07410	.02080	-6.19320	6.32510
	GRADIENT	.00132	-.00004	-.02489	.98777

RUN NO. 1484/ 0 RN/L = 3.00 GRADIENT INTERVAL = -5.00/ 5.00

ALPHAR	BETAR	CARS	CYNRS	ALFRSU	BETRSU
-4.193	-6.501	.05690	.03170	-3.93640	-6.54570
-4.469	-4.271	.06050	.02560	-4.22890	-4.37270
-4.361	.333	.06620	.02450	-4.28550	.08250
-3.875	4.467	.07050	.03110	-4.00620	4.24250
-3.972	6.311	.07300	.03360	-4.13840	6.11110
	GRADIENT	.00115	.00061	.02478	.98559

RUN NO. 1485/ 0 RN/L = 3.00 GRADIENT INTERVAL = -5.00/ 5.00

ALPHAR	BETAR	CARS	CYNRS	ALFRSU	BETRSU
-.321	-7.375	.05700	.04160	-.07540	-7.28940
-.308	-5.169	.05870	.04030	-.06170	-5.08350
-.293	-.761	.06600	.04470	-.04880	-.67650
-.250	3.385	.07110	.05010	-.00380	3.47070
-.282	5.583	.07400	.05330	-.03700	5.66830
	GRADIENT	.00123	.00130	.01085	1.00019

IA156A, AEDC PWT 16T-470, O T S W/SILTS (R8NPE4) (10 MAY 80)

REFERENCE DATA

SREF =	2690.0000 SQ.FT.	XMRP =	976.0000 IN. XT		
LREF =	1290.3000 INCHES	YMRP =	.0000 IN. YT		
BREF =	1290.3000 INCHES	ZMRP =	400.0000 IN. ZT		
SCALE =	.0200				

PARAMETRIC DATA

IB-ELV =	8.000	OB-ELV =	-7.000
BDFLAP =	.000	SPDBRK =	.000
RUDDER =	.000	SILTS =	1.000
MACH =	1.400	RN/L =	3.500

RUN NO. 1486/ 0 RN/L = 3.00 GRADIENT INTERVAL = -5.00/ 5.00

ALPHAR	BETAR	CARS	CYNRS	ALFRSU	BETRSU
4.616	-5.713	.06010	.03100	4.46080	-5.92020
4.419	-3.659	.06140	.03350	4.30520	-3.89180
4.212	-.019	.06710	.04390	4.28630	-.26920
4.245	3.745	.07090	.05400	4.47740	3.62780
4.213	5.829	.07350	.06000	4.46540	5.76410
	GRADIENT	.00128	.00277	.02341	1.01564

IA156A, AEDC PWT 16T-470, O T S W/SILTS (R8NPE5) (10 MAY 80)

REFERENCE DATA

SREF =	2690.0000 SQ.FT.	XMRP =	976.0000 IN. XT		
LREF =	1290.3000 INCHES	YMRP =	.0000 IN. YT		
BREF =	1290.3000 INCHES	ZMRP =	400.0000 IN. ZT		
SCALE =	.0200				

PARAMETRIC DATA

IB-ELV =	8.000	OB-ELV =	-7.000
BDFLAP =	.000	SPDBRK =	.000
RUDDER =	.000	SILTS =	1.000
MACH =	1.550	RN/L =	3.200

RUN NO. 1487/ 0 RN/L = 3.00 GRADIENT INTERVAL = -5.00/ 5.00

ALPHAR	BETAR	CARS	CYNRS	ALFRSU	BETRSU
-8.576	-6.206	.05010	.00350	-8.25720	-6.36230
-8.643	-4.027	.05350	-.00210	-8.35880	-4.24330
-8.577	.177	.06230	-.00590	-8.42630	-.14630
-8.346	4.629	.06750	.00250	-8.37770	4.27280
-8.398	6.518	.06780	.01120	-8.48870	6.17440
	GRADIENT	.00161	.00054	-.00205	.98394

RUN NO. 1488/ 0 RN/L = 3.00 GRADIENT INTERVAL = -5.00/ 5.00

ALPHAR	BETAR	CARS	CYNRS	ALFRSU	BETRSU
-6.544	-6.333	.05100	.01470	-6.20520	-6.43950
-6.471	-4.292	.05450	.01040	-6.15630	-4.45900
-6.506	.128	.06100	.00640	-6.34970	-.19450
-6.263	4.488	.06650	.01140	-6.33300	4.13720
-6.198	6.508	.06940	.01640	-6.33670	6.17790
	GRADIENT	.00137	.00011	-.02018	.97896

IA156A, AEDC PWT 16T-470, 0 T S W/SILTS (R8NPE5) (10 MAY 80)

REFERENCE DATA

SREF = 2690.0000 SQ.FT. XMRP = 976.0000 IN. XT
LREF = 1290.3000 INCHES YMRP = .0000 IN. YT
BREF = 1290.3000 INCHES ZMRP = 400.0000 IN. ZT
SCALE = .0200

PARAMETRIC DATA

IB-ELV = 8.000 OB-ELV = -7.000
BDFLAP = .000 SPDBRK = .000
RUDDER = .000 SILTS = 1.000
MACH = 1.550 RN/L = 3.200

RUN NO. 1489/ 0 RN/L = 3.01 GRADIENT INTERVAL = -5.00/ 5.00

ALPHAR	BETAR	CARS	CYNRS	ALFRSU	BETRSU
-4.292	-6.497	.05200	.02570	-3.93500	-6.52410
-4.555	-4.257	.05590	.02030	-4.21380	-4.36460
-4.390	.429	.06150	.02110	-4.25210	.09730
-3.818	4.553	.06550	.02860	-3.96780	4.22740
-3.910	6.400	.06820	.03110	-4.11060	6.10530
	GRADIENT	.00109	.00092	.02711	.97471

RUN NO. 1490/ 0 RN/L = 3.00 GRADIENT INTERVAL = -5.00/ 5.00

ALPHAR	BETAR	CARS	CYNRS	ALFRSU	BETRSU
-.409	-7.394	.05280	.03730	-.08430	-7.24430
-.397	-5.234	.05500	.03740	-.07170	-5.08400
-.383	-.827	.06110	.04200	-.05760	-.67630
-.378	3.322	.06740	.04820	-.05230	3.47250
-.400	5.512	.06960	.05190	-.07810	5.65840
	GRADIENT	.00152	.00149	.00128	.99988

RUN NO. 1491/ 0 RN/L = 3.00 GRADIENT INTERVAL = -5.00/ 5.00

ALPHAR	BETAR	CARS	CYNRS	ALFRSU	BETRSU
4.653	-5.637	.05580	.02750	4.46720	-5.94190
4.432	-3.522	.05730	.03050	4.30920	-3.85590
4.148	.143	.06310	.04200	4.29250	-.18600
4.148	3.794	.06670	.05210	4.47930	3.66500
4.102	5.812	.06920	.05950	4.45420	5.75710
	GRADIENT	.00129	.00295	.02323	1.02802

IA156A, AEDC PWT 16T-470, O T S W/SILTS (R8NPE6) (10 MAY 80)

REFERENCE DATA

SREF = 2690.0000 SQ.FT. XMRP = 976.0000 IN. XT
LREF = 1290.3000 INCHES YMRP = .0000 IN. YT
BREF = 1290.3000 INCHES ZMRP = 400.0000 IN. ZT
SCALE = .0200

PARAMETRIC DATA

'B-ELV = 10.000 OB-ELV = 2.000
BDFLAP = .000 SPDBRK = .000
RUDDER = .000 SILTS = 1.000
MACH = 1.050 RN/L = 3.500

RUN NO. 1494/ 0 RN/L = 3.50 GRADIENT INTERVAL = -5.00/ 5.00

ALPHAR	BETAR	CARS	CYNRS	ALFRSU	BETRSU
-8.648	-6.289	.06200	.01750	-8.47800	-6.40100
-8.633	-4.124	.06880	.01300	-8.48820	-4.26690
-8.677	-.062	.07660	.01320	-8.61590	-.25660
-8.534	4.208	.07860	.02590	-8.57710	4.00890
-8.563	6.150	.08190	.02970	-8.63930	5.96070
	GRADIENT	.00117	.00156	-.01050	.99334

RUN NO. 1495/ 0 RN/L = 3.50 GRADIENT INTERVAL = -5.00/ 5.00

ALPHAR	BETAR	CARS	CYNRS	ALFRSU	BETRSU
-6.449	-6.334	.06490	.03100	-6.26400	-6.41920
-6.415	-4.381	.07100	.02730	-6.24840	-4.49830
-6.575	-.078	.07620	.02890	-6.51130	-.27170
-6.382	4.206	.08170	.03620	-6.44780	4.01260
-6.363	6.205	.08370	.04200	-6.46520	6.02890
	GRADIENT	.00125	.00104	-.02325	.99114

RUN NO. 1496/ 0 RN/L = 3.50 GRADIENT INTERVAL = -5.00/ 5.00

ALPHAR	BETAR	CARS	CYNRS	ALFRSU	BETRSU
-4.196	-6.490	.06720	.04300	-3.99670	-6.53190
-4.466	-4.277	.07130	.03750	-4.28160	-4.36330
-4.408	.232	.07670	.04450	-4.35530	.03510
-3.910	4.324	.08290	.05320	-4.01870	4.15180
-4.028	6.164	.08360	.05460	-4.16310	6.01120
	GRADIENT	.00135	.00182	.02977	.98972

RUN NO. 1497/ 0 RN/L = 3.50 GRADIENT INTERVAL = -5.00/ 5.00

ALPHAR	BETAR	CARS	CYNRS	ALFRSU	BETRSU
-.319	-7.357	.06740	.05010	-.12480	-7.29570
-.323	-5.155	.06980	.04980	-.12850	-5.09450
-.403	-.770	.07780	.05940	-.20850	-.70970
-.315	3.327	.08500	.06790	-.12050	3.38780
-.301	5.512	.08530	.06990	-.10670	5.57230
	GRADIENT	.00176	.00207	.02148	1.00000

IA156A, AEDC PWT 16T-470, 0 T S W/SILTS (R8NPE6) (10 MAY 80)

REFERENCE DATA

SREF = 2690.0000 SQ.FT. XMRP = 976.0000 IN. XT
LREF = 1290.3000 INCHES YMRP = .0000 IN. YT
BREF = 1290.3000 INCHES ZMRP = 400.0000 IN. ZT
SCALE = .0200

PARAMETRIC DATA

IB-ELV = 10.000 OB-ELV = 2.000
BDFLAP = .000 SPDBRK = .000
RUDDER = .000 SILTS = 1.000
MACH = 1.050 RN/L = 3.500

RUN NO. 1498/ 0 RN/L = 3.50 GRADIENT INTERVAL = -5.00/ 5.00

ALPHAR	BETAR	CARS	CYNRS	ALFRSU	BETRSU
4.444	-5.772	.07210	.04150	4.31700	-5.93100
4.286	-3.691	.07560	.04490	4.19220	-3.87200
4.045	-.008	.07880	.05540	4.10200	-.20400
4.187	3.758	.08230	.06250	4.36620	3.66220
4.151	5.784	.08220	.06920	4.34730	5.72740
	GRADIENT	.00090	.00236	.02354	1.01145

IA156A, AEDC PWT 16T-470, 0 T S W/SILTS (R8NPE7) (10 MAY 80)

REFERENCE DATA

SREF = 2690.0000 SQ.FT. XMRP = 976.0000 IN. XT
LREF = 1290.3000 INCHES YMRP = .0000 IN. YT
BREF = 1290.3000 INCHES ZMRP = 400.0000 IN. ZT
SCALE = .0200

PARAMETRIC DATA

IB-ELV = 10.000 OB-ELV = 2.000
BDFLAP = .000 SPDBRK = .000
RUDDER = .000 SILTS = 1.000
MACH = 1.100 RN/L = 3.500

RUN NO. 1499/ 0 RN/L = 3.50 GRADIENT INTERVAL = -5.00/ 5.00

ALPHAR	BETAR	CARS	CYNRS	ALFRSU	BETRSU
-8.667	-6.293	.06030	.01490	-8.49500	-6.40310
-8.690	-4.149	.06770	.01130	-8.54280	-4.29120
-8.697	-.079	.07570	.01260	-8.63270	-.27310
-8.526	4.312	.08010	.02540	-8.56850	4.11250
-8.573	6.157	.08230	.02980	-8.64770	5.96710
	GRADIENT	.00146	.00168	-.00281	.99319

RUN NO. 1500/ 0 RN/L = 3.50 GRADIENT INTERVAL = -5.00/ 5.00

ALPHAR	BETAR	CARS	CYNRS	ALFRSU	BETRSU
-6.475	-6.333	.06310	.02830	-6.28840	-6.41530
-6.477	-4.388	.06870	.02470	-6.30860	-4.50400
-6.635	-.100	.07450	.02660	-6.56760	-.29330
-6.385	4.220	.08060	.03630	-6.44810	4.02610
-6.374	6.214	.08310	.04040	-6.47480	6.03610
	GRADIENT	.00138	.00135	-.01615	.99086

IA156A, AEDC PWT 16T-470, 0 T S W/SILTS (R8NPE7) (10 MAY 80)

REFERENCE DATA

SREF = 2690.0000 SQ.FT. XMRP = 976.0000 IN. XT
LREF = 1290.3000 INCHES YMRP = .0000 IN. YT
BREF = 1290.3000 INCHES ZMRP = 400.0000 IN. ZT
SCALE = .0200

PARAMETRIC DATA

IB-ELV = 10.000 OB-ELV = 2.000
BDFLAP = .000 SPDBRK = .000
RUDDER = .000 SILTS = 1.000
MACH = 1.100 RN/L = 3.500

RUN NO. 1501/ 0 RN/L = 3.51 GRADIENT INTERVAL = -5.00/ 5.00

ALPHAR	BETAR	CARS	CYNRS	ALFRSU	BETRSU
-4.210	-6.499	.06520	.04060	-4.00880	-6.53860
-4.496	-4.285	.06890	.03550	-4.30950	-4.36870
-4.418	.247	.07430	.04240	-4.36320	.05040
-3.900	4.318	.08010	.04980	-4.00670	4.14400
-4.042	6.195	.08240	.05150	-4.17530	6.04070
	GRADIENT	.00130	.00166	.03431	.98921

RUN NO. 1502/ 0 RN/L = 3.49 GRADIENT INTERVAL = -5.00/ 5.00

ALPHAR	BETAR	CARS	CYNRS	ALFRSU	BETRSU
-.330	-7.364	.06540	.05010	-.13570	-7.30050
-.313	-5.169	.06630	.04880	-.11870	-5.10560
-.385	-.773	.07330	.05630	-.19030	-.70930
-.288	3.348	.08000	.06330	-.09330	3.41090
-.277	5.537	.08180	.06610	-.08300	5.59980
	GRADIENT	.00163	.00170	.02354	.99998

RUN NO. 1503/ 0 RN/L = 3.50 GRADIENT INTERVAL = -5.00/ 5.00

ALPHAR	BETAR	CARS	CYNRS	ALFRSU	BETRSU
4.467	-5.788	.06730	.03890	4.34000	-5.94870
4.311	-3.676	.07140	.04220	4.21800	-3.85880
4.102	.001	.07430	.05340	4.16160	-.19470
4.214	3.760	.07850	.06020	4.39520	3.66530
4.183	5.777	.07920	.06700	4.38020	5.72270
	GRADIENT	.00096	.00242	.02397	1.01189

IA156A, AEDC PWT 16T-470, O T S W/SILTS (R8NPE8) (10 MAY 80)

REFERENCE DATA

SREF = 2690.0000 SQ.FT. XMRP = 976.0000 IN. XT
LREF = 1290.3000 INCHES YMRP = .0000 IN. YT
BREF = 1290.3000 INCHES ZMRP = 400.0000 IN. ZT
SCALE = .0200

PARAMETRIC DATA

IB-ELV = 10.000 OB-ELV = 2.000
BDFLAP = .000 SPDBRK = .000
RUDDER = .000 SILTS = 1.000
MACH = 1.150 RN/L = 3.500

RUN NO. 1504/ 0 RN/L = 3.50 GRADIENT INTERVAL = -5.00/ 5.00

ALPHAR	BETAR	CARS	CYNRS	ALFRSU	BETRSU
-8.693	-6.316	.06030	.01550	-8.51800	-6.42650
-8.705	-4.137	.06580	.00910	-8.55520	-4.27970
-8.719	-.080	.07410	.00900	-8.65250	-.27600
-8.589	4.116	.07820	.02040	-8.62610	3.91210
-8.587	6.197	.08020	.02610	-8.66160	6.00430
	GRADIENT	.00150	.00138	-.00851	.99264

RUN NO. 1505/ 0 RN/L = 3.51 GRADIENT INTERVAL = -5.00/ 5.00

ALPHAR	BETAR	CARS	CYNRS	ALFRSU	BETRSU
-6.474	-6.356	.06150	.02800	-6.28370	-6.43790
-6.437	-4.377	.06650	.02300	-6.26570	-4.49210
-6.591	-.080	.07290	.02370	-6.52150	-.27500
-6.420	4.257	.07880	.03130	-6.48310	4.05950
-6.363	6.245	.08110	.03600	-6.46330	6.06430
	GRADIENT	.00142	.00096	-.02513	.99054

RUN NO. 1506/ 0 RN/L = 3.50 GRADIENT INTERVAL = -5.00/ 5.00

ALPHAR	BETAR	CARS	CYNRS	ALFRSU	BETRSU
-4.178	-6.462	.06300	.04000	-3.97460	-6.50060
-4.482	-4.280	.06690	.03380	-4.29290	-4.36330
-4.403	.250	.07320	.03950	-4.34600	.05110
-3.896	4.349	.07910	.04620	-4.00340	4.17200
-4.024	6.210	.08110	.04780	-4.15800	6.05280
	GRADIENT	.00141	.00143	.03276	.98893

RUN NO. 1507/ 0 RN/L = 3.51 GRADIENT INTERVAL = -5.00/ 5.00

ALPHAR	BETAR	CARS	CYNRS	ALFRSU	BETRSU
-.290	-7.357	.06300	.04720	-.09360	-7.29130
-.278	-5.172	.06470	.04700	-.08240	-5.10630
-.346	-.776	.07320	.05410	-.14960	-.71000
-.253	3.343	.08050	.06170	-.05650	3.40850
-.242	5.566	.08150	.06310	-.04550	5.63170
	GRADIENT	.00177	.00185	.02260	.99995

IA156A, AEDC PWT 16T-470, O T S W/SILTS (R8NPE8) (10 MAY 80)

REFERENCE DATA

SREF = 2690.0000 SQ.FT. XMRP = 976.0000 IN. XT
LREF = 1290.3000 INCHES YMRP = .0000 IN. YT
BREF = 1290.3000 INCHES ZMRP = 400.0000 IN. ZT
SCALE = .0200

PARAMETRIC DATA

IB-ELV = 10.000 OB-ELV = 2.000
BDFLAP = .000 SPDBRK = .000
RUDDER = .000 SILTS = 1.000
MACH = 1.150 RN/L = 3.500

RUN NO. 1508/ 0 RN/L = 3.50 GRADIENT INTERVAL = -5.00/ 5.00

ALPHAR	BETAR	CARS	CYNRS	ALFRSU	BETRSU
4.504	-5.767	.06680	.03840	4.37840	-5.93040
4.400	-3.688	.07120	.04080	4.30840	-3.87300
4.121	.007	.07450	.05130	4.18290	-.19030
4.249	3.760	.07860	.05980	4.43310	3.66680
4.204	5.793	.07930	.06580	4.40340	5.74010
	GRADIENT	.00099	.00255	.01687	1.01235

IA156A, AEDC PWT 16T-470, O T S W/SILTS (R8NPE9) (10 MAY 80)

REFERENCE DATA

SREF = 2690.0000 SQ.FT. XMRP = 976.0000 IN. XT
LREF = 1290.3000 INCHES YMRP = .0000 IN. YT
BREF = 1290.3000 INCHES ZMRP = 400.0000 IN. ZT
SCALE = .0200

PARAMETRIC DATA

IB-ELV = 10.000 OB-ELV = 2.000
BDFLAP = .000 SPDBRK = .000
RUDDER = .000 SILTS = 1.000
MACH = 1.150 RN/L = 3.500

RUN NO. 1509/ 0 RN/L = 3.51 GRADIENT INTERVAL = -5.00/ 5.00

ALPHAR	BETAR	CARS	CYNRS	ALFRSU	BETRSU
-.294	-7.308	.06340	.04740	-.09800	-7.24300
-.278	-5.104	.06490	.04690	-.08150	-5.03870
-.339	-.827	.07320	.05400	-.14300	-.76140
-.251	3.415	.07970	.06120	-.05530	3.48070
-.239	5.580	.08170	.06340	-.04280	5.64560
	GRADIENT	.00153	.00170	.02067	1.00002