CR 116596
SQT

NASA

National Aeronautics and
Space Administration

Lyndon B. Johnson Space Center
Houston, Texas 77058

SPACE SHUTTLE AEROTHERMODYNAMIC DATA REPORT

RECEIVED
NASA STI FACILITY
ACCESS DEPT.

Data Management Services

HUNTSVILLE ELECTRONICS DIVISION CHRYSLER CORPORATION

October 10, 1980

DMS-DFR-2084
PHASE C

AEROTHERMODYNAMIC

DATA BASE

QUARTERLY

DATA FILE CONTENTS REPORT

Prepared under NASA Contract Number NAS9-13247

by

Data Management Services
Chrysler Corporation Huntsville Electronics Division
Slidell Engineering Operations

for

Engineering Analysis Division

Johnson Space Center
National Aeronautics and Space Administration
Houston, Texas

Prepared by: *G. Richard Lutz*

Reviewed by: *M. M. Mann*

Approved: J. T. Glynn
J. L. Glynn, Manager
Data Operations

Concurrence: N. D. Kemp
N. D. Kemp, Manager
Data Management Services

TABLE OF CONTENTS

Section		Page
1.	Introduction	v
2.	Baseline Configuration Designations	vii
3.	Summary Data Reports	vii
4.	Data File Report Digest	vii
5.	Wind Tunnel Test/DATAMAN Data Processing Summary	xii
6.	Space Shuttle Facility Wind Tunnel Summary	xiii
	Distribution	357

LIST OF TABLES

Table No.	Title	Page
1-1	Summary of Data Base Records	vi
3-1	Summary Data Reports List	xiv
4-1	Data File Report Digest	1
5-1	Wind Tunnel Test/DMS Data Processing Summary	93
6-1	Space Shuttle Facility Wind Tunnel Summary	320

LIST OF FIGURES

Figure No.	Title	Page
2-1	SSV Orbiter 5 Configuration Baseline	viii
2-2	Configuration 5 Launch Vehicle	ix
2-3	Configuration 5 External Tank and Solid Rocket Booster	x
2-4	Orbiter/747 Flight Test Configuration	xi

1. INTRODUCTION

Space shuttle aerothermodynamic data, collected from a continuing series of wind tunnel te[illegible], are permanently stored with the Data Management Services (DMS) system. Information pertaining to current baseline configuration definition is also stored. This report lists documentation of DMS processed data arranged sequentially and by space shuttle configuration.

Purpose of this report is to provide an up-to-date record of all applicable aerothermodynamic data collected, processed, or summarized during the space shuttle progr[illegible]. Tables are designed to provide survey information to the various space shuttle managerial and technical levels. Table 1-1 summarizes the contents and purposes of report sections.

Table 1-1. Summary of Data Base Records

Item	Contents	Purpose
Baseline configurations	Space shuttle configurations designated as reference or baseline	Current baseline configuration reference
Summary data reports	List of DMS reports presenting results of data analysis or refinements	Index of space shuttle aerothermo design data reports
Data file report digest	Compilation of space shuttle tests into operational status and basic configuration groups	Information arranged by vehicle on tests DMS processed or has in process
Wind tunnel test/DMS data processing summary	Table of space shuttle test data for which results have been incorporated into DMS data base	Reference of test data in DMS data base sequentially by data report number
Space shuttle facility wind tunnel summary	Summary of all space shuttle tests by facility	Information arranged by facility on tests DMS processed or has in process

2. BASELINE CONFIGURATION DESIGNATIONS

Configurations designated as baseline or reference configurations are in this report. Figure 2-1 shows the orbiter, figure 2-2 the launch vehicle, figure 2-3 the ET and SRB, and figure 2-4 the carrier.

3. SUMMARY DATA REPORTS

Summary data reports differentiate from data reports in that data reports present basic wind tunnel data as collected and summary reports contain data germane to a particular design application of the basic aerothermo test data. Summary reports range from basic data reports of edited or refined data to reports presenting gleanings from basic data reports.

The list of summary reports (table 3-1) contains DMS-generated documents.

4. DATA FILE REPORT DIGEST

Data file digest (table 4-1) compiles all information in the DATAMAN system into three categories:

1) Recently published reports--current month plus previous month
2) Tests in process
3) Published reports

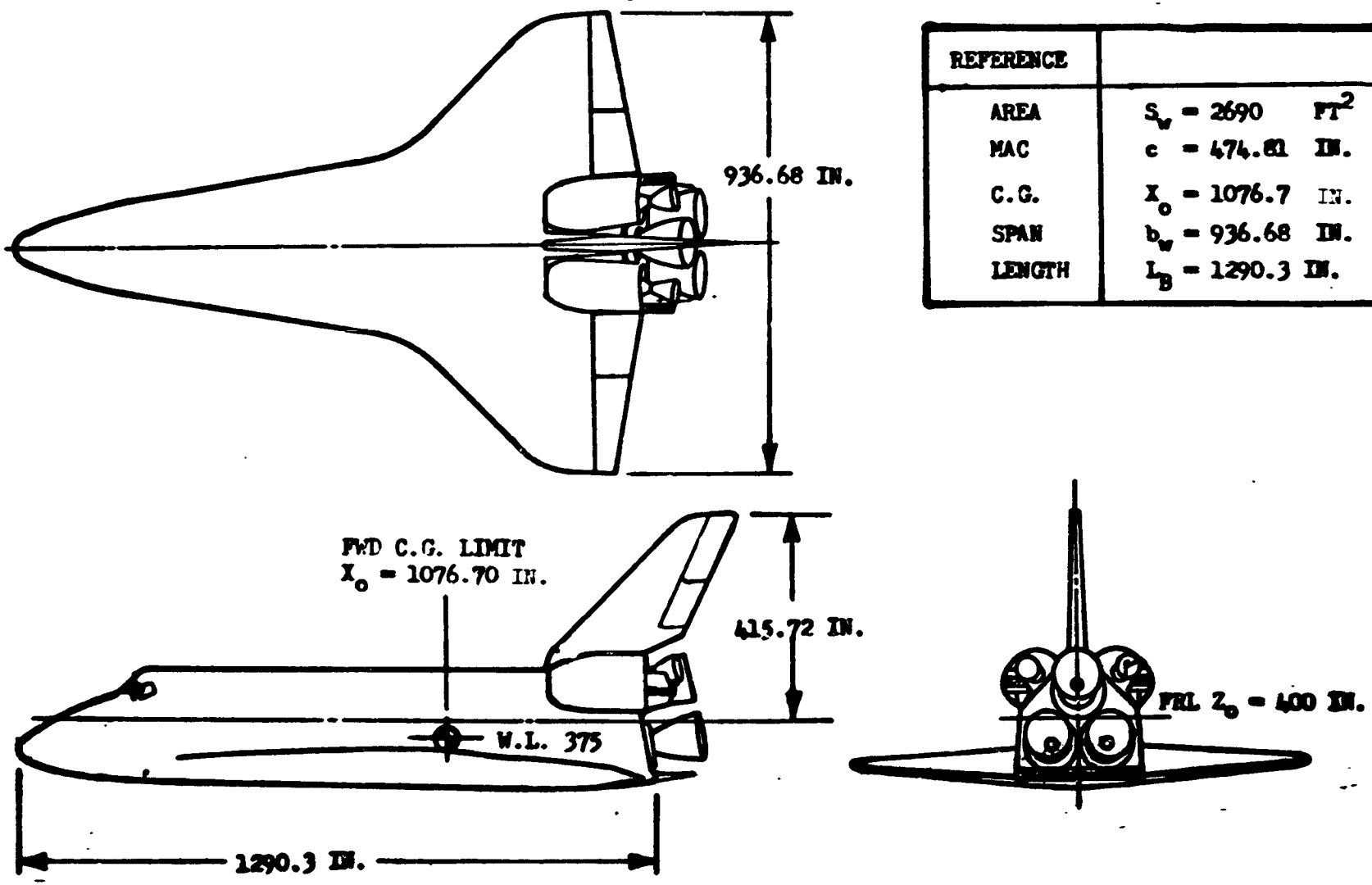

REFERENCE	
AREA	S_w = 2690 FT^2
MAC	c = 474.81 IN.
C.G.	X_o = 1076.7 IN.
SPAN	b_w = 936.68 IN.
LENGTH	L_B = 1290.3 IN.

Figure 2-1. SSV Orbiter 5 Configuration Baseline

ORIGINAL PAGE IS
OF POOR QUALITY

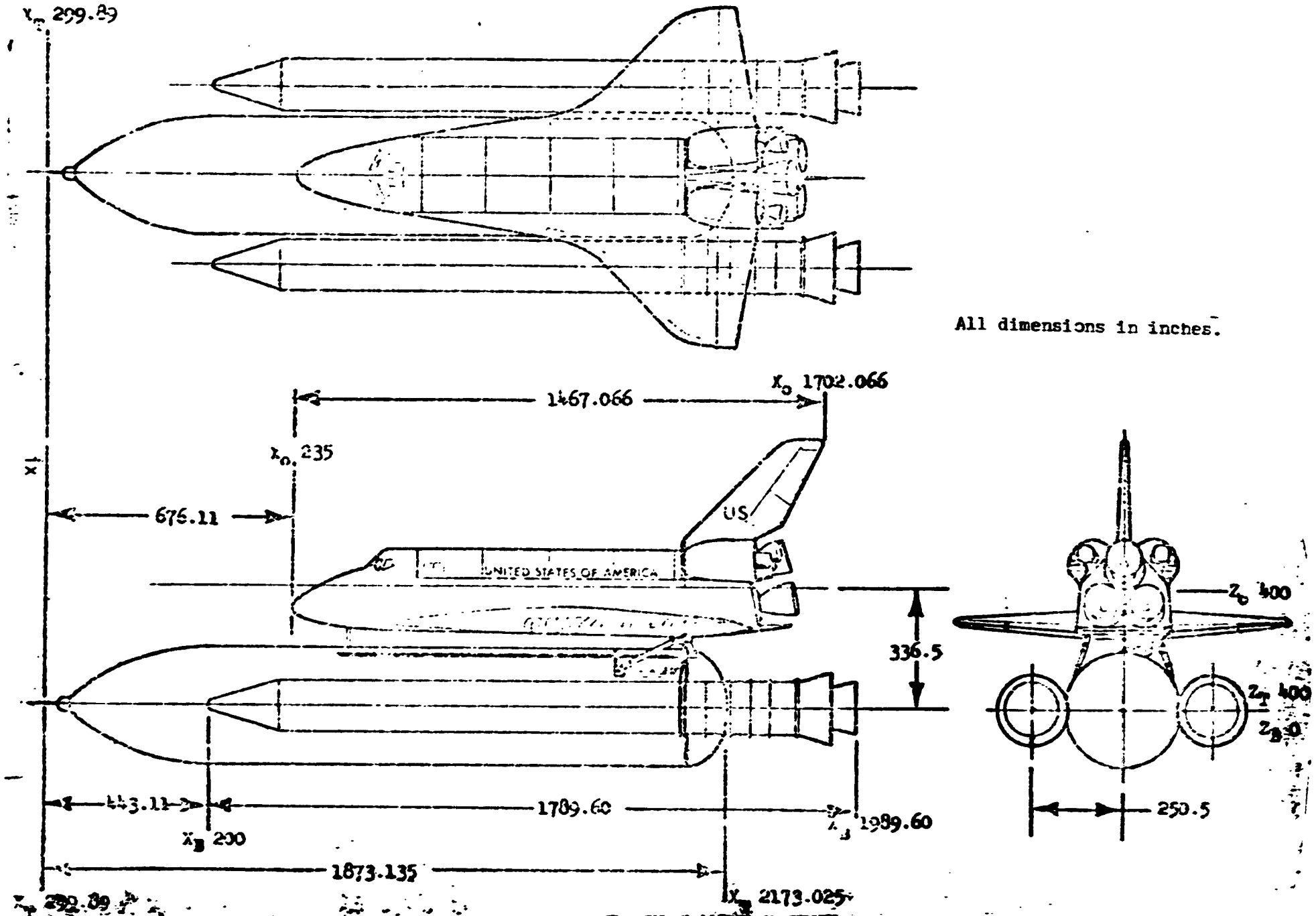

Figure 2-2. Configuration 5 Launch Vehicle

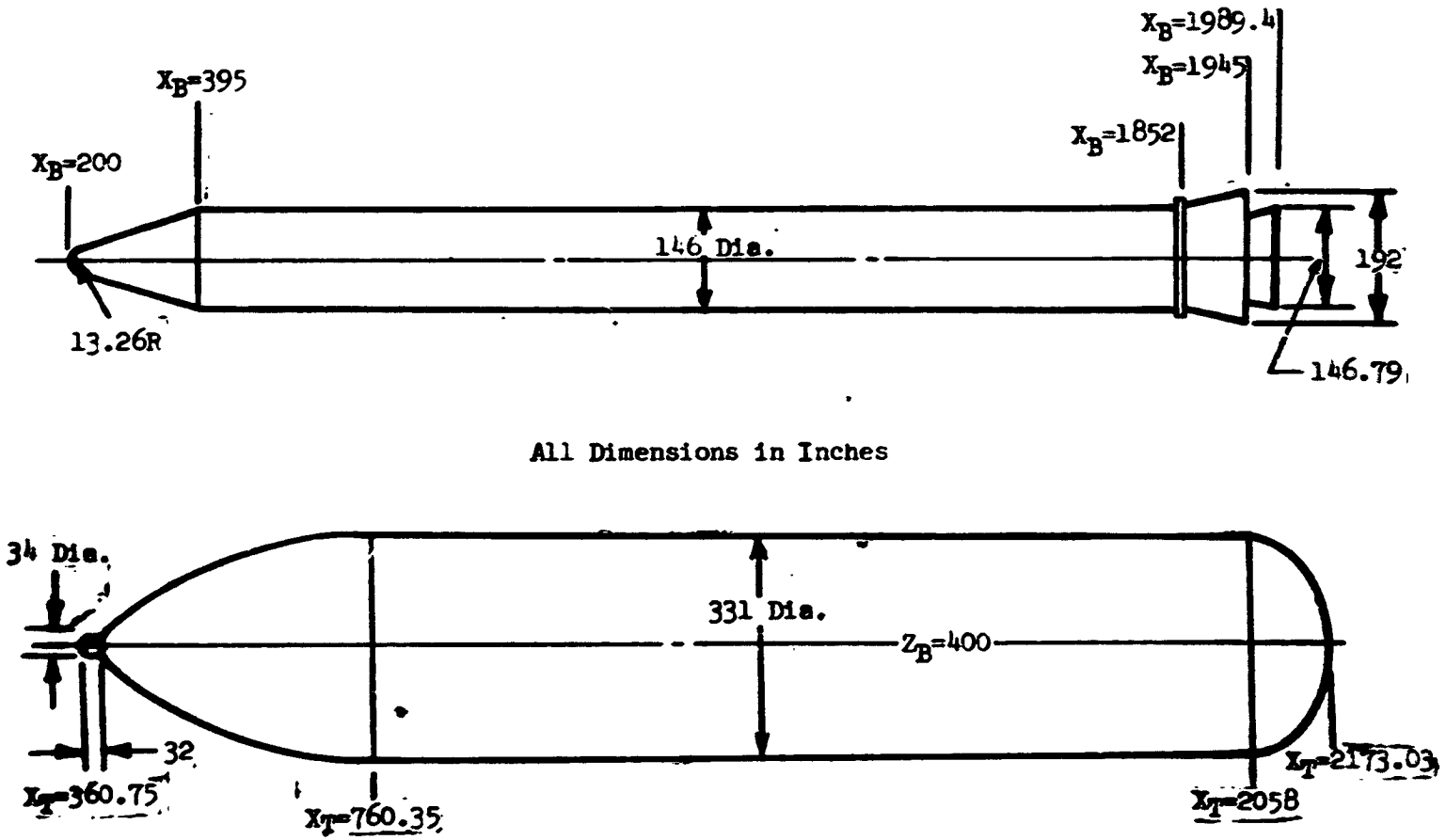

Figure 2-3. Configuration 5 External Tank and Solid Rocket Booster

ORIGINAL PAGE IS
OF POOR QUALITY

REFERENCE DIMENSIONS (FS)

	ORBITER	747 CARRIER
WING AREA ~ Ft^2	2690	5500
MAC ($\bar{c}$) ~ INCHES	474.81	327.78
SPAN (b) ~ INCHES	936.68	2348.04
MOMENT REFERENCE CENTER	67.5% LB	25.0 % $\bar{C}$
F.S. ~ INCHES	1109.0	1339.9
W.P. ~ INCHES	375.0	190.8

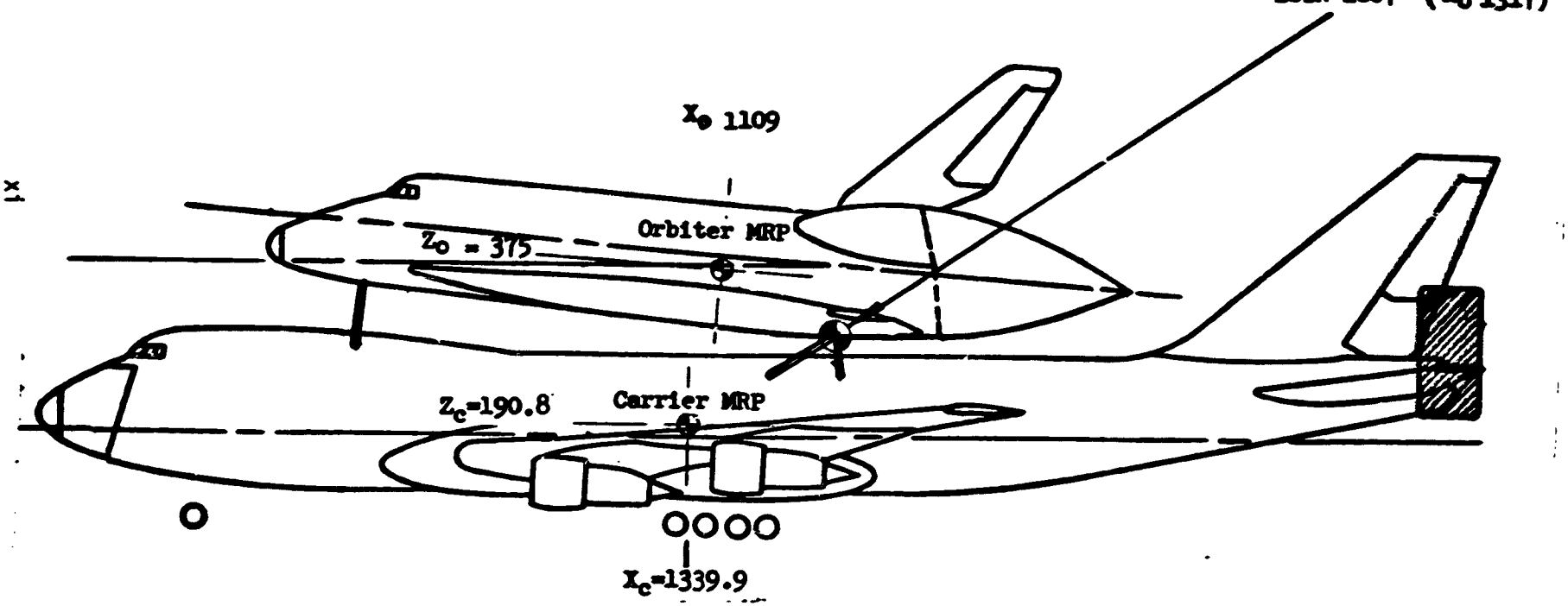

Figure 2-4. Orbiter/747 Flight Test Configuration

Each section is subdivided into five configuration categories:

1) Booster data

2) Orbiter data

3) Booster/orbiter data

4) External tank data

5) Carrier data

Information on each test is as follows:

1) DMS report number

2) NASA series number

3) NASA CR number

4) NASA TM X- number

5) Two-character test code

6) Configuration (specific)

7) Test number

5. WIND TUNNEL TEST/DATAMAN DATA PROCESSING SUMMARY

Space shuttle wind tunnel test data incorporated into the DATAMAN data base are listed by DMS report number in the processing summary (table 5-1). This summary collects test particulars so the reader can evaluate or categorize data. It contains the following information:

1) Test facility

2) Test identification

3) Configurations tested

4) Purpose of test

5) Type of test

6) Model scale

7) Test Mach number range

8) Testing agency

9) Cognizant test/DMS personnel

10) Basic publication numbers

6. SPACE SHUTTLE FACILITY WIND TUNNEL SUMMARY

Numerous wind tunnel facilities test space shuttle configurations. Table 6-1 collects information on tests completed or in process, grouped by facility. It contains the following information:

1) Two-character test code

2) Facility

3) Tunnel

4) Test number

5) NASA series number

6) DATAMAN report number

TABLE 3-1. Summary Data Reports List

(No Data Available at Present)

TABLE 4-1.

Data File Report Digest

INDEX OF RECENT PUBLICATIONS
JULY /SEPTEMBER

ORBITER DATA

DMS DMS-DR-	NASA SERIES NUMBER	NASA CR NUMBER	NASA TM-X NUMBER	CONFIGURATION	TEST NUMBER	DATASET 2-CHARACTER DESCRIPTOR
2241 V-01	OH39	160,490		MODEL 60-3, VEH. 4	AEDC - HYPERSONIC WIND TUNNEL (B) 74A -	V9
2241 V-02	OH39	160,491		MODEL 60-3, VEH. 4	AEDC - HYPERSONIC WIND TUNNEL (B) 74A -	V9
2241 V-03	OH39	160,492		MODEL 60-3, VEH. 4	AEDC - HYPERSONIC WIND TUNNEL (B) 74A -	V9
2241 V-04	OH39	160,493		MODEL 60-3, VEH. 4	AEDC - HYPERSONIC WIND TUNNEL (B) 74A -	V9
2340 V-01	OH98	160,501		0.0175-SCALE THIN-SKIN THERMOCOUPL E SHUTTLE ORBITER 60-0	AEDC - HYPERSONIC WIND TUNNEL (B) J7A -	VS
2340 V-02	OH98	160,502		0.0175-SCALE THIN-SKIN THERMOCOUPL E SHUTTLE ORBITER 60-0	AEDC - HYPERSONIC WIND TUNNEL (B) J7A -	VS
2478 V-01	LA131	160,503		B75C16E64F16FR22HG1M52N108N109N110 N111R20V27	LARC - UNITARY PLAN WIND TUNNEL 1299 -	7A
2478 V-02	LA131	160,504		B75C16E64F16FR22HG1M52N108N109N110 N111R20V27	LARC - UNITARY PLAN WIND TUNNEL 1299 -	7A
2478 V-03	LA131	160,505		B75C16E64F16FR22HG1M52N108N109N110 N111R20V27	LARC - UNITARY PLAN WIND TUNNEL 1299 -	7A

INDEX OF RECENT PUBLICATIONS
JULY /SEPTEMBER

INTEGRATED VEHICLE DATA

DMS DMS-DR-	NASA SERIES NUMBER	NASA CR NUMBER	NASA TM-X NUMBER	CONFIGURATION	TEST NUMBER	DATASET 2-CHARACTER DESCRIPTOR
2408 V-01	IA156B	160.498		B75C16E64F16FR22HG1M52N108N109N110 N111R20U1V27V29VT10VT11VT14VT17W13 1T39527	ARC - 9-FOOT BY 7-FOOT SUPERSONIC WIND T UNNEL (UNITARY) 272 -	2T
2408 V-02	IA156B	160.499		B75C16E64F16FR22HG1M52N108N109N110 N111R20U1V27V29VT10VT11VT14VT17W13 1T39527	ARC - 9-FOOT BY 7-FOOT SUPERSONIC WIND T UNNEL (UNITARY) 272 -	2T
2408 V-03	IA156B	160.500		B75C16E64F16FR22HG1M52N108N109N110 N111R20U1V27V29VT10VT11VT14VT17W13 1T39527	ARC - 9-FOOT BY 7-FOOT SUPERSONIC WIND T UNNEL (UNITARY) 272 -	2T
2456 V-01	IA184	160.486		0.03-SCALE SHUTTLE INTEGRATED VEHI CLE 47-OTS	ARC - 9-FOOT BY 7-FOOT SUPERSONIC WIND T UNNEL (UNITARY) 347-1 -	3K
2456 V-02	IA184	160.487		0.03-SCALE SHUTTLE INTEGRATED VEHI CLE 47-OTS	ARC - 9-FOOT BY 7-FOOT SUPERSONIC WIND T UNNEL (UNITARY) 347-: -	3K
2475	LA140	160.509			LARC - 16-FOOT TRANSONIC TUNNEL 342 -	KY

INDEX OF WORK IN PROCESS

BOOSTER DATA

DMS DMS-DR-	NASA SERIES NUMBER	NASA CR NUMBER	NASA TM-X NUMBER	CONFIGURATION	TEST NUMBER	DATASET 2-CHARACTER DESCRIPTOR
2331	SA11FA/B/C				ARC - 11-FOOT, 9-FOOT, 8-FOOT, UNITARY WIND TUNNEL - 074-1	NX
2369	SA31F			SRB REENTRY CONFIG.	MSFC - HIGH REYNOLDS NUMBER WIND TUNNEL - 039	

INDEX OF WORK IN PROCESS

ORBITER DATA

DMS DMS-DR-	NASA SERIES NUMBER	NASA CR NUMBER	NASA TM-X NUMBER	CONFIGURATION	TEST NUMBER	DATASET 2-CHARACTER DESCRIPTOR
2085	OH10 IH2				ARC - 3.5-FOOT HYPERSONIC WIND TUNNEL - 171	B9
2188	LA39				LARC - UNITARY PLAN WIND TUNNEL - 1075	QY
2213	LA53 LA54				LARC - FREON TUNNEL - 220-237 20-INCH HYPERSONIC TUNNEL (MACH 6) - 456	HD
2220	LA52				LARC - 20-INCH HYPERSONIC TUNNEL (MACH 6) - 458	HN
2228	LA46A/B				LARC - UNITARY PLAN WIND TUNNEL - 1092/1117 1117	HG
2237	OA155			VEHICLE 5 ORBITER	LARC - V/STOL TRANSITION RESEARCH WIND TU NNEL - 114	J7
2256	LA68				LARC - 22-INCH HELIUM TUNNEL - 439	JB
2260	LA60B LA60C				LARC - 8-FOOT TRANSONIC PRESSURE TUNNEL - 715 8-FOOT TRANSONIC PRESSURE TUNNEL - 776	KB

INDEX OF WORK IN PROCESS

ORBITER DATA

DMS DMS-OR-	NASA SERIES NUMBER	NASA CR NUMBER	NASA TM-X NUMBER	CONFIGURATION	TEST NUMBER	DATASET 2-CHARACTER DESCRIPTOR
2261	OA100				ARC - 40-FOOT BY 80-FOOT SUBSONIC WIND TUNNEL 462 -	NA
2287	0513				ARC - 9-FOOT BY 7-FOOT SUPERSONIC WIND TUNNEL (UNITARY) 166-1 -	NN
2291	LA79				NSWC - TUNNEL 8A 1275 -	JM
2292	LA368				LARC - LOW-TURBULENCE PRESSURE TUNNEL 214 -	JS
2294	OA172			140A/B SS ORBITER (MODEL 43-0) ORBITER FERRY CONFIGURATION	NRLAD - LOW SPEED WIND TUNNEL 752 -	FG
2302	OA174			ORBITER VEHICLE 101 WITH TAIL CONE	ARC - 40-FOOT BY 80-FOOT SUBSONIC WIND TUNNEL 479 -	MD
2304	OA173			TAILCONE-ON	ARC - 12-FOOT PRESSURE TUNNEL 180-1 -	MS
2314	OA176			LANDING	NRLAD - LOW SPEED WIND TUNNEL 754 -	FJ
2322	OA228			SPACE SHUTTLE ORBITER VEHICLE 102	NRLAD - LOW SPEED WIND TUNNEL 757 -	FL

INDEX OF WORK IN PROCESS

ORBITER DATA

DMS DMS-OR-	NASA SERIES NUMBER	NASA CR NUMBER	NASA TM-X NUMBER	CONFIGURATION	TEST NUMBER	DATASET 2-CHARACTER DESCRIPTOR
2329	OA224			SSV ORBITER (MODEL 57-0) FOREBODY W/ ADP, FTP, AND ADP AND FTP	LARC - 16-FOOT TRANSONIC TUNNEL - 312	JU
2336	LA82				CALSPAN - 8-FOOT TRANSONIC WIND TUNNEL - T18-111	UN
2339	0532				ARC - 2-FOOT BY 2-FOOT TRANSONIC WIND TUNNEL - 167-1	2C
2343	LA85				LARC - 22-INCH HELIUM TUNNEL - 445	JY
2351	OA238	151,406		ORBITER 102 FOREBODY	NRLAD - LOW SPEED WIND TUNNEL - 764	FN
2353	LA89				ARC - 11-FOOT TRANSONIC WIND TUNNEL (UNITARY) - 213-1	2E
2360 V-01	OA221B/C	160,521		ORBITER VEHICLE 102 FOREBODY	ARC - 9-FOOT BY 7-FOOT SUPERSONIC WIND TUNNEL (UNITARY) - 119-1 8-FOOT BY 7-FOOT SUPERSONIC WIND TUNNEL (UNITARY) - 119	21

INDEX OF WORK IN PROCESS

ORBITER DATA

DMS DMS-DR-	NASA SERIES NUMBER	NASA CR NUMBER	NASA TM-X NUMBER	CONFIGURATION	TEST NUMBER	DATASET 2-CHARACTER DESCRIPTOR
2360 V-02	OA221B/C	160,522		ORBITER VEHICLE 102 FOREBODY	ARC - 9-FOOT BY 7-FOOT SUPERSONIC WIND TUNNEL (UNITARY) - 119-1 8-FOOT BY 7-FOOT SUPERSONIC WIND TUNNEL (UNITARY) - 119	21
2362	LA92				LARC - 8-FOOT TRANSONIC PRESSURE TUNNEL - 764	K1
2364	OA145B			B75C16E64F16FD3FR22HG1M52N108N109N 110N111R20V27VT10VT11VT12VT13VT14	ARC - 9-FOOT BY 7-FOOT SUPERSONIC WIND TUNNEL (UNITARY) - 118-1	2G
2373	LA99			LARC BUILT MODEL 201-0 0.030 SCALE SSV ORBITER WITH REMOTE ELEVONS	LARC - 8-FOOT TRANSONIC PRESSURE TUNNEL - 769	K9
2374	LA103				CALSPAN - 8-FOOT TRANSONIC WIND TUNNEL - T18-113	UP
2375	OA237			ORBITER VEHICLE 102 FOREBODY	ARC - 40-FOOT BY 80-FOOT SUBSONIC WIND TUNNEL - 500	2M
2379	LA106				LARC - 8-FOOT TRANSONIC PRESSURE TUNNEL - 776	KC
2380 V-01	OA145A	151,801		B75C16E64F16FD3FR22HG1M52N108N109N 110N111R20V27VT10VT11VT12VT13VT14	ARC - 11-FOOT TRANSONIC WIND TUNNEL (UNITARY) - 118-1	2F

INDEX OF WORK IN PROCESS

ORBITER DATA

DMS DMS-DR-	NASA SERIES NUMBER	NASA CR NUMBER	NASA TM-X NUMBER	CONFIGURATION	TEST NUMBER	DATASET 2-CHARACTER DESCRIPTOR
2380 V-02	OA145A	151.802		B75C16E64F16FD3FR22HG1M52N108N109N 110N111R20V27VT10VT11VT12VT13VT14	ARC - 11-FOOT TRANSONIC WIND TUNNEL (UNI TARY) 118-1 -	2F
2380 V-03	OA145A	151.803		B75C16E64F16FD3FR22HG1M52N108N109N 110N111R20V27VT10VT11VT12VT13VT14	ARC - 11-FOOT TRANSONIC WIND TUNNEL (UNI TARY) 118-1 -	2F
2380 V-04	OA145A	151.804		B75C16E64F16FD3FR22HG1M52N108N109N 110N111R20V27VT10VT11VT12VT13VT14	ARC - 11-FOOT TRANSONIC WIND TUNNEL (UNI TARY) 118-1 -	2F
2380 V-05	OA145A	151.805		B75C16E64F16FD3FR22HG1M52N108N109N 110N111R20V27VT10VT11VT12VT13VT14	ARC - 11-FOOT TRANSONIC WIND TUNNEL (UNI TARY) 118-1 -	2F
2380 V-06	OA145A	151.806		B75C16E64F16FD3FR22HG1M52N108N109N 110N111R20V27VT10VT11VT12VT13VT14	ARC - 11-FOOT TRANSONIC WIND TUNNEL (UNI TARY) 118-1 -	2F
2383	LA93				LARC - CONTINUOUS-FLOW HYPERSONIC TUNNEL 130 -	K2
2388	OH84A			MODEL 83-0 (.04 SCALE) ; MODEL 60-0 (.0175 SCALE)	AEDC - HYPERSONIC WIND TUNNEL (B) V41B-R4A -	4E
2388	OH84A				AEDC - HYPERSONIC WIND TUNNEL (B) V41B-R4A -	4E

INDEX OF WORK IN PROCESS

ORBITER DATA

DMS DMS-DP-	NASA SERIES NUMBER	NASA CR NUMBER	NASA TM-X NUMBER	CONFIGURATION	TEST NUMBER	DATASET 2-CHARACTER DESCRIPTOR
2389	OA145C			B75C16E64F16FD3FR22HG1M52N108N109N 110N111R20V27VT10VT11VT12VT13VT14	ARC - 8-FOOT BY 7-FOOT SUPERSONIC WIND T UNNEL (UNITARY) - 118-1	2H
2394	LA109				LTV - HIGH SPEED WIND TUNNEL - 611	FR
2397	LA113				LARC - 8-FOOT TRANSONIC PRESSURE TUNNEL - 780	KH
2400	OA234	160,518		ORBITER VEHICLE 102 FOREBODY	LERC - 10 BY 10-FOOT SUPERSONIC WIND TUNN EL - 042	GY
2409	LA115				LARC - 8-FOOT TRANSONIC PRESSURE TUNNEL -	KL
2411	LA116				LARC - 8-FOOT TRANSONIC PRESSURE TUNNEL - 804	3H
2420	OH103A			MODEL 83-0 LINES VL70-000140C	AEDC - HYPERSONIC WIND TUNNEL (B) - V2	4H
2421 V-01	OA251B/C	160,495		99-0	ARC - 9-FOOT BY 7-FOOT SUPERSONIC WIND T UNNEL (UNITARY) - 282-1 8-FOOT BY 7-FOOT SUPERSONIC WIND T UNNEL (UNITARY) -	2Z

INDEX OF WORK IN PROCESS

ORBITER DATA

DMS DMS-OR-	NASA SERIES NUMBER	NASA CR NUMBER	NASA TM-X NUMBER	CONFIGURATION	TEST NUMBER	DATASET 2-CHARACTER DESCRIPTOR
2421 V-02	OA251B/C	160,496		99-0	ARC - 9-FOOT BY 7-FOOT SUPERSONIC WIND TUNNEL (UNITARY) - 282-1 8-FOOT BY 7-FOOT SUPERSONIC WIND TUNNEL (UNITARY) -	2Z
2424 V-01	OA126A,B,C 160,	506		B62C9E64F9M16RSV8W131N112FD3N28	ARC - 289-1 9-FOOT BY 7-FOOT SUPERSONIC WIND TUNNEL (UNITARY) -	2Y
2424 V-02	OA126A,B,C	160,507		B62C9E64F9M16RSV8W131N112FD3N28	ARC - 289-1 9-FOOT BY 7-FOOT SUPERSONIC WIND TUNNEL (UNITARY) -	2Y
2424 V-03	OA126A,B,C	160,508		SSV 102 ORBITER CONFIGURATION 47-0	ARC - 289-1	3H
2425	LA117				LARC - 8-FOOT TRANSONIC PRESSURE TUNNEL - 813	KQ
2427	OH103B			MODEL 60-0; LINES VL70-000140C	AEDC - HYPERSONIC WIND TUNNEL (B) - V41B-V2C	4M
2430	OA270A			OV102(MODEL 39-0)	LARC - 16-FOOT TRANSONIC TUNNEL - 326	KN
2432	LA125				LARC - UNITARY PLAN WIND TUNNEL - 1243	KS
2441	LA127				LARC - LOW-TURBULENCE PRESSURE TUNNEL - 255	KU

INDEX OF WORK IN PROCESS

ORBITER DATA

DMS DMS-OR-	NASA SERIES NUMBER	NASA CR NUMBER	NASA TM-X NUMBER	CONFIGURATION	TEST NUMBER	DATASET 2-CHARACTER DESCRIPTOR
2442	LA128				LTV - HIGH SPEED WIND TUNNEL - 646	KY
2445	OA146			SSV 140A/B/C/R ORBITER	ARC - 8-FOOT BY 7-FOOT SUPERSONIC WIND TUNNEL (UNITARY) - 318-1	3G
2446	LA122				LARC - UNITARY PLAN WIND TUNNEL - 1270	KX
2447	0552				ARC - 11-FOOT TRANSONIC WIND TUNNEL (UNITARY) - 436-2	AB
2458	0536/41				ARC - 11-FOOT TRANSONIC WIND TUNNEL (UNITARY) - 369-1	3L
2459	0537				ARC - 9-FOOT BY 7-FOOT SUPERSONIC WIND TUNNEL (UNITARY) - 369-1	3M
2463	0542				ARC - 11-FOOT TRANSONIC WIND TUNNEL (UNITARY) - 390-1	3D
2464	OH848				AEDC - SUPERSONIC WIND TUNNEL (A) - V41B-67	4U
2465	OH105				AEDC - SUPERSONIC WIND TUNNEL (A) - V41B-67	4V

INDEX OF WORK IN PROCESS

ORBITER DATA

DMS DMS-OR-	NASA SERIES NUMBER	NASA CR NUMBER	NASA TM-X NUMBER	CONFIGURATION	TEST NUMBER	DATASET 2-CHARACTER DESCRIPTOR
2468	OH84C				ARC - 3.5-FOOT HYPERSONIC WIND TUNNEL - 246	3Q
2469	OH105B				ARC - 3.5-FOOT HYPERSONIC WIND TUNNEL - 247	3R
2470	0545				ARC - 11-FOOT TRANSONIC WIND TUNNEL (UNITARY) - 381	3S
2473	OA252			TPS TILE CAVITY FLOW FIELD MODEL	ARC - 2-FOOT BY 2-FOOT TRANSONIC WIND TUNNEL - 382-1	3T
2477	LA141A/B			ORBITER 74-0	LARC - 20-INCH HYPERSONIC TUNNEL (MACH 6) - 6546	KZ
2482	OA400				ARC - 11-FOOT TRANSONIC WIND TUNNEL (UNITARY) - 427-1 427-2	3X
2484	LA144			OV102-SSME ON	LTV - HIGH SPEED WIND TUNNEL - 742	FS
2486	OA253				AEDC - TRANSONIC PROPULSION WIND TUNNEL (PWT-16T) - 572	4Y

INDEX OF WORK IN PROCESS

INTEGRATED VEHICLE DATA

DMS DMS-DR-	NASA SERIES NUMBER	NASA CR NUMBER	NASA TM-X NUMBER	CONFIGURATION	TEST NUMBER	DATASET 2-CHARACTER DESCRIPTOR
2225	OH:0 1H2			SPACE SHUTTLE INTEGRATED VEHICLE P PESSURE MODEL 26-OTS	ARC - 3.5-FOOT HYPERSONIC WIND TUNNEL - 171	BG
2239	LA398				LARC - 8-FOOT TRANSONIC PRESSURE TUNNEL - 676	QX
2306	IA:35A/B/C				ARC - 11-FOOT, 9-FOOT, 8-FOOT UNITARY W IND TUNNEL - 144-1	NO
2357	1H68			INTEGRATED VEHICLE ORBITER PLUS TANK	ARC - 3.5-FOOT HYPERSONIC WIND TUNNEL - 222	2D
2372	1H72			OTS TANK ALONE	AEDC - SUPERSONIC WIND TUNNEL (A) - V41A-R2A	VZ
2377	IA144				ARC - 11-FOOT TRANSONIC WIND TUNNEL (UNI TARY) - 228-1	2N
2378	IA191				ARC - 11-FOOT TRANSONIC WIND TUNNEL (UNI TARY) - 412-1	AA
2391	IA244				LARC - 8-FOOT TRANSONIC PRESSURE TUNNEL - 779	KE

INDEX OF WORK IN PROCESS

INTEGRATED VEHICLE DATA

DMS DMS-DR-	NASA SERIES NUMBER	NASA CR NUMBER	NASA TM-X NUMBER	CONFIGURATION	TEST NUMBER	DATASET 2-CHARACTER DESCRIPTOR
2393	IH51A			OT FLAT PLATE	ARC - 3.5-FOOT HYPERSONIC WIND TUNNEL -	20
2398	IA105A				AEDC - TRANSONIC PROPULSION WIND TUNNEL (PWT-16T) - 470	4B
2403 V-01	IA156A	160,515		B75C16E64F16FR22HG1M52N108N109N110 N111R20U1V27V29VT10VT11VT14VT17W13 1T39527	AEDC - TRANSONIC PROPULSION WIND TUNNEL (PWT-16T) - 470	4C
2403 V-02	IA156A	160,516		B75C16E64F16FR22HG1M52N108N109N110 N111R20U1V27V29VT10VT11VT14VT17W13 1T39527	AEDC - TRANSONIC PROPULSION WIND TUNNEL (PWT-16T) - 470	4C
2403 V-03	IA156A	160,517		B75C16E64F16FR22HG1M52N108N109N110 N111R20U1V27V29VT10VT11VT14VT17W13 1T39527	AEDC - TRANSONIC PROPULSION WIND TUNNEL (PWT-16T) - 470	4C
2404 V-01	IA119	160,510		88-OTS-.02 SCALE OF THE INTEGRATED SPACE SHUTTLE VEHICLE	ARC - 11-FOOT TRANSONIC WIND TUNNEL (UNI TARY) - 275-1	2R
2404 V-02	IA119	160,511		88-OTS-.02 SCALE OF THE INTEGRATED SPACE SHUTTLE VEHICLE	ARC - 11-FOOT TRANSONIC WIND TUNNEL (UNI TARY) - 275-1	2R
2404 V-03	IA119	160,512		88-OTS-.02 SCALE OF THE INTEGRATED SPACE SHUTTLE VEHICLE	ARC - 11-FOOT TRANSONIC WIND TUNNEL (UNI TARY) - 275-1	2R

INTEGRATED VEHICLE DATA

DMS DMS-OR-	NASA SERIES NUMBER	NASA CR NUMBER	NASA TM-X NUMBER	CONFIGURATION	TEST NUMBER	DATASET 2-CHARACTER DESCRIPTOR
2404 V-04	IA119	160,513		88-OTS-.02 SCALE OF THE INTEGRATED SPACE SHUTTLE VEHICLE	ARC - 11-FOOT TRANSONIC WIND TUNNEL (UNITARY) - 275-1	2R
2406	IA181				MSFC - 14-INCH TRISONIC WIND TUNNEL - 649	1U
2407	IH73				ARC - 3.5-FOOT HYPERSONIC WIND TUNNEL - 233-1	2V
2412	IH90				ARC - 3.5-FOOT HYPERSONIC WIND TUNNEL - 234-1	2W
2413	IA105B				ARC - 9-FOOT BY 7-FOOT SUPERSONIC WIND TUNNEL (UNITARY) - 242-1	2U
2416	IA603-1				MSFC - TRISONIC WIND TUNNEL - 668	6C
2428	IH11			84-OTS- .035 SCALE MODEL OF THE INTEGRATED SPACE SHUTTLE VEHICLE	LERC - 10 BY 10-FOOT SUPERSONIC WIND TUNNEL - 045	6I
2429	IH51B			OT FLAT PLATE	ARC - 3.5-FOOT HYPERSONIC WIND TUNNEL - 239	3C
2438	IA138			PROPOSED VEHICLE 5	ARC - 9-FOOT BY 7-FOOT SUPERSONIC WIND TUNNEL (UNITARY) - 246-1	3D

INDEX OF WORK IN PROCESS

INTEGRATED VEHICLE DATA

DMS DMS-DR-	NASA SERIES NUMBER	NASA CR NUMBER	NASA TM-X NUMBER	CONFIGURATION	TEST NUMBER	DATASET 2-CHARACTER DESCRIPTOR
2439	IA182				AEDC - TRANSONIC PROPULSION WIND TUNNEL (PWT-16T) - 517	4P
2444 V-01	IA183	160,488		B75C16E64F16FR22HG1M52N108N109N110 N111R20U1V27VT10VT11VT12VT13VT14 VT15VT16VT17W131T39S27	AEDC - TRANSONIC PROPULSION WIND TUNNEL (PWT-16T) - 519	4Q
2444 V-02	IA183	160,489		B75C16E64F16FR22HG1M52N108N109N110 N111R20U1V27VT10VT11VT12VT13VT14 VT15VT16VT17W131T39S27	AEDC - TRANSONIC PROPULSION WIND TUNNEL (PWT-16T) - 519	4Q
2448 V-01	IH51C	160,519			ARC - 3.5-FOOT HYPERSONIC WIND TUNNEL - 241	3F
2448 V-02	IH51C	160,520			ARC - 3.5-FOOT HYPERSONIC WIND TUNNEL - 241	3F
2449	IA132			EXTENAL OXYGEN HYDROGEN TANK FOREB ODY MODEL	AEDC - TRANSONIC PROPULSION WIND TUNNEL (PWT-16T) - 505	4R
2452	IH99				ARC - 3.5-FOOT HYPERSONIC WIND TUNNEL - 230	2P
2457	IA180			EXTERNAL OXYGEN HYDROGEN TANK FORE BODY MODEL	LARC - UNITARY PLAN WIND TUNNEL - 1267	KV
2460	FA27				MSFC - 14-INCH TRISONIC WIND TUNNEL - 655	1Y

INDEX OF WORK IN PROCESS

INTEGRATED VEHICLE DATA

DMS DMS-DR-	NASA SERIES NUMBER	NASA CR NUMBER	NASA TM-X NUMBER	CONFIGURATION	TEST NUMBER	DATASET 2-CHARACTER DESCRIPTOR
2461	IH51D				ARC - 3.5-FOOT HYPERSONIC WIND TUNNEL - 244	3N
2462	IA131B				ARC - 9-FOOT BY 7-FOOT SUPERSONIC WIND TUNNEL (UNITARY) - 283-1	3E
2466	IH102				AEDC - SUPERSONIC WIND TUNNEL (A) - V41B-67	4W
2467	IH103				ARC - 3.5-FOOT HYPERSONIC WIND TUNNEL - 245	3P
2471	LA132	160,514		LAUNCH VEHICLE - 89OTS	LARC - 16-FOOT TRANSONIC TUNNEL - 341	KW
2474	FA28			ORBITER ALONE LAUNCH CONFIGURATION (NO PROTUBERANCES ON ET)	MSFC - 14-INCH TRISONIC WIND TUNNEL - 656	1Z
2478	IA190A				ARC - 11-FOOT TRANSONIC WIND TUNNEL (UNITARY) - 411-1,2,3	3U
2480	IH104			ORBITER+TANK	ARC - 3.5-FOOT HYPERSONIC WIND TUNNEL - 250	3W
2481	IA602-1			OTS (MODEL 74) OTS + LBM	MSFC - 14-INCH TRISONIC WIND TUNNEL - 665	6B

INDEX OF WORK IN PROCESS

INTEGRATED VEHICLE DATA

DMS DMS-DR-	NASA SERIES NUMBER	NASA CR NUMBER	NASA TM-X NUMBER	CONFIGURATION	TEST NUMBER	DATASET 2-CHARACTER DESCRIPTOR
2483	IA190B				ARC - 9-FOOT BY 7-FOOT SUPERSONIC WIND TUNNEL (UNITARY) - 411-1,2,3	VH

INDEX OF WORK IN PROCESS

CARRIER DATA

DMS DMS-DP-	NASA SERIES NUMBER	NASA CR NUMBER	NASA TM-X NUMBER	CONFIGURATION	TEST NUMBER	DATASET 2-CHARACTER DESCRIPTOR
2201	CA3			BOEING 747 CARRIER (MODEL TE 1065)	UW - LOW SPEED WIND TUNNEL 1136	GL
2337	CA14A				TBCA - TRANSONIC WIND TUNNEL 1496 1497	GR

INDEX OF WORK IN PROCESS

EXTERNAL TANK DATA

DMS DMS-DR-	NASA SERIES NUMBER	NASA CR NUMBER	NASA TM-X NUMBER	CONFIGURATION	TEST NUMBER	DATASET 2-CHARACTER DESCRIPTOR
2085	DH10 1H2			ARC - 3.5-FOOT HYPERSONIC WIND TUNNEL - 171		89

INDEX OF PUBLISHED DATA

BOOSTER DATA

DMS DMS-DR-	NASA SERIES NUMBER	NASA CR NUMBER	NASA TM-X NUMBER	CONFIGURATION	TEST NUMBER	DATASET 2-CHARACTER DESCRIPTOR
2012	SA1F	120.090		SRB(PRR)	MSFC - 14-INCH TRISONIC WIND TUNNEL - 554	79
2025	SA3F	128.767		142-INCH DIAMETER SRB WITH AND WIT HOUT STRAKES	MSFC - 14-INCH TRISONIC WIND TUNNEL - 565	80
2051	SA5F	128.774		BOOSTER MSFC MODEL NO.449	MSFC - 14-INCH TRISONIC WIND TUNNEL - 572	86
2087	SA10F	134.116		SRB WITH VARIED SHROUD LENGTHS AND FLARE ANGLES	MSFC - 14-INCH TRISONIC WIND TUNNEL - 578	91
2088	SA2FA SA2FB	134.105		142-INCH SOLID ROCKET BOOSTER	LARC - 8-FOOT TRANSONIC PRESSURE TUNNEL - 655 8-FOOT TRANSONIC PRESSURE TUNNEL - 662	PS
2111	SA26F	134.435		MODEL 449/CONF.NBRE1, NBRE1A, NBRE 1B, NBRE1S1ELT	MSFC - 14-INCH TRISONIC WIND TUNNEL - 590/595	95
2142	FA4	134.402		TITAN III C SRM	MSFC - 14-INCH TRISONIC WIND TUNNEL - 587	97
2150	SA25F	141.511		SRB	LARC - UNITARY PLAN WIND TUNNEL - 1087	H9
2161	SA6F	134.422		SRB-BODY ALONE	LERC - 10 BY 10-FOOT SUPERSONIC WIND TUNN EL - 035	GE

INDEX OF PUBLISHED DATA

BOOSTER DATA

DMS DMS-DR-	NASA SERIES NUMBER	NASA CR NUMBER	NASA TM-X NUMBER	CONFIGURATION	TEST NUMBER	DATASET 2-CHARACTER DESCRIPTOR
2207	SA29F	147,608		MODEL 467, SRB NOSE CONE AND FORWARD CYLINDRICAL BODY	MSFC - HIGH REYNOLDS NUMBER WIND TUNNEL - 033	IE
2216	SH12F	141,802		SRB	LARC - UNITARY PLAN WIND TUNNEL - 1115	HA
2223	SA8F	141,549		ORB.W/ ATTACH RING,AFT RING,W/AND W/O PROTUBERANCES, NOSE CAP	MSFC - 14-INCH TRISONIC WIND TUNNEL - 604	IH
2244	SA28F	151,082		146-INCH WITH AND WITHOUT PROTUBERANCES	MSFC - 14-INCH TRISONIC WIND TUNNEL - 603	II
2277	SA13F	144,579		MODEL 461, 142-INCH DIA. WITHOUT PROTUBERANCES	MSFC - HIGH REYNOLDS NUMBER WIND TUNNEL - 034	IF
2310 V-01	SA14FB	151,083		RIGHT-HAND SRB REENTRY CONFIG.	MSFC - 14-INCH TRISONIC WIND TUNNEL - 640	IP
2310 V-02	SA14FB	151,084		RIGHT-HAND SRB REENTRY CONFIG.	MSFC - 14-INCH TRISONIC WIND TUNNEL - 640	IP
2325	SA14FA	147,645		CONF. 139	MSFC - 14-INCH TRISONIC WIND TUNNEL - 620	IO
2334	SA16F	147,648		REENTRY CONFIG. WITH ALL MAJOR PROTUBERANCES	AEDC - TRANSONIC PROPULSION WIND TUNNEL (PWT-4T) - E3A	VP
2345	SA21F		78195	146-INCH SRB/TRUNCATED NOSE (MODEL 486)	MSFC - 14-INCH TRISONIC WIND TUNNEL - 645	IR

INDEX OF PUBLISHED DATA

ORBITER DATA

DMS DMS-DR-	NASA SERIES NUMBER	NASA CR NUMBER	NASA TM-X NUMBER	CONFIGURATION	TEST NUMBER	DATASET 2-CHARACTER DESCRIPTOR
2001	MA5	128,750		NR ATP ORBITER	LARC - UNITARY PLAN WIND TUNNEL - 1002	OO
2002	LA1	128,752		NR PRR ORBITER	LARC - 8-FOOT TRANSONIC PRESSURE TUNNEL - 626	OU
2003	MA2	128,754		NR ATP ORBITER	LARC - 22-INCH HELIUM TUNNEL - 409	OS
2004	MA1	120,082		MSC 040A ORBITER	LTV - 15-FOOT BY 20-FOOT SUBSONIC WIND TUNNEL - S-081	DD
2005	OA1	120,070		NR ATP BASELINE ORBITER	MSFC - 14-INCH TRISONIC WIND TUNNEL - 555	76
2007	OA4	128,760		NR SSV ORBITER	ARC - 3.5-FOOT HYPERSONIC WIND TUNNEL - 147	BI
2008	MA4	128,751		NR ATP ORBITER	LARC - CONTINUOUS-FLOW HYPERSONIC TUNNEL - 89	OT
2008 R-01	MA4	128,751		NR ATP ORBITER	LARC - CONTINUOUS-FLOW HYPERSONIC TUNNEL - 89	OT
2009	OA3	128,761		SHUTTLE ORBITER OA3	ARC - 6-FOOT BY 6-FOOT SUPERSONIC WIND TUNNEL - 650	BH

INDEX OF PUBLISHED DATA

ORBITER DATA

DMS DMS-OR-	NASA SERIES NUMBER	NASA CR NUMBER	NASA TM-X NUMBER	CONFIGURATION	TEST NUMBER	DATASET 2-CHARACTER DESCRIPTOR
2014	OA7	128,753		NR PRR-SSV ORBITER	LARC - UNITARY PLAN WIND TUNNEL - 1007	OV
2016	OA2	120,092		NR ATP ORBITER	NRLAD - LOW SPEED WIND TUNNEL - 689	DF
2017	OA5	123,851		NR ATP ORBITER	NRLAD - LOW SPEED WIND TUNNEL - 690	DG
2019	OA6	128,756		ATP AND PRR ORBITER	NRLAD - LOW SPEED WIND TUNNEL - 694	DI
2020	OA9	128,757		PRR ORBITER	NRLAD - LOW SPEED WIND TUNNEL - 696	DJ
2021 V-01	OA45	128,758		-89A ORBITER	NRLAD - LOW SPEED WIND TUNNEL - 699	DL
2021 V-02	OA45	128,758		-89A ORBITER	NRLAD - LOW SPEED WIND TUNNEL - 699	DL
2022	OA10	128,759		RI -89B ORBITER	NRLAD - LOW SPEED WIND TUNNEL - 698	DK
2023	LA2	128,763		LO-100 ORBITER	LARC - 22-INCH HELIUM TUNNEL - 411	OY
2029	OA47	128,765		2A ORBITER	MSFC - 14-INCH TRISONIC WIND TUNNEL - 568	B4

INDEX OF PUBLISHED DATA

ORBITER DATA

DMS DMS-OR-	NASA SERIES NUMBER	NASA CR NUMBER	NASA TM-X NUMBER	CONFIGURATION	TEST NUMBER	DATASET 2-CHARACTER DESCRIPTOR
2030	OA14	128,763		-89B ROCKWELL INTERNATIONAL SPACE SHUTTLE ORBITER	NRLAD - LOW SPEED WIND TUNNEL - 700	DM
2031	LA3	128,769		LO-100 ORBITER	LARC - CONTINUOUS-FLOW HYPERSONIC TUNNEL - 85	OZ
2033	LA4	128,772		LO-100 ORBITER	LARC - UNITARY PLAN WIND TUNNEL - 995 1014	P1
2034	LA22	128,764		DOUBLE DELTA WING ORBITER	LARC - 22-INCH HELIUM TUNNEL - 405	ON
2035	OH2A OH2B	134,077		THERMAL PROTECTION SYSTEM	ARC - 3.5-FOOT HYPERSONIC WIND TUNNEL - 158	BU
2036	LA5	128,775		LARC LO-100 ORBITER	LARC - 22-INCH HELIUM TUNNEL - 413	P2
2037	OA84	134,405		140A/B ORBITER	LTV - HIGH SPEED WIND TUNNEL - 488	FD
2038	OA16	128,793		NR ORBITER	NRLAD - LOW SPEED WIND TUNNEL - 701	DN
2040	LA6	128,773		NAR 089-B-139 ORBITER	LARC - 8-FOOT TRANSONIC PRESSURE TUNNEL - 643	P4
2041	LA7A	128,781		LARC LO-100 ORBITER (SHIPS)	LARC - 8-FOOT TRANSONIC PRESSURE TUNNEL - 644	P5

INDEX OF PUBLISHED DATA

ORBITER DATA

DMS DMS-DR-	NASA SERIES NUMBER	NASA CR NUMBER	NASA TM-X NUMBER	CONFIGURATION	TEST NUMBER	DATASET 2-CHARACTER DESCRIPTOR
2042	IA52	134.087		ORBITER ALONE	MSFC - 14-INCH TRISONIC WIND TUNNEL - 584	9B
2043	LA16	128.770		RSI TILES,ORBITER	LARC - MACH 8 VARIABLE-DENSITY HYPERSONIC TUNNEL - 624	PB
2044	OA11A	128.786		SHUTTLE ORBITER 2A	ARC - 3.5-FOOT HYPERSONIC WIND TUNNEL - 157	BS
2045	OA18	128.779		ROCKWELL SSV ORBITER	NRLAD - LOW SPEED WIND TUNNEL - 704	DO
2046	LA17	128.776		LARC LO-100 ORBITER	LARC - 8-FOOT TRANSONIC PRESSURE TUNNEL - 648	PC
2047	LA31	134.086		040A SPACE SHUTTLE CONFIGURATION	LARC - CONTINUOUS-FLOW HYPERSONIC TUNNEL - 98	ON
2049	OH40	128.771		NR 2A ORBITER	LARC - MACH 8 VARIABLE-DENSITY HYPERSONIC TUNNEL - 3619/3670	CX
2050	OA43	128.790		ROCKWELL SSV 2A ORBITER	ARC - 6-FOOT BY 6-FOOT SUPERSONIC WIND T UNNEL - 706	BT
2052	LA78	128.791		LO-100 ORB(SHIPS: (BW2VFB)	LARC - UNITARY PLAN WIND TUNNEL - 1015	PB

ORBITER DATA

OMS OMS-OP-	NASA SERIES NUMBER	NASA CR NUMBER	NASA TM-X NUMBER	CONFIGURATION	TEST NUMBER	DATASET 2-CHARACTER DESCRIPTOR
2053 V-01	CA21A S	128.792		ORBITER 3	NPLAD - LOW SPEED WIND TUNNEL - 705	DP
2053 V-02	CA21B	128.792		ORBITER 3	NPLAD - LOW SPEED WIND TUNNEL - 705	DP
2054	LA8A LA8B	128.796		NP ORBITER	LARC - MILITARY PLAN WIND TUNNEL - 1023/1034	P6
2055 V-01	CA49	128.780		ORBITER 139	MSFC - 14-INCH TRISONIC WIND TUNNEL - 574	87
2055 V-01	CA49	128.780		ORBITER 139B	MSFC - 14-INCH TRISONIC WIND TUNNEL - 574	87
2055 V-02	CA49	128.780		ORBITER 139	MSFC - 14-INCH TRISONIC WIND TUNNEL - 574	87
2055 V-02	CA49	128.780		ORBITER 139B	MSFC - 14-INCH TRISONIC WIND TUNNEL - 574	87
2055 V-03	CA49	128.780		ORBITER 139	MSFC - 14-INCH TRISONIC WIND TUNNEL - 574	87
2055 V-03	CA49	128.780		ORBITER 139B	MSFC - 14-INCH TRISONIC WIND TUNNEL - 574	87
2056	LA9	128.782		NAR 0838-MOD NOSE + OMS	LARC - LOW-TURBULENCE PRESSURE TUNNEL - 130/135	P7

INDEX OF PUBLISHED DATA

ORBITER DATA

DMS DMS-OR-	NASA SERIES NUMBER	NASA CR NUMBER	NASA TM-X NUMBER	CONFIGURATION	TEST NUMBER	DATASET 2-CHARACTER DESCRIPTOR
2056	LA9	128,782		NAR 089B-MOD NOSE	LARC - LOW-TURBULENCE PRESSURE TUNNEL - 130/135	P7
2057	OA44	134,411		ORBITER, MODIFIED 2A.3	LARC - UNITARY PLAN WIND TUNNEL - 1035	PN
2058	OA17	134,079		ORBITER NAR VL70-000134B CONFIG.	LARC - LOW-TURBULENCE PRESSURE TUNNEL - 138	PP
2059	OA11B	128,798		ORBITER 2A	ARC - 3.5-FOOT HYPERSONIC WIND TUNNEL - 160	BX
2060	OA58	134,091		ORBITER 3.A	ARC - 3.5-FOOT HYPERSONIC WIND TUNNEL - 163	BY
2061	OA68	128,789		VL70-000147B (MODEL NO. 49-0)	NRLAD - 7-FOOT TRISONIC WIND TUNNEL - 276	DR
2061	OA68	128,789		VL70-000139B (MODEL NO. 42-0)	NRLAD - 7-FOOT TRISONIC WIND TUNNEL - 276	DR
2066	LA11	128,783		SPACE SHUTTLE ORBITER 089B-139	LARC - CONTINUOUS-FLOW HYPERSONIC TUNNEL - 96	PD
2067	052	128,777		0.025 SCALE MODEL OF SPACE SHUTTLE ORBITER (24-0) FIN/RUDDER	LARC - 26-INCH TRANSONIC BLOWDOWN TUNNEL - 544	PZ
2068	OA71A	128,797		-89B(2A) ORBITER	NRLAD - LOW SPEED WIND TUNNEL - 708	DS

INDEX OF PUBLISHED DATA

ORBITER DATA

DMS DMS-DR-	NASA SERIES NUMBER	NASA CR NUMBER	NASA TM-X NUMBER	CONFIGURATION	TEST NUMBER	DATASET 2-CHARACTER DESCRIPTOR
2069	MA7	134.074		PRR ORBITER	LARC - UNITARY PLAN WIND TUNNEL - 1031	PM
2071	OA23	128.799		MODEL 49-0	ARC - 3.5-FOOT HYPERSONIC WIND TUNNEL - 168	B6
2071	OA23	128.799		MODEL 32-0	ARC - 3.5-FOOT HYPERSONIC WIND TUNNEL - 168	B6
2073	OA70	134.070		MODEL 42-0 OF THE VL70-0001398 SSV ORBITER CONFIGURATION 3	LARC - UNITARY PLAN WIND TUNNEL - 1043	PV
2074	OA57A	134.414		-898 SPACE SHUTTLE ORBITER FERRY CONFIGURATION	NRLAD - LOW SPEED WIND TUNNEL - 709	DT
2075	OH41	128.784		MODEL SS-H-00326-1	LARC - MACH 8 VARIABLE-DENSITY HYPERSONIC TUNNEL - 3778/ 3855	P3
2076	OH41A	128.785		SS-H-00326-4	LARC - MACH 8 VARIABLE-DENSITY HYPERSONIC TUNNEL - 4060/ 4079	P9
2076	OH41A	128.785		SS-H-003268-5,-6,-7	LARC - MACH 8 VARIABLE-DENSITY HYPERSONIC TUNNEL - 4060/ 4079	P9

ORBITER DATA

DMS DMS-OR-	NASA SERIES NUMBER	NASA CR NUMBER	NASA TM-X NUMBER	CONFIGURATION	TEST NUMBER	DATASET 2-CHARACTER DESCRIPTOR
2077 V-01	1A29 0A63	134.095			ARC - 6-FOOT BY 6-FOOT SUPERSONIC WIND T UNNEL - 630	EB
2079	LA15	134.083		0898-1398(MODIFIED NOSE)	LARC - 20-INCH HYPERSONIC TUNNEL (MACH 6) - 441	PH
2080 V-01	0A57B	134.416		-89B SPACE SHUTTLE ORBITER FERRY C ONFIGURATION	NRLAD - LOW SPEED WIND TUNNEL - 713	DV
2080 V-02	0A57B	134.417		-89B SPACE SHUTTLE ORBITER FERRY C ONFIGURATION	NRLAD - LOW SPEED WIND TUNNEL - 713	DV
2081 V-01	0A69	141.580		-140 A/B SPACE SHUTTLE ORBITER	NRLAD - LOW SPEED WIND TUNNEL - 711	DQ
2081 V-02	0A69	141.581		-140 A/B SPACE SHUTTLE ORBITER	NRLAD - LOW SPEED WIND TUNNEL - 711	DQ
2082	0A73	128.800		CONFIGURATION 3A ORBITER	ARC - 3.5-FOOT HYPERSONIC WIND TUNNEL - 167	B5
2083	0A20A	134.081		SSV 140A/B ORBITER	LARC - UNITARY PLAN WIND TUNNEL - 1057	Q2
2086	0A71C	134.078		-89B ORBITER	NRLAD - LOW SPEED WIND TUNNEL - 712	DU
2089	0A25	134.082		140A/B	LARC - 8-FOOT TRANSONIC PRESSURE TUNNEL - 661	Q1

INDEX OF PUBLISHED DATA

ORBITER DATA

DMS DMS-DR-	NASA SERIES NUMBER	NASA CR NUMBER	NASA TM-X NUMBER	CONFIGURATION	TEST NUMBER	DATASET 2-CHARACTER DESCRIPTOR
2090	LABC	134.080		0898-1398 ORBITER CONFIGURATION	LARC - UNITARY PLAN WIND TUNNEL - 1040	P6
2091	LA7B	141.512		LO-100 ORBITER	LARC - 8-FOOT TRANSONIC PRESSURE TUNNEL - 657/660	P5
2092	OA72		71968	ORBITER 139B (34-0)	LARC - 22-INCH HELIUM TUNNEL - 415	PT
2094	OS1	134.073		BASIC WING AND 11 HZ INBD AND 13.5 HZ OUTBD ELEVON ROTATIONAL FREQ	LARC - 26-INCH TRANSONIC BLOWDOWN TUNNEL - 545	QT
2095	OA49	134.404		ORBITER	MSFC - 14-INCH TRISONIC WIND TUNNEL - 581	92
2096	OH13	134.101		B10C5D7F4M3V5W87	LARC - MACH 8 VARIABLE-DENSITY HYPERSONIC TUNNEL - 644	PO
2097	OA62A	134.102		140A/B SSV ORBITER	NRLAD - LOW SPEED WIND TUNNEL - 715	DW
2100	OH3A OH3B	134.075			AEDC - HYPERSONIC WIND TUNNEL (B) - VA289	TM
2101	OH42A OH42B OH42C	134.076		B17C7M4F5W103E22V7R5	LARC - MACH 8 VARIABLE-DENSITY HYPERSONIC TUNNEL - 4080/4105 4130/4193	PA

INDEX OF PUBLISHED DATA

ORBITER DATA

DMS DMS-DR-	NASA SERIES NUMBER	NASA CR NUMBER	NASA TM-X NUMBER	CONFIGURATION	TEST NUMBER	DATASET 2-CHARACTER DESCRIPTOR
2102	1A15	134,089		OT+L+P1+A1+F	ARC - 3.5-FOOT HYPERSONIC WIND TUNNEL - 175	EG
2103	1A62F	134,094		(034)(T14)(S12)	MSFC - 14-INCH TRISONIC WIND TUNNEL - 589 TRISONIC WIND TUNNEL -	94
2103	1A62F	134,094		(034)(T9)(S12)(PT4)(FR4)	MSFC - 14-INCH TRISONIC WIND TUNNEL - 589 TRISONIC WIND TUNNEL -	94
2104 V-01	0A62B	134,112		140A/B SSV ORBITER	NRLAD - LOW SPEED WIND TUNNEL - 717	DZ
2104 V-02	0A62B	134,113		140A/B SSV ORBITER	NRLAD - LOW SPEED WIND TUNNEL - 717	DX
2106	LA14A LA14B		72630	089B ORB.W/MOD NOSE	LARC - UNITARY PLAN WIND TUNNEL - 1046/1049	PG
2107	LA20		72631	089B ORBITERW/MOD. NOSE	LARC - MACH 8 VARIABLE-DENSITY HYPERSONIC TUNNEL - 653	PK
2109	0H45	141,527		147B CONFIGURATION ORBITER MODEL (50-0)	LARC - FREON TUNNEL - 121-137	05
2113	0A85	134,111		VL70-000139	LARC - CONTINUOUS-FLOW HYPERSONIC TUNNEL - 101	01

INDEX OF PUBLISHED DATA

ORBITER DATA

DMS DMS-DR-	NASA SERIES NUMBER	NASA CR NUMBER	NASA TM-X NUMBER	CONFIGURATION	TEST NUMBER	DATASET 2-CHARACTER DESCRIPTOR
2114	OA86	134.098		B30 THRU B50C9M7F8W116E26V8R5X9	NRLAD - LOW SPEED WIND TUNNEL 716 -	DX
2115	OA87	134.085		140A/B	ARC - 3.5-FOOT HYPERSONIC WIND TUNNEL 176 -	EF
2116	OA91	134.888		B19C7F5J59W107E23V7R5X20 + NACELLE RAKES	NRLAD - 7-FOOT TRISONIC WIND TUNNEL 278 -	DY
2117	OH14	147.617		B22C7F5M4V7W111	LARC - MACH 8 VARIABLE-DENSITY HYPERSONIC TUNNEL 648 -	QL
2120	OA106	134.426		ORBITER	LARC - 8-FOOT TRANSONIC PRESSURE TUNNEL 668 -	QZ
2121	LA38A			TASK CANCELLED. JULY. 1975	LARC - 8-FOOT TRANSONIC PRESSURE TUNNEL 669 -	QX
2124	IA16 OA26	134.093		140A/B ORBITER CONFIGURATION	ARC - 3.5-FOOT HYPERSONIC WIND TUNNEL 180 -	EM
2125	OA88	134.409		BODY ALONE (-140A/B)	LARC - 22-INCH HELIUM TUNNEL 422 -	QC
2126	LA25			TASK CANCELLED. DEC., 1976	LARC - CONTINUOUS-FLOW HYPERSONIC TUNNEL 100 -	PX
2127	LA35		71954	-139 B ORBITER WITH VARIOUS CONTROL DEFLECTIONS	LARC - CONTINUOUS-FLOW HYPERSONIC TUNNEL 102 -	QU

INDEX OF PUBLISHED DATA

ORBITER DATA

DMS DMS-DR-	NASA SERIES NUMBER	NASA CR NUMBER	NASA TM-X NUMBER	CONFIGURATION	TEST NUMBER	DATASET 2-CHARACTER DESCRIPTOR
2128 V-01	OA53A	134.114		140A/B	ARC - 11-FOOT TRANSONIC WIND TUNNEL (UNITARY) 747	EJ
2128 V-02	OA53A	134.115		140A/B	ARC - 11-FOOT TRANSONIC WIND TUNNEL (UNITARY) 747	EJ
2130	OA22A	141.529		SSV 140A/B ORBITER	ARC - 11-FOOT TRANSONIC WIND TUNNEL (UNITARY) 716	B2
2131	OA22B	141.530		SSV 4 140A/B ORBITER	ARC - 9-FOOT BY 7-FOOT SUPERSONIC WIND TUNNEL (UNITARY) 716	B4
2132	LA42	141.535		-089B W/MOD NOSE	AEDC - HYPERSONIC WIND TUNNEL (B) 48A	TP
2133	IA58	134.110		ORBITER	LARC - CONTINUOUS-FLOW HYPERSONIC TUNNEL 107	OK
2134 R-01	OA77/78 OA78	134.425		ORBITER-140A/B CONFIGURATION	AEDC - HYPERSONIC WIND TUNNEL (C) VA474 HYPERSONIC WIND TUNNEL (C)	TN
2135	LA13			TASK CANCELLED, AUGUST, 1974	LARC - CONTINUOUS-FLOW HYPERSONIC TUNNEL 99	PF
2137 V-02	OA105	134.106		CONFIGURATION3, MODEL 32-0	LARC - CONTINUOUS-FLOW HYPERSONIC TUNNEL 109	H2

INDEX OF PUBLISHED DATA

ORBITER DATA

DMS DMS-DR-	NASA SERIES NUMBER	NASA CR NUMBER	NASA TM-X NUMBER	CONFIGURATION	TEST NUMBER	DATASET 2-CHARACTER DESCRIPTOR
2139	OA118	134,407		VL70-000140A/B, MODEL 43-0	NRLAD - LOW SPEED WIND TUNNEL 724 -	F6
2140	OA37	134,408		140 A/B SPACE SHUTTLE ORBITER	NRLAD - LOW SPEED WIND TUNNEL 719 -	F2
2141	OH11	141,538		MODEL NO. 29-0/VL70-000139	AEDC - HYPERSONIC WIND TUNNEL (B) VA354 -	TS
2147	OA20C	134,097		140A/B SSV ORBITER	LARC - UNITARY PLAN WIND TUNNEL 1057 -	Q2
2149	OA90	141,805		CONFIG. 4 (-140A/B) MODEL 72-0	LARC - CONTINUOUS-FLOW HYPERSONIC TUNNEL 110 -	QJ
2151	OH6	141,815		THERMOCOUPLE MODEL OF SSV ORB. 139	ARC - 3.5-FOOT HYPERSONIC WIND TUNNEL 183 -	EQ
2152 R-01	OA81	134,423		VEHICLE 4 ORBITER (MODEL 51-0)	AEDC - HYPERVELOCITY WIND TUNNEL (F) VA489 -	TO
2153	IH1	151,377		TANK ALONE	LARC - UNITARY PLAN WIND TUNNEL 1071 -	Q7
2154	OH4A	134,437		MODEL 29-0	AEDC - HYPERSONIC WIND TUNNEL (B) VA352 -	TT
2155	OA110	134,406		B61C11F12M51W124E40	NRLAD - LOW SPEED WIND TUNNEL 721 -	F5

INDEX OF PUBLISHED DATA

ORBITER DATA

DMS DMS-DH-	NASA SERIES NUMBER	NASA CR NUMBER	NASA TM-X NUMBER	CONFIGURATION	TEST NUMBER	DATASET 2-CHARACTER DESCRIPTOR
2157	1H19	141.822		ORBITER WITH EXTERNAL TANK	LARC - HYPERSONIC NITROGEN TUNNEL - 28	OE
2159 V-01	0A59	134.410		140 A/B SSV ORBITER	ARC - 6-FOOT BY 6-FOOT SUPERSONIC WIND TUNNEL - 709	ER
2159 V-02	0A59	134.412		140 A/B SSV ORBITER	ARC - 6-FOOT BY 6-FOOT SUPERSONIC WIND TUNNEL - 709	ER
2162	0A36	134.430		140 A/B, VEHICLE 4	ARC - 3.5-FOOT HYPERSONIC WIND TUNNEL - 187	EP
2163	0A20B	134.403		140A/B	LARC - UNITARY PLAN WIND TUNNEL - 1097	Q2
2164 V-02	0H12 1H2	141.829		EXTERNAL TANK	CALSPAN - 48-INCH HYPERSONIC SHOCK TUNNEL - 173-100	UG
2167	0A98	141.550		140A/B	ARC - 3.5-FOOT HYPERSONIC WIND TUNNEL - 190	EQ
2171 V-01	0H38	144.584		140C ORBITER	ARC - 3.5-FOOT HYPERSONIC WIND TUNNEL - 198	EZ
2171 V-02	0H38	144.585		140C ORBITER	ARC - 3.5-FOOT HYPERSONIC WIND TUNNEL - 198	EZ

ORBITER DATA

DMS DMS-OR-	NASA SERIES NUMBER	NASA CR NUMBER	NASA TM-X NUMBER	CONFIGURATION	TEST NUMBER	DATASET 2-CHARACTER DESCRIPTOR
2171 V-03	OH38	144.586		140C ORBITER	ARC - 3.5-FOOT HYPERSONIC WIND TUNNEL - 198	EZ
2172	OA99	134.415		SSV ORBITER CONF. 2 (MODEL 21-0 OF VL70-000139)	LARC - 60-FOOT VACUUM SPHERE VON KARMAN F ACILITIES - R3289	H7
2176	LA40		72661	139B ORBITER	LARC - 22-INCH HELIUM TUNNEL - 426	H3
2177	OA83	141.510		140A/B SSV ORBITER	ARC - 3.5-FOOT HYPERSONIC WIND TUNNEL - 194	EW
2178	OA53B	134.119		140A/9	ARC - 9-FOOT BY 7-FOOT SUPERSONIC WIND T UNNEL (UNITARY) - 747	EK
2179	OS8A/B	151.378		SS ORBITER LOWER WING CARRY-THROUG H STRUCTURE WITH A DUMMY PANEL , A	ARC - 11-FOOT TRANSONIC WIND TUNNEL (UNI TARY) - 705 9-FOOT BY 7-FOOT SUPERSONIC WIND T UNNEL (UNITARY) -	EX
2182	LA49	151.062		089B/139	LARC - UNITARY PLAN WIND TUNNEL - 1101	HJ
2183	LA51		72661	140A/B	LARC - 8-FOOT TRANSONIC PRESSURE TUNNEL - 684	HV
2184	LA48	151.061		089B/140	LARC - 8-FOOT TRANSONIC PRESSURE TUNNEL - 680	HI

INDEX OF PUBLISHED DATA

ORBITER DATA

DMS DMS-DR-	NASA SERIES NUMBER	NASA CR NUMBER	NASA TM-X NUMBER	CONFIGURATION	TEST NUMBER	DATASET 2-CHARACTER DESCRIPTOR
2185	0A53C	134.120		140A/B	ARC - 8-FOOT BY 7-FOOT SUPERSONIC WIND TUNNEL (UNITARY) - 747	EL
2186	0A116	134.428		.015-SCALE ORBITER MODEL.CONFIGURATION 140A/B (49-0)	LARC - 8-FOOT TRANSONIC PRESSURE TUNNEL - 686	MU
2187	CA119A	134.421		140A/B SPACE SHUTTLE ORBITER INNER MOLD LINE CONFIGURATION. (MOJEL 1	NRLAD - LOW SPEED WIND TUNNEL - 726	FB
2190	0A108	141.537		0.004-SCALE ORBITER FORCE MODEL (74-0)	MSFC - 14-INCH TRISONIC WIND TUNNEL - 599	ID
2191	LA47		72661	140A/B	LARC - CONTINUOUS-FLOW HYPERSONIC TUNNEL - 104	MH
2193	0H26	151.380		SS ORB. 140B MODEL (MODIFIED 22-0)	ARC - 3.5-FOOT HYPERSONIC WIND TUNNEL - 199	E2
2195	0A82	134.442		ORBITER CONFIG. 3	LARC - CONTINUOUS-FLOW HYPERSONIC TUNNEL - 113	HL
2196	0A79	141.531		ORBITER 140A/B	AEDC - HYPERSONIC WIND TUNNEL (B) - 71A	TW
2198	0A115	141.534		ORBITER 140A/B	AEDC - SUPERSONIC WIND TUNNEL (A) - 71A	TV
2202	0A123	141.526		140A/B OUTER MOLD LINE CONFIGURATION	NRLAD - LOW SPEED WIND TUNNEL - 731	FA

INDEX OF PUBLISHED DATA

ORBITER DATA

DMS DMS-DR-	NASA SERIES NUMBER	NASA CR NUMBER	NASA TM-X NUMBER	CONFIGURATION	TEST NUMBER	DATASET 2-CHARACTER DESCRIPTOR
2203	OA119B	141.524		140C OUTER MOLD LINE CONFIGURATION	NRLAD - LOW SPEED WIND TUNNEL 730 -	F9
2205	OA109	141.532		RI SPACE SHUTTLE ORBITER VEHICLE 4 (MODIFIED) CONFIGURATION	LARC - 22-INCH HELIUM TUNNEL 431 -	HE
2209	OA124	141.536		MODEL 43-0	NRLAD - LOW SPEED WIND TUNNEL 735 -	FB
2211 V-01	CA5	141.800		0.03-SCALE 45-0 (ORBITER) MODEL	TBCA - TRANSONIC WIND TUNNEL 1431 -	GM
2211 V-02	CA5	141.803		0.03-SCALE 45-0 (ORBITER) MODEL	TBCA - TRANSONIC WIND TUNNEL 1431 -	GM
2211 V-03	CA5	141.804		0.03-SCALE 45-0 (ORBITER) MODEL	TBCA - TRANSONIC WIND TUNNEL 1431 -	GM
2214	OA89	141.513		140C MODIFIED SPACE SHUTTLE ORBITE R MODEL 74-0	LARC - HYPERSONIC NITROGEN TUNNEL 30-31 -	GD
2215	LA58	144.592		SSV ORBITER CONFIGURATION 140A/B-0 .015 SCALE	LTV - HIGH SPEED WIND TUNNEL 512 -	HY
2221	OA143	141.548		140C CONFIGURATION ORBITER (MODEL 16-0)	NRLAD - LOW SPEED WIND TUNNEL 737 -	FC
2222 V-01	OH49B	147.626		B25C10M4F10E26R5V7W116	AEDC - HYPERSONIC WIND TUNNEL (B) 57A -	V1

INDEX OF PUBLISHED DATA

ORBITER DATA

DMS DMS-DR-	NASA SERIES NUMBER	NASA CR NUMBER	NASA TM-X NUMBER	CONFIGURATION	TEST NUMBER	DATASET 2-CHARACTER DESCRIPTOR
2222 V-02	OH498	147,627		B25C10M4F10E26R5V7W116	AEDC - HYPERSONIC WIND TUNNEL (B) - 57A	VI
2225	OH4C	141,505		MODEL 21-0, LINES VL70-000139	AEDC - HYPERSONIC WIND TUNNEL (B) - VA352	TZ
2229	OA102	141,508		SSV 140A/B	LARC - 8-FOOT TRANSONIC PRESSURE TUNNEL - 687	HM
2232	OA131	141,521	—	MODEL 74-0, CONF. 4	MSFC - 14-INCH TRISONIC WIND TUNNEL - 607	IM
2233	LA59	151,068		72-OTS (B26C9E44F10FL10/11M16N28/8 6PSI-SR5S21T2,V8W116	LARC - 8-FOOT TRANSONIC PRESSURE TUNNEL - 703	HZ
2234	OA113	141,547		ORBITER WITH ELEVON AND BODY FLAP DEFLECTIONS	CALSPAN - 48-INCH HYPERSONIC SHOCK TUNNEL - 184-220	UH
2238	OA93	141,847		51-0	CALSPAN - 48-INCH HYPERSONIC SHOCK TUNNEL - 184-120	UI
2241 V-01	OH39	160,490		MODEL 60-3, VEH. 4	AEDC - HYPERSONIC WIND TUNNEL (B) - 74A	V9
2241 V-02	OH39	160,491		MODEL 60-3, VEH. 4	AEDC - HYPERSONIC WIND TUNNEL (B) - 74A	V9
2241 V-03	OH39	160,492		MODEL 60-3, VEH. 4	AEDC - HYPERSONIC WIND TUNNEL (B) - 74A	V9

INDEX OF PUBLISHED DATA

ORBITER DATA

DMS DMS-OP-	NASA SERIES NUMBER	NASA CP NUMBER	NASA TM-X NUMBER	CONFIGURATION	TEST NUMBER	DATASET 2-CHARACTER DESCRIPTOR
2241 V-04	0439	160.493		MODEL 60-3, VEH. 4	AEDC - HYPERSONIC WIND TUNNEL (B) - 74A	V9
2245 V-01	0A161A/B/C	147.618		SPACE SHUTTLE VEHICLE ORBITER 140A /B (MODIFIED)	ARC - 11-FOOT, 9-FOOT, 8-FOOT, UNITARY W IND TUNNEL - 094	E7
2245 V-02	0A161A/B/C	147.619		SPACE SHUTTLE VEHICLE ORBITER 140A /B (MODIFIED)	ARC - 11-FOOT, 9-FOOT, 8-FOOT, UNITARY W IND TUNNEL - 094	E7
2246	LA65	144.600		WING-BODY WITH VARIATIONS	ARC - 12-FOOT PRESSURE TUNNEL - 086	NC
2247	0A160	141.834		MODEL 51-0 OF MODIFIED VEH. 4 ORB. (B26 C9 E26 F7 M7 N28 R5 V8 W116)	AEDC - HYPERVELOCITY WIND TUNNEL (F) - 28A	VA
2250	0443	141.539		15-0.FLAT PLATE MODEL	ARC - 3.5-FOOT HYPERSONIC WIND TUNNEL - 182	ND
2251	049	141.540		MODEL 29-0/VL70-006139	AEDC - HYPERSONIC WIND TUNNEL (B) - VA353	V5
2252	0425A	141.546		ORB.; 40% SEMISPAN; BODY FLUSH; LE AD. EDGE; TRANSITION:SEMISPAN WING	AEDC - HYPERSONIC WIND TUNNEL (B) - 83A	V6
2254 V-01	0A148 0A148P	144.619		VEHICLE 5 ORBITER	ARC - 11-FOOT TRANSONIC WIND TUNNEL (UNI TARY) - 073	E8

ORBITER DATA

DMS DMS-DR-	NASA SERIES NUMBER	NASA CR NUMBER	NASA TM-X NUMBER	CONFIGURATION	TEST NUMBER	DATASET 2-CHARACTER DESCRIPTOR
2254 V-02	OA148 OA148P	144.620		VEHICLE 5 ORBITER	ARC - 11-FOOT TRANSONIC WIND TUNNEL (UNITARY) - 073	EB
2254 V-03	OA148 OA148P	144.621		VEHICLE 5 ORBITER	ARC - 11-FOOT TRANSONIC WIND TUNNEL (UNITARY) - 073	EB
2254 V-04	OA148 OA148P	144.622		VEHICLE 5 ORBITER	ARC - 11-FOOT TRANSONIC WIND TUNNEL (UNITARY) - 073	EB
2254 V-05	OA148 OA148P	144.623		VEHICLE 5 ORBITER	ARC - 11-FOOT TRANSONIC WIND TUNNEL (UNITARY) - 073	EB
2254 V-06	OA148 OA148P	144.624		VEHICLE 5 ORBITER	ARC - 11-FOOT TRANSONIC WIND TUNNEL (UNITARY) - 073	EB
2254 V-07	OA148 OA148P	144.625		VEHICLE 5 ORBITER	ARC - 11-FOOT TRANSONIC WIND TUNNEL (UNITARY) - 073	EB
2254 V-08	OA148 OA148P	144.626		VEHICLE 5 ORBITER	ARC - 11-FOOT TRANSONIC WIND TUNNEL (UNITARY) - 073	EB
2254 V-09	OA148 OA148P	144.627		VEHICLE 5 ORBITER	ARC - 11-FOOT TRANSONIC WIND TUNNEL (UNITARY) - 073	EB

INDEX OF PUBLISHED DATA

ORBITER DATA

DMS DMS-OR-	NASA SERIES NUMBER	NASA CR NUMBER	NASA TM-X NUMBER	CONFIGURATION	TEST NUMBER	DATASET 2-CHARACTER DESCRIPTOR
2254 V-10	OA148 OA148P	144.628		VEHICLE 5 ORBITER	ARC - 11-FOOT TRANSONIC WIND TUNNEL (UNI TARY) 073 -	EB
2254 V-11	OA148 OA148P	147.601		VEHICLE 5 ORBITER	ARC - 11-FOOT TRANSONIC WIND TUNNEL (UNI TARY) 073 -	EB
2254 V-12	OA148 OA148P	147.602		VEHICLE 5 ORBITER	ARC - 11-FOOT TRANSONIC WIND TUNNEL (UNI TARY) 073 -	EB
2254 V-13	OA148 OA148P	147.603		VEHICLE 5 ORBITER	ARC - 11-FOOT TRANSONIC WIND TUNNEL (UNI TARY) 073 -	EB
2257	LA69	151.369		OUTER MOLD LINE MODEL 72-0.S	LARC - 8-FOOT TRANSONIC PRESSURE TUNNEL 714 -	J9
2259	LA60A			TASK CANCELLED, MAY 1977	LARC - 8-FOOT TRANSONIC PRESSURE TUNNEL 704 -	J1
2263	OH74	144.596		140 C ORB (B62 C12 E52 F10 M16 R19 V8 W127)	AEDC - HYPERSONIC WIND TUNNEL (B) B8A -	VB
2264	LA62	141.843		SSV ORBITER 49-0 MODIFIED	LARC - 8-FOOT TRANSONIC PRESSURE TUNNEL 717 -	J3
2265	OA159	141.832		CONFIG 1 ORBITER WITH NOSE AND TAI L RCS JETS	ARC - 12-FOOT PRESSURE TUNNEL 078 -	NG

INDEX OF PUBLISHED DATA

ORBITER DATA

DMS DMS-OR-	NASA SERIES NUMBER	NASA CR NUMBER	NASA TM-X NUMBER	CONFIGURATION	TEST NUMBER	DATASET 2-CHARACTER DESCRIPTOR
2256	LA57	144.607		140A/B/C=B26 C9 E43 F8 M16 N28 R5 V8 W	LTV - HIGH SPEED WIND TUNNEL 552 -	FD
2267 V-01	MA22	147.604		REACTION CONTROL SYSTEM	LARC - CONTINUOUS-FLOW HYPERSONIC TUNNEL 118 -	JA
2267 V-02	MA22	147.605		REACTION CONTROL SYSTEM	LARC - CONTINUOUS-FLOW HYPERSONIC TUNNEL 118 -	JA
2267 V-03	MA22	147.606		REACTION CONTROL SYSTEM	LARC - CONTINUOUS-FLOW HYPERSONIC TUNNEL 118 -	JA
2267 V-04	MA22	147.607		REACTION CONTROL SYSTEM	LARC - CONTINUOUS-FLOW HYPERSONIC TUNNEL 118 -	JA
2268 V-01	CA9 CA9P	151.396		ORBITER 47-0	TBCA - TRANSONIC WIND TUNNEL 1477 -	GQ
2268 V-02	CA9 CA9P	151.397		ORBITER 47-0	TBCA - TRANSONIC WIND TUNNEL 1477 -	GQ
2268 V-03	CA9 CA9P	151.398		ORBITER 47-0	TBCA - TRANSONIC WIND TUNNEL 1477 -	GQ
2268 V-04	CA9 CA9P	151.399		ORBITER 47-0	TBCA - TRANSONIC WIND TUNNEL 1477 -	GQ
2268 V-05	CA9 CA9P	151.400		ORBITER 47-0	TBCA - TRANSONIC WIND TUNNEL 1477 -	GQ

INDEX OF PUBLISHED DATA

ORBITER DATA

DMS DMS-DR-	NASA SERIES NUMBER	NASA CR NUMBER	NASA TM-X NUMBER	CONFIGURATION	TEST NUMBER	DATASET 2-CHARACTER DESCRIPTOR
2269	LA70	147,624		140A/B/C=B26 C9 E43 F8 M16 N28 R5 V8 W	CALSPAN - 8-FOOT TRANSONIC WIND TUNNEL T18-103	UK
2270	LA63A	144,579		ORBITER W/ INDEPENDENTLY-OPERATED LEFT,RIGHT ELEVON SURFACES	LARC - UNITARY PLAN WIND TUNNEL 1118	JA
2271	LA71A/B	151,044		MODEL 69-0 WITH FOREBODY RSI MODS	LARC - UNITARY PLAN WIND TUNNEL 1147 1132	JC
2273 V-01	CA26	144,612		48-0 (02, 04, 06, S1, ATY, ATX)	LTV - HIGH SPEED WIND TUNNEL 559	FE
2273 V-02	CA26	144,613		48-0 (02, 04, 06, S1, ATY, ATX)	LTV - HIGH SPEED WIND TUNNEL 559	FE
2273 V-03	CA26	144,614		48-0 (02, 04, 06, S1, ATY, ATX)	LTV - HIGH SPEED WIND TUNNEL 559	FE
2273 V-04	CA26	144,615		48-0 (02, 04, 06, S1, ATY, ATX)	LTV - HIGH SPEED WIND TUNNEL 559	FE
2273 V-05	CA26	144,616		48-0 (02, 04, 06, S1, ATY, ATX)	LTV - HIGH SPEED WIND TUNNEL 559	FE
2275 V-01	CA23B	144,603		0.0125-SCALE 747 MODEL	ARC - 14-FOOT TRANSONIC WIND TUNNEL 120	NH
2275 V-02	CA23B	144,604		0.0125-SCALE 747 MODEL	ARC - 14-FOOT TRANSONIC WIND TUNNEL 120	NH

INDEX OF PUBLISHED DATA

ORBITER DATA

DMS DMS-DR-	NASA SERIES NUMBER	NASA CR NUMBER	NASA TM-X NUMBER	CONFIGURATION	TEST NUMBER	DATASET 2-CHARACTER DESCRIPTOR
2278	LA61			TEST CANCELLED, MAY 1976	LARC - LOW-TURBULENCE PRESSURE TUNNEL 219 -	J2
2279	LA63B	144.606		140A/B/C (B26 C9 E43 F8 M16 N28 R5 V8 W)	LARC - UNITARY PLAN WIND TUNNEL 1151 -	J4
2280	LA28	144.582		FLAT-PLATE MODEL WITH THIN-FILM HEAT FLUX GAGES	LTV - HIGH SPEED WIND TUNNEL 498 -	QB
2281	L/66	147.621		BASELINE	ARC - 12-FOOT PRESSURE TUNNEL 135-1 -	NJ
2283	MA14	147.649		ORBITER 089B	LTV - LOW SPEED WIND TUNNEL 422 -	FG
2285	OH50A	144.595		B2-0, WITH AND WITHOUT PROTUBERANCES, 50% FOREBODY MODELS	AEDC - HYPERSONIC WIND TUNNEL (B) VA526/21BA -	VE
2286	OA220	147.625		SSV ORBITER (MODEL 57-0) FOREBODY WITH TPS TILES ALONE	ARC - 14-FOOT TRANSONIC WIND TUNNEL 150-1 -	NL
2288	OH64	151.384		BASE HEATING MODEL 25-0	LERC - SPACE POWER FACILITY -	GG
2289 V-01	OA163	147.611		SPACE SHUTTLE ORBITER 140C	NRLAD - LOW SPEED WIND TUNNEL 751 -	FF
2289 V-02	OA163	147.612		SPACE SHUTTLE ORBITER 140C	NRLAD - LOW SPEED WIND TUNNEL 751 -	FF

INDEX OF PUBLISHED DATA

ORBITER DATA

DMS DMS-DR-	NASA SERIES NUMBER	NASA CR NUMBER	NASA TM-X NUMBER	CONFIGURATION	TEST NUMBER	DATASET 2-CHARACTER DESCRIPTOR
2289 V-03	OA163	147,613		SPACE SHUTTLE ORBITER 140C	NRLAD - LOW SPEED WIND TUNNEL - 751	FF
2289 V-04	OA163	147,614		SPACE SHUTTLE ORBITER 140C	NRLAD - LOW SPEED WIND TUNNEL - 751	FF
2290 V-01	CA8	147,641		747 ALONE	LARC - V/STOL TRANSITION RESEARCH WIND TU NNEL - 129	JF
2290 V-02	CA8	147,642		747 ALONE	LARC - V/STOL TRANSITION RESEARCH WIND TU NNEL - 129	JF
2290 V-03	CA8	147,643		747 ALONE	LARC - V/STOL TRANSITION RESEARCH WIND TU NNEL - 129	JF
2296 V-01	LA81	147,609		.03614-SCALE ORBITER MODEL OF A 08 98 CONFIGURATION WITH A 1398 CONFI	LARC - LOW-TURBULENCE PRESSURE TUNNEL - 229	JP
2296 V-02	LA81	147,610		.03614-SCALE ORBITER MODEL OF A 08 98 CONFIGURATION WITH A 1398 CONFI	LARC - LOW-TURBULENCE PRESSURE TUNNEL - 229	JP
2297	LA45A/B	147,628		WING	LARC - UNITARY PLAN WIND TUNNEL - 1145	HB
2298	LA73A LA73B	151,409		SSV ORBITER MODEL 69-0	LARC - LOW-TURBULENCE PRESSURE TUNNEL - 227 LOW-TURBULENCE PRESSURE TUNNEL - 238	JE

INDEX OF PUBLISHED DATA

ORBITER DATA

OMS DMS-OR-	NASA SERIES NUMBER	NASA CR NUMBER	NASA TM-X NUMBER	CONFIGURATION	TEST NUMBER	DATASET 2-CHARACTER DESCRIPTOR
2300	LA618	147,329		140A/B/C (B26 C9 E43 F8 M16 N28 R5 V8 W)	LARC - LOW-TURBULENCE PRESSURE TUNNEL - 228	JT
2301	OH54A	144,605		MODELS 82-1, -3, -5, -8, -11, ALL 50 PERCENT FOREBODIES	AEDC - HYPERSONIC WIND TUNNEL (B) - 82A	VH
2303	OH75	144,618		MODELS 82-1, -4, 50 PERCENT FOREBODIES	AEDC - HYPERSONIC WIND TUNNEL (B) - E3A	VG
2305 V-01	LA76	151,059		B26C9E43F8M16N28R5V8W	LTV - HIGH SPEED WIND TUNNEL - 573	FI
2305 V-02	LA76	151,060		B26C9E43F8M16N28R5V8W	LTV - HIGH SPEED WIND TUNNEL - 573	FI
2309	LA72	147,644		FOREBODY B1, B6, B7	LARC - 8-FOOT TRANSONIC PRESSURE TUNNEL - 740	JD
2311	LA78 LA87 LA88	147,620		B58C5E18F4R5V5W87-VEHICLE 2A (MODIFIED)	LARC - FREON TUNNEL - 267-268 22-INCH HELIUM TUNNEL - 446	JS
2317	OH53A			0.04-SCALE (83-0)ORBITER	ARC - 3.5-FOOT HYPERSONIC WIND TUNNEL - 216	NV
2318 V-01	LA75	147,646		ORBITER-140A/B/C=B26 C9 E43 F8 M16 N28 R5 V8 W	LARC - UNITARY PLAN WIND TUNNEL - 1173	JH

INDEX OF PUBLISHED DATA

ORBITER DATA

DMS DMS-OR-	NASA SERIES NUMBER	NASA CR NUMBER	NASA TM-X NUMBER	CONFIGURATION	TEST NUMBER	DATASET 2-CHARACTER DESCRIPTOR
2318 V-02	LA75	147,647		ORBITER-140A/B/C=B26 C9 E43 F8 M16 N28 R5 V8 W	LARC - UNITARY PLAN WIND TUNNEL - 1173	JH
2320 V-01	OA169	151,390		ORBITER 0.0125 70-OT	AEDC - HYPERSONIC WIND TUNNEL (B) - D8A	VJ
2320 V-02	OA169	151,391		ORBITER 0.0125 70-OT	AEDC - HYPERSONIC WIND TUNNEL (B) - D8A	VJ
2320 V-03	OA169	151,392		ORBITER 0.0125 70-OT	AEDC - HYPERSONIC WIND TUNNEL (B) - D8A	VJ
2321 V-01	OH69	151,410		ORBITER VEHICLE FOREBODY	AEDC - HYPERSONIC WIND TUNNEL (B) - V41B-E9A	VM
2321 V-02	OH69	151,411		ORBITER VEHICLE FOREBODY	AEDC - HYPERSONIC WIND TUNNEL (B) - V41B-E9A	VM
2330	OH52	147,637		CONF. 4, MODEL 29-0	AEDC - HYPERSONIC WIND TUNNEL (B) - 524	VO
2332	CA13	151,373		ORBITER- TAILCONE ON, TC23, STING MOUNTED	ARC - 14-FOOT TRANSONIC WIND TUNNEL - 121	NZ
2333 V-01	OA175	151,374		01+TC23'ALT' CONFIGURATION WITH TA ILCONE	ARC - 11-FOOT TRANSONIC WIND TUNNEL (UNI TARY) - 187-1	2A

INDEX OF PUBLISHED DATA

ORBITER DATA

DMS DMS-DR-	NASA SERIES NUMBER	NASA CR NUMBER	NASA TM-X NUMBER	CONFIGURATION	TEST NUMBER	DATASET 2-CHARACTER DESCRIPTOR
2333 V-02	OA175	151,375		01+TC23'ALT' CONFIGURATION WITH TA ILCONE	ARC - 11-FOOT TRANSONIC WIND TUNNEL (UNI TARY) 187-1 -	2A
2333 V-03	OA175	151,376		01+TC23'ALT' CONFIGURATION WITH TA ILCONE	ARC - 11-FOOT TRANSONIC WIND TUNNEL (UNI TARY) 187-1 -	2A
2337	OA236	151,786		FLIGHT TEST PROBE CALIBRATION	NRLAD - LOW SPEED WIND TUNNEL 759 -	FM
2340 V-01	OH98	160,501		0.0175-SCALE THIN-SKIN THERMOCOUPL E SHUTTLE ORBITER 60-0	AEDC - HYPERSONIC WIND TUNNEL (B) J7A -	VS
2340 V-02	OH98	160,502		0.0175-SCALE THIN-SKIN THERMOCOUPL E SHUTTLE ORBITER 60-0	AEDC - HYPERSONIC WIND TUNNEL (B) J7A -	VS
2342	OH548	151,074		MODEL 82-0. 50% FOREBODY	AEDC - HYPERSONIC WIND TUNNEL (B) 82A -	VM
2344 V-01	LA77	151,788		ORBITER-140A/B/C=B26 C9 E43 F8 M16 N28 R5 V8 W	ARC - 11-FOOT TRANSONIC WIND TUNNEL (UNI TARY) 200-1 -	2B
2344 V-02	LA77	151,789		ORBITER-140A/B/C=B26 C9 E43 F8 M16 N28 R5 V8 W	ARC - 11-FOOT TRANSONIC WIND TUNNEL (UNI TARY) 200-1 -	2B
2348 V-01	CA158	160,483		747-100 WITH CAM TYPE II KITS ATTA CHED	UW - LOW SPEED WIND TUNNEL 1178 -	GT

INDEX OF PUBLISHED DATA

ORBITER DATA

DMS DMS-DR-	NASA SERIES NUMBER	NASA CR NUMBER	NASA TM-X NUMBER	CONFIGURATION	TEST NUMBER	DATASET 2-CHARACTER DESCRIPTOR
2349	CA17	151.379		ORBITER B26.1C9E44F8M16R5V8W116	UW - LOW SPEED WIND TUNNEL 1184 -	GW
2350	OH46	151.065		140B ORB., MODEL 90-0	LARC - MACH 8 VARIABLE-DENSITY HYPERSONIC TUNNEL 4502-4601 -	OR
2352	LA91	151.383		ORBITER 140A/B/C B26C9E43F8M16N28 R5V8W	LARC - 8-FOOT TRANSONIC PRESSURE TUNNEL 758 -	JS
2355	OH49A	151.066		B17 C7 E22 F7 M4 W104	AEDC - SUPERSONIC WIND TUNNEL (A) VA525/218A -	VW
2356	OH60	151.064		MODEL 83-0 (B60 C10)	AEDC - HYPERSONIC WIND TUNNEL (B) 87A -	VU
2358	OH50B	151.067		FORWARD 50 PERCENT FUSELAGE, MODEL 83-0	AEDC - HYPERSONIC WIND TUNNEL (B) 58A -	VL
2359	OH66	151.405		ROCKWELL VEHICLE 3 (MODIFIED) SHUT TLE ORBITER. MODEL 66-0	CALSPAN - 96-INCH HYPERSONIC SHOCK TUNNEL 131 -	UO
2361 V-01	OA163B	151.370		B68C12E55F10M16N28R5V8W127X9	NRLAD - LOW SPEED WIND TUNNEL 768 -	FP
2361 V-02	OA163B	151.371		B68C12E55F10M16N28R5V8W127X9	NRLAD - LOW SPEED WIND TUNNEL 768 -	FP
2363	OS7	151.057		55-0 (FIN, RUDDER)	LARC - TRANSONIC DYNAMICS TUNNEL 246 -	HR

INDEX OF PUBLISHED DATA

ORBITER DATA

DMS DMS-DR-	NASA SERIES NUMBER	NASA CR NUMBER	NASA TM-X NUMBER	CONFIGURATION	TEST NUMBER	DATASET 2-CHARACTER DESCRIPTOR
2365	OS6	151.056		MODEL 54-0	LARC - TRANSONIC DYNAMICS TUNNEL - 246	HR
2366	OH25P	151.063		140C (B17C7E22F5M4R5V7W1C3	AEDC - HYPERSONIC WIND TUNNEL (B) - 41B-83A	VY
2367	OH57A/B	151.773			AEDC - HYPERSONIC WIND TUNNEL (B) - V41B-K3A	4A
2367 V-01	OH57A/B	151.773		MODEL 91-0 ORBITER 102, DRWG VC-70-000002B	AEDC -	
2368	OH51	151.058		MODELS 46-0, 64-0 90-0	LARC - CONTINUOUS-FLOW HYPERSONIC TUNNEL - 112	HD
2370 V-01	OA149B/C	151.790		B70C9E44F9M16N28R5V8W116(ORBITER)	ARC - 9-FOOT BY 7-FOOT SUPERSONIC WIND T UNNEL (UNITARY) - 115-1 8-FOOT BY 7-FOOT SUPERSONIC WIND T UNNEL (UNITARY) - 115-1	2K
2370 V-02	OA149B/C	151.791		B70C9E44F9M16N28R5V8W116(ORBITER)	ARC - 9-FOOT BY 7-FOOT SUPERSONIC WIND T UNNEL (UNITARY) - 115-1 8-FOOT BY 7-FOOT SUPERSONIC WIND T UNNEL (UNITARY) - 115-1	2K

INDEX OF PUBLISHED DATA

ORBITER DATA

DMS DMS-DR-	NASA SERIES NUMBER	NASA CR NUMBER	NASA TM-X NUMBER	CONFIGURATION	TEST NUMBER	DATASET 2-CHARACTER DESCRIPTOR
2370 V-03		151.792		B70C9E44F9M16N28R5V8W116(ORBITER)	ARC - 9-FOOT BY 7-FOOT SUPERSONIC WIND TUNNEL (UNITARY) - 115-1 8-FOOT BY 7-FOOT SUPERSONIC WIND TUNNEL (UNITARY) - 115-1	2K
2371	OH78	151.408		ORBITER VEHICLE 102	JSC - 56-A-76	GN
2376 V-01	OA149A	151.779		B70C9E44F9M16N28R5V8W116(ORBITER)	ARC - 11-FOOT TRANSONIC WIND TUNNEL (UNITARY) - 115	2K
2376 V-02	OA149A	151.780		B70C9E44F9M16N28R5V8W116(ORBITER)	ARC - 11-FOOT TRANSONIC WIND TUNNEL (UNITARY) - 115	2K
2376 V-03	OA149A	151.781		B70C9E44F9M16N28R5V8W116(ORBITER)	ARC - 11-FOOT TRANSONIC WIND TUNNEL (UNITARY) - 115	2K
2381	LA107			TEST CANCELLED SEPTEMBER 1978	LARC - 8-FOOT TRANSONIC PRESSURE TUNNEL - 780	KF
2382	OH8 IA109	151.382		MODEL 25-0 (VEH. 2A AFT OF STA. X0 =1400 AND PROP. SIMULATION SYS.)	MSFC - NASA/MSFC IMPULSE BASE FLOW FACILITY - 027	1U
2385	OH15	151.366		MODEL 53-0 (ELEVON/WING GAP)	ARC - 3.5-FOOT HYPERSONIC WIND TUNNEL - 173	ED

INDEX OF PUBLISHED DATA

ORBITER DATA

DMS DMS-DR-	NASA SERIES NUMBER	NASA CR NUMBER	NASA TM-X NUMBER	CONFIGURATION	TEST NUMBER	DATASET 2-CHARACTER DESCRIPTOR
2386	OH44	151,368		MODEL 53-0 (ELEVON/ELEVON GAP)	ARC - 3.5-FOOT HYPERSONIC WIND TUNNEL - 177	EH
2387	LA104			TEST CANCELLED SEPTEMBER 1978	LARC - LOW-TURBULENCE PRESSURE TUNNEL - 246	KA
2390	LA101	160,481		MODEL 44 0 SSV ORBITER WITH REMOTE CONTROLLED ELEVONS	LARC - UNITARY PLAN WIND TUNNEL - 1194	KD
2392	OA250	151,389		MODEL 45-0 ORB. 140A/B CONF. (MODIFIED)	NRLAD - LOW SPEED WIND TUNNEL - 775	FQ
2395	LA111			MODEL 44-0 (SILTS POD)	LARC - 8-FOOT TRANSONIC PRESSURE TUNNEL - 786	KJ
2396	LA110			MODEL 44-0 (SILTS POD)	LARC - UNITARY PLAN WIND TUNNEL - 1212	KI
2399	LA114	151,388		MODEL 44-0 (SILTS POD)	LARC - UNITARY PLAN WIND TUNNEL - 1217	KK
2402	OA223	151,763		B75C16F64F16FD3FR22HG1M52N108N109N110N111R20V27VT10VT11VT12VT13VT14	NRLAD - LOW SPEED WIND TUNNEL - 766	FO
2405 V-01	OA101	151,756		OV102	ARC - 12-FOOT PRESSURE TUNNEL - 218-1	20
2405 V-02	OA101	151,757		OV102	ARC - 12-FOOT PRESSURE TUNNEL - 218-1	20

ORBITER DATA

DMS DMS-OP-	NASA SERIES NUMBER	NASA CR NUMBER	NASA TM-X NUMBER	CONFIGURATION	TEST NUMBER	DATASET 2-CHARACTER DESCRIPTOR
2405 V-03	OA101	151,758		OV102	ARC - 12-FOOT PRESSURE TUNNEL - 218-1	20
2405 V-04	OA101	151,759		OV102	ARC - 12-FOOT PRESSURE TUNNEL - 218-1	20
2405 V-05	OA101	151,760		OV102	ARC - 12-FOOT PRESSURE TUNNEL - 218-1	20
2405 V-06	OA101	151,761		OV102	ARC - 12-FOOT PRESSURE TUNNEL - 218-1	20
2410	OH56	151,777		ORBITER WING TIP (MODEL 91-0)	AEDC - HYPERSONIC WIND TUNNEL (B) - V41B-R3A	HT
2414 V-01	OA232	160,484		B74C16N108PR4PR7PR8PR14VT18VT19	AEDC - TRANSONIC PROPULSION WIND TUNNEL (PWT-16T) - 431	VR
2414 V-02	OA232	160,485		B74C16N.08PR4PR7PR8PR14VT18VT19	AEDC - TRANSONIC PROPULSION WIND TUNNEL (PWT-16T) - 431	VR
2415 V-01	OA208/209	151,784		SSV 102 ORBITER CONFIGURATION MODE L 105-0	AEDC - SUPERSONIC WIND TUNNEL (A) - V41B-P5A	4I
2415 V-02	OA208/209	151,785		SSV 102 ORBITER CONFIGURATION MODE L 105-0	SUPERSONIC WIND TUNNEL (A) - V41A-P5A	4J
2417	OH58	151,770		93-0 FLAT PLATE	ARC - 3.5-FOOT HYPERSONIC WIND TUNNEL - 235	2X

INDEX OF PUBLISHED DATA

ORBITER DATA

DMS DMS-DR-	NASA SERIES NUMBER	NASA CR NUMBER	NASA TM-X NUMBER	CONFIGURATION	TEST NUMBER	DATASET 2-CHARACTER DESCRIPTOR
2419	OA270B/C	151.762		SSV OV102 ORBITER CONFIGURATION MODEL 104-0 INSTRUMENTED ELEVONS	LARC - 16-FOOT TRANSONIC TUNNEL - 325	KP
2426	LA124		TM1186	140A/B ORBITER	LARC - UNITARY PLAN WIND TUNNEL - 1207 LG2	KR
2433	OA171	151.764		0.02 SCALE ORBITER VEHICLE 102 (MODEL 105-01, MODIFIED MODEL 89-0	NSWC - 1310	GJ
2434	OA129	151.782		ORBITER (47.0) OV102 WITH RIGID AND FLEXIBLE TAIL	AEDC - TRANSONIC PROPULSION WIND TUNNEL (PWT-16T) - 507	4N
2436 V-06	LA126		72661			KT
2443	OH79	151.769		65-0 SS ORBITER BASE HEATING MODEL	JSC - 61-A-78	5A
2450	OS4A OS4B OS12	151.774			ARC - 2-FOOT BY 2-FOOT TRANSONIC WIND TUNNEL - 041.154.11 6	3Y
2451	OH90A/MA29	151.772			AEDC - HYPERSONIC WIND TUNNEL (B) - P4A	4S
2454 V-03	LA57		72661	140A/B ORBITER-BASELINE	LARC - CONTINUOUS-FLOW HYPERSONIC TUNNEL - 114	HX
2455	OH102A	151.778		140C ORBITER WITH SLAB SIDED VERTICAL TAIL	AEDC - 418-65	4T

ORBITER DATA

DMS DMS-OR-	NASA SERIES NUMBER	NASA CR NUMBER	NASA TM-X NUMBER	CONFIGURATION	TEST NUMBER	DATASET 2-CHARACTER DESCRIPTOR
2472	D4433	160.494		B75C16E64F16M52W131V29	AEDC - SUPERSONIC WIND TUNNEL (A) - V418-65	4X
2478 V-01	LA131	160.503		B75C16E64F16FR22HG1M52N100N109N110 N111R20V27	LARC - UNITARY PLAN WIND TUNNEL - 1299	7A
2478 V-02	LA131	160.504		B75C16E64F16FR22HG1M52N108N109N110 N111R20V27	LARC - UNITARY PLAN WIND TUNNEL - 1299	7A
2478 V-03	LA131	160.505		B75C16E64F16FR22HG1M52N108N109N110 N111R20V27	LARC - UNITARY PLAN WIND TUNNEL - 1299	7A

INTEGRATED VEHICLE DATA

DMS DMS-DR-	NASA SERIES NUMBER	NASA CR NUMBER	NASA TM-X NUMBER	CONFIGURATION	TEST NUMBER	DATASET 2-CHARACTER DESCRIPTOR
2006	IA1A	120.088		MSFC/NR PARAMETRIC LAUNCH VEHICLE	MSFC - 14-INCH TRISONIC WIND TUNNEL - 556	77
2010	IA1B	120.060		NR ATP ORBITER/TANK AND SRMS ON AND OFF	MSFC - 14-INCH TRISONIC WIND TUNNEL - 545	72
2011	MA9F	120.089		NR ATP ORBITER/EXTERNAL TANK AND SRBS	MSFC - 14-INCH TRISONIC WIND TUNNEL - 558	78
2013	IA2	128.762		SHUTTLE ORBITER/TANK SRM (N-040A)	ARC - 9-FOOT BY 7-FOOT SUPERSONIC WIND TUNNEL (UNITARY) - 616	BJ
2015 V-01	IA4	120.091		NASA SSV ORBITER ON NR EOHT WITH SINGLE BSRM	LTV - HIGH SPEED WIND TUNNEL - 458	DE
2015 V-02	IA4	120.091		NASA SSV ORBITER ON NR EOHT WITH SINGLE BSRM	LTV - HIGH SPEED WIND TUNNEL - 458	DE
2018	IA3	128.755		ATP LAUNCH CONFIGURATION	NRLAD - LOW SPEED WIND TUNNEL - 693	DH
2024	IA7	128.765		040A SPACE SHUTTLE INTEGRATED VEHICLE	ARC - 11-FOOT TRANSONIC WIND TUNNEL (UNITARY) - 686	BL
2026	IA31F	128.778		MCR 0074 BASELINE LAUNCH VEHICLE	MSFC - 14-INCH TRISONIC WIND TUNNEL - 566	81

INDEX OF PUBLISHED DATA

INTEGRATED VEHICLE DATA

DMS DMS-DR-	NASA SERIES NUMBER	NASA CR NUMBER	NASA TM-X NUMBER	CONFIGURATION	TEST NUMBER	DATASET 2-CHARACTER DESCRIPTOR
2027 V-01	IA32FB	141.807		ORB. WITH ET AND 2 SRB'S	MSFC - 14-INCH TRISONIC WIND TUNNEL - 567	B2
2027 V-02	IA32FB	141.808		ROB. WITH ET AND 2 SRB'S	MSFC - 14-INCH TRISONIC WIND TUNNEL - 567	B2
2027 V-03	IA32FB	141.809		ORB. WITH 2 SRB'S	MSFC - 14-INCH TRISONIC WIND TUNNEL - 567	B2
2028 V-01	IA31FB	134.434		MCR 0074 ORBITER LAUNCH	MSFC - 14-INCH TRISONIC WIND TUNNEL - 570	B3
2028 V-02	IA31FB	134.436		MCR 0074 ORBITER LAUNCH	MSFC - 14-INCH TRISONIC WIND TUNNEL - 570	B3
2032 V-01	IA9/OA12 OA12	128.794		17-OTS	ARC - 11-FOOT TRANSONIC WIND TUNNEL (UNITARY) - 707 8-FOOT BY 7-FOOT SUPERSONIC WIND TUNNEL (UNITARY) - 707	B-
2032 V-02	IA9/OA12 OA12	128.794		17-OTS	ARC - 11-FOOT TRANSONIC WIND TUNNEL (UNITARY) - 707 8-FOOT BY 7-FOOT SUPERSONIC WIND TUNNEL (UNITARY) - 707	B-

INDEX OF PUBLISHED DATA

INTEGRATED VEHICLE DATA

DMS DMS-DP-	NASA SERIES NUMBER	NASA CR NUMBER	NASA TM-X NUMBER	CONFIGURATION	TEST NUMBER	DATASET 2-CHARACTER DESCRIPTOR
2032 V-03	1A9/0A12 0A12	128,794		17-OTS	ARC - 11-FOOT TRANSONIC WIND TUNNEL (UNITARY) - 707 8-FOOT BY 7-FOOT SUPERSONIC WIND TUNNEL (UNITARY) - 707	B-
2032 V-04	1A9/0A12 0A12	128,794		17-OTS	ARC - 11-FOOT TRANSONIC WIND TUNNEL (UNITARY) - 707 8-FOOT BY 7-FOOT SUPERSONIC WIND TUNNEL (UNITARY) - 707	B-
2032 V-05	1A9/0A12 0A12	128,794		17-OTS	ARC - 11-FOOT TRANSONIC WIND TUNNEL (UNITARY) - 707 8-FOOT BY 7-FOOT SUPERSONIC WIND TUNNEL (UNITARY) - 707	B-
2032 V-06	1A9/0A12 0A12	128,794		17-OTS	ARC - 11-FOOT TRANSONIC WIND TUNNEL (UNITARY) - 707 8-FOOT BY 7-FOOT SUPERSONIC WIND TUNNEL (UNITARY) - 707	B-
2032 V-07	1A9/0A12 0A12	128,794		17-OTS	ARC - 11-FOOT TRANSONIC WIND TUNNEL (UNITARY) - 707 8-FOOT BY 7-FOOT SUPERSONIC WIND TUNNEL (UNITARY) - 707	B-

INTEGRATED VEHICLE DATA

DMS DMS-DR-	NASA SERIES NUMBER	NASA CR NUMBER	NASA TM-X NUMBER	CONFIGURATION	TEST NUMBER	DATASET 2-CHARACTER DESCRIPTOR
2032 V-08	IA9/OA12 OA12	128.794		17-OTS	ARC - 11-FOOT TRANSONIC WIND TUNNEL (UNITARY) - 707 8-FOOT BY 7-FOOT SUPERSONIC WIND TUNNEL (UNITARY) - 707	B-
2032 V-09	IA9/OA12 OA12	128.794		17-OTS	ARC - 11-FOOT TRANSONIC WIND TUNNEL (UNITARY) - 707 8-FOOT BY 7-FOOT SUPERSONIC WIND TUNNEL (UNITARY) - 707	B-
2032 V-10	IA9/OA12 OA12	128.794		17-OTS	ARC - 11-FOOT TRANSONIC WIND TUNNEL (UNITARY) - 707 8-FOOT BY 7-FOOT SUPERSONIC WIND TUNNEL (UNITARY) - 707	B-
2032 V-11	IA9/OA12 OA12	128.794		17-OTS	ARC - 11-FOOT TRANSONIC WIND TUNNEL (UNITARY) - 707 8-FOOT BY 7-FOOT SUPERSONIC WIND TUNNEL (UNITARY) - 707	B-
2032 V-12	IA9/OA12 OA12	128.794		17-OTS	ARC - 11-FOOT TRANSONIC WIND TUNNEL (UNITARY) - 707 8-FOOT BY 7-FOOT SUPERSONIC WIND TUNNEL (UNITARY) - 707	B-

INTEGRATED VEHICLE DATA

DMS DMS-DR-	NASA SERIES NUMBER	NASA CR NUMBER	NASA TM-X NUMBER	CONFIGURATION	TEST NUMBER	DATASET 2-CHARACTER DESCRIPTOR
2032 V-13	IA9/OA12 OA12	128,794		17-OTS	ARC - 11-FOOT TRANSONIC WIND TUNNEL (UNITARY) - 707 8-FOOT BY 7-FOOT SUPERSONIC WIND TUNNEL (UNITARY) - 707	B-
2032 V-14	IA9/OA12 OA12	128,794		17-OTS	ARC - 11-FOOT TRANSONIC WIND TUNNEL (UNITARY) - 707 8-FOOT BY 7-FOOT SUPERSONIC WIND TUNNEL (UNITARY) - 707	B-
2032 V-15	IA9/OA12 OA12	128,794		17-OTS	ARC - 11-FOOT TRANSONIC WIND TUNNEL (UNITARY) - 707 8-FOOT BY 7-FOOT SUPERSONIC WIND TUNNEL (UNITARY) - 707	B-
2032 V-16	IA9/OA12 OA12	128,794		17-OTS	ARC - 11-FOOT TRANSONIC WIND TUNNEL (UNITARY) - 707 8-FOOT BY 7-FOOT SUPERSONIC WIND TUNNEL (UNITARY) - 707	B-
2032 V-17	IA9/OA12 OA12	128,794		17-OTS	ARC - 11-FOOT TRANSONIC WIND TUNNEL (UNITARY) - 707 8-FOOT BY 7-FOOT SUPERSONIC WIND TUNNEL (UNITARY) - 707	B-

INDEX OF PUBLISHED DATA

INTEGRATED VEHICLE DATA

DMS DMS-DR-	NASA SERIES NUMBER	NASA CR NUMBER	NASA TM-X NUMBER	CONFIGURATION	TEST NUMBER	DATASET 2-CHARACTER DESCRIPTOR
2032 V-18	IA9/OA12 OA12	128.794		17-OTS	ARC - 11-FOOT TRANSONIC WIND TUNNEL (UNITARY) - 707 8-FOOT BY 7-FOOT SUPERSONIC WIND TUNNEL (UNITARY) - 707	B-
2039	IA6A	134.071		MODEL 2A ORBITER AND EXTERNAL TANK	MSFC - 14-INCH TRISONIC WIND TUNNEL - 571	85
2042	IA52	134.087		MFSC MODEL NO 453	MSFC - 14-INCH TRISONIC WIND TUNNEL - 584	98
2048	IA128	134.104		2A CONFIGURATION	ARC - 9-FOOT BY 7-FOOT SUPERSONIC WIND TUNNEL (UNITARY) - 710	BV
2062 V-01	IA13	134.117		INTEGRATED VEHICLE CONFIG 3 (MODEL 32-OTS)	AEDC - SUPERSONIC WIND TUNNEL (A) - VA323	TJ
2062 V-02	IA13	134.118		INTEGRATED VEHICLE CONFIG. 3 (MODEL 32-OTS)	AEDC - SUPERSONIC WIND TUNNEL (A) - VA323	TJ
2062 V-03	IA13	141.801		INTEGRATED VEHICLE CONFIG. 3 (MODEL 32-OTS)	AEDC - SUPERSONIC WIND TUNNEL (A) - VA323	TJ
2063	IA37 IA48	128.788		INTEGRATED VEHICLE	MSFC - 14-INCH TRISONIC WIND TUNNEL - 579/580	88
2064 V-01	IA36	141.814		INTEGRATED SSV 2A.3A MODIFIED	CALSPAN - 8-FOOT TRANSONIC WIND TUNNEL - T14-053	UF

INDEX OF PUBLISHED DATA

INTEGRATED VEHICLE DATA

DMS DMS-DP-	NASA SERIES NUMBER	NASA CR NUMBER	NASA TM-X NUMBER	CONFIGURATION	TEST NUMBER	DATASET 2-CHARACTER DESCRIPTOR
2064 V-02	IA36	141.816		INTEGRATED SSV 2A,3A MODIFIED	CALSPAN - 8-FOOT TRANSONIC WIND TUNNEL - T14-053	UF
2065 V-01	IA12C	141.518		2A CONFIGURATION	ARC - 8-FOOT BY 7-FOOT SUPERSONIC WIND T UNNEL (UNITARY) - 710	BZ
2065 V-02	IA12D	141.519		2A CONFIGURATION	ARC - 8-FOOT BY 7-FOOT SUPERSONIC WIND T UNNEL (UNITARY) - 710	BZ
2065 V-03	IA12C	141.520		2A CONFIGURATION	ARC - 8-FOOT BY 7-FOOT SUPERSONIC WIND T UNNEL (UNITARY) - 710	BZ
2070	LA23	128.787		JSC 040A ORBITER WITH EHOT AND 2 S RM	LARC - LOW-TURBULENCE PRESSURE TUNNEL - 141	PU
2072	IA31FC	134.072		PRR BASELINE LAUNCH CONFIGURATION MCR 0074 BASELINE MODEL ELEMENTS	MSFC - 14-INCH TRISONIC WIND TUNNEL - 573	90
2077 V-01	IA29 0A63	134.095		140A/B ORB., VEH. 4 ET, 2 SRB'S SHUTTLE ORBITER VENT PRESSURE MODE L 36-OTS	ARC - 6-FOOT BY 6-FOOT SUPERSONIC WIND T UNNEL - 630	EB
2077 V-02	IA29	134.099		140A/B ORB., VEH. 4 ET, 2 SRB'S	ARC - 6-FOOT BY 6-FOOT SUPERSONIC WIND T UNNEL - 630	EB

INTEGRATED VEHICLE DATA

DMS DMS-DR-	NASA SERIES NUMBER	NASA CR NUMBER	NASA TM-X NUMBER	CONFIGURATION	TEST NUMBER	DATASET 2-CHARACTER DESCRIPTOR
2077 V-03	0A63	134.100		140A/B ORB., VEH. 4 ET, 2 SRB'S	ARC - 6-FOOT BY 6-FOOT SUPERSONIC WIND TUNNEL - 630	EB
2078	IA10	128.795		MODEL 32-OT WITH ORBITER, ET, SIMULATED ENGINE PLUMES	ARC - 3.5-FOOT HYPERSONIC WIND TUNNEL - 169	B7
2084 V-01	IA14A	134.443		SSV 140A/B LAUNCH	ARC - 11-FOOT TRANSONIC WIND TUNNEL (UNITARY) - 716	B1
2084 V-02	IA14A	134.444		SSV 140A/B LAUNCH	ARC - 11-FOOT TRANSONIC WIND TUNNEL (UNITARY) - 716	B1
2084 V-03	IA14A	143.445		SSV 140A/B LAUNCH	ARC - 11-FOOT TRANSONIC WIND TUNNEL (UNITARY) - 716	B1
2084 V-04	IA14A	143.446		SSV 140A/B LAUNCH	ARC - 11-FOOT TRANSONIC WIND TUNNEL (UNITARY) - 716	B1
2084 V-05	IA14A	143.447		SSV 140A/B LAUNCH	ARC - 11-FOOT TRANSONIC WIND TUNNEL (UNITARY) - 716	B1
2084 V-06	IA14A	143.448		SSV 140A/B LAUNCH	ARC - 11-FOOT TRANSONIC WIND TUNNEL (UNITARY) - 716	B1

INTEGRATED VEHICLE DATA

DMS DMS-DR-	NASA SERIES NUMBER	NASA CR NUMBER	NASA TM-X NUMBER	CONFIGURATION	TEST NUMBER	DATASET 2-CHARACTER DESCRIPTOR
2084 V-07	IA14A	143.449		SSV 140A/B LAUNCH	ARC - 11-FOOT TRANSONIC WIND TUNNEL (UNITARY) - 716	B1
2084 V-08	IA14A	143.450		SSV 140A/B LAUNCH	ARC - 11-FOOT TRANSONIC WIND TUNNEL (UNITARY) - 716	B1
2084 V-09	IA14A	141.501		SSV 140A/B LAUNCH	ARC - 11-FOOT TRANSONIC WIND TUNNEL (UNITARY) - 716	B1
2084 V-10	IA14A	141.502		SSV 140A/B LAUNCH	ARC - 11-FOOT TRANSONIC WIND TUNNEL (UNITARY) - 716	B1
2084 V-11	IA14A	141.503		SSV 140A/B LAUNCH	ARC - 11-FOOT TRANSONIC WIND TUNNEL (UNITARY) - 716	B1
2093	IA37B	134.090		EXTERNAL TANK, T9 EXTERNAL TANK, T11	MSFC - 14-INCH TRISONIC WIND TUNNEL - 585	93
2098	IH15	134.096		B10C5D7F4M3V5W87 B10C5D7F4M3V5W87T8	ARC - 3.5-FOOT HYPERSONIC WIND TUNNEL - 172	B8
2099 V-01	OH4B	134.419		22-OT	AEDC - HYPERSONIC WIND TUNNEL (B) - VA352	TK
2099 V-02	OH4B	134.438		22-OT	AEDC - HYPERSONIC WIND TUNNEL (B) - VA352	TK

INTEGRATED VEHICLE DATA

DMS DMS-DR-	NASA SERIES NUMBER	NASA CR NUMBER	NASA TM-X NUMBER	CONFIGURATION	TEST NUMBER	DATASET 2-CHARACTER DESCRIPTOR
2099 V-03	OH4B	134,439		22-OT	AEDC - HYPERSONIC WIND TUNNEL (B) - VA352	TK
2100	OH3A OH3B	134,075		ORB.(VL70-000139)/ET (VL78-00041) AND ORB. ALONE RI ORBITER (VL70-000139)	AEDC - HYPERSONIC WIND TUNNEL (B) - VA289	TM
2105	IH17	144,594		ORBITER + EXTERNAL TANK, SSV MODEL 41-OTS EXTERNAL TANK ALONE, SSV MODEL 41-OTS	LARC - MACH 8 VARIABLE-DENSITY HYPERSONIC TUNNEL - 646/647	PR
2108	IA35 OA54	134,084		B26C9E26F8M7N25R5N116 B26C9E26F8M7N25R5N116S12T12	LARC - UNITARY PLAN WIND TUNNEL - 1063	D4
2110	IH18	144,589		ORBITER CONFIGURATION 2A EXTERNAL TANK	LARC - FREON TUNNEL - 97-118	DM
2112	IA57	134,401		INTEGRATED VEHICLE (CONFIGURATION 3)	AEDC - SUPERSONIC WIND TUNNEL (A) - VA422	TL
2118	IA41	134,108		MATED INTEGRATED VEHICLE MODEL(67-OTS)	LARC - 8-FOOT TRANSONIC PRESSURE TUNNEL - 667	DB
2119	IA42A IA42B	134,109		CONFIGURATION 4 MATED SSV (67-OTS)	LARC - UNITARY PLAN WIND TUNNEL - 1056/1073	D6
2122	IA69	134,424		LAUNCH CONFIGURATION (MODEL 67-OTS)	NRLAD - 7-FOOT TRISONIC WIND TUNNEL - 280	F3
2123	IA53	141,504		LAUNCH CONFIGURATION LAUNCH CONFIGURATION WITH STRUTS	MSFC - 14-INCH TRISONIC WIND TUNNEL - 588	96

INDEX OF PUBLISHED DATA

INTEGRATED VEHICLE DATA

DMS DMS-DR-	NASA SERIES NUMBER	NASA CR NUMBER	NASA TM-X NUMBER	CONFIGURATION	TEST NUMBER	DATASET 2-CHARACTER DESCRIPTOR
2129 V-01	IA14B	141.522		SSV 140A/B LAUNCH	ARC - 9-FOOT BY 7-FOOT SUPERSONIC WIND T UNNEL (UNITARY) - 716	B3
2129 V-02	IA14B	141.523		SSV 140A/B LAUNCH	ARC - 9-FOOT BY 7-FOOT SUPERSONIC WIND T UNNEL (UNITARY) - 716	B3
2136 V-01	IH3	141.514		B17 C7 M4 F5 W103 E22 V7 R5 T10	ARC - 3.5-FOOT HYPERSONIC WIND TUNNEL - 178	E1
2136 V-02	IH3	141.515		B17 C7 M4 F5 W103 E22 V7 R5 T10	ARC - 3.5-FOOT HYPERSONIC WIND TUNNEL - 178	E1
2136 V-03	IH3	141.516		B17 C7 M4 F5 W103 E22 V7 R5 T10	ARC - 3.5-FOOT HYPERSONIC WIND TUNNEL - 178	E1
2136 V-04	IH3	141.517		B17 C7 M4 F5 W103 E22 V7 R5 T10	ARC - 3.5-FOOT HYPERSONIC WIND TUNNEL - 178	E1
2137 V-01, R-01	IA60	134.103		CONFIGURATION 3, MODEL 32-01	LARC - CONTINUOUS-FLOW HYPERSONIC TUNNEL - 108	H1
2138 V-01	IH4	144.608		0.010-SCALE VERSION OF THE VEHICLE 3 SPACE SHUTTLE CONFIGURATION	LARC - UNITARY PLAN WIND TUNNEL - 1059	Q3
2138 V-02	IH4	144.609		0.010-SCALE VERSION OF THE VEHICLE 3 SPACE SHUTTLE CONFIGURATION	LARC - UNITARY PLAN WIND TUNNEL - 1059	Q3

INTEGRATED VEHICLE DATA

DMS DMS-DP-	NASA SERIES NUMBER	NASA CR NUMBER	NASA TM-X NUMBER	CONFIGURATION	TEST NUMBER	DATASET 2-CHARACTER DESCRIPTOR
2138 V-03	1H4	144.610		0.010-SCALE VERSION OF THE VEHICLE 3 SPACE SHUTTLE CONFIGURATION	LARC - UNITARY PLAN WIND TUNNEL - 1059	03
2138 V-04	1H4	144.611		0.010-SCALE VERSION OF THE VEHICLE 3 SPACE SHUTTLE CONFIGURATION	LARC - UNITARY PLAN WIND TUNNEL - 1059	03
2143	1A51A	144.587		INTEGRATED VEHICLE- CONFIGURATION 3 LINES	AEDC - SUPERSONIC WIND TUNNEL (A) - VA422	TQ
2144	1A58	134.427		LAUNCH CONFIGURATION	NRLAD - 7-FOOT TRISONIC WIND TUNNEL - 281	F4
2146	1S4	134.092		30-OTS	LARC - 26-INCH TRANSONIC BLOWDOWN TUNNEL - 547	HF
2148 V-01	1H20	134.440		22-OTS	ARC - 3.5-FOOT HYPERSONIC WIND TUNNEL - 18E	EN
2148 V-02	1H20	134.441		22-OTS	ARC - 3.5-FOOT HYPERSONIC WIND TUNNEL - 18S	EN
2153	1H1	151.377		ORBITER ALONE	LARC - UNITARY PLAN WIND TUNNEL - 1071	07
2156 V-01	1A17A	141.797		ORBITER WITH ET SEPARATING ISOLATED ORBITER	AEDC - HYPERSONIC WIND TUNNEL (B) - VA422	TR
2156 V-02	1A17A	141.798		ORBITER WITH ET SEPARATING ISOLATED ORBITER	AEDC - HYPERSONIC WIND TUNNEL (B) - VA422	TR

INTEGRATED VEHICLE DATA

DMS DMS-DR-	NASA SERIES NUMBER	NASA CR NUMBER	NASA TM-X NUMBER	CONFIGURATION	TEST NUMBER	DATASET 2-CHARACTER DESCRIPTOR
2156 V-03	IA17A	141,799		ORBITER WITH ET SEPARATING ISOLATED ORBITER	AEDC - HYPERSONIC WIND TUNNEL (B) - VA422	TR
2157	IH19	141,822		ORBITER EXTERNAL TANK	LARC - HYPERSONIC NITROGEN TUNNEL - 28	DE
2158	IS6A	147,640		013, T9, S7	MSFC - 14-INCH TRISONIC WIND TUNNEL - 582	IB
2163	IA18	134,413		52-OT ET ALONE	ARC - 3.5-FOOT HYPERSONIC WIND TUNNEL - 191	FS
2164 V-01	OH12 IH2	141,828		MODEL 37-OT (CONFIG. 3 ORB AND ET) CONFIGURATION 3 ORBITER	CALSPAN - 48-INCH HYPERSONIC SHOCK TUNNEL - 173-100	UG
2164 V-02	OH12 IH2	141,829		MODEL 37-OT (CONFIG. 3 ORB AND ET) CONFIGURATION 3 ORBITER	CALSPAN - 48-INCH HYPERSONIC SHOCK TUNNEL - 173-100	UG
2164 V-03	OH12 IH2	141,830		MODEL 37-OT (CONFIG. 3 ORB AND ET) CONFIGURATION 3 ORBITER	CALSPAN - 48-INCH HYPERSONIC SHOCK TUNNEL - 173-100	UG
2166	IH16	141,534		ORB.+ET+SRB ET	LARC - UNITARY PLAN WIND TUNNEL - 1041	PO
2168	LA32		71945	THERMAL PROTECTION SYSTEM	LARC - CONTINUOUS-FLOW HYPERSONIC TUNNEL - 97	OO
2169 V-01	IA81A	141,835		LAUNCH VEHICLE 5	ARC - 11-FOOT TRANSONIC WIND TUNNEL (UNITARY) - 019	ET

INTEGRATED VEHICLE DATA

DMS DMS-DP-	NASA SERIES NUMBER	NASA CR NUMBER	NASA TM-X NUMBER	CONFIGURATION	TEST NUMBER	DATASET 2-CHARACTER DESCRIPTOR
2169 V-02	IA81A	141.837		LAUNCH VEHICLE 5	ARC - 11-FOOT TRANSONIC WIND TUNNEL (UNITARY) - 019	ET
2169 V-03	IA81A	141.838		LAUNCH VEHICLE 5	ARC - 11-FOOT TRANSONIC WIND TUNNEL (UNITARY) - 019	ET
2169 V-04	IA81A	141.839		LAUNCH VEHICLE 5	ARC - 11-FOOT TRANSONIC WIND TUNNEL (UNITARY) - 019	ET
2169 V-05	IA81A	141.840		LAUNCH VEHICLE 5	ARC - 11-FOOT TRANSONIC WIND TUNNEL (UNITARY) - 019	ET
2169 V-06	IA81A	141.841		LAUNCH VEHICLE 5	ARC - 11-FOOT TRANSONIC WIND TUNNEL (UNITARY) - 019	ET
2169 V-07	IA81A	141.842		LAUNCH VEHICLE 5	ARC - 11-FOOT TRANSONIC WIND TUNNEL (UNITARY) - 019	ET
2170 V-01	IA19	141.543		LAUNCH VEHICLE 5	ARC - 11-FOOT TRANSONIC WIND TUNNEL (UNITARY) - 014	EU
2170 V-02	IA19	141.544		LAUNCH VEHICLE 5	ARC - 11-FOOT TRANSONIC WIND TUNNEL (UNITARY) - 014	EU

INDEX OF PUBLISHED DATA

INTEGRATED VEHICLE DATA

DMS DMS-DR-	NASA SERIES NUMBER	NASA CR NUMBER	NASA TM-X NUMBER	CONFIGURATION	TEST NUMBER	DATASET 2-CHARACTER DESCRIPTOR
2170 V-03	IA19	141.545		LAUNCH VEHICLE 5	ARC - 11-FOOT TRANSONIC WIND TUNNEL (UNI TARY) 014 -	EU
2173	IA8	134.107		6-OTS	ARC - 14-FOOT TRANSONIC WIND TUNNEL 711 -	BK
2174 V-01	IA33	141.811		VEHICLE 5 CONFIGURATION	MSFC - 14-INCH TRISONIC WIND TUNNEL 594 -	IC
2174 V-02	IA33	141.812		VEHICLE 5 CONFIGURATION	MSFC - 14-INCH TRISONIC WIND TUNNEL 594 -	IC
2174 V-03	IA33	141.813		VEHICLE 5 CONFIGURATION	MSFC - 14-INCH TRISONIC WIND TUNNEL 594 -	IC
2175 V-01	IA70	134.431		MODEL 49-0 + 67TS INTEGRATED VEHIC LE	NRLAD - 7-FOOT TRISONIC WIND TUNNEL 282 -	F7
2175 V-02	IA70	134.432		MODEL 49-0 + 67TS INTEGRATED VEHIC LE	NRLAD - 7-FOOT TRISONIC WIND TUNNEL 282 -	F7
2175 V-03	IA70	134.433		MODEL 49-0 + 67TS INTEGRATED VEHIC LE	NRLAD - 7-FOOT TRISONIC WIND TUNNEL 282 -	F7
2180 V-01	IH28	147.615		SSV ORBITER (MODEL(50-0) SSV EXT. TANK (MODEL 41-T)	ARC - 3.5-FOOT HYPERSONIC WIND TUNNEL 195 -	EV
2180 V-02	IH28	147.616		SSV ORBITER (MODEL(50-0) SSV EXT. TANK (MODEL 41-T)	ARC - 3.5-FOOT HYPERSONIC WIND TUNNEL 195 -	EV

INDEX OF PUBLISHED DATA

INTEGRATED VEHICLE DATA

DMS DMS-DP-	NASA SERIES NUMBER	NASA CR NUMBER	NASA TM-X NUMBER	CONFIGURATION	TEST NUMBER	DATASET 2-CHARACTER DESCRIPTOR
2189	IA110	141.506		ORBITER 140A/B	ARC - 9-FOOT BY 7-FOOT SUPERSONIC WIND TUNNEL (UNITARY) - 052	E1
2192 V-01	IA87	141.541		O/ET; O/ET,SRB; SRB	AEDC - SUPERSONIC WIND TUNNEL (A) - 60A	TU
2192 V-02	IA87	141.542		O/ET; O/ET,SRB; SRB	AEDC - SUPERSONIC WIND TUNNEL (A) - 60A	TU
2194 V-01	IA81B	141.817		LAUNCH VEHICLE 5	ARC - 9-FOOT BY 7-FOOT SUPERSONIC WIND TUNNEL (UNITARY) - 019	ET
2194 V-02	IA81B	141.818		LAUNCH VEHICLE 5	ARC - 9-FOOT BY 7-FOOT SUPERSONIC WIND TUNNEL (UNITARY) - 019	ET
2194 V-03	IA81B	141.819		LAUNCH VEHICLE 5	ARC - 9-FOOT BY 7-FOOT SUPERSONIC WIND TUNNEL (UNITARY) - 019	ET
2194 V-04	IA81B	141.820		LAUNCH VEHICLE 5	ARC - 9-FOOT BY 7-FOOT SUPERSONIC WIND TUNNEL (UNITARY) - 019	ET
2194 V-05	IA81B	141.821		LAUNCH VEHICLE 5	ARC - 9-FOOT BY 7-FOOT SUPERSONIC WIND TUNNEL (UNITARY) - 019	ET

INDEX OF PUBLISHED DATA

INTEGRATED VEHICLE DATA

DMS DMS-OP-	NASA SERIES NUMBER	NASA CR NUMBER	NASA TM-X NUMBER	CONFIGURATION	TEST NUMBER	DATASET 2-CHARACTER DESCRIPTOR
2199	LA43A/B LA43B		3315	ORBITER: ET: SRB	LARC - UNITARY PLAN WIND TUNNEL - 1074 1093	H5
2200	LA44		3335	ORBITER-140A/B: SRB: ET:	LARC - 8-FOOT TRANSONIC PRESSURE TUNNEL - 677	H6
2204	IA43	141.525		OTS.140A/B	LARC - 8-FOOT TRANSONIC PRESSURE TUNNEL - 693	HC
2206	IA44	141.528		0.010-SCALE OUTER MOLD LINE MODEL OF THE 140A/B CONFIGURATION	LARC - UNITARY PLAN WIND TUNNEL - 1088/1119	HB
2210	IH27	151.372		15-0 VIII (FLAT-PLATE CARRIER)	ARC - 3.5-FOOT HYPERSONIC WIND TUNNEL - 200	E3
2212 V-01	IA80	147.632		LAUNCH VEHICLE 5	ARC - 11-FOOT TRANSONIC WIND TUNNEL (UNITARY) - 023	E4
2212 V-02	IA80	147.633		LAUNCH VEHICLE 5	ARC - 11-FOOT TRANSONIC WIND TUNNEL (UNITARY) - 023	E4
2212 V-03	IA80	147.634		LAUNCH VEHICLE 5	ARC - 11-FOOT TRANSONIC WIND TUNNEL (UNITARY) - 023	E4
2212 V-04	IA80	147.635		LAUNCH VEHICLE 5	ARC - 11-FOOT TRANSONIC WIND TUNNEL (UNITARY) - 023	E4

INDEX OF PUBLISHED DATA

INTEGRATED VEHICLE DATA

DMS DMS-DR-	NASA SERIES NUMBER	NASA CR NUMBER	NASA TM-X NUMBER	CONFIGURATION	TEST NUMBER	DATASET 2-CHARACTER DESCRIPTOR
2219 V-01	IA82C	144.597		LAUNCH VEHICLE 5	ARC - 8-FOOT BY 7-FOOT SUPERSONIC WIND T UNNEL (UNITARY) - 044	E5
2219 V-02	IA82C	144.598		LAUNCH VEHICLE 5	ARC - 8-FOOT BY 7-FOOT SUPERSONIC WIND T UNNEL (UNITARY) - 044	E5
2224	LA55	147.650		72-OTS (ORB., ET, SRM)	LARC - NASA LANGLEY RESEARCH CENTER - 699 8-FOOT TRANSONIC PRESSURE TUNNEL -	HW
2226	IA51B	141.507		SPACE SHUTTLE VEHICLE CONFIGURATIO N 3 MODEL 32-OTS SPACE SHUTTLE ORBITER MODEL 52-O	AEDC - SUPERSONIC WIND TUNNEL (A) - VA422 21AA	V4
2227	IA71	141.806		ORB./W/ET AND SRB 74OTS; ORB. W/ET AND SRB'S 770, 74TS	MSFC - 14-INCH TRISONIC WIND TUNNEL - 610	1K
2230	IA17B	141.509		ORBITER-TANK MATEC. MODEL 52-OT	AEDC - HYPERSONIC WIND TUNNEL (B) - VA422	V3
2231 V-01	IA82B	144.601		LAUNCH VEHICLE 5	ARC - 9-FOOT BY 7-FOOT SUPERSONIC WIND T UNNEL (UNITARY) - 044	E6
2231 V-02	IA82B	144.602		LAUNCH VEHICLE 5	ARC - 9-FOOT BY 7-FOOT SUPERSONIC WIND T UNNEL (UNITARY) - 044	E6

INTEGRATED VEHICLE DATA

OMS OMS-DP-	NASA SERIES NUMBER	NASA CR NUMBER	NASA TM-X NUMBER	CONFIGURATION	TEST NUMBER	DATASET 2-CHARACTER DESCRIPTOR
2235	SA30F	141.810		SRB W/O HEAT SHIELD, W/HEAT SHIELD ON SKIRT, W/HEAT SHIELD ON NOZZLE	MSFC - 14-INCH TRISONIC WIND TUNNEL - 611	1J
2240	IH41A	151.054		60-OTS THERMOCOUPLE MODEL	AEDC - SUPERSONIC WIND TUNNEL (A) - A4A	V7
2242 V-01	IA111	141.831		52-OTS	AEDC - SUPERSONIC WIND TUNNEL (A) - A3A	VB
2242 V-02	IA111	144.588		52-OTS	AEDC - SUPERSONIC WIND TUNNEL (A) - A3A	VB
2248	IH48	144.599		60 OTS SPACE SHUTTLE VEHICLE 5	ARC - 3.5-FOOT HYPERSONIC WIND TUNNEL - 211	NB
2249	IH33	151.775		37-OT SPACE SHUTTLE ORBITER/EXTERNAL TANK- .01 SCALE	CALSPAN - 48-INCH HYPERSONIC SHOCK TUNNEL - 185-131 96-INCH HYPERSONIC SHOCK TUNNEL -	UJ
2253	IA125	144.833		77-0, 77-OTS	MSFC - 14-INCH TRISONIC WIND TUNNEL - 622	1N
2255			62.444	SERIES-BURN, PARALLEL-BURN; 2 CANOPY CONFIGURATIONS;	ARC - 11-FOOT TRANSONIC WIND TUNNEL (UNITARY) - 9-FOOT BY 7-FOOT SUPERSONIC WIND TUNNEL (UNITARY) -	NF
2258 V-01	IA72	151.045		88-OTS MODIFIED W/OMS PODS AND COLD AIR MPS AND SRB PLUME SIMULATION	ARC - 11-FOOT TRANSONIC WIND TUNNEL (UNITARY) - 072	NE

INDEX OF PUBLISHED DATA

INTEGRATED VEHICLE DATA

OMS OMS-OP-	NASA SERIES NUMBER	NASA CR NUMBER	NASA TM-X NUMBER	CONFIGURATION	TEST NUMBER	DATASET 2-CHARACTER DESCRIPTOR
2258 V-02	IA72	151.046		88-OTS MODIFIED W/OMS PODS AND COL D AIR MPS AND SRB PLUME SIMULATION	ARC - 11-FOOT TRANSONIC WIND TUNNEL (UNI TARY) 072	NE
2258 V-03	IA72	151.047		88-OTS MODIFIED W/OMS PODS AND COL D AIR MPS AND SRB PLUME SIMULATION	ARC - 11-FOOT TRANSONIC WIND TUNNEL (UNI TARY) 072	NE
2258 V-04	IA72	151.048		88-OTS MODIFIED W/OMS PODS AND COL D AIR MPS AND SRB PLUME SIMULATION	ARC - 11-FOOT TRANSONIC WIND TUNNEL (UNI TARY) 072	NE
2258 V-05	IA72	151.049		88-OTS MODIFIED W/OMS PODS AND COL D AIR MPS AND SRB PLUME SIMULATION	ARC - 11-FOOT TRANSONIC WIND TUNNEL (UNI TARY) 072	NE
2258 V-06	IA72	151.050		88-OTS MODIFIED W/OMS PODS AND COL D AIR MPS AND SRB PLUME SIMULATION	ARC - 11-FOOT TRANSONIC WIND TUNNEL (UNI TARY) 072	NE
2258 V-07	IA72	151.051		88-OTS MODIFIED W/OMS PODS AND COL D AIR MPS AND SRB PLUME SIMULATION	ARC - 11-FOOT TRANSONIC WIND TUNNEL (UNI TARY) 072	NE
2258 V-08	IA72	151.052		88-OTS MODIFIED W/OMS PODS AND COL D AIR MPS AND SRB PLUME SIMULATION	ARC - 11-FOOT TRANSONIC WIND TUNNEL (UNI TARY) 072	NE
2258 V-09	IA72	151.053		88-OTS MODIFIED W/OMS PODS AND COL D AIR MPS AND SRB PLUME SIMULATION	ARC - 11-FOOT TRANSONIC WIND TUNNEL (UNI TARY) 072	NE

INDEX OF PUBLISHED DATA

INTEGRATED VEHICLE DATA

DMS DMS-DP-	NASA SERIES NUMBER	NASA CR NUMBER	NASA TM-X NUMBER	CONFIGURATION	TEST NUMBER	DATASET 2-CHARACTER DESCRIPTOR
2272 V-01	IA114	151.077		SSV 3	AEDC - HYPERSONIC WIND TUNNEL (B) - C4A	VC
2272 V-02	IA114	151.078		SSV 3	AEDC - HYPERSONIC WIND TUNNEL (B) - C4A	VC
2274	FA14	144.593		74-OTS, VEH. 5 (ASCENT CONFIG.)	MSFC - 14-INCH TRISONIC WIND TUNNEL - 600	IL
2282	IH34	151.407		PLUME SIMULATION MODEL 19-OTS	LERC - 10 BY 10-FOOT SUPERSONIC WIND TUNNEL - 038	GF
2284 V-01	IS2A/B	151.035		INTEGRATED SPACE SHUTTLE VEHICLE 84-OTS	ARC - 9-FOOT BY 7-FOOT SUPERSONIC WIND TUNNEL (UNITARY) - 113 11-FOOT TRANSONIC WIND TUNNEL (UNITARY) -	NK
2294 V-02	IS2A/B	151.036		INTEGRATED SPACE SHUTTLE VEHICLE 84-OTS	ARC - 9-FOOT BY 7-FOOT SUPERSONIC WIND TUNNEL (UNITARY) - 113 11-FOOT TRANSONIC WIND TUNNEL (UNITARY) -	NK
2293	IA40	151.381		MODEL 75-OTS (72-0 WING, 140C MOD. FUSELAGE, ET, SRB)	AEDC - SUPERSONIC WIND TUNNEL (A) - K1A	VT
2295 V-01	IH41B	151.069		ET ALONE T34 ORBITER ALONE BS2C12E52F10M16R18V 8W116	AEDC - SUPERSONIC WIND TUNNEL (A) - A4A	VF

INDEX OF PUBLISHED DATA

INTEGRATED VEHICLE DATA

DMS DMS-DR-	NASA SERIES NUMBER	NASA CR NUMBER	NASA TM-X NUMBER	CONFIGURATION	TEST NUMBER	DATASET 2-CHARACTER DESCRIPTOR
2295 V-02	IH41B	151.070		ET ALONE T34 ORBITER ALONE B62C12E52F10M16R18V 8W116	AEDC - SUPERSONIC WIND TUNNEL (A) A4A -	VF
2295 V-03	IH41B	151.071		ET ALONE T34 ORBITER ALONE B62C12E52F10M16R18V 8W116	AEDC - SUPERSONIC WIND TUNNEL (A) A4A -	VF
2295 V-04	IH41B	151.072		ET ALONE T34 ORBITER ALONE B62C12E52F10M16R18V 8W116	AEDC - SUPERSONIC WIND TUNNEL (A) A4A -	VF
2295 V-05	IH41B	151.073		ET ALONE T34 ORBITER ALONE B62C12E52F10M16R18V 8W116	AEDC - SUPERSONIC WIND TUNNEL (A) A4A -	VF
2299	LA80		3497	ORBITER/747 FERRY VEHICLE	LARC - HIGH SPEED 7 BY 10-FOOT TUNNEL 999 -	JN
2309	IH5	147.635		19-OTS	CALSPAN - 48-INCH HYPERSONIC SHOCK TUNNEL 181 -	UL
2312 V-01	IH47	151.075		VEHICLE 5, TO INCLUDE SRB ALONE AN D OTS (SPIKE NOSE ET)	AEDC - SUPERSONIC WIND TUNNEL (A) J3A -	VI
2312 V-02	IH47	151.076		VEHICLE 5, TO INCLUDE SRB ALONE AN D OTS (SPIKE NOSE ET)	AEDC - SUPERSONIC WIND TUNNEL (A) J3A -	VI
2315	IA141	147.623		0.010-SCALE VL70-000140C INTEGRATE D SPACE SHUTTLE LAUNCH VEHICLE	NRLAD - 7-FOOT TRISONIC WIND TUNNEL 297 -	FK
2316	IA137	147.622		FULL 331 INCH DIAMETER FOREBODY AN 80% (264.8 INCH) OF FULL DIAMET ER FOREBODY	ARC - 14-FOOT TRANSONIC WIND TUNNEL 143-1 -	NY

INDEX OF PUBLISHED DATA

INTEGRATED VEHICLE DATA

DMS DMS-OP-	NASA SERIES NUMBER	NASA CR NUMBER	NASA TM-X NUMBER	CONFIGURATION	TEST NUMBER	DATASET 2-CHARACTER DESCRIPTOR
2319	IM43	151,771		.01-SCALE SPACE SHUTTLE ORB/ET 59-OT	CALSPAN - 48-INCH HYPERSONIC SHOCK TUNNEL - 189 96-INCH HYPERSONIC SHOCK TUNNEL -	UM
2323	IA94A	151,039		0.010-SCALE 72-OTS MODEL	LARC - UNITARY PLAN WIND TUNNEL - 1152	JK
2324	IA94B	151,040		0.010-SCALE 72-OTS MODEL	LARC - UNITARY PLAN WIND TUNNEL - 1177	JH
2326 V-01	IA93	151,037		0.010-SCALE 72-OTS MODEL	LARC - 8-FOOT TRANSONIC PRESSURE TUNNEL - 749	JJ
2326 V-02	IA93	151,038		0.010-SCALE 72-OTS MODEL	LARC - 8-FOOT TRANSONIC PRESSURE TUNNEL - 749	JJ
2327 V-01	IA22	151,079		CONFIG. 102 ORBITER AND ET, DESIGNATED MODEL 70-OT	AEDC - HYPERSONIC WIND TUNNEL (B) - D9A	VK
2327 V-02	IA22	151,080		CONFIG. 102 ORBITER AND ET, DESIGNATED MODEL 70-OT	AEDC - HYPERSONIC WIND TUNNEL (B) - D9A	VK
2327 V-03	IA22	151,081		CONFIG. 102 ORBITER AND ET, DESIGNATED MODEL 70-OT	AEDC - HYPERSONIC WIND TUNNEL (B) - D9A	VK
2328	LA34			REUSABLE SURFACE INSULATION TILE GAPS	LARC - CONTINUOUS-FLOW HYPERSONIC TUNNEL - 105	OO

INTEGRATED VEHICLE DATA

DMS DMS-DR-	NASA SERIES NUMBER	NASA CR NUMBER	NASA TM-X NUMBER	CONFIGURATION	TEST NUMBER	DATASET 2-CHARACTER DESCRIPTOR
2335	IA140A/B	151.783		VEHICLE 5 MODEL 74-OTS	MSFC - 14-INCH TRISONIC WIND TUNNEL - 341 646	1D
2346 V-01	IA142	151.385		75-OTS	AEDC - SUPERSONIC WIND TUNNEL (A) - K1A	VD
2346 V-02	IA142	151.386		75-OTS	AEDC - SUPERSONIC WIND TUNNEL (A) - K1A	VD
2346 V-03	IA142	151.387		75-OTS	AEDC - SUPERSONIC WIND TUNNEL (A) - K1A	VD
2354 V-01	IA143	151.401	1	MODEL 75-OTS (WING)	AEDC - SUPERSONIC WIND TUNNEL (A) - P8A	VX
2354 V-02	IA143	151.402	2	MODEL 75-OTS (WING)	AEDC - SUPERSONIC WIND TUNNEL (A) - P8A	VX
2354 V-03	IA143	151.403	3	MODEL 75-OTS (WING)	AEDC - SUPERSONIC WIND TUNNEL (A) - P8A	VX
2354 V-04	IA143	151.404	4	MODEL 75-OTS (WING)	AEDC - SUPERSONIC WIND TUNNEL (A) - P8A	VX
2384 V-01	IA148	151.412		OV102 + ET (MODEL 70-OT)	AEDC - HYPERSONIC WIND TUNNEL (B) - T0A	4D
2384 V-02	IA148	151.413		OV102 + ET (MODEL 70-OT)	AEDC - HYPERSONIC WIND TUNNEL (B) - T0A	4D

INTEGRATED VEHICLE DATA

DMS DMS-DR-	NASA SERIES NUMBER	NASA CR NUMBER	NASA TM-X NUMBER	CONFIGURATION	TEST NUMBER	DATASET 2-CHARACTER DESCRIPTOR
2401	ISIA/B/C OS3	151.395		11-OTS (ORB. ET. 2 SRB'S)	ARC - 11-FOOT, 9-FOOT, 8-FOOT, UNITARY WIND TUNNEL 705-1 -	2S
2408 V-01	IA156B	160.498		B75C16E64F16FR22HG1M52N108N109N110 N111R20U1V27V29V110V111V114V117W13 1T39527	ARC - 9-FOOT BY 7-FOOT SUPERSONIC WIND TUNNEL (UNITARY) 272 -	2T
2408 V-02	IA156B	160.499		B75C16E64F16FR22HG1M52N108N109N110 N111R20U1V27V29V110V111V114V117W13 1T39527	ARC - 9-FOOT BY 7-FOOT SUPERSONIC WIND TUNNEL (UNITARY) 272 -	2T
2408 V-03	IA156B	160.500		B75C16E64F16FR22HG1M52N108N109N110 N111R20U1V27V29V110V111V114V117W13 1T39527	ARC - 9-FOOT BY 7-FOOT SUPERSONIC WIND TUNNEL (UNITARY) 272 -	2T
2418	IH100	151.414			ARC - 3.5-FOOT HYPERSONIC WIND TUNNEL 227 -	3Z
2422	FH15	151.767		30/10/40-DEGREE CONE OGIVE	AEDC - SUPERSONIC WIND TUNNEL (A) V41A-20 -	4K
2431 V-01	IH85	151.793		OTS-T38S26B62C12M16W116E52V8R18F10 OT-T38B62C12M16W116E52V8R18F10	AEDC - SUPERSONIC WIND TUNNEL (A) V41A-W5 -	4L
2431 V-02	IH85	151.794		OTS-T38S26B62C12M16W116E52V8R18F10 OT-T38B62C12M16W116E52V8R18F10	AEDC - SUPERSONIC WIND TUNNEL (A) V41A-W5 -	4L
2431 V-03	IH85	151.795		OTS-T38S26B62C12M16W116E52V8R18F10 OT-T38B62C12M16W116E52V8R18F10	AEDC - SUPERSONIC WIND TUNNEL (A) V41A-W5 -	4L

INDEX OF PUBLISHED DATA

INTEGRATED VEHICLE DATA

DMS DMS-DR-	NASA SERIES NUMBER	NASA CR NUMBER	NASA TM-X NUMBER	CONFIGURATION	TEST NUMBER	DATASET 2-CHARACTER DESCRIPTOR
2431 V-04	IH85	151.796		OTS-T38S26B62C12M16W116F52V8R18F10 OT-T38B62C12M16W116E52V8R18F10	AEDC - SUPERSONIC WIND TUNNEL (A) - V41A-W5	4L
2431 V-05	IH85	151.797		OTS-T38S26B62C12M16W116E52V8R18F10 OT-T38B62C12M16W116E52V8R18F10	AEDC - SUPERSONIC WIND TUNNEL (A) - V41A-W5	4L
2431 V-06	IH85	151.798		OTS-T38S26B62C12M16W116E52V8R18F10 OT-T38B62C12M16W116E52V8R18F10	AEDC - SUPERSONIC WIND TUNNEL (A) - V41A-W5	4L
2431 V-07	IH85	151.799		OTS-T38S26B62C12M16W116E52V8R18F10 OT-T38B62C12M16W116E52V8R18F10	AEDC - SUPERSONIC WIND TUNNEL (A) - V41A-W5	4L
2431 V-08	IH85	151.800		OTS-T38S26B62C12M16W116E52V8R18F10 OT-T38B62C12M16W116E52V8R18F10	AEDC - SUPERSONIC WIND TUNNEL (A) - V41A-W5	4L
2435	IH39	151.415		INTEGRATED VEHICLE CONFIGURATION 5	LERC - 10 BY 10-FOOT SUPERSONIC WIND TUNNEL - 041	GK
2437	FA25	151.766		MODEL 74-OTS MODEL 74-OTS WITH ORB. MOLD LINE CHANGES ON WING AND NOSE	MSFC - 14-INCH TRISONIC WIND TUNNEL - 652	IX
2440	IH83	151.765		SPACE SHUTTLE PLUME SIMULATION (MODEL 19-OTS)	LERC - 10 BY 10-FOOT SUPERSONIC WIND TUNNEL - 044	GZ
2453	IH75	151.776		19-OTS-B64.C16.E63.F14.M18.N92.N94.V23.W 29.S22.N106.T33	CALSPAN - LUDWIEG TUBE - 195-100	UD

INTEGRATED VEHICLE DATA

CMS CMS-OP-	NASA SERIES NUMBER	NASA CR NUMBER	NASA TM-X NUMBER	CONFIGURATION	TEST NUMBER	DATASET 2-CHARACTER DESCRIPTOR
2456 V-01	IA184	150,486		0.03-SCALE SHUTTLE INTEGRATED VEHICLE 47-OTS	ARC - 9-FOOT BY 7-FOOT SUPERSONIC WIND TUNNEL (UNITARY) - 347-1	3K
2455 V-02	IA184	150,487		0.03-SCALE SHUTTLE INTEGRATED VEHICLE 47-OTS	ARC - 9-FOOT BY 7-FOOT SUPERSONIC WIND TUNNEL (UNITARY) - 347-1	3K
2475	LA140	150,509			LARC - 16-FOOT TRANSONIC TUNNEL - 342	KY

INDEX OF PUBLISHED DATA

CARRIER DATA

DMS DMS-OR-	NASA SERIES NUMBER	NASA CR NUMBER	NASA TM-X NUMBER	CONFIGURATION	TEST NUMBER	DATASET 2-CHARACTER DESCRIPTOR
2211 V-01	CA5	141.800		0.03-SCALE AX 1319 1-1 (CARRIER M ODEL	TBCA - TRANSONIC WIND TUNNEL 1431 -	GM
2211 V-02	CA5	141.803		0.03-SCALE AX 1319 1-1 (CARRIER) M ODEL	TBCA - TRANSONIC WIND TUNNEL 1431 -	GM
2211 V-03	CA5	141.804		0.03-SCALE AX-1319 1-1(CARRIER) MO DEL	TBCA - TRANSONIC WIND TUNNEL 1431 -	GM
2217 V-01	CA20	141.844		0.03-SCALE 45-0 MODIFIED SSV ORBIT ER 140A/B	TBCA - TRANSONIC WIND TUNNEL 1431 -	GN
2217 V-02	CA20	141.845		0.03-SCALE 45-0 MODIFIED SSV ORBIT ER 140A/B	TBCA - TRANSONIC WIND TUNNEL 1431 -	GN
2217 V-03	CA20	141.846		0.03-SCALE 45-0 MODIFIED SSV ORBIT ER 140A/B	TBCA - TRANSONIC WIND TUNNEL 1431 -	GN
2235	CA11	141.835		BOEING 747 MATED WITH AN EXTERNAL TANK	UW - LOW SPEED WIND TUNNEL 1146 -	GO
2243	CA23A	144.583		MODEL 48-0/AX1318!-1 0.0125 SCALE	ARC - 14-FOOT TRANSONIC WIND TUNNEL 980 -	E9
2252 V-01	CA5	147.630		CARRIER W/ ORB. ALONE. CARRIER ALO NE. MATED 747/ORBITER	TBCA - TRANSONIC WIND TUNNEL 1472 -	GP
2252 V-02	CA5	147.631		CARRIER W/ ORB. ALONE. CARRIER ALO NE. MATED 747/ORBITER	TBCA - TRANSONIC WIND TUNNEL 1472 -	GP

INDEX OF PUBLISHED DATA

CARRIER DATA

CMS CMS-DP-	NASA SERIES NUMBER	NASA CR NUMBER	NASA TM-X NUMBER	CONFIGURATION	TEST NUMBER	DATASET 2-CHARACTER DESCRIPTOR
2268 V-01	CA9 CA9P	151.396		BOEING AW13190-1 CARRIER	TBCA - TRANSONIC WIND TUNNEL 1477 -	GG
2268 V-02	CA9 CA9P	151.397		BOEING AW13190-1 CARRIER	TBCA - TRANSONIC WIND TUNNEL 1477 -	GG
2268 V-03	CA9 CA9P	151.398		BOEING AW13190-1 CARRIER	TBCA - TRANSONIC WIND TUNNEL 1477 -	GG
2268 V-04	CA9 CA9P	151.399		BOEING AW13190-1 CARRIER	TBCA - TRANSONIC WIND TUNNEL 1477 -	GG
2268 V-05	CA9 CA9P	151.400		BOEING AW13190-1 CARRIER	TBCA - TRANSONIC WIND TUNNEL 1477 -	GG
2273 V-01	CA26	144.612		AW13181-1, 747/1, 747/4	LTV - HIGH SPEED WIND TUNNEL 559 -	FE
2273 V-02	CA26	144.613		AW13181-1, 747/1, 747/4	LTV - HIGH SPEED WIND TUNNEL 559 -	FE
2273 V-03	CA26	144.614		AW13181-1, 747/1, 747/4	LTV - HIGH SPEED WIND TUNNEL 559 -	FE
2273 V-04	CA26	144.615		AW13181-1, 747/1, 747/4	LTV - HIGH SPEED WIND TUNNEL 559 -	FE
2273 V-05	CA26	144.616		AW13181-1, 747/1, 747/4	LTV - HIGH SPEED WIND TUNNEL 559 -	FE

INDEX OF PUBLISHED DATA

CARRIER DATA

DMS DMS-DR-	NASA SERIES NUMBER	NASA CR NUMBER	NASA TM-X NUMBER	CONFIGURATION	TEST NUMBER	DATASET 2-CHARACTER DESCRIPTOR
2275 V-01	CA23B	144.803		0.0125-SCALE SSV ORBITER	ARC - 14-FOOT TRANSONIC WIND TUNNEL 120 -	NH
2275 V-02	CA23B	144.804		0.0125-SCALE SSV ORBITER	ARC - 14-FOOT TRANSONIC WIND TUNNEL 120 -	NH
2290 V-01	CA9	147.641		747/ORBITER-FERRY CONFIGURATION, 747/ORBITER-ALT CONFIGURATIONS	LARC - V/STOL TRANSITION RESEARCH WIND TUNNEL 129 -	JF
2290 V-02	CA9	147.642		747/ORBITER-FERRY CONFIGURATION, 747/ORBITER-ALT CONFIGURATIONS	LARC - V/STOL TRANSITION RESEARCH WIND TUNNEL 129 -	JF
2290 V-03	CA9	147.643		747/ORBITER-FERRY CONFIGURATION, 747/ORBITER-ALT CONFIGURATIONS	LARC - V/STOL TRANSITION RESEARCH WIND TUNNEL 129 -	JF
2332	CA13	151.373		ORBITER- TAILCONE OFF, TAILCONE ON -TC19.	ARC - 14-FOOT TRANSONIC WIND TUNNEL 121 -	NZ
2338	CS3	147.633		AX13220-3.ORBITER MODEL B-0	UW - LOW SPEED WIND TUNNEL 1170 -	GU
2341	CS4/5	147.638		747CAM/ORBITER	TBCA - TRANSONIC WIND TUNNEL 1490/1493 -	GV
2347 V-01	CA15A	160.482		.04 SCALE 747-100	UW - LOW SPEED WIND TUNNEL 1173 -	GS

INDEX OF PUBLISHED DATA

CARRIER DATA

DMS DMS-DR-	NASA SERIES NUMBER	NASA CR NUMBER	NASA TM-X NUMBER	CONFIGURATION	TEST NUMBER	DATASET 2-CHARACTER DESCRIPTOR
23-8 V-01	CA:58	160.483		747-100 ALONE	UW - LOW SPEED WIND TUNNEL 1178	GT
23-9	CA17	151.379		CARRIER B298W45N5857M2526T14012AT 115.1106.1V9.1.3FTS1	UW - LOW SPEED WIND TUNNEL 1184	GW

INDEX OF PUBLISHED DATA

EXTERNAL TANK DATA

DMS DMS-DR-	NASA SERIES NUMBER	NASA CR NUMBER	NASA TM-X NUMBER	CONFIGURATION	TEST NUMBER	DATASET 2-CHARACTER DESCRIPTOR
2:33	1A58	134.110		EXTERNAL TANK	LARC - CONTINUOUS-FLOW HYPERSONIC TUNNEL - 107	OK
2:36 V-01	1H3	141.514		B17 C7 M4 F5 W103 E22 V7 R5	ARC - 3.5-FOOT HYPERSONIC WIND TUNNEL - 178	E1
2:36 V-02	1H3	141.515		B17 C7 M4 F5 W103 E22 V7 R5 T10	ARC - 3.5-FOOT HYPERSONIC WIND TUNNEL - 178	E1
2:36 V-03	1H3	141.516		B17 C7 M4 F5 W103 E22 V7 R5 T10	ARC - 3.5-FOOT HYPERSONIC WIND TUNNEL - 178	E1
2:36 V-04	1H3	141.517		B17 C7 M4 F5 W103 E22 V7 R5 T10	ARC - 3.5-FOOT HYPERSONIC WIND TUNNEL - 178	E1
2:45	TA1F	134.420		EXTERNAL TANK WITH PROTUBERANCES EXTERNAL TANK WITHOUT PROTUBERANCE S	MSFC - 14-INCH TRISONIC WIND TUNNEL - 583	99
2:53	1H1	151.377		SPB ALONE	LARC - UNITARY PLAN WIND TUNNEL - 1071	07
2:65 V-01	TA2F	141.823		EXTERNAL TANK WITH AND WITHOUT PRO TUBERANCES,0.003 SCALE	MSFC - 14-INCH TRISONIC WIND TUNNEL - 596	1A
2:65 V-02	TA2F	141.824		EXTERNAL TANK WITH AND WITHOUT PRO TUBERANCES,0.003 SCALE	MSFC - 14-INCH TRISONIC WIND TUNNEL - 595	1A
2:65 V-03	TA2F	141.825		EXTERNAL TANK WITH AND WITHOUT PRO TUBERANCES,0.003 SCALE	MSFC - 14-INCH TRISONIC WIND TUNNEL - 596	1A

EXTERNAL TANK DATA

DMS DMS-DR-	NASA SERIES NUMBER	NASA CR NUMBER	NASA TM-X NUMBER	CONFIGURATION	TEST NUMBER	DATASET 2-CHARACTER DESCRIPTOR
2165 V-04	TA2F	141.826		EXTERNAL TANK WITH AND WITHOUT PRO TUBERANCES.0.003 SCALE	MSFC - 14-INCH TRISONIC WIND TUNNEL - 596	1A
2165 V-05	TA2F	141.827		EXTERNAL TANK WITH AND WITHOUT PRO TUBERANCES.0.003 SCALE	MSFC - 14-INCH TRISONIC WIND TUNNEL - 596	1A
2181	TA9F	134.425		EXTERNAL TANK	ARC - 3.5-FOOT HYPERSONIC WIND TUNNEL - 196	EY
2197	FH10	134.418		ET MODEL MCR0200	AEDC - HYPERVELOCITY WIND TUNNEL (F) - VA291	TX
2208 V-01	TA3F	144.590		MODEL NO. 470	MSFC - 14-INCH TRISONIC WIND TUNNEL - 609	1G
2208 V-02	TA3F	144.591		MODEL NO. 470	MSFC - 14-INCH TRISONIC WIND TUNNEL - 609	1G
2218	TH1F	151.357		EXTERNAL TANK	AEDC - HYPERVELOCITY WIND TUNNEL (F) - 25A	TY
2276	FH13	151.055		40-DEG NOSE-CLEAN(NO PROTUBERANCES) DOUBLE CONE(10-DEG-40-DEG)(NO PROT UBERANCES)	AEDC - SUPERSONIC WIND TUNNEL (A) - E1A	VD
2313 V-01	FH14	151.041		.0275 SCALE SPACE SHUTTLE EXTERNAL TANK	ARC - 3.5-FOOT HYPERSONIC WIND TUNNEL - 215	NT
2313 V-02	FH14	151.042		.0275 SCALE SPACE SHUTTLE EXTERNAL TANK	ARC - 3.5-FOOT HYPERSONIC WIND TUNNEL - 215	NT

EXTERNAL TANK DATA

DMS DMS-OR-	NASA SERIES NUMBER	NASA CR NUMBER	NASA TM-X NUMBER	CONFIGURATION	TEST NUMBER	DATASET 2-CHARACTER DESCRIPTOR
2313 V-03	FH14	151.043		.0275 SCALE SPACE SHUTTLE EXTERNAL TANK	ARC - 3.5-FOOT HYPERSONIC WIND TUNNEL - 215	NT

Table 5-1

Wind Tunnel Tests/DMS Data Processing Summary

Tests processed	Page 94
Tests in process	Page 288

TEST ID	REPORT TITLE	CONFIGURATIONS TESTED	TEST PURPOSE	TYPE OF TEST	MODEL SCALE MACH RANGE	TESTING AGENCY	COGNIZANT TEST DMS PERSONNEL	BASIC PUBLICATIONS OR COMMENTS
LARC - UPWT - 1002 / MA5 CR-128,750	AERODYNAMIC STABILITY AND CONTROL CHARACTERISTICS OF A .01925 SCALE MODEL NR ATP ORBITER AT MACH NUMBERS FROM 1.9 TO 4.63	NR ATP ORBITER	AERODYNAMIC STABILITY AND CONTROL OF NR ATP ORBITER CONFIGURATION	FORCE	0.01925 / 1.3 - 4.63	LARC / LARC - UNITARY PLAN WIND TUNNEL	R. FOURNIER, B. SPENCER /LARC J. E. VAUGHN J. L. GLYNN -DMS	DMS-DR-2001 NOV., 1972
LARC - BTPT - 626 / LA1 CR-128,752	RESULTS OF TRANSONIC TESTS IN THE NASA/LARC 8 FOOT PRESSURE TUNNEL ON A 0.015 SCALE MODEL NR-PRR SPACE SHUTTLE ORBITER	NR PRR ORBITER	TRANSONIC AERODYNAMIC CHARACTERISTICS	FORCE	0.015 / 0.3 - 1.3	LARC / LARC - 8-FOOT TRANSONIC PRESSURE TUNNEL	R. MENNELL, B. SPENCER /NR R. SINGELLTON -DMS	DMS-DR-2002 MARCH, 1973
LARC - 22WT - 409 / MA2 CR-128,754	HYPERSONIC AERODYNAMIC CHARACTERISTICS OF NR-ATP ORBITER, ORBITER WITH EXTERNAL TANK, AND ASCENT CONFIGURATION	NR ATP ORBITER	HYPERSONIC AERODYNAMIC CHARACTERISTICS OF NR ATP ORBITER	FORCE	0.0045 / 20.3 -	LARC / LARC - 22-INCH HELIUM TUNNEL	G. C. ASHBY /LARC J. E. VAUGHN -DMS	DMS-DR-2003 APRIL, 1973
LTV - 1520SWT - S-081 / MA1 CR-128,082	LONGITUDINAL AERODYNAMIC CHARACTERISTICS OF LOW ASPECT RATIO WING CONFIGURATIONS IN GROUND EFFECT FOR A MOVING AND STATIONARY GROUND SURFACE	MSC 040A ORBITER	ELEVON EFFECTIVENESS AND ALTERNATE CONFIGURATION GEOMETRIES IN PRESENCE OF GROUND EFFECT	FORCE	0.05 / 0.067-	MSC / LTV - 15-FOOT BY 20-FOOT SUBSONIC WIND TUNNEL	P. ROMERE /MSC J. E. VAUGHN W. M. HALE -DMS	DMS-DR-2004 NOV., 1972

TEST ID	REPORT TITLE	CONFIGURATIONS TESTED	TEST PURPOSE	TYPE OF TEST	MODEL SCALE MACH RANGE	TESTING AGENCY	COGNIZANT TEST DMS PERSONNEL	BASIC PUBLICATIONS OR COMMENTS
MSFC - 14TWT - 555 / OAI CR-120,070	AERODYNAMIC STABILITY, CONTROL EFFECTIVENESS AND DRAG CHARACTERISTICS OF A SHUTTLE ORBITER CONFIGURATION AT MACH NUMBERS FROM 0.6 TO 4.96	NR ATP BASELINE ORBITER	AERODYNAMIC STABILITY AND CONTROL EFFECTIVENESS AND DRAG CHARACTERISTICS	FORCE	0.004 / 0.6 - 4.96	MSFC / MSFC - 14-INCH TRISONIC WIND TUNNEL	P. RAMSEY /MSFC V. W. SPARKS J. L. GLYNN -DMS	DMS-DR-2005 NOV., 1972
MSFC - 14TWT - 556 / IAIA CR-120,088	AERODYNAMIC STATIC STABILITY AND CONTROL EFFECTIVENESS OF A PARAMETRIC SHUTTLE LAUNCH CONFIGURATION	MSFC/NR PARAMETRIC LAUNCH VEHICLE	PERFORMANCE, STABILITY AND CONTROL CHARACTERISTICS	FORCE	0.004 / 0.6 - 4.96	MSFC / MSFC - 14-INCH TRISONIC WIND TUNNEL	P. E. RAMSEY /MSF V. W. SPARKS J. L. GLYNN -DMS	DMS-DR-2006 DEC., 1972
ARC - 3.5HWT - 147 / OA4 CR-128,760	RESULTS OF INVESTIGATIONS ON A 0.015 SCALE MODEL FOR NORTH AMERICAN ROCKWELL SPACE SHUTTLE ORBITER IN THE NASA/ARC 3.5 FOOT HYPERSONIC WIND TUNNEL	NR SSV ORBITER	STATIC STABILITY AND TRIM CAPABILITY, COMPONENT INCREMENTAL EFFECTS	FORCE	0.015 / 7.3 -	ARC / ARC - 3.5-FOOT HYPERSONIC WIND TUNNEL	B. CAMERON, C. W. LAMONT /NR T. L. MULKEY W. R. MORGAN -DMS	DMS-DR-2007 MARCH, 1973
LARC - CFHT - 89 / MA4 CR-128,751	STATIC STABILITY AND PERFORMANCE CHARACTERISTICS OF THE A.T.P. ORBITER AT M=10.3	NR ATP ORBITER	AERODYNAMIC STABILITY AND PERFORMANCE AT HYPERSONIC MACH NO. OF 10	FORCE	0.0075 / 10.3 -	LARC / LARC - CONTINUOUS-FLOW HYPERSONIC TUNNEL	T. BLACKSTOCK /LA RC V. W. SPARKS J. R. ZILER -DMS	DMS-DR-2008 JAN., 1973
LARC - CFHT - 89 / MA4 CR-128,751	STATIC STABILITY AND PERFORMANCE CHARACTERISTICS OF THE A.T.P. ORBITER AT M=10.3	NR ATP ORBITER	AERODYNAMIC STABILITY AND PERFORMANCE AT HYPERSONIC MACH NO. OF 10	FORCE	0.0075 / 10.3 -	LARC / LARC - CONTINUOUS-FLOW HYPERSONIC TUNNEL	T. BLACKSTOCK /LA RC V. W. SPARKS J. P. ZILER -DMS	DMS-DR-2008 REVISION 01 MAY, 1973

TEST ID	REPORT TITLE	CONFIGURATIONS TESTED	TEST PURPOSE	TYPE OF TEST	MODEL SCALE MACH RANGE	TESTING AGENCY	COGNIZANT TEST DMS PERSONNEL	BASIC PUBLICATIONS OR COMMENTS
ARC - 66SWT - 650 / 0A3 CR-128,761	AERODYNAMIC CHARACTERISTICS OF THE ROCKWELL INTERNATIONAL ORBITER OA3 AT MACH NUMBERS FROM 0.6 TO 2.0	SHUTTLE ORBITER	GEOMETRIC VARIATION, LONGITUDINAL AND LATERAL-DIRECTIONAL STABILITY EFFECTS	FORCE	.015 / 0.6 - 2.0	ARC / ARC - 6-FOOT BY 6-FOOT SUPERSONIC WIND TUNNEL	B. CAMERON, J. CAMPBELL, T.PAINE/R-DMS	DMS-DR-2009 JUNE, 1973
MSFC - 14TWT - 545 / IA1B CR-120,060	DETERMINATION OF THE AERODYNAMIC INTERFERENCE BETWEEN THE SPACE SHUTTLE ORBITER, EXTERNAL TANK, AND SOLID ROCKET BOOSTER ON A 0.004 SCALE ASCENT CONFIGURATION	NR ATP ORBITER/TANK AND SRMS ON AND OFF	AERODYNAMIC CHARACTERISTICS DURING SEPARATION	FORCE	0.004 / 0.60 - 4.96	MSFC / MSFC - 14-INCH TRISONIC WIND TUNNEL	P. RAMSEY / MSFC - R. BUCHHOLZ /LMSC - E. ALLEN /RI - J. DEHART/NSI V. W. SPARKS J. R. ZILER -DMS	DMS-DR-2010 MAY, 1973
MSFC - 14TWT - 558 / MA9F CR-120,089	SPACE SHUTTLE (ATP CONFIGURATION) ABORT STAGING INVESTIGATION	NR ATP ORBITER/EXTERNAL TANK AND SRBS	BASELINE SEPARATION	FORCE	0.004 / 0.9 - 2.0	MSFC / MSFC - 14-INCH TRISONIC WIND TUNNEL	J. RAMPY /NSI - K. BLACKWELL / MSFC - E. ALLEN /RI - I. FOSSLER/MSC V. W. SPARKS J. R. ZILER -DMS	DMS-DR-2011 APRIL, 1973
MSFC - 14TWT - 554 / SA1F CR-120,090	AERODYNAMIC CHARACTERISTICS OF A 162-INCH DIAMETER SOLID ROCKET BOOSTER WITH AND WITHOUT STRAKES	SRB(PRR)	DETERMINE STATIC AERODYNAMIC CHARACTERISTICS OF 162-INCH DIAMETER SRB(PRR) WITH AND WITHOUT STRAKES	FORCE	0.0049 / 0.6 - 3.48	MSFC / MSFC - 14-INCH TRISONIC WIND TUNNEL	JOSH JOHNSON /MSFC - W. D. RADFORD/NSI - J. RAMPY /NSI V. W. SPARKS J. R. ZILER -DMS	DMS-DR-2012 APRIL, 1973

TEST ID	REPORT TITLE	CONFIGURATIONS TESTED	TEST PURPOSE	TYPE OF TEST	MODEL SCALE / MACH RANGE	TESTING AGENCY	COGNIZANT TEST DMS PERSONNEL	BASIC PUBLICATIONS OR COMMENTS
ARC - 975WT - 616 / IA2 CR-128,752	EFFECT OF GASEOUS AND SOLID SIMULATED JET PLUMES ON AN 040A SPACE SHUTTLE LAUNCH CONFIGURATION AT MACH NUMBERS FROM 1.6 TO 2.2	SHUTTLE ORBITER/TANK SRM (N-040A)	PLUME EFFECTS ON STABILITY AND CONTROL CHARACTERISTICS	FORCE	0.019 / 1.6 - 2.2	ARC / ARC - 9-FOOT BY 7-FOOT SUPERSONIC WIND TUNNEL (UNITARY)	J.B.DODS,JR.,/ARC/ET AL V. W. SPARKS B. J. FRICKEN -DMS	DMS-DR-2013 FEB., 1974
LARC - UPWT - 1007 / CA7 CR-128,753	RESULTS OF SUPERSONIC TESTS IN THE LARC UNITARY PLAN WIND TUNNEL ON A .015 SCALE MODEL NR-PRR SPACE SHUTTLE ORBITER	NR PRR-SSV ORBITER	SUPERSONIC AERODYNAMIC CHARACTERISTICS CONTROL EFFECTIVENESS MODEL COMPONENT EFFECTS WING AREA-THICKNESS SURVEYS	FORCE	0.015 / 2.5 - 4.6	LARC / LARC - UNITARY PLAN WIND TUNNEL	B. SPENCER, R. MENNELL /NR J. E. VAUGHN B. J. FRICKEN -DMS	DMS-DR-2014 MARCH, 1973
LTV - HSWT - 458 / IA4 CR-120,091	AERODYNAMIC RESULTS OF SEPARATION TESTS IN THE VOUGHT AERONAUTICS 4X4FT HSWT ON A .0075 SCALE ROCKWELL INTERNATIONAL-ATP SHUTTLE INTEGRATED VEHICLE	NASA SSV ORBITER ON NR EOHT WITH SINGLE BSRM	EFFECTS OF BSRM SEPARATION ON LONGITUDINAL AND LATERAL-DIRECTIONAL STABILITY AND CONTROL CHARACTERISTICS	FORCE	0.0075 / 2.4 - 4.39	LTV / MSC / LTV - HIGH SPEED WIND TUNNEL	P. ROMERE/JSC, C. ZIEGLER, VSD J. RILEY, J.S. PRIGGE /ROCKWELL J. E. VAUGHN B. J. FRICKEN -DMS	DMS-DR-2015 VOLUME 01 JULY, 1973
LTV - HSWT - 458 / IA4 CR-120,091	AERODYNAMIC RESULTS OF SEPARATION TESTS ON THE VOUGHT AERONAUTICS 4FT X 4FT HSWT ON A .0075 SCALE ROCKWELL INTERNATIONAL-ATP SHUTTLE INTEGRATED VEHICLE	NASA SSV ORBITER ON NR EOHT WITH SINGLE BSRM	EFFECTS OF BSRM SEPARATION ON LONGITUDINAL AND LATERAL-DIRECTIONAL STABILITY AND CONTROL CHARACTERISTICS	FORCE	0.0075 / 2.4 - 4.39	MSC / LTV - HIGH SPEED WIND TUNNEL	P. ROMERE/JSC, C. ZIEGLER, VSD J. RILEY, J. S. PRIGGE/RI J. E. VAUGHN B. J. FRICKEN -DMS	DMS-DR-2015 VOLUME 02 JULY, 1973

TEST ID	REPORT TITLE	CONFIGURATIONS TESTED	TEST PURPOSE	TYPE OF TEST	MODEL SCALE MACH RANGE	TESTING AGENCY	COGNIZANT TEST DMS PERSONNEL	BASIC PUBLICATIONS OR COMMENTS
NRLAD - LSWT - 689 / OA2 CR-120.092	RESULTS OF INVESTIGATIONS ON A 0.0405 SCALE MODEL ATP VERSION OF THE NR-SSV ORBITER IN THE NORTH AMERICAN AERONAUTICAL LABORATORY LOW SPEED WIND TUNNEL	NR ATP ORBITER	SUBSONIC AERODYNAMIC CHARACTERISTICS	FORCE	0.0405 / 0.165-0.26	NR / NRLAD - LOW SPEED WIND TUNNEL	R. MENNELL /NR R. SINGELLTON -DMS	DMS-DR-2016 APRIL, 1973
NRLAD - LSWT - 690 / OA5 CR-123.851	RESULTS OF INVESTIGATIONS ON A 0.0405 SCALE MODEL PRR VERSION OF THE NR-SSV ORBITER IN THE NORTH AMERICAN AERONAUTICAL LABORATORY LOW SPEED WIND TUNNEL	NR ATP ORBITER	SUBSONIC AERODYNAMIC CHARACTERISTICS	FORCE	0.0405 / 0.165-0.26	NR / NRLAD - LOW SPEED WIND TUNNEL	R. KINGSLAND /NR R. SINGELLTON -DMS	DMS-DR-2017 APRIL, 1973
NRLAD - LSWT - 693 / 143 CR-128.755	CROSS WIND LOADS INVESTIGATION OF A .01925 SCALE MODEL OF THE ATP-SSV LAUNCH CONFIGURATION	ATP LAUNCH CONFIGURATION	CROSSWIND LOADS	FORCE	0.01925 / 0.069-0.25	NR / NRLAD - LOW SPEED WIND TUNNEL	L.S. KATOW /RI T. L. MULKEY S. W. BROWN -DMS	DMS-DR-2018 JUNE, 1973
NRLAD - LSWT - 694 / OA6 CR-128.756	LOW SPEED LONGITUDINAL AND LATERAL STABILITY CHARACTERISTICS OF A PRR SHUTTLE ORBITER CONFIGURATION	ATP AND PRR ORBITER	INVESTIGATE CONFIGURATION VARIABLES TO IMPROVE TOUCHDOWN LIFT CAPABILITIES	FORCE	0.0405 / 0.165-0.26	NR / NRLAD - LOW SPEED WIND TUNNEL	R. B. KINGSLAND/R OCKWELL T. L. MULKEY D. A. SARVER -DMS	DMS-DR-2019 JUNE, 1973
NRLAD - LSWT - 696 / OA9 CR-128.757	LOW SPEED INVESTIGATION OF THE PRR PLANFORM WING BOTH IN AND OUT OF GROUND EFFECT	PRR ORBITER	OPTIMIZE PRR PLANFORM WING IN AND OUT OF GROUND EFFECT	FORCE	0.0405 / 0.16 - 0.26	NR / NRLAD - LOW SPEED WIND TUNNEL	R. B. KINGSLAND, L. KATOW /RI D. A. SARVER -DMS	DMS-DR-2020 JUNE, 1973

TEST ID	REPORT TITLE	CONFIGURATIONS TESTED	TEST PURPOSE	TYPE OF TEST	MODEL SCALE MACH RANGE	TESTING AGENCY	COGNIZANT TEST DMS PERSONNEL	BASIC PUBLICATIONS OR COMMENTS
NPLAD - LSWT - 699 / OA45 CR-128,758	PRESSURE LOADS AN D AERODYNAMIC FOR CE INFORMATION FO R THE -89A SPACE SHUTTLE ORBITER C ONFIGURATION	-89A ORBITER	PRESSURE LOADS DA TA IN GROUND EFFE CT	PRESSURE	0.2 - 0.2	NR / NRLAD - LOW SPEED WIND TUNNEL	R. MENNELL /ROCKW ELL H. C. ZIMMERLE -DMS	DMS-DR-2021 VOLUME 01 NOV., 1973
NPLAD - LSWT - 699 / OA45 CR-128,758	PRESSURE LOADS AN D AERODYNAMIC FOR CE INFORMATION FO R THE -89A SPACE SHUTTLE ORBITER C ONFIGURATION	-89A ORBITER	PRESSURE LOADS DA TA IN GROUND EFFE CT	PRESSURE	0.2 - 0.2	NR / NRLAD - LOW SPEED WIND TUNNEL	R. MENNELL /ROCKW ELL H. C. ZIMMERLE -DMS	DMS-DR-2021 VOLUME 02 OCT., 1973
NPLAD - LSWT - 698 / OA10 CR-128,759	AERODYNAMIC CHARA CTERISTICS OF THE ROCKWELL INTERNA TIONAL -89B SPACE SHUTTLE ORBITER CONFIGURATION	RI -89B ORBITER	LONGITUDINAL AND LATERAL-DIRECTION AL STABILITY LEVELS	FORCE	0.0405 / 0.16 - 0.26	NR / NRLAD - LOW SPEED WIND TUNNEL	R. B. KINGSLAND / RI T. L. MULKEY S. W. BROWN -DMS	DMS-DR-2022 JUNE, 1973
LARC - 22WT - 411 / LA2 CR-128,763	STATIC AERODYNAMI C CHARACTERISTICS AND OIL FLOW AND ELECTRON BEAM RESULTS OF A 0.00 5 SCALE MODEL LAN GLEY CONCEPT SPAC E SHUTTLE ORBITER (LO-100) AT A MAC H NUMBER OF 20.3	LO-100 ORBITER	DETERMINE HYPERSO NIC PERFORMANCE, STATIC STABILITY AND CONTROL EFFECTIVENESS AND EXAMINE FLOW ABC UT THE LO-100 ORB ITER	FORCE	0.0050 / 20.30- 20.30	LARC / LARC - 22-INCH HELIUM TUNNEL	D. STONE /LARC V. W. SPARKS D. A. SARVER -DMS	DMS-DR-2023 JUNE, 1973
ARC - 11TWT - 686 / IA7 CR-128,765	WIND TUNNEL TEST OF THE 0.019 (040A) JET PLUME SPAC E SHUTTLE INTEGRA TED VEHICLE IN TH E ARC 11-FOOT UNI TARY WIND TUNNEL	040A SPACE SHUTTL E INTEGRATED VEHI CLE	STABILITY AND CON TROL DATA, WING P RESSURE AND NOZZL E PRESSURE DISTRI BUTIONS	FORCE PRESSURE	0.019 / 0.9 - 1.2	ARC / ARC - 11-FOOT TRANSO NIC WIND TUNNE L (UNITARY)	R. B. HARDIN /RI T. L. MULKEY W. M. HALE -DMS	DMS-DR-2024 AUGUST, 1973

TEST ID	REPORT TITLE	CONFIGURATIONS TESTED	TEST PURPOSE	TYPE OF TEST	MODEL SCALE MACH RANGE	TESTING AGENCY	COGNIZANT TEST DMS PERSONNEL	BASIC PUBLICATIONS OR COMMENTS
MSFC - 14TWT - 565 /SA3F CR-128,767	AERODYNAMIC CHARACTERISTICS OF A 1/42-INCH DIAMETER SOLID POCKET BOOSTER WITH AND WITHOUT STRAKES	142-INCH DIAMETER SRB WITH AND WITHOUT STRAKES	DETERMINATION OF AERODYNAMIC FORCES AND MOMENTS WITH COMPONENT BUILD-UP	FORCE	0.00563 / 0.6 - 3.48	MSFC / MSFC - 14-INCH TRISONIC WIND TUNNEL	JOSH D. JOHNSON / NASA/MSFC WALTER D. RADFORD /NSI V. W. SPARKS A. T. KAVANAUGH -DMS	DMS-DR-2025 MAY, 1973
MSFC - 14TWT - 566 /1A31F CR-128,776	AERODYNAMIC INVESTIGATIONS ON A 0.004 SCALE MODEL MCR 0074 BASELINE SPACE SHUTTLE LAUNCH VEHICLE AT MACH NO. BETWEEN 0.6 AND 4.96	MCR 0074 BASELINE LAUNCH VEHICLE	DETERMINE THE EFFECTS OF MODEL PARAMETRIC VARIATIONS ON AERODYNAMIC STATIC STABILITY CHARACTERISTICS OVER A MACH NO. RANGE OF 0.6 TO 4.96	FORCE	0.004 / 0.6 2- .2	MSFC / MSFC - 14-INCH TRISONIC WIND TUNNEL	PAUL RAMSEY/MSFC - M. K. ROBERTSON /NORTHROP V. W. SPARKS B. W. MYERS -DMS	DMS-DR-2026 SEPT., 1973
MSFC - 14TWT - 567 /1A32FB CR-141,807	AN INVESTIGATION IN THE NASA MSFC 14-INCH TRISONIC WIND TUNNEL TO DETERMINE THE PRESSURE DISTRIBUTION OVER THE COMPONENTS OF A 0.004 SCALE VERSION OF THE ROCKWELL MCR 007 4 BASELINE SHUTTLE ASCENT CONFIGURATION (1A32FB)	ORB. WITH ET AND 2 SRB'S		PRESSURE	0.004 / 0.6 - 4.96	MSFC / MSFC - 14-INCH TRISONIC WIND TUNNEL	P. E. RAMSEY /MSFC C V. W. SPARKS M. M. MOSER JR. -DMS	DMS-DR-2027 VOLUME 01 SEPT., 1975

TEST ID	REPORT TITLE	CONFIGURATIONS TESTED	TEST PURPOSE	TYPE OF TEST	MODEL SCALE MACH RANGE	TESTING AGENCY	COGNIZANT TEST DMS PERSONNEL	BASIC PUBLICATIONS OR COMMENTS
MSFC - 14TWT - 567 / IA32FB CR-141,808	AN INVESTIGATION IN THE NASA MSFC 14-INCH TRISONIC WIND TUNNEL TO DETERMINE THE PRESSURE DISTRIBUTION OVER THE COMPONENTS OF A 0.004 SCALE VERSION OF THE ROCKWELL MCR 007 4 BASELINE SHUTTLE ASCENT CONFIGURATION (IA32F)	ROB. WITH ET AND 2 SRB'S	DETERMINE PRESSURE DISTRIBUTION OVER ET, SRB, ORBITER WING	PRESSURE	0.004 / 0.6 - 4.96	MSFC / MSFC - 14-INCH TRISONIC WIND TUNNEL	P. E. RAMSEY / MSFC V. W. SPARKS M. M. MOSER JR. -DMS	DMS-DR-2027 VOLUME 02 OCT., 1975
MSFC - 14TWT - 567 / IA32FB CR-141,809	AN INVESTIGATION IN THE NASA MSFC 14-INCH TRISONIC WIND TUNNEL TO DETERMINE THE PRESSURE DISTRIBUTION OVER THE COMPONENTS OF A 0.004 SCALE VERSION OF THE ROCKWELL MCR 007 4 BASELINE SHUTTLE ASCENT CONFIGURATION (IA32F)	ORB. WITH 2 SRB'S	DETERMINE PRESSURE DISTRIBUTION OVER ET, SRB, ORBITER WING	PRESSURE	0.004 / 0.6 - 4.96	MSFC / MSFC - 14-INCH TRISONIC WIND TUNNEL	P. E. RAMSEY/MSFC V. W. SPARKS M. M. MOSER JR. -DMS	DMS-DR-2027 VOLUME 03 OCT., 1975

TEST ID	REPORT TITLE	CONFIGURATIONS TESTED	TEST PURPOSE	TYPE OF TEST	MODEL SCALE MACH RANGE	TESTING AGENCY	COGNIZANT TEST DMS PERSONNEL	BASIC PUBLICATIONS OR COMMENTS
MSFC - 14TWT - 570 / IA31FB CR-134,434	TRIPLE BALANCE TEST OF THE PRR BASELINE SPACE SHUTTLE CONFIGURATION (TWT 570)	MCR 0074 ORBITER LAUNCH	TO OBTAIN FORCE AND MOMENT DATA FOR THE MCR 0074 ORBITER (PRR BASELINE, EXTERNAL TANK, AND SOLID ROCKET BOOSTER IN THE LAUNCH CONFIGURATION AND TO IDENTIFY KEY SIMULATION PARAMETERS TO BE USED IN LAUNCH VEHICLE WIND TUNNEL TESTS	FORCE	0.004 / 0.6 - 4.96	MCFC / MSFC - 14-INCH TRISONIC WIND TUNNEL	P.RAMSEY/NASA T.DAVIS/NSI V. W. SPARKS R. B. LOWE -DMS	DMS-DR-2028 VOLUME 01 DEC., 1974
MSFC - 14TWT - 570 / IA31FB CR-134,436	TRIPLE BALANCE TEST OF THE PRR BASELINE SPACE SHUTTLE CONFIGURATION (TWT 570)	MCR 0074 ORBITER LAUNCH	TO OBTAIN FORCE AND MOMENT DATA FOR THE MCR 0074 ORBITER (PRR BASELINE, EXTERNAL TANK, AND SOLID ROCKET BOOSTER IN THE LAUNCH CONFIGURATION AND TO IDENTIFY KEY SIMULATION PARAMETERS TO BE USED IN LAUNCH VEHICLE WIND TUNNEL TESTS	FORCE	0.004 / 0.6 - 4.96	MSFC / MSFC - 14-INCH TRISONIC WIND TUNNEL	P. RAMSEY/NASA T. DAVIS/NSI V. W. SPARKS R. B. LOWE -DMS	DMS-DR-2028 VOLUME 02 DEC., 1974
MSFC - 14TWT - 568 / 0A47 CR-128,765	RESULTS OF A STATIC STABILITY AND CONTROL EFFECTIVENESS INVESTIGATION OF A 0.004 SCALE 2A ORBITER IN THE MARSHALL SPACE FLIGHT CENTER TRANSONIC WIND TUNNEL (MACH=0.6-4.96)	2A ORBITER 2A ORBITER WITH SYMETRICAL WING ORBITER BUILDUP	DETERMINE STATIC STABILITY AND CONTROL EFFECTIVENESS	FORCE	0.004 / 0.6 - 4.96	MSFC / MSFC - 14-INCH TRISONIC WIND TUNNEL	E.C. ALLEN, T. TUTTLE, T. FOSTER ROCKWELL J. E. VAUGHN W. R. MORGAN -DMS	DMS-DR-2029 MAY, 1973

TEST ID	REPORT TITLE	CONFIGURATIONS TESTED	TEST PURPOSE	TYPE OF TEST	MODEL SCALE MACH RANGE	TESTING AGENCY	COGNIZANT TEST DMS PERSONNEL	BASIC PUBLICATIONS OR COMMENTS
NRLAD - LSWT - 703 / 0A14 CR-128,768	AERODYNAMIC CHARACTERISTICS OF VARIOUS AFT-END CONFIGURATIONS OF THE ROCKWELL INTERNATIONAL SHUTTLE ORBITER	-898 ROCKWELL INTERNATIONAL SPACE SHUTTLE ORBITER	AFT-END CONFIGURATION EFFECTS ON LIFT, DRAG AND PITCHING MOMENT	FORCE	0.0405 / 0.16 -	NR / NRLAD - LOW SPEED WIND TUNNEL	R. B. KINGSLAND / RI T. L. MULKEY W. M. HALE -DMS	DMS-DR-2030 AUGUST, 1973
LARC - CFHT - 85 / LA3 CR-128,769	HYPERSONIC PERFORMANCE, STABILITY AND CONTROL CHARACTERISTICS OF A 0.010 SCALE MODEL OF A LANGLEY CONCEPT SPACE SHUTTLE ORBITER	LO-100 ORBITER	ELEVON AND BODY FLAP EFFECTIVENESS	FORCE	0.010 / 10.3 -	LARC / LARC - CONTINUOUS-FLOW HYPERSONIC TUNNEL	PETER T. BERNOT / LARC V. W. SPARKS S. W. BROWN -DMS	DMS-DR-2031 JUNE, 1973
ARC - 11TWT - 707 / 87SWT - 707 / IA9/0A12 0A12 CR-128,794	RESULTS OF TESTS 0A12 AND IA9 IN THE AMES RESEARCH CENTER UNITARY PLAN WIND TUNNELS ON AN 0.030-SCALE MODEL OF THE SPACE SHUTTLE VEHICLE 2A TO DETERMINE AERODYNAMIC LOADS	17-OTS	TO OBTAIN AERODYNAMIC LOADS ON LAUNCH VEHICLE	FORCE	0.030 / 0.6 - 1.4	ARC / ARC - 11-FOOT TRANSONIC WIND TUNNEL (UNITARY) 8-FOOT BY 7-FOOT SUPERSONIC WIND TUNNEL (UNITARY)	GILLENS, SPANGLER /RI H. C. ZIMMERLE -DMS	DMS-DR-2032 VOLUME 01 NOV., 1973
ARC - 11TWT - 707 / 87SWT - 707 / IA9/0A12 0A12 CR-128,794	RESULTS OF TESTS 0A12 AND IA9 IN THE AMES RESEARCH CENTER UNITARY PLAN WIND TUNNELS ON AN 0.030-SCALE MODEL OF THE SPACE SHUTTLE VEHICLE 2A TO DETERMINE AERODYNAMIC LOADS	17-OTS	TO OBTAIN AERODYNAMIC LOADS ON LAUNCH VEHICLE	FORCE	0.030 / 0.6 - 1.4	ARC / ARC - 11-FOOT TRANSONIC WIND TUNNEL (UNITARY) 8-FOOT BY 7-FOOT SUPERSONIC WIND TUNNEL (UNITARY)	GILLENS, SPANGLER /RI H. C. ZIMMERLE -DMS	DMS-DR-2032 VOLUME 02 NOV., 1973

TEST ID	REPORT TITLE	CONFIGURATIONS TESTED	TEST PURPOSE	TYPE OF TEST	MODEL SCALE / MACH RANGE	TESTING AGENCY	COGNIZANT TEST DMS PERSONNEL	BASIC PUBLICATIONS OR COMMENTS
ARC 11TWT 707 87SWT 707 1A9/OA12 OA12 CR-128,794	- RESULTS OF TESTS OA12 AND 1A9 IN THE AMES RESEARCH CENTER UNITARY / PLAN WIND TUNNELS ON AN 0.030-SCALE MODEL OF THE SPACE SHUTTLE VEHICLE 2A TO DETERMINE AERODYNAMIC LOADS	17-OTS	TO OBTAIN AERODYNAMIC LOADS ON LAUNCH VEHICLE	FORCE	0.030 - 0.6 / 1.4	ARC / ARC - 11-FOOT TRANSONIC WIND TUNNEL (UNITARY) / 8-FOOT BY 7-FOOT SUPERSONIC WIND TUNNEL (UNITARY)	GILLENS, SPANGLER/RI H. C. ZIMMERLE-DMS	DMS-DR-2032 VOLUME 03 OCT., 1973
ARC 11TWT 707 87SWT 707 1A9/OA12 OA12 CR-128,794	- RESULTS OF TESTS OA12 AND 1A9 IN THE AMES RESEARCH CENTER UNITARY / PLAN WIND TUNNELS ON AN 0.030-SCALE MODEL OF THE SPACE SHUTTLE VEHICLE 2A TO DETERMINE AERODYNAMIC LOADS	17-OTS	TO OBTAIN AERODYNAMIC LOADS ON LAUNCH VEHICLE	PRESSURE	0.030 - 0.6 / 1.4	ARC / ARC - 11-FOOT TRANSONIC WIND TUNNEL (UNITARY) / 8-FOOT BY 7-FOOT SUPERSONIC WIND TUNNEL (UNITARY)	GILLENS, SPANGLER/RI H. C. ZIMMERLE-DMS	DMS-DR-2032 VOLUME 04 DEC., 1973
ARC 11TWT 707 87SWT 707 1A9/OA12 OA12 CR-128,794	- RESULTS OF TESTS OA12 AND 1A9 IN THE AMES RESEARCH CENTER UNITARY / PLAN WIND TUNNELS ON AN 0.030-SCALE MODEL OF THE SPACE SHUTTLE VEHICLE 2A TO DETERMINE AERODYNAMIC LOADS	17-OTS	TO OBTAIN AERODYNAMIC LOADS ON LAUNCH VEHICLE	PRESSURE	0.030 - 0.6 / 1.4	ARC / ARC - 11-FOOT TRANSONIC WIND TUNNEL (UNITARY) / 8-FOOT BY 7-FOOT SUPERSONIC WIND TUNNEL (UNITARY)	GILLENS, SPANGLER/RI H. C. ZIMMERLE-DMS	DMS-DR-2032 VOLUME 05 DEC., 1973

TEST ID	REPORT TITLE	CONFIGURATIONS TESTED	TEST PURPOSE	TYPE OF TEST	MODEL SCALE MACH RANGE	TESTING AGENCY	COGNIZANT TEST DMS PERSONNEL	BASIC PUBLICATIONS OR COMMENTS
ARC - 11TWT - 707 / 87SWT - 707 / IA9/OA12 OA12 CR-128,794	RESULTS OF TESTS OA12 AND IA9 IN THE AMES RESEARCH CENTER UNITARY PLAN WIND TUNNELS ON AN 0.030-SCALE MODEL OF THE SPACE SHUTTLE VEHICLE 2A TO DETERMINE AERODYNAMIC LOADS	17-OTS	TO OBTAIN AERODYNAMIC LOADS ON LAUNCH VEHICLE	PRESSURE	0.030 / 0.6 - 1.4	ARC / ARC - 11-FOOT TRANSONIC WIND TUNNEL (UNITARY) 8-FOOT BY 7-FOOT SUPERSONIC WIND TUNNEL (UNITARY)	GILLENS, SPANGLER/RI H. C. ZIMMERLE -DMS	DMS-DR-2032 VOLUME 06 DEC., 1973
ARC - 11TWT - 707 / 87SWT - 707 / IA9/OA12 OA12 CR-128,794	RESULTS OF TESTS OA12 AND IA9 IN THE AMES RESEARCH CENTER UNITARY PLAN WIND TUNNELS ON AN 0.030-SCALE MODEL OF THE SPACE SHUTTLE VEHICLE 2A TO DETERMINE AERODYNAMIC LOADS	17-OTS	TO OBTAIN AERODYNAMIC LOADS ON LAUNCH VEHICLE	PRESSURE	0.030 / 0.6 - 1.4	ARC / ARC - 11-FOOT TRANSONIC WIND TUNNEL (UNITARY) 8-FOOT BY 7-FOOT SUPERSONIC WIND TUNNEL (UNITARY)	GILLENS, SPANGLER/RI H. C. ZIMMERLE -DMS	DMS-DR-2032 VOLUME 07 DEC., 1973
ARC - 11TWT - 707 / 87SWT - 707 / IA9/OA12 OA12 CR-128,794	RESULTS OF TESTS OA12 AND IA9 IN THE AMES RESEARCH CENTER UNITARY PLAN WIND TUNNELS ON AN 0.030-SCALE MODEL OF THE SPACE SHUTTLE VEHICLE 2A TO DETERMINE AERODYNAMIC LOADS	17-OTS	TO OBTAIN AERODYNAMIC LOADS ON LAUNCH VEHICLE	PRESSURE	0.030 / 0.6 - 1.4	ARC / ARC - 11-FOOT TRANSONIC WIND TUNNEL (UNITARY) 8-FOOT BY 7-FOOT SUPERSONIC WIND TUNNEL (UNITARY)	GILLENS, SPANGLER/RI H. C. ZIMMERLE -DMS	DMS-DR-2032 VOLUME 08 DEC., 1973

TEST ID	REPORT TITLE	CONFIGURATIONS TESTED	TEST PURPOSE	TYPE OF TEST	MODEL SCALE MACH RANGE	TESTING AGENCY	COGNIZANT TEST DMS PERSONNEL	BASIC PUBLICATIONS OR COMMENTS
ARC - 11TWT - 707 / 87SWT - 707 / IA9/OA12 OA12 CR-128,794	RESULTS OF TESTS OA12 AND IA9 IN THE AMES RESEARCH CENTER UNITARY PLAN WIND TUNNELS ON AN 0.030-SCALE MODEL OF THE SPACE SHUTTLE VEHICLE 2A TO DETERMINE AERODYNAMIC LOADS	17-OTS	TO OBTAIN AERODYNAMIC LOADS ON LAUNCH VEHICLE	PRESSURE	0.030 / 0.6 - 1.4	ARC / ARC - 11-FOOT TRANSONIC WIND TUNNEL (UNITARY) 8-FOOT BY 7-FOOT SUPERSONIC WIND TUNNEL (UNITARY)	GILLENS, SPANGLER/RI H. C. ZIMMERLE -DMS	DMS-DR-2032 VOLUME 09 JAN., 1974
ARC - 11TWT - 707 / 87SWT - 707 / IA9/OA12 OA12 CR-128,794	RESULTS OF TESTS OA12 AND IA9 IN THE AMES RESEARCH CENTER UNITARY PLAN WIND TUNNELS ON AN 0.030-SCALE MODEL OF THE SPACE SHUTTLE VEHICLE 2A TO DETERMINE AERODYNAMIC LOADS	17-OTS	TO OBTAIN AERODYNAMIC LOADS ON LAUNCH VEHICLE	PRESSURE	0.030 / 0.6 - 1.4	ARC / ARC - 11-FOOT TRANSONIC WIND TUNNEL (UNITARY) 8-FOOT BY 7-FOOT SUPERSONIC WIND TUNNEL (UNITARY)	GILLENS, SPANGLER/RI H. C. ZIMMERLE -DMS	DMS-DR-2032 VOLUME 10 JAN., 1974
ARC - 11TWT - 707 / 87SWT - 707 / IA9/OA12 OA12 CR-128,794	RESULTS OF TESTS OA12 AND IA9 IN THE AMES RESEARCH CENTER UNITARY PLAN WIND TUNNELS ON AN 0.030-SCALE MODEL OF THE SPACE SHUTTLE VEHICLE 2A TO DETERMINE AERODYNAMIC LOADS	17-OTS	TO OBTAIN AERODYNAMIC LOADS ON LAUNCH VEHICLE	PRESSURE	0.030 / 0.6 - 1.4	ARC / ARC - 11-FOOT TRANSONIC WIND TUNNEL (UNITARY) 8-FOOT BY 7-FOOT SUPERSONIC WIND TUNNEL (UNITARY)	GILLENS, SPANGLER/RI H. C. ZIMMERLE -DMS	DMS-DR-2032 VOLUME 11 JAN., 1974

TEST ID	REPORT TITLE	CONFIGURATIONS TESTED	TEST PURPOSE	TYPE OF TEST	MODEL SCALE MACH RANGE	TESTING AGENCY	COGNIZANT TEST DMS PERSONNEL	BASIC PUBLICATIONS OR COMMENTS
ARC - 11TWT - 707 / 87SWT - 707 / IA9/OA12 OA12 CR-128,794	RESULTS OF TESTS OA12 AND IA9 IN THE AMES RESEARCH CENTER UNITARY PLAN WIND TUNNELS ON AN 0.030-SCALE MODEL OF THE SPACE SHUTTLE VEHICLE 2A TO DETERMINE AERODYNAMIC LOADS	17-OTS	TO OBTAIN AERODYNAMIC LOADS ON LAUNCH VEHICLE	PRESSURE	0.030 - 0.6 / 1.4	ARC / ARC - /RI 11-FOOT TRANSONIC WIND TUNNEL (UNITARY) 8-FOOT BY 7-FOOT SUPERSONIC WIND TUNNEL (UNITARY)	GILLENS, SPANGLER H. C. ZIMMERLE -DMS	DMS-DR-2032 VOLUME 12 JAN., 1974
ARC - 11TWT - 707 / 87SWT - 707 / IA9/OA12 OA12 CR-128,794	RESULTS OF TESTS OA12 AND IA9 IN THE AMES RESEARCH CENTER UNITARY PLAN WIND TUNNELS ON AN 0.030-SCALE MODEL OF THE SPACE SHUTTLE VEHICLE 2A TO DETERMINE AERODYNAMIC LOADS	17-OTS	TO OBTAIN AERODYNAMIC LOADS ON LAUNCH VEHICLE	PRESSURE	0.030 - 0.6 / 1.4	ARC / ARC - /RI 11-FOOT TRANSONIC WIND TUNNEL (UNITARY) 8-FOOT BY 7-FOOT SUPERSONIC WIND TUNNEL (UNITARY)	GILLENS, SPANGLER H. C. ZIMMERLE -DMS	DMS-DR-2032 VOLUME 13 MARCH, 1974
ARC - 11TWT - 707 / 87SWT - 707 / IA9/OA12 OA12 CR-128,794	RESULTS OF TESTS OA12 AND IA9 IN THE AMES RESEARCH CENTER UNITARY PLAN WIND TUNNELS ON AN 0.030-SCALE MODEL OF THE SPACE SHUTTLE VEHICLE 2A TO DETERMINE AERODYNAMIC LOADS	17-OTS	TO OBTAIN AERODYNAMIC LOADS ON LAUNCH VEHICLE	PRESSURE	0.030 - 0.6 / 1.4	ARC / ARC - /RI 11-FOOT TRANSONIC WIND TUNNEL (UNITARY) 8-FOOT BY 7-FOOT SUPERSONIC WIND TUNNEL (UNITARY)	GILLENS, SPANGLER H. C. ZIMMERLE -DMS	DMS-DR-2032 VOLUME 14 MARCH, 1974

TEST ID	REPORT TITLE	CONFIGURATIONS TESTED	TEST PURPOSE	TYPE OF TEST	MODEL SCALE MACH RANGE	TESTING AGENCY	COGNIZANT TEST DMS PERSONNEL	BASIC PUBLICATIONS OR COMMENTS
ARC 11TWT 707 / 87SWT 707 / IA9/OA12 OA12 CR-128,794	RESULTS OF TESTS OA12 AND IA9 IN THE AMES RESEARCH CENTER UNITARY PLAN WIND TUNNELS ON AN 0.030-SCALE MODEL OF THE SPACE SHUTTLE VEHICLE 2A TO DETERMINE AERODYNAMIC LOADS	17-OTS	TO OBTAIN AERODYNAMIC LOADS ON LAUNCH VEHICLE	PRESSURE	0.030 / 0.6 - 1.4	ARC / ARC - 11-FOOT TRANSONIC WIND TUNNEL (UNITARY) 8-FOOT BY 7-FOOT SUPERSONIC WIND TUNNEL (UNITARY)	GILLENS, SPANGLER/RI H. C. ZIMMERLE-DMS	DMS-DR-2032 VOLUME 15 MARCH, 1974
ARC 11TWT 707 / 87SWT 707 / IA9/OA12 OA12 CR-128,794	RESULTS OF TESTS OA12 AND IA9 IN THE AMES RESEARCH CENTER UNITARY PLAN WIND TUNNELS ON AN 0.030-SCALE MODEL OF THE SPACE SHUTTLE VEHICLE 2A TO DETERMINE AERODYNAMIC LOADS	17-OTS	TO OBTAIN AERODYNAMIC LOADS ON LAUNCH VEHICLE	PRESSURE	0.030 / 0.6 - 1.4	ARC / ARC - 11-FOOT TRANSONIC WIND TUNNEL (UNITARY) 8-FOOT BY 7-FOOT SUPERSONIC WIND TUNNEL (UNITARY)	GILLENS, SPANGLER/RI H. C. ZIMMERLE-DMS	DMS-DR-2032 VOLUME 16 APRIL, 1974
ARC 11TWT 707 / 87SWT 707 / IA9/OA12 OA12 CR-128,794	RESULTS OF TESTS OA12 AND IA9 IN THE AMES RESEARCH CENTER UNITARY PLAN WIND TUNNELS ON AN 0.030-SCALE MODEL OF THE SPACE SHUTTLE VEHICLE 2A TO DETERMINE AERODYNAMIC LOADS	17-OTS	TO OBTAIN AERODYNAMIC LOADS ON LAUNCH VEHICLE	PRESSURE	0.030 / 0.6 - 1.4	ARC / ARC - 11-FOOT TRANSONIC WIND TUNNEL (UNITARY) 8-FOOT BY 7-FOOT SUPERSONIC WIND TUNNEL (UNITARY)	GILLENS, SPANGLER/RI H. C. ZIMMERLE-DMS	DMS-DR-2032 VOLUME 17 APRIL, 1974

TEST ID	REPORT TITLE	CONFIGURATIONS TESTED	TEST PURPOSE	TYPE OF TEST	MODEL SCALE MACH RANGE	TESTING AGENCY	COGNIZANT TEST DMS PERSONNEL	BASIC PUBLICATIONS OR COMMENTS
ARC - 11TWT - 707 / 87SWT - 707 / IA9/OA12 OA12 CR-128,794	RESULTS OF TESTS OA12 AND IA9 IN THE AMES RESEARCH CENTER UNITARY PLAN WIND TUNNELS ON AN 0.030-SCALE MODEL OF THE SPACE SHUTTLE VEHICLE 2A TO DETERMINE AERODYNAMIC LOADS	17-OTS	TO OBTAIN AERODYNAMIC LOADS ON LAUNCH VEHICLE	PRESSURE	0.030 / 0.6 - 1.4	ARC / ARC - 11-FOOT TRANSONIC WIND TUNNEL (UNITARY) 8-FOOT BY 7-FOOT SUPERSONIC WIND TUNNEL (UNITARY)	GILLENS, SPANGLER/RI H. C. ZIMMERLE -DMS	DMS-DR-2032 VOLUME 18 MAY, 1974
LARC - UPWT - 995 / 1014 / LA4 CR-128,772	SUPERSONIC STABILITY AND CONTROL CHARACTERISTICS OF A LANGLEY CONCEPT SPACE SHUTTLE ORBITER AT MACH 1.5 TO 4.63	LO-100 ORBITER	SUPERSONIC STABILITY CHARACTERISTICS	FORCE	0.01 / 1.5 - 4.63	LARC / LARC - UNITARY PLAN WIND TUNNEL	D.R.STONE/LARC,B. SPENCER/NR R. SINGELLTON -DMS	DMS-DR-2033 JULY, 1973
LARC - 22HT - 405 / LA22 CR-128,764	AERODYNAMIC AND FLOW VISUALIZATION STUDIES ON A SPACE SHUTTLE CONCEPT WITH A DOUBLE DELTA WING ORBITER AT A MACH NUMBER OF 20.3	DOUBLE DELTA WING ORBITER	LONGITUDINAL AND LATERAL-DIRECTIONAL CHARACTERISTICS, AND CONTROL EFFECTIVENESS AS WELL AS FLOW VISUALIZATION STUDIES	FORCE	0.004 / 20.3 -	LARC / LARC - 22-INCH HELIUM TUNNEL	W.C. WOODS, DAVID R. STONE, JAMES P. ARRINGTON /LARC J. E. VAUGHN S. W. BROWN -DMS	DMS-DR-2034 JULY, 1973
ARC - 3.5HWT - 158 / OH2A OH2B CR-134,077	THERMAL PROTECTION SYSTEM GAP HEATING RATES OF THE ROCKWELL INTERNATIONAL FLAT PLATE HEAT TRANSFER MODEL	THERMAL PROTECTION SYSTEM	TO OBTAIN AERODYNAMIC HEATING RATE DATA IN AND AROUND GAPS AT THE TPS	HEAT-TRANS	1.0 / 5.1 - 5.1	ARC / ARC - 3.5-FOOT HYPERSONIC WIND TUNNEL	T. F. FOSTER, W. J. GRIFALL/RI W. K. LOCKMAN/ARC D. A. SARVER M. M. MOSER JR. -DMS	DMS-DR-2035 APRIL, 1974

WIND TUNNEL TEST / DMS DATA PROCESSING

TEST ID	REPORT TITLE	CONFIGURATIONS TESTED	TEST PURPOSE	TYPE OF TEST	MODEL SCALE MACH RANGE	TESTING AGENCY	COGNIZANT TEST DMS PERSONNEL	BASIC PUBLICATIONS OR COMMENTS
LARC 22HT 413 LA5 CR-128,775	AERODYNAMIC AND FLOW-VISUALIZATION STUDIES ASSOCIATED WITH VARIATIONS IN THE GEOMETRY OF THE FORWARD PORTION OF IRREGULAR PLANFORM WINGS AT A MACH NUMBER OF 20.3	LARC LO-100 ORBITER	DEFINE THE EFFECTS OF WING-FILLET AND WING LEADING-EDGE SWEEP ANGLES AT HYPERSONIC SPEEDS	FORCE	.0040 / 20.3	LARC / LARC - 22-INCH HELIUM TUNNEL	DAVID R. STONE /NASA LARC D. E. POUCHER -DMS	DMS-DR-2036 AUGUST, 1973
LTV HSWT 488 OA84 CR-134,405	RESULTS OF INVESTIGATIONS ON A 0.015-SCALE 140A/B CONFIGURATION SPACE SHUTTLE VEHICLE ORBITER MODEL (49-0) IN THE LTV 4 BY 4-FOOT HIGH SPEED WIND TUNNEL	140A/B ORBITER 140A/B ORBITER WITHOUT VERTICAL TAIL 140A/B ORBITER WITHOUT VERTICAL TAIL AND WING	TO DETERMINE LONGITUDINAL AND LATERAL-DIRECTIONAL STABILITY AND CONTROL CHARACTERISTICS FOR THE UP-DATED SSV CONFIGURATION	FORCE	0.015 / 0.6 - 4.6	R.I. / LTV - HIGH SPEED WIND TUNNEL	V. ESPARZA /ROCKWELL INTERNATIONAL W.R. EMBURY /ROCKWELL INTERNATIONAL D. A. SARVER V. W. SPARKS -DMS	DMS-DR-2037 SEPT., 1974
NRLAD LSWT 701 OA16 CR-128,793	RESULTS OF LOW SPEED WIND TUNNEL TESTS ON A .0405 SCALE MODEL ROCKWELL SPACE SHUTTLE ORBITER TESTED BOTH IN FREE AIR AND IN THE PRESENCE OF A GROUND PLANE	NR ORBITER	INVESTIGATE AERODYNAMIC AND PROPULSION EFFECTS OF VARIOUS AIR BREATHING ENGINE SYSTEMS IN FORCED AIR AND IN THE PRESENCE OF THE GROUND	FORCE	0.0405 / 0.12 - 0.20	NR / NRLAD - LOW SPEED WIND TUNNEL	R. MENNELL, B. CAMERON/ROCKWELL INTERNATIONAL J. E. VAUGHN J. R. ZILER -DMS	DMS-DR-2038 FEB., 1974

ORIGINAL PAGE IS OF POOR QUALITY

TEST ID	REPORT TITLE	CONFIGURATIONS TESTED	TEST PURPOSE	TYPE OF TEST	MODEL SCALE / MACH RANGE	TESTING AGENCY	COGNIZANT TEST DMS PERSONNEL	BASIC PUBLICATIONS OR COMMENTS
MSFC - 14TWT - 571 / IA6A CR-134,071	RESULTS OF WIND TUNNEL TESTS AT MACH 5 ON THE .004 SCALE MODEL 2A CONFIGURATION SPACE SHUTTLE TO DETERMINE PROXIMITY EFFECTS AND ORBITER CONTROL EFFECTIVENESS DURING ORBITER/EXTERNAL TANK ABORT SEPARATION	MODEL 2A ORBITER AND EXTERNAL TANK	DETERMINE PROXIMITY EFFECTS ON THE AERODYNAMIC FORCES AND MOMENTS EXPERIENCED BY VEHICLE 2A CONFIGURATION SHUTTLE ORBITER AND EXTERNAL TANK DURING AND ABORT SEPARATION	FORCE	.004 / 5.0 - 5.0	MSFC / MSFC - 14-INCH TRISONIC WIND TUNNEL	W. P. GARTON /ROCKWELL J. E. VAUGHN A. T. KAVANAUGH -DMS	DMS-DR-2039 MARCH, 1974
LARC - BTPT - 643 / LA6 CR-128,773	SURFACE ROUGHNESS EFFECTS ON THE TRANSONIC AERODYNAMICS OF THE ROCKWELL INTERNATIONAL 089B-139 ORBITER	NAR 089-B-139 ORBITER	SURFACE ROUGHNESS EFFECTS ON TRANSONIC AERODYNAMICS	FORCE	0.0188 / .35- 1.2	LARC / LARC - 8-FOOT TRANSONIC PRESSURE TUNNEL	G.M. WARE, B. SPENCER /NCER /LARC V. W. SPARKS B. W. MYERS -DMS	DMS-DR-2040 AUGUST, 1973
LARC - BTPT - 644 / LA7A CR-128,781	TRANSONIC AERODYNAMIC CHARACTERISTICS ASSOCIATED WITH VARIATIONS IN THE GEOMETRY OF THE FORWARD PORTION OF IRREGULAR PLANFORM WINGS	LARC LO-100 ORBITER (SHIPS)	TRANSONIC AERODYNAMIC CHARACTERISTICS ASSOCIATED WITH VARIATIONS IN THE GEOMETRY OF THE FORWARD PORTION OF IRREGULAR PLANFORM WINGS	FORCE	0.010 / 0.35 - 1.2	LARC / LARC - 8-FOOT TRANSONIC PRESSURE TUNNEL	BERNARD SPENCER, J. R. /NASA LARC D. E. POUCHER -DMS	DMS-DR-2041 OCT., 1973
MSFC - 14TWT - 584 / IA52 CR-134,087	RESULTS OF FLOW VISUALIZATION STUDIES IN THE NASA/MSFC 14 X 14 INCH TRISONIC WIND TUNNEL ON A .004 SCALE MODEL (34-0) SPACE SHUTTLE ORBITER AND INTEGRATED VEHICLE	ORBITER ALONE MFSC MODEL NO 453	FLOW VISUALIZATION STUDIES	FORCE	0.004 / 0.9 - 5.0	MSFC / MSFC - 14-INCH TRISONIC WIND TUNNEL	W. P. GARTON/RI J. E. VAUGHN -DMS	DMS-DR-2042 MARCH, 1974

TEST ID	REPORT TITLE	CONFIGURATIONS TESTED	TEST PURPOSE	TYPE OF TEST	MODEL SCALE MACH RANGE	TESTING AGENCY	COGNIZANT TEST DMS PERSONNEL	BASIC PUBLICATIONS OR COMMENTS
LARC - 8VDHT - 624 / LA16 CR-128,770	HEAT TRANSFER DAT A TO CAVITIES BET WEEN SIMULATED RS I TILES AT MACH 8	RSI TILES.ORBITER	HEAT TRANSFER DAT A FOR RSI TILES	HEAT-TRANS	1.00 / 8.0 -	LARC / LARC - MACH 8 VARIABL E-DENSITY HYPE RSONIC TUNNEL	C. B. JOHNSON /LA RC W. M. HALE -DMS	DMS-DR-2043 JUNE, 1973
ARC - 3.5HWT - 157 / OA11A CR-128,786	RESULTS OF INVEST IGATIONS ON A 0.0 15-SCALE MODEL 2A CONFIGURATION OF THE ROCKWELL INT ERNATIONAL SPACE SHUTTLE ORBITER I N THE NASA/AMES R ESEARCH CENTER 3. 5 FOOT HYPERSONIC WIND TUNNEL	SHUTTLE ORBITER 2 A	DETERMINE LONGITU DINAL AND LATERAL -DIRECTIONAL STAB ILITY ESTABLISH TRIM CA PABILITY	FORCE	.015 / 5.27 - 7.32	ARC / ARC - 3.5-FOOT HYPER SONIC WIND TUN NEL	MORRIS D. MILAM/R OCKWELL JACK A. MELLENTHI N/NASA AMES B. J. FRICKEN -DMS	DMS-DR-2044 OCT., 1973
NRLAD - LSWT - 704 / OA18 CR-128,779	RESULTS OF INVEST IGATIONS (OA18) O F A 0.0405 SCALE MODEL OF THE 2A A ND 3 SPACE SHUTTL E ORBITER CONFIGU RATIONS IN THE NO RTH AMERICAN AERO NAUTICAL LABORATO RY LOW SPEED WIND TUNNEL AT M = 0. 26 AND 0.16	ROCKWELL SSV ORBI TER	OBTAIN SIX COMPON ENT FORCE DATA AN D ELEVON HINGE MO MENT DATA	FORCE	0.0405 / 0.16 - 0.26	NR / NRLAD - LOW SPEED WIND TUNNEL	D.G.WALSTAD /NR D. E. POUCHER -DMS	DMS-DR-2045 SEPT., 1973
LARC - 8TPT - 648 / LA17 CR-128,776	AERODYNAMIC STABI LITY AND CONTROL CHARACTERISTICS O F A LANGLEY CONCE PT SPACE SHUTTLE ORBITER (LO-100) AT MACH NUMBERS O F 0.35 TO 1.2	LARC LO-100 ORBIT ER	TRANSONIC AERODYN AMIC PERFORMANCE, STABILITY AND CON TROL AND CONTROL EFFECTIVENESS	FORCE	0.01 / 0.35 - 1.2	LARC / LARC - 8-FOOT TRANSON IC PRESSURE TU NNEL	BERNARD SPENCER,J R. /NASA LARC D. E. POUCHER -DMS	DMS-DR-2048 AUGUST, 1973

TEST ID	REPORT TITLE	CONFIGURATIONS TESTED	TEST PURPOSE	TYPE OF TEST	MODEL SCALE MACH RANGE	TESTING AGENCY	COGNIZANT TEST DMS PERSONNEL	BASIC PUBLICATIONS OR COMMENTS
LARC - CFHT - 98 / LA31 CR-134,086	EFFECT OF WALL TOTAL TEMPERATURE RATIO VARIATION ON HEAT TRANSFER	040A SPACE SHUTTLE CONFIGURATION	10	HEAT-TRANS	.006 / 10 - 10	LARC / LARC - CONTINUOUS-FLOW HYPERSONIC TUNNEL	J. C. DUNAVANT/LARC	DMS-DR-2047 FEB., 1974
ARC - 97SWT - 710 / IA126 CR-134,104	WIND TUNNEL TEST OF THE 0.019 (2A CONFIGURATION) JET PLUME SPACE SHUTTLE INTEGRATED VEHICLE IN THE ARC 9- BY 7-FOOT UNITARY WIND TUNNEL	2A CONFIGURATION	TO OBTAIN FORCE AND MOMENT DATA, WING PRESS. DIST., ELEVON AND RUDDER BENDING MOMENTS AND DETERMINE EFFECT OF SRM AND MPS PLUMES, SRM AND ORB. NOZZLE GIMBAL ANGLES, AND SRM SHROUDS OFF	FORCE PRESSURE	0.019 / 1.55 - 2.0	ARC / ARC - 9-FOOT BY 7-FOOT SUPERSONIC WIND TUNNEL (UNITARY)	R. B. HARDIN, R. BURROWS /ROCKWELL L. R. GUIST /ARC B. J. FRICKEN -DMS	DMS-DR-2048 JULY, 1974
LARC - BVDHT - 3619/3670/ 0040 CR-128,771	AERODYNAMIC HEATING OF A SPACE SHUTTLE DOUBLE DELTA WING ORBITER AT MACH NUMBER 8.0	NR 2A ORBITER	DETERMINATION OF HEATING EFFECTS FOR LAMINAR THROUGH TURBULENT FLIGHT REGIMES DURING REENTRY.	FORCE	.006 / 8.0	LARC / LARC - MACH 8 VARIABLE-DENSITY HYPERSONIC TUNNEL	H. GOROWITZ/ROCKWELL R. WHITE/GAC A. T. KAVANAUGH -DMS	DMS-DR-2049 JULY, 1973
ARC - 66SWT - 706 / 0A43 CR-128,790	WIND TUNNEL TEST OF THE 0.15-SCALE ROCKWELL INTERNATIONAL SPACE SHUTTLE VEHICLE ORBITER IN THE AMES 6- BY 6-FOOT SUPERSONIC WIND TUNNEL	ROCKWELL SSV 2A ORBITER	LONGITUDINAL AND LATERAL-DIRECTIONAL CHARACTERISTICS, RUDDER AND ELEVON HINGE MOMENTS	FORCE	0.015 / 0.6 - 2.0	ARC / ARC - 6-FOOT BY 6-FOOT SUPERSONIC WIND TUNNEL	M. D. MILAM, T. J. DZIUBALA /RI - K. C. ENDICOTT /ARC RC - T. MCGRATH /ARO M. J. LANFRANCO S. W. BROWN -DMS	DMS-DR-2050 NOV., 1973

TEST ID	REPORT TITLE	CONFIGURATIONS TESTED	TEST PURPOSE	TYPE OF TEST	MODEL SCALE MACH RANGE	TESTING AGENCY	COGNIZANT TEST DMS PERSONNEL	BASIC PUBLICATIONS OR COMMENTS
MSFC - 14TWT - 572 / SA5F CR-128,774	AERODYNAMIC CHARACTERISTICS OF A 1L NO.449 42-INCH DIAMETER SOLID ROCKET BOOSTER (CONFIGURATION NS 898 AND 139)	BOOSTER MSFC MODEL NO.449	TO OBTAIN FORCE AND MOMENT DATA TO INPUT IN COMPUTER PROGRAM TO DETERMINE THE RATE OF DECELERATION AND THE ATTITUDE OF THE SRB'S DURING FREE-FALL	FORCE	0.00563 / 0.6 - 3.48	MSFC / MSFC - 14-INCH TRISONIC WIND TUNNEL	J. D. JOHNSON/MSFC W. D. RADFORD/NSI V. W. SPARKS D. E. POUCHER -DMS	DMS-DR-2051 AUGUST, 1973
LARC - UPWT - 1015 / LA7B CR-128,791	SUPERSONIC AERODYNAMIC CHARACTERISTICS ASSOCIATED WITH VARIATIONS IN THE GEOMETRY OF THE FORWARD PORTION OF IRREGULAR PLANFORM WINGS	LO-100 ORB(SHIPS) (BW2VFB)	EFFECTS OF GEOMETRY ON SUPERSONIC AERODYNAMIC CHARACTERISTICS ON PLANFORM WINGS	FORCE	0.01875 / 2.36- 4.63	LARC / LARC - UNITARY PLAN WIND TUNNEL	D. R. STONE, B. SPENCER/LARC V. W. SPARKS B. W. MYERS -DMS	DMS-DR-2052 NOV., 1973
NRLAD - LSWT - 705 / OA21A $ CR-128,792	EXPERIMENTAL INVESTIGATIONS OF AN 0.0405 SCALE SPACE SHUTTLE CONFIGURATION 3 ORBITER TO DETERMINE SUBSONIC STABILITY CHARACTERISTICS (OA21)	ORBITER 3	INVESTIGATE THE LONGITUDINAL AND LATERAL-DIRECTIONAL SUBSONIC AERODYNAMIC CHARACTERISTICS OF THE ROCKWELL INTERNATIONAL PROPOSED PRR SPACE SHUTTLE ORBITER	FORCE	0.0405 /	NR / NRLAD - LOW SPEED WIND TUNNEL	B. W. CAMERON AND A. J. RITSCHEL / ROCKWELL INTERNATIONAL D. A. SARVER B. W. MYERS -DMS	DMS-DR-2053 VOLUME 01 DEC., 1973
NRLAD - LSWT - 705 / OA21B CR-128,792	EXPERIMENTAL INVESTIGATIONS OF AN 0.0405 SCALE SPACE SHUTTLE CONFIGURATION 3 ORBITER TO DETERMINE SUBSONIC STABILITY CHARACTERISTICS (OA21)	ORBITER 3	INVESTIGATE THE LONGITUDINAL AND LATERAL-DIRECTIONAL SUBSONIC AERODYNAMIC CHARACTERISTICS OF THE ROCKWELL INTERNATIONAL PROPOSED PRR SPACE SHUTTLE ORBITER	FORCE	0.0405 /	NR / NRLAD - LOW SPEED WIND TUNNEL	B. W. CAMERON AND A. J. RITSCHEL / ROCKWELL INTERNATIONAL D. A. SARVER B. W. MYERS -DMS	DMS-DR-2053 VOLUME 02 FEB., 1974

TEST ID	REPORT TITLE	CONFIGURATIONS TESTED	TEST PURPOSE	TYPE OF TEST	MODEL SCALE MACH RANGE	TESTING AGENCY	COGNIZANT TEST DMS PERSONNEL	BASIC PUBLICATIONS OR COMMENTS
LARC - UPWT - 1023/1034/ LABA LABB CR-128,796	SURFACE ROUGHNESS EFFECTSON THE SU PERSONIC AERODYNA MICS OF THE ROCKW WELL INTERNATIONA L 0898-139 ORBITE R	NR ORBITER	TO DETERMINE THE EFFECTS OF SURFAC E ROUGHNESS ON TH E ORBITER AERODYN AMIC CHARACTERIST ICS OVER COMPLETE MACH RANGE	FORCE	0.188 / 1.6 - 4.63	LARC / LARC - UNITARY PLAN W IND TUNNEL	G.M. WARE , BERNA RD SPENCER JR. /L ARC J. E. VAUGHN B. W. MYERS -DMS	DMS-DR-2054 NOV., 1973
MSFC - 14TWT - 574 / 0A48 CR-128,780	STATIC STABILITY AND CONTROL EFFEC TIVENESS OF MODEL S 12-0 AND 34-0 OF THE VEHICLE 3 CONFIGURATIONS	ORBITER 139 ORBITER 139B	TO DETERMINE THE STATIC STABILITY AND CONTROL EFFEC TIVENESS OF MODEL 12-0 AND 34-0	FORCE	0.004 / .6 - 4.96	MSFC / MSFC - 14-INCH TRISON IC WIND TUNNEL	E.C. ALLEN/ROCKWE LL TERRY TUTTLE/ROCK WELL V. W. SPARKS B. J. FRICKEN -DMS	DMS-DR-2055 VOLUME 01 SEPT., 1973
MSFC - 14TWT - 574 / 0A48 CR-128,780	STATIC STABILITY AND CONTROL EFFEC TIVENESS OF MODEL S 12-0 AND 34-0 OF THE VEHICLE 3 CONFIGURATIONS	ORBITER 139 ORBITER 139B	TO DETERMINE THE STATIC STABILITY AND CONTROL EFFEC TIVENESS OF MODEL 12-0 AND 34-0	FORCE	0.004 / .6 - 4.96	MSFC / MSFC - 14-INCH TRISON IC WIND TUNNEL	E.C. ALLEN/ROCKWE LL TERRY TUTTLE/ROCK WELL V. W. SPARKS B. J. FRICKEN -DMS	DMS-DR-2055 VOLUME 02 SEPT., 1973
MSFC - 14TWT - 574 / 0A48 CR-128,780	STATIC STABILITY AND CONTROL EFFEC TIVENESS OF MODEL S 12-0 AND 34-0 OF THE VEHICLE 3 CONFIGURATIONS	ORBITER 139 ORBITER 139B	TO DETERMINE THE STATIC STABILITY AND CONTROL EFFEC TIVENESS OF MODEL 12-0 AND 34-0	FORCE	0.004 / .6 - 4.96	MSFC / MSFC - 14-INCH TRISON IC WIND TUNNEL	E.C. ALLEN/ROCKWE LL TERRY TUTTLE/ROCK WELL V. W. SPARKS B. J. FRICKEN -DMS	DMS-DR-2055 VOLUME 03 NOV., 1973
LARC - LTPT - 130/135 / LA9 CR-128,782	SURFACE ROUGHNESS EFFECTS ON THE S UBSONIC AERODYNAM ICS OF THE ROCKWELL INTERNAT IONAL 0898-139 OR BITER	NAR 0898-MOD NOSE OMS NAR 0898-MOD NOSE	SURFACE ROUGHNESS EFFECTS ON TRANS ONIC AERODYNAMICS	FORCE	0.01875 /	LARC / LARC - LOW-TURBULENCE PRESSURE TUNN EL	G. M. WARE AND BE RNARD SPENCER, JR ./LARC M. D. MILAM/ROCKW ELL INTERNATIONAL J. E. VAUGHN B. W. MYERS -DMS	DMS-DR-2056 NOV., 1973

TEST ID	REPORT TITLE	CONFIGURATIONS TESTED	TEST PURPOSE	TYPE OF TEST	MODEL SCALE MACH RANGE	TESTING AGENCY	COGNIZANT TEST DMS PERSONNEL	BASIC PUBLICATIONS OR COMMENTS
LARC - UPWT - 1035 / OA44 CR-134,411	RESULTS OF AN EXPERIMENTAL AERODYNAMIC INVESTIGATION TO OBTAIN STATIC STABILITY AND CONTROL CHARACTERISTICS OF THE SSV CONFIGURATIONS 2A (VL70-000089B) MODEL 1 AND 3 (VL70-000139B) MODEL 2 ORBITERS AT MACH NUMBERS OF 2.5, 3.9, AND 4.6 IN THE NASA LARC 4X4-FOOT UPWT (OA44)	ORBITER, MODIFIED 2A,3	STAB. AND CONTROL CHARS. OF CONFIG 2A,3 AND ALT. FOREBODY	FORCE	0.015/ 2.5- 4.6	LARC / LARC - UNITARY PLAN WIND TUNNEL	V. ESPARZA, M. MILAM /ROCKWELL R. SINGELLTON -DMS	DMS-DR-2057 NOV., 1974
LARC - LTPT - 138 / OA17 CR-134,079	RESULTS OF THE 0.015 SCALE SPACE SHUTTLE VEHICLE ORBITER TEST (OA17) IN THE NASA LOW TURBULENCE PRESSURE TUNNEL	ORBITER NAR VL70-000134B CONFIG.	OBTAIN GENERAL STABILITY AND CONTROL CHARACTERISTICS	FORCE	0.015 / 0.25 -	LARC / LARC - LOW-TURBULENCE PRESSURE TUNNEL	BERNARD SPENCER JONES AND JAMES ELLISON /NASA LARC D. E. POUCHER -DMS	DMS-DR-2058 MARCH, 1974
ARC - 3.5HWT - 160 / OA118 CR-128,798	INVESTIGATIONS OF THE SPACE SHUTTLE ORBITER 2A CONFIGURATION 0.015-SCALE MODEL IN THE NASA AMES RESEARCH CENTER 3.5-FOOT HYPERSONIC WIND TUNNEL AT MACH NUMBERS 5, 7 AND 10	ORBITER 2A	DETERMINE THE FORCE, MOMENT, AND HINGE MOMENT CHARACTERISTICS OF CONFIGURATION 2A SPACE SHUTTLE VEHICLE ORBITER AT MACH NUMBERS 5, 7, AND 10	FORCE	0.015 / 5.0 - 7.0	ARC / ARC - 3.5-FOOT HYPERSONIC WIND TUNNEL	M. D. MILAM AND M. E. NICHOLS/ROCKWELL INTERNATIONAL J. A. MELLENTHIN AND J. CLEARY/NASA/AMES RESEARCH CENTER B. W. MYERS -DMS	DMS-DR-2059 JUNE, 1974

TEST ID	REPORT TITLE	CONFIGURATIONS TESTED	TEST PURPOSE	TYPE OF TEST	MODEL SCALE MACH RANGE	TESTING AGENCY	COGNIZANT TEST DMS PERSONNEL	BASIC PUBLICATIONS OR COMMENTS
ARC 3.5HWT 163 0A58 CR-134,091	RESULTS OF AN AERODYNAMIC FORCE AND MOMENT INVESTIGATION OF AN 0.015-SCALE CONFIGURATION 3 SPACE SHUTTLE ORBITER IN THE NASA/ARC 3.5-FOOT HYPERSONIC WIND TUNNEL (0A58)	ORBITER 3,A	GENERAL STABILITY AND CONTROL CHARACTERISTICS FOR CONFIGURATION 3 AND ALTERNATE VEHICLES	FORCE	0.015 / 5.3 - 10.3	ARC / ARC - 3.5-FOOT HYPERSONIC WIND TUNNEL	T. J. DZIUBALA/RI J. W. CLEARY/NASA ARC B. W. MYERS -DMS	DMS-DR-2060 JUNE, 1974
NRLAD 7TWT 276 0A68 CR-128,789	SUBSONIC, TRANSONIC, AND SUPERSONIC STABILITY AND CONTROL CHARACTERISTICS OF THE -14-78 SPACE SHUTTLE ORBITER	VL70-000139B (MOD EL NO. 42-0) VL70-000147B (MOD EL NO. 49-0)	STABILITY AND CONTROL CHARACTERISTICS	FORCE	0.015 / .6 - 3.0	NR / NRLAD - 7-FOOT TRISONIC WIND TUNNEL	R. C. MENNELL /RI D. A. SARVER -DMS	DMS-DR-2061 DEC., 1973
AEDC SWTA VA323 1A13 CR-134,117	AERODYNAMIC RESULTS OF A SEPARATION EFFECTS TEST CONDUCTED IN THE AEDC 40X 40 INCH TUNNEL A FACILITY ON THE ROCKWELL INTERNATIONAL LAUNCH CONFIGURATION 3 INTEGRATED VEHICLE	INTEGRATED VEHICLE CONFIG 3 (MODEL 32-OTS)	SEPARATION TEST OF SRB FROM ET AND ET FROM ORB. USING CAPTIVE TRAJECTORY SYSTEM		0.01 / 4.5 -	ROCKWELL/ AEDC - SUPERSONIC WIND TUNNEL (A)	JACK CAMPBELL/RI J. E. VAUGHN M. M. MOSER JR. -DMS	DMS-DR-2062 VOLUME 01 AUGUST, 1975

TEST ID	REPORT TITLE	CONFIGURATIONS TESTED	TEST PURPOSE	TYPE OF TEST	MODEL SCALE MACH RANGE	TESTING AGENCY	COGNIZANT TEST DMS PERSONNEL	BASIC PUBLICATIONS OR COMMENTS
AEDC - SWTA - VA323 / IA13 IA13 CR-134,118	AERODYNAMIC RESULTS OF A SEPARATION EFFECTS TEST CONDUCTED IN THE AEDC 40 X 40 INCH TUNNEL A FACILITY ON THE ROCKWELL INTERNATIONAL LAUNCH CONFIGURATION 3 INTEGRATED VEHICLE	INTEGRATED VEHICLE CONFIG. 3 (MODE 32-OTS)	SEPARATION TEST OF SRB FROM ET AND ET FROM ORB. USING CAPTIVE TRAJECTORY SYSTEM	FORCE	0.01 / 4.5 -	ROCKWELL/ AEDC - SUPERSONIC WIND TUNNEL (A)	JACK CAMPBELL/RI J. E. VAUGHN M. M. MOSER JR. -DMS	DMS-DR-2062 VOLUME 02 AUGUST, 1975
AEDC - SWTA - VA323 / IA13 IA13 CR-141,801	AERODYNAMIC RESULTS OF A SEPARATION EFFECTS TEST CONDUCTED IN THE AEDC 40 X 40 INCH TUNNEL A FACILITY ON THE ROCKWELL INTERNATIONAL LAUNCH CONFIGURATION 3 INTEGRATED VEHICLE	INTEGRATED VEHICLE CONFIG. 3 (MODE 32-OTS)	SEPARATION TEST OF SRB FROM ET AND ET FROM ORB. USING CAPTIVE TRAJECTORY SYSTEM	FORCE	0.01 / 4.5 -	ROCKWELL/ AEDC - SUPERSONIC WIND TUNNEL (A)	JACK CAMPBELL/RI J. E. VAUGHN M. M. MOSER JR. -DMS	DMS-DR-2062 VOLUME 03 AUGUST, 1975
MSFC - 14TWT - 579/580 / IA37 IA48 CR-128,788	RESULTS OF TESTS IN THE MSFC 14X14 INCH TRISONIC WIND TUNNEL ON A .004 SCALE MODEL OF THE ROCKWELL INTERNATIONAL SPACE SHUTTLE VEHICLE 3, (INTEGRATED CONFIGURATION)	INTEGRATED VEHICLE	STATIC STABILITY, INTERFERENCE EFFECTS	FORCE	0.004 / 0.6 - 4.96	MSFC / MSFC - 14-INCH TRISONIC WIND TUNNEL	E. C. ALLEN, T. H AMILTON /ROCKWELL J. E. VAUGHN A. T. KAVANAUGH -DMS	DMS-DR-2063 NOV., 1973

TEST ID	REPORT TITLE	CONFIGURATIONS TESTED	TEST PURPOSE	TYPE OF TEST	MODEL SCALE MACH RANGE	TESTING AGENCY	COGNIZANT TEST DMS PERSONNEL	BASIC PUBLICATIONS OR COMMENTS
CALSPAN - BTWT - T14-053 / IA36 CR-141,814	WIND TUNNEL TEST OF THE 0.019 SCALE SPACE SHUTTLE INTEGRATED VEHICLE (MODEL 14-OTS) IN THE CALSPAN 8-FOOT TRANSONIC WIND TUNNEL (IA36)	INTEGRATED SSV 2A.3A MODIFIED	MPS NOZZLE PRESSURE LOADS, WING, ELEVON, AND RUDDER HINGE MOMENTS, WING PRESSURE DISTRIBUTIONS, AERODYNAMIC STABILITY AND CONTROL	PRESSURE FORCE	0.019 / 0.9 - 1.2	CALSPAN / NR / CALSPAN - 8-FOOT TRANSONIC WIND TUNNEL	R. B. HARDIN, R. R. BURROWS /ROCKWELL - N. A. STRUZYNSKI /CALSPAN D. A. SARVER H. C. ZIMMERLE -DMS	DMS-DR-2064 VOLUME 01 DEC., 1975
CALSPAN - BTWT - T14-053 / IA36 CR-141,816	WING TUNNEL TEST OF THE 0.019 SCALE SPACE SHUTTLE INTEGRATED VEHICLE (MODEL 14-OTS) IN THE CALSPAN 8-FOOT TRANSONIC WIND TUNNEL (IA36)	INTEGRATED SSV 2A.3A MODIFIED	MPS NOZZLE PRESSURE LOADS, WING, ELEVON, AND RUDDER HINGE MOMENTS, WING PRESSURE DISTRIBUTIONS, AERODYNAMIC STABILITY AND CONTROL	PRESSURE FORCE	0.019 / 0.9 - 1.2	CALSPAN / NR / CALSPAN - 8-FOOT TRANSONIC WIND TUNNEL	R. B. HARDIN, R. R. BURROWS /ROCKWELL - N. A. STRUZYNSKI /CALSPAN D. A. SARVER H. C. ZIMMERLE -DMS	DMS-DR-2064 VOLUME 02 DEC., 1975
ARC - 87SWT - 710 / IA12C CR-141,518	WIND TUNNEL TESTS OF AN 0.019-SCALE SPACE SHUTTLE INTEGRATED VEHICLE IN THE NASA AMES 8 X 7-FOOT UNITARY WIND TUNNEL (IA12C)	2A CONFIGURATION	DETERMINE EFFECTS OF COLD JET GAS PLUMES ON LONG. AND LAT-DIR. CHAR., EXPOSED WING HINGE MOM., WING PRESS. DIST., ORBITER MPS EXTERNAL PRESS. DIST., AND MODEL BASE PRESSURES	FORCE PRESSURE	0.019 / 2.50 - 3.50	ARC / ARC - 8-FOOT BY 7-FOOT SUPERSONIC WIND TUNNEL (UNITARY)	R. B. HARDIN, R. R. BURROWS /ROCKWELL INTERNATIONAL L. R. GUIST /NASA AMES B. J. FRICKEN -DMS	DMS-DR-2065 VOLUME 01 APRIL, 1975
ARC - 87SWT - 710 / IA120 CR-141,519	WIND TUNNEL TESTS OF AN 0.019-SCALE SPACE SHUTTLE INTEGRATED VEHICLE IN THE NASA AMES 8 X 7-FOOT UNITARY WIND TUNNEL (IA12C)	2A CONFIGURATION	DETERMINE EFFECTS OF COLD JET GAS PLUMES ON LONG. AND LAT-DIR. CHAR., EXPOSED WING HINGE MOM., WING PRESS. DIST., ORBITER MPS EXTERNAL PRESS. DIST., AND MODEL BASE PRESSURES	FORCE PRESSURE	0.019 / 2.50 - 3.50	ARC / ARC - 8-FOOT BY 7-FOOT SUPERSONIC WIND TUNNEL (UNITARY)	R.B. HARDIN, R.R. BURROWS/RI L.R. GUIST/NASA AMES B. J. FRICKEN -DMS	DMS-DR-2065 VOLUME 02 APRIL, 1975

TEST ID	REPORT TITLE	CONFIGURATIONS TESTED	TEST PURPOSE	TYPE OF TEST	MODEL SCALE MACH RANGE	TESTING AGENCY	COGNIZANT TEST DMS PERSONNEL	BASIC PUBLICATIONS OR COMMENTS
ARC 87SWT 710 IA12C CR-141,520	WIND TUNNEL TESTS OF AN 0.019-SCALE SPACE SHUTTLE INTEGRATED VEHICLE IN THE NASA AMES 8 X 7-FOOT UNITARY WIND TUNNEL (IA12C)	2A CONFIGURATION	DETERMINE EFFECTS OF COLD JET GAS PLUMES ON LONG. AND LAT-DIR. CHAR. EXPOSED WING INGE MOM., WING PRESS. DIST., ORBITER MPS EXTERNAL PRESS. DIST., AND MOD EL BASE PRESSURES	FORCE PRESSURE	0.019 / 2.50 - 3.50	ARC / ARC - 8-FOOT BY 7-FOOT SUPERSONIC WIND TUNNEL (UNITARY)	R.B. HARDIN, R.R. BURROWS/RI L.R.GUIST/NASA AMES B. J. FRICKEN -DMS	DMS-DR-2065 VOLUME 03 APRIL, 1975
LARC CFHT 96 LA11 CR-128,783	HYPERSONIC PERFORMANCE, STABILITY AND CONTROL CHARACTERISTICS OF A .0075 SCALE MODEL ROCKWELL INTERNATIONAL 089-139 ORBITER CONFIGURATION	SPACE SHUTTLE ORBITER 089B-139	TO DETERMINE HYPERSONIC AERODYNAMIC CHARACTERISTICS OF SHUTTLE ORBITER	FORCE	0.0075 / 10.3 -	LARC / LARC - CONTINUOUS-FLOW HYPERSONIC TUNNEL	R.W.POWELL/NASA LARC ARC T.A.BLACKSTOCK/NASA LARC J. E. VAUGHN B. J. FRICKEN -DMS	DMS-DR-2066 NOV., 1973
LARC 26TBT 544 OS2 CR-128,777	FLUTTER TESTS (OS2) OF THE SHUTTLE ORBITER FIN/RUDDER MODEL 24-0	0.025 SCALE MODEL OF SPACE SHUTTLE ORBITER (24-0) FIN/RUDDER	ACQUISITION OF EXPERIMENTAL FLUTTER BOUNDARY DATA IN THE TRANSONIC FLIGHT REGION TO SUPPORT ANALYTICAL FLUTTER PREDICTIONS	STRUCT-DYN	0.025 / 0.6 - 1.3	LARC / LARC - 26-INCH TRANSONIC BLOWDOWN TUNNEL	J. W. FOUST/ROCKWELL A. T. KAVANAUGH -DMS	DMS-DR-2067 AUGUST, 1973
NRLAD LSWT 708 OA71A CR-128,797	EFFECTS OF THE AIR BREATHING PROPULSION SYSTEM ON SPACE SHUTTLE ORBITER SUBSONIC STABILITY AND CONTROL CHARACTERISTICS (OA71A)	-89B(2A) ORBITER	EFFECTS OF FERRY ENGINE NACELLE GROUPING AND LOCATION	FORCE	0.0405 / 0.20 -	NR / NRLAD - LOW SPEED WIND TUNNEL	R. MENNELL /ROCKWELL D. A. SARVER W. M. HALE -DMS	DMS-DR-2068 DEC., 1973

TEST ID	REPORT TITLE	CONFIGURATIONS TESTED	TEST PURPOSE	TYPE OF TEST	MODEL SCALE MACH RANGE	TESTING AGENCY	COGNIZANT TEST DMS PERSONNEL	BASIC PUBLICATIONS OR COMMENTS
LARC - UPWT - 1031 / MA7 CR-134,074	EFFECTS OF REACTI ON CONTROL SYSTEM JET-FLOW FIELD I NTERACTIONS ON A 0.015 SCALE MOD EL SPACE SHUTTLE ORBITER AERODYNAM IC CHARACTERISTICS	PRR ORBITER	INTERFERENCE STUD Y AT SUPERSONIC S PEEDS TO DETERMINE CONT ROL AMPLIFICATION FACTORS RESULTIN G FROM JET INTER- ACTION BETWEEN TH E RCS PLUMES AND THE EXTERNAL FLOW OVER THE VEHICLE	FORCE	0.015 / 2.5 - 4.0	LARC / LARC - UNITARY PLAN WIND TUNNEL	J.R.RAUSCH/ROCKWELL W.J.MONTA/LARC J. E. VAUGHN A. T. KAVANAUGH -DMS	DMS-DR-2069 JAN., 1974
LARC - LTPT - 141 / LA23 CR-128,787	EFFECT OF GASEOUS AND SOLID SIMUL ATED JET PLUMES ON AN OMA SPACE SHUTTLE LAUNCH CONFIGURATION AT MACH NUMBERS FROM .6 TO 2.2	JSC OMA ORBITER WITH EHOT AND 2 SRM	DETERMINE EFFECT OF PLUME-INDUCED FLOW SEPARATION AND ASPIRATION EFFECTS DUE TO OPERATION OF BOTH THE ORBITER AND THE SOLID ROCKET MOTORS	FORCE	.019 / 1.6 - 2.2	LARC / LARC - LOW-TURBULENCE PRESSURE TUNNEL	J. B. DODS,JR., J. BROWNSON, D. L. KASSNER / ARC K. L. BLACKWELL / MSFC V. W. SPARKS A. T. KAVANAUGH -DMS	DMS-DR-2070 OCT., 1973
ARC - 3.5HWT - 168 / OA23 CR-128,799	RESULTS OF TESTS OF 0.010- AND 0.015-SCALE MODELS OF SPACE SHUTTLE ORBITER CONFIGURATIONS 3 AND 3A IN THE AMES RESEARCH CENTER 3.5-FOOT HYPERSONIC WIND TUNNEL (OA23)	MODEL 32-0 MODEL 49-0	OBTAIN STABILITY AND CONTROL CHARACTERISTICS FOR THE 3A BASELINE VEHICLE CONFIGURATION	FORCE	0.015 , 0.010 / 5.3 - 10.3	ARC / ARC - 3.5-FOOT HYPERSONIC WIND TUNNEL	T. J. DZIUBALA, M. D. MILAM/ROCKWELL INTERNATIONAL J.W. CLEARY, J. A. MELLENTHIN/NASA AMES B. W. MYERS -DMS	DMS-DR-2071 SEPT., 1974
MSFC - 14TWT - 573 / IA31FC CR-134,072	MISALIGNMENT STUDIES ON SPACE SHUTTLE INTEGRATED VEHICLE	PRR BASELINE LAUNCH CONFIGURATION MCR 0074 BASELINE MODEL ELEMENTS	EFFECTS OF MODEL ELEMENT MISALIGNMENT ON TEST RESULTS	FORCE	0.004 / 0.9 - 1.46	MSFC / MSFC - 14-INCH TRISONIC WIND TUNNEL	P. RAMSEY /MSFC T. MCMEANS, T. DAVIS / NSI V. W. SPARKS A. T. KAVANAUGH -DMS	DMS-DR-2072 JAN., 1974

TEST ID	REPORT TITLE	CONFIGURATIONS TESTED	TEST PURPOSE	TYPE OF TEST	MODEL SCALE MACH RANGE	TESTING AGENCY	COGNIZANT TEST DMS PERSONNEL	BASIC PUBLICATIONS OR COMMENTS
LARC - UPWT - 1043 / 0A70 CR-134,070	EFFECTS OF REACTION CONTROL SYSTEM JET SIMULATION ON THE STABILITY AND CONTROL CHARACTERISTICS OF A 0.015 SCALE SPACE SHUTTLE MODEL TESTED IN THE LANGLEY RESEARCH CENTER UNITARY PLAN WIND TUNNEL	MODEL 42-0 OF THE VL70-0001398 SSV ORBITER CONFIGURATION 3	OBTAIN THE DETAILED EFFECTS THAT RCS JET FLOW INTERACTIONS HAVE ON SUPERSONIC STABILITY AND CONTROL CHARACTERISTICS OF THE SPACE SHUTTLE VEHICLE	FORCE	0.015 /	LARC / LARC - UNITARY PLAN WIND TUNNEL	J. J. DAILEDA, JOHN MARROQUIN J. E. VAUGHN A. T. KAVANAUGH -DMS	DMS-DR-2073 MARCH, 1974
NRLAD - LSWT - 709 / 0A57A CR-134,414	EFFECTS OF THE AIR BREATHING ENGINE PLUMES ON SSV ORBITER SUBSONIC WING PRESSURE DISTRIBUTIONS	-898 SPACE SHUTTLE ORBITER FERRY CONFIGURATION	INVESTIGATE THE ORBITER WING PRESSURE DISTRIBUTION RESULTING FROM FIVE UNDER-WING ENGINE NACELLE PLUMES	PRESSURE FORCE	0.0405 / 0.165-	NR / NRLAD - LOW SPEED WIND TUNNEL	BRUCE W. CAMERON, JR. /RI R. B. LONE -DMS	DMS-DR-2074 OCT., 1974
LARC - 8VDHT - 3778/ 3855 / OH41 CR-128,784	INVESTIGATION OF CONFIGURATION EFFECTS ON ENTRY HEATING DISTRIBUTIONS AT MACH = 8.0 (OH41)	MODEL SS-H-00326-1	AERODYNAMIC HEATING INVESTIGATIONS	HEAT-TRANS	0.00593 / 7.9 - 7.9	LARC / LARC - MACH 8 VARIABLE-DENSITY HYPERSONIC TUNNEL	H. GOROWITZ/RI A. T. KAVANAUGH -DMS	DMS-DR-2075 OCT., 1973
LARC - 8VDHT - 4060/ 4079 / OH41A CR-128,785	INVESTIGATION OF CONFIGURATION EFFECTS ON ENTRY HEATING DISTRIBUTIONS AT MACH NO = 8.0 (OH41A)	SS-H-00326-4 SS-H-00326B-5,-6,-7 NR 110D	AERODYNAMIC HEATING INVESTIGATIONS	HEAT-TRANS	0.00553 , 0.006 / 7.9 - 7.9	LARC / LARC - MACH 8 VARIABLE-DENSITY HYPERSONIC TUNNEL	H. GOROWITZ/RI R. WHITE, A. DEER RICO/GRUMMAN A. T. KAVANAUGH -DMS	DMS-DR-2076 OCT., 1973

TEST ID	REPORT TITLE	CONFIGURATIONS TESTED	TEST PURPOSE	TYPE OF TEST	MODEL SCALE MACH RANGE	TESTING AGENCY	COGNIZANT TEST DMS PERSONNEL	BASIC PUBLICATIONS OR COMMENTS
ARC 66SWT 630 1A29 0A63 CR-134,095	RESULTS OF TESTS 0A63 AND 1A29 ON AN 0.015-SCALE MODEL OF THE SPACE SHUTTLE CONFIGURATION 140 A/B IN THE NASA/ARC 6- BY 6-FOOT TRANSONIC WIND TUNNEL	140A/B ORB., VEH. 4 ET, 2 SRB'S SHUTTLE ORBITER VENT PRESSURE MODE L 36-OTS	TO DETERMINE LOCAL PRESSURE DISTRIBUTIONS ON THE ORBITER FUSELAGE FOR ASCENT FLIGHT TO SUPPORT VEHICLE VENTING STUDIES	PRESSURE	0.015 / 0.6 - 2.0	ARC / ARC - 6-FOOT BY 6-FOOT SUPERSONIC WIND TUNNEL	R.H. SPANGLER, D. E. THORNTON, ROCKWELL INTERNATIONAL L.R. GUIST, CARL E. SUTTON, ARC B. J. FRICKEN -DMS	DMS-DR-2077 VOLUME 01 MAY, 1974
ARC 66SWT 630 1A29 0A63 CR-134,099	RESULTS OF TESTS 0A63 AND 1A29 ON AN 0.015-SCALE MODEL OF THE SPACE SHUTTLE CONFIGURATION 140 A/B IN THE NASA/ARC 6- BY 6-FOOT TRANSONIC WIND TUNNEL	140A/B ORB., VEH. 4 ET, 2 SRB'S	TO DETERMINE LOCAL PRESSURE DISTRIBUTIONS ON THE ORBITER FUSELAGE FOR ASCENT FLIGHT TO SUPPORT VEHICLE VENTING STUDIES	PRESSURE	0.015 / 0.6 - 2.0	RC / ARC - 6-FOOT BY 6-FOOT SUPERSONIC WIND TUNNEL	R. H. SPANGLER, D. E. THORNTON, ROCKWELL INTERNATIONAL L. R. GUIST, CARL E. SUTTON, AMES B. J. FRICKEN -DMS	DMS-DR-2077 VOLUME 02 MAY, 1974
ARC 66SWT 630 0A63 CR-134,100	RESULTS OF TESTS 0A63 AND 1A29 ON AN 0.015-SCALE MODEL OF THE SPACE SHUTTLE CONFIGURATION 140 A/B IN THE NASA/ARC 6- BY 6-FOOT TRANSONIC WIND TUNNEL	140A/B ORB., VEH. 4 ET, 2 SRB'S	TO DETERMINE LOCAL PRESSURE DISTRIBUTIONS ON THE ORBITER FUSELAGE FOR ASCENT FLIGHT TO SUPPORT VEHICLE STUDIES	PRESSURE	0.015 / 0.6 - 2.0	ARC / ARC - 6-FOOT BY 6-FOOT SUPERSONIC WIND TUNNEL	R. H. SPANGLER, D. E. THORNTON/RI L. R. GUIST, CARL E. SUTTON, AMES B. J. FRICKEN -DMS	DMS-DR-2077 VOLUME 03 MAY, 1974
ARC 3.5SWT 169 1A10 CR-128,795	WIND TUNNEL TEST OF THE 0.010-SCALE SPACE SHUTTLE INTEGRATED VEHICLE IN THE NASA-AMES 3.5-FOOT HYPERSONIC WIND TUNNEL (1A10)	MODEL 32-OT WITH ORBITER, ET, SIMULATED ENGINE PLUMES	EVALUATE BASIC HYPERSONIC STABILITY CHARACTERISTICS OF FIRST AND SECOND STAGE AND TO DEFINE ORBITER PLUME EFFECTS ON AERO CHARACTERISTICS USING SOLID PLUMES	FORCE	0.010 /	ARC / ARC - 3.5-FOOT HYPERSONIC WIND TUNNEL	F. F. FIZGERALD, M. T. PETROZZI/ ROCKWELL INTERNATIONAL J. W. CLEARY, J. A. MELLENTHIN/ NASA/AMES RESEARCH CENTER B. W. MYERS -DMS	DMS-DR-2078 JAN., 1974

TEST ID	REPORT TITLE	CONFIGURATIONS TESTED	TEST PURPOSE	TYPE OF TEST	MODEL SCALE MACH RANGE	TESTING AGENCY	COGNIZANT TEST DMS PERSONNEL	BASIC PUBLICATIONS OR COMMENTS
LARC	EFFECTS OF SUPFAC	089B-139B(MODIFIE	EFFECTS OF TPS TI	FORCE	0.01 /	LARC /	G.C.ASHBY,JR./NAS	DMS-DR-2079
20HT6	E ROUGHNESS ON TH	D NOSE)	LE IRREGULARITIES		6.0 -	LARC -	A,LARC	APRIL, 1974
441 /	E AERODYNAMIC CHA		EXPLORE POSSIBLE		6.0	20-INCH HYPERS	J. E. VAUGHN	
LA15	RACTERISTICS OF T		BOUNDARY LAYER SE			ONIC TUNNEL (M	-DMS	
CR-134,083	HE MODIFIED 089 B		PARATION HYSTEREI			ACH 6)		
	SHUTTLE ORBITER		S EFFECT					
	AT MACH 6 (LA15)							
NRLAD	EFFECTS OF AIR BR	-89B SPACE SHUTTL	INVESTIGATE ORBIT	PRESSURE	0.0405 /	NR /	T. SOARD /RI	DMS-DR-2080
LSWT	EATHING ENGINE PL	E ORBITER FERRY C	ER WING PRESSURE	FORCE	0.20 -	NRLAD -	R. B. LOWE	VOLUME 01
713 /	UMES ON SSV ORBIT	ONFIGURATION	DISTRIBUTIONS RES			LOW SPEED WIND	-DMS	OCT., 1974
0A57B	ER SUBSONIC WING		ULTING FROM NACEL			TUNNEL		
CR-134,416	PRESSURE DISTRIBU		LE PLUMES ABOVE A					
	TION		ND BELOW THE WING					
NRLAD	EFFECTS OF AIR BR	-89B SPACE SHUTTL	INVESTIGATE ORBIT	PRESSURE	0.0405 /	NR /	T. SOARD /RT	DMS-DR-2080
LSWT	EATHING ENGINE PL	E ORBITER FERRY C	ER WING PRESSURE	FORCE	0.2 -	NRLAD -	R. B. LOWE	VOLUME 02
713 /	UMES ON SSV ORBIT	ONFIGURATION	DISTRIBUTIONS RES			LOW SPEED WIND	-DMS	OCT., 1974
0A57B	ER SUBSONIC WING		ULTING FROM NACEL			TUNNEL		
CR-134,417	PRESSURE DISTRIBU		LE PLUMES ABOVE A					
	TION		ND BELOW THE WING					
NRLAD	LANDING PRESSURE	-140 A/B SPACE SH	PRESSURE LOADS DA	PRESSURE	0.0405 /	NR /	T. L. SOARD, B. W	DMS-DR-2081
LSWT	LOADS OF THE -140	UTTLE ORBITER	TA IN GROUND EFFE		0.2 -	NRLAD -	. CAMERON /ROCKWE	VOLUME 01
711 /	A/B SPACE SHUTTL		CT		0.2	LOW SPEED WIND	LL	JAN., 1976
0A69	E ORBITER DETER-					TUNNEL	H. C. ZIMMERLE	
CR-141,590	MINED IN THE NRLA						-DMS	
	D LOW SPEED WIND							
	TUNNEL (0A69)							
NRLAD	LANDING PRESSURE	-140 A/B SPACE SH	PRESSURE LOADS DA	PRESSURE	0.0405 /	NR /	T. L. SOARD, B. W	DMS-DR-2081
LSWT	LOADS OF THE -140	UTTLE ORBITER	TA IN GROUND EFFE	FORCE	0.2 -	NRLAD -	. CAMERON /ROCKWE	VOLUME 02
711 /	A/B SPACE SHUTTL		CT		0.2	LOW SPEED WIND	LL	JAN., 1976
0A69	E ORBITER DETER-					TUNNEL	H. C. ZIMMERLE	
CR-141,581	MINED IN THE NRLA						-DMS	
	D LOW SPEED WIND							
	TUNNEL (0A69)							

TEST ID	REPORT TITLE	CONFIGURATIONS TESTED	TEST PURPOSE	TYPE OF TEST	MODEL SCALE MACH RANGE	TESTING AGENCY	COGNIZANT TEST DMS PERSONNEL	BASIC PUBLICATIONS OR COMMENTS
ARC 3.5W 167 0A73 CR-128,800	EFFECTS OF REACTION CONTROL SYSTEM JET SIMULATION ON THE STABILITY AND CONTROL CHARACTERISTICS OF A 0.015-SCALE SPACE SHUTTLE ORBITER MODEL IN THE AMES RESEARCH CENTER 3.5-FOOT HYPERSONIC WIND TUNNEL	CONFIGURATION 3A ORBITER	ASCERTAIN THE EFFECTS OF RCS JET FLOW FIELD INTERACTIONS WITH THE LOCAL FLOW FIELD ON THE HYPERSONIC AERODYNAMIC AND STABILITY AND CONTROL CHARACTERISTICS OF THE ORBITER DURING RE-ENTRY.	FORCE	0.015 / 10.29-	ARC / ARC - 3.5-FOOT HYPERSONIC WIND TUNNEL	T.J. DZIUBALA /RO CKWELL J. MARROQUIN /RO CKWELL M. M. MANN -DMS	DMS-DR-2082 DEC., 1973
LARC 3W 1057 0A20A CR-134,081	RESULTS OF INVESTIGATIONS (0A20) OF A 0.015-SCALE 140A/B ORBITER CONFIGURATION SPACE SHUTTLE VEHICLE ORBITER MODEL IN THE NASA/LANGLEY RESEARCH CENTER UNITARY PLAN WIND TUNNEL	SSV 140A/B ORBITER	TO DETERMINE SUPERSONIC TRIM AND STABILITY CHARACTERISTICS FOR THE 140A/B ORBITER.	FORCE	0.015 / 2.5 - 4.6	LARC / LARC - UNITARY PLAN WIND TUNNEL	J.H.CAMPBELL,II. M.E.NICHOLS /ROC KWELL W.P.PHILLIPS /LARC M. M. MANN -DMS	DMS-DR-2083 FEB., 1974
ARC 11TW 716 1A14A CR-134,443	AIRLOADS INVESTIGATIONS OF AN 0.03-SCALE MODEL OF THE SPACE SHUTTLE VEHICLE 140A/B LAUNCH CONFIGURATION (MODEL 47-OTS) IN THE ARC 11-FOOT UNITARY PLAN WIND TUNNEL FOR MACH RANGE 0.6 TO 1.4 (1A14A)	SSV 140A/B LAUNCH	OBTAIN PRESSURE DISTRIBUTIONS ON INTEGRATED LAUNCH VEHICLE; TO OBTAIN FORCE DATA	PRESSURE FORCE	0.030 / 0.6 - 1.4	ARC / ARC - 11-FOOT TRANSONIC WIND TUNNEL (UNITARY)	R. L. GILLINS, E. CHEE/RI D. A. SARVER J.T.DAVIET -DMS	DMS-DR-2084 VOLUME 01 FEB., 1975

TEST ID	REPORT TITLE	CONFIGURATIONS TESTED	TEST PURPOSE	TYPE OF TEST	MODEL SCALE MACH RANGE	TESTING AGENCY	COGNIZANT TEST DMS PERSONNEL	BASIC PUBLICATIONS OR COMMENTS
ARC 11TWT 716 IA14A CR-134,444	AIRLOADS INVESTIGATIONS OF AN 0.03-SCALE MODEL OF THE SPACE SHUTTLE VEHICLE 140A/B LAUNCH CONFIGURATION (MODEL 47-OTS) IN THE ARC 11-FOOT UNITARY PLAN WIND TUNNEL FOR MACH RANGE 0.6 TO 1.4 (IA14A)	SSV 140A/B LAUNCH	OBTAIN PRESSURE DISTRIBUTIONS ON INTEGRATED LAUNCH VEHICLE; TO OBTAIN FORCE DATA	PRESSURE FORCE	0.030 / 0.6 - 1.4	ARC / ARC - 11-FOOT TRANSONIC WIND TUNNEL (UNITARY)	R. L. GILLINS, E. CHEE/RI D. A. SARVER J.T.DAVIET -DMS	DMS-DR-2084 VOLUME 02 MARCH, 1975
ARC 11TWT 716 IA14A CR-143,445	AIRLOADS INVESTIGATIONS OF AN 0.03-SCALE MODEL OF THE SPACE SHUTTLE VEHICLE 140A/B LAUNCH CONFIGURATION (MODEL 47-OTS) IN THE ARC 11-FOOT UNITARY PLAN WIND TUNNEL FOR MACH RANGE 0.6 TO 1.4 (IA14A)	SSV 140A/B LAUNCH	OBTAIN PRESSURE DISTRIBUTIONS ON INTEGRATED LAUNCH VEHICLE; TO OBTAIN FORCE DATA	PRESSURE FORCE	0.030 / 0.6 - 1.4	ARC / ARC - 11-FOOT TRANSONIC WIND TUNNEL (UNITARY)	R. L. GILLINS, E. CHEE/RI D. A. SARVER J.T.DAVIET -DMS	DMS-DR-2084 VOLUME 03 APRIL, 1975
ARC 11TWT 716 IA14A CR-143,446	AIRLOADS INVESTIGATIONS OF AN 0.03-SCALE MODEL OF THE SPACE SHUTTLE VEHICLE 140A/B LAUNCH CONFIGURATION (MODEL 47-OTS) IN THE ARC 11-FOOT UNITARY PLAN WIND TUNNEL FOR MACH RANGE 0.6 TO 1.4 (IA14A)	SSV 140A/B LAUNCH	OBTAIN PRESSURE DISTRIBUTIONS ON INTEGRATED LAUNCH VEHICLE; TO OBTAIN FORCE DATA	PRESSURE FORCE	0.030 / 0.6 - 1.4	ARC / ARC - 11-FOOT TRANSONIC WIND TUNNEL (UNITARY)	R. L. GILLINS, E. CHEE/RI D. A. SARVER J.T.DAVIET -DMS	DMS-DR-2084 VOLUME 04 APRIL, 1975

TEST ID	REPORT TITLE	CONFIGURATIONS TESTED	TEST PURPOSE	TYPE OF TEST	MODEL SCALE MACH RANGE	TESTING AGENCY	COGNIZANT TEST DMS PERSONNEL	BASIC PUBLICATIONS OR COMMENTS
ARC - 11TWT - 716 / IA14A CR-143,447	AIRLOADS INVESTIGATIONS OF AN 0.03-SCALE MODEL OF THE SPACE SHUTTLE VEHICLE 140A/B LAUNCH CONFIGURATION (MODEL 47-OTS) IN THE ARC 11-FOOT UNITARY PLAN WIND TUNNEL FOR MACH RANGE 0.6 TO 1.4 (IA14A)	SSV 140A/B LAUNCH	OBTAIN PRESSURE DISTRIBUTIONS ON INTEGRATED LAUNCH VEHICLE; TO OBTAIN FORCE DATA	PRESSURE FORCE	0.030 / 0.6 - 1.4	ARC / ARC - 11-FOOT TRANSONIC WIND TUNNEL (UNITARY)	R. L. GILLINS, E. CHEE/RI D. A. SARVER J.T.DAVIET -DMS	DMS-DR-2084 VOLUME 05 APRIL, 1975
ARC - 11TWT - 716 / IA14A CR-143,448	AIRLOADS INVESTIGATIONS OF AN 0.03-SCALE MODEL OF THE SPACE SHUTTLE VEHICLE 140A/B LAUNCH CONFIGURATION (MODEL 47-OTS) IN THE ARC 11-FOOT UNITARY PLAN WIND TUNNEL FOR MACH RANGE 0.6 TO 1.4 (IA14A)	SSV 140A/B LAUNCH	OBTAIN PRESSURE DISTRIBUTIONS ON INTEGRATED LAUNCH VEHICLE; TO OBTAIN FORCE DATA	PRESSURE FORCE	0.030 /	ARC / ARC - 11-FOOT TRANSONIC WIND TUNNEL (UNITARY)	R. L. GILLINS, E. CHEE/RI D. A. SARVER J.T.DAVIET -DMS	DMS-DR-2084 VOLUME 06 APRIL, 1975
ARC - 11TWT - 716 / IA14A CR-143,449	AIRLOADS INVESTIGATIONS OF AN 0.03-SCALE MODEL OF THE SPACE SHUTTLE VEHICLE 140A/B LAUNCH CONFIGURATION (MODEL 47-OTS) IN THE ARC 11-FOOT UNITARY PLAN WIND TUNNEL FOR MACH RANGE 0.6 TO 1.4 (IA14A)	SSV 140A/B LAUNCH	OBTAIN PRESSURE DISTRIBUTIONS ON INTEGRATED LAUNCH VEHICLE; TO OBTAIN FORCE DATA	PRESSURE FORCE	0.030 / 0.6 - 1.4	ARC / ARC - 11-FOOT TRANSONIC WIND TUNNEL (UNITARY)	R. L. GILLINS, E. CHEE/RI D. A. SARVER J.T.DAVIET -DMS	DMS-DR-2084 VOLUME 07 APRIL, 1975

TEST ID	REPORT TITLE	CONFIGURATIONS TESTED	TEST PURPOSE	TYPE OF TEST	MODEL SCALE MACH RANGE	TESTING AGENCY	COGNIZANT TEST DMS PERSONNEL	BASIC PUBLICATIONS OR COMMENTS
ARC - 11TWT - 716 / IA14A CR-143,450	IRLOADS INVESTIGATIONS OF AN 0.03-SCALE MODEL OF THE SPACE SHUTTLE VEHICLE 140A/B LAUNCH CONFIGURATION (MODEL 47-OTS) IN THE ARC 11-FOOT UNITARY PLAN WIND TUNNEL FOR MACH RANGE 0.6 TO 1.4 (IA14A)	SSV 140A/B LAUNCH	OBTAIN PRESSURE DISTRIBUTIONS ON INTEGRATED LAUNCH VEHICLE; TO OBTAIN FORCE DATA	PRESSURE FORCE	0.030 /	RAC / ARC - 11-FOOT TRANSONIC WIND TUNNEL (UNITARY)	R. L. GILLINS, E. CHEE/RI D. A. SARVER J.T.DAVIET -DMS	DMS-DR-2084 VOLUME 08 APRIL, 1975
ARC - 11TWT - 716 / IA14A CR-141,501	IRLOADS INVESTIGATIONS OF AN 0.03-SCALE MODEL OF THE SPACE SHUTTLE VEHICLE 140A/B LAUNCH CONFIGURATION (MODEL 47-OTS) IN THE ARC 11-FOOT UNITARY PLAN WIND TUNNEL FOR MACH RANGE 0.6 TO 1.4 (IA14A)	SSV 140A/B LAUNCH	OBTAIN PRESSURE DISTRIBUTIONS ON INTEGRATED LAUNCH VEHICLE; TO OBTAIN FORCE DATA	PRESSURE FORCE	0.030 / 0.6 - 1.4	ARC / ARC - 11-FOOT TRANSONIC WIND TUNNEL (UNITARY)	R. L. GILLINS, E. CHEE/RI D. A. SARVER J.T.DAVIET -DMS	DMS-DR-2084 VOLUME 09 MAY, 1975
ARC - 11TWT - 716 / IA14A CR-141,502	AIRLOADS INVESTIGATIONS OF AN 0.03-SCALE MODEL OF THE SPACE SHUTTLE VEHICLE 140A/B LAUNCH CONFIGURATION (MODEL 47-OTS) IN THE ARC 11-FOOT UNITARY PLAN WIND TUNNEL FOR MACH RANGE 0.6 TO 1.4 (IA14A)	SSV 140A/B LAUNCH	OBTAIN PRESSURE DISTRIBUTIONS ON INTEGRATED LAUNCH VEHICLE; TO OBTAIN FORCE DATA	PRESSURE FORCE	0.030 / 0.6 - 1.4	ARC / ARC - 11-FOOT TRANSONIC WIND TUNNEL (UNITARY)	R. L. GILLINS, E. CHEE/RI D. A. SARVER J.T.DAVIET -DMS	DMS-DR-2084 VOLUME 10 MAY, 1975

WIND TUNNEL TEST / DMS DATA PROCESSING

TEST ID	REPORT TITLE	CONFIGURATIONS TESTED	TEST PURPOSE	TYPE OF TEST	MODEL SCALE / MACH RANGE	TESTING AGENCY	COGNIZANT TEST DMS PERSONNEL	BASIC PUBLICATIONS OR COMMENTS
APC 11TWT 716 IA14A CR-141,503	AIRLOADS INVESTIGATIONS OF AN 0.03-SCALE MODEL OF THE SPACE SHUTTLE VEHICLE 14-OA/B LAUNCH CONFIGURATION (MODEL 47-OTS) IN THE ARC 11-FOOT UNITARY PLAN WIND TUNNEL FOR MACH RANGE 0.6 TO 1.4 (IA14A)	SSV 14-OA/B LAUNCH	OBTAIN PRESSURE DISTRIBUTIONS ON INTEGRATED LAUNCH VEHICLE TO OBTAIN FORCE DATA	PRESSURE FORCE	0.030 / 0.6 - 1.4	ARC / ARC - 11-FOOT TRANSONIC WIND TUNNEL (UNITARY)	R.L. GILLINS, E. CHEE/RI D. A. SARVER J.T.DAVIET -DMS	DMS-DR-2084 VOLUME II MAY, 1975
NRLAD LSWT 712 OA71C CR-134,078	EFFECTS OF THE SI X ENGINE AIR BREATHING PROPULSION SYSTEM ON SPACE SHUTTLE ORBITER SUBSONIC STABILITY AND CONTROL CHARACTERISTICS	B9B ORBITER SPACE SHUTTLE ORBITER/ET	OPTIMIZE AIR BREATHING PROPULSION SYSTEM NACELLE CO-WL-INLET DESIGN AND DETERMINE THE EFFECT OF THIS DESIGN ON THE ORBITER STABILITY AND CONTROL CHARACTERISTICS	FORCE	0.0405 / 0.21 -	NRLAD / NRLAD - LOW SPEED WIND TUNNEL	R.C. MENNELL AND T. SOARD / ROCKWELL D. E. POUCHER -DMS	DMS-DR-2086 FEB., 1974
MSFC 14TWT 578 SA10F CR-134,116	EFFECT OF ENGINE SHROUD CONFIGURATION ON THE STATIC AERODYNAMIC CHARACTERISTICS OF A 0.00563 SCALE 142-INCH DIAMETER SOLID ROCKET BOOSTER	SRB WITH VARIED SHROUD LENGTHS AND FLARE ANGLES SRB WITH VARIED SHROUD MOUNTED STRAKES AND TVC BOTTLES	DETERMINE EFFECTS OF ENGINE SHROUD SIZE AND SHAPE ON AERODYNAMIC CHARACTERISTICS OF THE SRB	FORCE	0.00563 / 0.4 - 4.96	MSFC / NSI / MSFC - 14-INCH TRISONIC WIND TUNNEL	J.D. JOHNSON / MSFC W.F. BRADDOCK / NSI V. W. SPARKS V. W. SPARKS -DMS	DMS-DR-2087 SEPT., 1974

TEST ID	REPORT TITLE	CONFIGURATIONS TESTED	TEST PURPOSE	TYPE OF TEST	MODEL SCALE / MACH RANGE	TESTING AGENCY	COGNIZANT TEST DMS PERSONNEL	BASIC PUBLICATIONS OR COMMENTS
LARC B'PT 655 / B'P' 662 SA2FA SA2FB CR-134,105	AERODYNAMIC CHARACTERISTICS OF A 142-INCH DIAMETER SOLID ROCKET BOOSTER CONFIGURATION 139.	142-INCH SOLID ROCKET BOOSTER	AERODYNAMICS OF SRB DURING FREE-FALL	FORCE	0.02112 / 0.4 - 1.2	LARC / LARC - 8-FOOT TRANSONIC PRESSURE TUNNEL / 8-FOOT TRANSONIC PRESSURE TUNNEL	J.D.JOHNSON/MSFC / W.D.RADFORD/NSI / J. E. VAUGHN / A. T. KAVANAUGH / -DMS	DMS-DR-2088 JULY, 1974
LARC B'PT 661 / 0A25 CR-134,082	RESULTS OF INVESTIGATIONS ON AN 0.015-SCALE CONFIGURATION 140A/B SPACE SHUTTLE ORBITER MODEL 149-01 IN THE NASA/LANGLEY RESEARCH CENTER 8-FOOT TRANSONIC PRESSURE TUNNEL (0A25)	140A/B	VERIFY LONGITUDINAL AND LATERAL-DIRECTIONAL CHARACTERISTICS OF 140A/B ORBITER, DETERMINE SURFACE DEFLECTION EFFECTS ON VEHICLE PERFORMANCE, AND TO DETERMINE COMPONENT BUILDUP EFFECTS	FORCE	0.015 / 0.35 - 1.2	LARC / LARC - 8-FOOT TRANSONIC PRESSURE TUNNEL	J. H. CAMPBELL II / AND M. E. NICHOLS/ROCKWELL INTERNATIONAL / W. P. PHILLIPS/LANGLEY RESEARCH CENTER / B. W. MYERS / -DMS	DMS-DR-2089 APRIL, 1974
LARC UPWT 1040 / LARC CR-134,080	SUPERSONIC PERFORMANCE, STABILITY AND CONTROL CHARACTERISTICS OF A 0.01875 SCALE MODEL ROCKWELL INTERNATIONAL 089B-139B ORBITER CONFIGURATION (LABC)	089B-139B ORBITER CONFIGURATION	TO STUDY THE SUPERSONIC AERODYNAMIC CHARACTERISTICS OF A ROCKWELL IN	FORCE	0.01875/ 1.9 - 2.86	LARC / LARC - UNITARY PLAN WIND TUNNEL	G. M. WARE/LARC / R. W. POWELL/LARC / J. E. VAUGHN / B. W. MYERS / -DMS	DMS-DR-2090 MARCH, 1974

TEST ID	REPORT TITLE	CONFIGURATIONS TESTED	TEST PURPOSE	TYPE OF TEST	MODEL SCALE MACH RANGE	TESTING AGENCY	COGNIZANT TEST DMS PERSONNEL	BASIC PUBLICATIONS OR COMMENTS
LARC 8'PT 657/660 LA78 CR-141,512	SUBSONIC AND TRANSONIC AERODYNAMIC CHARACTERISTICS ASSOCIATED WITH VARIATIONS IN THE GEOMETRY OF THE FORWARD PORTION OF IRREGULAR PLANFORM WINGS ON A .01 .875 SCALE LO-100 LANGLEY CONCEPT SPACE SHUTTLE ORBITER IN THE LANGLEY 8-FOOT TPT (LA78)	LO-100 ORBITER	EFFECTS OF WING-FILLET LEADING EDGE CONFIGURATION	FORCE	0.35 - 1.2	LARC / LARC - 8-FOOT TRANSONIC PRESSURE TUNNEL	B. SPENCER /NASA D. E. POUCHER -DMS	DMS-DR-2091 MARCH, 1975
LARC 22WT 415 0A72 TM-X 71968	HYPERSONIC STABILITY AND CONTROL CHARACTERISTICS OF A 0.004 SCALE MODEL (34-0) ROCKWELL INTERNATIONAL SPACE SHUTTLE ORBITER VEHICLE 3 CONFIGURATION (0A-72)	ORBITER 139B (34-0)	TO DETERMINE THE HYPERSONIC AERODYNAMIC PERFORMANCE, LONGITUDINAL TRIM, AND STATIC STABILITY AND CONTROL AND DETERMINE THE EFFECT OF REYNOLDS NUMBER ON LONGITUDINAL STABILITY.	FORCE	0.004 / 17.6 - 21.6	LARC / LARC - 22-INCH HELIUM TUNNEL	DAVID R. STONE/LARC ROBERT MULFINGER/RI M. M. MANN -DMS	DMS-DR-2092 NOV., 1974
MSFC 14TWT 585 1A378 CR-134,090	EFFECT OF EXTERNAL TANK NOSE SHAPE ON THE ROCKWELL INTERNATIONAL SPACE SHUTTLE VEHICLE 3. (INTEGRATED CONFIGURATION (1A378)	EXTERNAL TANK, T9 EXTERNAL TANK, T1 EXTERNAL TANK, T1 SRB, S12	TO INVESTIGATE THE EFFECT ON THE INTEGRATED VEHICLE AERODYNAMIC CHARACTERISTICS OF SEVERAL TANK NOSE SHAPES	FORCE	0.004 / 0.6 - 4.96	MSFC / MSFC - 14-INCH TRISONIC WIND TUNNEL	E. C. ALLEN/RI V. W. SPARKS J. L. GLYNN -DMS	DMS-DR-2093 MARCH, 1974

TEST ID	REPORT TITLE	CONFIGURATIONS TESTED	TEST PURPOSE	TYPE OF TEST	MODEL SCALE MACH RANGE	TESTING AGENCY	COGNIZANT TEST DMS PERSONNEL	BASIC PUBLICATIONS OR COMMENTS
LARC - 26TBT - 545 / OSI CR-134,073	FLUTTER TESTS IOS II OF THE 0.02-SCALE ORBITER WING ELEVON SEMI-SPAN MODEL 23-0	BASIC WING AND II HZ INBD AND 13.5 HZ OUTBD ELEVON ROTATIONAL FREQ BASIC WING AND II HZ INBD AND II H Z OUTBOARD ELEVON ROTATIONAL FREQ	ACQUIRE EXPERIMENTAL FLUTTER BOUNDARY DATA IN THE TRANSONIC FLIGHT REGIME TO SUPPORT ANALYTICAL FLUTTER PREDICTIONS	STRUCT-DYN	0.55 - 1.3	LARC / LARC - 26-INCH TRANSONIC BLOWDOWN TUNNEL	MICHAEL A. KOTCH A. T. KAVANAUGH -DMS	DMS-DR-2094 MARCH, 1974
MSFC - 14TWT - 581 / OA49 CR-134,404	AN INVESTIGATION OF THE STABILITY AND CONTROL CHARACTERISTICS OF THE VEHICLE 4 CONFIGURATION	ORBITER	VERIFY THE STABILITY AND CONTROL CHARACTERISTICS OF THE VEHICLE 4 CONFIGURATION	FORCE	0.6 - 4.96	RI / MSFC - 14-INCH TRISONIC WIND TUNNEL	R. MULFINGER / ROCKWELL INTERNATIONAL D. A. SARVER M. M. MANN -DMS	DMS-DR-2095 SEPT., 1974
LARC - 8VDHT - 644 / CH13 CR-134,101	HEAT TRANSFER TESTS OF AN 0.006-SCALE THIN SKIN SPACE SHUTTLE THERMOCOUPLE MODEL 141-01 IN THE LANGLEY RESEARCH CENTER VARIABLE DENSITY TUNNEL AT M=8	B1CC507F4M3V5W87	OBTAIN ORBITER ENTRY HEATING DISTRIBUTIONS AND CORRELATE PHASE CHANGE PAINT DATA WITH THERMOCOUPLE DATA	HEAT-TRANS	0.006 / 8.0 - 8.0	LARC / LARC - MACH 8 VARIABLE-DENSITY HYPERSONIC TUNNEL	D. G. WALSTAD/ROCKWELL INTERNATIONAL P. LAWING/NASA B. W. MYERS -DMS	DMS-DR-2096 AUGUST, 1974

TEST ID	REPORT TITLE	CONFIGURATIONS TESTED	TEST PURPOSE	TYPE OF TEST	MODEL SCALE MACH RANGE	TESTING AGENCY	COGNIZANT TEST DMS PERSONNEL	BASIC PUBLICATIONS OR COMMENTS
NRLAD - LSWT 715 / OA62A CR-134,102	CONTINUED INVESTIGATIONS IN THE NAVAL LOW SPEED WIND TUNNEL INTO THE EFFECTS OF THE AIR BREATHING PROPULSION SYSTEM ON ORBITER SUBSONIC STABILITY AND CONTROL CHARACTERISTICS (OA62A)	140A/B SSV ORBITER	CONTINUE STUDIES INITIATED ON TEST S OA16, OA71A, AND D OA71C FOR OPTIMIZING THE AIR BREATHING PROPULSION SYSTEM (ABPS) AND INVESTIGATE THE AERODYNAMIC EFFECTS OF VARIOUS NACELLE NUMBER/LOCATION CONFIG. ON THE ORBITER STABILITY AND CONTROL CHARACTERISTICS	FORCE	0.0405 / 0.2 - 0.2	NR / NRLAD - LOW SPEED WIND TUNNEL	R. MENNELL/ROCKWELL INTERNATIONAL M. M. MANN -DMS	DMS-DR-2097 JUNE, 1974
ARC - 3.5HWT 172 / IH15 CR-134,096	HEAT TRANSFER TESTS OF A 0.006-SCALE THIN-SKIN SPACE SHUTTLE MODEL (141-OTS) IN THE AMES 3.5-FOOT HWT AT M=5.3	B10C5D7F4M3V5W87 B10C5D7F4M3V5W87T B10C5D7F4M3V5W87T 856 T8	PARAMETRICALLY INVESTIGATE THE ASCENT HEATING OF THE INTEGRATED VEHICLE	HEAT-TRANS	0.006 / 5.3 - 5.3	ARC / ARC - 3.5-FOOT HYPERSONIC WIND TUNNEL	D. G. WALSTAD AND W. J. GRIFALL/ ROCKWELL INTERNATIONAL T. L. LOCKMAN/ARC T. L. MULKEY B. W. MYERS -DMS	DMS-DR-2098 OCT., 1974
AEDC - HWTB VA352 / OH4B CR-134,419	DATA REPORT FOR TESTS ON THE HEAT TRANSFER EFFECTS OF THE 0.0175-SCALE ROCKWELL INTERNATIONAL SPACE SHUTTLE VEHICLE MODEL 22-OT IN THE AEDC 50-INCH B WIND TUNNEL	22-OT	HEAT TRANSFER EFFECTS	HEAT-TRANS	0.0175 / 8.0 - 8.0	AEDC / AEDC - HYPERSONIC WIND TUNNEL (B)	T. F. FOSTER, W. J. GRIFALL /ROCKWELL D. A. SARVER B. J. FRICKEN -DMS	DMS-DR-2099 VOLUME 01 FEB., 1975

TEST ID	REPORT TITLE	CONFIGURATIONS TESTED	TEST PURPOSE	TYPE OF TEST	MODEL SCALE MACH RANGE	TESTING AGENCY	COGNIZANT TEST DMS PERSONNEL	BASIC PUBLICATIONS OR COMMENTS
AEDC - HWTB - VA352 / OH4B CR-134,432	DATA REPORT FOR TESTS ON THE HEAT TRANSFER EFFECTS OF THE 0.0175-SCALE ROCKWELL INTERNATIONAL SPACE SHUTTLE VEHICLE MODEL 22-OT IN THE AEDC 50-INCH WIND TUNNEL	22-OT	HEAT TRANSFER EFFECTS	HEAT-TRANS	0.0175 / 8.0 - 8.0	AEDC / AEDC - HYPERSONIC WIND TUNNEL (B)	T. F. FOSTER, W. J. GRIFALL/ROCKWELL D. A. SARVER B. J. FRICKEN -DMS	DMS-DR-2099 VOLUME 02 FEB., 1975
AEDC - HWTB - VA352 / OH4B CR-134,439	DATA REPORT FOR TESTS ON THE HEAT TRANSFER EFFECTS OF THE 0.0175-SCALE ROCKWELL INTERNATIONAL SPACE SHUTTLE VEHICLE MODEL 22-OT IN THE AEDC 50-INCH B WIND TUNNEL	22-OT	HEAT TRANSFER EFFECTS	HEAT-TRANS	0.0175 / 8.0 - 8.0	AEDC / AEDC - HYPERSONIC WIND TUNNEL (B)	T. F. FOSTER, W. J. GRIFALL/ROCKWELL D. A. SARVER B. J. FRICKEN -DMS	DMS-DR-2099 VOLUME 03 FEB., 1975
AEDC - HWTB - VA289 / OH3A OH3B CR-134,075	PHASE CHANGE PAINT TESTS ON ROCKWELL ORBITER/TANK AND ORBITER ALONE CONFIGURATIONS	ORB.(VL70-000139) AND ORB. ALONE RI ORBITER (VL70-000139)	DETERMINE INTERFERENCE EFFECTS AND HEATING RATES ON AN ORBITER/TANK CONFIGURATION AND ON AN ORBITER ALONE, WITH AND WITHOUT TPS TILE SIMULATION.	HEAT-TRANS	0.0175 / 8.0 - 8.0	AEDC - HYPERSONIC WIND TUNNEL (B)	M.QUAN,C.CRAIG/RI M. M. FOSER JR. -DMS	DMS-DR-2100 JUNE, 1974

TEST ID	REPORT TITLE	CONFIGURATIONS TESTED	TEST PURPOSE	TYPE OF TEST	MODEL SCALE MACH RANGE	TESTING AGENCY	COGNIZANT TEST DMS PERSONNEL	BASIC PUBLICATIONS OR COMMENTS
LARC -	HEAT TRANSFER PHA	B17C7M4F5W103E22V	DETERMINE THE EFF	HEAT-TRANS	0.00593/	LARC /	R. JONES, T. CREE	DMS-DR-2101
BVDHT -	SE CHANGE PAINT T	7R5	ECTS OF VARIOUS W		8.0 -	LARC -	L. P. LAWING/NASA	JAN., 1974
4080/4105/	EST (OH-42) OF A	B17C7M4F5W104E22V	ING/UNDERBODY CON		8.0	MACH 8 VARIABL	M. QUAN, W. DYE,	
4130/4193/	ROCKWELL	7R5	FIGURATIONS ON			E-DENSITY HYPE	J. CUMMINGS, H. G	
OH42A	INTERNATIONAL SSV	B17C7M4F5W106E22V	THE AERODYNAMIC			RSONIC TUNNEL	OROWITZ, C. CRAIG	
OH42B	ORBITER IN THE N	7R5H16	HEATING RATES AND				. G. RICH/RI	
OH42C	ASA/LRC MACH 8 VA	B17C7M4F5W106E22V	BOUNDARY LAYER T				D. A. SARVER	
CR-134,076	RIABLE DENSITY	7R5H17	RANSITION DURING				G. G. MCDONALD	
	WIND TUNNEL		SIMULATED ENTRY C				-DMS	
			ONDITIONS					
ARC -	RESULTS OF INVEST	OT+L+PI+AI+F	EFFECTS OF VARIOU	FORCE	0.010 /	ARC /	M. T. PETROZZI, M	DMS-DR-2102
3.5HWT -	IGATIONS ON A 0.0		S ELEVON, RUDDER,		7.3 -	ARC -	. D. MILAM /RI	J APRIL, 1974
175 /	10-SCALE MODEL OF		ATTACHING STRUCT		7.3	3.5-FOOT HYPER	. A. MELLENTHIN /	
IA15	THE		URES, FAIRINGS,			SONIC WIND TUN	ARC	
CR-134,089	CONFIGURATION 3 S		AND MAIN PROPULSI			NEL	D. A. SARVER	
	PACE SHUTTLE ORBI		ON ROCKET PLUMES				G. G. MCDONALD	
	TER AND EXTERNAL		ON LONGITUDINAL A				-DMS	
	TANK IN THE NASA/		ND LATERAL-					
	AMES RESEARCH CEN		DIRECTIONAL STABI					
	TER 3.5-FOOT HYPE		LITY CHARACTERIST					
	RSONIC WIND TUNNE		ICS					
	L (IA15)							
MSFC -	WIND TUNNEL TEST	(034)(T9)(S12)(PT	DETERMINE EFFECT	FORCE	0.004,	ROCKWELL/	E.C. ALLEN/ROCKWE	DMS-DR-2103
14TWT -	RESULTS OF FAIRIN	4)(FR4)	OF FULL LENGTH OR		0.004 /	[illegible] -	LL INTERNATIONAL	APRIL, 1974
589 /	GS ON A 0.004 SCA	(034)(T14)(S12)	BITER/EXTERNAL TA		0.6 -	14-INCH TRISON	TOM HAMILTON/ROCK	
TWT -	LE MODEL ROCKWELL		NK FAIRING ON		5.0	IC WIND TUNNEL	WELL INTERNATIONA	
IA62F	SPACE SHUTTLE INT		AXIAL FORCE			TRISONIC WIND	L SPACE DIVISION	
CR-134,094	EGRATED VEHICLE A					TUNNEL	J. E. VAUGHN	
	ERODYNAMIC CHARAC						G. G. MCDONALD	
	TERISTICS AT MACH						-DMS	
	NUMBERS FROM 0 6							
	TO 4.96 (IA62F)							

TEST ID	REPORT TITLE	CONFIGURATIONS TESTED	TEST PURPOSE	TYPE OF TEST	MODEL SCALE MACH RANGE	TESTING AGENCY	COGNIZANT TEST DMS PERSONNEL	BASIC PUBLICATIONS OR COMMENTS
NRLAD - LSWT - 717 / OA628 CR-134,112	INVESTIGATION OF SPACE SHUTTLE ORBITER SUBSONIC STABILITY AND CONTROL CHARACTERISTICS IN THE NAAL LOW SPEED WIND TUNNEL (OA628)	140A/B SSV ORBITER	ESTABLISH BASIC LONGITUDINAL STABILITY CHARACTERISTICS IN AND OUT OF GROUND EFFECT AND LATERAL-DIRECTIONAL STABILITY CHARACTERISTICS IN FREE AIR	FORCE	0.0405 / 0.12 - 0.26	NR / NRLAD - LOW SPEED WIND TUNNEL	R. MENNELL/RI SPACE DIVISION T. HUGHES/RI SPACE DIVISION M. M. MANN -DMS	DMS-DR-2104 VOLUME 01 JULY, 1974
NRLAD - LSWT - 717 / OA628 CR-134,113	INVESTIGATION OF SPACE SHUTTLE ORBITER SUBSONIC STABILITY AND CONTROL CHARACTERISTICS IN THE NAAL LOW SPEED WIND TUNNEL (OA628)	140A/B SSV ORBITER	ESTABLISH BASIC LONGITUDINAL STABILITY CHARACTERISTICS IN AND OUT OF GROUND EFFECT AND LATERAL-DIRECTIONAL STABILITY CHARACTERISTICS IN FREE AIR.	FORCE	0.0405 / 0.12 - 0.26	NR / NRLAD - LOW SPEED WIND TUNNEL	R. MENNELL / ROCKWELL INTERNATIONAL / SPACE DIVISION T. HUGHES / ROCKWELL INTERNATIONAL / SPACE DIVISION M. M. MANN -DMS	DMS-DR-2104 VOLUME 02 AUGUST, 1974
LARC - 8VDHT - 646/647 / 1H17 CR-144,594	TRANSITION HEATING RATES OBTAINED ON A MATED AND ISOLATED 0.006 SCALE MODEL (41-OTS) SPACE SHUTTLE ORBITER AND EXTERNAL TANK IN THE NASA/LARC VARIABLE DENSITY HYPERSONIC TUNNEL	ORBITER + EXTERNAL TANK ALONE, SSV MODEL 41-OTS	TO INVESTIGATE ASCENT HEATING OF THE COMBINED TANK AND ORBITER	HEAT-TRANS	8.0 - 8.0	LARC / LARC - MACH 8 VARIABLE-DENSITY HYPERSONIC TUNNEL	J. CUMMINGS/RI D. A. SARVER J. E. VAUGHN -DMS	DMS-DR-2105 SEPT., 1976
LARC - UPWT - 1046/1049/ LA14A LA14B TM-X 72630	SUPERSONIC DYNAMIC STABILITY DERIVATIVES OF A MODIFIED 089B SHUTTLE ORBITER	089B ORB.W/MOD NOSE	MEASURE DYNAMIC STABILITY DERIVATIVES (SEE ALSO LA-20 FOR LOW MACH NO.DATA)	FORCE	.0165 /	LARC / LARC - UNITARY PLAN WIND TUNNEL	D.C. FREEMAN, R.P. BOYDEN, E.E. DAVENPORT/LARC J. E. VAUGHN J. E. VAUGHN -DMS	DMS-DR-2106 JAN., 1975

TEST ID	REPORT TITLE	CONFIGURATIONS TESTED	TEST PURPOSE	TYPE OF TEST	MODEL SCALE MACH RANGE	TESTING AGENCY	COGNIZANT TEST DMS PERSONNEL	BASIC PUBLICATIONS OR COMMENTS
LARC - 8VDHT - 653 / LA20 TM-X 72631	SUBSONIC AND TRAN SONIC DYNAMIC STABILITY DERIVATIVES OF A MODIFIED 0898 SHUTTLE ORBITER	0898 ORBITERW/MOD. NOSE	MEASURE DYNAMIC STABILITY DERIVATIVES (SEE ALSO LA-14 TEST RESULTS FOR HIGHER MACH NO. DATA)	FORCE	.0165 / .3 - 1.2	LARC / LARC - MACH 8 VARIABLE-DENSITY HYPERSONIC TUNNEL	D. C. FREEMAN/NASA-LARC J. E. VAUGHN J. E. VAUGHN -DMS	DMS-DR-2107 MARCH, 1975
LARC - UPWT - 1063 / IA35 OA64 CR-134,084	RESULTS OF TESTS (OA64 AND IA35) OF AN 0.015-SCALE MODEL (35-OTS) OF THE SPACE SHUTTLE CONFIGURATION 140A/B IN THE NASA/LARC UNITARY PLAN WIND TUNNEL	B26C9E26F8M7N25R5 N116 B26C9E26F8M7N25R5 N116S12T12	OBTAIN LOCAL PRESSURE DISTRIBUTION LAGE TO SUPPORT VENTING STUDIES AND TO DETERMINE EFFECT OF ELEVON DEFLECTIONS IN THE AFT PORTION OF THE ORBITER FUSELAGE	FORCE	0.015 / 2.5 - 4.5	LARC / LARC - UNITARY PLAN WIND TUNNEL	D. E. THORNTON AND D R. H. SPANGLER/ ROCKWELL INTERNATIONAL B. W. MYERS -DMS	DMS-DR-2108 MAY, 1974
LARC - CF4 - 121-137 / OH45 CR-141,527	ENTRY HEAT TRANSFER TESTS OF THE 0.005-SCALE SPACE SHUTTLE (-147B) ORBITER MODEL (50-01) IN THE LANGLEY RESEARCH CENTER FREON TUNNEL AT MACH 6 (OH45)	147B CONFIGURATION ORBITER MODEL (50-0)	TO DETERMINE THE EFFECTS OF THE LOW FREON SPECIFIC HEAT RATIO ON THE HEATING DISTRIBUTIONS AND TO DETERMINE THE IMPINGEMENT OF THE ORBITER BOW SHOCK ON THE WING.	HEAT-TRANS	6.0 - 6.0	LARC / LARC - FREON TUNNEL	J. W. FOUST,RI R. E. MIDDEN,LARC J. E. VAUGHN R. H. LINDAHL -DMS	DMS-DR-2109 JAN., 1976

TEST ID	REPORT TITLE	CONFIGURATIONS TESTED	TEST PURPOSE	TYPE OF TEST	MODEL SCALE MACH RANGE	TESTING AGENCY	COGNIZANT TEST DMS PERSONNEL	BASIC PUBLICATIONS OR COMMENTS
LARC CF4 97-118 IH18 CR-144,589	HEAT TRANSFER TESTS OF AN 0.006-SCALE (THIN-SKIN SPACE SHUTTLE THERMOCOUPLE MODEL (41-OT) IN THE LANGLEY RESEARCH CENTER FREON TUNNEL AT M = 6 (IH18)	ORBITER CONFIGURATION 2A EXTERNAL TANK	TO OBTAIN ASCENT HEATING DATA AT CONDITIONS SIMULATING REAL GAS EFFECTS AT HYPERSONIC MACH NUMBERS	HEAT-TRANS	6.0 -	LARC / LARC - FREON TUNNEL	D. G. WALSTAD/ ROCKWELL INTERNATIONAL J. E. VAUGHN M. M. MANN -DMS	DMS-DR-2110 JAN., 1976
MSFC 14TWT 590/595 SA26F CR-134,435	REENTRY AERODYNAMIC CHARACTERISTICS OF A SPACE SHUTTLE SOLID ROCKET BOOSTER MODEL 449 TESTED IN MSFC 14 X 14 INCH TWT	MODEL 449/CONF.NB REI. NBREIA, NBREIB. NBREISIELT	TO EVALUATE STATIC AERODYNAMIC STABILITY OF AN SRB.	FORCE	0.563 / 0.6 - 4.96	LARC / MSFC - 14-INCH TRISONIC WIND TUNNEL	J. D. JOHNSON W. F. BRADDOCK/NSI J. E. VAUGHN -DMS	DMS-DR-2111 NOV., 1974
AEDC SWTA VA422 IA57 CR-134,401	AERODYNAMIC RESULTS OF WIND TUNNEL SEPARATION TESTS ON A 0.01-SCALE MODEL (32-OTS) SPACE SHUTTLE INTEGRATED VEHICLE (IA57)	INTEGRATED VEHICLE (CONFIGURATION 3)	DETERMINE PROXIMITY FORCE AND MOMENTS FOR ORB.AND E.T. AND SRB W AND W/O SEPARATION ROCKETS FIRING.	FORCE	0.01 / 4.5 -	ROCKWELL/ AEDC - SUPERSONIC WIND TUNNEL (A)	J.J. DAILEDA/RI J. E. VAUGHN J. E. VAUGHN -DMS	DMS-DR-2112 NOV., 1974
LARC CFHT 101 OA85 CR-134,111	EFFECTS OF REACTION CONTROL SYSTEM JET FLOW FIELD INTERACTIONS ON THE AERODYNAMIC CHARACTERISTICS OF A 0.010 SCALE SPACE SHUTTLE ORBITER MODEL IN THE LANGLEY RESEARCH CENTER 31-INCH CFHT	VL70-000139	OBTAIN DETAILED EFFECTS ON SSV HYPERSONIC AERODYNAMIC AND STABILITY AND CONTROL CHARACTERISTICS OF RSC JET FLOW FIELD INTERACTION WITH THE LOCAL VEHICLE FLOW FIELD.	FORCE	0.010 / 10.3 - 10.3	LARC / LARC - CONTINUOUS-FLOW HYPERSONIC TUNNEL	T. A. BLACKSTOCK /LARC - J. J. DAILEDA, J. MARROQUIN M. M. MOSER JR. -DMS	DMS-DR-2113 OCT., 1974

TEST ID	REPORT TITLE	CONFIGURATIONS TESTED	TEST PURPOSE	TYPE OF TEST	MODEL SCALE MACH RANGE	TESTING AGENCY	COGNIZANT TEST DMS PERSONNEL	BASIC PUBLICATIONS OR COMMENTS
NRLAD - LSWT - 716 / 0A86 CR-134.098	AERODYNAMIC INVESTIGATIONS INTO VARIOUS LOW SPEED L/D IMPROVEMENT DEVICES ON THE 14 0A/B SPACE SHUTTLE ORBITER CONFIGURATION IN THE RI NAAL WIND TUNNEL (0A86)	B30 THRU B50C9M7F BWI16E26V8P5X9	INVESTIGATION OF VARIOUS BASE DRAG REDUCTION TECHNIQUES IN AN ATTEMPT TO IMPROVE L/D RATIOS AND TO CALCULATE STING INTERFERENCE EFFECTS	FORCE	0.0405 / 0.2 - 0.2	NRLAD / NRLAD - LOW SPEED WIND TUNNEL	R. C. MENNELL/RI D. A. SARVER G. G. MCDONALD -DMS	DMS-DR-2114 JUNE, 1974
ARC - 3.5HWT - 176 / 0A87 CR-134.085	RESULTS OF INVESTIGATIONS ON A 0.0 15-SCALE MODEL (4 9-0) OF THE SPACE SHUTTLE ORBITER IN THE NASA/AMES 3.5-FOOT HYPERSONIC WIND TUNNEL (0A87)	140A/B	VERIFY SUPERSONIC STABILITY AND CONTROL CHARACTERISTICS, VERIFY CONTROL SURFACE EFFECTIVENESS AND INVESTIGATE REYNOLDS NUMBER EFFECT	FORCE	0.015 / 5.3 - 10.0	ARC / ARC - 3.5-FOOT HYPERSONIC WIND TUNNEL	M. T. PETROZZI AND D M. D. MILAM/ROCKWELL INTERNATIONAL J. A. MELLENTHIN/AMES RESEARCH CENTER B. W. MYERS -DMS	DMS-DR-2115 MARCH, 1974
NRLAD - 7TWT - 278 / 0A91 CR-134.888	EFFECT OF THE SIX ENGINE AIR BREATHING PROPULSION SYSTEM ON SPACE SHUTTLE ORBITER SUBSONIC AND TRANSONIC STABILITY AND CONTROL CHARACTERISTICS (0A91)	B19C7F5J59W107E23 V7R5X20 + NACELLE PAKES	EFFECT OF THREE AIR BREATHING PROPULSION SYSTEM FERRY/FLIGHT TEST CONFIGURATIONS ON TRANSONIC DRAG RISE, ELEVON EFFECTIVENESS, LONG. STABILITY, AND LAT-DIR STAB OF THE -139B SHUTTLE ORBITER	FORCE	0.015 / 0.5 - 0.9	NR / NRLAD - 7-FOOT TRISONIC WIND TUNNEL	H. C. SMITH /RI D. A. SARVER G. G. MCDONALD -DMS	DMS-DR-2116 APRIL, 1974

TEST ID	REPORT TITLE	CONFIGURATIONS TESTED	TEST PURPOSE	TYPE OF TEST	MODEL SCALE / MACH RANGE	TESTING AGENCY	COGNIZANT TEST DMS PERSONNEL	BASIC PUBLICATIONS OR COMMENTS
LARC - BVDHT - 648 / OH14 CR-147,617	TRANSITION HEATING RATES DETERMINED ON A 0.006 SCALE SPACE SHUTTLE ORBITER MODEL (NO. 50-0) IN THE NASA/LARC MACH 8 VARIABLE DENSITY WIND TUNNEL TEST (OH14)	B22C7F5M4/7W111	PERFORMED TO DETERMINE TRANSITION HEATING RATES USING THIN SKIN THERMOCOUPLES.	HEAT-TRANS	.006 / 8.0 - 8.0	LARC / LARC - MACH 8 VARIABLE-DENSITY HYPERSONIC TUNNEL	J. CUMMINGS/ROCKWELL INTERNATIONAL R. PAPARELLI/ROCKWELL INTERNATIONAL G. G. MCDONALD -DMS	DMS-DR-2117 SEPT., 1976
LARC - BTPT - 657 / IA41 CR-134,108	RESULTS OF TRANSONIC WIND TUNNEL TESTS ON AN 0.015 SCALE SPACE SHUTTLE MATED VEHICLE MODEL (67-OTS) IN THE LARC 8-FOOT TPT (IA41)	MATED INTEGRATED VEHICLE MODEL (67-OTS)	LONG. AND LAT.-DIRECT STAB. CHAR. DURING CONFIG BUILD-UP. (SEE ALSO IA42A/B TEST RESULTS FOR HIGHER MACH NO. DATA)	FORCE	0.015 / 0.6 - 1.20	ROCKWELL/ LARC - 8-FOOT TRANSONIC PRESSURE TUNNEL	R. HARDIN/ R. BURROWS- ROCKWELL J. E. VAUGHN J. E. VAUGHN -DMS	DMS-DR-2118 AUGUST, 1974
LARC - UPWT - 1056/1073/ IA42A IA42B CR-134,109	SUPERSONIC TESTS OF AN 0.015-SCALE SPACE SHUTTLE MATED VEHICLE MODEL (67-OTS) IN THE LARC UPWT TO OBTAIN AERODYNAMIC FORCE DATA	CONFIGURATION 4 MATED SSV (67-OTS)	TO OBTAIN AERODYNAMIC FORCE DATA	FORCE	0.015 / 1.6 - 4.6	ROCKWELL/ LARC - UNITARY PLAN WIND TUNNEL	R. HARDIN, R. BURROWS/RI D. A. SARVER J. E. VAUGHN -DMS	DMS-DR-2119 AUGUST, 1974
LARC - BTPT - 658 / OA105 CR-134,426	WIND TUNNEL TESTS OF AN 0.015-SCALE CONFIGURATION 140A/B SPACE SHUTTLE ORBITER MODEL (67-0) IN THE NASA/LRC 8-FOOT TPT TO OBTAIN TRANSONIC AERODYNAMIC FORCE DATA (OA105)	ORBITER	EFFECT OF SPEEDBRAKE AND BODY FLAP	FORCE	0.015 / 0.35 - 1.2	R.I. / LARC - 8-FOOT TRANSONIC PRESSURE TUNNEL	V. W. SPARKS M. M. MOSER JR. -DMS	DMS-DR-2120 JAN., 1975

TEST ID	REPORT TITLE	CONFIGURATIONS TESTED	TEST PURPOSE	TYPE OF TEST	MODEL SCALE MACH RANGE	TESTING AGENCY	COGNIZANT TEST DMS PERSONNEL	BASIC PUBLICATIONS OR COMMENTS
LARC 8TPT 669 LA38A	TRANSONIC AERODYNAMIC INVESTIGATION OF CONFIGURATION MODIFICATIONS TO RI-140A/B FOR EXTENDING CENTER OF GRAVITY RANGE	TASK CANCELLED, JULY, 1975	TEST CANCELLED, JULY 1975	FORCE	0.015 / 0.35 - 1.2	LARC / LARC - 8-FOOT TRANSONIC PRESSURE TUNNEL	W.P. PHILLIPS D.C. FREEMAN, JR. V. W. SPARKS V. W. SPARKS -DMS	DMS-DR-2121 TASK CANCELLED JULY, 1975
NRLAD 7TWT 280 IA69 CR-134,424	INVESTIGATION OF SPACE SHUTTLE LAUNCH VEHICLE EXTERNAL TANK NOSE CONFIGURATION EFFECTS (MODEL 67-OTS) IN THE ROCKWELL INTERNATIONAL 7- BY 7-FOOT TRISONIC WIND TUNNEL (IA69)	LAUNCH CONFIGURATION (MODEL 67-OTS)	QUALIFY A NEW EXTERNAL TANK NOSE CONFIGURATION	PRESSURE FORCE	0.015 / 1.1 - 1.2	RI / NRLAD - 7-FOOT TRISONIC WIND TUNNEL	R.L. ROGGE / ROCKWELL INTERNATIONAL D. A. SARVER V. W. SPARKS -DMS	DMS-DR-2122 DEC., 1974
MSFC 14TWT 588 IA53 CR-141,504	RESULTS FROM INVESTIGATIONS IN THE NASA/MSFC TWT ON A 0.004 SCALE MODEL SPACE SHUTTLE LAUNCH VEHICLE (MODEL 13P-OTS) TO DETERMINE GAS SUPPLY STRUT EFFECT ON MODEL PRESSURE ENVIRONMENT (IA531)	LAUNCH CONFIGURATION LAUNCH CONFIGURATION WITH STRUTS LAUNCH CONFIGURATION WITH ORBITER / ET GAS SUPPLY FAIRINGS	DETERMINE EFFECT OF GAS SUPPLY STRUT CONFIGURATIONS ON AFT AND BASE PRESSURE ENVIRONMENTS OF SPACE SHUTTLE LAUNCH VEHICLE	PRESSURE FORCE	0.004 / 0.3 - 2.99	R.I. / MSFC - 14-INCH TRISONIC WIND TUNNEL	W. GARTON / ROCKWELL INTERNATIONAL V. W. SPARKS V. W. SPARKS -DMS	DMS-DR-2123 JAN., 1975

TEST ID	REPORT TITLE	CONFIGURATIONS TESTED	TEST PURPOSE	TYPE OF TEST	MODEL SCALE MACH RANGE	TESTING AGENCY	COGNIZANT TEST DMS PERSONNEL	BASIC PUBLICATIONS OR COMMENTS
ARC 3.5HWT 180 IA16 OA26 CR-134,093	RESULTS OF TESTS OA26 AND IA16 IN THE NASA/ARC 3.5-FOOT HYPERSONIC WIND TUNNEL ON A 0.015 SCALE MODEL (35-0'S) OF THE SPACE CONFIGURATION ON 140A/B TO OBTAIN PRESSURES FOR VENTING ANALYSIS	140A/B ORBITER CONFIGURATION VEHICLE 4 EXTERNAL TANK PLUS 140A/B ORBITER	DETERMINE SURFACE STATIC PRESSURE DISTRIBUTIONS ON THE ORBITER FUSELAGE, FOR BOTH THE ASCENT AND ENTRY FLIGHT PHASES, E TO SUPPORT ORBITER VENTING STUDIES	PRESSURE	1.0 / 5.3 - 10.3	ARC - 3.5-FOOT HYPERSONIC WIND TUNNEL	R. H. SPANGLER AND D. E. THORNTON/ ROCKWELL INTERNATIONAL B. W. MYERS -DMS	DMS-DR-2124 MAY, 1974
LARC 22HT 422 OA88 CR-134,409	HYPERSONIC STABILITY AND CONTROL CHARACTERISTICS AND REYNOLDS NUMBER EFFECTS OF THE ROCKWELL SSV 140 A/B ORBITER CONFIGURATION	BODY ALONE (-140A/B) ORBITER (-140A/B)	TO DETERMINE HYPERSONIC STABILITY AND CONTROL CHARACTERISTICS AND REYNOLDS NUMBER EFFECT ON ROCKWELL -140 A/B ORBITER	FORCE	0.004 / 18.1 - 21.6	R/I / LARC - 22-INCH HELIUM TUNNEL	DAVID R. STONE /NASA-LARC P. HAWTHORNE /RI J. E. VAUGHN J. E. VAUGHN -DMS	DMS-DR-2125 SEPT., 1974
LARC CFHT 100 LA25	EFFECTS OF REACTION CONTROL SYSTEM JET SIMULATION ON THE HYPERSONIC PERFORMANCE, STABILITY AND CONTROL CHARACTERISTICS OF A .01 SCALE ROCKWELL INTERNATIONAL 139B ORBITER CONFIGURATION	TASK CANCELLED, DEC., 1976	TEST CANCELLED, DECEMBER 1976	FORCE	0.01 / 10.3 - 10.3	LARC - CONTINUOUS-FLOW HYPERSONIC TUNNEL	TOM BLACKSTOCK /NASA-LARC J. E. VAUGHN J. E. VAUGHN -DMS	DMS-DR-2126 TASK CANCELLED DEC., 1976
LARC CFHT 102 LA35 TM-X 71954	REYNOLDS NUMBER EFFECTS AT MACH NUMBER 10.3 ON AERODYNAMIC CHARACTERISTICS OF .01 SCALE 139-B ORBITER	-139 B ORBITER WITH VARIOUS CONTROL DEFLECTIONS	EFFECT OF REYNOLDS NUMBER ON ORBITER AERO. CHARACTERISTICS	FORCE	0.01 / 10.3 - 10.3	LARC / LARC - CONTINUOUS-FLOW HYPERSONIC TUNNEL	PETER T. BERNOT J. E. VAUGHN J. E. VAUGHN -DMS	DMS-DR-2127 JULY, 1974

TEST ID	REPORT TITLE	CONFIGURATIONS TESTED	TEST PURPOSE	TYPE OF TEST	MODEL SCALE MACH RANGE	TESTING AGENCY	COGNIZANT TEST DMS PERSONNEL	BASIC PUBLICATIONS OR COMMENTS
ARC 11TWT 747 0A53A CR-134,114	INVESTIGATIONS ON AN 0.030-SCALE SPACE SHUTTLE VEHICLE CONFIGURATION 140A/B ORBITER MODEL IN THE AMES RESEARCH CENTER 11-BY 11-FOOT SUPERSONIC WIND TUNNEL (0A53A)	140A/B	THE PRIMARY TEST OBJECTIVES ARE TO OBTAIN CONFIGURATION 140 A/B STABILITY AND CONTROL CHARACTERISTICS, CONTROL SURFACE EFFECTIVENESS CONTROL SURFACE HINGE MOMENTS, AND VERTICAL TAIL PANEL LOADS.	FORCE	0.03 / 0.6 - 1.2	ARC / ARC - 11-FOOT TRANSONIC WIND TUNNEL (UNITARY)	MARK E. NICHOLS / RI M. M. MANN -DMS	DMS-DR-2128 VOLUME 01 AUGUST, 1974
ARC 11TWT 747 0A53A CR-134,115	INVESTIGATIONS ON AN 0.030-SCALE SPACE SHUTTLE VEHICLE CONFIGURATION 140A/B ORBITER MODEL IN THE AMES RESEARCH CENTER 11 -BY 11-FOOT SUPERSONIC WIND TUNNEL (0A53A)	140A/B	THE PRIMARY TEST OBJECTIVES ARE TO OBTAIN CONFIGURATION 140A/B STABILITY AND CONTROL CHARACTERISTICS, CONTROL SURFACE EFFECTIVENESS CONTROL SURFACE HINGE MOMENTS, AND VERTICAL TAIL PANEL LOADS.	FORCE	0.03 / 0.6 - 1.2	ARC / ARC - 11-FOOT TRANSONIC WIND TUNNEL (UNITARY)	MARK E. NICHOLS / RI M. M. MANN -DMS	DMS-DR-2128 VOLUME 02 AUGUST, 1974
ARC 97SWT 716 IA14B CR-141,522	AIRLOADS INVESTIGATION OF AN 0.030-SCALE MODEL OF THE SPACE SHUTTLE VEHICLE 140A/B LAUNCH CONFIGURATION (MODEL 47-OTS) IN THE ARC 9- BY 7-FOOT UNITARY PLAN WIND TUNNEL FOR MACH 1.55 AND 2.2 (IA14B)	SSV 140A/B LAUNCH	OBTAIN PRESSURE DISTRIBUTIONS ON INTEGRATED LAUNCH VEHICLE. FORCE DATA WERE TAKEN ALSO.	PRESSURE FORCE	0.030 / 1.55 - 2.2	ARC / ARC - 9-FOOT BY 7-FOOT SUPERSONIC WIND TUNNEL (UNITARY)	R. L. GILLENS / ROCKWELL E. CHEE / ROCKWELL D. A. SARVER J.T.DAVIET -DMS	DMS-DR-2129 VOLUME 01 MAY, 1975

WIND TUNNEL TEST / DMS DATA PROCESSING

TEST ID	REPORT TITLE	CONFIGURATIONS TESTED	TEST PURPOSE	TYPE OF TEST	MODEL SCALE MACH RANGE	TESTING AGENCY	COGNIZANT TEST DMS PERSONNEL	BASIC PUBLICATIONS OR COMMENTS
ARC 975WT 7:6 IA:4B CR-141,523	AIRLOADS INVESTIGATION OF AN 0.030-SCALE MODEL OF THE SPACE SHUTTLE VEHICLE 140A/B LAUNCH CONFIGURATION (MODEL 47-OTS) IN THE ARC 9- BY 7-FOOT UNITARY PLAN WIND TUNNEL FOR MACH 1.55 AND 2.2 (IA:4B).	SSV 140A/B LAUNCH	OBTAIN PRESSURE DISTRIBUTIONS ON INTEGRATED LAUNCH VEHICLE. FORCE DATA WERE TAKEN ALSO.	PRESSURE FORCE	0.030 / 1.55 - 2.2	ARC / ARC - 9-FOOT BY 7-FOOT SUPERSONIC WIND TUNNEL (UNITARY)	R. L. GILLINS / ROCKWELL E. CHEE / ROCKWELL D. A. SARVER J.T.DAVIET -DMS	R-DMS-DR-2129 VOLUME 02 MAY, 1975
ARC 11TWT 7:6 OA22A CR-141,529	AIRLOADS INVESTIGATION OF AN 0.030-SCALE MODEL OF THE SPACE SHUTTLE VEHICLE 140A/B ORBITER CONFIGURATION (MODEL 47-0) IN THE ARC 11-FOOT UNITARY PLAN WIND TUNNEL FOR MACH 0.6 AND 0.9 (OA22A)	SSV 140A/B ORBITER	OBTAIN PRESSURE DISTRIBUTIONS ON ORBITER ALONE. FORCE DATA WERE ALSO TAKEN.	PRESSURE FORCE	0.030 / 0.6 - 0.9	ARC / ARC - 11-FOOT TRANSONIC WIND TUNNEL (UNITARY)	R. L. GILLENS / OCKWELL F. CHEE / ROCKWELL D. A. SARVER J.T.DAVIET -DMS	R-DMS-DR-2130 MAY, 1975
ARC 975WT 7:6 OA22B CR-141,530	AIRLOADS INVESTIGATION OF AN 0.030-SCALE MODEL OF THE SPACE SHUTTLE 140A/B ORBITER CONFIGURATION (MODEL 47-0) IN THE ARC 9- BY 7-FOOT UNITARY PLAN WIND TUNNEL FOR MACH 1.55 AND 2.2 (OA22B)	SSV & 140A/B ORBITER	OBTAIN PRESSURE DISTRIBUTIONS ON ORBITER ALONE. FORCE DATA WERE ALSO TAKEN	PRESSURE FORCE	0.030 / 1.55 - 2.2	ARC / ARC - 9-FOOT BY 7-FOOT SUPERSONIC WIND TUNNEL (UNITARY)	R. L. GILLENS / OCKWELL F. CHEE / ROCKWELL D. A. SARVER J.T.DAVIET -DMS	R-DMS-DR-2131 MAY, 1975

TEST ID	REPORT TITLE	CONFIGURATIONS TESTED	TEST PURPOSE	TYPE OF TEST	MODEL SCALE MACH RANGE	TESTING AGENCY	COGNIZANT TEST DMS PERSONNEL	BASIC PUBLICATIONS OR COMMENTS
AEDC HWTB 48A LA42 CR-141,535	- RESULTS OF DYNAMIC STABILITY TESTS / CONDUCTED ON A .012 SCALE MODIFIED 0.089 B SHUTTLE ORBITER IN THE AEDC C-VKF TUNNEL B AT A MACH NUMBER OF 8.0 (LA42.	-089B W/MOD NOSE	HYPERSONIC DYNAMIC STABILITY	FORCE	0.012 / 8.0 - 8.0	LARC / AEDC - HYPERSONIC WIND TUNNEL (B)	DELMAR FREEMAN/LARC J. E. VAUGHN J.T.DAVIET -DMS	DMS-DR-2132 MAY, 1975
LARC CFHT 107 IA58 CR-134,110	- RESULTS OF TESTS IN THE NASA/LARC / 31-INCH CFHT ON A N 0.010-SCALE MODEL (32-OT) OF THE SPACE SHUTTLE CONFIGURATION 3 TO OBTAIN HYPERSONIC AERODYNAMIC CHARACTERISTICS FOR SECOND STAGE OPERATION DURING NOMINAL BOOST AND THE ABORT RTLS MODE	ORBITER EXTERNAL TANK	OBTAIN HYPERSONIC STABILITY DATA ON ORBITER - EXTERNAL TANK WITH AND WITHOUT PLUME AND BEAM	FORCE	0.010 / 10.3 - 10.3	LARC / LARC - CONTINUOUS-FLOW HYPERSONIC TUNNEL	D. E. THORNTON/RI T. BLACKSTOCK / NASA/LARC D. A. SARVER V. W. SPARKS -DMS	DMS-DR-2133 JULY, 1974
AEDC HWTC VA474 HWTC OA77/78 OA78 CR-134,429	- RESULTS OF INVESTIGATIONS (OA77 AND / D OA78) ON AN 0.015 SCALE 140/B CONFIGURATION SPACE SHUTTLE VEHICLE ORBITER MODEL 49-0 IN THE AEDC VKF B AND C WIND TUNNELS	ORBITER-140A/B CONFIGURATION	HYPERSONIC STABILITY AND CONTROL, CONTROL SURFACE EFFECTIVENESS, AND REYNOLDS NUMBER EFFECTS	FORCE	0.015 / 6.0 - 10	ROCKWELL/ AEDC - HYPERSONIC WIND TUNNEL (C) HYPERSONIC WIND TUNNEL (C)	M. D. MILAM/ROCKWELL J. E. VAUGHN M. M. MOSER JR. -DMS	DMS-DR-2134 REVISION 01 JAN., 1975

WIND TUNNEL TEST / DMS DATA PROCESSING

TEST ID	REPORT TITLE	CONFIGURATIONS TESTED	TEST PURPOSE	TYPE OF TEST	MODEL SCALE MACH RANGE	TESTING AGENCY	COGNIZANT TEST DMS PERSONNEL	BASIC PUBLICATIONS OR COMMENTS
LARC - CFHT - 99 / LA13		TASK CANCELLED, AUGUST, 1974	TEST CANCELLED, AUGUST 1974	FORCE	10.3 -	NASA / LARC - CONTINUOUS-FLOW HYPERSONIC TUNNEL	T. BLACKSTOCK /NASA-LARC J. E. VAUGHN J. E. VAUGHN -DMS	DMS-DR-2135 TASK CANCELLED AUGUST, 1974
ARC - 3.5HWT - 178 / IH3 CR-141,514	RESULTS OF HEAT TRANSFER TESTS OF AN 0.0175-SCALE SPACE SHUTTLE VEHICLE MODEL 22 OTS IN THE NASA-AMES 3.5-FOOT HYPERSONIC WIND TUNNEL (IH3)	B17 C7 M4 F5 W103 E22 V7 R5 T10 B17 C7 M4 F5 W103 E22 V7 R5 B17 C7 M4 F5 W103 E22 V7 R5 T10 S8	TO OBTAIN HEAT RATE DATA FOR THE FIRST AND SECOND STAGE VEHICLES AND TO INVESTIGATE INTERFERENCE HEATING EFFECTS	HEAT-TRANS	0.0175 / 5.3 - 5.3	ARC / ARC - 3.5-FOOT HYPERSONIC WIND TUNNEL	T.F. FOSTER,W.H. DYE/RI W.K. LOCKMAN,H.L. SEEGMILLER/NASA AMES B. J. FRICKEN -DMS	DMS-DR-2136 VOLUME 01 MAY, 1975
ARC - 3.5HWT - 178 / IH3 CR-141,515	RESULTS OF HEAT TRANSFER TESTS OF AN 0.0175-SCALE SPACE SHUTTLE VEHICLE MODEL 22 OTS IN THE NASA-AMES 3.5-FOOT HYPERSONIC WIND TUNNEL (IH3)	B17 C7 M4 F5 W103 E22 V7 R5 T10	TO OBTAIN HEAT RATE DATA FOR THE FIRST AND SECOND STAGE VEHICLES AND TO INVESTIGATE INTERFERENCE HEATING EFFECTS	HEAT-TRANS	0.0175 / 5.3 - 5.3	ARC / ARC - 3.5-FOOT HYPERSONIC WIND TUNNEL	T.F. FOSTER,W.H. DYE/RI W.K. LOCKMAN,H.L. SEEGMILLER/NASA AMES B. J. FRICKEN -DMS	DMS-DR-2136 VOLUME 02 MAY, 1975
ARC - 3.5HWT - 178 / IH3 CR-141,516	RESULTS OF HEAT TRANSFER TESTS OF AN 0.0175-SCALE SPACE SHUTTLE VEHICLE MODEL 22 OTS IN THE NASA-AMES 3.5-FOOT HYPERSONIC WIND TUNNEL (IH3)	B17 C7 M4 F5 W103 E22 V7 R5 T10 B17 C7 M4 F5 W103 E22 V7 R5 T10 S8	TO OBTAIN HEAT RATE DATA FOR THE FIRST AND SECOND STAGE VEHICLES AND TO INVESTIGATE INTERFERENCE HEATING EFFECTS	HEAT-TRANS	0.0175 / 5.3 - 5.3	ARC / ARC - 3.5-FOOT HYPERSONIC WIND TUNNEL	T.F. FOSTER,W.H. DYE/RI W.K. LOCKMAN,H.L. SEEGMILLER/NASA AMES B. J. FRICKEN -DMS	DMS-DR-2136 VOLUME 03 MAY, 1975

TEST ID	REPORT TITLE	CONFIGURATIONS TESTED	TEST PURPOSE	TYPE OF TEST	MODEL SCALE MACH RANGE	TESTING AGENCY	COGNIZANT TEST DMS PERSONNEL	BASIC PUBLICATIONS OR COMMENTS
ARC - 3.5HWT - 178 / IH3 CR-141,517	RESULTS OF HEAT TRANSFER TESTS OF AN 0.0175-SCALE SPACE SHUTTLE VEHICLE MODEL 22 OTS IN THE NASA-AMES 3.5-FOOT HYPERSONIC WIND TUNNEL (IH3)	B17 C7 M4 F5 W103 E22 V7 R5 T10 B17 C7 M4 F5 W103 E22 V7 R5 T10 B17 C7 M4 F5 W103 E22 V7 R5 T10 S8	TO OBTAIN HEAT RATE DATA FOR THE FIRST AND SECOND STAGE VEHICLES AND TO INVESTIGATE INTERFERENCE HEATING EFFECTS	HEAT-TRANS	0.0175 / 5.3 - 5.3	ARC / ARC - 3.5-FOOT HYPERSONIC WIND TUNNEL NEL	T.F. FOSTER,W.H. DYE/RI W.K. LOCKMAN,H.L. SEEGMILLER/NASA AMES B. J. FRICKEN -DMS	DMS-DR-2136 VOLUME 04 MARCH, 1976
LARC - CFHT - 108 / IA60 CR-134,103	RESULTS OF TESTS IN THE NASA/LARC 31-INCH CFHT ON A 0.01-SCALE MODEL (32-OT) OF THE SPACE SHUTTLE CONFIGURATION 3 TO DETERMINE THE RCS JET FLOWFIELD INTERACTION EFFECTS ON AERODYNAMIC CHARACTERISTICS (IA60/OA105) VOLUME 1 OF 2	CONFIGURATION 3, MODEL 32-0)	DETERMINE EFFECTS OF RCS JET FLOW FIELD ON HYPERSONIC STABILITY AND CONTROL	FORCE	0.01 / 10.33-10.33	NASA/NR / LARC - CONTINUOUS-FLOW HYPERSONIC TUNNEL	D.E. THORNTON /RI D. E. POUCHER -DMS	DMS-DR-2137 VOLUME 01 REVISION 01 SEPT., 1974
LARC - CFHT - 109 / OA105 CR-134,106	RESULTS OF TESTS IN THE NASA/LARC 31-INCH CFHT ON A 0.01-SCALE MODEL (32-OT) OF THE SPACE SHUTTLE CONFIGURATION 3 TO DETERMINE THE RCS JET FLOWFIELD INTERACTION EFFECTS ON AERODYNAMIC CHARACTERISTICS (IA60/OA105)	CONFIGURATION3, MODEL 32-0	DETERMINE EFFECTS OF RCS JET FLOW FIELD ON HYPERSONIC STABILITY AND CONTROL	FORCE	0.01 / 10.33-10.33	NASA/NR / LARC - CONTINUOUS-FLOW HYPERSONIC TUNNEL	D.E. THORNTON /RI D. E. POUCHER -DMS	DMS-DR-2137 VOLUME 02 JULY, 1974

TEST ID	REPORT TITLE	CONFIGURATIONS TESTED	TEST PURPOSE	TYPE OF TEST	MODEL SCALE MACH RANGE	TESTING AGENCY	COGNIZANT TEST DMS PERSONNEL	BASIC PUBLICATIONS OR COMMENTS
LARC UPWT 1059 IH4 CR-144,608	AEROHEATING/PRESSURE CHARACTERISTICS OF A 0.010-SCALE VERSION OF THE VEHICLE 3 SPACE SHUTTLE CONFIGURATION (26-OTS) IN THE LANGLEY RESEARCH CENTER 4-FOOT WIND TUNNEL (IH4)	0.010-SCALE VERSION OF THE VEHICLE 3 SPACE SHUTTLE CONFIGURATION	TO OBTAIN PRESSURE MEASUREMENTS ON THE LAUNCH CONFIGURATION, ORBITER ALONE, EXTERNAL TANK ALONE, AND SOLID ROCKET BOOSTER ALONE; ALSO TO OBTAIN HEAT TRANSFER DATA	PRESSURE	0.010 / 2.36 - 4.6	LARC / LARC - UNITARY PLAN WIND TUNNEL	B. SPENCER, JR./LARC D/RI R. H. LINDAHL -DMS	DMS-DR-2138 VOLUME 01 MAY, 1976
LARC UPWT 1059 IH4 CR-144,609	AEROHEATING/PRESSURE CHARACTERISTICS OF A 0.010-SCALE VERSION OF THE VEHICLE 3 SPACE SHUTTLE CONFIGURATION (26-OTS) IN THE LANGLEY RESEARCH CENTER 4-FOOT WIND TUNNEL (IH4)	0.010-SCALE VERSION OF THE VEHICLE 3 SPACE SHUTTLE CONFIGURATION	TO OBTAIN PRESSURE MEASUREMENTS ON THE LAUNCH CONFIGURATION, ORBITER ALONE, EXTERNAL TANK ALONE, AND SOLID ROCKET BOOSTER ALONE; ALSO TO OBTAIN HEAT TRANSFER DATA	PRESSURE	0.010 / 2.36 - 4.6	LARC / LARC - UNITARY PLAN WIND TUNNEL	B. SPENCER, JR./LARC D/RI R. H. LINDAHL -DMS	DMS-DR-2138 VOLUME 02 JULY, 1976
LARC UPWT 1059 IH4 CR-144,610	AEROHEATING/PRESSURE CHARACTERISTICS OF A 0.010-SCALE VERSION OF THE VEHICLE 3 SPACE SHUTTLE CONFIGURATION (26-OTS) IN THE LANGLEY RESEARCH CENTER 4-FOOT WIND TUNNEL (IH4)	0.010-SCALE VERSION OF THE VEHICLE 3 SPACE SHUTTLE CONFIGURATION	TO OBTAIN PRESSURE MEASUREMENTS ON THE LAUNCH CONFIGURATION, ORBITER ALONE, EXTERNAL TANK ALONE, AND SOLID ROCKET BOOSTER ALONE; ALSO TO OBTAIN HEAT TRANSFER DATA	PRESSURE	0.010 / 2.36 - 4.6	LARC / LARC - UNITARY PLAN WIND TUNNEL	B. SPENCER, JR./LARC D/RI R. H. LINDAHL -DMS	DMS-DR-2138 VOLUME 03 JULY, 1976

WIND TUNNEL TEST / DMS DATA PROCESSING

TEST ID	REPORT TITLE	CONFIGURATIONS TESTED	TEST PURPOSE	TYPE OF TEST	MODEL SCALE / MACH RANGE	TESTING AGENCY	COGNIZANT TEST DMS PERSONNEL	BASIC PUBLICATIONS OR COMMENTS
LARC - UPWT - 1059 / IH4 CR-144,611	AEROHEATING(PRESSURE) CHARACTERISTICS OF A 0.010-SCALE VERSION OF THE VEHICLE 3 SPACE SHUTTLE CONFIGURATION (26-OTS) IN THE LANGLEY RESEARCH CENTER 4-FOOT WIND TUNNEL(IH4)	0.010-SCALE VERSION OF THE VEHICLE 3 SPACE SHUTTLE CONFIGURATION	TO OBTAIN PRESSURE MEASUREMENTS ON THE LAUNCH CONFIGURATION,ORBITER ALONE,EXTERNAL TANK ALONE,AND SOLID ROCKET BOOSTER ALONE; ALSO TO OBTAIN HEAT TRANSFER DATA	PRESSURE	0.010 / 2.36 - 4.6	LARC / LARC - UNITARY PLAN WIND TUNNEL	B. SPENCER,JR./LARC, R.B. KINGSLAND/RI R. H. LINDAHL -DMS	DMS-DR-2138 VOLUME 04 JULY, 1976
NRLAD - LSWT - 724 / OA118 CR-134,407	EFFECT OF ELEVON GAP CONFIGURATIONS ON THE LONGITUDINAL AND LATERAL/DIRECTIONAL STABILITY AND CONTROL EFFECTIVENESS OF THE 43-O SPACE SHUTTLE ORBITER (IA60/OA105)	VL70-000140A/B, MODEL 43-O	ESTABLISH EFFECT OF NEW ELEVON GAP CONFIG. ON LONGITUDINAL AND LAT/DIRECT STABILITY AND CONTROL EFFECTIVENESS, MODEL 43-O	FORCE	0.0405 / 0.20 - 0.26	RI / NRLAD - LOW SPEED WIND TUNNEL	TERRANCE HUGHES / RI D. E. POUCHER -DMS	DMS-DR-2139 OCT., 1974
NRLAD - LSWT - 719 / OA37 CR-134,408	INVESTIGATION OF SPACE SHUTTLE ORBITER SUBSONIC STABILITY AND CONTROL CHARACTERISTICS AND DETERMINATION OF CONTROL SURFACE HINGE MOMENTS IN THE ROCKWELL INTERNATIONAL LOW SPEED WIND TUNNEL (OA37)	140 A/B SPACE SHUTTLE ORBITER	ESTABLISH BASIC LONGITUDINAL AND LATERAL-DIRECTIONAL STABILITY AND CONTROL CHARACTERISTICS FOR THE BASIC CONFIGURATION PLUS CONTROL SURFACE HINGE MOMENTS	FORCE	0.030 / 0.26 - 0.26	ROCKWELL/ NRLAD - LOW SPEED WIND TUNNEL	TERRANCE HUGHES/ROCKWELL INTERNATIONAL W.M. ZEMAN/ROCKWELL INTERNATIONAL D. A. SARVER G. G. MCDONALD -DMS	DMS-DR-2140 SEPT., 1974

WIND TUNNEL TEST / DMS DATA PROCESSING

TEST ID	REPORT TITLE	CONFIGURATIONS TESTED	TEST PURPOSE	TYPE OF TEST	MODEL SCALE / MACH RANGE	TESTING AGENCY	COGNIZANT TEST DMS PERSONNEL	BASIC PUBLICATIONS OR COMMENTS
AEDC HWTB VA354 OH11 CR-141.538	RESULTS OF TESTS OF A ROCKWELL INTERNATIONAL SPACE SHUTTLE ORBITER (-139 CONFIGURATION) 0.0175-SCALE MODEL (NO.29-0) IN THE AEDC TUNNEL TO DETERMINE HYPERSONIC HEATING EFFECTS (OH11)	MODEL NO. 29-0/VL 70-000139	TO DETERMINE MACH NUMBER EFFECTS AND TO OBTAIN OVERALL HEATING RATE DATA AT MACH NUMBERS FROM 10.5 TO 16	HEAT-TRANS	0.0175 / 10.5 - 14	AEDC / AEDC - HYPERSONIC WIND TUNNEL (B)	M. QUAN/RI A. BOUDREAUX/ARO W. B. MEINDERS -DMS	DMS-DR-2141 JUNE, 1975
MSFC 14TWT 587 FA4 CR-134.402	DETERMINATION OF AERODYNAMIC STABILITY AND DRAG OF THE TITAN SRM DURING ENTRY	TITAN III C SRM	STATIC STABILITY AND DRAG ON TITAN SRM AT HIGH ANGLES OF ATTACK	FORCE	.00736 / 0.6 - 4.96	NASA / MSFC - 14-INCH TRISONIC WIND TUNNEL	PAUL RAMSEY/ NASA MSFC V. W. SPARKS -DMS	DMS-DR-2142 AUGUST, 1974
AEDC SWTA VA422 IA61A CR-144.587	AERODYNAMIC RESULTS OF WIND TUNNEL TESTS ON AN 0.01 0-SCALE MODEL (32-OTS) SPACE SHUTTLE INTEGRATED VEHICLE IN THE AEDC VKF 40-INCH SUPERSONIC WIND TUNNEL	INTEGRATED VEHICLE- CONFIGURATION 3 LINES	PROXIMITY EFFECTS W AND W/O SEPARATION ROCKETS FIRING	FORCE	0.01 / 4.5 - 4.5	AEDC / AEDC - SUPERSONIC WIND TUNNEL (A)	J.DAILEDA/ RI J. E. VAUGHN J. E. VAUGHN -DMS	DMS-DR-2143 FEB., 1976
NRLAD 7TWT 281 IA68 CR-134.427	AN INVESTIGATION OF THE SUPPORT INTERFERENCE EFFECTS OF THE SSV MODEL 13P-OTS IN THE TRANSONIC AND SUPERSONIC FLOW REGIMES	LAUNCH CONFIGURATION	DETERMINE TRANSONIC AND SUPERSONIC CHARACTERISTICS OF MODEL 13P-OTS SUPPORT INTERFERENCE	PRESSURE FORCE	0.004 / 0.9 - 2.0	R.I. / NRLAD - 7-FOOT TRISONIC WIND TUNNEL	R.L. ROGGE / ROCKWELL INTERNATIONAL D. A. SARVER V. W. SPARKS -DMS	DMS-DR-2144 NOV., 1974

TEST ID	REPORT TITLE	CONFIGURATIONS TESTED	TEST PURPOSE	TYPE OF TEST	MODEL SCALE MACH RANGE	TESTING AGENCY	COGNIZANT TEST DMS PERSONNEL	BASIC PUBLICATIONS OR COMMENTS
MSFC - 14TWT - 583 / TAIF CR-134,420	AN INVESTIGATION TO DETERMINE THE STATIC STABILITY DURING RE-ENTRY OF THE 0.003-SCALE MCR 0200 BASELINE SPACE SHUTTLE EXTERNAL TANK MODEL	EXTERNAL TANK WITH PROTUBERANCES EXTERNAL TANK WITHOUT PROTUBERANCES	OBTAIN FORCE AND MOMENT STATIC STABILITY DATA FOR THE EXTERNAL TANK AT RE-ENTRY CONDITIONS	FORCE	0.003 / 1.96 - 4.96	MSFC / NC / MSFC - 14-INCH TRISONIC WIND TUNNEL	M.K. ROBERTSON / NORTHROP SERVICES INC. P.E. RAMSEY / NASA-MSFC V. W. SPARKS V. W. SPARKS -DMS	DMS-DR-2145 OCT., 1974
LARC - 26TBT - 547 / 154 CR-134,092	FLUTTER TESTS (IS 41 OF THE 0.0125-SCALE SHUTTLE REFLECTION PLANE MODEL 30-OTS IN THE LANGLEY RESEARCH CENTER 26-INCH TRANSONIC BLOWDOWN TUNNEL TEST NO. 547	30-OTS	TO ISOLATE THE EFFECTS OF INTERFERING AERODYNAMICS GENERATED BY THE ORBITER, TANK, AND SRB ON THE WING FLUTTER BOUNDARY	STRUCT-DYN	0.0125 / 0.6 - 1.45	LARC / LARC - 26-INCH TRANSONIC BLOWDOWN TUNNEL	M.A. KOTCH /RI - R.W. HESS /LARC D. A. SARVER M. M. MOSER JR. -DMS	DMS-DR-2146 APRIL, 1974
LARC - UPWT - 1057 / OA20C CR-134,097	RESULTS OF INVESTIGATIONS (OA20C) ON AN 0.015-SCALE CONFIGURATION 140A/B SPACE SHUTTLE VEHICLE ORBITER MODEL (49-0) IN THE NASA/LANGLEY RESEARCH CENTER UNITARY PLAN WIND TUNNEL	140A/B SSV ORBITER	DEFINE ADDITIONAL LONGITUDINAL STABILITY AND CONTROL CHARACTERISTICS FOR THE UPDATED SSV CONFIGURATION NOT OBTAINED IN OA20A TESTS.	FORCE	0.015 / 2.5 - 4.6	LARC / LARC - UNITARY PLAN WIND TUNNEL	J.H.CAMPBELL,II/R ROCKWELL INTERNATIONAL B.SPENCER / NASA LARC M. M. MANN -DMS	DMS-DR-2147 MAY, 1974

TEST ID	REPORT TITLE	CONFIGURATIONS TESTED	TEST PURPOSE	TYPE OF TEST	MODEL SCALE MACH RANGE	TESTING AGENCY	COGNIZANT TEST DMS PERSONNEL	BASIC PUBLICATIONS OR COMMENTS
ARC - 3.5HWT - 185 / 1H20 CR-134,440	HYPERSONIC AEROHEATING TEST OF SPACE SHUTTLE VEHICLE CONFIGURATION 3 (MODEL 22-OTS) IN THE NASA-AMES 3.5-FOOT HYPERSONIC WIND TUNNEL (1H-20)	22-OTS	TEMPERATURE MEASUREMENTS	HEAT-TRANS	0.0175 / 5.3 - 7.3	ARC / ARC - 3.5-FOOT HYPERSONIC WIND TUNNEL	R. B. KINGSLAND, R. OCKWELL / W. K. LOCKMAN, AMES / B. J. FRICKEN -DMS	DMS-DR-2148 VOLUME 01 JUNE, 1975
ARC - 3.5HWT - 185 / 1H20 CR-134,441	HYPERSONIC AEROHEATING TEST OF SPACE SHUTTLE VEHICLE CONFIGURATION 3 (MODEL 22-OTS) IN THE NASA-AMES 3.5-FOOT HYPERSONIC WIND TUNNEL (1H-20)	22-OTS	TEMPERATURE MEASUREMENTS	HEAT-TRANS	0.0175 / 5.3 - 7.3	ARC / ARC - 3.5-FOOT HYPERSONIC WIND TUNNEL	R. B. KINGSLAND, R. OCKWELL / W. K. LOCKMAN, AMES / B. J. FRICKEN -DMS	DMS-DR-2148 VOLUME 02 JUNE, 1975
LARC - CFHT - 110 / OA90 CR-141,805	RESULTS OF INVESTIGATIONS ON A 0.01-SCALE 140A/B CONFIGURATION SPACE SHUTTLE VEHICLE ORBITER MODEL 72-0 IN THE NASA/LANGLEY RESEARCH CENTER CONTINUOUS FLOW HYPERSONIC TUNNEL (OA90)	CONFIG. 4 (-140A/B) MODEL 72-0	HYPERSONIC STABILITY AND CONTROL	FORCE	0.01 / 10.3 -	ROCKWELL/ LARC - CONTINUOUS-FLOW HYPERSONIC TUNNEL	P.J. HAWTHORNE / OCKWELL / P.T. BERNOT / NASA -LARC / J. E. VAUGHN / J. E. VAUGHN -DMS	DMS-DR-2149 AUGUST, 1975
LARC - UPWT - 1087 / SA25F CR-141,511	AN INVESTIGATION OF HIGH MACH NUMBER STATIC STABILITY CHARACTERISTICS FOR A LARGE SCALE SOLID ROCKET BOOSTER	SRB	OBTAIN HIGH MACH NUMBER STATIC STABILITY DATA ON A LARGE SCALE SRB	FORCE	0.02112 / 2.3 - 4.63	MSFC / NSI / LARC - UNITARY PLAN WIND TUNNEL	J. JOHNSON / NASA -LARC / W. F. BRADDOCK/NSI / V. W. SPARKS / D.B. WATSON -DMS	DMS-DR-2150 MARCH, 1975

TEST ID	REPORT TITLE	CONFIGURATIONS TESTED	TEST PURPOSE	TYPE OF TEST	MODEL SCALE / MACH RANGE	TESTING AGENCY	COGNIZANT TEST DMS PERSONNEL	BASIC PUBLICATIONS OR COMMENTS
ARC 3.5HWT 183 OH5 CR-141,815	RESULTS OF AERODYNAMIC HEAT TRANSFER TESTS OF A 0.0175-SCALE MODEL OF THE ROCKWELL INTERNATIONAL SPACE SHUTTLE ORBITER 139 (MODEL NUMBER P 22-0) IN THE NASA/AMES 3.5-FOOT HYPERSONIC WIND TUNNEL (TEST OH5)	THERMOCOUPLE MODEL OF SSV ORB. 139	TO OBTAIN HEAT TRANSFER DATA UNDER SIMULATED ENTRY CONDITIONS	HEAT-TRANS	7.3 - 7.3	ARC / ARC - 3.5-FOOT HYPERSONIC WIND TUNNEL	W. H. DYE/RI W. K. LOCKMAN/ARC D. A. SARVER M. M. MOSER JR. -DMS	DMS-DR-2151 NOV., 1975
AEDC HWTF VAHB3 OABI CR-134,423	RESULTS OF AN INVESTIGATION OF HYPERSONIC VISCOUS INTERACTION EFFECTS ON AN 0.01 SCALE SPACE SHUTTLE ORBITER 51-0 MODEL IN THE AEDC-VKF HYPERVELOCITY WIND TUNNEL	VEHICLE 4 ORBITER (MODEL 51-0)	HYPERSONIC STABILITY AND CONTROL	FORCE	.01 / .16 - .20	AEDC - HYPERVELOCITY WIND TUNNEL (F)	ED ALLEN/ ROCKWELL L. HUNTSVILLE OFFICE J. E. VAUGHN J. E. VAUGHN -DMS	DMS-DR-2152 REVISION 01 JAN., 1978
LARC UPWT 1071 IHI CR-151,377	INVESTIGATION OF THE HEAT TRANSFER EFFECTS ON THE 2 2-OTS 0.0175-SCALE THIN SKIN THERMOCOUPLE MODEL (VEHICLE 3 CONFIGURATION)	ORBITER ALONE TANK ALONE SRB ALONE	TO OBTAIN HEAT TRANSFER RATE DATA ON THE ORBITER, EXTERNAL TANK, AND SOLID ROCKET BOOSTERS	HEAT-TRANS	0.0175 / 2.36 - 3.7	R.I. / LARC - UNITARY PLAN WIND TUNNEL	R.B. KINGSLAND / ROCKWELL INTERNATIONAL V. W. SPARKS M. M. MOSER JR. -DMS	DMS-DR-2153 OCT., 1977

TEST ID	REPORT TITLE	CONFIGURATIONS TESTED	TEST PURPOSE	TYPE OF TEST	MODEL SCALE MACH RANGE	TESTING AGENCY	COGNIZANT TEST DMS PERSONNEL	BASIC PUBLICATIONS OR COMMENTS
AEDC HWTB VA352 OH4A CR-134,437	HEAT TRANSFER TESTS OF A 0.0175-SCALE SPACE SHUTTLE ORBITER MODEL 12 9-01 TO DETERMINE THE EFFECT OF SURFACE TEMPERATURE ON BOUNDARY LAYER TRANSITION AT MACH 8.0 IN THE AEDC VKF TUNNEL B (TEST OH4A)	MODEL 29-0	TO DETERMINE EFFECT OF WALL TEMPERATURE ON THE POINT OF BOUNDARY LAYER TRANSITION	FORCE	8 - 8	AEDC / AEDC - HYPERSONIC WIND TUNNEL (B)	M. QUAN AND J. W. FOUST/RI W. R. MARTINDALE/ ARO B. W. MYERS -DMS	DMS-DR-2154 JAN., 1975
NRLAD LSWT 721 OA110 CR-134,406	STABILITY AND CONTROL CHARACTERISTICS FOR THE INNER MOLD LINE CONFIGURATION OF SPACE SHUTTLE ORBITER (OA110)	B61C11F12H51W124E40	ESTABLISH BASIC LONGITUDINAL AND LATERAL-DIRECTIONAL STABILITY AND CONTROL FOR THE IML ORBITER	FORCE	0.0405 / 0.12 - 0.20	NRLAD / NRLAD - LOW SPEED WIND TUNNEL	TERRANCE HUGHES AND ROBERT ROGGE / RI D. E. POUCHER -DMS	DMS-DR-2155 SEPT., 1974
AEDC HWTB VA422 IA17A CR-141,797	RESULTS OF AN EXTERNAL TANK SEPARATION TEST IN THE AEDC/VKF TUNNEL B ON AN 0.010 SCALE REPLICA OF THE SPACE SHUTTLE VEHICLE (MODEL 52-OT) IA17A	ORBITER WITH ET SEPARATING ISOLATED ORBITER ISOLATED ET	DETERMINE EFFECTS OF EXTERNAL TANK SEPARATING FROM ORBITER	FORCE	0.01 / 5.93 - 7.98	ROCKWELL/ AEDC - HYPERSONIC WIND TUNNEL (B)	R.H. SPANGLER/ RO CKWELL J.J. DAILEDA / RO CKWELL J. E. VAUGHN J.T.DAVIET -DMS	DMS-DR-2156 VOLUME 01 AUGUST, 1975
AEDC HWTB VA422 IA17A CR-141,798	RESULTS OF AN EXTERNAL TANK SEPARATING TEST IN THE AEDC/VKF TUNNEL B ON AN 0.010 SCALE REPLICA OF THE SPACE SHUTTLE VEHICLE (MODEL 52-OT) IA17A	ORBITER WITH ET SEPARATING ISOLATED ORBITER ISOLATED ET	DETERMINE EFFECTS OF EXTERNAL TANK SEPARATING FROM ORBITER	FORCE	0.01 / 5.93 - 7.98	ROCKWELL/ AEDC - HYPERSONIC WIND TUNNEL (B)	R.H. SPANGLER/ RO CKWELL J.J. DAILEDA / RO CKWELL J. E. VAUGHN J.T.DAVIET -DMS	DMS-DR-2156 VOLUME 02 AUGUST, 1975

TEST ID	REPORT TITLE	CONFIGURATIONS TESTED	TEST PURPOSE	TYPE OF TEST	MODEL SCALE MACH RANGE	TESTING AGENCY	COGNIZANT TEST DMS PERSONNEL	BASIC PUBLICATIONS OR COMMENTS
AEDC - HWTB - VA422 / IA17A CR-141,799	RESULTS OF AN EXTERNAL TANK SEPARATION TEST IN THE AEDC/VKF TUNNEL B ON AN 0.010 SCALE REPLICA OF THE SPACE SHUTTLE VEHICLE (MODEL 52-OT) IA17A	ORBITER WITH ET SEPARATING ISOLATED ORBITER ISOLATED ET	DETERMINE EFFECTS OF EXTERNAL TANK SEPARATING FROM ORBITER	FORCE	0.01 / 5.93 - 7.98	ROCKWELL/ AEDC - HYPERSONIC WIND TUNNEL (B)	R.H. SPANGLER/ RO CKWELL J.J. DAILEDA / RO CKWELL J. E. VAUGHN J.T.DAVIET -DMS	DMS-DR-2156 VOLUME 03 AUGUST, 1975
LARC - HNT 28 / IH19 CR-141,822	HEAT TRANSFER TESTS OF AN 0.006-SCALE THIN SKIN SPACE SHUTTLE MODEL (50-O, 41-T) IN THE LANGLEY RESEARCH CENTER NITROGEN TUNNEL AT MACH 19	ORBITER WITH EXTERNAL TANK ORBITER EXTERNAL TANK	ORBITER/EXTERNAL TANK ASCENT HEATING	HEAT-TRANS	19.8 - 19.8	NASA / LARC - HYPERSONIC NITROGEN TUNNEL	D.G. WALSTAD/R.I. D. A. SARVER W. B. MEINDERS -DMS	DMS-DR-2157 DEC., 1975
MSFC - 14TWT 582 / 156A CR-147,640	FLOW VISUALIZATION TESTS OF A 0.004-SCALE SPACE SHUTTLE VEHICLE 2A MODEL (NO. 13-OTS) IN THE MSFC 14-INCH TRISONIC WIND TUNNEL	013, T9, S7	TO OBTAIN FLOW VISUALIZATION PHOTOS TO HELP INTERPRET ISI AERO-NOISE DATA	STRUCT-DYN	.6 - 3.48	ROCKWELL/ MSFC - 14-INCH TRISONIC WIND TUNNEL	P. J. HAWTHORNE/R I G. STREBY/NSI D. A. SARVER M. M. MOSER JR. -DMS	DMS-DR-2158 OCT., 1976

TEST ID	REPORT TITLE	CONFIGURATIONS TESTED	TEST PURPOSE	TYPE OF TEST	MODEL SCALE MACH RANGE	TESTING AGENCY	COGNIZANT TEST DMS PERSONNEL	BASIC PUBLICATIONS OR COMMENTS
ARC 66SWT 709 0A59 CR-134,410	AERODYNAMIC RESULTS OF SUPPORT SYSTEM EFFECTS TESTS CONDUCTED IN NASA/ARC 6-BY 6FOOT SUPERSONIC WIND TUNNEL USING A 0.015-SCALE MODEL OF THE CONFIGURATION 140A/B SSV ORBITER (0A59)	140 A/B SSV ORBITER	DETERMINE EFFECTS OF STING BASE MOUNTING WITH AND WITHOUT MPS NOZZLES	FORCE	0.015 / 0.6 - 2.0	ROCKWELL/ ARC - 6-FOOT BY 6-FOOT SUPERSONIC WIND TUNNEL	JOHN H. CAMPBELL, RI, AND WILLARD R. EMBURY, RI D. A. SARVER G. G. MCDONALD -DMS	DMS-DR-2159 VOLUME 01 OCT., 1974
ARC 65SWT 709 0A59 CR-134,412	AERODYNAMIC RESULTS OF SUPPORT SYSTEM EFFECTS TESTS CONDUCTED IN NASA/ARC 6-BY-6 FOOT SUPERSONIC WIND TUNNEL USING A 0.015 -SCALE MODEL OF THE CONFIGURATION 140A/B SSV ORBITER (0A59)	140 A/B SSV ORBITER	DETERMINE EFFECTS OF STING BASE MOUNTING WITH AND WITHOUT MPS NOZZLES	FORCE	0.015 / 0.6 - 2.0	ROCKWELL/ ARC - 6-FOOT BY 6-FOOT SUPERSONIC WIND TUNNEL	JOHN H. CAMPBELL, RI, AND WILLARD R. EMBURY, RI D. A. SARVER G. G. MCDONALD -DMS	DMS-DR-2159 VOLUME 02 OCT., 1974
ARC 3.5HWT 191 1A18 CR-134,413	WIND TUNNEL TESTS OF THE 0.010-SCALE SPACE SHUTTLE INTEGRATED VEHICLE IN THE NASA/AMES 3.5 FOOT HYPERSONIC WIND TUNNEL (1A18)	52-OTET ALONE	TO EVALUATE BASIC HYPERSONIC STABILITY CHAR. OF ORBITER ATTACHED RIG	FORCE	0.010 / 5.3 - 10.3	ARC / ARC - 3.5-FOOT HYPERSONIC WIND TUNNEL	V. ESPARZA, E. CHEE/ROCKWELL INTERNATIONAL	DMS-DR-2160 MARCH, 1975

TEST ID	REPORT TITLE	CONFIGURATIONS TESTED	TEST PURPOSE	TYPE OF TEST	MODEL SCALE / MACH RANGE	TESTING AGENCY	COGNIZANT TEST DMS PERSONNEL	BASIC PUBLICATIONS OR COMMENTS
LEPC - 10SWT - 035 / SA6F CR-134,422	AERODYNAMIC CHARACTERISTICS OF MSFC MODEL 454 OF THE 142 INCH SOLID ROCKET BOOSTER TEST IN THE LERC 10-FOOT SWT AT MACH NUMBERS OF 2.0 AND 2.7 (SA6F)	SRB-BODY ALONE SRB-BODY WITH PRO TURBANCES	STATIC STABILITY AND CONTROL DURING TUMBLING RE-ENTRY	FORCE	0.0211 / 2.0 - 2.7	LERC / LERC - 10 BY 10-FOOT SUPERSONIC WIND TUNNEL	DUANE RADFORD/NSI PAUL RAMSEY/NASA-MSFC J. E. VAUGHN J. E. VAUGHN -DMS	DMS-DR-2161 FEB., 1975
ARC - 3.5HWT - 187 / OA36 CR-134,430	RESULTS OF INVESTIGATIONS ON AN 0.015-SCALE 140A/B CONFIGURATION OF THE ROCKWELL INTERNATIONAL SPACE SHUTTLE ORBITER IN THE NASA/AMES RESEARCH CENTER 3.5-FOOT HYPERSONIC WIND TUNNEL (OA36)	140 A/B, VEHICLE 4	TO VERIFY SUPERSONIC STABILITY AND CONTROL CHAR. OF VEHICLE 4, ANALYZE AERODYNAMIC PROBLEM AREAS, CONTROL SURFACE EFFECTIVENESS, AND REYNOLDS NUMBER EFFECT INCLUDING SEPARATION AND INTERFERENCES	FORCE	0.015 / 5.3 - 10.3	ARC / ARC - 3.5-FOOT HYPERSONIC WIND TUNNEL	M. D. MILAM, R. L. GILLINS/ROCKWELL INTERNATIONAL B. J. FRICKEN -DMS	DMS-DR-2162 NOV., 1974
LARC - UPWT - 1097 / OA20B CR-1[illegible],403	AERODYNAMIC RESULTS OF A SUPPORT SYSTEM INTERFERENCE EFFECTS TEST CONDUCTED AT NASA/LARC UPWT USING AN 0.015-SCALE MODEL OF THE CONFIGURATION 140A/B SSV ORBITER (OA20B)	140A/B	THE PRIMARY OBJECTIVE OF THIS TEST WAS TO DETERMINE THE EXTENT AERODYNAMIC SIMULATION IS AFFECTED BY BASE MOUNTING AN ORBITER MODEL WITHOUT MPS NOZZLES, ON A STRAIGHT STING.	FORCE	0.015 / 2.5 - 4.63	LARC / LARC - UNITARY PLAN WIND TUNNEL	J.H. CAMPBELL / R W.R. EMBURY / R M. M. MANN -DMS	DMS-DR-2163 SEPT., 1974

WIND TUNNEL TEST / DMS DATA PROCESSING

TEST ID	REPORT TITLE	CONFIGURATIONS TESTED	TEST PURPOSE	TYPE OF TEST	MODEL SCALE MACH RANGE	TESTING AGENCY	COGNIZANT TEST DMS PERSONNEL	BASIC PUBLICATIONS OR COMMENTS
CALSPAN - 48HST - 173-100 OH12 IH2 CR-141,828	HEAT TRANSFER TES TS C A 0.01-SCAL E RO WELL CONFIG URATION 3 SPACE S HUTTLE ORBITER AN D TANK (37-07) IN THE CALSPAN 48-I NCH HYPERSONIC SH OCK TUNNEL (OH12/ IH21)	MODEL 37-OT (CONF IG. 3 ORB AND ET) / CONFIGURATION 3 O RBITER EXTERNAL TANK	TO DETERMINE ASCE NT AND ENTRY HEAT TRANSFER RATES O VER A RANGE OF MA CH NO. AND REYNOL DS NO. OF PARTICU LAR INTEREST WAS ORBITER WING LEAD ING EDGE HEATING DURING ENTRY	HEAT-TRANS	0.01 - 6.95 / 19.5	ROCKWELL/ CALSPAN - 48-INCH HYPERS ONIC SHOCK TUN NEL	ED HEUSTIS/CALSPA N CORP. M. KOTCH/ R. I. D. A. SARVER W. B. MEINDERS -DMS	DMS-DR-2164 VOLUME 01 JAN., 1976
CALSPAN - 48HST - 173-100 OH12 IH2 CR-141,829	HEAT TRANSFER TES TS ON A 0.01-SCAL E ROCKWELL CONF URATION 3 SPACE S HUTTLE ORBITER AN D TANK (37-07) IN THE CALSPAN 48-I NCH HYPERSONIC SH OCK TUNNEL (OH12/ IH21)	MODEL 37-OT (CONF IG. 3 ORB AND ET) / CONFIGURATION 3 C RBITER EXTERNAL TANK	TO DETERMINE ASCE NT AND ENTRY HEAT TRANSFER RATES O VER A RANGE OF MA CH NO. AND REYNOL DS NO. OF PARTICU LAR INTEREST WAS ORBITER WING LEAD ING EDGE HEATING DURING ENTRY	HEAT-TRANS	6.95 - 19.5	ROCKWELL/ CALSPAN - 48-INCH HYPERS ONIC SHOCK TUN NEL	ED HEUSTIS/CALSPA N CORP. M. KOTCH/ R. I. W. B. MEINDERS -DMS	DMS-DR-2164 VOLUME 02 JAN., 1976
CALSPAN - 48HST - 173-100 OH12 IH2 CR-141,830	HEAT TRANSFER TES TS ON A 0.01-SCAL E ROCKWELL CONFIG URATION 3 SPACE S HUTTLE ORBITER AN D TANK (37-07) IN THE CALSPAN 48-I NCH HYPERSONIC SH OCK TUNNEL (OH12/ IH21)	MODEL 37-OT (CONF IG. 3 ORB AND ET) / CONFIGURATION 3 O RBITER EXTERNAL TANK	TO DETERMINE ASCE NT AND ENTRY HEAT TRANSFER RATES O VER A RANGE OF MA CH NO. AND REYNOL DS NO. OF PARTICU LAR INTEREST WAS ORBITER WING LEAD ING EDGE HEATING DURING ENTRY	HEAT-TRANS	0.01 - 6.95 / 19.5	ROCKWELL/ CALSPAN - 48-INCH HYPERS ONIC SHOCK TUN NEL	ED HEUSTIS/CALSPA N CORP. M. KOTCH/ R. I. D. A. SARVER W. B. MEINDERS -DMS	DMS-DR-2164 VOLUME 03 DEC., 1975

TEST ID	REPORT TITLE	CONFIGURATIONS TESTED	TEST PURPOSE	TYPE OF TEST	MODEL SCALE MACH RANGE	TESTING AGENCY	COGNIZANT TEST DMS PERSONNEL	BASIC PUBLICATIONS OR COMMENTS
MSFC 14TWT 596 TA2F CR-141,823	RESULTS OF AN INVESTIGATION OF AN 0.003-SCALE SPACE SHUTTLE EXTERNAL TANK (MSFC MODEL 460) IN THE NASA/MSFC 14 X 14-INCH TRISONIC WIND TUNNEL TO DETERMINE STATIC PRESSURE DISTRIBUTIONS DURING REENTRY (TA2F)	EXTERNAL TANK WITH AND WITHOUT PROTUBERANCES,0.003 SCALE	DETERMINE STATIC PRESSURE DISTRIBUTIONS ON MODIFIED MCR 0200 EXTERNAL TANK	PRESSURE	0.003 - 1.96 - 4.96	MSFC / MSFC - 14-INCH TRISONIC WIND TUNNEL	P.E. RAMSEY / MSFC G.W. WINKLER / NSI V. W. SPARKS D. E. POUCHER -DMS	DMS-DR-2165 VOLUME 01 DEC., 1975
MSFC 14TWT 596 TA2F CR-141,824	RESULTS OF AN INVESTIGATION OF AN 0.003-SCALE SPACE SHUTTLE EXTERNAL TANK (MSFC MODEL 460) IN THE NASA/MSFC 14 X 14-INCH TRISONIC WIND TUNNEL TO DETERMINE STATIC PRESSURE DISTRIBUTIONS DURING REENTRY (TA2F)	EXTERNAL TANK WITH AND WITHOUT PROTUBERANCES,0.003 SCALE	DETERMINE STATIC PRESSURE DISTRIBUTIONS ON MODIFIED MCR 0200 EXTERNAL TANK	PRESSURE	0.003 - 1.96 - 4.96	MSFC / MSFC - 14-INCH TRISONIC WIND TUNNEL	P.E. RAMSEY / MSFC G.W. WINKLER / NSI V. W. SPARKS D. E. POUCHER -DMS	DMS-DR-2165 VOLUME 02 DEC., 1975

TEST ID	REPORT TITLE	CONFIGURATIONS TESTED	TEST PURPOSE	TYPE OF TEST	MODEL SCALE MACH RANGE	TESTING AGENCY	COGNIZANT TEST DMS PERSONNEL	BASIC PUBLICATIONS OR COMMENTS
MSFC - 14TWT - 596 / TA2F CR-14..825	RESULTS OF AN INVESTIGATION OF AN 0.003-SCALE SPACE SHUTTLE EXTERNAL TANK (MSFC MODEL 460) IN THE NASA/MSFC 14 X 14-INCH TRISONIC WIND TUNNEL TO DETERMINE STATIC PRESSURE DISTRIBUTIONS DURING REENTRY (TA2F)	EXTERNAL TANK WITH AND WITHOUT PROTUBERANCES, 0.003 SCALE	DETERMINE STATIC PRESSURE DISTRIBUTIONS ON MODIFIED MCR 0200 EXTERNAL TANK	PRESSURE	0.003 / 1.96 - 4.96	MSFC / MSFC - 14-INCH TRISONIC WIND TUNNEL	P.E. RAMSEY / MSFC G.W. WINKLER / NSI V. W. SPARKS D. E. POUCHER -DMS	DMS-DR-2165 VOLUME 03 DEC., 1975
MSFC - 14TWT - 596 / TA2F CR-141,826	RESULTS OF AN INVESTIGATION OF AN 0.003-SCALE SPACE SHUTTLE EXTERNAL TANK (MSFC MODEL 460) IN THE NASA/MSFC 14 X 14-INCH TRISONIC WIND TUNNEL TO DETERMINE STATIC PRESSURE DISTRIBUTIONS DURING REENTRY (TA2F)	EXTERNAL TANK WITH AND WITHOUT PROTUBERANCES, 0.003 SCALE	DETERMINE STATIC PRESSURE DISTRIBUTIONS ON MODIFIED MCR 0200 EXTERNAL TANK	PRESSURE	0.003 / 1.96 - 4.96	MSFC / MSFC - 14-INCH TRISONIC WIND TUNNEL	P.E. RAMSEY / MSFC G.W. WINKLER / NSI V. W. SPARKS D. E. POUCHER -DMS	DMS-DR-2165 VOLUME 04 JAN., 1976

TEST ID	REPORT TITLE	CONFIGURATIONS TESTED	TEST PURPOSE	TYPE OF TEST	MODEL SCALE MACH RANGE	TESTING AGENCY	COGNIZANT TEST DMS PERSONNEL	BASIC PUBLICATIONS OR COMMENTS
MSFC - 14TWT - 595 / TA2F CR-141,827	RESULTS OF AN INVESTIGATION OF AN 0.003-SCALE SPACE SHUTTLE EXTERNAL TANK (MSFC MODEL 460) IN THE NASA/MSFC 14 X 14-INCH TRISONIC WIND TUNNEL TO DETERMINE STATIC PRESSURE DISTRIBUTIONS DURING REENTRY (TA2F)	EXTERNAL TANK WITH AND WITHOUT PROTUBERANCES, 0.003 SCALE	DETERMINE STATIC PRESSURE DISTRIBUTIONS ON MODIFIED MCR 0200 EXTERNAL TANK	PRESSURE	0.003 / 1.96 - 4.96	MSFC / MSFC - 14-INCH TRISONIC WIND TUNNEL	P.E. RAMSEY / MSFC V. W. SPARKS D. E. POUCHER -DMS	DMS-DR-2165 VOLUME 05 DEC., 1975
LARC - UPWT - 1041 / IH16 CR-141,534	HEAT TRANSFER TESTS OF AN 0.006 SCALE THIN-SKIN SPACE SHUTTLE THERMOCOUPLE MODEL (41-OTS) IN THE LANGLEY RESEARCH CENTER UNITARY PLAN WIND TUNNEL AT M=3.7 (IH16)	ORB.+ET+SRB SRB ORB	TO INVESTIGATE PARAMETRICALLY THE ASCENT HEATING OF THE INTEGRATED VEHICLE	HEAT-TRANS	3.7 - 3.7	RI / LARC - UNITARY PLAN WIND TUNNEL	D.G. WALSTAD/RI R.L. STALLINGS/LARC J.T.DAVIET -DMS	DMS-DR-2166 JULY, 1975
ARC - 3.5WT - 190 / OA98 CR-141,550	RESULTS OF AN INVESTIGATION ON AN 0.015-SCALE MODEL (49-0) OF THE ROCKWELL INTERNATIONAL SPACE SHUTTLE ORBITER IN THE NASA AMES RESEARCH CENTER 3.5-FOOT HYPERSONIC WIND TUNNEL (OA98)	140A/B	OBTAIN INCREMENTAL DATA ON THE EFFECTS OF A STING MOUNT ON BASE PRESSURES AND FORCE AND MOMENT DATA WITH VARIOUS SURFACE DEFLECTIONS	FORCE	0.015 / 5.3 - 10.3	ROCKWELL/ ARC - 3.5-FOOT HYPERSONIC WIND TUNNEL	M. D. MILAM AND R. L. GILLINS/ROCKWELL INTERNATIONAL J. CLEARY/NASA AMES D. A. SARVER G. G. MCDONALD -DMS	DMS-DR-2167 AUGUST, 1975

TEST ID	REPORT TITLE	CONFIGURATIONS TESTED	TEST PURPOSE	TYPE OF TEST	MODEL SCALE MACH RANGE	TESTING AGENCY	COGNIZANT TEST DMS PERSONNEL	BASIC PUBLICATIONS OR COMMENTS
LARC CFHT 97 LA32 TM-X 71945	HEAT TRANSFER TO SURFACE AND GAPS OF RSI TILE ARRAYS IN TURBULENT FLOW AT MACH 10.3	THERMAL PROTECTION SYSTEM	TO BETTER DEFINE THE HEATING WHICH THE TILE SURFACE AND GAP WALLS WILL EXPERIENCE; TILES ARE PART OF TPS	HEAT-TRANS	1.0 / 10.3 - 10.3	LARC / LARC - CONTINUOUS-FLOW HYPERSONIC TUNNEL	DAVID A. THROCKMORTON/LARC M. M. MOSER JR. -DMS	DMS-DR-2168 MAY, 1974
ARC 11TWT 019 IABIA CR-141,835	RESULTS OF A PRESSURE LOADS INVESTIGATION ON A 0.03-SCALE MODEL (47-OTS) OF THE INTEGRATED SPACE SHUTTLE VEHICLE CONFIGURATION 5 IN THE NASA AMES RESEARCH CENTER 11 X 11 FOOT LEG OF THE UNITARY PLAN WIND TUNNEL (IABIA) VOLUME 1 OF 7	LAUNCH VEHICLE 5	TO OBTAIN PRESSURE DISTRIBUTIONS, FORCE DATA, AND HINGE MOMENTS ON THE INTEGRATED LAUNCH VEHICLE	PRESSURE FORCE	0.03 / 0.6 - 2.5	ARC / ARC - 11-FOOT TRANSONIC WIND TUNNEL (UNITARY)	T. J. DZIUBALA, E. CHEE, M. D. MILLAM/RI D. A. SARVER M. M. MANN -DMS	DMS-DR-2169 VOLUME 01 JAN., 1976
ARC 11TWT 019 IABIA CR-141,837	RESULTS OF A PRESSURE LOADS INVESTIGATION ON A 0.03-SCALE MODEL (47-OTS) OF THE INTEGRATED SPACE SHUTTLE VEHICLE CONFIGURATION 5 IN THE NASA AMES RESEARCH CENTER 11 X 11 FOOT LEG OF THE UNITARY PLAN WIND TUNNEL (IABIA) VOLUME 2 OF 7	LAUNCH VEHICLE 5	TO OBTAIN PRESSURE DISTRIBUTIONS, FORCE DATA, AND HINGE MOMENTS ON THE INTEGRATED LAUNCH VEHICLE	PRESSURE FORCE	0.03 / 0.6 - 2.5	ARC / ARC - 11-FOOT TRANSONIC WIND TUNNEL (UNITARY)	T. J. DZIUBALA, E. CHEE, M. D. MILLAM/RI D. A. SARVER M. M. MANN -DMS	DMS-DR-2169 VOLUME 02 JAN., 1976

TEST ID	REPORT TITLE	CONFIGURATIONS TESTED	TEST PURPOSE	TYPE OF TEST	MODEL SCALE / MACH RANGE	TESTING AGENCY	COGNIZANT TEST DMS PERSONNEL	BASIC PUBLICATIONS OR COMMENTS
ARC 11TWT 019 IABIA CR-141,838	RESULTS OF A PRESSURE LOADS INVESTIGATION ON A 0.03 0-SCALE MODEL (47-OTS) OF THE INTEGRATED SPACE SHUTTLE VEHICLE CONFIGURATION 5 IN THE NASA AMES RESEARCH CENTER 11 X 11 FOOT LEG OF THE UNITARY PLAN WIND TUNNEL (IABIA) VOLUME 3 OF 7	LAUNCH VEHICLE 5	TO OBTAIN PRESSURE DISTRIBUTIONS, FORCE DATA, AND HINGE MOMENTS ON THE INTEGRATED LAUNCH VEHICLE	PRESSURE FORCE	0.03 0.6 2.5	ARC / ARC 11-FOOT TRANSONIC WIND TUNNEL (UNITARY)	T. J. DZIUBALA, E. CHEE, M. D. MILLER D. A. SARVER M. M. MANN -DMS	DMS-DR-2169 VOLUME 03 JAN., 1976
ARC 11TWT 019 IABIA CR-141,839	RESULTS OF A PRESSURE LOADS INVESTIGATION ON A 0.03 0-SCALE MODEL (47-OTS) OF THE INTEGRATED SPACE SHUTTLE VEHICLE CONFIGURATION 5 IN THE NASA AMES RESEARCH CENTER 11 X 11 FOOT LEG OF THE UNITARY PLAN WIND TUNNEL (IABIA) VOLUME 4 OF 7	LAUNCH VEHICLE 5	TO OBTAIN PRESSURE DISTRIBUTIONS, FORCE DATA, AND HINGE MOMENTS ON THE INTEGRATED LAUNCH VEHICLE	PRESSURE FORCE	0.03 0.6 2.5	ARC / ARC 11-FOOT TRANSONIC WIND TUNNEL (UNITARY)	T. J. DZIUBALA, E. CHEE, M. D. MILLER D. A. SARVER M. M. MANN -DMS	DMS-DR-2169 VOLUME 04 JAN., 1976

TEST ID	REPORT TITLE	CONFIGURATIONS TESTED	TEST PURPOSE	TYPE OF TEST	MODEL SCALE MACH RANGE	TESTING AGENCY	COGNIZANT TEST DMS PERSONNEL	BASIC PUBLICATIONS OR COMMENTS
ARC - IITWT - 019 / IABIA CR-141,840	RESULTS OF A PRESSURE LOADS INVESTIGATION ON A 0.03-SCALE MODEL (47-OTS) OF THE INTEGRATED SPACE SHUTTLE VEHICLE CONFIGURATION 5 IN THE NASA AMES RESEARCH CENTER 11 X 11 FOOT LEG OF THE UNITARY PLAN WIND TUNNEL (IABIA) VOLUME 5 OF 7	LAUNCH VEHICLE 5	TO OBTAIN PRESSURE DISTRIBUTIONS, FORCE DATA, AND HINGE MOMENTS ON THE INTEGRATED LAUNCH VEHICLE	PRESSURE FORCE	0.03 / 0.6 - 2.5	ARC / ARC - 11-FOOT TRANSONIC WIND TUNNEL (UNITARY)	T. J. DZIUBALA, E. CHEE, M. D. MILAM/RI D. A. SARVER M. M. MANN -DMS	DMS-DR-2169 VOLUME 05 JAN., 1976
ARC - IITWT - 019 / IABIA CR-141,841	RESULTS OF A PRESSURE LOADS INVESTIGATION ON A 0.03-SCALE MODEL (47-OTS) OF THE INTEGRATED SPACE SHUTTLE VEHICLE CONFIGURATION 5 IN THE NASA AMES RESEARCH CENTER 11 X 11 FOOT LEG OF THE UNITARY PLAN WIND TUNNEL (IABIA) VOLUME 6 OF 7	LAUNCH VEHICLE 5	TO OBTAIN PRESSURE DISTRIBUTIONS, FORCE DATA, AND HINGE MOMENTS ON THE INTEGRATED LAUNCH VEHICLE	PRESSURE FORCE	0.03 / 0.6 - 2.5	ARC / ARC - 11-FOOT TRANSONIC WIND TUNNEL (UNITARY)	T. J. DZIUBALA, E. CHEE, M. D. MILAM/RI D. A. SARVER M. M. MANN -DMS	DMS-DR-2169 VOLUME 06 JAN., 1976

TEST ID	REPORT TITLE	CONFIGURATIONS TESTED	TEST PURPOSE	TYPE OF TEST	MODEL SCALE MACH RANGE	TESTING AGENCY	COGNIZANT TEST DMS PERSONNEL	BASIC PUBLICATIONS OR COMMENTS
ARC 11TWT 019 IA81A CR-141,842	RESULTS OF A PRESSURE LOADS INVESTIGATION ON A 0.03-SCALE MODEL (47-OTS) OF THE INTEGRATED SPACE SHUTTLE VEHICLE CONFIGURATION 5 IN THE NASA AMES RESEARCH CENTER 11 X 11 FOOT LEG OF THE UNITARY PLAN WIND TUNNEL (IAB1A) VOLUME 7 OF 7	LAUNCH VEHICLE 5	TO OBTAIN PRESSURE DISTRIBUTIONS, FORCE DATA, AND HINGE MOMENTS ON THE INTEGRATED LAUNCH VEHICLE	PRESSURE FORCE	0.03 / 0.6 - 2.5	ARC / ARC - 11-FOOT TRANSONIC WIND TUNNEL (UNITARY)	T. J. DZIUBALA, E. CHEE, M. D. MILAM/RI D. A. SARVER M. M. MANN -DMS	DMS-DR-2169 VOLUME 07 JAN., 1976
ARC 11TWT 014 IA19 CR-141,543	RESULTS OF A JET PLUME EFFECTS TEST ON THE ROCKWELL INTERNATIONAL INTEGRATED SPACE SHUTTLE VEHICLE USING A VEHICLE 5 CONFIGURATION 0.02-SCALE MODEL (88-OTS) IN THE 11 X 11 FOOT LEG OF THE NASA/AMES RESEARCH CENTER UNITARY PLAN WIND TUNNEL (IA19)	LAUNCH VEHICLE 5	TO OBTAIN ELEVON HINGE MOMENTS AND INCREMENTAL EFFECTS OF JET PLUMES ON PRESSURE DISTRIBUTIONS	FORCE PRESSURE	0.02 / 0.9 - 1.40	ARC / ARC - 11-FOOT TRANSONIC WIND TUNNEL (UNITARY)	S.L.TREON/AMES RESEARCH CENTER M.E. NICHOLS/ R. I. D. A. SARVER W. B. MEINDERS -DMS	DMS-DR-2170 VOLUME 01 JUNE, 1975

TEST ID	REPORT TITLE	CONFIGURATIONS TESTED	TEST PURPOSE	TYPE OF TEST	MODEL SCALE MACH RANGE	TESTING AGENCY	COGNIZANT TEST DMS PERSONNEL	BASIC PUBLICATIONS OR COMMENTS
ARC 11TWT 014 IA19 CR-141,544	RESULTS OF A JET PLUME EFFECTS TEST ON THE ROCKWELL INTERNATIONAL INTEGRATED SPACE SHUTTLE VEHICLE USING A VEHICLE 5 CONFIGURATION 0.02-SCALE MODEL (88-OTS) IN THE 11 X 11 FOOT LEG OF THE NASA/AMES RESEARCH CENTER UNITARY PLAN WIND TUNNEL (IA19)	LAUNCH VEHICLE 5	TO OBTAIN ELEVON HINGE MOMENTS AND INCREMENTAL EFFECTS OF JET PLUMES ON PRESSURE DISTRIBUTIONS	FORCE PRESSURE	0.02 / 0.9 - 1.40	ARC / ARC - 11-FOOT TRANSONIC WIND TUNNEL (UNITARY)	S.L. TREON/AMES RESEARCH CENTER M.E. NICHOLS/ R. I. C. A. SARVER W. B. MEINDERS -DMS	DMS-DR-2170 VOLUME 02 JUNE, 1975
ARC 11TWT 014 IA19 CR-141,545	RESULTS OF A JET PLUME EFFECTS TEST ON THE ROCKWELL INTERNATIONAL INTEGRATED SPACE SHUTTLE VEHICLE USING A VEHICLE 5 CONFIGURATION 0.02-SCALE MODEL (88-OTS) IN THE 11 X 11 FOOT LEG OF THE NASA/AMES RESEARCH CENTER UNITARY PLAN WIND TUNNEL (IA19)	LAUNCH VEHICLE 5	TO OBTAIN ELEVON HINGE MOMENTS AND INCREMENTAL EFFECTS OF JET PLUMES ON PRESSURE DISTRIBUTIONS	FORCE PRESSURE	0.02 / 0.9 - 1.40	ARC / ARC - 11-FOOT TRANSONIC WIND TUNNEL (UNITARY)	S.L. TREON/AMES RESEARCH CENTER M.E. NICHOLS/R. I. D. A. SARVER W. B. MEINDERS -DMS	DMS-DR-2170 VOLUME 03 JUNE, 1975

TEST ID	REPORT TITLE	CONFIGURATIONS TESTED	TEST PURPOSE	TYPE OF TEST	MODEL SCALE / MACH RANGE	TESTING AGENCY	COGNIZANT TEST DMS PERSONNEL	BASIC PUBLICATIONS OR COMMENTS
ARC 3.5HWT 198 0H38 CR-144,584	RESULTS OF PRESSURE DISTRIBUTION TESTS OF A 0.010-SCALE SPACE SHUTTLE ORBITER MODEL (61-0) IN THE NASA/ARC 3.5-FOOT HYPERSONIC WIND TUNNEL (0H38)	140C ORBITER	OBTAIN PRESSURE DISTRIBUTIONS AT HIGH HEATING LOCATIONS FOR HIGH ANGLES OF ATTACK AT MACH NUMBERS 7 AND 10	PRESSURE	0.01 / 7.4 - 10.4	ARC / ARC - 3.5-FOOT HYPERSONIC WIND TUNNEL	W. H. DYE/RI JOE MARVIN/ARC D. A. SARVER W. B. MEINDERS -DMS	DMS-DR-2171 VOLUME 01 JAN., 1976
ARC 3.5HWT 198 0H38 CR-144,585	RESULTS OF PRESSURE DISTRIBUTION TESTS OF A 0.010-SCALE SPACE SHUTTLE ORBITER MODEL (61-0) IN THE NASA/ARC 3.5-FOOT HYPERSONIC WIND TUNNEL (0H38)	140C ORBITER	OBTAIN PRESSURE DISTRIBUTIONS AT HIGH HEATING LOCATIONS FOR HIGH ANGLES OF ATTACK AT MACH NUMBERS 7 AND 10	PRESSURE	0.01 / 7.4 - 10.4	ARC / ARC - 3.5-FOOT HYPERSONIC WIND TUNNEL	W. H. DYE/RI JOE MARVIN/ARC D. A. SARVER W. B. MEINDERS -DMS	DMS-DR-2171 VOLUME 02 JAN., 1976
ARC 3.5HWT 198 0H38 CR-144,586	RESULTS OF PRESSURE DISTRIBUTION TESTS OF A 0.010-SCALE SPACE SHUTTLE ORBITER MODEL (61-0) IN THE NASA/ARC 3.5-FOOT HYPERSONIC WIND TUNNEL (0H38)	140C ORBITER	OBTAIN PRESSURE DISTRIBUTIONS AT HIGH HEATING LOCATIONS FOR HIGH ANGLES OF ATTACK AT MACH NUMBERS 7 AND 10	PRESSURE	0.01 / 7.4 - 10.4	ARC / ARC - 3.5-FOOT HYPERSONIC WIND TUNNEL	W. H. DYE/RI JOE MARVIN/ARC D. A. SARVER W. B. MEINDERS -DMS	DMS-DR-2171 VOLUME 03 JAN., 1976
LARC 60VS R3289 0A99 CR-134,415	RESULTS OF REACTION CONTROL SYSTEM ON-ORBIT JET USING AN 0.0175-SCALE CONFIGURATION 3 SPACE SHUTTLE ORBITER MODEL (21-0) IN THE LARC 60-FOOT VACUUM SPHERE	SSV ORBITER CONF. 2 (MODEL 21-0 OF VL70-000139)	TO DETERMINE RCS DIRECT IMPINGEMENT EFFECTS ON SSV DURING ON-ORBIT	HEAT-TRANS	0.0175 / 3.4 -	RI / LARC - 60-FOOT VACUUM SPHERE VON KARMAN FACILITIES	IRA E. TILLEY III/LARC JOHN MARROQUIN/RI D. A. SARVER -DMS	DMS-DR-2172 OCT., 1974

WIND TUNNEL TEST / DMS DATA PROCESSING

TEST ID	REPORT TITLE	CONFIGURATIONS TESTED	TEST PURPOSE	TYPE OF TEST	MODEL SCALE MACH RANGE	TESTING AGENCY	COGNIZANT TEST DMS PERSONNEL	BASIC PUBLICATIONS OR COMMENTS
ARC 14-TWT 711 IA8 CR-134,107	AERODYNAMIC RESULTS OF AN ABORT SEPARATION EFFECTS TEST (IA8) CONDUCTED IN THE NASA/LARC 14-FOOT TRANSONIC WIND TUNNEL ON A MODEL (6-OTS) OF THE ROCKWELL INTERNATIONAL LAUNCH CONFIGURATION INTEGRATED VEHICLE	6-OTS	EXPERIMENTAL AERODYNAMIC INVESTIGATIONS	FORCE	0.015 0.32 - 1.1	LARC / ARC - 14-FOOT TRANSONIC WIND TUNNEL	J.H. CAMPBELL,II/RI J. E. VAUGHN M. M. MOSER JR. -DMS	DMS-DR-2173 JULY, 1974
MSFC 14TWT 594 IA33 CR-141,811	AN INVESTIGATION IN THE MSFC 14-INCH TWT TO DETERMINE THE STATIC STABILITY CHARACTERISTICS OF THE 0.004-SCALE MODEL (74-OTS) SPACE SHUTTLE VEHICLE 5 CONFIGURATION (IA33)	VEHICLE 5 CONFIGURATION	TO DETERMINE THE STATIC STABILITY CHARACTERISTICS OF THE SHUTTLE VEHICLE 5 CONFIGURATION; TO DETERMINE THE EFFECT ON THE VEHICLE 5 AERODYNAMIC CHARACTERISTICS OF ET AND SRB NOSE SHAPE, SRB NOZZLE SHROUD FLARE ANGLE, ORBITER TO TANK FAIRING, AND STING LOCATION	FORCE	0.004 0.6 - 4.96	MSFC / MSFC - 14-INCH TRISONIC WIND TUNNEL	E.C.ALLEN/RI V. W. SPARKS R. B. LOWE -DMS	DMS-DR-2174 VOLUME 01 NOV., 1975

TEST ID	REPORT TITLE	CONFIGURATIONS TESTED	TEST PURPOSE	TYPE OF TEST	MODEL SCALE MACH RANGE	TESTING AGENCY	COGNIZANT TEST DMS PERSONNEL	BASIC PUBLICATIONS OR COMMENTS
MSFC - 14TWT - 594 / IA33 CR-141,812	AN INVESTIGATION IN THE MSFC 14-INCH TWT TO DETERMINE THE STATIC STABILITY CHAPACTERISTICS OF THE 0.004-SCALE MODEL (74-OTS) SPACE SHUTTLE VEHICLE 5 CONFIGURATION (IA33)	VEHICLE 5 CONFIGURATION	TO DETERMINE THE STATIC STABILITY CHARACTERISTICS OF THE SHUTTLE VEHICLE 5 CONFIGURATION; TO DETERMINE THE EFFECT ON THE VEHICLE 5 AERODYNAMIC CHARACTERISTICS OF THE ET AND SRB NOSE SHAPE, SRB NOZZLE SHROUD FLARE ANGLE, ORBITER TO TANK FAIRING, AND STING LOCATION	FORCE	0.004 / 0.6 - 4.96	MSFC / MSFC - 14-INCH TRISONIC WIND TUNNEL	E.C. ALLEN/RI V. W. SPARKS R. B. LOWE -DMS	DMS-DR-2174 VOLUME 02 NOV., 1975
MSFC - 14TWT - 594 / IA33 CR-141,813	AN INVESTIGATION IN THE MSFC 14-INCH TWT TO DETERMINE THE STATIC STABILITY CHARACTERISTICS OF THE 0.004-SCALE MODEL (74-OTS) SPACE SHUTTLE VEHICLE 5 CONFIGURATION (IA33)	VEHICLE 5 CONFIGURATION	TO DETERMINE THE STATIC STABILITY CHARACTERISTICS OF THE SPACE SHUTTLE VEHICLE 5 CONFIGURATION; TO DETERMINE THE EFFECT ON THE VEHICLE 5 AERODYNAMIC CHARACTERISTICS OF THE ET AND SRB NOSE SHAPE, SRB NOZZLE SHROUD FLARE ANGLE, ORBITER TO TANK FAIRING, AND STING LOCATION	FORCE	0.004 / 0.6 - 4.96	MSFC / MSFC - 14-INCH TRISONIC WIND TUNNEL	E.C. ALLEN/RI V. W. SPARKS R. B. LOWE -DMS	DMS-DR-2174 VOLUME 03 NOV., 1975

TEST ID	REPORT TITLE	CONFIGURATIONS TESTED	TEST PURPOSE	TYPE OF TEST	MODEL SCALE MACH RANGE	TESTING AGENCY	COGNIZANT TEST DMS PERSONNEL	BASIC PUBLICATIONS OR COMMENTS
NRLAD 7TWT 282 IA70 CR-134,431	SUBSONIC AND TRAN SONIC HINGE MOMENT AND WING BENDING/TORSION CHARACTERISTICS FOR THE -140A/B INTEGRATED SPACE SHUTTLE VEHICLE (IA70) VOLUME I OF 3	MODEL 49-0 + 67TS INTEGRATED VEHICLE	OBTAIN ORBITER WING BENDING LOADS AND TO DEFINE ELEVON AND BODY FLAP HINGE MOMENTS WHILE IN THE SSV INTEGRATED CONFIGURATION	FORCE PRESSURE	0.015 / 0.90 - 1.50	NRLAD / NRLAD - 7-FOOT TRISONIC WIND TUNNEL	M.T. HUGHES,R.C. MENNELL / R.I. D. E. POUCHER -DMS	DMS-DR-2175 VOLUME 01 DEC., 1974
NRLAD 7TWT 282 IA70 CR-134,432	SUBSONIC AND TRAN SONIC HINGE MOMENT AND WING BENDING/TORSION CHARACTERISTICS FOR THE -140A/B INTEGRATED SPACE SHUTTLE VEHICLE (IA70) VOLUME 2 OF 3	MODEL 49-0 + 67TS INTEGRATED VEHICLE	OBTAIN ORBITER WING BENDING LOADS AND TO DEFINE ELEVON AND BODY FLAP HINGE MOMENTS WHILE IN THE SSV INTEGRATED CONFIGURATION	FORCE PRESSURE	0.015 / 0.90 - 1.50	NRLAD / NRLAD - 7-FOOT TRISONIC WIND TUNNEL	M.T. HUGHES,R.C. MENNELL /R.I. D. E. POUCHER -DMS	DMS-DR-2175 VOLUME 02 DEC., 1974
NRLAD 7TWT 282 IA70 CR-134,433	SUBSONIC AND TRAN SONIC HINGE MOMENT AND WING BENDING/TORSION CHARACTERISTICS FOR THE -140A/B INTEGRATED SPACE SHUTTLE VEHICLE (IA70) VOLUME 3 OF 3	MODEL 49-0 + 67TS INTEGRATED VEHICLE	OBTAIN ORBITER WING BENDING LOADS AND TO DEFINE ELEVON AND BODY FLAP HINGE MOMENTS WHILE IN THE SSV INTEGRATED CONFIGURATION	FORCE PRESSURE	0.015 / 0.90 - 1.50	NRLAD / NRLAD - 7-FOOT TRISONIC WIND TUNNEL	M.T. HUGHES,R.C. MENNELL /R.I. D. E. POUCHER -DMS	DMS-DR-2175 VOLUME 03 DEC., 1974

TEST ID	REPORT TITLE	CONFIGURATIONS TESTED	TEST PURPOSE	TYPE OF TEST	MODEL SCALE MACH RANGE	TESTING AGENCY	COGNIZANT TEST DMS PERSONNEL	BASIC PUBLICATIONS OR COMMENTS
LARC - 22HT - 426 / LA40 TM-X 72561	SPACE SHUTTLE ORBITER TRIMMED CENTER OF GRAVITY EXTENSION STUDY VOLUME IV - EFFECTS OF CONFIGURATION MODIFICATIONS ON THE AERODYNAMICS OF THE 139B ORBITER AT MACH 20.3	139B ORBITER	DETERMINE THE EFFECT OF SEVERAL FOREBODY, WING-FILLET, AND CANARD MODIFICATIONS ON THE ORBITER LONGITUDINAL CENTER OF PRESSURE LOCATIONS	FORCE	19.0-21.6	LARC / LARC - 22-INCH HELIUM TUNNEL	W. I. SCALLION/ NASA LARC G. J. MCDONALD -DMS	DMS-DR-2176 MAY, 1978
ARC - 3.5HWT - 194 / OA83 CR-141,510	RESULTS OF INVESTIGATIONS ON AN 0.015-SCALE CONFIGURATION 140A/B SPACE SHUTTLE VEHICLE ORBITER REACTION CONTROL SYSTEM PLUME-IMPINGEMENT MODEL 36-0 IN THE NASA/AMES RESEARCH CENTER 3.5-FOOT HYPERSONIC WIND TUNNEL (OA83)	140A/B SSV ORBITER	TO INVESTIGATE INCREMENTAL SURFACE PRESSURE EFFECTS OF RCS PITCH ENGINE OPERATION	FORCE PRESSURE	0.015 / 5.3 - 10.3	RI / ARC - 3.5-FOOT HYPERSONIC WIND TUNNEL	M. E. NICHOLS/RI T. E. POLEK/ARC R. B. LOWE -DMS	DMS-DR-2177 MARCH, 1975
ARC - 97SWT - 747 / OA53B CR-134,119	INVESTIGATIONS ON AN 0.030-SCALE SPACE SHUTTLE VEHICLE CONFIGURATION 140A/B ORBITER MODEL IN THE AMES RESEARCH CENTER 9-BY 7-FOOT SUPERSONIC WIND TUNNEL (OA53B)	140A/B	THE PRIMARY TEST OBJECTIVES ARE TO OBTAIN CONFIGURATION 140A/B STABILITY AND CONTROL CHARACTERISTICS, CONTROL SURFACE EFFECTIVENESS CONTROL SURFACE HINGE MOMENTS, AND VERTICAL TAIL PANEL LOADS.	FORCE	0.03 / 1.6 - 2.0	ARC / ARC - 9-FOOT BY 7-FOOT SUPERSONIC WIND TUNNEL (UNITARY)	MARK E. NICHOLS / RI M. M. MANN -DMS	DMS-DR-2178 AUGUST, 1974

TEST ID	REPORT TITLE	CONFIGURATIONS TESTED	TEST PURPOSE	TYPE OF TEST	MODEL SCALE MACH RANGE	TESTING AGENCY	COGNIZANT TEST DMS PERSONNEL	BASIC PUBLICATIONS OR COMMENTS
ARC - 11TWT - 705 / 97SWT - 058A/B CR-151,378	RESULTS OF AN INVESTIGATION OF THE ACOUSTIC AND VIB RATIONAL ENVIRONMENT OF A FULL SCALE SPACE SHUTTLE ORBITER STRUCTURAL TEST PANEL WITH SIMULATED TPS IN THE AMES UNITARY PLAN WIND TUNNEL (MODEL B1-0.TEST 058A AND B)	SS ORBITER LOWER WING CARRY-THROUGH STRUCTURE WITH A DUMMY PANEL, OR AN ELASTIC PANEL	TO INVESTIGATE TPS TILE SENSITIVITY TO EXTREME PRESSURE GRADIENTS AND VIBRATION AND TO DEFINE THE TPS AERODYNAMIC ENVIROMENT	STRUCT-DYN	1.0 - 0.60 / 2.5	ARC / ARC - 11-FOOT TRANSONIC WIND TUNNEL (UNITARY) 9-FOOT BY 7-FOOT SUPERSONIC WIND TUNNEL (UNITARY)	R. B. KINGSLAND/RI - DMS R. B. LOWE - DMS	DMS-DR-2179 NOV., 1977
ARC - 3.5HWT - 195 / 1H28 CR-147,615	HEAT TRANSFER TEST OF AN 0.006-SCALE THIN-SKIN THERMOCOUPLE SPACE SHUTTLE MODEL (50-0.41T) IN THE NASA-AMES RESEARCH CENTER 3.5-FOOT HYPERSONIC WIND TUNNEL AT MACH 5.3 (1H-28)	SSV ORBITER (MODEL 50-0) SSV EXT. TANK (MODEL 41-T)	OBTAIN AERODYNAMIC HEATING DATA UNDER SIMULATED RETURN-TO-LAUNCH-SITE ABORT CONDITIONS	HEAT-TRANS	5.22- 5.30	ARC - 3.5-FOOT HYPERSONIC WIND TUNNEL	J. W. CUMMINGS, T. F. FOSTER/RI W. K. LOCKMAN/ARC D. A. SARVER R. B. LOWE - DMS	DMS-DR-2180 VOLUME 01 SEPT., 1976
ARC - 3.5HWT - 195 / 1H28 CR-147,616	HEAT TRANSFER TEST OF AN 0.006-SCALE THIN-SKIN THERMOCOUPLE SPACE SHUTTLE MODEL (50-0.41T) IN THE NASA-AMES RESEARCH CENTER 3.5-FOOT HYPERSONIC WIND TUNNEL AT MACH 5.3 (1H-28)	SSV ORBITER (MODEL 50-0) SSV EXT. TANK (MODEL 41-T)	OBTAIN AERODYNAMIC HEATING DATA UNDER SIMULATED RETURN-TO-LAUNCH-SITE ABORT CONDITIONS	HEAT-TRANS	5.22- 5.30	ARC - 3.5-FOOT HYPERSONIC WIND TUNNEL	J. W. CUMMINGS, T. F. FOSTER/RI W. K. LOCKMAN/ARC D. A. SARVER R. B. LOWE - DMS	DMS-DR-2180 VOLUME 02 SEPT., 1976

TEST ID	REPORT TITLE	CONFIGURATIONS TESTED	TEST PURPOSE	TYPE OF TEST	MODEL SCALE / MACH RANGE	TESTING AGENCY	COGNIZANT TEST DMS PERSONNEL	BASIC PUBLICATIONS OR COMMENTS
APC 3.5HWT 195 TA9F CR-134,425	A HYPERSONIC FORCE AND MOMENT TEST OF A 0.006 SCALE MODEL OF THE 333.2 INCH DIAMETER EXTERNAL TANK IN THE AMES RESEARCH CENTER 3.5 FT. HYPERSONIC WIND TUNNEL (TA9F)	EXTERNAL TANK	TO INVESTIGATE THE EFFECTS OF PROTUBERANCES AND REYNOLDS NUMBER ON THE FORCE AND MOMENT COEFFICIENTS	FORCE	0.006 / 5.3 - 10.4	MSFC / ARC - 3.5-FOOT HYPERSONIC WIND TUNNEL	PAUL RAMSEY/NASA TOMMY DAVIS/ NSI J. E. VAUGHN G. G. MCDONALD -DMS	DMS-DR-2181 NOV., 1974
LARC UPWT 1101 LA49 CR-151,062	SUPERSONIC CONTROL EFFECTIVENESS FOR FULL AND PARTIAL SPAN ELEVON CONFIGURATIONS ON A 0.0165 SCALE MODEL SPACE SHUTTLE ORBITER TESTED IN THE LARC UNITARY PLAN WIND TUNNEL	089B/139		FORCE	.0165 / 2.5 - 4.63	LARC / LARC - UNITARY PLAN WIND TUNNEL	BERNARD SPENCER, JR./LARC J. E. VAUGHN -DMS	DMS-DR-2182 APRIL, 1977
LARC 8TPT 684 LA51 TM-X 72661	SPACE SHUTTLE ORBITER TRIMMED CENTER-OF-GRAVITY EXTENSION STUDY: VOLUME II-EFFECTS OF CONFIGURATION MODIFICATIONS ON THE AERODYNAMIC CHARACTERISTICS OF THE 140A/B ORBITER AT TRANSONIC SPEEDS	140A/B	TO DETERMINE EFFECTS OF FUSELAGE NOSE AND WING FILLET MODS ON TRANSONIC AERO. CHARACTERISTICS OF A SSV CONFIG.	FORCE	0.01 / .35 - 1.20	LARC / LARC - 8-FOOT TRANSONIC PRESSURE TUNNEL	W. P. PHILLIPS J. W. BALL D.B. WATSON -DMS	DMS-DR-2183 FEB., 1977

TEST ID	REPORT TITLE	CONFIGURATIONS TESTED	TEST PURPOSE	TYPE OF TEST	MODEL SCALE MACH RANGE	TESTING AGENCY	COGNIZANT TEST DMS PERSONNEL	BASIC PUBLICATIONS OR COMMENTS
LARC - 8TPT - 680 / LA48 CR-151,061	TRANSONIC CONTROL EFFECTIVENESS FO R FULL AND PARTIAL SPAN ELEVON CONFIGURATIONS ON A 0.0165 SCALE MOD EL SPACE SHUTTLE ORBITER TESTED IN THE LARC 8-FOOT TRANSONIC PRESSURE TUNNEL	089B/140	TO DETERMINE LONGITUDINAL/LATERAL CONTROL EFFECTIVENESS ON COMBINATIONS OF INBOARD, OUTBOARD, FULL SPAN WING TRAILING EDGE CONTROLS	FORCE	0.0165 / .60 - 1.08	LARC / LARC - 8-FOOT TRANSONIC PRESSURE TUNNEL	BERNARD SPENCER, J. R./LARC J. E. VAUGHN B. J. FRICKEN -DMS	DMS-DR-2184 APRIL, 1977
ARC - 87SWT - 747 / 0A53C CR-134,120	INVESTIGATIONS ON AN 0.030-SCALE SPACE SHUTTLE VEHICLE CONFIGURATION 140A/B ORBITER MODEL IN THE AMES RESEARCH CENTER UNITARY PLAN 8-BY 7-FOOT SUPERSONIC WIND TUNNEL	140A/B	THE PRIMARY TEST OBJECTIVES ARE TO OBTAIN CONFIGURATION 140A/B STABILITY AND CONTROL CHARACTERISTICS, CONTROL SURFACE EFFECTIVENESS CONTROL SURFACE HINGE MOMENTS, AND VERTICAL TAIL PANEL LOADS.	FORCE	0.03 / 2.5 - 3.5	ARC / ARC - 8-FOOT BY 7-FOOT SUPERSONIC WIND TUNNEL (UNITARY)	MARK E. NICHOLS / RI M. M. MANN -DMS	DMS-DR-2185 SEPT., 1974
LARC - 8TPT - 696 / 0A116 CR-134,429	RESULTS OF DIFFERENTIAL ELEVON/AILERON DEFLECTION FOR LATERAL CONTROL OPTIMIZATION AND ELEVON HINGE MOMENT INVESTIGATIONS ON AN 0.015-SCALE MODEL(49-0) OF THE SPACE SHUTTLE ORBITER IN THE NASA/LANGLEY RESEARCH CENTER 8-FOOT TRANSONIC PRESSURE TUNNEL	.015-SCALE ORBITER MODEL,CONFIGURATION 140A/B (49-0)	DETERMINE TRANSONIC DIFFERENTIAL ELEVON/AILERON LATERAL CONTROL OPTIMIZATION,TRANSONIC ELEVON HINGE MOMENTS,TRANSONIC EFFECTS OF NEW BASELINE 6-INCH ELEVON/ELEVON AND ELEVON/FUSELAGE GAPS, AND TRANSONIC EFFECTS OF THE NEW SHORT(VL70-008410) OMS PODS	FORCE	0.015 / 0.35 - 1.2	LARC / LARC - 8-FOOT TRANSONIC PRESSURE TUNNEL	A.I. LINDSEY,M.D. MILAM/RI R. H. LINDAHL -DMS	DMS-DR-2186 JAN., 1975

TEST ID	REPORT TITLE	CONFIGURATIONS TESTED	TEST PURPOSE	TYPE OF TEST	MODEL SCALE / MACH RANGE	TESTING AGENCY	COGNIZANT TEST DMS PERSONNEL	BASIC PUBLICATIONS OR COMMENTS
NRLAD - LSWT - 726 / OA119A CR-134,421	EFFECTS OF WING/ELEVON GAP SEALING FLAPPER DOORS ON ORBITER ELEVON EFFECTIVENESS (OA119A)	140A/B SPACE SHUTTLE ORBITER INNER MOLD LINE CONFIGURATION. (MODEL 6-0)	TO DEFINE ORBITER ELEVON EFFECTIVENESS WITH THE NEW 6 INCH ELEVON GAPS SEALING FLAPPER DOORS	FORCE	0.0405 / 0.26 - 0.26	RI / NRLAD - LOW SPEED WIND TUNNEL	R. C. MENNELL /RI R. B. LOWE -DMS	DMS-DR-2187 NOV., 1974
LARC - UPWT - 1075 / LA39				FORCE		LARC / LARC - UNITARY PLAN WIND TUNNEL	D.B. WATSON -DMS	DMS-DR-2188 TO LRC
ARC - 9TSWT - 052 / IA110 CR-141,505	RESULTS OF INVESTIGATION IA110 ON A 0.015-SCALE INTEGRATED CONFIGURATION OF THE SPACE SHUTTLE VEHICLE IN THE ARC 9X7 SUPERSONIC WIND TUNNEL USING MODELS 67-TS AND 49-0	ORBITER 140A/B	TO INVESTIGATE ORBITER WING BENDING, ELEVON PANEL LOADS, AND ELEVON EFFECTIVENESS	FORCE	1.5 - 2.5	ARC / ARC - 9-FOOT BY 7-FOOT SUPERSONIC WIND TUNNEL (UNITARY)	E. CHEE/ROCKWELL M. M. MANN -DMS	DMS-DR-2189 MARCH, 1975
MSFC - 14TWT - 599 / OA108 CR-141,537	INVESTIGATION IN THE MSFC TWT TO VERIFY THE STATIC STABILITY AND CONTROL EFFECTIVENESS OF THE 0.004-SCALE MODEL (74-0) OF THE SHUTTLE 5 ORBITER (OA-108)	0.004-SCALE ORBITER FORCE MODEL (74-0)	TO VERIFY STABILITY AND CONTROL CHARACTERISTICS	FORCE	0.004 / 0.6 - 4.96	NASA / MSFC - 14-INCH TRISONIC WIND TUNNEL	E. C. ALLEN / RI R. H. LINDAHL -DMS	DMS-DR-2190 JUNE, 1975

TEST ID	REPORT TITLE	CONFIGURATIONS TESTED	TEST PURPOSE	TYPE OF TEST	MODEL SCALE / MACH RANGE	TESTING AGENCY	COGNIZANT TEST DMS PERSONNEL	BASIC PUBLICATIONS OR COMMENTS
LARC CFHT 10+ LA47 TM-X 72661	SPACE SHUTTLE ORB ITER TRIMMED CENTER OF GRAVITY EXTENSION STUDY: VOLUME I--EFFECTS OF CONFIGURATIONS ON THE AERODYNAMIC CHARACTERISTICS OF THE 1:0 A/B ORBITER AT MACH 10.3	140A/B	C. G. EXTENSION STUDY AT MACH 10	FORCE	0.01 / 10.3 - 10.3	LARC / LARC - CONTINUOUS-FLOW HYPERSONIC TUNNEL	P. T. BERNDT/NASA/LARC J. E. VAUGHN G. G. MCDONALD -DMS	DMS-DR-2191 JULY, 1975
AEDC SWTA 60A IA87 CR-141,541	AERODYNAMIC RESULTS OF A SEPARATION EFFECTS TEST (IA871) ON A 0.01-SCALE MODEL (52-OTS) OF THE INTEGRATED SSV IN THE AEDC/VKF 40-BY-40 INCH SUPERSONIC WIND TUNNEL A	O/ET; O/ET,SRB; RB	STATIC FORCE TEST OF SRB SEPARATION EFFECTS FOR A RANGE OF SSV ATTITUDES	FORCE	0.010 / 4.52 - 4.52	RI / AEDC - SUPERSONIC WIND TUNNEL (A)	J.H. CAMPBELL, ARL KNUDSEN, L PEARSON/R.I. ROBERT BURT/ARD D. A. SARVER D.B. WATSON -DMS	C DMS-DR-2192 PAU VOLUME 01 JULY, 1975
AEDC SWTA 60A IA87 CR-141,542	AERODYNAMIC RESULTS OF A SEPARATION EFFECTS TEST (IA871) ON A 0.01-SCALE MODEL (52-OTS) OF THE INTEGRATED SSV IN THE AEDC/VKF 40-BY-40 INCH SUPERSONIC WIND TUNNEL A	O/ET; O/ET,SRB; RB	STATIC FORCE TEST OF SRB SEPARATION EFFECTS FOR A RANGE OF SSV ATTITUDES	FORCE	0.010 / 4.52 - 4.52	RI / AEDC - SUPERSONIC WIND TUNNEL (A)	J.H. CAMPBELL, ARL KNUDSEN, L PEARSON/R.I. ROBERT BURT/ARD D. A. SARVER D.B. WATSON -DMS	C DMS-DR-2192 PAU VOLUME 02 JULY, 1975

WIND TUNNEL TEST / DMS DATA PROCESSING

TEST ID	REPORT TITLE	CONFIGURATIONS TESTED	TEST PURPOSE	TYPE OF TEST	MODEL SCALE MACH RANGE	TESTING AGENCY	COGNIZANT TEST DMS PERSONNEL	BASIC PUBLICATIONS OR COMMENTS
ARC 3.5HWT 199 0H26 CR-151.380	RESULTS OF HEAT TRANSFER TEST OF A 0.0175-SCALE SPACE SHUTTLE ORBITER 140B MODEL (MODIFIED 22-01) IN THE NASA-AMES RESEARCH CENTER 3.5-FOOT HYPERSONIC WIND TUNNEL	SS ORB. 140B MODE (MODIFIED 22-01)	TO OBTAIN AERO HEATING DATA ON ORBITER UNDER SIMULATED ENTRY CONDITIONS	HEAT-TRANS	0.0175 / 7.32- 7.32	ROCKWELL/ ARC - 3.5-FOOT HYPERSONIC WIND TUNNEL	W. H. DYE/RI J. E. VAUGHN M. M. MOSER JR. -DMS	DMS-DR-2193 OCT., 1977
ARC 97SWT 019 IA81B CR-141.817	RESULTS OF A PRESSURE LOADS INVESTIGATION ON A 0.03-SCALE MODEL (47-OTS) OF THE INTEGRATED SPACE SHUTTLE VEHICLE CONFIGURATION 5 IN THE NASA AMES RESEARCH CENTER 9 X 7 FOOT LEG OF THE UNITARY PLAN WIND TUNNEL (IA81B) VOLUME 1 OF 5	LAUNCH VEHICLE 5	TO OBTAIN PRESSURE DISTRIBUTIONS, FORCE DATA, AND HINGE MOMENTS ON THE INTEGRATED LAUNCH VEHICLE	PRESSURE FORCE	0.03 / 0.9 - 1.4	ROCKWELL/ ARC - 9-FOOT BY 7-FOOT SUPERSONIC WIND TUNNEL (UNITARY)	T. J. DZIUBALA, E. CHEE, M. D. MILAM/RI D.W.HERSEY G. W. KLUG -DMS	DMS-DR-2194 VOLUME 01 NOV., 1975
ARC 97SWT 019 IA81B CR-141.818	RESULTS OF A PRESSURE LOADS INVESTIGATION ON A 0.03-SCALE MODEL (47-OTS) OF THE INTEGRATED SPACE SHUTTLE VEHICLE CONFIGURATION 5 IN THE NASA AMES RESEARCH CENTER 9 X 7 FOOT LEG OF THE UNITARY PLAN WIND TUNNEL (IA81B) VOLUME 2 OF 5	LAUNCH VEHICLE 5	TO OBTAIN PRESSURE DISTRIBUTIONS, FORCE DATA, AND HINGE MOMENTS ON THE INTEGRATED LAUNCH VEHICLE	PRESSURE FORCE	0.03 / 0.9 - 1.4	ROCKWELL/ ARC - 9-FOOT BY 7-FOOT SUPERSONIC WIND TUNNEL (UNITARY)	T. J. DZIUBALA, E. CHEE, M. D. MILAM/RI D.W.HERSEY G. W. KLUG -DMS	DMS-DR-2194 VOLUME 02 DEC., 1975

TEST ID	REPORT TITLE	CONFIGURATIONS TESTED	TEST PURPOSE	TYPE OF TEST	MODEL SCALE MACH RANGE	TESTING AGENCY	COGNIZANT TEST DMS PERSONNEL	BASIC PUBLICATIONS OR COMMENTS
ARC 97SWT 019 IA818 CR-141,819	RESULTS OF A PRESSURE LOADS INVESTIGATION ON A 0.03-SCALE MODEL (47--OTS) OF THE INTEGRATED SPACE SHUTTLE VEHICLE CONFIGURATION 5 IN THE NASA AMES RESEARCH CENTER 9 X 7 FOOT LEG OF THE UNITARY PLAN WIND TUNNEL (IA818) VOLUME 3 OF 5	LAUNCH VEHICLE 5	TO OBTAIN PRESSURE DISTRIBUTIONS, FORCE DATA, AND HINGE MOMENTS ON THE INTEGRATED LAUNCH VEHICLE	PRESSURE FORCE	0.03 / 0.9 - 1.4	ROCKWELL/ ARC - 9-FOOT BY 7-FOOT SUPERSONIC WIND TUNNEL (UNITARY)	T. J. DZIUBALA, E. CHEE, M. D. MILAM/RI D.W.HERSEY G. W. KLUG -DMS	DMS-DR-2194 VOLUME 03 DEC., 1975
ARC 97SWT 019 IA818 CR-141,820	RESULTS OF A PRESSURE LOADS INVESTIGATION ON A 0.03-SCALE MODEL (47--OTS) OF THE INTEGRATED SPACE SHUTTLE VEHICLE CONFIGURATION 5 IN THE NASA AMES RESEARCH CENTER 9 X 7 FOOT LEG OF THE UNITARY PLAN WIND TUNNEL (IA818) OVLUME 4 OF 5	LAUNCH VEHICLE 5	TO OBTAIN PRESSURE DISTRIBUTIONS, FORCE DATA, AND HINGE MOMENTS ON THE INTEGRATED LAUNCH VEHICLE	PRESSURE FORCE	0.03 / 0.9 - 1.4	ROCKWELL/ ARC - 9-FOOT BY 7-FOOT SUPERSONIC WIND TUNNEL (UNITARY)	T. J. DZIUBALA, E. CHEE, M. D. MILAM/RI D.W.HERSEY G. W. KLUG -DMS	DMS-DR-2194 VOLUME 04 DEC., 1975

TEST ID	REPORT TITLE	CONFIGURATIONS TESTED	TEST PURPOSE	TYPE OF TEST	MODEL SCALE MACH RANGE	TESTING AGENCY	COGNIZANT TEST DMS PERSONNEL	BASIC PUBLICATIONS OR COMMENTS
ARC 975WT 019 IA81B CR-141,821	RESULTS OF A PRESSURE LOADS INVESTIGATION ON A 0.03-SCALE MODEL (47-OTS) OF THE INTEGRATED SPACE SHUTTLE VEHICLE CONFIGURATION 5 IN THE NASA AMES RESEARCH CENTER 9 X 7 FOOT LEG OF THE UNITARY PLAN WIND TUNNEL (IA81B) VOLUME 5 OF 5	LAUNCH VEHICLE 5	TO OBTAIN PRESSURE DISTRIBUTIONS, FORCE DATA, AND HINGE MOMENTS ON THE INTEGRATED LAUNCH VEHICLE	PRESSURE FORCE	0.03 / 0.9 - 1.4	ROCKWELL/ ARC - 9-FOOT BY 7-FOOT SUPERSONIC WIND TUNNEL (UNITARY)	T. J. DZIUBALA, E. CHEE, M. D. MILAM/RI D.W.HERSEY G. W. KLUG -DMS	DMS-DR-2194 VOLUME D5 DEC., 1975
LARC CFHT 113 0A82 CR-134,442	RESULTS OF TEST 0A82 IN THE NASA/LARC 31-INCH CFHT ON AN 0.010-SCALE MODEL(32-0) OF THE SPACE SHUTTLE CONFIGURATION 3 TO DETERMINE RCS JET FLOW FIELD INTERACTION AND TO INVESTIGATE RT REAL GAS EFFECTS	ORBITER CONFIG. 3	TO DETERMINE RCS JET INTERACTION EFFECTS ON HYPERSONIC AERODYNAMIC CHARACTERISTICS AND TO INVESTIGATE RT (GAS CONSTANT TIMES TEMP.) SCALING EFFECTS ON THE RCS SIMILITUDE	FORCE	0.010 / 10.3 - 10.3	ROCKWELL/ LARC - CONTINUOUS-FLOW HYPERSONIC TUNNEL	D. E. THORNTON/RI M. M. MANN -DMS	DMS-DR-2195 FEB., 1975
AEDC HWTB 71A 0A79 CR-141,531	RESULTS OF INVESTIGATIONS OF AN 0.015 SCALE SPACE SHUTTLE VEHICLE 140A/B CONFIGURATION WITH MODIFIED OMS PODS AND ELEVONS IN THE AEDC VKF TUNNEL B (0A79)	ORBITER 140A/B	TO DETERMINE EFFECTS OF SURFACE DEFLECTIONS ELEVON, RUDDER, SPEED BRAKE, AND BODY FLAP CONFIGURATION AT MACH 8, ANGLE OF ATTACK RANGE OF 15D TO 45D, AND ANGLE OF SIDESLIP RANGE OF -5D TO 5D	FORCE	8.0 - 8.0	ROCKWELL/ AEDC - HYPERSONIC WIND TUNNEL (B)	V. ESPARZA /ROCKWELL INTERNATIONAL A. I. LINDAY /ROCKWELL INTERNATIONAL M. M. MANN -DMS	DMS-DR-2196 MAY, 1975

TEST ID	REPORT TITLE	CONFIGURATIONS TESTED	TEST PURPOSE	TYPE OF TEST	MODEL SCALE MACH RANGE	TESTING AGENCY	COGNIZANT TEST DMS PERSONNEL	BASIC PUBLICATIONS OR COMMENTS
AEDC HWTF VA29; FH10 CR-134,418	PRESSURE AND HEAT-FLUX RESULTS FROM THE SPACE SHUTTLE/EXTERNAL FUEL TANK INTERACTION TEST AT MACH NUMBERS 16 AND 19 (FH10)	ET MODEL MCR0200	TO MEASURE INTERACTION HEATING RATES ON ET MATED TO ORBITER UNDER LAMINAR FLOW CONDITIONS	HEAT-TRANS	0.0175 / 16 - 19	MSFC / AEDC - HYPERVELOCITY WIND TUNNEL (F)	E. B. BREWER, MSFC / D. R. HABERMAN, ARO / V. W. SPARKS / M. M. MOSER JR. -DMS	DMS-DR-2197 OCT., 1974
AEDC SWTA 71A OA115 CR-141,534	DIFFERENTIAL ELEVON EFFECTIVENESS / LATERAL CONTROL OPTIMIZATION AND ELEVON HINGE MOMENT INVESTIGATION ON A 0.015-SCALE SPACE SHUTTLE ORBITER MODEL (14 U A/B/C MODIFIED) IN THE AEDC VKF WIND TUNNEL A (OA115)	ORBITER 140A/B	DETERMINE SUPERSONIC DIFFERENTIAL ELEVON/AILERON LATERAL CONTROL OPTIMIZATION, SUPERSONIC ELEVON HINGE MOMENTS, SUPERSONIC EFFECTS OF NEW BASELINE 6-INCH ELEVON/ELEVON AND ELEVON/FUSELAGE GAPS, AND SUPERSONIC EFFECTS OF THE NEW SHORT OMS PODS.	FORCE	2.0 - 5.0	ROCKWELL/ AEDC - SUPERSONIC WIND TUNNEL (A)	V. ESPARZA / ROCKWELL INTERNATIONAL / A. I. LINDSAY / ROCKWELL INTERNATIONAL / R. H. LINDAHL -DMS	DMS-DR-2198 JULY, 1975
LARC UPWT 1074 1093 LA43A/B LA43B TM-X 3315	SUPERSONIC DYNAMIC-STABILITY DERIVATIVES OF THE SPACE SHUTTLE LAUNCH VEHICLE	ORBITER; ET; SRB	TO DETERMINE DYNAMIC-STABILITY CHARACTERISTICS AT SUPERSONIC SPEEDS	FORCE	0.015 / 2.0 - 4.63	LARC / LARC - UNITARY PLAN WIND TUNNEL	R. P. BOYDEN, D. C. FREEMAN, JR., E. E. DAVENPORT/LARC / J. W. BALL / R. H. LINDAHL -DMS	DMS-DR-2199 OCT., 1976

ORIGINAL PAGE IS OF POOR QUALITY

TEST ID	REPORT TITLE	CONFIGURATIONS TESTED	TEST PURPOSE	TYPE OF TEST	MODEL SCALE MACH RANGE	TESTING AGENCY	COGNIZANT TEST DMS PERSONNEL	BASIC PUBLICATIONS OR COMMENTS
LARC - BTRT - 677 / LA-4 TM-X 3336	SUBSONIC AND TRANSONIC DYNAMIC STABILITY CHARACTERISTICS OF THE SPACE SHUTTLE LAUNCH VEHICLE	ORBITER-140A/B, SRB ET.	FORCED-OSCILLATION TESTS MEASURED WERE PITCH, ROLL, YAW DAMPING, NORMAL FORCE DUE TO PITCH RATE, CROSS DERIVATIVES, YAW WING MOMENT DUE TO ROLL RATE, ROLL WING MOMENT DUE TO YAW RATE	FORCE	0.3 - 1.2	ROCKWELL/ LARC - 8-FOOT TRANSONIC PRESSURE TUNNEL	D. C. FREEMAN, JR. R. P. BOYDEN, G. E. DAVENPORT/LARC J. W. BALL R. H. LINDAHL -DMS	DMS-DR-2200 OCT., 1976
NRLAD - LSWT - 731 / CA123 CR-141,526	SPACE SHUTTLE VEHICLE FERRY CONFIGURATION AFTERBODY FAIRING EFFECTS ON 140A/B ORBITER AERODYNAMIC CHARACTERISTICS USING AN 1.0405-SCALE MODEL ORBITER 143-C, IN THE ROCKWELL INTERNATIONAL 7.75 X 11 FT LOW SPEED WIND TUNNEL (CA123)	140A/B OUTER MOLDLINE CONFIGURATION	TO DEFINE FERRY CONFIGURATION AFTERBODY FAIRING EFFECTS ON ORBITER STABILITY AND CONTROL CHARACTERISTICS AND TO SUBSTANTIATE WIND TUNNEL RESULTS OBTAINED AT BOEING AEROSPACE COMPANY	FORCE	0.26 - 0.26	ROCKWELL/ NRLAD - LOW SPEED WIND TUNNEL	R. C. MENNELL/RI R. H. LINDAHL -DMS	DMS-DR-2202 APRIL, 1975

TEST ID	REPORT TITLE	CONFIGURATIONS TESTED	TEST PURPOSE	TYPE OF TEST	MODEL SCALE MACH RANGE	TESTING AGENCY	COGNIZANT TEST DMS PERSONNEL	BASIC PUBLICATIONS OR COMMENTS
NRLAD -	RESULTS OF AN INV	140C OUTER MOLD L	TO DEFINE ORBITER	FORCE	0.0405 /	ROCKWELL/	M. T. HUGHES/RI	DMS-DR-2203
LSWT -	ESTIGATION OF ELE	INE CONFIGURATION	LOW SPEED ELEVON		0.20 -	NRLAD -	D. A. SARVER	APRIL 1975
730 /	VON HINGE MOMENTS		/AILERON EFFECTIV		0.26	LOW SPEED WIND	R. B. LOWE	
OA119B	AND DUAL PANEL E		ENESS AND TO MEAS			TUNNEL	-DMS	
CR-141,524	LEVON EFFECT VENE		URE INDIVIDUAL EL					
	SS USING AN 0405		EVON PANEL HINGE					
	-SCALE MODEL 16-		MOMENTS FOR THE C					
	C OF THE CONFIGU		URRENT 6 INCH EL					
	RATION 140C SPACE		EVON/ELEVON AND E					
	SHUTTLE ORBITER		LEVON FUSELAGE GA					
	IN THE ROCKWELL I		PS WITH WING/ELEV					
	NTERNATIONAL NAAL		ON GAP SEALING FL					
	LOW SPEED WIND TU		APPER DOORS					
	NNEL (OA119B							
LARC -	RESULTS OF TRANSO	OTS.140A/B	TO DETERMINE EFFE	FORCE	0.010 /	ROCKWELL/	M. T. PETROZZI, M	DMS-DR-2204
BTPT -	NIC WIND TUNNEL T		CTS OF CONF. BUIL		0.6 -	LARC -	. D. MILAN/ROCKWE	MAY, 1975
693 /	ESTS ON AN 0.010-		DUP. EFFECTS OF P		1.2	8-FOOT TRANSON	LL	
IA43	SCALE SPACE SHUTT		ROTUBERANCES, ET/			IC PRESSURE TU	B. J. FRICKEN	
CR-141,525	LE MATED VEHICLE		ORBITER FAIRINGS			NNEL	-DMS	
	MODEL 72-OTS IN T		AND ATTACH STRUCT					
	HE LARC 8-FOOT TR		URE . ELEVON DEFL					
	T (IA43)		ECTION EFFECTS ON					
			WING BENDING MOM					
			ENT					
LARC -	RESULTS OF A 0.00	RI SPACE SHUTTLE	TO DETERMINE STAB	FORCE	0.004 /	ROCKWELL/	P. J. HAWTHORNE/R	DMS-DR-2205
22HT -	4-SCALE 140C MODI	ORBITER VEHICLE 4	ILITY AND CONTROL		19.0 -	LARC -	I	MAY, 1975
431 /	FIED CONFIGURATIO	(MODIFIED) CONFI	CHARACTERISTICS		21.6	22-INCH HELIUM	D. A. SARVER	
OA109	N SPACE SHUTTLE V	GURATION	AT M=20.			TUNNEL	R. B. LOWE	
CR-141,532	EHICLE ORBITER MO	NFIGURATION					-DMS	
	DEL (74-0) IN THE							
	NASA/LANGLEY RES							
	EARCH CENTER HYPE							
	RSONIC HELIUM TUN							
	NEL (OA109)							

TEST ID	REPORT TITLE	CONFIGURATIONS TESTED	TEST PURPOSE	TYPE OF TEST	MODEL SCALE MACH RANGE	TESTING AGENCY	COGNIZANT TEST DMS PERSONNEL	BASIC PUBLICATIONS OR COMMENTS
LARC - JPWT - 1089/1119/ IA++ CR-141,528	RESULTS OF INVESTIGATIONS ON AN 0.010-SCALE 140A/B CONFIGURATION (MODEL 72STS) OF THE ROCKWELL INTERNATIONAL SPACE SHUTTLE ORBITER IN THE NASA/LANGLEY RESEARCH CENTER UNITARY PLAN WIND TUNNEL (IA++)	0.010-SCALE OUTER MOLD LINE MODEL OF THE 140A/B CONFIGURATION	TO OBTAIN SIX-COMPONENT FORCE AND MOMENT DATA FOR THE MATED VEHICLE AT SUBSONIC AND TRANSONIC CONDITIONS; EFFECTS OF CONFIGURATION BUILDUP; EFFECTS OF PROTUBERANCES, ET/OR BITER FAIRINGS AND ATTACK STRUCTURES; ELEVON DEFLECTION EFFECTS ON WING BENDING MOMENT	FORCE	.010 / 1.60 - 4.63	LARC / LARC - UNITARY PLAN WIND TUNNEL	M. T. PETROZZI, M. D. MILAM/RI R. H. LINDAHL -DMS	DMS-DR-2206 MAY, 1975
MSFC - HPWT - 033 / SA29F CR-147,608	AN INVESTIGATION TO DETERMINE THE PRESSURE DISTRIBUTION ON THE 0.013 SCALE SOLID ROCKET BOOSTER FOREBODY (MSFC MODEL 467) AT HIGH ANGLES OF ATTACK AT OR NEAR 90 DEGREES AND HIGH REYNOLDS NUMBERS IN THE MSFC HIGH REYNOLDS NUMBER WIND TUNNEL	MODEL 467. SRB NOSE CONE AND FORWARD CYLINDRICAL BODY	TO DETERMINE THE PRESSURE DISTRIBUTION OVER THE FORE-SECTION OF THE 146-INCH DIA. SRB	PRESSURE	0.4 - 0.6	MSFC / MSFC - HIGH REYNOLDS NUMBER WIND TUNNEL	P. E. RAMSEY/MSFC V. W. SPARKS -DMS	DMS-DR-2207 JULY, 1976

TEST ID	REPORT TITLE	CONFIGURATIONS TESTED	TEST PURPOSE	TYPE OF TEST	MODEL SCALE / MACH RANGE	TESTING AGENCY	COGNIZANT TEST DMS PERSONNEL	BASIC PUBLICATIONS OR COMMENTS
MSFC - 14TWT - 609 / TA3F CR-144,590	AN INVESTIGATION OF THE 0.009SCALE EXTERNAL TANK GIVE NOSE (MSFC MODEL 470) IN THE MSFC 14 INCH TWT TO DETERMINE THE PRESSURE DISTRIBUTION AROUND THE EXTERNAL TANK NOSE	MODEL NO. 470	TO DETERMINE THE PRESSURE DISTRIBUTION AROUND THE NOSE CAP	PRESSURE	0.0091 / .6 - 4.96	MSFC / MSFC - 14-INCH TRISONIC WIND TUNNEL	P. E. RAMSEY/MSFC G. W. WINKLER, T. C. DAVIS/NSI V. W SPARKS M. M. MOSER JR. -DMS	DMS-DR-2208 VOLUME 01 JAN., 1976
MSFC - 14TWT - 609 / TA3F CR-144,591	AN INVESTIGATION OF THE 0.009SCALE EXTERNAL TANK GIVE NOSE (MSFC MODEL 470) IN THE MSFC 14 INCH TWT TO DETERMINE THE PRESSURE DISTRIBUTION AROUND THE EXTERNAL TANK NOSE	MODEL NO. 470	TO DETERMINE THE PRESSURE DISTRIBUTION AROUND THE NOSE CAP	PRESSURE	0.0091 / .6 - 4.96	MSFC / MSFC - 14-INCH TRISONIC WIND TUNNEL	P. E. RAMSEY/MSFC G. W. WINKLER, T. C. DAVIS/NSI V. W. SPARKS M. M. MOSER JR. -DMS	DMS-DR-2208 VOLUME 02 JAN., 1976
NRLAD - LSWT - 736 / OA124 CR-141,536	RESULTS OF A SPACE SHUTTLE VEHICLE FERRY CONFIGURATION AFTERBODY FAIRING OPTIMIZATION STUDY USING A 14 OA/B 0.0405-SCALE MODEL ORBITER (14 3-0) IN THE ROCKWELL INTERNATIONAL 7.75 X 11.0 FT LOW SPEED WIND TUNNEL (OA124)	MODEL 43-0	INVESTIGATE AERODYNAMIC STABILITY AND CONTROL CHARACTERISTICS OF THE SSV FERRY CONFIGURATION	FORCE	.26 - .26	ROCKWELL/ NRLAD - LOW SPEED WIND TUNNEL	R. C. MENNEL,F. F. . FITZGERALD/ROCKWELL R. B. LOWE -DMS	DMS-DR-2209 JUNE, 1975

TEST ID	REPORT TITLE	CONFIGURATIONS TESTED	TEST PURPOSE	TYPE OF TEST	MODEL SCALE MACH RANGE	TESTING AGENCY	COGNIZANT TEST DMS PERSONNEL	BASIC PUBLICATIONS OR COMMENTS
ARC 3.5HWT 200 1H27 CR-151,372	CONNECTIVE HEAT-TRANSFER TEST RESULTS FOR A GAP, CYLINDRICAL-PROTUBERANCE, AND SHOCK-IMPINGEMENT FLAT-PLATE MODEL IN THE NASA-AMES 3.5-FOOT HYPERSONIC WIND TUNNEL (TEST 1H27, MODEL 15-0 VIII)	15-0 VIII (FLAT-PLATE CARRIER)	TO DETERMINE EFFECTS OF SURFACE PROTUBERANCES AND SHOCK IMPINGEMENT ON SURFACE HEATING AND HEATING IN SIMULATED TPS TILE GAPS	HEAT-TRANS	5.22 - 5.24	ROCKWELL/ ARC - 3.5-FOOT HYPERSONIC WIND TUNNEL	F. FOSTER, W. H. DYE/RI W. K. LOCKMAN D.W.HERSEY J. E. VAUGHN -DMS	DMS-DR-2210 JUNE, 1979
TBCA BTWT 1431 CA5 CR-141,800	RESULTS OF A 0.03-SCALE AERODYNAMIC CHARACTERISTICS INVESTIGATION OF A BOEING 747 CARRIER(MODEL NO. AX 1319 1-1) MATED WITH A SPACE SHUTTLE ORBITER (MODEL 45-0) CONDUCTED IN THE BOEING TRANSONIC WIND TUNNEL (CA5)	0.03-SCALE AX 131 9 1-1 (CARRIER) MODEL 45-0 (ORBITER) MODEL	DETERMINE PERFORMANCE,STABILITY,AND CONTROL CHARACTERISTICS OF VARIOUS CARRIER AIRCRAFT CONFIGURATIONS; INVESTIGATE AERODYNAMIC CHARACTERISTICS OF THE CARRIER MATED WITH THE ORBITER, CARRIER ALONE, AND ORBITER ALONE	FORCE	0.03 - 0.15 - 0.70	BOEING / TBCA - TRANSONIC WIND TUNNEL	R.D. KNUDSEN, J. AUGUSTYN, E. DICKSON/BOEING CO. D. A. SARVER R. H. LINDAHL -DMS	DMS-DR-2211 VOLUME 01 SEPT., 1975
TBCA BTWT 1431 CA5 CR-141,803	RESULTS OF A 0.03-SCALE AERODYNAMIC CHARACTERISTICS INVESTIGATION OF LE ORBITER (MODEL 45-0) CONDUCTED IN THE BOEING TRANSONIC WIND TUNNEL (CA5)	0.03-SCALE AX 131 9 1-1 (CARRIER) MODEL 45-0 (ORBITER) MODEL	DETERMINE PERFORMANCE,STABILITY,AND CONTROL CHARACTERISTICS OF VARIOUS CARRIER AIRCRAFT CONFIGURATIONS; INVESTIGATE AERODYNAMIC CHARACTERISTICS OF THE CARRIER MATED WITH THE ORBITER,CARRIER ALONE,AND ORBITER ALONE	FORCE	0.03 - 0.15 - 0.70	BOEING / TBCA - TRANSONIC WIND TUNNEL	R.D. KNUDSEN, J. AUGUSTYN, E. DICKSON/BOEING CO. D. A. SARVER R. H. LINDAHL -DMS	DMS-DR-2211 VOLUME 02 SEPT., 1975

TEST ID	REPORT TITLE	CONFIGURATIONS TESTED	TEST PURPOSE	TYPE OF TEST	MODEL SCALE / MACH RANGE	TESTING AGENCY	COGNIZANT TEST DMS PERSONNEL	BASIC PUBLICATIONS OR COMMENTS
TBCA - BTWT - 1431 / CAS CR-141,834	RESULTS OF A 0.03-SCALE AX-13 SCALE AERODYNAMIC CHARACTERISTICS INVESTIGATION OF A BOEING 747 CARRIER/MODEL NO. AX-13 B 1-11 MATED WITH A SPACE SHUTTLE ORBITER (MODEL 45-01) CONDUCTED IN THE BOEING TRANSONIC WIND TUNNEL (CAS)	0.03-SCALE AX-13 B 1-11/CARRIER; MODEL DEL 0.03-SCALE 45-01 ORBITER; MODEL	DETERMINE PERFORMANCE, STABILITY, AND CONTROL CHARACTERISTICS OF VARIOUS CARRIER AIRCRAFT CONFIGURATIONS; INVESTIGATE AERODYNAMIC CHARACTERISTICS OF THE CARRIER MATED WITH THE ORBITER, CARRIER ALONE, AND ORBITER ALONE	FORCE	0.03 / 0.15 - 0.70	BOEING / TBCA - TRANSONIC WIND TUNNEL	R.D. KNUDSEN, J. AUGUSTYN, E. DICKSON/BOEING CO. D. A. SARVER R. H. LINDAHL -DMS	DMS-DR-2211 VOLUME 03 SEPT., 1975
ARC 11TWT 023 / 1A80 CR-147,632	INVESTIGATIONS OF THE 0.020-SCALE 88-OTS INTEGRATED SPACE SHUTTLE VEHICLE JET-PLUME MODEL IN THE NASA/AMES RESEARCH CENTER 11X11-FOOT UNITARY PLAN WIND TUNNEL (1A80)	LAUNCH VEHICLE 5	DETERMINE INTEGRATED VEHICLE SURFACE-PRESSURE DISTRIBUTIONS, ELEVON AND RUDDER HINGE MOMENTS, AND WING AND VERTICAL-TAIL ROOT BENDING AND TORSIONAL MOMENTS DUE TO MPS AND SRB PLUME INTERACTIONS	FORCE PRESSURE	0.020 / 0.6 - 1.4	ROCKWELL/ ARC - 11-FOOT TRANSONIC WIND TUNNEL (UNITARY)	M. E. NICHOLS/RI C. R. EDWARDS -DMS	DMS-DR-2212 VOLUME 01 OCT., 1976
ARC 11TWT 023 / 1A80 CR-147,633	INVESTIGATIONS OF THE 0.020-SCALE 88-OTS INTEGRATED SPACE SHUTTLE VEHICLE JET-PLUME MODEL IN THE NASA/AMES RESEARCH CENTER 11X11-FOOT UNITARY PLAN WIND TUNNEL (1A80)	LAUNCH VEHICLE 5	DETERMINE INTEGRATED VEHICLE SURFACE-PRESSURE DISTRIBUTIONS, ELEVON AND RUDDER HINGE MOMENTS, AND WING AND VERTICAL-TAIL ROOT BENDING AND TORSIONAL MOMENTS DUE TO MPS AND SRB PLUME INTERACTIONS	FORCE PRESSURE	0.020 / 0.6 - 1.4	ROCKWELL/ ARC - 11-FOOT TRANSONIC WIND TUNNEL (UNITARY)	M. E. NICHOLS/RI C. R. EDWARDS -DMS	DMS-DR-2212 VOLUME 02 OCT., 1976

TEST ID	REPORT TITLE	CONFIGURATIONS TESTED	TEST PURPOSE	TYPE OF TEST	MODEL SCALE / MACH RANGE	TESTING AGENCY	COGNIZANT TEST DMS PERSONNEL	BASIC PUBLICATIONS OR COMMENTS
ARC 11TWT 023 IA80 CR-147,634	INVESTIGATIONS OF THE 0.020-SCALE 89-OTS INTEGRATED SPACE SHUTTLE VEHICLE JET-PLUME MODEL IN THE NAS A/AMES RESEARCH CENTER 11X11-FOOT UNITARY PLAN WIND TUNNEL (IA80)	LAUNCH VEHICLE 5	DETERMINE INTEGRATED VEHICLE SURFACE-PRESSURE DISTRIBUTIONS, ELEVON AND RUDDER HINGE MOMENTS, AND WING AND VERTICAL-TAIL ROOT BENDING AND TORSIONAL MOMENTS DUE TO MPS AND SRB PLUME INTERACTIONS	FORCE PRESSURE	0.020 / 0.6 - 1.4	ROCKWELL/ ARC - 11-FOOT TRANSONIC WIND TUNNEL (UNITARY)	M. E. NICHOLS/RI C. R. EDWARDS -DMS	DMS-DR-2212 VOLUME 03 OCT., 1976
ARC 11TWT 023 IA80 CR-147,635	INVESTIGATIONS OF THE 0.020-SCALE 88-OTS INTEGRATED SPACE SHUTTLE VEHICLE JET-PLUME MODEL IN THE NAS A/AMES RESEARCH CENTER 11X11-FOOT UNITARY PLAN WIND TUNNEL (IA80)	LAUNCH VEHICLE 5	DETERMINE INTEGRATED VEHICLE SURFACE-PRESSURE DISTRIBUTIONS, ELEVON AND RUDDER HINGE MOMENTS, AND WING AND VERTICAL-TAIL ROOT BENDING AND TORSIONAL MOMENTS DUE TO MPS AND SRB PLUME INTERACTIONS	FORCE PRESSURE	0.020 / 0.6 - 1.4	ROCKWELL/ ARC - 11-FOOT TRANSONIC WIND TUNNEL (UNITARY)	M. E. NICHOLS/RI C. R. EDWARDS -DMS	DMS-DR-2212 VOLUME 04 OCT., 1976
LARC HNT 30-31 OA89 CR-141,513	RESULTS OF INVESTIGATIONS ON AM 0.004-SCALE 140C MODIFIED CONFIGURATION SPACE SHUTTLE VEHICLE ORBITER MODEL (74-0) IN THE NASA/LANGLEY RESEARCH CENTER HYPERSONIC NITROGEN TUNNEL (OA89)	140C MODIFIED SPACE SHUTTLE ORBITER MODEL 74-0	OBTAIN HYPERSONIC LONGITUDINAL AND LATERAL-DIRECTIONAL STABILITY AND CONTROL CHARACTERISTICS OF THE UPDATED SSV CONFIGURATION IN AN INITIALLY DIATOMIC MEDIUM	FORCE	0.004 / 19.8 - 19.8	ROCKWELL/ LARC - HYPERSONIC NITROGEN TUNNEL	P.J. HAWTHORNE/RI W.C. WOODS/LARC G. G. MCDONALD -DMS	DMS-DR-2214 APRIL, 1975

TEST ID	REPORT TITLE	CONFIGURATIONS TESTED	TEST PURPOSE	TYPE OF TEST	MODEL SCALE / MACH RANGE	TESTING AGENCY	COGNIZANT TEST DMS PERSONNEL	BASIC PUBLICATIONS OR COMMENTS
LTV - HSWT - 512 / LA58 CR-144,592	UPPER WING SURFACE BOUNDARY LAYER MEASUREMENTS AND STATIC AERODYNAMIC DATA OBTAINED ON AN 0.015-SCALE MODEL OF THE SSV ORBITER CONFIGURATION 140A/B IN THE LTV ASWT AT A MACH NUMBER OF 4.6 (LA58)	SSV ORBITER CONFIGURATION 140A/B-0.015 SCALE	TO INVESTIGATE THE NATURE OF THE ORBITER BOUNDARY LAYER CHARACTERISTICS AT ANGLES OF ATTACK FROM -4 TO 32 DEGREES AT A MACH NUMBER OF 4.6. THE EFFECT OF LARGE GRIT WERE INVESTIGATED PLUS EFFECTS OF LARGE NEGATIVE ELEVON DEFLECTION ON LEE-SIDE SEPARATION.	FORCE	4.5 - 4.5	LARC / LTV - HIGH SPEED WIND TUNNEL	BENARD SPENCER, JR., R. L. STALLINGS, JR., LARC, T.C. POP, E. LTV, R. H. LINDAHL -DMS	DMS-DR-2215 FEB., 1976
LARC - UPWT - 1115 / SH12F CR-141,832	RESULTS OF AEROTHERMODYNAMIC HEATING TEST ON A 0.013 SCALE MODEL SOLID ROCKET BOOSTER IN THE NASA/LARC UNITARY PLAN WIND TUNNEL (SH12F)	SRB	OBTAIN AERODYNAMIC HEATING DATA ON SRB	HEAT-TRANS	0.013 / 3.7 - 3.7	MSFC / LARC - UNITARY PLAN WIND TUNNEL	E. B. BREWER/MSFC, J.T.DAVIET -DMS	DMS-DR-2216 AUGUST, 1975

TEST ID	REPORT TITLE	CONFIGURATIONS TESTED	TEST PURPOSE	TYPE OF TEST	MODEL SCALE MACH RANGE	TESTING AGENCY	COGNIZANT TEST DMS PERSONNEL	BASIC PUBLICATIONS OR COMMENTS
TBCA BTWT 1431 CA20 CR-141,844	AERODYNAMIC RESULTS OF A SEPARATION TEST (CA20) CONDUCTED AT THE BOEING TRANSONIC WIND TUNNEL USING 0.0 30-SCALE MODELS OF THE CONFIGURATION 140A/B (MODIFIED) SSV ORBITER (MODEL NO. 45-0) AND THE BOEING 747 CARRIER (MODEL NO. AX 1319 I-1)	0.03-SCALE 45-0 MODIFIED SSV ORBITER CONFIGURATION 140A/B AND 747 CARRIER MODELS 0.03-SCALE 747 CARRIER MODEL	ORBITER CONFIGURATION 140A/B AND 747 CARRIER MODELS WERE TESTED TO PROVIDE SIX-COMPONENT FORCE AND MOMENT DATA FOR EACH VEHICLE IN PROXIMITY TO THE OTHER AT A MATRIX OF TEST CONDITIONS AND TO DETERMINE ORBITER TARE EFFECTS TO OBTAIN SUPPORT-FREE AERODYNAMICS.	FORCE	0.003 R 0.003 / 0.30 - 0.60	BOEING / TBCA - TRANSONIC WIND TUNNEL	T. DZIUBALA, V. ESPARZA, R. L. GILLINS, M. PETROZZI, R. C. R. MULLEN, BOEING AEROSPACE D. A. SARVER R. H. LINDAHL -DMS	DMS-DR-2217 VOLUME 01 JAN., 1976
TBCA BTWT 1431 CA20 CR-141,845	AERODYNAMIC RESULTS OF A SEPARATION TEST (CA20) CONDUCTED AT THE BOEING TRANSONIC WIND TUNNEL USING 0.0 30-SCALE MODELS OF THE CONFIGURATION 140A/B (MODIFIED) SSV ORBITER (MODEL NO. 45-0) AND THE BOEING 747 CARRIER (MODEL NO. AX 1319 I-1)	0.03-SCALE 45-0 MODIFIED SSV ORBITER CONFIGURATION 140A/B AND 747 CARRIER MODELS 0.03-SCALE 747 CARRIER MODEL	ORBITER CONFIGURATION 140A/B AND 747 CARRIER MODELS WERE TESTED TO PROVIDE SIX-COMPONENT FORCE AND MOMENT DATA FOR EACH VEHICLE IN PROXIMITY TO THE OTHER AT A MATRIX OF TEST CONDITIONS AND TO DETERMINE ORBITER TARE EFFECTS TO OBTAIN SUPPORT-FREE AERODYNAMICS.	FORCE	0.003 R 0.003 / 0.30 - 0.60	BOEING / TBCA - TRANSONIC WIND TUNNEL	T. DZIUBALA, V. ESPARZA, R. L. GILLINS, M. PETROZZI, R. C. R. MULLEN, BOEING AEROSPACE D. A. SARVER R. H. LINDAHL -DMS	DMS-DR-2217 VOLUME 02 JAN., 1976

TEST ID	REPORT TITLE	CONFIGURATIONS TESTED	TEST PURPOSE	TYPE OF TEST	MODEL SCALE MACH RANGE	TESTING AGENCY	COGNIZANT TEST DMS PERSONNEL	BASIC PUBLICATIONS OR COMMENTS
TBCA BTWT 1431 CA20 CR-141,846	AERODYNAMIC RESULTS OF A SEPARATION TEST (CA20) CONDUCTED AT THE BOEING TRANSONIC WIND TUNNEL USING 0.0 30-SCALE MODELS OF THE CONFIGURATION ON 140A/B (MODIFIED) SSV ORBITER (MODEL NO. 45-0) AND THE BOEING 747 CARRIER (MODEL NO. AX 1319 I-1)	0.03-SCALE 45-0 MODIFIED SSV ORBITER 140A/B 0.03-SCALE 747 CARRIER MODEL	ORBITER CONFIGURATION 140A/B AND 747 CARRIER MODELS WERE TESTED TO PROVIDE SIX-COMPONENT FORCE AND MOMENT DATA FOR EACH VEHICLE IN PROXIMITY TO THE OTHER AT A MATRIX OF TEST CONDITIONS AND TO DETERMINE ORBITER TARE EFFECTS TO OBTAIN SUPPORT-FREE AERODYNAMICS.	FORCE	0.003 R 0.003 0.30 0.60	BOEING / TBCA - TRANSONIC WIND TUNNEL	T. DZIUBALA, V. ESPARZA, R. L. GILLIS, M. PETROZZI, R. C. MULLEN, BOEING AERDSPACE D. A. SARVER R. H. LINDAHL -DMS	DMS-DR-2217 VOLUME 03 JAN., 1976
AEDC HWTF 25A THIF CR-151,367	PRESSURE AND HEAT TRANSFER TESTS RESULTS ON THE SPACE SHUTTLE 0.015-SCALE EXTERNAL TANK AT MACH 16 IN AEDC TUNNEL F	EXTERNAL TANK	TO OBTAIN BASIC HEATING AND PRESSURE DISTRIBUTION DATA ON ET	HEAT-TRANS	0.38 - 1.10	MSFC / AEDC - HYPERVELOCITY WIND TUNNEL (F)	L. G. SILER, A. HOUDREAU/ARO H. R. CARROLL/MSFC J. E. VAUGHN -DMS	DMS-DR-2218 SEPT., 1977

ORIGINAL PAGE IS OF POOR QUALITY

TEST ID	REPORT TITLE	CONFIGURATIONS TESTED	TEST PURPOSE	TYPE OF TEST	MODEL SCALE MACH RANGE	TESTING AGENCY	COGNIZANT TEST DMS PERSONNEL	BASIC PUBLICATIONS OR COMMENTS
ARC 87SWT 044 IA82C CR-144,597	RESULTS OF AN INVESTIGATION OF JET PLUME EFFECTS ON AN 0.010-SCALE MODEL (75-OTS) OF THE SPACE SHUTTLE INTEGRATED VEHICLE IN THE 8- BY 7-FOOT LEG OF THE NASA/AMES UNITARY WIND TUNNEL (IA82C)	LAUNCH VEHICLE 5	DEFINE THE BASE PRESSURE ENVIRONMENT OF THE FIRST AND SECOND STAGE MATED VEHICLE IN A SUPERSONIC FLOW FIELD FROM MACH 2.50 THROUGH 3.50 WITH SIMULATED ROCKET ENGINE EXHAUST PLUMES. DETERMINE PRESSURE ENVIRONMENT OF THE ORBITER AT VARIOUS VENT PORT LOCATIONS.	FORCE PRESSURE	0.010 / 2.50 - 3.50	ROCKWELL/ ARC - 8-FOOT BY 7-FOOT SUPERSONIC WIND TUNNEL (UNITARY)	P. J. HAWTHORNE/R I M. M. MANN -DMS	DMS-DR-2219 VOLUME 01 APRIL, 1976
ARC 87SWT 044 IA82C CR-144,598	RESULTS OF AN INVESTIGATION OF JET PLUME EFFECTS ON AN 0.010-SCALE MODEL (75-OTS) OF THE SPACE SHUTTLE INTEGRATED VEHICLE IN THE 8- BY 7-FOOT LEG OF THE NASA/AMES UNITARY WIND TUNNEL (IA82C)	LAUNCH VEHICLE 5	DEFINE THE BASE PRESSURE ENVIRONMENT OF THE FIRST AND SECOND STAGE MATED VEHICLE IN A SUPERSONIC FLOW FIELD FROM MACH 2.50 THROUGH 3.50 WITH SIMULATED ROCKET ENGINE EXHAUST PLUMES. DETERMINE PRESSURE ENVIRONMENT OF THE ORBITER AT VARIOUS VENT PORT LOCATIONS.	FORCE PRESSURE	0.010 / 2.50 - 3.50	ROCKWELL/ ARC - 8-FOOT BY 7-FOOT SUPERSONIC WIND TUNNEL (UNITARY)	P. J. HAWTHORNE/R I M. M. MANN -DMS	DMS-DR-2219 VOLUME 02 APRIL, 1976
LARC 20HT6 458 LA52				FORCE		LARC / LARC - 20-INCH HYPERSONIC TUNNEL (MACH 6)	D.B. WATSON -DMS	DMS-DR-2220 TO LRC

TEST ID	REPORT TITLE	CONFIGURATIONS TESTED	TEST PURPOSE	TYPE OF TEST	MODEL SCALE MACH RANGE	TESTING AGENCY	COGNIZANT TEST DMS PERSONNEL	BASIC PUBLICATIONS OR COMMENTS
NRLAD - LSWT 737 / OA143 CR-141,548	INVESTIGATION OF SPACE SHUTTLE VEHICLE ORBITER (MODEL 16-0) WHEEL WELL PRESSURE LOADS IN THE ROCKWELL INTERNATIONAL 7.75 X 11 FOOT WIND TUNNEL (OA143)	140C CONFIGURATION 140C CONFIGURATION ORBITER (MODEL 16-0)	TO DEFINE ORBITER WHEEL WELL PRESSURE LOADING AND ITS EFFECT ON LANDING GEAR THERMAL INSULATION; TO INVESTIGATE THE PRESSURE ENVIRONMENT FOR THE HORIZONTAL FLIGHT NOSE PROBE AND AIR VENT DOOR PROBES.	PRESSURE	.0405 / .20 - .23	ROCKWELL/ NRLAD - LOW SPEED WIND TUNNEL	R.B.RUSSELL/ R. I. R.C. MENNELL/ R. I. D. A. SARVER W. B. MEINDERS -DMS	DMS-DR-2221 JULY, 1975
AEDC - HWTB 57A / OH98 CR-147,626	RESULTS FROM A CONVECTIVE HEAT-TRANSFER-RATE DISTRIBUTION TEST ON A 0.0175 SCALE MODEL (22-0) OF THE ROCKWELL INTERNATIONAL VEHICLE 4 SPACE SHUTTLE CONFIGURATION IN THE AEDC-VKF TUNNEL B(OH98)	B25C10M4F10E26R5V 7W116	RE-ENTRY CONVECTIVE HEAT TRANSFER RATES ON THE ORBITER	HEAT-TRANS	0.0175 / 8.0 - 8.0	ROCKWELL/ AEDC - HYPERSONIC WIND TUNNEL (B)	B.J. HERRERA/ROCKWELL INTERNATIONAL J. E. VAUGHN -DMS	DMS-DR-2222 VOLUME 01 OCT., 1976
AEDC - HWTB 57A / OH98 CR-147,627	RESULTS FROM A CONVECTIVE HEAT-TRANSFER-RATE DISTRIBUTION TEST ON A 0.0175 SCALE MODEL (22-0) OF THE ROCKWELL INTERNATIONAL VEHICLE 4 SPACE SHUTTLE CONFIGURATION IN THE AEDC-VKF TUNNEL B(OH98)	B25C10M4F10E26R5V 7W116	RE-ENTRY CONVECTIVE HEAT TRANSFER RATES ON THE ORBITER	HEAT-TRANS	0.0175 / 8.0 - 8.0	ROCKWELL/ AEDC - HYPERSONIC WIND TUNNEL (B)	B.J. HERRERA/ROCKWELL INTERNATIONAL J. E. VAUGHN -DMS	DMS-DR-2222 VOLUME 02 NOV., 1976

TEST ID	REPORT TITLE	CONFIGURATIONS TESTED	TEST PURPOSE	TYPE OF TEST	MODEL SCALE MACH RANGE	TESTING AGENCY	COGNIZANT TEST DMS PERSONNEL	BASIC PUBLICATIONS OR COMMENTS
MSFC - 14TWT - 604 / SABF CR-141,549	REENTRY STATIC STABILITY CHARACTERISTICS OF A .0054 79 SCALE MODEL 14-INCH SOLID ROCKET BOOSTER TESTED IN THE NASA/MSFC 14X14 INCH TWT	ORB.W/ ATTACH RING,AFT RING,W/AND W/O PROTUBERANCES 6-INCH SOLID ROCKET ORB.W/ ALL PROTUBERANCES: ORB.W/O HEAT SHIELD	TO ESTABLISH STATIC STABILITY CHARACTERISTICS OF SRB DURING REENTRY	FORCE	0.4 - 4.45	MSFC / MSFC - 14-INCH TRISONIC WIND TUNNEL	J. D. JOHNSON/MSFC / C. S. C. PRAHARAJ, W. F. BRADDOCK/NSI / R. B. LONE / -DMS	DMS-DR-2223 JULY, 1975
LARC - LARC - 693 / BTPT - LA56 CR-147,650	RESULTS OF A DRAG REDUCTION INVESTIGATED ON AN 0.01 0-SCALE MODEL OF THE SPACE SHUTTLE VEHICLE 72-OTS LAUNCH CONFIGURATION TESTED IN THE LARC 8-FOOT TRANSONIC PRESSURE TUNNEL FOR THE MACH RANGE OF 0.35 TO 1.20 (LA56)	72-OTS (ORB., ET, SRM)	INVESTIGATION OF SPACE SHUTTLE LAUNCH VEHICLE DRAG REDUCTION AT MACH NUMBERS 0.35 TO 1.20	FORCE	0.010 / 0.6 - 1.2	LARC / LARC - NASA LANGLEY RESEARCH CENTER 8-FOOT TRANSONIC PRESSURE TUNNEL	BERNARD SPENCER, J. / R./LARC / GEORGE M. WARE/LARC / J. W. BALL / G. G. MCDONALD / -DMS	DMS-DR-2224 MARCH, 1978
AEDC - HWTB - VA352 / OH&C CR-141,505	PHASE CHANGE PAINT TESTS TO INVESTIGATE EFFECTS OF TPS TILES ON HEATING RATES OF THE ROCKWELL SPACE SHUTTLE ORBITER (TEST OH&C, MODEL 21-0)	MODEL 21-0, LINES VL70-000139	TO EVALUATE AERODYNAMIC HEATING EFFECTS OF TILES IN THE TPS. TILE GAP DEPTH AND ORIENTATION TO THE FLOW WERE INVESTIGATED.	HEAT-TRANS	0.0175 / 8 - 8	RI / AEDC - HYPERSONIC WIND TUNNEL (B)	M. OUAN, C. W. CRAIG/RI / D. A. SARVER / M. M. MOSER JR. / -DMS	DMS-DR-2225 MARCH, 1975

TEST ID	REPORT TITLE	CONFIGURATIONS TESTED	TEST PURPOSE	TYPE OF TEST	MODEL SCALE MACH RANGE	TESTING AGENCY	COGNIZANT TEST DMS PERSONNEL	BASIC PUBLICATIONS OR COMMENTS
AEDC - SWTA - VA422 / 21AA / IA61B CR-141,507	RESULTS OF FLOW VISUALIZATION TESTS OF 0.010-SCALE SPACE SHUTTLE MODELS 32-OTS AND 52-O IN THE AEDC VKF TUNNEL A (IA 61B)	SPACE SHUTTLE VEHICLE CONFIGURATION 3 MODEL 32-OTS SPACE SHUTTLE ORBITER MODEL 52-O	OIL FLOW VISUALIZATION	FORCE	3.75- 5.03	RI / AEDC - SUPERSONIC WIND TUNNEL (A)	J.J.DAILEDA/ROCKWELL W.R.MARTINDALE/AR O,INC. D. A. SARVER G. G. MCDONALD -DMS	DMS-DR-2226 FEB., 1975
MSFC - 14TWT - 610 / IA71 CR-141,806	RESULTS OF EXPERIMENTAL TESTS IN THE MSFC 14X14 INCH TRISONIC TUNNEL ON A .004 SCALE MODEL SPACE SHUTTLE INTEGRATED VEHICLE 5 (MODEL 77-0, 74-TS) TO RELIEVE WING LOADS DURING ASCENT (IA71)	ORB /W/ET AND SRB 74OTS; ORB. W/ET AND SRB'S 770, 74TS	EFFECTIVENESS OF SEVERAL LOAD RELIEF SCHEMES ON WING TORSIONAL AND BENDING MOMENTS AT SUBSONIC + SUPERSONIC MACH NO'S ENCOUNTERED DURING LAUNCH	FORCE	0.0040 / 0.60 - 1.96	RI / MSFC - 14-INCH TRISONIC WIND TUNNEL	E C. ALLEN/R. I. D.B. WATSON -DMS	DMS-DR-2227 NOV., 1975
LARC - UPWT - 1092/1117/ 1117 / LA45A/B				FORCE		LARC / LARC - UNITARY PLAN WIND TUNNEL	D.B. WATSON -DMS	DMS-DR-2228 TO LRC
LARC - 8TPT - 687 / OA102 CR-141,508	RESULTS OF FLOW-VISUALIZATION INVESTIGATIONS ON A 0.015-SCALE MODIFIED CONFIGURATION 140A/B SPACE SHUTTLE VEHICLE ORBITER (MODEL 36-0) IN THE LANGLEY RESEARCH CENTER	SSV 140A/B	TO DETERMINE SEPARATION ZONES, FLOW-RECIRCULATION REGIONS, AND POTENTIAL VENTING AND CONTAMINANT-INGESTION PROBLEM AREAS	FORCE	0.015 / 0.6 - 1.2	ROCKWELL/ LARC - 8-FOOT TRANSONIC PRESSURE TUNNEL	M. E. NICHOLS/RI D. A. SARVER G. G. MCDONALD -DMS	DMS-DR-2229 FEB., 1975

TEST NO	REPORT TITLE	CONFIGURATIONS TESTED	TEST PURPOSE	TYPE OF TEST	MODEL SCALE MACH RANGE	TESTING AGENCY	COGNIZANT TEST DMS PERSONNEL	BASIC PUBLICATIONS OR COMMENTS
AEDC MA*B VA422 IA178 CR-141,509	- RESULTS OF OIL FL / SUALIZATIONS / TESTS OF AN 0.01 0-SCALE MODEL (52 -OTS) OF THE SPACE SHUTTLE ORBITER-TANK MATED AND ORBITER CONFIGURATI ONS IN THE AEDC / VF TUNNEL B (IA17 B	ORBITER-TANK MATE D. MODEL 52-OT	TO INVESTIGATE AE ROCYNAMIC FLOW PA TTERNS USING OIL FLOW TECHNIQUES	FORCE	0.010 / 7.95 - 7.95	ROCKWELL/ AEDC - HYPERSONIC WIN D TUNNEL (B)	J. J. DAILEDA/R: D. A. SARVER G. G. MCDONALD -DMS	DMS-DR-2230 FEB., 1975
ARC 97SWT 044 IA828 CR-144,601	- RESULTS OF AN INV / ESTIGATION OF JET / PLUME EFFECTS ON AN 0.010-SCALE MODEL (75-OTS) OF THE SPACE SHUTTL E INTEGRATED VEHI CLE IN THE 9- BY 7-FOOT LEG OF THE NASA/AMES UNITAR Y WIND TUNNEL (IA B20)	LAUNCH VEHICLE 5	DEFINE THE BASE P RESSURE ENVIRONME NT OF THE FIRST A ND SECOND STAGE MATED VEHICLE IN A SUPERSONIC FLOW FIELD FROM MACH 1.55 THROUGH 2.20	FORCE PRESSURE	0.010 / 1.55 - 2.20	ROCKWELL/ ARC - 9-FOOT BY 7-FO OT SUPERSONIC WIND TUNNEL (U NITARY)	P. J. HAWTHORNE/R I M. M. MANN -DMS	DMS-DR-2231 VOLUME 01 APRIL, 1976
ARC 97SWT 044 IA828 CR-144,602	- RESULTS OF AN INV / ESTIGATION OF JET / PLUME EFFECTS ON AN 0.010-SCALE MODEL (75-OTS) OF THE SPACE SHUTTL E INTEGRATED VEHI CLE IN THE 9- BY 7-FOOT LEG OF THE NASA/AMES UNITAR Y WIND TUNNEL (IA B20)	LAUNCH VEHICLE 5	DEFINE THE BASE P RESSURE ENVIRONME NT OF THE FIRST A ND SECOND STAGE MATED VEHICLE IN A SUPERSONIC FLOW FIELD FROM MACH 1.55 THROUGH 2.20	FORCE PRESSURE	0.010 / 1.55 - 2.20	ROCKWELL/ ARC - 9-FOOT BY 7-FO OT SUPERSONIC WIND TUNNEL (U NITARY)	P. J. HAWTHORNE/R I M. M. MANN -DMS	DMS-DR-2231 VOLUME 02 APRIL, 1976

TEST ID	REPORT TITLE	CONFIGURATIONS TESTED	TEST PURPOSE	TYPE OF TEST	MODEL SCALE MACH RANGE	TESTING AGENCY	COGNIZANT TEST DMS PERSONNEL	BASIC PUBLICATIONS OR COMMENTS
MSFC - 14"W 607 / OA131 CR-141,521	RESULTS OF INVESTIGATIONS ON THE 0.04-SCALE MODEL 74-0 OF THE CONFIGURATION 4 (MODIFIED SPACE SHUTTLE VEHICLE ORBITER IN THE NASA/MSFC 14-BY-14-INCH TRANSONIC WIND TUNNEL (OA131)	MODEL 74-0, CONF.	TO DETERMINE BOUNDARY-LAYER SEPARATION AND REGIONS OF POTENTIAL APU EXHAUST RECIRCULATION DURING TRANSONIC AND LOW SUPERSONIC RE-ENTRY FLIGHT	FORCE	0.004 - 0.60 / 2.75	ROCKWELL/MSFC - 14-INCH TRISONIC WIND TUNNEL	M. E. NICHOLS/RI D. A. SARVER M. M. MOSER JR. -DMS	DMS-DR-2232 JUNE, 1975
LARC BTPT 703 / LA59 CR-151,058	RESULTS OF A DRAG REDUCTION INVESTIGATION ON AN 0.0015-SCALE MODEL OF THE SPACE SHUTTLE VEHICLE 72-OTS LAUNCH CONFIGURATION TESTED IN THE LARC 8-FOOT TRANSONIC PRESSURE TUNNEL FOR THE MACH RANGE OF 0.3K TO 1.20	72-OTS (B26C9E44F 1CFL10/11M16N28/8 6PS1-SR5521T2,VBW 116	TO DETERMINE EFFECTS OF VARIOUS CONFIGURATIONAL COMPONENTS ON TOTAL DRAG OF VEH. 5	FORCE	0.35 - 1.20	LARC / LARC - 8-FOOT TRANSONIC PRESSURE TUNNEL	B. SPENCER, JR., G. M. WARE/LARC J. E. VAUGHN M. M. MOSER JR. -DMS	DMS-DR-2233 JUNE, 1977
CALSPAN 48HST 184-220 / OA113 CR-141,547	WIND TUNNEL TEST OA113 OF THE 0.01-SCALE SPACE SHUTTLE ORBITER MODEL 51-0 IN THE CALSPAN HYPERSONIC SHOCK TUNNEL (48-INCH LEG)	ORBITER WITH ELEVON AND BODY FLAP DEFLECTIONS	OBTAIN VISCOUS INTERACTION EFFECTS ON STABILITY DERIVATIVES OVER THE RE-ENTRY MACH SPECTRUM TOGETHER WITH SCHLIEREN PHOTOS AND PRESSURE DATA UTILIZED TO EVALUATE FLOW SEPARATION PHENOMENA	FORCE	0.010 - 10.0 / 16.0	ROCKWELL/CALSPAN - 48-INCH HYPERSONIC SHOCK TUNNEL	RICK BURROWS, JOHN MARROQUIN/R.I. C. E. ROGERS/CALSPAN CORP. D. A. SARVER J. E. VAUGHN -DMS	DMS-DR-2234 JULY, 1975

TEST ID	REPORT TITLE	CONFIGURATIONS TESTED	TEST PURPOSE	TYPE OF TEST	MODEL SCALE MACH RANGE	TESTING AGENCY	COGNIZANT TEST DMS PERSONNEL	BASIC PUBLICATIONS OR COMMENTS
MSFC - 14TWT - 611 / SA30F CR-141,810	REENTRY AERODYNAMIC FORCES AND MOMENTS ON THE ENGINE NOZZLE OF THE 146-INCH SOLID ROCKET BOOSTER MODEL 473 IN MSFC 14 X 14 INCH TRISONIC WIND TUNNEL (SA30F)	SRB W/O HEAT SHIELD, W/HEAT SHIELD ON SKIRT, W/HEAT SHIELD ON NOZZLE	TO DETERMINE AERODYNAMIC FORCES AND MOMENTS IMPOSED ON SRB NOZZLE DURING REENTRY	FORCE	1.95 - 3.48	MSFC / MSFC - 14-INCH TRISONIC WIND TUNNEL	J. D. JOHNSON/MSFC W. F. BRADDOCK/NS V. W. SPARKS M. M. MOSER JR. -DMS	DMS-DR-2235 NOV., 1975
UW - LSWT - 1146 / CA11 CR-141,835	MATED AERODYNAMIC CHARACTERISTICS INVESTIGATION FOR 0.04-SCALE MODEL BOEING 747 CAM/EXTERNAL TANK (MODEL AX1284 E-5) COMBINATION IN THE UNIVERSITY OF WASHINGTON AERONAUTICAL LABORATORY F. K. KIRSTEN WIND TUNNEL (CA11)	BOEING 747 MATED WITH AN EXTERNAL TANK BOEING 747 ALONE	TO DETERMINE AIRLOADS FOR SELECTED CONFIGURATIONS AND DETERMINE EFFECTIVENESS OF ET POSITION, ET INCIDENCE, SUPPORT STRUCTURE AND 747 VERTICAL STABILIZING SURFACES ON STABILITY, CONTROL AND PERFORMANCE OF 747/ET COMBINATIONS	FORCE	0.04 / .15 - .15	BOEING / UW - LOW SPEED WIND TUNNEL	R.D.KNUDSEN/BOEING G R.W.SENDER/BOEING D. A. SARVER W. B. MEINDERS -DMS	DMS-DR-2236 DEC., 1975
CALSPAN - 48HST - 184-120 / OA93 CR-141,847	RESULTS OF WIND TUNNEL RCS INTERACTION TESTS ON A 0.010-SCALE SPACE SHUTTLE ORBITER MODEL (51-0) IN THE CALSPAN CORPORATION 48-INCH HYPERSONIC SHOCK TUNNEL	51-0	TO DETERMINE EFFECTS OF RCS JET/FLOW FIELD INTERACTIONS ON SSV AERO. STABILITY AND CONTROL CHARACTERISTICS AT VARIOUS HYPERSONIC MACH AND REYNOLDS NUMBERS	FORCE	0.010 / 9.60 - 10.75	ROCKWELL/ CALSPAN - 48-INCH HYPERSONIC SHOCK TUNNEL	J. J. DAILEDA, J. MARROQUIN/RI C. E. ROGERS/CALSPAN CORP. V. W. SPARKS V. W. SPARKS -DMS	DMS-DR-2238 NOV., 1976

TEST ID	REPORT TITLE	CONFIGURATIONS TESTED	TEST PURPOSE	TYPE OF TEST	MODEL SCALE MACH RANGE	TESTING AGENCY	COGNIZANT TEST DMS PERSONNEL	BASIC PUBLICATIONS OR COMMENTS
LARC - BTPT - 675 / LA398				FORCE		LARC / LARC - 8-FOOT TRANSON IC PRESSURE TUNNEL	J. E. VAUGHN D.B. WATSON -DMS	DMS-DR-2239 TO LRC
AEDC - SWTA - A4A / IH41A CR-151,054	RESULTS OF AN INVESTIGATION OF THE SPACE SHUTTLE INTEGRATED VEHICLE AERODYNAMIC HEATING CHARACTERISTICS OBTAINED USING THE 0.0175-SCALE MODEL 60-OTS IN THE AEDC TUNNEL A DURING TESTS IH41 AND IH41A	60-OTS THERMOCOUPLE MODEL	TO OBTAIN HEAT TRANSFER DATA ON SS INTEGRATED VEHICLE DURING ASCENT OF FLIGHT PROFILE	HEAT-TRANS	2.5 - 4.5	ROCKWELL/ AEDC - SUPERSONIC WIND TUNNEL (A)	J. W. CUMMINGS, W. H. DYE/RI D. A. SARVER M. M. MANN -DMS	DMS-DR-2240 APRIL, 1977
AEDC - HWTB - 74A / OH39 CR-160,490	AN INVESTIGATION OF ENTRY HEATING ON THE 0.0175 SCALE SPACE SHUTTLE ORBITER (MODEL 60-0) IN THE AEDC UKF TUNNEL B	MODEL 60-3, VEH. 4	TO INVESTIGATE ENTRY HEATING	HEAT-TRANS	0.0175 / 8.0 -	ROCKWELL/ AEDC - HYPERSONIC WIND TUNNEL (B)	B. J. HERRERA/RI J. E. VAUGHN G. R. LUTZ -DMS	DMS-DR-2241 VOLUME 01 JULY, 1980
AEDC - HWTB - 74A / OH39 CR-160,491	AN INVESTIGATION OF ENTRY HEATING ON THE 0.0175 SCALE SPACE SHUTTLE ORBITER (MODEL 60-0) IN THE AEDC UKF TUNNEL B	MODEL 60-3, VEH. 4	TO INVESTIGATE ENTRY HEATING	HEAT-TRANS	0.0175 / 8.0 -	ROCKWELL/ AEDC - HYPERSONIC WIND TUNNEL (B)	B. J. HERRERA/RI J. E. VAUGHN G. R. LUTZ -DMS	DMS-DR-2241 VOLUME 02 JULY, 1980

WIND TUNNEL TEST / DMS DATA PROCESSING

TEST ID	REPORT TITLE	CONFIGURATIONS TESTED	TEST PURPOSE	TYPE OF TEST	MODEL SCALE / MACH RANGE	TESTING AGENCY	COGNIZANT TEST DMS PERSONNEL	BASIC PUBLICATIONS OR COMMENTS
AEDC HWTB 74A OH39 CR-160,492	AN INVESTIGATION OF ENTRY HEATING ON THE 0.0175 SCALE SPACE SHUTTLE ORBITER (MODEL 60-0) IN THE AEDC U KF TUNNEL B	MODEL 60-3, VEH.	TO INVESTIGATE ENTRY HEATING	HEAT-TRANS	0.0175 / 8.0	ROCKWELL/ AEDC HYPERSONIC WIND TUNNEL (B)	B. J. HERRERA/RI J. E. VAUGHN G. R. LUTZ -DMS	DMS-DR-2241 VOLUME 03 JULY, 1980
AEDC HWTB 74A OH39 CR-160,493	AN INVESTIGATION OF ENTRY HEATING ON THE 0.0175 SCALE SPACE SHUTTLE ORBITER (MODEL 60-0) IN THE AEDC U KF TUNNEL B	MODEL 60-3, VEH.	TO INVESTIGATE ENTRY HEATING	HEAT-TRANS	0.0175 / 8.0	ROCKWELL/ AEDC HYPERSONIC WIND TUNNEL (B)	B. J. HERRERA/RI J. E. VAUGHN G. R. LUTZ -DMS	DMS-DR-2241 VOLUME 04 JULY, 1980
AEDC SWTA A3A IA111 CR-141,831	AERODYNAMIC RESULTS OF A SEPARATION EFFECTS TEST ON A 0.010-SCALE MODEL (52-OTS) OF THE INTEGRATED SSV IN THE AEDC/VKF 40-BY-40 INCH SUPERSONIC WIND TUNNEL A (IA111)	52-OTS	TO OBTAIN DATA WITH THE SRB IN PROXIMITY TO THE O/E T OVER A LARGE OIET INITIAL ANGLE OF ATTACK AND SIDESLIP	FORCE	0.010 / 4.5	ROCKWELL/ AEDC SUPERSONIC WIND TUNNEL (A)	E. CHEE/RI R. BURT/ARO J. E. VAUGHN M. M. MOSER JR. -DMS	DMS-DR-2242 VOLUME 01 MARCH, 1976
AEDC SWTA A3A IA111 CR-144,588	AERODYNAMIC RESULTS OF A SEPARATION EFFECTS TEST ON A 0.010-SCALE MODEL (52-OTS) OF THE INTEGRATED SSV IN THE AEDC/VKF 40-BY-40 INCH SUPERSONIC WIND TUNNEL A (IA111)	52-OTS	TO OBTAIN DATA WITH THE SRB IN PROXIMITY TO THE O/E T OVER A LARGE OIET INITIAL ANGLE OF ATTACK AND SIDESLIP	FORCE	0.010 / 4.5	ROCKWELL/ AEDC SUPERSONIC WIND TUNNEL (A)	E. CHEE/RI R. BURT/ARO J. E. VAUGHN M. M. MOSER JR. -DMS	DMS-DR-2242 VOLUME 02 MARCH, 1976

TEST ID	REPORT TITLE	CONFIGURATIONS TESTED	TEST PURPOSE	TYPE OF TEST	MODEL SCALE MACH RANGE	TESTING AGENCY	COGNIZANT TEST DMS PERSONNEL	BASIC PUBLICATIONS OR COMMENTS
ARC 14-TWT 080 CA23A CR-144,583	RESULTS OF AN AERODYNAMIC INVESTIGATION OF A SPACE SHUTTLE ORBITER/747 CARRIER VEHICLE CONFIGURATION TO ESTABLISH A FREE-STREAM DATA BASE FOR ALT SEPARATION INVESTIGATION UTILIZING A 0.0125-SCALE MODEL IN THE ARC 14-FOOT WIND TUNNEL (CA23A)	MODEL 48-O/AX(318) 0.0125 SCALE	FORCE AND MOMENT DATA WERE OBTAINED FOR THE CARRIER AND ORBITER SEPARATELY AND MATED FOR PRE-LAUNCH AND FREE AIR DATA BASE FOR PLANNED SEPARATION TESTS OF THE CARRIER ALT CONFIGURATION.	FORCE	0.0125 / 0.3 - 0.7	ROCKWELL/ ARC - 14-FOOT TRANSONIC WIND TUNNEL	J. E. VAUGHN R. H. LINDAHL -DMS	DMS-DR-2243 JAN., 1976
MSFC 14TWT 603 SA28F CR-151,082	AN INVESTIGATION TO DETERMINE THE STATIC PRESSURE DISTRIBUTION OF THE 0.00948 SCALE SPACE SHUTTLE SOLID ROCKET BOOSTER (MSFC MODEL NUMBER R 468) DURING REENTRY IN THE NASA/MSFC 14 INCH TRISONIC WIND TUNNEL	146-INCH WITH AND WITHOUT PROTUBERANCES	TO OBTAIN STATIC PRESSURE DISTRIBUTIONS FOR THE SRB AT REENTRY ATTITUDES AND FLIGHT CONDITIONS	PRESSURE	.40 - .45	MSFC / MSFC - 14-INCH TRISONIC WIND TUNNEL	W. F. BRADDOCK, G. D. STREBY/NSI V. W. SPARKS M. M. MOSER JR. -DMS	DMS-DR-2244 AUGUST, 1977

TEST ID	REPORT TITLE	CONFIGURATIONS TESTED	TEST PURPOSE	TYPE OF TEST	MODEL SCALE MACH RANGE	TESTING AGENCY	COGNIZANT TEST DMS PERSONNEL	BASIC PUBLICATIONS OR COMMENTS
ARC - 11.97.87-094 / OA161A/B/C CR-147.618	RESULTS OF AN INVESTIGATION TO DETERMINE LOCAL FLOW CHARACTERISTICS AT THE AIR DATA PROBE LOCATIONS USING AN 0.030-SCALE MODEL (45-0) OF THE SPACE SHUTTLE VEHICLE ORBITER CONFIGURATION 140 A/B (MODIFIED) IN THE NASA AMES RESEARCH CENTER UNITARY PLAN WIND TUNNEL ( )	SPACE SHUTTLE VEHICLE ORBITER 140A / B (MODIFIED)	TO DETERMINE LOCAL TOTAL AND STATIC PRESSURE ENVIRONMENTS FOR THE AIR DATA PROBE LOCATIONS AND RELATIVE EFFECTIVENESS OF ALTERNATE FLIGHT TEST PROBE CONFIGURATIONS	FORCE	0.030 / 0.30 - 3.5	ROCKWELL/ ARC - 11-FOOT, 9-FOOT, 8-FOOT, UNITARY WIND TUNNEL	M.R.NICHOLS / R.I. J.C.MONFORT / ARC D.W.HERSEY W. B. MEINDERS -DMS	DMS-DR-2245 VOLUME 01 SEPT., 1976
ARC - 11.97.87-094 / OA161A/B/C CR-147.619	RESULTS OF AN INVESTIGATION TO DETERMINE LOCAL FLOW CHARACTERISTICS AT THE AIR DATA PROBE LOCATIONS USING AN 0.030-SCALE MODEL (45-0) OF THE SPACE SHUTTLE VEHICLE ORBITER CONFIGURATION 140 A/B (MODIFIED) IN THE NASA AMES RESEARCH CENTER UNITARY PLAN WIND TUNNEL ( )	SPACE SHUTTLE VEHICLE ORBITER 140A / B (MODIFIED)	TO DETERMINE LOCAL TOTAL AND STATIC PRESSURE ENVIRONMENTS FOR THE AIR DATA PROBE LOCATIONS AND RELATIVE EFFECTIVENESS OF ALTERNATE FLIGHT TEST PROBE CONFIGURATIONS	FORCE	0.030 / 0.30 - 3.5	ROCKWELL/ ARC - 11-FOOT, 9-FOOT, 8-FOOT, UNITARY WIND TUNNEL	M.R.NICHOLS / R.I. J.C.MONFORT / ARC D.W.HERSEY W. B. MEINDERS -DMS	DMS-DR-2245 VOLUME 02 OCT., 1976

TEST ID	REPORT TITLE	CONFIGURATIONS TESTED	TEST PURPOSE	TYPE OF TEST	MODEL SCALE MACH RANGE	TESTING AGENCY	COGNIZANT TEST DMS PERSONNEL	BASIC PUBLICATIONS OR COMMENTS
ARC 12PT 086 LA65 CR-144,600	LOW SUBSONIC AERODYNAMIC CHARACTERISTICS OF FIVE IRREGULAR PLANFORM WINGS WITH SYSTEMATICALLY VARYING WING FILLET GEOMETRY TESTED IN THE NASA/AMES 12-FOOT PRESSURE TUNNEL (LA65)	WING-BODY WITH VARIATIONS	EFFECT OF PLANFORM ON FORCE + MOMENT CHARACTERISTICS AS A FUNCTION OF RN/L	FORCE	.08 - .30	LARC / ARC - 12-FOOT PRESSURE TUNNEL	GEORGE WARE/NASA LANGLEY BERNARD SPENCER/NASA LANGLEY D.B. WATSON -DMS	DMS-DR-2246 JULY, 1976
AEDC HWTF 28A 0A160 CR-141,834	RESULTS OF AN INVESTIGATION OF HYPERSONIC VISCOUS INTERACTION EFFECTS OF THE SPACE SHUTTLE ORBITER USING A 0.01/ SCALE MODEL (51-0) IN THE AEDC-VKF TUNNEL F	MODEL 51-0 OF MODIFIED VEH. 4 ORB. (826 C9 E26 F7 M7 N28 R5 V8 W116)	TO DETERMINE HYPERSONIC VISCOUS INTERACTION EFFECTS	FORCE	0.010 / 19 - 19	ROCKWELL/ AEDC - HYPERVELOCITY WIND TUNNEL (F)	D. J. ELDER/RI J. E. VAUGHN -DMS	DMS-DR-2247 JAN., 1976
ARC 3.5HWT 211 1H48 CR-144,599	RESULTS OF HEAT TRANSFER TESTS OF A 0.0175-SCALE SPACE SHUTTLE VEHICLE 5 MODEL 160-OTS) IN THE NASA-AMES RESEARCH CENTER 3.5-FOOT HYPERSONIC WIND TUNNEL (TEST 1H48)	60 OTS SPACE SHUTTLE VEHICLE 5	TO OBTAIN AERODYNAMIC INTERFERENCE HEATING DATA ON THE EXTERNAL TANK IN THE TANK ALONE, SECOND-, AND FIRST-STAGE CONFIGURATIONS	HEAT-TRANS	0.0175 / 5.2 - 5.3	ROCKWELL/ ARC - 3.5-FOOT HYPERSONIC WIND TUNNEL	W. H. DYE/RI W. K. LOCKMAN/ARC R. B. LOWE -DMS	DMS-DR-2248 APRIL, 1976

TEST ID	REPORT TITLE	CONFIGURATIONS TESTED	TEST PURPOSE	TYPE OF TEST	MODEL SCALE MACH RANGE	TESTING AGENCY	COGNIZANT TEST DMS PERSONNEL	BASIC PUBLICATIONS OR COMMENTS
CALSPAN - 48HST - 185-131 / 96HST - 1H33 CR-151,775	RESULTS OF SPACE SHUTTLE HEAT TRANSFER TESTS USING A 0.01-SCALE MODEL (37-OT) IN THE CALSPAN HYPERSONIC SHOCK TUNNEL (TEST 1H33)	37-OT SPACE SHUTTLE ORBITER/EXTERNAL TANK - .01 SCALE	TO DETERMINE, AT HIGH MACH NUMBERS, (1) AERODYNAMIC HEATING RATES ON THE ORBITER/TANK INTERFACE AND SUPPORT STRUCTURE AND (2) THE HEATING EFFECT OF A BLUNT NOSE CAP ON THE EXTERNAL TANK NOSE SECTION.	HEAT-TRANS	.01 - 5.5 / 5.5 - 24.0	ROCKWELL/ CALSPAN - 48-INCH HYPERSONIC SHOCK TUNNEL / 96-INCH HYPERSONIC SHOCK TUNNEL	H.R. BRUES LE/RI C.E. WITTLIFF/CALSPAN J. E. VAUGHN -DMS	DMS-DR-2249 JUNE, 1979
ARC 3.5HWT 182 / 1H43 CR-141,539	RESULTS OF CONVECTIVE HEATING TESTS OF A LONGITUDINAL GAP ON THE ROCKWELL FLAT PLATE MODEL (15-0, INSERT VII) IN THE NASA/AMES 3.5 FOOT HYPERSONIC WIND TUNNEL (TEST 1H43)	15-0 FLAT PLATE MODEL	TO INVESTIGATE AERODYNAMIC HEATING RATES IN TPS GAPS AT VARIOUS DEPTHS, WIDTHS, LENGTHS, AND ORIENTATIONS TO THE FLOW.	HEAT-TRANS	1.0 - 5.1 / 5.1 - 5.1	ROCKWELL/ ARC - 3.5-FOOT HYPERSONIC WIND TUNNEL	M. QUAN/RI W. K. LOCKMAN/ARC M. M. MOSER JR. -DMS	DMS-DR-2250 JULY, 1975
AEDC HWTB VA353 / 0H9 CR-141,540	RESULTS OF TESTS ON A ROCKWELL INTERNATIONAL SPACE SHUTTLE ORBITER (-139 CONFIGURATION) 0.0175-SCALE MODEL (NO. 29-0) IN AEDC TUNNEL B TO DETERMINE BOUNDARY LAYER CHARACTERISTICS	MODEL 29-0/VL70-0 06139	TO DETERMINE BOUNDARY LAYER CHARACTERISTICS OVER A LOWER SURFACE OF AN ORBITER	HEAT-TRANS	8.0 - 8.0	ROCKWELL/ AEDC - HYPERSONIC WIND TUNNEL (B)	M. QUAN/RI W. MARTINDALE/ARO D. A. SARVER D.B. WATSON -DMS	DMS-DR-2251 JUNE, 1975

TEST ID	REPORT TITLE	CONFIGURATIONS TESTED	TEST PURPOSE	TYPE OF TEST	MODEL SCALE MACH RANGE	TESTING AGENCY	COGNIZANT TEST DMS PERSONNEL	BASIC PUBLICATIONS OR COMMENTS
AEDC HWTB 83A OH25A CR-141,546	- HEAT TRANSFER PHA - SE CHANGE PAINT T / ESTS OF 0.0175-SC ALE MODELS (NOS. 21-0 AND 46-0) OF THE ROCKWELL INT ERNATIONAL SPACE SHUTTLE ORBITER I N THE AEDC TUNNEL B HYPERSONIC WIN D TUNNEL (TEST OH 25A)	ORB.; 40) SEMISPA N; BOD FLUSH; LE AD. EDGE; TRANSIT ION SEMISPAN WING	TO INVESTIGATE PL ANFORM AREA REDUC TION CROSSFLOW EF FECTS ON VEHICLE 3 ORBITER CONFIGU RATIONS TO SET TH E OPTIMUM MODELSI ZE FOR LATER TEST S EXAMINING SHOCK -WING LEADING EDG E INTERFERENCE EF FECTS.	HEAT-TRANS	0.0175 6.0 8.0	/ ROCKWELL/ AEDC - HYPERSONIC WIN D TUNNEL (B)	W. H. DYE/R D. A. SARVER M. M. MOSER JR. -DMS	DMS-DR-2252 JULY, 1975
MSFC 14TWT 622 IA125 CR-144,833	- AN INVESTIGATION - IN THE MSFC TNT T / O DETERMINE SPOIL ER EFFECTS ON WIN G LOADS AND ELEVO N HINGE MOMENTS U TILIZING 0.004-SC ALE MODELS (77-0 AND 74-OTS) OF TH E SHUTTLE VEHICLE 5 CONFIGURATION	77-0, 77-OTS	TO EVALUATE MID-S PAN ELEVON FLIPPE R DOOR (USED AS A SPOILER) EFFECTS ON WING BENDING/T ORSION AND ELEVON HINGE MOMENTS DU RING LAUNCH	FORCE	0.004 0.6 2.74	/ ROCKWELL/ MSFC - 14-INCH TRISON IC WIND TUNNEL	V. W. SPARKS -DMS	DMS-DR-2253 JAN., 1976
ARC 11TWT 073 OA148 OA148P CR-144,619	- TERMINAL AREA ENE - RGY MANAGEMENT RE / GIME INVESTIGATIO NS UTILIZING AN 0 .030-SCALE MODEL (47-0) OF THE SPA CE SHUTTLE VEHICL E ORBITER CONFIGU RATION 140A/B/C/R IN THE AMES RESE ARCH CENTER 11 X 11 FOOT TRANSONIC WIND TUNNEL (OA1 48)	VEHICLE 5 ORBITER	TO OBTAIN PRESSUR E DISTRIBUTIONS, VEHICLE FORCES AN D MOMENTS, ELEVON AND RUDDER HINGE MOMENTS, BODY FL AP AND ELEVON LOA DS IN THE TERMINA L AREA ENERGY MAN AGEMENT (TAEM) AN D APPROACH OF FLI GHT	FORCE PRESSURE	0.030 0.6 1.4	/ ROCKWELL/ ARC - 11-FOOT TRANSO NIC WIND TUNNE L (UNITARY)	P.J.HAWTHORNE/ RI S.L.TREON/ W. B. MEINDERS -DMS	DMS-DR-2254 VOLUME 01 JULY, 1976

TEST ID	REPORT TITLE	CONFIGURATIONS TESTED	TEST PURPOSE	TYPE OF TEST	MODEL SCALE MACH RANGE	TESTING AGENCY	COGNIZANT TEST DMS PERSONNEL	BASIC PUBLICATIONS OR COMMENTS
ARC 11TWT 073 OA148 OA148P CR-144,620	TERMINAL AREA ENERGY MANAGEMENT REGIME INVESTIGATIONS UTILIZING AN 0.030 SCALE MODEL (47-0) OF THE SPACE SHUTTLE VEHICLE ORBITER CONFIGURATION 140A/B/C/R IN THE AMES RESEARCH CENTER 11 X 11 FOOT TRANSONIC WIND TUNNEL (OA148)	VEHICLE 5 ORBITER	TO OBTAIN PRESSURE DISTRIBUTIONS, VEHICLE FORCES AND MOMENTS, ELEVON AND RUDDER HINGE MOMENTS, BODY FLAP AND ELEVON LOADS IN THE TERMINAL AREA ENERGY MANAGEMENT (TAEM) AND APPROACH OF FLIGHT	FORCE PRESSURE	0.030 / 0.6 - 1.4	ROCKWELL/ ARC - 11-FOOT TRANSONIC WIND TUNNEL (UNITARY)	P.J.HAWTHORNE/ RI S.L.TREON/ W. B. MEINDERS -DMS	DMS-DR-2254 VOLUME 02 JULY, 1976
ARC 11TWT 073 OA148 OA148P CR-144,621	TERMINAL AREA ENERGY MANAGEMENT REGIME INVESTIGATIONS UTILIZING AN 0.030-SCALE MODEL (47-0) OF THE SPACE SHUTTLE VEHICLE ORBITER CONFIGURATION 140A/B/C/R IN THE AMES RESEARCH CENTER 11 X 11 FOOT TRANSONIC WIND TUNNEL (OA148)	VEHICLE 5 ORBITER	TO OBTAIN PRESSURE DISTRIBUTIONS, VEHICLE FORCES AND MOMENTS, ELEVON AND RUDDER HINGE MOMENTS, BODY FLAP AND ELEVON LOADS IN THE TERMINAL AREA ENERGY MANAGEMENT (TAEM) AND APPROACH OF FLIGHT	FORCE PRESSURE	0.030 / 0.6 - 1.4	ROCKWELL/ ARC - 11-FOOT TRANSONIC WIND TUNNEL (UNITARY)	P.J.HAWTHORNE/ RI S.L.TREON/ W. B. MEINDERS -DMS	DMS-DR-2254 VOLUME 03 JULY, 1976

TEST ID	REPORT TITLE	CONFIGURATIONS TESTED	TEST PURPOSE	TYPE OF TEST	MODEL SCALE MACH RANGE	TESTING AGENCY	COGNIZANT TEST DMS PERSONNEL	BASIC PUBLICATIONS OR COMMENTS
ARC 11TWT 073 OA148 OA148P CR-144,622	TERMINAL AREA ENERGY MANAGEMENT REGIME INVESTIGATIONS UTILIZING AN 0.030-SCALE MODEL (47-0) OF THE SPACE SHUTTLE VEHICLE ORBITER CONFIGURATION 140A/B/C/R IN THE AMES RESEARCH CENTER 11 X 11 FOOT TRANSONIC WIND TUNNEL (OA148)	VEHICLE 5 ORBITER	TO OBTAIN PRESSURE DISTRIBUTIONS, VEHICLE FORCES AND MOMENTS, ELEVON AND RUDDER HINGE MOMENTS, BODY FLAP AND ELEVON LOADS IN THE TERMINAL AREA ENERGY MANAGEMENT (TAEM) AND APPROACH OF FLIGHT	FORCE PRESSURE	0.030 / 0.6 - 1.4	ROCKWELL/ ARC - 11-FOOT TRANSONIC WIND TUNNEL (UNITARY)	P.J.HAWTHORNE/ RI S.L.TREON/ W. B. MEINDERS -DMS	DMS-DR-2254 VOLUME D4 AUGUST, 1976
ARC 11TWT 073 OA148 OA148P CR-144,623	TERMINAL AREA ENERGY MANAGEMENT REGIME INVESTIGATIONS UTILIZING AN 0.030-SCALE MODEL (47-0) OF THE SPACE SHUTTLE VEHICLE ORBITER CONFIGURATION 140A/B/C/R IN THE AMES RESEARCH CENTER 11 X 11 FOOT TRANSONIC WIND TUNNEL (OA148)	VEHICLE 5 ORBITER	TO OBTAIN PRESSURE DISTRIBUTIONS, VEHICLE FORCES AND MOMENTS, ELEVON AND RUDDER HINGE MOMENTS, BODY FLAP AND ELEVON LOADS IN THE TERMINAL AREA ENERGY MANAGEMENT (TAEM) AND APPROACH OF FLIGHT	FORCE PRESSURE	0.030 / 0.6 - 1.4	ROCKWELL/ ARC - 11-FOOT TRANSONIC WIND TUNNEL (UNITARY)	P.J.HAWTHORNE/ RI S.L.TREON/ W. B. MEINDERS -DMS	DMS-DR-2254 VOLUME 05 AUGUST, 1976

TEST ID	REPORT TITLE	CONFIGURATIONS TESTED	TEST PURPOSE	TYPE OF TEST	MODEL SCALE MACH RANGE	TESTING AGENCY	COGNIZANT TEST DMS PERSONNEL	BASIC PUBLICATIONS OR COMMENTS
ARC - 11TWT - 073 / OA148 OA148P CR-144,624	TERMINAL AREA ENERGY MANAGEMENT REGIME INVESTIGATIONS UTILIZING AN 0.030-SCALE MODEL (47-0) OF THE SPACE SHUTTLE VEHICLE ORBITER CONFIGURATION 140A/B/C/R IN THE AMES RESEARCH CENTER 11 X 11 FOOT TRANSONIC WIND TUNNEL (OA148)	VEHICLE 5 ORBITER	TO OBTAIN PRESSURE DISTRIBUTIONS, VEHICLE FORCES AND MOMENTS, ELEVON AND RUDDER HINGE MOMENTS, BODY FLAP AND ELEVON LOADS IN THE TERMINAL AREA ENERGY MANAGEMENT (TAEM) AND APPROACH OF FLIGHT	FORCE PRESSURE	0.030 / 0.6 - 1.4	ROCKWELL/ ARC - 11-FOOT TRANSONIC WIND TUNNEL (UNITARY)	P.J.HAWTHORNE/ RI S.L.TREON/ W. B. MEINDERS -DMS	DMS-DR-2254 VOLUME 06 AUGUST, 1976
ARC - 11TWT - 073 / OA148 OA148P CR-144,625	TERMINAL AREA ENERGY MANAGEMENT REGIME INVESTIGATIONS UTILIZING AN 0.030-SCALE MODEL (47-0) OF THE SPACE SHUTTLE VEHICLE ORBITER CONFIGURATION 140A/B/C/R IN THE AMES RESEARCH CENTER 11 X 11 FOOT TRANSONIC WIND TUNNEL (OA148)	VEHICLE 5 ORBITER	TO OBTAIN PRESSURE DISTRIBUTIONS, VEHICLE FORCES AND MOMENTS, ELEVON AND RUDDER HINGE MOMENTS, BODY FLAP AND ELEVON LOADS IN THE TERMINAL AREA ENERGY MANAGEMENT (TAEM) AND APPROACH OF FLIGHT	FORCE PRESSURE	0.030 / 0.6 - 1.4	ROCKWELL/ ARC - 11-FOOT TRANSONIC WIND TUNNEL (UNITARY)	P.J.HAWTHORNE/ RI S.L.TREON/ W. B. MEINDERS -DMS	DMS-DR-2254 VOLUME 07 AUGUST, 1976

TEST ID	REPORT TITLE	CONFIGURATIONS TESTED	TEST PURPOSE	TYPE OF TEST	MODEL SCALE MACH RANGE	TESTING AGENCY	COGNIZANT TEST DMS PERSONNEL	BASIC PUBLICATIONS OR COMMENTS
ARC 11TWT 073 OA148 OA148P CR-144,626	TERMINAL AREA ENERGY MANAGEMENT REGIME INVESTIGATIONS UTILIZING AN 0.030-SCALE MODEL 147-0) OF THE SPACE SHUTTLE VEHICLE ORBITER CONFIGURATION 140A/B/C/R IN THE AMES RESEARCH CENTER 11 X 11 FOOT TRANSONIC WIND TUNNEL (OA148)	VEHICLE 5 ORBITER	TO OBTAIN PRESSURE DISTRIBUTIONS, VEHICLE FORCES AND MOMENTS, ELEVON AND RUDDER HINGE MOMENTS, BODY FLAP AND ELEVON LOADS IN THE TERMINAL AREA ENERGY MANAGEMENT (TAEM) AND APPROACH OF FLIGHT	FORCE PRESSURE	0.030 / 0.6 - 1.4	ROCKWELL/ ARC - 11-FOOT TRANSONIC WIND TUNNEL (UNITARY)	P.J.HAWTHORNE/ RI S.L.TREON/ W. B. MEINDERS -DMS	DMS-DR-2254 VOLUME 08 AUGUST, 1976
ARC 11TWT 073 OA148 OA148P CR-144,627	TERMINAL AREA ENERGY MANAGEMENT REGIME INVESTIGATIONS UTILIZING AN 0.030-SCALE MODEL 147-0) OF THE SPACE SHUTTLE VEHICLE ORBITER CONFIGURATION 140A/B/C/R IN THE AMES RESEARCH CENTER 11 X 11 FOOT TRANSONIC WIND TUNNEL (OA148)	VEHICLE 5 ORBITER	TO OBTAIN PRESSURE DISTRIBUTIONS, VEHICLE FORCES AND MOMENTS, ELEVON AND RUDDER HINGE MOMENTS, BODY FLAP AND ELEVON LOADS IN THE TERMINAL AREA ENERGY MANAGEMENT (TAEM) AND APPROACH OF FLIGHT	FORCE PRESSURE	0.030 / 0.6 - 1.4	ROCKWELL/ ARC - 11-FOOT TRANSONIC WIND TUNNEL (UNITARY)	P.J.HAWTHORNE/ RI S.L.TREON/ W. B. MEINDERS -DMS	DMS-DR-2254 VOLUME 09 SEPT., 1976

TEST ID	REPORT TITLE	CONFIGURATIONS TESTED	TEST PURPOSE	TYPE OF TEST	MODEL SCALE MACH RANGE	TESTING AGENCY	COGNIZANT TEST DMS PERSONNEL	BASIC PUBLICATIONS OR COMMENTS
ARC 11TWT 073 OA148 OA148P CR-144,628	TERMINAL AREA ENERGY MANAGEMENT REGIME INVESTIGATIONS UTILIZING AN 0.030-SCALE MODEL (147-0) OF THE SPACE SHUTTLE VEHICLE ORBITER CONFIGURATION 140A/B/C/R IN THE AMES RESEARCH CENTER 11 X 11 FOOT TRANSONIC WIND TUNNEL (OA148)	VEHICLE 5 ORBITER	TO OBTAIN PRESSURE DISTRIBUTIONS, VEHICLE FORCES AND MOMENTS, ELEVON AND RUDDER HINGE MOMENTS, BODY FLAP AND ELEVON LOADS IN THE TERMINAL AREA ENERGY MANAGEMENT (TAEM) AND APPROACH OF FLIGHT	FORCE PRESSURE	0.030 / 0.6 - 1.4	ROCKWELL/ ARC - 11-FOOT TRANSONIC WIND TUNNEL (UNITARY)	P.J.HAWTHORNE/ S.L.TREON/ W. B. MEINDERS -DMS	RI DMS-DR-2254 VOLUME 10 SEPT., 1976
ARC 11TWT 073 OA148 OA148P CR-147,601	TERMINAL AREA ENERGY MANAGEMENT REGIME INVESTIGATIONS UTILIZING AN 0.030-SCALE MODEL (147-0) OF THE SPACE SHUTTLE VEHICLE ORBITER CONFIGURATION 140A/B/C/R IN THE AMES RESEARCH CENTER 11 X 11 FOOT TRANSONIC WIND TUNNEL (OA148)	VEHICLE 5 ORBITER	TO OBTAIN PRESSURE DISTRIBUTIONS, VEHICLE FORCES AND MOMENTS, ELEVON AND RUDDER HINGE MOMENTS, BODY FLAP AND ELEVON LOADS IN THE TERMINAL AREA ENERGY MANAGEMENT (TAEM) AND APPROACH OF FLIGHT	FORCE PRESSURE	0.030 / 0.6 - 1.4	ROCKWELL/ ARC - 11-FOOT TRANSONIC WIND TUNNEL (UNITARY)	P.J.HAWTHORNE/ S.L.TREON/ W. B. MEINDERS -DMS	RI DMS-DR-2254 VOLUME 11 SEPT., 1976

TEST ID	REPORT TITLE	CONFIGURATIONS TESTED	TEST PURPOSE	TYPE OF TEST	MODEL SCALE MACH RANGE	TESTING AGENCY	COGNIZANT TEST DMS PERSONNEL	BASIC PUBLICATIONS OR COMMENTS
ARC 11TWT 073 OA148 OA148P CR-147,602	TERMINAL AREA ENERGY MANAGEMENT REQUIREMENTS UTILIZING AN 0.030-SCALE MODEL (147-0) OF THE SPACE SHUTTLE VEHICLE ORBITER CONFIGURATION 140A/B/C/R IN THE AMES RESEARCH CENTER 11 X 11 FOOT TRANSONIC WIND TUNNEL (OA148)	VEHICLE 5 ORBITER	TO OBTAIN PRESSURE DISTRIBUTIONS, VEHICLE FORCES AND MOMENTS, ELEVON AND RUDDER HINGE MOMENTS, BODY FLAP AND ELEVON LOADS IN THE TERMINAL AREA ENERGY MANAGEMENT (TAEM) AND APPROACH OF FLIGHT	FORCE PRESSURE	0.030 0.6 - 1.4	ROCKWELL/ ARC - 11-FOOT TRANSONIC WIND TUNNEL (UNITARY)	P.J.HAWTHORNE/ RI S.L.TREON/ W. B. MEINDERS -DMS	DMS-DR-2254 VOLUME 12 SEPT., 1976
ARC 11TWT 073 OA148 OA148P CR-147,603	TERMINAL AREA ENERGY MANAGEMENT REQUIREMENTS UTILIZING AN 0.030-SCALE MODEL (147-0) OF THE SPACE SHUTTLE VEHICLE ORBITER CONFIGURATION 140A/B/C/R IN THE AMES RESEARCH CENTER 11 X 11 FOOT TRANSONIC WIND TUNNEL (OA148)	VEHICLE 5 ORBITER	TO OBTAIN PRESSURE DISTRIBUTIONS, VEHICLE FORCES AND MOMENTS, ELEVON AND RUDDER HINGE MOMENTS, BODY FLAP AND ELEVON LOADS IN THE TERMINAL AREA ENERGY MANAGEMENT (TAEM) AND APPROACH OF FLIGHT	FORCE PRESSURE	0.030 0.6 - 1.4	ROCKWELL/ ARC - 11-FOOT TRANSONIC WIND TUNNEL (UNITARY)	P.J.HAWTHORNE/ RI S.L.TREON/ W. B. MEINDERS -DMS	DMS-DR-2254 VOLUME 13 SEPT., 1976
ARC 11TWT 97SWT TM-X 62,444	SHADOWGRAPHS OF AIR FLOW OVER PROSPECTIVE SPACE SHUTTLE CONFIGURATIONS AT MACH NUMBERS FROM 0.8 TO 1.4	SERIES-BURN, PARALLEL-BURN; 2 CANOPY CONFIGURATIONS	TO IDENTIFY AND LOCATE REGIONS OF SIGNIFICANT TURBULENCE	FORCE	4.0 0.8 - 1.4	ARC / ARC - 11-FOOT TRANSONIC WIND TUNNEL (UNITARY) 9-FOOT BY 7-FOOT SUPERSONIC WIND TUNNEL (UNITARY)	J. B. DODS,JR., R. D. HANLY, J. H. EFTING/ARC D.W.HERSEY M. M. MOSER JR. -DMS	DMS-DR-2258 JULY, 1975

TEST ID	REPORT TITLE	CONFIGURATIONS TESTED	TEST PURPOSE	TYPE OF TEST	MODEL SCALE MACH RANGE	TESTING AGENCY	COGNIZANT TEST DMS PERSONNEL	BASIC PUBLICATIONS OR COMMENTS
LARC - 8TPT - 714 / LA69 CR-151,369	RESULTS OF A DRAG REDUCTION INVESTIGATION ON AN 0.010-SCALE MODEL OF THE SPACE SHUTTLE VEHICLE (72-OTS) LAUNCH CONFIGURATION TESTED IN THE LARC 8-FOOT TRANSONIC PRESSURE TUNNEL FOR THE MACH RANGE OF 0.35 TO 1.20	OUTER MOLD LINE MODEL 72-OTS	DETERMINE EFFECTS OF VARIOUS CONFIG. COMPONENTS ON TOTAL DRAG OF VEH. 5: PRIMARY ATTENTION ON DRAG REDUCTION FOR ET AND MODS TO ORB. AND OMS PODS	FORCE	0.010 / 0.35-1.20	LARC / LARC - 8-FOOT TRANSONIC PRESSURE TUNNEL	B. SPENCER, JR., G. M. WARE/LARC J. E. VAUGHN -DMS	DMS-DR-2257 SEPT., 1977
ARC - 11TWT - 072 / 1A72 CR-151,045	INVESTIGATIONS ON A 0.020-SCALE JET PLUME MODEL (88-OTS) OF THE ROCKWELL INTERNATIONAL INTEGRATED SSV CONFIGURATION 14D (MODIFIED) IN THE 11-FOOT TRANSONIC WIND TUNNEL	88-OTS MODIFIED WITH OMS PODS AND COLD AIR MPS AND SRB PLUME SIMULATION	TO DETERMINE WING AND VERTICAL TAIL ROOT BENDING MOMENTS, RUDDER AND ELEVON HINGE MOMENTS, NOZZLE GIMBAL MOMENTS, AND SURFACE PRESSURE PROFILES ON THE ORBITER, ET, SRB; TO DETERMINE ET BASE COOLING RATES.	PRESSURE	0.020 / 0.90 - 1.40	ROCKWELL/ ARC - 11-FOOT TRANSONIC WIND TUNNEL (UNITARY)	R. H. LINDAHL -DMS	DMS-DR-2258 VOLUME 01 APRIL, 1977
ARC - 11TWT - 072 / 1A72 CR-151,046	INVESTIGATIONS ON A 0.020-SCALE JET PLUME MODEL (88-OTS) OF THE ROCKWELL INTERNATIONAL INTEGRATED SSV CONFIGURATION 14D (MODIFIED) IN THE 11-FOOT TRANSONIC WIND TUNNEL	88-OTS MODIFIED WITH OMS PODS AND COLD AIR MPS AND SRB PLUME SIMULATION	TO DETERMINE WING AND VERTICAL TAIL ROOT BENDING MOMENTS, RUDDER AND ELEVON HINGE MOMENTS, NOZZLE GIMBAL MOMENTS, AND SURFACE PRESSURE PROFILES ON THE ORBITER, ET, SRB; TO DETERMINE ET BASE COOLING RATES.	PRESSURE	0.020 / 0.90 - 1.40	ROCKWELL/ ARC - 11-FOOT TRANSONIC WIND TUNNEL (UNITARY)	R. H. LINDAHL -DMS	DMS-DR-2258 VOLUME 02 APRIL, 1977

TEST ID	REPORT TITLE	CONFIGURATIONS TESTED	TEST PURPOSE	TYPE OF TEST	MODEL SCALE MACH RANGE	TESTING AGENCY	COGNIZANT TEST DMS PERSONNEL	BASIC PUBLICATIONS OR COMMENTS
ARC 11TWT 072 1A72 CR-151,047	INVESTIGATIONS ON A 0.020-SCALE JE T PLUME MODEL (88 -OTS) OF THE ROCKWELL INTERNATIONAL INTEGRATED SSV CONFIGURATION 14D (MODIFIED) IN THE 11-FOOT TRANSONIC WIND TUNNEL	88-OTS MODIFIED WITH DMS PODS AND COLD AIR MPS AND SRB PLUME SIMULATION	TO DETERMINE WING AND VERTICAL TAIL ROOT BENDING MOMENTS, RUDDER AND ELEVON HINGE MOMENTS, NOZZLE GIMBAL MOMENTS, AND SURFACE PRESSURE PROFILES ON THE ORBITER, ET, SRB; TO DETERMINE ET BASE COOLING RATES.	PRESSURE	0.020 / 0.90 - 1.40	ROCKWELL/ ARC - 11-FOOT TRANSONIC WIND TUNNEL (UNITARY)	R. H. LINDAHL -DMS	DMS-DR-2258 VOLUME 03 APRIL, 1977
ARC 11TWT 072 1A72 CR-151,048	INVESTIGATIONS ON A 0.020-SCALE JE T PLUME MODEL (88 -OTS) OF THE ROCKWELL INTERNATIONAL INTEGRATED SSV CONFIGURATION 14D (MODIFIED) IN THE 11-FOOT TRANSONIC WIND TUNNEL	88-OTS MODIFIED WITH DMS PODS AND COLD AIR MPS AND SRB PLUME SIMULATION	TO DETERMINE WING AND VERTICAL TAIL ROOT BENDING MOMENTS, RUDDER AND ELEVON HINGE MOMENTS, NOZZLE GIMBAL MOMENTS, AND SURFACE PRESSURE PROFILES ON THE ORBITER, ET, SRB; TO DETERMINE ET BASE COOLING RATES.	PRESSURE	0.020 / 0.90 - 1.40	ROCKWELL/ ARC - 11-FOOT TRANSONIC WIND TUNNEL (UNITARY)	R. H. LINDAHL -DMS	DMS-DR-2258 VOLUME 04 APRIL, 1977
ARC 11TWT 072 1A72 CR-151,049	INVESTIGATIONS ON A 0.020-SCALE JE T PLUME MODEL (88 -OTS) OF THE ROCKWELL INTERNATIONAL INTEGRATED SSV CONFIGURATION 14D (MODIFIED) IN THE 11-FOOT TRANSONIC WIND TUNNEL	88-OTS MODIFIED WITH DMS PODS AND COLD AIR MPS AND SRB PLUME SIMULATION	TO DETERMINE WING AND VERTICAL TAIL ROOT BENDING MOMENTS, RUDDER AND ELEVON HINGE MOMENTS, NOZZLE GIMBAL MOMENTS, AND SURFACE PRESSURE PROFILES ON THE ORBITER, ET, SRB; TO DETERMINE ET BASE COOLING RATES.	PRESSURE	0.020 / 0.90 - 1.40	ROCKWELL/ ARC - 11-FOOT TRANSONIC WIND TUNNEL (UNITARY)	R. H. LINDAHL -DMS	DMS-DR-2258 VOLUME 05 APRIL, 1977

TEST ID	REPORT TITLE	CONFIGURATIONS TESTED	TEST PURPOSE	TYPE OF TEST	MODEL SCALE MACH RANGE	TESTING AGENCY	COGNIZANT TEST DMS PERSONNEL	BASIC PUBLICATIONS OR COMMENTS
ARC 11TWT 072 1A72 CR-151,050	INVESTIGATIONS ON A 0.020-SCALE JE T PLUME MODEL (88-OTS) OF THE ROCKWELL INTERNATIONAL INTEGRATED SSV CONFIGURATION 140 (MODIFIED) IN THE 11-FOOT TRANSONIC WIND TUNNEL	88-OTS MODIFIED WITH OMS PODS AND COLD AIR MPS AND SRB PLUME SIMULATION	TO DETERMINE WING AND VERTICAL TAIL ROOT BENDING MOMENTS, RUDDER AND ELEVON HINGE MOMENTS, NOZZLE GIMBAL MOMENTS, AND SURFACE PRESSURE PROFILES ON THE ORBITER, ET, SRB; TO DETERMINE ET BASE COOLING RATES.	PRESSURE	0.020 / 0.90 - 1.40	ROCKWELL/ ARC - 11-FOOT TRANSONIC WIND TUNNEL (UNITARY)	R. H. LINDAHL -DMS	DMS-DR-2258 VOLUME 06 APRIL, 1977
ARC 11TWT 072 1A72 CR-151,051	INVESTIGATIONS ON A 0.020-SCALE JE T PLUME MODEL (88-OTS) OF THE ROCKWELL INTERNATIONAL INTEGRATED SSV CONFIGURATION 140 (MODIFIED) IN THE 11-FOOT TRANSONIC WIND TUNNEL	88-OTS MODIFIED WITH OMS PODS AND COLD AIR MPS AND SRB PLUME SIMULATION	TO DETERMINE WING AND VERTICAL TAIL ROOT BENDING MOMENTS, RUDDER AND ELEVON HINGE MOMENTS, NOZZLE GIMBAL MOMENTS, AND SURFACE PRESSURE PROFILES ON THE ORBITER, ET, SRB; TO DETERMINE ET BASE COOLING RATES.	PRESSURE	0.020 / 0.90 - 1.40	ROCKWELL/ ARC - 11-FOOT TRANSONIC WIND TUNNEL (UNITARY)	R. H. LINDAHL -DMS	DMS-DR-2258 VOLUME 07 APRIL, 1977
ARC 11TWT 072 1A72 CR-151,052	INVESTIGATIONS ON A 0.020-SCALE JE T PLUME MODEL (88-OTS) OF THE ROCKWELL INTERNATIONAL INTEGRATED SSV CONFIGURATION 140 (MODIFIED) IN THE 11-FOOT TRANSONIC WIND TUNNEL	88-OTS MODIFIED WITH OMS PODS AND COLD AIR MPS AND SRB PLUME SIMULATION	TO DETERMINE WING AND VERTICAL TAIL ROOT BENDING MOMENTS, RUDDER AND ELEVON HINGE MOMENTS, NOZZLE GIMBAL MOMENTS, AND SURFACE PRESSURE PROFILES ON THE ORBITER, ET, SRB; TO DETERMINE ET BASE COOLING RATES.	PRESSURE	0.020 / 0.90 - 1.40	ROCKWELL/ ARC - 11-FOOT TRANSONIC WIND TUNNEL (UNITARY)	R. H. LINDAHL -DMS	DMS-DR-2258 VOLUME 08 APRIL, 1977

WIND TUNNEL TEST / DMS DATA PROCESSING

TEST ID	REPORT TITLE	CONFIGURATIONS TESTED	TEST PURPOSE	TYPE OF TEST	MODEL SCALE MACH RANGE	TESTING AGENCY	COGNIZANT TEST DMS PERSONNEL	BASIC PUBLICATIONS OR COMMENTS
ARC 11TWT 072 1A72 CR-151,053	INVESTIGATIONS ON A 0.020-SCALE JET PLUME MODEL (88-OTS) OF THE ROCKWELL INTERNATIONAL INTEGRATED SSV CONFIGURATION 140C (MODIFIED) IN THE 11-FOOT TRANSONIC WIND TUNNEL	88-OTS MODIFIED W/OMS PODS AND COLD AIR MPS AND SRB PLUME SIMULATION	TO DETERMINE WING AND VERTICAL TAIL ROOT BENDING MOMENTS, RUDDER AND ELEVON HINGE MOMENTS, NOZZLE GIMBAL MOMENTS, AND SURFACE PRESSURE PROFILES ON THE ORBITER, ET, SRB; TO DETERMINE ET BASE COOLING RATES.	PRESSURE	0.020 / 0.90 - 1.40	ROCKWELL/ ARC - 11-FOOT TRANSONIC WIND TUNNEL (UNITARY)	R. H. LINDAHL -DMS	DMS-DR-2258 VOLUME 09 APRIL, 1977
LARC BTPT 704 LA60A		TASK CANCELLED, MAY 1977		FORCE		LARC / LARC - 8-FOOT TRANSONIC PRESSURE TUNNEL	J. E. VAUGHN -DMS	DMS-DR-2259 TASK CANCELLED MAY, 1977
TBCA BTWT 1472 CA6 CR-147,630	RESULTS OF A CARRIER AIRCRAFT VERIFICATION TEST IN THE BOEING 8 X 12 FOOT TRANSONIC TUNNEL USING A 0.03-SCALE 747 CAM/ORBITER MODEL 45-0	CARRIER W/ ORB. ALONE, CARRIER ALONE, MATED 747/ORBITER	TO OBTAIN FORCE AND MOMENT DATA ON EACH VEHICLE, MATED AND SEPARATED; TO INVESTIGATE EFFECTS OF ORBITER INCIDENCE, TAIL CONE, STRUT FAIRINGS, ELEVON, AND BODY FLAP SETTINGS	FORCE	0.03 / 0.3 - 0.7	ROCKWELL/ TBCA - TRANSONIC WIND TUNNEL	J. R. CORNELIUS, A. R. WOLFLA/TBC D. A. SARVER J. E. VAUGHN -DMS	DMS-DR-2262 VOLUME 01 NOV., 1976

TEST ID	REPORT TITLE	CONFIGURATIONS TESTED	TEST PURPOSE	TYPE OF TEST	MODEL SCALE MACH RANGE	TESTING AGENCY	COGNIZANT TEST DMS PERSONNEL	BASIC PUBLICATIONS OR COMMENTS
TBCA - BTWT 1472 CA6 CR-147,631	RESULTS OF A CARRIER AIRCRAFT VERIFICATION TEST IN THE BOEING 8 X 12 FOOT TRANSONIC TUNNEL USING A 0.03-SCALE 747 CAM/ORBITER MODEL 45-0	CARRIER W/ ORB. ALONE, CARRIER ALONE, MATED 747/ORBITER	TO OBTAIN FORCE AND MOMENT DATA ON EACH VEHICLE, MATED AND SEPARATED; TO INVESTIGATE EFFECTS OF ORBITER INCIDENCE, TAIL CONE, STRUT FAIRINGS, ELEVON, AND BODY FLAP SETTINGS	FORCE	0.03 - 0.3 / 0.7	ROCKWELL/ TBCA - TRANSONIC WIND TUNNEL	J. R. CORNELIUS, A. R. WOLFLA/TBC D. A. SARVER J. E. VAUGHN -DMS	DMS-DR-2262 VOLUME 02 NOV., 1976
AEDC - HWTB BBA OH74 CR-144,596	RESULTS OF HEAT TRANSFER TESTS ON A 0.0175-SCALE SPACE SHUTTLE ORBITER MODEL (56-0) IN THE AEDC VKF 'B' HYPERSONIC WIND TUNNEL (OH74)	140 C ORB (B62 C1 E52 F10 M16 R19 V8 W127)	TO DETERMINE ENTRY AERODYNAMIC HEATING RATES ON ORB. FUSELAGE SIDE	HEAT-TRANS	0.0175 - 8.0 / 8.0	ROCKWELL/ AEDC - HYPERSONIC WIND TUNNEL (B)	E. C. ALLEN, W. H. DYE/RI E. KNOX/AEDC R. H. LINDAHL -DMS	DMS-DR-2263 MARCH, 1976
LARC - BTPT 717 LA62 CR-141,843	TRANSONIC STABILITY AND CONTROL CHARACTERISTICS OF A 0.015-SCALE (REMOTELY CONTROLLED ELEVON) MODEL 49-0 OF THE SPACE SHUTTLE ORBITER TESTED IN THE NASA/LARC 8-FOOT TPT (LA62)	SSV ORBITER 49-0 MODIFIED	TO GENERATE A DETAILED AERODYNAMIC BASE TO SUBSTANTIATE THE DESIGN DATA ON THE CURRENT ORBITER CONFIGURATION	FORCE	0.35 - 1.20	LARC / LARC - 8-FOOT TRANSONIC PRESSURE TUNNEL	J. GAMBLE, M. BUH L. JR./JSC; B. SPENCER, G. MARE/LARC H. PARRELL/RI J. W. BALL M. M. MANN -DMS	DMS-DR-2264 DEC., 1975

TEST ID	REPORT TITLE	CONFIGURATIONS TESTED	TEST PURPOSE	TYPE OF TEST	MODEL SCALE MACH RANGE	TESTING AGENCY	COGNIZANT TEST DMS PERSONNEL	BASIC PUBLICATIONS OR COMMENTS
ARC 12PT 07P 0A159 CR-141,832	RESULTS OF TESTS USING A 0.030-SCALE MODEL (45-0) OF THE SPACE SHUTTLE VEHICLE ORBITER IN THE NASA/ARC 12-FOOT PRESSURE TUNNEL (0A159)	CONFIG 1 ORBITER WITH NOSE AND TAIL RCS JETS CONFIG 2 ORBITER WITH AFT CARRIER ATTACHMENT CONFIG 3 ORBITER WITH GROUND PLANE CONFIG 4 ORBITER WITH SIMULATED BALANCE SUPPORTS USED IN AMES 40X80	ASSESS EFFECTS OF RCS ORIFICES LOCATED ON ORBITER NOSE. EFFECTS OF MODIFIED OMS PODS AND MODIFIED ELEVONS ON THE 6-COMPONENT FORCE DATA.	FORCE	.030 / 0.26 - 0.26	ROCKWELL/ ARC - 12-FOOT PRESSURE TUNNEL	J. J. MARROQUIN/RI D.B. WATSON -DMS	DMS-DR-2265 JAN., 1976
LTV HSWT 552 LA67 CR-144,607	TRANSONIC-SUPERSONIC HIGH REYNOLDS NUMBER STABILITY AND CONTROL CHARACTERISTICS OF A 0.015-SCALE (REMOTELY CONTROLLED ELEVON) MODEL 44-0 OF THE SPACE SHUTTLE ORBITER TESTED IN THE VSD HIGH SPEED WIND TUNNEL	140A/B/C=B26 C9 E43 FB M16 N28 R5 V8 W	TO GENERATE A DETAILED AERODYNAMIC DATA BASE WHICH CAN BE USED TO SUBSTANTIATE THE AERODYNAMIC DATA DESIGN DATA BOOK FOR THE CURRENT ORBITER DESIGN.	FORCE	0.015 / 0.6 - 4.6	LARC / LTV - HIGH SPEED WIND TUNNEL	G. WARE, B. SPENCER, JR./LARC T. C. POPE/VSD J. E. VAUGHN -DMS	DMS-DR-2266 JULY, 1976

TEST ID	REPORT TITLE	CONFIGURATIONS TESTED	TEST PURPOSE	TYPE OF TEST	MODEL SCALE MACH RANGE	TESTING AGENCY	COGNIZANT TEST DMS PERSONNEL	BASIC PUBLICATIONS OR COMMENTS
LARC - CFHT - 116 / MA22 CR-147,604	RESULTS OF TEST M A22 IN THE NASA/L ARC 31-INCH CFHT ON AN 0.010-SCALE MODEL (32-0) OF T HE SPACE SHUTTLE CONFIGURATION 3 T O DETERMINE RCS JET FLOW FIELD IN TERACTION AND TO INVESTIGATE RT RE AL GAS EFFECTS	REACTION CONTROL SYSTEM	TO STUDY TUNNEL R EPEATABILITY AND EFFECT ON JET INT ERACTION DATA, TO DETERMINE EFFECTS OF MODEL HEATING , ELEVON, BODYFLA P DEFLECTIONS ON JET INTERACTION, STUDY MULTIPLE JE T FIRING EFFECTS, INVESTIGATE AREA RATIO EFFECTS, ST UDY SUPER POSITIO N EFFECTS	FORCE	0.0100 / 10.3 - 10.3	MSC / LARC - CONTINUOUS-FLO W HYPERSONIC T UNNEL	D.B. KANIPE/JSC J. W. BALL G. W. KLUG -DMS	DMS-DR-2267 VOLUME 01 JUNE, 1976
LARC - CFHT - 118 / MA22 CR-147,605	RESULTS OF TEST M A22 IN THE NASA/L ARC 31-INCH CFHT ON AN 0.010-SCALE MODEL (32-0) OF T HE SPACE SHUTTLE CONFIGURATION 3 T O DETERMINE RCS JET FLOW FIELD IN TERACTION AND TO INVESTIGATE RT RE AL GAS EFFECTS	REACTION CONTROL SYSTEM	TO STUDY TUNNEL R EPEATABILITY AND EFFECT ON JET INT ERACTION DATA, TO DETERMINE EFFECTS OF MODEL HEATING , ELEVON, BODYFLA P DEFLECTIONS ON JET INTERACTION, STUDY MULTIPLE JE T FIRING EFFECTS, INVESTIGATE AREA RATIO EFFECTS, ST UDY SUPER POSITIO N EFFECTS	FORCE	0.0100 / 10.3 - 10.3	MSC / LARC - CONTINUOUS-FLO W HYPERSONIC T UNNEL	D.B. KANIPE/JSC J. W. BALL G. W. KLUG -DMS	DMS-DR-2267 VOLUME 02 JUNE, 1976

TEST ID	REPORT TITLE	CONFIGURATIONS TESTED	TEST PURPOSE	TYPE OF TEST	MODEL SCALE / MACH RANGE	TESTING AGENCY	COGNIZANT TEST DMS PERSONNEL	BASIC PUBLICATIONS OR COMMENTS
LARC CFHT 118 MA22 CR-147,606	RESULTS OF TEST M A22 IN THE NASA/L ARC 31-INCH CFHT ON AN 0.010-SCALE MODEL (32-0) OF T HE SPACE SHUTTLE CONFIGURATION 3 T O DETERMINE RCS JET FLOW FIELD IN TERACTION AND TO INVESTIGATE RT RE AL GAS EFFECTS	REACTION CONTROL SYSTEM	TO STUDY TUNNEL R EPEATABILITY AND EFFECT ON JET INT ERACTION DATA, TO DETERMINE EFFECTS OF MODEL HEATING , ELEVON, BODYFLA P DEFLECTIONS ON JET INTERACTION, STUDY MULTIPLE JE T FIRING EFFECTS, INVESTIGATE AREA RATIO EFFECTS, ST UDY SUPER POSITIO N EFFECTS	FORCE	0.0100 / 10.3 - 10.3	MSC / LARC - CONTINUOUS-FLO W HYPERSONIC T UNNEL	D.B. KANIFE/JSC J. W. BALL G. W. KLUG -DMS	DMS-DR-2267 VOLUME 03 JUNE, 1976
LARC CFHT 118 MA22 CR-147,607	RESULTS OF TEST M A22 IN THE NASA/L ARC 31-INCH CFHT ON AN 0.010-SCALE MODEL (32-0) OF T HE SPACE SHUTTLE CONFIGURATION 3 T O DETERMINE RCS JET FLOW FIELD IN TERACTION AND TO INVESTIGATE RT RE AL GAS EFFECTS	REACTION CONTROL SYSTEM	TO STUDY TUNNEL R EPEATABILITY AND EFFECT ON JET INT ERACTION DATA, TO DETERMINE EFFECTS OF MODEL HEATING , ELEVON, BODYFLA P DEFLECTIONS ON JET INTERACTION, STUDY MULTIPLE JE T FIRING EFFECTS, INVESTIGATE AREA RATIO EFFECTS, ST UDY SUPER POSITIO N EFFECTS	FORCE	0.0100 / 10.3 - 10.3	MSC / LARC - CONTINUOUS-FLO W HYPERSONIC T UNNEL	D.B. KANIPE/JSC J. W. BALL G. W. KLUG -DMS	DMS-DR-2267 VOLUME 04 JUNE, 1976

TEST ID	REPORT TITLE	CONFIGURATIONS TESTED	TEST PURPOSE	TYPE OF TEST	MODEL SCALE MACH RANGE	TESTING AGENCY	COGNIZANT TEST DMS PERSONNEL	BASIC PUBLICATIONS OR COMMENTS
TBCA - BTWT - 1477 CA9 CA9P CR-151,396	RESULTS OF AN INVESTIGATION OF AERODYNAMIC FORCES, MOMENTS, AND PRESSURES ON 0.03-SCALE MODELS OF THE MATED SPACE SHUTTLE ORBITER AND CARRIER AIRCRAFT (MODEL NUMBERS AX1319P-1 AND 47-0) IN THE BOEING TRANSONIC WIND TUNNEL (CA9)	BOEING AX1319P-1 CARRIER / ORBITER 47-0	SIX-COMPONENT FORCE AND MOMENT DATA WERE MEASURED ON THE TOTAL VEHICLE AND ON THE ORBITER TAILCONE. THREE-COMPONENT FORCE AND MOMENT DATA WERE MEASURED ON THE CARRIER RIGHT TIP FIN. ORBITER ELEVON HINGE MOMENTS WERE ALSO MEASURED.	FORCE / PRESSURE	0.03 / 0.03 / 0.4 - 0.70	ROCKWELL/ TBCA - TRANSONIC WIND TUNNEL	W.R. COVINGTON/BOEING, H.SEXTON,H.S.LUTFI,S.L. OLLM ANN/RI R. H. LINDAHL -DMS	DMS-DR-2268 VOLUME 01 JUNE, 1979
TBCA - BTWT - 1477 CA9 CA9P CR-151,397	RESULTS OF AN INVESTIGATION OF AERODYNAMIC FORCES, MOMENTS, AND PRESSURES ON 0.03-SCALE MODELS OF THE MATED SPACE SHUTTLE ORBITER AND CARRIER AIRCRAFT (MODEL NUMBERS AX1319P-1 AND 47-0) IN THE BOEING TRANSONIC WIND TUNNEL (CA9)	BOEING AX1319P-1 CARRIER / ORBITER 47-0	SIX-COMPONENT FORCE AND MOMENT DATA WERE MEASURED ON THE TOTAL VEHICLE AND ON THE ORBITER TAILCONE. THREE-COMPONENT FORCE AND MOMENT DATA WERE MEASURED ON THE CARRIER RIGHT TIP FIN. ORBITER ELEVON HINGE MOMENTS WERE ALSO MEASURED.	FORCE / PRESSURE	0.03 / 0.03 / 0.4 - 0.70	ROCKWELL/ TBCA - TRANSONIC WIND TUNNEL	W.R. COVINGTON/BOEING, H.SEXTON,H.S.LUTFI,S.L. OLLM ANN/RI R. H. LINDAHL -DMS	DMS-DR-2268 VOLUME 02 JUNE, 1979

TEST ID	REPORT TITLE	CONFIGURATIONS TESTED	TEST PURPOSE	TYPE OF TEST	MODEL SCALE MACH RANGE	TESTING AGENCY	COGNIZANT TEST DMS PERSONNEL	BASIC PUBLICATIONS OR COMMENTS
TBCA - BTWT 1477 CA9 CA9P CR-151,398	RESULTS OF AN INVESTIGATION OF AERODYNAMIC FORCES, MOMENTS, AND PRESSURES ON 0.03-SCALE MODELS OF THE MATED SPACE SHUTTLE ORBITER AND CARRIER AIRCRAFT (MODEL NUMBERS AX1319P-1 AND 47-0) IN THE BOEING TRANSONIC WIND TUNNEL (CA9)	BOEING AX1319P-1 CARRIER ORBITER 47-0	SIX-COMPONENT FORCE AND MOMENT DATA WERE MEASURED ON THE TOTAL VEHICLE AND ON THE ORBITER TAILCONE. THREE-COMPONENT FORCE AND MOMENT DATA WERE MEASURED ON THE CARRIER RIGHT TIP FIN. ORBITER ELEVON HINGE MOMENTS WERE ALSO MEASURED.	FORCE PRESSURE	0.03 , 0.03 / 0.4 - 0.70	ROCKWELL/ TBCA - TRANSONIC WIND TUNNEL	W.R. COVINGTON/BOEING, H.SEXTON,H.S.LUTFI,S.L. OLLM ANN/RI R. H. LINDAHL -DMS	DMS-DR-2268 VOLUME 03 JUNE, 1979
TBCA - BTWT 1477 CA9 CA9P CR-151,399	RESULTS OF AN INVESTIGATION OF AERODYNAMIC FORCES, MOMENTS, AND PRESSURES ON 0.03-SCALE MODELS OF THE MATED SPACE SHUTTLE ORBITER AND CARRIER AIRCRAFT (MODEL NUMBERS AX1319P-1 AND 47-0) IN THE BOEING TRANSONIC WIND TUNNEL (CA9)	BOEING AX1319P-1 CARRIER ORBITER 47-0	SIX-COMPONENT FORCE AND MOMENT DATA WERE MEASURED ON THE TOTAL VEHICLE AND ON THE ORBITER TAILCONE. THREE-COMPONENT FORCE AND MOMENT DATA WERE MEASURED ON THE CARRIER RIGHT TIP FIN. ORBITER ELEVON HINGE MOMENTS WERE ALSO MEASURED.	FORCE PRESSURE	0.03 , 0.03 / 0.4 - 0.70	ROCKWELL/ TBCA - TRANSONIC WIND TUNNEL	W.R. COVINGTON/BOEING, H.SEXTON,H.S.LUTFI,S.L. OLLM ANN/RI R. H. LINDAHL -DMS	DMS-DR-2268 VOLUME 04 JUNE, 1979

TEST ID	REPORT TITLE	CONFIGURATIONS TESTED	TEST PURPOSE	TYPE OF TEST	MODEL SCALE MACH RANGE	TESTING AGENCY	COGNIZANT TEST DMS PERSONNEL	BASIC PUBLICATIONS OR COMMENTS
TBCA BTWT 1477 CA9 CA9P CR-151,400	RESULTS OF AN INVESTIGATION OF AERODYNAMIC FORCES, MOMENTS, AND PRESSURES ON 0.03-SCALE MODELS OF THE MATED SPACE SHUTTLE ORBITER AND CARRIER AIRCRAFT (MODEL NUMBERS AX13 19P-1 AND 47-0) IN THE BOEING TRANSONIC WIND TUNNEL (CA9)	BOEING AX1319P-1 CARRIER ORBITER 47-0	SIX-COMPONENT FORCE AND MOMENT DATA WERE MEASURED ON THE TOTAL VEHICLE AND ON THE ORBITER TAILCONE. THREE-COMPONENT FORCE AND MOMENT DATA WERE MEASURED ON THE CARRIER RIGHT TIP FIN. ORBITER ELEVON HINGE MOMENTS WERE ALSO MEASURED.	FORCE PRESSURE	0.03 0.03 0.4 - 0.70	ROCKWELL/ TBCA - TRANSONIC WIND TUNNEL	W.R. COVINGTON/BOEING, H.SEXTON,H. S.LUTFI,S.L. OLLMANN/RI R. H. LINDAHL -DMS	DMS-DR-2268 VOLUME 05 JUNE, 1979
CALSPAN BTWT T18-103 LA70 CR-147,624	TRANSONIC HIGH REYNOLDS NUMBER STABILITY AND CONTROL CHARACTERISTICS OF A 0.015-SCALE REMOTELY CONTROLLED ELEVON MODEL (44-0) OF THE SPACE SHUTTLE ORBITER TESTED IN THE CALSPAN 8-FOOT TWT	140A/B/C-B26 C9 E43 F8 M16 N28 R5 VB W	TO OBTAIN BASIC SHUTTLE AERO DATA THROUGH A FULL RANGE OF ELEVON AND AILERON DEFLECTIONS. VERIFICATION OF DATA OBTAINED AT OTHER FACILITIES, AND EFFECTS OF REYNOLDS NUMBER	FORCE	0.015 .35 - 1.20	LARC / CALSPAN - 8-FOOT TRANSONIC WIND TUNNEL	H. PARRELL/RI J. D. GAMBLE/JSC R. H. LINDAHL -DMS	DMS-DR-2269 SEPT., 1976
LARC UPWT 1118 LA63A CR-144,579	LOW SUPERSONIC STABILITY AND CONTROL CHARACTERISTICS OF A 0.015-SCALE REMOTELY CONTROLLED ELEVON MODEL (49-0) OF THE SPACE SHUTTLE ORBITER (LA63A)	ORBITER W/ INDEPENDENTLY-OPERATED LEFT,RIGHT ELEVON SURFACES	TO GENERATE A DETAILED AERODYNAMIC DATA BASE FOR THE CURRENT ORBITER CONFIGURATION	FORCE	0.015 1.5 - 2.0	LARC / LARC - UNITARY PLAN WIND TUNNEL	J. D. GAMBLE/JSC	DMS-DR-2270 DEC., 1975

TEST ID	REPORT TITLE	CONFIGURATIONS TESTED	TEST PURPOSE	TYPE OF TEST	MODEL SCALE MACH RANGE	TESTING AGENCY	COGNIZANT TEST DMS PERSONNEL	BASIC PUBLICATIONS OR COMMENTS
LARC - UPWT - 1147 / 1132 / LA71A/B CR-151,044	SUPERSONIC STABILITY AND CONTROL CHARACTERISTICS OF A 0.015 SCALE MODEL 69-0 OF THE SPACE SHUTTLE ORBITER WITH FOREBODY RSI MODIFICATIONS IN THE NASA/LARC 4-FOOT UPWT (LES 1 AND 2)	MODEL 69-0 WITH FOREBODY RSI MODS	TO DETERMINE SUPERSONIC AERODYNAMICS EFFECTS OF RSI REDUCTION ON FOREBODY	FORCE	0.015 / 1.5 - 4.6	LARC / LARC - UNITARY PLAN WIND TUNNEL	W. P. PHILLIPS/LARC J. E. VAUGHN D.B. WATSON -DMS	DMS-DR-2271 FEB., 1977
AEDC HWTB C4A IA114 CR-151,077	RESULTS OF AN INVESTIGATION OF EXTERNAL TANK SEPARATION EFFECTS USING AN 0.010-SCALE MODEL (52-OT) SPACE SHUTTLE VEHICLE IN THE ARNOLD ENGINEERING DEVELOPMENT CENTER VON KARMAN FACILITY TUNNEL B	SSV 3	TO INVESTIGATE AERODYNAMIC INTERACTIONS BETWEEN ET AND ORBITER DURING RTLS ABORT SEPARATION	FORCE	0.010 / 5.93 -	ROCKWELL/ AEDC - HYPERSONIC WIND TUNNEL (B)	E. CHEE, J. DAILE DA/JSC J. E. VAUGHN M. M. MOSER JR. -DMS	DMS-DR-2272 VOLUME 01 JUNE, 1977
AEDC HWTB C4A IA114 CR-151,078	RESULTS OF AN INVESTIGATION OF EXTERNAL TANK SEPARATION EFFECTS USING AN 0.010-SCALE MODEL (52-OT) SPACE SHUTTLE VEHICLE IN THE ARNOLD ENGINEERING DEVELOPMENT CENTER VON KARMAN FACILITY TUNNEL B	SSV 3	TO INVESTIGATE AERODYNAMIC INTERACTIONS BETWEEN ET AND ORBITER DURING RTLS ABORT SEPARATION	FORCE	0.010 / 5.93 -	ROCKWELL/ AEDC - HYPERSONIC WIND TUNNEL (B)	E. CHEE, J. DAILE DA/JSC J. E. VAUGHN M. M. MOSER JR. -DMS	DMS-DR-2272 VOLUME 02 JUNE, 1977

TEST ID	REPORT TITLE	CONFIGURATIONS TESTED	TEST PURPOSE	TYPE OF TEST	MODEL SCALE MACH RANGE	TESTING AGENCY	COGNIZANT TEST DMS PERSONNEL	BASIC PUBLICATIONS OR COMMENTS
LTV - HSWT - 559 / CA26 CR-144,612	RESULTS OF AN AERODYNAMIC INVESTIGATION OF A SPACE SHUTTLE ORBITER/747 CARRIER FLIGHT TEST CONFIGURATION TO DETERMINE SEPARATION CHARACTERISTICS UTILIZING 0.0125-SCALE MODELS (48-0/AX131-1) IN THE LTV 4X4-FOOT HIGH SPEED WIND TUNNEL (CA26)	AX13181-1, 747/1,747/4 48-0 (02, 04, 06, S1, ATY, ATX)	TO PRESENT THE PROXIMITY EFFECTS OF EACH VEHICLE ON THE OTHER AT SEPARATION DISTANCES (FROM THE MATED CONFIGURATION) RANGING FROM 1.5 FEET TO 75 FEET.	FORCE PRESSURE	0.0125 / 0.3 - 0.7	ROCKWELL/ LTV - HIGH SPEED WIND TUNNEL	R.L. GILLINS, V.E SPARZA/RI CARL ZIEGLER/GAS DYNAMICS LAB D. A. SARVER G. W. KLUG -DMS	DMS-DR-2273 VOLUME 01 MAY, 1976
LTV - HSWT - 559 / CA26 CR-144,613	RESULTS OF AN AERODYNAMIC INVESTIGATION OF A SPACE SHUTTLE ORBITER/747 CARRIER FLIGHT TEST CONFIGURATION TO DETERMINE SEPARATION CHARACTERISTICS UTILIZING 0.0125-SCALE MODELS (48-0/AX131-1) IN THE LTV 4X4-FOOT HIGH SPEED WIND TUNNEL (CA26)	AX13181-1, 747/1,747/4 48-0 (02, 04, 06, S1, ATY, ATX)	TO PRESENT THE PROXIMITY EFFECTS OF EACH VEHICLE ON THE OTHER AT SEPARATION DISTANCES (FROM THE MATED CONFIGURATION) RANGING FROM 1.5 FEET TO 75 FEET.	FORCE PRESSURE	0.0125 / 0.3 - 0.7	ROCKWELL/ LTV - HIGH SPEED WIND TUNNEL	R.L. GILLINS, V.E SPARZA/RI CARL ZIEGLER/GAS DYNAMICS LAB D. A. SARVER G. W. KLUG -DMS	DMS-DR-2273 VOLUME 02 JUNE, 1976

TEST ID	REPORT TITLE	CONFIGURATIONS TESTED	TEST PURPOSE	TYPE OF TEST	MODEL SCALE MACH RANGE	TESTING AGENCY	COGNIZANT TEST DMS PERSONNEL	BASIC PUBLICATIONS OR COMMENTS
LTV - HSWT - 559 / CA26 CR-144,614	RESULTS OF AN AERODYNAMIC INVESTIGATION OF A SPACE SHUTTLE ORBITER/747 CARRIER FLIGHT TEST CONFIGURATION TO DETERMINE SEPARATION CHARACTERISTICS UTILIZING 0.0125-SCALE MODELS (48-0/AX131 81-1) IN THE LTV 4X4-FOOT HIGH SPEED WIND TUNNEL (CA26)	AX131 81-1, 747/1, 747/4 48-0 (02, 04, 06, S1, ATY, ATX)	TO PRESENT THE PROXIMITY EFFECTS OF EACH VEHICLE ON THE OTHER AT SEPARATION DISTANCES (FROM THE MATED CONFIGURATION) RANGING FROM 1.5 FEET TO 75 FEET.	FORCE PRESSURE	0.0125 / 0.3 - 0.7	ROCKWELL/ LTV - HIGH SPEED WIND TUNNEL	R.L. GILLINS, V.E SPARZA/RI CARL ZIEGLER/GAS DYNAMICS LAB D. A. SARVER G. W. KLUG -DMS	DMS-DR-2273 VOLUME 03 JUNE, 1976
LTV - HSWT - 559 / CA26 CR-144,615	RESULTS OF AN AERODYNAMIC INVESTIGATION OF A SPACE SHUTTLE ORBITER/747 CARRIER FLIGHT TEST CONFIGURATION TO DETERMINE SEPARATION CHARACTERISTICS UTILIZING 0.0125-SCALE MODELS (48-0/AX131 81-1) IN THE LTV 4X4-FOOT HIGH SPEED WIND TUNNEL (CA26)	AX131 81-1, 747/1, 747/4 48-0 (02, 04, 06, S1, ATY, ATX)	TO PRESENT THE PROXIMITY EFFECTS OF EACH VEHICLE ON THE OTHER AT SEPARATION DISTANCES (FROM THE MATED CONFIGURATION) RANGING FROM 1.5 FEET TO 75 FEET.	FORCE PRESSURE	0.0125 / 0.3 - 0.7	ROCKWELL/ LTV - HIGH SPEED WIND TUNNEL	R.L. GILLINS, V.E SPARZA/RI CARL ZIEGLER/GAS DYNAMICS LAB D. A. SARVER G. W. KLUG -DMS	DMS-DR-2273 VOLUME 04 JUNE, 1976

TEST ID	REPORT TITLE	CONFIGURATIONS TESTED	TEST PURPOSE	TYPE OF TEST	MODEL SCALE MACH RANGE	TESTING AGENCY	COGNIZANT TEST DMS PERSONNEL	BASIC PUBLICATIONS OR COMMENTS
LTV MSWT 559 CA26 CR-144,616	RESULTS OF AN AERODYNAMIC INVESTIGATION OF A SPACE SHUTTLE ORBITER/747 CARRIER FLIGHT TEST CONFIGURATION TO DETERMINE SEPARATION CHARACTERISTICS UTILIZING 0.0125-SCALE MODELS (48-0/AX131-1) IN THE LTV 4X4-FOOT HIGH SPEED WIND TUNNEL (CA26)	AX13181-1, 747/1, 747/4 48-0 (02, 04, 06, S1, ATY, ATX)	TO PRESENT THE PROXIMITY EFFECTS OF EACH VEHICLE ON THE OTHER AT SEPARATION DISTANCES (FROM THE MATED CONFIGURATION) RANGING FROM 1.5 FEET TO 75 FEET.	FORCE PRESSURE	0.0125 / 0.3 - 0.7	ROCKWELL/ LTV - HIGH SPEED WIND TUNNEL	R.L. GILLINS, V.E. SPARZA/RI CARL ZIEGLER/GAS DYNAMICS LAB D. A. SARVER G. W. KLUG -DMS	DMS-DR-2273 VOLUME 05 JUNE, 1976
MSFC 14TWT 600 FA14 CR-144,593	AN INVESTIGATION OF DRAG REDUCTION FAIRINGS ON THE SPACE SHUTTLE VEHICLE 5 CONFIGURATION (MODEL 74-OTS) IN THE MSFC 14-INCH TRISONIC WIND TUNNEL	74-OTS, VEH. 5 (ASCENT CONFIG.)	TO DETERMINE STATIC STABILITY AND DRAG ON A 0.004-SCALE MODEL OF THE SHUTTLE AS CENT CONFIGURATION	FORCE	0.6 - 4.96	MSFC / MSFC - 14-INCH TRISONIC WIND TUNNEL	P. E. RAMSEY/MSFC V. W. SPARKS V. W. SPARKS -DMS	DMS-DR-2274 FEB., 1976
ARC 14-TWT 120 CA23B CR-144,603	RESULTS OF AN EXPERIMENTAL INVESTIGATION TO DETERMINE SEPARATION CHARACTERISTICS FOR THE ORBITER/747 USING A 0.0125-SCALE MODEL (48-0 AX13181-1 747) IN THE AMES RESEARCH CENTER 14-FOOT WIND TUNNEL (CA23B)	0.0125-SCALE SSV ORBITER 0.0125-SCALE 747 MODEL	LONGITUDINAL,LATERAL AND NORMAL SEPARATION INCREMENTS WERE OBTAINED FOR FIXED 747 ANGLES OF ATTACK OF 0,2,4 DEGREES WHILE VARYING ORBITER ANGLE OF ATTACK	FORCE	0.0125 / .3 - .6	ROCKWELL/ ARC - 14-FOOT TRANSONIC WIND TUNNEL	V. ESPARZA,RI,J. BROWNSON,D. PENA, ARC R. H. LINDAHL -DMS	DMS-DR-2275 VOLUME 01 MAY, 1976

TEST ID	REPORT TITLE	CONFIGURATIONS TESTED	TEST PURPOSE	TYPE OF TEST	MODEL SCALE MACH RANGE	TESTING AGENCY	COGNIZANT TEST DMS PERSONNEL	BASIC PUBLICATIONS OR COMMENTS
APC - 14-TWT - 120 / CA23B CR-144,604	RESULTS OF AN EXPERIMENTAL INVESTIGATION TO DETERMINE SEPARATION CHARACTERISTICS FOR THE ORBITER/747 USING A 0.0125-SCALE MODEL (48-0 AX 13181-1 747) IN THE AMES RESEARCH CENTER 14-FOOT WIND TUNNEL (CA23B)	0.0125-SCALE SSV ORBITER 0.0125-SCALE 747 MODEL	LONGITUDINAL, LATERAL AND NORMAL SEPARATION INCREMENTS WERE OBTAINED FOR FIXED 747 ANGLES OF ATTACK OF 0,2,4 DEGREES WHILE VARYING ORBITER ANGLE OF ATTACK	FORCE	0.0125 / .3 - .6	ROCKWELL/ ARC - 14-FOOT TRANSONIC WIND TUNNEL	V. ESPARZA, R. J. BROWNSON, D. PENA, ARC R. H. LINDAHL -DMS	DMS-DR-2275 VOLUME 02 MAY, 1976
AEDC - SWTA - E1A / FH13 CR-151,055	HEAT TRANSFER AND SURFACE PRESSURE DATA OBTAINED ON A .0429 SCALE MODEL SSV EXTERNAL TANK NOSE SECTION AT MACH NUMBERS FROM 2.5 TO 5.5 (FH13)	40-DEG NOSE-CLEAN (NO PROTUBERANCES) DOUBLE CONE (10-DEG-40-DEG) (NO PROTUBERANCES) DOUBLE CONE WITH PROTUBERANCES	DETERMINE THE INFLUENCE OF A NEW VENT CAP/LIGHTNING ROD CONFIGURATION WHICH FORMS THE NOSE TIP ON THE SHUTTLE EXTERNAL TANK.	HEAT-TRANS	2.5 - 5.5	MSFC / AEDC - SUPERSONIC WIND TUNNEL (A)	H. R. CARROLL/MMC J. E. VAUGHN M. M. MANN -DMS	DMS-DR-2278 JUNE, 1977
MSFC - HRWT - 034 / SA13F CR-144,579	FORCE TEST OF A 0.88 PERCENT SCALE 142-INCH DIAMETER SOLID ROCKET BOOSTER (MSFC MODEL NUMBER 461) IN THE NASA/MSFC HIGH REYNOLDS NUMBER WIND TUNNEL	MODEL 461, 142-INCH DIA. WITHOUT PROTUBERANCES	TO OBTAIN AERODYNAMIC FORCE DATA OVER A LARGE RANGE OF REYNOLDS NUMBERS	FORCE	0.88 / 0.6 - 0.7	MSFC / MSFC - HIGH REYNOLDS NUMBER WIND TUNNEL	J. D. JOHNSON/MSFC G. W. WINKLER/NSI V. W. SPARKS -DMS	DMS-DR-2277 JULY, 1976

TEST ID	REPORT TITLE	CONFIGURATIONS TESTED	TEST PURPOSE	TYPE OF TEST	MODEL SCALE MACH RANGE	TESTING AGENCY	COGNIZANT TEST DMS PERSONNEL	BASIC PUBLICATIONS OR COMMENTS
LARC - LTPT - 219 / LA61	LOW-SUBSONIC STABILITY AND CONTROL CHARACTERISTICS OF A 0.010-SCALE REMOTELY CONTROLLED ELEVON MODEL (49-0) OF THE SPACE SHUTTLE ORBITER IN THE LANGLEY RESEARCH CENTER LOW TURBULENCE PRESSURE TUNNEL	TEST CANCELLED. MAY 1976	TEST CANCELLED. MAY 1976	FORCE	0.015 / 0.06 - 0.30	LARC / LARC - LOW-TURBULENCE PRESSURE TUNNEL	B. SPENCER, JR./LARC G. WARE/LARC	DMS-DR-2278 TASK CANCELLED MAY, 1976
LARC - UPWT - 1151 / LA63B CR-144,606	HIGH SUPERSONIC STABILITY AND CONTROL CHARACTERISTICS OF A 0.015-SCALE REMOTELY CONTROLLED ELEVON) MODEL 49-0 OF THE SPACE SHUTTLE ORBITER TESTED IN THE NASA/LARC 4-FOOT UPWT(LEG 2)	140A/B/C (B26 C9 E43 F8 M16 N28 R5 V8 W)	TO GENERATE A DETAILED AERODYNAMIC DATA BASE FOR CURRENT SS ORB. CONF.	FORCE	2.86 - 4.60	LARC / LARC - UNITARY PLAN WIND TUNNEL	B. SPENCER, JR., G. WARE, R. FOURNIER/LARC J. GAMBLE/JSC J. W. BALL C. E. VAUGHN -DMS	DMS-DR-2279 JUNE, 1976
LTV - HSWT - 498 / LA28 CR-144,582	HEAT-FLUX GAGE MEASUREMENTS ON A FLAT PLATE AT A MACH NUMBER OF 4.6 IN THE VSD HIGH SPEED WIND TUNNEL-A FEASIBILITY TEST (LA28)	FLAT-PLATE MODEL WITH THIN-FILM HEAT FLUX GAGES	TO DETERMINE FEASIBILITY OF USING THIN-FILM HEAT-FLUX GAGES TO DEFINE BOUNDARY LAYER CHARACTERISTICS AT SUPERSONIC SPEEDS	HEAT-TRANS	1.0 / 4.6 - 4.6	LARC / LTV - HIGH SPEED WIND TUNNEL	B. SPENCER, JR., R. L. STALLINGS / LARC T. C. POPE / LTV J. W. BALL M. M. MOSER JR. -DMS	DMS-DR-2280 JAN., 1976

TEST ID	REPORT TITLE	CONFIGURATIONS TESTED	TEST PURPOSE	TYPE OF TEST	MODEL SCALE MACH RANGE	TESTING AGENCY	COGNIZANT TEST DMS PERSONNEL	BASIC PUBLICATIONS OR COMMENTS
ARC 12PT 135-1 LA66 CR-147,621	SUBSONIC STABILITY AND CONTROL CHARACTERISTICS OF A 0.015-SCALE (REMOTELY CONTROLLED ELEVON) MODEL 44-0 OF THE SPACE SHUTTLE ORBITER TESTED IN THE NASA/ARC 12-FOOT PRESSURE TUNNEL (LA66)	BASELINE	DEFINE NON-LINEAR AERODYNAMIC CHARACTERISTICS UTILIZING SMALL INCREMENTS IN ALPHA, BETA, AND ELEVON	FORCE	0.015 / 0.22 - 0.29	LARC / ARC - 12-FOOT PRESSURE TUNNEL	J.M. UNDERWOOD/JSC H. PARRELL/ROCKWELL INTERNATIONAL D.B. WATSON -DMS	DMS-DR-2281 SEPT., 1976
LERC 10SWT 038 1H34 CR-151,407	BASE PRESSURE AND HEAT TRANSFER TESTS OF THE 0.0225-SCALE SPACE SHUTTLE PLUME SIMULATION MODEL 19-OTS IN THE NASA-LEWIS 10X10 FOOT SWT	PLUME SIMULATION MODEL 19-OTS	OBTAIN BASE DATA AT LOWER ALTITUDES THAN PREVIOUSLY TESTED OBTAIN BASE DATA ABOUT SSME PARALLEL POSITION VERIFY PREVIOUS BASE DATA OBTAIN GAS RECOVERY TEMPERATURE DATA	HEAT-TRANS	0.0225 / 2.2 - 3.5	ROCKWELL/ LERC - 10 BY 10-FOOT SUPERSONIC WIND TUNNEL	J.W.FOUST/RI D.W.HERSEY -DMS	DMS-DR-2282 APRIL, 1978
LTV LSWT 422 MA14 CR-147,649	A LOW SPEED WIND TUNNEL TEST OF A 0.050 SCALE MODEL OF SHUTTLE ORBITER (MODEL 089B) TO INVESTIGATE THE LONGITUDINAL AND LATERAL DIRECTIONAL EFFECTS OF CANARD AND TAIL CONFIGURATIONAL MODIFICATIONS IN THE LTV LSWT	ORBITER 089B	CONFIGURATIONAL EFFECTS STUDY FOR 6 CANARDS AND TWO TAILS ON ORBITER 089B	FORCE	.050 / .067 - .067	MSC / LTV - LOW SPEED WIND TUNNEL	D.B. WATSON -DMS	DMS-DR-2283 NOV., 1976

TEST ID	REPORT TITLE	CONFIGURATIONS TESTED	TEST PURPOSE	TYPE OF TEST	MODEL SCALE MACH RANGE	TESTING AGENCY	COGNIZANT TEST DMS PERSONNEL	BASIC PUBLICATIONS OR COMMENTS
ARC - 97SWT - 113 / 11TWT - 152A/B CR-151,035	AERODYNAMIC NOISE OF THE 0.035-SCALE INTEGRATED SPACE SHUTTLE VEHICLE MODEL (84-OTS) IN THE NASA-AMES RESEARCH CENTER UNITARY PLAN WIND TUNNELS (152A/B)	INTEGRATED SPACE SHUTTLE VEHICLE 84-OTS	TO MEASURE AERODYNAMIC NOISE ON THE INTEGRATED SHUTTLE. TO MEASURE FLUCTUATING PRESSURES IN THE ORBITER PAYLOAD BAY DUE TO AERODYNAMIC FLOW ACROSS THE VENT SYSTEM HOLES. TO DEFINE FORE AND AFT BUFFET LOADS ON THE VERTICAL TAIL	STRUCT-DYN	0.035 / 0.65 - 2.5	ROCKWELL/ ARC - 9-FOOT BY 7-FOOT SUPERSONIC WIND TUNNEL (UNITARY) 11-FOOT TRANSONIC WIND TUNNEL (UNITARY)	J. W. FOUST/RI D. L. KASSNER/ARC W. B. MEINDERS -DMS	DMS-DR-2284 VOLUME 01 MAY, 1977
ARC - 97SWT - 113 / 11TWT - 152A/B CR-151,036	AERODYNAMIC NOISE OF THE 0.035-SCALE INTEGRATED SPACE SHUTTLE VEHICLE MODEL (84-OTS) IN THE NASA-AMES RESEARCH CENTER UNITARY PLAN WIND TUNNELS (152A/B)	INTEGRATED SPACE SHUTTLE VEHICLE 84-OTS	TO MEASURE AERODYNAMIC NOISE ON THE INTEGRATED SHUTTLE. TO MEASURE FLUCTUATING PRESSURES IN THE ORBITER PAYLOAD BAY DUE TO AERODYNAMIC FLOW ACROSS THE VENT SYSTEM HOLES. TO DEFINE FORE AND AFT BUFFET LOADS ON THE VERTICAL TAIL	STRUCT-DYN	0.035 / 0.65 - 2.5	ROCKWELL/ ARC - 9-FOOT BY 7-FOOT SUPERSONIC WIND TUNNEL (UNITARY) 11-FOOT TRANSONIC WIND TUNNEL (UNITARY)	J. W. FOUST/RI D. L. KASSNER/ARC W. B. MEINDERS -DMS	DMS-DR-2284 VOLUME 02 MAY, 1977
AEDC - HWTB - VA526/21B/ 0H50A CR-144,595	RESULTS OF TESTS USING THE PHASE CHANGE PAINT TECHNIQUE ON 0.04 SCALE 50 PERCENT FORE BODY MODELS (82-0) OF THE ROCKWELL SPACE SHUTTLE ORBITER	82-0, WITH AND WITHOUT PROTUBERANCES, 50% FOREBODY MODELS	TO DETERMINE AERODYNAMIC AERODYNAMIC HEATING RATES DUE TO VARIOUS PROTUBERANCES AND RECESSIONS	HEAT-TRANS	0.04 / 8.0 - 8.0	ROCKWELL/ AEDC - HYPERSONIC WIND TUNNEL (B)	M. QUAN/RI D. A. SARVER M. M. MOSER JR. -DMS	DMS-DR-2285 APRIL, 1976

TEST ID	REPORT TITLE	CONFIGURATIONS TESTED	TEST PURPOSE	TYPE OF TEST	MODEL SCALE MACH RANGE	TESTING AGENCY	COGNIZANT TEST DMS PERSONNEL	BASIC PUBLICATIONS OR COMMENTS
ARC - 14-TWT - 150-1 / 0A220 CR-147,625	RESULTS OF AN AIR PROBE INVESTIGATION UTILIZING A 0.10 SCALE ORBITER (MODEL 57-0) FOR EBODY IN THE AMES RESEARCH CENTER 14 FOOT WIND TUNNEL (0A220)	SSV ORBITER (MODEL 57-0) FOREBODY WITH TPS TILES AONE SSV ORBITER (MODEL 57-0) FOREBODY WITH TPS TILES IN MODIFIED CONFIG. SSV ORBITER (MODEL 57-0) FOREBODY .TPS. WITH ADP AND THE ORBITER ADP .FLIGHTTEST NOSE BOOM WITH MODIFIED TPS AND TPS FLIGHT CONFIGURATION	TO MEASURE PROBE STATIC PRESSURE ERROR. TO DETERMINE LOCAL ANGLE OF ATTACK. AND TO DETERMINE THE INFLUENCE OF THE AIR VENT DOOR. TWO ALTERNATE AIR DATA SYSTEMS WILL ALSO BE EVALUATED.NAMELY. A FLUSH PORT SYSTEM IN THE FORWARD FUSELAGE. AND INSTRUMENTED IN THE RCS CHAMBERS	FORCE	0.4 - 1.2	ROCKWELL/ ARC - 14-FOOT TRANSONIC WIND TUNNEL	V. ESPARZA/ROCKWELL D.E. THORNTON/ROCKWELL H. AUGUST/ROCKWELL A. MENA/ROCKWELL R. B. LOWE -DMS	DMS-DR-2286 OCT., 1976
LERC - SPF - OH64 CR-151,384	RESULTS OF BASE HEATING INVESTIGATIONS ON A 0.04 SCALE SPACE SHUTTLE ORBITER BASE (MODEL 25-0) IN THE NASA/LARC SPACE POWER FACILITY	BASE HEATING MODEL 25-0	DETERMINE GAS RECOVERY TEMPERATURES PRESSURE DISTRIBUTIONS. BASE HEATING RATES DURING 2ND STAGE ASCENT RESULTING FROM PLUME RECIRCULATION AND DIRECT PLUME IMPINGEMENT	HEAT-TRANS	0.04 /	ROCKWELL/ LERC - SPACE POWER FACILITY	W. GARTON/RI J. E. VAUGHN M. M. MOSER JR. -DMS	DMS-DR-2288 NOV., 1977

ORIGINAL PAGE IS OF POOR QUALITY

TEST ID	REPORT TITLE	CONFIGURATIONS TESTED	TEST PURPOSE	TYPE OF TEST	MODEL SCALE MACH RANGE	TESTING AGENCY	COGNIZANT TEST DMS PERSONNEL	BASIC PUBLICATIONS OR COMMENTS
NRLAD - LSWT - 751 / OA163 CR-147,611	RESULTS OF A LANDING LOADS TEST USING A 0.0405-SCALE MODEL (16-0) OF THE SPACE SHUTTLE ORBITER IN THE ROCKWELL INTERNATIONAL NAAL WIND TUNNEL (OA163)	SPACE SHUTTLE ORBITER 140C	TO DEFINE THE ORBITER LANDING GEAR SYSTEM PRESSURE LOADING. TO RECORD LANDING GEAR DOOR AND STRUT HINGE MOMENT LEVELS. TO RECORD AERODYNAMIC INFLUENCE OF LANDING GEAR ON ORBITER FORCE DATA AND TO INVESTIGATE 40X80 ARC TUNNEL STRUT SIMULATION EFFECTS.	FORCE PRESSURE	0.0405 / 0.17 - 0.17	ROCKWELL/ NRLAD - LOW SPEED WIND TUNNEL	R.B.RUSSELL, R. C. MENNELL/RI D.W.HERSEY W. B. MEINDERS -DMS	DMS-DR-2289 VOLUME 01 DEC., 1976
NRLAD - LSWT - 751 / OA163 CR-147,612	RESULTS OF A LANDING LOADS TEST USING A 0.0405-SCALE MODEL (16-0) OF THE SPACE SHUTTLE ORBITER IN THE ROCKWELL INTERNATIONAL NAAL WIND TUNNEL (OA163)	SPACE SHUTTLE ORBITER 140C	TO DEFINE THE ORBITER LANDING GEAR SYSTEM PRESSURE LOADING. TO RECORD LANDING GEAR DOOR AND STRUT HINGE MOMENT LEVELS. TO RECORD AERODYNAMIC INFLUENCE OF LANDING GEAR ON ORBITER FORCE DATA AND TO INVESTIGATE 40X80 ARC TUNNEL STRUT SIMULATION EFFECTS.	FORCE PRESSURE	0.0405 / 0.17 - 0.17	ROCKWELL/ NRLAD - LOW SPEED WIND TUNNEL	R.B.RUSSELL, R. C. MENNELL/RI D.W.HERSEY W. B. MEINDERS -DMS	DMS-DR-2289 VOLUME 02 DEC., 1976

TEST ID	REPORT TITLE	CONFIGURATIONS TESTED	TEST PURPOSE	TYPE OF TEST	MODEL SCALE MACH RANGE	TESTING AGENCY	COGNIZANT TEST DMS PERSONNEL	BASIC PUBLICATIONS OR COMMENTS
NRLAD LSWT 751 0A163 CR-147,613	RESULTS OF A LANDING LOADS TEST USING A 0.0405-SCALE MODEL (16-0) OF THE SPACE SHUTTLE ORBITER IN THE ROCKWELL INTERNATIONAL NAAL WIND TUNNEL (0A163)	SPACE SHUTTLE ORBITER 140C	TO DEFINE THE ORBITER LANDING GEAR SYSTEM PRESSURE LOADING. TO RECORD LANDING GEAR DOOR AND STRUT HINGE MOMENT LEVELS. TO RECORD AERODYNAMIC INFLUENCE OF LANDING GEAR ON ORBITER FORCE DATA AND TO INVESTIGATE 40X80 ARC TUNNEL STRUT SIMULATION EFFECTS.	FORCE PRESSURE	0.0405 / 0.17 - 0.17	ROCKWELL/ NRLAD - LOW SPEED WIND TUNNEL	R.B.RUSSELL, R. C. MENNELL/RI D.W.HERSEY W. B. MEINDERS -DMS	DMS-DR-2289 VOLUME 03 DEC., 1976
NRLAD LSWT 751 0A163 CR-147,614	RESULTS OF A LANDING LOADS TEST USING A 0.0405-SCALE MODEL (16-0) OF THE SPACE SHUTTLE ORBITER IN THE ROCKWELL INTERNATIONAL NAAL WIND TUNNEL (0A163)	SPACE SHUTTLE ORBITER 140C	TO DEFINE THE ORBITER LANDING GEAR SYSTEM PRESSURE LOADING. TO RECORD LANDING GEAR DOOR AND STRUT HINGE MOMENT LEVELS. TO RECORD AERODYNAMIC INFLUENCE OF LANDING GEAR ON ORBITER FORCE DATA AND TO INVESTIGATE 40X80 ARC TUNNEL STRUT SIMULATION EFFECTS.	FORCE PRESSURE	0.0405 / 0.17 - 0.17	ROCKWELL/ NRLAD - LOW SPEED WIND TUNNEL	R.B.RUSSELL, R. C. MENNELL/RI D.W.HERSEY W. H. MEINDERS -DMS	DMS-DR-2289 VOLUME 04 DEC., 1976

TEST ID	REPORT TITLE	CONFIGURATIONS TESTED	TEST PURPOSE	TYPE OF TEST	MODEL SCALE MACH RANGE	TESTING AGENCY	COGNIZANT TEST DMS PERSONNEL	BASIC PUBLICATIONS OR COMMENTS
LARC V/STOL 129 CAB CR-147,641	MATED AERODYNAMIC CHARACTERISTICS / INVESTIGATION FOR THE 0.04 SCALE 747 CAM AND THE 0.0405 SCALE SPACE SHUTTLE ORBITER IN THE NASA LANGLEY V/STOL TRANSIT ION RESEARCH WIND TUNNEL	747 ALONE 747/ORBITER-FERRY CONFIGURATION, 747/ORBITER-ALT CONFIGURATIONS	TO INVESTIGATE THE EFFECTS OF FLAP SETTING, STABILIZER ANGLE, AND GROUND PROXIMITY ON THE CONFIGURATIONS TESTED.	FORCE	0.0400 , 0.0405 / 0.15 - 0.21	BOEING / LARC - V/STOL TRANSITION RESEARCH WIND TUNNEL	R.D. KNUDSEN/THE BOEING CO. J.LOUISSE AND J.H.WALTER/THE BOEING CO. D. A. SARVER G. W. KLUG -DMS	DMS-DR-2290 VOLUME 01 NOV., 1976
LARC V/STOL 129 CAB CR-147,642	MATED AERODYNAMIC CHARACTERISTICS / INVESTIGATION FOR THE 0.04 SCALE 747 CAM AND THE 0.0405 SCALE SPACE SHUTTLE ORBITER IN THE NASA LANGLEY V/STOL TRANSIT ION RESEARCH WIND TUNNEL	747 ALONE 747/ORBITER-FERRY CONFIGURATION, 747/ORBITER-ALT CONFIGURATIONS	TO INVESTIGATE THE EFFECTS OF FLAP SETTING, STABILIZER ANGLE, AND GROUND PROXIMITY ON THE CONFIGURATIONS TESTED.	FORCE	0.0400 , 0.0405 / 0.15 - 0.21	BOEING / LARC - V/STOL TRANSITION RESEARCH WIND TUNNEL	R.D. KNUDSEN/THE BOEING CO. J.LOUISSE AND J.H.WALTER/THE BOEING CO. D. A. SARVER G. W. KLUG -DMS	DMS-DR-2290 VOLUME 02 NOV., 1976
LARC V/STOL 129 CAB CR-147,643	MATED AERODYNAMIC CHARACTERISTICS / INVESTIGATION FOR THE 0.04 SCALE 747 CAM AND THE 0.0405 SCALE SPACE SHUTTLE ORBITER IN THE NASA LANGLEY V/STOL TRANSIT ION RESEARCH WIND TUNNEL	747 ALONE 747/ORBITER-FERRY CONFIGURATION, 747/ORBITER-ALT CONFIGURATIONS	TO INVESTIGATE THE EFFECTS OF FLAP SETTING, STABILIZER ANGLE, AND GROUND PROXIMITY ON THE CONFIGURATIONS TESTED.	FORCE	0.0400 , 0.0405 / 0.15 - 0.21	BOEING / LARC - V/STOL TRANSITION RESEARCH WIND TUNNEL	R.D. KNUDSEN/THE BOEING CO. J.LOUISSE AND J.H.WALTER/THE BOEING CO. D. A. SARVER G. W. KLUG -DMS	DMS-DR-2290 VOLUME 03 NOV., 1976

TEST ID	REPORT TITLE	CONFIGURATIONS TESTED	TEST PURPOSE	TYPE OF TEST	MODEL SCALE MACH RANGE	TESTING AGENCY	COGNIZANT TEST DMS PERSONNEL	BASIC PUBLICATIONS OR COMMENTS
LARC - LTPT - 214 / LA368				FORCE		LARC / LARC - LOW-TURBULENCE PRESSURE TUNN EL	D.B. WATSON -DMS	DMS-DR-2292 TO LRC
AEDC - SWTA - KIA / IA40 CR-151,381	RESULTS OF TESTS USING A 0.010-SCALE MODEL 75-OTS IN THE AEDC VKF TUNNEL A	MODEL 75-OTS (72-O WING, 140C MOD. FUSELAGE, ET, SRB)	TO OBTAIN PROXIMITY FORCE AND MOMENT DATA FOR ET AND SRB WITH SRB SEPARATION MOTOR PLUME EFFECTS	FORCE	0.010 / 4.5 -	ROCKWELL/ AEDC - SUPERSONIC WIND TUNNEL (A)	J. J. DAILEDA, J. MARROQUIN/RI J. E. VAUGHN M. M. MOSER JR. -DMS	DMS-DR-2293 DEC., 1977
AEDC - SWTA - A4A / IH41B CR-151,069	RESULTS OF AN INVESTIGATION OF THE SPACE SHUTTLE INTEGRATED VEHICLE AERODYNAMIC HEATING CHARACTERISTICS OBTAINED USING THE 0.0175-SCALE MODEL 60-OTS IN AEDC TUNNEL A DURING TESTS IH41B	ET ALONE T34 ORBITER ALONE B6 2C12E52F10M16R18V8W116 ORBITER + TANK B6 2C12E52F10M16R185 23T34V8W116	A THIN-SKIN THERMOCOUPLE TEST WAS CONDUCTED TO OBTAIN HEAT-TRANSFER DATA ON THE SPACE SHUTTLE INTEGRATED VEHICLE DURING THE ASCENT PHASE OF ITS FLIGHT PROFILE	HEAT-TRANS	0.0175 / 3.01 - 4.01	ROCKWELL/ AEDC - SUPERSONIC WIND TUNNEL (A)	W.H. DYE/ROCKWELL INTERNATIONAL K.W. NUTT/ARO INC D. A. SARVER G. W. KLUG -DMS	DMS-DR-2295 VOLUME 01 SEPT., 1977
AEDC - SWTA - A4A / IH41B CR-151,070	RESULTS OF AN INVESTIGATION OF THE SPACE SHUTTLE INTEGRATED VEHICLE AERODYNAMIC HEATING CHARACTERISTICS OBTAINED USING THE 0.0175-SCALE MODEL 60-OTS IN AEDC TUNNEL A DURING TESTS IH41B	ET ALONE T34 ORBITER ALONE B6 2C12E52F10M16R18V8W116 ORBITER + TANK B6 2C12E52F10M16R185 23T34V8W116	A THIN-SKIN THERMOCOUPLE TEST WAS CONDUCTED TO OBTAIN HEAT-TRANSFER DATA ON THE SPACE SHUTTLE INTEGRATED VEHICLE DURING THE ASCENT PHASE OF ITS FLIGHT PROFILE	HEAT-TRANS	0.0175 / 3.01 - 4.01	ROCKWELL/ AEDC - SUPERSONIC WIND TUNNEL (A)	W.H. DYE/ROCKWELL INTERNATIONAL K.W. NUTT/ARO INC D. A. SARVER G. W. KLUG -DMS	DMS-DR-2295 VOLUME 02 SEPT., 1977

TEST ID	REPORT TITLE	CONFIGURATIONS TESTED	TEST PURPOSE	TYPE OF TEST	MODEL SCALE MACH RANGE	TESTING AGENCY	COGNIZANT TEST DMS PERSONNEL	BASIC PUBLICATIONS OR COMMENTS
AEDC SWTA A4A IH41B CR-151,071	RESULTS OF AN INVESTIGATION OF THE SPACE SHUTTLE INTEGRATED VEHICLE AERODYNAMIC HEATING CHARACTERISTICS OBTAINED USING THE 0.0175-SCALE MODEL 60-OTS IN AEDC TUNNEL A DURING TESTS IH41B	ET ALONE T34 ORBITER ALONE B6 2C12E52F10M16R18V 8W116 ORBITER + TANK B6 2C12E52F10M16R185 23T34V8W116	A THIN-SKIN THERMOCOUPLE TEST WAS CONDUCTED TO OBTAIN HEAT-TRANSFER DATA ON THE SPACE SHUTTLE INTEGRATED VEHICLE DURING THE ASCENT PHASE OF ITS FLIGHT PROFILE	HEAT-TRANS	0.0175 / 3.01 - 4.01	ROCKWELL/ AEDC - SUPERSONIC WIND TUNNEL (A)	W.H. DYE/ROCKWELL INTERNATIONAL K.W. NUTT/ARO INC. D. A. SARVER G. W. KLUG -DMS	DMS-DR-2295 VOLUME 03 SEPT., 1977
AEDC SWTA A4A IH41B CR-151,072	RESULTS OF AN INVESTIGATION OF THE SPACE SHUTTLE INTEGRATED VEHICLE AERODYNAMIC HEATING CHARACTERISTICS OBTAINED USING THE 0.0175-SCALE MODEL 60-OTS IN AEDC TUNNEL A DURING TESTS IH41B	ET ALONE T34 ORBITER ALONE B6 2C12E52F10M16R18V 8W116 ORBITER + TANK B6 2C12E52F10M16R185 23T34V8W116	A THIN-SKIN THERMOCOUPLE TEST WAS CONDUCTED TO OBTAIN HEAT-TRANSFER DATA ON THE SPACE SHUTTLE INTEGRATED VEHICLE DURING THE ASCENT PHASE OF ITS FLIGHT PROFILE	HEAT-TRANS	0.0175 / 3.01 - 4.01	ROCKWELL/ AEDC - SUPERSONIC WIND TUNNEL (A)	W.H. DYE/ROCKWELL INTERNATIONAL K.W. NUTT/ARO INC. D. A. SARVER G. W. KLUG -DMS	DMS-DR-2295 VOLUME 04 OCT., 1977
AEDC SWTA A4A IH41B CR-151,073	RESULTS OF AN INVESTIGATION OF THE SPACE SHUTTLE INTEGRATED VEHICLE AERODYNAMIC HEATING CHARACTERISTICS OBTAINED USING THE 0.0175-SCALE MODEL 60-OTS IN AEDC TUNNEL A DURING TESTS IH41B	ET ALONE T34 ORBITER ALONE B6 2C12E52F10M16R18V 8W116 ORBITER + TANK B6 2C12E52F10M16R185 23T34V8W116	A THIN-SKIN THERMOCOUPLE TEST WAS CONDUCTED TO OBTAIN HEAT-TRANSFER DATA ON THE SPACE SHUTTLE INTEGRATED VEHICLE DURING THE ASCENT PHASE OF ITS FLIGHT PROFILE	HEAT-TRANS	0.0175 / 3.01 - 4.01	ROCKWELL/ AEDC - SUPERSONIC WIND TUNNEL (A)	W.H. DYE/ROCKWELL INTERNATIONAL K.W. NUTT/ARO INC. D. A. SARVER G. W. KLUG -DMS	DMS-DR-2295 VOLUME 05 OCT., 1977

TEST ID	REPORT TITLE	CONFIGURATIONS TESTED	TEST PURPOSE	TYPE OF TEST	MODEL SCALE MACH RANGE	TESTING AGENCY	COGNIZANT TEST DMS PERSONNEL	BASIC PUBLICATIONS OR COMMENTS
LARC LTPT 229 LABI CR-147,609	SHUTTLE MODEL TAILCONE PPESSURE DISTRIBUTION AT LOW SUBSONIC SPEEDS OF A 0.03614-SCALE MODEL IN THE NASA/LARC LOW TURBULENCE PRESSURE TUNNEL (LABI)	.03614-SCALE ORBITER MODEL OF A 08B CONFIGURATION WITH A 139B CONFIGURATION NOSE FORWARD OF F.S. 500.	TO DETERMINE THE SENSITIVITY OF THE TAILCONE TO CHANGES IN REYNOLDS NUMBER.DETERMINE THE PRESSURE DISTRIBUTION OVER THE TAILCONE FOR STRUCTURAL DESIGN PURPOSES,AND TO DETERMINE THE INTERFERENCE EFFECTS OF THREE TYPES OF WIND TUNNEL MOUNTING TECHNIQUES ON THE TAILCONE	PRESSURE	03614 / .20 - 30	LARC / LARC - LOW-TURBULENCE PRESSURE TUNNEL	BERNARD SPENCER,GEORGE M. WARE/LARC R. H. LINDAHL -DMS	DMS-DR-2296 VOLUME 01 AUGUST, 1976
LARC LTPT 229 LABI CR-147,610	SHUTTLE MODEL TAILCONE PRESSURE DISTRIBUTION AT LOW SUBSONIC SPEEDS OF A 0.03614-SCALE MODEL IN THE NASA/LARC LOW TURBULENCE PRESSURE TUNNEL (LABI)	.03614-SCALE ORBITER MODEL OF A 08B CONFIGURATION WITH A 139B CONFIGURATION NOSE FORWARD OF F.S. 500.	TO DETERMINE THE SENSITIVITY OF THE TAILCONE TO CHANGES IN REYNOLDS NUMBER.DETERMINE THE PRESSURE DISTRIBUTION OVER THE TAILCONE FOR STRUCTURAL DESIGN PURPOSES,AND TO DETERMINE THE INTERFERENCE EFFECTS OF THREE TYPES OF WIND TUNNEL MOUNTING TECHNIQUES ON THE TAILCONE	PRESSURE	.03614 / .20 - .30	LARC / LARC - LOW-TURBULENCE PRESSURE TUNNEL	BERNARD SPENCER,GEORGE M. WARE/LARC R. H. LINDAHL -DMS	DMS-DR-2296 VOLUME 02 AUGUST, 1976

TEST ID	REPORT TITLE	CONFIGURATIONS TESTED	TEST PURPOSE	TYPE OF TEST	MODEL SCALE / MACH RANGE	TESTING AGENCY	COGNIZANT TEST DMS PERSONNEL	BASIC PUBLICATIONS OR COMMENTS
LARC - UPWT - 1145 / LA45A/B CR-147,628	HIGH SUPERSONIC AERODYNAMIC CHARACTERISTICS OF FIVE IRREGULAR PLANFORM WINGS WITH SYSTEMATICALLY VARYING WING FILLET GEOMETRY TESTED IN THE NASA/LARC 4-FOOT UPWT (LEG 2) (LA45A/B)	WING FILLET SWEEP	ESTABLISH GUIDLINES FOR LINEARIZATION OF ORBITER AERODYNAMIC CHARACTERISTICS	FORCE	1.0 / 2.36 - 3.7	LARC / LARC - UNITARY PLAN WIND TUNNEL	GEO. WARE, B. SPE NCER/LARC J. W. BALL D.B. WATSON -DMS	DMS-DR-2297 NOV., 1976
LARC - LTPT - 227 / LTPT - 238 / LA73A LA73B CR-151,409	LOW SPEED STABILITY AND CONTROL CHARACTERISTICS OF A 0.015 SCALE MODEL 69-0 OF THE SPACE SHUTTLE ORBITER WITH FOREBODY RSI MODIFICATIONS IN THE NASA/LARC LOW TURBULENCE PRESSURE TUNNEL (LA73A/B)	SSV ORBITER MODEL 69-0	TO DETERMINE LOW-SPEED STABILITY AND CONTROL CHARACTERISTICS OF THE SPACE SHUTTLE ORBITER WITH FOREBODY RSI MODIFICATIONS	FORCE	0.015 / 0.25 - 0.25	LARC / LARC - LOW-TURBULENCE PRESSURE TUNNEL LOW-TURBULENCE PRESSURE TUNNEL	BERNARD SPENCER/L ARC J. W. BALL M. M. MANN -DMS	DMS-DR-2298 MAY, 1978
LARC - 710HST - 999 / LA80 TM-X 3497	DYNAMIC STABILITY CHARACTERISTICS OF THE COMBINATION SPACE SHUTTLE ORBITER AND FERRY COMBINATION	ORBITER/747 FERRY VEHICLE	TO MEASURE PITCH, YAW, ROLL DAMPING, NORMAL FORCE DUE TO PITCH RATE, AND YAWING MOMENT DUE TO ROLL RATE AND ROLLING MOMENT DUE TO YAW RATE	FORCE	0.015 / 0.2 - 0.5	LARC / LARC - HIGH SPEED 7 BY 10-FOOT TUNNEL	D. C. FREEMAN, JR ., R. P. BOYDEN/L ARC R. H. LINDAHL -DMS	DMS-DR-2299 JUNE, 1977

TEST ID	REPORT TITLE	CONFIGURATIONS TESTED	TEST PURPOSE	TYPE OF TEST	MODEL SCALE MACH RANGE	TESTING AGENCY	COGNIZANT TEST DMS PERSONNEL	BASIC PUBLICATIONS OR COMMENTS
LARC - LTPT - 228 / LA61B CR-147,629	LOW-SUBSONIC STABILITY AND CONTROL CHARACTERISTICS OF A 0.015-SCALE REMOTELY CONTROLLED ELEVON MODEL (44-0) OF THE SPACE SHUTTLE ORBITER IN THE LANGLEY RESEARCH CENTER LOW TURBULENCE PRESSURE TUNNEL	140A/B/C (B26 C9 E43 F8 M16 N28 R5 V8 W)	TO GENERATE A DETAILED AERODYNAMIC DATA BASE FOR CURRENT SS CONFIGURATION	FORCE	0.015 / 0.15 - 0.25	LARC / LARC - LOW-TURBULENCE PRESSURE TUNNEL	B. SPENCER, JR., G. WARE/LARC W. B. MEINDERS -DMS	DMS-DR-2300 OCT., 1976
AEDC - HWTB - 82A / OH54A CR-144,605	RESULTS OF PHASE CHANGE PAINT HEAT TRANSFER TESTS UTILIZING 0.040 SCALE 50 PERCENT FOREBODY MODELS (NO. 82-0) OF THE ROCKWELL INTERNATIONAL SPACE SHUTTLE ORBITER IN AEDC VKF HYPERSONIC TUNNEL B	MODELS 82-1, -3, -5, -8, -11, ALL 50 PERCENT FOREBODIES	TO DETERMINE THE EFFECTS OF VARIOUS ROUGHNESS ELEMENTS ON BOUNDARY LAYER TRANSITION	HEAT-TRANS	0.040 / 7.93 - 8.00	ROCKWELL/ AEDC - HYPERSONIC WIND TUNNEL (B)	W. H. DYE/RI K. HUBE, D. CARVER R/ARO D. A. SARVER M. M. MOSER JR. -DMS	DMS-DR-2301 MAY, 1976
AEDC - HWTB - E3A / OH75 CR-144,618	RESULTS OF PHASE CHANGE PAINT TEST OF 0.040 SCALE 50 PERCENT FOREBODY MODELS (82-0) OF THE SPACE SHUTTLE ORBITER IN THE AEDC VKF 'B' HYPERSONIC WIND TUNNEL	MODELS 82-1, -4, 50 PERCENT FOREBODIES	TO DETERMINE THE EFFECTS OF SIMULATED RCS NOZZLES, PROTUBERANCES, AND PENETRATIONS ON AERODYNAMIC HEATING RATES DURING SIMULATED ENTRY CONDITIONS	HEAT-TRANS	0.030 / 8 - 8	ROCKWELL/ AEDC - HYPERSONIC WIND TUNNEL (B)	W. H. DYE/RI L. CARTER/ARO D. A. SARVER M. M. MOSER JR. -DMS	DMS-DR-2303 MAY, 1976

TEST ID	REPORT TITLE	CONFIGURATIONS TESTED	TEST PURPOSE	TYPE OF TEST	MODEL SCALE / MACH RANGE	TESTING AGENCY	COGNIZANT TEST DMS PERSONNEL	BASIC PUBLICATIONS OR COMMENTS
LTV HSWT 573 LA76 CR-151,059	HIGH REYNOLDS NUMBER TRANSONIC STABILITY AND CONTROL CHARACTERISTICS OF A 0.015 SCALE REMOTELY CONTROLLED ELEVON) MODEL 44-0 OF THE SPACE SHUTTLE ORBITER TESTED IN THE VSD HIGH SPEED TUNNEL (LA76)	B26C9E43F8M16N28R5V8W	TO OBTAIN HIGH REYNOLDS NUMBER TRANSONIC AERODYNAMIC DATA ON CONTROL SURFACE LINEARITY AND SENSITIVITY TO MACH NUMBER FOR FINE-CUT SPEED BRAKE, BODY FLAP AND RUDDER DEFLECTIONS; TO INVESTIGATE THE INTERACTIVE EFFECTS OF MUTUAL CONTROL SURFACE DEFLECTIONS		0.015 / 0.6 - 2.9	LARC / LTV - HIGH SPEED WIND TUNNEL	M. M. MANN -DMS	DMS-DR-2305 VOLUME 0 JUNE, 1977
LTV HSWT 573 LA76 CR-151,060	HIGH REYNOLDS NUMBER TRANSONIC STABILITY AND CONTROL CHARACTERISTICS OF A 0.015 SCALE REMOTELY CONTROLLED ELEVON) MODEL 44-0 OF THE SPACE SHUTTLE ORBITER TESTED IN THE VSD HIGH SPEED TUNNEL (LA76)	B26C9E43F8M16N28R5V8W	TO OBTAIN HIGH REYNOLDS NUMBER TRANSONIC AERODYNAMIC DATA ON CONTROL SURFACE LINEARITY AND SENSITIVITY TO MACH NUMBER FOR FINE-CUT SPEED BRAKE, BODY FLAP AND RUDDER DEFLECTIONS; TO INVESTIGATE THE INTERACTIVE EFFECTS OF MUTUAL CONTROL SURFACE DEFLECTIONS		0.015 / 0.6 - 2.9	LARC / LTV - HIGH SPEED WIND TUNNEL	M. M. MANN -DMS	DMS-DR-2305 VOLUME 02 JUNE, 1977

TEST ID	REPORT TITLE	CONFIGURATIONS TESTED	TEST PURPOSE	TYPE OF TEST	MODEL SCALE MACH RANGE	TESTING AGENCY	COGNIZANT TEST DMS PERSONNEL	BASIC PUBLICATIONS OR COMMENTS
CALSPAN - 48HST - 181 / 1H5 CR-147,636	AN EXPERIMENTAL DETERMINATION IN THE CALSPAN LUDWIEG TUBE OF THE BASE ENVIRONMENT OF THE INTEGRATED SPACE SHUTTLE VEHICLE AT SIMULATED MACH 4.5 FLIGHT CONDITIONS (TEST 1H5 OF MODEL 19-OTS)	19-OTS	TO DETERMINE HEAT TRANSFER AND PRESSURE DISTRIBUTIONS IN BASE OF SS VEHICLE DURING SIMULATED LAUNCH TRAJECTORY CONDITIONS OF MACH 4.5 AND PRESSURE ALTITUDES BETWEEN 90.00 AND 210,000 FEET 6066. HOURS--1.152	PRESSURE	0.0225 / 4.5 - 4.5	ROCKWELL/ CALSPAN - 48-INCH HYPERSONIC SHOCK TUNNEL	R. F. DRZEWIECKI/ CALSPAN J. W. FOUST/RI D. A. SARVER M. M. MOSER JR. -DMS	DMS-DR-2308 OCT., 1976
LARC - 8TPT - 740 / LA72 CR-147,644	TRANSONIC STABILITY AND CONTROL CHARACTERISTICS OF A 0.015 SCALE MODEL 69-0 OF THE SPACE SHUTTLE ORBITER WITH FOREBODY RSI MODIFICATION IN THE NASA/LARC 8-FOOT TPT (LA72)	FOREBODY B1, B6, B7	TO DETERMINE POSSIBLE ADVERSE AERODYNAMIC EFFECTS OF SLIGHT REDUCTION IN THICKNESS OF THE REUSABLE SURFACE INSULATION (RSI) LOCATED ALONG THE SIDES OF THE SPACE SHUTTLE ORBITER FUSELAGE FOREBODY	FORCE	0.015 / 0.35- 1.20	LARC / LARC - 8-FOOT TRANSONIC PRESSURE TUNNEL	W.P.PHILLIPS/LARC C. R. EDWARDS -DMS	DMS-DR-2309 NOV., 1976

TEST ID	REPORT TITLE	CONFIGURATIONS TESTED	TEST PURPOSE	TYPE OF TEST	MODEL SCALE MACH RANGE	TESTING AGENCY	COGNIZANT TEST DMS PERSONNEL	BASIC PUBLICATIONS OR COMMENTS
MSFC - 14TWT - 640 / SA14FB CR-151,083	REENTRY STATIC STABILITY CHARACTERISTICS OF A 0.005 48 SCALE MODEL OF A RIGHT HAND 146-INCH DIAMETER SOLID ROCKET BOOSTER (MSFC MODEL 486) REENTRY CONFIGURATION AS DETERMINED FROM TESTS IN THE NASA/MSFC 14-INCH TRISONIC WIND TUNNEL	RIGHT-HAND SRB REENTRY CONFIG.	TO DETERMINE AERODYNAMIC STATIC STABILITY CHARACTERISTICS OF SRB REENTRY CONFIGURATION	FORCE	0.00548 / 0.4 - 4.45	MSFC / MSFC - 14-INCH TRISONIC WIND TUNNEL	J. D. JOHNSON/MSFC G. D. STREBY/NSI V. W. SPARKS M. M. MOSER JR. -DMS	DMS-DR-2310 VOLUME 01 AUGUST, 1977
MSFC - 14TWT - 640 / SA14FB CR-151,084	REENTRY STATIC STABILITY CHARACTERISTICS OF A 0.005 48 SCALE MODEL OF A RIGHT HAND 146-INCH DIAMETER SOLID ROCKET BOOSTER (MSFC MODEL 486) REENTRY CONFIGURATION AS DETERMINED FROM TESTS IN THE NASA/MSFC 14-INCH TRISONIC WIND TUNNEL	RIGHT-HAND SRB REENTRY CONFIG.	TO DETERMINE AERODYNAMIC STATIC STABILITY CHARACTERISTICS OF SRB REENTRY CONFIGURATION	FORCE	0.00548 / 0.4 - 4.45	MSFC / MSFC - 14-INCH TRISONIC WIND TUNNEL	J. D. JOHNSON/MSFC G. D. STREBY/NSI V. W. SPARKS M. M. MOSER JR. -DMS	DMS-DR-2310 VOLUME 02 AUGUST, 1977

TEST ID	REPORT TITLE	CONFIGURATIONS TESTED	TEST PURPOSE	TYPE OF TEST	MODEL SCALE MACH RANGE	TESTING AGENCY	COGNIZANT TEST DMS PERSONNEL	BASIC PUBLICATIONS OR COMMENTS
LARC -	RESULTS FROM INVE	B58C5E:8F4R5V5W87	TO INVESTIGATE TH	PRESSURE	0.004 /	LARC /	JAMES C. ELLISON/	DMS-DR-2311
CF4 -	STIGATIONS IN THR	-VEHICLE 2A (MODI	E REAL GAS EFFECT		5.94 -	LARC -	LARC	AUGUST, 1976
267-268 /	EE NASA/LARC HYPE	FIED)	S USING A 0.004 S		20.30	FREON TUNNEL	J. W. BALL	
224? -	RSONIC WIND SANDI		CALE MODEL OF 3			22-INCH HELIUM	G. W. KLUG	
446 /	TUNNELS ON A 0.00		THE SPACE SHUTTLE			TUNNEL	-DMS	
LA78	4 SCALE MODEL SPA		ORBITER					
LA87	CE SHUTTLE ORBITE							
LA88	R (MODEL 13P-0)							
CR-147,620	TO DETERMINE REAL							
	GAS EFFECTS (LA7							
	8, LA87, LA88)							
AEDC -	RESULTS OF AN INV	VEHICLE 5, TO INC	TO OBTAIN HEAT TR	HEAT-TRANS	0.0175 /	ROCKWELL/	W. H. DYE/RI	DMS-DR-2312
SWTA -	ESTIGATION OF THE	LUDE SRB ALONE AN	ANSFER DATA ON TH		3.0 -	AEDC -	K. W. NUTT/ARO,IN	VOLUME 01
J3A /	SPACE SHUTTLE SO	D OTS (SPIKE NOSE	E SPACE SHUTTLE S		4.0	SUPERSONIC WIN	C.	JUNE, 1977
IH47	LID ROCKET BOOSTE	ET)	OLID ROCKET BOOST			D TUNNEL (A)	D. A. SARVER	
CR-151,075	R AERODYNAMIC HEA		ER, BOTH ISOLATED				C. R. EDWARDS	
	TING CHARACTERIST		AND IN THE PRESE				-DMS	
	ICS OBTAINED USIN		NCE OF THE ORBITE					
	G THE 0.0175-SCAL		R AND EXTERNAL TA					
	E MODEL 60-OTS IN		NK, DURING THE AS					
	AEDC TUNNEL A DU		CENT PHASE OF ITS					
	RING TESTS IH47		FLIGHT PROFILE					
AEDC -	RESULTS OF AN INV	VEHICLE 5, TO INC	TO OBTAIN HEAT TR	HEAT-TRANS	0.0175 /	ROCKWELL/	W. H. DYE/RI	DMS-DR-2312
SWTA -	ESTIGATION OF THE	LUDE SRB ALONE AN	ANSFER DATA ON TH		3.0 -	AEDC -	K. W. NUTT/ARO,IN	VOLUME 02
J3A /	SPACE SHUTTLE SO	D OTS (SPIKE NOSE	E SPACE SHUTTLE S		4.0	SUPERSONIC WIN	C.	JULY, 1977
IH47	LID ROCKET BOOSTE	ET)	OLID ROCKET BOOST			D TUNNEL (A)	D. A. SARVER	
CR-151,076	R AERODYNAMIC HEA		ER, BOTH ISOLATED				C. R. EDWARDS	
	TING CHARACTERIST		AND IN THE PRESE				-DMS	
	ICS OBTAINED USIN		NCE OF THE ORBITE					
	G THE 0.0175-SCAL		R AND EXTERNAL TA					
	E MODEL 60-OTS IN		NK, DURING THE AS					
	AEDC TUNNEL A DU		CENT PHASE OF ITS					
	RING TESTS IH47		FLIGHT PROFILE					

TEST ID	REPORT TITLE	CONFIGURATIONS TESTED	TEST PURPOSE	TYPE OF TEST	MODEL SCALE MACH RANGE	TESTING AGENCY	COGNIZANT TEST DMS PERSONNEL	BASIC PUBLICATIONS OR COMMENTS
ARC 3.5HWT 215 FH14 CR-151,041	RESULTS OF WIND TUNNEL TESTS TO DETERMINE HEAT TRANSFER RATES ON A .0275 SCALE SPACE SHUTTLE EXTERNAL TANK WITH A 10 DEG/40 DEG DOUBLE CONE-OGIVE NOSE IN THE NASA/ARC 3.5 HYPERSONIC TUNNEL	.0275 SCALE SPACE SHUTTLE EXTERNAL TANK	TO VERIFY THE THEORETICAL PREDICTIONS USED IN THE GENERATION OF THE THERMAL ENVIRONMENTS FOR THE LO2 TANK AND TO MORE ACCURATELY DEFINE THE RECOVERY FACTORS FOR REDUCING THE HEAT TRANSFER DATA FROM FH13	HEAT-TRANS	.0275 / 5.2 - 5.3	MSFC / ARC - 3.5-FOOT HYPERSONIC WIND TUNNEL	WILLIAM K. LOCKMA N/ARC. HARRY CARROLL/MMA R. H. LINDAHL -DMS	DMS-DR-2313 VOLUME 01 MARCH, 1977
ARC 3.5HWT 215 FH14 CR-151,042	RESULTS OF WIND TUNNEL TESTS TO DETERMINE HEAT TRANSFER RATES ON A .0275 SCALE SPACE SHUTTLE EXTERNAL TANK WITH A 10 DEG/40 DEG DOUBLE CONE-OGIVE NOSE IN THE NASA/ARC 3.5 HYPERSONIC TUNNEL	.0275 SCALE SPACE SHUTTLE EXTERNAL TANK	TO VERIFY THE THEORETICAL PREDICTIONS USED IN THE GENERATION OF THE THERMAL ENVIRONMENTS FOR THE LO2 TANK AND TO MORE ACCURATELY DEFINE THE RECOVERY FACTORS FOR REDUCING THE HEAT TRANSFER DATA FROM FH13	HEAT-TRANS	.0275 / 5.2 - 5.3	SFC / ARC - 3.5-FOOT HYPERSONIC WIND TUNNEL	WILLIAM K. LOCKMA N/ARC. HARRY CARROLL/MMA R. H. LINDAHL -DMS	DMS-DR-2313 VOLUME 02 MARCH, 1977
ARC 3.5HWT 215 FH14 CR-151,043	RESULTS OF WIND TUNNEL TESTS TO DETERMINE HEAT TRANSFER RATES ON A .0275 SCALE SPACE SHUTTLE EXTERNAL TANK WITH A 10 DEG/40 DEG DOUBLE CONE-OGIVE NOSE IN THE NASA/ARC 3.5 HYPERSONIC TUNNEL	.0275 SCALE SPACE SHUTTLE EXTERNAL TANK	TO VERIFY THE THEORETICAL PREDICTIONS USED IN THE GENERATION OF THE THERMAL ENVIRONMENTS FOR THE LO2 TANK AND TO MORE ACCURATELY DEFINE THE RECOVERY FACTORS FOR REDUCING THE HEAT TRANSFER DATA FROM FH13	HEAT-TRANS	.0275 / 5.2 - 5.3	SFC / ARC - 3.5-FOOT HYPERSONIC WIND TUNNEL	WILLIAM K. LOCKMA N/ARC. HARRY CARROLL/MMA R. H. LINDAHL -DMS	DMS-DR-2313 VOLUME 03 MARCH, 1977

TEST ID	REPORT TITLE	CONFIGURATIONS TESTED	TEST PURPOSE	TYPE OF TEST	MODEL SCALE / MACH RANGE	TESTING AGENCY	COGNIZANT TEST DMS PERSONNEL	BASIC PUBLICATIONS OR COMMENTS
NRLAD - 7TWT - 297 / IA141 CR-147,623	RESULTS OF AN INVESTIGATION OF REYNOLDS NUMBER EFFECTS ON INTEGRATED VEHICLE ELEVON HINGE MOMENTS AND WING PANEL LOADS OBTAINED WITH 0.01-SCALE MODEL 72-OTS IN THE ROCKWELL TRISONIC WIND TUNNEL	0.010-SCALE VL70-0001400C INTEGRATED SPACE SHUTTLE LAUNCH VEHICLE	TO OBTAIN REYNOLDS NUMBER EFFECTS ON ORBITER ELEVON HINGE MOMENTS AND WING BENDING/TORSIONAL MOMENTS	FORCE	0.010 / 0.6 - 1.25	ROCKWELL/ NRLAD - 7-FOOT TRISONIC WIND TUNNEL	R.C.MENNELL/RI R. H. LINDAHL -DMS	DMS-DR-2315 AUGUST, 1976
ARC - 14-TWT - 143-1 / IA137 CR-147,622	RESULTS OF TEST IA137 IN THE NASA/ARC 14 FOOT TRANSONIC WIND TUNNEL (H) OF THE 0.07 SCALE EXTERNAL TANK FOREBODY (MODEL 68-T) TO DETERMINE AUXILIARY AERODYNAMIC DATA SYSTEM FEASIBILITY	FULL 331 INCH DIAMETER FOREBODY AND 80% (264.8 INCH) OF FULL DIAMETER FOREBODY BICONIC NOSE PROBE	TO EXAMINE THE FEASIBILITY OF THE AUXILIARY AERODYNAMIC DATA SYSTEM (AADS) FOR DETERMING ANGLES OF ATTACK AND SIDESLIP DURING BOOST FLIGHT	FORCE PRESSURE	0.07 / 0.55 - 1.15	ROCKWELL/ ARC - 14-FOOT TRANSONIC WIND TUNNEL	D.E. THORNTON/ROCKWELL INTERNATIONAL P.K. MILLER/ ROCKWELL INTERNATIONAL D. A. SARVER G. W. KLUG -DMS	DMS-DR-2316 SEPT., 1976
ARC 3.5WT 216 OH53A	RESULTS OF TESTS TO DETERMINE REACTION CONTROL SYSTEM (RCS) NOZZLE EFFECTS ON THE ORBITER FOREBODY ASCENT AERODYNAMIC HEATING RATES USING A 0.04-SCALE MODEL (83-0) IN THE AMES RESEARCH CENTER 3.5 FOOT HYPERSONIC WIND TUNNEL (OH53A)	0.04-SCALE (83-0) ORBITER	TO DETERMINE RCS NOZZLE EFFECTS ON THE ORBITER FORE BODY ASCENT AERODYNAMIC HEATING RATES	HEAT-TRANS	0.04 / 5.2 - 5.3	ROCKWELL/ ARC - 3.5-FOOT HYPERSONIC WIND TUNNEL	W.H. DYE/RI R. H. LINDAHL -DMS	DMS-DR-2317 JAN., 1980

TEST ID	REPORT TITLE	CONFIGURATIONS TESTED	TEST PURPOSE	TYPE OF TEST	MODEL SCALE MACH RANGE	TESTING AGENCY	COGNIZANT TEST DMS PERSONNEL	BASIC PUBLICATIONS OR COMMENTS
LARC UPWT 1173 LA75 CR-147,646	HIGH SUPERSONIC STABILITY AND CONTROL CHARACTERISTICS OF A 0.015-SCALE (REMOTELY CONTROLLED ELEVON) MODEL 44-0 SPACE SHUTTLE ORBITER TESTED IN THE NASA/LARC 4-FOOT UPWT (LEG 2) (LA75)	ORBITER-140A/B/C B26 C9 E43 F8 M16 N28 R5 V8 W	DETERMINATION OF CONTROL SURFACE EFFECTIVENESS AT HIGH SUPERSONIC MACH NUMBERS	FORCE	2.86 - 4.60	LARC / LARC - UNITARY PLAN WIND TUNNEL	B. SPENCER, G. W. ARE/LARC J. W. BALL D.B. WATSON -DMS	DMS-DR-2318 VOLUME 01 DEC., 1976
LARC UPWT 1173 LA75 CR-147,647	HIGH SUPERSONIC STABILITY AND CONTROL CHARACTERISTICS OF A 0.015-SCALE (REMOTELY CONTROLLED ELEVON) MODEL 44-0 SPACE SHUTTLE ORBITER TESTED IN THE NASA/LARC 4-FOOT UPWT (LEG 2) (LA75)	ORBITER-140A/B/C B26 C9 E43 F8 M16 N28 R5 V8 W	DETERMINATION OF CONTROL SURFACE EFFECTIVENESS AT HIGH SUPERSONIC MACH NUMBERS	FORCE	2.86 - 4.60	LARC / LARC - UNITARY PLAN WIND TUNNEL	B. SPENCER, G. W. ARE/LARC J. W. BALL D.B. WATSON -DMS	DMS-DR-2318 VOLUME 02 DEC., 1976
CALSPAN 48HST 189 96HST 1H43 CR-151,771	HEAT TRANSFER AND PRESSURE TESTS ON A 0.01-SCALE SPACE SHUTTLE ORB/ET 59-OT) IN THE CALSPAN HYPERVELOCITY SHOCK TUNNELS (1H43)	.01-SCALE SPACE SHUTTLE MODEL (59-OT)	TO DETERMINE ASCENT HYPERSONIC HEATING RATES AND PRESSURE DISTRIBUTIONS ON AN UPDATED CONFIGURATION (M CR 500) OF THE ORBITER/EXTERNAL TANK	HEAT-TRANS /	.01 7.5 - 20.0	ROCKWELL/ CALSPAN - 48-INCH HYPERSONIC SHOCK TUNNEL 96-INCH HYPERSONIC SHOCK TUNNEL	P.R.CARROLL/RI. C. .E. WITTLIFF/CALSPAN D.W.HERSEY R. H. LINDAHL -DMS	DMS-DR-2319 JUNE, 1979

TEST ID	REPORT TITLE	CONFIGURATIONS TESTED	TEST PURPOSE	TYPE OF TEST	MODEL SCALE MACH RANGE	TESTING AGENCY	COGNIZANT TEST DMS PERSONNEL	BASIC PUBLICATIONS OR COMMENTS
AEDC HWTB D8A OA169 CR-151,390	RESULTS OF TESTS USING A 0.0125-SCALE MODEL(70-OT)OF THE SPACE SHUTTLE VEHICLE ORBITER IN THE AEDC VKF TUNNEL B (OA169)	ORBITER 0.0125 70-OT	TO OBTAIN INTERACTION EFFECTS OF THE RCS THRUSTER JET PLUMES ON SSV AERODYNAMICS DURING RETURN-TO-LAUNCH-SITE(RTLS) ABORT FLIGHT PHASE	FORCE	0.0125 / 5.9 - 5.9	ROCKWELL/ AEDC - HYPERSONIC WIND TUNNEL (B)	J.J. DAILEDA, J. MARROQUIN/RI R. H. LINDAHL J. E. VAUGHN -DMS	DMS-DR-2320 VOLUME 01 FEB., 1978
AEDC HWTB D8A OA169 CR-151,391	RESULTS OF TESTS USING A 0.0125-SCALE MODEL(70-OT)OF THE SPACE SHUTTLE VEHICLE ORBITER IN THE AEDC VKF TUNNEL B (OA169)	ORBITER 0.0125 70-OT	TO OBTAIN INTERACTION EFFECTS OF THE RCS THRUSTER JET PLUMES ON SSV AERODYNAMICS DURING RETURN-TO-LAUNCH-SITE(RTLS) ABORT FLIGHT PHASE	FORCE	0.0125 / 5.9 - 5.9	ROCKWELL/ AEDC - HYPERSONIC WIND TUNNEL (B)	J.J. DAILEDA, J. MARROQUIN/RI R. H. LINDAHL J. E. VAUGHN -DMS	DMS-DR-2320 VOLUME 02 FEB., 1978
AEDC HWTB D8A OA169 CR-151,392	RESULTS OF TESTS USING A 0.0125-SCALE MODEL(70-OT)OF THE SPACE SHUTTLE VEHICLE ORBITER IN THE AEDC VKF TUNNEL B (OA169)	ORBITER 0.0125 70-OT	TO OBTAIN INTERACTION EFFECTS OF THE RCS THRUSTER JET PLUMES ON SSV AERODYNAMICS DURING RETURN-TO-LAUNCH-SITE(RTLS) ABORT FLIGHT PHASE	FORCE	0.0125 / 5.9 - 5.9	ROCKWELL/ AEDC - HYPERSONIC WIND TUNNEL (B)	J.J. DAILEDA, J. MARROQUIN/RI R. H. LINDAHL J. E. VAUGHN -DMS	DMS-DR-2320 VOLUME 03 FEB., 1978
AEDC HWTB V41B-E9A OH69 CR-151,410	RESULTS OF TEST OH69 OBTAINED IN THE AEDC VKF HYPERSONIC TUNNEL B USING THE INFRARED SCANNING METHOD TO OBTAIN HEAT TRANSFER DATA ON THE 0.040 SCALE MODEL 82-0 OF THE SPACE SHUTTLE FOREBODY	ORBITER VEHICLE FOREBODY	TO DETERMINE THE INFLUENCE OF THERMAL PROTECTION TILE ROUGHNESS ON WINDWARD SURFACE BOUNDARY-LAYER TRANSITION.	HEAT-TRANS	0.040 / 8.0 - 8.0	ROCKWELL/ AEDC - HYPERSONIC WIND TUNNEL (B)	J. C. MARTINEZ + W. H. DYE/RI J. E. VAUGHN -DMS	DMS-DR-2321 VOLUME 01 AUGUST, 1978

TEST ID	REPORT TITLE	CONFIGURATIONS TESTED	TEST PURPOSE	TYPE OF TEST	MODEL SCALE MACH RANGE	TESTING AGENCY	COGNIZANT TEST DMS PERSONNEL	BASIC PUBLICATIONS OR COMMENTS
AEDC - HWTB - W-1B-E9A / OH69 CR-151,411	RESULTS OF TEST OH69 OBTAINED IN THE AEDC VKF HYPERSONIC TUNNEL B USING THE INFRARED SCANNING METHOD TO OBTAIN HEAT TRANSFER DATA ON THE 0.040 SCALE MODEL 82-O OF THE SPACE SHUTTLE FOREBODY	ORBITER VEHICLE FOREBODY	TO DETERMINE THE INFLUENCE OF THERMAL PROTECTION TILE ROUGHNESS ON WINDWARD SURFACE BOUNDARY-LAYER TRANSITION.	HEAT-TRANS	0.040 / 8.0 - 8.0	ROCKWELL/ AEDC - HYPERSONIC WIND TUNNEL (B)	J. C. MARTINEZ + W. H. DYE/RI J. E. VAUGHN -DMS	DMS-DR-2321 VOLUME 02 AUGUST, 1978
LARC - UPWT - 1152 / IA9-A CR-151,039	RESULTS OF INVESTIGATIONS CONDUCTED IN THE LARC 4-FOOT UNITARY PLAN WIND TUNNEL LEG NO. 1 USING THE 0.010-SCALE 72-OTS MODEL OF THE SPACE SHUTTLE INTEGRATED VEHICLE	0.010-SCALE 72-OTS MODEL	AERO-LOADS INVESTIGATIONS ON THE UPDATED CONFIGURATION-5 SPACE SHUTTLE;FULL SIMULATION OF UPDATED VEHICLE PROTUBERANCES AND ATTACH HARDWARE WAS USED.	FORCE	0.010 / 1.55 - 2.00	ROCKWELL/ LARC - UNITARY PLAN WIND TUNNEL	M.E. NICHOLS,P.J. HAWTHORNE,J.T. HAMILTON,P.K. MILLER/RI D.C. FREEMAN/LARC R. H. LINDAHL -DMS	DMS-DR-2323 FEB., 1977
LARC - UPWT - 1177 / IA9-B CR-151,040	RESULTS OF INVESTIGATIONS CONDUCTED IN THE LARC 4-FOOT UNITARY PLAN WIND TUNNEL LEG NO. 2 USING THE 0.010-SCALE 72-OTS MODEL OF THE SPACE SHUTTLE INTEGRATED VEHICLE	0.010-SCALE 72-OTS MODEL	AERO-LOADS INVESTIGATIONS ON THE UPDATED CONFIGURATION-5 SPACE SHUTTLE LAUNCH VEHICLE; FULL SIMULATION OF UPDATED VEHICLE PROTUBERANCES AND ATTACH HARDWARE WAS USED.	FORCE	0.010 / 2.50 - 4.50	ROCKWELL/ LARC - UNITARY PLAN WIND TUNNEL	M.E. NICHOLS,P.J. HAWTHORNE,J.T. HAMILTON,P.K. MILLER/RI D.C. FREEMAN/LARC R. H. LINDAHL -DMS	DMS-DR-2324 FEB., 1977

TEST ID	REPORT TITLE	CONFIGURATIONS TESTED	TEST PURPOSE	TYPE OF TEST	MODEL SCALE / MACH RANGE	TESTING AGENCY	COGNIZANT TEST DMS PERSONNEL	BASIC PUBLICATIONS OR COMMENTS
MSFC - 14TWT - 620 / SA14FA CR-147,645	AERODYNAMIC CHARACTERISTICS OF A 0.00563 SCALE 142-INCH DIAMETER SOLID ROCKET BOOSTER (MSFC MODEL 449 AND 480) WITH SIDE MOUNTED STINGS IN THE NASA/MSFC 14 INCH TRISONIC WIND TUNNEL	CONF. 139	TO DETERMINE THE ENTRY STATIC STABILITY OF THE SRB.	FORCE	0.00563 / 0.6 - 3.48	MSFC / MSFC - 14-INCH TRISONIC WIND TUNNEL	P. E. RAMSEY/MSFC V. W. SPARKS G. G. MCDONALD -DMS	DMS-DR-2325 NOV., 1976
LARC - 8TPT - 749 / IA93 CR-151,037	RESULTS OF INVESTIGATIONS CONDUCTED IN THE LARC 8-FOOT TRANSONIC PRESSURE TUNNEL USING THE 0.010-SCALE 72-OTS MODEL OF THE SPACE SHUTTLE INTEGRATED VEHICLE	0.010-SCALE 72-OTS MODEL	AERO-LOADS INVESTIGATION ON THE UPDATED CONFIGURATION-5 SPACE SHUTTLE; FULL SIMULATION OF UPDATED VEHICLE PROTUBERANCES AND ATTACH HARDW ARE WERE USED.	FORCE	0.010 / 0.6 - 1.205	ROCKWELL/ LARC - 8-FOOT TRANSONIC PRESSURE TUNNEL	M.E.NICHOLS,P.J. HAWTHORNE,J.T. HAMILTON,P.K. MILLER/RI D.C. FREEMAN/LARC R. H. LINDAHL -DMS	DMS-DR-2326 VOLUME 01 JAN., 1977
LARC - 8TPT - 749 / IA93 CR-151,038	RESULTS OF INVESTIGATIONS CONDUCTED IN THE LARC 8-FOOT TRANSONIC PRESSURE TUNNEL USING THE 0.010-SCALE 72-OTS MODEL OF THE SPACE SHUTTLE INTEGRATED VEHICLE	0.010-SCALE 72-OTS MODEL	AERO-LOADS INVESTIGATION ON THE UPDATED CONFIGURATION-5 SPACE SHUTTLE; FULL SIMULATION OF UPDATED VEHICLE PROTUBERANCES AND ATTACH HARDW ARE WERE USED.	FORCE	0.010 / 0.6 - 1.205	ROCKWELL/ LARC - 8-FOOT TRANSONIC PRESSURE TUNNEL	M.E.NICHOLS,P.J. HAWTHORNE,J.T. HAMILTON,P.K. MILLER/RI D.C. FREEMAN/LARC R. H. LINDAHL -DMS	DMS-DR-2326 VOLUME 02 FEB., 1977

TEST ID	REPORT TITLE	CONFIGURATIONS TESTED	TEST PURPOSE	TYPE OF TEST	MODEL SCALE MACH RANGE	TESTING AGENCY	COGNIZANT TEST DMS PERSONNEL	BASIC PUBLICATIONS OR COMMENTS
AEDC HWTB D9A IA22 CR-151,079	RESULTS OF TESTS USING 0.0125-SCALE MODEL (70-OT) OF THE SPACE SHUTTLE VEHICLE ORBITER IN THE AEDC VKF TUNNEL B	CONFIG. 102 ORBITER AND ET. DESIGNATED MODEL 70-OT	TO OBTAIN INTERACTION EFFECTS OF RCS THRUSTER JET PLUMES ON SSV AERO	FORCE	5.9 -	ROCKWELL/ AEDC - HYPERSONIC WIND TUNNEL (B)	L. L. TRIMMER/ARO J. J. DAILERA, J. MARROQUIN, H. S. DRESSER/RI J. E. VAUGHN M. M. MOSER JR. -DMS	DMS-DR-2327 VOLUME 01 JULY, 1977
AEDC HWTB D9A IA22 CR-151,080	RESULTS OF TESTS USING 0.0125-SCALE MODEL (70-OT) OF THE SPACE SHUTTLE VEHICLE ORBITER IN THE AEDC VKF TUNNEL B	CONFIG. 102 ORBITER AND ET. DESIGNATED MODEL 70-OT	TO OBTAIN INTERACTION EFFECTS OF RCS THRUSTER JET PLUMES ON SSV AERO	FORCE	5.9 -	ROCKWELL/ AEDC - HYPERSONIC WIND TUNNEL (B)	L. L. TRIMMER/ARO J. J. DAILERA, J. MARROQUIN, H. S. DRESSER/RI J. E. VAUGHN M. M. MOSER JR. -DMS	DMS-DR-2327 VOLUME 02 AUGUST, 1977
AEDC HWTB D9A IA22 CR-151,081	RESULTS OF TESTS USING 0.0125-SCALE MODEL (70-OT) OF THE SPACE SHUTTLE VEHICLE ORBITER IN THE AEDC VKF TUNNEL B	CONFIG. 102 ORBITER AND ET. DESIGNATED MODEL 70-OT	TO OBTAIN INTERACTION EFFECTS OF RCS THRUSTER JET PLUMES ON SSV AERO	FORCE	5.9 -	ROCKWELL/ AEDC - HYPERSONIC WIND TUNNEL (B)	L. L. TRIMMER/ARO J. J. DAILERA, J. MARROQUIN, H. S. DRESSER/RI J. E. VAUGHN M. M. MOSER JR. -DMS	DMS-DR-2327 VOLUME 03 AUGUST, 1977
LARC CFHT 105 LA34	EFFECT OF A SURFACE-TO-GAP TEMPERATURE DISCONTINUITY ON THE HEAT TRANSFER TO REUSABLE SURFACE INSULATION ON TILE GAPS	REUSABLE SURFACE INSULATION TILE GAPS	TO DETERMINE EFFECT OF A SURFACE-TO-WALL TEMPERATURE DISCONTINUITY ON THE HEAT TRANSFER WITHIN SPACE SHUTTLE, RSI, TILE GAPS SUBMERGED IN A THICK TURBULENT BOUNDARY LAYER	HEAT-TRANS	1.0 / 10.3 -	LARC / LARC - CONTINUOUS-FLOW HYPERSONIC TUNNEL	D. A. THROCKMORTON N/LARC J. W. BALL M. M. MOSER JR. -DMS	DMS-DR-2328 AUGUST, 1978

TEST ID	REPORT TITLE	CONFIGURATIONS TESTED	TEST PURPOSE	TYPE OF TEST	MODEL SCALE MACH RANGE	TESTING AGENCY	COGNIZANT TEST DMS PERSONNEL	BASIC PUBLICATIONS OR COMMENTS
AEDC -	RESULTS OF A FLOW	CONF. 4, MODEL 29	TO SIMULATE ATMOS	HEAT-TRANS	0.0175 /	ROCKWELL/	B. J. HERRERA/RI	DMS-DR-2330
HWTB -	FIELD SURVEY CON	-0	PHERIC ENTRY BY I		7.82 -	AEDC -	L. D. CARTER, W.	OCT., 1976
524 /	DUCTED USING THE		NVESTIGATING SHOC			HYPERSONIC WIN	R. MARTINDALE, C.	
OH52	0.0175 SCALE ORBI		K AND BOUNDARY LA			D TUNNEL (B)	E. KAUL/ARO	
CR-147,637	TER MODEL 29-0 IN		YERS ON LOWER ORB				M. M. MOSER JR.	
	THE AEDC VKF TUN		ITER SURFACE				-DMS	
	NEL B DURING TEST							
	OH52							
ARC -	RESULTS OF AERODY	ORBITER- TAILCONE	TO FORM A PRE-LAU	FORCE	0.03 /	ROCKWELL/	R.L.GILLINS/ROCKW	DMS-DR-2332
14-TWT -	NAMIC FORCE AND M	OFF, TAILCONE ON	NCH AND FREE AIR		0.3 -	ARC -	ELL	OCT., 1977
121 /	OMENT TESTS OF 0.	-TC19,	DATA BASE FOR PLA		0.6	14-FOOT TRANSO	V.ESPARZA/ROCKWEL	
CA13	03-SCALE MODELS	ORBITER- TAILCONE	NNED SEPARATION T			NIC WIND TUNNE	L	
CR-151,373	AX13191-3 AND 45-	ON, TC23, STING	ESTS OF THE CARRI			L	D. A. SARVER	
	01 OF THE SPACE S	MOUNTED	ER ALT CONFIGURAT				G. W. KLUG	
	HUTTLE ORBITER AN	747/1	ION.				-DMS	
	D CARRIER IN THE	747/1 + S1-12 (SP						
	NASA/ARC 14-FOOT	EED BRAKE DEPLOYE						
	TRANSONIC WIND TU	D)						
	NNEL (CA13)							
ARC -	WIND TUNNEL TEST	01+TC23'ALT' CONF	VERIFY ALT VEHICL	FORCE	0.030 /	ROCKWELL/	T.J.DZIUBALA/RI	DMS-DR-2333
11TWT -	OA175 OF THE 0.03	IGURATION WITH TA	E STABILITY AND C	PRESSURE	0.4 -	ARC -	R.R.BURROWS/RI	VOLUME 01
187-1 /	0-SCALE SSV ORBIT	ILCONE	ONTROL CHARACTERI		1.2	11-FOOT TRANSO	M. M. MANN	NOV., 1977
OA175	ER MODEL (47-0)	01+TC23+G19 'ALT'	STICS WITH TAIL-			NIC WIND TUNNE	-DMS	
CR-151,374	IN THE 11 X 11-FO	WITH LANDING GEA	CONE ON. DETERMIN			L (UNITARY)		
	OT LEG OF THE NAS	R DEPLOYED	E ELEVON, RUDDER/					
	A/ARC UNITARY PLA	01 'ALT' WITHOUT	SPEEDBRAKE, AND B					
	N WIND TUNNEL (OA	TAILCONE	ODY FLAP HINGE					
	175)	01 = AT132 - PRI	MOMENTS WITH SEAL					
		'102' REENTRY CON	ED HINGELINES. EF					
		FIGURATION	FECTS OF RN/L AND					
			DEPLOYED LANDING					
			GEAR/DOORS ON VEH					
			ICLE STABILITY AN					
			D CONTROL. TAILCO					
			NE PRESSURES					

TEST ID	REPORT TITLE	CONFIGURATIONS TESTED	TEST PURPOSE	TYPE OF TEST	MODEL SCALE MACH RANGE	TESTING AGENCY	COGNIZANT TEST DMS PERSONNEL	BASIC PUBLICATIONS OR COMMENTS
ARC - 11TWT - 187-1 / OA175 CR-151,375	WIND TUNNEL TEST OF THE 0.03-SCALE SSV ORBITER MODEL (47-0) IN THE 11 X 11-FOOT LEG OF THE NASA/ARC UNITARY PLAN WIND TUNNEL (OA175)	01+TC23'ALT' CONFIGURATION WITH TAILCONE 01+TC23+G19 'ALT' WITH LANDING GEAR DEPLOYED 01 'ALT' WITHOUT TAILCONE 01 = AT132 - PRI '102' REENTRY CONFIGURATION	VERIFY ALT VEHICLE STABILITY AND CONTROL CHARACTERISTICS WITH TAIL-CONE ON. DETERMINE ELEVON, RUDDER/SPEEDBRAKE, AND BODY FLAP HINGE MOMENTS WITH SEALED HINGELINES. EFFECTS OF RN/L AND DEPLOYED LANDING GEAR/DOORS ON VEHICLE STABILITY AND CONTROL. TAILCONE PRESSURES	FORCE PRESSURE	0.030 - 0.4 / 1.2	ROCKWELL/ ARC - 11-FOOT TRANSONIC WIND TUNNEL (UNITARY)	T.J.DZIUBALA/RI R.R. BURROWS/RI M. H. MANN -DMS	DMS-DR-2333 VOLUME 02 DEC., 1977
ARC - 11TWT - 187-1 / OA175 CR-151,376	WIND TUNNEL TEST OF THE 0.03-SCALE SSV ORBITER MODEL (47-0) IN THE 11 X 11-FOOT LEG OF THE NASA/ARC UNITARY PLAN WIND TUNNEL (OA175)	01+TC23'ALT' CONFIGURATION WITH TAILCONE 01+TC23+G19 'ALT' WITH LANDING GEAR DEPLOYED 01 'ALT' WITHOUT TAILCONE 01 = AT132 - PRI '102' REENTRY CONFIGURATION	VERIFY ALT VEHICLE STABILITY AND CONTROL CHARACTERISTICS WITH TAIL-CONE ON. DETERMINE ELEVON, RUDDER/SPEEDBRAKE, AND BODY FLAP HINGE MOMENTS WITH SEALED HINGELINES. EFFECTS OF RN/L AND DEPLOYED LANDING GEAR/DOORS ON VEHICLE STABILITY AND CONTROL. TAILCONE PRESSURES	FORCE PRESSURE	0.030 - 0.4 / 1.2	ROCKWELL/ ARC - 11-FOOT TRANSONIC WIND TUNNEL (UNITARY)	T.J.DZIUBALA/RI R.R.BURROWS/RI M. H. MANN -DMS	DMS-DR-2333 VOLUME 03 DEC., 1977

TEST ID	REPORT TITLE	CONFIGURATIONS TESTED	TEST PURPOSE	TYPE OF TEST	MODEL SCALE MACH RANGE	TESTING AGENCY	COGNIZANT TEST DMS PERSONNEL	BASIC PUBLICATIONS OR COMMENTS
AEDC PWT4T E3A SA16F CR-147,649	AN INVESTIGATION OF THE AERODYNAMIC CHARACTERISTICS OF A 0.00548 SCALE MODEL (MODEL NO. 486) OF THE SPACE SHUTTLE 145-INCH DIAMETER SOLID ROCKET BOOSTER AT ANGLES OF ATTACK FROM 112 TO 18 DEGREES IN THE AEDC PWT 4-FOOT TRANSONIC WIND TUNNEL	REEN TRY CONFIG. WITH ALL MAJOR PROTUBERANCES	TO DETERMINE ENTRY STATIC STABILITY OF SRB	FORCE	0.00548 / 0.4 - 1.2	MSFC / AEDC - TRANSONIC PROPULSION WIND TUNNEL (PWT-4T)	P. E. RAMSEY/MSFC V. W. SPARKS -DMS	DMS-DR-2334 NOV., 1976
MSFC 147WT 64. 646 IA140A/B CR-151,783	RESULTS OF EXPERIMENTAL INVESTIGATIONS IN THE MSFC 14-INCH TRISONIC WIND TUNNEL TO DETERMINE EFFECTS OF A MULTIPLE STING SUPPORT SYSTEM ON THE MATED VEHICLE AERODYNAMICS UTILIZING A 0.004 SCALE (74-OTS, 77-01 SHUTTLE VEHICLE 5 (IA140 A/B)	VEHICLE 5 MODEL 74-OTS	THE PURPOSE OF THIS TEST WAS TO OBTAIN INFORMATION ON STING/BODY INTERFERENCE, VERIFY STING ASSEMBLY DESIGN, DETERMINE EFFECT OF VERTICAL SEPARATION ON AERO CHARACTERISTICS OF ET PLUS SRB AND ORBITER AND EFFECTS OF STING ON ELEVON HINGE MOMENTS	FORCE	0.004 / 0.60 - 3.48	ROCKWELL/ MSFC - 14-INCH TRISONIC WIND TUNNEL	E.C. ALLEN/ROCKWELL J. E. VAUGHN G. W. KLUG -DMS	DMS-DR-2335 DEC., 1979
NRLAD LSWT 759 OA236 CR-151,786	A VERIFICATION STUDY OF THREE AMES RESEARCH CENTER PITOT-STATIC PROBES IN THE ROCKWELL INTERNATIONAL NAAL LOW SPEED WIND TUNNEL	FLIGHT TEST PROBE CALIBRATION	TO VERIFY THE CALIBRATION DATA OBTAINED USING THE AMES RESEARCH CENTER PROBES	PRESSURE	0.186- 0.262	ROCKWELL/ NRLAD - LOW SPEED WIND TUNNEL	J. G. LEFEVRE/RI D.W.HERSEY G. R. LUTZ -DMS	DMS-DR-2337 DEC., 1979

TEST ID	REPORT TITLE	CONFIGURATIONS TESTED	TEST PURPOSE	TYPE OF TEST	MODEL SCALE MACH RANGE	TESTING AGENCY	COGNIZANT TEST DMS PERSONNEL	BASIC PUBLICATIONS OR COMMENTS
UW LSWT 1170 CS3 CR-147,639	RESULTS OF THE LOW SPEED AEROELASTIC BUFFET TEST WITH A 0.046-SCALE MODEL (747-AX1322-D-3/ORBITER 8-0) OF THE 747 CAM/ORBITER IN THE UNIVERSITY OF WASHINGTON WIND TUNNEL	AX:3220-3.0 ORBITER MODEL 6-0	TO ASSES POTENTIAL BUFFET PROBLEMS RESULTING FROM ORBITER WAKE CHARACTERISTICS WITH TAILCONE OFF, TO PROVIDE DESIGN LOADS AND ACCELERATION ENVIRONMENTS. TO DEVELOP BUFFET SENSITIVITY DATA TO VARIOUS AEROD	STRUCT-DYN	0.046	BOEING / UW - LOW SPEED WIND TUNNEL	R. L. GILLENS/RI D. A. SARVER M. M. MOSER JR. -DMS	DMS-DR-2338 NOV., 1976
AEDC HWTB J7A OH98 CR-160,501	RESULTS OF TESTS ON A 0.0175-SCALE MODEL (60-0) OF THE SPACE SHUTTLE ORBITER TO DETERMINE RE-ENTRY MODE CONVECTIVE HEAT TRANSFER RATES ON THE UPPER WING SURFACE AND SSME NOZZLES IN THE AEDC VKF 'B' HYPERSONIC WIND TUNNEL (OH98)	0.0175-SCALE THIN-SKIN THERMOCOUPLE SHUTTLE ORBITER 60-0	1)SPANWISE HEATING ON UPPER WING SURFACE. 2)EFFECT OF HAT BAND PROTUBERANCES AND LH2 COOLING LINES ON SSME NOZZLE HEATING. AND 3)UPDATE CLEAN NOZZLE HEATING WITH BODY FLAP AND ELEVON DEFLECTIONS	HEAT-TRANS	0.0175 7.90 - 8.00	ROCKWELL/ AEDC - HYPERSONIC WIND TUNNEL (B)	C.L. BERTHOLD. J. MARROQUIN/RI D.W.HERSEY G. R. LUTZ -DMS	DMS-DR-2340 VOLUME 01 SEPT., 1980

WIND TUNNEL TEST / DMS DATA PROCESSING

TEST ID	REPORT TITLE	CONFIGURATIONS TESTED	TEST PURPOSE	TYPE OF TEST	MODEL SCALE MACH RANGE	TESTING AGENCY	COGNIZANT TEST DMS PERSONNEL	BASIC PUBLICATIONS OR COMMENTS
AEDC - HWTB - J7A / OH98 CR-160,502	RESULTS OF TESTS ON A 0.0175-SCALE MODEL (60-0) OF THE SPACE SHUTTLE ORBITER TO DETERMINE RE-ENTRY MODE CONVECTIVE HEAT TRANSFER RATES ON THE UPPER WING SURFACE AND SSME NOZZLES IN THE AEDC VKF 'B' HYPERSONIC WIND TUNNEL (OH98)	0.0175-SCALE THIN-SKIN THERMOCOUPLE SHUTTLE ORBITER 60-0	1)SPANWISE HEATING ON UPPER WING SURFACE. 2)EFFECT OF HAT BAND PROTUBERANCES AND LH2 COOLING LINES ON SSME NOZZLE HEATING. AND 3)UPDATE CLEAN NOZZLE HEATING WITH BODY FLAP AND ELEVON DEFLECTIONS	HEAT-TRANS	0.0175 / 7.90 - 8.00	ROCKWELL/ AEDC - HYPERSONIC WIND TUNNEL (B)	C.L. BERTHOLD, J. MARROQUIN/RI D.W.HERSEY G. R. LUTZ -DMS	DMS-DR-2340 VOLUME 02 SEPT., 1980
TBCA - BTWT - 1490/1493/ CS4/5 CR-147,638	RESULTS OF TESTS CS4 AND CS5 TO INVESTIGATE DYNAMIC LOADS AND PRESSURES ON 0.03-SCALE MODELS (AX1319-3 /4 AND 45-0) OF MATED 747 CAM AND SPACE SHUTTLE ORBITER IN THE BOEING TRANSONIC WIND TUNNEL	747CAM/ORBITER	TO OBTAIN DYNAMIC LOADS, PRESSURE, EMPENNAGE FLOW FIELD DATA	STRUCT-DYN	0.03 / 0.15 - 0.70	BOEING / TBCA - TRANSONIC WIND TUNNEL	C. A. LUNDER, W. D. BURGGRAF, W. R. COVINGTON/TBC D. A. SARVER M. M. MOSER JR. -DMS	DMS-DR-2341 OCT., 1976
AEDC - HWTB - B2A / OH54B CR-151,074	RESULTS OF PHASE CHANGE PAINT HEAT TRANSFER TEST UTILIZING 0.040 SCALE 50 PERCENT FOREBODY MODELS (NO. B2-0) OF THE ROCKWELL INTERNATIONAL SPACE SHUTTLE ORBITER IN THE AEDC VKF HYPERSONIC TUNNEL B	MODEL B2-0. 50% FOREBODY	TO INVESTIGATE SURFACE ROUGHNESS EFFECTS ON BOUNDARY LAYER TRANSITION	HEAT-TRANS	0.040 / .8 -	ROCKWELL/ AEDC - HYPERSONIC WIND TUNNEL (B)	W. H. DYE/RI L. L. TRIMMER/ARO M. M. MOSER JR. -DMS	DMS-DR-2342 JUNE, 1977

TEST ID	REPORT TITLE	CONFIGURATIONS TESTED	TEST PURPOSE	TYPE OF TEST	MODEL SCALE MACH RANGE	TESTING AGENCY	COGNIZANT TEST DMS PERSONNEL	BASIC PUBLICATIONS OR COMMENTS
ARC 11TWT 200-1 LA77 CR-151,789	TRANSONIC STABILITY AND CONTROL CHARACTERISTICS OF A 0.015-SCALE (REMOTELY CONTROLLED ELEVON) MODEL 44 -0 OF THE SPACE SHUTTLE ORBITER TESTED IN THE NASA/ARC 11-FOOT TRANSONIC WIND TUNNEL (LA77)	ORBITER-140A/B/C B26 C9 E43 F8 M16 N28 R5 V8 W	TO OBTAIN TRANSONIC AERODYNAMIC DATA ON CONTROL SURFACE LINEARITY AND SENSITIVITY TO MACH NUMBER FOR FINE-CUT SPEEDBRAKE, BODY FLAP, AND RUDDER DEFLECTIONS AND TO INVESTIGATE THE INTERACTIVE EFFECTS OF MUTUAL CONTROL SURFACE DEFLECTIONS	FORCE	0.015 / 0.6 - 1.2	LARC / ARC - 11-FOOT TRANSONIC WIND TUNNEL (UNITARY)	J. GAMBLE, J. UNDERWOOD/JSC HARRY PARRELL/RI J. W. BALL C. R. EDWARDS -DMS	DMS-DR-2344 VOLUME 01 JAN., 1980
ARC 11TWT 200-1 LA77 CR-151,789	TRANSONIC STABILITY AND CONTROL CHARACTERISTICS OF A 0.015-SCALE (REMOTELY CONTROLLED ELEVON) MODEL 44 -0 OF THE SPACE SHUTTLE ORBITER TESTED IN THE NASA/ARC 11-FOOT TRANSONIC WIND TUNNEL (LA77)	ORBITER-140A/B/C B26 C9 E43 F8 M16 N28 R5 V8 W	TO OBTAIN TRANSONIC AERODYNAMIC DATA ON CONTROL SURFACE LINEARITY AND SENSITIVITY TO MACH NUMBER FOR FINE-CUT SPEEDBRAKE, BODY FLAP, AND RUDDER DEFLECTIONS AND TO INVESTIGATE THE INTERACTIVE EFFECTS OF MUTUAL CONTROL SURFACE DEFLECTIONS	FORCE	0.015 / 0.6 - 1.2	LARC / ARC - 11-FOOT TRANSONIC WIND TUNNEL (UNITARY)	J. GAMBLE, J. UNDERWOOD/JSC HARRY PARRELL/RI J. W. BALL C. R. EDWARDS -DMS	DMS-DR-2344 VOLUME 02 JAN., 1980

TEST ID	REPORT TITLE	CONFIGURATIONS TESTED	TEST PURPOSE	TYPE OF TEST	MODEL SCALE MACH RANGE	TESTING AGENCY	COGNIZANT TEST DMS PERSONNEL	BASIC PUBLICATIONS OR COMMENTS
MSFC 14TWT 645 SA21F TM-X 78195	- AERODYNAMIC POLL CHARACTERISTICS OF A 0.00548 SCALE 145-INCH SOLID R OCKET BOOSTER REENTRY CONFIGURATION (MSFC MODEL NUMBER 486) OVER A PORTION OF THE REENTRY FLIGHT REGIME IN THE NASA/MSFC 14-INCH TRISONIC WIND TUNNEL	145-INCH SRB/TRUN CATED NOSE (MODEL 486)	TO STUDY POLL CHARACTERISTICS (TO OBTAIN IMPROVED AND MORE ACCURATE POLLING MOMENT DATA ON SRB BY USING A SENSITIVE SINGLE COMPONENT ROLL BALANCE--NO. 247	FORCE	1.46 - 3.48	MSFC / MSFC - 14-INCH TRISONIC WIND TUNNEL	P. E. RAMSEY/MSFC V. W. SPARKS M. M. MOSER JR. -DMS	DMS-DR-2345 OCT., 1978
AEDC SWTA KIA IA142 CR-151,385	- RESULTS OF SRB SEPARATION TESTS USING THE 0.010-SCALE SSV MODEL 75-OTS IN THE AEDC VKF TUNNEL A	75-OTS	TO OBTAIN PROXIMITY FORCE AND MOMENT DATA FOR ORB/ET AND SRB WITH BOOSTER SEPAPATION MOTOR PLUME EFFECTS	FORCE	0.010 / 4.5-4.5	ROCKWELL/ AEDC - SUPERSONIC WIND TUNNEL (A)	J. J. DAILEDA, J. MARROQUIN/RI J. E. VAUGHN M. M. MOSER JR. -DMS	DMS-DR-2346 VOLUME 01 JAN., 1978
AEDC SWTA KIA IA142 CR-151,396	- RESULTS OF SRB SEPARATION TESTS USING THE 0.010-SCALE SSV MODEL 75-OTS IN THE AEDC VKF TUNNEL A	75-OTS	TO OBTAIN PROXIMITY FORCE AND MOMENT DATA FOR ORB/ET AND SRB WITH BOOSTER SEPARATION MOTOR PLUME EFFECTS	FORCE	0.010 / 4.5-4.5	ROCKWELL/ AEDC - SUPERSONIC WIND TUNNEL (A)	J. J. DAILEDA, J. MARROQUIN/RI J. E. VAUGHN M. M. MOSER JR. -DMS	DMS-DR-2346 VOLUME 02 JAN., 1978
AEDC SWTA KIA IA142 CR-151,387	- RESULTS OF SRB SEPARATION TESTS USING THE 0.010-SCALE SSV MODEL 75-OTS IN THE AEDC VKF TUNNEL A	75-OTS	TO OBTAIN PROXIMITY FORCE AND MOMENT DATA FOR ORB/ET AND SRB WITH BOOSTER SEPARATION MOTOR PLUME EFFECTS	FORCE	0.010 / 4.5-4.5	ROCKWELL/ AEDC - SUPERSONIC WIND TUNNEL (A)	J. J. DAILEDA, J. MARROQUIN/RI J. E. VAUGHN M. M. MOSER JR. -DMS	DMS-DR-2346 VOLUME 03 JAN., 1978

TEST ID	REPORT TITLE	CONFIGURATIONS TESTED	TEST PURPOSE	TYPE OF TEST	MODEL SCALE MACH RANGE	TESTING AGENCY	COGNIZANT TEST DMS PERSONNEL	BASIC PUBLICATIONS OR COMMENTS
UW LSWT 1173 CA15A CR-160,482	MATED AERODYNAMIC CHARACTERISTICS INVESTIGATION FOR 0.04-SCALE MODEL BOEING 747 CAM/OR BITER (MODEL AX1 284 E-6) COMBINATION IN THE UNIVERSITY OF WASHINGTON AERONAUTICAL LABORATORY F. K. KIRSTEN WIND TUNNEL (CA15A)	.04 SCALE 747-100 747 CAM/ORBITER-FERRY CONF 747 CAM/ORBITER-ALT CONF	TO PROVIDE A DATA BASE TO DEFINE AERODYNAMIC CHARACTERISTICS IN PITCH AND YAW FOR ADDITIONAL ORBITER INCIDENCE ANGLES, FLAP SETTINGS AND TO DEFINE GROUND PROXIMITY EFFECTS.	FORCE	0.04 / 0.15 - 0.15	BOEING / UW - LOW SPEED WIND TUNNEL	R.D. KNUDSEN, J. M. BELZ, G. E. VEDEROFF/TBC R. H. LINDAHL -DMS	DMS-DR-2347 VOLUME 01 JUNE, 1980
UW LSWT 1178 CA15B CR-160,483	MATED AERODYNAMIC CHARACTERISTICS INVESTIGATION FOR 0.04-SCALE MODEL BOEING 747 CAM/OR BITER (MODEL AX12 84 E-7) COMBINATION IN THE UNIVERSITY OF WASHINGTON AERONAUTICAL LABORATORY F.K. KIRSTEN WIND TUNNEL (CA15B)	747-100 ALONE 747-100 WITH CAM TYPE II KITS ATTACHED 747-100 WITH 43-0 ATTACHED TO THE 747 CAM	TO SUPPLEMENT IN GROUND EFFECT ON THE MATED ALT CONFIGURATIONS, AND OBTAIN DATA IN FREE AIR ON THE 747 WITH CAM TYPE II MODIFICATIONS AND ON THE MATED CONFIGURATION FOR 4.5 DEG. INCIDENCE	FORCE	0.04, .0405/ 0.15- 0.15	BOEING / UW - LOW SPEED WIND TUNNEL	R.D.KNUDSEN/ THE BOEING CO. D.W.HERSEY G W. KLUG -DMS	DMS-DR-2348 VOLUME 01 JUNE, 1980

WIND TUNNEL TEST / DMS DATA PROCESSING

TEST ID	REPORT TITLE	CONFIGURATIONS TESTED	TEST PURPOSE	TYPE OF TEST	MODEL SCALE / MACH RANGE	TESTING AGENCY	COGNIZANT TEST DMS PERSONNEL	BASIC PUBLICATIONS OR COMMENTS
UW - LSWT - 1184 / CA17 CR-151,379	RESULTS OF TEST C A17 CONDUCTED IN THE UWAL LOW SPEED WIND TUNNEL USING THE MATED 0.04-SCALE 747 MODEL AX1284 AND 0.0405 SPACE SHUTTLE ORBITER MODEL 43-0	CARRIER B298W45N 5857M2526T14Q12AT 115.1106.1V9.1.3F TS1 ORBITER B26.1C9E 44F8M16R5V8W116	THIS TEST WAS PART II OF THE CARRIER AIRCRAFT MODIFICATION PROGRAM (CAM). EFFECTS OF FLAP, STABILIZER, RUDDER, SPOILER, AILERON, ELEVON, AND INCIDENCE ANGLES, TAILCONE AND GROUND PROXIMITY ON BOTH LONGITUDINAL AND LATERAL-DIRECTIONAL CHARACTERISTICS AT MACH 0.15.	FORCE	0.04 , 0.0405 / 0.15- 0.15	BOEING / UW - LOW SPEED WIND TUNNEL	W.N. WRIGHT/TBC D. A. SARVER G. W. KLUG -DMS	DMS-DR-2349 NOV., 1977
LARC - 8VDHT - 4502-4601/ OH46 CR-151,065	RESULTS OF PHASE CHANGE PAINT THERMAL MAPPING TEST OH46 USING THE 0.006-SCALE MODEL 90-0 IN THE NASA LARC VARIABLE DENSITY TUNNEL	140B ORB., MODEL 90-0	TO OBTAIN THERMAL CONTOURS	HEAT-TRANS	0.006 / 8.0 - 8.0	ROCKWELL/ LARC - MACH 8 VARIABLE-DENSITY HYPERSONIC TUNNEL	J. W. CUMMINGS, W. H. DYE/RI D. A. SARVER M. M. MOSER JR. -DMS	DMS-DR-2350 APRIL, 1977
LARC - 8TPT - 758 / LA91 CR-151,383	A STUDY OF TRANSONIC BETA HYSTERESIS OF AN 0.015 SCALE MODEL 44-0 (SPACE SHUTTLE ORBITER TESTED IN THE NASA/LARC 8-FOOT TRANSONIC) PRESSURE TUNNEL (LA91)	ORBITER 140A/B/C B26C9E43F8M16N28 R5V8W	THIS REPORT PRESENTS THE RESULTS OF AN INVESTIGATION IN THE NASA/LARC 8-FOOT TRANSONIC PRESSURE TUNNEL OF THE BETA HYSTERESIS EFFECT OF AN 0.015 SCALE SSV ORBITER	FORCE	0.015/ .7- 1.2	LARC / LARC - 8-FOOT TRANSONIC PRESSURE TUNNEL	BERNARD SPENCER J R./ LARC GEORGE M. WARE/ LARC J. W. BALL G. W. KLUG -DMS	DMS-DR-2352 JAN., 1978

TEST ID	REPORT TITLE	CONFIGURATIONS TESTED	TEST PURPOSE	TYPE OF TEST	MODEL SCALE MACH RANGE	TESTING AGENCY	COGNIZANT TEST DMS PERSONNEL	BASIC PUBLICATIONS OR COMMENTS
AEDC SWTA PBA IA143 CR-151,401 TM-X 1	RESULTS OF SRB SEPARATION TESTS USING THE 0.010 SCALE SSV MODEL 75-0TS IN THE AEDC VKF TUNNEL A (IA143)	MODEL 75-0TS (WING)	TO COMPLETE DATA VOIDS IN THE SRB SEPARATION AERO DATA BASE FOR BOTH PLUME-ON AND PLUME-OFF CONDITIONS	FORCE	4.0 - 5.0	ROCKWELL/ AEDC - SUPERSONIC WIND TUNNEL (A)	J. J. DAILEDA, R. H. SPANGLER /RI J. E. VAUGHN G. G. MCDONALD -DMS	DMS-DR-2354 VOLUME 01 FEB., 1978
AEDC SWTA PBA IA143 CR-151,402 TM-X 2	RESULTS OF SRB SEPARATION TESTS USING THE 0.010 SCALE SSV MODEL 75-0TS IN THE AEDC VKF TUNNEL A (IA143)	MODEL 75-0TS (WING)	TO COMPLETE DATA VOIDS IN THE SRB SEPARATION AERO DATA BASE FOR BOTH PLUME-ON AND PLUME-OFF CONDITIONS	FORCE	4.0 - 5.0	ROCKWELL/ AEDC - SUPERSONIC WIND TUNNEL (A)	J. J. DAILEDA, R. H. SPANGLER /RI J. E. VAUGHN G. G. MCDONALD -DMS	DMS-DR-2354 VOLUME 02 FEB., 1978
AEDC SWTA PBA IA143 CR-151,403 TM-X 3	RESULTS OF SRB SEPARATION TESTS USING THE 0.010 SCALE SSV MODEL 75-0TS IN THE AEDC VKF TUNNEL A (IA143)	MODEL 75-0TS (WING)	TO COMPLETE DATA VOIDS IN THE SRB SEPARATION AERO DATA BASE FOR BOTH PLUME-ON AND PLUME-OFF CONDITIONS	FORCE	4.0 - 5.0	ROCKWELL/ AEDC - SUPERSONIC WIND TUNNEL (A)	J. J. DAILEDA, R. H. SPANGLER /RI J. E. VAUGHN G. G. MCDONALD -DMS	DMS-DR-2354 VOLUME 03 FEB., 1978
AEDC SWTA PBA IA143 CR-151,404 TM-X 4	RESULTS OF SRB SEPARATION TESTS USING THE 0.010 SCALE SSV MODEL 75-0TS IN THE AEDC VKF TUNNEL A (IA143)	MODEL 75-0TS (WING)	TO COMPLETE DATA VOIDS IN THE SRB SEPARATION AERO DATA BASE FOR BOTH PLUME-ON AND PLUME-OFF CONDITIONS	FORCE	4.0 - 5.0	ROCKWELL/ AEDC - SUPERSONIC WIND TUNNEL (A)	J. J. DAILEDA, R. H. SPANGLER /RI J. E. VAUGHN G. G. MCDONALD -DMS	DMS-DR-2354 VOLUME 04 FEB., 1978

TEST ID	REPORT TITLE	CONFIGURATIONS TESTED	TEST PURPOSE	TYPE OF TEST	MODEL SCALE MACH RANGE	TESTING AGENCY	COGNIZANT TEST DMS PERSONNEL	BASIC PUBLICATIONS OR COMMENTS
AEDC SWTA VA525/218/ OH49A CR-151,066	RESULTS OF TEST OH49A OF THE .0175-SCALE SPACE SHUTTLE ORBITER MODEL 22-0 CONDUCTED IN THE AEDC VKF TUNNEL B TO DETERMINE AERO HEATING CHARACTERISTICS	B17 C7 E22 F7 M4 W104	TO INVESTIGATE AERODYNAMIC HEATING EFFECTS DURING ENTRY	HEAT-TRANS	7.9 - 8.0	ROCKWELL/ AEDC - SUPERSONIC WIND TUNNEL (A)	W. J. GRIFALL/RI W. R. MARTINDALE. C. E. KAUL/ARO	DMS-DR-2355 JUNE, 1977
AEDC HWTB B7A OH60 CR-151,064	AERODYNAMIC HEATING RESULTS OBTAINED DURING TEST OH60 CONDUCTED IN THE AEDC VKF TUNNEL B USING THE 0.040-SCALE MODEL B3-0 OF THE SPACE SHUTTLE ORBITER FORWARD FIFTY PERCENT FUSELAGE	MODEL B3-0 (B60 C10)	TO INVESTIGATE EFFECTS OF PROTUBERANCES ON AERODYNAMIC HEATING ON THE SS ORBITER FUSELAGE NOSE, CANOPY, AND SIDE WALLS	HEAT-TRANS	0.040 / 7.90 - 8.0	ROCKWELL/ AEDC - HYPERSONIC WIND TUNNEL (B)	B. J. HERRERA/RI D. A. SARVER M. M. MOSER JR. -DMS	DMS-DR-2356 MAY, 1977
AEDC HWTB 58A OH50B CR-151,057	AERODYNAMIC HEATING RESULTS OBTAINED DURING TEST OH50B CONDUCTED IN THE AEDC VKF TUNNEL B USING THE 0.040-SCALE B3-0 OF THE SPACE SHUTTLE ORBITER FORWARD FIFTY PERCENT FUSELAGE	FORWARD 50 PERCENT FUSELAGE, MODEL B3-0	TO INVESTIGATE EFFECTS OF PROTUBERANCES ON AERO. HEATING ON NOSE, CANOPY, SIDE WALLS	HEAT-TRANS	0.040 / 7.90 - 8.00	ROCKWELL/ AEDC - HYPERSONIC WIND TUNNEL (B)	W. M. DYE/RI D. A. SARVER M. M. MOSER JR. -DMS	DMS DR-2358 JUNE, 1977

TEST ID	REPORT TITLE	CONFIGURATIONS TESTED	TEST PURPOSE	TYPE OF TEST	MODEL SCALE MACH RANGE	TESTING AGENCY	COGNIZANT TEST DMS PERSONNEL	BASIC PUBLICATIONS OR COMMENTS
CALSPAN - 96HST - 131 / OH66 CR-151,405	RESULTS OF HEAT TRANSFER TESTING OF AN 0.025-SCALE MODEL (66-0) OF THE SPACE SHUTTLE ORBITER CONFIGURATION 140B IN THE CALSPAN HYPERSONIC SHOCK TUNNEL (OH66)	ROCKWELL VEHICLE 3 (MODIFIED) SHUTTLE ORBITER. MODEL 66-0	OBTAIN SPANWISE HEAT TRANSFER RATE DISTRIBUTIONS ON THE LEADING EDGE OF THE GLOVE AND WING. ESPECIALLY SHOCK INTERFERENCE PEAKS. OBTAIN HEAT TRANSFER DISTRIBUTIONS NORMAL TO A LEADING EDGE AT SIX SPANWISE LOCATIONS.	HEAT-TRANS	0.025 / 9.88 - 10.0	ROCKWELL/ CALSPAN - 96-INCH HYPERSONIC SHOCK TUNNEL	C.L.BERTHOL/ROCKWELL H.GORONITZ/ROCKWELL J. E. VAUGHN -DMS	DMS-DR-2359 MARCH, 1978
NRLAD - LSWT - 768 / OA163B CR-151,370	RESULTS OF A LANDING GEAR LOADS TEST USING A 0.0405-SCALE MODEL (16-0) OF THE SPACE SHUTTLE ORBITER IN THE ROCKWELL INTERNATIONAL NAAL WIND TUNNEL (OA163B)	B68C12E55F10M16N2 8R5V8W127X9	THE PRIMARY TEST OBJECTIVE WAS TO VERIFY ORBITER LANDING GEAR SYSTEM PRESSURE LOADING AND HINGE MOMENT LEVELS OBTAINED DURING THE TEST PERIOD OA163.	FORCE PRESSURE	0.0405 / 0.17 -	ROCKWELL/ NRLAD - LOW SPEED WIND TUNNEL	R.C.MENNELL/ROCKWELL INTERNATIONAL D.W.HERSEY G. W. KLUG -DMS	DMS-DR-2361 VOLUME 01 OCT., 1977
NRLAD - LSWT - 768 / OA163B CR-151,371	RESULTS OF A LANDING GEAR LOADS TEST USING A 0.0405-SCALE MODEL (16-0) OF THE SPACE SHUTTLE ORBITER IN THE ROCKWELL INTERNATIONAL NAAL WIND TUNNEL (OA163B)	B68C12E55F10M16N2 8R5V8W127X9	THE PRIMARY TEST OBJECTIVE WAS TO VERIFY ORBITER LANDING GEAR SYSTEM PRESSURE LOADING AND HINGE MOMENT LEVELS OBTAINED DURING THE TEST PERIOD OA163.	FORCE PRESSURE	0.0405 / 0.17 -	ROCKWELL/ NRLAD - LOW SPEED WIND TUNNEL	R.C.MENNELL/ROCKWELL INTERNATIONAL D.W.HERSEY G. W. KLUG -DMS	DMS-DR-2361 VOLUME 02 OCT., 1977

TEST ID	REPORT TITLE	CONFIGURATIONS TESTED	TEST PURPOSE	TYPE OF TEST	MODEL SCALE MACH RANGE	TESTING AGENCY	COGNIZANT TEST DMS PERSONNEL	BASIC PUBLICATIONS OR COMMENTS
LARC TDT 246 057 CR-151.057	RESULTS OF FLUTTER TEST OS7 OBTAINED USING THE 0.14-SCALE SPACE SHUTTLE ORBITER FIN/RUDDER MODEL NUMBER 55-0 IN THE NASA LARC 16-FOOT TRANSONIC DYNAMICS WIND TUNNEL	55-0 (FIN, RUDDER)	TO INVESTIGATE FLUTTER BOUNDARIES	STRUCT-DYN	0.14 / .095 - .1911	ROCKWELL/LARC - TRANSONIC DYNAMICS TUNNEL	C. L. BERTHOLD/RI F. RAUCH, G. COMM ERFORD, T. FOLEY/ GRUMMAN D. A. SARVER M. M. MOSER JR. -DMS	DMS-DR-2363 APRIL, 1977
LARC TDT 246 056 CR-151.056	RESULTS OF FLUTTER TEST OS6 OBTAINED USING THE 0.14-SCALE WING/ELEVON MODEL (54-0) IN THE NASA LARC 16-FOOT TRANSONIC DYNAMICS WIND TUNNEL	MODEL 54-0	TO DETERMINE FLUTTER, BUFFET, AND ELEVON BUZZ BOUNDARIES	STRUCT-DYN	0.14 / 0.3 - 1.1	LARC / LARC - TRANSONIC DYNAMICS TUNNEL	G. SPENCER, JR./L ARC M. M. MOSER JR. -DMS	DMS-DR-2365 APRIL, 1977
AEDC HWTB 418-23A OH258 CR-151.063	HEAT TRANSFER PHASE CHANGE PAINT TESTS OF 0.0175-SCALE MODEL (NO. 56-0) OF THE ROCKWELL INTERNATIONAL SPACE SHUTTLE ORBITER IN THE AEDC TUNNEL B HYPERSONIC WIND TUNNEL	140C (B17C7E22F5M R5V7W103	TO INVESTIGATE ENTRY AERODYNAMIC HEATING EFFECTS	HEAT-TRANS	0.0175 / 7.88 - 8.0	ROCKWELL/AEDC - HYPERSONIC WIND TUNNEL (B)	W. H. DYE/RI L. L. TRIMMER/ARO D. A. SARVER M. M. MOSER JR. -DMS	DMS-DR-2366 MAY, 1977
AEDC HWTB V418-K3A OH57A/B CR-151.773				HEAT-TRANS	0.0175 /	ROCKWELL/AEDC - HYPERSONIC WIND TUNNEL (B)	J. L. GLYNN J. E. VAUGHN -DMS	DMS-DR-2367 MAY, 1979

TEST ID	REPORT TITLE	CONFIGURATIONS TESTED	TEST PURPOSE	TYPE OF TEST	MODEL SCALE MACH RANGE	TESTING AGENCY	COGNIZANT TEST DMS PERSONNEL	BASIC PUBLICATIONS OR COMMENTS
AEDC - OH57A/B CR-151,773		MODEL 91-0 ORBITER 102, DRWG VC-70-0000028	OBTAIN STATIC PRESSURES ON UPPER AND LOWER WING SURFACES AND VERT. TAIL FOR FLOW FIELD DEFINITION		0.0175 / 7.94 - 8.0	ROCKWELL/ AEDC -	PAUL LAMOINE/RI J. L. GLYNN J. E. VAUGHN -DMS	DMS-DR-2367 VOLUME 01 MAY, 1979
LARC - CFHT - 112 / OH51 CR-151,058	RESULTS OF PHASE CHANGE HEAT TRANSFER TEST OH51 USING 0.006-SCALE SPACE SHUTTLE ORBITER MODELS 46-0 AND 90-0 AND PARTIAL WING 0.0175-SCALE MODEL 64-0 IN THE LARC 31-INCH CFHT	MODELS 46-0, 64-0 90-0	TO INVESTIGATE PHASE CHANGE PAINT HEATING EFFECTS ON ORBITER AND PARTIAL WING; WING TESTED WITH SHOCK GENERATOR AT VARIOUS POSITIONS	HEAT-TRANS	0.006 , 0.0175 / 10 -	ROCKWELL/ LARC - CONTINUOUS-FLOW HYPERSONIC TUNNEL	J. W. CUMMINGS/RI D.W.HERSEY M. M. MOSER JR. -DMS	DMS-DR-2368 APRIL, 1977
ARC - 97SWT - 115-1 / 87SWT - 115-1 / OA149B/C CR-151,790	RESULTS OF TEST USING A 0.030-SCALE PRESSURE LOADS SPACE SHUTTLE ORBITER MODEL (47-0) IN THE NASA/ARC UNITARY PLAN WIND TUNNEL	B70C9E44F9M16N28R 5V8W116(ORBITER)	DETERMINE FORCE/PRESSURE DATA AT HIGH ALPHA/BETA COMBINATIONS FOR MACH RANGE 1.6 TO 3.5	FORCE PRESSURE	1.6 - 3.5	ROCKWELL/ ARC - 9-FOOT BY 7-FOOT SUPERSONIC WIND TUNNEL (UNITARY) 8-FOOT BY 7-FOOT SUPERSONIC WIND TUNNEL (UNITARY)	E. CHEE/ROCKWELL INTERNATIONAL J. MARROQUIN/ROCKWELL INTERNATIONAL M. M. MANN -DMS	DMS-DR-2370 VOLUME 01 APRIL, 1980
ARC - 97SWT - 115-1 / 87SWT - 115-1 / OA149B/C CR-151,791	RESULTS OF TEST USING A 0.030-SCALE PRESSURE LOADS SPACE SHUTTLE ORBITER MODEL (47-0) IN THE NASA/ARC UNITARY PLAN WIND TUNNEL	B70C9E44F9M16N28R 5V8W116(ORBITER)	DETERMINE FORCE/PRESSURE DATA AT HIGH ALPHA/BETA COMBINATIONS FOR MACH RANGE 1.6 TO 3.5	FORCE PRESSURE	1.6 - 3.5	ROCKWELL/ ARC - 9-FOOT BY 7-FOOT SUPERSONIC WIND TUNNEL (UNITARY) 8-FOOT BY 7-FOOT SUPERSONIC WIND TUNNEL (UNITARY)	E. CHEE/ROCKWELL INTERNATIONAL J. MARROQUIN/ROCKWELL INTERNATIONAL M. M. MANN -DMS	DMS-DR-2370 VOLUME 02 APRIL, 1980

TEST ID	REPORT TITLE	CONFIGURATIONS TESTED	TEST PURPOSE	TYPE OF TEST	MODEL SCALE MACH RANGE	TESTING AGENCY	COGNIZANT TEST DMS PERSONNEL	BASIC PUBLICATIONS OR COMMENTS
ARC 975WT 115-1 875WT 115-1 CR-151,792	RESULTS OF TEST U SING A 0.030-SCALE PRESSURE LOADS SPACE SHUTTLE ORBITER MODEL (47-0) IN THE NASA/ARC UNITARY PLAN WIND TUNNEL	B70C9E44F9M16N28R 5V8W116(ORBITER)	DETERMINE FORCE/PRESSURE DATA AT HIGH ALPHA/BETA COMBINATIONS FOR MACH RANGE 1.6 TO 3.5	FORCE PRESSURE	1.6 - 3.5	ROCKWELL/ ARC - 9-FOOT BY 7-FOOT SUPERSONIC WIND TUNNEL (UNITARY) 8-FOOT BY 7-FOOT SUPERSONIC WIND TUNNEL (UNITARY)	E. CHEE/ROCKWELL INTERNATIONAL J. MARROQUIN/ROCKWELL INTERNATIONAL M. M. MANN -DMS	DMS-DR-2370 VOLUME 03 MAY, 1980
JSC 56-A-75 OH78 CR-151,408	RESULTS OF BASE HEATING TESTS ON A 0.04 SCALE SPACE SHUTTLE ORBITER BASE (MODEL 65-0) IN THE NASA/JSC THERMAL VACUUM CHAMBER A	ORBITER VEHICLE 102	TO MEASURE HEAT TRANSFER RATES AND PRESSURE DISTRIBUTIONS ABOUT THE BASE OF THE ORBITER VEHICLE DURING SECOND STAGE ASCENT	HEAT-TRANS	0.04 /	ROCKWELL/ JSC -	W. P. GARTON/RI J. E. VAUGHN -DMS	DMS-DR-2371 MAY, 1978
ARC 11TWT 115 OA149A CR-151,779	RESULTS OF TEST U SING A 0.030-SCALE PRESSURE LOADS SPACE SHUTTLE ORBITER MODEL (47-0) IN THE NASA/ARC UNITARY PLAN WIND TUNNEL	B70C9E44F9M16N28R 5V8W116(ORBITER)	DETERMINE FORCE/PRESSURE DATA AT HIGH ALPHA/BETA COMBINATIONS FOR MACH RANGE 0.6 TO 1.4	FORCE PRESSURE	0.6 - 1.4	ROCKWELL/ ARC - 11-FOOT TRANSONIC WIND TUNNEL (UNITARY)	E. CHEE/ROCKWELL INTERNATIONAL J. MARROQUIN/ROCKWELL INTERNATIONAL T. L. MULKEY M. M. MANN -DMS	DMS-DR-2376 VOLUME 01 JAN., 1980
ARC 11TWT 115 OA149A CR-151,780	RESULTS OF TEST U SING A 0.030-SCALE PRESSURE LOADS SPACE SHUTTLE ORBITER MODEL (47-0) IN THE NASA/ARC UNITARY PLAN WIND TUNNEL	B70C9E44F9M16N28R 5V8W116(ORBITER)	DETERMINE FORCE/PRESSURE DATA AT HIGH ALPHA/BETA COMBINATIONS FOR MACH RANGE 0.6 TO 1.4	FORCE PRESSURE	0.6 - 1.4	ROCKWELL/ ARC - 11-FOOT TRANSONIC WIND TUNNEL (UNITARY)	E. CHEE/ROCKWELL INTERNATIONAL J. MARROQUIN/ROCKWELL INTERNATIONAL T. L. MULKEY M. M. MANN -DMS	DMS-DR-2376 VOLUME 02 JAN., 1980

WIND TUNNEL TEST / DMS DATA PROCESSING

TEST ID	REPORT TITLE	CONFIGURATIONS TESTED	TEST PURPOSE	TYPE OF TEST	MODEL SCALE MACH RANGE	TESTING AGENCY	COGNIZANT TEST DMS PERSONNEL	BASIC PUBLICATIONS OR COMMENTS
ARC - 11TWT - 115 / OA149A CR-151,781	RESULTS OF TEST U SING A 0.030-SCAL E PRESSURE LOADS SPACE SHUTTLE ORB ITER MODEL (47-0) IN THE NASA/ARC UNITARY PLAN WIND TUNNEL	B70C9E44F9M16N28P 5V8W116 ORBITER.	DETERMINE FORCE/P RESSURE DATA AT H IGH ALPHA/BETA CO MBINATIONS FOR MACH RANGE 0.6 TO 1.4	FORCE PRESSURE	0.6 - 1.4	ROCKWELL/ ARC - 11-FOOT TRANSO NIC WIND TUNNE L (UNITARY)	E. CHEE/ROCKWELL INTERNATIONAL J. MARROQUIN/ROCK WELL INTERNATIONA L T. L. MULKEY M. M. MANN -DMS	DMS-DR-2376 VOLUME 03 JAN.. 1980
LARC - 8TPT - 780 / LA107		TEST CANCELLED SE PTEMBER 1978	TEST CANCELLED SE PTEMBER 1978	FORCE		LARC / LARC - 8-FOOT TRANSON IC PRESSURE TU NNEL	G. G. MCDONALD -DMS	DMS-DR-2381 TASK CANCELLED SEPT.. 1978
MSFC - IPBF - 027 / OH8 IA109 CR 151,382	RESULTS OF EXPERI MENTAL TESTS IN T HE NASA/MSFC IMPU LSE BASE FLOW FAC ILITY ON A SPACE SHUTTLE .04 SCALE ORBITER (MODEL 2 5-0) TO DETERMINE SECOND STAGE ASC ENT BASE HEATING RATES AND PRESSUR E DISTRIBUTION	MODEL 25-0 (VEH. 2A AFT OF STA. X0 =1400 AND PROP. S IMULATION SYS.)	TO DETERMINE 2ND STAGE ASCENT BASE HEATING RATES AN D PRESSURE DISTRI BUTIONS RESULTING FROM ENGINE PLUM E RECIRCULATION A ND DIRECT PLUME I MPINGEMENT	HEAT-TRANS	0.04 /	MSFC / MSFC - NASA/MSFC IMPU LSE BASE FLOW FACILITY	W. P. GARTON/RI J. E. VAUGHN M. M. MOSER JR. -DMS	DMS-DR-2382 NOV.. 1977
AEDC - HWTB - TOA / IA148 CR-151,412	RESULTS OF RCS JE T PLUME INTERACTI ON TESTS USING A 0.0125-SCALE MODE L (70-OT) OF THE SPACE SHUTTLE VEH ICLE ORBITER IN T HE AEDC VKF TUNNE L %B% (IA148)	OV102 + ET (MODEL 70-OT)	TO OBTAIN INTERAC TION EFFECTS OF R CS THRUSTER JET P LUMES ON SSV AERO DYNAMICS DURING S TAGING TO SIMULAT E A RETURN-TO-LAU NCH SITE (RTLS) A BORT MISSION	FORCE	0.0125 / 5.89	ROCKWELL/ AEDC - HYPERSONIC WIN D TUNNEL (B)	J.J.DAILEDA + J.M ARROQUIN/RI J. E. VAUGHN -DMS	DMS-DR-2384 VOLUME 01 SEPT.. 1978

WIND TUNNEL TEST / DMS DATA PROCESSING

TEST ID	REPORT TITLE	CONFIGURATIONS TESTED	TEST PURPOSE	TYPE OF TEST	MODEL SCALE / MACH RANGE	TESTING AGENCY	COGNIZANT TEST DMS PERSONNEL	BASIC PUBLICATIONS OR COMMENTS
AEDC - HWTB - TCA / IA149 CR-151.413	RESULTS OF RCS JE T PLUME INTERACTI ON TESTS USING A 0.0125-SCALE MODE L (70-OT) OF THE SPACE SHUTTLE VEH ICLE ORBITER IN T HE AEDC VKF TUNNE L %B% (IA148)	OV102 + ET (MODEL 70-OT)	TO OBTAIN INTERAC TION EFFECTS OF R CS THRUSTER JET P LUMES ON SSV AERO DYNAMICS DURING S TAGING TO SIMULAT E A RETURN-TO-LAU NCH SITE (RTLS) A BORT MISSION	FORCE	0.0125 / 5.89	ROCKWELL/ AEDC - HYPERSONIC WIN D TUNNEL (B)	J.J.DAILEDA + J.M ARROQUIN/RI J. E. VAUGHN -DMS	DMS-DR-2384 VOLUME 02 SEPT., 1978
ARC - 3.5HWT - 173 / OH15 CR-151.366	RESULTS OF TESTS ON A 0.111-SCALE SPACE SHUTTLE VE HICLE SIMULATED E LEVON/WING GAP HE AT TRANSFER MODEL (53-0) IN THE AM ES RESEARCH CENTE R 3.5-FOOT HWT	MODEL 53-0 (ELEVO N/WING GAP)	TO EVALUATE EFFEC T OF ELEVON DEFLE CTION, GAP GEOMET RY, AND BOUNDARY LAYER STATE ON EL EVON/WING GAP HEA TING	HEAT-TRANS	0.111 / 5.1 - 5.1	ROCKWELL/ ARC - 3.5-FOOT HYPER SONIC WIND TUN NEL	C. L. BERTHOLD/RI D.W.HERSEY M. M. MOSER JR. -DMS	DMS-DR-2385 SEPT., 1977
ARC - 3.5HWT - 177 / OH44 CR-151.368	RESULTS OF TESTS ON A 0.111-SCALE SPACE SHUTTLE VEH ICLE SIMULATED EL EVON/ELEVON GAP H EAT TRANSFER MODE L (53-0) IN THE A MES RESEARCH CENT ER 3.5-FOOT HYPER SONIC WIND TUNNEL	MODEL 53-0 (ELEVO N/ELEVON GAP)	TO EVALUATE EFFEC T OF ELEVON DEFLE CTION, GAP GEOMET RY, AND BOUNDARY	HEAT-TRANS	0.111 / 5.1 - 5.1	ROCKWELL/ ARC - 3.5-FOOT HYPER SONIC WIND TUN NEL	C. L. BERTHOLD/RI D.W.HERSEY M. M. MOSER JR. -DMS	DMS-DR-2386 SEPT., 1977
LARC - LTPT - 246 / LA104		TEST CANCELLED SE PTEMBER 1978	TEST CANCELLED SE PTEMBER 1978	FORCE		LARC / LARC - LOW-TURBULENCE PRESSURE TUNN EL	J. W. BALL G. G. MCDONALD -DMS	DMS-DR-2387 TASK CANCELLED SEPT., 1978

TEST ID	REPORT TITLE	CONFIGURATIONS TESTED	TEST PURPOSE	TYPE OF TEST	MODEL SCALE MACH RANGE	TESTING AGENCY	COGNIZANT TEST DMS PERSONNEL	BASIC PUBLICATIONS OR COMMENTS
LARC UPWT 1194 LA101 CR-160,481	LOW SUPERSONIC STABILITY AND CONTROL CHARACTERISTICS OF A 0.0015-SCALE MODEL (REMOTELY CONTROLLED ELEVON) MODEL 44-0 SPACE SHUTTLE ORBITER TESTED IN THE NASA/LARC 4 FOOT UPWT (LEG 1: LA101)	MODEL 44 0 SSV ORBITER WITH REMOTE CONTROLLED ELEVONS	OBTAIN LOW SUPERSONIC DATA ON CONTROL SURFACE LINEARITY AND SENSITIVITY TO MACH NUMBER FOR FINE CUT SPEED BRAKE, BODY FLAP AND RUDDER DEFLECTIONS. INVESTIGATE INTERACTIVE EFFECTS OF MUTUAL CONTROL SURFACE DEFLECTIONS, AND OBTAIN OTHER CONTROL SURFACE DATA	FORCE	0.015 / 1.5 - 2.86	LARC / LARC - UNITARY PLAN WIND TUNNEL	BERNARD SPENCER, JR./LARC GEORGE M. WARE/NASA J. W. BALL G. G. MCDONALD -DMS	DMS-DR-2390 JUNE, 1980
NRLAD LSWT 775 0A250 CR-151,389	GROUND PROXIMITY TESTS OF THE 0.03-SCALE MODEL (45-0) SPACE SHUTTLE ORBITER IN THE ROCKWELL INTERNATIONAL NAAL LOW SPEED WIND TUNNEL	MODEL 45-0 ORB. 140A/B CONF. (MODIFIED)	TO DEFINE ORB. LAT.-DIRECT. STABILITY CHARACTERISTICS IN GROUND PROXIMITY: TO INVESTIGATE DISCREPANCIES IN LAT.-DIRECT. DATA OBTAINED IN OTHER NAAL TESTS	FORCE	0.03 / .20- .20	ROCKWELL/ NRLAD - LOW SPEED WIND TUNNEL	R. MENNELL/RI J. E. VAUGHN M. M. MOSER JR. -DMS	DMS-DR-2392 DEC., 1977
LARC BTPT 786 LA111	EFFECT OF SILTS POD ON THE TRANSONIC AERODYNAMIC CHARACTERISTICS OF A 0.015-SCALE SHUTTLE ORBITER MODEL (44-0) TESTED IN THE NASA/LARC 8-FOOT TPT	MODEL 44-0 (SILTS POD)	TO DETERMINE EFFECT OF AERO. CHARACTERISTICS OF ORBITER RESULTING FROM ADDITION OF SILTS POD TO VERTICAL TAIL	FORCE	0.015 / 0.6 - 1.20	LARC / LARC - 8-FOOT TRANSONIC PRESSURE TUNNEL	G. WARE, B. SPENCER, JR./RI G. G. MCDONALD -DMS	DMS-DR-2395 JAN., 1978

TEST ID	REPORT TITLE	CONFIGURATIONS TESTED	TEST PURPOSE	TYPE OF TEST	MODEL SCALE MACH RANGE	TESTING AGENCY	COGNIZANT TEST DMS PERSONNEL	BASIC PUBLICATIONS OR COMMENTS
LARC UPWT 1212 LA110 CR-151,388	EFFECT OF SILTS POD ON THE LOW SUPERSONIC AERODYNAMIC CHARACTERISTICS OF A 0.015-SCALE SHUTTLE ORBITER MODEL (44-0) TESTED IN THE NASA/LARC 4-FOOT UPWT (LEG 1)	MODEL 44-0 (SILTS POD)	TO DETERMINE EFFECT OF AERO. CHARACTERISTICS OF ORBITER RESULTING FROM ADDITION OF SILTS POD TO VERTICAL TAIL	FORCE	0.015 - 1.5 2.5	LARC / LARC - UNITARY PLAN WIND TUNNEL	G. WARE, B. SPENCER, JR./LARC G. G. MCDONALD -DMS	DMS-DR-2396 DEC., 1977
LARC UPWT 1217 LA114 CR-151,388	EFFECT OF SILTS POD ON THE HIGH SUPERSONIC AERODYNAMIC CHARACTERISTICS OF A 0.015-SCALE SHUTTLE ORBITER MODEL (44-0) TESTED IN THE NASA/LARC 4-FOOT UPWT (LEG 2)	MODEL 44-0 (SILTS POD)	TO DETERMINE EFFECT OF AERO. CHARACTERISTICS OF ORBITER RESULTING FROM ADDITION OF SILTS POD TO VERTICAL TAIL	FORCE	0.015 - 3.0 4.63	LARC / LARC - UNITARY PLAN WIND TUNNEL	G. WARE, B. SPENCER, JR./RI G. G. MCDONALD -DMS	DMS-DR-2399 NOV., 19[illegible]
ARC 11,97,87-705-1 IS1A/B/C 053 CR-151,395	AERONOISE TEST RESULTS USING A 0.02 SRB'S) 40-SCALE SPACE SHUTTLE VEHICLE CONFIGURATION 2A MODEL (11-OTS) IN THE AMES RESEARCH CENTER UNITARY PLAN WIND TUNNELS	11-OTS (ORB, ET.	TO MEASURE FLUCTUATING PRESSURE (AERONOISE) ENVIRONMENT ON LAUNCH VEHICLE DURING TRANSONIC/SUPERSONIC ASCENT AND ORBITER DURING SUPERSONIC ENTRY	PRESSURE	0.040 - 06 3.5	ROCKWELL/ ARC - 11-FOOT, 9-FOOT, 8-FOOT, UNITARY WIND TUNNEL	B. J. HERRERA, C. L. STEVENS/RI D.W.HERSEY M. M. MOSER JR. -DMS	DMS-DR-2401 JAN., 1978
NRLAD LSWT 766 OA223 CR-151,763	SYSTEM CHECKOUT OF THE 0.05-SCALE SPACE SHUTTLE VEHICLE ORBITER 102 MODEL (39-0) IN THE NAAL LOW SPEED WIND TUNNEL(OA223)	875C16F64F16FD3F22HG1M52N108N109N110N111R20V27VT10VT11VT12VT13VT14VT15VT16VT17W131	CHECKOUT OF ALL MODEL CONTROL SURFACE AND PRESSURE SYSTEMS AND ESTABLISH THE OPERATIONAL STATUS OF THE COMPLETE MODEL	FORCE	0.24 - 0.24	ROCKWELL/ NRLAD - LOW SPEED WIND TUNNEL	R. C. MENNELL/ROCKWELL INTERNATIONAL D.W.HERSEY M. M. MANN -DMS	DMS-DR-2402 NOV., 1978

TEST ID	REPORT TITLE	CONFIGURATIONS TESTED	TEST PURPOSE	TYPE OF TEST	MODEL SCALE MACH RANGE	TESTING AGENCY	COGNIZANT TEST DMS PERSONNEL	BASIC PUBLICATIONS OR COMMENTS
ARC 12PT 218-1 OA101 CR-151,756	RESULTS OF A LOW SPEED APPROACH AND LANDING EXPERIMENTAL INVESTIGATION OF A 0.050-SCALE SPACE SHUTTLE ORBITER MODEL (39-01) IN THE NASA/AMES RESEARCH CENTER'S 12-FOOT PRESSURE WIND TUNNEL (OA101)	OV102	TO OBTAIN BASIC STABILITY AND CONTROL DATA FOR OV102 ORBITER, DETERMINE INDIVIDUAL PANEL HINGE MOMENTS, OBTAIN GROUND EFFECTS ON PITCH AND LATERAL DIRECTIONAL STABILITY AND CONTROL WITH LANDING GEAR DEPLOYED, AND CALIBRATE THE OV102 AIR DATA SYSTEM (FLUSH STATIC TAPS)	FORCE PRESSURE	0.050/ 0.25 - 0.40	ROCKWELL/ ARC - 12-FOOT PRESSURE TUNNEL	W.M. ZEMAN/RI, R. H. MULFINGER/RI, R.R. BURROWS/RI J.J. BROWNSON/NASA-ARC, C.Q. ALLEN/NASA-ARC D.W.HERSEY G. W. KLUG -DMS	DMS-DR-2405 VOLUME 01 SEPT., 1978
ARC 12PT 218-1 OA101 CR-151,757	RESULTS OF A LOW SPEED APPROACH AND LANDING EXPERIMENTAL INVESTIGATION OF A 0.050-SCALE SPACE SHUTTLE ORBITER MODEL (39-01) IN THE NASA/AMES RESEARCH CENTER'S 12-FOOT PRESSURE WIND TUNNEL (OA101)	OV102	TO OBTAIN BASIC STABILITY AND CONTROL DATA FOR OV102 ORBITER, DETERMINE INDIVIDUAL PANEL HINGE MOMENTS, OBTAIN GROUND EFFECTS ON PITCH AND LATERAL DIRECTIONAL STABILITY AND CONTROL WITH LANDING GEAR DEPLOYED, AND CALIBRATE THE OV102 AIR DATA SYSTEM (FLUSH STATIC TAPS)	FORCE PRESSURE	0.050/ 0.25 - 0.40	ROCKWELL/ ARC - 12-FOOT PRESSURE TUNNEL	W.M. ZEMAN/RI, R. H. MULFINGER/RI, R.R. BURROWS/RI J.J. BROWNSON/NASA-ARC, C.Q. ALLEN/NASA-ARC D.W.HERSEY G. W. KLUG -DMS	DMS-DR-2405 VOLUME 02 SEPT., 1978

TEST ID	REPORT TITLE	CONFIGURATIONS TESTED	TEST PURPOSE	TYPE OF TEST	MODEL SCALE MACH RANGE	TESTING AGENCY	COGNIZANT TEST DMS PERSONNEL	BASIC PUBLICATIONS OR COMMENTS
ARC 12PT 218-1 OA101 CR-151,758	RESULTS OF A LOW SPEED APPROACH AND LANDING EXPERIMENTAL INVESTIGATION OF A 0.050-SCALE SPACE SHUTTLE ORBITER MODEL (39-0) IN THE NASA/AMES RESEARCH CENTER'S 12-FOOT PRESSURE WIND TUNNEL (OA101)	OV102	TO OBTAIN BASIC STABILITY AND CONTROL DATA FOR OV102 ORBITER, DETERMINE INDIVIDUAL PANEL HINGE MOMENTS, OBTAIN GROUND EFFECTS ON PITCH AND LATERAL DIRECTIONAL STABILITY AND CONTROL WITH LANDING GEAR DEPLOYED, AND CALIBRATE THE OV102 AIR DATA SYSTEM (FLUSH STATIC TAPS)	FORCE PRESSURE	0.050/ 0.25 - 0.40	ROCKWELL/ ARC - 12-FOOT PRESSURE TUNNEL	W.M. ZEMAN/RI, R. H. MULFINGER/RI, P.R. BURROWS/RI J.J. BROWNSON/NASA-ARC, C.Q. ALLEN/NASA-ARC D.W.HERSEY G. W. KLUG -DMS	DMS-DR-2405 VOLUME 03 SEPT., 1978
ARC 12PT 218-1 OA101 CR-151,759	RESULTS OF A LOW SPEED APPROACH AND LANDING EXPERIMENTAL INVESTIGATION OF A 0.050-SCALE SPACE SHUTTLE ORBITER MODEL (39-0) IN THE NASA/AMES RESEARCH CENTER'S 12-FOOT PRESSURE WIND TUNNEL (OA101)	OV102	TO OBTAIN BASIC STABILITY AND CONTROL DATA FOR OV102 ORBITER, DETERMINE INDIVIDUAL PANEL HINGE MOMENTS, OBTAIN GROUND EFFECTS ON PITCH AND LATERAL DIRECTIONAL STABILITY AND CONTROL WITH LANDING GEAR DEPLOYED, AND CALIBRATE THE OV102 AIR DATA SYSTEM (FLUSH STATIC TAPS)	FORCE PRESSURE	0.050/ 0.25 - 0.40	ROCKWELL/ ARC - 12-FOOT PRESSURE TUNNEL	W.M. ZEMAN/RI, R. H. MULFINGER/RI, R.R. BURROWS/RI J.J. BROWNSON/NASA-ARC, C.Q. ALLEN/NASA-ARC D.W.HERSEY G. W. KLUG -DMS	DMS-DR-2405 VOLUME 04 SEPT., 1978

TEST ID	REPORT TITLE	CONFIGURATIONS TESTED	TEST PURPOSE	TYPE OF TEST	MODEL SCALE MACH RANGE	TESTING AGENCY	COGNIZANT TEST DMS PERSONNEL	BASIC PUBLICATIONS OR COMMENTS
ARC 12PT 218-1 OA101 CR-151,760	RESULTS OF A LOW SPEED APPROACH AND LANDING EXPERIMENTAL INVESTIGATION OF A 0.050-SCALE SPACE SHUTTLE ORBITER MODEL (39-O) IN THE NASA/AMES RESEARCH CENTER'S 12-FOOT PRESSURE WIND TUNNEL (OA101)	OV102	TO OBTAIN BASIC STABILITY AND CONTROL DATA FOR OV102 ORBITER, DETERMINE INDIVIDUAL PANEL HINGE MOMENTS, OBTAIN GROUND EFFECTS ON PITCH AND LATERAL DIRECTIONAL STABILITY AND CONTROL WITH LANDING GEAR DEPLOYED, AND CALIBRATE THE OV102 AIR DATA SYSTEM (FLUSH STATIC TAPS)	FORCE PRESSURE	0.050/ 0.25 - 0.40	ROCKWELL/ ARC - 12-FOOT PRESSURE TUNNEL	W.M. ZEMAN/RI, R. H. MULFINGER/RI, R.R. BURROWS/RI J.J. BROWNSON/NASA-ARC, C.O. ALLEN/NASA-ARC D.W.HERSEY G. W. KLUG -DMS	DMS-DR-2405 VOLUME 05 SEPT., 1978
ARC 12PT 218-1 OA101 CR-151,761	RESULTS OF A LOW SPEED APPROACH AND LANDING EXPERIMENTAL INVESTIGATION OF A 0.050-SCALE SPACE SHUTTLE ORBITER MODEL (39-O) IN THE NASA/AMES RESEARCH CENTER'S 12-FOOT PRESSURE WIND TUNNEL (OA101)	OV102	TO OBTAIN BASIC STABILITY AND CONTROL DATA FOR OV102 ORBITER, DETERMINE INDIVIDUAL PANEL HINGE MOMENTS, OBTAIN GROUND EFFECTS ON PITCH AND LATERAL DIRECTIONAL STABILITY AND CONTROL WITH LANDING GEAR DEPLOYED, AND CALIBRATE THE OV102 AIR DATA SYSTEM (FLUSH STATIC TAPS)	FORCE PRESSURE	0.050/ 0.25 - 0.40	ROCKWELL/ ARC - 12-FOOT PRESSURE TUNNEL	W.M. ZEMAN/RI, R. H. MULFINGER/RI, R.R. BURROWS/RI J.J. BROWNSON/NASA-ARC, C.O. ALLEN/NASA-ARC D.W.HERSEY G. W. KLUG -DMS	DMS-DR-2405 VOLUME 06 OCT., 1978

TEST ID	REPORT TITLE	CONFIGURATIONS TESTED	TEST PURPOSE	TYPE OF TEST	MODEL SCALE MACH RANGE	TESTING AGENCY	COGNIZANT TEST DMS PERSONNEL	BASIC PUBLICATIONS OR COMMENTS
ARC - 97SWT - 272 / IA156B CR-160,498	RESULTS OF TESTS USING A 0.02-SCALE MODEL (89-OTS) OF THE SPACE SHUTTLE INTEGRATED VEHICLE IN THE NASA/AMES RESEARCH CENTER 9X7 FOOT SUPERSONIC WIND TUNNEL (IA156B)	B75C16E64F16FR22H G1M52N108N109N110 N111R20U1V27V29VT 10VT11VT14VT17W13 1T39S27	TO OBTAIN FORCE AND MOMENT DATA ON ALL VEHICLE ELEMENTS (ORBITER, EXTERNAL TANK, AND EACH SOLID ROCKET BOOSTER), WING AND VERTICAL TAIL LOAD INDICATORS, ELEVON AND RUDDER HINGE MOMENTS, AND BASE-BODYFLAP PRESSURE DATA	PRESSURE FORCE	1.55 - 2.5	ROCKWELL/ ARC - 9-FOOT BY 7-FOOT SUPERSONIC WIND TUNNEL (UNITARY)	J. J. DAILEDA AND J. MARROQUIN/ROCKWELL INTERNATIONAL M. M. MANN -DMS	DMS-DR-2408 VOLUME 01 JULY, 1980
ARC - 97SWT - 272 / IA156B CR-160,499	RESULTS OF TESTS USING A 0.02-SCALE MODEL (89-OTS) OF THE SPACE SHUTTLE INTEGRATED VEHICLE IN THE NASA/AMES RESEARCH CENTER 9X7 FOOT SUPERSONIC WIND TUNNEL (IA156B)	B75C16E64F16FR22H G1M52N108N109N110 N111R20U1V27V29VT 10VT11VT14VT17W13 1T39S27	TO OBTAIN FORCE AND MOMENT DATA ON ALL VEHICLE ELEMENTS (ORBITER, EXTERNAL TANK, AND EACH SOLID ROCKET BOOSTER), WING AND VERTICAL TAIL LOAD INDICATORS, ELEVON AND RUDDER HINGE MOMENTS, AND BASE-BODYFLAP PRESSURE DATA	PRESSURE FORCE	1.55 - 2.5	ROCKWELL/ ARC - 9-FOOT BY 7-FOOT SUPERSONIC WIND TUNNEL (UNITARY)	J. J. DAILEDA AND J. MARROQUIN/ROCKWELL INTERNATIONAL M. M. MANN -DMS	DMS-DR-2408 VOLUME 02 JULY, 1980

TEST ID	REPORT TITLE	CONFIGURATIONS TESTED	TEST PURPOSE	TYPE OF TEST	MODEL SCALE MACH RANGE	TESTING AGENCY	COGNIZANT TEST DMS PERSONNEL	BASIC PUBLICATIONS OR COMMENTS
ARC - 97SWT - 272 / IA156B CR-160,500	RESULTS OF TESTS USING A 0.03-SCALE MODEL (89-OTS) OF THE SPACE SHUTTLE INTEGRATED VEHICLE IN THE NASA/AMES RESEARCH CENTER 9X7 FOOT SUPERSONIC WIND TUNNEL (IA156B)	B75C16E64F16FR22H G1M52N108N109N110 N111R20U1V27V29VT 10VT11VT14VT17W13 1T39527	TO OBTAIN FORCE AND MOMENT DATA ON ALL VEHICLE ELEMENTS (ORBITER, EXTERNAL TANK, AND EACH SOLID ROCKET BOOSTER), WING AND VERTICAL TAIL LOAD INDICATORS, ELEVON AND RUDDER HINGE MOMENTS, AND BASE-BODYFLAP PRESSURE DATA	PRESSURE FORCE	1.55 - 2.5	ROCKWELL/ ARC - 9-FOOT BY 7-FOOT SUPERSONIC WIND TUNNEL (UNITARY)	J. J. DAILEDA AND J. MARROQUIN/ROCKWELL INTERNATIONAL M. M. MANN -DMS	DMS-DR-2408 VOLUME 03 JULY, 1980
AEDC - HWTB - V41B-R3A / OH56 CR-151,777	RESULTS OF THE NASA/RI ORBITER WING TIP HEATING TEST WITH THE 0.08-SCALE ORBITER WING MODEL (91-0) IN THE AEDC VKF B HYPERSONIC WIND TUNNEL (OH56)	ORBITER WING TIP (MODEL 91-0)	DETERMINE AERODYNAMIC HEATING TO THE ORBITER WING LEADING EDGE	HEAT-TRANS	7.9 - 8.0	ROCKWELL/ AEDC - HYPERSONIC WIND TUNNEL (B)	J. W. FOUST/RI D.W.HERSEY J. E. VAUGHN -DMS	DMS-DR-2410 JUNE, 1979
AEDC - PWT16T - 431 / OA232 CR-160,484	CALIBRATION TESTS OF THE SPACE SHUTTLE AIR DATA SYSTEM USING A 0.10-SCALE ORBITER FOREBODY MODEL (99-0) IN THE AEDC 16T PROPULSION WIND TUNNEL (OA232)	B74C16N108PR4PR7P R8PR14VT18VT19 99-0	TO PROVIDE A CALIBRATION OF THE SIDE-MOUNTED AIR DATA PROBES AND THE NOSE BOOM-MOUNTED FT PROBE, I.E. DETERMINE LOCAL ANGLE OF ATTACK, MEASURE PROBE STATIC PRESSURE ERROR, AND DETERMINE EFFECT OF PROBE SCALE	FORCE	0.10/ 0.2 - 1.55	NRLAD / AEDC - TRANSONIC PROPULSION WIND TUNNEL (PWT-16T)	W.E.WHITE/ARO,INC. AEDC DIVISION T.J.DZIUBALA AND R.R.BURROWS/ RI D.W.HERSEY G. W. KLUG -DMS	DMS-DR-2414 VOLUME 01 MAY, 1980

TEST ID	REPORT TITLE	CONFIGURATIONS TESTED	TEST PURPOSE	TYPE OF TEST	MODEL SCALE / MACH RANGE	TESTING AGENCY	COGNIZANT TEST DMS PERSONNEL	BASIC PUBLICATIONS OR COMMENTS
AEDC - PWT16T - 431 / 0A232 CR-163,485	CALIBRATION TESTS OF THE SPACE SHU TTLE AIR DATA SYS TEM USING A C IC-SCALE ORBITER FOR EBOD MODEL (99-0 IN THE AEDC 16T PROPULSION WIND TUNNEL (0A232)	B74C16N1C8PR4PR7P R8PR14VT18VT19 99-0	TO PROVIDE A CALI BRATION OF THE SI DE-MOUNTED AIR DA TA PROBES AND THE NOSE BOOM-MOU NTED FT PROBE. 1. E. DETERMINE LOCA L ANGLE OF ATTACK . MEASURE PROBE S TATIC PRESSURE ER ROR. AND DETERMIN E EFFECT OF PROBE SCALE	FORCE	0.10/ 0.2 - 1.55	NRLAD / AEDC - TRANSONIC PROP ULSION WIND TU NNEL (PWT-16T)	W.E.WHITE/ARO,INC . AEDC DIVISION T.J.DZIUBALA AND R.R.BURROWS/ RI D.W.HERSEY G. W. KLUG -DMS	DMS-DR-2414 VOLUME 02 MAY, 1980
AEDC - SWTA - V418-P5A / 0A208/209 CR-151,784	RESULTS OF TESTS USING A 0.02-SCAL E MODEL (105-0) OF THE SPACE SHUTT LE VEHICLE ORBITE R IN THE ARNOLD E NGINEERING DEVELO PMENT CENTER VON KARMAN FACILITY S UPERSONIC TUNNEL A (0A209) AND HYP ERSONIC TUNNEL B (0A208/209)	SSV 102 ORBITER C ONFIGURATION MODE L 105-0	OBTAIN FORCE AND MOMENT DATA TO VE RIFY THE ORBITER STABILITY AND CON TROL CHARACTERIST ICS IN PITCH AND YAW, AND VERIFY C ONTROL EFFECTIVEN ESS AND TRIM LIMI TS IN THE MACH NU MBER RANGE FROM 2 TO 8	FORCE	0.02 / 2.0 - 8.0	ROCKWELL/ AEDC - SUPERSONIC WIN D TUNNEL (A)	J.J.DAILEDA/ROCKW ELL J.L.JORDAN/ARO,IN C G. G. MCDONALD -DMS	DMS-DR-2415 VOLUME 01 JUN., 1980

TEST ID	REPORT TITLE	CONFIGURATIONS TESTED	TEST PURPOSE	TYPE OF TEST	MODEL SCALE MACH RANGE	TESTING AGENCY	COGNIZANT TEST DMS PERSONNEL	BASIC PUBLICATIONS OR COMMENTS
SWTA - V4IA-P5A / 0A208/209 CR-151,785	RESULTS OF TESTS USING A 0.02-SCALE MODEL (105-0) OF THE SPACE SHUTTLE VEHICLE ORBITER IN THE ARNOLD ENGINEERING DEVELOPMENT CENTER VON KARMAN FACILITY SUPERSONIC TUNNEL A (0A209) AND HYPERSONIC TUNNEL B (0A208/209)	SSV 102 ORBITER CONFIGURATION MODEL 105-0	OBTAIN FORCE AND MOMENT DATA TO VERIFY THE ORBITER STABILITY AND CONTROL CHARACTERISTICS IN PITCH AND YAW, AND VERIFY CONTROL EFFECTIVENESS AND TRIM LIMITS IN THE MACH NUMBER RANGE FROM 2 TO 8	FORCE	0.02 / 2.0 - 8.0	NRLAD / SUPERSONIC WIND TUNNEL (A)	J.J.DAILEDA/ROCKWELL J.L.JORDAN/ARO,INC G. G. MCDONALD -DMS	DMS-DR-2415 VOLUME 02 JAN., 1980
ARC 3.5HWT 235 0H58 CR-151,770	RESULTS OF AEROTHERMODYNAMIC HEAT TRANSFER TESTS ON A 0.03-SCALE MODEL (93-0) SIMULATING THE ELEVON/ELEVON GAP AND ELEVON/FUSELAGE INTERFACE REGIONS OF THE SS ORBITER IN THE ARC 3.5HWT.	93-0 FLAT PLATE	TO MEASURE DETAILED ELEVON/ELEVON GAP + FUSELAGE/ELEVON INTERFACE HEATING DISTRIBUTION TO VERIFY DESIGN HEATING RATES.	HEAT-TRANS PRESSURE	0.04 / 0.03 / 7.3	ROCKWELL/ ARC - 3.5-FOOT HYPERSONIC WIND TUNNEL	J. CLEARY/NASA-ARC C. R.B. KINGSLAND/RI D.W.HERSEY M. M. MANN -DMS	DMS-DR-2417 JUNE, 1979
ARC 3.5HWT 227 1H100 CR-151,414	RESULTS OF TESTS OF A DEVELOPMENT FLIGHT INSTRUMENTATION GAS TEMPERATURE PROBE IN THE AMES RESEARCH CENTER 3.5 FT. HYPERSONIC WIND TUNNEL (1H100)			HEAT-TRANS		ROCKWELL/ ARC - 3.5-FOOT HYPERSONIC WIND TUNNEL	B. J. HERRERA/RI	DMS-DR-2418 OCT., 1978

WIND TUNNEL TEST / DMS DATA PROCESSING

TEST ID	REPORT TITLE	CONFIGURATIONS TESTED	TEST PURPOSE	TYPE OF TEST	MODEL SCALE / MACH RANGE	TESTING AGENCY	COGNIZANT TEST DMS PERSONNEL	BASIC PUBLICATIONS OR COMMENTS
LARC - 16T - 325 / OA270B/C CR-151,762	RESULTS OF AN INV ESTIGATION TO VER IFY SHUTTLE ORBIT ER AERO-CHARACTER ISTICS AND EXAMIN E TRANSONIC BLOCK AGE AND SHOCK REF LECTION EFFECTS U TILIZING .02-SCAL E HI-FIDELITY MOD ELS 104-0 AND 105 -0 IN THE LANGLEY RESEARCH CENTER 1 6-FT. TRANSONIC W IND TUNNEL OA270B /C	SSV OV102 ORBITER CONFIGURATION MO DEL 104-0 INSTRUM ENTED ELEVONS SSV OV102 ORBITER CONFIGURATION MO DEL 105-0 RIGID F ORCE MODEL	DETERMINE AERODYN AMIC STABILITY AN D CONTROL CHARACT ERISTICS AND CONT ROL SURFACE HINGE MOMENTS ON THE O V102 CONFIGURATIO N	FORCE	0.6 - 1.3	ROCKWELL/ LARC - 16-FOOT TRANSO NIC TUNNEL	R. H. MULFINGER, J. J. DAILEDA/ROC KWELL INTERNATION AL E. PUTNAM, W. COM PTON/LARC G. S. MCDONALD -DMS	DMS-DR-2419 SEPT., 1978
AEDC - SWTA - V41A-20 / FH15 CR-151,767	RESULTS OF THIN S KIN THERMOCOUPLE TESTS CONDUCTED I N THE AEDC VKF TU NNEL A TO DETERMI NE HEAT TRANSFER RATES ON A .0275 SCALE SSV ET FORE BODY (FH15)	30/10/40-DEGREE C ONE OGIVE	TO DETERMINE THE CHANGE IN HEATING , IF ANY DUE TO TH E SMALL CHANGE IN THE NOSE SPIKE C ONFIGURATIONΔ + T O MEASURE INTERFE RENCE HEATING ON THE SURFACE AROUN D THE FORWARD FAI RING, TRAYS, GOX LI NES + BRACKETS WI TH + WITHOUT THES E PROTUBERANCES.	HEAT-TRANS	3.0 - 5.5	MMC / AEDC - SUPERSONIC WIN D TUNNEL (A)	HARRY R. CARROLL/ MMC J. E. VAUGHN C. R. EDWARDS -DMS	DMS-DR-2422 APRIL, 1979

TEST ID	REPORT TITLE	CONFIGURATIONS TESTED	TEST PURPOSE	TYPE OF TEST	MODEL SCALE MACH RANGE	TESTING AGENCY	COGNIZANT TEST DMS PERSONNEL	BASIC PUBLICATIONS OR COMMENTS
ARC - 3.5HWT - 237 / FH16 CR-151,768	RESULTS OF THIN SKIN THERMOCOUPLE TESTS CONDUCTED IN THE NASA/ARC 3.5 FT. HYPERSONIC WIND TUNNEL TO DETERMINE HEAT TRANSFER RATES ON A .0275 SCALE SSV FOREBODY(FH16)	30,10,40 DEGREES CONICAL SPIKE FOR ET	DETERMINE THE CHANGE IN HEATING DUE TO THE CHANGE FROM 10,40 DEG CONAL SPIKE TO A 30,10,40 DEGREES CONICAL SPIKE TO MEASURE INTERFERENCE HEATING ON THE SURFACE AROUND THE FORWARD FAIRING, TRAYS, GOX LINE AND BRACKETS	HEAT-TRANS		MMC / ARC - 3.5-FOOT HYPERSONIC WIND TUNNEL	HARRY R. CARROLL/MMC JACK J. BROWNSON/ARC C. R. EDWARDS -DMS	DMS-DR-2423 JAN., 1980
LARC - UPWT - 1207 LG2 / LA124 TM-X TP1186	A WIND TUNNEL STUDY OF THE APPLICABILITY OF FAR-FIELD SONIC-BOOM THEORY TO THE SPACE SHUTTLE ORBITER	140A/B ORBITER	TO DETERMINE APPLICABILITY OF FAR-FIELD SONIC-BOOM THEORY TO THE SPACE SHUTTLE ORBITER	FORCE	0.0004 / 2.8 - 4.14	LARC / LARC - UNITARY PLAN WIND TUNNEL	H. W. CARLSON + R. J. MACK/LARC J. W. BALL G. G. MCDONALD -DMS	DMS-DR-2426 JUNE, 1978
AEDC - SWTA - V41A-W5 / IH85 CR-151,793	TEST RESULTS FROM THE NASA/ROCKELL INTERNATIONAL SPACE SHUTTLE INTEGRATED VEHICLE TEST USING A 0.0175-SCALE MODEL (60-OTS) CONDUCTED IN THE AEDC-VKF TUNNEL A (IH85)	OTS-T38S26B62C12M 16W116E52V8R18F10 OT-T38B62C12M16W1 16E52V8R18F10	TO OBTAIN CONVECTIVE HEAT-TRANSFER-RATE DISTRIBUTIONS ON THE SPACE SHUTTLE INTEGRATED VEHICLE DURING SIMULATED FIRST AND SECOND STAGE CONDITIONS OF THE FLIGHT PROFILE	HEAT-TRANS	0.0175 / 3.01 - 4.02	ROCKWELL/ AEDC - SUPERSONIC WIND TUNNEL (A)	J.W.CUMMINGS/RI K.W.NUTT/AEDC-VKF/SH J. E. VAUGHN G. W. KLUG -DMS	DMS-DR-2431 VOLUME 01 APRIL, 1980

ORIGINAL PAGE IS OF POOR QUALITY

WIND TUNNEL TEST / DMS DATA PROCESSING

TEST ID	REPORT TITLE	CONFIGURATIONS TESTED	TEST PURPOSE	TYPE OF TEST	MODEL SCALE MACH RANGE	TESTING AGENCY	COGNIZANT TEST DMS PERSONNEL	BASIC PUBLICATIONS OR COMMENTS
AEDC SWTA V41A-W5 1H85 CR-151,794	TEST RESULTS FROM THE NASA/ROCKELL INTERNATIONAL SP ACE SHUTTLE INTEGRATED VEHICLE TESTS USING A 0.0175-SCALE MODEL (60-0TS) CONDUCTED IN THE AEDC-VKF TUNNEL A (1H85)	OTS-T38S26862C12M 16W116E52V8R18F10 OT-T38862C12M16W1 16E52V8R18F10	TO OBTAIN CONVECTIVE HEAT-TRANSFER-RATE DISTRIBUTIONS ON THE SPACE SHUTTLE INTEGRATED VEHICLE DURING SIMULATED FIRST AND SECOND STAGE CONDITIONS OF THE FLIGHT PROFILE	HEAT-TRANS	0.0175 / 3.01 - 4.02	ROCKWELL/ AEDC - SUPERSONIC WIND TUNNEL (A)	J.W.CUMMINGS/RI K.W.NUTT/AEDC-VKF/SH J. E. VAUGHN G. W. KLUG -DMS	DMS-DR-2431 VOLUME 02 APRIL, 1980
AEDC SWTA V41A-W5 1H85 CR-151,795	TEST RESULTS FROM THE NASA/ROCKELL INTERNATIONAL SP ACE SHUTTLE INTEGRATED VEHICLE TESTS USING A 0.0175-SCALE MODEL (60-0TS) CONDUCTED IN THE AEDC-VKF TUNNEL A (1H85)	OTS-T38S26862C12M 16W116E52V8R18F10 OT-T38862C12M16W1 16E52V8R18F10	TO OBTAIN CONVECTIVE HEAT-TRANSFER-RATE DISTRIBUTIONS ON THE SPACE SHUTTLE INTEGRATED VEHICLE DURING SIMULATED FIRST AND SECOND STAGE CONDITIONS OF THE FLIGHT PROFILE	HEAT-TRANS	0.0175 / 3.01 - 4.02	ROCKWELL/ AEDC - SUPERSONIC WIND TUNNEL (A)	J.W.CUMMINGS/RI K.W.NUTT/AEDC-VKF/SH J. E. VAUGHN G. W. KLUG -DMS	DMS-DR-2431 VOLUME 03 APRIL, 1980
AEDC SWTA V41A-W5 1H85 CR-151,796	TEST RESULTS FROM THE NASA/ROCKELL INTERNATIONAL SP ACE SHUTTLE INTEGRATED VEHICLE TESTS USING A 0.0175-SCALE MODEL (60-0TS) CONDUCTED IN THE AEDC-VKF TUNNEL A (1H85)	OTS-T38S26862C12M 16W116E52V8R18F10 OT-T38862C12M16W1 16E52V8R18F10	TO OBTAIN CONVECTIVE HEAT-TRANSFER-RATE DISTRIBUTIONS ON THE SPACE SHUTTLE INTEGRATED VEHICLE DURING SIMULATED FIRST AND SECOND STAGE CONDITIONS OF THE FLIGHT PROFILE	HEAT-TRANS	0.0175 / 3.01 - 4.02	ROCKWELL/ AEDC - SUPERSONIC WIND TUNNEL (A)	J.W.CUMMINGS/RI K.W.NUTT/AEDC-VKF/SH J. E. VAUGHN G. W. KLUG -DMS	DMS-DR-2431 VOLUME 04 APRIL, 1980

TEST ID	REPORT TITLE	CONFIGURATIONS TESTED	TEST PURPOSE	TYPE OF TEST	MODEL SCALE MACH RANGE	TESTING AGENCY	COGNIZANT TEST DMS PERSONNEL	BASIC PUBLICATIONS OR COMMENTS
AEDC - SWTA - V41A-W5 / IH85 CR-151,797	TEST RESULTS FROM THE NASA/ROCKELL INTERNATIONAL SP ACE SHUTTLE INTEG RATED VEHICLE TES T USING A 0.0175- SCALE MODEL (60-0 TS) CONDUCTED IN THE AEDC-VKF TUNN EL A (IH85)	OTS-T38526862C12M 16W116E52V8R18F10 OT-T38862C12M16W1 16E52V8R18F10	TO OBTAIN CONVECT IVE HEAT-TRANSFER -RATE DISTRIBUTIO NS ON THE SPACE S HUTTLE INTEGRATED VEHICLE DURING S IMULATED FIRST AN D SECOND STAGE CO NDITIONS OF THE F LIGHT PROFILE	HEAT-TRANS	0.0175 / 3.01 - 4.02	ROCKWELL/ AEDC - SUPERSONIC WIN D TUNNEL (A)	J.W.CUMMINGS/RI K.W.NUTT/AEDC-VKF /SH J. E. VAUGHN G. W. KLUG -DMS	DMS-DR-2431 VOLUME 05 MAY, 1980
AEDC - SWTA - V41A-W5 / IH85 CR-151,798	TEST RESULTS FROM THE NASA/ROCKELL INTERNATIONAL SP ACE SHUTTLE INTEG RATED VEHICLE TES T USING A 0.0175- SCALE MODEL (60-0 TS) CONDUCTED IN THE AEDC-VKF TUNN EL A (IH85)	OTS-T38526862C12M 16W116E52V8R18F10 OT-T38862C12M16W1 16E52V8R18F10	TO OBTAIN CONVECT IVE HEAT-TRANSFER -RATE DISTRIBUTIO NS ON THE SPACE S HUTTLE INTEGRATED VEHICLE DURING S IMULATED FIRST AN D SECOND STAGE CO NDITIONS OF THE F LIGHT PROFILE	TRANS	0.0175 / 3.01 - 4.02	ROCKWELL/ AEDC - SUPERSONIC WIN D TUNNEL (A)	J.W.CUMMINGS/RI K.W.NUTT/AEDC-VKF /SH J. E. VAUGHN G. W. KLUG -DMS	DMS-DR-2431 VOLUME 06 MAY, 1980
AEDC - SWTA - V41A-W5 / IH85 CR-151,799	TEST RESULTS FROM THE NASA/ROCKELL INTERNATIONAL SP ACE SHUTTLE INTEG RATED VEHICLE TES T USING A 0.0175- SCALE MODEL (60-0 TS) CONDUCTED IN THE AEDC-VKF TUNN EL A (IH85)	OTS-T38526862C12M 16W116E52V8R18F10 OT-T38862C12M16W1 16E52V8R18F10	TO OBTAIN CONVECT IVE HEAT-TRANSFER -RATE DISTRIBUTIO NS ON THE SPACE S HUTTLE INTEGRATED VEHICLE DURING S IMULATED FIRST AN D SECOND STAGE CO NDITIONS OF THE F LIGHT PROFILE	HEAT-TRANS	0.0175 / 3.01 - 4.02	ROCKWELL/ AEDC - SUPERSONIC WIN D TUNNEL (A)	J.W.CUMMINGS/RI K.W.NUTT/AEDC-VKF /SH J. E. VAUGHN G. W. KLUG -DMS	DMS-DR-2431 VOLUME 07 MAY, 1980

TEST ID	REPORT TITLE	CONFIGURATIONS TESTED	TEST PURPOSE	TYPE OF TEST	MODEL SCALE MACH RANGE	TESTING AGENCY	COGNIZANT TEST DMS PERSONNEL	BASIC PUBLICATIONS OR COMMENTS
AEDC - SWTA - V41A-W5 / IH85 CR-151,800	TEST RESULTS FROM THE NASA/ROCKWELL INTERNATIONAL SPACE SHUTTLE INTEGRATED VEHICLE TEST USING A 0.0175-SCALE MODEL (60-0) TS) CONDUCTED IN THE AEDC-VKF TUNNEL A (IH35)	OTS-(38S26B62C12M16W116E52VBP18F10 OT-T38B62C12M16W116E52VBP18F10	TO OBTAIN CONVECTIVE HEAT-TRANSFER-RATE DISTRIBUTIONS ON THE SPACE SHUTTLE INTEGRATED VEHICLE DURING SIMULATED FIRST AND SECOND STAGE CONDITIONS OF THE FLIGHT PROFILE	HEAT-TRANS	0.0175 / 3.01 - 4.02	ROCKWELL/ AEDC - SUPERSONIC WIND TUNNEL (A)	J.W.CUMMINGS/RI K.W.NUTT/AEDC-VKF/SH J. E. VAUGHN G. W. KLUG -DMS	DMS-DR-2431 VOLUME 08 APRIL, 1980
NSWC 1310 / 0A171 CR-151,764	RESULTS OF TESTS USING A 0.020-SCALE MODEL (105-0) OF THE SPACE SHUTTLE VEHICLE ORBITER IN THE NAVAL SURFACE WEAPONS CENTER HYPERVELOCITY TUNNEL 9 (0A171)	0.02 SCALE ORBITER VEHICLE 102 (MODEL 105-0), MODIFIED MODEL 89-0	OBTAIN FORCE AND MOMENT DATA AT FULL SCALE FLIGHT TRAJECTORY REYNOLDS NUMBER AT A MACH NUMBER OF 14 AND TO EXPAND THE CURRENT DATA BASE ABOVE MACH 10 BUT BELOW THE FLIGHT CONDITIONS WHERE ONSET OF VISCOUS INTERACIONS OCCURS.	FORCE	13.1 - 13.5	ROCKWELL/ NSWC -	J. J. DAILEDA/ROCKWELL INTERNATIONAL W. C. WOODS, G. C. ASHBY, JR./LARC D.W.HERSEY G. G. MCDONALD -DMS	DMS-DR-2433 OCT., 1978
AEDC PWT16T 507 / 0A129 CR-151,782	RESULTS OF TESTS ON THE EFFECTS OF AEROELASTICITY OF THE SPACE SHUTTLE ORBITER VERTICAL TAIL USING A 0.03-SCALE MODEL (47-0) IN THE AEDC-16T PROPULSION WIND TUNNEL (0A129)	ORBITER (47.0) OV 102 WITH RIGID AND FLEXIBLE TAIL	TO DETERMINE AEROELASTIC EFFECTS OF THE ORBITER VERTICAL TAIL ON THE LATERAL-DIRECTIONAL STABILITY, RUDDER CONTROL CHARACTERISTICS AND VERTICAL TAIL LOADS.	FORCE	0.03/ 0.8 - 1.55	ROCKWELL/ AEDC - TRANSONIC PROPULSION WIND TUNNEL (PWT-16T)	R.S.SPANGLER/RI S.R.MOULIHAN/RI D.W.HERSEY G. W. KLUG -DMS	DMS-DR-2434 DEC., 1979

TEST ID	REPORT TITLE	CONFIGURATIONS TESTED	TEST PURPOSE	TYPE OF TEST	MODEL SCALE MACH RANGE	TESTING AGENCY	COGNIZANT TEST DMS PERSONNEL	BASIC PUBLICATIONS OR COMMENTS
LERC 10SWT 041 IH39 CR-151,415	BASE PRESSURE AND HEAT TRANSFER TESTS OF THE 0.0225-SCALE SPACE SHUTTLE PLUME SIMULATION MODEL (19-OTS) IN THE NASA-LEWIS RESEARCH CENTER 10X10-FOOT SUPERSONIC WIND TUNNEL (TEST IH39)	INTEGRATED VEHICLE CONFIGURATION 5	TO MEASURE HEAT TRANSFER + PRESSURE DISTRIBUTIONS ABOUT THE ORBITER, ET, + SRB AFTBODY SURFACES DUE TO ROCKET PLUME RECIRCULATION, THE SAME ALONG SIDE WALLS DUE TO ROCKET-PLUME-INDUCED SEPARATION; + TO DETERMINE GAS RECOVERY TEMPERATURES.	PRESSURE	0.0225 / 2.0 - 3.5	ROCKWELL/ LERC - 10 BY 10-FOOT SUPERSONIC WIND TUNNEL	J.W.FOUST/RI D.W.HERSEY G. G. MCDONALD -DMS	DMS-DR-2435 OCT., 1978
LA126 TM-X 72661	SPACE SHUTTLE ORBITER TRIMMED CENTER OF GRAVITY EXTENSION STUDY VOLUME VI--SYSTEM DESIGN STUDIES					LARC /	J. W. BALL -DMS	DMS-DR-2436 VOLUME 06 AUGUST, 1978
MSFC 14TWT 652 FA25 CR-151,756	RESULTS OF TRANSONIC TESTS IN THE NASA/MSFC 14-INCH TRISONIC WIND TUNNEL ON A 0.004-SCALE MODEL (74-OTS) SPACE SHUTTLE LAUNCH VEHICLE (FA25)	MODEL 74-OTS MODEL 74-OTS WITH ORB. MOLD LINE CHANGES ON WING AND NOSE MODEL 74-OTS WITH ORB. MOLD LINE CHANGES ON WING	DETERMINE AERODYNAMIC INCREMENTS DUE TO ATTACH STRUCTURE; ORBITER MOLD LINE CHANGES; WIRE BUNDLE FAIRINGS; FLOW ANGULARITY	FORCE	0.60 - 4.96	MSFC / MSFC - 14-INCH TRISONIC WIND TUNNEL	THOMAS E. LUNDY/L MSC J. L. GLYNN J. E. VAUGHN -DMS	DMS-DR-2437 FEB., 1979

TEST ID	REPORT TITLE	CONFIGURATIONS TESTED	TEST PURPOSE	TYPE OF TEST	MODEL SCALE MACH RANGE	TESTING AGENCY	COGNIZANT TEST DMS PERSONNEL	BASIC PUBLICATIONS OR COMMENTS
LERC - 10SWT - 044 / 1H83 CR-151,765	BASE PRESSURE AND HEAT TRANSFER TESTS OF THE 0.0225-SCALE SPACE SHUTTLE PLUME SIMULATION MODEL IN YAWED FLIGHT CONDITIONS IN THE NASA-LEWIS 10X10-FOOT SUPERSONIC WIND TUNNEL	SPACE SHUTTLE PLUME SIMULATION (MODEL 19-OTS)	TO MEASURE HEAT TRANSFER + PRESSURE DISTRIBUTIONS ABOUT THE ORBITER, EXTERNAL TANK (ET), + SOLID ROCKET BOOSTER (SRB) AFTERBODY SURFACES DUE TO ROCKET PLUME RECIRCULATION + IMPINGEMENT, + TO DERIVE GAS RECOVERY TEMP. IN THE BASE REGION USING GAS TEMP. PROBE MEASUREMENTS.	PRESSURE / HEAT-TRANS	0.0225 / 2.2 - 3.5	ROCKWELL/ LERC - 10 BY 10-FOOT SUPERSONIC WIND TUNNEL	J.W.FOUST/RI M.QUAN/RI D.W.HERSEY G. R. LUTZ -DMS	DMS-DR-2440 FEB., 1979
JSC 61-A-78 / 0H79 CR-151,769	PRESSURE AND HEAT TRANSFER TESTS OF THE 0.040-SCALE SPACE SHUTTLE ORBITER BASE HEATING MODEL IN THE JSC THERMAL VACUUM CHAMBER A.	65-0 SS ORBITER BASE HEATING MODEL	TO MEASURE BASE PRESSURE + HEAT TRANSFER RATES ON A SCALED MODEL OF THE SPACE SHUTTLE ORBITER BASE REGION WITH FIRING ROCKET ENGINES,SSME, DUPLICATING THE PLUME FLOW FIELD TO SIMULATE RECIRCULATION + IMPINGEMENT IN A NEAR-VACUUM ENVIRONMENT.	PRESSURE / HEAT-TRANS	0.040 /	ROCKWELL/ JSC -	J.W. FOUST, P.L. LEMOINE/RI, A.L. BRANSCOMB/JSC D.W.HERSEY G. R. LUTZ -DMS	DMS-DR-2443 JUNE, 1979

TEST ID	REPORT TITLE	CONFIGURATIONS TESTED	TEST PURPOSE	TYPE OF TEST	MODEL SCALE MACH RANGE	TESTING AGENCY	COGNIZANT TEST DMS PERSONNEL	BASIC PUBLICATIONS OR COMMENTS
ARC - 22TWT - 041.154.1/6 / 054A 054B 0512 CR-151.774	EXPERIMENTAL RESULTS OF TESTS TO DETERMINE THE EFFECTS OF ORBITER THERMAL PROTECTION SUBSYSTEM (TPS) TILES ON PANEL FLUTTER CONDUCTED IN THE ARC 2X2 TWT.		TO VERIFY FLUTTER PREDICTIONS MADE FOR PANELS WITH AND WITHOUT THERMAL PROTECTION MATERIAL	PRESSURE	1.05 - 1.1	ROCKWELL/ ARC - 2-FOOT BY 2-FOOT TRANSONIC WIND TUNNEL	R.B.KINGSLAND, M. A.KOTCH/ROCKWELL D.W.HERSEY G. R. LUTZ -DMS	DMS-DR-2450 MAY, 1979
AEDC - HWTB - P4A / OM90A/MA29 CR-151.772	RESULTS OF BOUNDARY LAYER TRANSITION TESTS OF THE 0.025-SCALE RIGHT-HAND WING AND TRUNCATED AFT FUSELAGE MODEL (94-0) IN THE AEDC HWTB.			HEAT-TRANS		ROCKWELL/ AEDC - HYPERSONIC WIND TUNNEL (B)	D.W.HERSEY G. R. LUTZ -DMS	DMS-DR-2451 MAY, 1979
CALSPAN - LT - 195-100 / 1H75 CR-151.776	BASE PRESSURE AND HEAT TRANSFER TESTS OF THE 0.0225-SCALE SPACE SHUTTLE PLUME SIMULATION MODEL (19-OTS) IN THE NASA/CALSPAN LUDWIEG TUBE WIND TUNNEL	19-OTS-B64,C16,E6,3,F14,M18,N92,N94,V23,W129,S22,N10,6,T33	TO MEASURE HEATING RATES AND PRESSURES AND TO DETERMINE GAS RECOVERY TEMPERATURES IN THE BASE REGIONS OF A SCALED MODEL OF THE SPACE SHUTTLE VEHICLE WITH ORBITER + SRB FIRING ROCKET ENGINES SIMULATING PLUME RECIRCULATION + IMPINGEMENT IN AN ALTITUDE ENVIRONMENT.	HEAT-TRANS PRESSURE	0.0225 / 3.5 - 4.5	ROCKWELL/ CALSPAN - LUDWIEG TUBE	C.E. WITTLIFF/CALSPAN D.W.HERSEY G. R. LUTZ -DMS	DMS-DR-2453 JUNE, 1979

WIND TUNNEL TEST / DMS DATA PROCESSING

TEST ID	REPORT TITLE	CONFIGURATIONS TESTED	TEST PURPOSE	TYPE OF TEST	MODEL SCALE MACH RANGE	TESTING AGENCY	COGNIZANT TEST DMS PERSONNEL	BASIC PUBLICATIONS OR COMMENTS
LARC CFHT 114 LA57 TM-X 72661	- IMPACT OF RETROFITS FOR CENTER-OF-GRAVITY EXTENSION ON ORBITER THERMAL PROTECTION SYSTEM	140A/B ORBITER-BASELINE 140A/B ORBITER WITH S-2 FILLET 140A/B ORBITER WITH C-4 CANARD	TO DISCOVER IF THE RETROFIT MODIFICATIONS, DEVELOPED TO INCREASE THE ALLOWABLE C.G. RANGE OF THE ORBITER, WOULD ADVERSELY AFFECT THE TPS ON THE ORBITER. RESULTS SHOWED NO SIGNIFICANT PROBLEMS.	HEAT-TRANS	0.01 - 10.3	LARC / LARC - CONTINUOUS-FLOW HYPERSONIC TUNNEL	J. C. DUNAVANT/LARC J. W. BALL G. R. LUTZ -DMS	DMS-DR-2454 VOLUME 03 APRIL, 1979
AEDC 41B-65 OH102A CR-151,778	- RESULTS OF FLOW AN GULARITY TESTS ON A 0.0175-SCALE SPACE SHUTTLE ORBITER MODEL (56-0) ON THE AEDC VKF B HYPERSONIC WIND TUNNEL (OH102A)	140C ORBITER WITH SLAB SIDED VERTICAL TAIL	TO DETERMINE THE FLOW DIRECTION AT THE SILTS LOCATION OF THE ORBITER VERTICAL TAIL LEADING EDGE	HEAT-TRANS	0.0175 - 8.0	ROCKWELL/ AEDC -	W.F. BRADDOCK/RI J. E. VAUGHN G. R. LUTZ -DMS	DMS-DR-2455 JUNE, 1979
ARC 97SWT 347-1 1A184 CR-160,486	- RESULTS OF TESTS USING A 0.03-SCALE MODEL (47-OTS) OF THE SPACE SHUTTLE INTEGRATED VEHICLE IN THE NASA/AMES RESEARCH CENTER 9X7 FOOT SUPERSONIC WIND TUNNEL (1A184)	0.03-SCALE SHUTTLE INTEGRATED VEHICLE 47-OTS	DISTRIBUTED CP ON ELEMENTS + COMPONENTS AFFECTED BY ELEVON, WING LOAD DATA, ORB. F+M DATA, ELEVON HINGE MOMENTS, FOUR COMPONENT VT FORCE DATA, SECONDARY-CP DATA ON SIMULATED AADS PROBE MOUNTED IN NOSE OF THE ET	FORCE PRESSURE	0.03 - 1.55 - 2.50	ROCKWELL/ ARC - 9-FOOT BY 7-FOOT SUPERSONIC WIND TUNNEL (UNITARY)	R.H. SPANGLER, J. J. DAILEDA/RI D.W.HERSEY J. L. GLYNN -DMS	DMS-DR-2456 VOLUME 01 SEPT., 1980

TEST ID	REPORT TITLE	CONFIGURATIONS TESTED	TEST PURPOSE	TYPE OF TEST	MODEL SCALE MACH RANGE	TESTING AGENCY	COGNIZANT TEST DMS PERSONNEL	BASIC PUBLICATIONS OR COMMENTS
ARC - 97SWT - 347-1 / IA184 CR-160,487	RESULTS OF TESTS USING A 0.03-SCALE MODEL (47-OTS) OF THE SPACE SHUTTLE INTEGRATED VEHICLE IN THE NASA/AMES RESEARCH CENTER 9X7 FOOT SUPERSONIC WIND TUNNEL (IA184)	0.03-SCALE SHUTTLE INTEGRATED VEHICLE 47-OTS	DISTRIBUTED CP ON ELEMENTS + COMPONENTS AFFECTED BY ELEVON, WING LOAD DATA, ORB. F+M DATA, ELEVON HINGE MOMENTS, FOUR COMPONENT VT FORCE DATA. SECONDARY- CP DATA ON SIMULATED AADS PROBE MOUNTED IN NOSE OF THE ET	FORCE PRESSURE	0.03 / 1.55 - 2.50	ROCKWELL/ARC - 9-FOOT BY 7-FOOT SUPERSONIC WIND TUNNEL (UNITARY)	R.H. SPANGLER, J. DAILEDA/RI D.W.HERSEY J. L. GLYNN -DMS	DMS-DR-2456 VOLUME 02 SEPT., 1980
AEDC - SWTA - V418-65 / OH400 CR-160,494	RESULTS OF AN ORBITER SILTS POD HEAT TRANSFER AND FLOW FIELD TEST USING A 0.0175-SCALE SPACE SHUTTLE ORBITER(92-0) IN THE AEDC VKF HYPERSONIC WIND TUNNEL B (OH400)	B75C16E64F16M52W131V29 B75C16E64F16M52W131V31	TO MEASURE HEAT TRANSFER COEFFICIENTS ON THE SILTS TAIL CONFIGURATION OF A SCALED SPACE SHUTTLE ORBITER MODEL	PRESSURE		ROCKWELL/AEDC - SUPERSONIC WIND TUNNEL (A)	J.A.COLLINS/RI K.W.NUTT/ARO,INC J. E. VAUGHN M. M. MANN -DMS	DMS-DR-2472 MAY, 1980
LARC - 16TT - 342 / LA140 CR-160,509				PRESSURE		LARC / LARC - 16-FOOT TRANSONIC TUNNEL	J. E. VAUGHN G. W. KLUG -DMS	DMS-DR-2475 AUGUST, 1980

TEST ID	REPORT TITLE	CONFIGURATIONS TESTED	TEST PURPOSE	TYPE OF TEST	MODEL SCALE MACH RANGE	TESTING AGENCY	COGNIZANT TEST DMS PERSONNEL	BASIC PUBLICATIONS OR COMMENTS
LARC - UPWT - 1299 LA131 CR-160,503	HIGH SUPERSONIC RUDDER EFFECTIVENESS AND EFFECT OF SILTS POD ON A 0.20-SCALE (REMOTELY DRIVEN CONTROL SURFACE) MODEL 10 6-0 SPACE SHUTTLE ORBITER TESTED IN THE NASA/LARC 4-FOOT UNITARY PLAN WIND TUNNEL (LA131)	B75C16E64F16FR22H G1M52N108N109N110 N111R20V27 V710VT11VT12VT13V T14VT15VT16VT17W 31	THE TEST OBJECTIVES WERE TO DEFINE OPB RUDDER EFFECTIVENESS, DETERMINE AERO DIFF. BETWEEN FILLED AND SCALED OPEN SPEEDBRAKE, DETERMINE EFFECT OF SILTS POD ON AERO CHAR. OF THE ORBITER, SUPPLEMENT CONTROL EFFECTIVENESS DATA	FORCE	0.2/ 2.- 4.	LARC / LARC - UNITARY PLAN WIND TUNNEL	BERNARD SPENCER J/LARC GEORGE M. WARE/LARC G. W. KLUG -DMS	DMS-DR-2478 VOLUME 01 AUGUST, 1980
LARC - UPWT - 1299 LA131 CR-160,504	HIGH SUPERSONIC RUDDER EFFECTIVENESS AND EFFECT OF SILTS POD ON A 0.20-SCALE (REMOTELY DRIVEN CONTROL SURFACE) MODEL 10 6-0 SPACE SHUTTLE ORBITER TESTED IN THE NASA/LARC 4-FOOT UNITARY PLAN WIND TUNNEL (LA131)	B75C16E64F16FR22H G1M52N108N109N110 N111R20V27 VT10VT11VT12VT13V T14VT15VT16VT17W 31	THE TEST OBJECTIVES WERE TO DEFINE OPB RUDDER EFFECTIVENESS, DETERMINE AERO DIFF. BETWEEN FILLED AND SCALED OPEN SPEEDBRAKE, DETERMINE EFFECT OF SILTS POD ON AERO CHAR. OF THE ORBITER, SUPPLEMENT CONTROL EFFECTIVENESS DATA	FORCE	0.2/ 2.- 4.	LARC / LARC - UNITARY PLAN WIND TUNNEL	BERNARD SPENCER J/LARC GEORGE M. WARE/LARC G. W. KLUG -DMS	DMS-DR-2478 VOLUME 02 AUGUST, 1980

TEST ID	REPORT TITLE	CONFIGURATIONS TESTED	TEST PURPOSE	TYPE OF TEST	MODEL SCALE MACH RANGE	TESTING AGENCY	COGNIZANT TEST DMS PERSONNEL	BASIC PUBLICATIONS OR COMMENTS
LAPC - UPWT 1299 LA131 CR-160,505	HIGH SUPERSONIC RUDDER EFFECTIVENESS AND EFFECT OF SILTS POD ON A 0.20-SCALE (REMOTELY DRIVEN CONTROL SURFACE) MODEL IN THE NASA/LAPC 4-FOOT UNITARY PLAN WIND TUNNEL (LA131)	B75C16E64F16FR22H GIM52N108N109N110 N111R20V27 VT10VT11VT12VT13VT14VT15VT16VT17W131	THE TEST OBJECTIVES WERE TO DEFINE ORB RUDDER EFFECTIVENESS, DETERMINE AERO DIFF. BETWEEN FILLED AND SCALED OPEN SPEEDBRAKE, DETERMINE EFFECT OF SILTS POD ON AERO CHAR. OF THE ORBITER, SUPPLEMENT CONTROL EFFECTIVENESS DATA	FORCE	0.2/ 2.- 4.	LARC / LARC - UNITARY PLAN WIND TUNNEL	BERNARD SPENCER J R./LARC GEORGE M. WARE/LARC RC G. W. KLUG -DMS	DMS-DR-2478 VOLUME D3 AUGUST, 1980

TEST ID	REPORT TITLE	CONFIGURATIONS TESTED	TEST PURPOSE	TYPE OF TEST	MODEL SCALE MACH RANGE	TESTING AGENCY	COGNIZANT TEST DMS PERSONNEL	BASIC PUBLICATIONS OR COMMENTS
ARC 3.5HWT 171 OHIO TH2	REPORT OF PRESSURE DISTRIBUTION TESTS OF THE 0.010-SCALE SPACE SHUTTLE VEHICLE MODEL (26-OTS) IN THE NASA/ARC 3.5-FOOT HYPERSONIC WIND TUNNEL (TESTS OHIO AND TH2)	SPACE SHUTTLE INTEGRATED VEHICLE PRESSURE MODEL 26-OTS	TO OBTAIN HYPERSONIC SURFACE PRESSURES ON THE MODEL TO CORRELATE AERODYNAMIC HEATING DATA AND VERIFY LOADS PREDICTIONS	PRESSURE	0.010 / 0.10 / 5.3 - 7.4	ARC / ARC - 3.5-FOOT HYPERSONIC WIND TUNNEL	W. H. DYE, R. B. KINGSLAND /ROCKWELL D. A. SARVER H. C. ZIMMERLE -DMS	DMS-DR-2085
UW LSWT 1136 CA3	MATED CARRIER AERODYNAMIC CHARACTERISTICS INVESTIGATION FOR 0.04-SCALE MODEL BOEING 747 CARRIER (MODEL TE 1065)/SS ORBITER (MODEL 43-0) AND 747 CARRIER/ET (MODEL 1284-72) COMBINATIONS IN THE U. OF WASH. AERONAUTICAL LABORATORY (UWAL) F.K. KIRSTEN WIND TUNNEL (CA3)	BOEING 747 CARRIER (MODEL TE 1065) SS ORBITER (MODEL 43-0) 747 CARRIER/ET (MODEL 1284-72)	TO PROVIDE AERODYNAMIC CHARACTERISTICS FOR DEVELOPMENT OF THE 747 AIRCRAFT FOR ORBITER FERRY AND LAUNCH . TO PROVIDE TRADE DATA FOR STABILIZER SIZE AND LOCATION EFFECTS. AND TO PROVIDE DRAG AND STABILITY CHARACTERISTICS FOR THE AIRPLANE AND EXTERNAL TANK CONFIGURATION.	FORCE	0.04 / 0.16 - 0.16	BOEING / UW - LOW SPEED WIND TUNNEL	R.D. KNUDSEN/BOEING K.B. BUCANAN/BOEING R.L. HANSON/BOEING R. H. LINDAHL -DMS	DMS-DR-2201
LARC CF4 220-237 20HT6 456 LA53 LA54				FORCE	5.8 - 6.0	LARC / LARC - FREON TUNNEL 20-INCH HYPERSONIC TUNNEL (MACH 6)	D.B. WATSON -DMS	DMS-DR-2213

TEST ID	REPORT TITLE	CONFIGURATIONS TESTED	TEST PURPOSE	TYPE OF TEST	MODEL SCALE MACH RANGE	TESTING AGENCY	COGNIZANT TEST DMS PERSONNEL	BASIC PUBLICATIONS OR COMMENTS
LARC - V/STOL - 114 / OA155		VEHICLE 5 ORBITER	TO OBTAIN PRESSURE DISTRIBUTIONS AND FORCES AND MOMENTS FOR THE ORBITER IN THE APPROACH AND LANDING CONFIGURATIONS WITH AND WITHOUT THE INFLUENCE OF A GROUND PLANE. VERTICAL TAIL LOADS AND ELEVON, BODY FLAP, AND RUDDER HINGE MOMENTS WERE ALSO OBTIANED.	PRESSURE FORCE	0.030 / 0.2 - 0.2	ROCKWELL/ LARC - V/STOL TRANSITION RESEARCH WIND TUNNEL	J.J.DAILEDA/RI J.MARROQUIN/RI H. C. ZIMMERLE -DMS	DMS-DR-2237
LARC - 22HT - 439 / LA68			STING EFFECTS; BALANCE SENSITIVITIES	FORCE	19.1 - 20.36	LARC / LARC - 22-INCH HELIUM TUNNEL	BILL WOODS/LARC J. E. VAUGHN -DMS	DMS-DR-2258
LARC - BTPT - 715 / BTPT - 776 / LA60B LA60C			DETERMINE EFFECTS OF SEVERAL WING FILLET CONFIGURATIONS	FORCE	0.3 - 1.2	LARC / LARC - 8-FOOT TRANSONIC PRESSURE TUNNEL 8-FOOT TRANSONIC PRESSURE TUNNEL	J. E. VAUGHN -DMS	DMS-DR-2260
ARC - 40SWT - 452 / OA100				FORCE		ROCKWELL/ ARC - 40-FOOT BY 80-FOOT SUBSONIC WIND TUNNEL	W. B. MEINDERS -DMS	DMS-DR-2261

TEST ID	REPORT TITLE	CONFIGURATIONS TESTED	TEST PURPOSE	TYPE OF TEST	MODEL SCALE MACH RANGE	TESTING AGENCY	COGNIZANT TEST DMS PERSONNEL	BASIC PUBLICATIONS OR COMMENTS
ARC 975WT 166-1 CS13				STRUCT-DYN		ROCKWELL/ ARC - 9-FOOT BY 7-FOOT SUPERSONIC WIND TUNNEL (UNITARY)	W. B. MEINDERS -DMS	DMS-DR-2287
NSWC 8A 1275 LA79				FORCE	.0040 /	LARC / NSWC - TUNNEL 8A	J. W. BALL G. G. MCDONALD -DMS	DMS-DR-2291
NRLAD LSWT 752 OA172	RESULTS OF TESTS OF A SPACE SHUTTLE ORBITER FERRY CONFIGURATION USING A 140A/B 0.0405-SCALE MODEL (43-01) IN THE ROCKWELL INTERNATIONAL 7.75 X 11 FOOT LOW SPEED WIND TUNNEL (OA172)	140A/B SS ORBITER (MODEL 43-01) ORBITER FERRY CONFIGURATION	TO DEFINE AND VERIFY ORBITER STABILITY AND CONTROL CHARACTERISTICS, BOTH IN AND OUT OF THE PRESENCE OF THE GROUND, WITH THE FERRY CONFIGURATION AFTERBODY INSTALLED	FORCE PRESSURE	0.0405 / 0.12 0.26	ROCKWELL/ NRLAD - LOW SPEED WIND TUNNEL	M. T. HUGHES/RI C. R. EDWARDS -DMS	DMS-DR-2294
ARC 40SWT 479 OA174	RESULTS OF TESTS USING A 0.36-SCALE MODEL(76-01) OF THE SPACE SHUTTLE ORBITER VEHICLE (101) IN THE NASA/AMES RESEARCH CENTER'S 40 X 80 SUBSONIC WIND TUNNEL (OA174)	ORBITER VEHICLE 101 WITH TAIL CONE ORBITER VEHICLE 101 WITHOUT TAIL CONE	OBTAIN STABILITY AND CONTROL FORCE, MOMENT AND CONTROL SURFACE HINGE MOMENT DATA: VERIFY AND MEASURE LANDING GEAR STRUT AND DOOR PRESSURES: OBTAIN TAIL CONE PRESSURE DISTRIBUTIONS: CALIBRATE BASELINE AND ALTERNATE AIR DATA SYSTEMS	FORCE PRESSURE	0.36 / 0.114-0.264	ROCKWELL/ ARC - 40-FOOT BY 80-FOOT SUBSONIC WIND TUNNEL	R.L.MAKI/ARC T.J.DZIUBALA/R.I. W. B. MEINDERS -DMS	DMS-DR-2302

TEST ID	REPORT TITLE	CONFIGURATIONS TESTED	TEST PURPOSE	TYPE OF TEST	MODEL SCALE MACH RANGE	TESTING AGENCY	COGNIZANT TEST DMS PERSONNEL	BASIC PUBLICATIONS OR COMMENTS
APC 12PT 180-1 OA173	RESULTS OF TESTS TO EVALUATE ARC 40/80-FOOT TUNNEL SUPPORT STRUT TARES ON THE SPACE SHUTTLE VEHICLE WITH THE TAIL CONE USING A 0.03-SCALE MODEL (48-D) IN THE NASA/ARC 12-FOOT PRESSURE WIND TUNNEL (OA173)	TAILCONE-ON	TO EVALUATE MODEL SUPPORT SYSTEM TARES FOR TEST OA174; THIS TEST IS WITH 40X80 FOOT STRUTS AND WINDSHIELDS IN AND OUT TO DETERMINE THEIR EFFECT ON THE ORBITER TAILCONE-ON CONFIGURATION	FORCE PRESSURE	0.030 / .26- .26	ROCKWELL/ ARC - 12-FOOT PRESSURE TUNNEL	R. L. GILLENS, T. J. DZIUBALA, R. W. MULFINGER/RI C. R. EDWARDS -DMS	DMS-DR-2304
APC 11,97,87-144-1 IA135A/B/C				FORCE PRESSURE	0.0300 /	ROCKWELL/ ARC - 11-FOOT, 9-FOOT, 8-FOOT, UNITARY WIND TUNNEL	D. A. SARVER G. W. KLUG -DMS	DMS-DR-2306
TBCA 8TWT 1496 1497 CA14A			VERIFICATION OF 747 CAM W/TYPE II MODIFICATION, AND FERRY AND ALT CONFIGURATION WITH ORBITER TAILCONE ON.	FORCE	0.03 / 0.3 - 0.7	BOEING / TBCA - TRANSONIC WIND TUNNEL	W.F. ANDERSON/BOEING J. E. VAUGHN -DMS	DMS-DR-2307
NRLAD LSWT 754 OA176	INVESTIGATION OF SUPPORT SYSTEM EFFECTS ON ORBITER LOW SPEED AERODYNAMIC CHARACTERISTICS USING 0.0405-SCALE MODEL 43-D IN THE NAAL LOW SPEED WIND TUNNEL	LANDING	DETERMINATION OF EFFECTS OF VARIOUS TUNNEL MOUNT CONFIGURATIONS ON THE FORCE COEFFICIENTS AND PRESSURES ON THE AFT TAILCONE OF THE ORBITER IN THE LANDING CONFIGURATION	FORCE	.0405 / 0.20 - 0.20	ROCKWELL/ NRLAD - LOW SPEED WIND TUNNEL	D. A. SARVER R. H. LINDAHL -DMS	DMS-DR-2314

WORK IN PROCESS
WIND TUNNEL TEST / DMS DATA PROCESSING

TEST ID	REPORT TITLE	CONFIGURATIONS TESTED	TEST PURPOSE	TYPE OF TEST	MODEL SCALE MACH RANGE	TESTING AGENCY	COGNIZANT TEST DMS PERSONNEL	BASIC PUBLICATIONS OR COMMENTS
NPLAD - LSWT - 757 / OA228	RESULTS OF TEST OA228 USING THE SS/V VEHICLE 102 0.1 SCALE FOREBODY MODEL NO. 57-0 IN THE NAAL LOW SPEED WIND TUNNEL	SPACE SHUTTLE ORBITER VEHICLE 102	TO RESOLVE DIFFERENCES IN AIR DATA PROBE AND FLIGHT TEST PROBE PRESSURE DATA OBTAINED DURING WIND TUNNEL TESTS OA174 AND OA224	FORCE	.19 0- 25 1	ROCKWELL/ NPLAD - LOW SPEED WIND TUNNEL	R. C. MENNELL, A. L. MENA, R. B. RUSSELL / RI W. B. MEINDERS -DMS	DMS-DR-2322
LARC - 16TT - 312 / OA224	CALIBRATION RESULTS OF THE BASELINE AIR DATA PROBES AT THE LANGLEY 16-FOOT TRANSONIC WIND TUNNEL USING A 0.10 SCALE ORBITER FOREBODY MODEL 102 LINES (OA224)	SSV ORBITER (MODEL 57-0) FOREBODY W/ ADP, FTP, AND ADP AND FTP	TO PROVIDE CALIBRATION OF THE AIR DATA PROBES	FORCE	0.4 - 1.30	ROCKWELL/ LARC - 16-FOOT TRANSONIC TUNNEL	V. ESPARZA, D.E. THORNTON/ROCKWELL H. AUGUST/ROCKWELL W. B. MEINDERS -DMS	DMS-DR-2329
ARC - 11.97.87-074-1 / SA11FA/B/C				FORCE PRESSURE	0.028 /	MSFC / ARC - 11-FOOT, 9-FOOT, 8-FOOT, UNITARY WIND TUNNEL	J. E. VAUGHN G. W. KLUG -DMS	DMS-DR-2331

TEST ID	REPORT TITLE	CONFIGURATIONS TESTED	TEST PURPOSE	TYPE OF TEST	MODEL SCALE MACH RANGE	TESTING AGENCY	COGNIZANT TEST DMS PERSONNEL	BASIC PUBLICATIONS OR COMMENTS
CALSPAN - 8TWT - T18-111 / LA82				FORCE		LARC / CALSPAN - 8-FOOT TRANSONIC WIND TUNNEL	G. G. MCDONALD -DMS	DMS-DR-2336
ARC - 22TWT - 167-1 / 0532				STRUCT-DYN		ROCKWELL/ ARC - 2-FOOT BY 2-FOOT TRANSONIC WIND TUNNEL		DMS-DR-2339
LARC - 22HT - 445 / LA85				PRESSURE		LARC / LARC - 22-INCH HELIUM TUNNEL	J. W. BALL R. H. LINDAHL -DMS	DMS-DR-2343

TEST ID	REPORT TITLE	CONFIGURATIONS TESTED	TEST PURPOSE	TYPE OF TEST	MODEL SCALE MACH RANGE	TESTING AGENCY	COGNIZANT TEST DMS PERSONNEL	BASIC PUBLICATIONS OR COMMENTS
NRLAD - LSWT - 764 / OA238 CR-151,405	RESULTS OF TEST OA238 USING THE SSV VEHICLE 102 0.1-SCALE FOREBODY MODEL NO. 99-0 IN THE NAAL LOW SPEED WIND TUNNEL TO INVESTIGATE AIR DATA SYSTEM CHARACTERISTICS	ORBITER 102 FOREBODY	TO OBTAIN LOW SPEED AIR DATA SYSTEM STATIC PROBE AND FLIGHT TEST PROBE PRESSURE DATA ON THE OML FOREBODY MODEL 99-0. ALSO TO INVESTIGATE MODEL BLOCKAGE AND THE EFFECTS OF PROBE POSITION, PROBE SCALE AND PROBE ROLL ANGLES ON ALL RECORDED PRESSURE LEVELS	FORCE	0.18 - 0.25	ROCKWELL/ NRLAC - LOW SPEED WIND TUNNEL	R.B.RUSSELL/ R.I. R.R.BURROWS/ R.I. W. B. MEINDERS -DMS	DMS-DR-2351
ARC - 11TWT - 213-1 / LA89				FORCE		LARC / ARC - 11-FOOT TRANSONIC WIND TUNNEL (UNITARY)	M. M. MANN -DMS	DMS-DR-2353
ARC - 3.5WT - 222 / 1H68		INTEGRATED VEHICLE ORBITER PLUS TANK ORBITER, TANK, AND SRB ALONE	TO OBTAIN AERODYNAMIC HEAT TRANSFER DATA ON THE SSV VEHICLE 5 CONFIGURATION	HEAT-TRANS	0.0175 / 5.3 - 7.4	ROCKWELL/ ARC - 3.5-FOOT HYPERSONIC WIND TUNNEL	W. H. DYE/RI R. H. LINDAHL -DMS	DMS-DR-2357

TEST ID	REPORT TITLE	CONFIGURATIONS TESTED	TEST PURPOSE	TYPE OF TEST	MODEL SCALE MACH RANGE	TESTING AGENCY	COGNIZANT TEST DMS PERSONNEL	BASIC PUBLICATIONS OR COMMENTS
ARC 97SWT 119-1 87SWT 119 OA221B/C CR-160,521	CALIBRATION TESTS OF THE SPACE SHU TTLE ORBITER PRIMARY AND ALTERNATE AIR DATA SYSTEMS USING A 0.10-SCALE ORBITER FOREBODY MODEL (99-0) IN THE NASA AMES RESEARCH CENTER 9 X 7 AND 8 X 7-FOOT LEGS OF THE UNITARY PLAN WIND TUNNEL (OA221B AND C)	ORBITER VEHICLE 102 FOREBODY	MEASURE AIR DATA SYSTEM PROBE PITOT AND STATIC PRESSURE ERRORS;DETERMINE PROBE SCALE EFFECT ON THE STATIC PRESSURE CALIBRATION;CALIBRATE THE ANGLE-OF-ATTACK SENSOR; EVALUATION OF BOTH FLUSH PORT AND INSTRUMENTED REACTION CONTROL SYSTEM THRUSTER AIR DATA SYSTEMS	FORCE	0.10 / 1.6 - 3.5	ROCKWELL/ ARC - 9-FOOT BY 7-FOOT SUPERSONIC WIND TUNNEL (UNITARY) 8-FOOT BY 7-FOOT SUPERSONIC WIND TUNNEL (UNITARY)	A.R.GROSS/ARC T.J.DZIUBALA/R.I. W. B. MEINDERS -DMS	DMS-DR-2360 VOLUME 01
ARC 97SWT 119-1 87SWT 119 OA221B/C CR-160,522	CALIBRATION TESTS OF THE SPACE SHU TTLE ORBITER PRIMARY AND ALTERNATE AIR DATA SYSTEMS USING A 0.10-SCALE ORBITER FOREBODY MODEL (99-0) IN THE NASA AMES RESEARCH CENTER 9 X 7 AND 8 X 7-FOOT LEGS OF THE UNITARY PLAN WIND TUNNEL (OA221B AND C)	ORBITER VEHICLE 102 FOREBODY	MEASURE AIR DATA SYSTEM PROBE PITOT AND STATIC PRESSURE ERRORS;DETERMINE PROBE SCALE EFFECT ON THE STATIC PRESSURE CALIBRATION;CALIBRATE THE ANGLE-OF-ATTACK SENSOR; EVALUATION OF BOTH FLUSH PORT AND INSTRUMENTED REACTION CONTROL SYSTEM THRUSTER AIR DATA SYSTEMS	FORCE	0.10 / 1.6 - 3.5	ROCKWELL/ ARC - 9-FOOT BY 7-FOOT SUPERSONIC WIND TUNNEL (UNITARY) 8-FOOT BY 7-FOOT SUPERSONIC WIND TUNNEL (UNITARY)	A.R.GROSS/ARC T.J.DZIUBALA/R.I. W. B. MEINDERS -DMS	DMS-DR-2360 VOLUME 02
LARC 8TPT 764 LA92				FORCE		LARC / LARC - 8-FOOT TRANSONIC PRESSURE TUNNEL		DMS-DR-2362

TEST ID	REPORT TITLE	CONFIGURATIONS TESTED	TEST PURPOSE	TYPE OF TEST	MODEL SCALE / MACH RANGE	TESTING AGENCY	COGNIZANT TEST DMS PERSONNEL	BASIC PUBLICATIONS OR COMMENTS
ARC - 97SWT - 118-1 / OA145B	RESULTS OF AN INV ESTIGATION TO VER IFY SHUTTLE ORBIT ER VEHICLE 102 AERO CHARACTERIST ICS UTILIZING AN .05-SCALE HI-FIDE LITY REMOTE CONTROL MODEL (39 -0) IN THE AMES R ESEARCH CENTER UN ITARY WIND TUNNEL (OA145B)	B75C16E64F16FD3FR 22HG1M52N108N109N 110N111R20V27VT10 VT11VT12VT13VT14 VT15VT16VT17W131	VERIFY ORBITER VE HICLE 102 AERODYN AMIC CHAR WITH RE GARD TO: (1)BASIC STABILITY AND CON TROL(2)CONTROL SU RFACE HINGE MOMEN TS(3)REYNOLDS NUMBER EFFECTS(4) HYSTERESIS AND CO NTROL SURFACE INT ERACTIONS(5) PROPOSED INBOARD/ OUTBOARD ELEVON I NTERACTION MATH M ODEL	FORCE PRESSURE	1.5 - 2.5	ROCKWELL/ ARC - 9-FOOT BY 7-FO OT SUPERSONIC WIND TUNNEL (U NITARY)	R. H. MULFINGER/R OCKWELL INTERNATI ONAL SPACE DIVISI ON M. M. MANN -DMS	DMS-DR-2364
MSFC - HRWT - 039 / SA31F	AN AERODYNAMIC ST ATIC STABILITY WI ND TUNNEL TEST OF A 0.00856 SCALE MODEL OF THE SPAC E SHUTTLE 146 INC H DIAMETER SOLID ROCKET BOOSTER RE ENTRY CONFIGURATI ON (MSFC MODEL 48 7) IN THE NASA/MS FC HIGH REYNOLDS NUMBER WIND TUNNE L	SRB REENTRY CONFI G.	TO OBTAIN AERO. F ORCE DATA OF SRB AT REENTRY MACH N UMBERS AND ATTITU DES	FORCE	0.4 - 0.9	MSFC / MSFC - HIGH REYNOLDS NUMBER WIND TU NNEL	G. W. WINKLER/I V. W. SPARKS M M. MOSER JR. -DMS	DMS-DR-2369
AEDC - SWTA - V41A-R2A / IH72		OTS TANK ALONE LEFT SRB ALONE RIGHT SRB ALONE	TO OBTAIN ET AND SRB AERODYNAMIC H EAT TRANSFER DATA ON THE SPACE SHU TTLE INTEGRATED V EHICLE DURING LAU NCH CONDITIONS	HEAT-TRANS	3.01 - 4.02	ROCKWELL/ AEDC - SUPERSONIC WIN D TUNNEL (A)	W. H. DYE /RI E. C. ALLEN D.W.HERSEY R. H. LINDAHL -DMS	DMS-DR-2372

TEST ID	REPORT TITLE	CONFIGURATIONS TESTED	TEST PURPOSE	TYPE OF TEST	MODEL SCALE MACH RANGE	TESTING AGENCY	COGNIZANT TEST DMS PERSONNEL	BASIC PUBLICATIONS OR COMMENTS
LARC 8TPT 763 LA89	SUBSONIC STABILITY AND CONTROL CHARACTERISTICS OF A 0.030 SCALE (REMOTELY CONTROLLED ELEVON, BODYFLAP, AND RUDDER) MODEL OF LA 201-0 SPACE SHUTTLE ORBITER WITH TAILCONE TESTED IN THE NASA/LARC 8-FOOT TPT (LA89)	LARC BUILT MODEL 201-0 0.030 SCALE SSV ORBITER WITH REMOTE ELEVONS	VERIFY MONLINEARITIES AND DETERMINE REASON DIFFERENCES NOTED BETWEEN DATA OF TESTS OA175 AND LA89. RUDDER AND BODYFLAP CONTROL EFFECTIVENESS FOR ALT CONDITIONS WERE DETERMINED AS WELL AS CONTROL DEFLECTION EFFECTS ON STABILITY	FORCE	0.4 - 0.6	LARC / LARC - 8-FOOT TRANSONIC PRESSURE TUNNEL	BERNARD SPENCER, JR./ NASA LARC GEORGE M WARE/ NASA/JSC G. G. MCDONALD -DMS	DMS-DR-2373
CALSPAN 8TWT T18-113 LA103				FORCE		LARC / CALSPAN - 8-FOOT TRANSONIC WIND TUNNEL	G. G. MCDONALD -DMS	DMS-DR-2374
ARC 40SWT 500 OA237	RESULTS OF AIR DATA SYSTEM CALIBRATION TEST USING THE 0.10-SCALE SPACE SHUTTLE ORBITER VEHICLE 102 FOREBODY MODEL 99-0 IN THE NASA 40 X 80-FOOT SUBSONIC WIND TUNNEL (OA237)	ORBITER VEHICLE 102 FOREBODY	OBTAIN ORBITER AIR DATA SYSTEM LOW-SPEED CALIBRATION; DEMONSTATE THAT FOREBODY MODEL WILL PROVIDE FULL ORBITE FLOW FIELD SIMULATION AT THE AIR DATA PROBES; DEMONSTRATE THAT PREDICTED BLOCKAGE INFLUENCE ON PROBE FOR THE NAL TUNNEL IS VALID	FORCE	00.11- 0.27	ROCKWELL/ ARC - 40-FOOT BY 80-FOOT SUBSONIC WIND TUNNEL	R.R.BURROW/RI R.L.MAKI/ARC W. B. MEINDERS -DMS	DMS-DR-2375

TEST ID	REPORT TITLE	CONFIGURATIONS TESTED	TEST PURPOSE	TYPE OF TEST	MODEL SCALE MACH RANGE	TESTING AGENCY	COGNIZANT TEST DMS PERSONNEL	BASIC PUBLICATIONS OR COMMENTS
ARC - 11TWT - 228-1 / 1A144				FORCE	0.01 /	ROCKWELL/ ARC - 11-FOOT TRANSONIC WIND TUNNEL (UNITARY)	D.W.HERSEY G. W. KLUG -DMS	DMS-DR-2377
ARC - 11TWT - 412-1 / 1A191				FORCE PRESSURE	0.25, 0.75/ 0 4- 1.4	ROCKWELL/ ARC - 11-FOOT TRANSONIC WIND TUNNEL (UNITARY)	S. R. HOULIHAN G. W. KLUG -DMS	DMS-DR-2378
LARC - 8TPT - 776 / LA106				FORCE		LARC / LARC - 8-FOOT TRANSONIC PRESSURE TUNNEL	G. G. MCDONALD -DMS	DMS-DR-2379
ARC - 11TWT - 118-1 / OA145A CR-151.801	RESULTS OF AN INVESTIGATION TO VERIFY SHUTTLE ORBITER VEHICLE 102 AEROD CHARACTERISTICS UTILIZING AN .05-SCALE HI-FIDELITY REMOTE CONTROL MODEL (39-0) IN THE AMES RESEARCH CENTER UNITARY WIND TUNNEL (OA145A	875C16E64F16FD3FR22HG1M52N108N109N110N111R20V27VT10VT11VT12VT13VT14VT15VT16VT17W131	VERIFY ORBITER VEHICLE 102 AERODYNAMIC CHAR WITH REGARD TO: (1)BASIC STABILITY AND CONTROL(2)CONTROL SURFACE HINGE MOMENTS(3)REYNOLDS NUMBER EFFECTS(4) HYSTERESIS AND CONTROL SURFACE INTERACTIONS(5) PROPOSED INBOARD/OUTBOARD ELEVON INTERACTION MATH MODEL	FORCE PRESSURE	0.6 - 1.4	ROCKWELL/ ARC - 11-FOOT TRANSONIC WIND TUNNEL (UNITARY)	R. M. MULFINGER/R OCKWELL INTERNATIONAL SPACE DIVISION M. M. MANN -DMS	DMS-DR-2380 VOLUME 01

TEST ID	REPORT TITLE	CONFIGURATIONS TESTED	TEST PURPOSE	TYPE OF TEST	MODEL SCALE MACH RANGE	TESTING AGENCY	COGNIZANT TEST DMS PERSONNEL	BASIC PUBLICATIONS OR COMMENTS
ARC 11TWT 118-1 OA145A CR-151,802	RESULTS OF AN INV ESTIGATION TO VERIFY SHUTTLE ORBITER VEHICLE 102 AERO CHARACTERISTICS UTILIZING AN .05-SCALE HI-FIDELITY REMOTE CONTROL MODEL (39-0) IN THE AMES RESEARCH CENTER UNITARY WIND TUNNEL (OA145A	875C16E64F16FD3FR 22HG1M52N108N109N 110N111R20V27VT10 VT11VT12VT13VT14 VT15VT16VT17W131	VERIFY ORBITER VEHICLE 102 AERODYNAMIC CHAR WITH REGARD TO: (1)BASIC STABILITY AND CONTROL(2)CONTROL SURFACE HINGE MOMENTS(3)REYNOLDS NUMBER EFFECTS(4) HYSTERESIS AND CONTROL SURFACE INTERACTIONS(5) PROPOSED INBOARD/OUTBOARD ELEVON INTERACTION MATH MODEL	FORCE PRESSURE	0.6 - 1.4	ROCKWELL/ ARC - 11-FOOT TRANSONIC WIND TUNNEL (UNITARY)	R. H. MULFINGER/ROCKWELL INTERNATIONAL SPACE DIVISION M. M. MANN -DMS	DMS-DR-2380 VOLUME 02
ARC 11TWT 118-1 OA145A CR-151,803	RESULTS OF AN INV ESTIGATION TO VERIFY SHUTTLE ORBITER VEHICLE 102 AERO CHARACTERISTICS UTILIZING AN .05-SCALE HI-FIDELITY REMOTE CONTROL MODEL (39-0) IN THE AMES RESEARCH CENTER UNITARY WIND TUNNEL (OA145A	875C16E64F16FD3FR 22HG1M52N108N109N 110N111R20V27VT10 VT11VT12VT13VT14 VT15VT16VT17W131	VERIFY ORBITER VEHICLE 102 AERODYNAMIC CHAR WITH REGARD TO: (1)BASIC STABILITY AND CONTROL(2)CONTROL SURFACE HINGE MOMENTS(3)REYNOLDS NUMBER EFFECTS(4) HYSTERESIS AND CONTROL SURFACE INTERACTIONS(5) PROPOSED INBOARD/OUTBOARD ELEVON INTERACTION MATH MODEL	FORCE PRESSURE	0.6 - 1.4	ROCKWELL/ ARC - 11-FOOT TRANSONIC WIND TUNNEL (UNITARY)	R. H. MULFINGER/ROCKWELL INTERNATIONAL SPACE DIVISION M. M. MANN -DMS	DMS-DR-2380 VOLUME 03

TEST ID	REPORT TITLE	CONFIGURATIONS TESTED	TEST PURPOSE	TYPE OF TEST	MODEL SCALE MACH RANGE	TESTING AGENCY	COGNIZANT TEST DMS PERSONNEL	BASIC PUBLICATIONS OR COMMENTS
ARC 11TWT 118-1 0A145A CR-151,804	RESULTS OF AN INVESTIGATION TO VERIFY SHUTTLE ORBITER VEHICLE 102 AERODYNAMICS UTILIZING AN .05-SCALE HI-FIDELITY REMOTE CONTROL MODEL (39-0) IN THE AMES RESEARCH CENTER UNITARY WIND TUNNEL (0A145A	B75C16E64F16FD3FR22HG1M52N108N109N110N111R20V27VT10VT11VT12VT13VT14VT15VT16VT17W131	VERIFY ORBITER VEHICLE 102 AERODYNAMIC CHAR WITH REGARD TO: (1)BASIC STABILITY AND CONTROL (2)CONTROL SURFACE HINGE MOMENTS (3)REYNOLDS NUMBER EFFECTS (4) HYSTERESIS AND CONTROL SURFACE INTERACTIONS (5) PROPOSED INBOARD/OUTBOARD ELEVON INTERACTION MATH MODEL	FORCE PRESSURE	0.6 - 1.4	ROCKWELL/ ARC - 11-FOOT TRANSONIC WIND TUNNEL (UNITARY)	R. H. MULFINGER/ROCKWELL INTERNATIONAL SPACE DIVISION M. M. MANN -DMS	DMS-DR-2380 VOLUME 04
ARC 11TWT 118-1 0A145A CR-151,805	RESULTS OF AN INVESTIGATION TO VERIFY SHUTTLE ORBITER VEHICLE 102 AERODYNAMICS UTILIZING AN .05-SCALE HI-FIDELITY REMOTE CONTROL MODEL (39-0) IN THE AMES RESEARCH CENTER UNITARY WIND TUNNEL (0A145A	B75C16E64F16FD3FR22HG1M52N108N109N110N111R20V27VT10VT11VT12VT13VT14VT15VT16VT17W131	VERIFY ORBITER VEHICLE 102 AERODYNAMIC CHAR WITH REGARD TO: (1)BASIC STABILITY AND CONTROL (2)CONTROL SURFACE HINGE MOMENTS (3)REYNOLDS NUMBER EFFECTS (4) HYSTERESIS AND CONTROL SURFACE INTERACTIONS (5) PROPOSED INBOARD/OUTBOARD ELEVON INTERACTION MATH MODEL	FORCE PRESSURE	0.6 - 1.4	ROCKWELL/ ARC - 11-FOOT TRANSONIC WIND TUNNEL (UNITARY)	R. H. MULFINGER/ROCKWELL INTERNATIONAL SPACE DIVISION M. M. MANN -DMS	DMS-DR-2380 VOLUME 05

WORK IN PROCESS
WIND TUNNEL TEST / DMS DATA PROCESSING

TEST ID	REPORT TITLE	CONFIGURATIONS TESTED	TEST PURPOSE	TYPE OF TEST	MODEL SCALE / MACH RANGE	TESTING AGENCY	COGNIZANT TEST DMS PERSONNEL	BASIC PUBLICATIONS OR COMMENTS
ARC - 11TWT - 118-1 / OA145A CR-151,806	RESULTS OF AN INVESTIGATION TO VERIFY SHUTTLE ORBITER VEHICLE 102 AERO CHARACTERISTICS UTILIZING AN .05-SCALE HI-FIDELITY REMOTE CONTROL MODEL (39-0) IN THE AMES RESEARCH CENTER UNITARY WIND TUNNEL (OA145A	B75C16E64F16FD3FR22HG1M52N108N109N110N111R20V27VT10VT11VT12VT13VT14VT15VT16VT17W131	VERIFY ORBITER VEHICLE 102 AERODYNAMIC CHAR WITH REGARD TO: (1)BASIC STABILITY AND CONTROL(2)CONTROL SURFACE HINGE MOMENTS(3)REYNOLDS NUMBER EFFECTS(4) HYSTERESIS AND CONTROL SURFACE INTERACTIONS(5) PROPOSED INBOARD/OUTBOARD ELEVON INTERACTION MATH MODEL	FORCE PRESSURE	0.6 - 1.4	ROCKWELL/ ARC - 11-FOOT TRANSONIC WIND TUNNEL (UNITARY)	R. H. MULFINGER/ROCKWELL INTERNATIONAL SPACE DIVISION M. M. MANN -DMS	DMS-DR-2380 VOLUME 06
LARC - CFHT - 130 / LA93				PRESSURE		LARC / LARC - CONTINUOUS-FLOW HYPERSONIC TUNNEL	W. B. MEINDERS -DMS	DMS-DR-2383
AEDC - HWTB - V41B-R4A / OH84A		M EL 83-0 (.04 SCALE) ; MODEL 60-0 (.0175 SCALE)	1)DETERMINE ORBITER (60-0)WINDWARD SURFACE HEATING OF TURBULENT FLOW ORIGINATING IN THE AREA OF THE NOSE RCC/RSI INTERFACE 2)DETERMINE ORBITER (83-0) LEESIDE HEATING IN SAME AREA	HEAT-TRANS	0.04 0.0175 / 7.90 - 8.0	ROCKWELL/ AEDC - HYPERSONIC WIND TUNNEL (B)	P.L. LAMOINE/RI J. E. VAUGHN -DMS	DMS-DR-2388

TEST ID	REPORT TITLE	CONFIGURATIONS TESTED	TEST PURPOSE	TYPE OF TEST	MODEL SCALE MACH RANGE	TESTING AGENCY	COGNIZANT TEST DMS PERSONNEL	BASIC PUBLICATIONS OR COMMENTS
ARC - 87SWT - 118-1 / OA145C	RESULTS OF AN INV ESTIGATION TO VER IFY SHUTTLE ORBIT ER VEHICLE 102 AERO CHARACTERIST ICS UTILIZING AN .05-SCALE HI-FIDE LITY REMOTE CONTROL MODEL (39 -0) IN THE AMES R ESEARCH CENTER UN ITARY WIND TUNNEL (OA145C)	875C16E64F16FD3FR 22HS1M52N108N109N 110N111R20V27VT10 VT11VT12VT13VT14 VT15VT16VT17W131	VERIFY ORBITER VE HICLE 102 AERODYN AMIC CHAR WITH RE GARD TO: (1)BASIC STABILITY AND CON TROL(2)CONTROL SU RFACE HINGE MOMEN TS(3)REYNOLDS NUMBER EFFECTS(4) HYSTERESIS AND CO NTROL SURFACE INT ERACTIONS(5) PROPOSED INBOARD ELEVON INTERACTIO N MATH MODEL	FORCE PRESSURE	2.45 - 3.5	ROCKWELL/ ARC - 8-FOOT BY 7-FO OT SUPERSONIC WIND TUNNEL (U NITARY)	R. M. MULFINGER/R OCKWELL INTERNATI ONAL SPACE DIVISI ON M. M. MANN -DMS	DMS-DR-2389
LARC - BTPT - 779 / 1A244				FORCE	0.01 /	ROCKWELL/ LARC - 8-FOOT TRANSON IC PRESSURE TU NNEL	D.W.HERSEY G. W. KLUG -DMS	DMS-DR-2391
ARC - 3.5SWT - 1H51A		OT FLAT PLATE		HEAT-TRANS	0.04 /	ROCKWELL/ ARC - 3.5-FOOT HYPER SONIC WIND TUN NEL	T. L. MULKEY G. W. KLUG -DMS	DMS-DR-2393
LTV - HSWT - 611 / LA109				FORCE		LARC / LTV - HIGH SPEED WIN D TUNNEL	G. G. MCDONALD -DMS	DMS-DR-2394
LARC - BTPT - 780 / LA113				FORCE	0.01 /	LARC / LARC - 8-FOOT TRANSON IC PRESSURE TU NNEL	J. W. BALL G. W. KLUG -DMS	DMS-DR-2397

TEST ID	REPORT TITLE	CONFIGURATIONS TESTED	TEST PURPOSE	TYPE OF TEST	MODEL SCALE MACH RANGE	TESTING AGENCY	COGNIZANT TEST DMS PERSONNEL	BASIC PUBLICATIONS OR COMMENTS
AEDC - PWT16T - 470 / IA105A				FORCE PRESSURE		ROCKWELL/ AEDC - TRANSONIC PROP ULSION WIND TU NNEL (PWT-16T)	M. M. MANN -DMS	DMS-DR-2398
LERC - 10SWT - 042 / OA234 CR-160,518	RESULTS OF SSV OR BITER AIR DATA SY STEM CALIBRATION TEST USING THE 0. 10-SCALE ORBITER FOREBODY MODEL 99 -0 IN THE NASA/LE WIS 10 X 10-FOOT SUPERSONIC WIND T UNNEL (OA234)	ORBITER VEHICLE 1 02 FOREBODY	OBTAIN CALIBRATIO NS OF 0.1 AND 0.2 -SCALE ROSEMOUNT AIR DATA SYSTEM P ROBES;MEASURE FOR EBODY FLUSH SURFA CE TAP PRESSURE D ISTRIBUTIONS AND RCS PORT PRESSURE S	FORCE	0.10 / 0.4 - 2.7	ROCKWELL/ LERC - 10 BY 10-FOOT SUPERSONIC WIN D TUNNEL	C.LOVELL/LERC R.R.BURROWS/RI W. B. MEINDERS -DMS	DMS-DR-2400
AEDC - PWT16T - 470 / IA156A CR-160,515	RESULTS OF TESTS USING A 0.02-SCAL E MODEL (89-OTS) OF THE SPACE SHUT TLE INTEGRATED VE HICLE IN THE AEDC 16-FOOT TRANSONI C PROPULSION WIND TUNNEL (IA156A)	B75C16E64F16FR22H GIM52N108N109N110 N111R20U1V27V29VT 10VT11VT14VT17W13 1T39527	TO OBTAIN FORCE A ND MOMENT DATA ON ALL VEHICLE ELEM ENTS (ORBITER, EX TERNAL TANK, AND EACH SOLID ROCKET BOOSTER), WING A ND VERTICAL TAIL LOAD INDICATORS, ELEVON AND RUDDER HINGE MOMENTS, A ND BASE-BODYFLAP PRESSURE DATA	FORCE	0.3 - 1.55	ROCKWELL/ AEDC - TRANSONIC PROP ULSION WIND TU NNEL (PWT-16T)	J. J. DAILEDA AND J. MARROQUIN/ROC KWELL INTERNATION AL M. M. MANN -DMS	DMS-DR-2403 VOLUME 01

TEST ID	REPORT TITLE	CONFIGURATIONS TESTED	TEST PURPOSE	TYPE OF TEST	MODEL SCALE MACH RANGE	TESTING AGENCY	COGNIZANT TEST DMS PERSONNEL	BASIC PUBLICATIONS OR COMMENTS
AEDC PWT16T 470 IA156A CR-160,516	RESULTS OF TESTS USING A 0.02-SCALE MODEL (89-OTS) OF THE SPACE SHUTTLE INTEGRATED VEHICLE IN THE AEDC 16-FOOT TRANSONIC PROPULSION WIND TUNNEL (IA156A)	B75C16E64F16FR22H G1M52N108N109N110 N111R20U1V27V29VT 10VT11VT14VT17W13 1T39527	TO OBTAIN FORCE AND MOMENT DATA ON ALL VEHICLE ELEMENTS (ORBITER, EXTERNAL TANK, AND EACH SOLID ROCKET BOOSTER), WING AND VERTICAL TAIL LOAD INDICATORS, ELEVON AND RUDDER HINGE MOMENTS, AND BASE-BODYFLAP PRESSURE DATA	FORCE	0.3 - 1.55	ROCKWELL/ AEDC - TRANSONIC PROPULSION WIND TUNNEL (PWT-16T)	J. J. DAILEDA AND J. MARROQUIN/ROCKWELL INTERNATIONAL M. M. MANN -DMS	DMS-DR-2403 VOLUME 02
AEDC PWT16T 470 IA156A CR-160,517	RESULTS OF TESTS USING A 0.02-SCALE MODEL (89-OTS) OF THE SPACE SHUTTLE INTEGRATED VEHICLE IN THE AEDC 16-FOOT TRANSONIC PROPULSION WIND TUNNEL (IA156A)	B75C16E64F16FR22H G1M52N108N109N110 N111R20U1V27V29VT 10VT11VT14VT17W13 1T39527	TO OBTAIN FORCE AND MOMENT DATA ON ALL VEHICLE ELEMENTS (ORBITER, EXTERNAL TANK, AND EACH SOLID ROCKET BOOSTER), WING AND VERTICAL TAIL LOAD INDICATORS, ELEVON AND RUDDER HINGE MOMENTS, AND BASE-BODYFLAP PRESSURE DATA	FORCE	0.3 - 1.55	ROCKWELL/ AEDC - TRANSONIC PROPULSION WIND TUNNEL (PWT-16T)	J. J. DAILEDA AND J. MARROQUIN/ROCKWELL INTERNATIONAL M. M. MANN -DMS	DMS-DR-2403 VOLUME 03
ARC 11TWT 275-1 IA119 CR-160,510	RESULTS OF TESTS USING A 0.020-SCALE MODEL (88-OTS) OF THE SPACE SHUTTLE INTEGRATED VEHICLE JET PLUME IN THE NASA/ARC UPWT 11 X 11-FOOT LEC (TEST IA119)	88-OTS-.02 SCALE OF THE INTEGRATED SPACE SHUTTLE VEHICLE	TO DETERMINE THE EFFECTS OF THE MAIN PROPULSION SYSTEM (MPS) AND SOLID ROCKET BOOSTER (SRB) PLUMES ON VEHICLE PRESSURE DISTRIBUTIONS, WING BENDING AND TORSION LOADS AND ELEVON HINGE MOMENTS.	FORCE PRESSURE	.020 / .6 - 1.40	ROCKWELL/ ARC - 11-FOOT TRANSONIC WIND TUNNEL (UNITARY)	T.J. DZIUBALA,J. STONE/RI S. R. HOULIHAN B. J. BURST -DMS	DMS-DR-2404 VOLUME 01

TEST ID	REPORT TITLE	CONFIGURATIONS TESTED	TEST PURPOSE	TYPE OF TEST	MODEL SCALE MACH RANGE	TESTING AGENCY	COGNIZANT TEST DMS PERSONNEL	BASIC PUBLICATIONS OR COMMENTS
ARC 11TWT 275-1 IA119 CR-160,511	RESULTS OF TESTS USING A 0.020-SCALE MODEL (88-OTS) OF THE SPACE SHUTTLE INTEGRATED VEHICLE JET PLUME IN THE NASA/ARC UPWT 11 X 11-FOOT LEC (TEST IA119)	88-OTS- 02 SCALE OF THE INTEGRATED SPACE SHUTTLE VEHICLE	TO DETERMINE THE EFFECTS OF THE MAIN PROPULSION SYSTEM (MPS) AND SOLID ROCKET BOOSTER (SRB) PLUMES ON VEHICLE PRESSURE DISTRIBUTIONS, WING BENDING AND TORSION LOADS AND ELEVON HINGE MOMENTS.	FORCE PRESSURE	.020 / .6 - 1.40	ROCKWELL/ ARC - 11-FOOT TRANSONIC WIND TUNNEL (UNITARY)	T.J. DZIUBALA,J. STONE/RI S. R. HOULIHAN B. J. BURST -DMS	DMS-DR-2404 VOLUME 02
ARC 11TWT 275-1 IA119 CR-160,512	RESULTS OF TESTS USING A 0.020-SCALE MODEL (88-OTS) OF THE SPACE SHUTTLE INTEGRATED VEHICLE JET PLUME IN THE NASA/ARC UPWT 11 X 11-FOOT LEC (TEST IA119)	88-OTS-.02 SCALE OF THE INTEGRATED SPACE SHUTTLE VEHICLE	TO DETERMINE THE EFFECTS OF THE MAIN PROPULSION SYSTEM (MPS) AND SOLID ROCKET BOOSTER (SRB) PLUMES ON VEHICLE PRESSURE DISTRIBUTIONS, WING BENDING AND TORSION LOADS AND ELEVON HINGE MOMENTS.	FORCE PRESSURE	.020 / .6 - 1.40	ROCKWELL/ ARC - 11-FOOT TRANSONIC WIND TUNNEL (UNITARY)	T.J. DZIUBALA,J. STONE/RI S. R. HOULIHAN B. J. BURST -DMS	DMS-DR-2404 VOLUME 03
ARC 11TWT 275-1 IA119 CR-160,513	RESULTS OF TESTS USING A 0.020-SCALE MODEL (88-OTS) OF THE SPACE SHUTTLE INTEGRATED VEHICLE JET PLUME IN THE NASA/ARC UPWT 11 X 11-FOOT LEC (TEST IA119)	88-OTS-.02 SCALE OF THE INTEGRATED SPACE SHUTTLE VEHICLE	TO DETERMINE THE EFFECTS OF THE MAIN PROPULSION SYSTEM (MPS) AND SOLID ROCKET BOOSTER (SRB) PLUMES ON VEHICLE PRESSURE DISTRIBUTIONS, WING BENDING AND TORSION LOADS AND ELEVON HINGE MOMENTS.	FORCE PRESSURE	.020 / .6 - 1.40	ROCKWELL/ ARC - 11-FOOT TRANSONIC WIND TUNNEL (UNITARY)	T.J. DZIUBALA,J. STONE/RI S. R. HOULIHAN B. J. BURST -DMS	DMS-DR-2404 VOLUME 04

TEST ID	REPORT TITLE	CONFIGURATIONS TESTED	TEST PURPOSE	TYPE OF TEST	MODEL SCALE MACH RANGE	TESTING AGENCY	COGNIZANT TEST DMS PERSONNEL	BASIC PUBLICATIONS OR COMMENTS
MSFC - 14"WT - 649 / IA181				FORCE		ROCKWELL/ MSFC - 14-INCH TRISON IC WIND TUNNEL	W. B. MEINDERS -DMS	DMS-DR-2406
ARC - 3.5HWT - 233-1 / IH73				HEAT-TRANS	0.006 /	ROCKWELL/ ARC - 3.5-FOOT HYPER SONIC WIND TUN NEL	D.W.HERSEY G. W. KLUG -DMS	DMS-DR-2407
LARC - 8TPT - LA115				FORCE		LARC / LARC - 8-FOOT TRANSON IC PRESSURE TU NNEL	G. G. MCDONALD -DMS	DMS-DR-2409
LARC - 8TPT - 804 / LA116				FORCE		LARC / LARC - 8-FOOT TRANSON IC PRESSURE TU NNEL	G. G. MCDONALD -DMS	DMS-DR-2411
ARC - 3.5HWT - 234-1 / IH90				HEAT-TRANS		ROCKWELL/ ARC - 3.5-FOOT HYPER SONIC WIND TUN NEL	G. W. KLUG -DMS	DMS-DR-2412
ARC - 9TSWT - 242-1 / IA1058				FORCE		NRLAC / ARC - 9-FOOT BY 7-FO OT SUPERSONIC WIND TUNNEL 'U NITARY)	M. M. MANN -DMS	DMS-DR-2413
MSFC - TWT - 668 / IA603-1				FORCE		ROCKWELL/ MSFC - TRISONIC WIND TUNNEL	J. E. VAUGHN C. R. EDWARDS -DMS	DMS-DR-2416

TEST ID	REPORT TITLE	CONFIGURATIONS TESTED	TEST PURPOSE	TYPE OF TEST	MODEL SCALE MACH RANGE	TESTING AGENCY	COGNIZANT TEST DMS PERSONNEL	BASIC PUBLICATIONS OR COMMENTS
AEDC - HW'B - V2 / OH103A		MODEL 83-0 LINES VL70-C00140C	DETERMINE DETAIL HEATING RCC-RSI INTERFACE AREA ON LOWER FUSELAGE AND OBTAIN RCS NOZZLE HEATING	HEAT-TRANS	0.04 / 7.88 - 8.0	ROCKWELL/ AEDC - HYPERSONIC WIND TUNNEL (B)	P.L. LAMOINE/RI J. E. VAUGHN J. E. VAUGHN -DMS	DMS-DR-2420
ARC - 97SWT - 282-1 / 87SWT - 0A251B/C CR-160,495	CALIBRATION TESTS OF THE SPACE SHUTTLE ORBITER AIR DATA SYSTEM USING A 0.10-SCALE ORBITER FOREBODY MODEL (99.0) IN THE NASA AMES RESEARCH CENTER 9 X 7 AND 8 X 7-FOOT LEGS OF THE UNITARY PLAN WIND TUNNEL (0A251B AND C)	99-0 B74C16N108PR7PR8P R14VT18VT19	THE OBJECTIVES OF THESE TESTS WERE TO DETERMINE AIR DATA SYSTEM PROBE PITOT AND STATIC PRESSURE ERRORS, THE EFFECT OF PROBE SCALE ON STATIC PRESSURE CALIBRATION; CALCULATE ANGLE-OF-ATTACK SENSOR; EVALUATE TWO 'FLUSH PORT' ALTERNATE AIR DATA SYSTEMS	FORCE	0.10/ 1 6- 3.5	ROCKWELL/ ARC - 9-FOOT BY 7-FOOT SUPERSONIC WIND TUNNEL (UNITARY) 8-FOOT BY 7-FOOT SUPERSONIC WIND TUNNEL (UNITARY)	J.GAWIENOWSKI, W. ANDERSON/ ARC R.R.BURROWS, W.R. CARLSON/ RI D.W.HERSEY G. W. KLUG -DMS	DMS-DR-2421 VOLUME 01
ARC - 97SWT - 282-1 / 87SWT - 0A251B/C CR-160,496	CALIBRATION TESTS OF THE SPACE SHUTTLE ORBITER AIR DATA SYSTEM USING A 0.10-SCALE ORBITER FOREBODY MODEL (99.0) IN THE NASA AMES RESEARCH CENTER 9 X 7 AND 8 X 7-FOOT LEGS OF THE UNITARY PLAN WIND TUNNEL (0A251B AND C)	99-0 B74C16N108PR7PR8P R14VT18VT19	THE OBJECTIVES OF THESE TESTS WERE TO DETERMINE AIR DATA SYSTEM PROBE PITOT AND STATIC PRESSURE ERRORS, THE EFFECT OF PROBE SCALE ON STATIC PRESSURE CALIBRATION; CALCULATE ANGLE-OF-ATTACK SENSOR; EVALUATE TWO 'FLUSH PORT' ALTERNATE AIR DATA SYSTEMS	FORCE	0.10/ 1.6- 3.5	ROCKWELL/ ARC - 9-FOOT BY 7-FOOT SUPERSONIC WIND TUNNEL (UNITARY) 8-FOOT BY 7-FOOT SUPERSONIC WIND TUNNEL (UNITARY)	J.GAWIENOWSKI, W. ANERSON/ ARC R.R.BURROWS, W.R. CARLSON/ RI D.W.HERSEY G. W. KLUG -DMS	DMS-DR-2421 VOLUME 02

TEST ID	REPORT TITLE	CONFIGURATIONS TESTED	TEST PURPOSE	TYPE OF TEST	MODEL SCALE MACH RANGE	TESTING AGENCY	COGNIZANT TEST DMS PERSONNEL	BASIC PUBLICATIONS OR COMMENTS
ARC 289-1 97SWT 0A126A,B,C 160. CR-506	RESULTS OF TESTS ON THE EFFECTS OF AEROELASTICITY OF THE SPACE SHUTTLE ORBITER VERTICAL TAIL USING A 0.03-SCALE MODEL (47-0) IN THE NASA AMES UNITARY WIND TUNNELS (0A126A/B)	B62C9E64F9M16RSV8 W13N112FD3N28	DETERMINE THE EFFECT OF AEROELASTICITY OF THE ORBITER VERTICAL TAIL ON THE LATERAL DIRECTIONAL STABILITY, RUDDER CONTROL CHARACTERISTICS AND TAIL LOADS OF THE ORBITER	FORCE	0.6 - 2.5	ROCKWELL/ ARC - 9-FOOT BY 7-FOOT SUPERSONIC WIND TUNNEL (UNITARY)	S. R. HOULIHAN/ROCKWELL INTERNATIONAL M. M. MANN -DMS	DMS-DR-2424 VOLUME 01
ARC 289-1 97SWT 0A126A,B,C CR-160,507	RESULTS OF TESTS ON THE EFFECTS OF AEROELASTICITY OF THE SPACE SHUTTLE ORBITER VERTICAL TAIL USING A 0.03-SCALE MODEL (47-0) IN THE NASA AMES UNITARY WIND TUNNELS (0A126A/B)	B62C9E64F9M16RSV8 W13N112FD3N28	DETERMINE THE EFFECT OF AEROELASTICITY OF THE ORBITER VERTICAL TAIL ON THE LATERAL DIRECTIONAL STABILITY, RUDDER CONTROL CHARACTERISTICS AND TAIL LOADS OF THE ORBITER	FORCE	0.6 - 2.5	ROCKWELL/ ARC - 9-FOOT BY 7-FOOT SUPERSONIC WIND TUNNEL (UNITARY)	S. R. HOULIHAN/ROCKWELL INTERNATIONAL M. M. MANN -DMS	DMS-DR-2424 VOLUME 02
ARC 289-1 0A126A,B,C CR-160,508	RESULTS OF TESTS ON THE EFFECTS OF AEROELASTICITY OF THE SPACE SHUTTLE ORBITER VERTICAL TAIL USING A 0.03-SCALE MODEL (47-0) IN THE NASA AMES UNITARY WIND TUNNELS (0A126A/BC)	SSV 102 ORBITER CONFIGURATION 47-0	DETERMINE EFFECT OF AEROELASTICITY OF ORBITER VERTICAL TAIL ON LATERAL DIRECTIONAL STABILITY, RUDDER CONTROL CHARACTERISTICS AND TAIL LOADS OF THE ORBITER VEHICLE. THREE TAILS (RIGID, PRESSURE INSTRUMENTED, AND ELASTIC) WERE USED.	FORCE	0.03 / 0.6 - 3.5	ROCKWELL/ ARC -	S. R. HOULIHAN/ROCKWELL W. ANDERSON/ARC D.W.HERSEY G. G. MCDONALD -DMS	DMS-DR-2424 VOLUME 03

TEST ID	REPORT TITLE	CONFIGURATIONS TESTED	TEST PURPOSE	TYPE OF TEST	MODEL SCALE MACH RANGE	TESTING AGENCY	COGNIZANT TEST DMS PERSONNEL	BASIC PUBLICATIONS OR COMMENTS
LARC - BTPT - 813 / LA117				FORCE		LARC / LARC - 8-FOOT TRANSON IC PRESSURE TU NNEL	G. G. MCDONALD -DMS	DMS-DR-2425
AEDC - HWTB - V418-V2C / OH103B		MODEL 60-O: LINE S VL70-000140C	DETERMINE TURBULE NT HEATING ON LOW ER FUSELAGE AND W ING SURFACE	HEAT-TRANS	0.0175 / 7.96 - 8.0	ROCKWELL/ AEDC - HYPERSONIC WIN D TUNNEL (B)	J.W. CUMMINGS/RI J. E. VAUGHN -DMS	DMS-DR-2427
LERC - 10SWT - 045 / IH11	WIND TUNNEL TESTS OF THE 0.035-SCA LE INTEGRATED SPA CE SHUTTLE VEHICL E 84-OTS IN THE N ASA/LEWIS 10 X 10 -FOOT SUPERSONIC WIND TUNNEL (IH1 1)	84-OTS- .035 SCAL E MODEL OF THE IN TEGRATED SPACE SH UTTLE VEHICLE	TO OBTAIN PRESSUR E DATA IN THE VIC INITY OF PROTUBER ANCES AND CONNECT ING HARDWARE ON T HE ORBITER,EXTERN AL TANK AND SOLID ROCKET BOOSTER I N ORDER TO DETERM INE AERODYNAMIC H EATING RATES IN T HESE AREAS.	PRESSURE	.035 / 2.5 - 3.5	ROCKWELL/ LERC - 10 BY 10-FOOT SUPERSONIC WIN D TUNNEL	P.R. CARROL/RI, W SA . GERSTENMAIER/NA C. R. EDWARDS -DMS	DMS-DR-2428
ARC - 3.5HWT - 239 / IH51B		OT FLAT PLATE		HEAT-TRANS	0.04 /	ROCKWELL/ ARC - 3.5-FOOT HYPER SONIC WIND TUN NEL	D.W.HERSEY G. W. KLUG -DMS	DMS-DR-2429

TEST ID	REPORT TITLE	CONFIGURATIONS TESTED	TEST PURPOSE	TYPE OF TEST	MODEL SCALE MACH RANGE	TESTING AGENCY	COGNIZANT TEST DMS PERSONNEL	BASIC PUBLICATIONS OR COMMENTS
LARC 16TT 326 OA270A	RESULTS OF AN INVESTIGATION TO VERIFY SHUTTLE ORBITER AERO-CHARACTERISTICS AND EXAMINE TRANSONIC BLOCKAGE AND SHOCK REFLECTION EFFECTS UTILIZING AN .05-SCALE HI-FIDELITY REMOTE CONTROL MODEL (39-0) IN THE LANGLEY RESEARCH CENTER 16-FT. TRANSONIC WIND TUNNEL OA270A	OV102(MODEL 39-0)	VERIFICATION OF LONGITUDINAL AND LATERAL/DIRECTIONAL FORCE AND MOMENT CHARACTERISTICS, CONTROL SURFACE EFFECTIVENESS AND HINGE MOMENTS AND EXAMINE THE EFFECT OF TUNNEL BLOCKAGE AND SHOCK REFLECTIONS ON THESE CHARACTERISTICS	FORCE	0.6 - 1.3	ROCKWELL/ LARC - 16-FOOT TRANSONIC TUNNEL	R.H.MULFINGER/RI M. M. MANN -DMS	DMS-DR-2430
LARC UPWT 1243 LA125				FORCE		LARC / LARC - UNITARY PLAN WIND TUNNEL	J. W. BALL G. W. KLUG -DMS	DMS-DR-2432
ARC 97SWT 246-1 IA138		PROPOSED VEHICLE 5	TO OBTAIN PRESSURE COEFFICIENT INCREMENTS DUE TO PLUME EFFECTS ON THE ORBITER, EXTERNAL TANK, AND SRB, AND TO OBTAIN WING LOADS AND ELEVON HINGE MOMENTS	FORCE PRESSURE	0.01 / 1.55 - 2.5	ROCKWELL/ ARC - 9-FOOT BY 7-FOOT SUPERSONIC WIND TUNNEL (UNITARY)	J. MARROQUIN/RI D.W.HERSEY R. H. LINDAHL -DMS	DMS-DR-2438
AEDC PWT16T 517 IA182				FORCE		ROCKWELL/ AEDC - TRANSONIC PROPULSION WIND TUNNEL (PWT-16T)		DMS-DR-2439

TEST ID	REPORT TITLE	CONFIGURATIONS TESTED	TEST PURPOSE	TYPE OF TEST	MODEL SCALE / MACH RANGE	TESTING AGENCY	COGNIZANT TEST DMS PERSONNEL	BASIC PUBLICATIONS OR COMMENTS
LARC - LTPT - 255 / LA127				FORCE		LARC / LARC - LOW-TURBULENCE PRESSURE TUNNEL	J. W. BALL G. G. MCDONALD -DMS	DMS-DR-2441
LTV - HSWT - 646 / LA128				FORCE		LARC / LTV - HIGH SPEED WIND TUNNEL	J. W. BALL G. G. MCDONALD -DMS	DMS-DR-2442
AEDC - PWT16T - 519 / IA183 CR-160,488	RESULTS OF TESTS USING A 0.02-SCALE MODEL (89-OTS) OF THE SPACE SHUTTLE INTEGRATED VEHICLE IN THE AEDC 16-FOOT TRANSONIC PROPULSION WIND TUNNEL (IA183)	B75C16E64F16FR22H GIM52N108N109N110 N111R20U1V27VT10V T11VT12VT13VT14 VT15VT16VT17W131T 39527	TO OBTAIN FORCE AND MOMENT DATA ON ALL VEHICLE ELEMENTS(ORBITER,EXTERNAL TANK, AND EACH SOLID ROCKET BOOSTER), WING AND VERTICAL TAIL LOAD INDICATORS, ELEVON HINGE MOMENTS, AND BASE-BODYFLAP PRESSURE DATA FOR VERIFICATION OF TEST IA156A DATA	PRESSURE	0.2 - 1.6	ROCKWELL/ AEDC - TRANSONIC PROPULSION WIND TUNNEL (PWT-16T)	J. J. DAILEDA/ROCKWELL INTERNATIONAL D.W.HERSEY M. M. MANN -DMS	DMS-DR-2444 VOLUME 01

WORK IN PROCESS
WIND TUNNEL TEST / DMS DATA PROCESSING

TEST ID	REPORT TITLE	CONFIGURATIONS TESTED	TEST PURPOSE	TYPE OF TEST	MODEL SCALE / MACH RANGE	TESTING AGENCY	COGNIZANT TEST DMS PERSONNEL	BASIC PUBLICATIONS OR COMMENTS
AEDC - PWT16T - 519 / IA183 CR-160,489	RESULTS OF TESTS USING A 0.02-SCALE MODEL (89-OTS) OF THE SPACE SHUTTLE INTEGRATED VEHICLE IN THE AEDC 16-FOOT TRANSONIC PROPULSION WIND TUNNEL (IA183)	B75C16E64F16FR22H G1M52N108N109N110 N111R20U1V27VT10V T11VT12VT13VT14 VT15VT16VT17W131T 39S27	TO OBTAIN FORCE AND MOMENT DATA ON ALL VEHICLE ELEMENTS (ORBITER, EXTERNAL TANK, AND EACH SOLID ROCKET BOOSTER), WING AND VERTICAL TAIL LOAD INDICATORS, ELEVON HINGE MOMENTS, AND BASE-BODYFLAP PRESSURE DATA FOR VERIFICATION OF TEST IA156A DATA	PRESSURE	0.2 - 1.6	ROCKWELL/ AEDC - TRANSONIC PROPULSION WIND TUNNEL (PWT-16T)	J. J. DAILEDA/ROCKWELL INTERNATIONAL D.W.HERSEY M. M. MANN -DMS	DMS-DR-2444 VOLUME 02
ARC - 87SWT - 318-1 / OA146		SSV 140A/B/C/R ORBITER	TO OBTAIN OV-102 DISTRIBUTED PRESSURES, VEHICLE FORCES AND MOMENTS, ELEVON HINGE MOMENTS, AND WING LOADS IN THE HYPERSONIC FLOW REGION FOR RETURN TO LAUNCH SITE (RTLS) ABORT	FORCE PRESSURE	3.5 - 3.5	ROCKWELL/ ARC - 8-FOOT BY 7-FOOT SUPERSONIC WIND TUNNEL (UNITARY)	A. J. RITSCHEL/RI I. M. WEINBERG/RI D.W.HERSEY H. C. ZIMMERLE -DMS	DMS-DR-2445
LARC - UPWT - 1270 / LA122				FORCE		LARC / LARC - UNITARY PLAN WIND TUNNEL	J. W. BALL G. G. MCDONALD -DMS	DMS-DR-2446
ARC - 11TWT - 436-2 / OS52				PRESSURE		ROCKWELL/ ARC - 11-FOOT TRANSONIC WIND TUNNEL (UNITARY)	S. R. HOULIHAN C. R. EDWARDS -DMS	DMS-DR-2447

TEST ID	REPORT TITLE	CONFIGURATIONS TESTED	TEST PURPOSE	TYPE OF TEST	MODEL SCALE MACH RANGE	TESTING AGENCY	COGNIZANT TEST DMS PERSONNEL	BASIC PUBLICATIONS OR COMMENTS
ARC 3.5HWT 241 IH51C CR-160,519	SPACE SHUTTLE THIN SKIN HEAT TRANSFER TESTS OF SIMULATED LARGE SCALE PROTUBERANCES AND HALF SCALE TILE ON FLAT PLATE MODEL 58-OTS IN THE NASA AMES RESEARCH CENTER 3.5-FT HYPERSONIC WIND TUNNEL (IH51C)		DETERMINE AEROHEATING AROUND PROTUBERANCES AND INVESTIGATE TPS TILE HEATING RATES USING A HALF-SCALE TILE ARRAY	PRESSURE	LARGE / 5.3 - 5.3	ROCKWELL/ ARC - 3.5-FOOT HYPERSONIC WIND TUNNEL	J. W. FOUST/RI D.W.HERSEY J. E. VAUGHN -DMS	DMS-DR-2448 VOLUME 01
ARC 3.5HWT 241 IH51C CR-160,520	SPACE SHUTTLE THIN SKIN HEAT TRANSFER TESTS OF SIMULATED LARGE SCALE PROTUBERANCES AND HALF SCALE TILE ON FLAT PLATE MODEL 58-OTS IN THE NASA AMES RESEARCH CENTER 3.5-FT HYPERSONIC WIND TUNNEL (IH51C)		DETERMINE AEROHEATING AROUND PROTUBERANCES AND INVESTIGATE TPS TILE HEATING RATES USING A HALF-SCALE TILE ARRAY	PRESSURE	LARGE / 5.3 - 5.3	ROCKWELL/ ARC - 3.5-FOOT HYPERSONIC WIND TUNNEL	J. W. FOUST/RI D.W.HERSEY J. E. VAUGHN -DMS	DMS-DR-2448 VOLUME 02
AEDC PWT16T 505 IA132	RESULTS OF SHUTTLE TRANSPORTATION SYSTEM ASCENT AIR DATA SYSTEM CALIBRATION TEST USING THE 0.07-SCALE EXTERNAL TANK FOREBODY MODEL (68-T) IN THE AEDC PWT 16-FOOT TRANSONIC WIND TUNNEL (IA132)	EXTENAL OXYGEN HYDROGEN TANK FOREBODY MODEL	OBTAIN A TRANSONIC CALIBRATION OF THE ASCENT AIR DATA SYSTEM (AADS); INVESTIGATE AN ALTERNATE AADS; PERFORM LIMITED TUNNEL FLOW SURVEY	FORCE	0.4 - 1.55	ROCKWELL/ AEDC - TRANSONIC PROPULSION WIND TUNNEL (PWT-16T)	R.R.BURROWS/R.I. C.J.SPURLIN/AEDC D.W.HERSEY W. B. MEINDERS -DMS	DMS-DR-2449

TEST ID	REPORT TITLE	CONFIGURATIONS TESTED	TEST PURPOSE	TYPE OF TEST	MODEL SCALE MACH RANGE	TESTING AGENCY	COGNIZANT TEST DMS PERSONNEL	BASIC PUBLICATIONS OR COMMENTS
ARC - 3.5HWT - 230 / IH99				HEAT-TRANS		ROCKWELL/ ARC - 3.5-FOOT HYPERSONIC WIND TUNNEL	D.W.HERSEY G. R. LUTZ -DMS	DMS-DR-2452
LARC - UPWT - 1267 / IA180	RESULTS OF SHUTTLE TRANSPORTATION SYSTEM ASCENT AIR DATA SYSTEM HIGH SUPERSONIC CALIBRATION TEST USING THE 0.07-SCALE EXTERNAL OXYGEN HYDROGEN TANK FOREBODY MODEL (68-T) IN THE UNITARY PLAN HIGH SPEED LEG OF THE LARC 4X4 WIND TUNNEL (IA18D)	EXTERNAL OXYGEN HYDROGEN TANK FOREBODY MODEL	OBTAIN A HIGH SUPERSONIC ASCENT AIR DATA SYSTEM (AADS) CALIBRATION; OBTAIN SHOCK DETACHMENT DIAGNOSTIC INFORMATION	FORCE	3.5 - 4.63	ROCKWELL/ LARC UNITARY WIND TUNNEL	R.R.BURROWS/R.I. W.CORLETTE/LARC D.W.HERSEY W. B. MEINDERS -DMS	DMS-DR-2457
ARC - 11TWT - 369-1 / 0536/41				PRESSURE		ROCKWELL/ ARC - 11-FOOT TRANSONIC WIND TUNNEL (UNITARY)	D.W.HERSEY M. M. MANN -DMS	DMS-DR-2458
ARC - 9TWT - 369-1 / 0537				PRESSURE		ROCKWELL/ ARC - 9-FOOT BY 7-FOOT SUPERSONIC WIND TUNNEL (UNITARY)	D.W.HERSEY M. M. MANN -DMS	DMS-DR-2459
MSFC - 14TWT - 655 / FA27			DETERMINE CAUSE AND AERO FIX TO ELIMINATE ORBITER ROLLING MOMENT	FORCE	0.004 / 0.6 - 1.25	MSFC / MSFC - 14-INCH TRISONIC WIND TUNNEL	BILL BRADDOCK/LMS C-HUNTSVILLE J. L. GLYNN J. E. VAUGHN -DMS	DMS-DR-2460

TEST ID	REPORT TITLE	CONFIGURATIONS TESTED	TEST PURPOSE	TYPE OF TEST	MODEL SCALE MACH RANGE	TESTING AGENCY	COGNIZANT TEST DMS PERSONNEL	BASIC PUBLICATIONS OR COMMENTS
ARC - 3.5HWT - 244 / IH51D				HEAT-TRANS		ROCKWELL/ ARC - 3.5-FOOT HYPERSONIC WIND TUNNEL	D.W.HERSEY M. M. MANN -DMS	DMS-DR-2461
ARC - 9TSWT - 283-1 / IA131B				FORCE		ROCKWELL/ ARC - 9-FOOT BY 7-FOOT SUPERSONIC WIND TUNNEL (UNITARY)	D.W.HERSEY W. B. MEINDERS -DMS	DMS-DR-2462
ARC - 11TWT - 380-1 / 0542			TO OBTAIN PERFORMANCE CHARACTERISTICS OF DAMAGED LRSI TILE AND MINI-TILE WHEN SUBJECTED TO TRANSONIC SHOCK AND TURBULENT FLOW ENVIRONMENT	PRESSURE		ROCKWELL/ ARC - 11-FOOT TRANSONIC WIND TUNNEL (UNITARY)	R.B. KINGSLAND/ROCKWELL D.W.HERSEY H. C. ZIMMERLE -DMS	DMS-DR-2463
AEDC - SWTA - V41B-67 / OH84B				HEAT-TRANS		ROCKWELL/ AEDC - SUPERSONIC WIND TUNNEL (A)	T. L. MULKEY G. W. KLUG -DMS	DMS-DR-2464
AEDC - SWTA - V41B-67 / OH105				HEAT-TRANS		ROCKWELL/ AEDC - SUPERSONIC WIND TUNNEL (A)	T. L. MULKEY G. W. KLUG -DMS	DMS-DR-2465
AEDC - SWTA - V41B-67 / IH102				HEAT-TRANS		ROCKWELL/ AEDC - SUPERSONIC WIND TUNNEL (A)	T. L. MULKEY G. W. KLUG -DMS	DMS-DR-2466

TEST ID	REPORT TITLE	CONFIGURATIONS TESTED	TEST PURPOSE	TYPE OF TEST	MODEL SCALE MACH RANGE	TESTING AGENCY	COGNIZANT TEST DMS PERSONNEL	BASIC PUBLICATIONS OR COMMENTS
ARC - 3.5HWT - 245 / IH103				HEAT-TRANS		ROCKWELL/ ARC - 3.5-FOOT HYPER-SONIC WIND TUN-NEL	T. L. MULKEY G. G. MCDONALD -DMS	DMS-DR-2467
ARC - 3.5HWT - 246 / OH84C				HEAT-TRANS		ROCKWELL/ ARC - 3.5-FOOT HYPER-SONIC WIND TUN-NEL	T. L. MULKEY G. G. MCDONALD -DMS	DMS-DR-2468
ARC - 3.5HWT - 247 / OH105B				HEAT-TRANS		ROCKWELL/ ARC - 3.5-FOOT HYPER-SONIC WIND TUN-NEL	T. L. MULKEY G. G. MCDONALD -DMS	DMS-DR-2469
ARC - 11TWT - 381 / OS45			TO OBTAIN ORBITER TPS TILE AIRLOAD S IN LAUNCH ENVIR-ONMENT	PRESSURE	0.0 - 0.87	ROCKWELL/ ARC - 11-FOOT TRANSO-NIC WIND TUNNE-L (UNITARY)	T. L. MULKEY H. C. ZIMMERLE -DMS	DMS-DR-2470
LARC - 16TT - 341 / LA132 CR-160,514	RESULTS OF TESTS ON A .02 SCALE SP-ACE SHUTTLE LAUNC-H VEHICLE MODEL (-890TS) IN THE LAR-C 16-FT TRANSONIC-WIND TUNNEL TO D-ETERMINE PRESSURE-DISTRIBUTION ALO-NG THE EXTERNAL T-ANK LOX CABLE TRA-Y (LA132)	LAUNCH VEHICLE - 890TS	TO DETERMINE PRES-SURE DISTRIBUTION ALONG THE EXTERN-AL TANK LOX CABLE TRAY	PRESSURE	.02 / 1.1 - 1.25	LARC / LARC - 16-FOOT TRANSO-NIC TUNNEL	W.I. SCALLION/LAR-C J. E. VAUGHN C. R. EDWARDS -DMS	DMS-DR-2471

TEST ID	REPORT TITLE	CONFIGURATIONS TESTED	TEST PURPOSE	TYPE OF TEST	MODEL SCALE MACH RANGE	TESTING AGENCY	COGNIZANT TEST DMS PERSONNEL	BASIC PUBLICATIONS OR COMMENTS
ARC - 22TWT - 382-1 / OA252		TPS TILE CAVITY F LOW FIELD MODEL	TO DETERMINE PRES. DISTRIBUTIONS F OR THE OML, TILE CAVITY AND ON SID ES OF TILE SURROU NDING CAVITY; TO OBTAIN PRES. VARI ATIONS DUE TO TIL E HEIGHT MISMATCH ,VARIATIONS IN GA P WIDTH, AND VARI ATION IN RN/FT AN D BOUNDARY LAYER THICKNESS	PRESSURE		ROCKWELL/ ARC - 2-FOOT BY 2-FO OT TRANSONIC W IND TUNNEL	R.B.KINGSLAND,RI J. E. VAUGHN H. C. ZIMMERLE -DMS	DMS-DR-2473
MSFC - 14TWT - 656 / FA28	RESULTS OF TESTS ON A .004 SCALE S PACE SHUTTLE LAUN CH CONFIGURATION (MODEL 74-OTS) IN THE NASA/MSFC 14 -INCH TRISONIC WI ND TUNNEL (FA28)	ORBITER ALONE LAUNCH CONFIGURAT ION LAUNCH CONFIGURAT ION	DETERMINE WAYS TO ALLEVIATE O/ET F WD AATTACH POINT LOADS VERIFY PREVIOUS D ATA OBTAINED AT A EDC	FORCE	.004 / 0.60 - 1.25	MSFC / MSFC - 14-INCH TRISON IC WIND TUNNEL	W.F. BRADDOCK/LMS C J. L. GLYNN J. E. VAUGHN -DMS	DMS-DR-2474
ARC - 11TWT - 411-1,2,3/ IA190A			TO OBTAIN FORCE A ND PRESSURE LOADS ON ET PROTUBERAN CES AND TO DETERMINE LOCAL F LOW VELOCITIES ON ET UPPER SURFACE NEAR CENTERLINE	FORCE PRESSURE	0.60 - 1.4	ROCKWELL/ ARC - 11-FOOT TRANSO NIC WIND TUNNE L (UNITARY)	A.P.KANEVSKY/RI J. E. VAUGHN H. C. ZIMMERLE -DMS	DMS-DR-2476

TEST ID	REPORT TITLE	CONFIGURATIONS TESTED	TEST PURPOSE	TYPE OF TEST	MODEL SCALE MACH RANGE	TESTING AGENCY	COGNIZANT TEST DMS PERSONNEL	BASIC PUBLICATIONS OR COMMENTS
LARC 20HT6 6546 LA141A/B	RESULTS OF INVESTIGATIONS ON AN 0.004-SCALE 140C MODIFIED CONFIGURATION SPACE SHUTTLE VEHICLE ORBITER MODEL (74-0) IN THE NASA/LANGLEY RESEARCH CENTER 20-INCH MACH 6 TUNNEL (LA141)	ORBITER 74-0	TO (1)DETERMINE ORBITER DIRECTIONAL STABILITY AND CONTROL CHARACTERISTICS FROM 20-40 ANGLE OF ATTACK (2)TEST ANGLES OF ATTACK AND SIDES LIP FOR CONTINGENCY ABORT, (3)TEST SMALL NEGATIVE ANGLE OF ATTACK INCREMENTS TO VERIFY OTHER RESULTS (4)VALIDATE MACH=6 DATA	FORCE	0.004 / 6.0 - 6.0	LARC / LARC - 20-INCH HYPERSONIC TUNNEL (MACH 6)	R.L. CALLOWAY/LARC J. E. VAUGHN C. R. EDWARDS -DMS	DMS-DR-2477
ARC 3.5HWT 250 1H104		ORBITER+TANK		PRESSURE	0.0175 / 5.3 - 7.3	ROCKWELL/ ARC - 3.5-FOOT HYPERSONIC WIND TUNNEL	C.L.BERTHOLD,RI	DMS-DR-2480
MSFC 14TWT 665 1A602-1		OTS (MODEL 74) OTS + LBM OTS + LBM + FAIRING OTS + LBM + WAX FAIRING		FORCE	0.004 / 0.60 - 4.96	ROCKWELL/ MSFC - 14-INCH TRISONIC WIND TUNNEL	J. E. VAUGHN C. R. EDWARDS -DMS	DMS-DR-2481
ARC 11TWT 427-1 427-2 0A400				FORCE PRESSURE		ROCKWELL/ ARC - 11-FOOT TRANSONIC WIND TUNNEL (UNITARY)		DMS-DR-2482

WORK IN PROCESS
WIND TUNNEL TEST / DMS DATA PROCESSING

TEST ID	REPORT TITLE	CONFIGURATIONS TESTED	TEST PURPOSE	TYPE OF TEST	MODEL SCALE MACH RANGE	TESTING AGENCY	COGNIZANT TEST DMS PERSONNEL	BASIC PUBLICATIONS OR COMMENTS
ARC - 97SWT - 411-1,2,3/ IA190B			TO OBTAIN FORCE AND PRESSURE LOADS ON ET PROTUBERANCES AND TO DETERMINE LOCAL FLOW OVER ET UPPER SURFACE	FORCE PRESSURE	1.55 - 2.5	ROCKWELL/ ARC - 9-FOOT BY 7-FOOT SUPERSONIC WIND TUNNEL (UNITARY)	A.R.KANEVSKY/RI S. R. HOULIHAN H. C. ZIMMERLE -DMS	DMS-DR-2483
LTV - HSWT - 742 / LA144		OV102-SSME ON OV102-SSME OFF OV102-SSME ON VT OFF		FORCE	0.02/ 2.5- 4.75	LARC / LTV - HIGH SPEED WIND TUNNEL	J. E. VAUGHN G. W. KLUG -DMS	DMS-DR-2484
AEDC - PWT16T - 572 / OA253				PRESSURE		ROCKWELL/ AEDC - TRANSONIC PROPULSION WIND TUNNEL (PWT-16T)	S. R. HOULIHAN M. M. MANN -DMS	DMS-DR-2486

Table 6-1

Space Shuttle Facility Wind Tunnel Summary

SPACE SHUTTLE FACILITY WIND TUNNEL SUMMARY

TEST CODE	FACILITY	SUBFACILITY	TEST NO.	NASA SERIES NO.	DMS-DR-	PUBLICATION DATE
KT				LA126	2436,V-06	AUGUST, 1978
4J		SWTA	V41A-P5A	OA208/209	2415,V-02	JAN., 1980
	AEDC			OH57A/B	2367,V-01	MAY, 1979
4T	AEDC		41B-65	OH102A	2455	JUNE, 1979
VU	AEDC	HWTB	B7A	OH60	2356	MAY, 1977
VB	AEDC	HWTB	B8A	OH74	2263	MARCH, 1976
VC	AEDC	HWTB	C4A	1A114	2272,V-01	JUNE, 1977
VC	AEDC	HWTB	C4A	1A114	2272,V-02	JUNE, 1977
VJ	AEDC	HWTB	D8A	OA169	2320,V-01	FEB., 1978
VJ	AEDC	HWTB	D8A	OA169	2320,V-02	FEB., 1978
VJ	AEDC	HWTB	D8A	OA169	2320,V-03	FEB., 1978
VK	AEDC	HWTB	D9A	1A22	2327,V-01	JULY, 1977
VK	AEDC	HWTB	D9A	1A22	2327,V-02	AUGUST, 1977
VK	AEDC	HWTB	D9A	1A22	2327,V-03	AUGUST, 1977
VG	AEDC	HWTB	E3A	OH75	2303	MAY, 1976
VS	AEDC	HWTB	J7A	OH98	2340,V-01	SEPT., 1980
VS	AEDC	HWTB	J7A	OH98	2340,V-02	SEPT., 1980
4S	AEDC	HWTB	P4A	OH90A/MA28	2451	MAY, 1979

SPACE SHUTTLE FACILITY WIND TUNNEL SUMMARY

TEST CODE	FACILITY	SUBFACILITY	TEST NO.	NASA SERIES NO.	DMS-DR-	PUBLICATION DATE
4D	AEDC	HWTB	TOA	IA148	2384,V-01	SEPT., 1978
4D	AEDC	HWTB	TOA	IA148	2384,V-02	SEPT., 1978
TM	AEDC	HWTB	VA289	OH3A	2100	JUNE, 1974
TT	AEDC	HWTB	VA352	OH4A	2154	JAN., 1975
TZ	AEDC	HWTB	VA352	OH4C	2225	MARCH, 1975
TK	AEDC	HWTB	VA352	OH4B	2099,V-01	FEB., 1975
TK	AEDC	HWTB	VA352	OH4B	2099,V-02	FEB., 1975
TK	AEDC	HWTB	VA352	OH4B	2099,V-03	FEB., 1975
V5	AEDC	HWTB	VA353	OH9	2251	JUNE, 1975
TS	AEDC	HWTB	VA354	OH11	2141	JUNE, 1975
V3	AEDC	HWTB	VA422	IA17B	2230	FEB., 1975
TR	AEDC	HWTB	VA422	IA17A	2156,V-01	AUGUST, 1975
TR	AEDC	HWTB	VA422	IA17A	2156,V-02	AUGUST, 1975
TR	AEDC	HWTB	VA422	IA17A	2156,V-03	AUGUST, 1975
VE	AEDC	HWTB	VA526/21BA	OH50A	2285	APRIL, 1976
4H	AEDC	HWTB	V2	OH103A	2420	IN PROCESS
VM	AEDC	HWTB	V41B-E9A	OH69	2321,V-01	AUGUST, 1978
VM	AEDC	HWTB	V41B-E9A	OH69	2321,V-02	AUGUST, 1978
4A	AEDC	HWTB	V41B-K3A	OH57A/B	2367	MAY, 1979
HT	AEDC	HWTB	V41B-R3A	OH56	2410	JUNE, 1979
4E	AEDC	HWTB	V41B-R4A	OH84A	2388	IN PROCESS

SPACE SHUTTLE FACILITY WIND TUNNEL SUMMARY

TEST CODE	FACILITY	SUBFACILITY	TEST NO.	NASA SERIES NO.	DMS-DR-	PUBLICATION DATE	
4M	AEDC	HWTB	V41B-V2C	OH103B	2427	IN PROCESS	
VY	AEDC	HWTB	41B-83A	OH25B	2366	MAY,	1977
TP	AEDC	HWTB	48A	LA42	2132	MAY,	1975
VO	AEDC	HWTB	524	OH52	2330	OCT.,	1976
V1	AEDC	HWTB	57A	OH49B	2222,V-01	OCT.,	1976
V1	AEDC	HWTB	57A	OH49B	2222,V-02	NOV.,	1976
VL	AEDC	HWTB	58A	OH50B	2358	JUNE,	1977
TW	AEDC	HWTB	71A	OA79	2196	MAY,	1975
V9	AEDC	HWTB	74A	OH39	2241,V-01	JULY,	1980
V9	AEDC	HWTB	74A	OH39	2241,V-02	JULY,	1980
V9	AEDC	HWTB	74A	OH39	2241,V-03	JULY,	1980
V9	AEDC	HWTB	74A	OH39	2241,V-04	JULY,	1980
VH	AEDC	HWTB	82A	OH54A	2301	MAY,	1976
VM	AEDC	HWTB	82A	OH54B	2342	JUNE,	1977
V6	AEDC	HWTB	83A	OH25A	2252	JULY,	1975
TN	AEDC	HWTC	VA474	OA77/78	2134,R-01	JAN.,	1975
TX	AEDC	HWTF	VA291	FH10	2197	OCT.,	1974
TO	AEDC	HWTF	VA489	OA81	2152,R-01	JAN.,	1976
TY	AEDC	HWTF	25A	TH1F	2218	SEPT.,	1977

SPACE SHUTTLE FACILITY WIND TUNNEL SUMMARY

TEST CODE	FACILITY	SUBFACILITY	TEST NO.	NASA SERIES NO.	DMS-DR-	PUBLICATION DATE
VA	AEDC	HWTF	28A	0A160	2247	JAN., 1976
VR	AEDC	PWT16T	431	0A232	2414,V-01	MAY, 1980
VR	AEDC	PWT16T	431	0A232	2414,V-02	MAY, 1980
4B	AEDC	PWT16T	470	1A105A	2398	IN PROCESS
4C	AEDC	PWT16T	470	1A156A	2403,V-01	IN PROCESS
4C	AEDC	PWT16T	470	1A156A	2403,V-02	IN PROCESS
4C	AEDC	PWT16T	470	1A156A	2403,V-03	IN PROCESS
4R	AEDC	PWT16T	505	1A132	2449	IN PROCESS
4N	AEDC	PWT16T	507	0A129	2434	DEC., 1979
4P	AEDC	PWT16T	517	1A182	2439	IN PROCESS
4Q	AEDC	PWT16T	519	1A183	2444,V-01	IN PROCESS
4Q	AEDC	PWT16T	519	1A183	2444,V-02	IN PROCESS
4Y	AEDC	PWT16T	572	0A253	2486	IN PROCESS
VP	AEDC	PWT4T	E3A	5A16F	2334	NOV., 1976
V8	AEDC	SWTA	A3A	1A111	2242,V-01	MARCH, 1976
V8	AEDC	SWTA	A3A	1A111	2242,V-02	MARCH, 1976
V7	AEDC	SWTA	A4A	1H41A	2240	APRIL, 1977
VF	AEDC	SWTA	A4A	1H41B	2295,V-01	SEPT., 1977

SPACE SHUTTLE FACILITY WIND TUNNEL SUMMARY

TEST CODE	FACILITY	SUBFACILITY	TEST NO.	NASA SERIES NO.	DMS-DR-	PUBLICATION DATE
VF	AEDC	SWTA	A4A	IH41B	2295,V-02	SEPT., 1977
VF	AEDC	SWTA	A4A	IH41B	2295,V-03	SEPT., 1977
VF	AEDC	SWTA	A4A	IH41B	2295,V-04	OCT., 1977
VF	AEDC	SWTA	A4A	IH41B	2295,V-05	OCT., 1977
VD	AEDC	SWTA	E1A	FH13	2276	JUNE, 1977
VI	AEDC	SWTA	J3A	IH47	2312,V-01	JUNE, 1977
VI	AEDC	SWTA	J3A	IH47	2312,V-02	JULY, 1977
VT	AEDC	SWTA	K1A	IA40	2293	DEC., 1977
VQ	AEDC	SWTA	K1A	IA142	2346,V-01	JAN., 1978
VQ	AEDC	SWTA	K1A	IA142	2346,V-02	JAN., 1978
VQ	AEDC	SWTA	K1A	IA142	2346,V-03	JAN., 1978
VX	AEDC	SWTA	P8A	IA143	2354,V-01	FEB., 1978
VX	AEDC	SWTA	P8A	IA143	2354,V-02	FEB., 1978
VX	AEDC	SWTA	P8A	IA143	2354,V-03	FEB., 1978
VX	AEDC	SWTA	P8A	IA143	2354,V-04	FEB., 1978
TJ	AEDC	SWTA	VA323	IA13	2062,V-01	AUGUST, 1975
TJ	AEDC	SWTA	VA323	IA13	2062,V-02	AUGUST, 1975
TJ	AEDC	SWTA	VA323	IA13	2062,V-03	AUGUST, 1975
TL	AEDC	SWTA	VA422	IA57	2112	NOV., 1974
TQ	AEDC	SWTA	VA422	IA61A	2143	FEB., 1976
V4	AEDC	SWTA	VA422/21AA	IA61B	2226	FEB., 1975

SPACE SHUTTLE FACILITY WIND TUNNEL SUMMARY

TEST CODE	FACILITY	SUBFACILITY	TEST NO.	NASA SERIES NO.	DMS-DR-	PUBLICATION DATE
VW	AEDC	SWTA	VA525/218A	OH49A	2355	JUNE, 1977
VZ	AEDC	SWTA	V41A-R2A	IH72	2372	IN PROCESS
4L	AEDC	SWTA	V41A-W5	IH85	2431,V-01	APRIL, 1980
4L	AEDC	SWTA	V41A-W5	IH85	2431,V-02	APRIL, 1980
4L	AEDC	SWTA	V41A-W5	IH85	2431,V-03	APRIL, 1980
4L	AEDC	SWTA	V41A-W5	IH85	2431,V-04	APRIL, 1980
4L	AEDC	SWTA	V41A-W5	IH85	2431,V-05	MAY, 1980
4L	AEDC	SWTA	V41A-W5	IH85	2431,V-06	MAY, 1980
4L	AEDC	SWTA	V41A-W5	IH85	2431,V-07	MAY, 1980
4L	AEDC	SWTA	V41A-W5	IH85	2431,V-08	APRIL, 1980
4K	AEDC	SWTA	V41A-20	FH15	2422	APRIL, 1979
4I	AEDC	SWTA	V41B-P5A	OA208/209	2415,V-01	JAN., 1980
4X	AEDC	SWTA	V41B-65	OH400	2472	MAY, 1980
4U	AEDC	SWTA	V41B-67	OH84B	2464	IN PROCESS
4V	AEDC	SWTA	V41B-67	OH105	2465	IN PROCESS
4W	AEDC	SWTA	V41B-67	IH102	2466	IN PROCESS
TU	AEDC	SWTA	60A	IA87	2192,V-01	JULY, 1975
TU	AEDC	SWTA	60A	IA87	2192,V-02	JULY, 1975
TV	AEDC	SWTA	71A	OA115	2198	JULY, '975
2Y	ARC		289-1	OA126A,B,C	2424,V-01	IN PROCESS

SPACE SHUTTLE FACILITY WIND TUNNEL SUMMARY

TEST CODE	FACILITY	SUBFACILITY	TEST NO.	NASA SERIES NO.	DMS-DR-	PUBLICATION DATE
2Y	ARC		289-1	0A126A,B,C	2424,V-02	IN PROCESS
3H	ARC		289-1	0A126A,B,C	2424,V-03	IN PROCESS
NF	ARC	11TWT			2255	JULY, 1975
EU	ARC	11TWT	014	1A19	2170,V-01	JUNE, 1975
EU	ARC	11TWT	014	1A19	2170,V-02	JUNE, 1975
EU	ARC	11TWT	014	1A19	2170,V-03	JUNE, 1975
ET	ARC	11TWT	019	1A81A	2169,V-01	JAN., 1976
ET	ARC	11TWT	019	1A81A	2169,V-02	JAN., 1976
ET	ARC	11TWT	019	1A81A	2169,V-03	JAN., 1976
ET	ARC	11TWT	019	1A81A	2169,V-04	JAN., 1976
ET	ARC	11TWT	019	1A81A	2169,V-05	JAN., 1976
ET	ARC	11TWT	019	1A81A	2169,V-06	JAN., 1976
ET	ARC	11TWT	019	1A81A	2169,V-07	JAN., 1976
E4	ARC	11TWT	023	1A80	2212,V-01	OCT., 1976
E4	ARC	11TWT	023	1A80	2212,V-02	OCT., 1976
E4	ARC	11TWT	023	1A80	2212,V-03	OCT., 1976
E4	ARC	11TWT	023	1A80	2212,V-04	OCT., 1976
NE	ARC	11TWT	072	1A72	2258,V-01	APRIL, 1977
NE	ARC	11TWT	072	1A72	2258,V-02	APRIL, 1977
NE	ARC	11TWT	072	1A72	2258,V-03	APRIL, 1977

SPACE SHUTTLE FACILITY WIND TUNNEL SUMMARY

TEST CODE	FACILITY	SUBFACILITY	TEST NO.	NASA SERIES NO.	DMS-DR-	PUBLICATION DATE
NE	ARC	11TWT	072	1A72	2258,V-04	APRIL, 1977
NE	ARC	11TWT	072	1A72	2258,V-05	APRIL, 1977
NE	ARC	11TWT	072	1A72	2258,V-06	APRIL, 1977
NE	ARC	11TWT	072	1A72	2258,V-07	APRIL, 1977
NE	ARC	11TWT	072	1A72	2258,V-08	APRIL, 1977
NE	ARC	11TWT	072	1A72	2258,V-09	APRIL, 1977
E8	ARC	11TWT	073	0A148	2254,V-01	JULY, 1976
E8	ARC	11TWT	073	0A148	2254,V-02	JULY, 1976
E8	ARC	11TWT	073	0A148	2254,V-03	JULY, 1976
E8	ARC	11TWT	073	0A148	2254,V-04	AUGUST, 1976
E8	ARC	11TWT	073	0A148	2254,V-05	AUGUST, 1976
E8	ARC	11TWT	073	0A148	2254,V-06	AUGUST, 1976
E8	ARC	11TWT	073	0A148	2254,V-07	AUGUST, 1976
E8	ARC	11TWT	073	0A148	2254,V-08	AUGUST, 1976
E8	ARC	11TWT	073	0A148	2254,V-09	SEPT., 1976
E8	ARC	11TWT	073	0A148	2254,V-10	SEPT., 1976
E8	ARC	11TWT	073	0A148	2254,V-11	SEPT., 1976
E8	ARC	11TWT	073	0A148	2254,V-12	SEPT., 1976
E8	ARC	11TWT	073	0A148	2254,V-13	SEPT., 1976
2K	ARC	11TWT	115	0A149A	2376,V-01	JAN., 1980
2K	ARC	11TWT	115	0A149A	2376,V-02	JAN., 1980

SP> 1: SHUTTLE FACILITY WIND TUNNEL SUMMARY

TEST CODE	FACILITY	SUBFACILITY	TEST NO.	NASA SERIES NO.	DMS-DR-	PUBLICATION DATE
2K	ARC	11TWT	115	OA149A	2376,V-03	JAN., 1980
2F	ARC	11TWT	118-1	OA145A	2380,V-01	IN PROCESS
2F	ARC	11TWT	118-1	OA145A	2380,V-02	IN PROCESS
2F	ARC	11TWT	118-1	OA145A	2380,V-03	IN PROCESS
2F	ARC	11TWT	118-1	OA145A	2380,V-04	IN PROCESS
2F	ARC	11TWT	118-1	OA145A	2380,V-05	IN PROCESS
2F	ARC	11TWT	118-1	OA145A	2380,V-06	IN PROCESS
2A	ARC	11TWT	187-1	OA175	2333,V-01	NOV., 1977
2A	ARC	11TWT	187-1	OA175	2333,V-02	DEC., 1977
2A	ARC	11TWT	187-1	OA175	2333,V-03	DEC., 1977
2B	ARC	11TWT	200-1	LA77	2344,V-01	JAN., 1980
2B	ARC	11TWT	200-1	LA77	2344,V-02	JAN., 1980
2E	ARC	11TWT	213-1	LA89	2353	IN PROCESS
2N	ARC	11TWT	228-1	IA144	2377	IN PROCESS
2R	ARC	11TWT	275-1	IA119	2404,V-01	IN PROCESS
2R	ARC	11TWT	275-1	IA119	2404,V-02	IN PROCESS
2R	ARC	11TWT	275-1	IA119	2404,V-03	IN PROCESS
2R	ARC	11TWT	275-1	IA119	2404,V-04	IN PROCESS
3L	ARC	11TWT	369-1	OS36/41	2458	IN PROCESS
3O	ARC	11TWT	380-1	OS42	2463	IN PROCESS
3S	ARC	11TWT	391	OS45	2470	IN PROCESS

SPACE SHUTTLE FACILITY WIND TUNNEL SUMMARY

TEST CODE	FACILITY	SUBFACILITY	TEST NO.	NASA SERIES NO.	DMS-DR-	PUBLICATION DATE
3U	ARC	11TWT	411-1,2,3	1A190A	2476	IN PROCESS
AA	ARC	11TWT	412-1	1A191	2378	IN PROCESS
3X	ARC	11TWT	427-1/427-	0A400	2482	IN PROCESS
AB	ARC	11TWT	436-2	0S52	2447	IN PROCESS
BL	ARC	11TWT	686	1A7	2024	AUGUST, 1973
EX	ARC	11TWT	705	0S8A/B	2179	NOV., 1977
B-	ARC	11TWT	707	1A9/0A12	2032,V-01	NOV., 1973
B-	ARC	11TWT	707	1A9/0A12	2032,V-02	NOV., 1973
B-	ARC	11TWT	707	1A9/0A12	2032,V-03	OCT., 1973
B-	ARC	11TWT	707	1A9/0A12	2032,V-04	DEC., 1973
B-	ARC	11TWT	707	1A9/0A12	2032,V-05	DEC., 1973
B-	ARC	11TWT	707	1A9/0A12	2032,V-06	DEC., 1973
B-	ARC	11TWT	707	1A9/0A12	2032,V-07	DEC., 1973
B-	ARC	11TWT	707	1A9/0A12	2032,V-08	DEC., 1973
B-	ARC	11TWT	707	1A9/0A12	2032,V-09	JAN., 1974
B-	ARC	11TWT	707	1A9/0A12	2032,V-10	JAN., 1974
B-	ARC	11TWT	707	1A9/0A12	2032,V-11	JAN., 1974
B-	ARC	11TWT	707	1A9/0A12	2032,V-12	JAN., 1974
B-	ARC	11TWT	707	1A9/0A12	2032,V-13	MARCH, 1974
B-	ARC	11TWT	707	1A9/0A12	2032,V-14	MARCH, 1974
B-	ARC	11TWT	707	1A9/0A12	2032,V-15	MARCH, 1974

SPACE SHUTTLE FACILITY WIND TUNNEL SUMMARY

TEST CODE	FACILITY	SUBFACILITY	TEST NO.	NASA SERIES NO.	DMS-DR-	PUBLICATION DATE	
B-	ARC	11TWT	707	1A9/0A12	2032,V-16	APRIL,	1974
B-	ARC	11TWT	707	1A9/0A12	2032,V-17	APRIL,	1974
B-	ARC	11TWT	707	1A9/0A12	2032,V-18	MAY,	1974
B2	ARC	11TWT	716	0A22A	2130	MAY,	1975
B1	ARC	11TWT	716	1A14A	2084,V-01	FEB.,	1975
B1	ARC	11TWT	716	1A14A	2084,V-02	MARCH,	1975
B1	ARC	11TWT	716	1A14A	2084,V-03	APRIL,	1975
B1	ARC	11TWT	716	1A14A	2084,V-04	APRIL,	1975
B1	ARC	11TWT	716	1A14A	2084,V-05	APRIL,	1975
B1	ARC	11TWT	716	1A14A	2084,V-06	APRIL,	1975
B1	ARC	11TWT	716	1A14A	2084,V-07	APRIL,	1975
B1	ARC	11TWT	716	1A14A	2084,V-08	APRIL,	1975
B1	ARC	11TWT	716	1A14A	2084,V-09	MAY,	1975
B1	ARC	11TWT	716	1A14A	2084,V-10	MAY,	1975
B1	ARC	11TWT	716	1A14A	2084,V-11	MAY,	1975
EJ	ARC	11TWT	747	0A53A	2128,V-01	AUGUST,	1974
EJ	ARC	11TWT	747	0A53A	2128,V-02	AUGUST,	1974
NX	ARC	11,97,87UN	074-1	SA11FA/B/C	2331	IN PROCESS	
E7	ARC	11,97,87UN	094	0A161A/B/C	2245,V-01	SEPT.,	1976
E7	ARC	11,97,87UN	094	0A161A/B/C	2245,V-02	OCT.,	1976

SPACE SHUTTLE FACILITY WIND TUNNEL SUMMARY

TEST CODE	FACILITY	SUBFACILITY	TEST NO.	NASA SERIES NO.	DMS-DR-	PUBLICATION DATE
NQ	ARC	11,97,87UN	144-1	IA135A/B/C	2306	IN PROCESS
25	ARC	11,97,87UN	705-1	IS1A/B/C	2401	JAN., 1978
NG	ARC	12PT	078	OA159	2265	JAN., 1976
NC	ARC	12PT	086	LA65	2246	JULY, 1976
NJ	ARC	12PT	135-1	LA66	2281	SEPT., 1976
NS	ARC	12PT	180-1	OA173	2304	IN PROCESS
20	ARC	12PT	218-1	OA101	2405,V-01	SEPT., 1978
20	ARC	12PT	218-1	OA101	2405,V-02	SEPT., 1978
20	ARC	12PT	218-1	OA101	2405,V-03	SEPT., 1978
20	ARC	12PT	218-1	OA101	2405,V-04	SEPT., 1978
20	ARC	12PT	218-1	OA101	2405,V-05	SEPT., 1978
20	ARC	12PT	218-1	OA101	2405,V-06	OCT., 1978
E9	ARC	14-TWT	080	CA23A	2243	JAN., 1976
NH	ARC	14-TWT	120	CA23B	2275,V-01	MAY, 1976
NH	ARC	14-TWT	120	CA23B	2275,V-02	MAY, 1976
NZ	ARC	14-TWT	121	CA13	2332	OCT., 1977
NY	ARC	14-TWT	143-1	IA137	2316	SEPT., 1976
NL	ARC	14-TWT	150-1	OA220	2286	OCT., 1976
BK	ARC	14-TWT	711	IA8	2173	JULY, 1974

SPACE SHUTTLE FACILITY WIND TUNNEL SUMMARY

TEST CODE	FACILITY	SUBFACILITY	TEST NO.	NASA SERIES NO.	DMS-DR-	PUBLICATION DATE
3Y	ARC	22TWT	041.154.11	054A	2450	MAY, 1979
2C	ARC	22TWT	167-1	0532	2339	IN PROCESS
3T	ARC	22TWT	382-1	0A252	2473	IN PROCESS
20	ARC	3.5HWT		1H51A	2393	IN PROCESS
B1	ARC	3.5HWT	147	0A4	2007	MARCH, 1973
BS	ARC	3.5HWT	157	0A11A	2044	OCT., 1973
BU	ARC	3.5HWT	158	0H2A	2035	APRIL, 1974
BX	ARC	3.5HWT	160	0A11B	2059	JUNE, 1974
BY	ARC	3.5HWT	163	0A58	2060	JUNE, 1974
B5	ARC	3.5HWT	167	0A73	2082	DEC., 1973
B6	ARC	3.5HWT	168	0A23	2071	SEPT., 1974
B7	ARC	3.5HWT	169	1A10	2078	JAN., 1974
B9	ARC	3.5HWT	171	0H10	2085	IN PROCESS
B8	ARC	3.5HWT	172	1H15	2098	OCT., 1974
ED	ARC	3.5HWT	173	0H15	2385	SEPT., 1977
EG	ARC	3.5HWT	175	1A15	2102	APRIL, 1974
EF	ARC	3.5HWT	176	0A87	2115	MARCH, 1974
EH	ARC	3.5HWT	177	0H44	2386	SEPT., 1977
EI	ARC	3.5HWT	178	1H3	2136.V-01	MAY, 1975
EI	ARC	3.5HWT	178	1H3	2136.V-02	MAY, 1975

SPACE SHUTTLE FACILITY WIND TUNNEL SUMMARY

TEST CODE	FACILITY	SUBFACILITY	TEST NO.	NASA SERIES NO.	DMS-DR-	PUBLICATION DATE	
E1	ARC	3.5HWT	178	1H3	2136.V-03	MAY.	1975
E1	ARC	3.5HWT	178	1H3	2136.V-04	MARCH.	1976
EM	ARC	3.5HWT	180	1A16	2124	MAY.	1974
ND	ARC	3.5HWT	182	0H43	2250	JULY.	1975
EQ	ARC	3.5HWT	183	0H6	2151	NOV..	1975
EN	ARC	3.5HWT	185	1H20	2148.V-01	JUNE.	1975
EN	ARC	3.5HWT	185	1H20	2148.V-02	JUNE.	1975
EP	ARC	3.5HWT	187	0A36	2162	NOV..	1974
EQ	ARC	3.5HWT	190	0A98	2167	AUGUST.	1975
ES	ARC	3.5HWT	191	1A18	2160	MARCH.	1975
EW	ARC	3.5HWT	194	0A83	2177	MARCH.	1975
EV	ARC	3.5HWT	195	1H28	2180.V-01	SEPT..	1976
EV	ARC	3.5HWT	195	1H28	2180.V-02	SEPT..	1976
EY	ARC	3.5HWT	196	TA9F	2181	NOV..	1974
EZ	ARC	3.5HWT	198	0H38	2171.V-01	JAN..	1976
EZ	ARC	3.5HWT	198	0H38	2171.V-02	JAN..	1976
EZ	ARC	3.5HWT	198	0H38	2171.V-03	JAN..	1976
E2	ARC	3.5HWT	199	0H26	2193	OCT..	1977
E3	ARC	3.5HWT	200	1H27	2210	JUNE.	1979
NB	ARC	3.5HWT	211	1H48	2248	APRIL.	1976
NT	ARC	3.5HWT	215	FH14	2313.V-01	MARCH.	1977

SPACE SHUTTLE FACILITY WIND TUNNEL SUMMARY

TEST CODE	FACILITY	SUBFACILITY	TEST NO.	NASA SERIES NO.	DMS-DR-	PUBLICATION DATE
NT	ARC	3.5HWT	215	FH14	2313,V-02	MARCH, 1977
NT	ARC	3.5HWT	215	FH14	2313,V-03	MARCH, 1977
NV	ARC	3.5HWT	216	OH53A	2317	JAN., 1980
2D	ARC	3.5HWT	222	IH68	2357	IN PROCESS
3Z	ARC	3.5HWT	227	IH100	2418	OCT., 1978
2P	ARC	3.5HWT	230	IH99	2452	IN PROCESS
2V	ARC	3.5HWT	233-1	IH73	2407	IN PROCESS
2W	ARC	3.5HWT	234-1	IH90	2412	IN PROCESS
2X	ARC	3.5HWT	235	OH58	2417	JUNE, 1979
3A	ARC	3.5HWT	237	FH16	2423	JAN., 1980
3C	ARC	3.5HWT	239	IH51B	2429	IN PROCESS
3F	ARC	3.5HWT	241	IH51C	2448,V-01	IN PROCESS
3F	ARC	3.5HWT	241	IH51C	2448,V-02	IN PROCESS
3N	ARC	3.5HWT	244	IH51D	2461	IN PROCESS
3P	ARC	3.5HWT	245	IH103	2467	IN PROCESS
3Q	ARC	3.5HWT	246	OH84C	2468	IN PROCESS
3R	ARC	3.5HWT	247	OH105B	2469	IN PROCESS
3W	ARC	3.5HWT	250	IH104	2480	IN PROCESS
NA	ARC	40SWT	462	OA100	2261	IN PROCESS
NO	ARC	40SWT	479	OA174	2302	IN PROCESS

SPACE SHUTTLE FACILITY WIND TUNNEL SUMMARY

TEST CODE	FACILITY	SUBFACILITY	TEST NO.	NASA SERIES NO.	DMS-DR-	PUBLICATION DATE
2M	ARC	40SWT	500	0A237	2375	IN PROCESS
EB	ARC	66SWT	630	1A29	2077.V-01	MAY, 1974
EB	ARC	66SWT	630	1A29	2077.V-02	MAY, 1974
EB	ARC	66SWT	630	0A63	2077.V-03	MAY, 1974
BH	ARC	66SWT	650	0A3	2009	JUNE, 1973
BT	ARC	66SWT	706	0A43	2050	NOV., 1973
ER	ARC	66SWT	709	0A59	2159.V-01	OCT., 1974
ER	ARC	66SWT	709	0A59	2159.V-02	OCT., 1974
E5	ARC	87SWT	044	1A82C	2219.V-01	APRIL, 1976
E5	ARC	87SWT	044	1A82C	2219.V-02	APRIL, 1976
2K	ARC	87SWT	115-1	0A149B/C	2370.V-01	APRIL, 1980
2K	ARC	87SWT	115-1	0A149B/C	2370.V-02	APRIL, 1980
2K	ARC	87SWT	115-1		2370.V-03	MAY, 1980
2H	ARC	87SWT	118-1	0A145C	2389	IN PROCESS
21	ARC	87SWT	119	0A221B/C	2360.V-01	IN PROCESS
21	ARC	87SWT	119	0A221B/C	2360.V-02	IN PROCESS
3G	ARC	87SWT	318-1	0A146	2445	IN PROCESS
BZ	ARC	87SWT	710	1A12C	2065.V-01	APRIL, 1975
BZ	ARC	87SWT	710	1A120	2065.V-02	APRIL, 1975

SPACE SHUTTLE FACILITY WIND TUNNEL SUMMARY

TEST CODE	FACILITY	SUBFACILITY	TEST NO.	NASA SERIES NO.	DMS-DR-	PUBLICATION DATE	
BZ	ARC	87SWT	710	IA12C	2065.V-03	APRIL.	1975
EL	ARC	87SWT	747	0A53C	2185	SEPT..	1974
ET	ARC	97SWT	019	IA81B	2194.V-01	NOV..	1975
ET	ARC	97SWT	019	IA81B	2194.V-02	DEC..	1975
ET	ARC	97SWT	019	IA81B	2194.V-03	DEC..	1975
ET	ARC	97SWT	019	IA81B	2194.V-04	DEC..	1975
ET	ARC	97SWT	019	IA81B	2194.V-05	DEC..	1975
E6	ARC	97SWT	044	IA82B	2231.V-01	APRIL.	1976
E6	ARC	97SWT	044	IA82B	2231.V-02	APRIL.	1976
E1	ARC	97SWT	052	IA110	2189	MARCH.	1975
NK	ARC	97SWT	113	IS2A/B	2284.V-01	MAY.	1977
NK	ARC	97SWT	113	IS2A/B	2284.V-02	MAY.	1977
2K	ARC	97SWT	115-1	0A149B/C	2370.V-01	APRIL.	1980
2K	ARC	97SWT	115-1	0A149B/C	2370.V-02	APRIL.	1980
2K	ARC	97SWT	115-1		2370.V-03	MAY.	1980
2G	ARC	97SWT	118-1	0A145B	2364	IN PROCESS	
21	ARC	97SWT	119-1	0A221B/C	2360.V-01	IN PROCESS	
21	ARC	97SWT	119-1	0A221B/C	2360.V-02	IN PROCESS	
NN	ARC	97SWT	166-1	0513	2287	IN PROCESS	
2U	ARC	97SWT	242-1	IA105B	2413	IN PROCESS	

ORIGINAL PAGE IS
OF POOR QUALITY

SPACE SHUTTLE FACILITY WIND TUNNEL SUMMARY

TEST CODE	FACILITY	SUBFACILITY	TEST NO.	NASA SERIES NO.	DMS-DR-	PUBLICATION DATE
3D	ARC	97SWT	246-1	IA138	2438	IN PROCESS
2T	ARC	97SWT	272	IA156B	2408.V-01	JULY, 1980
2T	ARC	97SWT	272	IA156B	2408.V-02	JULY, 1980
2T	ARC	97SWT	272	IA156B	2408.V-03	JULY, 1980
2Z	ARC	97SWT	282-1	OA251B/C	2421.V-01	IN PROCESS
2Z	ARC	97SWT	282-1	OA251B/C	2421.V-02	IN PROCESS
3E	ARC	97SWT	283-1	IA131B	2462	IN PROCESS
3K	ARC	97SWT	347-1	IA184	2456.V-01	SEPT., 1980
3K	ARC	97SWT	347-1	IA184	2456.V-02	SEPT., 1980
3M	ARC	97SWT	369-1	0537	2459	IN PROCESS
VH	ARC	97SWT	411-1,2,3	IA190B	2483	IN PROCESS
BJ	ARC	97SWT	616	IA2	2013	FEB., 1974
BV	ARC	97SWT	710	IA12B	2048	JULY, 1974
B4	ARC	97SWT	716	OA22B	2131	MAY, 1975
B3	ARC	97SWT	716	IA14B	2129.V-01	MAY, 1975
B3	ARC	97SWT	716	IA14B	2129.V-02	MAY, 1975
EK	ARC	97SWT	747	OA53B	2178	AUGUST, 1974
UQ	CALSPAN	LT	195-100	IH75	2453	JUNE, 1979
UG	CALSPAN	4BHST	173-100	OH12	2164.V-02	JAN., 1976

SPACE SHUTTLE FACILITY WIND TUNNEL SUMMARY

TEST CODE	FACILITY	SUBFACILITY	TEST NO.	NASA SERIES NO.	DMS-DR-	PUBLICATION DATE
UL	CALSPAN	48HST	181	IH5	2308	OCT., 1976
UI	CALSPAN	48HST	184-120	OA93	2238	NOV., 1976
UH	CALSPAN	48HST	184-220	OA113	2234	JULY, 1975
UJ	CALSPAN	48HST	185-131	IH33	2249	JUNE, 1979
UM	CALSPAN	48HST	189	IH43	2319	JUNE, 1979
UG	CALSPAN	48HST	173-100	OH12	2164,V-01	JAN., 1976
UG	CALSPAN	48HST	173-100	OH12	2164,V-03	DEC., 1975
UF	CALSPAN	8TWT	T14-053	IA36	2064,V-01	DEC., 1975
UF	CALSPAN	8TWT	T14-053	IA36	2064,V-02	DEC., 1975
UK	CALSPAN	8TWT	T18-103	LA70	2269	SEPT., 1976
UN	CALSPAN	8TWT	T18-111	LA82	2336	IN PROCESS
UP	CALSPAN	8TWT	T18-113	LA103	2374	IN PROCESS
UO	CALSPAN	96HST	131	OH66	2359	MARCH, 1978
GN	JSC		56-A-76	OH78	2371	MAY, 1978
5A	JSC		61-A-78	OH79	2443	JUNE, 1979
PX	LARC	CFHT	100	LA25	2126	CANCELLED
QI	LARC	CFHT	101	OA85	2113	OCT., 1974

SPACE SHUTTLE FACILITY WIND TUNNEL SUMMARY

TEST CODE	FACILITY	SUBFACILITY	TEST NO.	NASA SERIES NO.	DMS-DR-	PUBLICATION DATE
QU	LARC	CFHT	102	LA35	2127	JULY, 1974
HH	LARC	CFHT	104	LA47	2191	JULY, 1975
QQ	LARC	CFHT	105	LA34	2328	AUGUST, 1976
QK	LARC	CFHT	107	1A58	2133	JULY, 1974
H1	LARC	CFHT	108	1A60	2137,V-01,R-01	SEPT., 1974
H2	LARC	CFHT	109	OA105	2137,V-02	JULY, 1974
QJ	LARC	CFHT	110	CA90	2149	AUGUST, 1975
HD	LARC	CFHT	112	OH51	2368	APRIL, 1977
HL	LARC	CFHT	113	OA82	2195	FEB., 1975
HX	LARC	CFHT	114	LA57	2454,V-03	APRIL, 1979
JA	LARC	CFHT	118	MA22	2267,V-01	JUNE, 1976
JA	LARC	CFHT	118	MA22	2267,V-02	JUNE, 1976
JA	LARC	CFHT	118	MA22	2267,V-03	JUNE, 1976
JA	LARC	CFHT	118	MA22	2267,V-04	JUNE, 1976
K2	LARC	CFHT	130	LA93	2383	IN PROCESS
OZ	LARC	CFHT	85	LA3	2031	JUNE, 1973
OT	LARC	CFHT	89	MA4	2008	JAN., 1973
OT	LARC	CFHT	89	MA4	2008,R-01	MAY, 1973
PD	LARC	CFHT	96	LA11	2066	NOV., 1973
QD	LARC	CFHT	97	LA32	2168	MAY, 1974
QN	LARC	CFHT	98	LA31	2047	FEB., 1974

SPACE SHUTTLE FACILITY WIND TUNNEL SUMMARY

TEST CODE	FACILITY	SUBFACILITY	TEST NO.	NASA SERIES NO.	DMS-DR-	PUBLICATION DATE
PF	LARC	CFHT	99	LA13	2135	CANCELLED
OS	LARC	CF4	121-137	OH45	2109	JAN., 1976
HO	LARC	CF4	220-237	LA53	2213	IN PROCESS
J5	LARC	CF4	267-268	LA78	2311	AUGUST, 1976
OM	LARC	CF4	97-118	IH18	2110	JAN., 1976
OE	LARC	HNT	28	IH19	2157	DEC., 1975
OD	LARC	HNT	30-31	OA89	2214	APRIL, 1975
HW	LARC	LARC	699	LA56	2224	MARCH, 1978
P7	LARC	LTPT	130/135	LA9	2056	NOV., 1973
PP	LARC	LTPT	138	OA17	2058	MARCH, 1974
PU	LARC	LTPT	141	LA23	2070	OCT., 1973
J5	LARC	LTPT	214	LA36B	2292	IN PROCESS
J2	LARC	LTPT	219	LA61	2278	CANCELLED
JE	LARC	LTPT	227	LA73A	2298	MAY, 1978
JT	LARC	LTPT	228	LA61B	2300	OCT., 1976
JP	LARC	LTPT	229	LA81	2296,V-01	AUGUST, 1976
JP	LARC	LTPT	229	LA81	2296,V-02	AUGUST, 1976

SPACE SHUTTLE FACILITY WIND TUNNEL SUMMARY

TEST CODE	FACILITY	SUBFACILITY	TEST NO.	NASA SERIES NO.	DMS-DR-	PUBLICATION DATE
KA	LARC	LTPT	246	LA104	2387	CANCELLED
KU	LARC	LTPT	255	LA127	2441	IN PROCESS
HR	LARC	TDT	246	OS7	2363	APRIL, 1977
HR	LARC	TDT	246	OS6	2365	APRIL, 1977
OQ	LARC	UPWT	1002	MA5	2001	NOV., 1972
OV	LARC	UPWT	1007	OA7	2014	MARCH, 1973
PB	LARC	UPWT	1015	LA7B	2052	NOV., 1973
PE	LARC	UPWT	1023/1034	LABA	2054	NOV., 1973
PM	LARC	UPWT	1031	MA7	2069	JAN., 1974
PN	LARC	UPWT	1035	OA44	2057	NOV., 1974
PS	LARC	UPWT	1040	LABC	2090	MARCH, 1974
PQ	LARC	UPWT	1041	IH16	2166	JULY, 1975
PV	LARC	UPWT	1043	OA70	2073	MARCH, 1974
PG	LARC	UPWT	1046/1049	LA14A	2106	JAN., 1975
QS	LARC	UPWT	1056/1073	IA42A	2119	AUGUST, 1974
Q2	LARC	UPWT	1057	OA20A	2083	FEB., 1974
Q2	LARC	UPWT	1057	OA20C	2147	MAY, 1974
Q3	LARC	UPWT	1059	IH4	2138,V-01	MAY, 1976
Q3	LARC	UPWT	1059	IH4	2138,V-02	JULY, 1976

SPACE SHUTTLE FACILITY WIND TUNNEL SUMMARY

TEST CODE	FACILITY	SUBFACILITY	TEST NO.	NASA SERIES NO.	DMS-DR-	PUBLICATION DATE
Q3	LARC	UPWT	1059	IH4	2138,V-03	JULY, 1976
Q3	LARC	UPWT	1059	IH4	2138,V-04	JULY, 1976
Q4	LARC	UPWT	1063	IA35	2108	MAY, 1974
Q7	LARC	UPWT	1071	IH1	2153	OCT., 1977
H5	LARC	UPWT	1074	LA43A/B	2199	OCT., 1976
QY	LARC	UPWT	1075	LA39	2188	IN PROCESS
H9	LARC	UPWT	1087	SA25F	2150	MARCH, 1975
H8	LARC	UPWT	1088/1119	IA44	2206	MAY, 1975
HG	LARC	UPWT	1092//1117	LA46A/B	2228	IN PROCESS
Q2	LARC	UPWT	1097	OA20B	2163	SEPT., 1974
HJ	LARC	UPWT	1101	LA49	2182	APRIL, 1977
HA	LARC	UPWT	1115	SH12F	2216	AUGUST, 1975
J4	LARC	UPWT	1118	LA63A	2270	DEC., 1975
HB	LARC	UPWT	1145	LA45A/B	2297	NOV., 1976
JC	LARC	UPWT	1147 /1132	LA71A/B	2271	FEB., 1977
J4	LARC	UPWT	1151	LA63B	2279	JUNE, 1976
JK	LARC	UPWT	1152	IA94A	2323	FEB., 1977
JH	LARC	UPWT	1173	LA75	2318,V-01	DEC., 1976
JH	LARC	UPWT	1173	LA75	2318,V-02	DEC., 1976
JW	LARC	UPWT	1177	IA94B	2324	FEB., 1977
KD	LARC	UPWT	1194	LA101	2390	JUNE, 1980

SPACE SHUTTLE FACILITY WIND TUNNEL SUMMARY

TEST CODE	FACILITY	SUBFACILITY	TEST NO.	NASA SERIES NO.	DMS-DR-	PUBLICATION DATE
KR	LARC	UPWT	1207 LG2	LA124	2426	JUNE, 1978
KI	LARC	UPWT	1212	LA110	2396	DEC., 1977
KK	LARC	UPWT	1217	LA114	2399	NOV., 1977
KS	LARC	UPWT	1243	LA125	2432	IN PROCESS
KV	LARC	UPWT	1267	1A180	2457	IN PROCESS
KX	LARC	UPWT	1270	LA122	2446	IN PROCESS
7A	LARC	UPWT	1299	LA131	2478,V-01	AUGUST, 1980
7A	LARC	UPWT	1299	LA131	2478,V-02	AUGUST, 1980
7A	LARC	UPWT	1299	LA131	2478,V-03	AUGUST, 1980
P1	LARC	UPWT	995 /1014	LA4	2033	JULY, 1973
J7	LARC	V/STOL	114	OA155	223[illegible]	IN PROCESS
JF	LARC	V/STOL	129	CA8	2290,V-01	NOV., 1976
JF	LARC	V/STOL	129	CA8	2290,V-02	NOV., 1976
JF	LARC	V/STOL	129	CA8	2290,V-03	NOV., 1976
JU	LARC	16TT	312	OA224	2329	IN PROCESS
KP	LARC	16TT	325	OA270B/C	2419	SEPT., 1978
KN	LARC	16TT	326	OA270A	2430	IN PROCESS
KW	LARC	16TT	341	LA132	2471	IN PROCESS
KY	LARC	16TT	342	LA140	2475	AUGUST, 1980

SPACE SHUTTLE FACILITY WIND TUNNEL SUMMARY

TEST CODE	FACILITY	SUBFACILITY	TEST NO.	NASA SERIES NO.	DMS-DR-	PUBLICATION DATE
PH	LARC	20HT6	441	LA15	2079	APRIL, 1974
HN	LARC	20HT6	458	LA52	2220	IN PROCESS
KZ	LARC	20HT6	6546	LA141A/B	2477	IN PROCESS
ON	LARC	22HT	405	LA22	2034	JULY, 1973
OS	LARC	22HT	409	MA2	2003	APRIL, 1973
OY	LARC	22HT	411	LA2	2023	JUNE, 1973
P2	LARC	22HT	413	LA5	2036	AUGUST, 1973
PT	LARC	22HT	415	OA72	2092	NOV., 1974
QC	LARC	22HT	422	OA88	2125	SEPT., 1974
H3	LARC	22HT	426	LA40	2176	MAY, 1978
HE	LARC	22HT	431	OA109	2205	MAY, 1975
JB	LARC	22HT	439	LA68	2256	IN PROCESS
JY	LARC	22HT	445	LA85	2343	IN PROCESS
PZ	LARC	26TBT	544	OS2	2067	AUGUST, 1973
QT	LARC	26TBT	545	OS1	2094	MARCH, 1974
HF	LARC	26TBT	547	IS4	2146	APRIL, 1974
H7	LARC	60VS	R3289	OA99	2172	OCT., 1974

SPACE SHUTTLE FACILITY WIND TUNNEL SUMMARY

TEST CODE	FACILITY	SUBFACILITY	TEST NO.	NASA SERIES NO.	DMS-DR-	PUBLICATION DATE
JN	LARC	710HST	999	LA80	2299	JUNE, 1977
KL	LARC	8TPT		LA115	2409	IN PROCESS
OU	LARC	8TPT	626	LA1	2002	MARCH, 1973
P4	LARC	8TPT	643	LA6	2040	AUGUST, 1973
P5	LARC	8TPT	644	LA7A	2041	OCT., 1973
PC	LARC	8TPT	648	LA17	2046	AUGUST, 1973
PS	LARC	8TPT	655	SA2FA	2088	JULY, 1974
P5	LARC	8TPT	657/660	LA7B	2091	MARCH, 1975
Q1	LARC	8TPT	661	OA25	2089	APRIL, 1974
QB	LARC	8TPT	667	IA41	2118	AUGUST, 1974
QZ	LARC	8TPT	668	OA106	2120	JAN., 1975
QX	LARC	8TPT	669	LA38A	2121	CANCELLED
QX	LARC	8TPT	676	LA38B	2239	IN PROCESS
H6	LARC	8TPT	677	LA44	2200	OCT., 1976
HI	LARC	8TPT	680	LA48	2184	APRIL, 1977
HV	LARC	8TPT	684	LA51	2183	FEB., 1977
HU	LARC	8TPT	686	OA116	2186	JAN., 1975
HM	LARC	8TPT	687	OA102	2229	FEB., 1975
HC	LARC	8TPT	693	IA43	2204	MAY, 1975
HZ	LARC	8TPT	703	LA59	2233	JUNE, 1977

SPACE SHUTTLE FACILITY WIND TUNNEL SUMMARY

TEST CODE	FACILITY	SUBFACILITY	TEST NO.	NASA SERIES NO.	DMS-DR-	PUBLICATION DATE
J1	LARC	8TPT	704	LA60A	2259	CANCELLED
J9	LARC	8TPT	714	LA69	2257	SEPT.. 1977
JB	LARC	8TPT	715	LA60B	2260	IN PROCESS
J3	LARC	8TPT	717	LA62	2264	DEC.. 1975
JC	LARC	8TPT	740	LA72	2309	NOV.. 1976
JJ	LARC	8TPT	749	IA93	2326.V-01	JAN.. 1977
JJ	LARC	8TPT	749	IA93	2326.V-02	FEB.. 1977
J6	LARC	8TPT	759	LA91	2352	JAN.. 1978
K1	LARC	8TPT	764	LA92	2362	IN PROCESS
K9	LARC	8TPT	769	LA99	2373	IN PROCESS
KC	LARC	8TPT	776	LA105	2379	IN PROCESS
KE	LARC	8TPT	779	IA244	2391	IN PROCESS
KF	LARC	8TPT	780	LA107	2381	CANCELLED
KH	LARC	8TPT	780	LA113	2397	IN PROCESS
KJ	LARC	8TPT	786	LA111	2395	JAN.. 1978
KM	LARC	8TPT	804	LA116	2411	IN PROCESS
KQ	LARC	8TPT	813	LA117	2425	IN PROCESS
		8VDHT				
OX	LARC	8VDHT	3619/3670	OH40	2049	JULY. 1973
P3	LARC	8VDHT	3778//3855	OH41	2075	OCT.. 1973
P9	LARC	8VDHT	4050//4079	OH41A	2076	OCT.. 1973

SPACE SHUTTLE FACILITY WIND TUNNEL SUMMARY

TEST CODE	FACILITY	SUBFACILITY	TEST NO.	NASA SERIES NO.	DMS-DR-	PUBLICATION DATE	
PA	LARC	8VDHT	4080/4105	OH42A	2101	JAN.,	1974
PP	LARC	8VDHT	4502-4601	OH46	2350	APRIL,	1977
PB	LARC	8VDHT	624	LA15	2043	JUNE,	1973
PC	LARC	8VDHT	644	OH13	2096	AUGUST,	1974
PR	LARC	8VDHT	646/647	IH17	2105	SEPT.,	1976
PL	LARC	8VDHT	648	OH14	2117	SEPT.,	1976
PK	LARC	8VDHT	653	LA20	2107	MARCH,	1975
GG	LERC	SPF		OH64	2288	NOV.,	1977
GE	LERC	10SWT	035	SA6F	2161	FEB.,	1975
GF	LERC	10SWT	038	IH34	2282	APRIL,	1978
GK	LERC	10SWT	041	IH39	2435	OCT.,	1978
GV	LERC	10SWT	042	OA234	2400	IN PROCESS	
GZ	LERC	10SWT	044	IH83	2440	FEB.,	1979
GI	LERC	10SWT	045	IH11	2428	IN PROCESS	
DE	LTV	HSWT	458	IA4	2015,V-01	JULY,	1973
DE	LTV	HSWT	458	IA4	2015,V-02	JULY,	1973
FD	LTV	HSWT	488	OA84	2037	SEPT.,	1974
QB	LTV	HSWT	498	LA28	2280	JAN.,	1976

SPACE SHUTTLE FACILITY WIND TUNNEL SUMMARY

TEST CODE	FACILITY	SUBFACILITY	TEST NO.	NASA SERIES NO.	DMS-UR-	PUBLICATION DATE
HY	LTV	HSWT	512	LA58	2215	FEB., 1976
FD	LTV	HSWT	552	LA67	2266	JULY, 1976
FE	LTV	HSWT	559	CA26	2273.V-01	MAY, 1976
FE	LTV	HSWT	559	CA26	2273.V-02	JUNE, 1976
FE	LTV	HSWT	559	CA26	2273.V-03	JUNE, 1976
FE	LTV	HSWT	559	CA26	2273.V-04	JUNE, 1976
FE	LTV	HSWT	559	CA26	2273.V-05	JUNE, 1976
FI	LTV	HSWT	573	LA76	2305.V-01	JUNE, 1977
FI	LTV	HSWT	573	LA76	2305.V-02	JUNE, 1977
FR	LTV	HSWT	611	LA109	2334	IN PROCESS
KY	LTV	HSWT	646	LA128	2442	IN PROCESS
FS	LTV	HSWT	742	LA144	2484	IN PROCESS
FG	LTV	LSWT	422	MA14	2283	NOV., 1976
DD	LTV	1520SWT	S-081	MA1	2004	NOV., 1972
IE	MSFC	HPWT	033	SA29F	2207	JULY, 1976
IF	MSFC	HPWT	034	SA13F	2277	JULY, 1976
IT	MSFC	HPWT	039	SA31F	2369	IN PROCESS

SPACE SHUTTLE FACILITY WIND TUNNEL SUMMARY

TEST CODE	FACILITY	SUBFACILITY	TEST NO.	NASA SERIES NO.	DMS-DR-	PUBLICATION DATE
1U	MSFC	IPBF	027	OH8	2382	NOV., 1977
6C	MSFC	TWT	668	IA603-1	2416	IN PROCESS
72	MSFC	14TWT	545	IA1B	2010	MAY, 1973
79	MSFC	14TWT	554	SA1F	2012	APRIL, 1973
76	MSFC	14TWT	555	OA1	2005	NOV., 1972
77	MSFC	14TWT	556	IA1A	2006	DEC., 1972
78	MSFC	14TWT	558	MA9F	2011	APRIL, 1973
80	MSFC	14TWT	565	SA3F	2025	MAY, 1973
81	MSFC	14TWT	566	IA31F	2026	SEPT., 1973
82	MSFC	14TWT	567	IA32FB	2027,V-01	SEPT., 1975
82	MSFC	14TWT	567	IA32FB	2027,V-02	OCT., 1975
82	MSFC	14TWT	567	IA32FB	2027,V-03	OCT., 1975
84	MSFC	14TWT	568	OA47	2029	MAY, 1973
83	MSFC	14TWT	570	IA31FB	2028,V-01	DEC., 1974
83	MSFC	14TWT	570	IA31FB	2028,V-02	DEC., 1974
85	MSFC	14TWT	571	IA6A	2039	MARCH, 1974
86	MSFC	14TWT	572	SA5F	2051	AUGUST, 1973
90	MSFC	14TWT	573	IA31FC	2072	JAN., 1974
87	MSFC	14TWT	574	OA48	2055,V-01	SEPT., 1973

ORIGINAL PAGE IS OF POOR QUALITY

SPACE SHUTTLE FACILITY WIND TUNNEL SUMMARY

TEST CODE	FACILITY	SUBFACILITY	TEST NO.	NASA SERIES NO.	DMS-DR-	PUBLICATION DATE	
87	MSFC	14TWT	574	OA48	2055.V-02	SEPT..	1973
87	MSFC	14TWT	574	OA48	2055.V-03	NOV..	1973
91	MSFC	14TWT	578	SA10F	2087	SEPT..	1974
88	MSFC	14TWT	579/580	IA37	2063	NOV..	1973
92	MSFC	14TWT	581	OA49	2095	SEPT..	1974
1B	MSFC	14TWT	582	IS6A	2158	OCT..	1976
99	MSFC	14TWT	583	TA1F	2145	OCT..	1974
98	MSFC	14TWT	584	IA52	2042	MARCH.	1974
93	MSFC	14TWT	585	IA37B	2093	MARCH.	1974
97	MSFC	14TWT	587	FA4	2142	AUGUST.	1974
96	MSFC	14TWT	588	IA53	2123	JAN..	1975
94	MSFC	14TWT	589	IA62F	2103	APRIL.	1974
95	MSFC	14TWT	590/595	SA26F	2111	NOV..	197.
1C	MSFC	14TWT	594	IA33	2174.V-01	NOV..	1975
1C	MSFC	14TWT	594	IA33	2174.V-02	NOV..	1975
1C	MSFC	14TWT	594	IA33	2174.V-03	NOV..	1975
1A	MSFC	14TWT	596	TA2F	2165.V-01	DEC..	1975
1A	MSFC	14TWT	596	TA2F	2165.V-02	DEC..	1975
1A	MSFC	14TWT	596	TA2F	2165.V-03	DEC..	1975
1A	MSFC	14TWT	596	TA2F	2165.V-04	JAN..	1976
1A	MSFC	14TWT	596	TA2F	2165.V-05	DEC..	1975

SPACE SHUTTLE FACILITY WIND TUNNEL SUMMARY

TEST CODE	FACILITY	SUBFACILITY	TEST NO.	NASA SERIES NO.	DMS-DR-	PUBLICATION DATE
ID	MSFC	14TWT	599	OA108	2190	JUNE, 1975
IL	MSFC	14TWT	600	FA14	2274	FEB., 1976
II	MSFC	14TWT	603	SA28F	2244	AUGUST, 1977
IH	MSFC	14TWT	604	SA8F	2223	JULY, 1975
IM	MSFC	14TWT	607	OA131	2232	JUNE, 1975
IG	MSFC	14TWT	609	TA3F	2208,V-01	JAN., 1976
IG	MSFC	14TWT	609	TA3F	2208,V-02	JAN., 1976
IK	MSFC	14TWT	610	IA71	2227	NOV., 1975
IJ	MSFC	14TWT	611	SA30F	2235	NOV., 1975
IO	MSFC	14TWT	620	SA14FA	2325	NOV., 1976
IN	MSFC	14TWT	622	IA125	2253	JAN., 1976
IP	MSFC	14TWT	640	SA14FB	2310,V-01	AUGUST, 1977
IP	MSFC	14TWT	640	SA14FB	2310,V-02	AUGUST, 1977
IQ	MSFC	14TWT	641 /646	IA140A/B	2335	DEC., 1979
IR	MSFC	14TWT	645	SA21F	2345	OCT., 1978
IU	MSFC	14TWT	649	IA181	2406	IN PROCESS
IX	MSFC	14TWT	652	FA25	2437	FEB., 1979
IY	MSFC	14TWT	655	FA27	2460	IN PROCESS
IZ	MSFC	14TWT	656	FA28	2474	IN PROCESS
6B	MSFC	14TWT	665	IA602-1	2481	IN PROCESS

SPACE SHUTTLE FACILITY WIND TUNNEL SUMMARY

TEST CODE	FACILITY	SUBFACILITY	TEST NO.	NASA SERIES NO.	DMS-DR-	PUBLICATION DATE
DF	NRLAD	LSWT	689	0A2	2016	APRIL. 1973
DG	NRLAD	LSWT	690	0A5	2017	APRIL. 1973
DH	NRLAD	LSWT	693	1A3	2018	JUNE. 1973
DI	NRLAD	LSWT	694	0A6	2019	JUNE. 1973
DJ	NRLAD	LSWT	696	0A9	2020	JUNE. 1973
DK	NRLAD	LSWT	698	0A10	2022	JUNE. 1973
DL	NRLAD	LSWT	699	0A45	2021.V-01	NOV.. 1973
DL	NRLAD	LSWT	699	0A45	2021.V-02	OCT.. 1973
DM	NRLAD	LSWT	700	0A14	2030	AUGUST. 1973
DN	NRLAD	LSWT	701	0A16	2038	FEB.. 1974
DO	NRLAD	LSWT	704	0A18	2045	SEPT.. 1973
DP	NRLAD	LSWT	705	0A21A	2053.V-01	DEC.. 1973
DP	NRLAD	LSWT	705	0A21B	2053.V-02	FEB.. 1974
DS	NRLAD	LSWT	708	0A71A	2068	DEC.. 1973
DT	NRLAD	LSWT	709	0A57A	2074	OCT.. 1974
DQ	NRLAD	LSWT	711	0A69	2081.V-01	JAN.. 1976
DQ	NRLAD	LSWT	711	0A69	2081.V-02	JAN.. 1976
DU	NRLAD	LSWT	712	0A71C	2086	FEB.. 1974
DV	NRLAD	LSWT	713	0A57B	2080.V-01	OCT.. 1974
DV	NRLAD	LSWT	713	0A57B	2080.V-02	OCT.. 1974
DW	NRLAD	LSWT	715	0A62A	2097	JUNE. 1974

SPACE SHUTTLE FACILITY WIND TUNNEL SUMMARY

TEST CODE	FACILITY	SUBFACILITY	TEST NO.	NASA SERIES NO.	DMS-DR-	PUBLICATION DATE
DX	NRLAD	LSWT	716	0A86	2114	JUNE, 1974
DZ	NRLAD	LSWT	717	0A62B	2104,V-01	JULY, 1974
DX	NRLAD	LSWT	717	0A62B	2104,V-02	AUGUST, 1974
F2	NRLAD	LSWT	719	0A37	2140	SEPT., 1974
F5	NRLAD	LSWT	721	0A110	2155	SEPT., 1974
F6	NRLAD	LSWT	724	0A118	2139	OCT., 1974
F8	NRLAD	LSWT	726	0A119A	2187	NOV., 1974
F9	NRLAD	LSWT	730	0A119B	2203	APRIL, 1975
FA	NRLAD	LSWT	731	0A123	2202	APRIL, 1975
FB	NRLAD	LSWT	736	0A124	2209	JUNE, 1975
FC	NRLAD	LSWT	737	0A143	2221	JULY, 1975
FF	NRLAD	LSWT	751	0A163	2289,V-01	DEC., 1976
FF	NRLAD	LSWT	751	0A163	2289,V-02	DEC., 1976
FF	NRLAD	LSWT	751	0A163	2289,V-03	DEC., 1976
FF	NRLAD	LSWT	751	0A163	2289,V-04	DEC., 1976
FG	NRLAD	LSWT	752	0A172	2294	IN PROCESS
FJ	NRLAD	LSWT	754	0A176	2314	IN PROCESS
FL	NRLAD	LSWT	757	0A228	2322	IN PROCESS
FM	NRLAD	LSWT	759	0A236	2337	DEC., 1979
FN	NRLAD	LSWT	764	0A238	2351	IN PROCESS
FO	NRLAD	LSWT	766	0A223	2402	NOV., 1978

SPACE SHUTTLE FACILITY WIND TUNNEL SUMMARY

TEST CODE	FACILITY	SUBFACILITY	TEST NO.	NASA SERIES NO.	DMS-DR-	PUBLICATION DATE	
FP	NRLAD	LSWT	768	OA163B	2361,V-01	OCT.,	1977
FP	NRLAD	LSWT	768	OA163B	2361,V-02	OCT.,	1977
FQ	NRLAD	LSWT	775	OA250	2392	DEC.,	1977
DR	NRLAD	7TWT	276	OA68	2061	DEC.,	1973
DY	NRLAD	7TWT	278	OA91	2116	APRIL,	1974
F3	NRLAD	7TWT	280	IA69	2122	DEC.,	1974
F4	NRLAD	7TWT	281	IA68	2144	NOV.,	1974
F7	NRLAD	7TWT	282	IA70	2175,V-01	DEC.,	1974
F7	NRLAD	7TWT	282	IA70	2175,V-02	DEC.,	1974
F7	NRLAD	7TWT	282	IA70	2175,V-03	DEC.,	1974
FK	NRLAD	7TWT	297	IA141	2315	AUGUST,	1976
GJ	NSWC		1310	OA171	2433	OCT.,	1979
JM	NSWC	8A	1275	LA79	2291	IN PROCESS	
GM	TBCA	BTWT	1431	CA5	2211,V-01	SEPT.,	1975
GN	TBCA	BTWT	1431	CA20	2217,V-01	JAN.,	1976
GM	TBCA	BTWT	1431	CA5	2211,V-02	SEPT.,	1975
GN	TBCA	BTWT	1431	CA20	2217,V-02	JAN.,	1976

SPACE SHUTTLE FACILITY WIND TUNNEL SUMMARY

TEST CODE	FACILITY	SUBFACILITY	TEST NO.	NASA SERIES NO.	DMS-DR-	PUBLICATION DATE
GM	TBCA	BTWT	1431	CA5	2211,V-03	SEPT., 1975
GN	TBCA	BTWT	1431	CA20	2217,V-03	JAN., 1976
GP	TBCA	BTWT	1472	CA6	2262,V-01	NOV., 1976
GP	TBCA	BTWT	1472	CA6	2262,V-02	NOV., 1976
GQ	TBCA	BTWT	1477	CA9	2268,V-01	JUNE, 1979
GQ	TBCA	BTWT	1477	CA9	2268,V-02	JUNE, 1979
GQ	TBCA	BTWT	1477	CA9	2268,V-03	JUNE, 1979
GQ	TBCA	BTWT	1477	CA9	2268,V-04	JUNE, 1979
GQ	TBCA	BTWT	1477	CA9	2268,V-05	JUNE, 1979
GV	TBCA	BTWT	1490/1493	CS4/5	2341	OCT., 1976
GR	TBCA	BTWT	1496 /1497	CA14A	2307	IN PROCESS
GL	UW	LSWT	1136	CA3	2201	IN PROCESS
GO	UW	LSWT	1146	CA11	2236	DEC., 1975
GU	UW	LSWT	1170	CS3	2338	NOV., 1976
GS	UW	LSWT	1173	CA15A	2347,V-01	JUNE, 1980
GT	UW	LSWT	1178	CA15B	2348,V-01	JUNE, 1980
GW	UW	LSWT	1184	CA17	2349	NOV., 1977