NASA
National Aeronautics and
Space Administration

Lyndon B. Johnson Space Center
Houston, Texas 77058

DMS-DR-2467
NASA CR 160,834

RESULTS OF AEROTHERMODYNAMIC HEAT TRANSFER TESTS ON 0.0175-SCALE MODELS 60-OT AND 56-0/60T CONDUCTED IN THE NASA/AMES RESEARCH CENTER 3.5-FOOT HYPERSONIC WIND TUNNEL (IH103)

SPACE SHUTTLE AEROTHERMODYNAMIC DATA REPORT

2S596 0002
D100332S
#30

Data Management SERVICES
HUNTSVILLE ELECTRONICS DIVISION CHRYSLER CORPORATION

June 1981

DMS-DR-2467
NASA CR 160,834

RESULTS OF AEROTHERMODYNAMIC HEAT TRANSFER TESTS ON 0.0175-SCALE MODELS 60-OT AND 56-0/60T CONDUCTED IN THE NASA/AMES RESEARCH CENTER 3.5-FOOT HYPERSONIC WIND TUNNEL (IH103)

by

J. Marroquin
Rockwell International, Space Transportation System
Development and Production Division

Prepared under NASA Contract Number NAS9-16283

by

Data Management Services
Chrysler Huntsville Electronics Division/
Slidell Engineering Office
New Orleans, Louisiana 70189

for

Engineering Analysis Division

Johnson Space Center
National Aeronautics and Space Administration
Houston, Texas

WIND TUNNEL TEST SPECIFICS:

Test Number:	ARC 3.5 HWT - 245
NASA Series Number:	IH103
Model Number:	60-OT, and 56-0/60T
Test Dates:	July 7, 1979 through July 26, 1979
Occupancy Hours:	216

FACILITY COORDINATOR:

J. G. Marvin
Mail Stop 229-1
Ames Research Center
Moffett Field, CA 94035

Phone: (415) 965-5390

PROJECT ENGINEER:

J. Marroquin
Mail Code AC07
Rockwell International
Space Systems Group
12214 Lakewood Boulevard
Downey, CA 90241

Phone: (213) 922-3785

DATA MANAGEMENT SERVICES:

Prepared by: Liaison - D. W. Hersey, S. R. Houlihan
Operations - B. J. Burst

Reviewed by: G. W. Klug

Approved: J. L. Glynn, Manager
Data Operations

Concurrence: N. D. Kemp, Manager
Data Management Services

Chrysler Huntsville Electronics Division/Slidell Engineering Office assumes no responsibility for the data presented other than display characteristics.

RESULTS OF AEROTHERMODYNAMIC HEAT TRANSFER TESTS ON 0.0175-SCALE MODELS 60-OT and 56-0/60T CONDUCTED IN THE NASA/AMES RESEARCH CENTER 3.5-FOOT HYPERSONIC WIND TUNNEL (IH103)

by

J. Marroquin
Rockwell International Space Transportation System
Development and Production Division

ABSTRACT

An experimental investigation was performed in the NASA/Ames Research Center 3.5-foot hypersonic wind tunnel (Test IH103) to obtain aerodynamic heat transfer data on the orbiter fuselage on model 56-0/60T and on the orbiter fuselage, wing, vertical tail and OMS pod for model 60-OT during the second stage configuration.

Data were obtained at a nominal Mach number of 5.25 and Reynolds numbers of .6 and 1.0 x 10^6/foot. Angles-of-attack of 0, $\pm 5^\circ$ and $\pm 10^\circ$ and sideslip angles of 0, -3°, -5°, and -9° were obtained.

The models utilized for test IH103 were 0.0175-scale thin-skin thermocouple models of the Rockwell International vehicle 5 configuration. Model 60-0 was constructed of 17-4 PH stainless steel. The nominal skin thickness was 0.03 inches at the instrumented areas. The 56-0 model used for a portion of the test was model number 2B of the material "LH" 56-0 phase-

change paint models. The left fuselage side was modified to accept a thin-skin insert contoured to the vehicle lines (VL70-000140C) and made of 17-4 PH stainless steel with a nominal skin thickness of 0.020 inches at the instrument locations. The model 60 External Tank was used with both orbiter models and was not instrumented for these tests.

TABLE OF CONTENTS

	Page
ABSTRACT	iii
INDEX OF MODEL FIGURES	2
INTRODUCTION	3
NOMENCLATURE	4
CONFIGURATIONS INVESTIGATED	8
INSTRUMENTATION	10
TEST FACILITY DESCRIPTION	11
TEST PROCEDURES	13
DATA REDUCTION	14
REFERENCES	18
TABLES	
I. TEST CONDITIONS	19
II. DATASET/RUN NUMBER COLLATION SUMMARY	20
III. MODEL DIMENSIONAL DATA	24
IV. THERMOCOUPLE LOCATIONS	35
V. THERMOCOUPLE PLUG HOOKUP SCHEDULE	62
FIGURES	
MODEL	69
APPENDIX	
TABULATED SOURCE DATA	79

INDEX OF MODEL FIGURES

Figure Number		Page Number
1.	Model Coordinate System	69
2.	Orbiter General Arrangement	70
3.	Model 60-OT Thermocouple Locations	
	a. Nose and Canopy T/C Locations (Top View)	71
	b. Nose and Canopy T/C Locations (Side View)	72
	c. Lower Surface T/C Locations	73
	d. Upper Surface T/C Locations	74
	e. Aft Fuselage T/C Locations	75
	f. OMS Pods T/C Locations	76
	g. Vertical Tail T/C Locations	77
4.	Model 56-Ø Thermocouple Locations	78

INTRODUCTION

An experimental investigation was performed to determine aerodynamic heat transfer data on the orbiter fuselage on model 56-0/60T and on the orbiter fuselage, wing, vertical tail, and OMS pods for model 60-OT during the second stage configuration. The test articles were 0.0175-scale representations of the orbiter/tank configuration 5 (model 60-OT) and the orbiter/tank to the vehicle lines (VL70-000140C) for model 56-0/60T. The tests were performed in the NASA/Ames Research Center 3.5-foot hypersonic wind tunnel to simulate second stage flight conditions. Nominal test conditions were as follows:

MACH NO.	P_t (PSI)	T_t (°R)	Re/ft.
5.25	100	1500	1.0×10^6
5.25	100	2000	$.6 \times 10^6$

With the tunnel flowing, the model was inserted with a one second time on centerline. Data were recorded at angles-of-attack of 0°, ±5°, and ±10° and at sideslip angles of 0°, -3°, -5°, and -9°. A total of 375 thermocouples were utilized on model 60-OT, and 75 thermocouples were used on model 56-0/60T. All instrumentation was located on the orbiter models.

A combined total of 131 runs in approximately 216 occupancy hours were made with 6 repeats due to tunnel temperature or Beckman problems. This test was made during the period of July 7, 1979 through July 26, 1979. A summary of configurations tested and test conditions for each run is given in Table II.

NOMENCLATURE

SYMBOL	MNEMONIC	DESCRIPTION
b		thickness of model skin
δ_{BF}	BDFLAP	body flap deflection angle, degrees
C		specific heat of model skin material
C_o, C_1, C_2		constants in curve fit for C over model wall temperature range
c_p		specific heat of air stream (perfect gas value)
CHAN	CHAN	recording system channel
δ_e	ELEVON	elevon deflection angle, degrees
H_{aw}	HAW	adiabatic wall enthalpy
H_t	HT	freestream total enthalpy
H_{w_i}	HW	enthalpy based on model wall temperature for given thermocouple location at initial time
h	H	heat transfer coefficient at model wall for given thermocouple location
h_s	HS	stagnation-point heat transfer coefficient for reference sphere
h/h_s(X.XXX)	H/HREF (R=X.XXX)	ratio of model heat transfer coefficient to heat transfer coefficient of reference sphere for H_{aw}/H_t =X.XXX (1.000, 0.900, 0.850)
L	LENGTH	model reference length
M_∞, M	MACH	freestream Mach number
	PHI	radial location of thermocouple, degrees
	PINF	freestream static pressure
P_t	PT	freestream total pressure

NOMENCLATURE (Continued)

SYMBOL	MNEMONIC	DESCRIPTION
$\dot{q}_i$	Q, QDOT	heat transfer rate at model wall for given thermocouple location at initial time
$\dot{q}_s$	QS, QREF	stagnation-point heat transfer rate for reference sphere at initial time
R_s	RS	reference sphere radius at model scale equivalent to 0.305 m (1 ft.) for full-scale vehicle
Re_∞/ft	RN/FT	freestream Reynolds number per foot
Re_∞,L	REL	freestream Reynolds number based on model reference length, L
δ_{SB}	SPDBRK	speedbrake deflection angle, degrees
St(X.XXX)	STN NO R=X.XXX	Stanton number based on freestream flow conditions and the model heat transfer coefficient for H_{aw}/H_t = X.XXX (1.000, 0.900, 0.850)
T		temperature
	TINF	freestream static temperature
T_t	TT	freestream total temperature
T_{w_i}	TW	model wall temperature for given thermocouple location at initial time
T/C	T/C NO. XNNN (in Tab Data)	thermocouple number, where $X = \begin{cases} 0, \text{ no alphanumeric suffix on T/C No.} \\ 1, \text{ alphanumeric suffix of C in Table IV} \\ 2, \text{ alphanumeric suffix of A in Table IV} \end{cases}$
t		time
t_i	TIME	initial time (before model insertion into flow) extrapolated from $f(T_w)$ vs. time
u		velocity
	VINF	freestream velocity
W		density of model skin material

NOMENCLATURE (Continued)

SYMBOL	MNEMONIC	DESCRIPTION
X/L	XB/LB	longitudinal location on orbiter, percent of body length
X_o	XO	full scale longitudinal location on orbiter, measured from a point 235 inches (full scale) forward of the orbiter nose
X_oMS	XO MS	model scale longitudinal location on orbiter, measured from a point 235 inches (full scale) forward of the orbiter nose
X/C_V	XV/CV	chordwise location on vertical tail, percent of vertical tail chord
X/C	XW/CW	chordwise location on wing, percent of wing chord
Y_o	YO	full scale lateral location on orbiter, measured from orbiter centerline
Y_oMS	YO MS	model scale lateral location on orbiter, measured from orbiter centerline
Z_o	ZO	full scale vertical location on orbiter, measured from centerline of external tank
Z_oMS	ZO MS	model scale vertical location on orbiter, measured from centerline of external tank
Z/b_v	ZV/BV	spanwise location on vertical tail, percent of vertical tail span
2Y/b	2Y/BW	spanwise location on wing, percent of wing semi-span
α		model angle of attack, degrees
β		model angle of sideslip, degrees
μ		viscosity of air
ρ	RHO	density of air

NOMENCLATURE (Concluded)

SUBSCRIPTS	DESCRIPTION
aw	adiabatic wall
i	initial value before model insertion into tunnel flow
n	nozzle
O	orbiter
PG	perfect gas (calorically and thermally perfect gas)
s	reference sphere
t	freestream total condition
T	external tank
w	wall
∞	freestream
1	conditions upstream of shock
2	conditions downstream of shock

CONFIGURATIONS INVESTIGATED

The 60-OT model is a 0.0175-scale thin-skin thermocouple model of the Rockwell International vehicle 5 configuration. This configuration reflects Shuttle Configuration Control VC72-000002F. The model was instrumented with 600 thirty-gauge thermocouples of which 375 were used; of these, 225 were iron-Constantan and 150 were Chromel-Constantan. Thermocouple locations are shown in Figure 3.

The model was constructed of 17-4 PH stainless steel. The nominal skin thickness is 0.030-inch at the instrumented area. Model components defining the configuration tested are:

B_{62}	fuselage
C_{12}	canopy
M_{16}	OMS pods
W_{116}	wing
E_{52}	elevon
V_8	vertical
R_{18}	rudder
F_{10}	bodyflap
T_{38}	external tank (spike nose)

The second model tested was model 56-0, model number 2B of the material "LH" phase change paint models. The left fuselage side was modified to accept a thin-skin insert contoured to the vehicle lines VL70-000140C.

The insert is constructed from 17-4 PH stainless steel with a nominal skin thickness of 0.020 inches. The model was instrumented with 80 thirty-gauge Chromel-Constantan thermocouples of which 75 were used. Thermocouple locations are presented in Figure 4.

Model 56-0 components are defined as follows:

B_{62}	fuselage
C_{12}	canopy
M_{16}	OMS pods
W_{127}	wing
E_{52}	elevon
V_{30}	vertical
F_{10}	bodyflap

The model 60 external tank (T_{38}) was used with this model. Dimensional details for all components are given in Table III.

INSTRUMENTATION

The thin-skin model 60-0 is instrumented with 600 thirty-gauge thermocouples of which 375 were used; of these, 225 were iron-Constantan (identified by a number only) and 150 were Chromel-Constantan thermocouples (identified by a number and letter suffix of A or C). A new thermocouple location added for this test has the A suffix whereas the letter C designates the location of a previously existing thermocouple which was repaired with Chromel-Constantan wire. The thermocouples were spot welded to the model inner surface at the locations given in Figure 3, and Tables IV and V. The 375 thermocouples were connected to 25 plugs with 15 thermocouples per plug. These plugs were stowed inside and aft of the tunnel. Two thermocouple junction boxes were installed on the thermocouple board. One was iron-Constantan (Box 1) and the other Chromel-Constantan (Box 2). The Constantan leads from each junction box were doubled to the same Constantan plug in the terminal board. The first three Iron-Constantan constant sets (100, 200 and 300) were plugged to Box 1, and the constant sets 500 and 600 (both Chromel-Constantan) were plugged to Box 2. Thus, all thermocouple changes were made by plug changes inside the tunnel at the terminal board.

Model 56-0 is instrumented with 80 thirty-gauge Chromel-Constantan (C.S. 400) thermocouples, of which 75 were used. Each thermocouple had 46 feet of lead so that it could be hooked up directly to the terminal board located at the west end of the test section. No plugs were required. Thermocouple locations are given in Figure 4.

TEST FACILITY DESCRIPTION

The NASA/Ames 3.5-Foot Hypersonic Wind Tunnel is a closed-circuit blow-down-type tunnel capable of operating at nominal Mach numbers of 5, 7, and 10 at pressures to 1800 psia and temperatures to 3400°R for run times to four minutes. The major components of the facility include a gas storage system where the test gas is stored at 3000 psi, a storage heater filled with aluminum-oxide pebbles capable of heating the test gas to 3400°R, axisymmetric contoured nozzles with exit diameters of 42 inches for generating the desired Mach number, and a 900,000 ft^3 vacuum storage system which operates to pressures of 0.3 psia. The test section itself is an open-jet type enclosed within a chamber approximately 12-feet in diameter and 40-feet in length, arranged transversally to the flow direction.

A model support system is provided that can pitch models through an angle-of-attack range of -20 to +18 degrees, in a vertical plane, about a fixed point of rotation on the tunnel centerline. This rotation point is adjustable from 1 to 5 feet from the nozzle exit plane. The model normally is out of the test stream (strut centerline 37-inches from tunnel centerline) until the tunnel test conditions are established after which it is inserted. Insertion time is adjustable to as little as 1/2 second and models may be inserted at any strut angle.

TEST FACILITY DESCRIPTION (Concluded)

A high-speed, analog-to-digital data acquisition system is used to record test data on magnetic tape. The present system is equipped to measure and record the outputs from 80 transducers in addition to 20 channels of tunnel parameters.

TEST PROCEDURES

The models were mounted at various α and β combinations to the tunnel quick-insert support mechanism. This mechanism injected the model into the air stream when steady-state test conditions were established and retracted the model at the completion of data acquisition. The model injection time, time on tunnel centerline, and retraction time were each set at about 1 second to give a total test duration of about 3 seconds. The nominal test conditions are given in Table I.

The model wall temperature along with the tunnel conditions were recorded on magnetic tape at 0.7 seconds intervals during the test duration of about 3 seconds. The heat transfer data were reduced using the techniques given in the data reduction section of the report. The combination of 375 model thermocouples, a 75 thermocouple input limit to the data acquisition system per run, and the number of different model configurations necessitated 25 different thermocouple plug hookup schedules for this test as given in Table V.

DATA REDUCTION *

All test data were reduced at the NASA Ames Research Center using the data reduction techniques outlined below. The thermocouple data were reduced using the one-dimensional, thin-wall equation:

$$\dot{q} = WCb \frac{dT_w}{dt} = h\ (H_{aw} - H_w) \equiv hT_t\left(\frac{H_{aw}}{H} - \frac{H_w}{H}\right) \tag{1}$$

which neglects heat conduction losses.

Assuming that W and h are constant and

$$C = C_o + C_1T_w + C_2T_w^2 \text{ for } T_w \text{ ranges} \tag{2}$$

the integration of equation (1) for $t = t_i$ to t and $T_w = T_{w_i}$ to T_w yields the linear equation:

$$f(T_w) = -\ell n\left(\frac{T'_{aw}-T_w}{T'_{aw}-T_{w_i}}\right) - \left[\frac{C_1}{C'_{aw}} + \frac{C_2}{C'_{aw}}\left(T'_{aw} + \frac{T_w+T_{w_i}}{2}\right)\right](T_w - T_{w_i})$$

$$= \frac{hc_p}{WC'_{aw}b}(t - t_i) \tag{3}$$

where it is defined that:

$$T'_{aw} \equiv \frac{H_{aw}}{c_p} \equiv \frac{H_{aw}}{H_t}\frac{H_t}{c_p} \geq (T_{aw})_{PG} \tag{4}$$

and

$$C'_{aw} \quad C_0 + C_1\ T'_{aw} + C_2\ T'^2_{aw} \tag{5}$$

$\neq$ specific heat at adiabatic wall temperature.

*Data Reduction section provided by William K. Lockman, NASA Ames Research Center

The form of Equation (3) is $f(T_w) = mt + a$ where m is the slope and a is the intercept for a straight line if heat conduction errors are negligible. Thus, deviations from a straight line can indicate heat conduction effects.

The slope, m, of $f(T_w)$ vs t from Equation (3) is computed by a least-squares, straight-line fit over a finite time interval (approximately one second) beginning when the model reaches uniform tunnel flow. The value of the heat transfer coefficient, h, is then determined from:

$$h = \frac{WC'_{aw}b}{c_p} m \tag{6}$$

Using this value of h, the heat transfer rate is evaluated at the initial time, t_i, when the model is isothermal at the initial wall enthalpy, H_{w_i}

$$\dot{q} = \dot{q}_i = h\ (H_{aw} - H_{w_i}) \equiv hH_t \left(\frac{H_{aw}}{H_t} - \frac{H_{wi}}{H_t}\right) \tag{7}$$

where H_{aw}/H_t is the same value used to evaluate h. The resultant value of q is independent of the value of H_{aw}/H_t used for both the h and $\dot{q}$ evaluations.

The reference sphere heating is also evaluated at the initial wall enthalpy by the method of Fay and Riddell.

$$\dot{q}_s = h_s\ (H_t - H_{w_i}) \equiv h_s\ H_t \left(1.0 - \frac{H_{wi}}{H_t}\right) \tag{8}$$

The model-to-sphere ratio of heat transfer coefficients is then determined from Equations (7) and (8) as

$$\frac{h}{h_s} = \frac{\dot{q}_i}{\dot{q}_s}\left[\frac{1.0 - H_{w_i}/H_t}{H_{aw}/H_t - H_{w_i}/H_t}\right] \tag{9}$$

where $\dot{q}_i$ is constant for all values of H_{aw}/H_t. To determine h/h_s for various values of H_{aw}/H_t, the particular value of H_{aw}/H_t is substituted into Equation (9).

The Stanton number is defined as

$$St \equiv \frac{h}{\rho u} = \frac{\dot{q}_i}{\rho u(H_{aw} - H_{w_i})} \tag{10}$$

where for freestream conditions, $\rho u = \rho_\infty V_\infty$.

The calculations of the model heating, reference sphere heating, and Reynolds number included the corrections of NACA report 1135 (Figure 2) for calorically imperfect, thermally perfect air. Keyes' equation for viscosity was also used for the sphere heating and Reynolds number computations:

$$\mu = \frac{0.0232 \times 10^{-6} T^{0.5}}{1 + \frac{220}{T} \times 10^{-9/T}} \tag{11}$$

where the units for T and μ are ^{o}R and lb-sec/ft, respectively.

Material Properties

The instrumented areas of the model were constructed of 17-4 PH stainless steel. The material thermal properties necessary for thin wall thermocouple data reduction are listed below.

Material density: $W = 490\ lb/ft^3$

Material specific heat: $C = 0.0797 + 5.556 \times 10^{-5}\ T\ \frac{BTU}{lbm\text{-}^{o}R}$

REFERENCES

1. Fay, J. A. and Riddell, F. R.: Theory of Stagnation Point Heat Transfer in Dissociated Air. J. Aeron. Sci., Vol. 25, No. 1, dated February 1958, pp. 73-85.

2. Ames Research Staff: Equations, Tables, and Charts for Compressible Flow, NASA Report 1135, 1953.

3. Bertram, Mitchel H.: Comment on "Viscosity of Air." J. Spacecraft Rockets, Vol. 4, No. 2, February 1967, pp. 287-288.

4. SD78-SH-0034, "Pretest Information for Testing the 0.0175-Scale Thin Skin Thermocouple Model 60-OTS in the NASA/ARC 3.5-Foot Hypersonic Wind Tunnel, Test IH-90," dated January 12, 1978.

5. STS79-0254, "Pretest Information for Testing the 0.0175-Scale Thin Skin Thermocouple Model 60-OT, 56-0/60-T in the NASA/ARC 3.5 Foot Hypersonic Wind Tunnel Test IH103," dated June 8, 1979.

TABLE I.

TEST : IH103 | DATE :

TEST CONDITIONS

MACH NUMBER	REYNOLDS NUMBER (per ft) x 10^6	DYNAMIC PRESSURE (pounds/sq. inch)	STAGNATION TEMPERATURE (degrees Rankine)
5.3	.6	100	2000
5.3	1.0	100	1500

BALANCE UTILIZED: _____

	CAPACITY:	ACCURACY:	COEFFICIENT TOLERANCE:
NF			
SF			
AF			
PM			
RM			
YM			

COMMENTS:

TABLE II

TEST: IH103 (ARC 3.5 HWT 245)

DATA SET RUN NUMBER COLLATION SUMMARY

DATE:

DATA SET IDENTIFIER	CONFIGURATION	α	β	Se	SeF	SsB	Re/FT	M	CONSTANT SET * 100	200	300	400	500	600
R3P$01	60-ØT	0	0	0	0	0	1.0	5.25	25	61	60		85	84
02		-5							26	62	59		86	83
03		5							27	63	58		87	82
04		10							28	64	57		88	81
05		0	-5						29	68	69		76	77
06		-5							30	67	70		75	78
07		5							31	66	71		74	79
08		10							32	65	72		73	80
09		0	-3						34	51	48		92	93
10		-5							35	52	47		91	94
11		5							36	46	49		90	95
12		10							33	45	50		89	96
13		0	-9						39	41	53		101	100
14		-5							105	42	54		102	99
15		5							37	43	55		103	98
16		10							38	44	56		104	97

TEST RUN NUMBERS

1 7 13 19 25 31 37 43 49 55 61 67 75 76

COEFFICIENTS IDVAR (1) IDVAR (2) NDV

α OR β SCHEDULES

* - See Table V for specification of Constant Set.

- See attached Index of 4th Character of Dataset ID.

TABLE II (Continued)

TEST: IH103 (ARC 3.5HWT 245) — DATA SET RUN NUMBER COLLATION SUMMARY — DATE:

DATA SET IDENTIFIER	CONFIGURATION	α	β	δe	S_{BF}	S_{SB}	Re/ft	M	CONSTANT SET 100	200	300	400	500	600				TEST RUN NUMBERS
R3P 17	60 - ØT	-10	-9	0	0	0	1.0	5.25	106	107	108		109	110				
18			-3						115	114	113		112	111				
19			-5						116	117	118		119	120				
20			0						125	124	123		122	121				
21		0	0				0.6		127	128	129		130	131				
22	56Ø/60T	-5	0				1.0					6						
23		0										3						
24		5										7						
25		10										8						
26		10	-5									12						
27		5										11						
28		0										9						
29		-5										10						
30		-5	-3									14						
31		0										13						
32		5										15						
33		10										16						

1 7 13 19 25 31 37 43 49 55 61 67 75 76

COEFFICIENTS — IDVAR (1) — IDVAR (2)

α OR β SCHEDULES

TABLE II (Continued)

TEST: IH103 (ARC 3.5 HWT 245)

DATA SET. RUN NUMBER COLLATION SUMMARY

DATE:

DATA SET IDENTIFIER	CONFIGURATION	α	β	δ_e	δ_{BF}	δ_{SB}	Re/FT	M		CONSTANT SET 100	200	300	400	500	600				TEST RUN NUMBERS
R3P#34	56φ/60T	10	-9	0	0	0	1.0	5.25					20						
35		5											19						
36		0											17						
37		-5											18						
38		-10	0										24						
39			-5										23						
40			-3										22						
41			-9										21						

1 7 13 19 25 31 37 43 49 55 61 67 75 76

COEFFICIENTS IDVAR (1) IDVAR (2) NDV

α OR β SCHEDULES

TABLE II (Concluded)

INDEX OF 4TH CHARACTER IN DATASET ID

A, B, C	-	60-OT FUSELAGE
D, E	-	60-OT LOWER NOSE
F	-	60-OT LOWER MID FUSELAGE
G	-	60-OT LOWER AFT FUSELAGE
H	-	60-OT LOWER ELEVON (NO GOOD DATA)
I	-	60-OT AFT FUSELAGE AND ELEVON SPLIT LINE
J	-	60-OT UPPER RIGHT WING
K	-	60-OT LOWER BODYFLAP
L	-	60-OT BODYFLAP EDGE
M	-	60-OT VERTICAL TAIL
N	-	60-OT UPPER MID FUSELAGE
O	-	60-OT UPPER RIGHT WING
P	-	60-OT WING - MISCELLANEOUS
Q	-	60-OT LOWER WING
R	-	60-OT UPPER WING
S	-	60-OT OMD POD
T	-	60-OT VERTICAL TAIL
U	-	60-OT SPEEDBRAKE CAVITY
V	-	56-0/60T FUSELAGE

TABLE III. MODEL DIMENSIONAL DATA

MODEL COMPONENT: BODY - B_{62}

GENERAL DESCRIPTION: Configuration 140C orbiter fuselage. MCR 200-R4 Similar to 140A/B fuselage except aft body revised and improved midbody-wing-boot fairing, X_o = 940 to X_o = 1040.

MODEL SCALE: 0.0175

DRAWING NUMBER: VL70-000140C, -000202C, -000205A, VL70-000200B, -000203

DIMENSIONS:	FULL SCALE	MODEL SCALE
Length (IML: FWD.STA. X_o=238), In.	1290.3	22.58
Length (OML: FWD.STA. X_o235), In.	1293.3	22.63
Max. Width (At X_o = 1528.3), In.	264.0	4.62
Max. Depth (At X_o = 1464), In.	250.0	4.38
Fineness Ratio	4.899	4.899
Area, Ft^2		
Max. Cross-Sectional	340.885	0.104

TABLE III. MODEL DIMENSIONAL DATA (Continued)

MODEL COMPONENT: CANOPY - C_{12}

GENERAL DESCRIPTION: Configuration 140C orbiter canopy. Vehicle cabin No. 31 updated to MCR 200-R4. Used with fuselage B_{62}.

MODEL SCALE: 0.0175

DRAWING NUMBER: VL70-000140C, -000202B, -000204

DIMENSIONS:	FULL SCALE	MODEL SCALE
Length (X_o = 434.643 to 578), In.	143.357	2.508
Max. Width (At X_o = 513.127), In.	152.412	2.667
Max. Depth (Z_o = 501 to 449.39), In.	51.61	0.903

TABLE III. MODEL DIMENSIONAL DATA (Continued)

MODEL COMPONENT: ELEVON - E_{52}

GENERAL DESCRIPTION: Elevon for configuration 140C. Hingeline at X_o = 1387, elevon split line X_o = 312.5, 6.0" beveled edges and centerbodies.

MODEL SCALE: 0.0175

DRAWING NUMBER: VL70-000140C, -006089, -006092

DIMENSIONS:	FULL SCALE	MODEL SCALE
Area, Ft^2	210.0	0.064
Span (equivalent), In.	349.2	6.111
Inb'd equivalent chord, In.	118.0	2.065
Outb'd equivalent chord, In.	55.19	0.966
Ratio movable surface chord/ total surface chord		
At Inb'd equiv. chord	0.2096	0.2096
At Outb'd equiv. chord	0.4004	0.4004
Sweep Back Angles, degrees		
Leading Edge	0.0	0.0
Trailing Edge	- 10.056	- 10.056
Hingeline	0.0	0.0
Area Moment (Product of area & $\bar{c}$), ft^3	1587.25	0.008
Mean Aerodynamic Chord, In.	90.7	1.587
Hingeline dihedral (Origin at Z_o = 261.3509), deg.	5.229	5.229

TABLE III. MODEL DIMENSIONAL DATA (Continued)

MODEL COMPONENT: BODYFLAP - F_{10}

GENERAL DESCRIPTION: Configuration 140C body flap. Hingeline located at X_o = 1532, Z_o = 287.

MODEL SCALE: 0.0175

DRAWING NUMBER: VL70-000140C, -355114

DIMENSIONS:	FULL SCALE	MODEL SCALE
Length (X_o = 1525.5 to X_o = 1613),In.	87.50	1.531
Max. Width (At L.E., X_o = 1525),In.	256.00	4.480
Max. Depth (X_o = 1532),In.	19.798	0.346
Area, Ft^2		
Max. Cross-Sectional (At H.L.)	35.196	0.011
Planform	135.00	0.041
Base (X_o = 1613)	4.89	0.0015

TABLE III. MODEL DIMENSIONAL DATA (Continued)

MODEL COMPONENT: OMS POD - M_{16}

GENERAL DESCRIPTION: Configuration 140C orbiter OMS Pod - short pod.

MODEL SCALE: 0.0175

DRAWING NUMBER: VL70-008401, -008410

DIMENSIONS:	FULL SCALE	MODEL SCALE
Length (OMS Fwd. Sta. X_o = 1310.5), In.	258.50	4.524
Max. Width (At X_o = 1511,), In.	136.8	2.394
Max. Depth (At X_o = 1511), In.	74.70	1.307
Fineness Ratio	2.484	2.484
Area, Ft^2		
Max. Cross-Sectional	58.864	0.018

TABLE III. MODEL DIMENSIONAL DATA (Continued)

MODEL COMPONENT: RUDDER - R_{18}

GENERAL DESCRIPTION: The rudder is a secondary movable airfoil at the trailing edge of the vertical fin that imparts yaw forces. This dimensional data was calculated from the OML master dimensions.

MODEL SCALE: 0.0175

DRAWING NUMBER: Vehicle 5 Configuration MCR 200, Rev. 7

DIMENSIONS:	FULL SCALE	MODEL SCALE
Area, Ft^2	97.84	0.030
Span (equivalent), In.	198.614	3.476
Inb'd equivalent chord, In.	97.07	1.699
Outb'd equivalent chord, In.	50.80	0.889
Ratio movable surface chord/ total surface chord		
At Inb'd equiv. chord	0.400	0.400
At Outb'd equiv. chord	0.400	0.400
Sweep Back Angles, degrees		
Leading Edge	34.833	34.833
Trailing Edge	26.249	26.249
Hingeline	34.833	34.833
Area Moment (Product of Area & $\bar{c}$), Ft^3	593.889	0.003
Mean Aerodynamic Chord, In.	72.840	1.275

TABLE III. MODEL DIMENSIONAL DATA (Continued)

MODEL COMPONENT: EXTERNAL TANK - T_{38}

GENERAL DESCRIPTION: Spike nose configuration.

MODEL SCALE: 0.0175

DRAWING NUMBER: VC78-000002E (ET DRAWING),
VC72-000002 (SHUTTLE CONFIG. DRAWING)

(Dimensions are to tank structural OML, TPS not included)

DIMENSIONS:	FULL SCALE	MODEL SCALE
Length	1850.525	32.384
Max. Width	331.00	5.792
Fineness Ratio	5.687	5.687
Area, Ft^2 (Max. Cross Sectional)	594.678	0.1821

TABLE III. MODEL DIMENSIONAL DATA (Continued)

MODEL COMPONENT: VERTICAL - V_8

GENERAL DESCRIPTION: Configuration 140C orbiter vertical tail - identical to configuration 140A/B vertical tail).

MODEL SCALE: 0.0175

DRAWING NUMBER: VL70-000140C, -000146B

DIMENSIONS: TOTAL DATA	FULL SCALE	MODEL SCALE
Area (Theo.), ft^2 Planform	413.253	0.127
Span (Theo.), in.	315.72	5.530
Aspect Ratio	1.675	1.675
Rate of Taper	0.507	0.507
Taper Ratio	0.404	0.404
Sweep Back Angles, degrees		
Leading Edge	45.000	45.000
Trailing Edge	26.25	26.25
0.25 Element Line	41.13	41.13
Chords:		
Root (Theo.) WP	268.50	4.699
Tip (Theo.) WP	108.47	1.898
MAC	199.81	3.497
Fus. Sta. of .25 MAC	1463.35	25.609
W.P. of .25 MAC	635.52	11.122
B.L. of .25 MAC	0.0	0.0
Airfoil Section		
Leading Wedge Angle, deg.	10.00	10.00
Trailing Wedge Angle, deg.	14.92	14.92
Leading Edge Radius	2.00	2.00
Void Area	13.17	0.0040
Blanketed Area	0.0	0.0

TABLE III. MODEL DIMENSIONAL DATA (Continued)

MODEL COMPONENT: VERTICAL - V_{30}

GENERAL DESCRIPTION: Slab sided vertical tail with extended span

MODEL SCALE: 0.0175

DRAWING NUMBER:

DIMENSIONS: TOTAL DATA	FULL SCALE	MODEL SCALE
Area (Theo.), ft^2 Planform	442.299	0.135
Span (Theo.), in.	358.57	6.275
Aspect Ratio	2.019	2.019
Rate of Taper	0.507	0.507
Taper Ratio	0.323	0.323
Sweep Back Angles, degrees		
Leading Edge	45.000	45.000
Trailing Edge	26.25	26.25
0.25 Element Line	41.13	41.13
Chords:		
Root (Theo.) WP	268.50	4.699
Tip (Theo.) WP	86.75	1.518
MAC	193.12	3.380
Fus. Sta. of .25 MAC	1474.87	25.810
W.P. of .25 MAC	648.71	11.352
B.L. of .25 MAC	0.0	0.0
Airfoil Section		
Leading Wedge Angle, deg.	11.75	11.75
Trailing Wedge Angle, deg.	0.0	0.0
Leading Edge Radius	0.0	0.0
Void Area	0.0	0.0
Blanketed Area	0.0	0.0

TABLE III. MODEL DIMENSIONAL DATA (Continued)

MODEL COMPONENT: WING - W_{116}

GENERAL DESCRIPTION: Configuration 5. NOTE: Identical to W_{144} except airfoil thickness. Dihedral angle is along trailing edge of wing. Geometric twist - 0.

MODEL SCALE: 0.0175 DRAWING NO.: VL70-000140A, -000200

DIMENSIONS:	FULL SCALE	MODEL SCALE
TOTAL DATA		
Area (Theo.), ft^2		
Planform	2690.0	0.824
Span (Theo.), in.	936.68	16.392
Aspect Ratio	2.265	2.265
Rate of Taper	1.177	1.177
Taper Ratio	0.200	0.200
Dihedral Angle, degrees	3.500	3.500
Incidence Angle, degrees	0.500	0.500
Aerodynamic Twist, degrees		
Sweep Back Angles, degrees		
Leading Edge	45.000	45.000
Trailing Edge	- 10.056	- 10.056
0.25 Element Line	35.209	35.209
Chords:		
Root (Theo.) B.P.0.0.	689.24	12.062
Tip, (Theo.) B.P.	137.85	2.412
MAC	474.81	8.309
Fus. Sta. of .25 MAC	1136.83	19.895
W.P. of .25 MAC	290.58	5.085
B.L. of .25 MAC	182.13	3.187
EXPOSED DATA		
Area (Theo.), ft^2	1751.50	0.536
Span, (Theo.), in. BP108	720.68	12.612
Aspect Ratio	2.059	2.059
Taper Ratio	0.245	0.245
Chords		
Root BP108	562.09	9.837
Tip 1.00 b/2	137.85	2.412
MAC	392.83	6.875
Fus. Sta. of .25 MAC	1185.98	20.755
W.P. of .25 MAC	294.30	5.150
B.L. of .25 MAC	251.77	4.406
Airfoil Section (Rockwell Mod NASA) XXXX-64		
Root b/2 =	0.113	0.113
Tip b/2 =	0.120	0.120
Data for (1) of (2) Sides		
Leading Edge Cuff		
Planform Area, ft^2	113.18	0.035
Leading Edge Intersects Fus M.L. @ Sta	500.00	8.750
Leading Edge Intersects Wing @ Sta	1024.00	17.920

TABLE III. MODEL DIMENSIONAL DATA

MODEL COMPONENT: WING - W_{127}

GENERAL DESCRIPTION: Configuration 140C orbiter wing, MCR 200-R4. Similar to 140A/B wing W_{116} but with refinements: improved wing-boot-midbody fairing (X_o=940 to X_o=1040). Elevon split line relocated from Y_o=281 to Y_o=312.5 . MODEL SCALE: 0.0175 DWG.NO.VL70-000140C,-000200B

DIMENSIONS:	FULL SCALE	MODEL SCALE
TOTAL DATA		
Area (Theo.), ft^2		
Planform	2690.00	0.824
Span (Theo.), in.	936.68	16.392
Aspect Ratio	2.265	2.265
Rate of Taper	1.177	1.177
Taper Ratio	0.200	0.200
Dihedral Angle, degrees	3.500	3.500
Incidence Angle, degrees	0.500	0.500
Aerodynamic Twist, degrees	3.000	3.000
Sweep Back Angles, degrees		
Leading Edge	45.000	45.000
Trailing Edge	- 10.065	- 10.065
0.25 Element Line	35.209	35.209
Chords:		
Root (Theo.) B.P.O.O.	689.24	12.062
Tip, (Theo.) B.P.	137.85	2.412
MAC	474.81	8.309
Fus. Sta. of .25 MAC	1136.83	19.895
W.P. of .25 MAC	290.58	5.085
B.L. of .25 MAC	182.18	3.187
EXPOSED DATA		
Area (Theo.), ft^2	1751.50	0.536
Span, (Theo.), in. BP108	720.68	12.612
Aspect Ratio	2.059	2.059
Taper Ratio	0.245	0.245
Chords		
Root BP108	562.09	9.837
Tip 1.00 b/2	137.85	2.412
MAC	392.83	6.875
Fus. Sta. of .25 MAC	1185.98	20.755
W.P. of .25 MAC	294.30	5.150
B.L. of .25 MAC	251.77	4.406
Airfoil Section (Rockwell Mod NASA) XXXX-64		
Root b/2 =	0.113	0.113
Tip b/2 =	0.120	0.120
Data for (1) of (2) Sides		
Leading Edge Cuff		
Planform Area, ft^2	113.18	0.035
Leading Edge Intersects Fus M.L. @ Sta	500.00	8.750
Leading Edge Intersects Wing @ Sta	1024.0	17.920

TABLE IV. THERMOCOUPLE LOCATIONS

FUSELAGE

Model 60-0

L_{ref} = 1293.3

T/C No.	X/L	FULL SCALE			MODEL SCALE			ϕ_o	SKIN THICKNESS	MAT'L	REMARKS
		X_o	Y_o	Z_o	X FROM NOSE	Y_o	Z FROM FRL				
1	0	235.0	0	-	0	0	-	0	.040	17-4	Bottom ℄
2	.005	241.47	↓	↓	.113	↓	↓	↓	.032	↓	↓
3	.01	247.92	↓	↓	.226	↓	↓	↓	.033	↓	↓
4	.02	260.87	↓	↓	.453	↓	↓	↓	.040	↓	↓
5	.03	273.80	↓	↓	.679	↓	↓	↓	.040	↓	↓
6	.04	286.73	↓	↓	.905	↓	↓	↓	.040	↓	↓
7	.05	299.67	↓	↓	1.132	↓	↓	↓	.033	↓	↓
8	.06	312.60	↓	↓	1.358	↓	↓	↓	.035	↓	↓
9	.07	325.52	↓	↓	1.584	↓	↓	↓	.032	↓	↓
10	.08	338.46	↓	↓	1.811	↓	↓	↓	.032	↓	↓
11	.09	351.40	↓	↓	2.037	↓	↓	↓	.035	↓	↓
12	.10	364.33	↓	↓	2.263	↓	↓	↓	.037	↓	↓
13	.12	390.20	↓	↓	2.716	↓	↓	↓	.040	↓	↓
14	.13	403.13	↓	↓	2.942	↓	↓	↓	.038	↓	↓
15	.14	416.06	↓	↓	3.169	↓	↓	↓	.035	↓	↓
16	.15	429.00	↓	↓	3.395	↓	↓	↓	.036	↓	↓
17	.16	441.93	↓	↓	3.621	↓	↓	↓	.036	↓	↓
18	.17	454.86	↓	↓	3.848	↓	↓	↓	.035	↓	↓
19	.18	467.79	↓	↓	4.074	↓	↓	↓	.035	↓	↓
20	.19	480.73	↓	↓	4.300	↓	↓	↓	.035	↓	↓
21	.20	493.66	↓	↓	4.527	↓	↓	↓	.035	↓	↓
22C	.225	525.99	↓	↓	5.092	↓	↓	↓	.035	↓	↓
23	.25	558.32	↓	↓	5.658	↓	↓	↓	.035	↓	↓
24	.30	622.99	↓	↓	6.790	↓	↓	↓	.035	↓	↓
25	.35	687.66	↓	↓	7.922	↓	↓	↓	.035	↓	↓
26	.40	752.32	↓	↓	9.053	↓	↓	↓	.034	↓	↓

TABLE IV. THERMOCOUPLE LOCATIONS (CONTINUED)

FUSELAGE

Model 60-0

L_{ref} = 1293.3

T/C NO.	X/L	FULL SCALE X_o	FULL SCALE Y_o	FULL SCALE Z_o	MODEL SCALE X FROM NOSE	MODEL SCALE Y_o	MODEL SCALE Z FROM FRL	ϕ_o	SKIN THICKNESS	MAT'L	REMARKS
27C	.45	816.99	0	-	10.185	0	-	0	.033	17-4	Bottom ℄
28C	.50	881.65			11.316				.032		
29C	.55	946.32			12.448				.030		
30C	.60	1010.9			13.580				.030		
31C	.65	1075.6			14.711				.030		
32C	.70	1140.3			15.843				.029		
33C	.75	1204.9			16.975				.030		
34C	.80	1269.6			18.106				.030		
35C	.85	1324.8			19.068				.029		
36C	.90	1398.9			20.369				.031		
37C	.925	1431.3			20.935				.027		
38C	.950	1463.6			21.501				.027		
39C	.975	1495.9			22.067				.023		
40	1.015	1547.7			22.972				.030		
41	1.03	1567.1			23.312				.030		
42	1.045	1586.3			23.651				.028		
43	1.06	1605.0			23.977				.0265		
44	.05	299.67	25.0		1.132	.438		14	.032		Fuselage Bottom Surface
45	.10	364.33	20.0		2.263	.350		10	.036		
46	.15	429.0	24.0		3.395	.420		10	.035		
48	.20	493.66	50.0		4.527	.875		24	.025		
50C	.50	881.65	46.8		11.316	.819		-	.028		
51C	.60	1010.9			13.580				.025		
52C	.70	1140.3			15.843				.030		
53C	.80	1269.6			18.106				.030		
54C	.90	1398.6			20.369				.028		
55C	.95	1463.6			21.501				.025		

TABLE IV. THERMOCOUPLE LOCATIONS (CONTINUED)

FUSELAGE

Model 60-0 L_{ref} = 1293.3

T/C NO.	X/L	FULL SCALE			MODEL SCALE			ϕ_o	SKIN THICKNESS	MAT'L	REMARKS
		X_o	Y_o	Z_o	X FROM NOSE	Y_o	Z FROM FRL				
56C	.975	1495.9	46.8	-	22.067	.819	-	-	.028	17-4	Fuselage Bottom Surface
57	1.015	1547.7			22.972				.030		
58	1.03	1567.1			23.312				.030		
59	1.045	1586.5			23.651				.030		
60	1.060	1605.0			23.977				.031		
61C	.40	752.32	93.60		9.053	1.638			.032		
62C	.50	881.65			11.316				.031		
63C	.60	1010.9			13.580				.033		
64C	.70	1140.3			15.848				.029		
65C	.80	1269.6			18.106				.031		
66C	.90	1398.6			20.369				.030		
67C	.95	1463.6			21.501				.029		
68C	.975	1495.9			22.067				.028		
69	1.015	1547.7			22.972				.0275		
70	1.03	1567.1			23.313				.0285		
71	1.045	1586.5			23.651				.029		
72	1.06	1605.0			23.977				.027		
169	.01	247.93	0		.226	0		180	.033		Top Centerline
170	.025	267.33			.565				.031		
171	.050	299.67			1.129				.035		
172	.075	332.0			1.694				.035		
173	.100	364.33			2.258				.034		
174	.125	396.66			2.283				.032		
175	.150	429.0			3.387				.032		
176	.160	441.93			3.613				.040		
177	.170	459.86			3.839				.040		

TABLE IV. THERMOCOUPLE LOCATIONS (CONTINUED)

FUSELAGE

Model 60-0

L_{ref} = 1293.3

T/C NO.	X/L	FULL SCALE X_o	FULL SCALE Y_o	FULL SCALE Z_o	MODEL SCALE X FROM NOSE	MODEL SCALE Y_o	MODEL SCALE Z FROM FRL	ϕ_o	SKIN THICKNESS	MAT'L	REMARKS
178	.180	467.79	0	-	4.064	0	-	180	.033	17-4	Top Centerline
179	.200	493.66			4.516				.036		
182	.40	752.32			9.053				.026		
183	.45	816.99			10.185				.026		
184	.50	881.65			11.316				.025		
185	.55	946.32			12.448				.026		
186	.60	1010.9			13.580				.025		
187	.65	1075.6			14.711				.024		
188	.70	1140.3			15.843				.025		
189	.75	1204.9			16.975				.0255		
190	.80	1269.6			18.105				.023		
191	-	-	6.00	452.0	-	.105	.910	-	.031		Window #1 Bottom Right
192			12.80	478.0		.224	1.365		.031		Top Right
193			21.20	464.9		.371	1.136		.030		Center
194			29.60	478.0		.518	1.365		.028		Top Left
195			34.30	452.0		.602	.910		.030		Bottom Right
196			40.40	452.0		.707	.910		.030		Window #2 Bottom Right
197			34.80	478.0		.609	1.365		.030		Top Right
198			44.80	464.9		.784	1.136		.030		Center
199			43.20	478.0		.756	1.365		.030		Window #2 Top Left
200			59.20	452.0		1.036	.910		.029		Bottom Left
201			62.40	464.9		1.092	1.136		.029		Window #3 Center
202	.05	299.6	-	303.6	1.132	-	-1.687	22	.040		Fuselage Side CCL
203				325.6			-1.302	35	.035		MHB
204				342.4			-1.008	42.5	.033		UT
205				378.4			- .378	60	.033		45T

TABLE IV. THERMOCOUPLE LOCATIONS (CONTINUED)

FUSELAGE

MODEL 60-0

L_{ref} = 1293.3

T/C NO.	X/L	FULL SCALE			MODEL SCALE			ϕ_o	SKIN THICKNESS	MAT'L	REMARKS
		X_o	Y_o	Z_o	X FROM NOSE	Y_c	Z FROM FRL				
206	.076	332.2	-	350.0	1.720	-	- .875	-	.035	17-4	Fuselage Side RCS
207	.10	364.3	39.20	-	2.263	.686	-	20	.038		
208			52.00	-		.910	-	24.5	.035		CCL
209			-	317.6		-	-1.442	39	.035		MHB
210			-	410.0		-	0.175	119	.037		
211	.15	429.0	40.80	-	3.395	.714	-	20	.035		
212			62.00	-		1.085	-	25.5	.025		CCL
213			79.20	304.8		1.386	-1.666	40	.030		CCL
214			83.60	314.4		1.463	-1.498	45.5	.038		MHB
215	.20	493.6	65.80	287.20	4.527	1.148	-1.974	31.5	.022		CCL
216			75.60	292.0		1.323	-1.890	35	.022		CCL
217			85.20	298.8		1.491	-1.771	40	.020		CCL
218			-	320.0		-	-1.400	51	.035		MHB
219				360.0			- .700	67.5	.030		UT
220C				410.0			0.175	96.5	.031		Upper Fuselage
223	.40	752.32		-	9.053		-	157.5	.034		
224	.45	816.99			10.185				.034		
225	.50	881.65			11.316				.034		
226	.55	946.32			12.448				.035		
227	.60	1010.9			13.580				.034		
228	.65	1075.6			14.711				.0325		
229	.70	1140.3			15.843				.030		
230	.75	1204.9			16.975				.030		
231	.80	1269.6			18.106				.032		
234	.40	752.32			9.053			315	.030		
235	.45	816.99			10.185			315	.030		

TABLE IV. THERMOCOUPLE LOCATIONS (CONTINUED)

FUSELAGE

MODEL 60-0

L_{ref} = 1293.3

T/C NO.	X/L	FULL SCALE			MODEL SCALE			ϕ_o	SKIN THICKNESS	MAT'L	REMARKS
		X_o	Y_o	Z_o	X FROM NOSE	Y_o	Z FROM FRL				
236	.50	881.65	-	-	11.316	-	-	315	.036	17-4	UPPER FUSELAGE
237	.55	946.32			12.448				.035		
238	.60	1010.9			13.580				.031		
239	.65	1075.6			14.711				.032		
240	.70	1140.3			15.843				.030		
241	.75	1204.9			16.975				.032		
242	.80	1269.6			18.106				.032		
288C	.975	1496.0		381.2	22.068		-0.329		.030		AFT FUSELAGE SIDE
388	.40	752.32		445.0	9.053		0.788	114	.031		UPPER FUSELAGE SIDE
389	.45	816.99			10.185				.033		
390	.50	881.65			11.316				.036		
391	.55	946.32			12.448				.0345		
392	.60	1010.9			13.580				.0335		
393	.65	1075.6			14.711				.0345		
394	.70	1140.3			15.843				.034		
395	.75	1204.9			16.975				.036		
396	.80	1269.6			18.106				.034		

TABLE IV. THERMOCOUPLE LOCATIONS (CONTINUED)

WING

MODEL 60-0

T/C NO.	2Y/b	FULL SCALE X/C	FULL SCALE X_o	FULL SCALE Y_o	MODEL SCALE X FROM L.E.	MODEL SCALE Y_o		ELEVON T/C	SKIN THICKNESS	MAT'L	REMARKS
73C	.30	0		140.5	0	2.459			.020	17-4	Wing Lower Surface
74C		.05			.670				.020		
75C		.10			1.340				.026		
76C		.20			2.680				.031		
77C		.30			4.020				.030		
78C		.40			5.360				.031		
79C		.50			6.700				.030		
80C		.60			8.040				.030		
81C		.70			9.380				.031		
82C		.80			10.720				.030		
83		.90			12.060			X	.0305		
84		.95			12.730			X	.031		
86C	.40	0		187.3	0	3.277			.022		
87C		.05			.438				.031		
88C		.10			.876				.031		
89C		.20			1.753				.030		
90C		.30			2.629				.031		
91C		.40			3.506				.029		
92C		.60			5.258				.033		
93C		.70			6.135				.033		
94C		.75			6.573				.030		
95		.85			7.449				.0295		
96		.90			7.888			X	.026		
97		.95			8.326			X	.0275		
98C	.45	0		210.7	8.688	3.687		X	.030		
99C	.50	0		234.1	0	4.098			.027		

TABLE IV. THERMOCOUPLE LOCATIONS (CONTINUED)

WING

Model 60-0

T/C NO.	2Y/b	FULL SCALE X/C	FULL SCALE X_o	FULL SCALE Y_o	MODEL SCALE X FROM L.E.	MODEL SCALE Y_o	MODEL SCALE	ELEVON T/C	SKIN THICKNESS	MAT'L	REMARKS
100C	.50	.05		234.1	.364	4.098			.029	17-4	Wing Lower Surface
101C		.10			.727				.030		
102C		.20			1.454				.031		
103C		.30			2.181				.031		
104C		.40			2.908				.031		
105C		.60			4.362				.032		
106C		.70			5.089				.031		
107	.50	.90			6.543			X	.0285		
108C	.55	0		257.6	0	4.508			.026		
109C	.60	0		281.0	0	4.918			.024		
110C		.025			.157				.029		
111C		.05			.314				.028		
112C		.075			.470				.030		
113C		.10			.627				.031		
114C		.20			1.254				.031		
115C		.30			1.882				.033		
116C		.40			2.509				.032		
117C		.50			3.136				.032		
118C		.60			3.763				.032		
119C		.70			4.390				.031		
120		.80			5.018			X	.030		
121		.85			5.331			X	.0305		
122		.90			5.645			X	.0295		
123		.95			5.958			X	.0295		
124C	.65	0		309.4	0	5.327			.026		
125C	.70	0		327.8	0	5.737			.017		

TABLE IV. THERMOCOUPLE LOCATIONS (CONTINUED)

WING

Model 60-0

T/C NO.	2Y/b	FULL SCALE X/C	FULL SCALE X_o	FULL SCALE Y_o	MODEL SCALE X FROM L.E.	MODEL SCALE Y_o	MODEL SCALE	ELEVON T/C	SKIN THICKNESS	MAT'L	REMARKS
126C	.70	.025		327.8	.133	5.737			.024	17-4	Wing Lower Surface
127C		.10			.531				.032		
128C		.20			1.061				.036		
129C		.30			1.592				.036		
130C		.40			2.123				.035		
131		.60			3.184				.035		
132		.90			4.776			X	.031		
133	.75	0		352.8	0	6.174			.028		
134		.025			.121				.028		
135		.05			.241				.030		
136		.10			.483				.032		
137		.20			.965				.032		
138		.30			1.448				.035		
139		.40			1.930				.034		
140		.60			2.895				.033		
141C		.70			3.378	6.174			.031		
142		.80			3.860			X	.027		
143		.90			4.343			X	.0305		
144		.95			4.584			X	.0295		
145	.80	0		374.6	0	6.557			.024		
146		.20			.868				.032		
147		.40			1.737				.031		
148		.90			3.908			X	.0305		
149	.85	0		398.1	0	6.967			.028		
150		.20			.772				.031		
151		.40			1.544				.030		

TABLE IV. THERMOCOUPLE LOCATIONS (CONTINUED)

WING

Model 60-0

T/C NO.	2Y/b	FULL SCALE X/C	FULL SCALE X_o	FULL SCALE Y_o	MODEL SCALE X FROM L.E.	MODEL SCALE Y_o	MODEL SCALE	ELEVON T/C	SKIN THICKNESS	MAT'L	REMARKS
152	.90	0		421.4	0	7.376			.028	17-4	Wing Lower Surface
153		.10			.338				.030		
154		.20			.675				.031		
155C		.30			1.013				.031		
156		.50			1.689				.031		
157C		.60			2.026				.032		
158		.80			2.702			X	.0285		
159		.90			3.039			X	.028		
160	.95	0		444.9	0	7.786			.030		
161		.05			.138				.031		
162		.10			.276				.030		
163		.20			.552				.032		
164		.30			.827				.031		
165		.50			1.379				.030		
166		.70			1.931			X	.0295		
167		.80			2.206			X	.030		
168		.90			2.482			X	.0295		
246	.400	.05		187.3	.438	3.278			.024		Wing Upper Surface
247		.20			1.753				.028		
248		.40			3.506				.024		
249	.40	.60			5.258				.020		
250		.75			6.573				.030		
251		.80			7.011			X	.029		
252		.95			8.326			X	.025		
253	.60	.025		281.0	.157	4.918			.009		
254		.05			.314				.011		

TABLE IV. THERMOCOUPLE LOCATIONS (CONTINUED)

WING

Model 60-0

T/C NO.	2Y/b	FULL SCALE X/C	FULL SCALE X_o	FULL SCALE Y_o	MODEL SCALE X FROM L.E.	MODEL SCALE Y_c		ELEVON T/C	SKIN THICKNESS	MAT'L	REMARKS
255	.60	.10		281.0	.627	4.918			.021	17-4	Wing Upper Surface
256		.20			1.254				.025		
257		.40			2.509				.027		
258		.60			3.763				.024		
259		.75			4.703				.025		
260		.85			5.331			X	.027		
261		.95			5.958			X	.020		
262	.70	.20		327.83	1.061	5.737			.029		
263		.40			2.123				.025		
264		.90			4.776			X	.028		
265	.75	.10		352.25	.483	6.147			.023		
266		.20			.965				.023		
267		.40			1.930				.025		
268		.60			2.895				.022		
269		.80			3.860			X	.024		
270		.90			4.430			X	.028		
271	.80	.90		374.69	3.908	6.557		X	.029		
272	.90	.20		421.99	.675	7.376			.025		
273		.40			1.351				.025		
274		.60			2.026				.030		
275	.95	.20		444.91	.552	7.786			.023		
276		.40			1.103				.030		
277		.50			1.379				.025		
278		.70			1.930			X	.028		
279		.80			2.206			X	.029		
280		.90			2.481			X	.028		

TABLE IV. THERMOCOUPLE LOCATIONS (CONTINUED)

OMS POD

Model 60-0

T/C NO.	X/L	FULL SCALE			MODEL SCALE				SKIN THICKNESS	MAT'L	REMARKS
		X_o	Y_o	Z_o	X FROM POD L.E.	Y_o	Z FROM FRP				
298		1325	106.9	428.6					.030	17-4	
299			98.77	489.2					.033		
300			67.73	511.3					.030		
301			48.78	506.7					.028		
302		1350	123.6	440.4					.024		
303			132.0	458.6					.030		
304			108.9	498.5					.032		
305			69.5	524.4					.029		
306			47.3	515.5					.031		
308		1375	111.6	421.6					.016		
309			130.0	440.0					.023		
310			139.6	460.0					.035		
311			113.8	503.4					.028		
312			72.4	531.0					.031		
313		1400	48.28	523.4					.027		
315		1425	115.0	415.1					.031		
316			133.7	437.7					.030		
317			147.7	466.3					.038		
318			119.7	508.6					.027		
319			77.34	536.5					.030		
320		1450	117.48	418.20					.023		
321			134.5	436.0					.029		
322			149.8	468.2					.033		
323			122.2	511.1					.025		
325			48.3	526.6					.027		
327		1500	136.7	437.0					.029		

TABLE IV. THERMOCOUPLE LOCATIONS (CONTINUED)

OMS POD

MODEL 60-0

T/C NO.	X/L	FULL SCALE			MODEL SCALE				SKIN THICKNESS	MAT'L	REMARKS
		X_o	Y_o	Z_o	X FROM POD L.E.	Y_o	Z FROM FRP				
328		1500	151.2	470.4					.036	17-4	
329		↓	125.6	514.0					.031	↓	
330			89.5	539.4					.031		
331			55.7	532.3					.034		
332		1525	-	424.0					.029		Downward Firing RCS
333		↓	-	431.0					.034		
334			-	440.0					.035		
335			-	493.0					.029		
336			133.0	-					.030		Upward Firing RCS
337		1545	-	428.0					.022		Downward Firing RCS
338		↓	-	434.0					.027		
339			-	443.0					.039	↓	

TABLE IV. THERMOCOUPLE LOCATIONS (CONTINUED)

VERTICAL TAIL

Model 60-0

T/C NO.	Z/bv	FULL SCALE			MODEL SCALE			RUDDER T/C	SKIN THICKNESS	MAT'L	REMARKS
		X/C_v	X_o	Z	X FROM L.E.	Z FROM FRP					
340	.10	.10							.0315	17-4	External Surface
341	↓	.30							.0305	↓	↓
342	↓	.50							.0295	↓	↓
343	.20	.10							.031	↓	↓
344	↓	.20							.0302	↓	↓
345	↓	.40							.0313	↓	↓
346	↓	.60							.031	↓	↓
347	↓	.80							.0315	↓	↓
348	.30	.05							.0297	↓	↓
349	↓	.20							.031	↓	↓
350	↓	.40							.031	↓	↓
351	↓	.50							.0318	↓	↓
352	↓	.90						X	.030	↓	↓
353	.40	.10							.0305	↓	↓
354	↓	.20							.0315	↓	↓
355	↓	.40							.0315	↓	↓
356	↓	.50							.0308	↓	↓
357	↓	.70						X	.029	↓	↓
358	↓	.90						X	.0298	↓	↓
359	.50	.05							.0285	↓	↓
360	↓	.70						X	.028	↓	↓
361	↓	.90						X	.0315	↓	↓
362	.60	.05							.029	↓	↓
363	↓	.10							.0295	↓	↓
364	↓	.20							.0303	↓	↓
365	↓	.40							.0318	↓	↓

TABLE IV. THERMOCOUPLE LOCATIONS (CONTINUED)

VERTICAL TAIL

Model 60-0

T/C NO.	Z/bv	FULL SCALE X/C_v	FULL SCALE X_o	FULL SCALE Z	MODEL SCALE X FROM L.E.	MODEL SCALE Z FROM FRP	MODEL SCALE	RUDDER T/C	SKIN THICKNESS	MAT'L	REMARKS
366	.60	.50							.0315	17-4	External Surface
367	↓	.70						X	.028	↓	↓
368	↓	.90						X	.030	↓	↓
369	.70	.05							.0275	↓	↓
370	↓	.70						X	.0275	↓	↓
371	↓	.90						X	.029	↓	↓
372	.80	.05							.029	↓	↓
373	↓	.10							.0293	↓	↓
374	.80	.40							.031	↓	↓
375	↓	.50							.0325	↓	↓
376	↓	.70						X	.028	↓	↓
377	↓	.90						X	.029	↓	↓
378	.90	.10							.031	↓	↓
379	↓	.30							.0305	↓	↓
380	↓	.50							.032	↓	↓
381	↓	.70							.0308	↓	↓
382	↓	.90							.0298	↓	↓
383	.95	.30							.0313	↓	↓
384	↓	.50							.0315	↓	↓
385	↓	.90							.033	↓	↓
397C	↓								.0318	↓	Speed Brake Cavity
398C	↓								.0312	↓	↓
399C	↓								.0312	↓	↓
400C	↓								.0312	↓	↓

TABLE IV. THERMOCOUPLE LOCATIONS (CONTINUED)

LOWER LEFT SSME NOZZLE
(Note Material)

Model 60-0

T/C NO.		X FROM EXIT PLANE F.S.	X FROM EXIT PLANE M. S.	ϕ_n DEGREES	SKIN THICKNESS (INCHES)	MAT'L	REMARKS
408		5.0	0.088	315	.030	15-5	Smooth Nozzle
409		↓	↓	0	.031	↓	↓
411				45	.0315		
412				65	.032		
413				90	.032		
414				135	.0325		
415		10.0	0.175	0	.0305		
418		↓	↓	65	.0315		
419				90	.032		
420		15.0	0.263	0	.029		
421		↓	↓	45	.0295		
422				90	.030		
423		25.0	0.438	0	.0255		
424		↓	↓	45	.026		
425				65	.026		
426				90	.026		
427		45.0	0.788	45	.027		
		(428 through 431 on heat shield)					

TABLE IV. THERMOCOUPLE LOCATIONS (CONTINUED)

BASE HEATSHIELD

Model 60-0

T/C NO.		FULL SCALE			MODEL SCALE				SKIN THICKNESS	MAT'L	REMARKS
		Y_o	Z_o		Y_o	Z FROM FRP					
428		0	430		0	0.525			.032	15-5	
429		-70	430		-1.225	0.525			.031	↓	
430		0	320		0	-1.400			.0315		
431		-110	320		-1.925	-1.400			.0305		

TABLE IV. THERMOCOUPLE LOCATIONS (CONTINUED)

LOWER RIGHT SSME NOZZLE
(Note Material)

Model 60-0

T/C NO.		X FROM EXIT PLANE F.S.	X FROM EXIT PLANE M. S.	ϕ_n DEGREES	SKIN THICKNESS (INCHES)	MAT'L	REMARKS
432		5.0	0.088	315	.0289	17-4	Nozzle W/Hat Bands
433		↓	↓	0	.0298	↓	↓
434				25	.0285		
435				45	.0297		
436				65	.0298		
437				90	.0292		
438				135	.0307		
439		10.0	0.175	0	.0299		
440		↓	↓	25	.0285		
441				45	.0292		
442				65	.0296		
443				90	.0288		
444		15.42	0.270	0	.0274		
445		↓	↓	25	.0290		
446				45	.0280		
447				65	.0278		
448				90	.0282		
449		25.0	0.438	0	.0288		
450		↓	↓	25	.0291		
451				45	.0286		
452				65	.0295		
453				90	.0291		

TABLE IV. THERMOCOUPLE LOCATIONS (CONTINUED)

UPPER WING

Model 60-0

T/C NO.	2Y/b	FULL SCALE X_o	FULL SCALE Y_o		MODEL SCALE X_o	MODEL SCALE Y_o			SKIN THICKNESS (INCHES)	MAT'L	REMARKS
460	.500	1373.54	234.17		24.036	4.097			.0280	17-4	Wing Upper Surface
461	.550	↓	257.587		↓	4.507			.0305	↓	↓
462	.600		281.004			4.917			.0290		
463	.650		304.421			5.327			.0290		
464	.700		327.838			5.737			.0200		
465	.725		339.546			5.942			.0290		
466	.750		351.255			6.146			.0270		
467	.775		362.963			6.351			.0240		
468	.800		374.672			6.556			.0240		
469	.825		386.380			6.761			.0240		
470	.850		398.089			6.966			.0250		
471	.875		409.797			7.171			.0260		
472*	.925		433.214			7.581			.0270		
277	.950		444.923			7.786			.0250		
473	.975		456.631			7.991			.0200		

* T/C 274 REF. 2Y/B = .900

TABLE IV. THERMOCOUPLE LOCATIONS (CONTINUED)

UPPER WING

Model 60-0

T/C NO.	2Y/b	FULL SCALE X/C	FULL SCALE Y_o		MODEL SCALE X FROM L.E.	MODEL SCALE Y_o		ELEVON T/C	SKIN THICKNESS (INCHES)	MAT'L	REMARKS
476	.700	.60	327.83		3.125	5.737			.0300	17-4	Wing Upper Surface
477	.750	.50	351.25		2.411	6.147			.0280	↓	↓
478	.800	.10	374.69		.435	6.557			.0310	↓	↓
479	↓	.30	↓		1.305	↓			.0320	↓	↓
480	↓	.40	↓		1.740	↓			.0320	↓	↓
481	↓	.50	↓		2.171	↓			.0320	↓	↓
482	↓	-	↓		24.33 } X_o	↓		X	.0250	↓	↓
483	.825	-	386.00		24.33 }	6.756		X	.0280	↓	↓
484	↓	.85	↓		3.485	↓		X	.0250	↓	↓
485	↓	.90	↓		3.690	↓		X	.0290	↓	↓
486	.850	.10	397.94		.386	6.964			.0320	↓	↓
487	↓	.30	↓		1.158	↓			.0300	↓	↓
488	↓	.40	↓		1.544	↓			.0300	↓	↓
489	↓	.50	↓		2.000	↓			.0300	↓	↓
490	↓	-	↓		24.33 } X_o	↓		X	.0290	↓	↓
491	.900	.90	421.50		3.033	7.376		X	.0290	↓	↓

TABLE IV. THERMOCOUPLE LOCATIONS (CONTINUED)

Model 60-0

T/C NO.		MODEL SCALE X_o	MODEL SCALE Y_o	MODEL SCALE Z_o		SKIN THICKNESS	MAT'L	REMARKS
37A		4.553	0.252	--		.032	17-4	Lower Nose (LH)
38A		4.541	0.428	5.524		.033		
39A		4.515	--	5.696		.036		
41A		5.626		6.002		.031		
45A		6.361	1.041	5.266		.028		
46A			--	5.470		.030		
47A			1.230	5.673		.031		
65A		8.610	0.388	4.893		.030		
70A		8.610	1.681	5.388		.030		
107A		13.170	0.780	4.809		.024		Lower Mid Fuselage (LH)
114A		13.207	1.782	4.977		.031		
115A		13.107	1.962	--		.024		
116A			2.142	--		.020		
117A			2.322	--		.017		
118A			2.448	--		.025		
130A		15.356	1.837	4.882		.023		
131A			2.046	--		.029		
132A			2.250	--		.028		
133A			2.453	--		.026		
134A			2.663	--		.023		
135A			2.816	5.226		.027		
186A		24.329	1.819	4.681		.030		Lower Aft Fuselage
187A		24.925	1.883	--		.031		
188A		25.476	1.911	--		.028		

TABLE IV. THERMOCOUPLE LOCATIONS (CONTINUED)

Model 60-0

T/C NO.		MODEL SCALE X_o	MODEL SCALE Y_o	MODEL SCALE Z_o		SKIN THICKNESS	MAT'L	REMARKS
189A		25.923	1.981	--		.025	17-4	Lower Aft Fuselage
196A		24.015	2.128	--		.028		" " "
197A		24.480	2.459	--		.032		Lower Elevon (LH)
320A		24.576	--	5.565		.0295		Aft Fuselage & Elevon
321A		24.913	--			.0265		Split Line (LH)
322A		25.476	--			.027		
323A		26.038	--			.029		
336A		24.576	--	4.902		.030		
337A		24.913	--			.031		
338A		25.575	--			.028		
339A		26.138	--			.026		
341A		24.576	--	4.692		.030		
342A		24.913	--	4.692		.032		
343A		25.475	--	4.722		.031		
344A		26.038	--	4.759		.031		
249A		10.859	1.988	--		.030*		Upper Wing (RH)
250A		11.983		--		.028		
251A		13.107		--		.030		
252A		14.195		--		.022		
253A		17.545	1.970	--		.026		
254A		19.941	2.049	--		.018		
255A		22.330	2.047	--		.029		
256A		14.195	2.459	--		.020		

*Nominal Value; Skin Thickness Not Measured

TABLE IV. THERMOCOUPLE LOCATIONS (CONTINUED)

Model 60-0

T/C NO.		MODEL SCALE X_o	Y_o	Z_o		SKIN THICKNESS	MAT'L	REMARKS
257A		15.535	2.459	4.759		.027	17-4	Upper Wing (RH)
258A		16.875		--		.020		
259A		18.215		--		.016		
260A		19.555		--		.028		
261A		20.895		--		.025		
262A		22.235		--		.030		
263A		23.576		--		.029		
279A		24.080	5.138	--		.030*		
113A		27.268	0.928	--		.030		Lower Body Flap
191A		27.268	1.819	--		.028		" " "
314A		27.274	0	5.122		.0255		Upper Body Flap
315A		28.017	0	--		.019		
316A		27.275	0.875	5.224		.0295		
317A		28.017	0.875	--		.028		
318A		27.275	1.837	5.122		.0295		
319A		28.017	1.697	--		.0295		
192A		26.994	--	5.064		.031		Body Flap, Edge
193A		27.265	--	5.092		.0305		
194A		27.639	--	5.106		.031		
368A		26.091	0	9.303		.0305		Vertical Tail
87A		9.799	1.101	7.781		.031		Upper Mid Fuselage (LH)

*Nominal Value; Skin Thickness Not Measured

TABLE IV. THERMOCOUPLE LOCATIONS (CONTINUED)

Model 60-0

T/C NO.		MODEL SCALE X_o	MODEL SCALE Y_o	MODEL SCALE Z_o		SKIN THICKNESS	MAT'L	REMARKS
88A		9.705	0.672	8.431		.026	17-4	Upper Mid Fuselage (LH)
89A		9.717	1.709	6.654		.031		
102A		10.806	1.638	8.089		.023		
103A		10.806	0.867	8.523		.015		
122A		13.077	1.684	--		.0252		
124A		13.107	1.128	--		.0308		
125A		13.077	0.868	--		.029		
126A		13.107	0.560	--		.0285		
127A		13.107	0.280	--		.0245		
139A		15.347	1.584	--		.0337		
140A		15.347	0.868	--		.0291		
404A		17.574	1.572	--		.0301		
405A		17.549	1.120	--		.0322		
406A		17.574	0.868	--		.0285		
407A		17.574	0.560	--		.0284		
408A		17.574	0.280	--		.0260		
410A		19.845	1.572	--		.0334		
155A		22.000	1.572	--		.0307		
156A		22.000	0.868	--		.0264		
157A		22.640	1.582	--		.0305		
158A		22.640	1.218	--		.0248		
159A		22.640	0.868	--		.0264		
160A		22.640	0.308	--		.0306		
36A		22.610	0.014	--		.0278		

TABLE IV. THERMOCOUPLE LOCATIONS (CONTINUED)

L = 1293.3
X = Full Scale Distance from Orbiter Nose

Model 56-0

T/C NO.	X	X/L	Z_o	SKIN THICKNESS	REMARKS
1	355.66	0.275	437.5	.0215	Upper Tangent
2	387.99	0.3	442.0	.0210	
3	420.33	0.325	445.0	.0217	
4	452.66	0.350		.0215	
5	484.99	0.375		.0212	
6	517.32	0.400		.0217	
7	549.65	0.425		.0215	
8	581.99	0.450		.0218	
9	614.32	0.475		.0219	
10	646.65	0.500		.0220	
11	678.99	0.525		.0220	
12	711.32	0.55		.0222	
13	775.99	0.600		.0220	
14	840.65	0.650		.0220	
15	905.31	0.700		.0228	
16	969.98	0.750		.0220	
17	1034.64	0.800		.0230	
18	368.59	0.285	420.0	.0190	Hinge Line
19	435.84	0.337		.0189	
20	504.39	0.390		.0189	
21	550.95	0.426		.0190	
22	618.20	0.478		.0200	
23	685.43	0.530		.0200	
24	733.30	0.567		.0205	
25	801.85	0.620		.0205	
26	866.51	0.67		.0205	
27	911.78	0.705		.0207	

TABLE IV. THERMOCOUPLE LOCATIONS (CONTINUED)

L = 1293.3
X = Full Scale Distance from Orbiter Nose

Model 56-0

T/C NO.	X	X/L	Z_o	SKIN THICKNESS	REMARKS
28	969.98	0.750	420.0	.0203	Hinge Line
29	1034.64	0.800	↓	.0202	↓
30	1065.68	0.824	↓	.0160	↓
31	258.66	0.200	400.00	.0210	W.L. 400
32	290.99	0.225	↓	.0199	↓
33	323.32	0.250	↓	.0199	↓
34	355.66	0.275	↓	.0186	↓
35	387.99	0.300	↓	.0180	↓
36	420.33	0.325	↓	.0190	↓
37	452.66	0.350	↓	.0192	↓
38	484.99	0.375	↓	.0190	↓
39	517.32	0.400	↓	.0189	↓
40	549.66	0.425	↓	.0188	↓
41	581.99	0.450	↓	.0195	↓
42	614.32	0.475	↓	.0200	↓
43	646.65	0.500	↓	.0200	↓
44	678.99	0.525	↓	.0190	↓
45	711.32	0.550	↓	.0200	↓
46	775.99	0.600	↓	.0205	↓
47	840.65	0.650	↓	.0210	↓
48	905.31	0.700	↓	.0202	↓
49	969.98	0.750	↓	.0205	↓
50	1034.64	0.800	↓	.0208	↓
51	1099.30	0.850	↓	.0180	↓
52	1131.64	0.875	↓	.0180	↓
53	1163.97	0.900	↓	.0160	↓
54	1196.30	0.925	↓	.0170	↓

TABLE IV. THERMOCOUPLE LOCATIONS (CONCLUDED)

L = 1293.3
X = Full Scale Distance from Orbiter Nose

Model 56-0

T/C NO.	X	X/L	Z_o	SKIN THICKNESS	REMARKS
55	1228.64	0.950	400.00	.0220	W.L. 400
56	387.99	0.300	372.5	.0170	Z = 372.5
57	420.33	0.325		.0170	
58	452.66	0.350		.0170	
59	484.99	0.375		.0170	
60	517.32	0.400		.0170	
61	549.66	0.425		.0170	
62	581.99	0.450		.0172	
63	614.32	0.475		.0175	
64	646.65	0.500		.0180	
65	678.99	0.525		.0180	
66	711.32	0.550		.0190	
67	775.99	0.600		.0198	
68	840.65	0.650		.0190	
69	905.31	0.700		.0200	
70	969.98	0.750		.0200	
71	258.66	0.200	355	.0195	W.L. 355
72	290.99	0.225		.0190	
73	323.32	0.250		.0190	
74	355.66	0.275		.0180	
75	1034.64	0.800		.0185	
76	1099.30	0.850		.0188	
77	1131.64	0.875		.0170	
78	1163.97	0.900		.0172	
79	1196.30	0.925		.0180	
80	1228.64	0.950		.0190	

TABLE V. THERMOCOUPLE PLUG HOOKUP SCHEDULE

CONSTANT SET (C.S.) AND THERMOCOUPLE (T/C) SCHEDULE

ORBITER 60-0

Plug Numbers 1, 2, 3, 4, 5, 6, 7, 8, 9, 10, 11, 12, 13, 14, 15

IRON-CONSTANTAN

	C.S. 100
Plug Numbers	1, 2, 3, 4, 5
	C.S. 200
Plug Numbers	6, 7, 8, 9, 10
	C.S. 300
Plug Numbers	11, 12, 13, 14, 15

TABLE V. THERMOCOUPLE PLUG HOOKUP SCHEDULE (Continued)

Model No. 60-0 Constant Set 100

PLUG NUMBERS

	1 T/C	2 T/C	3 T/C	4 T/C	5 T/C
1	340	357	373	300	317
2	341	358	374	301	318
3	342	359	375	302	319
4	343	360	376	303	320
5	344	361	377	304	321
6	345	362	378	305	322
7	348	363	379	306	323
8	349	364	380	308	325
9	350	365	381	309	327
10	351	366	382	310	331
11	352	367	383	311	332
12	353	369	384	312	333
13	354	370	385	313	334
14	355	371	298	315	335
15	356	372	299	316	337

TABLE V. THERMOCOUPLE PLUG HOOKUP SCHEDULE (Continued)

Model No. 60-0 Constant Set 200

PLUG NUMBERS

	6 T/C	7 T/C	8 T/C	9 T/C	10 T/C
1	338	251	463	95	147
2	339	252	464	96	148
3	253	264	465	97	150
4	254	269	466	107	151
5	255	270	467	120	152
6	256	482	468	121	153
7	257	271	469	122	154
8	258	483	470	123	156
9	259	484	471	131	158
10	260	485	274	132	159
11	261	490	472	139	162
12	276	491	277	140	163
13	278	460	473	142	164
14	279	461	83	143	165
15	280	462	84	144	166

TABLE V. THERMOCOUPLE PLUG HOOKUP SCHEDULE (Continued)

Model No. 60-0 Constant Set 300

PLUG NUMBERS

	11 T/C	12 T/C	13 T/C	14 T/C	15 T/C
1	167	14	204	218	223
2	168	15	205	219	234
3	1	16	206	40	388
4	2	17	45	41	184
5	3	18	207	42	225
6	4	19	208	43	236
7	5	20	209	57	390
8	6	21	211	58	186
9	7	23	212	59	188
10	8	24	213	60	229
11	9	25	214	69	240
12	10	26	48	70	394
13	11	44	215	71	190
14	12	202	216	72	231
15	13	203	217	182	242

TABLE V. THERMOCOUPLE PLUG HOOKUP SCHEDULE (Continued)

CONSTANT SET (C.S.) AND THERMOCOUPLE (T/C) SCHEDULE

ORBITER 60-C

Plug Numbers 16, 17, 18, 19, 20, 21, 22, 23, 24, 25

CHROMEL-CONSTANTAN

C.S. 500

Plug Numbers 16, 17, 18, 19, 20

C.S. 600

Plug Numbers 21, 22, 23, 24, 25

TABLE V. THERMOCOUPLE PLUG HOOKUP SCHEDULE (Continued)

Model No. 60-0 Constant Set 500

PLUG NUMBERS
CHROMEL-CONSTANTAN

	16 T/C	17 T/C	18 T/C	19 T/C	20 T/C
1	368A	258A	116C	105C	35C
2	397C	259A	117C	106C	36C
3	398C	260A	118C	141C	37C
4	399C	261A	119C	155C	38C
5	400C	262A	77C	157C	39C
6	279A	263A	78C	197A	113A
7	249A	74C	79C	22C	191A
8	250A	75C	80C	27C	192A
9	251A	76C	81C	28C	193A
10	252A	110C	82C	29C	194A
11	253A	111C	90C	30C	186A
12	254A	112C	91C	31C	187A
13	255A	113C	92C	32C	188A
14	256A	114C	93C	33C	189A
15	257A	115C	94C	34C	196A

TABLE V. THERMOCOUPLE PLUG HOOKUP SCHEDULE (Concluded)

Model No. 60-0 Constant Set 600

PLUG NUMBERS
CHROMEL-CONSTANTAN

	21 T/C	22 T/C	23 T/C	24 T/C	25 T/C
1	37A	56C	338A	122A	157A
2	38A	62C	339A	140A	107A
3	39A	63C	341A	139A	114A
4	45A	64C	342A	408A	115A
5	46A	65C	343A	407A	116A
6	47A	66C	344A	406A	117A
7	65A	67C	87A	405A	118A
8	70A	68C	88A	404A	130A
9	107A	320A	89A	410A	131A
10	50C	321A	103A	156A	132A
11	51C	322A	102A	155A	133A
12	52C	323A	127A	36A	134A
13	53C	288C	126A	160A	135A
14	54C	336A	125A	159A	220C
15	55C	337A	124A	158A	41A

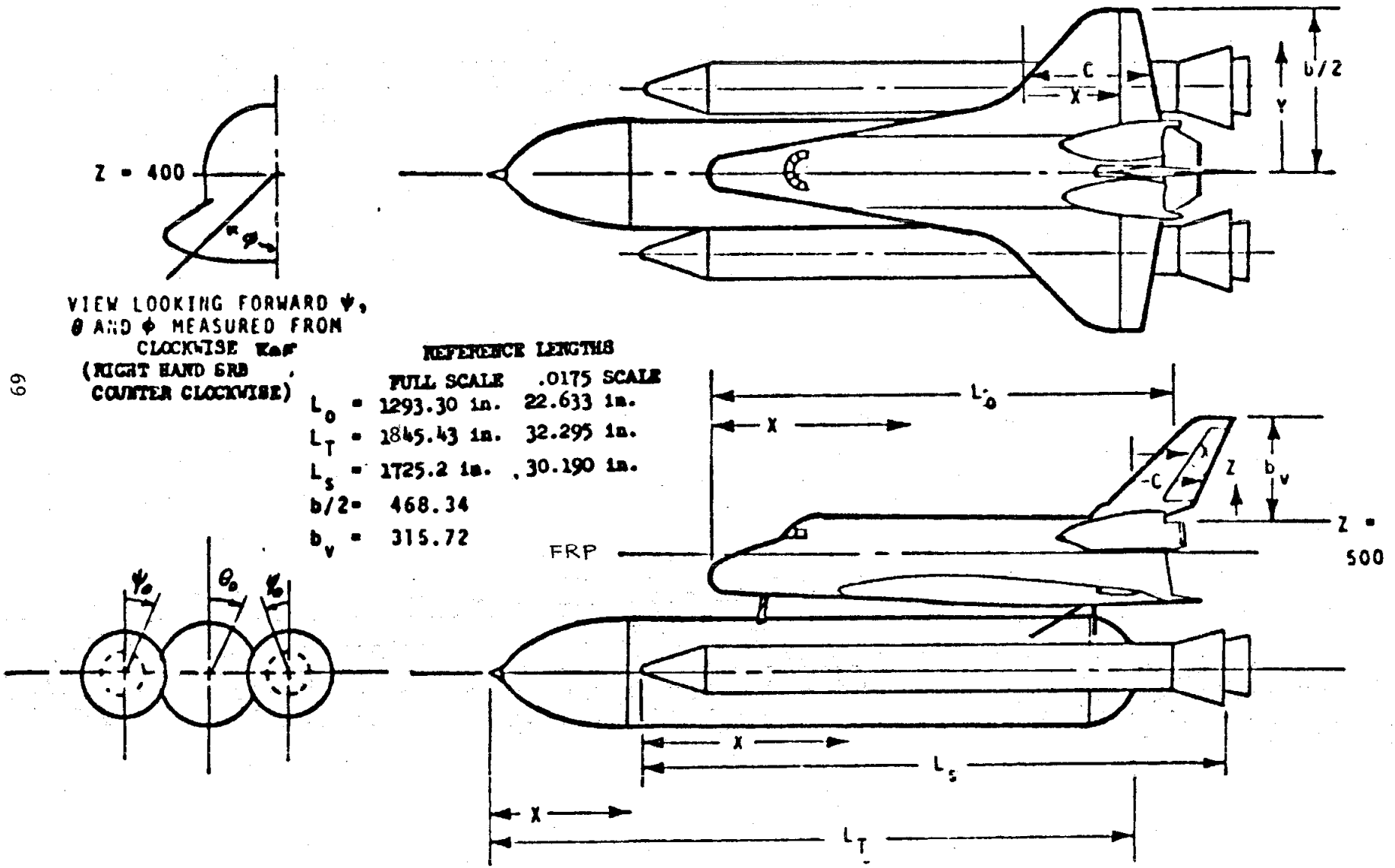

Figure 1. Model Coordinate System

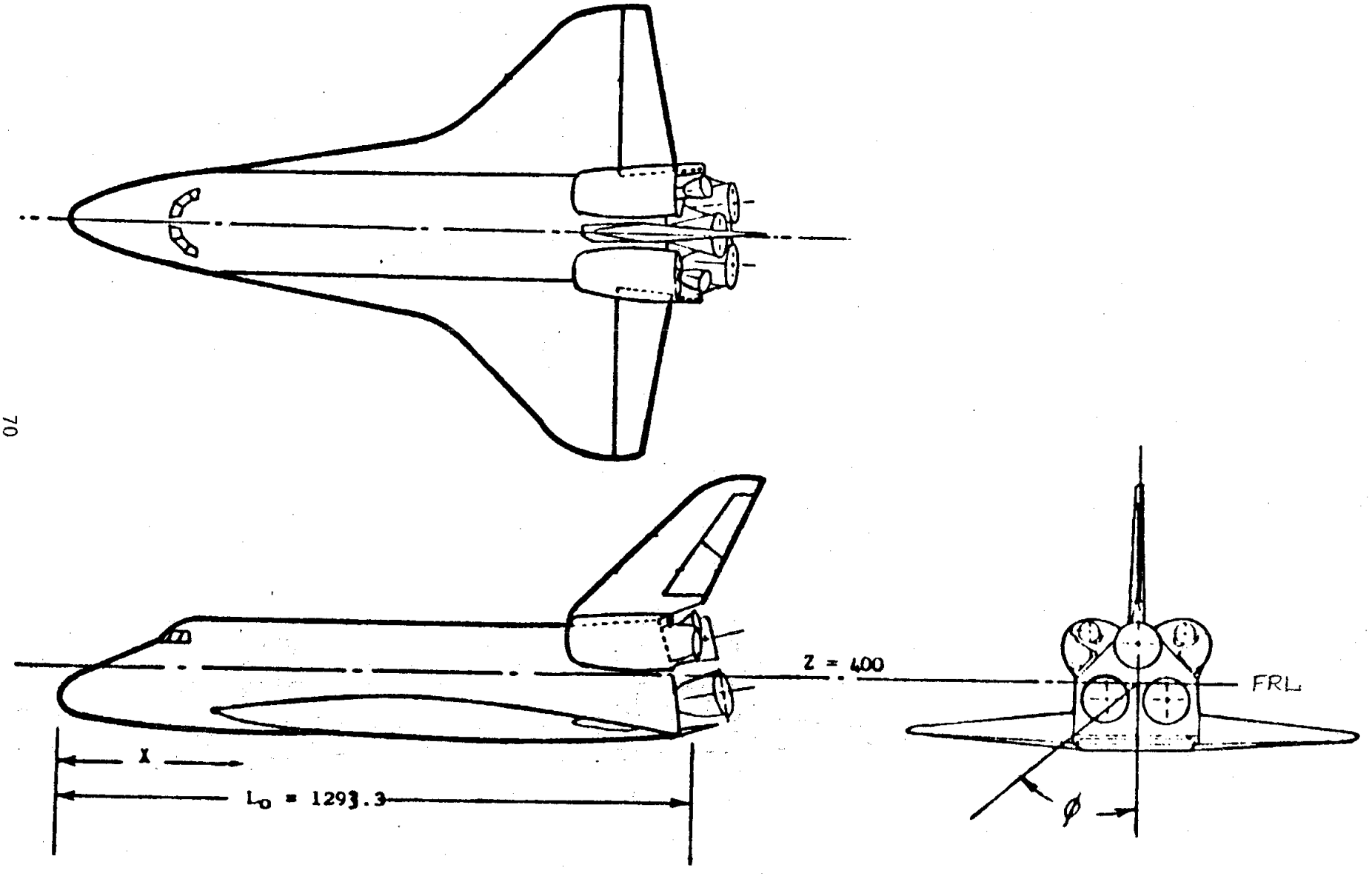

Figure 2. Orbiter General Arrangement

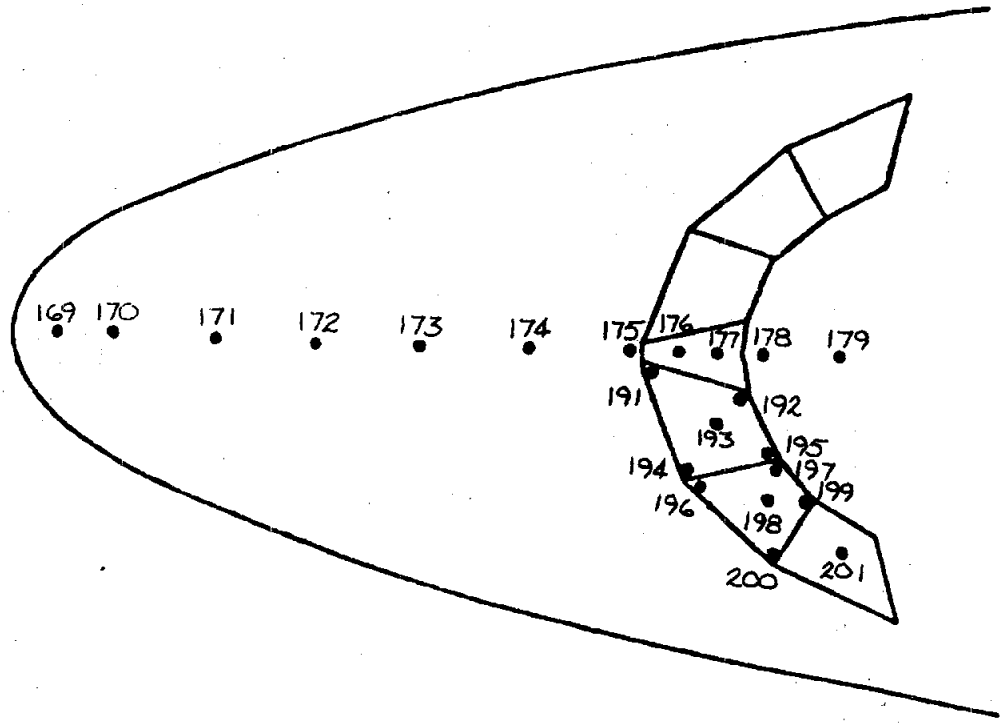

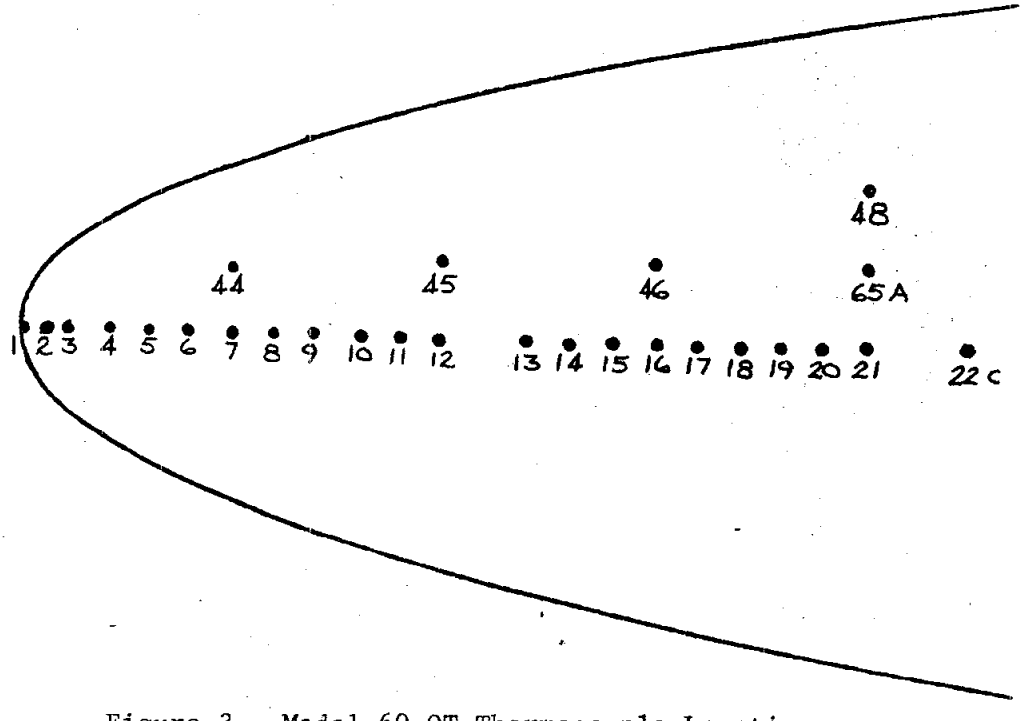

Figure 3. Model 60-OT Thermocouple Locations
a. Nose and Canopy T/C Locations
(Top View)

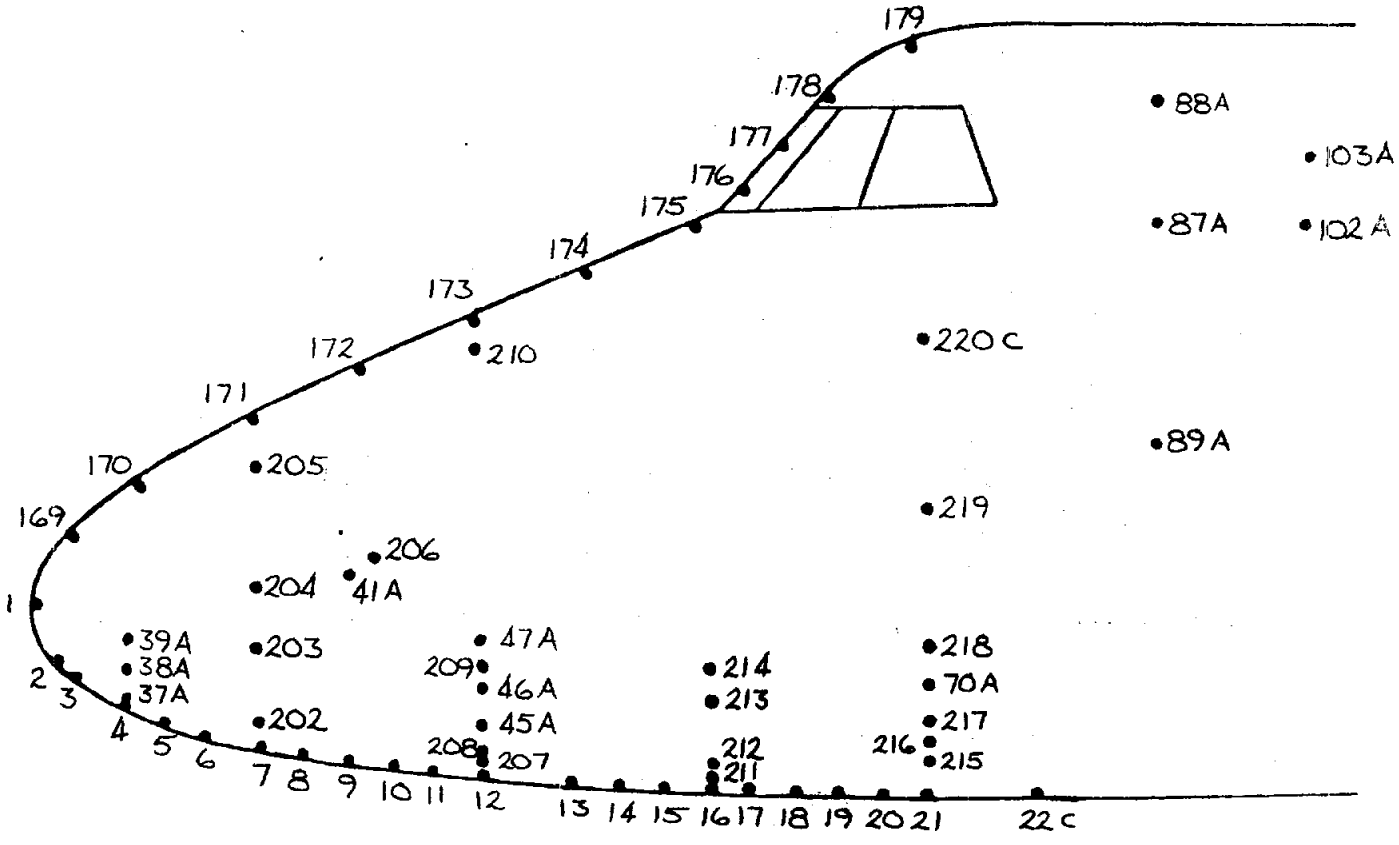

Figure 3. (Continued)
b. Nose and Canopy T/C Locations (Side View)

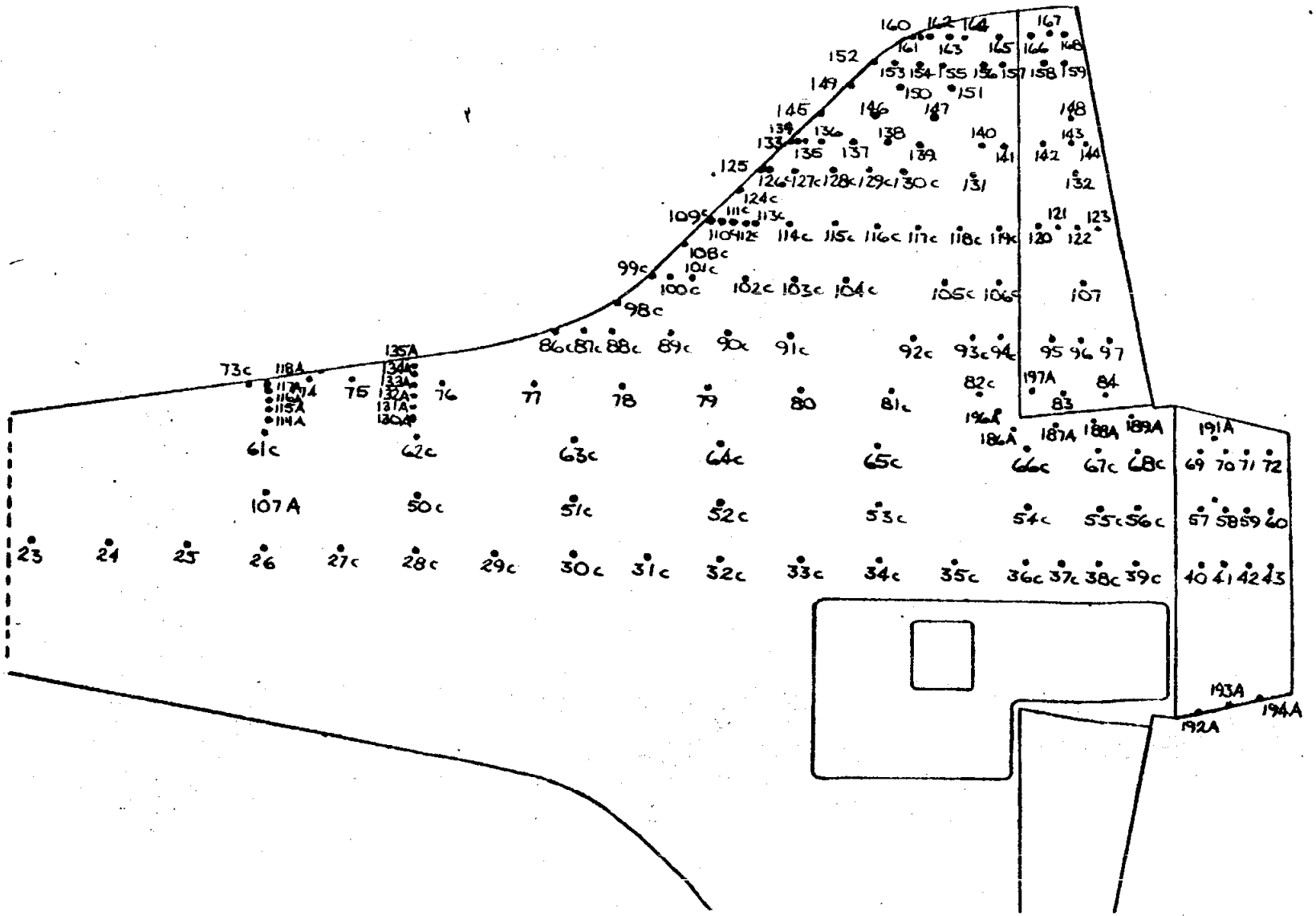

Figure 3. (Continued)
c. Lower Surface T/C Locations

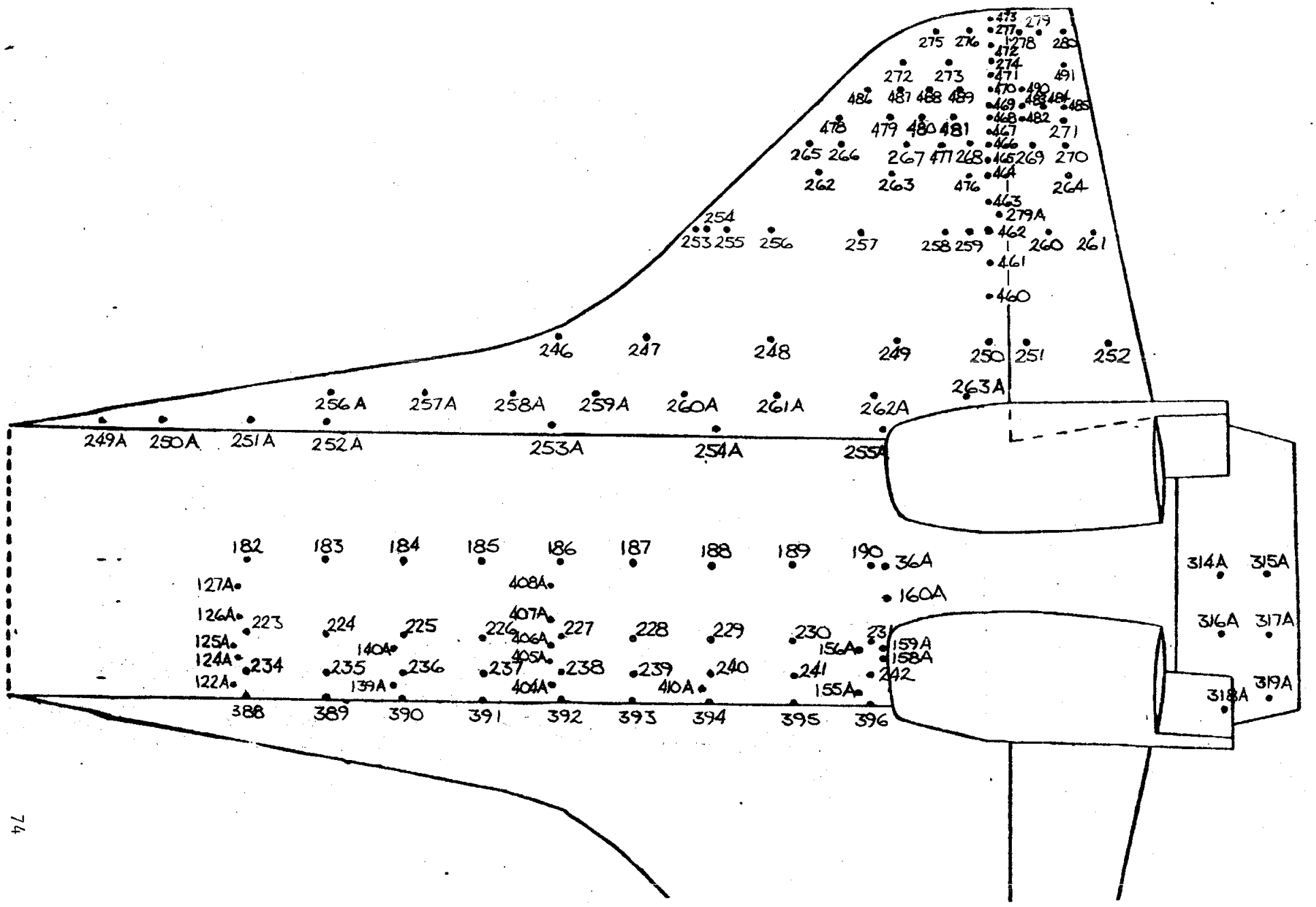

Figure 3. (Continued)
d. Upper Surface T/C Locations

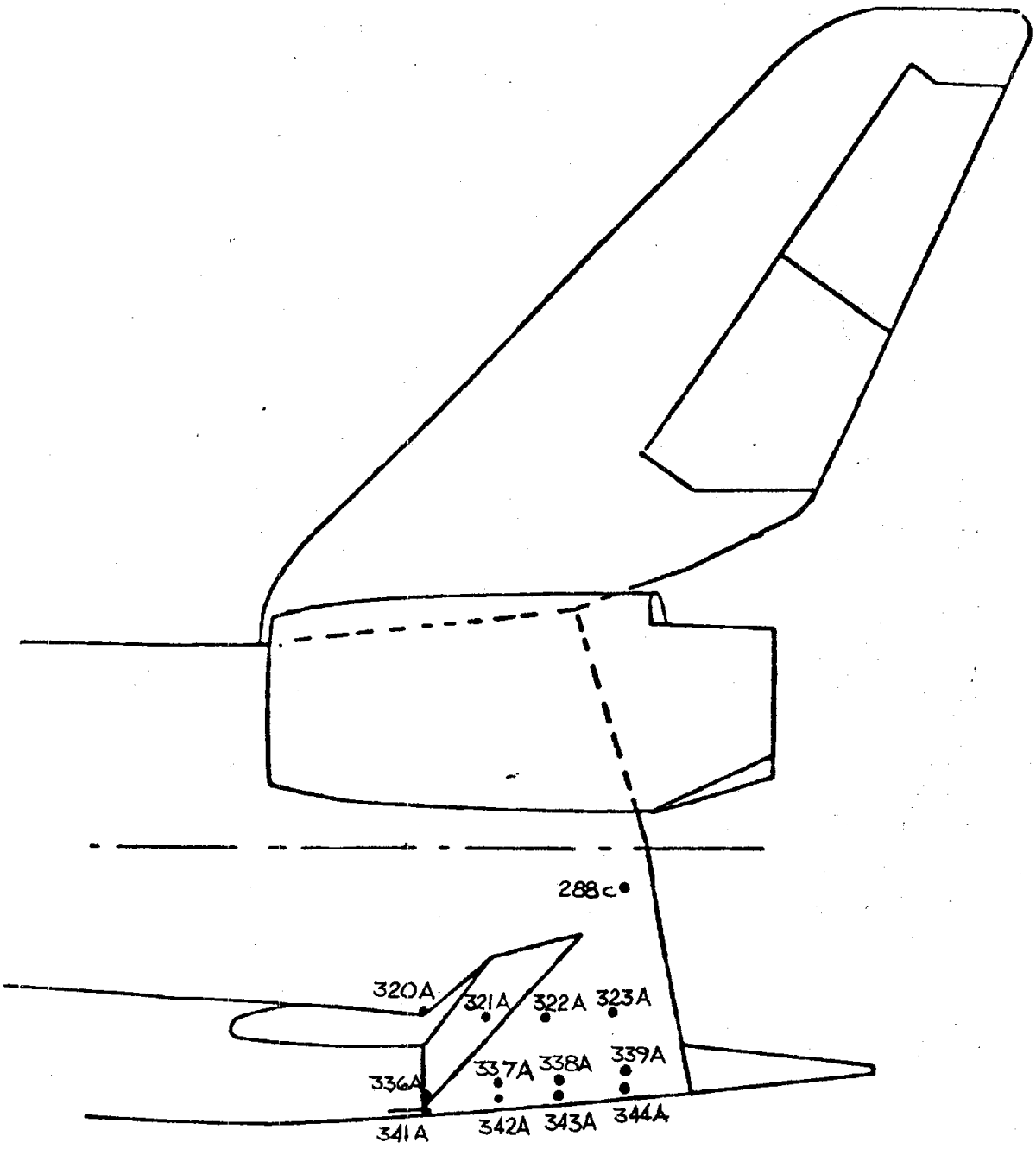

Figure 3. (Continued)
e. Aft Fuselage T/C Locations

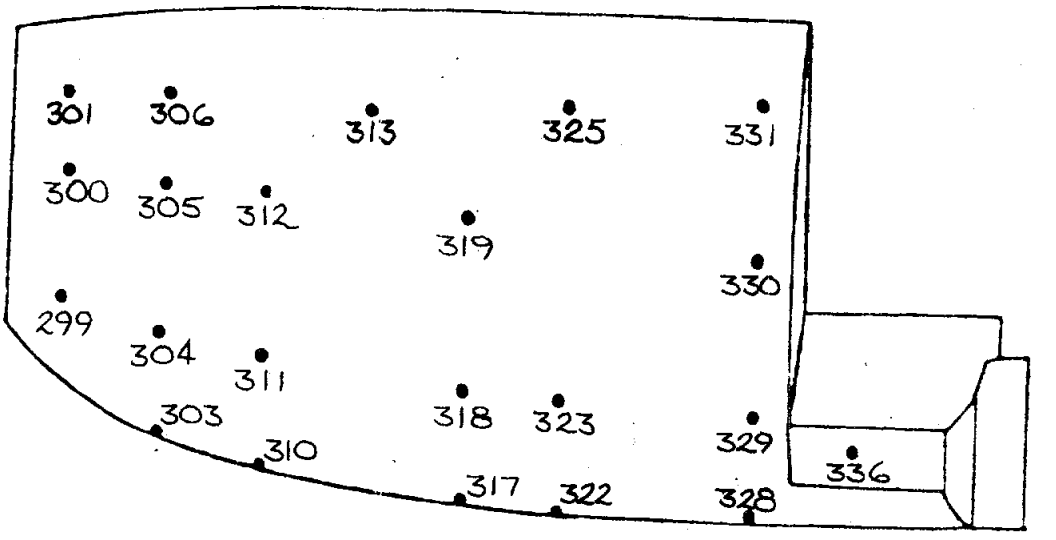

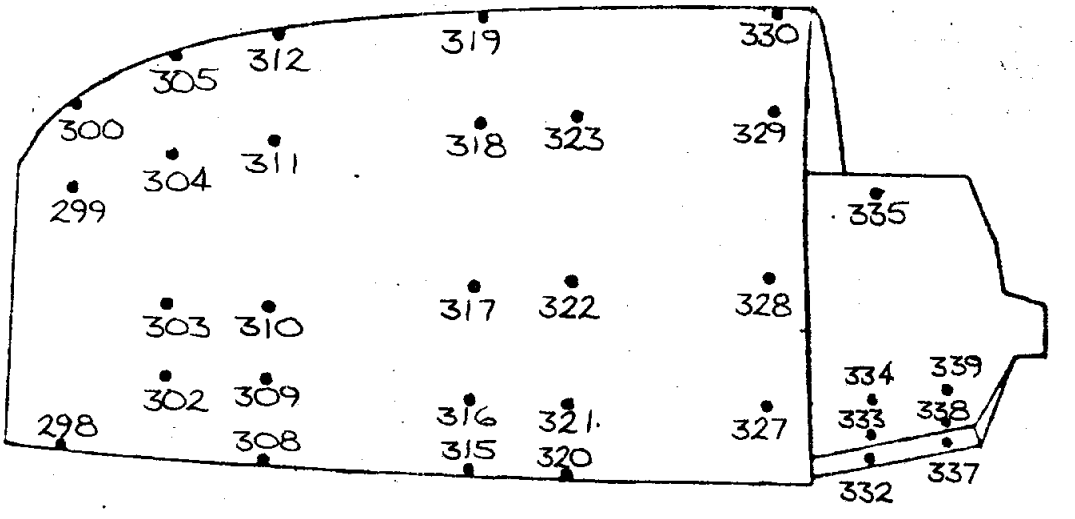

Figure 3. (Continued)
f. OMS Pod T/C Locations

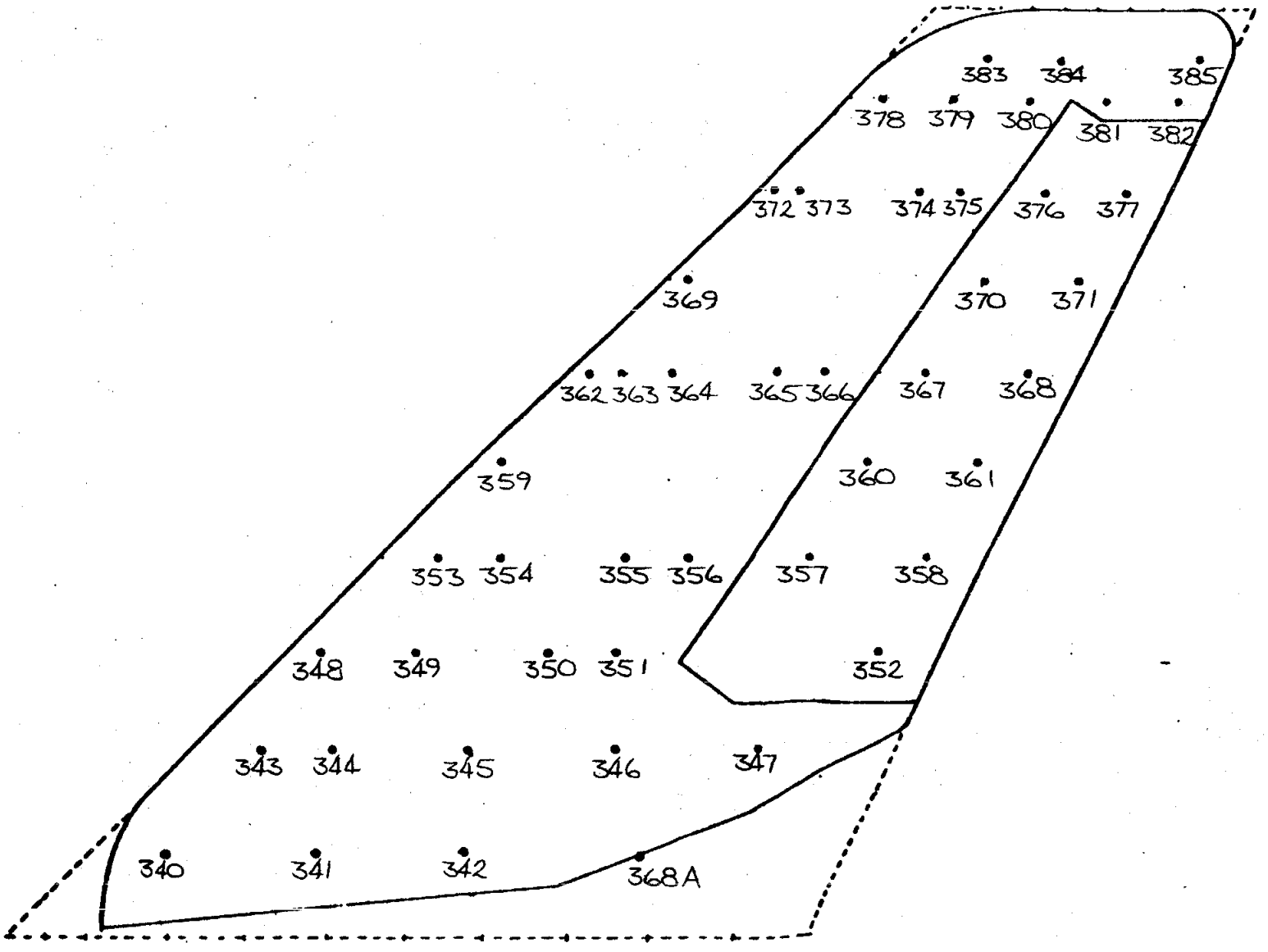

Figure 3. (Concluded)
g. Vertical Tail T/C Locations

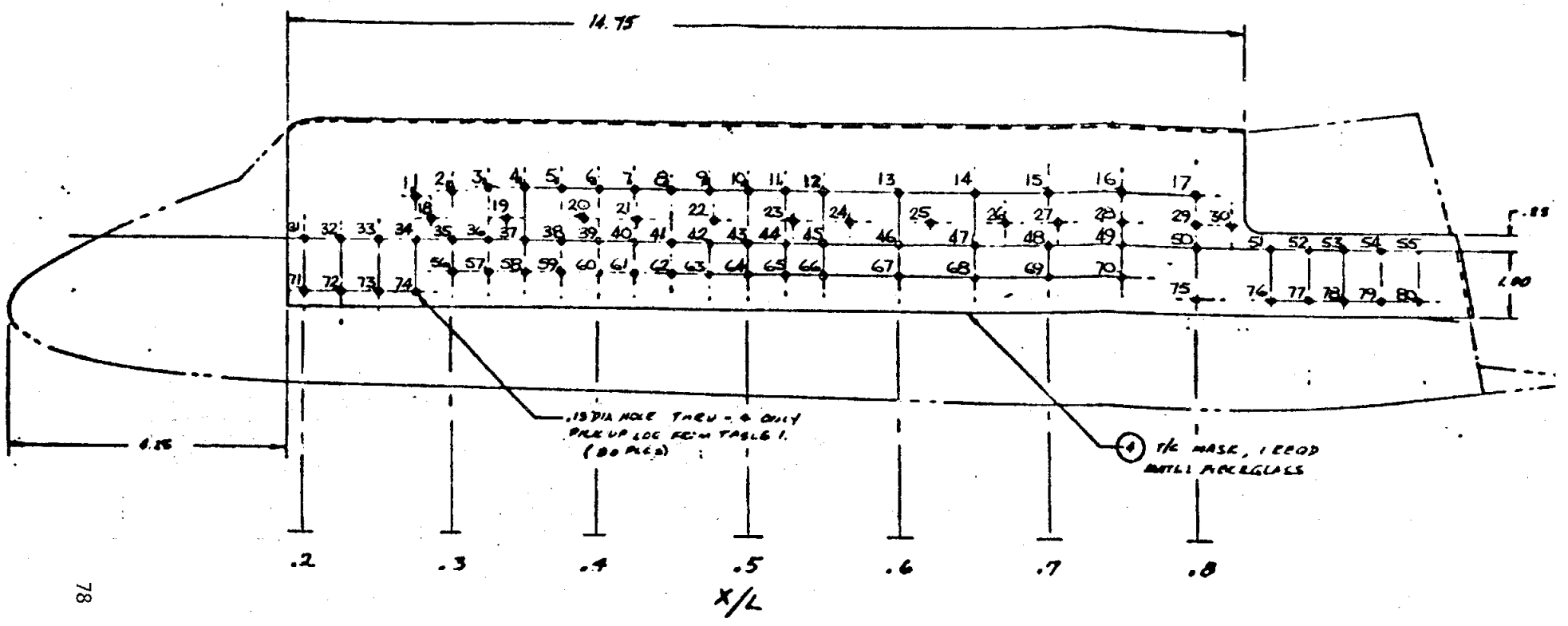

Figure 4.
Model 56-0 Thermocouple Locations

APPENDIX

TABULATED SOURCE DATA

(THIS PAGE INTENTIONALLY LEFT BLANK)

IH103 60-OT FUSELAGE (R3PA01)

FUSELAGE

PARAMETRIC DATA

MACH = 5.250 ALPHA = .0000 BETA = .0000 ELEVON = .0000
BDFLAP = .0000 SPDBRK = .0000

TEST CONDITIONS

RUN NUMBER	ALPHA DEG.	BETA DEG.	MACH	RN/FT /FT X10 6	PT PSIA	TT DEG. R	HT BTU/ LBM	PINF PSIA	TINF DEG. R	RHO SLUGS/ FT3	VINF FT/SEC	SCALE
60	.0000	.0000	5.250	1.059	102.9	1478.	363.8	.1420	232.8	.5119-04	3926.	.1750-01
84	.0000	.0000	5.250	1.008	102.8	1523.	375.5	.1415	240.3	.4941-04	3989.	.1750-01
85	.0000	.0000	5.250	1.025	103.2	1511.	372.3	.1421	238.3	.5006-04	3972.	.1750-01

RUN NUMBER	PHI DEG.	HS SPHERE TW=540
60	.0000	.1671
84	.0000	.1673
85	.0000	.1675

TEST DATA

RUN NUMBER	PHI	XB/LB	T/C NO	H/HREF R=1.0	H/HREF R=.900	H/HREF R=.850	QREF BTU/ FT2SEC	QDOT BTU/ FT2SEC	HW/HT	TW DEG. R	STN NO R=.900
60	.00000	.00000	1.0000	.8332	.9899	1.093	38.35	31.95	.3685	558.7	.2556-01
60	.00000	.50000-02	2.0000	.5165	.6137	.6774	38.36	19.81	.3683	558.4	.1584-01
60	.00000	.10000-01	3.0000	.3283	.3900	.4305	38.38	12.60	.3680	558.0	.1007-01
60	.00000	.20000-01	4.0000	.1503	.1786	.1971	38.41	5.775	.3675	557.1	.4610-02
60	.00000	.30000-01	5.0000	.8645-01	.1027	.1133	38.43	3.322	.3672	556.7	.2651-02
60	.00000	.40000-01	6.0000	.6664-01	.7914-01	.8733-01	38.44	2.562	.3670	556.4	.2043-02
60	.00000	.50000-01	7.0000	.4677-01	.5554-01	.6129-01	38.44	1.798	.3670	556.4	.1434-02
60	.00000	.60000-01	8.0000	.4082-01	.4848-01	.5350-01	38.44	1.569	.3670	556.5	.1252-02
60	.00000	.70000-01	9.0000	.3032-01	.3601-01	.3974-01	38.46	1.166	.3668	556.1	.9298-03
60	.00000	.80000-01	10.000	.1761-01	.2092-01	.2308-01	38.43	.6768	.3672	556.6	.5401-03
60	.00000	.90000-01	11.000	.1469-01	.1744-01	.1925-01	38.44	.5645	.3671	556.6	.4503-03
60	.00000	.10000+00	12.000	.3264-01	.3877-01	.4278-01	38.44	1.255	.3671	556.6	.1001-02
60	.00000	.12000	13.000	.2309	.2742	.3026	38.44	8.875	.3670	556.4	.7080-02
60	.00000	.13000	14.000	.1684	.2000	.2207	38.44	6.473	.3671	556.6	.5165-02
60	.00000	.14000	15.000	.9371-01	.1113	.1228	38.42	3.600	.3673	556.9	.2874-02
60	.00000	.15000	16.000	.7277-01	.8644-01	.9540-01	38.40	2.794	.3677	557.4	.2232-02
60	.00000	.16000	17.000	.6260-01	.7384-01	.8113-01	39.94	2.500	.3434	520.6	.1910-02

IH103 60-OT FUSELAGE (R3PA01)

RUN NUMBER	PHI	XB/LB	T/C NO	H/HREF R=1.0	H/HREF R=.900	H/HREF R=.850	QREF BTU/ FT2SEC	QDOT BTU/ FT2SEC	HW/HT	TW DEG. R	STN NO R=.900
60	.00000	.17000	18.000	.7070-01	.8399-01	.9269-01	38.39	2.714	.3678	557.6	.2168-02
60	.00000	.18000	19.000	.7980-01	.9480-01	.1046	38.39	3.063	.3679	557.7	.2448-02
60	.00000	.19000	20.000	.8433-01	.1002	.1106	38.37	3.235	.3682	558.3	.2587-02
60	.00000	.20000	21.000	.8541-01	.1015	.1120	38.35	3.275	.3686	558.8	.2620-02
60	.00000	.25000	23.000	.2913-01	.3462-01	.3822-01	38.32	1.116	.3690	559.4	.8937-03
60	.00000	.30000	24.000	.5395-01	.6412-01	.7078-01	38.31	2.067	.3692	559.7	.1655-02
60	.00000	.40000	26.000	.2992-01	.3557-01	.3928-01	38.24	1.144	.3702	561.3	.9182-03
85	.00000	.45000	1027.0	.2328-01	.2755-01	.3033-01	40.23	.9368	.3546	550.3	.7212-03
85	.00000	.55000	1029.0	.1904-01	.2253-01	.2480-01	40.24	.7661	.3546	550.2	.5897-03
85	.00000	.60000	1030.0	.1740-01	.2060-01	.2268-01	40.22	.7000	.3548	550.6	.5391-03
85	.00000	.65000	1031.0	.9704-02	.1148-01	.1264-01	40.24	.3906	.3545	550.0	.3006-03
85	.00000	.70000	1032.0	.2049-01	.2425-01	.2670-01	40.20	.8238	.3551	551.0	.6348-03
85	.00000	.75000	1033.0	.8048-01	.9523-01	.1048	40.25	3.240	.3543	549.8	.2493-02
85	.00000	.80000	1034.0	.9791-01	.1159	.1276	40.24	3.940	.3546	550.2	.3033-02
85	.00000	.85000	1035.0	.1028	.1216	.1339	40.27	4.140	.3541	549.5	.3184-02
85	.00000	.90000	1036.0	.4722-01	.5587-01	.6151-01	40.24	1.900	.3546	550.2	.1462-02
85	.00000	.95000	1038.0	.3023-01	.3577-01	.3938-01	40.26	1.217	.3543	549.8	.9363-03
85	.00000	.97500	1039.0	.2649-01	.3134-01	.3449-01	40.31	1.068	.3534	548.4	.8203-03
60	.00000	1.0150	40.000	.2502-01	.2969-01	.3274-01	38.63	.9665	.3640	551.9	.7667-03
60	.00000	1.0300	41.000	.2641-01	.3134-01	.3456-01	38.63	1.020	.3641	552.0	.8093-03
60	.00000	1.0450	42.000	.2869-01	.3405-01	.3756-01	38.61	1.108	.3644	552.5	.8794-03
60	10.000	.10000+00	45.000	.2433-01	.2889-01	.3188-01	38.46	.9356	.3667	556.0	.7459-03
60	14.000	.50000-01	44.000	.5261-01	.6248-01	.6894-01	38.47	2.024	.3666	555.8	.1613-02
60	20.000	.10000+00	207.00	.2117-01	.2514-01	.2774-01	38.51	.8153	.3660	554.9	.6492-03
60	20.000	.15000	211.00	.1131	.1343	.1482	38.49	4.354	.3662	555.2	.3468-02
60	22.000	.50000-01	202.00	.7779-01	.9237-01	.1019	38.48	2.994	.3664	555.5	.2385-02
60	24.000	.20000	48.000	.5744-01	.6821-01	.7526-01	38.48	2.210	.3665	555.6	.1761-02
60	24.500	.10000+00	208.00	.3949-01	.4689-01	.5173-01	38.51	1.521	.3660	554.8	.1211-02
60	25.500	.15000	212.00	.3482-01	.4134-01	.4561-01	38.51	1.341	.3660	554.9	.1067-02
60	31.500	.20000	215.00	.5227-01	.6207-01	.6849-01	38.48	2.012	.3664	555.5	.1603-02
60	35.000	.20000	216.00	.3781-01	.4490-01	.4954-01	38.48	1.455	.3665	555.6	.1159-02
60	39.000	.10000+00	209.00	.5510-01	.6541-01	.7215-01	38.55	2.124	.3653	553.9	.1689-02
60	40.000	.15000	213.00	.1945-01	.2309-01	.2548-01	38.51	.7492	.3659	554.7	.5963-03
60	40.000	.20000	217.00	.2188-01	.2598-01	.2867-01	38.47	.8419	.3665	555.7	.6709-03
60	42.500	.50000-01	204.00	.1136	.1349	.1488	38.46	4.368	.3668	556.1	.3483-02
60	45.500	.15000	214.00	.3987-01	.4732-01	.5220-01	38.57	1.533	.3650	553.4	.1222-02
60	51.000	.20000	218.00	.1982-01	.2354-01	.2597-01	38.47	.7625	.3666	555.7	.6078-03
60	60.000	.50000-01	205.00	.1327	.1576	.1739	38.43	5.100	.3672	556.7	.4069-02
60	67.500	.20000	219.00	.1993-01	.2367-01	.2611-01	38.48	.7670	.3664	555.5	.6111-03
84	96.500	.20000	1220.0	.2373-01	.2802-01	.3081-01	41.03	.9737	.3468	542.7	.7391-03
60	114.00	.40000	388.00	.2526-01	.3001-01	.3312-01	38.40	.9700	.3678	557.6	.7748-03
60	114.00	.70000	394.00	.1453-01	.1726-01	.1905-01	38.39	.5579	.3678	557.7	.4457-03
60	157.50	.40000	223.00	.3378-02	.4002-02	.4409-02	38.96	.1316	.3588	543.9	.1034-03

IH103 60-OT FUSELAGE (R3PA01)

RUN NUMBER	PHI	XB/LB	T/C NO	H/HREF R=1.0	H/HREF R=.900	H/HREF R=.850	QREF BTU/ FT2SEC	QDOT BTU/ FT2SEC	HW/HT	TW DEG. R	STN NO R=.900
60	157.50	.50000	225.00	.1913-01	.2271-01	.2506-01	38.47	.7357	.3666	555.9	.5864-03
60	157.50	.70000	229.00	.1776-01	.2109-01	.2327-01	38.47	.6832	.3665	555.7	.5445-03
60	157.50	.80000	231.00	.2716-02	.3215-02	.3540-02	39.14	.1063	.3559	539.6	.8307-04
60	180.00	.40000	182.00	.1098-01	.1305-01	.1440-01	38.43	.4221	.3672	556.8	.3368-03
60	180.00	.50000	184.00	.1164-01	.1383-01	.1526-01	38.47	.4479	.3667	555.9	.3570-03
60	180.00	.60000	186.00	.1719-01	.2042-01	.2253-01	38.46	.6612	.3667	556.0	.5271-03
60	180.00	.70000	188.00	.1978-01	.2348-01	.2591-01	38.47	.7608	.3665	555.7	.6063-03
60	180.00	.80000	190.00	.3033-01	.3602-01	.3975-01	38.44	1.166	.3671	556.5	.9300-03
60	315.00	.50000	236.00	.5280-02	.6270-02	.6918-02	38.46	.2030	.3668	556.1	.1619-03
60	315.00	.70000	240.00	.3957-02	.4698-02	.5184-02	38.47	.1522	.3667	555.9	.1213-03
60	315.00	.80000	242.00	.5028-01	.5973-01	.6593-01	38.38	1.930	.3680	557.9	.1542-02

IH103 60-OT FUSELAGE (R3PA02)

FUSELAGE

PARAMETRIC DATA

MACH = 5.250 ALPHA = -5.000 BETA = .0000 ELEVON = .0000
BDFLAP = .0000 SPDBRK = .0000

TEST CONDITIONS

RUN NUMBER	ALPHA DEG.	BETA DEG.	MACH	RN/FT /FT X10 6	PT PSIA	TT DEG. R	HT BTU/ LBM	PINF PSIA	TINF DEG. R	RHO SLUGS/ FT3	VINF FT/SEC	SCALE
59	-5.000	.0000	5.250	1.045	101.3	1476.	363.2	.1398	232.4	.5048-04	3923.	.1750-01
83	-5.000	.0000	5.250	1.048	103.8	1496.	368.3	.1430	235.7	.5092-04	3951.	.1750-01
86	-5.000	.0000	5.250	1.032	103.2	1504.	370.6	.1422	237.2	.5031-04	3963.	.1750-01

RUN NUMBER	PHI DEG.	HS SPHERE TW=540
59	.0000	.1650
83	.0000	.1679
86	.0000	.1675

TEST DATA

RUN NUMBER	PHI	XB/LB	T/C NO	H/HREF R=1.0	H/HREF R=.900	H/HREF R=.850	QREF BTU/ FT2SEC	QDOT BTU/ FT2SEC	HW/HT	TW DEG. R	STN NO R=.900
59	.00000	.00000	1.0000	.9882	1.172	1.293	38.32	37.87	.3632	549.8	.3048-01
59	.00000	.50000-02	2.0000	.5930	.7034	.7756	38.34	22.74	.3629	549.3	.1829-01
59	.00000	.10000-01	3.0000	.3628	.4303	.4744	38.36	13.92	.3626	548.9	.1119-01
59	.00000	.20000-01	4.0000	.1605	.1903	.2098	38.40	6.162	.3619	547.9	.4949-02
59	.00000	.30000-01	5.0000	.9370-01	.1111	.1225	38.42	3.600	.3616	547.3	.2889-02
59	.00000	.40000-01	6.0000	.7358-01	.8724-01	.9616-01	38.44	2.828	.3613	546.9	.2269-02
59	.00000	.50000-01	7.0000	.5290-01	.6272-01	.6914-01	38.44	2.033	.3613	546.9	.1631-02
59	.00000	.60000-01	8.0000	.4807-01	.5699-01	.6283-01	38.44	1.848	.3613	547.0	.1482-02
59	.00000	.70000-01	9.0000	.3759-01	.4456-01	.4912-01	38.45	1.445	.3611	546.6	.1159-02
59	.00000	.80000-01	10.000	.2732-01	.3240-01	.3571-01	38.44	1.050	.3613	546.9	.8425-03
59	.00000	.90000-01	11.000	.2191-01	.2598-01	.2863-01	38.44	.8422	.3613	546.9	.6756-03
59	.00000	.10000+00	12.000	.1687-01	.2000-01	.2205-01	38.44	.6485	.3613	546.9	.5201-03
59	.00000	.12000	13.000	.1546	.1833	.2020	38.45	5.945	.3611	546.6	.4767-02
59	.00000	.13000	14.000	.1847	.2190	.2414	38.45	7.101	.3612	546.8	.5695-02
59	.00000	.14000	15.000	.9201-01	.1091	.1202	38.44	3.537	.3613	547.0	.2837-02
59	.00000	.15000	16.000	.7913-01	.9383-01	.1034	38.42	3.040	.3617	547.5	.2440-02
59	.00000	.16000	17.000	.1141	.1347	.1481	39.36	4.491	.3467	524.8	.3507-02

IH103 60-OT FUSELAGE (R3PA02)

RUN NUMBER	PHI	XB/LB	T/C NO	H/HREF R=1.0	H/HREF R=.900	H/HREF R=.850	QREF BTU/ FT2SEC	QDOT BTU/ FT2SEC	HW/HT	TW DEG. R	STN NO R=.900
59	.00000	.17000	18.000	.1293	.1534	.1691	38.41	4.967	.3619	547.7	.3988-02
59	.00000	.18000	19.000	.1214	.1439	.1587	38.40	4.661	.3619	547.8	.3743-02
59	.00000	.19000	20.000	.1188	.1409	.1553	38.39	4.560	.3621	548.2	.3663-02
59	.00000	.20000	21.000	.1073	.1273	.1404	38.37	4.119	.3625	548.6	.3311-02
59	.00000	.25000	23.000	.3882-01	.4605-01	.5078-01	38.35	1.489	.3628	549.1	.1198-02
59	.00000	.30000	24 000	.5510-01	.6536-01	.7207-01	38.33	2.112	.3631	549.7	.1700-02
59	.00000	.40000	26.000	.3701-01	.4393-01	.4845-01	38.24	1.415	.3645	551.8	.1142-02
86	.00000	.45000	1027.0	.3361-01	.3973-01	.4371-01	40.27	1.353	.3511	542.3	.1037-02
86	.00000	.55000	1029.0	.2706-01	.3199-01	.3519-01	40.28	1.090	.3510	542.2	.8351-03
86	.00000	.60000	1030.0	.1872-01	.2213-01	.2435-01	40.24	.7533	.3515	542.9	.5777-03
86	.00000	.65000	1031.0	.1840-01	.2175-01	.2392-01	40.28	.7410	.3509	542.0	.5677-03
86	.00000	.70000	1032.0	.1917-01	.2267-01	.2494-01	40.26	.7719	.3513	542.7	.5918-03
86	.00000	.75000	1033.0	.7884-01	.9318-01	.1025	40.32	3.178	.3504	541.2	.2433-02
86	.00000	.80000	1034.0	.9630-01	.1138	.1252	40.30	3.881	.3507	541.6	.2972-02
86	.00000	.85000	1035.0	.1061	.1253	.1379	40.34	4.278	.3501	540.7	.3272-02
86	.00000	.90000	1036.0	.1865-01	.2204-01	.2425-01	40.31	.7518	.3505	541.3	.5755-03
86	.00000	.95000	1038.0	.2373-01	.2805-01	.3086-01	40.30	.9564	.3506	541.5	.7323-03
86	.00000	.97500	1039.0	.2152-01	.2543-01	.2797-01	40.35	.8682	.3499	540.5	.6640-03
59	.00000	1.0150	40.000	.1937-01	.2296-01	.2531-01	38.49	.7455	.3606	545.8	.5972-03
59	.00000	1.0300	41.000	.2002-01	.2373-01	.2616-01	38.48	.7703	.3607	546.0	.6172-03
59	.00000	1.0450	42.000	.1593-01	.1889-01	.2082-01	38.45	.6126	.3611	546.6	.4912-03
59	10.000	.10000+00	45.000	.2047-01	.2426-01	.2675-01	38.46	.7872	.3610	546.4	.6310-03
59	14.000	.50000-01	44.000	.6081-01	.7209-01	.7946-01	38.45	2.338	.3611	546.6	.1875-02
59	20.000	.10000+00	207.00	.3738-01	.4431-01	.4884-01	38.50	1.439	.3604	545.5	.1152-02
59	20.000	.15000	211.00	.9033-01	.1071	.1180	38.50	3.478	.3604	545.5	.2785-02
59	22.000	.50000-01	202.00	.8861-01	.1050	.1158	38.46	3.408	.3609	546.3	.2732-02
59	24.000	.20000	48.000	.8956-01	.1062	.1170	38.49	3.447	.3606	545.8	.2761-02
59	24.500	.10000+00	208.00	.4696-01	.5566-01	.6135-01	38.49	1.807	.3605	545.7	.1448-02
59	25.500	.15000	212.00	.2314-01	.2743-01	.3023-01	38.48	.8903	.3607	546.0	.7134-03
59	31.500	.20000	215.00	.8625-01	.1022	.1127	38.49	3.319	.3605	545.8	.2659-02
59	35.000	.50000-01	203.00	.1161	.1371	.1508	39.33	4.567	.3472	525.5	.3569-02
59	35.000	.20000	216.00	.5809-01	.6885-01	.7589-01	38.48	2.235	.3606	545.9	.1791-02
59	39.000	.10000+00	209.00	.6813-01	.8075-01	.8900-01	38.50	2.623	.3603	545.3	.2100-02
59	40.000	.15000	213.00	.2043-01	.2422-01	.2669-01	38.50	.7867	.3604	545.5	.6299-03
59	40.000	.20000	217.00	.2831-01	.3356-01	.3699-01	38.48	1.089	.3607	546.0	.8727-03
59	42.500	.50000-01	204.00	.1372	.1627	.1793	38.42	5.271	.3616	547.3	.4231-02
59	45.500	.15000	214.00	.4584-01	.5432-01	.5986-01	38.56	1.768	.3594	544.0	.1413-02
59	51.000	.20000	218.00	.2424-01	.2873-01	.3167-01	38.47	.9324	.3608	546.2	.7473-03
59	60.000	.50000-01	205.00	.1696	.2012	.2218	38.40	6.515	.3619	547.8	.5231-02
59	67.500	.20000	219.00	.3067-01	.3635-01	.4007-01	38.48	1.180	.3607	546.0	.9455-03
83	96.500	.20000	1220.0	.2664-01	.3152-01	.3470-01	39.90	1.063	.3545	544.2	.8174-03
59	114.00	.40000	388.00	.3207-01	.3804-01	.4194-01	38.37	1.231	.3624	548.6	.9892-03
59	114.00	.70000	394.00	.1300-01	.1542-01	.1700-01	38.31	.4979	.3633	550.0	.4009-03

IH103 60-OT FUSELAGE (REPA02)

RUN NUMBER	PHI	XB/LB	T/C NO	H/HREF R=1.0	H/HREF R=.900	H/HREF R=.850	QREF BTU/ FT2SEC	QDOT BTU/ FT2SEC	HW/HT	TW DEG. R	STN NO R=.900
59	157.50	.40000	223.00	.1525-02	.1805-02	.1987-02	38.85	.5926-01	.3548	537.0	.4696-04
59	157.50	.50000	225.00	.3434-01	.4071-01	.4488-01	38.41	1.319	.3618	547.6	.1059-02
59	157.50	.70000	229.00	.4489-01	.5324-01	.5870-01	38.36	1.722	.3626	548.8	.1384-02
59	157.50	.80000	231.00	.8006-03	.9473-03	.1043-02	38.87	.3112-01	.3545	536.6	.2465-04
59	180.00	.40000	182.00	.1259-01	.1493-01	.1646-01	38.40	.4836	.3619	547.8	.3883-03
59	180.00	.50000	184.00	.3465-01	.4109-01	.4530-01	38.42	1.331	.3617	547.5	.1069-02
59	180.00	.60000	186.00	.3706-01	.4394-01	.4844-01	38.42	1.424	.3617	547.5	.1143-02
59	180.00	.70000	188.00	.3743-01	.4438-01	.4893-01	38.39	1.437	.3621	548.1	.1154-02
59	180.00	.80000	190.00	.3913-01	.4642-01	.5118-01	38.35	1.500	.3628	549.2	.1207-02
59	315.00	.50000	236.00	.4547-02	.5392-02	.5944-02	38.41	.1747	.3618	547.7	.1402-03
59	315.00	.70000	240.00	.3203-01	.3799-01	.4189-01	38.34	1.228	.3630	549.4	.9879-03
59	315.00	.80000	242.00	.8458-01	.1004	.1107	38.27	3.237	.3640	550.9	.2609-02

IH103 60-OT FUSELAGE

(R3PA03)

FUSELAGE

PARAMETRIC DATA

MACH = 5.250 ALPHA = 5.000 BETA = .0000 ELEVON = .0000
BDFLAP = .0000 SPDBRK = .0000

TEST CONDITIONS

RUN NUMBER	ALPHA DEG.	BETA DEG.	MACH	RN/FT /FT X10 6	PT PSIA	TT DEG. R	HT BTU/ LBM	PINF PSIA	TINF DEG. R	RHO SLUGS/ FT3	VINF FT/SEC	SCALE
58	5.000	.0000	5.250	1.018	101.8	1504.	370.5	.1402	237.1	.4962-04	3962.	.1750-01
82	5.000	.0000	5.250	1.000	101.7	1521.	374.9	.1400	239.9	.4897-04	3986.	.1750-01
87	5.000	.0000	5.250	1.026	102.1	1500.	369.5	.1407	236.4	.4992-04	3957.	.1750-01

RUN NUMBER	PHI DEG.	HS SPHERE TW=540
58	.0000	.1663
82	.0000	.1664
87	.0000	.1665

TEST DATA

RUN NUMBER	PHI	XB/LB	T/C NO	H/HREF R=1.0	H/HREF R=.900	H/HREF R=.850	QREF BTU/ FT2SEC	QDOT BTU/ FT2SEC	HW/HT	TW DEG. R	STN NO R=.900
58	.00000	.00000	1.0000	.7650	.9052	.9966	39.75	30.40	.3546	547.6	.2379-01
58	.00000	.50000-02	2.0000	.4813	.5695	.6270	39.77	19.14	.3543	547.1	.1497-01
58	.00000	.10000-01	3.0000	.2996	.3545	.3902	39.79	11.92	.3540	546.6	.9317-02
58	.00000	.20000-01	4.0000	.1325	.1568	.1726	39.83	5.278	.3534	545.6	.4121-02
58	.00000	.30000-01	5.0000	.7663-01	.9065-01	.9977-01	39.84	3.053	.3532	545.3	.2382-02
58	.00000	.40000-01	6.0000	.5867-01	.6939-01	.7638-01	39.85	2.338	.3530	545.1	.1824-02
58	.00000	.50000-01	7.0000	.4191-01	.4958-01	.5457-01	39.83	1.670	.3533	545.4	.1303-02
58	.00000	.60000-01	8.0000	.3642-01	.4309-01	.4743-01	39.83	1.451	.3534	545.6	.1132-02
58	.00000	.70000-01	9.0000	.2825-01	.3342-01	.3678-01	39.84	1.125	.3532	545.4	.8784-03
58	.00000	.80000-01	10.000	.2085-01	.2466-01	.2715-01	39.81	.8301	.3536	545.9	.6483-03
58	.00000	.90000-01	11.000	.1904-01	.2253-01	.2480-01	39.81	.7581	.3537	546.0	.5921-03
58	.00000	.10000+00	12.000	.2328-01	.2754-01	.3032-01	39.80	.9267	.3537	546.2	.7239-03
58	.00000	.12000	13.000	.2086	.2467	.2716	39.80	8.301	.3538	546.2	.6485-02
58	.00000	.13000	14.000	.1726	.2042	.2247	39.79	6.865	.3540	546.6	.5366-02
58	.00000	.14000	15.000	.6768-01	.8008-01	.8816-01	39.77	2.692	.3543	547.0	.2105-02
58	.00000	.15000	16.000	.4901-01	.5799-01	.6385-01	39.75	1.948	.3545	547.4	.1524-02
58	.00000	.16000	17.000	.4461-01	.5256-01	.5770-01	40.76	1.818	.3388	523.1	.1383-02

IH103 60-OT FUSELAGE (R3PA03)

RUN NUMBER	PHI	XB/LB	T/C NO	H/HREF R=1.0	H/HREF R=.900	H/HREF R=.850	QREF BTU/ FT2SEC	QDOT BTU/ FT2SEC	HW/HT	TW DEG. R	STN NO R=.900
58	.00000	.17000	18.000	.4952-01	.5860-01	.6452-01	39.73	1.968	.3548	547.8	.1540-02
58	.00000	.18000	19.000	.5531-01	.6546-01	.7207-01	39.73	2.197	.3549	548.0	.1720-02
58	.00000	.19000	20.000	.5954-01	.7047-01	.7759-01	39.71	2.364	.3552	548.5	.1852-02
58	.00000	.20000	21.000	.5623-01	.6656-01	.7329-01	39.69	2.232	.3555	548.9	.1749-02
58	.00000	.25000	23.000	.3641-01	.4311-01	.4747-01	39.65	1.444	.3561	549.8	.1133-02
58	.00000	.30000	24.000	.4769-01	.5646-01	.6218-01	39.64	1.891	.3562	550.0	.1484-02
58	.00000	.40000	26.000	.3082-01	.3650-01	.4021-01	39.57	1.220	.3573	551.7	.9591-03
87	.00000	.45000	1027.0	.2570-01	.3040-01	.3347-01	39.77	1.022	.3535	544.4	.7965-03
87	.00000	.55000	1029.0	.2136-01	.2527-01	.2782-01	39.76	.8492	.3537	544.6	.6620-03
87	.00000	.60000	1030.0	.2449-01	.2897-01	.3189-01	39.73	.9727	.3542	545.4	.7590-03
87	.00000	.65000	1031.0	.2268-01	.2684-01	.2954-01	39.75	.9018	.3537	544.7	.7030-03
87	.00000	.70000	1032.0	.1502-01	.1777-01	.1957-01	39.74	.5970	.3540	545.1	.4656-03
87	.00000	.75000	1033.0	.1153	.1364	.1501	39.78	4.586	.3533	544.0	.3572-02
87	.00000	.80000	1034.0	.1126	.1331	.1465	39.78	4.478	.3533	544.0	.3488-02
87	.00000	.85000	1035.0	.5237-01	.6194-01	.6816-01	39.83	2.086	.3525	542.8	.1623-02
87	.00000	.90000	1036.0	.3540-01	.4187-01	.4609-01	39.79	1.409	.3531	543.8	.1097-02
87	.00000	.95000	1038.0	.2700-01	.3194-01	.3515-01	39.76	1.073	.3536	544.5	.8367-03
87	.00000	.97500	1039.0	.2356-01	.2786-01	.3066-01	39.84	.9385	.3525	542.7	.7300-03
58	.00000	1.0150	40.000	.1784-01	.2110-01	.2322-01	39.92	.7123	.3520	543.4	.5546-03
58	.00000	1.0300	41.000	.2034-01	.2405-01	.2646-01	39.93	.8120	.3518	543.1	.6321-03
58	.00000	1.0450	42.000	.2278-01	.2693-01	.2963-01	39.92	.9093	.3519	543.3	.7079-03
58	10.000	.10000+00	45.000	.2263-01	.2677-01	.2947-01	39.83	.9015	.3533	545.5	.7037-03
58	14.000	.50000-01	44.000	.4819-01	.5699-01	.6272-01	39.87	1.922	.3526	544.5	.1498-02
58	20.000	.10000+00	207.00	.4439-01	.5249-01	.5777-01	39.87	1.770	.3526	544.5	.1380-02
58	20.000	.15000	211.00	.8530-01	.1009	.1111	39.84	3.398	.3532	545.3	.2652-02
58	22.000	.50000-01	202.00	.7309-01	.8644-01	.9513-01	39.89	2.916	.3523	544.0	.2272-02
58	24.000	.20000	48.000	.2383-01	.2820-01	.3104-01	39.79	.9484	.3539	546.5	.7411-03
58	24.500	.10000+00	208.00	.5697-01	.6738-01	.7416-01	39.86	2.271	.3528	544.7	.1771-02
58	25.500	.15000	212.00	.2464-01	.2914-01	.3208-01	39.82	.9811	.3534	545.7	.7659-03
58	31.500	.20000	215.00	.1600-01	.1893-01	.2084-01	39.79	.6368	.3539	546.4	.4976-03
58	35.000	.50000-01	203.00	.9605-01	.1132	.1244	40.62	3.902	.3410	526.5	.2978-02
58	35.000	.20000	216.00	.1545-01	.1828-01	.2012-01	39.79	.6145	.3540	546.6	.4803-03
58	39.000	.10000+00	209.00	.5243-01	.6200-01	.6823-01	39.90	2.092	.3522	543.9	.1630-02
58	40.000	.15000	213.00	.4181-01	.4946-01	.5444-01	39.82	1.665	.3535	545.7	.1300-02
58	40.000	.20000	217.00	.1896-01	.2244-01	.2470-01	39.78	.7544	.3541	546.7	.5897-03
58	42.500	.50000-01	204.00	.1054	.1247	.1372	39.85	4.201	.3530	545.0	.3277-02
58	45.500	.15000	214.00	.3891-01	.4602-01	.5064-01	39.87	1.551	.3527	544.6	.1209-02
58	51.000	.20000	218.00	.2297-01	.2718-01	.2992-01	39.77	.9135	.3542	547.0	.7143-03
58	60.000	.50000-01	205.00	.1160	.1373	.1511	39.82	4.620	.3535	545.8	.3608-02
58	67.500	.20000	219.00	.2134-01	.2525-01	.2779-01	39.78	.8487	.3541	546.8	.6635-03
82	96.500	.20000	1220.0	.1633-01	.1930-01	.2122-01	40.60	.6630	.3489	545.1	.5111-03
58	114.00	.40000	388.00	.3459-01	.4094-01	.4508-01	39.71	1.374	.3551	548.3	.1076-02
58	114.00	.70000	394.00	.2605-01	.3083-01	.3394-01	39.70	1.034	.3553	548.6	.8102-03

IH103 60-OT FUSELAGE (R3PA03)

RUN NUMBER	PHI	XB/LB	T/C NO	H/HREF R=1.0	H/HREF R=.900	H/HREF R=.850	QREF BTU/ FT2SEC	QDOT BTU/ FT2SEC	HW/HT	TW DEG. R	STN NO R=.900
58	157.50	.40000	223.00	.4594-02	.5432-02	.5977-02	39.93	.1834	.3518	543.2	.1428-03
58	157.50	.50000	225.00	.1488-01	.1761-01	.1938-01	39.75	.5916	.3545	547.3	.4628-03
58	157.50	.70000	229.00	.8772-02	.1038-01	.1143-01	39.75	.3487	.3546	547.5	.2728-03
58	157.50	.80000	231.00	.1224-02	.1445-02	.1589-02	40.26	.4928-01	.3467	535.3	.3801-04
58	180.00	.40000	182.00	.1034-01	.1224-01	.1348-01	39.72	.4108	.3551	548.2	.3217-03
58	180.00	.50000	184.00	.1380-01	.1634-01	.1799-01	39.74	.5486	.3548	547.8	.4293-03
58	180.00	.60000	186.00	.1328-01	.1572-01	.1731-01	39.72	.5276	.3550	548.1	.4131-03
58	180.00	.70000	188.00	.1038-01	.1228-01	.1352-01	39.74	.4124	.3547	547.7	.3228-03
58	180.00	.80000	190.00	.2043-01	.2417-01	.2662-01	39.72	.8112	.3551	548.3	.6353-03
58	315.00	.50000	236.00	.3599-02	.4259-02	.4689-02	39.75	.1431	.3546	547.4	.1119-03
58	315.00	.70000	240.00	.7292-02	.8629-02	.9500-02	39.76	.2900	.3544	547.2	.2268-03
58	315.00	.80000	242.00	.3372-01	.3991-01	.4394-01	39.70	1.339	.3553	548.6	.1049-02

IH103 60-OT FUSELAGE (R3PA04)

FUSELAGE

PARAMETRIC DATA

MACH = 5.250 ALPHA = 10.00 BETA = .0000 ELEVON = .0000
BDFLAP = .0000 SPDBRK = .0000

TEST CONDITIONS

RUN NUMBER	ALPHA DEG.	BETA DEG.	MACH	RN/FT /FT X10 6	PT PSIA	TT DEG. R	HT BTU/ LBM	PINF PSIA	TINF DEG. R	RHO SLUGS/ FT3	VINF FT/SEC	SCALE
57	10.00	.0000	5.250	1.013	101.8	1509.	371.9	.1402	238.0	.4942-04	3970.	.1750-01
81	10.00	-5.000	5.250	1.029	101.8	1494.	368.0	.1404	235.5	.5001-04	3949.	.1750-01
88	10.00	.0000	5.250	1.044	103.7	1498.	369.0	.1429	236.1	.5079-04	3954.	.1750-01

RUN NUMBER	PHI DEG.	HS SPHERE TW=540
57	.0000	.1663
81	.0000	.1663
88	.0000	.1678

TEST DATA

RUN NUMBER	PHI	XB/LB	T/C NO	H/HREF R=1.0	H/HREF R=.900	H/HREF R=.850	QREF BTU/ FT2SEC	QDOT BTU/ FT2SEC	HW/HT	TW DEG. R	STN NO R=.900
57	.00000	.00000	1.0000	.6424	.7593	.8353	40.18	25.81	.3504	543.1	.2001-01
57	.00000	.50000-02	2.0000	.4023	.4755	.5230	40.20	16.17	.3501	542.6	.1253-01
57	.00000	.10000-01	3.0000	.2674	.3160	.3476	40.23	10.76	.3497	542.0	.8327-02
57	.00000	.20000-01	4.0000	.1574	.1859	.2045	40.27	6.336	.3490	541.0	.4899-02
57	.00000	.30000-01	5.0000	.1090	.1288	.1416	40.28	4.392	.3488	540.6	.3394-02
57	.00000	.40000-01	6.0000	.9005-01	.1064	.1170	40.30	3.629	.3485	540.2	.2803-02
57	.00000	.50000-01	7.0000	.6269-01	.7406-01	.8145-01	40.29	2.525	.3488	540.6	.1952-02
57	.00000	.60000-01	8.0000	.5429-01	.6413-01	.7053-01	40.28	2.187	.3488	540.7	.1690-02
57	.00000	.70000-01	9.0000	.4045-01	.4779-01	.5255-01	40.30	1.630	.3486	540.3	.1259-02
57	.00000	.80000-01	10.000	.2555-01	.3019-01	.3320-01	40.29	1.029	.3488	540.6	.7954-03
57	.00000	.90000-01	11.000	.1969-01	.2326-01	.2558-01	40.28	.7929	.3489	540.8	.6129-03
57	.00000	.10000+00	12.000	.1438-01	.1698-01	.1868-01	40.27	.5789	.3490	540.9	.4475-03
57	.00000	.12000	13.000	.3891-01	.4598-01	.5057-01	40.27	1.567	.3490	541.0	.1212-02
57	.00000	.13000	14.000	.5216-01	.6163-01	.6778-01	40.25	2.100	.3493	541.3	.1624-02
57	.00000	.14000	15.000	.2673-01	.3158-01	.3474-01	40.26	1.076	.3492	541.3	.8322-03
57	.00000	.15000	16.000	.2599-01	.3071-01	.3378-01	40.24	1.046	.3495	541.8	.8092-03
57	.00000	.16000	17.000	.3497-01	.4117-01	.4518-01	41.12	1.438	.3359	520.6	.1086-02

IH103 60-OT FUSELAGE (R3PA04)

RUN NUMBER	PHI	XB/LB	T/C NO	H/HREF R=1.0	H/HREF R=.900	H/HREF R=.850	QREF BTU/ FT2SEC	QDOT BTU/ FT2SEC	HW/HT	TW DEG. R	STN NO R=.900
57	.00000	.17000	18.000	.4692-01	.5545-01	.6100-01	40.22	1.887	.3498	542.2	.1461-02
57	.00000	.18000	19.000	.5395-01	.6376-01	.7013-01	40.21	2.170	.3499	542.3	.1680-02
57	.00000	.19000	20.000	.5346-01	.6318-01	.6950-01	40.20	2.149	.3501	542.6	.1665-02
57	.00000	.20000	21.000	.4952-01	.5852-01	.6438-01	40.18	1.990	.3504	543.1	.1542-02
57	.00000	.25000	23.000	.3555-01	.4202-01	.4622-01	40.17	1.428	.3506	543.4	.1107-02
57	.00000	.30000	24.000	.3356-01	.3967-01	.4364-01	40.16	1.348	.3507	543.6	.1045-02
57	.00000	.40000	26.000	.3408-01	.4030-01	.4434-01	40.10	1.367	.3516	545.0	.1062-02
88	.00000	.45000	1027.0	.2463-01	.2916-01	.3211-01	39.86	.9817	.3562	547.8	.7572-03
88	.00000	.55000	1029.0	.3190-01	.3777-01	.4160-01	39.84	1.271	.3564	548.1	.9807-03
88	.00000	.60000	1030.0	.2669-01	.3161-01	.3481-01	39.82	1.063	.3568	548.7	.8207-03
88	.00000	.65000	1031.0	.4000-01	.4736-01	.5216-01	39.84	1.594	.3565	548.2	.1230-02
88	.00000	.70000	1032.0	.5996-01	.7100-01	.7819-01	39.83	2.388	.3566	548.4	.1843-02
88	.00000	.75000	1033.0	.8622-01	.1021	.1124	39.86	3.437	.3562	547.8	.2651-02
88	.00000	.80000	1034.0	.8537-01	.1011	.1113	39.86	3.402	.3562	547.8	.2624-02
88	.00000	.85000	1035.0	.5727-01	.6778-01	.7464-01	39.90	2.285	.3555	546.8	.1760-02
88	.00000	.90000	1036.0	.3397-01	.4022-01	.4429-01	39.87	1.354	.3561	547.6	.1044-02
88	.00000	.95000	1038.0	.2422-01	.2868-01	.3158-01	39.85	.9653	.3563	547.9	.7446-03
88	.00000	.97500	1039.0	.2153-01	.2548-01	.2806-01	39.92	.8595	.3553	546.3	.6618-03
57	.00000	1.0150	40.000	.2149-01	.2537-01	.2789-01	40.47	.8698	.3459	536.1	.6687-03
57	.00000	1.0300	41.000	.2503-01	.2954-01	.3247-01	40.48	1.013	.3458	535.9	.7786-03
57	.00000	1.0450	42.000	.2876-01	.3395-01	.3732-01	40.47	1.164	.3459	536.1	.8948-03
57	10.000	.10000+00	45.000	.1550-01	.1831-01	.2013-01	40.28	.6242	.3488	540.6	.4824-03
57	14.000	.50000-01	44.000	.8218-01	.9708-01	.1068	40.32	3.314	.3482	539.7	.2558-02
57	20.000	.10000+00	207.00	.3793-01	.4480-01	.4926-01	40.32	1.529	.3482	539.7	.1181-02
57	20.000	.15000	211.00	.1490-01	.1761-01	.1936-01	40.30	.6006	.3486	540.3	.4640-03
57	22.000	.50000-01	202.00	.1050	.1240	.1364	40.34	4.237	.3479	539.2	.3269-02
57	24.000	.20000	48.000	.1950-01	.2304-01	.2534-01	40.25	.7848	.3493	541.3	.6070-03
57	24.500	.10000+00	208.00	.6220-01	.7347-01	.8079-01	40.32	2.508	.3482	539.7	.1936-02
57	25.500	.15000	212.00	.3489-01	.4122-01	.4534-01	40.27	1.405	.3491	541.0	.1086-02
57	31.500	.20000	215.00	.1329-01	.1570-01	.1727-01	40.26	.5351	.3492	541.3	.4138-03
57	35.000	.50000-01	203.00	.1116	.1315	.1443	41.01	4.579	.3375	523.1	.3467-02
57	35.000	.20000	216.00	.2328-01	.2751-01	.3026-01	40.25	.9371	.3493	541.4	.7249-03
57	39.000	.10000+00	209.00	.7333-01	.8662-01	.9526-01	40.30	2.955	.3486	540.3	.2283-02
57	40.000	.15000	213.00	.6780-01	.8010-01	.8810-01	40.28	2.731	.3489	540.8	.2111-02
57	40.000	.20000	217.00	.3347-01	.3955-01	.4350-01	40.25	1.347	.3494	541.5	.1042-02
57	42.500	.50000-01	204.00	.8434-01	.9964-01	.1096	40.30	3.399	.3485	540.2	.2626-02
57	45.500	.15000	214.00	.6181-01	.7302-01	.8030-01	40.30	2.491	.3485	540.2	.1924-02
57	51.000	.20000	218.00	.3823-01	.4518-01	.4969-01	40.23	1.538	.3496	541.8	.1190-02
57	60.000	.50000-01	205.00	.9590-01	.1133	.1246	40.26	3.861	.3492	541.2	.2986-02
57	67.500	.20000	219.00	.1425-01	.1684-01	.1852-01	40.24	.5735	.3495	541.7	.4437-03
81	96.500	.20000	1220.0	.1339-01	.1585-01	.1746-01	39.43	.5281	.3555	545.3	.4148-03
57	114.00	.40000	388.00	.2074-01	.2451-01	.2696-01	40.22	.8341	.3498	542.2	.6458-03
57	114.00	.70000	394.00	.1114-01	.1316-01	.1448-01	40.26	.4485	.3491	541.1	.3468-03

IH103 60-OT FUSELAGE (R3PA04)

RUN NUMBER	PHI	XB/LB	T/C NO	H/HREF R=1.0	H/HREF R=.900	H/HREF R=.850	QREF BTU/ FT2SEC	QDOT BTU/ FT2SEC	HW/HT	TW DEG. R	STN NO R=.900
57	157.50	.40000	223.00	.4003-02	.4722-02	.5188-02	40.64	.1627	.3433	532.2	.1245-03
57	157.50	.50000	225.00	.3905-02	.4614-02	.5074-02	40.27	.1572	.3491	541.1	.1216-03
57	157.50	.70000	229.00	.1204-01	.1423-01	.1565-01	40.25	.4847	.3493	541.3	.3749-03
57	157.50	.80000	231.00	.1420-02	.1675-02	.1840-02	40.66	.5773-01	.3430	531.7	.4415-04
57	180.00	.40000	182.00	.9949-02	.1176-01	.1293-01	40.22	.4002	.3498	542.1	.3098-03
57	180.00	.50000	184.00	.1154-01	.1364-01	.1500-01	40.24	.4644	.3495	541.6	.3593-03
57	180.00	.60000	186.00	.1180-01	.1395-01	.1534-01	40.26	.4752	.3492	541.2	.3675-03
57	180.00	.70000	188.00	.1376-01	.1626-01	.1789-01	40.27	.5543	.3490	541.0	.4285-03
57	180.00	.80000	190.00	.2110-01	.2493-01	.2741-01	40.26	.8493	.3492	541.2	.6568-03
57	315.00	.50000	236.00	.6970-02	.8235-02	.9057-02	40.27	.2807	.3490	541.0	.2170-03
57	315.00	.80000	242.00	.1185-01	.1400-01	.1540-01	40.25	.4770	.3494	541.5	.3690-03

IH103 60-OT FUSELAGE (R3PA05)

FUSELAGE

PARAMETRIC DATA

MACH = 5.250 ALPHA = .0000 BETA = -5.000 ELEVON = .0000
BDFLAP = .0000 SPDBRK = .0000

TEST CONDITIONS

RUN NUMBER	ALPHA DEG.	BETA DEG.	MACH	RN/FT /FT X10 6	PT PSIA	TT DEG. R	HT BTU/ LBM	PINF PSIA	TINF DEG. R	RHO SLUGS/ FT3	VINF FT/SEC	SCALE
69	.0000	-5.000	5.250	1.031	103.0	1504.	370.5	.1419	237.1	.5023-04	3962.	.1750-01
76	.0000	-5.000	5.250	1.033	102.9	1501.	369.7	.1418	236.6	.5028-04	3958.	.1750-01
77	.0000	-5.000	5.250	1.043	103.3	1496.	368.4	.1425	235.8	.5070-04	3951.	.1750-01

RUN NUMBER	PHI DEG.	HS SPHERE TW=540
69	.0000	.1673
76	.0000	.1672
77	.0000	.1675

TEST DATA

RUN NUMBER	PHI	XB/LB	T/C NO	H/HREF R=1.0	H/HREF R=.900	H/HREF R=.850	QREF BTU/ FT2SEC	QDOT BTU/ FT2SEC	HW/HT	TW DEG. R	STN NO R=.900
69	.00000	.00000	1.0000	.8294	.9835	1.084	39.53	32.79	.3617	558.5	.2568-01
69	.00000	.50000-02	2.0000	.5187	.6150	.6779	39.56	20.52	.3612	557.8	.1606-01
69	.00000	.10000-01	3.0000	.3221	.3818	.4209	39.57	12.75	.3611	557.5	.9969-02
69	.00000	.20000-01	4.0000	.1477	.1754	.1935	39.20	5.789	.3668	566.4	.4577-02
69	.00000	.30000-01	5.0000	.8571-01	.1016	.1120	39.64	3.398	.3600	555.9	.2653-02
69	.00000	.40000-01	6.0000	.6660-01	.7894-01	.8699-01	39.65	2.641	.3599	555.7	.2061-02
69	.00000	.50000-01	7.0000	.4786-01	.5672-01	.6251-01	39.65	1.897	.3600	555.8	.1481-02
69	.00000	.60000-01	8.0000	.4328-01	.5129-01	.5653-01	39.64	1.715	.3601	555.9	.1339-02
69	.00000	.70000-01	9.0000	.3376-01	.4001-01	.4409-01	39.65	1.339	.3598	555.6	.1045-02
69	.00000	.80000-01	10.000	.1836-01	.2248-01	.2477-01	39.62	.7514	.3603	556.3	.5869-03
69	.00000	.90000-01	11.000	.1826-01	.2165-01	.2386-01	39.63	.7238	.3602	556.2	.5653-03
69	.00000	.10000+00	12.000	.2048-01	.2428-01	.2675-01	39.62	.8114	.3604	556.4	.6339-03
69	.00000	.12000	13.000	.1947	.2308	.2544	39.62	7.715	.3604	556.4	.6027-02
69	.00000	.13000	14.000	.2392	.2835	.3125	39.61	9.474	.3605	556.7	.7403-02
69	.00000	.14000	15.000	.7938-01	.9410-01	.1037	39.59	3.143	.3608	557.0	.2457-02
69	.00000	.15000	16.000	.5157-01	.6114-01	.6739-01	39.57	2.041	.3611	557.5	.1596-02
69	.00000	.16000	17.000	.4009-01	.4753-01	.5239-01	39.58	1.587	.3609	557.3	.1241-02

IH103 60-OT FUSELAGE (R3PA05)

RUN NUMBER	PHI	XB/LB	T/C NO	H/HREF R=1.0	H/HREF R=.900	H/HREF R=.850	QREF BTU/ FT2SEC	QDOT BTU/ FT2SEC	HW/HT	TW DEG. R	STN NO R=.900
69	.00000	.17000	18.000	.3395-01	.4025-01	.4437-01	39.55	1.343	.3614	558.0	.1051-02
69	.00000	.18000	19.000	.3337-01	.3957-01	.4362-01	39.55	1.320	.3614	558.1	.1033-02
69	.00000	.19000	20.000	.5343-01	.6336-01	.6984-01	39.53	2.112	.3618	558.6	.1654-02
69	.00000	.20000	21.000	.7284-01	.8637-01	.9522-01	39.52	2.878	.3620	558.9	.2255-02
69	.00000	.25000	23.000	.3129-01	.3711-01	.4092-01	39.48	1.235	.3625	559.7	.9689-03
69	.00000	.30000	24.000	.4513-01	.5353-01	.5902-01	39.46	1.781	.3628	560.2	.1398-02
69	.00000	.35000	25.000	.4978-01	.5906-01	.6513-01	39.43	1.963	.3633	561.0	.1542-02
69	.00000	.40000	26.000	.4406-01	.5228-01	.5765-01	39.42	1.737	.3634	561.1	.1365-02
76	.00000	.45000	1027.0	.4304-01	.5092-01	.5606-01	39.89	1.717	.3544	546.1	.1329-02
76	.00000	.55000	1029.0	.4016-01	.4753-01	.5232-01	39.88	1.602	.3546	546.3	.1241-02
76	.00000	.60000	1030.0	.3552-01	.4203-01	.4628-01	39.87	1.416	.3548	546.6	.1097-02
76	.00000	.65000	1031.0	.3707-01	.4387-01	.4830-01	39.88	1.479	.3546	546.3	.1145-02
76	.00000	.70000	1032.0	.2989-01	.3538-01	.3895-01	39.85	1.191	.3550	547.0	.9234-03
76	.00000	.75000	1033.0	.9541-01	.1129	.1243	39.88	3.805	.3546	546.4	.2947-02
76	.00000	.80000	1034.0	.9447-01	.1118	.1231	39.87	3.766	.3548	546.6	.2918-02
76	.00000	.85000	1035.0	.1188	.1401	.1538	40.76	4.844	.3409	525.3	.3660-02
76	.00000	.90000	1036.0	.3643-01	.4312-01	.4748-01	39.84	1.452	.3552	547.3	.1126-02
76	.00000	.95000	1038.0	.3589-01	.4249-01	.4678-01	39.83	1.430	.3554	547.7	.1109-02
76	.00000	.97500	1039.0	.4517-01	.5345-01	.5884-01	39.89	1.802	.3545	546.2	.1395-02
69	.00000	1.0150	40.000	.3609-01	.4275-01	.4710-01	39.75	1.434	.3583	553.3	.1116-02
69	.00000	1.0300	41.000	.3514-01	.4163-01	.4587-01	39.75	1.397	.3584	553.3	.1087-02
69	.00000	1.0450	42.000	.3374-01	.3998-01	.4405-01	39.72	1.340	.3588	554.1	.1044-02
69	10.000	.10000+00	45.000	.1886-01	.2235-01	.2463-01	39.65	.7478	.3599	555.6	.5836-03
69	14.000	.50000-01	44.000	.6191-01	.7336-01	.8083-01	39.69	2.457	.3593	554.8	.1916-02
69	20.000	.10000+00	207.00	.3624-01	.4294-01	.4731-01	39.70	1.439	.3591	554.5	.1121-02
69	20.000	.15000	211.00	.9322-01	.1105	.1217	39.66	3.697	.3598	555.5	.2885-02
69	22.000	.50000-01	202.00	.9868-01	.1169	.1288	39.70	3.917	.3592	554.6	.3053-02
69	24.000	.20000	48.000	.7580-01	.8985-01	.9903-01	39.61	3.002	.3606	556.7	.2346-02
69	24.500	.10000+00	208.00	.5796-01	.6868-01	.7568-01	39.69	2.300	.3594	554.9	.1793-02
69	25.500	.15000	212.00	.2474-01	.2932-01	.3231-01	39.65	.9810	.3598	555.6	.7656-03
69	31.500	.20000	215.00	.3600-01	.4267-01	.4703-01	39.64	1.427	.3601	556.0	.1114-02
69	35.000	.50000-01	203.00	.1405	.1665	.1835	39.63	5.566	.3603	556.3	.4347-02
69	35.000	.20000	216.00	.2270-01	.2690-01	.2965-01	39.63	.8994	.3602	556.2	.7024-03
69	39.000	.10000+00	209.00	.8169-01	.9677-01	.1066	39.75	3.247	.3584	553.4	.2527-02
69	40.000	.15000	213.00	.3550-01	.4207-01	.4636-01	39.66	1.408	.3597	555.4	.1099-02
69	40.000	.20000	217.00	.1279-01	.1516-01	.1671-01	39.62	.5068	.3603	556.4	.3959-03
69	42.500	.50000-01	204.00	.1387	.1643	.1811	39.68	5.502	.3594	554.9	.4291-02
69	45.500	.15000	214.00	.5940-01	.7038-01	.7754-01	39.71	2.359	.3589	554.2	.1838-02
69	51.000	.20000	218.00	.3644-01	.4319-01	.4760-01	39.63	1.444	.3603	556.2	.1128-02
69	60.000	.50000-01	205.00	.1600	.1897	.2090	39.64	6.343	.3601	556.0	.4953-02
69	67.500	.20000	219.00	.3385-01	.4012-01	.4422-01	39.63	1.342	.3601	556.1	.1048-02
77	96.500	.20000	1220.0	.2185-02	.2583-02	.2842-02	40.05	.8751-01	.3513	539.4	.6716-04
69	114.00	.40000	388.00	.6023-01	.7141-01	.7871-01	39.56	2.383	.3612	557.8	.1864-02

IH103 60-OT FUSELAGE

(R3PA05)

RUN NUMBER	PHI	XB/LB	T/C NO	H/HREF R=1.0	H/HREF R=.900	H/HREF R=.850	QREF BTU/ FT2SEC	QDOT BTU/ FT2SEC	HW/HT	TW DEG. R	STN NO R=.900
69	114.00	.70000	394.00	.4312-01	.5112-01	.5635-01	39.55	1.705	.3614	558.0	.1335-02
69	157.50	.40000	223.00	.2273-02	.2686-02	.2954-02	40.30	.9159-01	.3499	540.2	.7018-04
69	157.50	.50000	225.00	.6233-02	.7388-02	.8143-02	39.61	.2469	.3605	556.6	.1929-03
69	157.50	.70000	229.00	.1007-01	.1194-01	.1316-01	39.62	.3991	.3604	556.5	.3118-03
69	157.50	.80000	231.00	.3701-02	.4374-02	.4811-02	40.29	.1491	.3500	540.4	.1143-03
69	180.00	.40000	182.00	.2028-01	.2405-01	.2651-01	39.55	.8022	.3614	558.1	.6279-03
69	180.00	.50000	184.00	.1007-01	.1193-01	.1315-01	39.60	.3986	.3606	556.8	.3116-03
69	180.00	.60000	186.00	.8546-02	.1013-01	.1117-01	39.60	.3384	.3607	556.9	.2645-03
69	180.00	.70000	188.00	.1080-02	.1276-02	.1404-02	40.30	.4353-01	.3498	540.1	.3335-04
69	180.00	.80000	190.00	.3635-01	.4309-01	.4749-01	39.58	1.439	.3609	557.3	.1125-02
69	315.00	.50000	236.00	.2745-01	.3253-01	.3586-01	39.61	1.087	.3605	556.6	.8495-03
69	315.00	.70000	240.00	.1040-01	.1233-01	.1359-01	39.60	.4121	.3606	556.8	.3220-03
69	315.00	.80000	242.00	.5956-01	.7050-01	.7762-01	39.94	2.379	.3555	548.8	.1841-02

IH103 60-OT FUSELAGE (R3PA06)

FUSELAGE

PARAMETRIC DATA

MACH = 5.250 ALPHA = -5.000 BETA = -5.000 ELEVON = .0000
BDFLAP = .0000 SPDBRK = .0000

TEST CONDITIONS

RUN NUMBER	ALPHA DEG.	BETA DEG.	MACH	RN/FT /FT X10 6	PT PSIA	TT DEG. R	HT BTU/ LBM	PINF PSIA	TINF DEG. R	RHO SLUGS/ FT3	VINF FT/SEC	SCALE
70	.0000	-5.000	5.250	1.044	103.5	1497.	368.6	.1426	235.9	.5074-04	3952.	.1750-01
75	-5.000	-5.000	5.250	1.039	103.3	1499.	369.3	.1424	236.3	.5057-04	3956.	.1750-01
78	-5.000	-5.000	5.250	.9991	96.86	1476.	363.2	.1337	232.4	.4828-04	3923.	.1750-01

RUN NUMBER	PHI DEG.	HS SPHERE TW=540
70	.0000	.1677
75	.0000	.1376
78	.0000	.1621

TEST DATA

RUN NUMBER	PHI	XB/LB	T/C NO	H/HREF R=1.0	H/HREF R=.900	H/HREF R=.850	QREF BTU/ FT2SEC	QDOT BTU/ FT2SEC	HW/HT	TW DEG. R	STN NO R=.900
70	.00000	.00000	1.0000	.9284	1.102	1.216	39.13	36.33	.3662	562.6	.2861-01
70	.00000	.50000-02	2.0000	.5727	.6800	.7502	39.16	22.43	.3658	562.0	.1765-01
70	.00000	.10000-01	3.0000	.3535	.4197	.4630	39.18	13.85	.3655	561.6	.1089-01
70	.00000	.20000-01	4.0000	.1596	.1898	.2096	38.81	6.195	.3713	570.4	.4926-02
70	.00000	.30000-01	5.0000	.9212-01	.1093	.1206	39.25	3.616	.3644	559.8	.2838-02
70	.00000	.40000-01	6.0000	.7132-01	.8462-01	.9333-01	39.27	2.800	.3641	559.4	.2197-02
70	.00000	.50000-01	7.0000	.5129-01	.6085-01	.6711-01	39.28	2.015	.3639	559.0	.1580-02
70	.00000	.60000-01	8.0000	.4664-01	.5533-01	.6102-01	39.29	1.832	.3638	558.9	.1437-02
70	.00000	.70000-01	9.0000	.3651-01	.4331-01	.4776-01	39.31	1.435	.3635	558.5	.1125-02
70	.00000	.80000-01	10.000	.2428-01	.2881-01	.3177-01	39.31	.9544	.3635	558.5	.7480-03
70	.00000	.90000-01	11.000	.1442-01	.1711-01	.1886-01	39.31	.5668	.3635	558.4	.4441-03
70	.00000	.10000+00	12.000	.1897-01	.2250-01	.2482-01	39.31	.7457	.3634	558.3	.5843-03
70	.00000	.12000	13.000	.1905	.2260	.2492	39.34	7.493	.3631	557.8	.5867-02
70	.00000	.13000	14.000	.2788	.3307	.3647	39.33	10.97	.3631	557.8	.8586-02
70	.00000	.14000	15.000	.9725-01	.1154	.1272	39.33	3.824	.3632	558.0	.2995-02
70	.00000	.15000	16.000	.5908-01	.7009-01	.7729-01	39.31	2.322	.3635	558.4	.1820-02
70	.00000	.16000	17.000	.4308-01	.5111-01	.5636-01	39.32	1.694	.3632	558.1	.1327-02

IH103 60-OT FUSELAGE (R3PA06)

RUN NUMBER	PHI	XB/LB	T/C NO	H/HREF R=1.0	H/HREF R=.900	H/HREF R=.850	QREF BTU/ FT2SEC	QDOT BTU/ FT2SEC	HW/HT	TW DEG. R	STN NO R=.900
70	.00000	.17000	18.000	.3564-01	.4228-01	.4663-01	39.31	1.401	.3634	558.3	.1098-02
70	.00000	.18000	19.000	.5779-01	.6856-01	.7560-01	39.31	2.271	.3635	558.5	.1780-02
70	.00000	.19000	20.000	.9487-01	.1126	.1241	39.30	3.728	.3637	558.7	.2922-02
70	.00000	.20000	21.000	.1074	.1274	.1405	39.28	4.219	.3639	559.1	.3309-02
70	.00000	.25000	23.000	.3296-01	.3911-01	.4314-01	39.27	1.295	.3640	559.3	.1016-02
70	.00000	.30000	24.000	.5217-01	.6191-01	.6828-01	39.26	2.049	.3642	559.5	.1607-02
70	.00000	.35000	25.000	.6816-01	.8089-01	.8922-01	39.24	2.675	.3646	560.1	.2100-02
70	.00000	.40000	26.000	.4957-01	.5884-01	.6490-01	39.22	1.944	.3649	560.6	.1528-02
75	.00000	.45000	1027.0	.5189-01	.6148-01	.6773-01	39.67	2.059	.3585	551.8	.1600-02
75	.00000	.55000	1029.0	.4392-01	.5204-01	.5733-01	39.66	1.742	.3587	552.0	.1354-02
75	.00000	.60000	1030.0	.3668-01	.4345-01	.4788-01	39.64	1.454	.3590	552.5	.1131-02
75	.00000	.65000	1031.0	.4014-01	.4756-01	.5240-01	39.66	1.592	.3587	552.0	.1237-02
75	.00000	.70000	1032.0	.3406-01	.4036-01	.4447-01	39.64	1.350	.3590	552.5	.1050-02
75	.00000	.75000	1033.0	.8950-01	.1060	.1168	39.68	3.551	.3584	551.5	.2759-02
75	.00000	.80000	1034.0	.8898-01	.1054	.1161	39.69	3.531	.3583	551.4	.2743-02
75	.00000	.85000	1035.0	.9971-01	.1175	.1289	40.97	4.085	.3384	520.8	.3061-02
75	.00000	.90000	1036.0	.3134-01	.3713-01	.4090-01	39.69	1.244	.3582	551.3	.9661-03
75	.00000	.95000	1038.0	.2557-01	.3029-01	.3338-01	39.66	1.014	.3587	552.1	.7883-03
75	.00000	.97500	1039.0	.2847-01	.3372-01	.3714-01	39.75	1.132	.3573	549.8	.8775-03
70	.00000	1.0150	40.000	.3100-01	.3676-01	.4053-01	39.37	1.221	.3625	556.8	.9546-03
70	.00000	1.0300	41.000	.3087-01	.3661-01	.4037-01	39.35	1.215	.3628	557.4	.9506-03
70	.00000	1.0450	42.000	.2901-01	.3442-01	.3795-01	39.32	1.141	.3634	558.3	.8936-03
70	10.000	.10000+00	45.000	.1669-01	.1980-01	.2183-01	39.33	.6563	.3632	558.0	.5140-03
70	14.000	.50000-01	44.000	.6316-01	.7494-01	.8265-01	39.28	2.481	.3639	559.0	.1946-02
70	20.000	.10000+00	207.00	.3723-01	.4416-01	.4869-01	39.36	1.465	.3626	557.1	.1147-02
70	20.000	.15000	211.00	.1182	.1402	.1546	39.38	4.656	.3623	556.6	.3641-02
70	22.000	.50000-01	202.00	.9933-01	.1179	.1300	39.28	3.902	.3639	559.1	.3060-02
70	24.000	.20000	48.000	.9077-01	.1076	.1187	39.42	3.578	.3618	555.9	.2795-02
70	24.500	.10000+00	208.00	.5488-01	.6510-01	.7178-01	39.35	2.160	.3628	557.4	.1690-02
70	25.500	.15000	212.00	.3246-01	.3850-01	.4244-01	39.38	1.278	.3623	556.6	.9996-03
70	31.500	.20000	215.00	.5117-01	.6067-01	.6689-01	39.42	2.017	.3617	555.7	.1576-02
70	35.000	.50000-01	203.00	.1427	.1694	.1869	39.20	5.595	.3652	561.0	.4398-02
70	35.000	.20000	216.00	.3482-01	.4129-01	.4552-01	39.42	1.373	.3618	555.8	.1072-02
70	39.000	.10000+00	209.00	.7842-01	.9299-01	.1025	39.43	3.092	.3617	555.6	.2415-02
70	40.000	.15000	213.00	.2963-01	.3514-01	.3874-01	39.41	1.168	.3620	556.1	.9123-03
70	40.000	.20000	217.00	.1938-01	.2298-01	.2534-01	39.42	.7641	.3617	555.7	.5968-03
70	42.500	.50000-01	204.00	.1583	.1878	.2072	39.25	6.213	.3644	559.8	.4876-02
70	45.500	.15000	214.00	.6564-01	.7781-01	.8577-01	39.47	2.591	.3609	554.5	.2021-02
70	51.000	.20000	218.00	.4306-01	.5106-01	.5629-01	39.43	1.698	.3616	555.6	.1326-02
70	60.000	.50000-01	205.00	.1900	.2255	.2488	39.24	7.456	.3646	560.2	.5855-02
70	67.500	.20000	219.00	.4162-01	.4935-01	.5440-01	39.43	1.641	.3616	555.5	.1281-02
70	114.00	.40000	388.00	.6813-01	.8082-01	.8912-01	39.34	2.680	.3631	557.8	.2098-02
70	114.00	.70000	394.00	.5348-01	.6346-01	.6999-01	39.27	2.100	.3641	559.4	.1648-02

IH103 60-OT FUSELAGE (R3PA06)

RUN NUMBER	PHI	XB/LB	T/C NO	H/HREF R=1.0	H/HREF R=.900	H/HREF R=.850	QREF BTU/ FT2SEC	QDOT BTU/ FT2SEC	HW/HT	TW DEG. R	STN NO R=.900
70	157.50	.40000	223.00	.4140-03	.4899-03	.5393-03	39.90	.1652-01	.3543	544.3	.1273-04
70	157.50	.50000	225.00	.2007-01	.2380-01	.2625-01	39.36	.7899	.3627	557.2	.6181-03
70	157.50	.70000	229.00	.3994-01	.4738-01	.5225-01	39.33	1.571	.3631	557.9	.1230-02
70	157.50	.80000	231.00	.2192-02	.2593-02	.2855-02	39.91	.8748-01	.3541	544.0	.6738-04
70	180.00	.40000	182.00	.2237-01	.2655-01	.2928-01	39.26	.8783	.3643	559.6	.6892-03
70	180.00	.50000	184.00	.3472-01	.4119-01	.4541-01	39.36	1.367	.3627	557.2	.1069-02
70	180.00	.60000	186.00	.2781-01	.3299-01	.3638-01	39.35	1.095	.3628	557.3	.8566-03
70	180.00	.80000	190.00	.3946-01	.4682-01	.5163-01	39.29	1.550	.3638	558.8	.1216-02
70	315.00	.50000	236.00	.1828-01	.2168-01	.2391-01	39.34	.7191	.3629	557.6	.5630-03
70	315.00	.70000	240.00	.3627-01	.4303-01	.4745-01	39.31	1.426	.3634	558.3	.1117-02

IH103 60-OT FUSELAGE (R3PA07)

FUSELAGE

PARAMETRIC DATA

MACH = 5.250 ALPHA = 5.000 BETA = -5.000 ELEVON = .0000
BDFLAP = .0000 SPDBRK = .0000

TEST CONDITIONS

RUN NUMBER	ALPHA DEG.	BETA DEG.	MACH	RN/FT /FT X10 6	PT PSIA	TT DEG. R	HT BTU/ LBM	PINF PSIA	TINF DEG. R	RHO SLUGS/ FT3	VINF FT/SEC	SCALE
71	5.000	-5.000	5.250	.9992	103.8	1540.	380.0	.1426	243.2	.4920-04	4013.	.1750-01
74	5.000	-5.000	5.250	1.035	103.4	1503.	370.4	.1424	237.0	.5042-04	3962.	.1750-01
79	5.000	-5.000	5.250	1.004	99.07	1492.	367.3	.1366	235.1	.4877-04	3945.	.1750-01

RUN NUMBER	PHI DEG.	HS SPHERE TW=540
71	.0000	.1681
74	.0000	.1676
79	.0000	.1640

TEST DATA

RUN NUMBER	PHI	XB/LB	T/C NO	H/HREF R=1.0	H/HREF R=.900	H/HREF R=.850	QREF BTU/ FT2SEC	QDOT BTU/ FT2SEC	HW/HT	TW DEG. R	STN NO R=.900
71	.00000	.00000	1.0000	.7522	.8877	.9756	41.83	31.47	.3449	546.2	.2349-01
71	.00000	.50000-02	2.0000	.4836	.5707	.6271	41.86	20.24	.3446	545.7	.1510-01
71	.00000	.10000-01	3.0000	.3032	.3578	.3931	41.89	12.70	.3441	544.9	.9466-02
71	.00000	.20000-01	4.0000	.1399	.1650	.1813	41.94	5.867	.3433	543.6	.4366-02
71	.00000	.30000-01	5.0000	.8151-01	.9614-01	.1056	41.97	3.421	.3429	543.0	.2544-02
71	.00000	.40000-01	6.0000	.6438-01	.7593-01	.8341-01	41.99	2.704	.3425	542.4	.2009-02
71	.00000	.50000-01	7.0000	.4616-01	.5444-01	.5980-01	42.01	1.939	.3423	542.1	.1441-02
71	.00000	.60000-01	8.0000	.4233-01	.4992-01	.5483-01	42.01	1.778	.3422	542.0	.1321-02
71	.00000	.70000-01	9.0000	.3349-01	.3949-01	.4338-01	42.03	1.408	.3420	541.5	.1045-02
71	.00000	.80000-01	10.000	.2253-01	.2656-01	.2918-01	42.04	.9471	.3418	541.2	.7029-03
71	.00000	.90000-01	11.000	.1798-01	.2120-01	.2329-01	42.05	.7561	.3417	541.2	.5611-03
71	.00000	.10000+00	12.000	.2489-01	.2934-01	.3223-01	42.05	1.047	.3416	541.0	.7765-03
71	.00000	.12000	13.000	.2028	.2391	.2626	42.07	8.532	.3414	540.6	.6328-02
71	.00000	.13000	14.000	.1895	.2234	.2453	42.07	7.972	.3413	540.5	.5912-02
71	.00000	.14000	15.000	.6512-01	.7677-01	.8432-01	42.08	2.740	.3413	540.4	.2032-02
71	.00000	.15000	16.000	.5614-01	.6620-01	.7271-01	42.06	2.362	.3415	540.8	.1752-02
71	.00000	.16000	17.000	.4747-01	.5597-01	.6147-01	42.07	1.997	.3414	540.6	.1481-02

IH103 60-OT FUSELAGE

(R3PA07)

RUN NUMBER	PHI	XB/LB	T/C NO	H/HREF R=1.0	H/HREF R=.900	H/HREF R=.850	QREF BTU/ FT2SEC	QDOT BTU/ FT2SEC	HW/HT	TW DEG. R	STN NO R=.900
71	.00000	.17000	18.000	.3746-01	.4416-01	.4851-01	42.06	1.576	.3415	540.8	.1169-02
71	.00000	.18000	19.000	.2943-01	.3470-01	.3811-01	42.07	1.238	.3414	540.7	.9182-03
71	.00000	.19000	20.000	.4297-01	.5067-01	.5565-01	42.05	1.807	.3416	541.0	.1341-02
71	.00000	.20000	21.000	.6523-01	.7691-01	.8448-01	42.05	2.743	.3417	541.2	.2035-02
71	.00000	.25000	23.000	.4045-01	.4769-01	.5238-01	42.06	1.701	.3416	540.9	.1262-02
71	.00000	.30000	24.000	.3252-01	.3835-01	.4212-01	42.06	1.368	.3415	540.8	.1015-02
71	.00000	.35000	25.000	.3986-01	.4700-01	.5163-01	42.05	1.676	.3417	541.2	.1244-02
71	.00000	.40000	26.000	.4254-01	.5016-01	.5510-01	42.03	1.788	.3420	541.6	.1327-02
74	.00000	.45000	1027.0	.4210-01	.4986-01	.5492-01	39.88	1.679	.3572	551.4	.1300-02
74	.00000	.55000	1029.0	.3713-01	.4398-01	.4844-01	39.88	1.481	.3573	551.5	.1146-02
74	.00000	.60000	1030.0	.3354-01	.3972-01	.4376-01	39.87	1.337	.3574	551.6	.1035-02
74	.00000	.65000	1031.0	.3367-01	.3987-01	.4392-01	39.90	1.343	.3570	551.0	.1039-02
74	.00000	.70000	1032.0	.5067-01	.6000-01	.6609-01	39.88	2.020	.3573	551.5	.1564-02
74	.00000	.75000	1033.0	.1168	.1383	.1523	39.93	4.663	.3564	550.2	.3604-02
74	.00000	.80000	1034.0	.1157	.1370	.1509	39.91	4.617	.3567	550.6	.3571-02
74	.00000	.85000	1035.0	.1463	.1724	.1892	41.11	6.016	.3382	522.0	.4499-02
74	.00000	.90000	1036.0	.3957-01	.4686-01	.5160-01	39.92	1.580	.3566	550.4	.1221-02
74	.00000	.95000	1038.0	.3320-01	.3930-01	.4329-01	39.93	1.325	.3565	550.2	.1025-02
74	.00000	.97500	1039.0	.3623-01	.4288-01	.4722-01	39.98	1.449	.3556	549.0	.1118-02
71	.00000	1.0150	40.000	.4002-01	.4716-01	.5178-01	42.19	1.689	.3395	537.7	.1248-02
71	.00000	1.0300	41.000	.4272-01	.5034-01	.5528-01	42.17	1.801	.3399	538.3	.1332-02
71	.00000	1.0450	42.000	.4346-01	.5122-01	.5625-01	42.13	1.831	.3405	539.2	.1356-02
71	10.000	.10000+00	45.000	.1734-01	.2045-01	.2246-01	42.05	.7292	.3418	541.2	.5412-03
71	14.000	.50000-01	44.000	.6132-01	.7232-01	.7944-01	42.00	2.575	.3425	542.4	.1914-02
71	20.000	.10000+00	207.00	.3780-01	.4457-01	.4895-01	42.07	1.590	.3413	540.5	.1179-02
71	20.000	.15000	211.00	.7885-01	.9295-01	.1021	42.11	3.320	.3408	539.7	.2460-02
71	22.000	.50000-01	202.00	.9553-01	.1127	.1238	42.00	4.012	.3425	542.3	.2981-02
71	24.000	.20000	48.000	.6231-01	.7344-01	.8064-01	42.14	2.626	.3403	538.8	.1944-02
71	24.500	.10000+00	208.00	.5891-01	.6946-01	.7628-01	42.08	2.479	.3413	540.4	.1838-02
71	25.500	.15000	212.00	.2274-01	.2681-01	.2944-01	42.12	.9580	.3407	539.5	.7096-03
71	31.500	.20000	215.00	.2775-01	.3271-01	.3592-01	42.15	1.170	.3402	538.7	.8657-03
71	35.000	.50000-01	203.00	.1305	.1539	.1691	42.00	5.481	.3425	542.4	.4073-02
71	35.000	.20000	216.00	.1950-01	.2298-01	.2523-01	42.15	.8219	.3402	538.7	.6082-03
71	39.000	.10000+00	209.00	.8288-01	.9773-01	.1074	42.03	3.483	.3420	541.6	.2586-02
71	40.000	.15000	213.00	.4175-01	.4921-01	.5404-01	42.14	1.759	.3404	539.0	.1302-02
71	40.000	.20000	217.00	.1241-01	.1463-01	.1607-01	42.15	.5233	.3402	538.7	.3872-03
71	42.500	.50000-01	204.00	.1298	.1531	.1682	41.96	5.445	.3430	543.2	.4050-02
71	45.500	.15000	214.00	.5904-01	.6958-01	.7640-01	42.16	2.489	.3400	538.4	.1842-02
71	51.000	.20000	218.00	.3558-01	.4194-01	.4605-01	42.15	1.500	.3402	538.8	.1110-02
71	60.000	.50000-01	205.00	.1353	.1597	.1754	41.93	5.675	.3435	543.9	.4225-02
71	67.500	.20000	219.00	.3404-01	.4012-01	.4405-01	42.15	1.435	.3402	538.7	.1062-02
79	96.500	.20000	1220.0	.3203-01	.3787-01	.4168-01	39.02	1.250	.3523	539.3	.1004-02
71	114.00	.40000	388.00	.5139-01	.6058-01	.6653-01	42.11	2.164	.3408	539.7	.1603-02

IH103 60-OT FUSELAGE (R3PA07)

RUN NUMBER	PHI	XB/LB	T/C NO	H/HREF R=1.0	H/HREF R=.900	H/HREF R=.850	QREF BTU/ FT2SEC	QDOT BTU/ FT2SEC	HW/HT	TW DEG. R	STN NO R=.900
71	114.00	.70000	394.00	.2441-01	.2877-01	.3160-01	42.10	1.028	.3409	539.8	.7615-03
71	157.50	.40000	223.00	.7309-03	.8605-03	.9443-03	42.41	.3100-01	.3362	532.4	.2278-04
71	157.50	.50000	225.00	.5108-02	.6021-02	.6612-02	42.14	.2152	.3404	539.1	.1594-03
71	157.50	.80000	231.00	.6421-03	.7559-03	.8294-03	42.43	.2724-01	.3359	532.0	.2001-04
71	180.00	.40000	182.00	.1378-01	.1625-01	.1785-01	42.08	.5800	.3412	540.3	.4300-03
71	180.00	.50000	184.00	.9099-02	.1072-01	.1178-01	42.14	.3834	.3403	539.0	.2838-03
71	180.00	.60000	186.00	.6197-02	.7305-02	.8021-02	42.13	.2611	.3404	539.1	.1933-03
71	180.00	.70000	188.00	.1313-03	.1545-03	.1695-03	42.45	.5572-02	.3357	531.5	.4090-05
71	180.00	.80000	190.00	.1910-01	.2251-01	.2472-01	42.13	.8046	.3405	539.1	.5957-03
71	315.00	.50000	236.00	.1807-01	.2130-01	.2339-01	42.13	.7612	.3404	539.1	.5636-03
71	315.00	.70000	240.00	.1133-01	.1336-01	.1467-01	42.13	.4776	.3404	539.1	.3536-03
71	315.00	.80000	242.00	.2264-01	.2669-01	.2931-01	42.09	.9529	.3410	540.1	.7063-03

IH103 60-OT FUSELAGE

(R3PA08)

FUSELAGE

PARAMETRIC DATA

MACH = 5.250 ALPHA = 10.00 BETA = -5.000 ELEVON = .0000
BDFLAP = .0000 SPDBRK = .0000

TEST CONDITIONS

RUN NUMBER	ALPHA DEG.	BETA DEG.	MACH	RN/FT /FT X10 6	PT PSIA	TT DEG. R	HT BTU/ LBM	PINF PSIA	TINF DEG. R	RHO SLUGS/ FT3	VINF FT/SEC	SCALE
72	5.000	-5.000	5.250	1.044	103.8	1499.	369.3	.1431	236.3	.5082-04	3956.	.1750-01
73	5.000	-5.000	5.250	1.032	103.4	1506.	371.0	.1424	237.4	.5031-04	3965.	.1750-01
80	10.00	-5.000	5.250	1.024	102.2	1503.	370.2	.1408	236.9	.4989-04	3961.	.1750-01

RUN NUMBER	PHI DEG.	HS SPHERE TW=540
72	.0000	.1680
73	.0000	.1676
80	.0000	.1667

TEST DATA

RUN NUMBER	PHI	XB/LB	T/C NO	H/HREF R=1.0	H/HREF R=.900	H/HREF R=.850	QREF BTU/ FT2SEC	QDOT BTU/ FT2SEC	HW/HT	TW DEG. R	STN NO R=.900
72	.00000	.00000	1.0000	.6392	.7566	.8332	39.95	25.54	.3557	547.4	.1964-01
72	.00000	.50000-02	2.0000	.4195	.4965	.5467	39.98	16.77	.3553	546.8	.1289-01
72	.00000	.10000-01	3.0000	.2634	.3117	.3432	40.01	10.54	.3548	546.0	.8094-02
72	.00000	.20000-01	4.0000	.1298	.1535	.1690	40.06	5.199	.3540	544.7	.3986-02
72	.00000	.30000-01	5.0000	.8876-01	.1050	.1156	40.09	3.558	.3535	544.1	.2726-02
72	.00000	.40000-01	6.0000	.7722-01	.9134-01	.1005	40.11	3.097	.3532	543.6	.2372-02
72	.00000	.50000-01	7.0000	.6048-01	.7154-01	.7874-01	40.12	2.427	.3531	543.3	.1858-02
72	.00000	.60000-01	8.0000	.5780-01	.6836-01	.7524-01	40.13	2.319	.3529	543.1	.1775-02
72	.00000	.70000-01	9.0000	.4774-01	.5646-01	.6214-01	40.15	1.917	.3526	542.7	.1466-02
72	.00000	.80000-01	10.000	.3574-01	.4226-01	.4651-01	40.16	1.435	.3525	542.5	.1097-02
72	.00000	.90000-01	11.000	.3245-01	.3837-01	.4223-01	40.16	1.303	.3525	542.5	.9964-03
72	.00000	.10000+00	12.000	.2655-01	.3139-01	.3455-01	40.16	1.066	.3524	542.4	.8152-03
72	.00000	.12000	13.000	.1277	.1510	.1662	40.18	5.132	.3521	541.8	.3921-02
72	.00000	.13000	14.000	.1170	.1384	.1523	40.18	4.701	.3522	542.0	.3593-02
72	.00000	.14000	15.000	.4265-01	.5043-01	.5550-01	40.18	1.713	.3522	542.0	.1310-02
72	.00000	.15000	16.000	.3176-01	.3757-01	.4134-01	40.16	1.276	.3524	542.3	.9754-03
72	.00000	.16000	17.000	.2129-01	.2518-01	.2770-01	40.19	.8558	.3519	541.6	.6537-03

IH103 60-OT FUSELAGE

(R3PA08)

RUN NUMBER	PHI	XB/LB	T/C NO	H/HREF R=1.0	H/HREF R=.900	H/HREF R=.850	QREF BTU/ FT2SEC	QDOT BTU/ FT2SEC	HW/HT	TW DEG. R	STN NO R=.900
72	.00000	.17000	18.000	.1247-01	.1474-01	.1622-01	40.16	.5006	.3524	542.3	.3828-03
72	.00000	.18000	19.000	.1267-01	.1498-01	.1648-01	40.17	.5087	.3524	542.3	.3889-03
72	.00000	.19000	20.000	.1692-01	.2001-01	.2202-01	40.15	.6793	.3526	542.6	.5196-03
72	.00000	.20000	21.000	.2352-01	.2782-01	.3061-01	40.13	.9439	.3528	543.0	.7223-03
72	.00000	.25000	23.000	.2032-01	.2404-01	.2645-01	40.14	.8158	.3527	542.9	.6241-03
72	.00000	.30000	24.000	.3740-01	.4424-01	.4868-01	40.15	1.502	.3527	542.8	.1149-02
72	.00000	.35000	25.000	.3443-01	.4073-01	.4483-01	40.12	1.382	.3531	543.4	.1058-02
72	.00000	.40000	26.000	.2871-01	.3396-01	.3738-01	40.10	1.151	.3533	543.8	.8817-03
73	.00000	.45000	1027.0	.2576-01	.3048-01	.3356-01	40.12	1.034	.3546	548.4	.7957-03
73	.00000	.55000	1029.0	.2864-01	.3389-01	.3731-01	40.11	1.149	.3547	548.6	.8847-03
73	.00000	.60000	1030.0	.2496-01	.2955-01	.3253-01	40.09	1.001	.3551	549.1	.7712-03
73	.00000	.65000	1031.0	.2511-01	.2972-01	.3272-01	40.12	1.008	.3546	548.4	.7757-03
73	.00000	.70000	1032.0	.4049-01	.4792-01	.5277-01	40.08	1.623	.3552	549.3	.1251-02
73	.00000	.75000	1033.0	.1278	.1513	.1665	40.14	5.132	.3543	547.9	.3949-02
73	.00000	.80000	1034.0	.1286	.1521	.1675	40.12	5.158	.3546	548.3	.3971-02
73	.00000	.85000	1035.0	.1564	.1841	.2020	41.30	6.458	.3364	520.3	.4811-02
73	.00000	.90000	1036.0	.5068-01	.5996-01	.6600-01	40.16	2.035	.3541	547.5	.1565-02
73	.00000	.95000	1038.0	.2986-01	.3533-01	.3889-01	40.16	1.199	.3540	547.4	.9223-03
73	.00000	.97500	1039.0	.2715-01	.3211-01	.3534-01	40.22	1.092	.3530	545.9	.8382-03
72	.00000	1.0150	40.000	.3614-01	.4271-01	.4698-01	40.33	1.458	.3498	538.4	.1109-02
72	.00000	1.0300	41.000	.4138-01	.4891-01	.5380-01	40.32	1.669	.3500	538.6	.1270-02
72	.00000	1.0450	42.000	.4164-01	.4921-01	.5414-01	40.30	1.678	.3504	539.2	.1278-02
72	10.000	.10000+00	45.000	.3798-01	.4492-01	.4943-01	40.16	1.525	.3525	542.5	.1166-02
72	14.000	.50000-01	44.000	.6783-01	.8023-01	.8830-01	40.12	2.721	.3530	543.3	.2083-02
72	20.000	.10000+00	207.00	.6438-01	.7612-01	.8376-01	40.20	2.588	.3518	541.4	.1977-02
72	20.000	.15000	211.00	.2956-01	.3495-01	.3846-01	40.22	1.189	.3515	541.0	.9076-03
72	22.000	.50000-01	202.00	.9474-01	.1121	.1233	40.12	3.801	.3530	543.3	.2910-02
72	24.000	.20000	48.000	.2406-01	.2845-01	.3130-01	40.26	.9687	.3509	540.1	.7387-03
72	24.500	.10000+00	208.00	.7581-01	.8965-01	.9865-01	40.20	3.047	.3519	541.6	.2328-02
72	25.500	.15000	212.00	.5129-01	.6063-01	.6671-01	40.24	2.064	.3513	540.6	.1574-02
72	31.500	.20000	215.00	.3496-01	.4133-01	.4547-01	40.26	1.408	.3509	540.0	.1073-02
72	35.000	.50000-01	203.00	.1213	.1435	.1579	40.13	4.868	.3529	543.1	.3726-02
72	35.000	.20000	216.00	.4127-01	.4879-01	.5367-01	40.26	1.662	.3509	540.0	.1267-02
72	39.000	.10000+00	209.00	.7162-01	.8467-01	.9315-01	40.25	2.883	.3511	540.4	.2199-02
72	40.000	.15000	213.00	.7274-01	.8598-01	.9460-01	40.26	2.928	.3509	540.1	.2233-02
72	40.000	.20000	217.00	.4430-01	.5236-01	.5761-01	40.27	1.784	.3508	539.9	.1360-02
72	42.500	.50000-01	204.00	.1129	.1335	.1469	40.10	4.525	.3534	543.9	.3466-02
72	45.500	.15000	214.00	.6342-01	.7496-01	.8246-01	40.29	2.555	.3504	539.3	.1947-02
72	51.000	.20000	218.00	.3864-01	.4568-01	.5025-01	40.26	1.556	.3509	540.0	.1186-02
72	60.000	.50000-01	205.00	.1100	.1302	.1433	40.07	4.409	.3538	544.5	.3380-02
72	67.500	.20000	219.00	.2878-01	.3403-01	.3743-01	40.26	1.159	.3509	540.1	.8836-03
80	96.500	.20000	1220.0	.4833-01	.5715-01	.6289-01	39.98	1.932	.3520	543.1	.1498-02
72	114.00	.40000	388.00	.1930-01	.2282-01	.2511-01	40.23	.7766	.3513	540.7	.5926-03

IH103 60-OT FUSELAGE

(R3PA08)

RUN NUMBER	PHI	XB/LB	T/C NO	H/HREF R=1.0	H/HREF R=.900	H/HREF R=.850	QREF BTU/ FT2SEC	QDOT BTU/ FT2SEC	HW/HT	TW DEG. R	STN NO R=.900
72	114.00	.70000	394.00	.2891-01	.3418-01	.3761-01	40.20	1.162	.3518	541.4	.8876-03
72	157.50	.50000	225.00	.1284-02	.1518-02	.1670-02	40.26	.5170-01	.3509	540.1	.3942-04
72	157.50	.80000	231.00	.1518-02	.1792-02	.1970-02	40.58	.6162-01	.3460	532.4	.4656-04
72	180.00	.40000	182.00	.1006-01	.1189-01	.1308-01	40.23	.4046	.3514	540.8	.3087-03
72	180.00	.50000	184.00	.1990-02	.2353-02	.2589-02	40.24	.8010-01	.3512	540.4	.6110-04
72	180.00	.60000	186.00	.1259-02	.1489-02	.1638-02	40.23	.5066-01	.3514	540.7	.3866-04
72	180.00	.80000	190.00	.8516-02	.1007-01	.1108-01	40.22	.3425	.3516	541.1	.2615-03
72	315.00	.50000	236.00	.5280-02	.6242-02	.6868-02	40.24	.2125	.3512	540.4	.1621-03
72	315.00	.70000	240.00	.2873-02	.3397-02	.3737-02	40.26	.1157	.3510	540.1	.8820-04
72	315.00	.80000	242.00	.5362-02	.6341-02	.6977-02	40.20	.2155	.3519	541.6	.1646-03

IH103 60-OT FUSELAGE

(R3PA09)

FUSELAGE

PARAMETRIC DATA

MACH = 5.250 ALPHA = .0000 BETA = -3.000 ELEVON = .0000
BDFLAP = .0000 SPDBRK = .0000

TEST CONDITIONS

RUN NUMBER	ALPHA DEG.	BETA DEG.	MACH	RN/FT /FT X10 6	PT PSIA	TT DEG. R	HT BTU/ LBM	PINF PSIA	TINF DEG. R	RHO SLUGS/ FT3	VINF FT/SEC	SCALE
48	.0000	-3.000	5.250	1.062	103.9	1484.	365.3	.1434	233.8	.5146-04	3934.	.1750-01
92	.0000	-3.000	5.250	1.145	111.7	1482.	364.8	.1541	233.4	.5541-04	3932.	.1750-01
93	.0000	-3.000	5.250	1.074	104.3	1478.	363.7	.1440	232.7	.5192-04	3926.	.1750-01

RUN NUMBER	PHI DEG.	HS SPHERE TW=540
48	.0000	.1679
92	.0000	.1741
93	.0000	.1682

TEST DATA

RUN NUMBER	PHI	XB/LB	T/C NO	H/HREF R=1.0	H/HREF R=.900	H/HREF R=.850	QREF BTU/ FT2SEC	QDOT BTU/ FT2SEC	HW/HT	TW DEG. R	STN NO R=.900
48	.00000	.00000	1.0000	.8480	1.004	1.106	39.41	33.42	.3575	544.3	.2589-01
48	.00000	.50000-02	2.0000	.5186	.6141	.6764	39.43	20.45	.3572	543.8	.1583-01
48	.00000	.10000-01	3.0000	.3197	.3786	.4170	39.46	12.62	.3567	543.1	.9759-02
48	.00000	.20000-01	4.0000	.1440	.1704	.1877	39.51	5.688	.3559	541.9	.4393-02
48	.00000	.30000-01	5.0000	.8343-01	.9875-01	.1087	39.54	3.299	.3554	541.1	.2545-02
48	.00000	.40000-01	6.0000	.6544-01	.7745-01	.8528-01	39.56	2.589	.3551	540.7	.1997-02
48	.00000	.50000-01	7.0000	.4689-01	.5549-01	.6110-01	39.57	1.855	.3550	540.4	.1430-02
48	.00000	.60000-01	8.0000	.4255-01	.5035-01	.5544-01	39.57	1.684	.3549	540.3	.1298-02
48	.00000	.70000-01	9.0000	.3354-01	.3968-01	.4369-01	39.60	1.328	.3545	539.7	.1023-02
48	.00000	.80000-01	10.000	.2090-01	.2472-01	.2722-01	39.61	.8276	.3544	539.6	.6374-03
48	.00000	.90000-01	11.000	.1323-01	.1566-01	.1724-01	39.62	.5242	.3542	539.3	.4036-03
48	.00000	.10000+00	12.000	.2020-01	.2390-01	.2631-01	39.62	.8004	.3542	539.2	.6162-03
48	.00000	.12000	13.000	.1810	.2141	.2357	39.65	7.175	.3538	538.6	.5519-02
48	.00000	.13000	14.000	.2119	.2507	.2760	39.64	8.402	.3538	538.7	.6464-02
48	.00000	.14000	15.000	.7222-01	.8545-01	.9406-01	39.64	2.863	.3539	538.8	.2203-02
48	.00000	.15000	16.000	.4424-01	.5235-01	.5762-01	39.63	1.753	.3540	539.0	.1350-02
48	.00000	.16000	17.000	.4713-01	.5568-01	.6123-01	39.97	1.884	.3487	530.9	.1436-02

IH103 60-OT FUSELAGE

(R3PA09)

RUN NUMBER	PHI	XB/LB	T/C NO	H/HREF R=1.0	H/HREF R=.900	H/HREF R=.850	QREF BTU/ FT2SEC	QDOT BTU/ FT2SEC	HW/HT	TW DEG. R	STN NO R=.900
48	.00000	.17000	18.000	.4208-01	.4978-01	.5480-01	39.63	1.668	.3540	539.0	.1283-02
48	.00000	.18000	19.000	.4794-01	.5672-01	.6244-01	39.63	1.900	.3541	539.1	.1462-02
48	.00000	.19000	20.000	.8612-01	.1019	.1122	39.62	3.412	.3542	539.2	.2627-02
48	.00000	.20000	21.000	.9040-01	.1070	.1178	39.60	3.580	.3545	539.7	.2758-02
48	.00000	.25000	23.000	.2695-01	.3189-01	.3511-01	39.61	1.068	.3543	539.4	.8222-03
48	.00000	.30000	24.000	.6534-01	.7732-01	.8513-01	39.60	2.587	.3545	539.8	.1993-02
48	.00000	.40000	26.000	.2894-01	.3426-01	.3773-01	39.50	1.143	.3561	542.2	.8831-03
92	.00000	.45000	1027.0	.3868-01	.4590-01	.5063-01	40.33	1.560	.3646	554.3	.1140-02
92	.00000	.55000	1029.0	.3079-01	.3654-01	.4030-01	40.33	1.242	.3646	554.3	.9071-03
92	.00000	.60000	1030.0	.2606-01	.3092-01	.3411-01	40.33	1.051	.3647	554.4	.7677-03
92	.00000	.65000	1031.0	.2774-01	.3292-01	.3631-01	40.35	1.119	.3643	553.9	.8174-03
92	.00000	.70000	1032.0	.2614-01	.3102-01	.3422-01	40.32	1.054	.3648	554.6	.7702-03
92	.00000	.75000	1033.0	.7726-01	.9168-01	.1011	40.38	3.119	.3639	553.3	.2276-02
92	.00000	.80000	1034.0	.8580-01	.1018	.1123	40.36	3.463	.3642	553.7	.2528-02
92	.00000	.85000	1035.0	.9261-01	.1099	.1212	40.38	3.739	.3639	553.2	.2728-02
92	.00000	.90000	1036.0	.4054-01	.4811-01	.5306-01	40.36	1.636	.3642	553.7	.1194-02
92	.00000	.95000	1038.0	.3510-01	.4165-01	.4594-01	40.37	1.417	.3640	553.4	.1034-02
92	.00000	.97500	1039.0	.3162-01	.3751-01	.4136-01	40.41	1.278	.3634	552.4	.9312-03
48	.00000	1.0150	40.000	.2855-01	.3379-01	.3720-01	39.55	1.129	.3553	540.9	.8710-03
48	.00000	1.0300	41.000	.2884-01	.3414-01	.3760-01	39.53	1.140	.3556	541.4	.8801-03
48	.00000	1.0450	42.000	.2766-01	.3275-01	.3606-01	39.50	1.093	.3561	542.1	.8441-03
48	10.000	.10000+00	45.000	.1778-01	.2104-01	.2316-01	39.64	.7049	.3539	538.9	.5425-03
48	14.000	.50000-01	44.000	.5743-01	.6797-01	.7483-01	39.57	2.273	.3549	540.3	.1752-02
48	20.000	.10000+00	207.00	.3156-01	.3733-01	.4109-01	39.69	1.252	.3531	537.6	.9624-03
48	20.000	.15000	211.00	.1196	.1415	.1557	39.73	4.754	.3525	536.6	.3648-02
48	22.000	.50000-01	202.00	.8760-01	.1037	.1141	39.59	3.468	.3547	540.0	.2672-02
48	24.000	.20000	48.000	.4871-01	.5760-01	.6339-01	39.75	1.936	.3521	536.1	.1485-02
48	24.500	.10000+00	208.00	.4963-01	.5870-01	.6461-01	39.68	1.970	.3532	537.7	.1514-02
48	25.500	.15000	212.00	.3283-01	.3883-01	.4274-01	39.72	1.304	.3527	536.9	.1001-02
48	31.500	.20000	215.00	.4654-01	.5504-01	.6056-01	39.77	1.851	.3518	535.6	.1419-02
48	35.000	.50000-01	203.00	.1181	.1395	.1534	40.02	4.726	.3480	529.8	.3598-02
48	35.000	.20000	216.00	.3224-01	.3812-01	.4195-01	39.77	1.282	.3518	535.6	.9829-03
48	39.000	.10000+00	209.00	.7247-01	.8571-01	.9432-01	39.73	2.879	.3525	536.6	.2210-02
48	40.000	.15000	213.00	.2426-01	.2868-01	.3156-01	39.76	.9644	.3520	535.9	.7396-03
48	40.000	.20000	217.00	.1746-01	.2064-01	.2272-01	39.78	.6945	.3518	535.5	.5323-03
48	42.500	.50000-01	204.00	.1348	.1596	.1757	39.55	5.332	.3552	540.8	.4113-02
48	45.500	.15000	214.00	.8979-02	.1062-01	.1168-01	39.82	.3575	.3511	534.6	.2737-03
48	51.000	.20000	218.00	.3295-01	.3896-01	.4287-01	39.78	1.311	.3517	535.4	.1005-02
48	60.000	.50000-01	205.00	.1534	.1816	.1999	39.53	6.063	.3556	541.4	.4680-02
48	67.500	.20000	219.00	.3181-01	.3761-01	.4139-01	39.78	1.265	.3517	535.4	.9698-03
93	96.500	.20000	1220.0	.2462-01	.2922-01	.3223-01	38.84	.9562	.3649	553.0	.7493-03
48	114.00	.40000	388.00	.5283-01	.6250-01	.6880-01	39.64	2.094	.3539	538.8	.1611-02
48	114.00	.70000	394.00	.2981-01	.3529-01	.3886-01	39.49	1.177	.3562	542.3	.9096-03

IH103 60-OT FUSELAGE

(R3PA09)

RUN NUMBER	PHI	XB/LB	T/C NO	H/HREF R=1.0	H/HREF R=.900	H/HREF R=.850	QREF BTU/ FT2SEC	QDOT BTU/ FT2SEC	HW/HT	TW DEG. R	STN NO R=.900
48	157.50	.40000	223.00	.8560-02	.1013-01	.1115-01	39.63	.3392	.3540	539.0	.2611-03
48	157.50	.50000	225.00	.6189-02	.7323-02	.8062-02	39.60	.2451	.3545	539.8	.1888-03
48	157.50	.70000	229.00	.1276-01	.1510-01	.1663-01	39.50	.5040	.3560	542.0	.3893-03
48	157.50	.80000	231.00	.4275-01	.5062-01	.5576-01	39.44	1.686	.3569	543.4	.1305-02
48	180.00	.40000	182.00	.1592-01	.1883-01	.2073-01	39.62	.6307	.3542	539.2	.4855-03
48	180.00	.50000	184.00	.1767-01	.2092-01	.2303-01	39.59	.6998	.3546	539.9	.5392-03
48	180.00	.60000	186.00	.1770-01	.2095-01	.2307-01	39.57	.7004	.3550	540.5	.5401-03
48	180.00	.70000	188.00	.1583-01	.1873-01	.2063-01	39.52	.6255	.3557	541.5	.4829-03
48	180.00	.80000	190.00	.3279-01	.3883-01	.4276-01	39.47	1.294	.3566	542.9	.1001-02
48	315.00	.50000	236.00	.2187-01	.2588-01	.2849-01	39.60	.8659	.3545	539.7	.6671-03
48	315.00	.70000	240.00	.9277-02	.1098-01	.1210-01	39.49	.3663	.3563	542.4	.2831-03
48	315.00	.80000	242.00	.4532-01	.5365-01	.5908-01	39.48	1.789	.3563	542.5	.1383-02

IH103 60-OT FUSELAGE

FUSELAGE (R3PA10)

PARAMETRIC DATA

MACH = 5.250 ALPHA = -5.000 BETA = -3.000 ELEVON = .0000
BDFLAP = .0000 SPDBRK = .0000

TEST CONDITIONS

RUN NUMBER	ALPHA DEG.	BETA DEG.	MACH	RN/FT /FT X10 6	PT PSIA	TT DEG. R	HT BTU/ LBM	PINF PSIA	TINF DEG. R	RHO SLUGS/ FT3	VINF FT/SEC	SCALE
47	-5.000	-3.000	5.250	1.069	103.7	1477.	363.3	.1431	232.5	.5165-04	3924.	.1750-01
91	-5.000	-3.000	5.250	1.041	102.5	1490.	366.9	.1413	234.8	.5052-04	3943.	.1750-01
94	-5.000	-3.000	5.250	1.005	103.7	1534.-	378.4	.1425	242.1	.4939-04	4004.	.1750-01

RUN NUMBER	PHI DEG.	HS SPHERE TW=540
47	.0000	.1677
91	.0000	.1668
94	.0000	.1680

TEST DATA

RUN NUMBER	PHI	XB/LB	T/C NO	H/HREF R=1.0	H/HREF R=.900	H/HREF R=.850	QREF BTU/ FT2SEC	QDOT BTU/ FT2SEC	HW/HT	TW DEG. R	STN NO R=.900
47	.00000	.00000	1.0000	.9406	1.115	1.229	38.97	36.66	.3603	545.5	.2867-01
47	.00000	.50000-02	2.0000	.5730	.6791	.7484	38.99	22.34	.3599	545.0	.1746-01
47	.00000	.10000-01	3.0000	.3535	.4188	.4615	39.02	13.79	.3595	544.4	.1077-01
47	.00000	.20000-01	4.0000	.1607	.1904	.2097	39.07	6.277	.3587	543.2	.4896-02
47	.00000	.30000-01	5.0000	.9444-01	.1119	.1233	39.09	3.691	.3584	542.7	.2877-02
47	.00000	.40000-01	6.0000	.7335-01	.8688-01	.9571-01	39.11	2.869	.3580	542.1	.2234-02
47	.00000	.50000-01	7.0000	.5241-01	.6208-01	.6839-01	39.12	2.050	.3579	542.0	.1597-02
47	.00000	.60000-01	8.0000	.4706-01	.5574-01	.6140-01	39.12	1.841	.3580	542.1	.1433-02
47	.00000	.70000-01	9.0000	.3677-01	.4354-01	.4797-01	39.14	1.439	.3576	541.6	.1120-02
47	.00000	.80000-01	10.000	.2418-01	.2864-01	.3155-01	39.15	.9469	.3574	541.2	.7366-03
47	.00000	.90000-01	11.000	.1892-01	.2240-01	.2468-01	39.14	.7405	.3575	541.4	.5762-03
47	.00000	.10000+00	12.000	.2252-01	.2667-01	.2938-01	39.15	.8816	.3574	541.3	.6859-03
47	.00000	.12000	13.000	.2004	.2373	.2614	39.16	7.848	.3572	540.9	.6103-02
47	.00000	.13000	14.000	.2070	.2451	.2700	39.16	8.107	.3572	540.9	.6305-02
47	.00000	.14000	15.000	.9174-01	.1086	.1197	39.17	3.593	.3572	540.9	.2794-02
47	.00000	.15000	16.000	.7036-01	.8332-01	.9178-01	39.15	2.755	.3574	541.2	.2143-02
47	.00000	.16000	17.000	.6855-01	.8093-01	.8897-01	39.84	2.731	.3465	524.8	.2083-02

IH103 60-OT FUSELAGE

(R3PA10)

RUN NUMBER	PHI	XB/LB	T/C NO	H/HREF R=1.0	H/HREF R=.900	H/HREF R=.850	QREF BTU/ FT2SEC	QDOT BTU/ FT2SEC	HW/HT	TW DEG. R	STN NO R=.900
47	.00000	.17000	18.000	.8706-01	.1031	.1136	39.15	3.409	.3574	541.2	.2652-02
47	.00000	.18000	19.000	.1014	.1201	.1323	39.15	3.970	.3574	541.2	.3089-02
47	.00000	.19000	20.000	.1049	.1242	.1368	39.14	4.104	.3577	541.6	.3194-02
47	.00000	.20000	21.000	.9505-01	.1126	.1240	39.13	3.719	.3578	541.8	.2895-02
47	.00000	.25000	23.000	.3325-01	.3938-01	.4338-01	39.13	1.301	.3578	541.8	.1013-02
47	.00000	.30000	24.000	.6489-01	.7686-01	.8466-01	39.13	2.539	.3578	541.8	.1977-02
91	.00000	.40000	26.000	.2837-01	.3361-01	.3703-01	39.07	1.108	.3587	543.1	.8643-03
91	.00000	.45000	1027.0	.3505-01	.4154-01	.4578-01	39.14	1.372	.3602	550.7	.1081-02
91	.00000	.55000	1029.0	.3376-01	.4002-01	.4410-01	39.14	1.322	.3601	550.6	.1041-02
91	.00000	.60000	1030.0	.2862-01	.3392-01	.3739-01	39.14	1.120	.3602	550.7	.8827-03
91	.00000	.65000	1031.0	.2913-01	.3453-01	.3805-01	39.14	1.140	.3601	550.6	.8984-03
91	.00000	.70000	1032.0	.2816-01	.3338-01	.3678-01	39.14	1.102	.3601	550.7	.8685-03
91	.00000	.75000	1033.0	.7287-01	.8636-01	.9517-01	39.17	2.854	.3598	550.1	.2247-02
91	.00000	.80000	1034.0	.8159-01	.9669-01	.1065	39.17	3.196	.3596	549.9	.2516-02
91	.00000	.85000	1035.0	.8859-01	.1050	.1157	39.20	3.473	.3593	549.3	.2732-02
91	.00000	.90000	1036.0	.2707-01	.3208-01	.3535-01	39.16	1.060	.3598	550.2	.8346-03
91	.00000	.95000	1038.0	.1899-01	.2251-01	.2481-01	39.13	.7431	.3603	550.9	.5857-03
91	.00000	.97500	1039.0	.1765-01	.2092-01	.2305-01	39.18	.6917	.3595	549.7	.5443-03
47	.00000	1.0150	40.000	.2112-01	.2500-01	.2753-01	39.29	.8300	.3552	537.8	.6431-03
47	.00000	1.0450	42.000	.2093-01	.2478-01	.2729-01	39.24	.8213	.3560	539.1	.6373-03
47	10.000	.10000+00	45.000	.2017-01	.2388-01	.2631-01	39.15	.7895	.3575	541.3	.6143-03
47	14.000	.50000-01	44.000	.6427-01	.7613-01	.8386-01	39.11	2.514	.3580	542.2	.1958-02
47	20.000	.10000+00	207.00	.3947-01	.4674-01	.5148-01	39.18	1.547	.3569	540.5	.1202-02
47	20.000	.15000	211.00	.1219	.1443	.1589	39.21	4.779	.3564	539.8	.3712-02
47	22.000	.50000-01	202.00	.9799-01	.1161	.1279	39.12	3.834	.3579	541.9	.2985-02
47	24.000	.20000	48.000	.6764-01	.8006-01	.8815-01	39.28	2.657	.3554	538.1	.2059-02
47	24.500	.10000+00	208.00	.5295-01	.6270-01	.6905-01	39.20	2.076	.3567	540.1	.1613-02
47	25.500	.15000	212.00	.3002-01	.3554-01	.3914-01	39.23	1.178	.3562	539.4	.9141-03
47	31.500	.20000	215.00	.6701-01	.7932-01	.8735-01	39.24	2.630	.3560	539.0	.2040-02
47	35.000	.50000-01	203.00	.1333	.1574	.1730	39.87	5.316	.3461	524.1	.4051-02
47	35.000	.20000	216.00	.4283-01	.5070-01	.5583-01	39.24	1.680	.3560	539.1	.1304-02
47	39.000	.10000+00	209.00	.8120-01	.9615-01	.1059	39.18	3.181	.3569	540.5	.2473-02
47	40.000	.15000	213.00	.2752-01	.3258-01	.3587-01	39.24	1.080	.3560	539.1	.8379-03
47	40.000	.20000	217.00	.2307-01	.2731-01	.3008-01	39.24	.9054	.3560	539.1	.7026-03
47	42.500	.50000-01	204.00	.1455	.1724	.1899	39.09	5.687	.3584	542.7	.4432-02
47	45.500	.15000	214.00	.7164-02	.8473-02	.9324-02	39.45	.2826	.3526	534.0	.2180-03
47	51.000	.20000	218.00	.3292-01	.3897-01	.4292-01	39.24	1.292	.3561	539.2	.1002-02
47	60.000	.50000-01	205.00	.1806	.2140	.2358	39.06	7.056	.3588	543.3	.5503-02
47	67.500	.20000	219.00	.3925-01	.4647-01	.5117-01	39.24	1.540	.3560	539.1	.1195-02
94	96.500	.20000	1220.0	.3194-01	.3776-01	.4154-01	41.23	1.317	.3511	553.6	.9963-03
47	114.00	.40000	388.00	.5790-01	.6855-01	.7550-01	39.20	2.269	.3567	540.1	.1763-02
47	114.00	.70000	394.00	.4758-01	.5635-01	.6206-01	39.18	1.864	.3570	540.5	.1449-02
47	157.50	.40000	223.00	.1143-01	.1353-01	.1490-01	39.21	.4480	.3565	539.9	.3479-03

IH103 60-OT FUSELAGE

(R3PA10)

RUN NUMBER	PHI	XB/LB	T/C NO	H/HREF R=1.0	H/HREF R=.900	H/HREF R=.850	QREF BTU/ FT2SEC	QDOT BTU/ FT2SEC	HW/HT	TW DEG. R	STN NO R=.900
47	157.50	.50000	225.00	.3151-01	.3731-01	.4109-01	39.23	1.236	.3562	539.4	.9596-03
47	157.50	.70000	229.00	.3907-01	.4625-01	.5093-01	39.24	1.533	.3561	539.2	.1190-02
47	157.50	.80000	231.00	.7806-01	.9244-01	.1018	39.18	3.059	.3569	540.5	.2377-02
47	180.00	.40000	182.00	.1487-01	.1760-01	.1939-01	39.22	.5831	.3564	539.7	.4528-03
47	180.00	.50000	184.00	.3829-01	.4533-01	.4993-01	39.22	1.502	.3563	539.5	.1166-02
47	180.00	.60000	186.00	.3866-01	.4577-01	.5040-01	39.22	1.516	.3563	539.6	.1177-02
47	180.00	.70000	188.00	.3181-01	.3766-01	.4148-01	39.23	1.248	.3561	539.3	.9688-03
47	180.00	.80000	190.00	.5326-01	.6306-01	.6945-01	39.20	2.088	.3566	540.0	.1622-02
47	315.00	.50000	236.00	.1281-01	.1517-01	.1670-01	39.21	.5023	.3564	539.7	.3901-03
47	315.00	.70000	240.00	.4262-01	.5046-01	.5557-01	39.22	1.672	.3563	539.5	.1298-02
47	315.00	.80000	242.00	.1156	.1371	.1511	38.90	4.499	.3613	547.1	.3526-02

IH103 60-OT FUSELAGE

(R3PA11)

FUSELAGE

PARAMETRIC DATA

MACH = 5.250 ALPHA = 5.000 BETA = -3.000 ELEVON = .0000
BDFLAP = .0000 SPDBRK = .0000

TEST CONDITIONS

RUN NUMBER	ALPHA DEG.	BETA DEG.	MACH	RN/FT /FT X10 6	PT PSIA	TT DEG. R	HT BTU/ LBM	PINF PSIA	TINF DEG. R	RHO SLUGS/ FT3	VINF FT/SEC	SCALE
49	5.000	-3.000	5.250	1.047	102.8	1487.	366.2	.1418	234.3	.5077-04	3939.	.1750-01
90	5.000	-3.000	5.250	1.038	102.4	1492.	367.4	.1412	235.1	.5041-04	3946.	.1750-01
95	5.000	-3.000	5.250	1.012	102.9	1520.	374.9	.1416	239.9	.4954-04	3986.	.1750-01

RUN NUMBER	PHI DEG.	HS SPHERE TW=540
49	.0000	.1670
90	.0000	.1668
95	.0000	.1673

TEST DATA

RUN NUMBER	PHI	XB/LB	T/C NO	H/HREF R=1.0	H/HREF R=.900	H/HREF R=.850	QREF BTU/ FT2SEC	QDOT BTU/ FT2SEC	HW/HT	TW DEG. R	STN NO R=.900
49	.00000	.00000	1.0000	.7362	.8715	.9597	39.40	29.00	.3558	543.0	.2262-01
49	.00000	.50000-02	2.0000	.4604	.5449	.6000	39.42	18.15	.3554	542.4	.1414-01
49	.00000	.10000-01	3.0000	.2970	.3515	.3870	39.45	11.72	.3550	541.7	.9126-02
49	.00000	.20000-01	4.0000	.1396	.1651	.1818	39.51	5.513	.3540	540.2	.4286-02
49	.00000	.30000-01	5.0000	.8103-01	.9586-01	.1055	39.55	3.204	.3534	539.4	.2489-02
49	.00000	.40000-01	6.0000	.6390-01	.7559-01	.8319-01	39.57	2.529	.3530	538.7	.1962-02
49	.00000	.50000-01	7.0000	.4553-01	.5385-01	.5927-01	39.58	1.802	.3529	538.6	.1398-02
49	.00000	.60000-01	8.0000	.4131-01	.4886-01	.5377-01	39.60	1.636	.3526	538.0	.1269-02
49	.00000	.70000-01	9.0000	.3892-01	.4602-01	.5064-01	39.63	1.542	.3521	537.3	.1195-02
49	.00000	.80000-01	10.000	.3110-01	.3678-01	.4047-01	39.64	1.233	.3519	537.0	.9549-03
49	.00000	.90000-01	11.000	.2517-01	.2977-01	.3275-01	39.66	.9983	.3517	536.7	.7729-03
49	.00000	.10000+00	12.000	.2402-01	.2840-01	.3125-01	39.67	.9528	.3516	536.5	.7374-03
49	.00000	.12000	13.000	.2269	.2683	.2951	39.70	9.008	.3511	535.8	.6966-02
49	.00000	.13000	14.000	.1797	.2124	.2337	39.69	7.131	.3512	535.9	.5516-02
49	.00000	.14000	15.000	.6490-01	.7673-01	.8443-01	39.66	2.574	.3516	536.5	.1992-02
49	.00000	.15000	16.000	.4854-01	.5739-01	.6315-01	39.66	1.925	.3517	536.7	.1490-02
49	.00000	.16000	17.000	.4311-01	.5098-01	.5610-01	39.61	1.708	.3524	537.7	.1324-02

IH103 60-OT FUSELAGE

(R3PA11)

RUN NUMBER	PHI	XB/LB	T/C NO	H/HREF R=1.0	H/HREF R=.900	H/HREF R=.850	QREF BTU/ FT2SEC	QDOT BTU/ FT2SEC	HW/HT	TW DEG. R	STN NO R=.900
49	.00000	.17000	18.000	.3757-01	.4443-01	.4889-01	39.65	1.490	.3518	536.8	.1154-02
49	.00000	.18000	19.000	.3050-01	.3606-01	.3968-01	39.65	1.209	.3519	537.0	.9363-03
49	.00000	.19000	20.000	.3739-01	.4421-01	.4865-01	39.63	1.482	.3521	537.3	.1148-02
49	.00000	.20000	21.000	.5663-01	.6698-01	.7371-01	39.61	2.243	.3525	537.9	.1739-02
49	.00000	.25000	23.000	.2694-01	.3186-01	.3506-01	39.60	1.067	.3526	538.1	.8271-03
49	.00000	.30000	24.000	.6539-01	.7735-01	.8513-01	39.57	2.587	.3531	538.8	.2008-02
49	.00000	.40000	26.000	.3030-01	.3586-01	.3949-01	39.41	1.194	.3555	542.5	.9309-03
90	.00000	.45000	1027.0	.3624-01	.4294-01	.4732-01	39.22	1.421	.3596	550.6	.1119-02
90	.00000	.55000	1029.0	.3509-01	.4158-01	.4582-01	39.21	1.376	.3598	550.9	.1083-02
90	.00000	.60000	1030.0	.3377-01	.4003-01	.4411-01	39.19	1.324	.3601	551.4	.1043-02
90	.00000	.65000	1031.0	.3199-01	.3791-01	.4177-01	39.22	1.255	.3596	550.7	.9875-03
90	.00000	.70000	1032.0	.3305-01	.3918-01	.4317-01	39.19	1.295	.3601	551.4	.1020-02
90	.00000	.75000	1033.0	.1028	.1218	.1342	39.25	4.033	.3592	550.1	.3172-02
90	.00000	.80000	1034.0	.1072	.1271	.1400	39.22	4.205	.3596	550.7	.3310-02
90	.00000	.85000	1035.0	.9553-01	.1132	.1247	39.25	3.749	.3592	550.0	.2949-02
90	.00000	.90000	1036.0	.3949-01	.4679-01	.5156-01	39.23	1.549	.3595	550.5	.1219-02
90	.00000	.95000	1038.0	.3533-01	.4186-01	.4613-01	39.23	1.386	.3594	550.4	.1091-02
90	.00000	.97500	1039.0	.3411-01	.4041-01	.4452-01	39.28	1.340	.3586	549.1	.1053-02
49	.00000	1.0150	40.000	.2522-01	.2986-01	.3288-01	39.36	.9926	.3564	543.9	.7751-03
49	.00000	1.0300	41.000	.2835-01	.3357-01	.3697-01	39.34	1.115	.3567	544.4	.8713-03
49	.00000	1.0450	42.000	.3035-01	.3594-01	.3959-01	39.30	1.193	.3573	545.3	.9329-03
49	10.000	.10000+00	45.000	.2488-01	.2940-01	.3234-01	39.74	.9886	.3504	534.7	.7635-03
49	14.000	.50000-01	44.000	.5606-01	.6630-01	.7296-01	39.62	2.221	.3523	537.6	.1721-02
49	20.000	.10000+00	207.00	.5475-01	.6467-01	.7111-01	39.88	2.183	.3482	531.4	.1679-02
49	20.000	.15000	211.00	.7966-01	.9412-01	.1035	39.82	3.172	.3491	532.8	.2444-02
49	22.000	.50000-01	202.00	.8682-01	.1027	.1130	39.64	3.442	.3520	537.1	.2666-02
49	24 000	.20000	48.000	.1803-01	.2131-01	.2344-01	39.76	.7170	.3500	534.2	.5534-03
49	24.500	.10000+00	208.00	.6061-01	.7161-01	.7875-01	39.84	2.415	.3487	532.2	.1860-02
49	25.500	.15000	212.00	.2185-01	.2581-01	.2838-01	39.85	.8706	.3486	532.1	.6703-03
49	31.500	.20000	215.00	.1603-01	.1893-01	.2082-01	39.84	.6386	.3487	532.2	.4917-03
49	35.000	.50000-01	203.00	.1190	.1407	.1548	39.66	4.720	.3516	536.6	.3653-02
49	35.000	.20000	216.00	.1893-01	.2236-01	.2459-01	39.84	.7542	.3488	532.3	.5808-03
49	39.000	.10000+00	209.00	.6728-01	.7948-01	.8740-01	39.86	2.681	.3485	531.9	.2064-02
49	40.000	.15000	213.00	.5309-01	.6271-01	.6896-01	39.88	2.117	.3481	531.3	.1629-02
49	40.000	.20000	217.00	.2396-01	.2831-01	.3113-01	39.84	.9544	.3489	532.4	.7351-03
49	42.500	.50000-01	204.00	.1171	.1385	.1524	39.59	4.635	.3528	538.4	.3596-02
49	45.500	.15000	214.00	.1278-01	.1511-01	.1662-01	39.73	.5078	.3506	535.0	.3923-03
49	51.000	.20000	218.00	.2936-01	.3468-01	.3814-01	39.84	1.170	.3488	532.2	.9007-03
49	60.000	.50000-01	205.00	.1222	.1446	.1591	39.55	4.834	.3534	539.3	.3754-02
49	67.500	.20000	219.00	.2813-01	.3323-01	.3655-01	39.85	1.121	.3486	532.0	.8631-03
95	96.500	.20000	1220.0	.2147-01	.2541-01	.2798-01	40.38	.8668	.3558	555.9	.6689-03
49	114.00	.40000	388.00	.4290-01	.5074-01	.5586-01	39.54	1.696	.3536	539.5	.1317-02
49	114.00	.70000	394.00	.3101-01	.3673-01	.4046-01	39.27	1.218	.3577	545.9	.9534-03

IH103 60-OT FUSELAGE

(R3PA11)

RUN NUMBER	PHI	XB/LB	T/C NO	H/HREF R=1.0	H/HREF R=.900	H/HREF R=.850	QREF BTU/ FT2SEC	QDOT BTU/ FT2SEC	HW/HT	TW DEG. R	STN NO R=.900
49	157.50	.40000	223.00	.8123-02	.9611-02	.1058-01	39.52	.3210	.3539	540.0	.2495-03
49	157.50	.50000	225.00	.3181-02	.3764-02	.4144-02	39.45	.1255	.3549	541.6	.9772-04
49	157.50	.70000	229.00	.4099-02	.4853-02	.5345-02	39.35	.1613	.3566	544.1	.1260-03
49	157.50	.80000	231.00	.2905-01	.3442-01	.3792-01	39.22	1.140	.3585	547.1	.8933-03
49	180.00	.40000	182.00	.1328-01	.1571-01	.1730-01	39.50	.5245	.3542	540.5	.4079-03
49	180.00	.50000	184.00	.1814-01	.2147-01	.2364-0	39.45	.7158	.3549	541.6	.5574-03
49	180.00	.60000	186.00	.1585-01	.1877-01	.2067-01	39.39	.6245	.3558	543.0	.4871-03
49	180.00	.70000	188.00	.1104-01	.1307-01	.1440-01	39.35	.4344	.3565	544.1	.3393-03
49	180.00	.80000	190.00	.2187-01	.2591-01	.2854-01	39.26	.8586	.3580	546.3	.6724-03
49	315.00	.50000	236.00	.1851-01	.2191-01	.2413-01	39.45	.7304	.3550	541.7	.5688-03
49	315.00	.70000	240.00	.9252-02	.1095-01	.1207-01	39.34	.3639	.3567	544.4	.2844-03

IH103 60-OT FUSELAGE

(R3PA12)

FUSELAGE

PARAMETRIC DATA

MACH = 5.250 ALPHA = 10.00 BETA = -3.000 ELEVON = .0000
BDFLAP = .0000 SPDBRK = .0000

TEST CONDITIONS

RUN NUMBER	ALPHA DEG.	BETA DEG.	MACH	RN/FT /FT X10 6	PT PSIA	TT DEG. R	HT BTU/ LBM	PINF PSIA	TINF DEG. R	RHO SLUGS/ FT3	VINF FT/SEC	SCALE
50	10.00	-3.000	5.250	1.015	101.8	1507.	371.4	.1402	237.7	.4950-04	3967.	.1750-01
89	10.00	-3.000	5.250	1.034	104.5	1514.	373.3	.1439	238.9	.5056-04	3977.	.1750-01
96	10.00	-3.000	5.250	1.046	102.9	1490.	366.9	.1420	234.8	.5074-04	3943.	.1750-01

RUN NUMBER	PHI DEG.	HS SPHERE TW=540
50	.0000	.1664
89	.0000	.1686
96	.0000	.1672

TEST DATA

RUN NUMBER	PHI	XB/LB	T/C NO	H/HREF R=1.0	H/HREF R=.900	H/HREF R=.850	QREF BTU/ FT2SEC	QDOT BTU/ FT2SEC	HW/HT	TW DEG. R	STN NO R=.900
50	.00000	.00000	1.0000	.6618	.7833	.8624	39.82	26.35	.3553	550.0	.2061-01
50	.00000	.50000-02	2.0000	.4223	.4998	.5503	39.83	16.82	.3551	549.7	.1315-01
50	.00000	.10000-01	3.0000	.2833	.3353	.3692	39.86	11.29	.3547	549.1	.8824-02
50	.00000	.20000-01	4.0000	.1570	.1857	.2044	39.91	6.265	.3539	547.9	.4888-02
50	.00000	.30000-01	5.0000	.1057	.1250	.1376	39.95	4.221	.3533	546.9	.3290-02
50	.00000	.40000-01	6.0000	.9219-01	.1090	.1200	39.96	3.684	.3531	546.6	.2870-02
50	.00000	.50000-01	7.0000	.7489-01	.8858-01	.9749-01	39.97	2.994	.3529	546.3	.2331-02
50	.00000	.60000-01	8.0000	.7117-01	.8418-01	.9264-01	39.98	2.846	.3528	546.1	.2216-02
50	.00000	.70000-01	9.0000	.5655-01	.6688-01	.7361-01	40.00	2.262	.3526	545.8	.1760-02
50	.00000	.80000-01	10.000	.4277-01	.5058-01	.5566-01	40.01	1.711	.3524	545.6	.1331-02
50	.00000	.90000-01	11.000	.3432-01	.4059-01	.4466-01	40.02	1.373	.3522	545.3	.1068-02
50	.00000	.10000+00	12.000	.2389-01	.2825-01	.3109-01	40.02	.9561	.3522	545.2	.7436-03
50	.00000	.12000	13.000	.5413-01	.6400-01	.7043-01	40.03	2.167	.3520	544.9	.1685-02
50	.00000	.13000	14.000	.7515-01	.8887-01	.9779-01	40.03	3.008	.3520	545.0	.2339-02
50	.00000	.14000	15.000	.2807-01	.3319-01	.3653-01	40.04	1.124	.3519	544.8	.8737-03
50	.00000	.15000	16.000	.1803-01	.2133-01	.2347-01	40.03	.7219	.3520	545.0	.5613-03
50	.00000	.16000	17.000	.2662-01	.3143-01	.3456-01	40.35	1.074	.3470	537.2	.8276-03

IH103 60-OT FUSELAGE

(R3PA12)

RUN NUMBER	PHI	XB/LB	T/C NO	H/HREF R=1.0	H/HREF R=.900	H/HREF R=.850	QREF BTU/ FT2SEC	QDOT BTU/ FT2SEC	HW/HT	TW DEG. R	STN NO R=.900
50	.00000	.17000	18.000	.4503-01	.5324-01	.5859-01	40.04	1.803	.3518	544.7	.1401-02
50	.00000	.18000	19.000	.6122-01	.7239-01	.7966-01	40.05	2.452	.3518	544.6	.1906-02
50	.00000	.19000	20.000	.5811-01	.6871-01	.7561-01	40.04	2.327	.3519	544.7	.1809-02
50	.00000	.20000	21.000	.4953-01	.5856-01	.6444-01	40.04	1.983	.3520	544.9	.1541-02
50	.00000	.25000	23.000	.3899-01	.4610-01	.5073-01	40.06	1.562	.3515	544.1	.1214-02
50	.00000	.30000	24.000	.3768-01	.4455-01	.4902-01	40.06	1.509	.3516	544.3	.1173-02
50	.00000	.40000	26.000	.3219-01	.3807-01	.4190-01	39.99	1.287	.3526	545.9	.1002-02
89	.00000	.45000	1027.0	.2404-01	.2844-01	.3130-01	40.72	.9791	.3527	548.7	.7409-03
89	.00000	.55000	1029.0	.3281-01	.3880-01	.4271-01	40.72	1.336	.3528	548.8	.1011-02
89	.00000	.60000	1030.0	.3883-01	.4593-01	.5055-01	40.70	1.580	.3531	549.2	.1197-02
89	.00000	.65000	1031.0	.3713-01	.4391-01	.4833-01	40.74	1.513	.3525	548.4	.1144-02
89	.00000	.70000	1032.0	.4316-01	.5105-01	.5618-01	40.70	1.757	.3530	549.2	.1330-02
89	.00000	.75000	1033.0	.1092	.1292	.1421	40.76	4.452	.3522	547.9	.3365-02
89	.00000	.80000	1034.0	.1388	.1642	.1807	40.74	5.656	.3525	548.4	.4278-02
89	.00000	.85000	1035.0	.1770	.2093	.2303	40.78	7.217	.3519	547.4	.5453-02
89	.00000	.90000	1036.0	.5829-01	.6893-01	.7586-01	40.74	2.375	.3525	548.4	.1796-02
89	.00000	.95000	1038.0	.4498-01	.5319-01	.5854-01	40.73	1.832	.3526	548.5	.1386-02
89	.00000	.97500	1039.0	.4964-01	.5869-01	.6458-01	40.79	2.025	.3518	547.2	.1529-02
50	.00000	1.0150	40.000	.4036-01	.4774-01	.5254-01	39.99	1.614	.3527	546.0	.1256-02
50	.00000	1.0300	41.000	.4245-01	.5022-01	.5527-01	39.95	1.696	.3532	546.8	.1322-02
50	.00000	1.0450	42.000	.4160-01	.4922-01	.5418-01	39.91	1.660	.3539	547.9	.1295-02
50	10.000	.10000+00	45.000	.2943-01	.3481-01	.3831-01	40.00	1.177	.3525	545.8	.9162-03
50	14.000	.50000-01	44.000	.7398-01	.8752-01	.9633-01	39.94	2.955	.3534	547.0	.2303-02
50	20.000	.10000+00	207.00	.6269-01	.7414-01	.8159-01	40.01	2.508	.3524	545.5	.1952-02
50	20.000	.15000	211.00	.1522-01	.1800-01	.1980-01	40.05	.6095	.3518	544.6	.4737-03
50	22.000	.50000-01	202.00	.1061	.1256	.1382	39.94	4.239	.3534	547.1	.3304-02
50	24.500	.10000+00	208.00	.8001-01	.9464-01	.1042	39.98	3.199	.3528	546.1	.2491-02
50	25.500	.15000	212.00	.3938-01	.4657-01	.5124-01	40.02	1.576	.3522	545.3	.1226-02
50	31.500	.20000	215.00	.2289-01	.2706-01	.2977-01	40.11	.9181	.3508	543.0	.7122-03
50	35.000	.50000-01	203.00	.1107	.1307	.1436	40.45	4.479	.3455	534.8	.3441-02
50	35.000	.20000	216.00	.3193-01	.3774-01	.4153-01	40.11	1.281	.3508	543.1	.9936-03
50	39.000	.10000+00	209.00	.8062-01	.9535-01	.1049	40.00	3.225	.3525	545.8	.2510-02
50	40.000	.15000	213.00	.8410-01	.9945-01	.1094	40.03	3.367	.3520	544.9	.2618-02
50	40.000	.20000	217.00	.4009-01	.4739-01	.5214-01	40.11	1.608	.3508	543.1	.1248-02
50	42.500	.50000-01	204.00	.1007	.1192	.1312	39.89	4.017	.3543	548.5	.3136-02
50	45.500	.15000	214.00	.2138-01	.2527-01	.2779-01	40.18	.8591	.3497	541.3	.6651-03
50	51.000	.20000	218.00	.4965-01	.5869-01	.6457-01	40.10	1.991	.3510	543.3	.1545-02
50	60.000	.50000-01	205.00	.1078	.1275	.1404	39.89	4.299	.3543	548.4	.3357-02
50	67.500	.20000	219.00	.1846-01	.2182-01	.2401-01	40.10	.7403	.3510	543.3	.5745-03
96	96.500	.20000	1220.0	.3175-01	.3757-01	.4137-01	39.55	1.256	.3551	543.0	.9758-03
50	114.00	.40000	388.00	.1557-01	.1840-01	.2025-01	40.09	.6240	.3512	543.7	.4844-03
50	114.00	.70000	394.00	.2097-01	.2481-01	.2730-01	39.96	.8380	.3531	546.6	.6529-03
50	157.50	.40000	223.00	.5553-02	.6564-02	.7221-02	40.12	.2228	.3506	542.8	.1728-03

IH103 60-OT FUSELAGE (R3PA12)

RUN NUMBER	PHI	XB/LB	T/C NO	H/HREF R=1.0	H/HREF R=.900	H/HREF R=.850	QREF BTU/ FT2SEC	QDOT BTU/ FT2SEC	HW/HT	TW DEG. R	STN NO R=.900
50	157.50	.50000	225.00	.3265-03	.3860-03	.4247-03	40.09	.1309-01	.3512	543.6	.1016-04
50	157.50	.70000	229.00	.3648-02	.4314-02	.4748-02	40.00	.1459	.3525	545.7	.1135-03
50	157.50	.80000	231.00	.1021-01	.1208-01	.1329-01	39.94	.4077	.3535	547.2	.3178-03
50	180.00	.40000	182.00	.6064-02	.7168-02	.7885-02	40.14	.2434	.3504	542.4	.1887-03
50	180.00	.50000	184.00	.2959-02	.3498-02	.3848-02	40.11	.1187	.3508	543.1	.9207-04
50	180.00	.60000	186.00	.2821-02	.3335-02	.3670-02	40.08	.1131	.3512	543.7	.8779-04
50	180.00	.70000	188.00	.2874-02	.3398-02	.3739-02	40.04	.1151	.3519	544.7	.8945-04
50	180.00	.80000	190.00	.9061-02	.1072-01	.1179-01	39.98	.3623	.3528	546.2	.2821-03
50	315.00	.50000	236.00	.3060-02	.3617-02	.3980-02	40.07	.1226	.3514	544.0	.9522-04
50	315.00	.70000	240.00	.5035-02	.5955-02	.6554-02	39.97	.2013	.3529	546.4	.1567-03
50	315.00	.80000	242.00	.3519-01	.4163-01	.4583-01	39.92	1.405	.3538	547.7	.1096-02

IH103 60-OT FUSELAGE

FUSELAGE (R3PA13)

PARAMETRIC DATA

MACH = 5.250 ALPHA = .0000 BETA = -9.000 ELEVON = .0000
BDFLAP = .0000 SPDBRK = .0000

TEST CONDITIONS

RUN NUMBER	ALPHA DEG.	BETA DEG.	MACH	RN/FT /FT X10 6	PT PSIA	TT DEG. R	HT BTU/ LBM	PINF PSIA	TINF DEG. R	RHO SLUGS/ FT3	VINF FT/SEC	SCALE
53	.0000	-9.000	5.250	1.015	101.9	1509.	371.8	.1404	237.9	.4952-04	3969.	.1750-01
100	.0000	-9.000	5.250	1.056	104.1	1491.	367.2	.1435	235.0	.5127-04	3944.	.1750-01
101	.0000	-9.000	5.250	1.049	103.1	1488.	366.4	.1421	234.5	.5087-04	3940.	.1750-01

RUN NUMBER	PHI DEG.	HS SPHERE TW=540
53	.0000	.1665
100	.0000	.1681
101	.0000	.1673

TEST DATA

RUN NUMBER	PHI	XB/LB	T/C NO	H/HREF R=1.0	H/HREF R=.900	H/HREF R=.850	QREF BTU/ FT2SEC	QDOT BTU/ FT2SEC	HW/HT	TW DEG. R	STN NO R=.900
53	.00000	.00000	1.0000	.8544	1.012	1.115	39.74	33.96	.3575	554.0	.2662-01
53	.00000	.50000-02	2.0000	.5472	.6480	.7137	39.76	21.76	.3572	553.5	.1705-01
53	.00000	.10000-01	3.0000	.3405	.4032	.4440	39.79	13.55	.3568	552.9	.1061-01
53	.00000	.20000-01	4.0000	.1578	.1869	.2058	39.83	6.287	.3561	551.8	.4917-02
53	.00000	.30000-01	5.0000	.9069-01	.1074	.1182	39.85	3.614	.3558	551.4	.2825-02
53	.00000	.40000-01	6.0000	.7223-01	.8550-01	.9414-01	39.87	2.880	.3555	550.9	.2250-02
53	.00000	.50000-01	7.0000	.5207-01	.6164-01	.6787-01	39.87	2.076	.3555	550.9	.1622-02
53	.00000	.60000-01	8.0000	.4913-01	.5816-01	.6404-01	39.88	1.959	.3555	550.8	.1530-02
53	.00000	.70000-01	9.0000	.4046-01	.4789-01	.5273-01	39.89	1.614	.3553	550.5	.1260-02
53	.00000	.80000-01	10.000	.2627-01	.3110-01	.3424-01	39.89	1.048	.3553	550.5	.8183-03
53	.00000	.90000-01	11.000	.1659-01	.1964-01	.2163-01	39.89	.6619	.3552	550.5	.5168-03
53	.00000	.10000+00	12.000	.2394-01	.2833-01	.3119-01	39.89	.9549	.3553	550.5	.7455-03
53	.00000	.12000	13.000	.2369	.2804	.3087	39.91	9.455	.3550	550.1	.7378-02
53	.00000	.13000	14.000	.2738	.3240	.3568	39.90	10.93	.3551	550.2	.8527-02
53	.00000	.14000	15.000	.8267-01	.9784-01	.1077	39.89	3.298	.3552	550.4	.2575-02
53	.00000	.15000	16.000	.5327-01	.6305-01	.6942-01	39.88	2.124	.3554	550.7	.1659-02
53	.00000	.16000	17.000	.4648-01	.5486-01	.6030-01	40.54	1.885	.3452	534.9	.1445-02

IH103 60-OT FUSELAGE (R3PA13)

RUN NUMBER	PHI	XB/LB	T/C NO	H/HREF R=1.0	H/HREF R=.900	H/HREF R=.850	QREF BTU/ FT2SEC	QDOT BTU/ FT2SEC	HW/HT	TW DEG. R	STN NO R=.900
53	.00000	.17000	18.000	.4298-01	.5087-01	.5601-01	39.88	1.714	.3554	550.6	.1339-02
53	.00000	.18000	19.000	.3373-01	.3993-01	.4396-01	39.89	1.345	.3553	550.6	.1051-02
53	.00000	.19000	20.000	.2967-01	.3512-01	.3867-01	39.87	1.183	.3555	550.9	.9240-03
53	.00000	.20000	21.000	.4054-01	.4799-01	.5284-01	39.86	1.616	.3557	551.2	.1263-02
53	.00000	.25000	23.000	.5576-01	.6601-01	.7268-01	39.87	2.223	.3556	551.0	.1737-02
53	.00000	.30000	24.000	.5051-01	.5979-01	.6584-01	39.86	2.013	.3557	551.2	.1573-02
53	.00000	.40000	26.000	.5957-01	.7054-01	.7769-01	39.78	2.370	.3569	553.1	.1856-02
101	.00000	.45000	1027.0	.5271-01	.6252-01	.6895-01	39.00	2.056	.3632	554.5	.1621-02
101	.00000	.55000	1029.0	.4604-01	.5462-01	.6023-01	39.00	1.796	.3632	554.6	.1416-02
101	.00000	.60000	1030.0	.4409-01	.5230-01	.5768-01	38.99	1.719	.3634	554.9	.1356-02
101	.00000	.65000	1031.0	.3747-01	.4445-01	.4901-01	39.01	1.462	.3631	554.5	.1152-02
101	.00000	.70000	1032.0	.7116-01	.8442-01	.9309-01	38.99	2.775	.3633	554.8	.2188-02
101	.00000	.75000	1033.0	.1349	.1600	.1764	39.03	5.265	.3627	553.9	.4147-02
101	.00000	.80000	1034.0	.1501	.1780	.1963	39.04	5.859	.3626	553.7	.4614-02
101	.00000	.85000	1035.0	.1882	.2232	.2461	39.08	7.356	.3620	552.8	.5787-02
101	.00000	.90000	1036.0	.3915-01	.4644-01	.5121-01	39.03	1.528	.3627	553.9	.1204-02
101	.00000	.95000	1038.0	.1551-01	.1840-01	.2029-01	39.01	.6049	.3631	554.5	.4768-03
101	.00000	.97500	1039.0	.1072-01	.1271-01	.1402-01	39.08	.4190	.3620	552.7	.3296-03
53	.00000	1.0150	40.000	.9492-02	.1123-01	.1237-01	39.92	.3790	.3547	549.7	.2956-03
53	.00000	1.0300	41.000	.1184-01	.1401-01	.1543-01	39.91	.4725	.3550	550.1	.3687-03
53	.00000	1.0450	42.000	.1389-01	.1644-01	.1810-01	39.87	.5538	.3555	550.9	.4326-03
53	10.000	.10000+00	45.000	.1959-01	.2318-01	.2552-01	39.91	.7817	.3550	550.0	.6100-03
53	14.000	.50000-01	44.000	.7152-01	.8465-01	.9321-01	39.89	2.853	.3553	550.5	.2228-02
53	20.000	.10000+00	207.00	.5474-01	.6477-01	.7130-01	39.95	2.186	.3544	549.2	.1704-02
53	20.000	.15000	211.00	.1197	.1416	.1559	39.96	4.783	.3541	548.7	.3727-02
53	22.000	.50000-01	202.00	.1141	.1350	.1486	39.90	4.551	.3551	550.2	.3552-02
53	24.000	.20000	48.000	.2401-02	.2851-02	.3146-02	39.18	.9409-01	.3663	567.6	.7498-04
53	24.500	.10000+00	208.00	.7324-01	.8666-01	.9540-01	39.95	2.926	.3543	549.0	.2281-02
53	25.500	.15000	212.00	.2950-01	.3490-01	.3842-01	39.97	1.179	.3540	548.5	.9185-03
53	31.500	.20000	215.00	.3509-01	.4150-01	.4568-01	40.01	1.404	.3534	547.6	.1092-02
53	35.000	.50000-01	203.00	.1574	.1858	.2042	40.54	6.383	.3451	534.8	.4893-02
53	35.000	.20000	216.00	.2051-01	.2427-01	.2671-01	40.02	.8208	.3533	547.5	.6386-03
53	39.000	.10000+00	209.00	.9923-01	.1174	.1293	39.92	3.961	.3548	549.7	.3090-02
53	40.000	.15000	213.00	.5904-01	.6984-01	.7688-01	39.98	2.360	.3538	548.3	.1838-02
53	40.000	.20000	217.00	.1381-01	.1634-01	.1798-01	40.03	.5529	.3531	547.2	.4300-03
53	42.500	.50000-01	204.00	.1696	.2007	.2210	39.87	6.760	.3556	551.1	.5282-02
53	45.500	.15000	214.00	.1588-01	.1877-01	.2065-01	40.19	.6382	.3506	543.3	.4941-03
53	51.000	.20000	218.00	.5323-01	.6297-01	.6931-01	39.99	2.129	.3536	548.0	.1657-02
53	60.000	.50000-01	205.00	.1801	.2132	.2348	39.83	7.173	.3562	551.9	.5610-02
53	67.500	.20000	219.00	.5224-01	.6180-01	.6803-01	40.00	2.090	.3535	547.8	.1626-02
100	96.500	.20000	1220.0	.6681-01	.7912-01	.8715-01	39.65	2.649	.3575	547.0	.2044-02
53	114.00	.40000	388.00	.7997-01	.9464-01	.1042	39.92	3.193	.3548	549.7	.2491-02
53	114.00	.70000	394.00	.5143-01	.6089-01	.6706-01	39.81	2.047	.3566	552.5	.1602-02

IH103 60-OT FUSELAGE

(R3PA13)

RUN NUMBER	PHI	XB/LB	T/C NO	H/HREF R=1.0	H/HREF R=.900	H/HREF R=.850	QREF BTU/ FT2SEC	QDOT BTU/ FT2SEC	HW/HT	TW DEG. R	STN NO R=.900
53	157.50	.40000	223.00	.9926-02	.1184-01	.1311-01	38.17	.3789	.3819	591.8	.3111-03
53	157.50	.50000	225.00	.1540-01	.1822-01	.2006-01	39.93	.6148	.3546	549.5	.4794-03
53	157.50	.70000	229.00	.9369-02	.1109-01	.1221-01	39.87	.3736	.3555	550.9	.2918-03
53	157.50	.80000	231.00	.1143-02	.1351-02	.1486-02	40.23	.4601-01	.3499	542.2	.3557-04
53	180.00	.40000	182.00	.9344-02	.1106-01	.1217-01	39.93	.3731	.3546	549.5	.2910-03
53	180.00	.50000	184.00	.4664-02	.5519-02	.6076-02	39.92	.1862	.3548	549.8	.1452-03
53	180.00	.60000	186.00	.4564-02	.5401-02	.5947-02	39.89	.1820	.3552	550.5	.1421-03
53	180.00	.70000	188.00	.2861-02	.3387-02	.3729-02	39.87	.1141	.3555	550.9	.8911-04
53	180.00	.80000	190.00	.2392-01	.2832-01	.3119-01	39.80	.9518	.3567	552.7	.7451-03
53	315.00	.50000	236.00	.2777-01	.3286-01	.3618-01	39.93	1.109	.3547	549.6	.8648-03
53	315.00	.80000	242.00	.7189-01	.9527-01	.9402-01	39.41	2.833	.3628	562.1	.2243-02

IH103 60-OT FUSELAGE (R3PA14)

FUSELAGE

PARAMETRIC DATA

MACH = 5.250 ALPHA = -5.000 BETA = -9.000 ELEVON = .0000
BDFLAP = .0000 SPDBRK = .0000

TEST CONDITIONS

RUN NUMBER	ALPHA DEG.	BETA DEG.	MACH	RN/FT /FT X10 6	PT PSIA	TT DEG. R	HT BTU/ LBM	PINF PSIA	TINF DEG. R	RHO SLUGS/ FT3	VINF FT/SEC	SCALE
54	-5.000	-9.000	5.250	1.031	101.6	1491.	367.2	.1401	235.0	.5004-04	3945.	.1750-01
99	-5.000	-9.000	5.250	1.045	102.9	1490.	366.9	.1420	234.8	.5073-04	3943.	.1750-01
102	-5.000	-9.000	5.250	1.049	102.4	1483.	364.9	.1413	233.5	.5078-04	3932.	.1750-01

RUN NUMBER	PHI DEG.	HS SPHERE TW=540
54	.0000	.1661
99	.0000	.1672
102	.0000	.1667

TEST DATA

RUN NUMBER	PHI	XB/LB	T/C NO	H/HREF R=1.0	H/HREF R=.900	H/HREF R=.850	QREF BTU/ FT2SEC	QDOT BTU/ FT2SEC	HW/HT	TW DEG. R	STN NO R=.900
54	.00000	.00000	1.0000	.9885	1.173	1.295	38.67	38.23	.3656	559.5	.3067-01
54	.00000	.50000-02	2.0000	.6196	.7355	.8114	38.69	23.97	.3653	559.1	.1922-01
54	.00000	.10000-01	3.0000	.3762	.4465	.4926	38.70	14.56	.3651	558.7	.1167-01
54	.00000	.20000-01	4.0000	.1722	.2043	.2253	38.74	6.669	.3645	557.8	.5340-02
54	.00000	.30000-01	5.0000	.9856-01	.1169	.1290	38.76	3.820	.3642	557.4	.3057-02
54	.00000	.40000-01	6.0000	.7870-01	.9338-01	.1030	38.77	3.051	.3639	557.0	.2441-02
54	.00000	.50000-01	7.0000	.5697-01	.6760-01	.7456-01	38.77	2.209	.3639	557.0	.1767-02
54	.00000	.60000-01	8.0000	.5355-01	.6354-01	.7008-01	38.77	2.076	.3640	557.1	.1661-02
54	.00000	.70000-01	9.0000	.4391-01	.5210-01	.5746-01	38.78	1.703	.3638	556.9	.1362-02
54	.00000	.80000-01	10.000	.2890-01	.3429-01	.3782-01	38.76	1.120	.3642	557.3	.8964-03
54	.00000	.90000-01	11.000	.1906-01	.2261-01	.2494-01	38.76	.7387	.3641	557.2	.5911-03
54	.00000	.10000+00	12.000	.2198-01	.2608-01	.2877-01	38.76	.8518	.3642	557.4	.6817-03
54	.00000	.12000	13.000	.2485	.2949	.3252	38.77	9.633	.3640	557.2	.7708-02
54	.00000	.13000	14.000	.3268	.3878	.4277	38.75	12.66	.3642	557.5	.1014-01
54	.00000	.14000	15.000	.1048	.1244	.1372	38.75	4.062	.3643	557.6	.3252-02
54	.00000	.15000	16.000	.6052-01	.7183-01	.7923-01	38.73	2.344	.3646	558.1	.1877-02
54	.00000	.16000	17.000	.4988-01	.5888-01	.6473-01	39.90	1.990	.3462	529.9	.1541-02

IH103 60-OT FUSELAGE

(R3PA14)

RUN NUMBER	PHI	XB/LB	T/C NO	H/HREF R=1.0	H/HREF R=.900	H/HREF R=.850	QREF BTU/ FT2SEC	QDOT BTU/ FT2SEC	HW/HT	TW DEG. R	STN NO R=.900
54	.00000	.17000	18.000	.4657-01	.5528-01	.6097-01	38.72	1.803	.3647	558.2	.1445-02
54	.00000	.18000	19.000	.3766-01	.4470-01	.4931-01	38.72	1.458	.3648	558.4	.1168-02
54	.00000	.19000	20.000	.5307-01	.6299-01	.6948-01	38.70	2.054	.3650	558.7	.1646-02
54	.00000	.20000	21.000	.8524-01	.1012	.1116	38.69	3.297	.3653	559.1	.2644-02
54	.00000	.25000	23.000	.5103-01	.6058-01	.6683-01	38.67	1.973	.3656	559.5	.1583-02
54	.00000	.30000	24.000	.5299-01	.6291-01	.6941-01	38.65	2.048	.3659	560.1	.1644-02
54	.00000	.40000	26.000	.6393-01	.7593-01	.8378-01	38.59	2.467	.3668	561.4	.1984-02
102	.00000	.45000	1027.0	.6216-01	.7378-01	.8138-01	38.62	2.401	.3648	554.8	.1913-02
102	.00000	.55000	1029.0	.5446-01	.6463-01	.7130-01	38.61	2.103	.3650	555.1	.1676-02
102	.00000	.60000	1030.0	.4729-01	.5613-01	.6192-01	38.59	1.825	.3652	555.5	.1456-02
102	.00000	.65000	1031.0	.4811-01	.5710-01	.6299-01	38.60	1.857	.3652	555.4	.1481-02
102	.00000	.70000	1032.0	.4814-01	.5714-01	.6304-01	38.59	1.858	.3653	555.5	.1482-02
102	.00000	.75000	1033.0	.1435	.1704	.1879	38.63	5.545	.3647	554.7	.4418-02
102	.00000	.80000	1034.0	.1468	.1743	.1922	38.63	5.672	.3647	554.7	.4520-02
102	.00000	.85000	1035.0	.1609	.1910	.2106	38.65	6.219	.3644	554.3	.4953-02
102	.00000	.90000	1036.0	.3368-01	.3998-01	.4410-01	38.60	1.300	.3651	555.3	.1037-02
102	.00000	.95000	1038.0	.1402-01	.1664-01	.1836-01	38.58	.5408	.3654	555.8	.4315-03
102	.00000	.97500	1039.0	.8122-02	.9638-02	.1063-01	38.65	.3139	.3643	554.1	.2500-03
54	.00000	1.0150	40.000	.4490-02	.5325-02	.5871-02	38.88	.1745	.3623	554.5	.1392-03
54	.00000	1.0300	41.000	.5243-02	.6218-02	.6856-02	38.86	.2037	.3625	554.9	.1626-03
54	.00000	1.0450	42.000	.6011-02	.7130-02	.7863-02	38.83	.2334	.3631	555.7	.1864-03
54	10.000	.10000+00	45.000	.2120-01	.2516-01	.2775-01	38.78	.8222	.3639	556.9	.6576-03
54	14.000	.50000-01	44.000	.7628-01	.9051-01	.9981-01	38.79	2.959	.3637	556.6	.2366-02
54	20.000	.10000+00	207.00	.5415-01	.6424-01	.7085-01	38.81	2.102	.3634	556.1	.1679-02
54	20.000	.15000	211.00	.1424	.1690	.1864	38.80	5.527	.3635	556.3	.4417-02
54	22.000	.50000-01	202.00	.1219	.1446	.1594	38.80	4.729	.3635	556.3	.3779-02
54	24.000	.20000	48.000	.2155-01	.2557-01	.2820-01	38.78	.8356	.3638	556.8	.6683-03
54	24.500	.10000+00	208.00	.7305-01	.8667-01	.9557-01	38.80	2.834	.3635	556.4	.2265-02
54	25.500	.15000	212.00	.3735-01	.4432-01	.4888-01	38.77	1.448	.3639	557.0	.1158-02
54	31.500	.20000	215.00	.5100-01	.6051-01	.6673-01	38.80	1.979	.3636	556.5	.1582-02
54	35.000	.50000-01	203.00	.1689	.1994	.2193	39.84	6.730	.3471	531.2	.5219-02
54	35.000	.20000	216.00	.3195-01	.3790-01	.4180-01	38.79	1.239	.3637	556.7	.9908-03
54	39.000	.10000+00	209.00	.1060	.1258	.1387	38.82	4.116	.3631	555.8	.3287-02
54	40.000	.15000	213.00	.5316-01	.6307-01	.6955-01	38.79	2.062	.3637	556.6	.1649-02
54	40.000	.20000	217.00	.1833-01	.2175-01	.2399-01	38.78	.7110	.3638	556.8	.5685-03
54	42.500	.50000-01	204.00	.1892	.2245	.2476	38.77	7.335	.3640	557.2	.5869-02
54	45.500	.15000	214.00	.1435-01	.1699-01	.1871-01	39.22	.5627	.3569	546.2	.4442-03
54	51.000	.20000	218.00	.5328-01	.6321-01	.6971-01	38.78	2.066	.3638	556.8	.1652-02
54	60.000	.50000-01	205.00	.2156	.2559	.2822	38.74	8.352	.3645	557.9	.6688-02
54	67.500	.20000	219.00	.5460-01	.6479-01	.7145-01	38.79	2.118	.3636	556.6	.1693-02
99	96.500	.20000	1220.0	.9163-01	.1087	.1198	39.13	3.586	.3617	553.2	.2821-02
54	114.00	.40000	388.00	.6115-01	.7257-01	.8004-01	38.75	2.369	.3644	557.7	.1897-02
54	114.00	.70000	394.00	.6172-01	.7325-01	.8080-01	38.72	2.390	.3647	558.2	.1915-02

IH103 60-OT FUSELAGE

(R3PA14)

RUN NUMBER	PHI	XB/LB	T/C NO	H/HREF R=1.0	H/HREF R=.900	H/HREF R=.850	QREF BTU/ FT2SEC	QDOT BTU/ FT2SEC	HW/HT	TW DEG. R	STN NO R=.900
54	157.50	.50000	225.00	.6250-02	.7416-02	.8178-02	38.79	.2424	.3637	556.6	.1938-03
54	157.50	.70000	229.00	.3423-01	.4062-01	.4480-01	38.75	1.326	.3643	557.6	.1062-02
54	157.50	.80000	231.00	.6427-03	.7607-03	.8375-03	39.32	.2527-01	.3553	543.8	.1989-04
54	180.00	.40000	182.00	.1189-01	.1411-01	.1556-01	38.76	.4608	.3641	557.2	.3687-03
54	180.00	.50000	184.00	.1944-01	.2306-01	.2543-01	38.78	.7538	.3638	556.7	.6028-03
54	180.00	.60000	186.00	.1457-01	.1728-01	.1906-01	38.79	.5650	.3637	556.7	.4518-03
54	180.00	.70000	188.00	.2421-01	.2873-01	.3168-01	38.77	.9388	.3639	557.0	.7510-03
54	180.00	.80000	190.00	.5686-01	.6748-01	.7443-01	38.73	2.202	.3647	558.2	.1764-02
54	315.00	.50000	236.00	.2905-01	.3447-01	.3801-01	38.80	1.127	.3636	556.4	.9010-03
54	315.00	.70000	240.00	.2381-01	.2826-01	.3117-01	38.73	.9223	.3646	558.0	.7386-03
54	315.00	.80000	242.00	.1451	.1723	.1901	38.67	5.612	.3656	559.5	.4503-02

IH103 60-OT FUSELAGE

FUSELAGE (R3PA15)

PARAMETRIC DATA

MACH = 5.250 ALPHA = 5.000 BETA = -9.000 ELEVON = .0000
BDFLAP = .0000 SPDBRK = .0000

TEST CONDITIONS

RUN NUMBER	ALPHA DEG.	BETA DEG.	MACH	RN/FT /FT X10 6	PT PSIA	TT DEG. R	HT BTU/ LBM	PINF PSIA	TINF DEG. R	RHO SLUGS/ FT3	VINF FT/SEC	SCALE
55	-5.000	-9.000	5.250	1.043	101.7	1481.	364.6	.1404	233.3	.5049-04	3930.	.1750-01
98	5.000	-9.000	5.250	1.057	103.4	1484.	365.2	.1426	233.7	.5120-04	3934.	.1750-01
103	5.000	-9.000	5.250	1.053	103.3	1486.	365.9	.1424	234.2	.5105-04	3938.	.1750-01

RUN NUMBER	PHI DEG.	HS SPHERE TW=540
55	.0000	.1661
98	.0000	.1675
103	.0000	.1674

TEST DATA

RUN NUMBER	PHI	XB/LB	T/C NO	H/HREF R=1.0	H/HREF R=.900	H/HREF R=.850	QREF BTU/ FT2SEC	QDOT BTU/ FT2SEC	HW/HT	TW DEG. R	STN NO R=.900
55	.00000	.00000	1.0000	.7183	.8543	.9436	38.02	27.31	.3717	564.7	.2221-01
55	.00000	.50000-02	2.0000	.4682	.5568	.6149	38.03	17.81	.3714	564.3	.1447-01
55	.00000	.10000-01	3.0000	.2926	.3480	.3843	38.05	11.14	.3711	563.9	.9046-02
55	.00000	.20000-01	4.0000	.1373	.1632	.1802	38.09	5.229	.3706	563.0	.4243-02
55	.00000	.30000-01	5.0000	.7859-01	.9342-01	.1032	38.11	2.995	.3703	562.6	.2429-02
55	.00000	.40000-01	6.0000	.6380-01	.7584-01	.8375-01	38.11	2.432	.3701	562.3	.1972-02
55	.00000	.50000-01	7.0000	.4620-01	.5492-01	.6065-01	38.11	1.761	.3702	562.4	.1428-02
55	.00000	.60000-01	8.0000	.4348-01	.5169-01	.5708-01	38.11	1.657	.3703	562.6	.1344-02
55	.00000	.70000-01	9.0000	.3594-01	.4272-01	.4717-01	38.11	1.370	.3701	562.3	.1111-02
55	.00000	.80000-01	10.000	.2241-01	.2664-01	.2942-01	38.09	.8535	.3705	563.0	.6925-03
55	.00000	.90000-01	11.000	.1584-01	.1883-01	.2079-01	38.09	.6032	.3705	562.9	.4894-03
55	.00000	.10000+00	12.000	.2563-01	.3047-01	.3364-01	38.08	.9759	.3706	563.1	.7920-03
55	.00000	.12000	13.000	.2270	.2699	.2980	38.08	8.644	.3707	563.2	.7015-02
55	.00000	.13000	14.000	.2206	.2623	.2897	38.07	8.398	.3709	563.5	.6819-02
55	.00000	.14000	15.000	.6553-01	.7792-01	.8605-01	38.06	2.494	.3710	563.6	.2025-02
55	.00000	.15000	16.000	.4524-01	.5379-01	.5941-01	38.04	1.721	.3714	564.2	.1398-02
55	.00000	.16000	17.000	.3891-01	.4594-01	.5050-01	39.60	1.541	.3465	526.5	.1196-02

IH103 60-OT FUSELAGE (R3PA15)

RUN NUMBER	PHI	XB/LB	T/C NO	H/HREF R=1.0	H/HREF R=.900	H/HREF R=.850	QREF BTU/ FT2SEC	QDOT BTU/ FT2SEC	HW/HT	TW DEG. R	STN NO R=.900
55	.00000	.17000	18.000	.3359-01	.3995-01	.4412-01	38.02	1.277	.3716	564.6	.1038-02
55	.00000	.18000	19.000	.2605-01	.3098-01	.3422-01	38.02	.9903	.3717	564.7	.8053-03
55	.00000	.19000	20.000	.2266-01	.2696-01	.2977-01	38.00	.8612	.3719	565.1	.7007-03
55	.00000	.20000	21.000	.2645-01	.3146-01	.3476-01	37.98	1.005	.3723	565.6	.8179-03
55	.00000	.25000	23.000	.4493-01	.5345-01	.5905-01	37.95	1.705	.3727	566.2	.1389-02
55	.00000	.30000	24.000	.5195-01	.6181-01	.6829-01	37.93	1.971	.3731	566.8	.1607-02
55	.00000	.40000	26.000	.4431-01	.5273-01	.5827-01	37.89	1.679	.3737	567.8	.1371-02
103	.00000	.45000	1027.0	.3833-01	.4551-01	.5022-01	38.80	1.487	.3661	558.3	.1177-02
103	.00000	.55000	1029.0	.2982-01	.3541-01	.3907-01	38.80	1.157	.3662	558.4	.9159-03
103	.00000	.60000	1030.0	.2642-01	.3138-01	.3462-01	38.78	1.025	.3666	559.0	.8116-03
103	.00000	.65000	1031.0	.1382-01	.1640-01	.1810-01	38.80	.5361	.3661	558.3	.4243-03
103	.00000	.70000	1032.0	.6004-01	.7130-01	.7867-01	38.78	2.328	.3665	559.0	.1844-02
103	.00000	.75000	1033.0	.1472	.1747	.1927	38.83	5.715	.3656	557.6	.4519-02
103	.00000	.80000	1034.0	.1629	.1933	.2133	38.83	6.324	.3657	557.7	.5002-02
103	.00000	.85000	1035.0	.2005	.2379	.2625	38.87	7.792	.3651	556.7	.6155-02
103	.00000	.90000	1036.0	.4109-01	.4878-01	.5382-01	38.83	1.596	.3657	557.6	.1262-02
103	.00000	.95000	1038.0	.1578-01	.1873-01	.2067-01	38.83	.6127	.3657	557.7	.4846-03
103	.00000	.97500	1039.0	.1091-01	.1295-01	.1428-01	38.89	.4244	.3647	556.2	.3350-03
55	.00000	1.0150	40.000	.8939-02	.1062-01	.1172-01	38.28	.3422	.3675	558.3	.2761-03
55	.00000	1.0300	41.000	.9742-02	.1157-01	.1277-01	38.28	.3729	.3676	558.5	.3009-03
55	.00000	1.0450	42.000	.1128-01	.1341-01	.1480-01	38.24	.4316	.3681	559.2	.3485-03
55	10.000	.10000+00	45.000	.1898-01	.2257-01	.2492-01	38.11	.7235	.3702	562.4	.5867-03
55	14.000	.50000-01	44.000	.6593-01	.7836-01	.8651-01	38.14	2.514	.3697	561.7	.2037-02
55	20.000	.10000+00	207.00	.4974-01	.5911-01	.6527-01	38.14	1.897	.3697	561.7	.1537-02
55	20.000	.15000	211.00	.9533-01	.1133	.1251	38.11	3.633	.3702	562.4	.2946-02
55	22.000	.50000-01	202.00	.1042	.1238	.1367	38.15	3.974	.3695	561.4	.3218-02
55	24.500	.10000+00	208.00	.7397-01	.8793-01	.9708-01	38.13	2.821	.3699	561.9	.2286-02
55	25.500	.15000	212.00	.2307-01	.2743-01	.3029-01	38.09	.8789	.3704	562.8	.7130-03
55	31.500	.20000	215.00	.1883-01	.2239-01	.2472-01	38.09	.7173	.3705	562.9	.5819-03
55	35.000	.50000-01	203.00	.1391	.1644	.1807	39.49	5.494	.3483	529.2	.4279-02
55	35.000	.20000	216.00	.2306-01	.2741-01	.3027-01	38.10	.8786	.3704	562.7	.7127-03
55	39.000	.10000+00	209.00	.8813-01	.1047	.1156	38.19	3.365	.3689	560.6	.2723-02
55	40.000	.15000	213.00	.7028-01	.8354-01	.9225-01	38.10	2.678	.3703	562.6	.2172-02
55	40.000	.20000	217.00	.3248-01	.3862-01	.4265-01	38.07	1.237	.3708	563.3	.1004-02
55	42.500	.50000-01	204.00	.1466	.1743	.1924	38.12	5.588	.3700	562.2	.4530-02
55	45.500	.15000	214.00	.1967-01	.2332-01	.2570-01	38.68	.7608	.3611	548.6	.6065-03
55	51.000	.20000	218.00	.4912-01	.5840-01	.6449-01	38.07	1.870	.3708	563.4	.1518-02
55	60.000	.50000-01	205.00	.1440	.1712	.1891	38.10	5.488	.3703	562.6	.4451-02
55	67.500	.20000	219.00	.4230-01	.5029-01	.5553-01	38.08	1.611	.3707	563.2	.1307-02
98	96.500	.20000	1220.0	.6945-01	.8231-01	.9070-01	39.13	2.718	.3600	547.9	.2126-02
55	114.00	.40000	388.00	.3893-01	.4630-01	.5113-01	38.05	1.481	.3712	564.0	.1203-02
55	114.00	.70000	394.00	.3489-01	.4149-01	.4582-01	38.05	1.328	.3711	563.8	.1078-02
55	157.50	.50000	225.00	.1033-01	.1228-01	.1356-01	38.11	.3937	.3701	562.4	.3192-03

IH103 60-OT FUSELAGE

(R3PA15)

RUN NUMBER	PHI	XB/LB	T/C NO	H/HREF R=1.0	H/HREF R=.900	H/HREF R=.850	QREF BTU/ FT2SEC	QDOT BTU/ FT2SEC	HW/HT	TW DEG. R	STN NO R=.900
55	157.50	.70000	229.00	.6292-02	.7479-02	.8259-02	38.10	.2397	.3703	562.6	.1944-03
55	157.50	.80000	231.00	.1101-02	.1305-02	.1438-02	38.83	.4276-01	.3588	545.1	.3394-04
55	180.00	.40000	182.00	.8336-02	.9911-02	.1095-01	38.07	.3173	.3709	563.4	.2576-03
55	180.00	.50000	184.00	.4191-02	.4982-02	.5502-02	38.11	.1597	.3702	562.5	.1295-03
55	180.00	.60000	186.00	.4498-02	.5347-02	.5904-02	38.11	.1714	.3702	562.4	.1390-03
55	180.00	.70000	188.00	.1860-02	.2211-02	.2442-02	38.12	.7092-01	.3701	562.3	.5749-04
55	180.00	.80000	190.00	.1399-01	.1664-01	.1837-01	38.07	.5327	.3708	563.3	.4324-03
55	315.00	.50000	236.00	.1592-01	.1892-01	.2089-01	38.11	.6067	.3702	562.4	.4919-03
55	315.00	.70000	240.00	.9005-02	.1071-01	.1182-01	38.09	.3430	.3704	562.8	.2783-03

IH103 60-OT FUSELAGE (R3PA16)

FUSELAGE

PARAMETRIC DATA

MACH = 5.250 ALPHA = 10.00 BETA = -9.000 ELEVON = .0000
BDFLAP = .0000 SPDBRK = .0000

TEST CONDITIONS

RUN NUMBER	ALPHA DEG.	BETA DEG.	MACH	RN/FT /FT X10 6	PT PSIA	TT DEG. R	HT BTU/ LBM	PINF PSIA	TINF DEG. R	RHO SLUGS/ FT3	VINF FT/SEC	SCALE
56	10.00	-9.000	5.250	1.019	101.9	1504.	370.6	.1403	237.2	.4965-04	3963.	.1750-01
97	10.00	-9.000	5.250	1.033	103.2	1504.	370.5	.1422	237.1	.5033-04	3962.	.1750-01
104	10.00	-9.000	5.250	1.049	103.3	1490.	366.9	.1424	234.8	.5090-04	3943.	.1750-01

RUN NUMBER	PHI DEG.	HS SPHERE TW=540
56	.0000	.1664
97	.0000	.1675
104	.0000	.1674

TEST DATA

RUN NUMBER	PHI	XB/LB	T/C NO	H/HREF R=1.0	H/HREF R=.900	H/HREF R=.850	QREF BTU/ FT2SEC	QDOT BTU/ FT2SEC	HW/HT	TW DEG. R	STN NO R=.900
56	.00000	.00000	1.0000	.6352	.7537	.8312	39.20	24.90	.3638	562.0	.1979-01
56	.00000	.50000-02	2.0000	.4270	.5067	.5587	39.22	16.75	.3635	561.6	.1330-01
56	.00000	.10000-01	3.0000	.2684	.3184	.3510	39.24	10.53	.3632	561.0	.8360-02
56	.00000	.20000-01	4.0000	.1284	.1523	.1679	39.29	5.044	.3624	559.8	.3999-02
56	.00000	.30000-01	5.0000	.7508-01	.8903-01	.9816-01	39.31	2.951	.3621	559.4	.2338-02
56	.00000	.40000-01	6.0000	.6258-01	.7420-01	.8180-01	39.33	2.461	.3618	558.9	.1949-02
56	.00000	.50000-01	7.0000	.4772-01	.5659-01	.6238-01	39.33	1.877	.3618	558.9	.1486-02
56	.00000	.60000-01	8.0000	.4989-01	.5916-01	.6522-01	39.32	1.962	.3619	559.0	.1554-02
56	.00000	.70000-01	9.0000	.4413-01	.5233-01	.5769-01	39.33	1.736	.3617	558.7	.1374-02
56	.00000	.80000-01	10.000	.3634-01	.4309-01	.4751-01	39.32	1.429	.3619	559.0	.1132-02
56	.00000	.90000-01	11.000	.3267-01	.3874-01	.4271-01	39.32	1.285	.3619	559.0	.1017-02
56	.00000	.10000+00	12.000	.2478-01	.2938-01	.3239-01	39.32	.9742	.3620	559.1	.7716-03
56	.00000	.12000	13.000	.2254	.2672	.2946	39.33	8.863	.3618	558.9	.7018-02
56	.00000	.13000	14.000	.1702	.2018	.2225	39.32	6.691	.3619	559.0	.5299-02
56	.00000	.14000	15.000	.5118-01	.6069-01	.6692-01	39.31	2.012	.3621	559.4	.1594-02
56	.00000	.15000	16.000	.4179-01	.4957-01	.5465-01	39.29	1.642	.3624	559.8	.1302-02
56	.00000	.16000	17.000	.3418-01	.4029-01	.4424-01	40.73	1.392	.3399	525.1	.1059-02

IH103 60-OT FUSELAGE

(R3PA16)

RUN NUMBER	PHI	XB/LB	T/C NO	H/HREF R=1.0	H/HREF R=.900	H/HREF R=.850	QREF BTU/ FT2SEC	QDOT BTU/ FT2SEC	HW/HT	TW DEG. R	STN NO R=.900
56	.00000	.17000	18.000	.2882-01	.3418-01	.3768-01	39.28	1.132	.3626	560.1	.8975-03
56	.00000	.18000	19.000	.2131-01	.2527-01	.2787-01	39.27	.8367	.3627	560.3	.6637-03
56	.00000	.19000	20.000	.1380-01	.1637-01	.1805-01	39.25	.5417	.3630	560.7	.4299-03
56	.00000	.20000	21.000	.8239-02	.9775-02	.1078-01	39.23	.3232	.3634	561.3	.2567-03
56	.00000	.25000	23.000	.2149-01	.2550-01	.2813-01	39.20	.8425	.3638	562.0	.6696-03
56	.00000	.30000	24.000	.2570-01	.3050-01	.3364-01	39.17	1.007	.3642	562.6	.8008-03
56	.00000	.40000	26.000	.2823-01	.3351-01	.3697-01	39.10	1.104	.3654	564.5	.8799-03
104	.00000	.45000	1027.0	.2515-01	.2987-01	.3296-01	38.86	.9776	.3668	560.9	.7740-03
104	.00000	.55000	1029.0	.3376-01	.4010-01	.4425-01	38.85	1.312	.3670	561.2	.1039-02
104	.00000	.60000	1030.0	.3199-01	.3799-01	.4193-01	38.84	1.243	.3671	561.4	.9944-03
104	.00000	.65000	1031.0	.3957-01	.4699-01	.5186-01	38.85	1.537	.3670	561.2	.1218-02
104	.00000	.70000	1032.0	.5610-01	.6663-01	.7353-01	38.85	2.180	.3670	561.2	.1726-02
104	.00000	.75000	1033.0	.1585	.1882	.2076	38.89	6.162	.3665	560.3	.4875-02
104	.00000	.80000	1034.0	.1689	.2006	.2213	38.89	6.570	.3664	560.2	.5197-02
104	.00000	.85000	1035.0	.1932	.2294	.2531	38.94	7.525	.3656	559.0	.5944-02
104	.00000	.90000	1036.0	.4253-01	.5049-01	.5571-01	38.91	1.655	.3661	559.7	.1308-02
104	.00000	.95000	1038.0	.1700-01	.2018-01	.2227-01	38.90	.6613	.3662	560.0	.5230-03
104	.00000	.97500	1039.0	.1614-01	.1916-01	.2114-01	38.97	.6291	.3651	558.3	.4965-03
56	.00000	1.0150	40.000	.1383-01	.1639-01	.1807-01	39.42	.5451	.3604	556.7	.4305-03
56	.00000	1.0300	41.000	.1617-01	.1916-01	.2112-01	39.42	.6373	.3604	556.7	.5033-03
56	.00000	1.0450	42.000	.2009-01	.2382-01	.2625-01	39.40	.7916	.3607	557.2	.6255-03
56	10.000	.10000+00	45.000	.3673-01	.4355-01	.4801-01	39.35	1.445	.3614	558.3	.1144-02
56	14.000	.50000-01	44.000	.6636-01	.7867-01	.8672-01	39.36	2.612	.3613	558.2	.2066-02
56	20.000	.10000+00	207.00	.6642-01	.7873-01	.8678-01	39.40	2.617	.3607	557.1	.2068-02
56	20.000	.15000	211.00	.4856-01	.5756-01	.6345-01	39.40	1.913	.3607	557.2	.1512-02
56	22.000	.50000-01	202.00	.1061	.1258	.1387	39.37	4.178	.3611	557.8	.3304-02
56	24.500	.10000+00	208.00	.8336-01	.9881-01	.1089	39.41	3.285	.3605	556.9	.2595-02
56	25.500	.15000	212.00	.4030-01	.4778-01	.5266-01	39.39	1.588	.3608	557.3	.1255-02
56	31.500	.20000	215.00	.3426-01	.4061-01	.4476-01	39.39	1.350	.3608	557.3	.1067-02
56	35.000	.50000-01	203.00	.1392	.1641	.1802	40.66	5.659	.3410	526.8	.4314-02
56	35.000	.20000	216.00	.3957-01	.4691-01	.5171-01	39.39	1.559	.3609	557.4	.1232-02
56	39.000	.10000+00	209.00	.1072	.1270	.1400	39.39	4.221	.3608	557.3	.3336-02
56	40.000	.15000	213.00	.9158-01	.1086	.1196	39.42	3.610	.3604	556.8	.2851-02
56	40.000	.20000	217.00	.4664-01	.5530-01	.6095-01	39.38	1.837	.3610	557.6	.1452-02
56	42.500	.50000-01	204.00	.1356	.1608	.1773	39.34	5.337	.3615	558.5	.4224-02
56	45.500	.15000	214.00	.2436-01	.2881-01	.3170-01	39.91	.9720	.3528	544.9	.7569-03
56	51.000	.20000	218.00	.5335-01	.6325-01	.6972-01	39.38	2.101	.3610	557.6	.1661-02
56	60.000	.50000-01	205.00	.1225	.1453	.1601	39.30	4.814	.3622	559.5	.3814-02
56	67.500	.20000	219.00	.3734-01	.4426-01	.4879-01	39.39	1.471	.3608	557.3	.1163-02
97	96.500	.20000	1220.0	.6387-01	.7554-01	.8314-01	40.15	2.564	.3528	544.7	.1971-02
56	114.00	.40000	388.00	.3286-01	.3898-01	.4298-01	39.26	1.290	.3628	560.5	.1024-02
56	114.00	.70000	394.00	.3713-01	.4404-01	.4857-01	39.25	1.457	.3630	560.7	.1157-02
56	157.50	.50000	225.00	.5928-02	.7030-02	.7750-02	39.31	.2331	.3620	559.2	.1846-03

IH103 60-OT FUSELAGE (R3PA16)

RUN NUMBER	PHI	XB/LB	T/C NO	H/HREF R=1.0	H/HREF R=.900	H/HREF R=.850	QREF BTU/ FT2SEC	QDOT BTU/ FT2SEC	HW/HT	TW DEG. R	STN NO R=.900
56	157.50	.70000	229.00	.2523-02	.2993-02	.3300-02	39.27	.9908-01	.3627	560.3	.7859-04
56	157.50	.80000	231.00	.1490-02	.1762-02	.1938-02	40.01	.5963-01	.3511	542.3	.4630-04
56	180.00	.40000	182.00	.4966-02	.5891-02	.6495-02	39.27	.1950	.3627	560.2	.1547-03
56	180.00	.50000	184.00	.1572-02	.1865-02	.2056-02	39.29	.6178-01	.3623	559.7	.4897-04
56	180.00	.60000	186.00	.2978-02	.3532-02	.3894-02	39.29	.1170	.3623	559.7	.9274-04
56	180.00	.70000	188.00	.3444-02	.4084-02	.4503-02	39.28	.1353	.3625	560.0	.1073-03
56	180.00	.80000	190.00	.1510-01	.1791-01	.1975-01	39.23	.5923	.3633	561.2	.4703-03
56	315.00	.50000	236.00	.6760-02	.8016-02	.8838-02	39.31	.2658	.3620	559.2	.2105-03

IH103 60-OT FUSELAGE

FUSELAGE (R3PA17)

PARAMETRIC DATA

MACH = 5.250 ALPHA = -10.00 BETA = -9.000 ELEVON = .0000
BDFLAP = .0000 SPDBRK = .0000

TEST CONDITIONS

RUN NUMBER	ALPHA DEG.	BETA DEG.	MACH	RN/FT /FT X10 6	PT PSIA	TT DEG. R	HT BTU/ LBM	PINF PSIA	TINF DEG. R	RHO SLUGS/ FT3	VINF FT/SEC	SCALE
108	-10.00	-9.000	5.250	1.066	103.4	1476.	363.2	.1427	232.5	.5153-04	3923.	.1750-01
109	-10.00	-9.000	5.250	1.078	103.6	1468.	361.2	.1431	231.2	.5196-04	3912.	.1750-01
110	-10.00	-9.000	5.250	1.092	103.7	1458.	358.4	.1434	229.4	.5246-04	3897.	.1750-01

RUN NUMBER	PHI DEG.	HS SPHERE TW=540
108	.0000	.1675
109	.0000	.1676
110	.0000	.1676

TEST DATA

RUN NUMBER	PHI	XB/LB	T/C NO	H/HREF R=1.0	H/HREF R=.900	H/HREF R=.850	QREF BTU/ FT2SEC	QDOT BTU/ FT2SEC	HW/HT	TW DEG. R	STN NO R=.900
108	.00000	.00000	1.0000	1.019	1.215	1.343	37.80	38.54	.3778	571.9	.3123-01
108	.00000	.50000-02	2.0000	.6346	.7560	.8360	37.82	24.00	.3774	571.4	.1944-01
108	.00000	.10000-01	3.0000	.3847	.4583	.5068	37.85	14.56	.3770	570.7	.1179-01
108	.00000	.20000-01	4.0000	.1748	.2082	.2302	37.90	6.628	.3762	569.5	.5355-02
108	.00000	.30000-01	5.0000	.1003	.1195	.1321	37.94	3.807	.3756	568.7	.3073-02
108	.00000	.40000-01	6.0000	.7998-01	.9523-01	.1053	37.94	3.034	.3756	568.6	.2449-02
108	.00000	.50000-01	7.0000	.5776-01	.6877-01	.7601-01	37.95	2.192	.3754	568.3	.1769-02
108	.00000	.60000-01	8.0000	.5352-01	.6372-01	.7044-01	37.96	2.032	.3753	568.2	.1639-02
108	.00000	.70000-01	9.0000	.4406-01	.5245-01	.5797-01	37.97	1.673	.3751	567.8	.1349-02
108	.00000	.80000-01	10.000	.3091-01	.3680-01	.4067-01	37.96	1.173	.3752	568.0	.9464-03
108	.00000	.90000-01	11.000	.2596-01	.3091-01	.3416-01	37.97	.9857	.3752	568.0	.7950-03
108	.00000	.10000+00	12.000	.1625-01	.1935-01	.2138-01	37.98	.6172	.3750	567.7	.4976-03
108	.00000	.12000	13.000	.1900	.2262	.2499	37.99	7.218	.3748	567.4	.5816-02
108	.00000	.13000	14.000	.3039	.3618	.3999	37.98	11.54	.3750	567.7	.9305-02
108	.00000	.14000	15.000	.1309	.1559	.1723	37.97	4.971	.3751	567.9	.4008-02
108	.00000	.15000	16.000	.8525-01	.1015	.1122	37.96	3.236	.3753	568.1	.2610-02
108	.00000	.16000	17.000	.6278-01	.7474-01	.8262-01	37.96	2.383	.3752	568.0	.1922-02

IH103 60-OT FUSELAGE

(R3PA17)

RUN NUMBER	PHI	XB/LB	T/C NO	H/HREF R=1.0	H/HREF R=.900	H/HREF R=.850	QREF BTU/ FT2SEC	QDOT BTU/ FT2SEC	HW/HT	TW DEG. R	STN NO R=.900
108	.00000	.17000	18.000	.4552-01	.5420-01	.5991-01	37.96	1.728	.3754	568.2	.1394-02
108	.00000	.18000	19.000	.4857-01	.5783-01	.6393-01	37.95	1.843	.3755	568.4	.1487-02
108	.00000	.19000	20.000	.7636-01	.9092-01	.1005	37.93	2.897	.3757	568.7	.2338-02
108	.00000	.20000	21.000	.9179-01	.1093	.1208	37.92	3.481	.3759	569.0	.2811-02
108	.00000	.25000	23.000	.5048-01	.6011-01	.6646-01	37.92	1.914	.3759	569.1	.1546-02
108	.00000	.30000	24.000	.7427-01	.8845-01	.9779-01	37.89	2.814	.3764	569.8	.2275-02
108	.00000	.35000	25.000	.9820-01	.1170	.1293	37.87	3.719	.3767	570.2	.3008-02
108	.00000	.40000	26.000	.7000-01	.8338-01	.9219-01	37.85	2.650	.3770	570.7	.2144-02
109	.00000	.45000	1027.0	.6788-01	.8092-01	.8952-01	37.53	2.547	.3794	571.1	.2071-02
109	.00000	.55000	1029.0	.6622-01	.7894-01	.8733-01	37.52	2.484	.3795	571.3	.2020-02
109	.00000	.60000	1030.0	.5369-01	.6401-01	.7081-01	37.50	2.013	.3798	571.7	.1638-02
109	.00000	.65000	1031.0	.5651-01	.6736-01	.7452-01	37.51	2.120	.3796	571.4	.1724-02
109	.00000	.70000	1032.0	.5847-01	.6972-01	.7713-01	37.49	2.192	.3799	571.9	.1784-02
109	.00000	.75000	1033.0	.1526	.1819	.2012	37.52	5.726	.3794	571.2	.4656-02
109	.00000	.80000	1034.0	.1598	.1905	.2108	37.53	5.998	.3793	571.0	.4877-02
109	.00000	.85000	1035.0	.1810	.2158	.2387	37.55	6.797	.3790	570.6	.5522-02
109	.00000	.90000	1036.0	.4457-01	.5314-01	.5879-01	37.51	1.672	.3797	571.6	.1360-02
109	.00000	.95000	1038.0	.1853-01	.2209-01	.2444-01	37.51	.6952	.3795	571.4	.5654-03
109	.00000	.97500	1039.0	.1248-01	.1488-01	.1646-01	37.56	.4689	.3788	570.3	.3808-03
108	.00000	1.0150	40.000	.8025-02	.9549-02	.1055-01	38.07	.3055	.3735	565.5	.2456-03
108	.00000	1.0300	41.000	.1041-01	.1240-01	.1370-01	38.00	.3956	.3747	567.3	.3188-03
108	.00000	1.0450	42.000	.1161-01	.1381-01	.1527-01	38.01	.4412	.3744	566.9	.3553-03
108	10.000	.10000+00	45.000	.2584-01	.3075-01	.3399-01	38.00	.9817	.3747	567.2	.7910-03
108	14.000	.50000-01	44.000	.7625-01	.9077-01	.1003	37.98	2.896	.3750	567.7	.2334-02
108	20.000	.10000+00	207.00	.5486-01	.6529-01	.7215-01	38.03	2.086	.3741	566.4	.1679-02
108	20.000	.15000	211.00	.1038	.1236	.1365	38.04	3.949	.3741	566.3	.3178-02
108	22.000	.50000-01	202.00	.1213	.1444	.1596	37.99	4.607	.3748	567.4	.3713-02
108	24.000	.20000	48.000	.1284	.1528	.1689	38.07	4.889	.3736	565.5	.3931-02
108	24.500	.10000+00	208.00	.7132-01	.8488-01	.9380-01	38.02	2.712	.3743	566.6	.2183-02
108	25.500	.15000	212.00	.2859-01	.3403-01	.3760-01	38.04	1.087	.3741	566.3	.8752-03
108	31.500	.20000	215.00	.5008-01	.5960-01	.6585-01	38.08	1.907	.3734	565.4	.1533-02
108	35.000	.50000-01	203.00	.1783	.2123	.2346	37.99	6.776	.3747	567.3	.5460-02
108	35.000	.20000	216.00	.2626-01	.3140-01	.3480-01	37.13	.9752	.3884	588.0	.8068-03
108	39.000	.10000+00	209.00	.1002	.1192	.1317	38.09	3.815	.3733	565.1	.3065-02
108	40.000	.15000	213.00	.5645-01	.6717-01	.7423-01	38.05	2.148	.3738	565.9	.1728-02
108	40.000	.20000	217.00	.1993-01	.2371-01	.2619-01	38.12	.7596	.3728	564.4	.6098-03
108	42.500	.50000-01	204.00	.1987	.2366	.2615	37.95	7.542	.3754	568.3	.6085-02
108	45.500	.15000	214.00	.9666-01	.1150	.1270	38.12	3.685	.3727	564.2	.2958-02
108	51.000	.20000	218.00	.7625-01	.9073-01	.1003	38.07	2.903	.3735	565.5	.2334-02
108	60.000	.50000-01	205.00	.2163	.2576	.2848	37.91	8.201	.3760	569.2	.6624-02
108	67.500	.20000	219.00	.5824-01	.6930-01	.7656-01	38.09	2.218	.3732	565.0	.1782-02
108	114.00	.40000	388.00	.9075-01	.1080	.1194	38.02	3.450	.3744	566.8	.2778-02
108	114.00	.70000	394.00	.8639-01	.1028	.1137	37.96	3.279	.3752	568.1	.2645-02

IH103 MODELS 60-OT AND 560/60T AT ARC 3.5 FT. TUNNEL

IH103 60-OT FUSELAGE

RUN NUMBER	PHI	XB/LB	T/C NO	H/HREF R=1.0	H/HREF R=.900	H/HREF R=.850	QREF BTU/ FT2SEC	QDOT BTU/ FT2SEC	HW/HT	TW DEG. R	STN NO R=.900
108	157.50	.50000	225.00	.6752-01	.8036-01	.8881-01	38.02	2.567	.3743	566.7	.2067-02
108	157.50	.70000	229.00	.6472-01	.7705-01	.8516-01	37.98	2.458	.3749	567.6	.1982-02
108	157.50	.80000	231.00	.5734-02	.6800-02	.7498-02	38.78	.2223	.3624	548.6	.1750-03
108	180.00	.40000	182.00	.2127-01	.2532-01	.2799-01	37.95	.8071	.3754	568.4	.6512-03
108	180.00	.50000	184.00	.3161-01	.3762-01	.4157-01	38.03	1.202	.3741	566.4	.9676-03
108	180.00	.60000	186.00	.6215-01	.7398-01	.8176-01	38.00	2.362	.3746	567.1	.1903-02
108	180.00	.70000	188.00	.5347-03	.6341-03	.6991-03	38.79	.2074-01	.3621	548.2	.1632-04
108	180.00	.80000	190.00	.6076-01	.7235-01	.7997-01	37.95	2.306	.3755	568.5	.1861-02
108	315.00	.50000	236.00	.6333-01	.7538-01	.8331-01	38.02	2.408	.3744	566.7	.1939-02
108	315.00	.70000	240.00	.6606-01	.7864-01	.8691-01	37.99	2.509	.3748	567.5	.2023-02
108	315.00	.80000	242.00	.7879-01	.9367-01	.1034	38.27	3.015	.3704	560.8	.2410-02

IH103 60-OT FUSELAGE (R3PA18)

FUSELAGE

PARAMETRIC DATA

MACH = 5.250 ALPHA = -10.00 BETA = -3.000 ELEVON = .0000
BDFLAP = .0000 SPDBRK = .0000

TEST CONDITIONS

RUN NUMBER	ALPHA DEG.	BETA DEG.	MACH	RN/FT /FT X10 6	PT PSIA	TT DEG. R	HT BTU/ LBM	PINF PSIA	TINF DEG. R	RHO SLUGS/ FT3	VINF FT/SEC	SCALE
111	-10.00	-3.000	5.250	1.024	103.5	1514.	373.3	.1425	238.9	.5005-04	3977.	.1750-01
112	-10.00	-3.000	5.250	1.055	103.0	1483.	365.0	.1422	233.6	.5107-04	3933.	.1750-01
113	-10.00	-3.000	5.250	1.041	103.0	1494.	367.9	.1419	235.5	.5058-04	3949.	.1750-01

RUN NUMBER	PHI DEG.	HS SPHERE TW=540
111	.0000	.1678
112	.0000	.1672
113	.0000	.1672

TEST DATA

RUN NUMBER	PHI	XB/LB	T/C NO	H/HREF R=1.0	H/HREF R=.900	H/HREF R=.850	QREF BTU/ FT2SEC	QDOT BTU/ FT2SEC	HW/HT	TW DEG. R	STN NO R=.900
113	.00000	.00000	1.0000	1.050	1.244	1.370	39.47	41.43	.3582	549.3	.3235-01
113	.00000	.50000-02	2.0000	.6375	.7550	.8317	39.51	25.19	.3576	548.4	.1964-01
113	.00000	.10000-01	3.0000	.3891	.4608	.5075	39.54	15.38	.3571	547.7	.1199-01
113	.00000	.20000-01	4.0000	.1747	.2068	.2277	39.60	6.917	.3561	546.1	.5379-02
113	.00000	.30000-01	5.0000	.1025	.1214	.1337	39.63	4.063	.3558	545.6	.3158-02
113	.00000	.40000-01	6.0000	.7891-01	.9340-01	.1028	39.64	3.128	.3555	545.1	.2430-02
113	.00000	.50000-01	7.0000	.5681-01	.6724-01	.7404-01	39.65	2.252	.3555	545.1	.1749-02
113	.00000	.60000-01	8.0000	.5158-01	.6105-01	.6723-01	39.65	2.045	.3555	545.1	.1588-02
113	.00000	.70000-01	9.0000	.4046-01	.4788-01	.5272-01	39.66	1.605	.3552	544.6	.1246-02
113	.00000	.80000-01	10.000	.2811-01	.3328-01	.3664-01	39.65	1.115	.3554	545.0	.8657-03
113	.00000	.90000-01	11.000	.2431-01	.2878-01	.3169-01	39.64	.9639	.3555	545.1	.7487-03
113	.00000	.10000+00	12.000	.1565-01	.1852-01	.2039-01	39.64	.6202	.3556	545.2	.4818-03
113	.00000	.12000	13.000	.1414	.1673	.1843	39.64	5.604	.3556	545.2	.4353-02
113	.00000	.13000	14.000	.2013	.2383	.2624	39.63	7.978	.3557	545.4	.6199-02
113	.00000	.14000	15.000	.9680-01	.1146	.1262	39.63	3.836	.3557	545.5	.2981-02
113	.00000	.15000	16.000	.5488-01	.6497-01	.7154-01	39.61	2.174	.3560	546.0	.1690-02
113	.00000	.16000	17.000	.6682-01	.7911-01	.8711-01	39.61	2.647	.3560	545.8	.2058-02

IH103 60-OT FUSELAGE (R3PA18)

RUN NUMBER	PHI	XB/LB	T/C NO	H/HREF R=1.0	H/HREF R=.900	H/HREF R=.850	QREF BTU/ FT2SEC	QDOT BTU/ FT2SEC	HW/HT	TW DEG. R	STN NO R=.900
113	.00000	.17000	18.000	.1050	.1243	.1369	39.59	4.157	.3564	546.5	.3234-02
113	.00000	.18000	19.000	.1219	.1443	.1589	39.59	4.824	.3564	546.5	.3753-02
113	.00000	.19000	20.000	.1224	.1450	.1597	39.57	4.845	.3566	546.9	.3771-02
113	.00000	.20000	21.000	.1042	.1234	.1359	39.55	4.120	.3570	547.4	.3209-02
113	.00000	.25000	23.000	.3797-01	.4497-01	.4953-01	39.53	1.501	.3572	547.8	.1170-02
113	.00000	.35000	25.000	.6584-01	.7799-01	.8591-01	39.49	2.600	.3579	548.8	.2029-02
113	.00000	.40000	26.000	.3858-01	.4570-01	.5035-01	39.46	1.522	.3584	549.5	.1189-02
112	.00000	.45000	1027.0	.4786-01	.5673-01	.6252-01	39.03	1.868	.3602	548.0	.1467-02
112	.00000	.55000	1029.0	.4329-01	.5132-01	.5656-01	39.02	1.689	.3606	548.5	.1327-02
112	.00000	.60000	1030.0	.3466-01	.4109-01	.4529-01	39.00	1.352	.3608	548.9	.1063-02
112	.00000	.65000	1031.0	.3803-01	.4507-01	.4968-01	39.02	1.484	.3604	548.3	.1166-02
112	.00000	.70000	1032.0	.3404-01	.4036-01	.4448-01	39.00	1.328	.3607	548.8	.1044-02
112	.00000	.75000	1033.0	.8055-01	.9547-01	.1052	39.03	3.144	.3603	548.1	.2470-02
112	.00000	.80000	1034.0	.8760-01	.1038	.1144	39.04	3.420	.3602	547.9	.2686-02
112	.00000	.85000	1035.0	.1031	.1222	.1346	39.08	4.030	.3595	546.9	.3161-02
112	.00000	.90000	1036.0	.2628-01	.3115-01	.3433-01	39.03	1.026	.3603	548.2	.8058-03
112	.00000	.95000	1038.0	.1613-01	.1911-01	.2107-01	39.01	.6290	.3606	548.6	.4945-03
112	.00000	.97500	1039.0	.1150-01	.1363-01	.1501-01	39.08	.4494	.3595	546.9	.3525-03
113	.00000	1.0150	40.000	.1737-01	.2055-01	.2262-01	39.72	.6899	.3543	543.3	.5347-03
113	.00000	1.0300	41.000	.2102-01	.2487-01	.2738-01	39.72	.8348	.3543	543.3	.6470-03
113	.00000	1.0450	42.000	.2160-01	.2556-01	.2814-01	39.69	.8574	.3547	544.0	.6651-03
113	10.000	.10000+00	45.000	.2556-01	.3025-01	.3330-01	39.68	1.014	.3550	544.3	.7869-03
113	14.000	.50000-01	44.000	.6897-01	.8162-01	.8986-01	39.69	2.737	.3548	544.0	.2124-02
113	20.000	.10000+00	207.00	.4630-01	.5479-01	.6032-01	39.72	1.839	.3544	543.4	.1425-02
113	20.000	.15000	211.00	.1110	.1314	.1446	39.69	4.406	.3547	543.9	.3418-02
113	22.000	.50000-01	202.00	.1315-02	.1553-02	.1708-02	40.07	.5269-01	.3488	534.8	.4043-04
113	24.000	.20000	48.000	.1055	.1248	.1374	39.69	4.185	.3548	544.1	.3247-02
113	24.500	.10000+00	208.00	.5447-01	.6445-01	.7096-01	39.72	2.164	.3543	543.3	.1677-02
113	25.500	.15000	212.00	.2594-01	.3070-01	.3380-01	39.69	1.029	.3548	544.1	.7986-03
113	31.500	.20000	215.00	.7636-01	.9037-01	.9949-01	39.69	3.031	.3547	544.0	.2351-02
113	35.000	.50000-01	203.00	.1492	.1766	.1944	39.70	5.924	.3547	543.9	.4594-02
113	35.000	.20000	216.00	.4487-01	.5310-01	.5846-01	39.69	1.781	.3548	544.1	.1382-02
113	39.000	.10000+00	209.00	.8927-01	.1057	.1163	39.68	3.542	.3549	544.3	.2749-02
113	40.000	.15000	213.00	.3128-01	.3701-01	.4075-01	39.69	1.241	.3548	544.1	.9630-03
113	40.000	.20000	217.00	.2417-01	.2861-01	.3150-01	39.67	.9590	.3550	544.4	.7443-03
113	42.500	.50000-01	204.00	.1681	.1989	.2190	39.66	6.665	.3552	544.7	.5175-02
113	45.500	.15000	214.00	.6566-01	.7769-01	.8552-01	39.74	2.610	.3539	542.7	.2021-02
113	51.000	.20000	218.00	.5145-01	.6090-01	.6705-01	39.66	2.041	.3552	544.6	.1584-02
113	60.000	.50000-01	205.00	.2122	.2512	.2767	39.59	8.402	.3563	546.3	.6536-02
113	67.500	.20000	219.00	.3992-01	.4724-01	.5201-01	39.68	1.584	.3549	544.3	.1229-02
111	96.500	.20000	1220.0	.3588-01	.4239-01	.4662-01	40.75	1.462	.3492	543.2	.1110-02
113	114.00	.40000	388.00	.6733-01	.7970-01	.8777-01	39.62	2.668	.3559	545.7	.2073-02
113	114.00	.70000	394.00	.7830-01	.9271-01	.1021	39.57	3.099	.3566	546.8	.2412-02

IH103 60-OT FUSELAGE (R3PA18)

RUN NUMBER	PHI	XB/LB	T/C NO	H/HREF R=1.0	H/HREF R=.900	H/HREF R=.850	QREF BTU/ FT2SEC	QDOT BTU/ FT2SEC	HW/HT	TW DEG. R	STN NO R=.900
113	157.50	.40000	223.00	.1374-02	.1623-02	.1785-02	40.11	.5512-01	.3483	534.1	.4225-04
113	157.50	.50000	225.00	.3420-01	.4048-01	.4457-01	39.63	1.355	.3557	545.4	.1053-02
113	157.50	.70000	229.00	.5361-01	.6347-01	.6990-01	39.59	2.122	.3564	546.5	.1651-02
113	157.50	.80000	231.00	.2039-02	.2408-02	.2649-02	40.09	.8174-01	.3485	534.4	.6268-04
113	180.00	.40000	182.00	.3023-01	.3580-01	.3943-01	39.57	1.197	.3566	546.8	.9312-03
113	180.00	.50000	184.00	.3825-01	.4528-01	.4986-01	39.62	1.515	.3559	545.7	.1178-02
113	180.00	.70000	188.00	.2146-03	.2535-03	.2787-03	40.12	.8610-02	.3481	533.8	.6598-05
113	180.00	.80000	190.00	.5512-01	.6526-01	.7187-01	39.57	2.181	.3567	546.9	.1698-02
113	315.00	.50000	236.00	.4433-01	.5247-01	.5778-01	39.64	1.757	.3556	545.2	.1365-02
113	315.00	.70000	240.00	.6078-01	.7196-01	.7925-01	39.57	2.405	.3566	546.8	.1872-02
113	315.00	.80000	242.00	.1053	.1247	.1374	39.53	4.162	.3573	547.9	.3244-02

IH103 60-OT FUSELAGE

FUSELAGE (R3PA19)

PARAMETRIC DATA

MACH = 5.250 ALPHA = -10.00 BETA = -5.000 ELEVON = .0000
BDFLAP = .0000 SPDBRK = .0000

TEST CONDITIONS

RUN NUMBER	ALPHA DEG.	BETA DEG.	MACH	RN/FT /FT X10 6	PT PSIA	TT DEG. R	HT BTU/ LBM	PINF PSIA	TINF DEG. R	RHO SLUGS/ FT3	VINF FT/SEC	SCALE
118	-10.00	-5.000	5.250	1.036	102.9	1498.	368.8	.1418	236.0	.5040-04	3953.	.1750-01
119	-10.00	-5.000	5.250	1.047	104.7	1505.	370.7	.1442	237.2	.5101-04	3963.	.1750-01
120	-10.00	-5.000	5.250	1.081	103.6	1466.	360.5	.1432	230.7	.5207-04	3909.	.1750-01

RUN NUMBER	PHI DEG.	HS SPHERE TW=540
118	.0000	.1672
119	.0000	.1687
120	.0000	.1676

TEST DATA

RUN NUMBER	PHI	XB/LB	T/C NO	H/HREF R=1.0	H/HREF R=.900	H/HREF R=.850	QREF BTU/ FT2SEC	QDOT BTU/ FT2SEC	HW/HT	TW DEG. R	STN NO R=.900
118	.00000	.00000	1.0000	1.073	1.272	1.403	39.35	42.23	.3613	555.5	.3315-01
118	.00000	.50000-02	2.0000	.6546	.7760	.8553	39.39	25.78	.3607	554.5	.2022-01
118	.00000	.10000-01	3.0000	.3999	.4740	.5224	39.42	15.77	.3602	553.7	.1235-01
118	.00000	.20000-01	4.0000	.1806	.2140	.2358	39.49	7.130	.3592	552.1	.5576-02
118	.00000	.30000-01	5.0000	.1039	.1231	.1356	39.52	4.106	.3587	551.4	.3208-02
118	.00000	.40000-01	6.0000	.8114-01	.9612-01	.1059	39.53	3.208	.3585	551.1	.2505-02
118	.00000	.50000-01	7.0000	.5707-01	.6755-01	.7437-01	39.74	2.268	.3553	546.2	.1761-02
118	.00000	.60000-01	8.0000	.5183-01	.6139-01	.6763-01	39.55	2.049	.3583	550.8	.1600-02
118	.00000	.70000-01	9.0000	.4125-01	.4886-01	.5383-01	39.56	1.632	.3580	550.3	.1273-02
118	.00000	.80000-01	10.000	.2877-01	.3408-01	.3755-01	39.56	1.138	.3580	550.4	.8883-03
118	.00000	.90000-01	11.000	.2473-01	.2929-01	.3227-01	39.55	.9781	.3582	550.6	.7634-03
118	.00000	.10000+00	12.000	.1535-01	.1818-01	.2003-01	39.55	.6071	.3582	550.6	.4739-03
118	.00000	.12000	13.000	.1624	.1924	.2120	39.56	6.426	.3580	550.4	.5015-02
118	.00000	.13000	14.000	.2526	.2993	.3297	39.55	9.992	.3582	550.7	.7800-02
118	.00000	.14000	15.000	.1107	.1312	.1445	39.54	4.379	.3584	550.9	.3419-02
118	.00000	.15000	16.000	.6305-01	.7470-01	.8230-01	39.53	2.492	.3586	551.2	.1947-02
118	.00000	.16000	17.000	.5824-01	.6900-01	.7602-01	39.52	2.301	.3588	551.5	.1798-02

IH103 60-OT FUSELAGE

(R3PA19)

RUN NUMBER	PHI	XB/LB	T/C NO	H/HREF R=1.0	H/HREF R=.900	H/HREF R=.850	QREF BTU/ FT2SEC	QDOT BTU/ FT2SEC	HW/HT	TW DEG. R	STN NO R=.900
118	.00000	.17000	18.000	.7616-01	.9023-01	.9941-01	39.51	3.009	.3588	551.6	.2352-02
118	.00000	.18000	19.000	.1067	.1264	.1392	39.51	4.215	.3588	551.5	.3294-02
118	.00000	.19000	20.000	.1202	.1425	.1570	39.49	4.748	.3591	552.0	.3713-02
118	.00000	.20000	21.000	.1110	.1315	.1449	39.47	4.381	.3594	552.5	.3427-02
118	.00000	.25000	23.000	.3994-01	.4733-01	.5216-01	39.46	1.576	.3596	552.8	.1234-02
118	.00000	.35000	25.000	.9596-01	.1137	.1254	39.41	3.782	.3604	554.0	.2964-02
118	.00000	.40000	26.000	.5661-01	.6711-01	.7397-01	39.38	2.229	.3609	554.7	.1749-02
119	.00000	.45000	1027.0	.6273-01	.7439-01	.8201-01	39.86	2.501	.3619	559.1	.1927-02
119	.00000	.55000	1029.0	.5463-01	.6479-01	.7143-01	39.84	2.176	.3622	559.6	.1679-02
119	.00000	.60000	1030.0	.4397-01	.5215-01	.5750-01	39.81	1.750	.3627	560.4	.1351-02
119	.00000	.65000	1031.0	.4951-01	.5871-01	.6473-01	39.85	1.973	.3621	559.5	.1521-02
119	.00000	.70000	1032.0	.4021-01	.4770-01	.5259-01	39.80	1.600	.3629	560.6	.1236-02
119	.00000	.75000	1033.0	.1174	.1393	.1535	39.85	4.680	.3620	559.3	.3608-02
119	.00000	.80000	1034.0	.1202	.1425	.1572	39.84	4.789	.3621	559.5	.3693-02
119	.00000	.85000	1035.0	.1296	.1536	.1694	39.88	5.167	.3617	558.7	.3981-02
119	.00000	.90000	1036.0	.2813-01	.3336-01	.3678-01	39.82	1.120	.3626	560.2	.8644-03
119	.00000	.95000	1038.0	.2834-01	.3362-01	.3707-01	39.80	1.128	.3628	560.6	.8710-03
119	.00000	.97500	1039.0	.2607-01	.3091-01	.3407-01	39.88	1.040	.3616	558.6	.8009-03
118	.00000	1.0150	40.000	.1301-01	.1540-01	.1697-01	39.57	.5146	.3579	550.2	.4015-03
118	.00000	1.0300	41.000	.1695-01	.2008-01	.2213-01	39.55	.6705	.3582	550.7	.5234-03
118	.00000	1.0450	42.000	.2247-01	.2663-01	.2934-01	39.50	.8877	.3590	551.8	.6939-03
118	10.000	.10000+00	45.000	.2569-01	.3043-01	.3352-01	39.58	1.017	.3578	550.0	.7931-03
118	14.000	.50000-01	44.000	.7244-01	.8581-01	.9453-01	39.55	2.865	.3581	550.5	.2236-02
118	20.000	.10000+00	207.00	.4744-01	.5618-01	.6188-01	39.61	1.879	.3574	549.3	.1464-02
118	20.000	.15000	211.00	.1115	.1320	.1454	39.61	4.416	.3573	549.3	.3442-02
118	22.000	.50000-01	202.00	.4691-02	.5548-02	.6106-02	39.89	.1871	.3529	542.4	.1446-03
118	24.500	.10000+00	208.00	.6101-01	.7226-01	.7959-01	39.59	2.416	.3576	549.6	.1883-02
116	25.500	.15000	212.00	.2897-01	.3430-01	.3778-01	39.61	1.147	.3572	549.1	.9941-03
118	31.500	.20000	215.00	.6169-01	.7305-01	.8046-01	39.62	2.444	.3571	548.9	.1904-02
118	35.000	.20000	216.00	.3636-01	.4306-01	.4742-01	39.61	1.440	.3572	549.1	.1122-02
118	39.000	.10000+00	209.00	.9182-01	.1087	.1198	39.61	3.637	.3572	549.1	.2834-02
118	40.000	.15000	213.00	.4146-01	.4909-01	.5408-01	39.61	1.642	.3572	549.1	.1280-02
118	40.000	.20000	217.00	.2193-01	.2597-01	.2861-01	39.60	.8686	.3574	549.3	.6770-03
118	42.500	.50000-01	204.00	.1905	.2258	.2488	39.49	7.526	.3591	552.0	.5884-02
118	45.500	.15000	214.00	.8558-01	.1013	.1116	39.66	3.395	.3565	547.9	.2641-02
118	51.000	.20000	218.00	.6574-01	.7786-01	.8577-01	39.59	2.603	.3576	549.7	.2029-02
118	60.000	.50000-01	205.00	.2222	.2633	.2902	39.47	8.770	.3595	552.7	.6863-02
118	67.500	.20000	219.00	.5075-01	.6011-01	.6621-01	39.61	2.010	.3573	549.3	.1567-02
120	96.500	.20000	1220.0	.3522-01	.4185-01	.4619-01	38.13	1.343	.3686	553.9	.1071-02
118	114.00	.40000	388.00	.7168-01	.8492-01	.9356-01	39.53	2.833	.3586	551.2	.2213-02
118	114.00	.70000	394.00	.8202-01	.9721-01	.1071	39.43	3.234	.3602	553.6	.2533-02
118	157.50	.40000	223.00	.4808-01	.5696-01	.6276-01	39.53	1.901	.3586	551.2	.1485-02
118	157.50	.50000	225.00	.3565-01	.4224-01	.4653-01	39.54	1.410	.3584	550.9	.1101-02

IH103 60-OT FUSELAGE

(R3PA19)

RUN NUMBER	PHI	XB/LB	T/C NO	H/HREF R=1.0	H/HREF R=.900	H/HREF R=.850	QREF BTU/ FT2SEC	QDOT BTU/ FT2SEC	HW/HT	TW DEG. R	STN NO R=.900
118	157.50	.70000	229.00	.6417-01	.7603-01	.8377-01	39.50	2.535	.3589	551.8	.1981-02
118	157.50	.80000	231.00	.2969-02	.3511-02	.3864-02	39.94	.1186	.3521	541.2	.9154-04
118	180.00	.40000	182.00	.2435-01	.2886-01	.3180-01	39.44	.9603	.3599	553.3	.7520-03
118	180.00	.50000	184.00	.3631-01	.4301-01	.4738-01	39.54	1.436	.3584	550.9	.1121-02
118	180.00	.70000	188.00	.4682-03	.5534-03	.6089-03	40.01	.1873-01	.3511	539.7	.1443-04
118	180.00	.80000	190.00	.5098-01	.6043-01	.6659-01	39.43	2.010	.3600	553.4	.1575-02
118	315.00	.50000	236.00	.4384-01	.5193-01	.5721-01	39.53	1.733	.3585	551.1	.1353-02
118	315.00	.80000	242.00	.9746-01	.1155	.1273	39.38	3.838	.3609	554.7	.3011-02

IH103 60-OT FUSELAGE

(R3PA20)

FUSELAGE

PARAMETRIC DATA

MACH = 5.250 ALPHA = -10.00 BETA = .0000 ELEVON = .0000
BDFLAP = .0000 SPDBRK = .0000

TEST CONDITIONS

RUN NUMBER	ALPHA DEG.	BETA DEG.	MACH	RN/FT /FT X10 6	PT PSIA	TT DEG. R	HT BTU/ LBM	PINF PSIA	TINF DEG. R	RHO SLUGS/ FT3	VINF FT/SEC	SCALE
121	-10.00	.0000	5.250	.9993	103.7	1539.	379.8	.1425	243.0	.4920-04	4011.	.1750-01
122	-10.00	.0000	5.250	1.012	103.5	1525.	376.0	.1423	240.6	.4964-04	3992.	.1750-01
123	-10.00	.0000	5.250	1.039	103.6	1501.	369.8	.1427	236.6	.5060-04	3959.	.1750-01

RUN NUMBER	PHI DEG.	HS SPHERE TW=540
121	.0000	.1681
122	.0000	.1678
123	.0000	.1677

TEST DATA

RUN NUMBER	PHI	XB/LB	T/C NO	H/HREF R=1.0	H/HREF R=.900	H/HREF R=.850	QREF BTU/ FT2SEC	QDOT BTU/ FT2SEC	HW/HT	TW DEG. R	STN NO R=.900
123	.00000	.00000	1.0000	1.086	1.288	1.421	39.49	42.89	.3628	559.2	.3351-01
123	.00000	.50000-02	2.0000	.6442	.7640	.8423	39.52	25.46	.3623	558.4	.1987-01
123	.00000	.10000-01	3.0000	.3954	.4689	.5169	39.56	15.64	.3618	557.5	.1220-01
123	.00000	.20000-01	4.0000	.1792	.2124	.2341	39.62	7.099	.3608	556.1	.5525-02
123	.00000	.30000-01	5.0000	.1057	.1253	.1381	39.65	4.190	.3604	555.5	.3259-02
123	.00000	.40000-01	6.0000	.8057-01	.9550-01	.1052	39.66	3.195	.3603	555.2	.2484-02
123	.00000	.50000-01	7.0000	.5743-01	.6806-01	.7501-01	39.68	2.279	.3599	554.6	.1771-02
123	.00000	.60000-01	8.0000	.5044-01	.5979-01	.6589-01	39.66	2.001	.3602	555.1	.1555-02
123	.00000	.70000-01	9.0000	.3892-01	.4613-01	.5084-01	39.68	1.545	.3599	554.7	.1200-02
123	.00000	.80000-01	10.000	.2779-01	.3293-01	.3629-01	39.68	1.102	.3600	554.8	.8567-03
123	.00000	.90000-01	11.000	.2368-01	.2807-01	.3093-01	39.68	.9396	.3600	554.8	.7301-03
123	.00000	.10000+00	12.000	.1486-01	.1761-01	.1941-01	39.68	.5896	.3599	554.7	.4581-03
123	.00000	.12000	13.000	.1054	.1249	.1376	39.69	4.181	.3598	554.6	.3248-02
123	.00000	.13000	14.000	.1617	.1916	.2112	39.67	6.414	.3600	554.9	.4984-02
123	.00000	.14000	15.000	.7651-01	.9068-01	.9993-01	39.67	3.035	.3600	554.9	.2359-02
123	.00000	.15000	16.000	.7613-01	.9024-01	.9945-01	39.65	3.019	.3603	555.4	.2347-02
123	.00000	.16000	17.000	.1781	.2111	.2327	39.67	7.065	.3601	555.0	.5492-02

IH103 60-OT FUSELAGE

(R3PA20)

RUN NUMBER	PHI	XB/LB	T/C NO	H/HREF R=1.0	H/HREF R=.900	H/HREF R=.850	QREF BTU/ FT2SEC	QDOT BTU/ FT2SEC	HW/HT	TW DEG. R	STN NO R=.900
123	.00000	.17000	18.000	.1878	.2227	.2454	39.65	7.447	.3604	555.5	.5792-02
123	.00000	.18000	19.000	.1665	.1974	.2175	39.64	6.600	.3605	555.6	.5134-02
123	.00000	.19000	20.000	.1484	.1759	.1939	39.63	5.881	.3607	555.9	.4576-02
123	.00000	.20000	21.000	.1235	.1464	.1614	39.61	4.892	.3610	556.4	.3809-02
123	.00000	.25000	23.000	.4433-01	.5255-01	.5793-01	39.60	1.755	.3611	556.6	.1367-02
123	.00000	.35000	25.000	.5220-01	.6190-01	.6824-01	39.56	2.065	.3618	557.5	.1610-02
123	.00000	.40000	26.000	.4170-01	.4946-01	.5453-01	39.53	1.649	.3622	558.2	.1286-02
122	.00000	.45000	1027.0	.3323-01	.3934-01	.4332-01	40.62	1.350	.3558	557.5	.1035-02
122	.00000	.55000	1029.0	.3374-01	.3994-01	.4398-01	40.61	1.370	.3559	557.8	.1051-02
122	.00000	.60000	1030.0	.2484-01	.2941-01	.3239-01	40.60	1.009	.3561	558.0	.7735-03
122	.00000	.65000	1031.0	.2967-01	.3513-01	.3868-01	40.60	1.205	.3560	557.8	.9239-03
122	.00000	.70000	1032.0	.2796-01	.3309-01	.3644-01	40.60	1.135	.3560	557.9	.8705-03
122	.00000	.75000	1033.0	.8352-01	.9887-01	.1089	40.62	3.393	.3557	557.4	.2600-02
122	.00000	.80000	1034.0	.9850-01	.1166	.1284	40.63	4.002	.3555	557.1	.3067-02
122	.00000	.85000	1035.0	.1339	.1585	.1745	40.66	5.445	.3551	556.5	.4169-02
122	.00000	.90000	1036.0	.4469-01	.5291-01	.5826-01	40.60	1.814	.3560	557.9	.1392-02
122	.00000	.95000	1038.0	.1888-01	.2236-01	.2462-01	40.57	.7660	.3565	558.6	.5880-03
122	.00000	.97500	1039.0	.2229-01	.2639-01	.2906-01	40.63	.9058	.3556	557.2	.6941-03
123	.00000	1.0150	40.000	.2347-01	.2781-01	.3063-01	39.78	.9338	.3584	552.3	.7234-03
123	.00000	1.0300	41.000	.2279-01	.2700-01	.2974-01	39.79	.9067	.3583	552.1	.7023-03
123	.00000	1.0450	42.000	.2110-01	.2500-01	.2754-01	39.76	.8390	.3587	552.8	.6504-03
123	10.000	.10000+00	45.000	.2115-01	.2507-01	.2762-01	39.67	.8390	.3600	554.9	.6520-03
123	14.000	.50000-01	44.000	.6507-01	.7711-01	.8498-01	39.68	2.582	.3599	554.6	.2006-02
123	20.000	.10000+00	207.00	.4085-01	.4840-01	.5333-01	39.73	1.623	.3592	553.6	.1259-02
123	20.000	.15000	211.00	.8053-01	.9542-01	.1051	39.74	3.200	.3591	553.4	.2482-02
123	22.000	.50000-01	202.00	.9771-01	.1158	.1276	39.69	3.878	.3597	554.4	.3012-02
123	24.000	.20000	48.000	.1322-01	.1569-01	.1730-01	39.42	.5211	.3640	561.0	.4079-03
123	24.500	.10000+00	208.00	.4786-01	.5671-01	.6249-01	39.72	1.901	.3593	553.7	.1475-02
123	25.500	.15000	212.00	.2083-01	.2469-01	.2720-01	39.72	.8276	.3593	553.7	.6422-03
123	31.500	.20000	215.00	.1222	.1448	.1595	39.75	4.857	.3588	553.0	.3766-02
123	35.000	.20000	216.00	.9092-01	.1077	.1187	39.75	3.614	.3589	553.1	.2802-02
123	39.000	.10000+00	209.00	.7897-01	.9359-01	.1031	39.68	3.134	.3599	554.6	.2434-02
123	40.000	.15000	213.00	.1942-01	.2301-01	.2536-01	39.72	.7714	.3593	553.8	.5987-03
123	40.000	.20000	217.00	.3842-01	.4552-01	.5016-01	39.74	1.527	.3590	553.3	.1184-02
123	42.500	.50000-01	204.00	.1552	.1840	.2028	39.62	6.150	.3608	556.1	.4786-02
123	45.500	.15000	214.00	.5771-01	.6836-01	.7531-01	39.80	2.297	.3581	551.9	.1778-02
123	51.000	.20000	218.00	.4003-01	.4743-01	.5226-01	39.73	1.590	.3591	553.4	.1234-02
123	60.000	.50000-01	205.00	.2168	.2571	.2834	39.57	8.580	.3616	557.2	.6686-02
123	67.500	.20000	219.00	.3064-01	.3630-01	.3999-01	39.75	1.218	.3588	552.9	.9443-03
121	96.500	.20000	1220.0	.3212-01	.3797-01	.4176-01	41.44	1.331	.3502	554.3	.1004-02
123	114.00	.40000	388.00	.3421-01	.4053-01	.4466-01	39.74	1.359	.3590	553.3	.1054-02
123	114.00	.70000	394.00	.6223-01	.7376-01	.8130-01	39.64	2.467	.3606	555.7	.1919-02
123	157.50	.50000	225.00	.5452-01	.6462-01	.7122-01	39.67	2.163	.3601	555.0	.1681-02

IH103 60-OT FUSELAGE

(R3PA20)

RUN NUMBER	PHI	XB/LB	T/C NO	H/HREF R=1.0	H/HREF R=.900	H/HREF R=.850	QREF BTU/ FT2SEC	QDOT BTU/ FT2SEC	HW/HT	TW DEG. R	STN NO R=.900
123	157.50	.70000	229.00	.5374-01	.6371-01	.7023-01	39.62	2.129	.3609	556.2	.1657-02
123	157.50	.80000	231.00	.1484-02	.1755-02	.1932-02	40.17	.5963-01	.3523	542.9	.4568-04
123	180.00	.40000	182.00	.2929-01	.3472-01	.3827-01	39.65	1.161	.3604	555.4	.9031-03
123	180.00	.50000	184.00	.7325-01	.8683-01	.9569-01	39.66	2.905	.3603	555.3	.2259-02
123	180.00	.70000	188.00	.2014-03	.2381-03	.2620-03	40.21	.8097-02	.3516	542.0	.6196-05
123	180.00	.80000	190.00	.4940-01	.5857-01	.6456-01	39.58	1.955	.3614	557.0	.1523-02
123	315.00	.50000	236.00	.3322-01	.3937-01	.4339-01	39.68	1.318	.3600	554.8	.1024-02
123	315.00	.70000	240.00	.4582-01	.5432-01	.5988-01	39.61	1.815	.3610	556.4	.1413-02
123	315.00	.80000	242.00	.1094	.1297	.1430	39.57	4.330	.3616	557.2	.3374-02

IH103 60-OT FUSELAGE (R3PA21)

FUSELAGE

PARAMETRIC DATA

MACH = 5.250 ALPHA = .0000 BETA = .0000 ELEVON = .0000
BDFLAP = .0000 SPDBRK = .0000

TEST CONDITIONS

RUN NUMBER	ALPHA DEG.	BETA DEG.	MACH	RN/FT /FT X10 6	PT PSIA	TT DEG. R	HT BTU/ LBM	PINF PSIA	TINF DEG. R	RHO SLUGS/ FT3	VINF FT/SEC	SCALE
129	.0000	.0000	5.250	.6601	103.8	1978.	498.3	.1374	318.9	.3615-04	4595.	.1750-01
130	.0000	.0000	5.250	.6533	104.0	1992.	502.2	.1374	321.4	.3588-04	4613.	.1750-01
131	.0000	.0000	5.250	.6469	103.6	1999.	504.0	.1367	322.6	.3557-04	4622.	.1750-01

RUN NUMBER	PHI DEG.	HS SPHERE TW=540
129	.0000	.1691
130	.0000	.1693
131	.0000	.1689

TEST DATA

RUN NUMBER	PHI	XB/LB	T/C NO	H/HREF R=1.0	H/HREF R=.900	H/HREF R=.850	QREF BTU/ FT2SEC	QDOT BTU/ FT2SEC	HW/HT	TW DEG. R	STN NO R=.900
129	.00000	.00000	1.0000	.8907	1.031	1.119	61.86	55.10	.2656	551.6	.3261-01
129	.00000	.50000-02	2.0000	.5623	.6509	.7065	61.90	34.81	.2652	550.7	.2059-01
129	.00000	.10000-01	3.0000	.3553	.4112	.4464	61.94	22.01	.2648	549.9	.1301-01
129	.00000	.20000-01	4.0000	.1638	.1895	.2057	62.02	10.16	.2638	547.9	.5994-02
129	.00000	.30000-01	5.0000	.9701-01	.1123	.1218	62.06	6.021	.2633	546.9	.3551-02
129	.00000	.40000-01	6.0000	.7501-01	.8679-01	.9416-01	62.09	4.657	.2631	546.4	.2745-02
129	.00000	.50000-01	7.0000	.5372-01	.6215-01	.6745-01	62.12	3.337	.2627	545.6	.1966-02
129	.00000	.60000-01	8.0000	.4722-01	.5463-01	.5928-01	62.11	2.933	.2629	545.9	.1728-02
129	.00000	.70000-01	9.0000	.3583-01	.4145-01	.4498-01	62.13	2.226	.2626	545.4	.1311-02
129	.00000	.80000-01	10.000	.2528-01	.2924-01	.3173-01	62.14	1.571	.2625	545.2	.9252-03
129	.00000	.90000-01	11.000	.1633-01	.1889-01	.2050-01	62.14	1.015	.2624	545.1	.5975-03
129	.00000	.10000+00	12.000	.2663-01	.3081-01	.3343-01	62.15	1.655	.2624	545.0	.9746-03
129	.00000	.12000	13.000	.2035	.2354	.2554	62.17	12.65	.2622	544.6	.7446-02
129	.00000	.13000	14.000	.1477	.1709	.1854	62.16	9.183	.2622	544.6	.5406-02
129	.00000	.14000	15.000	.7434-01	.8600-01	.9332-01	62.16	4.621	.2623	544.7	.2721-02
129	.00000	.15000	16.000	.6201-01	.7174-01	.7784-01	62.14	3.853	.2625	545.2	.2269-02
129	.00000	.16000	17.000	.5555-01	.6425-01	.6971-01	62.20	3.455	.2619	543.9	.2033-02

IH103 60-OT FUSELAGE (R3PA21)

RUN NUMBER	PHI	XB/LB	T/C NO	H/HREF R=1.0	H/HREF R=.900	H/HREF R=.850	QREF BTU/ FT2SEC	QDOT BTU/ FT2SEC	HW/HT	TW DEG. R	STN NO R=.900
129	.00000	.17000	18.000	.5547-01	.6418-01	.6964-01	62.13	3.446	.2626	545.5	.2030-02
129	.00000	.18000	19.000	.6724-01	.7779-01	.8441-01	62.13	4.178	.2626	545.3	.2461-02
129	.00000	.19000	20.000	.8055-01	.9319-01	.1011	62.12	5.003	.2627	545.7	.2948-02
129	.00000	.20000	21.000	.8116-01	.9390-01	.1019	62.10	5.040	.2629	546.0	.2970-02
129	.00000	.25000	23.000	.3118-01	.3607-01	.3914-01	62.11	1.936	.2628	545.9	.1141-02
129	.00000	.35000	25.000	.4557-01	.5272-01	.5722-01	62.07	2.829	.2632	546.7	.1668-02
129	.00000	.40000	26.000	.2997-01	.3468-01	.3764-01	62.04	1.860	.2636	547.5	.1097-02
130	.00000	.45000	1027.0	.2852-01	.3301-01	.3584-01	62.42	1.780	.2653	555.2	.1049-02
130	.00000	.55000	1029.0	.2213-01	.2562-01	.2781-01	62.41	1.381	.2654	555.4	.8136-03
130	.00000	.60000	1030.0	.1878-01	.2174-01	.2361-01	62.38	1.172	.2656	556.0	.6906-03
130	.00000	.65000	1031.0	.8730-02	.1010-01	.1097-01	62.43	.5450	.2651	555.0	.3210-03
130	.00000	.70000	1032.0	.1913-01	.2214-01	.2403-01	62.39	1.193	.2655	555.8	.7032-03
130	.00000	.75000	1033.0	.8003-01	.9264-01	.1006	62.44	4.998	.2649	554.5	.2942-02
130	.00000	.80000	1034.0	.9632-01	.1115	.1210	62.44	6.014	.2650	554.8	.3541-02
130	.00000	.85000	1035.0	.1084	.1255	.1362	62.50	6.777	.2644	553.3	.3986-02
130	.00000	.90000	1036.0	.4665-01	.5399-01	.5861-01	62.45	2.913	.2649	554.5	.1715-02
130	.00000	.95000	1038.0	.3142-01	.3637-01	.3948-01	62.43	1.961	.2651	555.0	.1155-02
130	.00000	.97500	1039.0	.2637-01	.3052-01	.3313-01	62.50	1.648	.2643	553.3	.9695-03
123	.00000	1.0150	40.000	.2407-01	.2784-01	.3020-01	62.28	1.499	.2610	542.0	.8808-03
129	.00000	1.0450	42.000	.2917-01	.3374-01	.3660-01	62.22	1.815	.2616	543.3	.1067-02
129	10.000	.10000+00	45.000	.1921-01	.2222-01	.2411-01	62.14	1.193	.2625	545.2	.7029-03
129	14.000	.50000-01	44.000	.5868-01	.6789-01	.7367-01	62.11	3.645	.2628	545.9	.2148-02
129	20.000	.10000+00	207.00	.2859-01	.3307-01	.3588-01	62.19	1.778	.2619	544.0	.1046-02
129	20.000	.15000	211.00	.1069	.1237	.1342	62.21	6.652	.2617	543.5	.3913-02
129	22.000	.50000-01	202.00	.6608-03	.7638-03	.8283-03	62.54	.4132-01	.2581	536.0	.2417-04
129	24.500	.10000+00	208.00	.4612-01	.5335-01	.5789-01	62.16	2.867	.2622	544.6	.1688-02
129	25.500	.15000	212.00	.3093-01	.3578-01	.3883-01	62.18	1.924	.2620	544.2	.1132-02
129	31.500	.20000	215.00	.5575-01	.6448-01	.6996-01	62.23	3.469	.2615	543.1	.2040-02
129	35.000	.20000	216.00	.3975-01	.4597-01	.4988-01	62.22	2.473	.2616	543.3	.1454-02
129	39.000	.10000+00	209.00	.6930-01	.8016-01	.8697-01	62.21	4.311	.2618	543.7	.2536-02
129	40.000	.15000	213.00	.2116-01	.2447-01	.2655-01	62.20	1.316	.2618	543.8	.7742-03
129	40.000	.20000	217.00	.2318-01	.2682-01	.2909-01	62.22	1.442	.2616	543.3	.8484-03
129	42.500	.50000-01	204.00	.1251	.1448	.1571	62.07	7.766	.2633	546.9	.4580-02
129	45.500	.15000	214.00	.4515-01	.5222-01	.5665-01	62.27	2.812	.2610	542.1	.1652-02
129	51.000	.20000	218.00	.2290-01	.2649-01	.2874-01	62.22	1.425	.2616	543.2	.8380-03
129	60.000	.50000-01	205.00	.1478	.1710	.1856	62.03	9.167	.2638	547.8	.5410-02
129	67.500	.20000	219.00	.2476-01	.2864-01	.3108-01	62.23	1.541	.2615	543.2	.9062-03
131	96.500	.20000	1220.0	.2624-01	.3031-01	.3287-01	63.31	1.661	.2564	538.5	.9679-03
129	114.00	.40000	388.00	.2947-01	.3409-01	.3699-01	62.17	1.832	.2622	544.6	.1079-02
129	114.00	.70000	394.00	.8663-02	.1002-01	.1088-01	62.12	.5381	.2628	545.7	.3171-03
129	157.50	.50000	225.00	.2134-01	.2468-01	.2678-01	62.21	1.327	.2617	543.6	.7808-03
129	157.50	.70000	229.00	.1370-01	.1585-01	.1720-01	62.15	.8514	.2624	545.0	.5013-03
129	157.50	.80000	231.00	.1450-02	.1676-02	.1817-02	62.62	.9082-01	.2571	534.1	.5304-04

IH103 60-OT FUSELAGE

(R3PA21)

RUN NUMBER	PHI	XB/LB	T/C NO	H/HREF R=1.0	H/HREF R=.900	H/HREF R=.850	QREF BTU/ FT2SEC	QDOT BTU/ FT2SEC	HW/HT	TW DEG. R	STN NO R=.900
129	180.00	.40000	182.00	.2449-01	.2833-01	.3074-01	62.12	1.521	.2627	545.7	.8963-03
129	180.00	.50000	184.00	.1224-01	.1415-01	.1535-01	62.22	.7613	.2616	543.3	.4477-03
129	180.00	.60000	186.00	.1342-01	.1552-01	.1684-01	62.21	.8347	.2618	543.6	.4910-03
129	180.00	.70000	188.00	.6874-03	.7944-03	.8614-03	62.62	.4305-01	.2572	534.1	.2514-04
129	180.00	.80000	190.00	.2897-01	.3351-01	.3637-01	62.12	1.800	.2627	545.6	.1060-02
129	315.00	.50000	236.00	.4698-02	.5434-02	.5896-02	62.20	.2922	.2618	543.8	.1719-03
129	315.00	.70000	240.00	.7869-02	.9104-02	.9879-02	62.13	.4889	.2626	545.4	.2880-03
129	315.00	.80000	242.00	.2718-01	.3145-01	.3414-01	62.06	1.687	.2634	547.0	.9950-03

IH103 60-OT FUSELAGE (R3PB01)

FUSELAGE

PARAMETRIC DATA

MACH = 5.250 ALPHA = .0000 BETA = .0000 ELEVON = .0000
BDFLAP = .0000 SPDBRK = .0000

TEST CONDITIONS

RUN NUMBER	ALPHA DEG.	BETA DEG.	MACH	RN/FT /FT X10 6	PT PSIA	TT DEG. R	HT BTU/ LBM	PINF PSIA	TINF DEG. R	RHO SLUGS/ FT3	VINF FT/SEC	SCALE
60	.0000	.0000	5.250	1.059	102.9	1478.	363.8	.1420	232.8	.5119-04	3926.	.1750-01
84	.0000	.0000	5.250	1.008	102.8	1523.	375.5	.1415	240.3	.4941-04	3989.	.1750-01

RUN NUMBER	PHI DEG.	HS SPHERE TW=540
60	.0000	.1671
84	.0000	.1673

TEST DATA

RUN NUMBER	YO	XB/LB	T/C NO	H/HREF R=1.0	H/HREF R=.900	H/HREF R=.850	QREF BTU/ FT2SEC	QDOT BTU/ FT2SEC	HW/HT	TW DEG. R	STN NO R=.900
84	46.800	.50000	1050.0	.2499-01	.2952-01	.3247-01	40.92	1.023	.3485	545.4	.7786-03
84	46.800	.60000	1051.0	.1332-01	.1574-01	.1730-01	40.93	.5452	.3483	545.1	.4150-03
84	46.800	.70000	1052.0	.2492-01	.2944-01	.3237-01	40.91	1.019	.3486	545.5	.7764-03
84	46.800	.80000	1053.0	.9839-01	.1162	.1278	40.93	4.027	.3483	545.1	.3065-02
84	46.800	.90000	1054.0	.4342-01	.5129-01	.5640-01	40.92	1.777	.3485	545.4	.1353-02
84	46.800	.97500	1056.0	.2545-01	.3006-01	.3305-01	40.98	1.043	.3476	544.0	.7927-03
60	46.800	1.0300	58.000	.2692-01	.3195-01	.3524-01	38.57	1.038	.3650	553.4	.8250-03
60	46.800	1.0450	59.000	.3075-01	.3651-01	.4027-01	38.55	1.185	.3654	554.0	.9427-03
60	46.800	1.0600	60.000	.5211-01	.6187-01	.6825-01	38.52	2.007	.3658	554.6	.1598-02
84	93.600	.50000	1062.0	.2706-01	.3196-01	.3515-01	40.94	1.108	.3481	544.8	.8430-03
84	93.600	.60000	1063.0	.2753-01	.3252-01	.3576-01	40.93	1.127	.3483	545.1	.8577-03
84	93.600	.70000	1064.0	.2424-01	.2864-01	.3149-01	40.92	.9921	.3484	545.2	.7553-03
84	93.600	.80000	1065.0	.1068	.1262	.1388	40.92	4.372	.3484	545.2	.3328-02
84	93.600	.90000	1066.0	.2447-01	.2890-01	.3178-01	40.93	1.001	.3483	545.2	.7623-03
84	93.600	.95000	1067.0	.6976-03	.8227-03	.9038-03	41.32	.2882-01	.3424	535.8	.2171-04
84	93.600	.97500	1068.0	.4364-01	.5155-01	.5669-01	40.93	1.786	.3483	545.2	.1360-02
60	93.600	1.0150	69.000	.2762-01	.3278-01	.3616-01	38.57	1.065	.3651	553.5	.8466-03
60	93.600	1.0600	72.000	.4460-01	.5297-01	.5846-01	38.42	1.713	.3674	557.0	.1368-02

IH103 60-OT FUSELAGE

(R3PB02)

FUSELAGE

PARAMETRIC DATA

MACH = 5.250 ALPHA = -5.000 BETA = .0000 ELEVON = .0000
BDFLAP = .0000 SPDBRK = .0000

TEST CONDITIONS

RUN NUMBER	ALPHA DEG.	BETA DEG.	MACH	RN/FT /FT X10 6	PT PSIA	TT DEG. R	HT BTU/ LBM	PINF PSIA	TINF DEG. R	RHO SLUGS/ FT3	VINF FT/SEC	SCALE
59	-5.000	.0000	5.250	1.045	101.3	1476.	363.2	.1398	232.4	.5048-04	3923.	.1750-01
83	-5.000	.0000	5.250	1.048	103.8	1496.	368.3	.1430	235.7	.5092-04	3951.	.1750-01

RUN NUMBER	PHI DEG.	HS SPHERE TW=540
59	.0000	.1658
83	.0000	.1679

TEST DATA

RUN NUMBER	YO	XB/LB	T/C NO	H/HREF R=1.0	H/HREF R=.900	H/HREF R=.850	QREF BTU/ FT2SEC	QDOT BTU/ FT2SEC	HW/HT	TW DEG. R	STN NO R=.900
83	46.800	.50000	1050.0	.2749-01	.3255-01	.3584-01	39.76	1.093	.3567	547.6	.9439-03
83	46.800	.60000	1051.0	.1622-01	.1921-01	.2116-01	39.77	.6453	.3566	547.4	.4981-03
83	46.800	.70000	1052.0	.1594-01	.1887-01	.2078-01	39.76	.6338	.3567	547.5	.4893-03
83	46.800	.80000	1053.0	.9461-01	.1120	.1234	39.78	3.763	.3565	547.2	.2904-02
83	46.800	.90000	1054.0	.1857-01	.2199-01	.2421-01	39.78	.7386	.3565	547.2	.5701-03
83	46.800	.97500	1056.0	.2054-01	.2431-01	.2677-01	39.84	.8181	.3555	545.7	.6303-03
59	46.800	1.0300	58.000	.2191-01	.2598-01	.2864-01	38.41	.8416	.3617	547.5	.6756-03
59	46.800	1.0450	59.000	.1983-01	.2351-01	.2592-01	38.40	.7614	.3620	547.9	.6115-03
59	46.800	1.0600	60.000	.3663-01	.4344-01	.4790-01	38.36	1.405	.3627	549.0	.1130-02
83	93.600	.50000	1062.0	.2883-01	.3413-01	.3759-01	39.78	1.147	.3564	547.0	.8849-03
83	93.600	.60000	1063.0	.2585-01	.3061-01	.3371-01	39.77	1.028	.3566	547.4	.7936-03
83	93.600	.70000	1064.0	.1730-01	.2049-01	.2256-01	39.78	.6885	.3564	547.0	.5312-03
83	93.600	.80000	1065.0	.1080	.1278	.1408	39.77	4.294	.3565	547.3	.3314-02
83	93.600	.90000	1066.0	.2005-01	.2374-01	.2614-01	39.78	.7976	.3565	547.2	.6155-03
83	93.600	.95000	1067.0	.1606-03	.1897-03	.2087-03	40.23	.6458-02	.3495	536.5	.4921-05
83	93.600	.97500	1068.0	.2705-01	.3202-01	.3527-01	39.78	1.076	.3564	547.1	.8303-03
59	93.600	1.0150	69.000	.1860-01	.2206-01	.2431-01	38.44	.7150	.3613	547.0	.5736-03
59	93.600	1.0600	72.000	.4393-01	.5213-01	.5749-01	38.25	1.680	.3643	551.5	.1355-02

IH103 60-OT FUSELAGE (R3PB03)

FUSELAGE

PARAMETRIC DATA

MACH = 5.250 ALPHA = 5.000 BETA = .0000 ELEVON = .0000
BDFLAP = .0000 SPDBRK = .0000

TEST CONDITIONS

RUN NUMBER	ALPHA DEG.	BETA DEG.	MACH	RN/FT /FT X10 6	PT PSIA	TT DEG. R	HT BTU/ LBM	PINF PSIA	TINF DEG. R	RHO SLUGS/ FT3	VINF FT/SEC	SCALE
58	5.000	.0000	5.250	1.018	101.8	1504.	370.5	.1402	237.1	.4962-04	3962.	.1750-01
82	5.000	.0000	5.250	1.000	101.7	1521.	374.9	.1400	239.9	.4897-04	3986.	.1750-01

RUN NUMBER	PHI DEG.	HS SPHERE TW=540
58	.0000	.1663
82	.0000	.1664

TEST DATA

RUN NUMBER	YO	XB/LB	T/C NO	H/HREF R=1.0	H/HREF R=.900	H/HREF R=.850	QREF BTU/ FT2SEC	QDOT BTU/ FT2SEC	HW/HT	TW DEG. R	STN NO R=.900
82	46.800	.50000	1050.0	.2565-01	.3032-01	.3336-01	40.48	1.038	.3507	547.9	.8030-03
82	46.800	.60000	1051.0	.1361-03	.1605-03	.1734-03	40.89	.5564-02	.3444	538.0	.4254-05
82	46.800	.70000	1052.0	.2618-01	.3094-01	.3404-01	40.48	1.060	.3507	548.0	.8196-03
82	46.800	.80000	1053.0	.1248	.1475	.1622	40.49	5.051	.3506	547.7	.3906-02
82	46.800	.90000	1054.0	.3453-01	.4082-01	.4490-01	40.49	1.398	.3506	547.7	.1081-02
82	46.800	.97500	1056.0	.2387-01	.2820-01	.3102-01	40.55	.9679	.3496	546.2	.7471-03
58	46.800	1.0300	58.000	.2402-01	.2840-01	.3126-01	39.89	.9579	.3524	544.2	.7465-03
58	46.800	1.0450	59.000	.2734-01	.3233-01	.3558-01	39.88	1.090	.3525	544.3	.8499-03
58	46.800	1.0600	60.000	.4189-01	.4955-01	.5453-01	39.86	1.670	.3529	544.8	.1302-02
82	93.600	.50000	1062.0	.3167-01	.3743-01	.4117-01	40.50	1.283	.3503	547.3	.9913-03
82	93.600	.60000	1063.0	.3105-01	.3670-01	.4037-01	40.49	1.257	.3505	547.6	.9720-03
82	93.600	.70000	1064.0	.2486-01	.2937-01	.3229-01	40.67	1.011	.3477	543.3	.7779-03
82	93.600	.80000	1065.0	.1385	.1637	.1801	40.48	5.606	.3507	547.8	.4336-02
82	93.600	.90000	1066.0	.3492-01	.4127-01	.4540-01	40.50	1.414	.3504	547.5	.1093-02
82	93.600	.95000	1067.0	.4492-03	.5300-03	.5824-03	40.90	.1837-01	.3443	537.9	.1404-04
82	93.600	.97500	1068.0	.3822-01	.4517-01	.4969-01	40.50	1.548	.3504	547.4	.1196-02
58	93.600	1.0150	69.000	.1569-01	.1855-01	.2042-01	39.88	.6255	.3525	544.3	.4876-03

IH103 60-OT FUSELAGE (R3PB04)

FUSELAGE

PARAMETRIC DATA

MACH = 5.250 ALPHA = 10.00 BETA = .0000 ELEVON = .0000
BDFLAP = .0000 SPDBRK = .0000

TEST CONDITIONS

RUN NUMBER	ALPHA DEG.	BETA DEG.	MACH	RN/FT /FT X10 6	PT PSIA	TT DEG. R	HT BTU/ LBM	PINF PSIA	TINF DEG. R	RHO SLUGS/ FT3	VINF FT/SEC	SCALE
57	10.00	.0000	5.250	1.013	101.8	1509.	371.9	.1402	238.0	.4942-04	3970.	.1750-01
81	10.00	-5.000	5.250	1.029	101.8	1494.	368.0	.1404	235.5	.5001-04	3949.	.1750-01

RUN NUMBER	PHI DEG.	HS SPHERE TW=540
57	.0000	.1663
81	.0000	.1663

TEST DATA

RUN NUMBER	YO	XB/LB	T/C NO	H/HREF R=1.0	H/HREF R=.900	H/HREF R=.850	QREF BTU/ FT2SEC	QDOT BTU/ FT2SEC	HW/HT	TW DEG. R	STN NO R=.900
81	46.800	.50000	1050.0	.3794-01	.4493-01	.4949-01	39.31	1.491	.3573	548.1	.1175-02
81	46.800	.60000	1051.0	.2367-03	.2797-03	.3076-03	39.82	.9424-02	.3494	535.9	.7320-05
81	46.800	.70000	1052.0	.5354-01	.6341-01	.6984-01	39.32	2.105	.3572	547.8	.1659-02
81	46.800	.80000	1053.0	.7943-01	.9405-01	.1036	39.34	3.124	.3570	547.5	.2460-02
81	46.800	.90000	1054.0	.4008-01	.4746-01	.5227-01	39.36	1.578	.3566	546.9	.1242-02
81	46.800	.97500	1056.0	.2241-01	.2653-01	.2921-01	39.43	.8838	.3555	545.2	.6941-03
57	46.800	1.0300	59.000	.2394-01	.2826-01	.3106-01	40.45	.9684	.3462	536.5	.7448-03
57	46.800	1.0450	59.000	.2639-01	.3115-01	.3424-01	40.46	1.068	.3461	536.4	.8209-03
57	46.800	1.0600	60.000	.3808-01	.4497-01	.4943-01	40.42	1.539	.3467	537.3	.1185-02
81	93.600	.50000	1062.0	.2552-01	.3022-01	.3328-01	39.33	1.004	.3570	547.6	.7905-03
81	93.600	.60000	1063.0	.3578-01	.4237-01	.4667-01	39.33	1.407	.3570	547.6	.1108-02
81	93.600	.70000	1064.0	.4335-01	.5131-01	.5651-01	39.40	1.708	.3560	546.0	.1343-02
81	93.600	.80000	1065.0	.1782	.2110	.2324	39.34	7.009	.3569	547.5	.5519-02
81	93.600	.90000	1066.0	.4083-01	.4834-01	.5324-01	39.37	1.607	.3565	546.8	.1265-02
81	93.600	.95000	1067.0	.9360-03	.1106-02	.1216-02	39.82	.3727-01	.3495	536.0	.2895-04
81	93.600	.97500	1068.0	.4331-01	.5128-01	.5647-01	39.37	1.705	.3564	546.6	.1342-02
57	93.600	1.0150	69.000	.1717-01	.2027-01	.2228-01	40.47	.6947	.3460	536.3	.5341-03
57	93.600	1.0600	72.000	.4084-01	.4823-01	.5303-01	40.36	1.648	.3476	538.8	.1271-02

IH103 60-OT FUSELAGE (R3PB05)

FUSELAGE

PARAMETRIC DATA

MACH = 5.250 ALPHA = .0000 BETA = -5.000 ELEVON = .0000
BDFLAP = .0000 SPDBRK = .0000

TEST CONDITIONS

RUN NUMBER	ALPHA DEG.	BETA DEG.	MACH	RN/FT /FT X10 6	PT PSIA	TT DEG. R	HT BTU/ LBM	PINF PSIA	TINF DEG. R	RHO SLUGS/ FT3	VINF FT/SEC	SCALE
69	.0000	-5.000	5.250	1.031	103.0	1504.	370.5	.1419	237.1	.5023-04	3962.	.1750-01
77	.0000	-5.000	5.250	1.043	103.3	1496.	368.4	.1425	235.8	.5070-04	3951.	.1750-01

RUN NUMBER	PHI DEG.	HS SPHERE TW=540
69	.0000	.1673
77	.0000	.1675

TEST DATA

RUN NUMBER	YO	XB/LB	T/C NO	H/HREF R=1.0	H/HREF R=.900	H/HREF R=.850	QREF BTU/ FT2SEC	QDOT BTU/ FT2SEC	HW/HT	TW DEG. R	STN NO R=.900
77	46.800	.50000	1050.0	.4293-01	.5090-01	.5610-01	39.42	1.693	.3610	554.3	.1322-02
77	46.800	.60000	1051.0	.3203-01	.3798-01	.4186-01	39.44	1.263	.3608	554.0	.9866-03
77	46.800	.70000	1052.0	.3905-01	.4630-01	.5103-01	39.44	1.540	.3607	553.9	.1203-02
77	46.800	.80000	1053.0	.1434	.1700	.1873	39.45	5.656	.3606	553.7	.4416-02
77	46.800	.90000	1054.0	.4734-01	.5611-01	.6185-01	39.44	1.867	.3607	553.9	.1458-02
77	46.800	.97500	1056.0	.1928-01	.2285-01	.2518-01	39.49	.7614	.3599	552.7	.5937-03
69	46.800	1.0300	58.000	.3789-01	.4490-01	.4947-01	39.68	1.503	.3594	555.0	.1172-02
69	46.800	1.0450	59.000	.3660-01	.4338-01	.4780-01	39.66	1.451	.3598	555.5	.1133-02
69	46.800	1.0600	60.000	.3972-01	.4708-01	.5189-01	39.62	1.574	.3603	556.4	.1229-02
77	93.600	.50000	1062.0	.1074-02	.1270-02	.1397-02	40.00	.4295-01	.3520	540.5	.3301-04
77	93.600	.60000	1063.0	.3450-01	.4090-01	.4508-01	39.43	1.361	.3608	554.1	.1063-02
77	93.600	.70000	1064.0	.3707-01	.4395-01	.4844-01	39.44	1.462	.3607	553.8	.1142-02
77	93.600	.80000	1065.0	.1709	.2026	.2233	39.45	6.743	.3606	553.7	.5264-02
77	93.600	.90000	1066.0	.5241-01	.6213-01	.6849-01	39.42	2.066	.3610	554.3	.1614-02
77	93.600	.95000	1067.0	.3914-01	.4641-01	.5116-01	39.38	1.541	.3617	555.3	.1206-02
77	93.600	.97500	1068.0	.2590-01	.3071-01	.3385-01	39.40	1.021	.3613	554.8	.7978-03
69	93.600	1.0150	69.000	.2017-01	.2391-01	.2635-01	39.65	.7999	.3599	555.7	.6243-03
69	93.600	1.0600	72.000	.2340-01	.2774-01	.3058-01	39.55	.9253	.3615	558.2	.7244-03

IH103 60-OT FUSELAGE (R3PB06)

FUSELAGE

PARAMETRIC DATA

MACH = 5.250 ALPHA = -5.000 BETA = -5.000 ELEVON = .0000
BDFLAP = .0000 SPDBRK = .0000

TEST CONDITIONS

RUN NUMBER	ALPHA DEG.	BETA DEG.	MACH	RN/FT /FT X10 6	PT PSIA	TT DEG. R	HT BTU/ LBM	PINF PSIA	TINF DEG. R	RHO SLUGS/ FT3	VINF FT/SEC	SCALE
70	.0000	-5.000	5.250	1.044	103.5	1497.	368.6	.1426	235.9	.5074-04	3952.	.1750-01
78	-5.000	-5.000	5.250	.9991	96.86	1476.	363.2	.1337	232.4	.4828-04	3923.	.1750-01

RUN NUMBER	PHI DEG.	HS SPHERE TW=540
70	.0000	.1677
78	.0000	.1621

TEST DATA

RUN NUMBER	YO	XB/LB	T/C NO	H/HREF R=1.0	H/HREF R=.900	H/HREF R=.850	QREF BTU/ FT2SEC	QDOT BTU/ FT2SEC	HW/HT	TW DEG. R	STN NO R=.900
78	46.800	.50000	1050.0	.4911-01	.5836-01	.6442-01	37.14	1.824	.3686	557.9	.1551-02
78	46.800	.60000	1051.0	.3586-01	.4261-01	.4704-01	37.14	1.332	.3686	557.9	.1133-02
78	46.800	.70000	1052.0	.4192-01	.4982-01	.5499-01	37.12	1.556	.3689	558.3	.1324-02
78	46.800	.80000	1053.0	.1398	.1661	.1833	37.12	5.189	.3689	558.3	.4415-02
78	46.800	.90000	1054.0	.4370-01	.5193-01	.5733-01	37.12	1.622	.3689	558.3	.1380-02
78	46.800	.97500	1056.0	.1239-01	.1472-01	.1625-01	37.20	.4609	.3677	556.5	.3913-03
70	46.800	1.0300	58.000	.2809-01	.3333-01	.3676-01	39.28	1.104	.3639	559.0	.8654-03
70	46.800	1.0450	59.000	.3113-01	.3694-01	.4074-01	39.25	1.222	.3644	559.8	.9590-03
70	46.800	1.0600	60.000	.3446-01	.4090-01	.4511-01	39.21	1.351	.3650	560.8	.1062-02
78	93.600	.60000	1063.0	.4542-01	.5397-01	.5958-01	37.14	1.687	.3687	558.0	.1435-02
78	93.600	.70000	1064.0	.3575-01	.4248-01	.4689-01	37.14	1.328	.3687	558.0	.1129-02
78	93.600	.80000	1065.0	.1696	.2015	.2224	37.11	6.293	.3690	558.5	.5356-02
78	93.600	.90000	1066.0	.4869-01	.5786-01	.6387-01	37.11	1.807	.3690	558.5	.1538-02
78	93.600	.95000	1067.0	.3075-01	.3655-01	.4036-01	37.07	1.140	.3698	559.7	.9715-03
78	93.600	.97500	1068.0	.2099-01	.2494-01	.2753-01	37.12	.7791	.3689	558.4	.6629-03
70	93.600	1.0150	69.000	.1072-01	.1272-01	.1403-01	39.25	.4206	.3644	559.8	.3302-03
70	93.600	1.0600	72.000	.2160-01	.2564-01	.2828-01	39.23	.8474	.3648	560.4	.6656-03

IH103 60-OT FUSELAGE (R3PB07)

FUSELAGE

PARAMETRIC DATA

MACH = 5.250 ALPHA = 5.000 BETA = -5.000 ELEVON = .0000
BDFLAP = .0000 SPDBRK = .0000

TEST CONDITIONS

RUN NUMBER	ALPHA DEG.	BETA DEG.	MACH	RN/FT /FT X10 6	PT PSIA	TT DEG. R	HT BTU/ LBM	PINF PSIA	TINF DEG. R	RHO SLUGS/ FT3	VINF FT/SEC	SCALE
71	5.000	-5.000	5.250	.9992	103.8	1540.	380.0	.1426	243.2	.4920-04	4013.	.1750-01
79	5.000	-5.000	5.250	1.004	99.07	1492.	367.3	.1366	235.1	.4877-04	3945.	.1750-01

RUN NUMBER	PHI DEG.	HS SPHERE TW=540
71	.0000	.1681
79	.0000	.1640

TEST DATA

RUN NUMBER	YO	XB/LB	T/C NO	H/HREF R=1.0	H/HREF R=.900	H/HREF R=.850	QREF BTU/ FT2SEC	QDOT BTU/ FT2SEC	HW/HT	TW DEG. R	STN NO R=.900
79	46.800	.50000	1050.0	.3722-01	.4403-01	.4846-01	38.96	1.450	.3532	540.7	.1167-02
79	46.800	.60000	1051.0	.2837-03	.3350-03	.3683-03	39.34	.1116-01	.3473	531.6	.8880-05
79	46.800	.70000	1052.0	.4937-01	.5840-01	.6428-01	38.96	1.924	.3532	540.7	.1547-02
79	46.800	.80000	1053.0	.1821	.2154	.2371	38.96	7.097	.3532	540.7	.5708-02
79	46.800	.90000	1054.0	.6377-01	.7544-01	.8304-01	38.94	2.483	.3536	541.3	.1999-02
79	46.800	.97500	1056.0	.1376-01	.1628-01	.1791-01	38.99	.5365	.3528	540.1	.4312-03
71	46.800	1.0300	58.000	.2326-01	.2741-01	.3010-01	42.12	.9796	.3406	539.3	.7255-03
71	46.800	1.0450	59.000	.3118-01	.3676-01	.4037-01	42.11	1.313	.3408	539.7	.9728-03
71	46.800	1.0600	60.000	.4065-01	.4793-01	.5264-01	42.06	1.710	.3416	540.9	.1268-02
79	93.600	.50000	1062.0	.1889-01	.2234-01	.2459-01	38.98	.7364	.3529	540.3	.5921-03
79	93.600	.60000	1063.0	.2229-01	.2637-01	.2902-01	38.98	.8689	.3530	540.3	.6986-03
79	93.600	.70000	1064.0	.3249-01	.3843-01	.4229-01	38.97	1.266	.3530	540.4	.1018-02
79	93.600	.80000	1065.0	.2713	.3210	.3533	38.95	10.57	.3534	541.0	.8504-02
79	93.600	.90000	1066.0	.8084-01	.9563-01	.1053	38.94	3.148	.3536	541.2	.2534-02
79	93.600	.95000	1067.0	.2405-03	.2840-03	.3123-03	39.34	.9460-02	.3473	531.6	.7528-05
79	93.600	.97500	1068.0	.3113-01	.3683-01	.4055-01	38.92	1.212	.3540	541.9	.9759-03
71	93.600	1.0150	69.000	.8866-02	.1045-01	.1148-01	42.14	.3736	.3404	539.0	.2766-03
71	93.600	1.0600	72.000	.1625-01	.1916-01	.2104-01	42.06	.6833	.3415	540.9	.5069-03

IH103 60-OT FUSELAGE (R3PB08)

FUSELAGE

PARAMETRIC DATA

MACH = 5.250 ALPHA = 10.00 BETA = -5.000 ELEVON = .0000
BDFLAP = .0000 SPDBRK = .0000

TEST CONDITIONS

RUN NUMBER	ALPHA DEG.	BETA DEG.	MACH	RN/FT /FT X10 6	PT PSIA	TT DEG. R	HT BTU/ LBM	PINF PSIA	TINF DEG. R	RHO SLUGS/ FT3	VINF FT/SEC	SCALE
72	5.000	-5.000	5.250	1.044	103.8	1499.	369.3	.1431	236.3	.5082-04	3956.	.1750-01
80	10.00	-5.000	5.250	1.024	102.2	1503.	370.2	.1408	236.9	.4989-04	3961.	.1750-01

RUN NUMBER	PHI DEG.	HS SPHERE TW=540
72	.0000	.1680
80	.0000	.1667

TEST DATA

RUN NUMBER	YO	XB/LB	T/C NO	H/HREF R=1.0	H/HREF R=.900	H/HREF R=.850	QREF BTU/ FT2SEC	QDOT BTU/ FT2SEC	HW/HT	TW DEG. R	STN NO R=.900
80	46.800	.50000	1050.0	.2902-01	.3433-01	.3779-01	39.87	1.157	.3537	545.7	.8998-03
80	46.800	.60000	1051.0	.2550-03	.3011-03	.3310-03	40.34	.1029-01	.3464	534.5	.7896-05
80	46.800	.70000	1052.0	.4961-01	.5869-01	.6460-01	39.87	1.978	.3537	545.7	.1538-02
80	46.800	.80000	1053.0	.1737	.2055	.2262	39.87	6.925	.3537	545.7	.5385-02
80	46.800	.90000	1054.0	.5121-01	.6058-01	.6669-01	39.88	2.042	.3536	545.5	.1588-02
80	46.800	.97500	1056.0	.1848-01	.2186-01	.2406-01	39.93	.7379	.3528	544.4	.5730-03
72	46.800	1.0300	58.000	.2539-01	.3001-01	.3302-01	40.29	1.023	.3504	539.3	.7794-03
72	46.800	1.0450	59.000	.2629-01	.3107-01	.3418-01	40.28	1.059	.3506	539.6	.8069-03
72	46.800	1.0600	60.000	.3075-01	.3635-01	.4000-01	40.25	1.238	.3511	540.3	.9440-03
80	93.600	.50000	1062.0	.2862-01	.3386-01	.3727-01	39.89	1.142	.3534	545.3	.8874-03
80	93.600	.60000	1063.0	.2445-01	.2892-01	.3184-01	39.88	.9751	.3535	545.4	.7582-03
80	93.600	.70000	1064.0	.3623-01	.4285-01	.4716-01	39.91	1.446	.3530	544.7	.1123-02
80	93.600	.80000	1065.0	.2592	.3067	.3375	39.88	10.34	.3536	545.6	.8038-02
80	93.600	.90000	1066.0	.8265-01	.9778-01	.1076	39.88	3.296	.3535	545.5	.2563-02
80	93.600	.97500	1068.0	.4517-01	.5344-01	.5883-01	39.86	1.801	.3538	545.9	.1401-02
72	93.600	1.0150	69.000	.1625-01	.1921-01	.2113-01	40.28	.6545	.3506	539.6	.4988-03
72	93.600	1.0600	72.000	.1244-01	.1471-01	.1618-01	40.23	.5003	.3514	540.9	.3819-03

IH103 60-OT FUSELAGE (R3P809)

FUSELAGE

PARAMETRIC DATA

MACH = 5.250 ALPHA = .0000 BETA = -3.000 ELEVON = .0000
BDFLAP = .0000 SPDBRK = .0000

TEST CONDITIONS

RUN NUMBER	ALPHA DEG.	BETA DEG.	MACH	RN/FT /FT X10 6	PT PSIA	TT DEG. R	HT BTU/ LBM	PINF PSIA	TINF DEG. R	RHO SLUGS/ FT3	VINF FT/SEC	SCALE
48	.0000	-3.000	5.250	1.062	103.9	1484.	365.3	.1434	233.8	.5146-04	3934.	.1750-01
93	.0000	-3.000	5.250	1.074	104.3	1478.	363.7	.1440	232.7	.5192-04	3926.	.1750-01

RUN NUMBER	PHI DEG.	HS SPHERE TW=540
48	.0000	.1679
93	.0000	.1682

TEST DATA

RUN NUMBER	YO	XB/LB	T/C NO	H/HREF R=1.0	H/HREF R=.900	H/HREF R=.850	QREF BTU/ FT2SEC	QDOT BTU/ FT2SEC	HW/HT	TW DEG. R	STN NO R=.900
93	46.800	.50000	1050.0	.3973-01	.4718-01	.5207-01	38.71	1.538	.3669	556.1	.1210-02
93	46.800	.60000	1051.0	.2697-01	.3203-01	.3534-01	38.72	1.044	.3667	555.8	.8212-03
93	46.800	.70000	1052.0	.3223-01	.3828-01	.4224-01	38.71	1.248	.3668	556.0	.9814-03
93	46.800	.80000	1053.0	.1222	.1452	.1602	38.72	4.733	.3666	555.7	.3721-02
93	46.800	.90000	1054.0	.3011-01	.3576-01	.3946-01	38.70	1.165	.3670	556.3	.9168-03
93	46.800	.97500	1056.0	.2784-01	.3306-01	.3648-01	38.73	1.078	.3666	555.7	.8477-03
48	46.800	1.0300	58.000	.2807-01	.3324-01	.3660-01	39.47	1.108	.3565	542.7	.8567-03
48	46.800	1.0450	59.000	.2681-01	.3174-01	.3496-01	39.45	1.058	.3568	543.2	.8182-03
48	46.800	1.0600	60.000	.2966-01	.3513-01	.3869-01	39.41	1.169	.3575	544.3	.9054-03
93	93.600	.50000	1062.0	.3832-01	.4550-01	.5021-01	38.72	1.484	.3668	555.9	.1167-02
93	93.600	.60000	1063.0	.3792-01	.4503-01	.4969-01	38.72	1.468	.3667	555.8	.1155-02
93	93.600	.70000	1064.0	.3125-01	.3711-01	.4094-01	38.74	1.211	.3663	555.2	.9514-03
93	93.600	.80000	1065.0	.1635	.1942	.2143	38.72	6.332	.3667	555.8	.4979-02
93	93.600	.90000	1066.0	.4887-01	.5805-01	.6406-01	38.69	1.891	.3671	556.5	.1488-02
93	93.600	.95000	1067.0	.2204-01	.2618-01	.2890-01	38.64	.8517	.3679	557.7	.6712-03
93	93.600	.97500	1068.0	.2270-01	.2697-01	.2977-01	38.65	.8776	.3677	557.4	.6914-03
48	93.600	1.0150	69.000	.2706-01	.3204-01	.3529-01	39.47	1.068	.3565	542.7	.8259-03
48	93.600	1.0300	70.000	.6906-01	.8156-01	.8967-01	40.07	2.767	.3472	528.6	.2103-02

IH103 60-OT FUSELAGE (R3PB10)

FUSELAGE

PARAMETRIC DATA

MACH = 5.250 ALPHA = -5.000 BETA = -3.000 ELEVON = .0000
BDFLAP = .0000 SPDBRK = .0000

TEST CONDITIONS

RUN NUMBER	ALPHA DEG.	BETA DEG.	MACH	RN/FT /FT X10 6	PT PSIA	TT DEG. R	HT BTU/ LBM	PINF PSIA	TINF DEG. R	RHO SLUGS/ FT3	VINF FT/SEC	SCALE
47	-5.000	-3.000	5.250	1.069	103.7	1477.	363.3	.1431	232.5	.5165-04	3924.	.1750-01
94	-5.000	-3.000	5.250	1.005	103.7	1534.	378.4	.1425	242.1	.4939-04	4004.	.1750-01

RUN NUMBER	PHI DEG.	HS SPHERE TW=540
47	.0000	.1677
94	.0000	.1680

TEST DATA

RUN NUMBER	YO	XB/LB	T/C NO	H/HREF R=1.0	H/HREF R=.900	H/HREF R=.850	QREF BTU/ FT2SEC	QDOT BTU/ FT2SEC	HW/HT	TW DEG. R	STN NO R=.900
94	46.800	.50000	1050.0	.4153-01	.4913-01	.5407-01	41.08	1.706	.3533	557.1	.1296-02
94	46.800	.60000	1051.0	.2690-01	.3181-01	.3502-01	41.10	1.105	.3531	556.8	.8394-03
94	46.800	.70000	1052.0	.3254-01	.3849-01	.4237-01	41.09	1.337	.3532	557.0	.1016-02
94	46.800	.80000	1053.0	.1187	.1404	.1545	41.09	4.878	.3531	556.8	.3705-02
94	46.800	.90000	1054.0	.3067-01	.3629-01	.3994-01	41.06	1.259	.3536	557.6	.9574-03
94	46.800	.97500	1056.0	.9112-02	.1078-01	.1186-01	41.09	.3745	.3531	556.8	.2844-03
47	46.800	1.0300	58.000	.2187-01	.2590-01	.2852-01	39.23	.8581	.3562	539.4	.6661-03
47	46.800	1.0450	59.000	.2357-01	.2791-01	.3074-01	39.20	.9242	.3566	540.0	.7179-03
47	46.800	1.0600	60.000	.2657-01	.3146-01	.3465-01	39.16	1.040	.3573	541.1	.8092-03
94	93.600	.50000	1062.0	.3875-01	.4584-01	.5045-01	41.09	1.592	.3531	556.8	.1209-02
94	93.600	.60000	1063.0	.4097-01	.4846-01	.5334-01	41.10	1.684	.3531	556.8	.1279-02
94	93.600	.70000	1064.0	.2906-01	.3437-01	.3782-01	41.11	1.195	.3528	556.3	.9068-03
94	93.600	.80000	1065.0	.1485	.1757	.1934	41.10	6.104	.3531	556.8	.4635-02
94	93.600	.90000	1066.0	.4179-01	.4945-01	.5443-01	41.05	1.716	.3538	557.9	.1305-02
94	93.600	.95000	1067.0	.2209-01	.2614-01	.2878-01	40.98	.9052	.3548	559.5	.6896-03
94	93.600	.97500	1068.0	.1469-01	.1738-01	.1913-01	40.98	.6019	.3548	559.4	.4585-03
47	93.600	1.0150	69.000	.5441-02	.6442-02	.7095-02	39.22	.2134	.3564	539.7	.1657-03
47	93.600	1.0300	70.000	.1088-01	.1284-01	.1412-01	39.80	.4329	.3472	525.7	.3306-03
47	93.600	1.0600	72.000	.1764-01	.2090-01	.2303-01	39.07	.6893	.3587	543.2	.5376-03

IH103 60-OT FUSELAGE (R3PB11)

FUSELAGE

PARAMETRIC DATA

MACH = 5.250 ALPHA = 5.000 BETA = -3.000 ELEVON = .0000
BDFLAP = .0000 SPDBRK = .0000

TEST CONDITIONS

RUN NUMBER	ALPHA DEG.	BETA DEG.	MACH	RN/FT /FT X10 6	PT PSIA	TT DEG. R	HT BTU/ LBM	PINF PSIA	TINF DEG. R	RHO SLUGS/ FT3	VINF FT/SEC	SCALE
49	5.000	-3.000	5.250	1.047	102.8	1487.	366.2	.1418	234.3	.5077-04	3939.	.1750-01
95	5.000	-3.000	5.250	1.012	102.9	1520.	374.9	.1416	239.9	.4954-04	3986.	.1750-01

RUN NUMBER	PHI DEG.	HS SPHERE TW=540
49	.0000	.1670
95	.0000	.1673

TEST DATA

RUN NUMBER	YO	XB/LB	T/C NO	H/HREF R=1.0	H/HREF R=.900	H/HREF R=.850	QREF BTU/ FT2SEC	QDOT BTU/ FT2SEC	HW/HT	TW DEG. R	STN NO R=.900
95	46.800	.50000	1050.0	.3637-01	.4309-01	.4748-01	40.19	1.462	.3587	560.3	.1134-02
95	46.800	.60000	1051.0	.2639-01	.3126-01	.3444-01	40.20	1.061	.3586	560.3	.8227-03
95	46.800	.70000	1052.0	.3695-01	.4378-01	.4824-01	40.19	1.485	.3588	560.5	.1152-02
95	46.800	.80000	1053.0	.1534	.1817	.2002	40.18	6.162	.3589	560.7	.4782-02
95	46.800	.90000	1054.0	.4350-01	.5154-01	.5679-01	40.18	1.748	.3589	560.8	.1356-02
95	46.800	.97500	1056.0	.2419-01	.2865-01	.3156-01	40.23	.9732	.3580	559.3	.7540-03
49	46.800	1.0300	58.000	.1920-01	.2274-01	.2505-01	39.29	.7542	.3575	545.6	.5901-03
49	46.800	1.0450	59.000	.2330-01	.2760-01	.3041-01	39.25	.9145	.3581	546.5	.7164-03
49	46.800	1.0600	60.000	.2838-01	.3363-01	.3705-01	39.21	1.113	.3588	547.5	.8727-03
95	93.600	.50000	1062.0	.1750-01	.2073-01	.2283-01	40.21	.7035	.3584	560.0	.5455-03
95	93.600	.60000	1063.0	.1905-01	.2256-01	.2486-01	40.20	.7656	.3586	560.2	.5938-03
95	93.600	.70000	1064.0	.2320-01	.2748-01	.3028-01	40.21	.9330	.3584	559.8	.7233-03
95	93.600	.80000	1065.0	.2617	.3101	.3417	40.18	10.52	.3588	560.6	.8161-02
95	93.600	.90000	1066.0	.7078-01	.8387-01	.9241-01	40.16	2.842	.3592	561.1	.2207-02
95	93.600	.95000	1067.0	.3561-01	.4220-01	.4651-01	40.12	1.429	.3598	562.1	.1111-02
95	93.600	.97500	1068.0	.2482-01	.2944-01	.3246-01	39.96	.9919	.3622	565.9	.7745-03
49	93.600	1.0150	69.000	.1505-01	.1782-01	.1964-01	39.26	.5907	.3580	546.3	.4626-03
49	93.600	1.0300	70.000	.4633-01	.5476-01	.6025-01	39.71	1.840	.3509	535.4	.1422-02
49	93.600	1.0600	72.000	.2155-01	.2555-01	.2816-01	39.10	.8428	.3604	550.0	.6630-03

IH103 60-OT FUSELAGE (R3PB12)

FUSELAGE

PARAMETRIC DATA

MACH = 5.250 ALPHA = 10.00 BETA = -3.000 ELEVON = .0000
BDFLAP = .0000 SPDBRK = .0000

TEST CONDITIONS

RUN NUMBER	ALPHA DEG.	BETA DEG.	MACH	RN/FT /FT X10 6	PT PSIA	TT DEG. R	HT BTU/ LBM	PINF PSIA	TINF DEG. R	RHO SLUGS/ FT3	VINF FT/SEC	SCALE
50	10.00	-3.000	5.250	1.015	101.8	1507.	371.4	.1402	237.7	.4950-04	3967.	.1750-01
96	10.00	-3.000	5.250	1.046	102.9	1490.	366.9	.1420	234.8	.5074-04	3943.	.1750-01

RUN NUMBER	PHI DEG.	HS SPHERE TW=540
50	.0000	.1664
96	.0000	.1672

TEST DATA

RUN NUMBER	YO	XB/LB	T/C NO	H/HREF R=1.0	H/HREF R=.900	H/HREF R=.850	QREF BTU/ FT2SEC	QDOT BTU/ FT2SEC	HW/HT	TW DEG. R	STN NO R=.900
96	46.800	.50000	1050.0	.3258-01	.3858-01	.4249-01	39.43	1.285	.3569	545.8	.1002-02
96	46.800	.60000	1051.0	.2377-01	.2815-01	.3100-01	39.45	.9377	.3567	545.5	.7309-03
96	46.800	.70000	1052.0	.4922-01	.5828-01	.6419-01	39.44	1.941	.3568	545.6	.1513-02
96	46.800	.80000	1053.0	.1586	.1878	.2068	39.45	6.256	.3567	545.5	.4876-02
96	46.800	.90000	1054.0	.4952-01	.5863-01	.6457-01	39.46	1.954	.3565	545.1	.1522-02
96	46.800	.97500	1056.0	.2892-01	.3423-01	.3769-01	39.51	1.142	.3558	544.0	.8889-03
50	46.800	1.0300	58.000	.4271-01	.5053-01	.5562-01	39.90	1.704	.3540	548.1	.1330-02
50	46.800	1.0450	59.000	.3982-01	.4712-01	.5187-01	39.87	1.587	.3546	548.9	.1240-02
50	46.800	1.0600	60.000	.4036-01	.4777-01	.5259-01	39.82	1.607	.3553	550.0	.1257-02
96	93.600	.50000	1062.0	.1924-01	.2278-01	.2509-01	39.46	.7593	.3565	545.1	.5916-03
96	93.600	.60000	1063.0	.1480-01	.1752-01	.1930-01	39.46	.5840	.3566	545.2	.4551-03
96	93.600	.70000	1064.0	.4009-01	.4746-01	.5227-01	39.48	1.583	.3563	544.7	.1232-02
96	93.600	.80000	1065.0	.2406	.2848	.3137	39.45	9.489	.3567	545.5	.7396-02
96	93.600	.90000	1066.0	.6760-01	.8004-01	.8815-01	39.46	2.668	.3565	545.0	.2078-02
96	93.600	.95000	1067.0	.4035-01	.4778-01	.5263-01	39.43	1.591	.3571	545.9	.1241-02
96	93.600	.97500	1068.0	.3214-01	.3805-01	.4190-01	39.46	1.268	.3565	545.2	.9880-03
50	93.600	1.0150	69.000	.2708-01	.3203-01	.3526-01	39.92	1.081	.3538	547.7	.8431-03
50	93.600	1.0300	70.000	.5544-01	.6549-01	.7201-01	40.29	2.234	.3480	538.7	.1724-02

IH103 60-OT FUSELAGE (R3PB13)

FUSELAGE

PARAMETRIC DATA

MACH = 5.250 ALPHA = .0000 BETA = -9.000 ELEVON = .0000
BDFLAP = .0000 SPDBRK = .0000

TEST CONDITIONS

RUN NUMBER	ALPHA DEG.	BETA DEG.	MACH	RN/FT /FT X10 6	PT PSIA	TT DEG. R	HT BTU/ LBM	PINF PSIA	TINF DEG. R	RHO SLUGS/ FT3	VINF FT/SEC	SCALE
53	.0000	-9.000	5.250	1.015	101.9	1509.	371.8	.1404	237.9	.4952-04	3969.	.1750-01
100	0000	-9.000	5.250	1.056	104.1	1491.	367.2	.1435	235.0	.5127-04	3944.	.1750-01

RUN NUMBER	PHI DEG.	HS SPHERE TW=540
53	.0000	.1665
100	.0000	.1681

TEST DATA

RUN NUMBER	YO	XB/LB	T/C NO	H/HREF R=1.0	H/HREF R=.900	H/HREF R=.850	QREF BTU/ FT2SEC	QDOT BTU/ FT2SEC	HW/HT	TW DEG. R	STN NO R=.900
100	46.800	.50000	1050.0	.3146-01	.3728-01	.4109-01	39.47	1.242	.3602	551.2	.9630-03
100	46.800	.60000	1051.0	.2308-01	.2736-01	.3015-01	39.48	.9112	.3602	551.1	.7066-03
100	46.800	.70000	1052.0	.6052-01	.7173-01	.7906-01	39.46	2.388	.3604	551.5	.1853-02
100	46.800	.80000	1053.0	.2131	.2526	.2783	39.48	8.411	.3602	551.2	.6523-02
100	46.800	.90000	1054.0	.7215-01	.8552-01	.9426-01	39.47	2.848	.3603	551.4	.2209-02
100	46.800	.97500	1056.0	.1757-01	.2082-01	.2294-01	39.54	.6947	.3592	549.6	.5378-03
53	46.800	1.0300	58.000	.1315-01	.1557-01	.1714-01	39.86	.5242	.3557	551.2	.4096-03
53	46.800	1.0450	59.000	.1657-01	.1962-01	.2161-01	39.83	.6602	.3561	551.9	.5163-03
53	46.800	1.0600	60.000	.2790-01	.3303-01	.3638-01	39.78	1.110	.3569	553.0	.8691-03
100	93.600	.50000	1062.0	.1952-01	.2313-01	.2549-01	39.49	.7708	.3599	550.7	.5975-03
100	93.600	.60000	1063.0	.1616-01	.1915-01	.2110-01	39.48	.6379	.3601	551.1	.4946-03
100	93.600	.70000	1064.0	.3064-01	.3632-01	.4002-01	39.51	1.211	.3597	550.5	.9380-03
100	93.600	.80000	1065.0	.2659	.3151	.3473	39.47	10.49	.3603	551.3	.8139-02
100	93.600	.90000	1066.0	.8504-01	.1008	.1111	39.48	3.358	.3601	551.0	.2603-02
100	93.600	.95000	1067.0	.5060-01	.5998-01	.6611-01	39.46	1.997	.3604	551.4	.1549-02
100	93.600	.97500	1068.0	.3797-01	.4503-01	.4966-01	39.31	1.493	.3627	555.0	.1163-02
53	93.600	1.0150	69.000	.1231-01	.1457-01	.1604-01	39.86	.4906	.3557	551.2	.3833-03
53	93.600	1.0300	70.000	.1009-01	.1192-01	.1312-01	40.18	.4054	.3507	543.4	.3139-03
53	93.600	1.0600	72.000	.1993-01	.2362-01	.2602-01	39.67	.7908	.3587	555.8	.6213-03

IH103 60-OT FUSELAGE (R3PB14)

FUSELAGE

PARAMETRIC DATA

MACH = 5.250 ALPHA = -5.000 BETA = -9.000 ELEVON = .0000
BDFLAP = .0000 SPDBRK = .0000

TEST CONDITIONS

RUN NUMBER	ALPHA DEG.	BETA DEG.	MACH	RN/FT /FT X10 6	PT PSIA	TT DEG. R	HT BTU/ LBM	PINF PSIA	TINF DEG. R	RHO SLUGS/ FT3	VINF FT/SEC	SCALE
54	-5.000	-9.000	5.250	1.031	101.6	1491.	367.2	.1401	235.0	.5004-04	3945.	.1750-01
99	-5.000	-9.000	5.250	1.045	102.9	1490.	366.9	.1420	234.8	.5073-04	3943.	.1750-01

RUN NUMBER	PHI DEG.	HS SPHERE TW=540
54	.0000	.1661
99	.0000	.1672

TEST DATA

RUN NUMBER	YO	XB/LB	T/C NO	H/HREF R=1.0	H/HREF R=.900	H/HREF R=.850	QREF BTU/ FT2SEC	QDOT BTU/ FT2SEC	HW/HT	TW DEG. R	STN NO R=.900
99	46.800	.50000	1050.0	.6336-01	.7519-01	.8293-01	38.97	2.469	.3643	557.1	.1952-02
99	46.800	.60000	1051.0	.4366-01	.5181-01	.5715-01	38.97	1.702	.3642	557.0	.1345-02
99	46.800	.70000	1052.0	.5817-01	.6903-01	.7614-01	38.97	2.267	.3643	557.1	.1792-02
99	46.800	.80000	1053.0	.1912	.2269	.2503	38.98	7.455	.3641	556.8	.5890-02
99	46.800	.90000	1054.0	.6537-01	.7757-01	.8555-01	38.97	2.548	.3642	557.0	.2014-02
99	46.800	.97500	1056.0	.1576-01	.1870-01	.2062-01	39.04	.6153	.3633	555.6	.4854-03
54	46.800	1.0300	58.000	.3953-02	.4690-02	.5172-02	38.81	.1534	.3633	556.0	.1226-03
54	46.800	1.0450	59.000	.4018-02	.4768-02	.5258-02	38.78	.1558	.3638	556.8	.1246-03
54	46.800	1.0600	60.000	.9701-02	.1151-01	.1270-01	38.72	.3756	.3648	558.3	.3009-03
99	93.600	.50000	1062.0	.2749-01	.3262-01	.3597-01	39.00	1.072	.3639	556.5	.8467-03
99	93.600	.60000	1063.0	.3846-01	.4563-01	.5033-01	38.98	1.499	.3642	556.9	.1185-02
99	93.600	.70000	1064.0	.4157-01	.4931-01	.5438-01	39.02	1.622	.3635	556.0	.1280-02
99	93.600	.80000	1065.0	.2050	.2432	.2682	38.97	7.988	.3642	557.0	.6313-02
99	93.600	.90000	1066.0	.5366-01	.6368-01	.7024-01	38.96	2.091	.3644	557.3	.1653-02
99	93.600	.95000	1067.0	.5191-01	.6161-01	.6796-01	38.93	2.021	.3649	558.1	.1599-02
99	93.600	.97500	1068.0	.4031-01	.4788-01	.5284-01	38.77	1.563	.3674	561.9	.1243-02
54	93.600	1.0150	69.000	.1732-01	.2055-01	.2266-01	38.82	.6724	.3632	555.8	.5371-03
54	93.600	1.0600	72.000	.1482-01	.1760-01	.1942-01	38.63	.5725	.3663	560.6	.4600-03

IH103 60-OT FUSELAGE (R3PB15)

FUSELAGE

PARAMETRIC DATA

MACH = 5.250 ALPHA = 5.000 BETA = -9.000 ELEVON = .0000
BDFLAP = .0000 SPDBRK = .0000

TEST CONDITIONS

RUN NUMBER	ALPHA DEG.	BETA DEG.	MACH	RN/FT /FT X10 6	PT PSIA	TT DEG. R	HT BTU/ LBM	PINF PSIA	TINF DEG. R	RHO SLUGS/ FT3	VINF FT/SEC	SCALE
55	-5.000	-9.000	5.250	1.043	101.7	1481.	364.6	.1404	233.3	.5049-04	3930.	.1750-01
98	5.000	-9.000	5.250	1.057	103.4	1484.	365.2	.1426	233.7	.5120-04	3934.	.1750-01

RUN NUMBER	PHI DEG.	HS SPHERE TW=540
55	.0000	.1661
98	.0000	.1675

TEST DATA

RUN NUMBER	YO	XB/LB	T/C NO	H/HREF R=1.0	H/HREF R=.900	H/HREF R=.850	QREF BTU/ FT2SEC	QDOT BTU/ FT2SEC	HW/HT	TW DEG. R	STN NO R=.900
98	46.800	.50000	1050.0	.2706-01	.3209-01	.3538-01	39.00	1.055	.3621	551.1	.8291-03
98	46.800	.60000	1051.0	.2267-01	.2689-01	.2964-01	39.00	.8842	.3620	551.0	.6945-03
98	46.800	.70000	1052.0	.5310-01	.6297-01	.6942-01	38.99	2.070	.3621	551.2	.1627-02
98	46.800	.80000	1053.0	.2267	.2688	.2964	38.99	8.840	.3621	551.2	.6945-02
98	46.800	.90000	1054.0	.7690-01	.9120-01	.1005	38.99	2.998	.3623	551.3	.2356-02
98	46.800	.97500	1056.0	.1803-01	.2138-01	.2357-01	39.04	.7040	.3614	550.1	.5523-03
55	46.800	1.0300	58.000	.8308-02	.9871-02	.1090-01	38.23	.3176	.3683	559.6	.2566-03
55	46.800	1.0450	59.000	.1154-01	.1372-01	.1514-01	38.19	.4409	.3689	560.5	.3567-03
55	46.800	1.0600	60.000	.2291-01	.2722-01	.3006-01	38.16	.8741	.3694	561.3	.7078-03
98	93.600	.50000	1062.0	.3135-01	.3718-01	.4098-01	39.02	1.223	.3618	550.6	.9604-03
98	93.600	.60000	1063.0	.2718-01	.3224-01	.3554-01	39.00	1.060	.3620	550.9	.8328-03
98	93.600	.70000	1064.0	.3032-01	.3595-01	.3963-01	39.07	1.185	.3610	549.4	.9288-03
98	93.600	.80000	1065.0	.2849	.3379	.3725	38.99	11.11	.3622	551.3	.8728-02
98	93.600	.90000	1066.0	.1132	.1342	.1480	38.98	4.411	.3623	551.4	.3467-02
98	93.600	.95000	1067.0	.5338-01	.6332-01	.6982-01	38.94	2.079	.3630	552.4	.1636-02
98	93.600	.97500	1068.0	.3957-01	.4698-01	.5182-01	38.78	1.535	.3655	556.2	.1213-02
55	93.600	1.0150	69.000	.1904-01	.2263-01	.2497-01	38.22	.7277	.3685	559.9	.5882-03
55	93.600	1.0600	72.000	.1779-01	.2115-01	.2336-01	38.07	.6772	.3708	563.4	.5498-03

IH103 60-OT FUSELAGE

FUSELAGE

PARAMETRIC DATA

MACH = 5.250 ALPHA = 10.00 BETA = -9.000 ELEVON = .0000
BDFLAP = .0000 SPDBRK = .0000

TEST CONDITIONS

RUN NUMBER	ALPHA DEG.	BETA DEG.	MACH	RN/FT /FT X10 6	PT PSIA	TT DEG. R	HT BTU/ LBM	PINF PSIA	TINF DEG. R	RHO SLUGS/ FT3	VINF FT/SEC	SCALE
56	10.00	-9.000	5.250	1.019	101.9	1504.	370.6	.1403	237.2	.4965-04	3963.	.1750-01
97	10.00	-9.000	5.250	1.033	103.2	1504.	370.5	.1422	237.1	.5033-04	3962.	.1750-01

RUN NUMBER	PHI DEG.	HS SPHERE TW=540
56	.0000	.1664
97	.0000	.1675

TEST DATA

RUN NUMBER	YO	XB/LB	T/C NO	H/HREF R=1.0	H/HREF R=.900	H/HREF R=.850	QREF BTU/ FT2SEC	QDOT BTU/ FT2SEC	HW/HT	TW DEG. R	STN NO R=.900
97	46.800	.50000	1050.0	.2567-01	.3038-01	.3345-01	40.03	1.028	.3547	547.6	.7927-03
97	46.800	.60000	1051.0	.1683-01	.1992-01	.2193-01	40.04	.6739	.3545	547.3	.5197-03
97	46.800	.70000	1052.0	.6166-01	.7297-01	.8033-01	40.05	2.469	.3544	547.2	.1904-02
97	46.800	.80000	1053.0	.2196	.2598	.2860	40.07	8.800	.3540	546.6	.6780-02
97	46.800	.90000	1054.0	.6503-01	.7693-01	.8468-01	40.09	2.607	.3537	546.2	.2008-02
97	46.800	.97500	1056.0	.1743-01	.2062-01	.2269-01	40.15	.7000	.3528	544.7	.5382-03
56	46.800	1.0300	58.000	.1627-01	.1929-01	.2126-01	39.37	.6406	.3611	557.8	.5066-03
56	46.800	1.0450	59.000	.2169-01	.2572-01	.2835-01	39.36	.8538	.3613	558.1	.6754-03
56	46.800	1.0600	60.000	.4298-01	.5096-01	.5619-01	39.32	1.690	.3619	559.0	.1338-02
97	93.600	.50000	1062.0	.4270-01	.5052-01	.5561-01	40.06	1.710	.3542	547.0	.1318-02
97	93.600	.60000	1063.0	.3704-01	.4383-01	.4825-01	40.05	1.484	.3543	547.1	.1144-02
97	93.600	.70000	1064.0	.3913-01	.4629-01	.5096-01	40.08	1.568	.3539	546.4	.1208-02
97	93.600	.80000	1065.0	.2527	.2990	.3291	40.08	10.13	.3539	546.5	.7802-02
97	93.600	.90000	1066.0	.1312	.1552	.1709	40.11	5.263	.3535	545.8	.4051-02
97	93.600	.95000	1067.0	.6284-01	.7434-01	.8183-01	40.09	2.519	.3538	546.3	.1940-02
97	93.600	.97500	1068.0	.4632-01	.5483-01	.6038-01	39.93	1.850	.3561	549.9	.1431-02
56	93.600	1.0150	69.000	.1792-01	.2124-01	.2342-01	39.38	.7057	.3609	557.5	.5579-03
56	93.600	1.0600	72.000	.3720-01	.4413-01	.4866-01	39.23	1.459	.3633	561.2	.1159-02

IH103 60-OT FUSELAGE (R3PB17)

FUSELAGE

PARAMETRIC DATA

MACH = 5.250 ALPHA = -10.00 BETA = -9.000 ELEVON = .0000
BDFLAP = .0000 SPDBRK = .0000

TEST CONDITIONS

RUN NUMBER	ALPHA DEG.	BETA DEG.	MACH	RN/FT /FT X10 6	PT PSIA	TT DEG. R	HT BTU/ LBM	PINF PSIA	TINF DEG. R	RHO SLUGS/ FT3	VINF FT/SEC	SCALE
108	-10.00	-9.000	5.250	1.066	103.4	1476.	363.2	.1427	232.5	.5153-04	3923.	.1750-01
110	-10.00	-9.000	5.250	1.092	103.7	1458.	358.4	.1434	229.4	.5246-04	3897.	.1750-01

RUN NUMBER	PHI DEG.	HS SPHERE TW=540
108	.0000	.1675
110	.0000	.1676

TEST DATA

RUN NUMBER	YO	XB/LB	T/C NO	H/HREF R=1.0	H/HREF R=.900	H/HREF R=.850	QREF BTU/ FT2SEC	QDOT BTU/ FT2SEC	HW/HT	TW DEG. R	STN NO R=.900
110	46.800	.50000	1050.0	.6991-01	.8347-01	.9243-01	36.93	2.582	.3844	574.2	.2124-02
110	46.800	.60000	1051.0	.5293-01	.6320-01	.6999-01	36.92	1.954	.3846	574.5	.1608-02
110	46.800	.70000	1052.0	.6742-01	.8050-01	.8916-01	36.90	2.488	.3849	575.0	.2049-02
110	46.800	.80000	1053.0	.2016	.2407	.2666	36.92	7.443	.3846	574.6	.6126-02
110	46.800	.90000	1054.0	.6384-01	.7622-01	.8441-01	36.93	2.358	.3844	574.2	.1940-02
110	46.800	.97500	1056.0	.1435-01	.1713-01	.1896-01	36.99	.5307	.3835	572.9	.4359-03
108	46.800	1.0300	58.000	.8851-02	.1054-01	.1164-01	38.00	.3364	.3746	567.1	.2710-03
108	46.800	1.0450	59.000	.9320-02	.1110-01	.1226-01	37.97	.3539	.3752	568.0	.2854-03
108	46.800	1.0600	60.000	.1337-01	.1592-01	.1760-01	37.92	.5069	.3759	569.1	.4094-03
110	93.600	.50000	1062.0	.7446-01	.8888-01	.9842-01	36.97	2.752	.3839	573.4	.2262-02
110	93.600	.60000	1063.0	.6815-01	.8137-01	.9010-01	36.94	2.518	.3842	574.0	.2071-02
110	93.600	.70000	1064.0	.5304-01	.6333-01	.7014-01	36.92	1.958	.3846	574.5	.1612-02
110	93.600	.80000	1065.0	.2181	.2604	.2883	36.92	8.051	.3846	574.5	.6626-02
110	93.600	.90000	1066.0	.7922-01	.9458-01	.1047	36.94	2.926	.3843	574.1	.2407-02
110	93.600	.95000	1067.0	.5733-03	.6812-03	.7519-03	37.93	.2175-01	.3684	550.3	.1735-04
110	93.600	.97500	1068.0	.3473-01	.4146-01	.4590-01	36.97	1.284	.3838	573.2	.1055-02
108	93.600	1.0150	69.000	.1485-01	.1767-01	.1953-01	37.99	.5640	.3748	567.4	.4545-03
108	93.600	1.0600	72.000	.2001-01	.2383-01	.2634-01	37.92	.7588	.3759	569.0	.6128-03

IH103 60-OT FUSELAGE (R3PB18)

FUSELAGE

PARAMETRIC DATA

MACH = 5.250 ALPHA = -10.00 BETA = -3.000 ELEVON = .0000
BDFLAP = .0000 SPDBRK = .0000

TEST CONDITIONS

RUN NUMBER	ALPHA DEG.	BETA DEG.	MACH	RN/FT /FT X10 6	PT PSIA	TT DEG. R	HT BTU/ LBM	PINF PSIA	TINF DEG. R	RHO SLUGS/ FT3	VINF FT/SEC	SCALE
111	-10.00	-3.000	5.250	1.024	103.5	1514.	373.3	.1425	238.9	.5005-04	3977.	.1750-01
113	-10.00	-3.000	5.250	1.041	103.0	1494.	367.9	.1419	235.5	.5058-04	3949.	.1750-01

RUN NUMBER	PHI DEG.	HS SPHERE TW=540
111	.0000	.1678
113	.0000	.1672

TEST DATA

RUN NUMBER	YO	XB/LB	T/C NO	H/HREF R=1.0	H/HREF R=.900	H/HREF R=.850	QREF BTU/ FT2SEC	QDOT BTU/ FT2SEC	HW/HT	TW DEG. R	STN NO R=.900
111	46.800	.50000	1050.0	.5430-01	.6419-01	.7062-01	40.63	2.206	.3511	546.1	.1681-02
111	46.800	.60000	1051.0	.3314-01	.3918-01	.4310-01	40.64	1.347	.3508	545.7	.1026-02
111	46.800	.70000	1052.0	.3998-01	.4727-01	.5200-01	40.64	1.625	.3509	545.8	.1238-02
111	46.800	.80000	1053.0	.1370	.1619	.1782	40.64	5.568	.3508	545.7	.4241-02
111	46.800	.90000	1054.0	.3753-01	.4437-01	.4881-01	40.63	1.525	.3510	546.1	.1162-02
111	46.800	.97500	1056.0	.9168-02	.1084-01	.1192-01	40.68	.3729	.3503	544.9	.2838-03
113	46.800	1.0300	58.000	.1415-01	.1674-01	.1844-01	39.66	.5611	.3552	544.7	.4356-03
113	46.800	1.0450	59.000	.1990-01	.2356-01	.2594-01	39.66	.7893	.3553	544.8	.6128-03
113	46.800	1.0600	60.000	.2680-01	.3172-01	.3493-01	39.61	1.061	.3560	545.9	.8252-03
111	93.600	.50000	1062.0	.5155-01	.6093-01	.6703-01	40.66	2.096	.3506	545.4	.1596-02
111	93.600	.60000	1063.0	.5594-01	.6613-01	.7275-01	40.65	2.274	.3507	545.5	.1732-02
111	93.600	.70000	1064.0	.3571-01	.4221-01	.4644-01	40.66	1.452	.3505	545.3	.1106-02
111	93.600	.80000	1065.0	.1689	.1996	.2196	40.65	6.864	.3506	545.5	.5227-02
111	93.600	.90000	1066.0	.5160-01	.6099-01	.6710-01	40.64	2.097	.3509	545.8	.1597-02
111	93.600	.95000	1067.0	.3750-03	.4424-03	.4861-03	41.10	.1541-01	.3437	534.7	.1159-04
111	93.600	.97500	1068.0	.2064-01	.2440-01	.2685-01	40.62	.8385	.3511	546.2	.6390-03
113	93.600	1.0150	69.000	.6343-02	.7507-02	.8266-02	39.67	.2516	.3551	544.5	.1953-03
113	93.600	1.0600	72.000	.2948-01	.3490-01	.3844-01	39.57	1.166	.3567	546.9	.9080-03

IH103 60-OT FUSELAGE (R3PB19)

FUSELAGE

PARAMETRIC DATA

MACH = 5.250 ALPHA = -10.00 BETA = -5.000 ELEVON = .0000
BDFLAP = .0000 SPDBRK = .0000

TEST CONDITIONS

RUN NUMBER	ALPHA DEG.	BETA DEG.	MACH	RN/FT /FT X10 6	PT PSIA	TT DEG. R	HT BTU/ LBM	PINF PSIA	TINF DEG. R	RHO SLUGS/ FT3	VINF FT/SEC	SCALE
118	-10.00	-5.000	5.250	1.036	102.9	1498.	368.8	.1418	236.0	.5040-04	3953.	.1750-01
120	-10.00	-5.000	5.250	1.091	103.6	1466.	360.5	.1432	230.7	.5207-04	3909.	.1750-01

RUN NUMBER	PHI DEG.	HS SPHERE TW=540
118	.0000	.1672
120	.0000	.1676

TEST DATA

RUN NUMBER	YO	XB/LB	T/C NO	H/HREF R=1.0	H/HREF R=.900	H/HREF R=.850	QREF BTU/ FT2SEC	QDOT BTU/ FT2SEC	HW/HT	TW DEG. R	STN NO R=.900
120	46.800	.50000	1050.0	.5567-01	.6620-01	.7311-01	37.95	2.113	.3714	558.0	.1693-02
120	46.800	.60000	1051.0	.3773-03	.4476-03	.4936-03	38.45	.1450-01	.3636	546.3	.1145-04
120	46.800	.70000	1052.0	.4664-01	.5546-01	.6126-01	37.94	1.769	.3717	558.5	.1419-02
120	46.800	.80000	1053.0	.1544	.1837	.2029	37.92	5.857	.3719	558.8	.4698-02
120	46.800	.90000	1054.0	.5203-01	.6190-01	.6837-01	37.89	1.972	.3723	559.5	.1583-02
120	46.800	.97500	1056.0	.2414-01	.2871-01	.3172-01	37.91	.9151	.3721	559.1	.7344-03
118	46.800	1.0300	58.000	.1097-01	.1300-01	.1432-01	39.49	.4332	.3591	552.1	.3387-03
118	46.800	1.0450	59.000	.1508-01	.1787-01	.1969-01	39.45	.5948	.3598	553.1	.4657-03
118	46.800	1.0600	60.000	.1986-01	.2354-01	.2595-01	39.40	.7824	.3606	554.3	.6134-03
120	93.600	.50000	1062.0	.6551-01	.7790-01	.8603-01	37.97	2.488	.3711	557.6	.1992-02
120	93.600	.60000	1063.0	.6511-01	.7742-01	.8551-01	37.97	2.472	.3712	557.7	.1980-02
120	93.600	.70000	1064.0	.4623-01	.5497-01	.6071-01	37.96	1.755	.3713	557.9	.1406-02
120	93.600	.80000	1065.0	.1772	.2108	.2328	37.94	6.724	.3716	558.3	.5391-02
120	93.600	.90000	1066.0	.4861-01	.5782-01	.6388-01	37.89	1.842	.3723	559.5	.1479-02
120	93.600	.95000	1067.0	.3431-01	.4083-01	.4511-01	37.83	1.298	.3733	560.9	.1044-02
120	93.600	.97500	1068.0	.2618-01	.3115-01	.3442-01	37.85	.9910	.3731	560.6	.7967-03
118	93.600	1.0150	69.000	.1332-01	.1579-01	.1740-01	39.48	.5259	.3593	552.4	.4114-03
118	93.600	1.0600	72.000	.2268-01	.2688-01	.2963-01	39.40	.8934	.3606	554.3	.7005-03

IH103 60-OT FUSELAGE (R3PB20)

FUSELAGE

PARAMETRIC DATA

MACH = 5.250 ALPHA = -10.00 BETA = .0000 ELEVON = .0000
BDFLAP = .0000 SPDBRK = .0000

TEST CONDITIONS

RUN NUMBER	ALPHA DEG.	BETA DEG.	MACH	RN/FT /FT X10 6	PT PSIA	TT DEG. R	HT BTU/ LBM	PINF PSIA	TINF DEG. R	RHO SLUGS/ FT3	VINF FT/SEC	SCALE
121	-10.00	.0000	5.250	.9993	103.7	1539.	379.8	.1425	243.0	.4920-04	4011.	.1750-01
123	-10.00	.0000	5.250	1.039	103.6	1501.	369.8	.1427	236.6	.5060-04	3959.	.1750-01

RUN NUMBER	PHI DEG.	HS SPHERE TW=540
121	.0000	.1681
123	.0000	.1677

TEST DATA

RUN NUMBER	YO	XB/LB	T/C NO	H/HREF R=1.0	H/HREF R=.900	H/HREF R=.850	QREF BTU/ FT2SEC	QDOT BTU/ FT2SEC	HW/HT	TW DEG. R	STN NO R=.900
121	46.800	.50000	1050.0	.4057-01	.4798-01	.5281-01	41.26	1.674	.3529	558.6	.1269-02
121	46.800	.60000	1051.0	.3470-03	.4096-03	.4501-03	41.80	.1451-01	.3448	545.7	.1084-04
121	46.800	.70000	1052.0	.2346-01	.2775-01	.3055-01	41.23	.9674	.3534	559.2	.7339-03
121	46.800	.80000	1053.0	.9985-01	.1181	.1300	41.21	4.115	.3537	559.8	.3124-02
12	46.800	.90000	1054.0	.2707-01	.3203-01	.3527-01	41.18	1.115	.3542	560.5	.8470-03
121	46.800	.97500	1056.0	.1668-01	.1973-01	.2172-01	41.22	.6875	.3536	559.7	.5218-03
123	46.800	1.0300	58.000	.2276-01	.2697-01	.2972-01	39.74	.9046	.3590	553.3	.7016-03
123	46.800	1.0450	59.000	.2204-01	.2611-01	.2877-01	39.74	.8757	.3590	553.3	.6792-03
123	46.800	1.0600	60.000	.2293-01	.2718-01	.2995-01	39.70	.9103	.3597	554.3	.7069-03
121	93.600	.50000	1062.0	.3488-01	.4126-01	.4541-01	41.26	1.439	.3530	558.6	.1091-02
121	93.600	.60000	1063.0	.3155-01	.3732-01	.4107-01	41.27	1.302	.3528	558.3	.9869-03
121	93.600	.70000	1064.0	.2493-01	.2948-01	.3245-01	41.27	1.029	.3527	558.3	.7796-03
121	93.600	.80000	1065.0	.1410	.1668	.1836	41.21	5.811	.3537	559.7	.4410-02
121	93.600	.90000	1066.0	.3059-01	.3620-01	.3985-01	41.16	1.259	.3545	561.0	.9571-03
121	93.600	.95000	1067.0	.1458-01	.1726-01	.1901-01	41.06	.5986	.3560	563.5	.4563-03
121	93.600	.97500	1068.0	.1435-01	.1698-01	.1870-01	41.09	.5895	.3555	562.7	.4490-03
123	93.600	1.0150	69.000	.7501-02	.8887-02	.9792-02	39.75	.2982	.3589	552.9	.2312-03
123	93.600	1.0600	72.000	.2792-01	.3310-01	.3648-01	39.64	1.107	.3605	555.6	.8610-03

IH103 60-OT FUSELAGE (R3PB21)

FUSELAGE

PARAMETRIC DATA

MACH = 5.250 ALPHA = .0000 BETA = .0000 ELEVON = .0000
BDFLAP = .0000 SPDBRK = .0000

TEST CONDITIONS

RUN NUMBER	ALPHA DEG.	BETA DEG.	MACH	RN/FT /FT X10 6	PT PSIA	TT DEG. R	HT BTU/ LBM	PINF PSIA	TINF DEG. R	RHO SLUGS/ FT3	VINF FT/SEC	SCALE
129	.0000	.0000	5.250	.6601	103.8	1978.	498.3	.1374	318.9	.3615-04	4595.	.1750-01
131	.0000	.0000	5.250	.6469	103.6	1999.	504.0	.1367	322.6	.3557-04	4622.	.1750-01

RUN NUMBER	PHI DEG.	HS SPHERE TW=540
129	.0000	.1691
131	.0000	.1689

TEST DATA

RUN NUMBER	YO	XB/LB	T/C NO	H/HREF R=1.0	H/HREF R=.900	H/HREF R=.850	QREF BTU/ FT2SEC	QDOT BTU/ FT2SEC	HW/HT	TW DEG. R	STN NO R=.900
131	46.800	.50000	1050.0	.2432-01	.2812-01	.3050-01	62.98	1.532	.2599	546.1	.8976-03
131	46.800	.60000	1051.0	.3383-04	.3911-04	.4241-04	63.13	.2136-02	.2583	542.5	.1249-05
131	46.800	.70000	1052.0	.2121-01	.2454-01	.2662-01	62.82	1.333	.2617	549.7	.7832-03
131	46.800	.80000	1053.0	.1090	.1261	.1368	62.75	6.839	.2625	551.4	.4024-02
131	46.800	.90000	1054.0	.4569-01	.5286-01	.5737-01	62.70	2.865	.2631	552.7	.1687-02
131	46.800	.97500	1056.0	.2774-01	.3210-01	.3483-01	62.71	1.740	.2629	552.4	.1024-02
129	46.800	1.0300	58.000	.2800-01	.3239-01	.3515-01	62.19	1.742	.2620	544.1	.1025-02
129	46.800	1.0450	59.000	.3059-01	.3538-01	.3839-01	62.17	1.902	.2621	544.4	.1119-02
129	46.800	1.0600	60.000	.5537-01	.6406-01	.6951-01	62.11	3.439	.2628	545.8	.2026-02
131	93.600	.50000	1062.0	.2124-01	.2456-01	.2664-01	63.00	1.338	.2597	545.5	.7840-03
131	93.600	.60000	1063.0	.2413-01	.2790-01	.3026-01	62.94	1.518	.2604	547.0	.8905-03
131	93.600	.70000	1064.0	.2788-01	.3224-01	.3497-01	62.90	1.753	.2609	548.0	.1029-02
131	93.600	.80000	1065.0	.1098	.1271	.1379	62.75	6.892	.2625	551.3	.4055-02
131	93.600	.90000	1066.0	.2386-01	.2760-01	.2996-01	62.68	1.495	.2633	553.0	.8809-03
131	93.600	.95000	1067.0	.3321-01	.3843-01	.4172-01	62.60	2.079	.2642	555.0	.1226-02
131	93.600	.97500	1068.0	.9852-04	.1139-03	.1235-03	63.14	.6221-02	.2582	542.3	.3635-05
129	93.600	1.0150	69.000	.2271-01	.2627-01	.2851-01	62.18	1.412	.2620	544.2	.8313-03
129	93.600	1.0600	72.000	.3159-01	.3655-01	.3967-01	62.10	1.962	.2629	546.1	.1156-02

IH103 60-OT FUSELAGE (R3PC01)

FUSELAGE

PARAMETRIC DATA

MACH = 5.250 ALPHA = .0000 BETA = .0000 ELEVON = .0000
BDFLAP = .0000 SPDBRK = .0000

TEST CONDITIONS

RUN NUMBER	ALPHA DEG.	BETA DEG.	MACH	RN/FT /FT X10 6	PT PSIA	TT DEG. R	HT BTU/ LBM	PINF PSIA	TINF DEG. R	RHO SLUGS/ FT3	VINF FT/SEC	SCALE
60	.0000	.0000	5.250	1.059	102.9	1478.	363.8	.1420	232.8	.5119-04	3926.	.1750-01
84	.0000	.0000	5.250	1.008	102.8	1523.	375.5	.1415	240.3	.4941-04	3989.	.1750-01

RUN NUMBER	PHI DEG.	HS SPHERE TW=540
60	.0000	.1671
84	.0000	.1673

TEST DATA

RUN NUMBER	XB/LB	ZO	T/C NO	H/HREF R=1.0	H/HREF R=.900	H/HREF R=.850	QREF BTU/ FT2SEC	QDOT BTU/ FT2SEC	HW/HT	TW DEG. R	STN NO R=.900
60	.76000-01	350.00	206.00	.8765-01	.1041	.1148	38.48	3.373	.3665	555.6	.2688-02
84	.97500	381.20	1288.0	.2655-01	.3137-01	.3449-01	40.92	1.087	.3484	545.3	.8273-03

IH103 60-OT FUSELAGE (R3PC02)

FUSELAGE

PARAMETRIC DATA

MACH = 5.250 ALPHA = -5.000 BETA = .0000 ELEVON = .0000
BDFLAP = .0000 SPDBRK = .0000

TEST CONDITIONS

RUN NUMBER	ALPHA DEG.	BETA DEG.	MACH	RN/FT /FT X10 6	PT PSIA	TT DEG. R	HT BTU/ LBM	PINF PSIA	TINF DEG. R	RHO SLUGS/ FT3	VINF FT/SEC	SCALE
59	-5.000	.0000	5.250	1.045	101.3	1476.	363.2	.1398	232.4	.5048-04	3923.	.1750-01
83	-5.000	.0000	5.250	1.048	103.8	1496.	368.3	.1430	235.7	.5092-04	3951.	.1750-01

RUN NUMBER	PHI DEG.	HS SPHERE TW=540
59	.0000	.1658
83	.0000	.1679

TEST DATA

RUN NUMBER	XB/LB	ZO	T/C NO	H/HREF R=1.0	H/HREF R=.900	H/HREF R=.850	QREF BTU/ FT2SEC	QDOT BTU/ FT2SEC	HW/HT	TW DEG. R	STN NO R=.900
59	.76000-01	350.00	206.00	.1082	.1282	.1414	38.44	4.157	.3614	547.0	.3335-02
83	.97500	381.20	1288.0	.3071-01	.3636-01	.4005-01	39.77	1.221	.3566	547.4	.9429-03

IH103 60-OT FUSELAGE (R3PC03)

FUSELAGE

PARAMETRIC DATA

MACH = 5.250 ALPHA = 5.000 BETA = .0000 ELEVON = .0000
BDFLAP = .0000 SPDBRK = .0000

TEST CONDITIONS

RUN NUMBER	ALPHA DEG.	BETA DEG.	MACH	RN/FT /FT X10 6	PT PSIA	TT DEG. R	HT BTU/ LBM	PINF PSIA	TINF DEG. R	RHO SLUGS/ FT3	VINF FT/SEC	SCALE
58	5.000	.0000	5.250	1.018	101.8	1504.	370.5	.1402	237.1	.4962-04	3962.	.1750-01
82	5.000	.0000	5.250	1.000	101.7	1521.	374.9	.1400	239.9	.4897-04	3986.	.1750-01

RUN NUMBER	PHI DEG.	HS SPHERE TW=540
58	.0000	.1663
82	.0000	.1664

TEST DATA

RUN NUMBER	XB/LB	ZO	T/C NO	H/HREF R=1.0	H/HREF R=.900	H/HREF R=.850	QREF BTU/ FT2SEC	QDOT BTU/ FT2SEC	HW/HT	TW DEG. R	STN NO R=.900
58	.76000-01	350.00	206.00	.8154-01	.9644-01	.1061	39.85	3.249	.3530	545.1	.2535-02
82	.97500	381.20	1288.0	.2805-01	.3315-01	.3647-01	40.48	1.135	.3506	547.8	.8780-03

IH103 60-OT FUSELAGE

(R3PC04)

FUSELAGE

PARAMETRIC DATA

MACH = 5.250 ALPHA = 10.00 BETA = .0000 ELEVON = .0000
BDFLAP = .0000 SPDBRK = .0000

TEST CONDITIONS

RUN NUMBER	ALPHA DEG.	BETA DEG.	MACH	RN/FT /FT X10 6	PT PSIA	TT DEG. R	HT BTU/ LBM	PINF PSIA	TINF DEG. R	RHO SLUGS/ FT3	VINF FT/SEC	SCALE
57	10.00	.0000	5.250	1.013	101.8	1509.	371.9	.1402	238.0	.4942-04	3970.	.1750-01
81	10.00	-5.000	5.250	1.029	101.8	1494.	368.0	.1404	235.5	.5001-04	3949.	.1750-01

RUN NUMBER	PHI DEG.	HS SPHERE TW=540
57	.0000	.1663
81	.0000	.1663

TEST DATA

RUN NUMBER	XB/LB	ZO	T/C NO	H/HREF R=1.0	H/HREF R=.900	H/HREF R=.850	QREF BTU/ FT2SEC	QDOT BTU/ FT2SEC	HW/HT	TW DEG. R	STN NO R=.900
57	.76000-01	350.00	206.00	.6424-01	.7590-01	.8347-01	40.29	2.588	.3487	540.5	.2000-02
81	.97500	381.20	1288.0	.2655-01	.3144-01	.3462-01	39.37	1.045	.3565	546.8	.8224-03

IH103 60-OT FUSELAGE (R3PC05)

FUSELAGE

PARAMETRIC DATA

MACH = 5.250 ALPHA = .0000 BETA = -5.000 ELEVON = .0000
BDFLAP = .0000 SPDBRK = .0000

TEST CONDITIONS

RUN NUMBER	ALPHA DEG.	BETA DEG.	MACH	RN/FT /FT X10 6	PT PSIA	TT DEG. R	HT BTU/ LBM	PINF PSIA	TINF DEG. R	RHO SLUGS/ FT3	VINF FT/SEC	SCALE
69	.0000	-5.000	5.250	1.031	103.0	1504.	370.5	.1419	237.1	.5023-04	3962.	.1750-01
77	.0000	-5.000	5.250	1.043	103.3	1496.	368.4	.1425	235.8	.5070-04	3951.	.1750-01

RUN NUMBER	PHI DEG.	HS SPHERE TW=540
69	.0000	.1673
77	.0000	.1675

TEST DATA

RUN NUMBER	XB/LB	ZO	T/C NO	H/HREF R=1.0	H/HREF R=.900	H/HREF R=.850	QREF BTU/ FT2SEC	QDOT BTU/ FT2SEC	HW/HT	TW DEG. R	STN NO R=.900
69	.76000-01	350.00	206.00	.1106	.1311	.1444	39.69	4.390	.3593	554.7	.3422-02
77	.97500	381.20	1288.0	.3510-01	.4161-01	.4585-01	39.47	1.386	.3602	553.1	.1081-02

IH103 60-OT FUSELAGE (R3PC06)

FUSELAGE

PARAMETRIC DATA

MACH = 5.250 ALPHA = -5.000 BETA = -5.000 ELEVON = .0000
BDFLAP = .0000 SPDBRK = .0000

TEST CONDITIONS

RUN NUMBER	ALPHA DEG.	BETA DEG.	MACH	RN/FT /FT X10 6	PT PSIA	TT DEG. R	HT BTU/ LBM	PINF PSIA	TINF DEG. R	RHO SLUGS/ FT3	VINF FT/SEC	SCALE
70	.0000	-5.000	5.250	1.044	103.5	1497.	368.6	.1426	235.9	.5074-04	3952.	.1750-01
78	-5.000	-5.000	5.250	.9991	96.86	1476.	363.2	.1337	232.4	.4828-04	3923.	.1750-01

RUN NUMBER	PHI DEG.	HS SPHERE TW=540
70	.0000	.1677
78	.0000	.1621

TEST DATA

RUN NUMBER	XB/LB	ZO	T/C NO	H/HREF R=1.0	H/HREF R=.900	H/HREF R=.850	QREF BTU/ FT2SEC	QDOT BTU/ FT2SEC	HW/HT	TW DEG. R	STN NO R=.900
70	.76000-01	350.00	206.00	.1316	.1562	.1722	39.31	5.175	.3635	558.5	.4055-02
78	.97500	381.20	1288.0	.4485-01	.5329-01	.5883-01	37.14	1.666	.3686	557.8	.1417-02

IH103 60-OT FUSELAGE (R3PC07)

FUSELAGE

PARAMETRIC DATA

MACH = 5.250 ALPHA = 5.000 BETA = -5.000 ELEVON = .0000
BDFLAP = .0000 SPDBRK = .0000

TEST CONDITIONS

RUN NUMBER	ALPHA DEG.	BETA DEG.	MACH	RN/FT /FT X10 6	PT PSIA	TT DEG. R	HT BTU/ LBM	PINF PSIA	TINF DEG. R	RHO SLUGS/ FT3	VINF FT/SEC	SCALE
71	5.000	-5.000	5.250	.9992	103.8	1540.	380.0	.1426	243.2	.4920-04	4013.	.1750-01
79	5.000	-5.000	5.250	1.004	99.07	1492.	367.3	.1366	235.1	.4877-04	3945.	.1750-01

RUN NUMBER	PHI DEG.	HS SPHERE TW=540
71	.0000	.1681
79	.0000	.1640

TEST DATA

RUN NUMBER	XB/LB	ZO	T/C NO	H/HREF R=1.0	H/HREF R=.900	H/HREF R=.850	QREF BTU/ FT2SEC	QDOT BTU/ FT2SEC	HW/HT	TW DEG. R	STN NO R=.900
71	.76000-01	350.00	206.00	.1042	.1229	.1350	42.00	4.375	.3424	542.3	.3251-02
79	.97500	381.20	1288.0	.4675-01	.5530-01	.6087-01	38.96	1.822	.3533	540.8	.1465-02

IH103 60-OT FUSELAGE (R3PC08)

FUSELAGE

PARAMETRIC DATA

MACH = 5.250 ALPHA = 10.00 BETA = -5.000 ELEVON = .0000
BDFLAP = .0000 SPDBRK = .0000

TEST CONDITIONS

RUN NUMBER	ALPHA DEG.	BETA DEG.	MACH	RN/FT /FT X10 6	PT PSIA	TT DEG. R	HT BTU/ LBM	PINF PSIA	TINF DEG. R	RHO SLUGS/ FT3	VINF FT/SEC	SCALE
72	5.000	-5.000	5.250	1.044	103.8	1499.	369.3	.1431	236.3	.5082-04	3956.	.1750-01
80	10.00	-5.000	5.250	1.024	102.2	1503.	370.2	.1408	236.9	.4989-04	3961.	.1750-01

RUN NUMBER	PHI DEG.	HS SPHERE TW=540
72	.0000	.1680
80	.0000	.1667

TEST DATA

RUN NUMBER	XB/LB	ZO	T/C NO	H/HREF R=1.0	H/HREF R=.900	H/HREF R=.850	QREF BTU/ FT2SEC	QDOT BTU/ FT2SEC	HW/HT	TW DEG. R	STN NO R=.900
72	.76000-01	350.00	206.00	.9006-01	.1065	.1172	40.15	3.616	.3526	542.7	.2766-02
80	.97500	381.20	1288.0	.5012-01	.5929-01	.6526-01	39.89	1.999	.3534	545.3	.1554-02

IH103 60-OT FUSELAGE (R3PC09)

FUSELAGE

PARAMETRIC DATA

MACH = 5.250 ALPHA = .0000 BETA = -3.000 ELEVON = .0000
BDFLAP = .0000 SPDBRK = .0000

TEST CONDITIONS

RUN NUMBER	ALPHA DEG.	BETA DEG.	MACH	RN/FT /FT X10 6	PT PSIA	TT DEG. R	HT BTU/ LBM	PINF PSIA	TINF DEG. R	RHO SLUGS/ FT3	VINF FT/SEC	SCALE
48	.0000	-3.000	5.250	1.062	103.9	1484.	365.3	.1434	233.8	.5146-04	3934.	.1750-01
93	.0000	-3.000	5.250	1.074	104.3	1478.	363.7	.1440	232.7	.5192-04	3926.	.1750-01

RUN NUMBER	PHI DEG.	HS SPHERE TW=540
48	.0000	.1679
93	.0000	.1682

TEST DATA

RUN NUMBER	XB/LB	ZO	T/C NO	H/HREF R=1.0	H/HREF R=.900	H/HREF R=.850	QREF BTU/ FT2SEC	QDOT BTU/ FT2SEC	HW/HT	TW DEG. R	STN NO R=.900
48	.76000-01	350.00	206.00	.1085	.1284	.1413	39.62	4.299	.3542	539.3	.3310-02
93	.97500	381.20	1288.0	.3093-01	.3673-01	.4053-01	38.72	1.198	.3667	555.7	.9416-03

IH103 60-OT FUSELAGE (R3PC10)

FUSELAGE

PARAMETRIC DATA

MACH = 5.250 ALPHA = -5.000 BETA = -3.000 ELEVON = .0000
BDFLAP = .0000 SPDBRK = .0000

TEST CONDITIONS

RUN NUMBER	ALPHA DEG.	BETA DEG.	MACH	RN/FT /FT X10 6	PT PSIA	TT DEG. R	HT BTU/ LBM	PINF PSIA	TINF DEG. R	RHO SLUGS/ FT3	VINF FT/SEC	SCALE
47	-5.000	-3.000	5.250	1.069	103.7	1477.	363.3	.1431	232.5	.5165-04	3924.	.1750-01
94	-5.000	-3.000	5.250	1.005	103.7	1534.	378.4	.1425	242.1	.4939-04	4004.	.1750-01

RUN NUMBER	PHI DEG.	HS SPHERE TW=540
47	.0000	.1677
94	.0000	.1680

TEST DATA

RUN NUMBER	XB/LB	ZO	T/C NO	H/HREF R=1.0	H/HREF R=.900	H/HREF R=.850	QREF BTU/ FT2SEC	QDOT BTU/ FT2SEC	HW/HT	TW DEG. R	STN NO R=.900
47	.76000-01	350.00	206.00	.1155	.1368	.1507	39.12	4.520	.3579	542.0	.3519-02
94	.97500	381.20	1288.0	.3402-01	.4024-01	.4429-01	41.10	1.398	.3531	556.8	.1062-02

IH103 60-OT FUSELAGE (R3PC11)

FUSELAGE

PARAMETRIC DATA

MACH = 5.250 ALPHA = 5.000 BETA = -3.000 ELEVON = .0000
BDFLAP = .0000 SPDBRK = .0000

TEST CONDITIONS

RUN NUMBER	ALPHA DEG.	BETA DEG.	MACH	RN/FT /FT X10 6	PT PSIA	TT DEG. R	HT BTU/ LBM	PINF PSIA	TINF DEG. R	RHO SLUGS/ FT3	VINF FT/SEC	SCALE
49	5.000	-3.000	5.250	1.047	102.8	1487.	366.2	.1418	234.3	.5077-04	3939.	.1750-01
95	5.000	-3.000	5.250	1.012	102.9	1520.	374.9	.1416	239.9	.4954-04	3986.	.1750-01

RUN NUMBER	PHI DEG.	HS SPHERE TW=540
49	.0000	.1670
95	.0000	.1673

TEST DATA

RUN NUMBER	XB/LB	ZO	T/C NO	H/HREF R=1.0	H/HREF R=.900	H/HREF R=.850	QREF BTU/ FT2SEC	QDOT BTU/ FT2SEC	HW/HT	TW DEG. R	STN NO R=.900
49	.76000-01	350.00	206.00	.9228-01	.1091	.1200	39.68	3.662	.3513	536.2	.2833-02
95	.97500	381.20	1288.0	.2723-01	.3227-01	.3555-01	40.19	1.095	.3587	560.3	.8491-03

IH103 60-OT FUSELAGE (R3PC12)

FUSELAGE

PARAMETRIC DATA

MACH = 5.250 ALPHA = 10.00 BETA = -3.000 ELEVON = .0000
BDFLAP = .0000 SPDBRK = .0000

TEST CONDITIONS

RUN NUMBER	ALPHA DEG.	BETA DEG.	MACH	RN/FT /FT X10 6	PT PSIA	TT DEG. R	HT BTU/ LBM	PINF PSIA	TINF DEG. R	RHO SLUGS/ FT3	VINF FT/SEC	SCALE
50	10.00	-3.000	5.250	1.015	101.8	1507.	371.4	.1402	237.7	.4950-04	3967.	.1750-01
96	10.00	-3.000	5.250	1.046	102.9	1490.	366.9	.1420	234.8	.5074-04	3943.	.1750-01

RUN NUMBER	PHI DEG.	HS SPHERE TW=540
50	.0000	.1664
96	.0000	.1672

TEST DATA

RUN NUMBER	XB/LB	ZO	T/C NO	H/HREF R=1.0	H/HREF R=.900	H/HREF R=.850	QREF BTU/ FT2SEC	QDOT BTU/ FT2SEC	HW/HT	TW DEG. R	STN NO R=.900
50	.76000-01	350.00	206.00	.8046-01	.9519-01	.1048	39.91	3.211	.3539	547.9	.2505-02
96	.97500	381.20	1288.0	.3722-01	.4407-01	.4854-01	39.45	1.468	.3567	545.5	.1144-02

IH103 60-OT FUSELAGE (R3PC13)

FUSELAGE

PARAMETRIC DATA

MACH = 5.250 ALPHA = .0000 BETA = -9.000 ELEVON = .0000
BDFLAP = .0000 SPDBRK = .0000

TEST CONDITIONS

RUN NUMBER	ALPHA DEG.	BETA DEG.	MACH	RN/FT /FT X10 6	PT PSIA	TT DEG. R	HT BTU/ LBM	PINF PSIA	TINF DEG. R	RHO SLUGS/ FT3	VINF FT/SEC	SCALE
53	.0000	-9.000	5.250	1.015	101.9	1509.	371.8	.1404	237.9	.4952-04	3969.	.1750-01
100	.0000	-9.000	5.250	1.056	104.1	1491.	367.2	.1435	235.0	.5127-04	3944.	.1750-01

RUN NUMBER	PHI DEG.	HS SPHERE TW=540
53	.0000	.1665
100	.0000	.1681

TEST DATA

RUN NUMBER	XB/LB	ZO	T/C NO	H/HREF R=1.0	H/HREF R=.900	H/HREF R=.850	QREF BTU/ FT2SEC	QDOT BTU/ FT2SEC	HW/HT	TW DEG. R	STN NO R=.900
53	.76000-01	350.00	206.00	.1417	.1677	.1847	39.89	5.652	.3553	550.6	.4414-02
100	.97500	381.20	1288.0	.5541-01	.6568-01	.7238-01	39.47	2.187	.3603	551.4	.1696-02

IH103 60-OT FUSELAGE (R3PC14)

FUSELAGE

PARAMETRIC DATA

MACH = 5.250 ALPHA = -5.000 BETA = -9.000 ELEVON = .0000
BDFLAP = .0000 SPDBRK = .0000

TEST CONDITIONS

RUN NUMBER	ALPHA DEG.	BETA DEG.	MACH	RN/FT /FT X10 6	PT PSIA	TT DEG. R	HT BTU/ LBM	PINF PSIA	TINF DEG. R	RHO SLUGS/ FT3	VINF FT/SEC	SCALE
54	-5.000	-9.000	5.250	1.031	101.6	1491.	367.2	.1401	235.0	.5004-04	3945.	.1750-01
99	-5.000	-9.000	5.250	1.045	102.9	1490.	366.9	.1420	234.8	.5073-04	3943.	.1760-01

RUN NUMBER	PHI DEG.	HS SPHERE TW=540
54	.0000	.1661
99	.0000	.1672

TEST DATA

RUN NUMBER	XB/LB	ZO	T/C NO	H/HREF R=1.0	H/HREF R=.900	H/HREF R=.850	QREF BTU/ FT2SEC	QDOT BTU/ FT2SEC	HW/HT	TW DEG. R	STN NO R=.9[illegible]0
54	.76000-01	350.00	206.00	.1573	.1867	.2059	38.77	6.100	.3640	557.1	.4880-02
99	.97500	38[illegible].20	1288.0	.7724-01	.9165-01	.1011	39.00	3.012	.3638	556.4	.2379-02

IH103 60-OT FUSELAGE (R3PC15)

FUSELAGE

PARAMETRIC DATA

MACH = 5.250 ALPHA = 5.000 BETA = -9.000 ELEVON = .0000
BDFLAP = .0000 SPDBRK = .0000

TEST CONDITIONS

RUN NUMBER	ALPHA DEG.	BETA DEG.	MACH	RN/FT /FT X10 6	PT PSIA	TT DEG. R	HT BTU/ LBM	PINF PSIA	TINF DEG. R	RHO SLUGS/ FT3	VINF FT/SEC	SCALE
55	-5.000	-9.000	5.250	1.043	101.7	1481.	364.6	.1404	233.3	.5049-04	3930.	.1750-01
98	5.000	-9.000	5.250	1.057	103.4	1484.	365.2	.1426	233.7	.5120-04	3934.	.1750-01

RUN NUMBER	PHI DEG.	HS SPHERE TW=540
55	.0000	.1661
98	.0000	.1675

TEST DATA

RUN NUMBER	XB/LB	ZO	T/C NO	H/HREF R=1.0	H/HREF R=.900	H/HREF R=.850	QREF BTU/ FT2SEC	QDOT BTU/ FT2SEC	HW/HT	TW DEG. R	STN NO R=.900
55	.76000-01	350.00	206.00	.1218	.1447	.1598	38.12	4.641	.3700	562.2	.3763-02
98	.97500	381.20	1288.0	.6117-01	.7254-01	.7998-01	39.00	2.385	.3621	551.1	.1874-02

IH103 60-OT FUSELAGE (R3PC16)

FUSELAGE

PARAMETRIC DATA

MACH = 5.250 ALPHA = 10.00 BETA = -9.000 ELEVON = .0000
BDFLAP = .0000 SPDBRK = .0000

TEST CONDITIONS

RUN NUMBER	ALPHA DEG.	BETA DEG.	MACH	RN/FT /FT X10 6	PT PSIA	TT DEG. R	HT BTU/ LBM	PINF PSIA	TINF DEG. R	RHO SLUGS/ FT3	VINF FT/SEC	SCALE
56	10.00	-9.000	5.250	1.019	101.9	1504.	370.6	.1403	237.2	.4965-04	3963.	.1750-01
97	10.00	-9.000	5.250	1.033	103.2	1504.	370.5	.1422	237.1	.5033-04	3962.	.1750-01

RUN NUMBER	PHI DEG.	HS SPHERE TW=540
56	.0000	.1664
97	.0000	.1675

TEST DATA

RUN NUMBER	XB/LB	ZO	T/C NO	H/HREF R=1.0	H/HREF R=.900	H/HREF R=.850	QREF BTU/ FT2SEC	QDOT BTU/ FT2SEC	HW/HT	TW DEG. R	STN NO R=.900
56	.76000-01	350.00	206.00	.1134	.1344	.1481	39.36	4.461	.3613	558.1	.3529-02
97	.97500	381.20	1288.0	.6774-01	.8014-01	.8822-01	40.08	2.715	.3539	546.4	.2091-02

IH103 60-OT FUSELAGE (R3PC17)

FUSELAGE

PARAMETRIC DATA

MACH = 5.250 ALPHA = -10.00 BETA = -9.000 ELEVON = .0000
BDFLAP = .0000 SPDBRK = .0000

TEST CONDITIONS

RUN NUMBER	ALPHA DEG.	BETA DEG.	MACH	RN/FT /FT X10 6	PT PSIA	TT DEG. R	HT BTU/ LBM	PINF PSIA	TINF DEG. R	RHO SLUGS/ FT3	VINF FT/SEC	SCALE
108	-10.00	-9.000	5.250	1.066	103.4	1476.	363.2	.1427	232.5	.5153-04	3923.	.1750-01
110	-10.00	-9.000	5.250	1.092	103.7	1458.	358.4	.1434	229.4	.5246-04	3897.	.1750-01

RUN NUMBER	PHI DEG.	HS SPHERE TW=540
108	.0000	.1675
110	.0000	.1676

TEST DATA

RUN NUMBER	XB/LB	ZO	T/C NO	H/HREF R=1.0	H/HREF R=.900	H/HREF R=.850	QREF BTU/ FT2SEC	QDOT BTU/ FT2SEC	HW/HT	TW DEG. R	STN NO R=.900
108	.76000-01	350.00	206.00	.1728	.2057	.2273	38.01	6.568	.3745	566.9	.5290-02
110	.97500	381.20	1288.0	.6089-01	.7271-01	.8053-01	36.89	2.246	.3851	575.2	.1850-02

IH103 60-OT FUSELAGE (R3PC18)

FUSELAGE

PARAMETRIC DATA

MACH = 5.250 ALPHA = -10.00 BETA = -3.000 ELEVON = .0000
BDFLAP = .0000 SPDBRK = .0000

TEST CONDITIONS

RUN NUMBER	ALPHA DEG.	BETA DEG.	MACH	RN/FT /FT X10 6	PT PSIA	TT DEG. R	HT BTU/ LBM	PINF PSIA	TINF DEG. R	RHO SLUGS/ FT3	VINF FT/SEC	SCALE
111	-10.00	-3.000	5.250	1.024	103.5	1514.	373.3	.1425	238.9	.5005-04	3977.	.1750-01
113	-10.00	-3.000	5.250	1.041	103.0	1494.	367.9	.1419	235.5	.5058-04	3949.	.1750-01

RUN NUMBER	PHI DEG.	HS SPHERE TW=540
111	.0000	.1678
113	.0000	.1672

TEST DATA

RUN NUMBER	XB/LB	ZO	T/C NO	H/HREF R=1.0	H/HREF R=.900	H/HREF R=.850	QREF BTU/ FT2SEC	QDOT BTU/ FT2SEC	HW/HT	TW DEG. R	STN NO R=.900
113	.76000-01	350.00	206.00	.1327	.1571	.1729	39.67	5.265	.3550	544.4	.4086-02
111	.97500	381.20	1288.0	.5566-01	.6579-01	.7238-01	40.64	2.262	.3509	545.9	.1723-02

IH103 60-OT FUSELAGE (R3PC19)

FUSELAGE

PARAMETRIC DATA

MACH = 5.250 ALPHA = -10.00 BETA = -5.000 ELEVON = .0000
BDFLAP = .0000 SPDBRK = .0000

TEST CONDITIONS

RUN NUMBER	ALPHA DEG.	BETA DEG.	MACH	RN/FT /FT X10 6	PT PSIA	TT DEG. R	HT BTU/ LBM	PINF PSIA	TINF DEG. R	RHO SLUGS/ FT3	VINF FT/SEC	SCALE
118	-10.00	-5.000	5.250	1.036	102.9	1498.	368.8	.1418	236.0	.5040-04	3953.	.1750-01
120	-10.00	-5.000	5.250	1.081	103.6	1466.	360.5	.1432	230.7	.5207-04	3909.	.1750-01

RUN NUMBER	PHI DEG.	HS SPHERE TW=540
118	.0000	.1672
120	.0000	.1676

TEST DATA

RUN NUMBER	XB/LB	ZO	T/C NO	H/HREF R=1.0	H/HREF R=.900	H/HREF R=.850	QREF BTU/ FT2SEC	QDOT BTU/ FT2SEC	HW/HT	TW DEG. R	STN NO R=.900
118	.76000-01	350.00	206.00	.1644	.1948	.2146	39.53	6.500	.3586	551.2	.5077-02
120	.97500	381.20	1288.0	.6334-01	.7534-01	.8323-01	37.89	2.400	.3724	559.5	.1927-02

IH103 60-OT FUSELAGE (R3PC20)

FUSELAGE

PARAMETRIC DATA

MACH = 5.250 ALPHA = -10.00 BETA = .0000 ELEVON = .0000
BDFLAP = .0000 SPDBRK = .0000

TEST CONDITIONS

RUN NUMBER	ALPHA DEG.	BETA DEG.	MACH	RN/FT /FT X10 6	PT PSIA	TT DEG. R	HT BTU/ LBM	PINF PSIA	TINF DEG. R	RHO SLUGS/ FT3	VINF FT/SEC	SCALE
121	-10.00	.0000	5.250	.9993	103.7	1539.	379.8	.1425	243.0	.4920-04	4011.	.1750-01
123	-10.00	.0000	5.250	1.039	103.6	1501.	369.8	.1427	236.6	.5060-04	3959.	.1750-01

RUN NUMBER	PHI DEG.	HS SPHERE TW=540
121	.0000	.1681
123	.0000	.1677

TEST DATA

RUN NUMBER	XB/LB	ZO	T/C NO	H/HREF R=1.0	H/HREF R=.900	H/HREF R=.850	QREF BTU/ FT2SEC	QDOT BTU/ FT2SEC	HW/HT	TW DEG. R	STN NO R=.900
123	.76000-01	350.00	206.00	.1248	.1479	.1630	39.65	4.949	.3604	555.4	.3848-02
121	.97500	381.20	1288.0	.5245-01	.6205-01	.6831-01	41.19	2.161	.3539	560.2	.1641-02

IH103 60-OT FUSELAGE (R3PC21)

FUSELAGE

PARAMETRIC DATA

MACH = 5.250 ALPHA = .0000 BETA = .0000 ELEVON = .0000
BDFLAP = .0000 SPDBRK = .0000

TEST CONDITIONS

RUN NUMBER	ALPHA DEG.	BETA DEG.	MACH	RN/FT /FT X10 6	PT PSIA	TT DEG. R	HT BTU/ LBM	PINF PSIA	TINF DEG. R	RHO SLUGS/ FT3	VINF FT/SEC	SCALE
129	.0000	.0000	5.250	.6601	103.8	1978.	498.3	.1374	318.9	.3615-04	4595.	.1750-01
131	.0000	.0000	5.250	.6469	103.6	1999.	504.0	.1367	322.6	.3557-04	4622.	.1750-01

RUN NUMBER	PHI DEG.	HS SPHERE TW=540
129	.0000	.1691
131	.0000	.1689

TEST DATA

RUN NUMBER	XB/LB	ZO	T/C NO	H/HREF R=1.0	H/HREF R=.900	H/HREF R=.850	QREF BTU/ FT2SEC	QDOT BTU/ FT2SEC	HW/HT	TW DEG. R	STN NO R=.900
129	.76000-01	350.00	206.00	.9731-01	.1126	.1222	62.11	6.043	.2629	546.0	.3561-02
131	.97500	381.20	1288.0	.2510-01	.2905-01	.3152-01	62.68	1.573	.2633	553.1	.9269-03

IH103 60-OT LOWER NOSE (R3PD01)

LOWER NOSE

PARAMETRIC DATA

MACH = 5.250 ALPHA = .0000 BETA = .0000 ELEVON = .0000
BDFLAP = .0000 SPDBRK = .0000

TEST CONDITIONS

RUN NUMBER	ALPHA DEG.	BETA DEG.	MACH	RN/FT /FT X10 6	PT PSIA	TT DEG. R	HT BTU/ LBM	PINF PSIA	TINF DEG. R	RHO SLUGS/ FT3	VINF FT/SEC	SCALE
84	.0000	.0000	5.250	1.008	102.8	1523.	375.5	.1415	240.3	.4941-04	3989.	.1750-01

RUN NUMBER	PHI DEG.	HS SPHERE TW=540
84	.0000	.1673

TEST DATA

RUN NUMBER	YO MS	XO MS	T/C NO	H/HREF R=1.0	H/HREF R=.900	H/HREF R=.850	QREF BTU/ FT2SEC	QDOT BTU/ FT2SEC	HW/HT	TW DEG. R	STN NO R=.900
84	.25200	4.5530	2037.0	.1709	.2018	.2219	40.95	6.998	.3479	544.5	.5324-02

IH103 60-OT LOWER NOSE

(R3PD02)

LOWER NOSE

PARAMETRIC DATA

MACH = 5.250 ALPHA = -5.000 BETA = .0000 ELEVON = .0000
BDFLAP = .0000 SPDBRK = .0000

TEST CONDITIONS

RUN NUMBER	ALPHA DEG.	BETA DEG.	MACH	RN/FT /FT X10 6	PT PSIA	TT DEG. R	HT BTU/ LBM	PINF PSIA	TINF DEG. R	RHO SLUGS/ FT3	VINF FT/SEC	SCALE
83	-5.000	.0000	5.250	1.048	103.8	1496.	368.3	.1430	235.7	.5092-04	3951.	.1750-01

RUN NUMBER	PHI DEG.	HS SPHERE TW=540
83	.0000	.1679

TEST DATA

RUN NUMBER	YO MS	XO MS	T/C NO	H/HREF R=1.0	H/HREF R=.900	H/HREF R=.850	QREF BTU/ FT2SEC	QDOT BTU/ FT2SEC	HW/HT	TW DEG. R	STN NO R=.900
83	.25200	4.5530	2037.0	.1789	.2118	.2332	39.83	7.126	.3557	546.0	.5492-02

IH103 60-OT LOWER NOSE (R3PD03)

LOWER NOSE

PARAMETRIC DATA

MACH = 5.250 ALPHA = 5.000 BETA = .0000 ELEVON = .0000
BDFLAP = .0000 SPDBRK = .0000

TEST CONDITIONS

RUN NUMBER	ALPHA DEG.	BETA DEG.	MACH	RN/FT /FT X10 6	PT PSIA	TT DEG. R	HT BTU/ LBM	PINF PSIA	TINF DEG. R	RHO SLUGS/ FT3	VINF FT/SEC	SCALE
82	5.000	.0000	5.250	1.000	101.7	1521.	374.9	.1400	239.9	.4897-04	3986.	.1750-01

RUN NUMBER	PHI DEG.	HS SPHERE TW=540
82	.0000	.1664

TEST DATA

RUN NUMBER	YO MS	XO MS	T/C NO	H/HREF R=1.0	H/HREF R=.900	H/HREF R=.850	QREF BTU/ FT2SEC	QDOT BTU/ FT2SEC	HW/HT	TW DEG. R	STN NO R=.900
82	.25200	4.5530	2037.0	.1519	.1795	.1974	40.57	6.162	.3493	545.7	.4753-02

IH103 60-OT LOWER NOSE (R3PD04)

LOWER NOSE

PARAMETRIC DATA

MACH = 5.250 ALPHA = 10.00 BETA = .0000 ELEVON = .0000
BDFLAP = .0000 SPDBRK = .0000

TEST CONDITIONS

RUN NUMBER	ALPHA DEG.	BETA DEG.	MACH	RN/FT /FT X10 6	PT PSIA	TT DEG. R	HT BTU/ LBM	PINF PSIA	TINF DEG. R	RHO SLUGS/ FT3	VINF FT/SEC	SCALE
81	10.00	-5.000	5.250	1.029	101.8	1494.	368.0	.1404	235.5	.5001-04	3949.	.1750-01

RUN NUMBER	PHI DEG.	HS SPHERE TW=540
81	.0000	.1663

TEST DATA

RUN NUMBER	YO MS	XO MS	T/C NO	H/HREF R=1.0	H/HREF R=.900	H/HREF R=.850	QREF BTU/ FT2SEC	QDOT BTU/ FT2SEC	HW/HT	TW DEG. R	STN NO R=.900
81	.25200	4.5530	2037.0	.1722	.2039	.2246	39.35	6.778	.3568	547.2	.5335-02

IH103 60-OT LOWER NOSE

LOWER NOSE

PARAMETRIC DATA

MACH = 5.250 ALPHA = .0000 BETA = -5.000 ELEVON = .0000
BDFLAP = .0000 SPDBRK = .0000

TEST CONDITIONS

RUN NUMBER	ALPHA DEG.	BETA DEG.	MACH	RN/FT /FT X10 6	PT PSIA	TT DEG. R	HT BTU/ LBM	PINF PSIA	TINF DEG. R	RHO SLUGS/ FT3	VINF FT/SEC	SCALE
77	.0000	-5.000	5.250	1.043	103.3	1496.	368.4	.1425	235.8	.5070-04	3951.	.1750-01

RUN NUMBER	PHI DEG.	HS SPHERE TW=540
77	.0000	.1675

TEST DATA

RUN NUMBER	YO MS	XO MS	T/C NO	H/HREF R=1.0	H/HREF R=.900	H/HREF R=.850	QREF BTU/ FT2SEC	QDOT BTU/ FT2SEC	HW/HT	TW DEG. R	STN NO R=.900
77	.25200	4.5530	2037.0	.1903	.2257	.2488	39.39	7.498	.3614	555.0	.5863-02

IH103 60-OT LOWER NOSE (R3PD06)

LOWER NOSE

PARAMETRIC DATA

MACH = 5.250 ALPHA = -5.000 BETA = -5.000 ELEVON = .0000
BDFLAP = .0000 SPDBRK = .0000

TEST CONDITIONS

RUN NUMBER	ALPHA DEG.	BETA DEG.	MACH	RN/FT /FT X10 6	PT PSIA	TT DEG. R	HT BTU/ LBM	PINF PSIA	TINF DEG. R	RHO SLUGS/ FT3	VINF FT/SEC	SCALE
78	-5.000	-5.000	5.250	.9991	96.86	1476.	363.2	.1337	232.4	.4828-04	3923.	.1750-01

RUN NUMBER	PHI DEG.	HS SPHERE TW=540
78	.0000	.1621

TEST DATA

RUN NUMBER	YO MS	XO MS	T/C NO	H/HREF R=1.0	H/HREF R=.900	H/HREF R=.850	QREF BTU/ FT2SEC	QDOT BTU/ FT2SEC	HW/HT	TW DEG. R	STN NO R=.900
78	.25200	4.5530	2037.0	.2052	.2436	.2688	37.28	7.648	.3664	554.5	.6476-02

IH103 60-OT LOWER NOSE (R3PD07)

LOWER NOSE

PARAMETRIC DATA

MACH = 5.250 ALPHA = 5.000 BETA = -5.000 ELEVON = .0000
BDFLAP = .0000 SPDBRK = .0000

TEST CONDITIONS

RUN NUMBER	ALPHA DEG.	BETA DEG.	MACH	RN/FT /FT X10 6	PT PSIA	TT DEG. R	HT BTU/ LBM	PINF PSIA	TINF DEG. R	RHO SLUGS/ FT3	VINF FT/SEC	SCALE
79	5.000	-5.000	5.250	1.004	99.07	1492.	367.3	.1366	235.1	.4877-04	3945.	.1750-01

RUN NUMBER	PHI DEG.	HS SPHERE TW=540
79	.0000	.1640

TEST DATA

RUN NUMBER	YO MS	XO MS	T/C NO	H/HREF R=1.0	H/HREF R=.900	H/HREF R=.850	QREF BTU/ FT2SEC	QDOT BTU/ FT2SEC	HW/HT	TW DEG. R	STN NO R=.900
79	.25200	4.5530	2037.0	.1814	.2146	.2362	38.97	7.071	.3530	540.4	.5686-02

IH103 60-OT LOWER NOSE

(R3PD08)

LOWER NOSE

PARAMETRIC DATA

MACH = 5.250 ALPHA = 10.00 BETA = -5.000 ELEVON = .0000
BDFLAP = .0000 SPDBRK = .0000

TEST CONDITIONS

RUN NUMBER	ALPHA DEG.	BETA DEG.	MACH	RN/FT /FT X10 6	PT PSIA	TT DEG. R	HT BTU/ LBM	PINF PSIA	TINF DEG. R	RHO SLUGS/ FT3	VINF FT/SEC	SCALE
80	10.00	-5.000	5.250	1.024	102.2	1503.	370.2	.1408	236.9	.4989-04	3961.	.1750-01

RUN NUMBER	PHI DEG.	HS SPHERE TW=540
80	.0000	.1667

TEST DATA

RUN NUMBER	YO MS	XO MS	T/C NO	H/HREF R=1.0	H/HREF R=.900	H/HREF R=.850	QREF BTU/ FT2SEC	QDOT BTU/ FT2SEC	HW/HT	TW DEG. R	STN NO R=.900
80	.25200	4.5530	2037.0	.1598	.1891	.2081	39.85	6.368	.3540	546.2	.4955-02

IH103 60-OT LOWER NOSE (R3PD09)

LOWER NOSE

PARAMETRIC DATA

MACH = 5.250 ALPHA = .0000 BETA = -3.000 ELEVON = .0000
BDFLAP = .0000 SPDBRK = .0000

TEST CONDITIONS

RUN NUMBER	ALPHA DEG.	BETA DEG.	MACH	RN/FT /FT X10 6	PT PSIA	TT DEG. R	HT BTU/ LBM	PINF PSIA	TINF DEG. R	RHO SLUGS/ FT3	VINF FT/SEC	SCALE
93	.0000	-3.000	5.250	1.074	104.3	1478.	363.7	.1440	232.7	.5192-04	3926.	.1750-01

RUN NUMBER	PHI DEG.	HS SPHERE TW=540
93	.0000	.1682

TEST DATA

RUN NUMBER	YO MS	XO MS	T/C NO	H/HREF R=1.0	H/HREF R=.900	H/HREF R=.850	QREF BTU/ FT2SEC	QDOT BTU/ FT2SEC	HW/HT	TW DEG. R	STN NO R=.900
93	.25200	4.5530	2037.0	.1713	.2034	.2245	38.70	6.627	.3671	556.3	.5215-02

IH103 60-OT LOWER NOSE

(R3PD10)

LOWER NOSE

PARAMETRIC DATA

MACH = 5.250 ALPHA = -5.000 BETA = -3.000 ELEVON = .0000
BDFLAP = .0000 SPDBRK = .0000

TEST CONDITIONS

RUN NUMBER	ALPHA DEG.	BETA DEG.	MACH	RN/FT /FT X10 6	PT PSIA	TT DEG. R	HT BTU/ LBM	PINF PSIA	TINF DEG. R	RHO SLUGS/ FT3	VINF FT/SEC	SCALE
94	-5.000	-3.000	5.250	1.005	103.7	1534.	378.4	.1425	242.1	.4939-04	4004.	.1750-01

RUN NUMBER	PHI DEG.	HS SPHERE TW=540
94	.0000	.1680

TEST DATA

RUN NUMBER	YO MS	XO MS	T/C NO	H/HREF R=1.0	H/HREF R=.900	H/HREF R=.850	QREF BTU/ FT2SEC	QDOT BTU/ FT2SEC	HW/HT	TW DEG. R	STN NO R=.900
94	.25200	4.5530	2037.0	.1931	.2285	.2515	40.99	7.914	.3546	559.2	.6027-02

IH103 60-OT LOWER NOSE (R3PD11)

LOWER NOSE

PARAMETRIC DATA

MACH = 5.250 ALPHA = 5.000 BETA = -3.000 ELEVON = .0000
BDFLAP = .0000 SPDBRK = .0000

TEST CONDITIONS

RUN NUMBER	ALPHA DEG.	BETA DEG.	MACH	RN/FT /FT X10 6	PT PSIA	TT DEG. R	HT BTU/ LBM	PINF PSIA	TINF DEG. R	RHO SLUGS/ FT3	VINF FT/SEC	SCALE
95	5.000	-3.000	5.250	1.012	102.9	1520.	374.9	.1416	239.9	.4954-04	3986.	.1750-01

RUN NUMBER	PHI DEG.	HS SPHERE TW=540
95	.0000	.1673

TEST DATA

RUN NUMBER	YO MS	XO MS	T/C NO	H/HREF R=1.0	H/HREF R=.900	H/HREF R=.850	QREF BTU/ FT2SEC	QDOT BTU/ FT2SEC	HW/HT	TW DEG. R	STN NO R=.900
95	.25200	4.5530	2037.0	.1673	.1982	.2184	40.21	6.728	.3584	559.9	.5216-02

IH103 60-OT LOWER NOSE (R3PD12)

LOWER NOSE

PARAMETRIC DATA

MACH = 5.250 ALPHA = 10.00 BETA = -3.000 ELEVON = .0000
BDFLAP = .0000 SPDBRK = .0000

TEST CONDITIONS

RUN NUMBER	ALPHA DEG.	BETA DEG.	MACH	RN/FT /FT X10 6	PT PSIA	TT DEG. R	HT BTU/ LBM	PINF PSIA	TINF DEG. R	RHO SLUGS/ FT3	VINF FT/SEC	SCALE
96	10.00	-3.000	5.250	1.046	102.9	1490.	366.9	.1420	234.8	.5074-04	3943.	.1750-01

RUN NUMBER	PHI DEG.	HS SPHERE TW=540
96	.0000	.1672

TEST DATA

RUN NUMBER	YO MS	XO MS	T/C NO	H/HREF R=1.0	H/HREF R=.900	H/HREF R=.850	QREF BTU/ FT2SEC	QDOT BTU/ FT2SEC	HW/HT	TW DEG. R	STN NO R=.900
96	.25200	4.5530	2037.0	.1704	.2017	.2221	39.53	6.735	.3555	543.6	.5238-02

IH103 60-OT LOWER NOSE (R3PD13)

LOWER NOSE

PARAMETRIC DATA

MACH = 5.250 ALPHA = .0000 BETA = -9.000 ELEVON = .0000
BDFLAP = .0000 SPDBRK = .0000

TEST CONDITIONS

RUN NUMBER	ALPHA DEG.	BETA DEG.	MACH	RN/FT /FT X10 6	PT PSIA	TT DEG. R	HT BTU/ LBM	PINF PSIA	TINF DEG. R	RHO SLUGS/ FT3	VINF FT/SEC	SCALE
100	.0000	-9.000	5.250	1.056	104.1	1491.	367.2	.1435	235.0	.5127-04	3944.	.1750-01

RUN NUMBER	PHI DEG.	HS SPHERE TW=540
100	.0000	.1681

TEST DATA

RUN NUMBER	YO MS	XO MS	T/C NO	H/HREF R=1.0	H/HREF R=.900	H/HREF R=.850	QREF BTU/ FT2SEC	QDOT BTU/ FT2SEC	HW/HT	TW DEG. R	STN NO R=.900
100	.25200	4.5530	2037.0	.1983	.2349	.2587	39.69	7.872	.3569	546.1	.6067-02

IH103 60-OT LOWER NOSE (R3PD14)

LOWER NOSE

PARAMETRIC DATA

MACH = 5.250 ALPHA = -5.000 BETA = -9.000 ELEVON = .0000
BDFLAP = .0000 SPDBRK = .0000

TEST CONDITIONS

RUN NUMBER	ALPHA DEG.	BETA DEG.	MACH	RN/FT /FT X10 6	PT PSIA	TT DEG. R	HT BTU/ LBM	PINF PSIA	TINF DEG. R	RHO SLUGS/ FT3	VINF FT/SEC	SCALE
99	-5.000	-9.000	5.250	1.045	102.9	1490.	366.9	.1420	234.8	.5073-04	3943.	.1750-01

RUN NUMBER	PHI DEG.	HS SPHERE TW=540
99	.0000	.1672

TEST DATA

RUN NUMBER	YO MS	XO MS	T/C NO	H/HREF R=1.0	H/HREF R=.900	H/HREF R=.850	QREF BTU/ FT2SEC	QDOT BTU/ FT2SEC	HW/H1	TW DEG. R	STN NO R=.900
99	.25200	4.5530	2037.0	.2174	.2578	.2842	39.11	8.503	.3620	553.7	.6693-02

IH103 60-OT LOWER NOSE (R3PD15)

LOWER NOSE

PARAMETRIC DATA

MACH = 5.250 ALPHA = 5.000 BETA = -9.000 ELEVON = .0000
BDFLAP = .0000 SPDBRK = .0000

TEST CONDITIONS

RUN NUMBER	ALPHA DEG.	BETA DEG.	MACH	RN/FT /FT X10 6	PT PSIA	TT DEG. R	HT BTU/ LBM	PINF PSIA	TINF DEG. R	RHO SLUGS/ FT3	VINF FT/SEC	SCALE
98	5.000	-9.000	5.250	1.057	103.4	1484.	365.2	.1426	233.7	.5120-04	3934.	.1750-01

RUN NUMBER	PHI DEG.	HS SPHERE TW=540
98	.0000	.1675

TEST DATA

RUN NUMBER	YO MS	XO MS	T/C NO	H/HREF R=1.0	H/HREF R=.900	H/HREF R=.850	QREF BTU/ FT2SEC	QDOT BTU/ FT2SEC	HW/HT	TW DEG. R	STN NO R=.900
98	.25200	4.5530	2037.0	.1845	.2188	.2411	39.06	7.208	.3611	549.5	.5652-02

IH103 60-OT LOWER NOSE

LOWER NOSE

PARAMETRIC DATA

MACH = 5.250 ALPHA = 10.00 BETA = -9.000 ELEVON = .0000
BDFLAP = .0000 SPDBRK = .0000

TEST CONDITIONS

RUN NUMBER	ALPHA DEG.	BETA DEG.	MACH	RN/FT /FT X10 6	PT PSIA	TT DEG. R	HT BTU/ LBM	PINF PSIA	TINF DEG. R	RHO SLUGS/ FT3	VINF FT/SEC	SCALE
97	10.00	-9.000	5.250	1.033	103.2	1504.	370.5	.1422	237.1	.5033-04	3962.	.1750-01

RUN NUMBER	PHI DEG.	HS SPHERE TW=540
97	.0000	.1675

TEST DATA

RUN NUMBER	YO MS	XO MS	T/C NO	H/HREF R=1.0	H/HREF R=.900	H/HREF R=.850	QREF BTU/ FT2SEC	QDOT BTU/ FT2SEC	HW/HT	TW DEG. R	STN NO R=.900
97	.25200	4.5530	2037.0	.1652	.1955	.2152	40.08	6.623	.3539	546.4	.5102-02

IH103 60-OT LOWER NOSE (R3PD17)

LOWER NOSE

PARAMETRIC DATA

MACH = 5.250 ALPHA = -10.00 BETA = -9.000 ELEVON = .0000
BDFLAP = .0000 SPDBRK = .0000

TEST CONDITIONS

RUN NUMBER	ALPHA DEG.	BETA DEG.	MACH	RN/FT /FT X10 6	PT PSIA	TT DEG. R	HT BTU/ LBM	PINF PSIA	TINF DEG. R	RHO SLUGS/ FT3	VINF FT/SEC	SCALE
110	-10.00	-9.000	5.250	1.092	103.7	1458.	358.4	.1434	229.4	.5246-04	3897.	.1750-01

RUN NUMBER	PHI DEG.	HS SPHERE TW=540
110	.0000	.1676

TEST DATA

RUN NUMBER	YO MS	XO MS	T/C NO	H/HREF R=1.0	H/HREF R=.900	H/HREF R=.850	QREF BTU/ FT2SEC	QDOT BTU/ FT2SEC	HW/HT	TW DEG. R	STN NO R=.900
110	.25200	4.5530	2037.0	.2274	.2712	.3001	37.15	8.449	.3809	568.9	.6904-02

IH103 60-OT LOWER NOSE

(R3PD18)

LOWER NOSE

PARAMETRIC DATA

MACH = 5.250 ALPHA = -10.00 BETA = -3.000 ELEVON = .0000
BDFLAP = .0000 SPDBRK = .0000

TEST CONDITIONS

RUN NUMBER	ALPHA DEG.	BETA DEG.	MACH	RN/FT /FT X10 6	PT PSIA	TT DEG. R	HT BTU/ LBM	PINF PSIA	TINF DEG. R	RHO SLUGS/ FT3	VINF FT/SEC	SCALE
111	-10.00	-3.000	5.250	1.024	103.5	1514.	373.3	.1425	238.9	.5005-04	3977.	.1750-01

RUN NUMBER	PHI DEG.	HS SPHERE TW=540
111	.0000	.1678

TEST DATA

RUN NUMBER	YO MS	XO MS	T/C NO	H/HREF R=1.0	H/HREF R=.900	H/HREF R=.850	QREF BTU/ FT2SEC	QDOT BTU/ FT2SEC	HW/HT	TW DEG. R	STN NO R=.900
111	.25200	4.5530	2037.0	.2213	.2617	.2880	40.57	8.979	.3519	547.4	.6853-02

IH103 60-OT LOWER NOSE (R3PD19)

LOWER NOSE

PARAMETRIC DATA

MACH = 5.250 ALPHA = -10.00 BETA = -5.000 ELEVON = .0000
BDFLAP = .0000 SPDBRK = .0000

TEST CONDITIONS

RUN NUMBER	ALPHA DEG.	BETA DEG.	MACH	RN/FT /FT X10 6	PT PSIA	TT DEG. R	HT BTU/ LBM	PINF PSIA	TINF DEG. R	RHO SLUGS/ FT3	VINF FT/SEC	SCALE
120	-10.00	-5.000	5.250	1.081	103.6	1466.	360.5	.1432	230.7	.5207-04	3909.	.1750-01

RUN NUMBER	PHI DEG.	HS SPHERE TW=540
120	.0000	.1676

TEST DATA

RUN NUMBER	YO MS	XO MS	T/C NO	H/HREF R=1.0	H/HREF R=.900	H/HREF R=.850	QREF BTU/ FT2SEC	QDOT BTU/ FT2SEC	HW/HT	TW DEG. R	STN NO R=.900
120	.25200	4.5530	2037.0	.2147	.2555	.2822	37.87	8.132	.3727	560.1	.6534-02

IH103 60-OT LOWER NOSE (R3PD20)

LOWER NOSE

PARAMETRIC DATA

MACH = 5.250 ALPHA = -10.00 BETA = .0000 ELEVON = .0000
BDFLAP = .0000 SPDBRK = .0000

TEST CONDITIONS

RUN NUMBER	ALPHA DEG.	BETA DEG.	MACH	RN/FT /FT X10 6	PT PSIA	TT DEG. R	HT BTU/ LBM	PINF PSIA	TINF DEG. R	RHO SLUGS/ FT3	VINF FT/SEC	SCALE
121	-10.00	.0000	5.250	.9993	103.7	1539.	379.8	.1425	243.0	.4920-04	4011.	.1750-01

RUN NUMBER	PHI DEG.	HS SPHERE TW=540
121	.0000	.1681

TEST DATA

RUN NUMBER	YO MS	XO MS	T/C NO	H/HREF R=1.0	H/HREF R=.900	H/HREF R=.850	QREF BTU/ FT2SEC	QDOT BTU/ FT2SEC	HW/HT	TW DEG. R	STN NO R=.900
121	.25200	4.5530	2037.0	.2136	.2527	.2782	41.19	8.799	.3540	560.2	.6683-02

IH103 60-OT LOWER NOSE (R3PD21)

LOWER NOSE

PARAMETRIC DATA

MACH = 5.250 ALPHA = .0000 BETA = .0000 ELEVON = .0000
BDFLAP = .0000 SPDBRK = .0000

TEST CONDITIONS

RUN NUMBER	ALPHA DEG.	BETA DEG.	MACH	RN/FT /FT X10 6	PT PSIA	TT DEG. R	HT BTU/ LBM	PINF PSIA	TINF DEG. R	RHO SLUGS/ FT3	VINF FT/SEC	SCALE
131	.0000	.0000	5.250	.6469	103.6	1999.	504.0	.1367	322.6	.3557-04	4622.	.1750-01

RUN NUMBER	PHI DEG.	HS SPHERE TW=540
131	.0000	.1689

TEST DATA

RUN NUMBER	YO MS	XO MS	T/C NO	H/HREF R=1.0	H/HREF R=.900	H/HREF R=.850	QREF BTU/ FT2SEC	QDOT BTU/ FT2SEC	HW/HT	TW DEG. R	STN NO R=.900
131	.25200	4.5530	2037.0	.2033	.2352	.2552	62.78	12.76	.2621	550.7	.7506-02

IH103 60-OT LOWER NOSE (R3PE01)

LOWER NOSE

PARAMETRIC DATA

MACH = 5.250 ALPHA = .0000 BETA = .0000 ELEVON = .0000
BDFLAP = .0000 SPDBRK = .0000

TEST CONDITIONS

RUN NUMBER	ALPHA DEG.	BETA DEG.	MACH	RN/FT /FT X10 6	PT PSIA	TT DEG. R	HT BTU/ LBM	PINF PSIA	TINF DEG. R	RHO SLUGS/ FT3	VINF FT/SEC	SCALE
84	.0000	.0000	5.250	1.008	102.8	1523.	375.5	.1415	240.3	.4941-04	3989.	.1750-01

RUN NUMBER	PHI DEG.	HS SPHERE TW=540
84	.0000	.1673

TEST DATA

RUN NUMBER	XO MS	ZO MS	T/C NO	H/HREF R=1.0	H/HREF R=.900	H/HREF R=.850	QREF BTU/ FT2SEC	QDOT BTU/ FT2SEC	HW/HT	TW DEG. R	STN NO R=.900
84	4.5150	5.6960	2039.0	.2321	.2741	.3014	40.96	9.507	.3478	544.3	.7231-02
84	4.5410	5.5240	2038.0	.1841	.2174	.2390	40.97	7.543	.3476	544.0	.5734-02
84	5.6260	6.0020	2041.0	.8454-01	.9982-01	.1097	41.04	3.470	.3466	542.4	.2633-02
84	6.3610	5.2660	2045.0	.3783-01	.4467-01	.4910-01	41.05	1.553	.3464	542.2	.1178-02
84	6.3610	5.4700	2046.0	.5243-01	.6190-01	.6805-01	41.05	2.152	.3465	542.3	.1633-02
84	6.3610	5.6730	2047.0	.5271-01	.6232-01	.6858-01	40.68	2.144	.3521	551.0	.1643-02
84	8.6100	4.8930	2065.0	.3357-01	.3965-01	.4359-01	40.98	1.376	.3475	543.9	.1046-02
84	8.6100	5.3880	2070.0	.1240-01	.1465-01	.1610-01	41.01	.5086	.3471	543.2	.3863-03

IH103 60-OT LOWER NOSE (R3PE02)

LOWER NOSE

PARAMETRIC DATA

MACH = 5.250 ALPHA = -5.000 BETA = .0000 ELEVON = .0000
BDFLAP = .0000 SPDBRK = .0000

TEST CONDITIONS

RUN NUMBER	ALPHA DEG.	BETA DEG.	MACH	RN/FT /FT X10 6	PT PSIA	TT DEG. R	HT BTU/ LBM	PINF PSIA	TINF DEG. R	RHO SLUGS/ FT3	VINF FT/SEC	SCALE
83	-5.000	.0000	5.250	1.048	103.8	1496.	368.3	.1430	235.7	.5092-04	3951.	.1750-01

RUN NUMBER	PHI DEG.	HS SPHERE TW=540
83	.0000	.1679

TEST DATA

RUN NUMBER	XO MS	ZO MS	T/C NO	H/HREF R=1.0	H/HREF R=.900	H/HREF R=.850	QREF BTU/ FT2SEC	QDOT BTU/ FT2SEC	HW/HT	TW DEG. R	STN NO R=.900
83	4.5150	5.6960	2039.0	.2494	.2953	.3251	39.83	9.935	.3557	546.0	.7656-02
83	4.5410	5.5240	2038.0	.1920	.2273	.2503	39.85	7.653	.3553	545.4	.5894-02
83	5.6260	6.0020	2041.0	.9789-01	.1158	.1275	39.92	3.907	.3543	543.9	.3004-02
83	6.3610	5.2660	2045.0	.3896-01	.4609-01	.5074-01	39.94	1.556	.3540	543.4	.1195-02
83	6.3610	5.4700	2046.0	.5163-01	.6109-01	.6725-01	39.93	2.061	.3541	543.6	.1584-02
83	6.3610	5.6730	2047.0	.5601-01	.6638-01	.7315-01	39.56	2.216	.3598	552.3	.1721-02
83	8.6100	4.8930	2065.0	.3805-01	.4504-01	.4959-01	39.84	1.516	.3555	545.6	.1168-02
83	8.6100	5.3880	2070.0	.1397-01	.1653-01	.1820-01	39.87	.5569	.3550	544.9	.4286-03

IH103 60-OT LOWER NOSE

LOWER NOSE

PARAMETRIC DATA

MACH = 5.250 ALPHA = 5.000 BETA = .0000 ELEVON = .0000
BDFLAP = .0000 SPDBRK = .0000

TEST CONDITIONS

RUN NUMBER	ALPHA DEG.	BETA DEG.	MACH	RN/FT /FT X10 6	PT PSIA	TT DEG. R	HT BTU/ LBM	PINF PSIA	TINF DEG. R	RHO SLUGS/ FT3	VINF FT/SEC	SCALE
82	5.000	.0000	5.250	1.000	101.7	1521.	374.9	.1400	233.9	.4897-04	3986.	.1750-01

RUN NUMBER	PHI DEG.	HS SPHERE TW=540
82	.0000	.1664

TEST DATA

RUN NUMBER	XO MS	ZO MS	T/C NO	H/HREF R=1.0	H/HREF R=.900	H/HREF R=.850	QREF BTU/ FT2SEC	QDOT BTU/ FT2SEC	HW/HT	TW DEG. R	STN NO R=.900
82	4.5150	5.6960	2039.0	.2104	.2486	.2734	40.58	8.539	.3492	545.5	.6586-02
82	4.5410	5.5240	2038.0	.1649	.1948	.2143	40.59	6.694	.3490	545.2	.5161-02
82	5.6260	6.0020	2041.0	.7750-01	.9155-01	.1007	40.64	3.150	.3483	544.1	.2425-02
82	6.3610	5.2660	2045.0	.4456-01	.5263-01	.5787-01	40.65	1.811	.3481	543.8	.1394-02
82	6.3610	5.4700	2046.0	.5154-01	.6089-01	.6695-01	40.64	2.095	.3482	544.0	.1613-02
82	6.3610	5.6730	2047.0	.4925-01	.5826-01	.6413-01	40.28	1.984	.3538	552.8	.1543-02
82	8.6100	4.8930	2065.0	.2223-01	.2627-01	.2890-01	40.55	.9015	.3496	546.2	.6958-03
82	8.6100	5.3880	2070.0	.2807-01	.3317-01	.3648-01	40.57	1.139	.3493	545.7	.8786-03

IH103 60-OT LOWER NOSE (R3PE04)

LOWER NOSE

PARAMETRIC DATA

MACH = 5.250 ALPHA = 10.00 BETA = .0000 ELEVON = .0000
BDFLAP = .0000 SPDBRK = .0000

TEST CONDITIONS

RUN NUMBER	ALPHA DEG.	BETA DEG.	MACH	RN/FT /FT X10 6	PT PSIA	TT DEG. R	HT BTU/ LBM	PINF PSIA	TINF DEG. R	RHO SLUGS/ FT3	VINF FT/SEC	SCALE
81	10.00	-5.000	5.250	1.029	101.8	1494.	368.0	.1404	235.5	.5001-04	3949.	.1750-01

RUN NUMBER	PHI DEG.	HS SPHERE TW=540
81	.0000	.1663

TEST DATA

RUN NUMBER	XO MS	ZO MS	T/C NO	H/HREF R=1.0	H/HREF R=.900	H/HREF R=.850	QREF BTU/ FT2SEC	QDOT BTU/ FT2SEC	HW/HT	TW DEG. R	STN NO R=.900
81	4.5150	5.6960	2039.0	.1910	.2262	.2491	39.35	7.517	.3568	547.2	.5918-02
81	4.5410	5.5240	2038.0	.1690	.2001	.2204	39.37	6.655	.3565	546.8	.5236-02
81	5.6260	6.0020	2041.0	.6662-01	.7886-01	.8683-01	39.44	2.628	.3554	545.1	.2063-02
81	6.3610	5.2660	2045.0	.5767-01	.6824-01	.7513-01	39.48	2.277	.3547	544.0	.1786-02
81	6.3610	5.4700	2046.0	.5908-01	.6992-01	.7698-01	39.47	2.332	.3549	544.3	.1829-02
81	6.3610	5.6730	2047.0	.5270-01	.6247-01	.6885-01	39.11	2.061	.3605	553.0	.1634-02
81	8.6100	4.8930	2065.0	.2132-01	.2524-01	.2780-01	39.39	.8398	.3562	546.3	.6604-03
81	8.6100	5.3880	2070.0	.4783-01	.5662-01	.6235-01	39.41	1.885	.3558	545.7	.1481-02

IH103 60-OT LOWER NOSE (R3PE05)

LOWER NOSE

PARAMETRIC DATA

MACH = 5.250 ALPHA = .0000 BETA = -5.000 ELEVON = .0000
BDFLAP = .0000 SPDBRK = .0000

TEST CONDITIONS

RUN NUMBER	ALPHA DEG.	BETA DEG.	MACH	RN/FT /FT X10 6	PT PSIA	TT DEG. R	HT BTU/ LBM	PINF PSIA	TINF DEG. R	RHO SLUGS/ FT3	VINF FT/SEC	SCALE
77	.0000	-5.000	5.250	1.043	103.3	1496.	368.4	.1425	235.8	.5070-04	3951.	.1750-01

RUN NUMBER	PHI DEG.	HS SPHERE TW=540
77	.0000	.1675

TEST DATA

RUN NUMBER	XO MS	ZO MS	T/C NO	H/HREF R=1.0	H/HREF R=.900	H/HREF R=.850	QREF BTU/ FT2SEC	QDOT BTU/ FT2SEC	HW/HT	TW DEG. R	STN NO R=.900
77	4.5150	5.6960	2039.0	.2702	.3204	.3532	39.38	10.64	.3617	555.3	.8323-02
77	4.5410	5.5240	2038.0	.2148	.2547	.2808	39.41	8.466	.3612	554.6	.6617-02
77	5.6260	6.0020	2041.0	.1272-02	.1504-02	.1654-02	40.04	.5093-01	.3513	539.5	.3909-04
77	6.3610	5.2660	2045.0	.5365-01	.6357-01	.7005-01	39.54	2.121	.3592	551.5	.1652-02
77	6.3610	5.4700	2046.0	.7115-01	.8430-01	.9289-01	39.55	2.814	.3591	551.4	.2190-02
77	6.3610	5.6730	2047.0	.6941-01	.8237-01	.9086-01	39.18	2.719	.3648	560.1	.2139-02
77	8.6100	4.8930	2065.0	.2067-01	.2450-01	.2700-01	39.48	.8161	.3601	553.0	.6365-03
77	8.6100	5.3880	2070.0	.2883-01	.3417-01	.3765-01	39.52	1.139	.3595	552.0	.8877-03

IH103 60-OT LOWER NOSE (R3PE06)

LOWER NOSE

PARAMETRIC DATA

MACH = 5.250 ALPHA = -5.000 BETA = -5.000 ELEVON = .0000
BOFLAP = .0000 SPDBRK = .0000

TEST CONDITIONS

RUN NUMBER	ALPHA DEG.	BETA DEG.	MACH	RN/FT /FT X10 6	PT PSIA	TT DEG. R	HT BTU/ LBM	PINF PSIA	TINF DEG. R	RHO SLUGS/ FT3	VINF FT/SEC	SCALE
78	-5.000	-5.000	5.250	.9991	96.86	1476.	363.2	.1337	232.4	.4828-04	3923.	.1750-01

RUN NUMBER	PHI DEG.	HS SPHERE TW=540
78	.0000	.1621

TEST DATA

RUN NUMBER	XO MS	ZO MS	T/C NO	H/HREF R=1.0	H/HREF R=.900	H/HREF R=.850	QREF BTU/ FT2SEC	QDOT BTU/ FT2SEC	HW/HT	TW DEG. R	STN NO R=.900
78	4.5150	5.6960	2039.0	.3050	.3622	.3996	37.29	11.37	.3662	554.3	.9629-02
78	4.5410	5.5240	2038.0	.2321	.2756	.3041	37.30	8.658	.3660	554.0	.7327-02
78	5.6260	6.0020	2041.0	.1402-03	.1660-03	.1829-03	37.82	.5302-02	.3575	541.1	.4416-05
78	6.3610	5.2660	2045.0	.5177-01	.6145-01	.6779-01	37.34	1.933	.3653	552.8	.1634-02
78	6.3610	5.4700	2046.0	.7634-01	.9062-01	.9997-01	37.33	2.850	.3655	553.2	.2409-02
78	6.3610	5.6730	2047.0	.8066-01	.9592-01	.1059	36.97	2.982	.3713	562.1	.2549-02
78	8.6100	4.8930	2065.0	.3443-01	.4089-01	.4512-01	37.22	1.282	.3672	555.8	.1087-02
78	8.6100	5.3880	2070.0	.3045-01	.3617-01	.3992-01	37.23	1.134	.3672	555.7	.9615-03

IH103 60-OT LOWER NOSE (R3PE07)

LOWER NOSE

PARAMETRIC DATA

MACH = 5.250 ALPHA = 5.000 BETA = -5.000 ELEVON = .0000
BDFLAP = .0000 SPDBRK = .0000

TEST CONDITIONS

RUN NUMBER	ALPHA DEG.	BETA DEG.	MACH	RN/FT /FT X10 6	PT PSIA	TT DEG. R	HT BTU/ LBM	PINF PSIA	TINF DEG. R	RHO SLUGS/ FT3	VINF FT/SEC	SCALE
79	5.000	-5.000	5.250	1.004	99.07	1492.	367.3	.1366	235.1	.4877-04	3945.	.1750-01

RUN NUMBER	PHI DEG.	HS SPHERE TW=540
79	.0000	.1640

TEST DATA

RUN NUMBER	XO MS	ZO MS	T/C NO	H/HREF R=1.0	H/HREF R=.900	H/HREF R=.850	QREF BTU/ FT2SEC	QDOT BTU/ FT2SEC	HW/HT	TW DEG. R	STN NO R=.900
79	4.5150	5.6960	2039.0	.2560	.3028	.3333	38.97	9.977	.3531	540.5	.8023-02
79	4.5410	5.5240	2038.0	.2045	.2419	.2662	38.99	7.973	.3528	540.1	.6409-02
79	5.6260	6.0020	2041.0	.1008	.1192	.1312	39.02	3.933	.3524	539.4	.3159-02
79	6.3610	5.2660	2045.0	.5411-01	.6397-01	.7039-01	39.09	2.115	.3512	537.6	.1695-02
79	6.3610	5.4700	2046.0	.6994-01	.8269-01	.9099-01	39.07	2.732	.3515	538.1	.2191-02
79	6.3610	5.6730	2047.0	.6670-01	.7899-01	.8700-01	38.72	2.582	.3572	546.8	.2092-02
79	8.6100	4.8930	2065.0	.1310-01	.1549-01	.1705-01	39.02	.5112	.3523	539.2	.4105-03
79	8.6100	5.3880	2070.0	.3091-01	.3655-01	.4023-01	39.02	1.206	.3523	539.3	.9686-03

IH103 60-OT LOWER NOSE (R3PE08)

LOWER NOSE

PARAMETRIC DATA

MACH = 5.250 ALPHA = 10.00 BETA = -5.000 ELEVON = .0000
BDFLAP = .0000 SPDBRK = .0000

TEST CONDITIONS

RUN NUMBER	ALPHA DEG.	BETA DEG.	MACH	RN/FT /FT X10 6	PT PSIA	TT DEG. R	HT BTU/ LBM	PINF PSIA	TINF DEG. R	RHO SLUGS/ FT3	VINF FT/SEC	SCALE
80	10.00	-5.000	5.250	1.024	102.2	1503.	370.2	.1408	236.9	.4989-04	3961.	.1750-01

RUN NUMBER	PHI DEG.	HS SPHERE TW=540
80	.0000	.1667

TEST DATA

RUN NUMBER	XO MS	ZO MS	T/C NO	H/HREF R=1.0	H/HREF R=.900	H/HREF R=.850	QREF BTU/ FT2SEC	QDOT BTU/ FT2SEC	HW/HT	TW DEG. R	STN NO R=.900
80	4.5150	5.6960	2039.0	.2233	.2642	.2909	39.85	8.900	.3540	546.2	.6926-02
80	4.5410	5.5240	2038.0	.1801	.2131	.2345	39.87	7.180	.3538	545.8	.5585-02
80	5.6260	6.0020	2041.0	.8723-01	.1032	.1135	39.95	3.485	.3525	543.9	.2704-02
80	6.3610	5.2660	2045.0	.6135-01	.7254-01	.7982-01	39.99	2.453	.3518	542.9	.1902-02
80	6.3610	5.4700	2046.0	.6821-01	.8066-01	.8876-01	39.98	2.727	.3520	543.1	.2114-02
80	6.3610	5.6730	2047.0	.6307-01	.7470-01	.8228-01	39.62	2.499	.3576	551.8	.1957-02
80	8.6100	4.8930	2065.0	.4098-02	.4847-02	.5334-02	39.92	.1636	.3530	544.6	.1270-03
80	8.6100	5.3880	2070.0	.4669-01	.5522-01	.6077-01	39.94	1.865	.3526	544.0	.1447-02

IH103 60-OT LOWER NOSE (R3PE09)

LOWER NOSE

PARAMETRIC DATA

MACH = 5.250 ALPHA = .0000 BETA = -3.000 ELEVON = .0000
BDFLAP = .0000 SPDBRK = .0000

TEST CONDITIONS

RUN NUMBER	ALPHA DEG.	BETA DEG.	MACH	RN/FT /FT X10 6	PT PSIA	TT DEG. R	HT BTU/ LBM	PINF PSIA	TINF DEG. R	RHO SLUGS/ FT3	VINF FT/SEC	SCALE
93	.0000	-3.000	5.250	1.074	104.3	1478.	363.7	.1440	232.7	.5192-04	3926.	.1750-01

RUN NUMBER	PHI DEG.	HS SPHERE TW=540
93	.0000	.1682

TEST DATA

RUN NUMBER	XO MS	ZO MS	T/C NO	H/HREF R=1.0	H/HREF R=.900	H/HREF R=.850	QREF BTU/ FT2SEC	QDOT BTU/ FT2SEC	HW/HT	TW DEG. R	STN NO R=.900
93	4.5150	5.6960	2039.0	.2467	.2930	.3234	38.69	9.547	.3671	556.4	.7512-02
93	4.5410	5.5240	2038.0	.1891	.2246	.2478	39.70	7.318	.3670	556.2	.5757-02
93	5.6260	6.0020	2041.0	.1002	.1190	.1313	38.77	3.886	.3659	554.6	.3051-02
93	6.3610	5.2660	2045.0	.4405-01	.5229-01	.5769-01	38.78	1.708	.3657	554.3	.1341-02
93	6.3610	5.4700	2046.0	.5949-01	.7062-01	.7792-01	38.78	2.307	.3658	554.4	.1811-02
93	6.3610	5.6730	2047.0	.6017-01	.7155-01	.7903-01	38.41	2.311	.3715	563.1	.1834-02
93	8.6100	4.8930	2065.0	.3371-01	.4003-01	.4416-01	38.77	1.307	.3659	554.7	.1026-02
93	8.6100	5.3880	2070.0	.2220-01	.2636-01	.2908-01	38.77	.8607	.3659	554.6	.6758-03

IH103 60-OT LOWER NOSE (R3PE10)

LOWER NOSE

PARAMETRIC DATA

MACH = 5.250 ALPHA = -5.000 BETA = -3.000 ELEVON = .0000
BDFLAP = .0000 SPDBRK = .0000

TEST CONDITIONS

RUN NUMBER	ALPHA DEG.	BETA DEG.	MACH	RN/FT /FT X10 6	PT PSIA	TT DEG. R	HT BTU/ LBM	PINF PSIA	TINF DEG. R	RHO SLUGS/ FT3	VINF FT/SEC	SCALE
94	-5.000	-3.000	5.250	1.005	103.7	1534.	378.4	.1425	242.1	.4939-04	4004.	.1750-01

RUN NUMBER	PHI DEG.	HS SPHERE TW=540
94	.0000	.1680

TEST DATA

RUN NUMBER	XO MS	ZO MS	T/C NO	H/HREF R=1.0	H/HREF R=.900	H/HREF R=.850	QREF BTU/ FT2SEC	QDOT BTU/ FT2SEC	HW/HT	TW DEG. R	STN NO R=.900
94	4.5150	5.6960	2039.0	.2324	.2750	.3028	40.99	9.528	.3546	559.2	.7256-02
94	4.5410	5.5240	2038.0	.2124	.2513	.2767	41.00	8.708	.3545	559.0	.6630-02
94	5.6260	6.0020	2041.0	.1047	.1238	.1363	41.11	4.304	.3528	556.4	.3267-02
94	6.3610	5.2660	2045.0	.4470-01	.5286-01	.5816-01	41.17	1.840	.3520	555.0	.1395-02
94	6.3610	5.4700	2046.0	.6211-01	.7344-01	.8081-01	41.18	2.557	.3519	554.9	.1938-02
94	6.3610	5.6730	2047.0	.6441-01	.7616-01	.8381-01	41.16	2.651	.3521	555.2	.2010-02
94	8.6100	4.8930	2065.0	.3569-01	.4221-01	.4645-01	41.14	1.469	.3523	555.6	.1114-02
94	8.6100	5.3880	2070.0	.1982-01	.2344-01	.2579-01	41.19	.8166	.3516	554.5	.6185-03

IH103 60-OT LOWER NOSE (R3PE11)

LOWER NOSE

PARAMETRIC DATA

MACH = 5.250 ALPHA = 5.000 BETA = -3.000 ELEVON = .0000
BDFLAP = .0000 SPDBRK = .0000

TEST CONDITIONS

RUN NUMBER	ALPHA DEG.	BETA DEG.	MACH	RN/FT /FT X10 6	PT PSIA	TT DEG. R	HT BTU/ LBM	PINF PSIA	TINF DEG. R	RHO SLUGS/ FT3	VINF FT/SEC	SCALE
95	5.000	-3.000	5.250	1.012	102.9	1520.	374.9	.1416	239.9	.4954-04	3986.	.1750-01

RUN NUMBER	PHI DEG.	HS SPHERE TW=540
95	.0000	.1673

TEST DATA

RUN NUMBER	XO MS	ZO MS	T/C NO	H/HREF R=1.0	H/HREF R=.900	H/HREF R=.850	QREF BTU/ FT2SEC	QDOT BTU/ F12SEC	HW/HT	TW DEG. R	STN NO R=.900
95	4.5150	5.6960	2039.0	.2108	.2497	.2751	40.21	8.475	.3584	559.9	.6572-02
95	4.5410	5.5240	2038.0	.1832	.2170	.2391	40.23	7.370	.3581	559.5	.5711-02
95	5.6260	6.0020	2041.0	.8747-01	.1036	.1141	40.34	3.529	.3564	556.8	.2726-02
95	6.3610	5.2660	2045.0	.4533-01	.5367-01	.5910-01	40.36	1.830	.3561	556.3	.1413-02
95	6.3610	5.4700	2046.0	.6103-01	.7225-01	.7956-01	40.36	2.463	.3561	556.3	.1902-02
95	6.3610	5.6730	2047.0	.5809-01	.6877-01	.7574-01	40.34	2.343	.3564	556.7	.1810-02
95	8.6100	4.8930	2065.0	.1273-01	.1507-01	.1660-01	40.28	.5127	.3574	558.3	.3967-03
95	8.6100	5.3880	2070.0	.3363-01	.3982-01	.4386-01	40.32	1.356	.3567	557.2	.1048-02

IH103 60-OT LOWER NOSE (R3PE12)

LOWER NOSE

PARAMETRIC DATA

MACH = 5.250 ALPHA = 10.00 BETA = -3.000 ELEVON = .0000
BDFLAP = .0000 SPDBRK = .0000

TEST CONDITIONS

RUN NUMBER	ALPHA DEG.	BETA DEG.	MACH	RN/FT /FT X10 6	PT PSIA	TT DEG. R	HT BTU/ LBM	PINF PSIA	TINF DEG. R	RHO SLUGS/ FT3	VINF FT/SEC	SCALE
96	10.00	-3.000	5.250	1.046	102.9	1490.	366.9	.1420	234.8	.5074-04	3943.	.1750-01

RUN NUMBER	PHI DEG.	HS SPHERE TW=540
96	.0000	.1672

TEST DATA

RUN NUMBER	XO MS	ZO MS	T/C NO	H/HREF R=1.0	H/HREF R=.900	H/HREF R=.850	QREF BTU/ FT2SEC	QDOT BTU/ FT2SEC	HW/HT	TW DEG. R	STN NO R=.900
96	4.5150	5.6960	2039.0	.2101	.2487	.2738	39.54	8.309	.3552	543.1	.6459-02
96	4.5410	5.5240	2038.0	.1736	.2055	.2262	39.55	6.866	.3551	543.0	.5336-02
96	5.6260	6.0020	2041.0	.7829-01	.9263-01	.1020	39.61	3.101	.3541	541.4	.2406-02
96	6.3610	5.2660	2045.0	.6327-01	.7486-01	.8240-01	39.63	2.508	.3538	541.0	.1944-02
96	6.3610	5.4700	2046.0	.6402-01	.7575-01	.8338-01	39.62	2.536	.3540	541.3	.1967-02
96	6.3610	5.6730	2047.0	.5064-01	.5991-01	.6596-01	39.61	2.006	.3542	541.6	.1556-02
96	8.6100	4.8930	2065.0	.1068-01	.1264-01	.1392-01	39.51	.4218	.3557	543.9	.3282-03
96	8.6100	5.3880	2070.0	.5989-01	.7089-01	.7805-01	39.52	2.367	.3555	543.6	.1841-02

IH103 60-OT LOWER NOSE (R3PE13)

LOWER NOSE

PARAMETRIC DATA

MACH = 5.250 ALPHA = .0000 BETA = -9.000 ELEVON = .0000
BDFLAP = .0000 SPDBRK = .0000

TEST CONDITIONS

RUN NUMBER	ALPHA DEG.	BETA DEG.	MACH	RN/FT /FT X10 6	PT PSIA	TT DEG. R	HT BTU/ LBM	PINF PSIA	TINF DEG. R	RHO SLUGS/ FT3	VINF FT/SEC	SCALE
100	.0000	-9.000	5.250	1.056	104.1	1491.	367.2	.1435	235.0	.5127-04	3944.	.1750-01

RUN NUMBER	PHI DEG.	HS SPHERE TW=540
100	.0000	.1681

TEST DATA

RUN NUMBER	XO MS	ZO MS	T/C NO	H/HREF R=1.0	H/HREF R=.900	H/HREF R=.850	QREF BTU/ FT2SEC	QDOT BTU/ FT2SEC	HW/HT	TW DEG. R	STN NO R=.900
100	4.5150	5.6960	2039.0	.2844	.3367	.3708	39.70	11.29	.3567	545.9	.8698-02
100	4.5410	5.5240	2038.0	.2282	.2702	.2976	39.71	9.060	.3566	545.7	.6980-02
100	5.6260	6.0020	2041.0	.1265	.1498	.1650	39.75	5.030	.3559	544.6	.3870-02
100	6.3610	5.2660	2045.0	.6239-01	.7386-01	.8133-01	39.74	2.479	.3561	545.0	.1908-02
100	6.3610	5.4700	2046.0	.8113-01	.9605-01	.1058	39.72	3.222	.3564	545.3	.2481-02
100	6.3610	5.6730	2047.0	.8167-01	.9670-01	.1065	39.71	3.243	.3566	545.6	.2498-02
100	8.6100	4.8930	2065.0	.1163-01	.1378-01	.1518-01	39.59	.4604	.3584	548.4	.3559-03
100	8.6100	5.3880	2070.0	.4617-01	.5469-01	.6025-01	39.60	1.828	.3583	548.2	.1413-02

IH103 60-OT LOWER NOSE

(R3PE14)

LOWER NOSE

PARAMETRIC DATA

MACH = 5.250 ALPHA = -5.000 BETA = -9.000 ELEVON = .0000
BDFLAP = .0000 SPDBRK = .0000

TEST CONDITIONS

RUN NUMBER	ALPHA DEG.	BETA DEG.	MACH	RN/FT /FT X10 6	PT PSIA	TT DEG. R	HT BTU/ LBM	PINF PSIA	TINF DEG. R	RHO SLUGS/ FT3	VINF FT/SEC	SCALE
99	-5.000	-9.000	5.250	1.045	102.9	1490.	366.9	.1420	234.6	.5073-04	3943.	.1750-01

RUN NUMBER	PHI DEG.	HS SPHERE TW=540
99	.0000	.1672

TEST DATA

RUN NUMBER	XO MS	ZO MS	T/C NO	H/HREF R=1.0	H/HREF R=.900	H/HREF R=.850	QREF BTU/ FT2SEC	QDOT BTU/ FT2SEC	HW/HT	TW DEG. R	STN NO R=.900
99	4.5150	5.6960	2039.0	.3072	.3643	.4016	39.14	12.03	.3616	553.0	.9458-02
99	4.5410	5.5240	2038.0	.2494	.2957	.3260	39.14	9.761	.3617	553.1	.7678-02
99	5.6260	6.0020	2041.0	.1411	.1673	.1843	39.23	5.537	.3602	550.9	.4343-02
99	6.3610	5.2660	2045.0	.6268-01	.7430-01	.8189-01	39.21	2.458	.3605	551.3	.1929-02
99	6.3610	5.4700	2046.0	.8514-01	.1009	.1112	39.21	3.338	.3606	551.4	.2621-02
99	6.3610	5.6730	2047.0	.8766-01	.1039	.1145	39.20	3.436	.3608	551.7	.2698-02
99	8.6100	4.8930	2065.0	.1696-01	.2012-01	.2219-01	39.06	.6627	.3629	555.0	.5224-03
99	8.6100	5.3880	2070.0	.4372-01	.5185-01	.5717-01	39.10	1.709	.3623	554.1	.1346-02

IH103 60-OT LOWER NOSE (R3PE15)

LOWER NOSE

PARAMETRIC DATA

MACH = 5.250 ALPHA = 5.000 BETA = -9.000 ELEVON = .0000
BDFLAP = .0000 SPDBRK = .0000

TEST CONDITIONS

RUN NUMBER	ALPHA DEG.	BETA DEG.	MACH	RN/FT /FT X10 6	PT PSIA	TT DEG. R	HT BTU/ LBM	PINF PSIA	TINF DEG. R	RHO SLUGS/ FT3	VINF FT/SEC	SCALE
98	5.000	-9.000	5.250	1.057	103.4	1484.	365.2	.1426	233.7	.5120-04	3934.	.1750-01

RUN NUMBER	PHI DEG.	HS SPHERE TW=540
98	.0000	.1675

TEST DATA

RUN NUMBER	XO MS	ZO MS	T/C NO	H/HREF R=1.0	H/HREF R=.900	H/HREF R=.850	QREF BTU/ FT2SEC	QDOT BTU/ FT2SEC	HW/HT	TW DEG. R	STN NO R=.900
98	4.5150	5.6960	2039.0	.2760	.3272	.3606	39.08	10.78	.3608	549.1	.8452-02
98	4.5410	5.5240	2038.0	.2120	.2513	.2769	39.08	8.284	.3608	549.1	.6491-02
98	5.6260	6.0020	2041.0	.1171	.1388	.1530	39.17	4.589	.3593	546.9	.3586-02
98	6.3610	5.2660	2045.0	.6698-01	.7937-01	.8746-01	39.17	2.624	.3593	546.9	.2051-02
98	6.3610	5.4700	2046 0	.8554-01	.1014	.1117	39.16	3.350	.3595	547.2	.2619-02
98	6.3610	5.6730	2047.0	.8211-01	.9731-01	.1072	39.15	3.214	.3597	547.5	.2514-02
98	8.6100	4.8930	2065.0	.1218-01	.1444-01	.1591-01	39.06	.4756	.3610	549.5	.3729-03
98	8.6100	5.3880	2070.0	.5403-01	.6405-01	.7060-01	39.08	2.112	.3608	549.1	.1655-02

IH103 60-OT LOWER NOSE (R3PE16)

LOWER NOSE

PARAMETRIC DATA

MACH = 5.250 ALPHA = 10.00 BETA = -9.000 ELEVON = .0000
BDFLAP = .0000 SPDBRK = .0000

TEST CONDITIONS

RUN NUMBER	ALPHA DEG.	BETA DEG.	MACH	RN/FT /FT X10 6	PT PSIA	TT DEG. R	HT BTU/ LBM	PINF PSIA	TINF DEG. R	RHO SLUGS/ FT3	VINF FT/SEC	SCALE
97	10.00	-9.000	5.250	1.033	103.2	1504.	370.5	.1422	237.1	.5033-04	3962.	.1750-01

RUN NUMBER	PHI DEG.	HS SPHERE TW=540
97	.0000	.1675

TEST DATA

RUN NUMBER	XO MS	ZO MS	T/C NO	H/HREF R=1.0	H/HREF R=.900	H/HREF R=.850	QREF BTU/ FT2SEC	QDOT BTU/ FT2SEC	HW/HT	TW DEG. R	STN NO R=.900
97	4.5150	5.6960	2039.0	.2396	.2835	.3120	40.10	9.608	.3536	546.0	.7398-02
97	4.5410	5.5240	2038.0	.1916	.2266	.2495	40.10	7.682	.3536	545.9	.5914-02
97	5.6260	6.0020	2041.0	.1043	.1233	.1357	40.19	4.191	.3521	543.7	.3218-02
97	6.3610	5.2660	2045.0	.7471-01	.8835-01	.9721-01	40.21	3.004	.3519	543.3	.2306-02
97	6.3610	5.4700	2046.0	.9166-01	.1084	.1193	40.20	3.685	.3520	543.5	.2829-02
97	6.3610	5.6730	2047.0	.8204-01	.9701-01	.1068	40.19	3.297	.3522	543.7	.2532-02
97	8.6100	4.8930	2065.0	.7955-02	.9411-02	.1036-01	40.09	.3189	.3537	546.2	.2456-03
97	8.6100	5.3880	2070.0	.6538-01	.7733-01	.8511-01	40.13	2.623	.3532	545.3	.2018-02

IH103 60-OT LOWER NOSE (R3PE17)

LOWER NOSE

PARAMETRIC DATA

MACH = 5.250 ALPHA = -10.00 BETA = -9.000 ELEVON = .0000
BDFLAP = .0000 SPDBRK = .0000

TEST CONDITIONS

RUN NUMBER	ALPHA DEG.	BETA DEG.	MACH	RN/FT /FT X10 6	PT PSIA	TT DEG. R	HT BTU/ LBM	PINF PSIA	TINF DEG. R	RHO SLUGS/ FT3	VINF FT/SEC	SCALE
110	-10.00	-9.000	5.250	1.092	103.7	1458.	358.4	.1434	229.4	.5246-04	3897.	.1750-01

RUN NUMBER	PHI DEG.	HS SPHERE TW=540
110	.0000	.1676

TEST DATA

RUN NUMBER	XO MS	ZO MS	T/C NO	H/HREF R=1.0	H/HREF R=.900	H/HREF R=.850	QREF BTU/ FT2SEC	QDOT BTU/ FT2SEC	HW/HT	TW DEG. R	STN NO R=.900
110	4.5150	5.6960	2039.0	.3431	.4091	.4527	37.16	12.75	.3807	568.7	.1041-01
110	4.5410	5.5240	2038.0	.2645	.3154	.3490	37.17	9.830	.3806	568.5	.8028-02
110	5.6260	6.0020	2041.0	.1519	.1811	.2003	37.32	5.670	.3783	565.0	.4610-02
110	6.3610	5.2660	2045.0	.6143-01	.7322-01	.8100-01	37.25	2.288	.3793	566.6	.1864-02
110	6.3610	5.4700	2046.0	.8739-01	.1042	.1153	37.23	3.254	.3796	567.0	.2652-02
110	6.3610	5.6730	2047.0	.9436-01	.1125	.1245	37.23	3.513	.3797	567.1	.2864-02
110	8.6100	4.8930	2065.0	.3676-01	.4386-01	.4856-01	37.05	1.362	.3825	571.4	.1116-02
110	8.6100	5.3880	2070.0	.5916-01	.7058-01	.7812-01	37.09	2.194	.3819	570.5	.1797-02

IH103 60-OT LOWER NOSE (R3PE18)

LOWER NOSE

PARAMETRIC DATA

MACH = 5.250 ALPHA = -10.00 BETA = -3.000 ELEVON = .0000
BDFLAP = .0000 SPDBRK = .0000

TEST CONDITIONS

RUN NUMBER	ALPHA DEG.	BETA DEG.	MACH	RN/FT /FT X10 6	PT PSIA	TT DEG. R	HT BTU/ LBM	PINF PSIA	TINF DEG. R	RHO SLUGS/ FT3	VINF FT/SEC	SCALE
111	-10.00	-3.000	5.250	1.024	103.5	1514.	373.3	.1425	238.9	.5005-04	3977.	.1750-01

RUN NUMBER	PHI DEG.	HS SPHERE TW=540
111	.0000	.1678

TEST DATA

RUN NUMBER	XO MS	ZO MS	T/C NO	H/HREF R=1.0	H/HREF R=.900	H/HREF R=.850	QREF BTU/ FT2SEC	QDOT BTU/ FT2SEC	HW/HT	TW DEG. R	STN NO R=.900
111	4.5150	5.6960	2039.0	.3234	.3824	.4207	40.57	13.12	.3519	547.4	.1001-01
111	4.5410	5.5240	2038.0	.2465	.2915	.3207	40.59	10.01	.3516	546.9	.7633-02
111	5.6260	6.0020	2041.0	.1310	.1548	.1703	40.70	5.331	.3500	544.4	.4055-02
111	6.3610	5.2660	2045.0	.5080-01	.6002-01	.6601-01	40.75	2.070	.3492	543.2	.1572-02
111	6.3610	5.4700	2046.0	.1751-03	.2066-03	.2270-03	41.12	.7201-02	.3435	534.3	.5413-05
111	6.3610	5.6730	2047.0	.7996-01	.9449-01	.1039	40.72	3.256	.3496	543.8	.2475-02
111	8.6100	4.8930	2065.0	.4772-01	.5640-01	.6204-01	40.68	1.941	.3502	544.8	.1477-02
111	8.6100	5.3880	2070.0	.3056-01	.3611-01	.3972-01	40.71	1.244	.3498	544.2	.9457-03

IH103 60-OT LOWER NOSE (R3PE19)

LOWER NOSE

PARAMETRIC DATA

MACH = 5.250 ALPHA = -10.00 BETA = -5.000 ELEVON = .0000
BDFLAP = .0000 SPDBRK = .0000

TEST CONDITIONS

RUN NUMBER	ALPHA DEG.	BETA DEG.	MACH	RN/FT /FT X10 6	PT PSIA	TT DEG. R	HT BTU/ LBM	PINF PSIA	TINF DEG. R	RHO SLUGS/ FT3	VINF FT/SEC	SCALE
120	-10.00	-5.000	5.250	1.081	103.6	1466.	360.5	.1432	230.7	.5207-04	3909.	.1750-01

RUN NUMBER	PHI DEG.	HS SPHERE TW=540
120	.0000	.1676

TEST DATA

RUN NUMBER	XO MS	ZO MS	T/C NO	H/HREF R=1.0	H/HREF R=.900	H/HREF R=.850	QREF BTU/ FT2SEC	QDOT BTU/ FT2SEC	HW/HT	TW DEG. R	STN NO R=.900
120	4.5150	5.6960	2039.0	.3183	.3787	.4184	37.86	12.05	.3729	560.3	.9685-02
120	4.5410	5.5240	2038.0	.2416	.2874	.3175	37.88	9.151	.3726	559.8	.7350-02
120	5.6260	6.0020	2041.0	.1344	.1598	.1764	38.02	5.109	.3704	556.6	.4036-02
120	6.3610	5.2660	2045.0	.5129-01	.6096-01	.6731-01	38.05	1.951	.3699	555.8	.1559-02
120	6.3610	5.4700	2046.0	.7390-01	.8785-01	.9700-01	38.04	2.812	.3700	555.9	.2247-02
120	6.3610	5.6730	2047.0	.8151-01	.9689-01	.1070	38.04	3.100	.3701	556.1	.2478-02
120	8.6100	4.8930	2065.0	.4612-01	.5483-01	.6055-01	38.02	1.754	.3703	556.4	.1402-02
120	8.6100	5.3880	2070.0	.3791-01	.4506-01	.4975-01	38.05	1.442	.3698	555.7	.1153-02

IH103 60-OT LOWER NOSE (R3PE20)

LOWER NOSE

PARAMETRIC DATA

MACH = 5.250 ALPHA = -10.00 BETA = .0000 ELEVON = .0000
BDFLAP = .0000 SPDBRK = .0000

TEST CONDITIONS

RUN NUMBER	ALPHA DEG.	BETA DEG.	MACH	RN/FT /FT X10 6	PT PSIA	TT DEG. R	HT BTU/ LBM	PINF PSIA	TINF DEG. R	RHO SLUGS/ FT3	VINF FT/SEC	SCALE
121	-10.00	.0000	5.250	.9993	103.7	1539.	379.8	.1425	243.0	.4920-04	4011.	.1750-01

RUN NUMBER	PHI DEG.	HS SPHERE TW=540
121	.0000	.1681

TEST DATA

RUN NUMBER	XO MS	ZO MS	T/C NO	H/HREF R=1.0	H/HREF R=.900	H/HREF R=.850	QREF BTU/ FT2SEC	QDOT BTU/ FT2SEC	HW/HT	TW DEG. R	STN NO R=.900
121	4.5150	5.6960	2039.0	.2998	.3547	.3905	41.19	12.35	.3540	560.3	.9379-02
121	4.5410	5.5240	2038.0	.2307	.2729	.3004	41.21	9.508	.3537	559.7	.7217-02
121	5.6260	6.0020	2041.0	.1155	.1366	.1503	41.31	4.771	.3522	557.5	.3612-02
121	6.3610	5.2660	2045.0	.4408-01	.5211-01	.5734-01	41.37	1.824	.3513	556.0	.1378-02
121	6.3610	5.4700	2046.0	.6283-01	.7429-01	.8174-01	41.35	2.598	.3517	556.6	.1965-02
121	6.3610	5.6730	2047.0	.6905-01	.8165-01	.8984-01	41.33	2.854	.3519	556.9	.2159-02
121	8.6100	4.8930	2065.0	.4606-01	.5446-01	.5992-01	41.35	1.905	.3516	556.5	.1440-02
121	8.6100	5.3880	2070.0	.2127-01	.2515-01	.2767-01	41.35	.8795	.3516	556.5	.6651-03

IH103 60-OT LOWER NOSE (R3PE21)

LOWER NOSE

PARAMETRIC DATA

MACH = 5.250 ALPHA = .0000 BETA = .0000 ELEVON = .0000
BDFLAP = .0000 SPDBRK = .0000

TEST CONDITIONS

RUN NUMBER	ALPHA DEG.	BETA DEG.	MACH	RN/FT /FT X10 6	PT PSIA	TT DEG. R	HT BTU/ LBM	PINF PSIA	TINF DEG. R	RHO SLUGS/ FT3	VINF FT/SEC	SCALE
131	.0000	.0000	5.250	.6469	103.6	1999.	504.0	.1367	322.6	.3557-04	4622.	.1750-01

RUN NUMBER	PHI DEG.	HS SPHERE TW=540
131	.0000	.1689

TEST DATA

RUN NUMBER	XO MS	ZO MS	T/C NO	H/HREF R=1.0	H/HREF R=.900	H/HREF R=.850	QREF BTU/ FT2SEC	QDOT BTU/ FT2SEC	HW/HT	TW DEG. R	STN NO R=.900
131	4.5150	5.6960	2039.0	.2568	.2971	.3224	62.76	16.12	.2624	551.1	.9482-02
131	4.5410	5.5240	2038.0	.2174	.2515	.2729	62.79	13.65	.2620	550.4	.8027-02
131	5.6260	6.0020	2041.0	.1009	.1166	.1265	62.95	6.348	.2603	546.9	.3723-02
131	6.3610	5.2660	2045.0	.4526-01	.5232-01	.5674-01	63.13	2.858	.2583	542.6	.1670-02
131	6.3610	5.4700	2046.0	.6254-01	.7229-01	.7840-01	63.14	3.949	.2582	542.5	.2308-02
131	6.3610	5.6730	2047.0	.6345-01	.7333-01	.7953-01	63.13	4.006	.2583	542.5	.2341-02
131	8.6100	4.8930	2065.0	.3583-01	.4141-01	.4490-01	63.21	2.265	.2574	540.7	.1322-02
131	8.6100	5.3880	2070.0	.1415-01	.1635-01	.1773-01	63.31	.8960	.2564	538.5	.5222-03

IH103 60-OT LOWER MID FUSELAGE (R3PF01)

LWR MID FUSE

PARAMETRIC DATA

MACH = 5.250 ALPHA = .0000 BETA = .0000 ELEVON = .0000
BDFLAP = .0000 SPDBRK = .0000

TEST CONDITIONS

RUN NUMBER	ALPHA DEG.	BETA DEG.	MACH	RN/FT /FT X10 6	PT PSIA	TT DEG. R	HT BTU/ LBM	PINF PSIA	TINF DEG. R	RHO SLUGS/ FT3	VINF FT/SEC	SCALE
84	.0000	.0000	5.250	1.008	102.8	1523.	375.5	.1415	240.3	.4941-04	3989.	.1750-01

RUN NUMBER	PHI DEG.	HS SPHERE TW=540
84	.0000	.1673

TEST DATA

RUN NUMBER	XO MS	YO MS	T/C NO	H/HREF R=1.0	H/HREF R=.900	H/HREF R=.850	QREF BTU/ FT2SEC	QDOT BTU/ FT2SEC	HW/HT	TW DEG. R	STN NO R=.900
84	13.107	1.9620	2115.0	.3554-01	.4198-01	.4616-01	40.96	1.456	.3478	544.3	.1107-02
84	13.107	2.1420	2116.0	.2925-01	.3455-01	.3799-01	40.95	1.198	.3480	544.7	.9113-03
84	13.107	2.3220	2117.0	.2193-01	.2591-01	.2849-01	40.91	.8973	.3485	545.5	.6834-03
84	13.107	2.4480	2118.0	.3304-01	.3903-01	.4292-01	40.91	1.352	.3486	545.5	.1029-02
84	13.170	.78000	2107.0	.3498-01	.4132-01	.4544-01	40.95	1.433	.3479	544.5	.1090-02
84	13.207	1.7820	2114.0	.4776-01	.5641-01	.6203-01	40.97	1.957	.3477	544.2	.1488-02
84	15.356	1.8370	2130.0	.2120-01	.2504-01	.2753-01	40.95	.8681	.3480	544.6	.6604-03
84	15.356	2.0460	2131.0	.2863-01	.3382-01	.3718-01	40.95	1.173	.3479	544.5	.8919-03
84	15.356	2.2500	2132.0	.2923-01	.3452-01	.3796-01	40.96	1.197	.3478	544.3	.9105-03
84	15.356	2.4530	2133.0	.3489-01	.4121-01	.4531-01	40.94	1.428	.3481	544.7	.1087-02
84	15.356	2.6630	2134.0	.4189-01	.4949-01	.5442-01	40.92	1.714	.3484	545.3	.1305-02
84	15.356	2.8160	2135.0	.5337-01	.6305-01	.6934-01	40.92	2.184	.3485	545.4	.1663-02

IH103 60-OT LOWER MID FUSELAGE (R3PF02)

LWR MID FUSE

PARAMETRIC DATA

MACH = 5.250 ALPHA = -5.000 BETA = .0000 ELEVON = .0000
BDFLAP = .0000 SPDBRK = .0000

TEST CONDITIONS

RUN NUMBER	ALPHA DEG.	BETA DEG.	MACH	RN/FT /FT X10 6	PT PSIA	TT DEG. R	HT BTU/ LBM	PINF PSIA	TINF DEG. R	RHO SLUGS/ FT3	VINF FT/SEC	SCALE
83	-5.000	.0000	5.250	1.048	103.8	1496.	368.3	.1430	235.7	.5092-04	3951.	.1750-01

RUN NUMBER	PHI DEG.	HS SPHERE TW=540
83	.0000	.1679

TEST DATA

RUN NUMBER	XO MS	YO MS	T/C NO	H/HREF R=1.0	H/HREF R=.900	H/HREF R=.850	QREF BTU/ FT2SEC	QDOT BTU/ FT2SEC	HW/HT	TW DEG. R	STN NO R=.900
83	13.107	1.9620	2115.0	.4394-01	.5202-01	.5729-01	39.79	1.748	.3563	546.9	.1349-02
83	13.107	2.1420	2116.0	.3802-01	.4502-01	.4958-01	39.78	1.513	.3565	547.2	.1167-02
83	13.107	2.3220	2117.0	.4013-01	.4752-01	.5234-01	39.74	1.595	.3571	548.1	.1232-02
83	13.107	2.4480	2118.0	.5090-01	.6028-01	.6639-01	39.74	2.023	.3571	548.1	.1563-02
83	13.170	.78000	2107.0	.3502-01	.4146-01	.4565-01	39.82	1.395	.3558	546.2	.1075-02
83	13.207	1.7820	2114.0	.3075-01	.3640-01	.4008-01	39.83	1.225	.3557	546.1	.9438-03
83	15.356	1.8370	2130.0	.1947-01	.2304-01	.2538-01	39.79	.7746	.3562	546.8	.5975-03
83	15.356	2.0460	2131.0	.3109-01	.3681-01	.4054-01	39.79	1.237	.3563	546.9	.9546-03
83	15.356	2.2500	2132.0	.3778-01	.4473-01	.4926-01	39.79	1.503	.3562	546.8	.1160-02
83	15.356	2.4530	2133.0	.3657-01	.4330-01	.4769-01	39.78	1.455	.3565	547.2	.1123-02
83	15.356	2.6630	2134.0	.3997-01	.4734-01	.5214-01	39.75	1.589	.3569	547.9	.1227-02
83	15.356	2.8160	2135.0	.5896-01	.6982-01	.7690-01	39.75	2.343	.3570	547.9	.1810-02

IH103 60-OT LOWER MID FUSELAGE (R3PF03)

LWR MID FUSE

PARAMETRIC DATA

MACH = 5.250 ALPHA = 5.000 BETA = .0000 ELEVON = .0000
BDFLAP = .0000 SPDBRK = .0000

TEST CONDITIONS

RUN NUMBER	ALPHA DEG.	BETA DEG.	MACH	RN/FT /FT X10 6	PT PSIA	TT DEG. R	HT BTU/ LBM	PINF PSIA	TINF DEG. R	RHO SLUGS/ FT3	VINF FT/SEC	SCALE
82	5.000	.0000	5.250	1.000	101.7	1521.	374.9	.1400	239.9	.4897-04	3986.	.1750-01

RUN NUMBER	PHI DEG.	HS SPHERE TW=540
82	.0000	.1664

TEST DATA

RUN NUMBER	XO MS	YO MS	T/C NO	H/HREF R=1.0	H/HREF R=.900	H/HREF R=.850	QREF BTU/ FT2SEC	QDOT BTU/ FT2SEC	HW/HT	TW DEG. R	STN NO R=.900
82	13.107	1.9620	2115.0	.1344-01	.1589-01	.1748-01	40.52	.5447	.3501	546.9	.4208-03
82	13.107	2.1420	2116.0	.2226-01	.2631-01	.2895-01	40.50	.9016	.3504	547.4	.6969-03
82	13.107	2.3220	2117.0	.4115-01	.4865-01	.5353-01	40.44	1.664	.3512	548.8	.1289-02
82	13.107	2.4480	2118.0	.5889-01	.6963-01	.7661-01	40.43	2.381	.3514	549.1	.1844-02
82	13.170	.78000	2107.0	.2767-01	.3271-01	.3598-01	40.53	1.122	.3499	546.7	.8663-03
82	13.207	1.7820	2114.0	.1482-01	.1752-01	.1927-01	40.52	.6006	.3501	546.9	.4640-03
82	15.356	1.8370	2130.0	.1905-01	.2251-01	.2476-01	40.52	.7717	.3501	547.0	.5962-03
82	15.356	2.0460	2131.0	.1811-01	.2140-01	.2354-01	40.52	.7338	.3501	546.9	.5669-03
82	15.356	2.2500	2132.0	.1905-01	.2252-01	.2477-01	40.52	.7721	.3501	546.9	.5965-03
82	15.356	2.4530	2133.0	.3195-01	.3776-01	.4154-01	40.50	1.294	.3504	547.4	.1000-02
82	15.356	2.6630	2134.0	.4882-01	.5771-01	.6349-01	40.48	1.976	.3508	548.0	.1528-02
82	15.356	2.8160	2135.0	.6902-01	.8159-01	.8976-01	40.47	2.793	.3509	548.2	.2161-02

IH103 60-OT LOWER MID FUSELAGE (R3PF04)

LWR MID FUSE

PARAMETRIC DATA

MACH = 5.250 ALPHA = 10.00 BETA = .0000 ELEVON = .0000
BDFLAP = .0000 SPDBRK = .0000

TEST CONDITIONS

RUN NUMBER	ALPHA DEG.	BETA DEG.	MACH	RN/FT /FT X10 6	PT PSIA	TT DEG. R	HT BTU/ LBM	PINF PSIA	TINF DEG. R	RHO SLUGS/ FT3	VINF FT/SEC	SCALE
81	10.00	-5.000	5.250	1.029	101.8	1494.	368.0	.1404	235.5	.5001-04	3949.	.1750-01

RUN NUMBER	PHI DEG.	HS SPHERE TW=540
81	.0000	.1663

TEST DATA

RUN NUMBER	XO MS	YO MS	T/C NO	H/HREF R=1.0	H/HREF R=.900	H/HREF R=.850	QREF BTU/ FT2SEC	QDOT BTU/ FT2SEC	HW/HT	TW DEG. R	STN NO R=.900
81	13.107	1.9620	2115.0	.2867-01	.3395-01	.3739-01	39.33	1.128	.3571	547.6	.8881-03
81	13.107	2.1420	2116.0	.4337-01	.5136-01	.5657-01	39.31	1.705	.3574	548.2	.1344-02
81	13.107	2.3220	2117.0	.5955-01	.7055-01	.7772-01	39.24	2.337	.3585	549.9	.1845-02
81	13.107	2.4480	2118.0	.7527-01	.8917-01	.9825-01	39.22	2.952	.3588	550.3	.2333-02
81	13.170	.78000	2107.0	.3851-01	.4559-01	.5021-01	39.37	1.516	.3565	546.8	.1193-02
81	13.207	1.7820	2114.0	.2244-01	.2657-01	.2926-01	39.34	.8827	.3569	547.4	.6950-03
81	15.356	1.8370	2130.0	.1751-01	.2074-01	.2284-01	39.35	.6892	.3568	547.3	.5425-03
81	15.356	2.0460	2131.0	.2591-01	.3068-01	.3379-01	39.34	1.019	.3569	547.4	.8026-03
81	15.356	2.2500	2132.0	.3813-01	.4515-01	.4973-01	39.34	1.500	.3570	547.5	.1181-02
81	15.356	2.4530	2133.0	.5376-01	.6367-01	.7013-01	39.30	2.113	.3575	548.3	.1666-02
81	15.356	2.6630	2134.0	.6896-01	.8169-01	.8999-01	39.28	2.709	.3579	549.0	.2137-02
81	15.356	2.8160	2135.0	.9006-01	.1067	.1175	39.26	3.536	.3582	549.3	.2791-02

IH103 60-OT LOWER MID FUSELAGE (R3PF05)

LWR MID FUSE

PARAMETRIC DATA

MACH = 5.250 ALPHA = .0000 BETA = -5.000 ELEVON = .0000
BDFLAP = .0000 SPDBRK = .0000

TEST CONDITIONS

RUN NUMBER	ALPHA DEG.	BETA DEG.	MACH	RN/FT /FT X10 6	PT PSIA	TT DEG. R	HT BTU/ LBM	PINF PSIA	TINF DEG. R	RHO SLUGS/ FT3	VINF FT/SEC	SCALE
77	.0000	-5.000	5.250	1.043	103.3	1496.	368.4	.1425	235.8	.5070-04	3951.	.1750-01

RUN NUMBER	PHI DEG.	HS SPHERE TW=540
77	.0000	.1675

TEST DATA

RUN NUMBER	XO MS	YO MS	T/C NO	H/HREF R=1.0	H/HREF R=.900	H/HREF R=.850	QREF BTU/ FT2SEC	QDOT BTU/ FT2SEC	HW/HT	TW DEG. R	STN NO R=.900
77	13.107	1.9620	2115.0	.2628-01	.3115-01	.3434-01	39.42	1.036	.3610	554.3	.8093-03
77	13.107	2.1420	2116.0	.3637-01	.4312-01	.4753-01	39.41	1.433	.3612	554.6	.1120-02
77	13.107	2.3220	2117.0	.5353-01	.6347-01	.6997-01	39.37	2.107	.3618	555.6	.1649-02
77	13.107	2.4480	2118.0	.7472-01	.8860-01	.9768-01	39.36	2.941	.3619	555.7	.2302-02
77	13.170	.78000	2107.0	.5113-01	.6059-01	.6678-01	39.48	2.019	.3600	552.9	.1574-02
77	13.207	1.7820	2114.0	.2227-01	.2639-01	.2909-01	39.47	.8790	.3602	553.1	.6857-03
77	15.356	1.8370	2130.0	.1330-01	.1576-01	.1737-01	39.45	.5246	.3605	553.6	.4095-03
77	15.356	2.0460	2131.0	.1796-01	.2129-01	.2346-01	39.44	.7083	.3607	553.9	.5531-03
77	15.356	2.2500	2132.0	.2841-01	.3368-01	.3712-01	39.42	1.120	.3610	554.3	.8749-03
77	15.356	2.6630	2134.0	.5489-01	.6509-01	.7175-01	39.38	2.162	.3616	555.3	.1691-02
77	15.356	2.8160	2135.0	.3664-02	.4332-02	.4767-02	40.05	.1467	.3516	540.2	.1127-03

IH103 60-OT LOWER MID FUSELAGE (R3PF06)

LWR MID FUSE

PARAMETRIC DATA

MACH = 5.250 ALPHA = -5.000 BETA = -5.000 ELEVON = .0000
BDFLAP = .0000 SPDBRK = .0000

TEST CONDITIONS

RUN NUMBER	ALPHA DEG.	BETA DEG.	MACH	RN/FT /FT X10 6	PT PSIA	TT DEG. R	HT BTU/ LBM	PINF PSIA	TINF DEG. R	RHO SLUGS/ FT3	VINF FT/SEC	SCALE
78	-5.000	-5.000	5.250	.9991	96.86	1476.	363.2	.1337	232.4	.4828-04	3923.	.1750-01

RUN NUMBER	PHI DEG.	HS SPHERE TW=540
78	.0000	.1621

TEST DATA

RUN NUMBER	XO MS	YO MS	T/C NO	H/HREF R=1.0	H/HREF R=.900	H/HREF R=.850	QREF BTU/ FT2SEC	QDOT BTU/ FT2SEC	HW/HT	TW DEG. R	STN NO R=.900
78	13.107	1.9620	2115.0	.1900-01	.2257-01	.2491-01	37.16	.7059	.3683	557.4	.5999-03
78	13.107	2.1420	2116.0	.1385-01	.1645-01	.1816-01	37.14	.5144	.3685	557.8	.4374-03
78	13.107	2.3220	2117.0	.3461-01	.4114-01	.4542-01	37.08	1.284	.3695	559.3	.1093-02
78	13.107	2.4480	2118.0	.6943-01	.8253-01	.9112-01	37.07	2.574	.3697	559.6	.2194-02
78	13.170	.78000	2107.0	.4641-01	.5513-01	.6085-01	37.20	1.727	.3675	556.3	.1466-02
78	13.207	1.7820	2114.0	.3878-01	.4607-01	.5085-01	37.18	1.442	.3679	556.8	.1225-02
78	15.356	1.8370	2130.0	.3991-01	.4742-01	.5234-01	37.16	1.483	.3683	557.4	.1260-02
78	15.356	2.0460	2131.0	.3532-01	.4196-01	.4632-01	37.16	1.313	.3682	557.4	.1115-02
78	15.356	2.2500	2132.0	.1998-01	.2373-01	.2620-01	37.15	.7422	.3684	557.5	.6308-03
78	15.356	2.6630	2134.0	.4612-01	.5481-01	.6052-01	37.10	1.711	.3692	558.9	.1457-02
78	15.356	2.8160	2135.0	.4387-02	.5197-02	.5726-02	37.76	.1656	.3584	542.5	.1382-03

IH103 60-OT LOWER MID FUSELAGE (R3PF07)

LWR MID FUSE

PARAMETRIC DATA

MACH = 5.250 ALPHA = 5.000 BETA = -5.000 ELEVON = .0000
BDFLAP = .0000 SPDBRK = .0000

TEST CONDITIONS

RUN NUMBER	ALPHA DEG.	BETA DEG.	MACH	RN/FT /FT X10 6	PT PSIA	TT DEG. R	HT BTU/ LBM	PINF PSIA	TINF DEG. R	RHO SLUGS/ FT3	VINF FT/SEC	SCALE
79	5.000	-5.000	5.250	1.004	99.07	1492.	367.3	.1366	235.1	.4877-04	3945.	.1750-01

RUN NUMBER	PHI DEG.	HS SPHERE TW=540
79	.0000	.1640

TEST DATA

RUN NUMBER	XO MS	YO MS	T/C NO	H/HREF R=1.0	H/HREF R=.900	H/HREF R=.850	QREF BTU/ FT2SEC	QDOT BTU/ FT2SEC	HW/HT	TW DEG. R	STN NO R=.900
79	13.107	1.9620	2115.0	.3884-01	.4595-01	.5058-01	38.93	1.512	.3538	541.6	.1218-02
79	13.107	2.1420	2116.0	.5327-01	.6303-01	.6939-01	38.91	2.073	.3541	542.1	.1670-02
79	13.107	2.3220	2117.0	.6800-01	.8047-01	.8860-01	38.86	2.643	.3548	543.1	.2132-02
79	13.107	2.4480	2118.0	.8482-01	.1004	.1105	38.86	3.296	.3549	543.3	.2659-02
79	13.170	.78000	2107.0	.4123-01	.4876-01	.5367-01	39.00	1.608	.3527	539.8	.1292-02
79	13.207	1.7820	2114.0	.3320-01	.3927-01	.4322-01	38.99	1.294	.3529	540.2	.1040-02
79	15.356	1.8370	2130.0	.1631-01	.1929-01	.2123-01	38.97	.6355	.3532	540.7	.5112-03
79	15.356	2.0460	2131.0	.2580-01	.3052-01	.3359-01	38.95	1.005	.3534	540.9	.8087-03
79	15.356	2.2500	2132.0	.3729-01	.4412-01	.4856-01	36.94	1.452	.3536	541.3	.1169-02
79	15.356	2.4530	2133.0	.5405-01	.6395-01	.7040-01	38.91	2.103	.3541	542.0	.1694-02
79	15.356	2.6630	2134.0	.6865-01	.8123-01	.8942-01	38.90	2.670	.3543	542.4	.2152-02
79	15.356	2.8160	2135.0	.9396-01	.1112	.1224	38.88	3.653	.3546	542.8	.2946-02

IH103 60-OT LOWER MID FUSELAGE (R3PF08)

LWR MID FUSE

PARAMETRIC DATA

MACH = 5.250 ALPHA = 10.00 BETA = -5.000 ELEVON = .0000
BDFLAP = .0000 SPDBRK = .0000

TEST CONDITIONS

RUN NUMBER	ALPHA DEG.	BETA DEG.	MACH	RN/FT /FT X10 6	PT PSIA	TT DEG. R	HT BTU/ LBM	PINF PSIA	TINF DEG. R	RHO SLUGS/ FT3	VINF FT/SEC	SCALE
80	10.00	-5.000	5.250	1.024	102.2	1503.	370.2	.1408	236.9	.4989-04	3961.	.1750-01

RUN NUMBER	PHI DEG.	HS SPHERE TW=540
80	.0000	.1667

TEST DATA

RUN NUMBER	XO MS	YO MS	T/C NO	H/HREF R=1.0	H/HREF R=.900	H/HREF R=.850	QREF BTU/ FT2SEC	QDOT BTU/ FT2SEC	HW/HT	TW DEG. R	STN NO R=.900
80	13.107	1.9620	2115.0	.5100-01	.6033-01	.6641-01	39.88	2.034	.3535	545.5	.1581-02
80	13.107	2.1420	2116.0	.6478-01	.7664-01	.8437-01	39.86	2.582	.3539	546.0	.2009-02
80	13.107	2.3220	2117.0	.7944-01	.9401-01	.1035	39.80	3.162	.3547	547.3	.2464-02
80	13.107	2.4480	2118.0	.9242-01	.1094	.1204	39.78	3.677	.3550	547.8	.2867-02
80	13.170	.78000	2107.0	.1807-01	.2138-01	.2353-01	39.91	.7214	.3530	544.7	.5604-03
80	13.207	1.7820	2114.0	.4251-01	.5029-01	.5535-01	39.90	1.696	.3532	545.0	.1318-02
80	15.356	1.8370	2130.0	.2611-01	.3088-01	.3399-01	39.89	1.041	.3533	545.1	.8094-03
80	15.356	2.0460	2131.0	.4031-01	.4769-01	.5249-01	39.89	1.608	.3534	545.3	.1250-02
80	15.356	2.2500	2132.0	.5248-01	.6208-01	.6833-01	39.89	2.094	.3534	545.2	.1627-02
80	15.356	2.4530	2133.0	.6810-01	.8057-01	.8868-01	39.87	2.715	.3537	545.7	.2112-02
80	15.356	2.6630	2134.0	.8383-01	.9919-01	.1092	39.83	3.339	.3543	546.7	.2600-02
80	15.356	2.8160	2135.0	.1007	.1191	.1311	39.82	4.009	.3545	546.9	.3122-02

IH103 60-OT LOWER MID FUSELAGE (R3PF09)

LWR MID FUSE

PARAMETRIC DATA

MACH = 5.250 ALPHA = .0000 BETA = -3.000 ELEVON = .0000
BDFLAP = .0000 SPDBRK = .0000

TEST CONDITIONS

RUN NUMBER	ALPHA DEG.	BETA DEG.	MACH	RN/FT /FT X10 6	PT PSIA	TT DEG. R	HT BTU/ LBM	PINF PSIA	TINF DEG. R	RHO SLUGS/ FT3	VINF FT/SEC	SCALE
93	.0000	-3.000	5.250	1.074	104.3	1478.	363.7	.1440	232.7	.5192-04	3926.	.1750-01

RUN NUMBER	PHI DEG.	HS SPHERE TW=540
93	.0000	.1682

TEST DATA

RUN NUMBER	XO MS	YO MS	T/C NO	H/HREF R=1.0	H/HREF R=.900	H/HREF R=.850	QREF BTU/ FT2SEC	QDOT BTU/ FT2SEC	HW/HT	TW DEG. R	STN NO R=.900
93	13.107	1.9620	2115.0	.1780-01	.2114-01	.2332-01	38.73	.6895	.3665	555.4	.5419-03
93	13.107	2.1420	2116.0	.2353-01	.2794-01	.3083-01	38.72	.9109	.3667	555.9	.7163-03
93	13.107	2.3220	2117.0	.3628-01	.4309-01	.4755-01	38.68	1.403	.3673	556.7	.1105-02
93	13.107	2.4480	2118.0	.5920-01	.7031-01	.7760-01	38.67	2.289	.3675	557.0	.1803-02
93	13.170	.78000	2107.0	.3880-01	.4606-01	.5082-01	38.77	1.504	.3658	554.5	.1181-02
93	13.207	1.7820	2114.0	.2516-01	.2987-01	.3296-01	38.77	.9754	.3660	554.7	.7659-03
93	15.356	1.8370	2130.0	.2669-01	.3169-01	.3497-01	38.74	1.034	.3664	555.3	.8126-03
93	15.356	2.0460	2131.0	.2555-01	.3034-01	.3348-01	38.74	.9899	.3664	555.4	.7780-03
93	15.356	2.2500	2132.0	.1906-01	.2264-01	.2498-01	38.73	.7383	.3666	555.6	.5804-03
93	15.356	2.4530	2133.0	.3205-01	.3806-01	.4200-01	38.71	1.241	.3668	555.9	.9759-03
93	15.356	2.6630	2134.0	.4326-01	.5137-01	.5669-01	38.69	1.674	.3672	556.5	.1317-02
93	15.356	2.8160	2135.0	.6869-01	.8158-01	.9004-01	38.68	2.657	.3674	556.8	.2092-02

IH103 60-OT LOWER MID FUSELAGE (R3PF10)

LWR MID FUSE

PARAMETRIC DATA

MACH = 5.250 ALPHA = -5.000 BETA = -3.000 ELEVON = .0000
BDFLAP = .0000 SPDBRK = .0000

TEST CONDITIONS

RUN NUMBER	ALPHA DEG.	BETA DEG.	MACH	RN/FT /FT X10 6	PT PSIA	TT DEG. R	HT BTU/ LBM	PINF PSIA	TINF DEG. R	RHO SLUGS/ FT3	VINF FT/SEC	SCALE
94	-5.000	-3.000	5.250	1.005	103.7	1534.	378.4	.1425	242.1	.4939-04	4004.	.1750-01

RUN NUMBER	PHI DEG.	HS SPHERE TW=540
94	.0000	.1680

TEST DATA

RUN NUMBER	XO MS	YO MS	T/C NO	H/HREF R=1.0	H/HREF R=.900	H/HREF R=.850	QREF BTU/ FT2SEC	QDOT BTU/ FT2SEC	HW/HT	TW DEG. R	STN NO R=.900
94	13.107	1.9620	2115.0	.2750-01	.3252-01	.3579-01	41.12	1.131	.3526	556.1	.8581-03
94	13.107	2.1420	2116.0	.2423-01	.2866-01	.3154-01	41.10	.9957	.3531	556.8	.7562-03
94	13.107	2.3220	2117.0	.2873-01	.3399-01	.3742-01	41.05	1.179	.3538	557.9	.8969-03
94	13.107	2.4480	2118.0	.5677-01	.6717-01	.7394-01	41.03	2.329	.3541	558.3	.1772-02
94	13.170	.78000	2107.0	.4354-01	.5149-01	.5667-01	41.14	1.791	.3524	555.8	.1359-02
94	13.207	1.7820	2114.0	.4945-01	.5849-01	.6437-01	41.13	2.034	.3526	556.0	.1543-02
94	15.356	1.8370	2130.0	.2915-01	.3447-01	.3794-01	41.12	1.198	.3528	556.3	.9096-03
94	15.356	2.0460	2131.0	.3292-01	.3894-01	.4285-01	41.12	1.354	.3528	556.3	.1027-02
94	15.356	2.2500	2132.0	.3860-01	.4566-01	.5025-01	41.10	1.587	.3529	556.6	.1205-02
94	15.356	2.4530	2133.0	.2909-01	.3441-01	.3787-01	41.08	1.195	.3533	557.1	.9079-03
94	15.356	2.6630	2134.0	.3875-01	.4584-01	.5046-01	41.06	1.591	.3536	557.6	.1209-02
94	15.356	2.8160	2135.0	.6913-01	.8178-01	.9003-01	41.05	2.837	.3538	557.9	.2158-02

IH103 60-OT LOWER MID FUSELAGE (R3PF11)

LWR MID FUSE

PARAMETRIC DATA

MACH = 5.250 ALPHA = 5.000 BETA = -3.000 ELEVON = .0000
BDFLAP = .0000 SPDBRK = .0000

TEST CONDITIONS

RUN NUMBER	ALPHA DEG.	BETA DEG.	MACH	RN/FT /FT X10 6	PT PSIA	TT DEG. R	HT BTU/ LBM	PINF PSIA	TINF DEG. R	RHO SLUGS/ FT3	VINF FT/SEC	SCALE
95	5.000	-3.000	5.250	1.012	102.9	1520.	374.9	.1416	239.9	.4954-04	3986.	.1750-01

RUN NUMBER	PHI DEG.	HS SPHERE TW=540
95	.0000	.1673

TEST DATA

RUN NUMBER	XO MS	YO MS	T/C NO	H/HREF R=1.0	H/HREF R=.900	H/HREF R=.850	QREF BTU/ FT2SEC	QDOT BTU/ FT2SEC	HW/HT	TW DEG. R	STN NO R=.900
95	13.107	1.9620	2115.0	.2886-01	.3419-01	.3767-01	40.23	1.161	.3581	559.5	.8998-03
95	13.107	2.1420	2116.0	.4094-01	.4849-01	.5343-01	40.21	1.646	.3585	560.0	.1276-02
95	13.107	2.3220	2117.0	.5516-01	.6536-01	.7202-01	40.16	2.215	.3592	561.1	.1720-02
95	13.107	2.4480	2118.0	.6983-01	.8274-01	.9117-01	40.15	2.803	.3594	561.5	.2177-02
95	13.170	.78000	2107.0	.3313-01	.3923-01	.4321-01	40.28	1.334	.3574	558.4	.1033-02
95	13.207	1.7820	2114.0	.2405-01	.2848-01	.3137-01	40.27	.9683	.3575	558.6	.7496-03
95	15.356	1.8370	2130.0	.1375-01	.1629-01	.1794-01	40.23	.5532	.3580	559.3	.4286-03
95	15.356	2.0460	2131.0	.1959-01	.2321-01	.2557-01	40.23	.7881	.3581	559.5	.6108-03
95	15.356	2.2500	2132.0	.2744-01	.3250-01	.3581-01	40.21	1.103	.3584	559.9	.8554-03
95	15.356	2.4530	2133.0	.4485-01	.5314-01	.5855-01	40.19	1.803	.3587	560.4	.1398-02
95	15.356	2.6630	2134.0	.5725-01	.6784-01	.7475-01	40.17	2.300	.3591	560.9	.1785-02
95	15.356	2.8160	2135.0	.7669-01	.9087-01	.1001	40.15	3.079	.3593	561.3	.2391-02

IH103 60-OT LOWER MID FUSELAGE (R3PF12)

LWR MID FUSE

PARAMETRIC DATA

MACH = 5.250 ALPHA = 10.00 BETA = -3.000 ELEVON = .0000
BDFLAP = .0000 SPDBRK = .0000

TEST CONDITIONS

RUN NUMBER	ALPHA DEG.	BETA DEG.	MACH	RN/FT /FT X10 6	PT PSIA	TT DEG. R	HT BTU/ LBM	PINF PSIA	TINF DEG. R	RHO SLUGS/ FT3	VINF FT/SEC	SCALE
96	10.00	-3.000	5.250	1.046	102.9	1490.	366.9	.1420	234.8	.5074-04	3943.	.1750-01

RUN NUMBER	PHI DEG.	HS SPHERE TW=540
96	.0000	.1672

TEST DATA

RUN NUMBER	XO MS	YO MS	T/C NO	H/HREF R=1.0	H/HREF R=.900	H/HREF R=.850	QREF BTU/ FT2SEC	QDOT BTU/ FT2SEC	HW/HT	TW DEG. R	STN NO R=.900
96	13.107	1.9620	2115.0	.4470-01	.5292-01	.5829-01	39.46	1.764	.3566	545.2	.1374-02
96	13.107	2.1420	2116.0	.5851-01	.6928-01	.7631-01	39.43	2.307	.3570	545.9	.1799-02
96	13.107	2.3220	2117.0	.7287-01	.8631-01	.9508-01	39.38	2.869	.3579	547.2	.2241-02
96	13.107	2.4480	2118.0	.8476-01	.1004	.1106	39.35	3.335	.3582	547.8	.2607-02
96	13.170	.78000	2107.0	.2012-01	.2382-01	.2623-01	39.47	.7942	.3564	544.9	.6186-03
96	13.207	1.7820	2114.0	.3784-01	.4480-01	.4934-01	39.46	1.493	.3565	545.2	.1163-02
96	15.356	1.8370	2130.0	.2275-01	.2693-01	.2966-01	39.46	.8976	.3565	545.1	.6993-03
96	15.356	2.0460	2131.0	.3601-01	.4264-01	.4696-01	39.46	1.421	.3565	545.1	.1107-02
96	15.356	2.2500	2132.0	.4697-01	.5561-01	.6124-01	39.46	1.853	.3565	545.1	.1444-02
96	15.356	2.4530	2133.0	.6285-01	.7442-01	.8196-01	39.44	2.479	.3569	545.7	.1932-02
96	15.356	2.6630	2134.0	.8065-01	.9552-01	.1052	39.40	3.178	.3574	546.5	.2480-02
96	15.356	2.8160	2135.0	.9765-01	.1156	.1274	39.39	3.847	.3576	546.7	.3003-02

IH103 60-OT LOWER MID FUSELAGE (R3PF13)

LWR MID FUSE

PARAMETRIC DATA

MACH = 5.250 ALPHA = .0000 BETA = -9.000 ELEVON = .0000
BDFLAP = .0000 SPDBRK = .0000

TEST CONDITIONS

RUN NUMBER	ALPHA DEG.	BETA DEG.	MACH	RN/FT /FT X10 6	PT PSIA	TT DEG. R	HT BTU/ LBM	PINF PSIA	TINF DEG. R	RHO SLUGS/ FT3	VINF FT/SEC	SCALE
100	.0000	-9.000	5.250	1.056	104.1	1491.	367.2	.1435	235.0	.5127-04	3944.	.1750-01

RUN NUMBER	PHI DEG.	HS SPHERE TW=540
100	.0000	.1681

TEST DATA

RUN NUMBER	XO MS	YO MS	T/C NO	H/HREF R=1.0	H/HREF R=.900	H/HREF R=.850	QREF BTU/ FT2SEC	QDOT BTU/ FT2SEC	HW/HT	TW DEG. R	STN NO R=.900
100	13.107	1.9620	2115.0	.3553-01	.4211-01	.4640-01	39.52	1.404	.3595	550.2	.1088-02
100	13.107	2.1420	2116.0	.5017-01	.5946-01	.6552-01	39.50	1.981	.3599	550.7	.1536-02
100	13.107	2.3220	2117.0	.7041-01	.8345-01	.9198-01	39.46	2.778	.3604	551.5	.2155-02
100	13.107	2.4480	2118.0	.9597-01	.1138	.1254	39.45	3.786	.3606	551.7	.2938-02
100	13.170	.78000	2107.0	.3712-01	.4398-01	.4846-01	39.54	1.468	.3592	549.6	.1136-02
100	13.207	1.7820	2114.0	.2151-01	.2549-01	.2809-01	39.53	.8504	.3593	549.8	.6585-03
100	15.356	1.8370	2130.0	.1867-01	.2213-01	.2439-01	39.51	.7378	.3597	550.4	.5716-03
100	15.356	2.0460	2131.0	.3114-01	.3691-01	.4067-01	39.51	1.231	.3596	550.3	.9533-03
100	15.356	2.2500	2132.0	.3949-01	.4680-01	.5157-01	39.52	1.561	.3596	550.2	.1209-02
100	15.356	2.4530	2133.0	.4337-01	.5139-01	.5663-01	39.50	1.713	.3598	550.5	.1327-02
100	15.356	2.6630	2134.0	.6922-01	.8205-01	.9043-01	39.46	2.732	.3604	551.5	.2119-02
100	15.356	2.8160	2135.0	.1066	.1264	.1393	39.47	4.207	.3603	551.4	.3264-02

IH103 60-OT LOWER MID FUSELAGE (R3PF14)

LWR MID FUSE

PARAMETRIC DATA

MACH = 5.250 ALPHA = -5.000 BETA = -9.000 ELEVON = .0000
BDFLAP = .0000 SPDBRK = .0000

TEST CONDITIONS

RUN NUMBER	ALPHA DEG.	BETA DEG.	MACH	RN/FT /FT X10 6	PT PSIA	TT DEG. R	HT BTU/ LBM	PINF PSIA	TINF DEG. R	RHO SLUGS/ FT3	VINF FT/SEC	SCALE
99	-5.000	-9.000	5.250	1.045	102.9	1490.	366.9	.1420	234.8	.5073-04	3943.	.1750-01

RUN NUMBER	PHI DEG.	HS SPHERE TW=540
99	.0000	.1672

TEST DATA

RUN NUMBER	XO MS	YO MS	T/C NO	H/HREF R=1.0	H/HREF R=.900	H/HREF R=.850	QREF BTU/ FT2SEC	QDOT BTU/ FT2SEC	HW/HT	TW DEG. R	STN NO R=.900
99	13.107	1.9620	2115.0	.2354-01	.2793-01	.3080-01	39.00	.9179	.3638	556.4	.7249-03
99	13.107	2.1420	2116.0	.4071-01	.4830-01	.5327-01	38.99	1.587	.3639	556.6	.1254-02
99	13.107	2.3220	2117.0	.5941-01	.7050-01	.7776-01	38.96	2.315	.3645	557.4	.1830-02
99	13.107	2.4480	2118.0	.8853-01	.1051	.1159	38.95	3.449	.3646	557.5	.2727-02
99	13.170	.78000	2107.0	.6550-01	.7769-01	.8567-01	39.05	2.557	.3631	555.3	.2017-02
99	13.207	1.7820	2114.0	.2094-01	.2484-01	.2739-01	39.05	.8177	.3631	555.3	.6449-03
99	15.356	1.8370	2130.0	.1325-01	.1572-01	.1734-01	39.01	.5170	.3636	556.0	.4081-03
99	15.356	2.0460	2131.0	.2039-01	.2419-01	.2668-01	39.01	.7953	.3637	556.2	.6279-03
99	15.356	2.2500	2132.0	.3648-01	.4328-01	.4773-01	38.99	1.422	.3639	556.5	.1124-02
99	15.356	2.4530	2133.0	.4953-01	.5877-01	.6482-01	38.97	1.930	.3643	557.1	.1526-02
99	15.356	2.6630	2134.0	.5047-01	.5989-01	.6606-01	38.96	1.966	.3644	557.3	.1555-02
99	15.356	2.8160	2135.0	.9519-01	.1130	.1246	38.95	3.708	.3646	557.5	.2933-02

IH103 60-OT LOWER MID FUSELAGE (R3PF15)

LWR MID FUSE

PARAMETRIC DATA

MACH = 5.250 ALPHA = 5.000 BETA = -9.000 ELEVON = .0000
BDFLAP = .0000 SPDBRK = .0000

TEST CONDITIONS

RUN NUMBER	ALPHA DEG.	BETA DEG.	MACH	RN/FT /FT X10 6	PT PSIA	TT DEG. R	HT BTU/ LBM	PINF PSIA	TINF DEG. R	RHO SLUGS/ FT3	VINF FT/SEC	SCALE
98	5.000	-9.000	5.250	1.057	103.4	1484.	365.2	.1426	233.7	.5120-04	3934.	.1750-01

RUN NUMBER	PHI DEG.	HS SPHERE TW=540
98	.0000	.1675

TEST DATA

RUN NUMBER	XO MS	YO MS	T/C NO	H/HREF R=1.0	H/HREF R=.900	H/HREF R=.850	QREF BTU/ FT2SEC	QDOT BTU/ FT2SEC	HW/HT	TW DEG. R	STN NO R=.900
98	13.107	1.9620	2115.0	.5067-01	.6008-01	.6624-01	39.03	1.978	.3616	550.4	.1552-02
98	13.107	2.1420	2116.0	.6384-01	.7571-01	.8347-01	39.00	2.490	.3620	550.9	.1956-02
98	13.107	2.3220	2117.0	.8188-01	.9712-01	.1071	38.96	3.190	.3627	552.0	.2509-02
98	13.107	2.4480	2118.0	.1031	.1223	.1348	38.94	4.013	.3630	552.5	.3158-02
98	13.170	.78000	2107.0	.2054-01	.2435-01	.2684-01	39.05	.8022	.3612	549.7	.6291-03
98	13.207	1.7820	2114.0	.4018-01	.4763-01	.5251-01	39.05	1.569	.3613	549.9	.1231-02
98	15.356	1.8370	2130.0	.2744-01	.3253-01	.3586-01	39.03	1.071	.3615	550.2	.8404-03
98	15.356	2.0460	2131.0	.3506-01	.4157-01	.4583-01	39.03	1.369	.3615	550.2	.1074-02
98	15.356	2.2500	2132.0	.4150-01	.4920-01	.5424-01	39.03	1.620	.3615	550.2	.1271-02
98	15.356	2.4530	2133.0	.6335-01	.7512-01	.8282-01	39.02	2.472	.3617	550.6	.1941-02
98	15.356	2.6630	2134.0	.8554-01	.1014	.1119	38.98	3.334	.3624	551.6	.2621-02
98	15.356	2.8160	2135.0	.1175	.1394	.1537	38.97	4.580	.3625	551.7	.3601-02

IH103 60-OT LOWER MID FUSELAGE (R3PF16)

LWR MID FUSE

PARAMETRIC DATA

MACH = 5.250 ALPHA = 10.00 BETA = -9.000 ELEVON = .0000
BDFLAP = .0000 SPDBRK = .0000

TEST CONDITIONS

RUN NUMBER	ALPHA DEG.	BETA DEG.	MACH	RN/FT /FT X10 6	PT PSIA	TT DEG. R	HT BTU/ LBM	PINF PSIA	TINF DEG. R	RHO SLUGS/ FT3	VINF FT/SEC	SCALE
97	10.00	-9.000	5.250	1.033	103.2	1504.	370.5	.1422	237.1	.5033-04	3962.	.1750-01

RUN NUMBER	PHI DEG.	HS SPHERE TW=540
97	.0000	.1675

TEST DATA

RUN NUMBER	XO MS	YO MS	T/C NO	H/HREF R=1.0	H/HREF R=.900	H/HREF R=.850	QREF BTU/ FT2SEC	QDOT BTU/ FT2SEC	HW/HT	TW DEG. R	STN NO R=.900
97	13.107	1.9620	2115.0	.5899-01	.6980-01	.7684-01	40.06	2.364	.3541	546.8	.1822-02
97	13.107	2.1420	2116.0	.7180-01	.8496-01	.9354-01	40.05	2.875	.3544	547.2	.2217-02
97	13.107	2.3220	2117.0	.8599-01	.1018	.1120	40.00	3.440	.3551	548.3	.2656-02
97	13.107	2.4480	2118.0	.1007	.1192	.1313	39.98	4.027	.3554	548.8	.3111-02
97	13.170	.78000	2107.0	.1806-01	.2137-01	.2353-01	40.07	.7238	.3540	546.6	.5577-03
97	13.207	1.7820	2114.0	.5449-01	.6447-01	.7097-01	40.07	2.184	.3540	546.6	.1682-02
97	15.356	1.8370	2130.0	.3788-01	.4482-01	.4934-01	40.07	1.518	.3541	546.7	.1170-02
97	15.356	2.0460	2131.0	.5247-01	.6208-01	.6834-01	40.07	2.103	.3540	546.6	.1620-02
97	15.356	2.2500	2132.0	.5878-01	.6954-01	.7655-01	40.07	2.355	.3540	546.6	.1815-02
97	15.356	2.4530	2133.0	.7387-01	.8741-01	.9622-01	40.05	2.959	.3543	547.1	.2281-02
97	15.356	2.6630	2134.0	.9243-01	.1094	.1204	40.02	3.699	.3548	547.8	.2854-02
97	15.356	2.8160	2135.0	.1118	.1323	.1456	40.02	4.472	.3549	547.9	.3451-02

IH103 60-OT LOWER MID FUSELAGE (R3PF17)

LWR MID FUSE

PARAMETRIC DATA

MACH = 5.250 ALPHA = -10.00 BETA = -9.000 ELEVON = .0000
BDFLAP = .0000 SPDBRK = .0000

TEST CONDITIONS

RUN NUMBER	ALPHA DEG.	BETA DEG.	MACH	RN/FT /FT X10 6	PT PSIA	TT DEG. R	HT BTU/ LBM	PINF PSIA	TINF DEG. R	RHO SLUGS/ FT3	VINF FT/SEC	SCALE
110	-10.00	-9.000	5.250	1.092	103.7	1458.	358.4	.1434	229.4	.5246-04	3897.	.1750-01

RUN NUMBER	PHI DEG.	HS SPHERE TW=540
110	.0000	.1676

TEST DATA

RUN NUMBER	XO MS	YO MS	T/C NO	H/HREF R=1.0	H/HREF R=.900	H/HREF R=.850	QREF BTU/ FT2SEC	QDOT BTU/ FT2SEC	HW/HT	TW DEG. R	STN NO R=.900
110	13.107	1.9620	2115.0	.2587-01	.3088-01	.3418-01	37.03	.9581	.3828	571.9	.7859-03
110	13.107	2.1420	2116.0	.2452-01	.2926-01	.3240-01	37.02	.9077	.3830	572.1	.7448-03
110	13.107	2.3220	2117.0	.5864-01	.6999-01	.7749-01	36.99	2.169	.3835	572.8	.1781-02
110	13.107	2.4480	2118.0	.9836-01	.1174	.1300	36.98	3.637	.3837	573.2	.2988-02
110	13.170	.78000	2107.0	.7610-01	.9081-01	.1005	37.04	2.819	.3827	571.7	.2311-02
110	13.207	1.7820	2114.0	.5200-01	.6205-01	.6869-01	37.04	1.926	.3827	571.6	.1579-02
110	15.356	1.8370	2130.0	.4833-01	.5769-01	.6387-01	37.01	1.789	.3832	572.4	.1468-02
110	15.356	2.0460	2131.0	.3311-01	.3952-01	.4375-01	37.01	1.226	.3832	572.4	.1006-02
110	15.356	2.2500	2132.0	.3373-01	.4026-01	.4457-01	37.00	1.248	.3833	572.6	.1025-02
110	15.356	2.4530	2133.0	.4622-01	.5516-01	.6107-01	37.00	1.710	.3833	572.5	.1404-02
110	15.356	2.6630	2134.0	.6252-01	.7462-01	.8262-01	37.00	2.313	.3834	572.6	.1899-02
110	15.356	2.8160	2135.0	.1066	.1272	.1409	36.98	3.941	.3837	573.2	.3238-02

IH103 60-OT LOWER MID FUSELAGE (R3PF18)

LWR MID FUSE

PARAMETRIC DATA

MACH = 5.250 ALPHA = -10.00 BETA = -3.000 ELEVON = .0000
BDFLAP = .0000 SPDBRK = .0000

TEST CONDITIONS

RUN NUMBER	ALPHA DEG.	BETA DEG.	MACH	RN/FT /FT X10 6	PT PSIA	TT DEG. R	HT BTU/ LBM	PINF PSIA	TINF DEG. R	RHO SLUGS/ FT3	VINF FT/SEC	SCALE
111	-10.00	-3.000	5.250	1.024	103.5	1514.	373.3	.1425	238.9	.5005-04	3977.	.1750-01

RUN NUMBER	PHI DEG.	HS SPHERE TW=540
111	.0000	.1678

TEST DATA

RUN NUMBER	XO MS	YO MS	T/C NO	H/HREF R=1.0	H/HREF R=.900	H/HREF R=.850	QREF BTU/ FT2SEC	QDOT BTU/ FT2SEC	HW/HT	TW DEG. R	STN NO R=.900
111	13.107	1.9620	2115.0	.4220-01	.4988-01	.5488-01	40.63	1.714	.3511	546.1	.1306-02
111	13.107	2.1420	2116.0	.4281-01	.5061-01	.5568-01	40.62	1.739	.3512	546.3	.1325-02
111	13.107	2.3220	2117.0	.4595-01	.5434-01	.5979-01	40.56	1.864	.3521	547.7	.1423-02
111	13.107	2.4480	2118.0	.7300-01	.8633-01	.9500-01	40.55	2.960	.3523	548.0	.2261-02
111	13.170	.78000	2107.0	.5622-01	.6644-01	.7309-01	40.68	2.287	.3502	544.8	.1740-02
111	13.207	1.7820	2114.0	.6008-01	.7100-01	.7811-01	40.68	2.444	.3502	544.8	.1860-02
111	15.356	1.8370	2130.0	.4228-01	.4998-01	.5498-01	40.65	1.719	.3507	545.5	.1309-02
111	15.356	2.0460	2131.0	.4933-01	.5831-01	.6415-01	40.64	2.005	.3508	545.7	.1527-02
111	15.356	2.2500	2132.0	.4816-01	.5693-01	.6264-01	40.63	1.956	.3511	546.1	.1491-02
111	15.356	2.4530	2133.0	.5283-01	.6245-01	.6872-01	40.60	2.145	.3514	546.7	.1635-02
111	15.356	2.6630	2134.0	.4837-01	.5720-01	.6293-01	40.58	1.963	.3517	547.1	.1498-02
111	15.356	2.8160	2135.0	.8837-01	.1045	.1150	40.57	3.586	.3519	547.4	.2736-02

IH103 60-OT LOWER MID FUSELAGE (R3PF19)

LWR MID FUSE

PARAMETRIC DATA

MACH = 5.250 ALPHA = -10.00 BETA = -5.000 ELEVON = .0000
BDFLAP = .0000 SPDBRK = .0000

TEST CONDITIONS

RUN NUMBER	ALPHA DEG.	BETA DEG.	MACH	RN/FT /FT X10 6	PT PSIA	TT DEG. R	HT BTU/ LBM	PINF PSIA	TINF DEG. R	RHO SLUGS/ FT3	VINF FT/SEC	SCALE
120	-10.00	-5.000	5.250	1.081	103.6	1466.	360.5	.1432	230.7	.5207-04	3909.	.1750-01

RUN NUMBER	PHI DEG.	HS SPHERE TW=540
120	.0000	.1676

TEST DATA

RUN NUMBER	XO MS	YO MS	T/C NO	H/HREF R=1.0	H/HREF R=.900	H/HREF R=.850	QREF BTU/ FT2SEC	QDOT BTU/ FT2SEC	HW/HT	TW DEG. R	STN NO R=.900
120	13.107	1.9620	2115.0	.3868-01	.4599-01	.5079-01	38.00	1.470	.3706	556.9	.1176-02
120	13.107	2.1420	2116.0	.3157-01	.3754-01	.4146-01	37.98	1.199	.3709	557.3	.9602-03
120	13.107	2.3220	2117.0	.4067-01	.4837-01	.5343-01	37.93	1.543	.3718	558.6	.1237-02
120	13.107	2.4480	2118.0	.7890-01	.9384-01	.1037	37.92	2.992	.3720	558.9	.2400-02
120	13.170	.78000	2107.0	.6363-01	.7564-01	.8352-01	38.04	2.421	.3700	555.9	.1935-02
120	13.207	1.7820	2114.0	.4811-01	.5718-01	.6314-01	38.04	1.830	.3701	556.1	.1463-02
120	15.356	1.8370	2130.0	.4237-01	.5037-01	.5562-01	38.00	1.610	.3706	556.9	.1288-02
120	15.356	2.0460	2131.0	.5179-01	.6157-01	.6800-01	38.00	1.968	.3707	557.0	.1575-02
120	15.356	2.2500	2132.0	.4836-01	.5750-01	.6350-01	37.98	1.837	.3709	557.4	.1471-02
120	15.356	2.4530	2133.0	.3251-01	.3866-01	.4270-01	37.96	1.234	.3713	557.9	.9888-03
120	15.356	2.6630	2134.0	.4806-01	.5716-01	.6313-01	37.94	1.823	.3716	558.4	.1462-02
120	15.356	2.8160	2135.0	.9135-01	.1086	.1200	37.93	3.465	.3718	558.7	.2779-02

IH103 60-OT LOWER MID FUSELAGE (R3PF20)

LWR MID FUSE

PARAMETRIC DATA

MACH = 5.250 ALPHA = -10.00 BETA = .0000 ELEVON = .0000
BDFLAP = .0000 SPDBRK = .0000

TEST CONDITIONS

RUN NUMBER	ALPHA DEG.	BETA DEG.	MACH	RN/FT /FT X10 6	PT PSIA	TT DEG. R	HT BTU/ LBM	PINF PSIA	TINF DEG. R	RHO SLUGS/ FT3	VINF FT/SEC	SCALE
121	-10.00	.0000	5.250	.9993	103.7	1539.	379.8	.1425	243.0	.4920-04	4011.	.1750-01

RUN NUMBER	PHI DEG.	HS SPHERE TW=540
121	.0000	.1681

TEST DATA

RUN NUMBER	XO MS	YO MS	T/C NO	H/HREF R=1.0	H/HREF R=.900	H/HREF R=.850	QREF BTU/ FT2SEC	QDOT BTU/ FT2SEC	HW/HT	TW DEG. R	STN NO R=.900
121	13.107	1.9620	2115.0	.3945-01	.4666-01	.5135-01	41.26	1.628	.3529	558.6	.1234-02
121	13.107	2.1420	2116.0	.5262-01	.6226-01	.6853-01	41.21	2.169	.3537	559.8	.1646-02
121	13.107	2.3220	2117.0	.4489-01	.5313-01	.5850-01	41.12	1.846	.3551	562.0	.1405-02
121	13.107	2.4480	2118.0	.6525-01	.7724-01	.8505-01	41.08	2.681	.3556	562.8	.2042-02
121	13.170	.78000	2107.0	.4489-01	.5308-01	.5841-01	41.35	1.856	.3517	556.6	.1404-02
121	13.207	1.7820	2114.0	.5239-01	.6196-01	.6819-01	41.29	2.163	.3525	557.9	.1639-02
121	15.356	1.8370	2130.0	.2859-01	.3382-01	.3721-01	41.29	1.180	.3526	558.0	.8942-03
121	15.356	2.0460	2131.0	.4256-01	.5034-01	.5541-01	41.27	1.756	.3529	558.5	.1331-02
121	15.356	2.2500	2132.0	.5197-01	.6147-01	.6766-01	41.25	2.144	.3531	558.8	.1626-02
121	15.356	2.4530	2133.0	.5657-01	.6692-01	.7366-01	41.21	2.331	.3537	559.8	.1770-02
121	15.356	2.6630	2134.0	.5543-01	.6559-01	.7221-01	41.15	2.281	.3546	561.2	.1734-02
121	15.356	2.8160	2135.0	.7521-01	.8901-01	.9800-01	41.13	3.093	.3549	561.8	.2354-02

IH103 60-OT LOWER MID FUSELAGE (R3PF21)

LWR MID FUSE

PARAMETRIC DATA

MACH = 5.250 ALPHA = .0000 BETA = .0000 ELEVON = .0000
BDFLAP = .0000 SPDBRK = .0000

TEST CONDITIONS

RUN NUMBER	ALPHA DEG.	BETA DEG.	MACH	RN/FT /FT X10 6	PT PSIA	TT DEG. R	HT BTU/ LBM	PINF PSIA	TINF DEG. R	RHO SLUGS/ FT3	VINF FT/SEC	SCALE
131	.0000	.0000	5.250	.6469	103.6	1999.	504.0	.1367	322.6	.3557-04	4622.	.1750-01

RUN NUMBER	PHI DEG.	HS SPHERE TW=540
131	.0000	.1689

TEST DATA

RUN NUMBER	XO MS	YO MS	T/C NO	H/HREF R=1.0	H/HREF R=.900	H/HREF R=.850	QREF BTU/ FT2SEC	QDOT BTU/ FT2SEC	HW/HT	TW DEG. R	STN NO R=.900
131	13.107	1.9620	2115.0	.3721-01	.4302-01	.4665-01	63.08	2.348	.2588	543.6	.1373-02
131	13.107	2.1420	2116.0	.3063-01	.3541-01	.3841-01	63.05	1.931	.2592	544.5	.1130-02
131	13.107	2.3220	2117.0	.2290-01	.2648-01	.2872-01	62.97	1.442	.2601	546.3	.8452-03
131	13.107	2.4480	2118.0	.3441-01	.3979-01	.4316-01	62.95	2.166	.2603	546.9	.1270-02
131	13.170	.78000	2107.0	.3412-01	.3943-01	.4276-01	63.16	2.155	.2579	541.8	.1259-02
131	13.207	1.7820	2114.0	.4243-01	.4904-01	.5319-01	63.14	2.679	.2581	542.3	.1566-02
131	15.356	1.8370	2130.0	.1914-01	.2213-01	.2400-01	63.02	1.206	.2595	545.0	.7063-03
131	15.356	2.0460	2131.0	.2973-01	.3437-01	.3728-01	63.00	1.873	.2597	545.5	.1097-02
131	15.356	2.2500	2132.0	.3191-01	.3690-01	.4002-01	62.97	2.009	.2601	546.3	.1178-02
131	15.356	2.4530	2133.0	.3501-01	.4048-01	.4391-01	62.93	2.203	.2605	547.3	.1292-02
131	15.356	2.6630	2134.0	.4130-01	.4776-01	.5181-01	62.90	2.597	.2608	547.9	.1524-02
131	15.356	2.8160	2135.0	.5883-01	.6804-01	.7382-01	62.87	3.699	.2612	548.6	.2172-02

IH103 60-OT LOWER AFT FUSELAGE (R3PG01)

LWR AFT FUSE

PARAMETRIC DATA

MACH = 5.250 ALPHA = .0000 BETA = .0000 ELEVON = .0000
BDFLAP = .0000 SPDBRK = .0000

TEST CONDITIONS

RUN NUMBER	ALPHA DEG.	BETA DEG.	MACH	RN/FT /FT X10 6	PT PSIA	TT DEG. R	HT BTU/ LBM	PINF PSIA	TINF DEG. R	RHO SLUGS/ FT3	VINF FT/SEC	SCALE
85	.0000	.0000	5.250	1.025	103.2	1511.	372.3	.1421	238.3	.5006-04	3972.	.1750-01

RUN NUMBER	PHI DEG.	HS SPHERE TW=540
85	.0000	.1675

TEST DATA

RUN NUMBER	XO MS	YO MS	T/C NO	H/HREF R=1.0	H/HREF R=.900	H/HREF R=.850	QREF BTU/ FT2SEC	QDOT BTU/ FT2SEC	HW/HT	TW DEG. R	STN NO R=.900
85	24.329	1.8190	2186.0	.2387-01	.2825-01	.3111-01	40.21	.9599	.3550	550.9	.7395-03
85	24.925	1.8830	2187.0	.1751-01	.2072-01	.2281-01	40.22	.7041	.3548	550.6	.5423-03
85	25.476	1.9110	2188.0	.2675-01	.3167-01	.3487-01	40.17	1.075	.3556	551.8	.8288-03
85	25.923	1.9810	2189.0	.2609-01	.3088-01	.3401-01	40.14	1.047	.3561	552.6	.8083-03

IH103 60-OT LOWER AFT FUSELAGE (R3PG02)

LWR AFT FUSE

PARAMETRIC DATA

MACH = 5.250 ALPHA = -5.000 BETA = .0000 ELEVON = .0000
BDFLAP = .0000 SPDBRK = .0000

TEST CONDITIONS

RUN NUMBER	ALPHA DEG.	BETA DEG.	MACH	RN/FT /FT X10 6	PT PSIA	TT DEG. R	HT BTU/ LBM	PINF PSIA	TINF DEG. R	RHO SLUGS/ FT3	VINF FT/SEC	SCALE
86	-5.000	.0000	5.250	1.032	103.2	1504.	370.6	.1422	237.2	.5031-04	3963.	.1750-01

RUN NUMBER	PHI DEG.	HS SPHERE TW=540
86	.0000	.1675

TEST DATA

RUN NUMBER	XO MS	YO MS	T/C NO	H/HREF R=1.0	H/HREF R=.900	H/HREF R=.850	QREF BTU/ FT2SEC	QDOT BTU/ FT2SEC	HW/HT	TW DEG. R	STN NO R=.900
86	24.329	1.8190	2186.0	.2306-01	.2727-01	.3000-01	40.25	.9282	.3515	542.8	.7118-03
86	24.925	1.8830	2187.0	.1240-01	.1466-01	.1613-01	40.28	.4995	.3510	542.2	.3828-03
86	25.476	1.9110	2188.0	.2337-01	.2764-01	.3041-01	40.20	.9395	.3522	544.0	.7215-03
86	25.923	1.9810	2189.0	.2700-01	.3194-01	.3515-01	40.14	1.084	.3531	545.3	.8337-03

IH103 60-OT LOWER AFT FUSELAGE (R3PG03)

LWR AFT FUSE

PARAMETRIC DATA

MACH = 5.250 ALPHA = 5.000 BETA = .0000 ELEVON = .0000
BDFLAP = .0000 SPDBRK = .0000

TEST CONDITIONS

RUN NUMBER	ALPHA DEG.	BETA DEG.	MACH	RN/FT /FT X10 6	PT PSIA	TT DEG. R	HT BTU/ LBM	PINF PSIA	TINF DEG. R	RHO SLUGS/ FT3	VINF FT/SEC	SCALE
87	5.000	.0000	5.250	1.026	102.1	1500.	369.5	.1407	236.4	.4992-04	3957.	.1750-01

RUN NUMBER	PHI DEG.	HS SPHERE TW=540
87	.0000	.1665

TEST DATA

RUN NUMBER	XO MS	YO MS	T/C NO	H/HREF R=1.0	H/HREF R=.900	H/HREF R=.850	QREF BTU/ FT2SEC	QDOT BTU/ FT2SEC	HW/HT	TW DEG. R	STN NO R=.900
87	24.329	1.8190	2186.0	.3553-01	.4204-01	.4627-01	39.74	1.412	.3540	545.1	.1101-02
87	24.925	1.8830	2187.0	.2481-01	.2935-01	.3231-01	39.77	.9868	.3535	544.3	.7689-03
87	25.476	1.9110	2188.0	.3237-01	.3830-01	.4217-01	39.71	1.285	.3544	545.8	.1003-02
87	25.923	1.9810	2189.0	.3309-01	.3916-01	.4311-01	39.68	1.313	.3549	546.4	.1026-02

IH103 60-OT LOWER AFT FUSELAGE (R3PG04)

LWR AFT FUSE

PARAMETRIC DATA

MACH = 5.250 ALPHA = 10.00 BETA = .0000 ELEVON = .0000
BDFLAP = .0000 SPDBRK = .0000

TEST CONDITIONS

RUN NUMBER	ALPHA DEG.	BETA DEG.	MACH	RN/FT /FT X10 6	PT PSIA	TT DEG. R	HT BTU/ LBM	PINF PSIA	TINF DEG. R	RHO SLUGS/ FT3	VINF FT/SEC	SCALE
88	10.00	.0000	5.250	1.044	103.7	1498.	369.0	.1429	236.1	.5079-04	3954.	.1750-01

RUN NUMBER	PHI DEG.	HS SPHERE TW=540
88	.0000	.1678

TEST DATA

RUN NUMBER	XO MS	YO MS	T/C NO	H/HREF R=1.0	H/HREF R=.900	H/HREF R=.850	QREF BTU/ FT2SEC	QDOT BTU/ FT2SEC	HW/HT	TW DEG. R	STN NO R=.900
88	24.329	1.8190	2186.0	.3238-01	.3834-01	.4222-01	39.84	1.290	.3565	548.3	.9955-03
88	24.925	1.8830	2187.0	.2904-01	.3438-01	.3786-01	39.85	1.157	.3563	547.9	.8926-03
88	25.476	1.9110	2188.0	.3806-01	.4507-01	.4964-01	39.80	1.515	.3571	549.2	.1170-02
88	25.923	1.9810	2189.0	.3770-01	.4465-01	.4918-01	39.79	1.500	.3573	549.5	.1159-02

IH103 60-OT LOWER AFT FUSELAGE (R3PG05)

LWR AFT FUSE

PARAMETRIC DATA

MACH = 5.250 ALPHA = .0000 BETA = -5.000 ELEVON = .0000
BDFLAP = .0000 SPDBRK = .0000

TEST CONDITIONS

RUN NUMBER	ALPHA DEG.	BETA DEG.	MACH	RN/FT /FT X10 6	PT PSIA	TT DEG. R	HT BTU/ LBM	PINF PSIA	TINF DEG. R	RHO SLUGS/ FT3	VINF FT/SEC	SCALE
76	.0000	-5.000	5.250	1.033	102.9	1501.	369.7	.1418	236.6	.5028-04	3958.	.1750-01

RUN NUMBER	PHI DEG.	HS SPHERE TW=540
76	.0000	.1672

TEST DATA

RUN NUMBER	XO MS	YO MS	T/C NO	H/HREF R=1.0	H/HREF R=.900	H/HREF R=.850	QREF BTU/ FT2SEC	QDOT BTU/ FT2SEC	HW/HT	TW DEG. R	STN NO R=.900
76	24.329	1.8190	2186.0	.2397-01	.2837-01	.3123-01	39.84	.9550	.3552	547.2	.7405-03
76	24.925	1.8830	2187.0	.2435-01	.2882-01	.3173-01	39.83	.9699	.3553	547.4	.7522-03
76	25.476	1.9110	2188.0	.3013-01	.3567-01	.3928-01	39.79	1.199	.3561	548.6	.9310-03
76	25.923	1.9810	2189.0	.2440-01	.2888-01	.3180-01	39.78	.9706	.3561	548.6	.7538-03

IH103 60-OT LOWER AFT FUSELAGE (R3PG06)

LWR AFT FUSE

PARAMETRIC DATA

MACH = 5.250 ALPHA = -5.000 BETA = -5.000 ELEVON = .0000
BDFLAP = .0000 SPDBRK = .0000

TEST CONDITIONS

RUN NUMBER	ALPHA DEG.	BETA DEG.	MACH	RN/FT /FT X10 6	PT PSIA	TT DEG. R	HT BTU/ LBM	PINF PSIA	TINF DEG. R	RHO SLUGS/ FT3	VINF FT/SEC	SCALE
75	-5.000	-5.000	5.250	1.039	103.3	1499.	369.3	.1424	236.3	.5057-04	3956.	.1750-01

RUN NUMBER	PHI DEG.	HS SPHERE TW=540
75	.0000	.1676

TEST DATA

RUN NUMBER	XO MS	YO MS	T/C NO	H/HREF R=1.0	H/HREF R=.900	H/HREF R=.850	QREF BTU/ FT2SEC	QDOT BTU/ FT2SEC	HW/HT	TW DEG. R	STN NO R=.900
75	24.329	1.8190	2186.0	.2629-01	.3115-01	.3432-01	39.65	1.042	.3588	552.3	.8105-03
75	24.925	1.8830	2187.0	.2203-01	.2610-01	.2876-01	39.67	.8741	.3585	551.7	.6792-03
75	25.476	1.9110	2188.0	.2751-01	.3259-01	.3592-01	39.62	1.090	.3593	553.0	.8481-03
75	25.923	1.9810	2189.0	.2366-01	.2804-01	.3090-01	39.60	.9369	.3596	553.5	.7295-03

IH103 60-OT LOWER AFT FUSELAGE

LWR AFT FUSE

PARAMETRIC DATA

MACH = 5.250 ALPHA = 5.000 BETA = -5.000 ELEVON = .0000
BDFLAP = .0000 SPDBRK = .0000

TEST CONDITIONS

RUN NUMBER	ALPHA DEG.	BETA DEG.	MACH	RN/FT /FT X10 6	PT PSIA	TT DEG. R	HT BTU/ LBM	PINF PSIA	TINF DEG. R	RHO SLUGS/ FT3	VINF FT/SEC	SCALE
74	5.000	-5.000	5.250	1.035	103.4	1503.	370.4	.1424	237.0	.5042-04	3962.	.1750-01

RUN NUMBER	PHI DEG.	HS SPHERE TW=540
74	.0000	.1676

TEST DATA

RUN NUMBER	XO MS	YO MS	T/C NO	H/HREF R=1.0	H/HREF R=.900	H/HREF R=.850	QREF BTU/ FT2SEC	QDOT BTU/ FT2SEC	HW/HT	TW DEG. R	STN NO R=.900
74	24.329	1.8190	2186.0	.4919-01	.5824-01	.6414-01	39.93	1.964	.3565	550.3	.1518-02
74	24.925	1.8830	2187.0	.5204-01	.6161-01	.6785-01	39.93	2.078	.3564	550.2	.1606-02
74	25.476	1.9110	2188.0	.8402-01	.9940-01	.1094	40.10	3.370	.3538	546.1	.2592-02
74	25.923	1.9810	2189.0	.4347-01	.5148-01	.5670-01	39.90	1.734	.3569	551.0	.1342-02

IH103 60-OT LOWER AFT FUSELAGE (R3PG08)

LWR AFT FUSE

PARAMETRIC DATA

MACH = 5.250 ALPHA = 10.00 BETA = -5.000 ELEVON = .0000
BDFLAP = .0000 SPDBRK = .0000

TEST CONDITIONS

RUN NUMBER	ALPHA DEG.	BETA DEG.	MACH	RN/FT /FT X10 6	PT PSIA	TT DEG. R	HT BTU/ LBM	PINF PSIA	TINF DEG. R	RHO SLUGS/ FT3	VINF FT/SEC	SCALE
73	5.000	-5.000	5.250	1.032	103.4	1506.	371.0	.1424	237.4	.5031-04	3965.	.1750-01

RUN NUMBER	PHI DEG.	HS SPHERE TW=540
73	.0000	.1676

TEST DATA

RUN NUMBER	XO MS	YO MS	T/C NO	H/HREF R=1.0	H/HREF R=.900	H/HREF R=.850	QREF BTU/ FT2SEC	QDOT BTU/ FT2SEC	HW/HT	TW DEG. R	STN NO R=.900
73	24.329	1.8190	2186.0	.5824-01	.6892-01	.7587-01	40.14	2.338	.3543	547.8	.1799-02
73	24.925	1.8830	2187.0	.7323-01	.8664-01	.9537-01	40.16	2.941	.3540	547.5	.2262-02
73	25.923	1.9810	2189.0	.5181-01	.6130-01	.6749-01	40.13	2.079	.3546	548.3	.1600-02

IH103 60-OT LOWER AFT FUSELAGE (R3PG09)

LWR AFT FUSE

PARAMETRIC DATA

MACH = 5.250 ALPHA = .0000 BETA = -3.000 ELEVON = .0000
BDFLAP = .0000 SPDBRK = .0000

TEST CONDITIONS

RUN NUMBER	ALPHA DEG.	BETA DEG.	MACH	RN/FT /FT X10 6	PT PSIA	TT DEG. R	HT BTU/ LBM	PINF PSIA	TINF DEG. R	RHO SLUGS/ FT3	VINF FT/SEC	SCALE
92	.0000	-3.000	5.250	1.145	111.7	1482.	364.8	.1541	233.4	.5541-04	3932.	.1750-01

RUN NUMBER	PHI DEG.	HS SPHERE TW=540
92	.0000	.1741

TEST DATA

RUN NUMBER	XO MS	YO MS	T/C NO	H/HREF R=1.0	H/HREF R=.900	H/HREF R=.850	QREF BTU/ FT2SEC	QDOT BTU/ FT2SEC	HW/HT	TW DEG. R	STN NO R=.900
92	24.329	1.8190	2186.0	.2802-01	.3324-01	.3666-01	40.37	1.131	.3641	553.5	.8253-03
92	24.925	1.8830	2187.0	.2779-01	.3298-01	.3637-01	40.37	1.122	.3641	553.5	.8188-03
92	25.476	1.9110	2188.0	.2575-01	.3056-01	.3371-01	40.34	1.039	.3645	554.2	.7588-03
92	25.923	1.9810	2189.0	.1723-01	.2045-01	.2255-01	40.34	.6950	.3645	554.2	.5076-03

IH103 60-OT LOWER AFT FUSELAGE (R3PG10)

LWR AFT FUSE

PARAMETRIC DATA

MACH = 5.250 ALPHA = -5.000 BETA = -3.000 ELEVON = .0000
BDFLAP = .0000 SPDBRK = .0000

TEST CONDITIONS

RUN NUMBER	ALPHA DEG.	BETA DEG.	MACH	RN/FT /FT X10 6	PT PSIA	TT DEG. R	HT BTU/ LBM	PINF PSIA	TINF DEG. R	RHO SLUGS/ FT3	VINF FT/SEC	SCALE
91	-5.000	-3.000	5.250	1.041	102.5	1490.	366.9	.1413	234.8	.5052-04	3943.	.1750-01

RUN NUMBER	PHI DEG.	HS SPHERE TW=540
91	.0000	.1668

TEST DATA

RUN NUMBER	XO MS	YO MS	T/C NO	H/HREF R=1.0	H/HREF R=.900	H/HREF R=.850	QREF BTU/ FT2SEC	QDOT BTU/ FT2SEC	HW/HT	TW DEG. R	STN NO R=.900
91	24.329	1.8190	2186.0	.2345-01	.2780-01	.3064-01	39.13	.9178	.3603	550.8	.7233-03
91	24.925	1.8830	2187.0	.2176-01	.2580-01	.2843-01	39.15	.8520	.3600	550.5	.6712-03
91	25.476	1.9110	2188.0	.2126-01	.2520-01	.2778-01	39.11	.8315	.3606	551.4	.6557-03
91	25.923	1.9810	2189.0	.1862-01	.2208-01	.2433-01	39.10	.7281	.3608	551.7	.5744-03

IH103 60-OT LOWER AFT FUSELAGE (R3PG11)

LWR AFT FUSE

PARAMETRIC DATA

MACH = 5.250 ALPHA = 5.000 BETA = -3.000 ELEVON = .0000
BDFLAP = .0000 SPDBRK = .0000

TEST CONDITIONS

RUN NUMBER	ALPHA DEG.	BETA DEG.	MACH	RN/FT /FT X10 6	PT PSIA	TT DEG. R	HT BTU/ LBM	PINF PSIA	TINF DEG. R	RHO SLUGS/ FT3	VINF FT/SEC	SCALE
90	5.000	-3.000	5.250	1.038	102.4	1492.	367.4	.1412	235.1	.5041-04	3946.	.1750-01

RUN NUMBER	PHI DEG.	HS SPHERE TW=540
90	.0000	.1668

TEST DATA

RUN NUMBER	XO MS	YO MS	T/C NO	H/HREF R=1.0	H/HREF R=.900	H/HREF R=.850	QREF BTU/ FT2SEC	QDOT BTU/ FT2SEC	HW/HT	TW DEG. R	STN NO R=.900
90	24.329	1.8190	2186.0	.4770-01	.5653-01	.6229-01	39.22	1.871	.3597	550.8	.1473-02
90	24.925	1.8830	2187.0	.4877-01	.5780-01	.6369-01	39.22	1.913	.3596	550.7	.1506-02
90	25.923	1.9810	2189.0	.3793-01	.4496-01	.4955-01	39.15	1.485	.3607	552.2	.1171-02

IH103 60-OT LOWER AFT FUSELAGE (R3PG12)

LWR AFT FUSE

PARAMETRIC DATA

MACH = 5.250 ALPHA = 10.00 BETA = -3.000 ELEVON = .0000
BDFLAP = .0000 SPDBRK = .0000

TEST CONDITIONS

RUN NUMBER	ALPHA DEG.	BETA DEG.	MACH	RN/FT /FT X10 6	PT PSIA	TT DEG. R	HT BTU/ LBM	PINF PSIA	TINF DEG. R	RHO SLUGS/ FT3	VINF FT/SEC	SCALE
89	10.00	-3.000	5.250	1.034	104.5	1514.	373.3	.1439	238.9	.5056-04	3977.	.1750-01

RUN NUMBER	PHI DEG.	HS SPHERE TW=540
89	.0000	.1686

TEST DATA

RUN NUMBER	XO MS	YO MS	T/C NO	H/HREF R=1.0	H/HREF R=.900	H/HREF R=.850	QREF BTU/ FT2SEC	QDOT BTU/ FT2SEC	HW/HT	TW DEG. R	STN NO R=.900
89	24.329	1.8190	2186.0	.7339-01	.8679-01	.9552-01	40.73	2.989	.3527	548.7	.2261-02
89	24.925	1.8830	2187.0	.6094-01	.7207-01	.7931-01	40.74	2.482	.3525	548.4	.1878-02
89	25.476	1.9110	2188.0	.6672-01	.7893-01	.8688-01	40.66	2.713	.3537	550.2	.2056-02
89	25.923	1.9810	2189.0	.4896-01	.5793-01	.6377-01	40.62	1.989	.3543	551.2	.1509-02

IH103 60-OT LOWER AFT FUSELAGE (R3PG13)

LWR AFT FUSE

PARAMETRIC DATA

MACH = 5.250 ALPHA = .0000 BETA = -9.000 ELEVON = .0000
BDFLAP = .0000 SPDBRK = .0000

TEST CONDITIONS

RUN NUMBER	ALPHA DEG.	BETA DEG.	MACH	RN/FT /FT X10 6	PT PSIA	TT DEG. R	HT BTU/ LBM	PINF PSIA	TINF DEG. R	RHO SLUGS/ FT3	VINF FT/SEC	SCALE
101	.0000	-9.000	5.250	1.049	103.1	1488.	366.4	.1421	234.5	.5087-04	3940.	.1750-01

RUN NUMBER	PHI DEG.	HS SPHERE TW=540
101	.0000	.1673

TEST DATA

RUN NUMBER	XO MS	YO MS	T/C NO	H/HREF R=1.0	H/HREF R=.900	H/HREF R=.850	QREF BTU/ FT2SEC	QDOT BTU/ FT2SEC	HW/HT	TW DEG. R	STN NO R=.900
101	24.329	1.8190	2186.0	.4397-01	.5216-01	.5752-01	38.99	1.714	.3634	554.8	.1352-02
101	24.925	1.8830	2187.0	.5381-01	.6383-01	.7038-01	39.02	2.100	.3629	554.2	.1655-02
101	25.476	1.9110	2188.0	.6292-01	.7466-01	.8233-01	38.98	2.452	.3636	555.2	.1935-02
101	25.923	1.9810	2189.0	.5292-01	.6279-01	.6925-01	38.95	2.061	.3639	555.7	.1627-02

IH103 60-OT LOWER AFT FUSELAGE (R3PG14)

LWR AFT FUSE

PARAMETRIC DATA

MACH = 5.250 ALPHA = -5.000 BETA = -9.000 ELEVON = .0000
BDFLAP = .0000 SPDBRK = .0000

TEST CONDITIONS

RUN NUMBER	ALPHA DEG.	BETA DEG.	MACH	RN/FT /FT X10 6	PT PSIA	TT DEG. R	HT BTU/ LBM	PINF PSIA	TINF DEG. R	RHO SLUGS/ FT3	VINF FT/SEC	SCALE
102	-5.000	-9.000	5.250	1.049	102.4	1483.	364.9	.1413	233.5	.5078-04	3932.	.1750-01

RUN NUMBER	PHI DEG.	HS SPHERE TW=540
102	.0000	.1667

TEST DATA

RUN NUMBER	XO MS	YO MS	T/C NO	H/HREF R=1.0	H/HREF R=.900	H/HREF R=.850	QREF BTU/ FT2SEC	QDOT BTU/ FT2SEC	HW/HT	TW DEG. R	STN NO R=.900
102	24.329	1.8190	2186.0	.3224-01	.3827-01	.4222-01	38.58	1.244	.3654	555.8	.9925-03
102	24.925	1.8030	2187.0	.2911-01	.3455-01	.3812-01	38.59	1.123	.3653	555.6	.8961-03
102	25.476	1.9110	2188.0	.3145-01	.3734-01	.4120-01	38.54	1.212	.3661	556.9	.9683-03
102	25.923	1.9810	2189.0	.2969-01	.3525-01	.3890-01	38.53	1.144	.3663	557.0	.9141-03

IH103 60-OT LOWER AFT FUSELAGE (R3PG15)

LWR AFT FUSE

PARAMETRIC DATA

MACH = 5.250 ALPHA = 5.000 BETA = -9.000 ELEVON = .0000
BDFLAP = .0000 SPDBRK = .0000

TEST CONDITIONS

RUN NUMBER	ALPHA DEG.	BETA DEG.	MACH	RN/FT /FT X10 6	PT PSIA	TT DEG. R	HT BTU/ LBM	PINF PSIA	TINF DEG. R	RHO SLUGS/ FT3	VINF FT/SEC	SCALE
103	5.000	-9.000	5.250	1.053	103.3	1486.	365.9	.1424	234.2	.5105-04	3938.	.1750-01

RUN NUMBER	PHI DEG.	HS SPHERE TW=540
103	.0000	.1674

TEST DATA

RUN NUMBER	XO MS	YO MS	T/C NO	H/HREF R=1.0	H/HREF R=.900	H/HREF R=.850	QREF BTU/ FT2SEC	QDOT BTU/ FT2SEC	HW/HT	TW DEG. R	STN NO R=.900
103	24.329	1.8190	2186.0	.6369-01	.7562-01	.8342-01	38.82	2.473	.3658	557.9	.1956-02
103	24.925	1.8830	2187.0	.7563-01	.8977-01	.9903-01	38.85	2.938	.3654	557.2	.2322-02
103	25.476	1.9110	2188.0	.8629-01	.1024	.1130	38.82	3.350	.3659	558.0	.2650-02
103	25.923	1.9810	2189.0	.6388-01	.7585-01	.8370-01	38.79	2.478	.3664	558.7	.1962-02

IH103 60-OT LOWER AFT FUSELAGE (R3PG16)

LWR AFT FUSE

PARAMETRIC DATA

MACH = 5.250 ALPHA = 10.00 BETA = -9.000 ELEVON = .0000
BDFLAP = .0000 SPDBRK = .0000

TEST CONDITIONS

RUN NUMBER	ALPHA DEG.	BETA DEG.	MACH	RN/FT /FT X10 6	PT PSIA	TT DEG. R	HT BTU/ LBM	PINF PSIA	TINF DEG. R	RHO SLUGS/ FT3	VINF FT/SEC	SCALE
104	10.00	-9.000	5.250	1.049	103.3	1490.	366.9	.1424	234.8	.5090-04	3943.	.1750-01

RUN NUMBER	PHI DEG.	HS SPHERE TW=540
104	.0000	.1674

TEST DATA

RUN NUMBER	XO MS	YO MS	T/C NO	H/HREF R=1.0	H/HREF R=.900	H/HREF R=.850	QREF BTU/ FT2SEC	QDOT BTU/ FT2SEC	HW/HT	TW DEG. R	STN NO R=.900
104	24.329	1.8190	2186.0	.1101	.1307	.1442	38.89	4.281	.3664	560.2	.3387-02
104	24.925	1.8830	2187.0	.9448-01	.1122	.1238	38.90	3.675	.3663	560.1	.2907-02
104	25.476	1.9110	2188.0	.7932-01	.9419-01	.1039	38.87	3.083	.3668	560.8	.2441-02
104	25.923	1.9810	2189.0	.5515-01	.6549-01	.7226-01	38.87	2.144	.3667	560.6	.1697-02

IH103 60-OT LOWER AFT FUSELAGE (R3PG17)

LWR AFT FUSE

PARAMETRIC DATA

MACH = 5.250 ALPHA = -10.00 BETA = -9.000 ELEVON = .0000
BDFLAP = .0000 SPDBRK = .0000

TEST CONDITIONS

RUN NUMBER	ALPHA DEG.	BETA DEG.	MACH	RN/FT /FT X10 6	PT PSIA	TT DEG. R	HT BTU/ LBM	PINF PSIA	TINF DEG. R	RHO SLUGS/ FT3	VINF FT/SEC	SCALE
109	-10.00	-9.000	5.250	1.078	103.6	1468.	361.2	.1431	231.2	.5196-04	3912.	.1750-01

RUN NUMBER	PHI DEG.	HS SPHERE TW=540
109	.0000	.1676

TEST DATA

RUN NUMBER	XO MS	YO MS	T/C NO	H/HREF R=1.0	H/HREF R=.900	H/HREF R=.850	QREF BTU/ FT2SEC	QDOT BTU/ FT2SEC	HW/HT	TW DEG. R	STN NO R=.900
109	24.329	1.8190	2186.0	.4047-01	.4825-01	.5338-01	37.49	1.517	.3799	571.9	.1235-02
109	24.925	1.8830	2187.0	.4164-01	.4964-01	.5491-01	37.53	1.563	.3794	571.1	.1270-02
109	25.476	1.9110	2188.0	.5000-01	.5962-01	.6597-01	37.48	1.874	.3801	572.2	.1526-02
109	25.923	1.9810	2189.0	.4392-01	.5238-01	.5796-01	37.46	1.645	.3804	572.7	.1340-02

IH103 60-OT LOWER AFT FUSELAGE (R3PG18)

LWR AFT FUSE

PARAMETRIC DATA

MACH = 5.250 ALPHA = -10.00 BETA = -3.000 ELEVON = .0000
BDFLAP = .0000 SPDBRK = .0000

TEST CONDITIONS

RUN NUMBER	ALPHA DEG.	BETA DEG.	MACH	RN/FT /FT X10 6	PT PSIA	TT DEG. R	HT BTU/ LBM	PINF PSIA	TINF DEG. R	RHO SLUGS/ FT3	VINF FT/SEC	SCALE
112	-10.00	-3.000	5.250	1.055	103.0	1483.	365.0	.1422	233.6	.5107-04	3933.	.1750-01

RUN NUMBER	PHI DEG.	HS SPHERE TW=540
112	.0000	.1672

TEST DATA

RUN NUMBER	XO MS	YO MS	T/C NO	H/HREF R=1.0	H/HREF R=.900	H/HREF R=.850	QREF BTU/ FT2SEC	QDOT BTU/ FT2SEC	HW/HT	TW DEG. R	STN NO R=.900
112	24.329	1.8190	2186.0	.2680-01	.3177-01	.3501-01	39.03	1.046	.3603	548.2	.8218-03
112	24.925	1.8830	2187.0	.2567-01	.3042-01	.3353-01	39.04	1.002	.3602	548.0	.7869-03
112	25.476	1.9110	2188.0	.2666-01	.3160-01	.3483-01	39.01	1.040	.3607	548.7	.8175-03
112	25.923	1.9810	2189.0	.2419-01	.2667-01	.3160-01	39.01	.9434	.3607	548.7	.7417-03

IH103 60-OT LOWER AFT FUSELAGE (R3PG19)

LWR AFT FUSE

PARAMETRIC DATA

MACH = 5.250 ALPHA = -10.00 BETA = -5.000 ELEVON = .0000
BDFLAP = .0000 SPDBRK = .0000

TEST CONDITIONS

RUN NUMBER	ALPHA DEG.	BETA DEG.	MACH	RN/FT /FT X10 6	PT PSIA	TT DEG. R	HT BTU/ LBM	PINF PSIA	TINF DEG. R	RHO SLUGS/ FT3	VINF FT/SEC	SCALE
119	-10.00	-5.000	5.250	1.047	104.7	1505.	370.7	.1442	237.2	.5101-04	3963.	.1750-01

RUN NUMBER	PHI DEG.	HS SPHERE TW=540
119	.0000	.1687

TEST DATA

RUN NUMBER	XO MS	YO MS	T/C NO	H/HREF R=1.0	H/HREF R=.900	H/HREF R=.850	QREF BTU/ FT2SEC	QDOT BTU/ FT2SEC	HW/HT	TW DEG. R	STN NO R=.900
119	24.329	1.8190	2186.0	.2648-01	.3141-01	.3463-01	39.81	1.054	.3626	560.2	.8137-03
119	24.925	1.8830	2187.0	.2346-01	.2782-01	.3067-01	39.85	.9350	.3621	559.3	.7209-03
119	25.476	1.9110	2188.0	.3131-01	.3715-01	.4097-01	39.76	1.245	.3634	561.4	.9624-03
119	25.923	1.9810	2189.0	.2972-01	.3526-01	.3889-01	39.71	1.180	.3643	562.7	.9135-03

IH103 60-OT LOWER AFT FUSELAGE (R3PG20)

LWR AFT FUSE

PARAMETRIC DATA

MACH = 5.250 ALPHA = -10.00 BETA = .0000 ELEVON = .0000
BDFLAP = .0000 SPDBRK = .0000

TEST CONDITIONS

RUN NUMBER	ALPHA DEG.	BETA DEG.	MACH	RN/FT /FT X10 6	PT PSIA	TT DEG. R	HT BTU/ LBM	PINF PSIA	TINF DEG. R	RHO SLUGS/ FT3	VINF FT/SEC	SCALE
122	-10.00	.0000	5.250	1.012	103.5	1525.	376.0	.1423	240.6	.4964-04	3992.	.1750-01

RUN NUMBER	PHI DEG.	HS SPHERE TW=540
122	.0000	.1678

TEST DATA

RUN NUMBER	XO MS	YO MS	T/C NO	H/HREF R=1.0	H/HREF R=.900	H/HREF R=.850	QREF BTU/ FT2SEC	QDOT BTU/ FT2SEC	HW/HT	TW DEG. R	STN NO R=.900
122	24.329	1.8190	2186.0	.3634-01	.4301-01	.4737-01	40.62	1.476	.3558	557.5	.1131-02
122	24.925	1.8830	2187.0	.1684-01	.1993-01	.2195-01	40.63	.6842	.3556	557.2	.5243-03
122	25.476	1.9110	2188.0	.1384-01	.1639-01	.1805-01	40.58	.5617	.3564	558.5	.4311-03
122	25.923	1.9810	2189.0	.1277-01	.1512-01	.1665-01	40.56	.5179	.3566	558.7	.3976-03

IH103 60-OT LOWER AFT FUSELAGE

LWR AFT FUSE

PARAMETRIC DATA

MACH = 5.250 ALPHA = .0000 BETA = .0000 ELEVON = .0000
BDFLAP = .0000 SPDBRK = .0000

TEST CONDITIONS

RUN NUMBER	ALPHA DEG.	BETA DEG.	MACH	RN/FT /FT X10 6	PT PSIA	TT DEG. R	HT BTU/ LBM	PINF PSIA	TINF DEG. R	RHO SLUGS/ FT3	VINF FT/SEC	SCALE
130	.0000	.0000	5.250	.6533	104.0	1992.	502.2	.1374	321.4	.3588-04	4613.	.1750-01

RUN NUMBER	PHI DEG.	HS SPHERE TW=540
130	.0000	.1693

TEST DATA

RUN NUMBER	XO MS	YO MS	T/C NO	H/HREF R=1.0	H/HREF R=.900	H/HREF R=.850	QREF BTU/ FT2SEC	QDOT BTU/ FT2SEC	HW/HT	TW DEG. R	STN NO R=.900
130	24.329	1.8190	2186.0	.2526-01	.2924-01	.3174-01	62.40	1.576	.2654	555.5	.9287-03
130	24.925	1.8830	2187.0	.1594-01	.1845-01	.2003-01	62.40	.9945	.2655	555.7	.5860-03
130	25.476	1.9110	2188.0	.2531-01	.2930-01	.3181-01	62.32	1.577	.2663	557.4	.9307-03
130	25.923	1.9810	2189.0	.2791-01	.3231-01	.3508-01	62.29	1.738	.2666	558.0	.1026-02

IH103 60-OT AFT FUSELAGE AND ELEVON SPLIT LINE (R3P101)

AFT FUSE,ELEVON

PARAMETRIC DATA

MACH = 5.250 ALPHA = .0000 BETA = .0000 ELEVON = .0000
BDFLAP = .0000 SPDBRK = .0000

TEST CONDITIONS

RUN NUMBER	ALPHA DEG.	BETA DEG.	MACH	RN/FT /FT X10 6	PT PSIA	TT DEG. R	HT BTU/ LBM	PINF PSIA	TINF DEG. R	RHO SLUGS/ FT3	VINF FT/SEC	SCALE
84	.0000	.0000	5.250	1.008	102.8	1523.	375.5	.1415	240.3	.4941-04	3989.	.1750-01

RUN NUMBER	PHI DEG.	HS SPHERE TW=540
84	.0000	.1673

TEST DATA

RUN NUMBER	ZO MS	XO MS	T/C NO	H/HREF R=1.0	H/HREF R=.900	H/HREF R=.850	QREF BTU/ FT2SEC	QDOT BTU/ FT2SEC	HW/HT	TW DEG. R	STN NO R=.900
84	4.6920	24.576	2341.0	.1274-01	.1505-01	.1655-01	40.92	.5214	.3484	545.3	.3970-03
84	4.6920	24.913	2342.0	.1732-01	.2046-01	.2249-01	40.92	.7086	.3484	545.3	.5395-03
84	4.7220	25.475	2343.0	.2655-01	.3137-01	.3449-01	40.93	1.087	.3483	545.2	.8273-03
84	4.7590	26.038	2344.0	.2881-01	.3403-01	.3742-01	40.94	1.180	.3481	544.8	.8977-03
84	4.9020	24.576	2336.0	.3494-02	.4127-02	.4538-02	40.94	.1430	.3482	544.9	.1088-03
84	4.9020	24.913	2337.0	.1026-01	.1212-01	.1333-01	40.94	.4201	.3481	544.8	.3197-03
84	4.9020	25.575	2338.0	.1693-01	.2000-01	.2200-01	40.92	.6929	.3484	545.3	.5275-03
84	4.9020	26.138	2339.0	.2193-01	.2590-01	.2848-01	40.95	.8979	.3480	544.7	.6832-03
84	5.5650	24.576	2320.0	.1500-01	.1771-01	.1948-01	40.93	.6138	.3483	545.1	.4672-03
84	5.5650	24.913	2321.0	.4531-03	.5352-03	.5885-03	40.95	.1856-01	.3479	544.6	.1412-04
84	5.5650	26.038	2323.0	.2546-01	.3008-01	.3308-01	40.91	1.042	.3487	545.7	.7934-03

IH103 60-OT AFT FUSELAGE AND ELEVON SPLIT LINE (R3P102)

AFT FUSE,ELEVON

PARAMETRIC DATA

MACH = 5.250 ALPHA = -5.000 BETA = .0000 ELEVON = .0000
BDFLAP = .0000 SPDBRK = .0000

TEST CONDITIONS

RUN NUMBER	ALPHA DEG.	BETA DEG.	MACH	RN/FT /FT X10 6	PT PSIA	TT DEG. R	HT BTU/ LBM	PINF PSIA	TINF DEG. R	RHO SLUGS/ FT3	VINF FT/SEC	SCALE
83	-5.000	.0000	5.250	1.048	103.8	1496.	368.3	.1430	235.7	.5092-04	3951.	.1750-01

RUN NUMBER	PHI DEG.	HS SPHERE TW=540
83	.0000	.1679

TEST DATA

RUN NUMBER	ZO MS	XO MS	T/C NO	H/HREF R=1.0	H/HREF R=.900	H/HREF R=.850	QREF BTU/ FT2SEC	QDOT BTU/ FT2SEC	HW/HT	TW DEG. R	STN NO R=.900
83	4.6920	24.576	2341.0	.7037-02	.8332-02	.9177-02	39.77	.2799	.3566	547.3	.2160-03
83	4.6920	24.913	2342.0	.6862-02	.8124-02	.8948-02	39.78	.2730	.3565	547.2	.2107-03
83	4.7220	25.475	2343.0	.2113-01	.2502-01	.2756-01	39.77	.8405	.3565	547.3	.6488-03
83	4.7590	26.038	2344.0	.3148-01	.3727-01	.4105-01	39.78	1.252	.3564	547.2	.9664-03
83	4.9020	24.576	2336.0	.3502-02	.4146-02	.4566-02	39.78	.1393	.3564	547.1	.1075-03
83	4.9020	24.913	2337.0	.1176-01	.1392-01	.1534-01	39.79	.4680	.3563	546.9	.3611-03
83	4.9020	25.575	2338.0	.2767-01	.3277-01	.3609-01	39.76	1.100	.3568	547.6	.8497-03
83	4.9020	26.138	2339.0	.3719-01	.4402-01	.4848-01	39.80	1.480	.3561	546.6	.1142-02
83	5.5650	24.576	2320.0	.2800-01	.3315-01	.3651-01	39.78	1.114	.3564	547.0	.8596-03
83	5.5650	26.038	2323.0	.3857-01	.4567-01	.5030-01	39.75	1.533	.3569	547.8	.1184-02

IH103 60-OT AFT FUSELAGE AND ELEVON SPLIT LINE (R3PI03)

AFT FUSE,ELEVON

PARAMETRIC DATA

MACH = 5.250 ALPHA = 5.000 BETA = .0000 ELEVON = .0000
BDFLAP = .0000 SPDBRK = .0000

TEST CONDITIONS

RUN NUMBER	ALPHA DEG.	BETA DEG.	MACH	RN/FT /FT X10 6	PT PSIA	TT DEG. R	HT BTU/ LBM	PINF PSIA	TINF DEG. R	RHO SLUGS/ FT3	VINF FT/SEC	SCALE
82	5.000	.0000	5.250	1.000	101.7	1521.	374.9	.1400	239.9	.4897-04	3986.	.1750-01

RUN NUMBER	PHI DEG.	HS SPHERE TW=540
82	.0000	.1664

TEST DATA

RUN NUMBER	ZO MS	XO MS	T/C NO	H/HREF R=1.0	H/HREF R=.900	H/HREF R=.850	QREF BTU/ FT2SEC	QDOT BTU/ FT2SEC	HW/HT	TW DEG. R	STN NO R=.900
82	4.6920	24.576	2341.0	.2064-01	.2439-01	.2683-01	40.49	.8356	.3505	547.5	.6460-03
82	4.6920	24.913	2342.0	.3314-01	.3917-01	.4309-01	40.50	1.342	.3504	547.5	.1038-02
82	4.7220	25.475	2343.0	.4200-01	.4964-01	.5461-01	40.49	1.701	.3505	547.6	.1315-02
82	4.7590	26.038	2344.0	.4048-01	.4785-01	.5263-01	40.51	1.640	.3502	547.1	.1267-02
82	4.9020	24.576	2336.0	.4629-02	.5471-02	.6019-02	40.50	.1875	.3504	547.4	.1449-03
82	4.9020	24.913	2337.0	.1359-01	.1606-01	.1767-01	40.52	.5506	.3502	547.1	.4254-03
82	4.9020	25.575	2338.0	.2730-01	.3227-01	.3550-01	40.49	1.105	.3506	547.7	.8547-03
82	4.9020	26.138	2339.0	.3163-01	.3738-01	.4112-01	40.51	1.281	.3502	547.2	.9902-03
82	5.5650	24.576	2320.0	.1204-01	.1423-01	.1565-01	40.49	.4874	.3505	547.6	.3768-03
82	5.5650	24.913	2321.0	.1027-02	.1213-02	.1335-02	40.52	.4160-01	.3501	546.9	.3214-04
82	5.5650	26.038	2323.0	.1742-01	.2059-01	.2265-01	40.46	.7048	.3509	548.3	.5453-03

IH103 60-OT AFT FUSELAGE AND ELEVON SPLIT LINE (R3P104)

AFT FUSE,ELEVON

PARAMETRIC DATA

MACH = 5.250 ALPHA = 10.00 BETA = .0000 ELEVON = .0000
BDFLAP = .0000 SPDBRK = .0000

TEST CONDITIONS

RUN NUMBER	ALPHA DEG.	BETA DEG.	MACH	RN/FT /FT X10 6	PT PSIA	TT DEG. R	HT BTU/ LBM	PINF PSIA	TINF DEG. R	RHO SLUGS/ FT3	VINF FT/SEC	SCALE
81	10.00	-5.000	5.250	1.029	101.8	1494.	368.0	.1404	235.5	.5001-04	3949.	.1750-01

RUN NUMBER	PHI DEG.	HS SPHERE TW=540
81	.0000	.1663

TEST DATA

RUN NUMBER	ZO MS	XO MS	T/C NO	H/HREF R=1.0	H/HREF R=.900	H/HREF R=.850	QREF BTU/ FT2SEC	QDOT BTU/ FT2SEC	HW/HT	TW DEG. R	STN NO R=.900
81	4.6920	24.576	2341.0	.1608-01	.1905-01	.2098-01	39.35	.6329	.3568	547.3	.4983-03
81	4.6920	24.913	2342.0	.2289-01	.2710-01	.2985-01	39.36	.9010	.3566	546.9	.7090-03
81	4.7220	25.475	2343.0	.3618-01	.4284-01	.4719-01	39.34	1.423	.3569	547.5	.1121-02
81	4.7590	26.038	2344.0	.3933-01	.4657-01	.5129-01	39.37	1.548	.3565	546.8	.1218-02
81	4.9020	24.576	2336.0	.7103-02	.8411-02	.9263-02	39.35	.2795	.3568	547.2	.2200-03
81	4.9020	24.913	2337.0	.1041-01	.1233-01	.1358-01	39.36	.4098	.3566	546.9	.3225-03
81	4.9020	25.575	2338.0	.2292-01	.2714-01	.2989-01	39.33	.9014	.3571	547.7	.7100-03
81	4.9020	26.138	2339.0	.3216-01	.3808-01	.4194-01	39.36	1.266	.3567	547.1	.9962-03
81	5.5650	24.576	2320.0	.3588-02	.4248-02	.4678-02	39.37	.1412	.3565	546.7	.1111-03
81	5.5650	24.913	2321.0	.4591-03	.5435-03	.5985-03	39.41	.1809-01	.3558	545.8	.1422-04
81	5.5650	26.038	2323.0	.2132-01	.2524-01	.2781-01	39.33	.8385	.3570	547.6	.6604-03

IH103 60-OT AFT FUSELAGE AND ELEVON SPLIT LINE (R3P105)

AFT FUSE,ELEVON

PARAMETRIC DATA

MACH = 5.250 ALPHA = .0000 BETA = -5.000 ELEVON = .0000
BDFLAP = .0000 SPDBRK = .0000

TEST CONDITIONS

RUN NUMBER	ALPHA DEG.	BETA DEG.	MACH	RN/FT /FT X10 6	PT PSIA	TT DEG. R	HT BTU/ LBM	PINF PSIA	TINF DEG. R	RHO SLUGS/ FT3	VINF FT/SEC	SCALE
77	.0000	-5.000	5.250	1.043	103.3	1496.	368.4	.1425	235.8	.5070-04	3951.	.1750-01

RUN NUMBER	PHI DEG.	HS SPHERE TW=540
77	.0000	.1675

TEST DATA

RUN NUMBER	ZO MS	XO MS	T/C NO	H/HREF R=1.0	H/HREF R=.900	H/HREF R=.850	QREF BTU/ FT2SEC	QDOT BTU/ FT2SEC	HW/HT	TW DEG. R	STN NO R=.900
77	4.6920	24.913	2342.0	.1140-01	.1352-01	.1490-01	39.41	.4493	.3611	554.6	.3511-03
77	4.7220	25.475	2343.0	.1690-01	.2004-01	.2209-01	39.39	.6656	.3615	555.1	.5205-03
77	4.7590	26.038	2344.0	.2252-03	.2663-03	.2930-03	40.02	.9015-02	.3516	539.9	.6922-05
77	4.9020	24.576	2336.0	.3863-02	.4580-02	.5048-02	39.42	.1523	.3611	554.5	.1190-03
77	4.9020	24.913	2337.0	.6778-02	.8035-02	.8857-02	39.42	.2672	.3610	554.3	.2087-03
77	4.9020	26.138	2339.0	.2006-01	.2378-01	.2621-01	39.39	.7900	.3615	555.1	.6178-03
77	5.5650	24.576	2320.0	.1766-03	.2088-03	.2297-03	40.01	.7064-02	.3519	540.4	.5427-05
77	5.5650	26.038	2323.0	.2723-01	.3228-01	.3558-01	39.44	1.074	.3606	553.8	.8386-03

IH103 60-OT AFT FUSELAGE AND ELEVON SPLIT LINE (R3P106)

AFT FUSE,ELEVON

PARAMETRIC DATA

MACH = 5.250 ALPHA = -5.000 BETA = -5.000 ELEVON = .0000
BDFLAP = .0000 SPDBRK = .0000

TEST CONDITIONS

RUN NUMBER	ALPHA DEG.	BETA DEG.	MACH	RN/FT /FT X10 6	PT PSIA	TT DEG. R	HT BTU/ LBM	PINF PSIA	TINF DEG. R	RHO SLUGS/ FT3	VINF FT/SEC	SCALE
78	-5.000	-5.000	5.250	.9991	96.86	1476.	363.2	.1337	232.4	.4828-04	3923.	.1750-01

RUN NUMBER	PHI DEG.	HS SPHERE TW=540
78	.0000	.1621

TEST DATA

RUN NUMBER	ZO MS	XO MS	T/C NO	H/HREF R=1.0	H/HREF R=.900	H/HREF R=.850	QREF BTU/ FT2SEC	QDOT BTU/ FT2SEC	HW/HT	TW DEG. R	STN NO R=.900
78	4.6920	24.913	2342.0	.8803-02	.1046-01	.1155-01	37.12	.3267	.3690	558.5	.2781-03
78	4.7220	25.475	2343.0	.2622-01	.3117-01	.3441-01	37.08	.9723	.3696	559.4	.8284-03
78	4.7590	26.038	2344.0	.5188-03	.6145-03	.6769-03	37.79	.1960-01	.3580	541.8	.1634-04
78	4.9020	24.576	2336.0	.6344-02	.7540-02	.8325-02	37.09	.2353	.3695	559.2	.2004-03
78	4.9020	24.913	2337.0	.2409-01	.2863-01	.3160-01	37.11	.8939	.3691	558.7	.7609-03
78	4.9020	26.138	2339.0	.3130-01	.3720-01	.4107-01	37.09	1.161	.3695	559.2	.9888-03
78	5.5650	24.576	2320.0	.2136-03	.2530-03	.2787-03	37.77	.8067-02	.3583	542.3	.6729-05
78	5.5650	26.038	2323.0	.4174-01	.4961-01	.5477-01	37.08	1.548	.3696	559.4	.1319-02

IH103 60-OT AFT FUSELAGE AND ELEVON SPLIT LINE (R3P107)

AFT FUSE,ELEVON

PARAMETRIC DATA

MACH = 5.250 ALPHA = 5.000 BETA = -5.000 ELEVON = .0000
BDFLAP = .0000 SPDBRK = .0000

TEST CONDITIONS

RUN NUMBER	ALPHA DEG.	BETA DEG.	MACH	RN/FT /FT X10 6	PT PSIA	TT DEG. R	HT BTU/ LBM	PINF PSIA	TINF DEG. R	RHO SLUGS/ FT3	VINF FT/SEC	SCALE
79	5.000	-5.000	5.250	1.004	99.07	1492.	367.3	.1366	235.1	.4877-04	3945.	.1750-01

RUN NUMBER	PHI DEG.	HS SPHERE TW=540
79	.0000	.1640

TEST DATA

RUN NUMBER	ZO MS	XO MS	T/C NO	H/HREF R=1.0	H/HREF R=.900	H/HREF R=.850	QREF BTU/ FT2SEC	QDOT BTU/ FT2SEC	HW/HT	TW DEG. R	STN NO R=.900
79	4.6920	24.576	2341.0	.2316-01	.2740-01	.3016-01	38.94	.9019	.3537	541.4	.7260-03
79	4.6920	24.913	2342.0	.4647-01	.5497-01	.6051-01	38.94	1.809	.3536	541.3	.1457-02
79	4.7220	25.475	2343.0	.8575-01	.1015	.1117	38.91	3.337	.3540	541.9	.2688-02
79	4.7590	26.038	2344.0	.6891-01	.8154-01	.8976-01	38.91	2.681	.3541	542.1	.2160-02
79	4.9020	24.576	2336.0	.8896-02	.1052-01	.1158-01	38.94	.3464	.3536	541.2	.2788-03
79	4.9020	24.913	2337.0	.2455-01	.2905-01	.3197-01	38.95	.9564	.3534	541.0	.7696-03
79	4.9020	25.575	2338.0	.5422-01	.6416-01	.7063-01	38.90	2.109	.3542	542.2	.1700-02
79	4.9020	26.138	2339.0	.4760-01	.5631-01	.6199-01	38.92	1.852	.3539	541.8	.1492-02
79	5.5650	24.576	2320.0	.1750-01	.2070-01	.2278-01	38.97	.6819	.3531	540.6	.5485-03
79	5.5650	26.038	2323.0	.9900-02	.1171-01	.1289-01	38.92	.3853	.3540	541.9	.3103-03

IH103 60-OT AFT FUSELAGE AND ELEVON SPLIT LINE (R3P108)

AFT FUSE,ELEVON

PARAMETRIC DATA

MACH = 5.250 ALPHA = 10.00 BETA = -5.000 ELEVON = .0000
BDFLAP = .0000 SPDBRK = .0000

TEST CONDITIONS

RUN NUMBER	ALPHA DEG.	BETA DEG.	MACH	RN/FT /FT X10 6	PT PSIA	TT DEG. R	HT BTU/ LBM	PINF PSIA	TINF DEG. R	RHO SLUGS/ FT3	VINF FT/SEC	SCALE
80	10.00	-5.000	5.250	1.024	102.2	1503.	370.2	.1408	236.9	.4989-04	3961.	.1750-01

RUN NUMBER	PHI DEG.	HS SPHERE TW=540
80	.0000	.1667

TEST DATA

RUN NUMBER	ZO MS	XO MS	T/C NO	H/HREF R=1.0	H/HREF R=.900	H/HREF R=.850	QREF BTU/ FT2SEC	QDOT BTU/ FT2SEC	HW/HT	TW DEG. R	STN NO R=.900
80	4.6920	24.576	2341.0	.3896-01	.4610-01	.5074-01	39.86	1.553	.3539	546.0	.1208-02
80	4.6920	24.913	2342.0	.7354-01	.8700-01	.9576-01	39.87	2.932	.3537	545.8	.2280-02
80	4.7220	25.475	2343.0	.8537-01	.1010	.1112	39.85	3.402	.3540	546.2	.2647-02
80	4.7590	26.038	2344.0	.6494-01	.7683-01	.8457-01	39.86	2.588	.3539	546.1	.2014-02
80	4.9020	24.576	2336.0	.1379-01	.1631-01	.1796-01	39.86	.5496	.3539	546.0	.4276-03
80	4.9020	24.913	2337.0	.4561-01	.5395-01	.5939-01	39.87	1.818	.3537	545.7	.1414-02
80	4.9020	25.575	2338.0	.6201-01	.7338-01	.8078-01	39.83	2.470	.3543	546.6	.1923-02
80	4.9020	26.138	2339.0	.4561-01	.5396-01	.5939-01	39.86	1.818	.3539	546.0	.1414-02
80	5.5650	24.576	2320.0	.2390-01	.2828-01	.3112-01	39.90	.9537	.3533	545.1	.7411-03
80	5.5650	26.038	2323.0	.1578-01	.1867-01	.2055-01	39.86	.6290	.3539	546.0	.4893-03

IH103 60-OT AFT FUSELAGE AND ELEVON SPLIT LINE (R3P109)

AFT FUSE,ELEVON

PARAMETRIC DATA

MACH = 5.250 ALPHA = .0000 BETA = -3.000 ELEVON = .0000
BDFLAP = .0000 SPDBRK = .0000

TEST CONDITIONS

RUN NUMBER	ALPHA DEG.	BETA DEG.	MACH	RN/FT /FT X10 6	PT PSIA	TT DEG. R	HT BTU/ LBM	PINF PSIA	TINF DEG. R	RHO SLUGS/ FT3	VINF FT/SEC	SCALE
93	.0000	-3.000	5.250	1.074	104.3	1478.	363.7	.1440	232.7	.5192-04	3926.	.1750-01

RUN NUMBER	PHI DEG.	HS SPHERE TW=540
93	.0000	.1682

TEST DATA

RUN NUMBER	ZO MS	XO MS	T/C NO	H/HREF R=1.0	H/HREF R=.900	H/HREF R=.850	QREF BTU/ FT2SEC	QDOT BTU/ FT2SEC	HW/HT	TW DEG. R	STN NO R=.900
93	4.6920	24.576	2341.0	.1012-01	.1202-01	.1326-01	38.70	.3917	.3670	556.2	.3081-03
93	4.6920	24.913	2342.0	.1340-01	.1592-01	.1756-01	38.70	.5186	.3670	556.3	.4080-03
93	4.7220	25.475	2343.0	.1884-01	.2238-01	.2470-01	38.67	.7286	.3674	556.9	.5737-03
93	4.7590	26.038	2344.0	.1917-01	.2277-01	.2513-01	38.65	.7408	.3678	557.5	.5837-03
93	4.9020	24.576	2336.0	.3099-02	.3681-02	.4061-02	38.72	.1200	.3668	555.9	.9436-04
93	4.9020	24.913	2337.0	.4735-02	.5623-02	.6204-02	38.71	.1833	.3668	555.9	.1441-03
93	4.9020	25.575	2338.0	.1111-01	.1319-01	.1456-01	38.67	.4295	.3674	556.9	.3382-03
93	4.9020	26.138	2339.0	.1893-01	.2248-01	.2481-01	38.67	.7319	.3675	557.0	.5763-03
93	5.5650	24.576	2320.0	.1524-01	.1809-01	.1996-01	38.74	.5903	.3663	555.2	.4638-03
93	5.5650	26.038	2323.0	.2379-01	.2826-01	.3118-01	38.70	.9206	.3671	556.4	.7244-03

IH103 60-OT AFT FUSELAGE AND ELEVON SPLIT LINE (R3P110)

AFT FUSE,ELEVON

PARAMETRIC DATA

MACH = 5.250 ALPHA = -5.000 BETA = -3.000 ELEVON = .0000
BDFLAP = .0000 SPDBRK = .0000

TEST CONDITIONS

RUN NUMBER	ALPHA DEG.	BETA DEG.	MACH	RN/FT /FT X10 6	PT PSIA	TT DEG. R	HT BTU/ LBM	PINF PSIA	TINF DEG. R	RHO SLUGS/ FT3	VINF FT/SEC	SCALE
94	-5.000	-3.000	5.250	1.005	103.7	1534.	378.4	.1425	242.1	.4939-04	4004.	.1750-01

RUN NUMBER	PHI DEG.	HS SPHERE TW=540
94	.0000	.1680

TEST DATA

RUN NUMBER	ZO MS	XO MS	T/C NO	H/HREF R=1.0	H/HREF R=.900	H/HREF R=.850	QREF BTU/ FT2SEC	QDOT BTU/ FT2SEC	HW/HT	TW DEG. R	STN NO R=.900
94	4.6920	24.576	2341.0	.6048-02	.7156-02	.7877-02	41.05	.2482	.3538	558.0	.1888-03
94	4.6920	24.913	2342.0	.8997-02	.1064-01	.1172-01	41.04	.3692	.3539	558.1	.2808-03
94	4.7220	25.475	2343.0	.2089-01	.2472-01	.2722-01	41.01	.8569	.3544	558.8	.6522-03
94	4.7590	26.038	2344.0	.2350-01	.2781-01	.3062-01	40.99	.9635	.3546	559.2	.7338-03
94	4.9020	24.576	2336.0	.4563-02	.5398-02	.5942-02	41.07	.1874	.3535	557.5	.1424-03
94	4.9020	24.913	2337.0	.1591-01	.1882-01	.2071-01	41.06	.6532	.3536	557.6	.4965-03
94	4.9020	25.575	2338.0	.2711-01	.3208-01	.3532-01	41.02	1.112	.3543	558.7	.8464-03
94	4.9020	26.138	2339.0	.2800-01	.3313-01	.3648-01	40.99	1.148	.3546	559.2	.8741-03
94	5.5650	24.576	2320.0	.2328-01	.2754-01	.3031-01	41.11	.9573	.3528	556.3	.7266-03
94	5.5650	26.038	2323.0	.4511-01	.5337-01	.5874-01	41.07	1.853	.3534	557.3	.1408-02

IH103 60-OT AFT FUSELAGE AND ELEVON SPLIT LINE (R3P111)

AFT FUSE,ELEVON

PARAMETRIC DATA

MACH = 5.250 ALPHA = 5.000 BETA = -3.000 ELEVON = .0000
BDFLAP = .0000 SPDBRK = .0000

TEST CONDITIONS

RUN NUMBER	ALPHA DEG.	BETA DEG.	MACH	RN/FT /FT X10 6	PT PSIA	TT DEG. R	HT BTU/ LBM	PINF PSIA	TINF DEG. R	RHO SLUGS/ FT3	VINF FT/SEC	SCALE
95	5.000	-3.000	5.250	1.012	102.9	1520.	374.9	.1416	239.9	.4954-04	3986.	.1750-01

RUN NUMBER	PHI DEG.	HS SPHERE TW=540
95	.0000	.1673

TEST DATA

RUN NUMBER	ZO MS	XO MS	T/C NO	H/HREF R=1.0	H/HREF R=.900	H/HREF R=.850	QREF BTU/ FT2SEC	QDOT BTU/ FT2SEC	HW/HT	TW DEG. R	STN NO R=.900
95	4.6920	24.576	2341.0	.2309-01	.2736-01	.3015-01	40.15	.9272	.3593	561.3	.7201-03
95	4.6920	24.913	2342.0	.4255-01	.5042-01	.5556-01	40.15	1.708	.3593	561.3	.1327-02
95	4.7220	25.475	2343.0	.7146-01	.8469-01	.9332-01	40.13	2.868	.3596	561.8	.2229-02
95	4.7590	26.038	2344.0	.5734-01	.6795-01	.7487-01	40.13	2.301	.3597	561.9	.1788-02
95	4.9020	24.576	2336.0	.9036-02	.1071-01	.1180-01	40.16	.3629	.3592	561.2	.2818-03
95	4.9020	24.913	2337.0	.2489-01	.2949-01	.3249-01	40.16	.9994	.3592	561.2	.7760-03
95	4.9020	25.575	2338.0	.4651-01	.5512-01	.6074-01	40.12	1.866	.3598	562.1	.1451-02
95	4.9020	26.138	2339.0	.4043-01	.4791-01	.5279-01	40.14	1.623	.3594	561.5	.1261-02
95	5.5650	24.576	2320.0	.1528-01	.1810-01	.1994-01	40.21	.6142	.3584	559.9	.4763-03
95	5.5650	26.038	2323.0	.1121-01	.1329-01	.1464-01	40.16	.4504	.3591	561.0	.3497-03

IH103 60-OT AFT FUSELAGE AND ELEVON SPLIT LINE (R3P112)

AFT FUSE,ELEVON

PARAMETRIC DATA

MACH = 5.250 ALPHA = 10.00 BETA = -3.000 ELEVON = .0000
BDFLAP = .0000 SPDBRK = .0000

TEST CONDITIONS

RUN NUMBER	ALPHA DEG.	BETA DEG.	MACH	RN/FT /FT X10 6	PT PSIA	TT DEG. R	HT BTU/ LBM	PINF PSIA	TINF DEG. R	RHO SLUGS/ FT3	VINF FT/SEC	SCALE
96	10.00	-3.000	5.250	1.046	102.9	1490.	366.9	.1420	234.8	.5074-04	3943.	.1750-01

RUN NUMBER	PHI DEG.	HS SPHERE TW=540
96	.0000	.1672

TEST DATA

RUN NUMBER	ZO MS	XO MS	T/C NO	H/HREF R=1.0	H/HREF R=.900	H/HREF R=.850	QREF BTU/ FT2SEC	QDOT BTU/ FT2SEC	HW/HT	TW DEG. R	STN NO R=.900
96	4.6920	24.576	2341.0	.4388-01	.5195-01	.5722-01	39.45	1.731	.3566	545.3	.1349-02
96	4.6920	24.913	2342.0	.6971-01	.8253-01	.9089-01	39.46	2.751	.3565	545.1	.2143-02
96	4.7220	25.475	2343.0	.8216-01	.9728-01	.1071	39.45	3.241	.3567	545.4	.2526-02
96	4.7590	26.038	2344.0	.6477-01	.7669-01	.8446-01	39.46	2.556	.3565	545.1	.1991-02
96	4.9020	24.576	2336.0	.1817-01	.2152-01	.2370-01	39.45	.7169	.3567	545.4	.5587-03
96	4.9020	24.913	2337.0	.5388-01	.6379-01	.7026-01	39.46	2.126	.3565	545.1	.1657-02
96	4.9020	25.575	2338.0	.6201-01	.7343-01	.8087-01	39.43	2.445	.3570	545.8	.1907-02
96	4.9020	26.138	2339.0	.4814-01	.5700-01	.6277-01	39.45	1.899	.3566	545.3	.1480-02
96	5.5650	24.576	2320.0	.1975-01	.2338-01	.2575-01	39.46	.7792	.3566	545.2	.6072-03
96	5.5650	26.038	2323.0	.9198-02	.1089-01	.1200-01	39.42	.3626	.3572	546.1	.2828-03

IH103 60-OT AFT FUSELAGE AND ELEVON SPLIT LINE (R3P113)

AFT FUSE,ELEVON

PARAMETRIC DATA

MACH = 5.250 ALPHA = .0000 BETA = -9.000 ELEVON = .0000
BDFLAP = .0000 SPDBRK = .0000

TEST CONDITIONS

RUN NUMBER	ALPHA DEG.	BETA DEG.	MACH	RN/FT /FT X10 6	PT PSIA	TT DEG. R	HT BTU/ LBM	PINF PSIA	TINF DEG. R	RHO SLUGS/ FT3	VINF FT/SEC	SCALE
100	.0000	-9.000	5.250	1.056	104.1	1491.	367.2	.1435	235.0	.5127-04	3944.	.1750-01

RUN NUMBER	PHI DEG.	HS SPHERE TW=540
100	.0000	.1681

TEST DATA

RUN NUMBER	ZO MS	XO MS	T/C NO	H/HREF R=1.0	H/HREF R=.900	H/HREF R=.850	QREF BTU/ FT2SEC	QDOT BTU/ FT2SEC	HW/HT	TW DEG. R	STN NO R=.900
100	4.6920	24.576	2341.0	.1267-01	.1502-01	.1655-01	39.49	.5006	.3599	550.7	.3880-03
100	4.6920	24.913	2342.0	.2459-01	.2914-01	.3211-01	39.51	.9713	.3597	550.4	.7526-03
100	4.7220	25.475	2343.0	.4721-01	.5594-01	.6165-01	39.50	1.865	.3598	550.5	.1445-02
100	4.7590	26.038	2344.0	.4447-01	.5269-01	.5806-01	39.53	1.758	.3594	549.9	.1361-02
100	4.9020	24.576	2336.0	.8937-02	.1059-01	.1167-01	39.50	.3530	.3599	550.6	.2736-03
100	4.9020	24.913	2337.0	.1655-01	.1962-01	.2162-01	39.51	.6540	.3597	550.4	.5067-03
100	4.9020	25.575	2338.0	.2281-01	.2703-01	.2979-01	39.49	.9008	.3599	550.7	.6982-03
100	4.9020	26.138	2339.0	.2727-01	.3231-01	.3561-01	39.53	1.078	.3593	549.7	.8347-03
100	5.5650	24.576	2320.0	.2725-01	.3230-01	.3559-01	39.47	1.075	.3603	551.3	.8342-03
100	5.5650	26.038	2323.0	.2652-01	.3144-01	.3465-01	39.45	1.047	.3605	551.7	.8121-03

IH103 60-OT AFT FUSELAGE AND ELEVON SPLIT LINE (R3PI14)

AFT FUSE,ELEVON

PARAMETRIC DATA

MACH = 5.250 ALPHA = -5.000 BETA = -9.000 ELEVON = .0000
BDFLAP = .0000 SPDBRK = .0000

TEST CONDITIONS

RUN NUMBER	ALPHA DEG.	BETA DEG.	MACH	RN/FT /FT X10 6	PT PSIA	TT DEG. R	HT BTU/ LBM	PINF PSIA	TINF DEG. R	RHO SLUGS/ FT3	VINF FT/SEC	SCALE
99	-5.000	-9.000	5.250	1.045	102.9	1490.	366.9	.1420	234.8	.5073-04	3943.	.1750-01

RUN NUMBER	PHI DEG.	HS SPHERE TW=540
99	.0000	.1672

TEST DATA

RUN NUMBER	ZO MS	XO MS	T/C NO	H/HREF R=1.0	H/HREF R=.900	H/HREF R=.850	QREF BTU/ FT2SEC	QDOT BTU/ FT2SEC	HW/HT	TW DEG. R	STN NO R=.900
99	4.6920	24.576	2341.0	.2568-01	.3048-01	.3361-01	38.96	1.001	.3644	557.3	.7911-03
99	4.6920	24.913	2342.0	.3557-01	.4221-01	.4655-01	38.97	1.386	.3643	557.1	.1096-02
99	4.7220	25.475	2343.0	.3167-01	.3758-01	.4145-01	38.96	1.234	.3645	557.4	.9755-03
99	4.7590	26.038	2344.0	.3264-01	.3873-01	.4272-01	38.96	1.272	.3644	557.3	.1005-02
99	4.9020	24.576	2336.0	.1261-01	.1497-01	.1651-01	38.97	.4915	.3643	557.2	.3885-03
99	4.9020	24.913	2337.0	.3925-01	.4657-01	.5136-01	38.98	1.530	.3641	556.9	.1209-02
99	4.9020	25.575	2338.0	.4139-01	.4913-01	.5419-01	38.95	1.612	.3646	557.6	.1275-02
99	4.9020	26.138	2339.0	.3658-01	.4341-01	.4788-01	38.98	1.426	.3642	556.9	.1127-02
99	5.5650	24.576	2320.0	.3458-01	.4102-01	.4524-01	39.01	1.349	.3637	556.2	.1065-02
99	5.5650	26.038	2323.0	.2488-01	.2952-01	.3256-01	38.97	.9696	.3643	557.1	.7663-03

IH103 60-OT AFT FUSELAGE AND ELEVON SPLIT LINE (R3PI15)

AFT FUSE,ELEVON

PARAMETRIC DATA

MACH = 5.250 ALPHA = 5.000 BETA = -9.000 ELEVON = .0000
BDFLAP = .0000 SPDBRK = .0000

TEST CONDITIONS

RUN NUMBER	ALPHA DEG.	BETA DEG.	MACH	RN/FT /FT X10 6	PT PSIA	TT DEG. R	HT BTU/ LBM	PINF PSIA	TINF DEG. R	RHO SLUGS/ FT3	VINF FT/SEC	SCALE
98	5.000	-9.000	5.250	1.057	103.4	1484.	365.2	.1426	233.7	.5120-04	3934.	.1750-01

RUN NUMBER	PHI DEG.	HS SPHERE TW=540
98	.0000	.1675

TEST DATA

RUN NUMBER	ZO MS	XO MS	T/C NO	H/HREF R=1.0	H/HREF R=.900	H/HREF R=.850	QREF BTU/ FT2SEC	QDOT BTU/ FT2SEC	HW/HT	TW DEG. R	STN NO R=.900
98	4.6920	24.576	2341.0	.3025-01	.3588-01	.3956-01	38.97	1.179	.3625	551.7	.9268-03
98	4.6920	24.913	2342.0	.6228-01	.7387-01	.8144-01	38.99	2.428	.3622	551.3	.1908-02
98	4.7220	25.475	2343.0	.1022	.1212	.1336	38.97	3.982	.3626	551.8	.3131-02
98	4.7590	26.038	2344.0	.7991-01	.9478-01	.1045	38.97	3.114	.3625	551.7	.2448-02
98	4.9020	24.576	2336.0	.1330-01	.1577-01	.1739-01	38.97	.5182	.3625	551.7	.4074-03
98	4.9020	24.913	2337.0	.3403-01	.4036-01	.4449-01	38.98	1.327	.3623	551.4	.1042-02
98	4.9020	25.575	2338.0	.6776-01	.8037-01	.8862-01	38.95	2.639	.3628	552.2	.2076-02
98	4.9020	26.138	2339.0	.5732-01	.6799-01	.7496-01	38.98	2.234	.3624	551.6	.1756-02
98	5.5650	24.576	2320.0	.1826-01	.2165-01	.2387-01	39.00	.7121	.3620	550.9	.5593-03
98	5.5650	26.038	2323.0	.1044-01	.1238-01	.1365-01	38.96	.4067	.3626	551.8	.3198-03

IH103 60-OT AFT FUSELAGE AND ELEVON SPLIT LINE

AFT FUSE,ELEVON (R3P116)

PARAMETRIC DATA

MACH = 5.250 ALPHA = 10.00 BETA = -9.000 ELEVON = .0000
BDFLAP = .0000 SPDBRK = .0000

TEST CONDITIONS

RUN NUMBER	ALPHA DEG.	BETA DEG.	MACH	RN/FT /FT X10 6	PT PSIA	TT DEG. R	HT BTU/ LBM	PINF PSIA	TINF DEG. R	RHO SLUGS/ FT3	VINF FT/SEC	SCALE
97	10.00	-9.000	5.250	1.033	103.2	1504.	370.5	.1422	237.1	.5033-04	3962.	.1750-01

RUN NUMBER	PHI DEG.	HS SPHERE TW=540
97	.0000	.1675

TEST DATA

RUN NUMBER	ZO MS	XO MS	T/C NO	H/HREF R=1.0	H/HREF R=.900	H/HREF R=.850	QREF BTU/ FT2SEC	QDOT BTU/ FT2SEC	HW/HT	TW DEG. R	STN NO R=.900
97	4.6920	24.576	2341.0	.9217-01	.1090	.1200	40.10	3.696	.3536	546.0	.2846-02
97	4.6920	24.913	2342.0	.1137	.1345	.1480	40.11	4.558	.3535	545.8	.3509-02
97	4.7220	25.475	2343.0	.9922-01	.1174	.1292	40.11	3.979	.3535	545.8	.3063-02
97	4.7590	26.038	2344.0	.7555-01	.8936-01	.9835-01	40.14	3.032	.3530	545.0	.2332-02
97	4.9020	24.576	2336.0	.3771-01	.4462-01	.4911-01	40.10	1.512	.3536	546.0	.1164-02
97	4.9020	24.913	2337.0	.8694-01	.1029	.1132	40.11	3.487	.3535	545.8	.2684-02
97	4.9020	25.575	2338.0	.7100-01	.8400-01	.9246-01	40.09	2.847	.3537	546.1	.2192-02
97	4.9020	26.138	2339.0	.5537-01	.6549-01	.7208-01	40.13	2.222	.3531	545.2	.1709-02
97	5.5650	24.576	2320.0	.1529-01	.1809-01	.1991-01	40.09	.6128	.3538	546.3	.4720-03
97	5.5650	26.038	2323.0	.1112-01	.1316-01	.1449-01	40.07	.4457	.3541	546.7	.3434-03

IH103 60-OT AFT FUSELAGE AND ELEVON SPLIT LINE (R3P117)

AFT FUSE,ELEVON

PARAMETRIC DATA

MACH = 5.250 ALPHA = -10.00 BETA = -9.000 ELEVON = .0000
BDFLAP = .0000 SPDBRK = .0000

TEST CONDITIONS

RUN NUMBER	ALPHA DEG.	BETA DEG.	MACH	RN/FT /FT X10 6	PT PSIA	TT DEG. R	HT BTU/ LBM	PINF PSIA	TINF DEG. R	RHO SLUGS/ FT3	VINF FT/SEC	SCALE
110	-10.00	-9.000	5.250	1.092	103.7	1458.	358.4	.1434	229.4	.5246-04	3897.	.1750-01

RUN NUMBER	PHI DEG.	HS SPHERE TW=540
110	.0000	.1676

TEST DATA

RUN NUMBER	ZO MS	XO MS	T/C NO	H/HREF R=1.0	H/HREF R=.900	H/HREF R=.850	QREF BTU/ FT2SEC	QDOT BTU/ FT2SEC	HW/HT	TW DEG. R	STN NO R=.900
110	4.6920	24.576	2341.0	.1179-01	.1407-01	.1558-01	36.94	.4354	.3843	574.0	.3581-03
110	4.6920	24.913	2342.0	.1996-01	.2383-01	.2639-01	36.93	.7371	.3844	574.2	.6064-03
110	4.7220	25.475	2343.0	.3912-01	.4671-01	.5173-01	36.94	1.445	.3844	574.2	.1189-02
110	4.7590	26.038	2344.0	.5066-01	.6048-01	.6697-01	36.96	1.872	.3840	573.6	.1539-02
110	4.9020	24.576	2336.0	.1477-01	.1764-01	.1953-01	36.92	.5454	.3846	574.5	.4489-03
110	4.9020	24.913	2337.0	.4294-01	.5127-01	.5677-01	36.93	1.586	.3845	574.3	.1305-02
110	4.9020	25.575	2338.0	.5024-01	.5999-01	.6644-01	36.91	1.854	.3848	574.8	.1527-02
110	4.9020	26.138	2339.0	.5834-01	.6965-01	.7712-01	36.95	2.156	.3841	573.8	.1773-02
110	5.5650	24.576	2320.0	.6613-01	.7896-01	.8745-01	36.91	2.441	.3847	574.7	.2010-02
110	5.5650	26.038	2323.0	.8733-01	.1043	.1155	36.89	3.222	.3851	575.3	.2654-02

IH103 60-OT AFT FUSELAGE AND ELEVON SPLIT LINE (R3P118)

AFT FUSE,ELEVON

PARAMETRIC DATA

MACH = 5.250 ALPHA = -10.00 BETA = -3.000 ELEVON = .0000
BDFLAP = .0000 SPDBRK = .0000

TEST CONDITIONS

RUN NUMBER	ALPHA DEG.	BETA DEG.	MACH	RN/FT /FT X10 6	PT PSIA	TT DEG. R	HT BTU/ LBM	PINF PSIA	TINF DEG. R	RHO SLUGS/ FT3	VINF FT/SEC	SCALE
111	-10.00	-3.000	5.250	1.024	103.5	1514.	373.3	.1425	238.9	.5005-04	3977.	.1750-01

RUN NUMBER	PHI DEG.	HS SPHERE TW=540
111	.0000	.1678

TEST DATA

RUN NUMBER	ZO MS	XO MS	T/C NO	H/HREF R=1.0	H/HREF R=.900	H/HREF R=.850	QREF BTU/ FT2SEC	QDOT. BTU/ FT2SEC	HW/HT	TW DEG. R	STN NO R=.900
111	4.6920	24.576	2341.0	.5844-02	.6909-02	.7601-02	40.62	.2374	.3512	546.3	.1809-03
111	4.6920	24.913	2342.0	.1348-01	.1594-01	.1754-01	40.62	.5476	.3512	546.3	.4174-03
111	4.7220	25.475	2343.0	.2838-01	.3355-01	.3692-01	40.60	1.152	.3514	546.7	.8786-03
111	4.7590	26.038	2344.0	.4239-01	.5011-01	.5514-01	40.61	1.721	.3513	546.5	.1312-02
111	4.9020	24.576	2336.0	.9778-02	.1156-01	.1272-01	40.62	.3971	.3512	546.4	.3027-03
111	4.9020	24.913	2337.0	.2991-01	.3536-01	.3890-01	40.62	1.215	.3512	546.3	.9259-03
111	4.9020	25.575	2338.0	.4238-01	.5011-01	.5514-01	40.59	1.720	.3516	547.0	.1312-02
111	4.9020	26.138	2339.0	.5518-01	.6523-01	.7177-01	40.61	2.241	.3512	546.4	.1708-02
111	5.5650	24.576	2320.0	.4823-01	.5701-01	.6272-01	40.65	1.961	.3506	545.4	.1493-02
111	5.5650	26.038	2323.0	.5124-01	.6058-01	.6665-01	40.60	2.080	.3514	546.7	.1586-02

IH103 60-OT AFT FUSELAGE AND ELEVON SPLIT LINE (R3P119)

AFT FUSE,ELEVON

PARAMETRIC DATA

MACH = 5.250 ALPHA = -10.00 BETA = -5.000 ELEVON = .0000
BDFLAP = .0000 SPDBRK = .0000

TEST CONDITIONS

RUN NUMBER	ALPHA DEG.	BETA DEG.	MACH	RN/FT /FT X10 6	PT PSIA	TT DEG. R	HT BTU/ LBM	PINF PSIA	TINF DEG. R	RHO SLUGS/ FT3	VINF FT/SEC	SCALE
120	-10.00	-5.000	5.250	1.081	103.6	1466.	360.5	.1432	230.7	.5207-04	3909.	.1750-01

RUN NUMBER	PHI DEG.	HS SPHERE TW=540
120	.0000	.1676

TEST DATA

RUN NUMBER	ZO MS	XO MS	T/C NO	H/HREF R=1.0	H/HREF R=.900	H/HREF R=.850	QREF BTU/ FT2SEC	QDOT BTU/ FT2SEC	HW/HT	TW DEG. R	STN NO R=.900
120	4.6920	24.576	2341.0	.5647-02	.6718-02	.7421-02	37.88	.2139	.3725	559.8	.1718-03
120	4.6920	24.913	2342.0	.9771-02	.1162-01	.1284-01	37.87	.3700	.3727	560.0	.2973-03
120	4.7220	25.475	2343.0	.2885-01	.3433-01	.3793-01	37.84	1.092	.3733	560.8	.8779-03
120	4.7590	26.038	2344.0	.4067-01	.4839-01	.5347-01	37.82	1.538	.3735	561.2	.1238-02
120	4.9020	24.576	2336.0	.1002-01	.1192-01	.1317-01	37.88	.3797	.3726	559.8	.3050-03
120	4.9020	24.913	2337.0	.3216-01	.3826-01	.4227-01	37.87	1.218	.3727	560.0	.9786-03
120	4.9020	25.575	2338.0	.4023-01	.4787-01	.5289-01	37.82	1.521	.3735	561.2	.1224-02
120	4.9020	26.138	2339.0	.5154-01	.6132-01	.6776-01	37.83	1.950	.3734	561.0	.1568-02
120	5.5650	24.576	2320.0	.4808-01	.5718-01	.6316-01	37.92	1.823	.3719	558.7	.1463-02
120	5.5650	26.038	2323.0	.6945-01	.8262-01	.9128-01	37.86	2.630	.3728	560.2	.2113-02

IH103 60-OT AFT FUSELAGE AND ELEVON SPLIT LINE (R3P120)

AFT FUSE,ELEVON

PARAMETRIC DATA

MACH = 5.250 ALPHA = -10.00 BETA = .0000 ELEVON = .0000
BDFLAP = .0000 SPDBRK = .0000

TEST CONDITIONS

RUN NUMBER	ALPHA DEG.	BETA DEG.	MACH	RN/FT /FT X10 6	PT PSIA	TT DEG. R	HT BTU/ LBM	PINF PSIA	TINF DEG. R	RHO SLUGS/ FT3	VINF FT/SEC	SCALE
121	-10.00	.0000	5.250	.9993	103.7	1539.	379.8	.1425	243.0	.4920-04	4011.	.1750-01

RUN NUMBER	PHI DEG.	HS SPHERE TW=540
121	.0000	.1681

TEST DATA

RUN NUMBER	ZO MS	XO MS	T/C NO	H/HREF R=1.0	H/HREF R=.900	H/HREF R=.850	QREF BTU/ FT2SEC	QDOT BTU/ FT2SEC	HW/HT	TW DEG. R	STN NO R=.900
121	4.6920	24.576	2341.0	.1241-01	.1468-01	.1617-01	41.12	.5102	.3551	562.0	.3883-03
121	4.6920	24.913	2342.0	.1527-01	.1807-01	.1989-01	41.13	.6279	.3549	561.8	.4777-03
121	4.7220	25.475	2343.0	.2968-01	.3513-01	.3869-01	41.05	1.218	.3561	563.5	.9288-03
121	4.7590	26.038	2344.0	.3855-01	.4565-01	.5027-01	41.04	1.582	.3563	564.0	.1207-02
121	4.9020	24.576	2336.0	.9606-02	.1137-01	.1252-01	41.12	.3950	.3550	561.8	.3006-03
121	4.9020	24.913	2337.0	.3221-01	.3812-01	.4198-01	41.12	1.325	.3551	562.0	.1008-02
121	4.9020	25.575	2338.0	.4539-01	.5374-01	.5919-01	41.03	1.863	.3563	564.0	.1421-02
121	4.9020	26.138	2339.0	.4929-01	.5836-01	.6427-01	41.03	2.023	.3564	564.0	.1543-02
121	5.5650	24.576	2320.0	.4048-01	.4789-01	.5271-01	41.21	1.668	.3537	559.7	.1266-02
121	5.5650	26.038	2323.0	.4334-01	.5130-01	.5648-01	41.09	1.781	.3555	562.6	.1356-02

IH103 60-OT AFT FUSELAGE AND ELEVON SPLIT LINE (R3P121)

AFT FUSE,ELEVON

PARAMETRIC DATA

MACH = 5.250 ALPHA = .0000 BETA = .0000 ELEVON = .0000
BDFLAP = .0000 SPDBRK = .0000

TEST CONDITIONS

RUN NUMBER	ALPHA DEG.	BETA DEG.	MACH	RN/FT /FT X10 6	PT PSIA	TT DEG. R	HT BTU/ LBM	PINF PSIA	TINF DEG. R	RHO SLUGS/ FT3	VINF FT/SEC	SCALE
131	.0000	.0000	5.250	.6469	103.6	1999.	504.0	.1367	322.6	.3557-04	4622.	.1750-01

RUN NUMBER	PHI DEG.	HS SPHERE TW=540
131	.0000	.1689

TEST DATA

RUN NUMBER	ZO MS	XO MS	T/C NO	H/HREF R=1.0	H/HREF R=.900	H/HREF R=.850	QREF BTU/ FT2SEC	QDOT BTU/ FT2SEC	HW/HT	TW DEG. R	STN NO R=.900
131	4.6920	24.576	2341.0	.1213-01	.1403-01	.1523-01	62.67	.7602	.2633	553.1	.4479-03
131	4.6920	24.913	2342.0	.1450-01	.1677-01	.1820-01	62.67	.9084	.2634	553.4	.5353-03
131	4.7220	25.475	2343.0	.2270-01	.2627-01	.2851-01	62.61	1.421	.2640	554.5	.8383-03
131	4.7590	26.038	2344.0	.2424-01	.2805-01	.3045-01	62.59	1.517	.2642	555.0	.8952-03
131	4.9020	24.576	2336.0	.2877-02	.3329-02	.3613-02	62.68	.1804	.2633	553.1	.1062-03
131	4.9020	24.913	2337.0	.7024-02	.8127-02	.8819-02	62.68	.4402	.2633	553.0	.2593-03
131	4.9020	25.575	2338.0	.1443-01	.1670-01	.1813-01	62.60	.9035	.2641	554.8	.5330-03
131	4.9020	26.138	2339.0	.2063-01	.2388-01	.2592-01	62.61	1.292	.2641	554.7	.7619-03
131	5.5650	24.576	2320.0	.1572-01	.1819-01	.1974-01	62.71	.9859	.2629	552.3	.5804-03
131	5.5650	24.913	2321.0	.4460-03	.5160-03	.5599-03	62.75	.2799-01	.2624	551.3	.1647-04
131	5.5650	26.038	2323.0	.2814-01	.3256-01	.3534-01	62.62	1.762	.2639	554.4	.1039-02

IH103 60-OT UPPER RH WING (R3PJ01)

UPPER RH WING

PARAMETRIC DATA

MACH = 5.250 ALPHA = .0000 BETA = .0000 ELEVON = .0000
BDFLAP = .0000 SPDBRK = .0000

TEST CONDITIONS

RUN NUMBER	ALPHA DEG.	BETA DEG.	MACH	RN/FT /FT X10 6	PT PSIA	TT DEG. R	HT BTU/ LBM	PINF PSIA	TINF DEG. R	RHO SLUGS/ FT3	VINF FT/SEC	SCALE
85	.0000	.0000	5.250	1.025	103.2	1511.	372.3	.1421	238.3	.5006-04	3972.	.1750-01

RUN NUMBER	PHI DEG.	HS SPHERE TW=540
85	.0000	.1675

TEST DATA

RUN NUMBER	YO MS	XO MS	T/C NO	H/HREF R=1.0	H/HREF R=.900	H/HREF R=.850	QREF BTU/ FT2SEC	QDOT BTU/ FT2SEC	HW/HT	TW DEG. R	STN NO R=.900
85	1.9700	17.545	2253.0	.9536-02	.1128-01	.1241-01	40.34	.3847	.3530	547.7	.2953-03
85	1.9880	10.859	2249.0	.4351-01	.5148-01	.5668-01	40.25	1.751	.3543	549.8	.1348-02
85	1.9880	11.983	2250.0	.4586-01	.5426-01	.5973-01	40.27	1.847	.3541	549.4	.1420-02
85	1.9880	13.107	2251.0	.3150-01	.3726-01	.4102-01	40.29	1.269	.3537	548.9	.9754-03
85	1.9880	14.195	2252.0	.2000-01	.2366-01	.2604-01	40.30	.8059	.3536	548.7	.6193-03
85	2.0470	22.330	2255.0	.8112-02	.9596-02	.1056-01	40.32	.3271	.3533	548.2	.2512-03
85	2.0490	19.941	2254.0	.3789-02	.4482-02	.4933-02	40.33	.1528	.3532	548.0	.1173-03
85	2.4590	14.195	2256.0	.1989-01	.2354-01	.2592-01	40.25	.8007	.3544	550.0	.6162-03
85	2.4590	15.535	2257.0	.2503-01	.2961-01	.3260-01	40.29	1.008	.3538	549.0	.7752-03
85	2.4590	16.875	2258.0	.1378-01	.1630-01	.1795-01	40.30	.5554	.3536	548.6	.4268-03
85	2.4590	18.215	2259.0	.1044-01	.1235-01	.1359-01	40.33	.4209	.3532	548.1	.3232-03
85	2.4590	19.555	2260.0	.1131-01	.1338-01	.1473-01	40.32	.4561	.3533	548.3	.3503-03
85	2.4590	20.895	2261.0	.4456-02	.5270-02	.5800-02	40.35	.1798	.3528	547.5	.1380-03
85	2.4590	22.235	2262.0	.6252-02	.7395-02	.8139-02	40.33	.2521	.3532	548.1	.1936-03
85	2.4590	23.576	2263.0	.6314-02	.7468-02	.8219-02	40.34	.2547	.3530	547.7	.1955-03
85	5.1380	24.080	2279.0	.1227-02	.1450-02	.1595-02	40.55	.4974-01	.3498	542.7	.3796-04

IH103 60-OT UPPER RH WING (R3PJ02)

UPPER RH WING

PARAMETRIC DATA

MACH = 5.250 ALPHA = -5.000 BETA = .0000 ELEVON = .0000
BDFLAP = .0000 SPDBRK = .0000

TEST CONDITIONS

RUN NUMBER	ALPHA DEG.	BETA DEG.	MACH	RN/FT /FT X10 6	PT PSIA	TT DEG. R	HT BTU/ LBM	PINF PSIA	TINF DEG. R	RHO SLUGS/ FT3	VINF FT/SEC	SCALE
86	-5.000	.0000	5.250	1.032	103.2	1504.	370.6	.1422	237.2	.5031-04	3963.	.1750-01

RUN NUMBER	PHI DEG.	HS SPHERE TW=540
86	.0000	.1675

TEST DATA

RUN NUMBER	YO MS	XO MS	T/C NO	H/HREF R=1.0	H/HREF R=.900	H/HREF R=.850	QREF BTU/ FT2SEC	QDOT BTU/ FT2SEC	HW/HT	TW DEG. R	STN NO R=.900
86	1.9700	17.545	2253.0	.1097-01	.1296-01	.1425-01	40.37	.4427	.3495	539.8	.3383-03
86	1.9880	10.859	2249.0	.6961-01	.8228-01	.9052-01	40.30	2.805	.3507	541.7	.2148-02
86	1.9880	11.983	2250.0	.7889-01	.9324-01	.1026	40.30	3.179	.3506	541.5	.2434-02
86	1.9880	13.107	2251.0	.5182-01	.6125-01	.6738-01	40.33	2.090	.3503	541.0	.1599-02
86	1.9880	14.195	2252.0	.3451-01	.4079-01	.4487-01	40.33	1.392	.3502	540.9	.1065-02
86	2.0470	22.330	2255.0	.9218-02	.1089-01	.1198-01	40.38	.3722	.3495	539.8	.2844-03
86	2.0490	19.941	2254.0	.2666-02	.3150-02	.3465-02	40.37	.1076	.3495	539.9	.8225-04
86	2.4590	14.195	2256.0	.2297-01	.2715-01	.2987-01	40.31	.9258	.3506	541.4	.7088-03
86	2.4590	15.535	2257.0	.2175-01	.2570-01	.2828-01	40.33	.8773	.3501	540.8	.6711-03
86	2.4590	16.875	2258.0	.1438-01	.1699-01	.1869-01	40.34	.5800	.3500	540.6	.4436-03
86	2.4590	18.215	2259.0	.1002-01	.1184-01	.1302-01	40.37	.4044	.3496	539.9	.3091-03
86	2.4590	19.555	2260.0	.1624-01	.1919-01	.2110-01	40.37	.6554	.3496	540.0	.5009-03
86	2.4590	20.895	2261.0	.7315-02	.8644-02	.9507-02	40.38	.2954	.3494	539.7	.2257-03
86	2.4590	22.235	2262.0	.5193-02	.6137-02	.6750-02	40.37	.2097	.3496	539.9	.1602-03
86	2.4590	23.576	2263.0	.8360-02	.9877-02	.1086-01	40.41	.3378	.3490	539.0	.2579-03
86	5.1380	24.080	2279.0	.1701-02	.2005-02	.2201-02	41.03	.6981-01	.3394	524.2	.5238-04

IH103 60-OT UPPER RH WING (R3PJ03)

UPPER RH WING

PARAMETRIC DATA

MACH = 5.250 ALPHA = 5.000 BETA = .0000 ELEVON = .0000
BDFLAP = .0000 SPDBRK = .0000

TEST CONDITIONS

RUN NUMBER	ALPHA DEG.	BETA DEG.	MACH	RN/FT /FT X10 6	PT PSIA	TT DEG. R	HT BTU/ LBM	PINF PSIA	TINF DEG. R	RHO SLUGS/ FT3	VINF FT/SEC	SCALE
87	5.000	.0000	5.250	1.026	102.1	1500.	369.5	.1407	236.4	.4992-04	3957.	.1750-01

RUN NUMBER	PHI DEG.	HS SPHERE TW=540
87	.0000	.1665

TEST DATA

RUN NUMBER	YO MS	XO MS	T/C NO	H/HREF R=1.0	H/HREF R=.900	H/HREF R=.850	QREF BTU/ FT2SEC	QDOT BTU/ FT2SEC	HW/HT	TW DEG. R	STN NO R=.900
87	1.9700	17.545	2253.0	.3438-02	.4066-02	.4474-02	39.86	.1370	.3521	542.2	.1065-03
87	1.9880	10.859	2249.0	.4353-01	.5149-01	.5668-01	39.79	1.732	.3532	543.9	.1349-02
87	1.9880	11.983	2250.0	.3591-01	.4248-01	.4676-01	39.79	1.429	.3532	543.9	.1113-02
87	1.9880	13.107	2251.0	.1876-01	.2219-01	.2442-01	39.81	.7466	.3529	543.4	.5812-03
87	1.9880	14.195	2252.0	.8710-02	.1030-01	.1134-01	39.81	.3468	.3528	543.3	.2699-03
87	2.0470	22.330	2255.0	.5493-02	.6496-02	.7149-02	39.85	.2189	.3522	542.3	.1702-03
87	2.0490	19.941	2254.0	.1676-02	.1982-02	.2181-02	39.86	.6681-01	.3522	542.3	.5194-04
87	2.4590	14.195	2256.0	.2586-01	.3060-01	.3368-01	39.77	1.029	.3535	544.3	.8016-03
87	2.4590	15.535	2257.0	.2016-01	.2384-01	.2624-01	39.81	.8024	.3529	543.5	.6246-03
87	2.4590	16.875	2258.0	.1818-01	.2150-01	.2367-01	39.82	.7240	.3527	543.1	.5634-03
87	2.4590	18.215	2259.0	.7040-02	.8326-02	.9162-02	39.85	.2806	.3522	542.3	.2181-03
87	2.4590	19.555	2260.0	.6570-02	.7770-02	.8550-02	39.85	.2618	.3522	542.4	.2036-03
87	2.4590	20.895	2261.0	.2081-02	.2461-02	.2709-02	39.85	.8296-01	.3522	542.3	.6449-04
87	2.4590	22.235	2262.0	.9525-03	.1126-02	.1239-02	39.87	.3797-01	.3520	542.0	.2951-04
87	2.4590	23.576	2263.0	.1829-02	.2162-02	.2379-02	39.89	.7295-01	.3516	541.4	.5665-04
87	5.1380	24.080	2279.0	.1443-02	.1703-02	.1871-02	40.38	.5827-01	.3440	529.7	.4463-04

IH103 60-OT UPPER RH WING (R3PJ04)

UPPER RH WING

PARAMETRIC DATA

MACH = 5.250 ALPHA = 10.00 BETA = .0000 ELEVON = .0000
BDFLAP = .0000 SPDBRK = .0000

TEST CONDITIONS

RUN NUMBER	ALPHA DEG.	BETA DEG.	MACH	RN/FT /FT X10 6	PT PSIA	TT DEG. R	HT BTU/ LBM	PINF PSIA	TINF DEG. R	RHO SLUGS/ FT3	VINF FT/SEC	SCALE
88	10.00	.0000	5.250	1.044	103.7	1498.	369.0	.1429	236.1	.5079-04	3954.	.1750-01

RUN NUMBER	PHI DEG.	HS SPHERE TW=540
88	.0000	.1678

TEST DATA

RUN NUMBER	YO MS	XO MS	T/C NO	H/HREF R=1.0	H/HREF R=.900	H/HREF R=.850	QREF BTU/ FT2SEC	QDOT BTU/ FT2SEC	HW/HT	TW DEG. R	STN NO R=.900
88	1.9700	17.545	2253.0	.1028-01	.1217-01	.1340-01	39.93	.4106	.3550	546.0	.3160-03
88	1.9880	10.859	2249.0	.5759-01	.6818-01	.7508-01	39.86	2.296	.3561	547.7	.1770-02
88	1.9880	11.983	2250.0	.3903-01	.4621-01	.5089-01	39.87	1.556	.3560	547.5	.1200-02
88	1.9880	13.107	2251.0	.1934-01	.2289-01	.2521-01	39.89	.7716	.3557	546.9	.5945-03
88	1.9880	14.195	2252.0	.8985-02	.1064-01	.1171-01	39.89	.3585	.3556	546.9	.2762-03
88	2.0470	22.330	2255.0	.7690-02	.9102-02	.1002-01	39.93	.3070	.3552	546.2	.2364-03
88	2.0490	19.941	2254.0	.4705-02	.5568-02	.6131-02	39.93	.1878	.3551	546.1	.1446-03
88	2.4590	14.195	2256.0	.2024-01	.2396-01	.2639-01	39.85	.8065	.3563	548.0	.6222-03
88	2.4590	15.535	2257.0	.1509-01	.1787-01	.1967-01	39.89	.6020	.3558	547.1	.4639-03
88	2.4590	16.875	2258.0	.7233-02	.8561-02	.9427-02	39.90	.2886	.3556	546.8	.2223-03
88	2.4590	18.215	2259.0	.3138-02	.3714-02	.4089-02	39.93	.1253	.3551	546.1	.9645-04
88	2.4590	19.555	2260.0	.2708-02	.3205-02	.3529-02	39.92	.1081	.3552	546.3	.8323-04
88	2.4590	20.895	2261.0	.8979-03	.1063-02	.1170-02	39.98	.3590-01	.3544	545.0	.2759-04
88	2.4590	22.235	2262.0	.2605-02	.3084-02	.3395-02	39.93	.1040	.3551	546.0	.8008-04
88	2.4590	23.576	2263.0	.3127-02	.3700-02	.4074-02	39.95	.1249	.3548	545.6	.9609-04
88	5.1380	24.080	2279.0	.1564-02	.1846-02	.2029-02	40.51	.6336-01	.3461	532.2	.4797-04

IH103 60-OT UPPER RH WING (R3PJ05)

UPPER RH WING

PARAMETRIC DATA

MACH = 5.250 ALPHA = .0000 BETA = -5.000 ELEVON = .0000
BDFLAP = .0000 SPDBRK = .0000

TEST CONDITIONS

RUN NUMBER	ALPHA DEG.	BETA DEG.	MACH	RN/FT /FT X10 6	PT PSIA	TT DEG. R	HT BTU/ LBM	PINF PSIA	TINF DEG. R	RHO SLUGS/ FT3	VINF FT/SEC	SCALE
76	.0000	-5.000	5.250	1.033	102.9	1501.	369.7	.1418	236.6	.5028-04	3958.	.1750-01

RUN NUMBER	PHI DEG.	HS SPHERE TW=540
76	.0000	.1672

TEST DATA

RUN NUMBER	YO MS	XO MS	T/C NO	H/HREF R=1.0	H/HREF R=.900	H/HREF R=.850	QREF BTU/ FT2SEC	QDOT BTU/ FT2SEC	HW/HT	TW DEG. R	STN NO R=.900
76	1.9700	17.545	2253.0	.8362-02	.9893-02	.1089-01	39.94	.3340	.3537	545.0	.2583-03
76	1.9880	10.859	2249.0	.3317-01	.3925-01	.4321-01	39.90	1.324	.3543	545.9	.1025-02
76	1.9880	11.983	2250.0	.3002-01	.3553-01	.3911-01	39.91	1.198	.3542	545.7	.9274-03
76	1.9880	13.107	2251.0	.2009-01	.2377-01	.2616-01	39.93	.8022	.3538	545.2	.6205-03
76	1.9880	14.195	2252.0	.1735-01	.2052-01	.2259-01	39.92	.6926	.3539	545.3	.5358-03
76	2.0470	22.330	2255.0	.7815-02	.9246-02	.1018-01	39.92	.3120	.3540	545.4	.2414-03
76	2.0490	19.941	2254.0	.3515-02	.4158-02	.4577-02	39.93	.1404	.3538	545.1	.1086-03
76	2.4590	14.195	2256.0	.1708-01	.2021-01	.2225-01	39.87	.6811	.3547	546.5	.5276-03
76	2.4590	15.535	2257.0	.1412-01	.1671-01	.1840-01	39.90	.5635	.3544	546.0	.4363-03
76	2.4590	16.875	2258.0	.1765-01	.2088-01	.2299-01	39.92	.7045	.3541	545.5	.5451-03
76	2.4590	18.215	2259.0	.9660-02	.1143-01	.1258-01	39.94	.3858	.3537	545.0	.2983-03
76	2.4590	19.555	2260.0	.1134-01	.1342-01	.1477-01	39.93	.4528	.3538	545.2	.3502-03
76	2.4590	20.895	2261.0	.7198-02	.8515-02	.9373-02	39.94	.2875	.3537	545.0	.2223-03
76	2.4590	22.235	2262.0	.9871-02	.1168-01	.1286-01	39.93	.3942	.3538	545.2	.3049-03
76	2.4590	23.576	2263.0	.1091-01	.1291-01	.1421-01	39.94	.4359	.3537	544.9	.3371-03

IH103 60-OT UPPER RH WING (R3PJ06)

UPPER RH WING

PARAMETRIC DATA

MACH = 5.250 ALPHA = -5.000 BETA = -5.000 ELEVON = .0000
BDFLAP = .0000 SPDBRK = .0000

TEST CONDITIONS

RUN NUMBER	ALPHA DEG.	BETA DEG.	MACH	RN/FT /FT X10 6	PT PSIA	TT DEG. R	HT BTU/ LBM	PINF PSIA	TINF DEG. R	RHO SLUGS/ FT3	VINF FT/SEC	SCALE
75	-5.000	-5.000	5.250	1.039	103.3	1499.	369.3	.1424	236.3	.5057-04	3956.	.1750-01

RUN NUMBER	PHI DEG.	HS SPHERE TW=540
75	.0000	.1676

TEST DATA

RUN NUMBER	YO MS	XO MS	T/C NO	H/HREF R=1.0	H/HREF R=.900	H/HREF R=.850	QREF BTU/ FT2SEC	QDOT BTU/ FT2SEC	HW/HT	TW DEG. R	STN NO R=.900
75	1.9700	17.545	2253.0	.1239-01	.1467-01	.1616-01	39.73	.4921	.3577	550.4	.3817-03
75	1.9880	10.859	2249.0	.2853-01	.3380-01	.3724-01	39.68	1.132	.3583	551.5	.8795-03
75	1.9880	11.983	2250.0	.3631-01	.4302-01	.4739-01	39.68	1.441	.3583	551.4	.1119-02
75	1.9880	13.107	2251.0	.2772-01	.3283-01	.3617-01	39.71	1.101	.3580	550.9	.8544-03
75	1.9880	14.195	2252.0	.2457-01	.2911-01	.3207-01	39.70	.9756	.3580	551.0	.7574-03
75	2.0470	22.330	2255.0	.1145-01	.1357-01	.1494-01	39.73	.4551	.3575	550.2	.3530-03
75	2.0490	19.941	2254.0	.5014-02	.5939-02	.6542-02	39.74	.1992	.3575	550.2	.1545-03
75	2.4590	14.195	2256.0	.2526-01	.2993-01	.3297-01	39.66	1.002	.3587	552.0	.7788-03
75	2.4590	15.535	2257.0	.2396-01	.2838-01	.3127-01	39.68	.9505	.3584	551.6	.7385-03
75	2.4590	16.875	2258.0	.2272-01	.2691-01	.2964-01	39.70	.9019	.3580	551.0	.7001-03
75	2.4590	18.215	2259.0	.1504-01	.1781-01	.1962-01	39.73	.5974	.3576	550.4	.4635-03
75	2.4590	19.555	2260.0	.1664-01	.1971-01	.2171-01	39.73	.6611	.3576	550.3	.5128-03
75	2.4590	20.895	2261.0	.8556-02	.1013-01	.1116-01	39.74	.3400	.3574	550.1	.2637-03
75	2.4590	22.235	2262.0	.8420-02	.9971-02	.1098-01	39.75	.3347	.3573	549.9	.2595-03
75	2.4590	23.576	2263.0	.1988-01	.2355-01	.2593-01	39.76	.7907	.3571	549.5	.6127-03

IH103 60-OT UPPER RH WING (R3PJ07)

UPPER RH WING

PARAMETRIC DATA

MACH = 5.250 ALPHA = 5.000 BETA = -5.000 ELEVON = .0000
BDFLAP = .0000 SPDBRK = .0000

TEST CONDITIONS

RUN NUMBER	ALPHA DEG.	BETA DEG.	MACH	RN/FT /FT X10 6	PT PSIA	TT DEG. R	HT BTU/ LBM	PINF PSIA	TINF DEG. R	RHO SLUGS/ FT3	VINF FT/SEC	SCALE
74	5.000	-5.000	5.250	1.035	103.4	1503.	370.4	.1424	237.0	.5042-04	3962.	.1750-01

RUN NUMBER	PHI DEG.	HS SPHERE TW=540
74	.0000	.1676

TEST DATA

RUN NUMBER	YO MS	XO MS	T/C NO	H/HREF R=1.0	H/HREF R=.900	H/HREF R=.850	QREF BTU/ FT2SEC	QDOT BTU/ FT2SEC	HW/HT	TW DEG. R	STN NO R=.900
74	1.9700	17.545	2253.0	.5869-02	.6948-02	.7651-02	39.95	.2344	.3562	549.8	.1811-03
74	1.9880	10.859	2249.0	.1313-01	.1555-01	.1713-01	39.88	.5237	.3572	551.4	.4054-03
74	1.9880	11.983	2250.0	.1815-01	.2150-01	.2368-01	39.89	.7241	.3571	551.2	.5604-03
74	1.9880	13.107	2251.0	.1359-01	.1610-01	.1773-01	39.91	.5426	.3567	550.6	.4196-03
74	1.9880	14.195	2252.0	.1114-01	.1319-01	.1452-01	39.92	.4446	.3566	550.5	.3438-03
74	2.0470	22.330	2255.0	.8117-02	.9609-02	.1058-01	39.97	.3244	.3559	549.4	.2505-03
74	2.0490	19.941	2254.0	.3121-02	.3695-02	.4069-02	39.95	.1247	.3561	549.6	.9632-04
74	2.4590	14.195	2256.0	.1510-01	.1789-01	.1970-01	39.87	.6022	.3573	551.5	.4662-03
74	2.4590	15.535	2257.0	.1204-01	.1426-01	.1570-01	39.90	.4803	.3569	551.0	.3716-03
74	2.4590	16.875	2258.0	.1618-01	.1916-01	.2110-01	39.93	.6462	.3565	550.3	.4995-03
74	2.4590	18.215	2259.0	.7148-02	.8462-02	.9318-02	39.95	.2856	.3561	549.7	.2206-03
74	2.4590	19.555	2260.0	.6259-02	.7410-02	.8160-02	39.96	.2501	.3560	549.6	.1932-03
74	2.4590	20.895	2261.0	.4292-02	.5081-02	.5595-02	39.97	.1716	.3558	549.2	.1325-03
74	2.4590	22.235	2262.0	.5599-02	.6627-02	.7298-02	39.97	.2238	.3558	549.2	.1728-03
74	2.4590	23.576	2263.0	.6281-02	.7434-02	.8186-02	39.99	.2512	.3555	548.7	.1938-03

IH103 60-OT UPPER RH WING (R3PJ08)

UPPER RH WING

PARAMETRIC DATA

MACH = 5.250 ALPHA = 10.00 BETA = -5.000 ELEVON = .0000
BDFLAP = .0000 SPDBRK = .0000

TEST CONDITIONS

RUN NUMBER	ALPHA DEG.	BETA DEG.	MACH	RN/FT /FT X10 6	PT PSIA	TT DEG. R	HT BTU/ LBM	PINF PSIA	TINF DEG. R	RHO SLUGS/ FT3	VINF FT/SEC	SCALE
73	5.000	-5.000	5.250	1.032	103.4	1506.	371.0	.1424	237.4	.5031-04	3965.	.1750-01

RUN NUMBER	PHI DEG.	HS SPHERE TW=540
73	.0000	.1676

TEST DATA

RUN NUMBER	YO MS	XO MS	T/C NO	H/HREF R=1.0	H/HREF R=.900	H/HREF R=.850	QREF BTU/ FT2SEC	QDOT BTU/ FT2SEC	HW/HT	TW DEG. R	STN NO R=.900
73	1.9700	17.545	2253.0	.4289-02	.5074-02	.5584-02	40.20	.1724	.3533	546.4	.1324-03
73	1.9880	10.859	2249.0	.1958-01	.2317-01	.2550-01	40.12	.7855	.3546	548.3	.6047-03
73	1.9880	11.983	2250.0	.1909-01	.2259-01	.2487-01	40.14	.7663	.3543	547.9	.5896-03
73	1.9880	13.107	2251.0	.1344-01	.1590-01	.1750-01	40.17	.5397	.3539	547.3	.4149-03
73	1.9880	14.195	2252.0	.9247-02	.1094-01	.1204-01	40.18	.3716	.3537	546.9	.2856-03
73	2.0470	22.330	2255.0	.5054-02	.5978-02	.6580-02	40.20	.2032	.3534	546.5	.1561-03
73	2.0490	19.941	2254.0	.1828-02	.2162-02	.2380-02	40.20	.7348-01	.3533	546.4	.5644-04
73	2.4590	14.195	2256.0	.1734-01	.2052-01	.2259-01	40.13	.6959	.3545	548.2	.5356-03
73	2.4590	15.535	2257.0	.1475-01	.1746-01	.1922-01	40.16	.5924	.3541	547.5	.4556-03
73	2.4590	16.875	2258.0	.1058-01	.1252-01	.1378-01	40.18	.4253	.3537	546.9	.3268-03
73	2.4590	18.215	2259.0	.6130-02	.7252-02	.7982-02	40.20	.2464	.3535	546.6	.1893-03
73	2.4590	19.555	2260.0	.4166-02	.4928-02	.5424-02	40.20	.1674	.3535	546.6	.1286-03
73	2.4590	20.895	2261.0	.2198-02	.2600-02	.2862-02	40.21	.8839-01	.3532	546.2	.6788-04
73	2.4590	22.235	2262.0	.3301-02	.3905-02	.4298-02	40.20	.1327	.3534	546.5	.1019-03
73	2.4590	23.576	2263.0	.4511-02	.5335-02	.5872-02	40.22	.1814	.3530	545.9	.1393-03

IH103 60-OT UPPER RH WING (R3PJ09)

UPPER RH WING

PARAMETRIC DATA

MACH = 5.250 ALPHA = .0000 BETA = -3.000 ELEVON = .0000
BDFLAP = .0000 SPDBRK = .0000

TEST CONDITIONS

RUN NUMBER	ALPHA DEG.	BETA DEG.	MACH	RN/FT /FT X10 6	PT PSIA	TT DEG. R	HT BTU/ LBM	PINF PSIA	TINF DEG. R	RHO SLUGS/ FT3	VINF FT/SEC	SCALE
92	.0000	-3.000	5.250	1.145	111.7	1482.	364.8	.1541	233.4	.5541-04	3932.	.1750-01

RUN NUMBER	PHI DEG.	HS SPHERE TW=540
92	.0000	.1741

TEST DATA

RUN NUMBER	YO MS	XO MS	T/C NO	H/HREF R=1.0	H/HREF R=.900	H/HREF R=.850	QREF BTU/ FT2SEC	QDOT BTU/ FT2SEC	HW/HT	TW DEG. R	STN NO R=.900
92	1.9700	17.545	2253.0	.1021-01	.1212-01	.1336-01	40.38	.4124	.3638	553.1	.3008-03
92	1.9880	10.859	2249.0	.2804-01	.3328-01	.3671-01	40.32	1.131	.3648	554.7	.8263-03
92	1.9880	11.983	2250.0	.3300-01	.3916-01	.4320-01	40.33	1.331	.3647	554.4	.9723-03
92	1.9880	13.107	2251.0	.2168-01	.2573-01	.2838-01	40.35	.8750	.3643	553.8	.6388-03
92	1.9880	14.195	2252.0	.1688-01	.2003-01	.2209-01	40.35	.6810	.3644	554.0	.4973-03
92	2.0470	22.330	2255.0	.7449-02	.8838-02	.9747-02	40.39	.3008	.3638	553.1	.2194-03
92	2.0490	19.941	2254.0	.3862-02	.4582-02	.5053-02	40.38	.1559	.3638	553.1	.1138-03
92	2.4590	14.195	2256.0	.2491-01	.2957-01	.3261-01	40.30	1.004	.3651	555.1	.7340-03
92	2.4590	15.535	2257.0	.2169-01	.2574-01	.2839-01	40.33	.8748	.3646	554.3	.6390-03
92	2.4590	16.875	2258.0	.2059-01	.2443-01	.2695-01	40.35	.8308	.3643	553.8	.6066-03
92	2.4590	18.215	2259.0	.1218-01	.1446-01	.1594-01	40.37	.4919	.3640	553.3	.3589-03
92	2.4590	19.555	2260.0	.1312-01	.1557-01	.1717-01	40.38	.5297	.3639	553.2	.3864-03
92	2.4590	20.895	2261.0	.6557-02	.7780-02	.8580-02	40.39	.2649	.3637	552.9	.1932-03
92	2.4590	22.235	2262.0	.5217-02	.6190-02	.6826-02	40.40	.2108	.3636	552.8	.1537-03
92	2.4590	23.576	2263.0	.5507-02	.6533-02	.7204-02	40.42	.2226	.3633	552.3	.1622-03
92	5.1380	24.080	2279.0	.1119-02	.1326-02	.1461-02	40.75	.4560-01	.3583	544.7	.3293-04

IH103 60-OT UPPER RH WING (R3PJ10)

UPPER RH WING

PARAMETRIC DATA

MACH = 5.250 ALPHA = -5.000 BETA = -3.000 ELEVON = .0000
BDFLAP = .0000 SPDBRK = .0000

TEST CONDITIONS

RUN NUMBER	ALPHA DEG.	BETA DEG.	MACH	RN/FT /FT X10 6	PT PSIA	TT DEG. R	HT BTU/ LBM	PINF PSIA	TINF DEG. R	RHO SLUGS/ FT3	VINF FT/SEC	SCALE
91	-5.000	-3.000	5.250	1.041	102.5	1490.	366.9	.1413	234.8	.5052-04	3943.	.1750-01

RUN NUMBER	PHI DEG.	HS SPHERE TW=540
91	.0000	.1668

TEST DATA

RUN NUMBER	YO MS	XO MS	T/C NO	H/HREF R=1.0	H/HREF R=.900	H/HREF R=.850	QREF BTU/ FT2SEC	QDOT BTU/ FT2SEC	HW/HT	TW DEG. R	STN NO R=.900
91	1.9700	17.545	2253.0	.1426-01	.1690-01	.1863-01	39.19	.5590	.3594	549.5	.4398-03
91	1.9880	10.859	2249.0	.3369-01	.3993-01	.4401-01	39.12	1.318	.3604	551.1	.1039-02
91	1.9880	11.983	2250.0	.4919-01	.5830-01	.6426-01	39.13	1.925	.3602	550.8	.1517-02
91	1.9880	13.107	2251.0	.3852-01	.4566-01	.5031-01	39.15	1.508	.3600	550.4	.1188-02
91	1.9880	14.195	2252.0	.2994-01	.3548-01	.3910-01	39.15	1.172	.3600	550.4	.9232-03
91	2.0470	22.330	2255.0	.1218-01	.1443-01	.1591-01	39.18	.4772	.3596	549.8	.3756-03
91	2.0490	19.941	2254.0	.5070-02	.6007-02	.6620-02	39.18	.1987	.3595	549.6	.1563-03
91	2.4590	14.195	2256.0	.3194-01	.3787-01	.4174-01	39.10	1.249	.3608	551.6	.9852-03
91	2.4590	15.535	2257.0	.2925-01	.3467-01	.3821-01	39.14	1.145	.3602	550.7	.9022-03
91	2.4590	16.875	2258.0	.2460-01	.2916-01	.3213-01	39.15	.9631	.3600	550.4	.7586-03
91	2.4590	18.215	2259.0	.1622-01	.1923-01	.2119-01	39.18	.6356	.3596	549.8	.5003-03
91	2.4590	19.555	2260.0	.1851-01	.2193-01	.2417-01	39.18	.7250	.3596	549.8	.5707-03
91	2.4590	20.895	2261.0	.7917-02	.9382-02	.1034-01	39.18	.3102	.3595	549.8	.2441-03
91	2.4590	22.235	2262.0	.7819-02	.9266-02	.1021-01	39.18	.3064	.3595	549.6	.2411-03
91	2.4590	23.576	2263.0	.9448-02	.1119-01	.1233-01	39.21	.3704	.3591	549.1	.2913-03
91	5.1380	24.080	2279.0	.1261-02	.1493-02	.1644-02	39.43	.4972-01	.3557	543.8	.3885-04

IH103 60-OT UPPER RH WING (R3PJ11)

UPPER RH WING

PARAMETRIC DATA

MACH = 5.250 ALPHA = 5.000 BETA = -3.000 ELEVON = .0000
BDFLAP = .0000 SPDBRK = .0000

TEST CONDITIONS

RUN NUMBER	ALPHA DEG.	BETA DEG.	MACH	RN/FT /FT X10 6	PT PSIA	TT DEG. R	HT BTU/ LBM	PINF PSIA	TINF DEG. R	RHO SLUGS/ FT3	VINF FT/SEC	SCALE
90	5.000	-3.000	5.250	1.038	102.4	1492.	367.4	.1412	235.1	.5041-04	3946.	.1750-01

RUN NUMBER	PHI DEG.	HS SPHERE TW=540
90	.0000	.1668

TEST DATA

RUN NUMBER	YO MS	XO MS	T/C NO	H/HREF R=1.0	H/HREF R=.900	H/HREF R=.850	QREF BTU/ FT2SEC	QDOT BTU/ FT2SEC	HW/HT	TW DEG. R	STN NO R=.900
90	1.9700	17.545	2253.0	.4112-02	.4872-02	.5368-02	39.28	.1615	.3586	549.2	.1269-03
90	1.9880	10.859	2249.0	.1930-01	.2288-01	.2521-01	39.22	.7572	.3596	550.6	.5959-03
90	1.9880	11.983	2250.0	.1356-01	.1606-01	.1770-01	39.23	.5318	.3595	550.4	.4185-03
90	1.9880	13.107	2251.0	.1003-01	.1188-01	.1309-01	39.25	.3935	.3591	549.9	.3095-03
90	1.9880	14.195	2252.0	.7072-02	.8380-02	.9233-02	39.25	.2776	.3591	549.9	.2183-03
90	2.0470	22.330	2255.0	.6215-02	.7364-02	.8113-02	39.28	.2441	.3587	549.3	.1918-03
90	2.0490	19.941	2254.0	.2181-02	.2584-02	.2847-02	39.28	.8567-01	.3587	549.3	.6732-04
90	2.4590	14.195	2256.0	.2525-01	.2993-01	.3298-01	39.22	.9903	.3597	550.7	.7796-03
90	2.4590	15.535	2257.0	.1793-01	.2124-01	.2341-01	39.25	.7037	.3592	550.0	.5534-03
90	2.4590	16.875	2258.0	.1829-01	.2168-01	.2388-01	39.26	.7183	.3590	549.7	.5647-03
90	2.4590	18.215	2259.0	.7074-02	.8381-02	.9234-02	39.28	.2779	.3587	549.3	.2183-03
90	2.4590	19.555	2260.0	.6648-02	.7876-02	.8678-02	39.28	.2611	.3587	549.3	.2052-03
90	2.4590	20.895	2261.0	.1911-02	.2264-02	.2494-02	39.29	.7509-01	.3585	549.0	.5898-04
90	2.4590	22.235	2262.0	.6123-03	.7254-03	.7992-03	39.29	.2405-01	.3586	549.1	.1890-04
90	2.4590	23.576	2263.0	.4561-02	.5403-02	.5952-02	39.31	.1793	.3582	548.5	.1408-03
90	5.1380	24.080	2279.0	.1279-02	.1512-02	.1664-02	39.77	.5088-01	.3510	537.4	.3942-04

IH103 60-OT UPPER RH WING

UPPER RH WING

(R3PJ12)

PARAMETRIC DATA

MACH = 5.250 ALPHA = 10.00 BETA = -3.000 ELEVON = .0000
BDFLAP = .0000 SPDBRK = .0000

TEST CONDITIONS

RUN NUMBER	ALPHA DEG.	BETA DEG.	MACH	RN/FT /FT X10 6	PT PSIA	TT DEG. R	HT BTU/ LBM	PINF PSIA	TINF DEG. R	RHO SLUGS/ FT3	VINF FT/SEC	SCALE
89	10.00	-3.000	5.250	1.034	104.5	1514.	373.3	.1439	238.9	.5056-04	3977.	.1750-01

RUN NUMBER	PHI DEG.	HS SPHERE TW=540
89	.0000	.1686

TEST DATA

RUN NUMBER	YO MS	XO MS	T/C NO	H/HREF R=1.0	H/HREF R=.900	H/HREF R=.850	QREF BTU/ FT2SEC	QDOT BTU/ FT2SEC	HW/HT	TW DEG. R	STN NO R=.900
89	1.9700	17.545	2253.0	.5377-02	.6357-02	.6994-02	40.83	.2195	.3511	546.3	.1656-03
89	1.9880	10.859	2249.0	.4466-01	.5281-01	.5812-01	40.76	1.820	.3522	547.8	.1376-02
89	1.9880	11.983	2250.0	.2620-01	.3099-01	.3410-01	40.77	1.068	.3521	547.7	.8073-03
89	1.9880	13.107	2251.0	.1312-01	.1551-01	.1706-01	40.80	.5351	.3516	547.0	.4041-03
89	1.9880	14.195	2252.0	.1067-01	.1262-01	.1389-01	40.79	.4354	.3517	547.2	.3289-03
89	2.0470	22.330	2255.0	.8527-02	.1008-01	.1109-01	40.83	.3482	.3511	546.2	.2627-03
89	2.0490	19.941	2254.0	.3096-02	.3660-02	.4026-02	40.83	.1264	.3511	546.1	.9535-04
89	2.4590	14.195	2256.0	.2377-01	.2811-01	.3093-01	40.74	.9684	.3524	548.3	.7323-03
89	2.4590	15.535	2257.0	.1816-01	.2148-01	.2363-01	40.78	.7407	.3519	547.5	.5596-03
89	2.4590	16.875	2258.0	.1231-01	.1456-01	.1602-01	40.79	.5022	.3518	547.2	.3793-03
89	2.4590	18.215	2259.0	.6745-02	.7974-02	.8774-02	40.81	.2753	.3514	546.6	.2078-03
89	2.4590	19.555	2260.0	.4161-02	.4920-02	.5413-02	40.82	.1698	.3513	546.6	.1282-03
89	2.4590	20.895	2261.0	.1077-02	.1273-02	.1400-02	40.84	.4397-01	.3510	546.0	.3317-04
89	2.4590	22.235	2262.0	.7778-03	.9195-03	.1012-02	40.83	.3176-01	.3511	546.2	.2396-04
89	2.4590	23.576	2263.0	.5109-02	.6039-02	.6644-02	40.85	.2087	.3508	545.7	.1574-03
89	5.1380	24.080	2279.0	.1191-02	.1407-02	.1548-02	40.89	.4868-01	.3503	544.9	.3667-04

IH103 60-OT UPPER RH WING

UPPER RH WING

PARAMETRIC DATA

MACH = 5.250 ALPHA = .0000 BETA = -9.000 ELEVON = .0000
BDFLAP = .0000 SPDBRK = .0000

TEST CONDITIONS

RUN NUMBER	ALPHA DEG.	BETA DEG.	MACH	RN/FT /FT X10 6	PT PSIA	TT DEG. R	HT BTU/ LBM	PINF PSIA	TINF DEG. R	RHO SLUGS/ FT3	VINF FT/SEC	SCALE
101	.0000	-9.000	5.250	1.049	103.1	1488.	366.4	.1421	234.5	.5087-04	3940.	.1750-01

RUN NUMBER	PHI DEG.	HS SPHERE TW=540
101	.0000	.1673

TEST DATA

RUN NUMBER	YO MS	XO MS	T/C NO	H/HREF R=1.0	H/HREF R=.900	H/HREF R=.850	QREF BTU/ FT2SEC	QDOT BTU/ FT2SEC	HW/HT	TW DEG. R	STN NO R=.900
101	1.9700	17.545	2253.0	.7919-02	.9392-02	.1035-01	39.07	.3094	.3621	552.9	.2434-03
101	1.9880	10.859	2249.0	.1951-01	.2314-01	.2552-01	39.01	.7612	.3630	554.3	.5999-03
101	1.9880	11.983	2250.0	.2129-01	.2525-01	.2785-01	39.02	.8307	.3629	554.2	.6546-03
101	1.9880	13.107	2251.0	.1936-01	.2297-01	.2532-01	39.05	.7562	.3624	553.4	.5953-03
101	1.9880	14.195	2252.0	.1538-01	.1824-01	.2011-01	39.04	.6004	.3627	553.8	.4729-03
101	2.0470	22.330	2255.0	.1823-01	.2161-01	.2383-01	39.08	.7123	.3619	552.6	.5602-03
101	2.0490	19.941	2254.0	.5272-02	.6252-02	.6893-02	39.08	.2060	.3620	552.8	.1621-03
101	2.4590	14.195	2256.0	.8459-02	.1004-01	.1107-01	38.98	.3297	.3636	555.1	.2601-03
101	2.4590	15.535	2257.0	.6844-02	.8119-02	.8952-02	39.02	.2671	.3629	554.2	.2104-03
101	2.4590	16.875	2258.0	.1932-01	.2292-01	.2527-01	39.04	.7543	.3627	553.8	.5941-03
101	2.4590	18.215	2259.0	.1077-01	.1278-01	.1409-01	39.07	.4210	.3621	553.0	.3312-03
101	2.4590	19.555	2260.0	.1138-01	.1350-01	.1488-01	39.07	.4447	.3621	552.9	.3499-03
101	2.4590	20.895	2261.0	.1521-01	.1803-01	.1988-01	39.10	.5947	.3617	552.2	.4675-03
101	2.4590	22.235	2262.0	.1897-01	.2250-01	.2480-01	39.09	.7415	.3618	552.5	.5831-03
101	2.4590	23.576	2263.0	.1978-01	.2346-01	.2586-01	39.11	.7736	.3616	552.1	.6080-03
101	5.1380	24.080	2279.0	.1493-02	.1767-02	.1945-02	39.52	.5900-01	.3550	542.1	.4581-04

IH103 60-OT UPPER RH WING (R3PJ14)

UPPER RH WING

PARAMETRIC DATA

MACH = 5.250 ALPHA = -5.000 BETA = -9.000 ELEVON = .0000
BDFLAP = .0000 SPDBRK = .0000

TEST CONDITIONS

RUN NUMBER	ALPHA DEG.	BETA DEG.	MACH	RN/FT /FT X10 6	PT PSIA	TT DEG. R	HT BTU/ LBM	PINF PSIA	TINF DEG. R	RHO SLUGS/ FT3	VINF FT/SEC	SCALE
102	-5.000	-9.000	5.250	1.049	102.4	1483.	364.9	.1413	233.5	.5078-04	3932.	.1750-01

RUN NUMBER	PHI DEG.	HS SPHERE TW=540
102	.0000	.1667

TEST DATA

RUN NUMBER	YO MS	XO MS	T/C NO	H/HREF R=1.0	H/HREF R=.900	H/HREF R=.850	QREF BTU/ FT2SEC	QDOT BTU/ FT2SEC	HW/HT	TW DEG. R	STN NO R=.900
102	1.9700	17.545	2253.0	.1157-01	.1373-01	.1514-01	38.67	.4474	.3641	553.8	.3561-03
102	1.9880	10.859	2249.0	.2293-01	.2721-01	.3002-01	38.62	.8856	.3648	554.9	.7058-03
102	1.9880	11.983	2250.0	.2987-01	.3545-01	.3910-01	38.62	1.153	.3648	554.9	.9193-03
102	1.9880	13.107	2251.0	.2663-01	.3160-01	.3486-01	38.66	1.029	.3643	554.0	.8196-03
102	1.9880	14.195	2252.0	.2425-01	.2878-01	.3174-01	38.64	.9369	.3646	554.5	.7463-03
102	2.0470	22.330	2255.0	.1092-01	.1296-01	.1429-01	38.67	.4222	.3640	553.7	.3360-03
102	2.0490	19.941	2254.0	.4548-02	.5397-02	.5953-02	38.66	.1758	.3642	553.9	.1400-03
102	2.4590	14.195	2256.0	.1109-01	.1316-01	.1452-01	38.59	.4278	.3653	555.6	.3413-03
102	2.4590	15.535	2257.0	.1183-01	.1404-01	.1549-01	38.62	.4570	.3648	554.8	.3641-03
102	2.4590	16.875	2258.0	.2366-01	.2808-01	.3097-01	38.64	.9140	.3646	554.5	.7281-03
102	2.4590	18.215	2259.0	.1303-01	.1546-01	.1705-01	38.66	.5035	.3642	554.0	.4008-03
102	2.4590	19.555	2260.0	.1423-01	.1689-01	.1863-01	38.66	.5503	.3641	553.8	.4380-03
102	2.4590	20.895	2261.0	.7536-02	.8940-02	.9858-02	38.73	.2919	.3632	552.3	.2319-03
102	2.4590	22.235	2262.0	.6892-02	.8178-02	.9019-02	38.68	.2666	.3639	553.5	.2121-03
102	2.4590	23.576	2263.0	.1668-01	.1979-01	.2183-01	38.69	.6454	.3637	553.2	.5133-03
102	5.1380	24.080	2279.0	.2101-02	.2484-02	.2733-02	39.43	.8283-01	.3521	535.5	.6447-04

IH103 60-OT UPPER RH WING (R3PJ15)

UPPER RH WING

PARAMETRIC DATA

MACH = 5.250 ALPHA = 5.000 BETA = -9.000 ELEVON = .0000
BDFLAP = .0000 SPDBRK = .0000

TEST CONDITIONS

RUN NUMBER	ALPHA DEG.	BETA DEG.	MACH	RN/FT /FT X10 6	PT PSIA	TT DEG. R	HT BTU/ LBM	PINF PSIA	TINF DEG. R	RHO SLUGS/ FT3	VINF FT/SEC	SCALE
103	5.000	-9.000	5.250	1.053	103.3	1486.	365.9	.1424	234.2	.5105-04	3938.	.1750-01

RUN NUMBER	PHI DEG.	HS SPHERE TW=540
103	.0000	.1674

TEST DATA

RUN NUMBER	YO MS	XO MS	T/C NO	H/HREF R=1.0	H/HREF R=.900	H/HREF R=.850	QREF BTU/ FT2SEC	QDOT BTU/ FT2SEC	HW/HT	TW DEG. R	STN NO R=.900
103	1.9700	17.545	2253.0	.7046-02	.8363-02	.9225-02	38.88	.2739	.3650	556.6	.2163-03
103	1.9880	10.859	2249.0	.6088-02	.7227-02	.7973-02	38.82	.2363	.3658	557.8	.1870-03
103	1.9880	11.983	2250.0	.1988-01	.2361-01	.2604-01	38.83	.7721	.3657	557.7	.6106-03
103	1.9880	13.107	2251.0	.1557-01	.1848-01	.2038-01	38.87	.6051	.3651	556.8	.4780-03
103	1.9880	14.195	2252.0	.1954-01	.2319-01	.2559-01	38.84	.7588	.3655	557.4	.5999-03
103	2.0470	22.330	2255.0	.1944-01	.2307-01	.2545-01	38.89	.7561	.3647	556.2	.5969-03
103	2.0490	19.941	2254.0	.9806-02	.1164-01	.1284-01	38.88	.3812	.3649	556.5	.3011-03
103	2.4590	14.195	2256.0	.8161-02	.9691-02	.1069-01	38.79	.3166	.3663	558.6	.2507-03
103	2.4590	15.535	2257.0	.6587-02	.7820-02	.8627-02	38.82	.2557	.3658	557.8	.2023-03
103	2.4590	16.875	2258.0	.1393-01	.1654-01	.1824-01	38.84	.5411	.3655	557.4	.4278-03
103	2.4590	18.215	2259.0	.9402-02	.1116-01	.1231-01	38.87	.3654	.3651	556.8	.2887-03
103	2.4590	19.555	2260.0	.2439-01	.2895-01	.3193-01	38.88	.9481	.3650	556.6	.7488-03
103	2.4590	20.895	2261.0	.1938-01	.2297-01	.2531-01	39.19	.7595	.3600	549.1	.5944-03
103	2.4590	22.235	2262.0	.2050-01	.2433-01	.2683-01	38.89	.7972	.3647	556.2	.6293-03
103	2.4590	23.576	2263.0	.1961-01	.2327-01	.2567-01	38.91	.7631	.3644	555.7	.6021-03
103	5.1380	24.080	2279.0	.1455-02	.1722-02	.1896-02	39.51	.5748-01	.3551	541.4	.4457-04

IH103 60-OT UPPER RH WING (R3PJ16)

UPPER RH WING

PARAMETRIC DATA

MACH = 5.250 ALPHA = 10.00 BETA = -9.000 ELEVON = .0000
BDFLAP = .0000 SPDBRK = .0000

TEST CONDITIONS

RUN NUMBER	ALPHA DEG.	BETA DEG.	MACH	RN/FT /FT X10 6	PT PSIA	TT DEG. R	HT BTU/ LBM	PINF PSIA	TINF DEG. R	RHO SLUGS/ FT3	VINF FT/SEC	SCALE
104	10.00	-9.000	5.250	1.049	103.3	1490.	366.9	.1424	234.8	.5090-04	3943.	.1750-01

RUN NUMBER	PHI DEG.	HS SPHERE TW=540
104	.0000	.1674

TEST DATA

RUN NUMBER	YO MS	XO MS	T/C NO	H/HREF R=1.0	H/HREF R=.900	H/HREF R=.850	QREF BTU/ FT2SEC	QDOT BTU/ FT2SEC	HW/HT	TW DEG. R	STN NO R=.900
104	1.9700	17.545	2253.0	.6292-02	.7471-02	.8243-02	38.91	.2448	.3661	559.9	.1936-03
104	1.9880	10.859	2249.0	.1078-01	.1280-01	.1412-01	38.84	.4185	.3672	561.5	.3316-03
104	1.9880	11.983	2250.0	.1570-01	.1864-01	.2057-01	38.84	.6098	.3671	561.4	.4831-03
104	1.9880	13.107	2251.0	.1059-01	.1258-01	.1388-01	38.89	.4119	.3665	560.3	.3259-03
104	1.9880	14.195	2252.0	.1015-01	.1205-01	.1329-01	38.87	.3943	.3668	560.8	.3122-03
104	2.0470	22.330	2255.0	.9706-02	.1152-01	.1271-01	38.93	.3778	.3659	559.4	.2986-03
104	2.0490	19.941	2254.0	.5370-02	.6376-02	.7035-02	38.91	.2090	.3661	559.8	.1652-03
104	2.4590	14.195	2256.0	.3165-02	.3759-02	.4149-02	38.81	.1228	.3676	562.1	.9739-04
104	2.4590	15.535	2257.0	.3355-02	.3985-02	.4398-02	38.85	.1304	.3670	561.2	.1033-03
104	2.4590	16.875	2258.0	.8903-02	.1057-01	.1167-01	38.87	.3460	.3668	560.9	.2739-03
104	2.4590	18.215	2259.0	.5333-02	.6332-02	.6987-02	38.90	.2074	.3663	560.1	.1641-03
104	2.4590	19.555	2260.0	.1198-01	.1423-01	.1570-01	38.90	.4661	.3662	560.0	.3686-03
104	2.4590	20.895	2261.0	.1248-01	.1480-01	.1633-01	39.05	.4872	.3639	556.4	.3836-03
104	2.4590	22.235	2262.0	.1140-01	.1353-01	.1493-01	38.93	.4437	.3658	559.4	.3506-03
104	2.4590	23.576	2263.0	.1147-01	.1362-01	.1502-01	38.95	.4469	.3655	558.8	.3529-03
104	5.1380	24.080	2279.0	.2333-02	.2762-02	.3042-02	39.55	.9226-01	.3562	544.6	.7162-04

IH103 60-OT UPPER RH WING (R3PJ17)

UPPER RH WING

PARAMETRIC DATA

MACH = 5.250 ALPHA = -10.00 BETA = -9.000 ELEVON = .0000
BDFLAP = .0000 SPDBRK = .0000

TEST CONDITIONS

RUN NUMBER	ALPHA DEG.	BETA DEG.	MACH	RN/FT /FT X10 6	PT PSIA	TT DEG. R	HT BTU/ LBM	PINF PSIA	TINF DEG. R	RHO SLUGS/ FT3	VINF FT/SEC	SCALE
109	-10.00	-9.000	5.250	1.078	103.6	1468.	361.2	.1431	231.2	.5196-04	3912.	.1750-01

RUN NUMBER	PHI DEG.	HS SPHERE TW=540
109	.0000	.1676

TEST DATA

RUN NUMBER	YO MS	XO MS	T/C NO	H/HREF R=1.0	H/HREF R=.900	H/HREF R=.850	QREF BTU/ FT2SEC	QDOT BTU/ FT2SEC	HW/HT	TW DEG. R	STN NO R=.900
109	1.9700	17.545	2253.0	.1582-01	.1885-01	.2085-01	37.57	.5942	.3787	570.0	.4825-03
109	1.9880	10.859	2249.0	.2014-01	.2400-01	.2656-01	37.51	.7552	.3796	571.5	.6144-03
109	1.9880	11.983	2250.0	.2713-01	.3234-01	.3578-01	37.51	1.018	.3796	571.5	.8278-03
109	1.9880	13.107	2251.0	.2871-01	.3423-01	.3786-01	37.53	1.078	.3793	570.9	.8760-03
109	1.9880	14.195	2252.0	.3486-01	.4156-01	.4597-01	37.54	1.309	.3791	570.8	.1064-02
109	2.0470	22.330	2255.0	.1961-01	.2337-01	.2585-01	37.56	.7365	.3788	570.2	.5981-03
109	2.0490	19.941	2254.0	.7835-02	.9338-02	.1033-01	37.57	.2944	.3787	570.0	.2390-03
109	2.4590	14.195	2256.0	.1547-01	.1845-01	.2041-01	37.49	.5800	.3800	572.0	.4721-03
109	2.4590	15.535	2257.0	.2185-01	.2605-01	.2882-01	37.52	.8200	.3795	571.3	.6668-03
109	2.4590	16.875	2258.0	.3355-01	.3999-01	.4424-01	37.53	1.259	.3793	571.0	.1024-02
109	2.4590	18.215	2259.0	.1835-01	.2188-01	.2420-01	37.55	.6892	.3789	570.5	.5599-03
109	2.4590	19.555	2260.0	.1696-01	.2022-01	.2236-01	37.56	.6372	.3788	570.2	.5175-03
109	2.4590	20.895	2261.0	.1480-01	.1764-01	.1952-01	37.47	.5544	.3802	572.4	.4515-03
109	2.4590	22.235	2262.0	.1731-01	.2062-01	.2281-01	37.59	.6506	.3783	569.5	.5279-03
109	2.4590	23.576	2263.0	.1646-01	.1961-01	.2169-01	37.58	.6185	.3784	569.7	.5020-03
109	5.1380	24.080	2279.0	.2407-03	.2860-03	.3158-03	38.16	.9186-02	.3692	555.8	.7326-05

IH103 60-OT UPPER RH WING (R3PJ18)

UPPER RH WING

PARAMETRIC DATA

MACH = 5.250 ALPHA = -10.00 BETA = -3.000 ELEVON = .0000
BDFLAP = .0000 SPDBRK = .0000

TEST CONDITIONS

RUN NUMBER	ALPHA DEG.	BETA DEG.	MACH	RN/FT /FT X10 6	PT PSIA	TT DEG. R	HT BTU/ LBM	PINF PSIA	TINF DEG. R	RHO SLUGS/ FT3	VINF FT/SEC	SCALE
112	-10.00	-3.000	5.250	1.055	103.0	1483.	365.0	.1422	233.6	.5107-04	3933.	.1750-01

RUN NUMBER	PHI DEG.	HS SPHERE TW=540
112	.0000	.1672

TEST DATA

RUN NUMBER	YO MS	XO MS	T/C NO	H/HREF R=1.0	H/HREF R=.900	H/HREF R=.850	QREF BTU/ FT2SEC	QDOT BTU/ FT2SEC	HW/HT	TW DEG. R	STN NO R=.900
112	1.9700	17.545	2253.0	.2290-01	.2714-01	.2990-01	39.11	.8956	.3591	546.3	.7020-03
112	1.9880	10.859	2249.0	.5596-01	.6633-01	.7310-01	39.04	2.185	.3601	547.9	.1716-02
112	1.9880	11.983	2250.0	.6997-01	.8293-01	.9139-01	39.05	2.732	.3601	547.7	.2145-02
112	1.9880	13.107	2251.0	.5010-01	.5938-01	.6544-01	39.06	1.957	.3599	547.5	.1536-02
112	1.9880	14.195	2252.0	.4120-01	.4882-01	.5380-01	39.07	1.610	.3597	547.1	.1263-02
112	2.0470	22.330	2255.0	.2117-01	.2508-01	.2764-01	39.10	.8277	.3592	546.4	.6489-03
112	2.0490	19.941	2254.0	.8148-02	.9655-02	.1064-01	39.10	.3186	.3592	546.4	.2498-03
112	2.4590	14.195	2256.0	.4041-01	.4790-01	.5279-01	39.01	1.576	.3606	548.6	.1239-02
112	2.4590	15.535	2257.0	.3862-01	.4577-01	.5044-01	39.05	1.508	.3601	547.8	.1184-02
112	2.4590	16.875	2258.0	.5406-01	.6407-01	.7060-01	39.07	2.112	.3597	547.2	.1657-02
112	2.4590	18.215	2259.0	.3066-01	.3633-01	.4003-01	39.10	1.199	.3592	546.5	.9399-03
112	2.4590	19.555	2260.0	.2197-01	.2603-01	.2868-01	39.10	.8590	.3592	546.5	.6734-03
112	2.4590	20.895	2261.0	.9912-02	.1174-01	.1294-01	39.13	.3879	.3587	545.7	.3038-03
112	2.4590	22.235	2262.0	.1915-01	.2268-01	.2500-01	39.11	.7488	.3590	546.2	.5869-03
112	2.4590	23.576	2263.0	.1740-01	.2061-01	.2271-01	39.12	.6806	.3589	546.0	.5332-03
112	5.1380	24.080	2279.0	.4665-03	.5511-03	.6060-03	39.77	.1855-01	.3487	530.5	.1427-04

IH103 60-OT UPPER RH WING (R3PJ19)

UPPER RH WING

PARAMETRIC DATA

MACH = 5.250 ALPHA = -10.00 BETA = -5.000 ELEVON = .0000
BDFLAP = .0000 SPDBRK = .0000

TEST CONDITIONS

RUN NUMBER	ALPHA DEG.	BETA DEG.	MACH	RN/FT /FT X10 6	PT PSIA	TT DEG. R	HT BTU/ LBM	PINF PSIA	TINF DEG. R	RHO SLUGS/ FT3	VINF FT/SEC	SCALE
119	-10.00	-5.000	5.250	1.047	104.7	1505.	370.7	.1442	237.2	.5101-04	3963.	.1750-01

RUN NUMBER	PHI DEG.	HS SPHERE TW=540
119	.0000	.1687

TEST DATA

RUN NUMBER	YO MS	XO MS	T/C NO	H/HREF R=1.0	H/HREF R=.900	H/HREF R=.850	QREF BTU/ FT2SEC	QDOT BTU/ FT2SEC	HW/HT	TW DEG. R	STN NO R=.900
119	1.9700	17.545	2253.0	.1809-01	.2145-01	.2364-01	39.94	.7226	.3607	557.3	.5558-03
119	1.9880	10.859	2249.0	.6503-01	.7711-01	.8501-01	39.88	2.593	.3617	558.7	.1998-02
119	1.9880	11.983	2250.0	.7241-01	.8586-01	.9464-01	39.88	2.888	.3615	558.5	.2225-02
119	1.9880	14.195	2252.0	.3690-01	.4375-01	.4823-01	39.90	1.473	.3612	558.1	.1134-02
119	2.0470	22.330	2255.0	.2021-01	.2396-01	.2641-01	39.93	.8070	.3608	557.5	.6208-03
119	2.0490	19.941	2254.0	.6938-02	.8225-02	.9065-02	39.94	.2771	.3607	557.3	.2131-03
119	2.4590	14.195	2256.0	.4165-01	.4939-01	.5446-01	39.85	1.660	.3621	559.5	.1280-02
119	2.4590	15.535	2257.0	.3941-01	.4673-01	.5152-01	39.88	1.572	.3617	558.7	.1211-02
119	2.4590	16.875	2258.0	.4880-01	.5786-01	.6378-01	39.90	1.947	.3614	558.3	.1499-02
119	2.4590	18.215	2259.0	.2459-01	.2915-01	.3213-01	39.92	.9816	.3610	557.6	.7553-03
119	2.4590	19.555	2260.0	.1907-01	.2261-01	.2492-01	39.93	.7614	.3609	557.5	.5857-03
119	2.4590	20.895	2261.0	.9262-02	.1098-01	.1210-01	39.97	.3702	.3602	556.4	.2845-03
119	2.4590	22.235	2262.0	.1667-01	.1976-01	.2178-01	39.95	.6659	.3605	557.0	.5120-03
119	2.4590	23.576	2263.0	.1699-01	.2013-01	.2219-01	39.95	.6786	.3605	557.0	.5217-03
119	5.1380	24.080	2279.0	.7597-04	.8986-04	.9890-04	40.45	.3073-02	.3529	545.1	.2330-05

IH103 60-OT UPPER RH WING (R3PJ20)

UPPER RH WING

PARAMETRIC DATA

MACH = 5.250 ALPHA = -10.00 BETA = .0000 ELEVON = .0000
BDFLAP = .0000 SPDBRK = .0000

TEST CONDITIONS

RUN NUMBER	ALPHA DEG.	BETA DEG.	MACH	RN/FT /FT X10 6	PT PSIA	TT DEG. R	HT BTU/ LBM	PINF PSIA	TINF DEG. R	RHO SLUGS/ FT3	VINF FT/SEC	SCALE
122	-10.00	.0000	5.250	1.012	103.5	1525.	376.0	.1423	240.6	.4964-04	3992.	.1750-01

RUN NUMBER	PHI DEG.	HS SPHERE TW=540
122	.0000	.1678

TEST DATA

RUN NUMBER	YO MS	XO MS	T/C NO	H/HREF R=1.0	H/HREF R=.900	H/HREF R=.850	QREF BTU/ FT2SEC	QDOT BTU/ FT2SEC	HW/HT	TW DEG. R	STN NO R=.900
122	1.9700	17.545	2253.0	.3545-01	.4196-01	.4619-01	40.66	1.441	.3551	556.5	.1104-02
122	1.9880	10.859	2249.0	.6695-01	.7926-01	.8727-01	40.62	2.719	.3558	557.5	.2085-02
122	1.9880	11.983	2250.0	.8273-01	.9793-01	.1078	40.62	3.361	.3557	557.4	.2576-02
122	1.9880	13.107	2251.0	.5013-01	.5934-01	.6533-01	40.65	2.038	.3553	556.8	.1561-02
122	1.9880	14.195	2252.0	.3624-01	.4290-01	.4723-01	40.63	1.472	.3555	557.1	.1128-02
122	2.0470	22.330	2255.0	.2209-01	.2615-01	.2879-01	40.66	.8983	.3551	556.5	.6878-03
122	2.0490	19.941	2254.0	.6778-01	.8021-01	.8831-01	40.68	2.757	.3548	556.0	.2110-02
122	2.4590	14.195	2256.0	.4417-01	.5230-01	.5760-01	40.57	1.792	.3564	558.5	.1376-02
122	2.4590	15.535	2257.0	.4230-01	.5008-01	.5514-01	40.61	1.718	.3559	557.7	.1317-02
122	2.4590	16.875	2258.0	.5687-01	.6732-01	.7413-01	40.62	2.310	.3557	557.4	.1771-02
122	2.4590	18.215	2259.0	.3375-01	.3995-01	.4399-01	40.64	1.372	.3553	556.8	.1051-02
122	2.4590	19.555	2260.0	.2275-01	.2692-01	.2964-01	40.65	.9247	.3552	556.7	.7082-03
122	2.4590	20.895	2261.0	.6651-02	.7870-02	.8664-02	40.70	.2707	.3545	555.5	.2070-03
122	2.4590	22.235	2262.0	.1591-01	.1883-01	.2074-01	40.67	.6473	.3549	556.1	.4954-03
122	2.4590	23.576	2263.0	.1973-01	.2335-01	.2571-01	40.67	.8026	.3549	556.2	.6143-03
122	5.1380	24.080	2279.0	.1368-03	.1616-03	.1776-03	41.20	.5636-02	.3470	543.7	.4252-05

IH103 60-OT UPPER RH WING (R3PJ21)

UPPER RH WING

PARAMETRIC DATA

MACH = 5.250 ALPHA = .0000 BETA = .0000 ELEVON = .0000
BDFLAP = .0000 SPDBRK = .0000

TEST CONDITIONS

RUN NUMBER	ALPHA DEG.	BETA DEG.	MACH	RN/FT /FT X10 6	PT PSIA	TT DEG. R	HT BTU/ LBM	PINF PSIA	TINF DEG. R	RHO SLUGS/ FT3	VINF FT/SEC	SCALE
130	.0000	.0000	5.250	.6533	104.0	1992.	502.2	.1374	321.4	.3588-04	4613.	.1750-01

RUN NUMBER	PHI DEG.	HS SPHERE TW=540
130	.0000	.1693

TEST DATA

RUN NUMBER	YO MS	XO MS	T/C NO	H/HREF R=1.0	H/HREF R=.900	H/HREF R=.850	QREF BTU/ FT2SEC	QDOT BTU/ FT2SEC	HW/HT	TW DEG. R	STN NO R=.900
130	1.9700	17.545	2253.0	.1009-01	1167-01	.1267-01	62.53	.6308	.2639	552.5	.3708-03
130	1.9880	10.859	2249.0	.5095-01	.5898-01	.6402-01	62.43	3.181	.2651	555.0	.1873-02
130	1.9880	11.983	2250.0	.5573-01	.6450-01	.7002-01	62.44	3.480	.2649	554.6	.2049-02
130	1.9880	14.195	2252.0	.2866-01	.3317-01	.3601-01	62.49	1.791	.2644	553.4	.1054-02
130	2.0470	22.330	2255.0	.6689-02	.7740-02	.8401-02	62.54	.4183	.2639	552.4	.2459-03
130	2.0490	19.941	2254.0	.3091-02	.3577-02	.3882-02	62.53	.1933	.2640	552.5	.1136-03
130	2.4590	14.195	2256.0	.1786-01	.2067-01	.2244-01	62.39	1.114	.2655	555.8	.6566-03
130	2.4590	15.535	2257.0	.2387-01	.2762-01	.2998-01	62.44	1.490	.2649	554.6	.8774-03
130	2.4590	16.875	2258.0	.1128-01	.1306-01	.1417-01	62.49	.7049	.2645	553.5	.4147-03
130	2.4590	18.215	2259.0	.9473-02	.1096-01	.1190-01	62.52	.5922	.2641	552.9	.3482-03
130	2.4590	19.555	2260.0	.1283-01	.1485-01	.1612-01	62.52	.8022	.2641	552.9	.4717-03
130	2.4590	20.895	2261.0	.5424-02	.6277-02	.6812-02	62.56	.3393	.2637	552.0	.1994-03
130	2.4590	22.235	2262.0	.4947-02	.5724-02	.6213-02	62.53	.3093	.2639	552.5	.1818-03
130	2.4590	23.576	2263.0	.5756-02	.6661-02	.7229-02	62.54	.3600	.2639	552.4	.2116-03
130	5.1360	24.080	2279.0	.6861-03	.7940-03	.8617-03	62.56	.4292-01	.2637	551.9	.2522-04

IH103 60-OT LOWER BODYFLAP (R3PK01)

LWR BODYFLAP

PARAMETRIC DATA

MACH = 5.250 ALPHA = .0000 BETA = .0000 ELEVON = .0000
BDFLAP = .0000 SPDBRK = .0000

TEST CONDITIONS

RUN NUMBER	ALPHA DEG.	BETA DEG.	MACH	RN/FT /FT X10 6	PT PSIA	TT DEG. R	HT BTU/ LBM	PINF PSIA	TINF DEG. R	RHO SLUGS/ FT3	VINF FT/SEC	SCALE
85	.0000	.0000	5.250	1.025	103.2	1511.	372.3	.1421	238.3	.5006-04	3972.	.1750-01

RUN NUMBER	PHI DEG.	HS SPHERE TW=540
85	.0000	.1675

TEST DATA

RUN NUMBER	XO MS	YO MS	T/C NO	H/HREF R=1.0	H/HREF R=.900	H/HREF R=.850	QREF BTU/ FT2SEC	QDOT BTU/ FT2SEC	HW/HT	TW DEG. R	STN NO R=.900
85	27.268	.92800	2113.0	.2566-01	.3035-01	.3340-01	40.37	1.036	.3525	547.0	.7946-03
85	27.268	1.8190	2191.0	.2105-01	.2491-01	.2741-01	40.29	.8483	.3537	548.9	.6520-03

IH103 60-OT LOWER BODYFLAP (R3PK02)

LWR BODYFLAP

PARAMETRIC DATA

MACH = 5.250 ALPHA = -5.000 BETA = .0000 ELEVON = .0000
BDFLAP = .0000 SPDBRK = .0000

TEST CONDITIONS

RUN NUMBER	ALPHA DEG.	BETA DEG.	MACH	RN/FT /FT X10 6	PT PSIA	TT DEG. R	HT BTU/ LBM	PINF PSIA	TINF DEG. R	RHO SLUGS/ FT3	VINF FT/SEC	SCALE
86	-5.000	.0000	5.250	1.032	103.2	1504.	370.6	.1422	237.2	.5031-04	3963.	.1750-01

RUN NUMBER	PHI DEG.	HS SPHERE TW=540
86	.0000	.1675

TEST DATA

RUN NUMBER	XO MS	YO MS	T/C NO	H/HREF R=1.0	H/HREF R=.900	H/HREF R=.850	QREF BTU/ FT2SEC	QDOT BTU/ FT2SEC	HW/HT	TW DEG. R	STN NO R=.900
86	27.268	.92800	2113.0	.1933-01	.2284-01	.2512-01	40.43	.7816	.3487	538.6	.5964-03
86	27.268	1.8190	2191.0	.1672-01	.1976-01	.2174-01	40.33	.6743	.3501	540.8	.5159-03

IH103 60-OT LOWER BODYFLAP (R3PK03)

LWR BODYFLAP

PARAMETRIC DATA

MACH = 5.250 ALPHA = 5.000 BETA = .0000 ELEVON = .0000
BDFLAP = .0000 SPDBRK = .0000

TEST CONDITIONS

RUN NUMBER	ALPHA DEG.	BETA DEG.	MACH	RN/FT /FT X10 6	PT PSIA	TT DEG. R	HT BTU/ LBM	PINF PSIA	TINF DEG. R	RHO SLUGS/ FT3	VINF FT/SEC	SCALE
87	5.000	.0000	5.250	1.026	102.1	1500.	369.5	.1407	236.4	.4992-04	3957.	.1750-01

RUN NUMBER	PHI DEG.	HS SPHERE TW=540
87	.0000	.1665

TEST DATA

RUN NUMBER	XO MS	YO MS	T/C NO	H/HREF R=1.0	H/HREF R=.900	H/HREF R=.850	QREF BTU/ FT2SEC	QDOT BTU/ FT2SEC	HW/HT	TW DEG. R	STN NO R=.900
87	27.268	.92800	2113.0	.2206-01	.2607-01	.2868-01	39.96	.8813	.3506	539.9	.6832-03
87	27.268	1.8190	2191.0	.1084-01	.1282-01	.1411-01	39.90	.4326	.3515	541.2	.3359-03

IH103 60-OT LOWER BODYFLAP (R3PK04)

LWR BODYFLAP

PARAMETRIC DATA

MACH = 5.250 ALPHA = 10.00 BETA = .0000 ELEVON = .0000
BDFLAP = .0000 SPDBRK = .0000

TEST CONDITIONS

RUN NUMBER	ALPHA DEG.	BETA DEG.	MACH	RN/FT /FT X10 6	PT PSIA	TT DEG. R	HT BTU/ LBM	PINF PSIA	TINF DEG. R	RHO SLUGS/ FT3	VINF FT/SEC	SCALE
88	10.00	.0000	5.250	1.044	103.7	1498.	369.0	.1429	236.1	.5079-04	3954.	.1750-01

RUN NUMBER	PHI DEG.	HS SPHERE TW=540
88	.0000	.1678

TEST DATA

RUN NUMBER	XO MS	YO MS	T/C NO	H/HREF R=1.0	H/HREF R=.900	H/HREF R=.850	QREF BTU/ FT2SEC	QDOT BTU/ FT2SEC	HW/HT	TW DEG. R	STN NO R=.900
88	27.268	.92800	2113.0	.1677-01	.1984-01	.2184-01	40.03	.6713	.3536	543.7	.5153-03
88	27.268	1.8190	2191.0	.1500-01	.1775-01	.1954-01	39.97	.5997	.3545	545.1	.4611-03

IH103 60-OT LOWER BODYFLAP (R3PK05)

LWR BODYFLAP

PARAMETRIC DATA

MACH = 5.250 ALPHA = .0000 BETA = -5.000 ELEVON = .0000
BDFLAP = .0000 SPDBRK = .0000

TEST CONDITIONS

RUN NUMBER	ALPHA DEG.	BETA DEG.	MACH	RN/FT /FT X10 6	PT PSIA	TT DEG. R	HT BTU/ LBM	PINF PSIA	TINF DEG. R	RHO SLUGS/ FT3	VINF FT/SEC	SCALE
76	.0000	-5.000	5.250	1.033	102.9	1501.	369.7	.1418	236.6	.5028-04	3958.	.1750-01

RUN NUMBER	PHI DEG.	HS SPHERE TW=540
76	.0000	.1672

TEST DATA

RUN NUMBER	XO MS	YO MS	T/C NO	H/HREF R=1.0	H/HREF R=.900	H/HREF R=.850	QREF BTU/ FT2SEC	QDOT BTU/ FT2SEC	HW/HT	TW DEG. R	STN NO R=.900
76	27.268	.92800	2113.0	.3343-01	.3955-01	.4352-01	39.98	1.336	.3531	544.1	.1032-02
76	27.268	1.8190	2191.0	.1479-01	.1750-01	.1927-01	39.92	.5905	.3540	545.5	.4569-03

IH103 60-OT LOWER BODYFLAP

(R3PK06)

LWR BODYFLAP

PARAMETRIC DATA

MACH = 5.250 ALPHA = -5.000 BETA = -5.000 ELEVON = .0000
BDFLAP = .0000 SPDBRK = .0000

TEST CONDITIONS

RUN NUMBER	ALPHA DEG.	BETA DEG.	MACH	RN/FT /FT X10 6	PT PSIA	TT DEG. R	HT BTU/ LBM	PINF PSIA	TINF DEG. R	RHO SLUGS/ FT3	VINF FT/SEC	SCALE
75	-5.000	-5.000	5.250	1.039	103.3	1499.	369.3	.1424	236.3	.5057-04	3956.	.1750-01

RUN NUMBER	PHI DEG.	HS SPHERE TW=540
75	.0000	.1676

TEST DATA

RUN NUMBER	XO MS	YO MS	T/C NO	H/HREF R=1.0	H/HREF R=.900	H/HREF R=.850	QREF BTU/ FT2SEC	QDOT BTU/ FT2SEC	HW/HT	TW DEG. R	STN NO R=.900
75	27.268	.92800	2113.0	.2314-01	.2739-01	.3016-01	39.86	.9222	.3557	547.4	.7128-03
75	27.268	1.8190	2191.0	.8262-02	.9782-02	.1077-01	39.80	.3288	.3566	548.8	.2546-03

IH103 60-OT LOWER BODYFLAP (R3PK07)

LWR BODYFLAP

PARAMETRIC DATA

MACH = 5.250 ALPHA = 5.000 BETA = -5.000 ELEVON = .0000
BDFLAP = .0000 SPDBRK = .0000

TEST CONDITIONS

RUN NUMBER	ALPHA DEG.	BETA DEG.	MACH	RN/FT /FT X10 6	PT PSIA	TT DEG. R	HT BTU/ LBM	PINF PSIA	TINF DEG. R	RHO SLUGS/ FT3	VINF FT/SEC	SCALE
74	5.000	-5.000	5.250	1.035	103.4	1503.	370.4	.1424	237.0	.5042-04	3962.	.1750-01

RUN NUMBER	PHI DEG.	HS SPHERE TW=540
74	.0000	.1676

TEST DATA

RUN NUMBER	XO MS	YO MS	T/C NO	H/HREF R=1.0	H/HREF R=.900	H/HREF R=.850	QREF BTU/ FT2SEC	QDOT BTU/ FT2SEC	HW/HT	TW DEG. R	STN NO R=.900
74	27.268	.92800	2113.0	.1722-01	.2037-01	.2243-01	40.09	.6904	.3539	546.3	.5312-03
74	27.268	1.8190	2191.0	.6609-02	.7822-02	.8612-02	40.04	.2646	.3548	547.7	.2039-03

IH103 60-OT LOWER BODYFLAP (R3PK08)

LWR BODYFLAP

PARAMETRIC DATA

MACH = 5.250 ALPHA = 10.00 BETA = -5.000 ELEVON = .0000
BDFLAP = .0000 SPDBRK = .0000

TEST CONDITIONS

RUN NUMBER	ALPHA DEG.	BETA DEG.	MACH	RN/FT /FT X10 6	PT PSIA	TT DEG. R	HT BTU/ LBM	PINF PSIA	TINF DEG. R	RHO SLUGS/ FT3	VINF FT/SEC	SCALE
73	5.000	-5.000	5.250	1.032	103.4	1506.	371.0	.1424	237.4	.5031-04	3965.	.1750-01

RUN NUMBER	PHI DEG.	HS SPHERE TW=540
73	.0000	.1676

TEST DATA

RUN NUMBER	XO MS	YO MS	T/C NO	H/HREF R=1.0	H/HREF R=.900	H/HREF R=.850	QREF BTU/ FT2SEC	QDOT BTU/ FT2SEC	HW/HT	TW DEG. R	STN NO R=.900
73	27.268	.92800	2113.0	.2485-01	.2938-01	.3233-01	40.33	1.002	.3514	543.4	.7671-03
73	27.268	1.8190	2191.0	.1378-01	.1630-01	.1794-01	40.28	.5552	.3522	544.6	.4256-03

IH103 60-OT LOWER BODYFLAP (R3PK09)

LWR BODYFLAP

PARAMETRIC DATA

MACH = 5.250 ALPHA = .0000 BETA = -3.000 ELEVON = .0000
BDFLAP = .0000 SPDBRK = .0000

TEST CONDITIONS

RUN NUMBER	ALPHA DEG.	BETA DEG.	MACH	RN/FT /FT X10 6	PT PSIA	TT DEG. R	HT BTU/ LBM	PINF PSIA	TINF DEG. R	RHO SLUGS/ FT3	VINF FT/SEC	SCALE
92	.0000	-3.000	5.250	1.145	111.7	1482.	364.8	.1541	233.4	.5541-04	3932.	.1750-01

RUN NUMBER	PHI DEG.	HS SPHERE TW=540
92	.0000	.1741

TEST DATA

RUN NUMBER	XO MS	YO MS	T/C NO	H/HREF R=1.0	H/HREF R=.900	H/HREF R=.850	QREF BTU/ FT2SEC	QDOT BTU/ FT2SEC	HW/HT	TW DEG. R	STN NO R=.900
92	27.268	.92800	2113.0	.2360-01	.2798-01	.3085-01	40.51	.9559	.3619	550.2	.6948-03
92	27.268	1.8190	2191.0	.2130-01	.2526-01	.2785-01	40.46	.8617	.3626	551.3	.6272-03

IH103 60-OT LOWER BODYFLAP (R3PK10)

LWR BODYFLAP

PARAMETRIC DATA

MACH = 5.250 ALPHA = -5.000 BETA = -3.000 ELEVON = .0000
BDFLAP = .0000 SPDBRK = .0000

TEST CONDITIONS

RUN NUMBER	ALPHA DEG.	BETA DEG.	MACH	RN/FT /FT X10 6	PT PSIA	TT DEG. R	HT BTU/ LBM	PINF PSIA	TINF DEG. R	RHO SLUGS/ FT3	VINF FT/SEC	SCALE
91	-5.000	-3.000	5.250	1.041	102.5	1490.	366.9	.1413	234.8	.5052-04	3943.	.1750-01

RUN NUMBER	PHI DEG.	HS SPHERE TW=540
91	.0000	.1668

TEST DATA

RUN NUMBER	XO MS	YO MS	T/C NO	H/HREF R=1.0	H/HREF R=.900	H/HREF R=.850	QREF BTU/ FT2SEC	QDOT BTU/ FT2SEC	HW/HT	TW DEG. R	STN NO R=.900
91	27.268	.92800	2113.0	.1476-01	.1748-01	.1926-01	39.26	.5794	.3582	547.7	.4548-03
91	27.268	1.8190	2191.0	.4320-02	.5118-02	.5639-02	39.23	.1695	.3587	548.5	.1332-03

IH103 60-OT LOWER BODYFLAP (R3PK11)

LWR BODYFLAP

PARAMETRIC DATA

MACH = 5.250 ALPHA = 5.000 BETA = -3.000 ELEVON = .0000
BDFLAP = .0000 SPDBRK = .0000

TEST CONDITIONS

RUN NUMBER	ALPHA DEG.	BETA DEG.	MACH	RN/FT /FT X10 6	PT PSIA	TT DEG. R	HT BTU/ LBM	PINF PSIA	TINF DEG. R	RHO SLUGS/ FT3	VINF FT/SEC	SCALE
90	5.000	-3.000	5.250	1.038	102.4	1492.	367.4	.1412	235.1	.5041-04	3946.	.1750-01

RUN NUMBER	PHI DEG.	HS SPHERE TW=540
90	.0000	.1668

TEST DATA

RUN NUMBER	XO MS	YO MS	T/C NO	H/HREF R=1.0	H/HREF R=.900	H/HREF R=.850	QREF BTU/ FT2SEC	QDOT BTU/ FT2SEC	HW/HT	TW DEG. R	STN NO R=.900
90	27.268	.92800	2113.0	.1938-01	.2294-01	.2527-01	39.39	.7632	.3570	546.6	.5978-03
90	27.268	1.8190	2191.0	.9179-02	.1087-01	.1198-01	39.32	.3609	.3581	548.4	.2833-03

IH103 60-OT LOWER BODYFLAP (R3PK12)

LWR BODYFLAP

PARAMETRIC DATA

MACH = 5.250 ALPHA = 10.00 BETA = -3.000 ELEVON = .0000
BDFLAP = .0000 SPDBRK = .0000

TEST CONDITIONS

RUN NUMBER	ALPHA DEG.	BETA DEG.	MACH	RN/FT /FT X10 6	PT PSIA	TT DEG. R	HT BTU/ LBM	PINF PSIA	TINF DEG. R	RHO SLUGS/ FT3	VINF FT/SEC	SCALE
89	10.00	-3.000	5.250	1.034	104.5	1514.	373.3	.1439	238.9	.5056-04	3977.	.1750-01

RUN NUMBER	PHI DEG.	HS SPHERE TW=540
89	.0000	.1686

TEST DATA

RUN NUMBER	XO MS	YO MS	T/C NO	H/HREF R=1.0	H/HREF R=.900	H/HREF R=.850	QREF BTU/ FT2SEC	QDOT BTU/ FT2SEC	HW/HT	TW DEG. R	STN NO R=.900
89	27.268	.92800	2113.0	.3927-01	.4643-01	.5109-01	40.81	1.603	.3514	546.7	.1210-02
89	27.268	1.8190	2191.0	.1651-01	.1953-01	.2149-01	40.73	.6726	.3526	548.5	.5088-03

IH103 60-OT LOWER BODYFLAP (R3PK13)

LWR BODYFLAP

PARAMETRIC DATA

MACH = 5.250 ALPHA = .0000 BETA = -9.000 ELEVON = .0000
BDFLAP = .0000 SPDBRK = .0000

TEST CONDITIONS

RUN NUMBER	ALPHA DEG.	BETA DEG.	MACH	RN/FT /FT X10 6	PT PSIA	TT DEG. R	HT BTU/ LBM	PINF PSIA	TINF DEG. R	RHO SLUGS/ FT3	VINF FT/SEC	SCALE
101	.0000	-9.000	5.250	1.049	103.1	1488.	366.4	.1421	234.5	.5087-04	3940.	.1750-01

RUN NUMBER	PHI DEG.	HS SPHERE TW=540
101	.0000	.1673

TEST DATA

RUN NUMBER	XO MS	YO MS	T/C NO	H/HREF R=1.0	H/HREF R=.900	H/HREF R=.850	QREF BTU/ FT2SEC	QDOT BTU/ FT2SEC	HW/HT	TW DEG. R	STN NO R=.900
101	27.268	.92800	2113.0	.1119-01	.1326-01	.1462-01	39.17	.4383	.3605	550.5	.3438-03
101	27.268	1.8190	2191.0	.1279-01	.1516-01	.1671-01	39.13	.5003	.3613	551.6	.3930-03

IH103 60-OT LOWER BODYFLAP (R3PK14)

LWR BODYFLAP

PARAMETRIC DATA

MACH = 5.250 ALPHA = -5.000 BETA = -9.000 ELEVON = .0000
BDFLAP = .0000 SPDBRK = .0000

TEST CONDITIONS

RUN NUMBER	ALPHA DEG.	BETA DEG.	MACH	RN/FT /FT X10 6	PT PSIA	TT DEG. R	HT BTU/ LBM	PINF PSIA	TINF DEG. R	RHO SLUGS/ FT3	VINF FT/SEC	SCALE
102	-5.000	-9.000	5.250	1.049	102.4	1483.	364.9	.1413	233.5	.5078-04	3932.	.1750-01

RUN NUMBER	PHI DEG.	HS SPHERE TW=540
102	.0000	.1667

TEST DATA

RUN NUMBER	XO MS	YO MS	T/C NO	H/HREF R=1.0	H/HREF R=.900	H/HREF R=.850	QREF BTU/ FT2SEC	QDOT BTU/ FT2SEC	HW/HT	TW DEG. R	STN NO R=.900
102	27.268	.92800	2113.0	.3768-02	.4469-02	.4928-02	38.76	.1460	.3627	551.6	.1159-03
102	27.268	1.8190	2191.0	.1347-01	.1598-01	.1762-01	38.70	.5213	.3635	552.9	.4144-03

IH103 60-OT LOWER BODYFLAP (R3PK15)

LWR BODYFLAP

PARAMETRIC DATA

MACH = 5.250 ALPHA = 5.000 BETA = -9.000 ELEVON = .0000
BDFLAP = .0000 SPDBRK = .0000

TEST CONDITIONS

RUN NUMBER	ALPHA DEG.	BETA DEG.	MACH	RN/FT /FT X10 6	PT PSIA	TT DEG. R	HT BTU/ LBM	PINF PSIA	TINF DEG. R	RHO SLUGS/ FT3	VINF FT/SEC	SCALE
103	5.000	-9.000	5.250	1.053	103.3	1486.	365.9	.1424	234.2	.5105-04	3938.	.1750-01

RUN NUMBER	PHI DEG.	HS SPHERE TW=540
103	.0000	.1674

TEST DATA

RUN NUMBER	XO MS	YO MS	T/C NO	H/HREF R=1.0	H/HREF R=.900	H/HREF R=.850	QREF BTU/ FT2SEC	QDOT BTU/ FT2SEC	HW/HT	TW DEG. R	STN NO R=.900
103	27.268	.92800	2113.0	.7941-02	.9421-02	.1039-01	38.99	.3096	.3632	553.9	.2437-03
103	27.268	1.8190	2191.0	.1700-01	.2017-01	.2224-01	38.95	.6620	.3638	554.8	.5217-03

IH103 60-OT LOWER BODYFLAP (R3PK16)

LWR BODYFLAP

PARAMETRIC DATA

MACH = 5.250 ALPHA = 10.00 BETA = -9.000 ELEVON = .0000
BDFLAP = .0000 SPDBRK = .0000

TEST CONDITIONS

RUN NUMBER	ALPHA DEG.	BETA DEG.	MACH	RN/FT /FT X10 6	PT PSIA	TT DEG. R	HT BTU/ LBM	PINF PSIA	TINF DEG. R	RHO SLUGS/ FT3	VINF FT/SEC	SCALE
104	10.00	-9.000	5.250	1.049	103.3	1490.	366.9	.1424	234.8	.5090-04	3943.	.1750-01

RUN NUMBER	PHI DEG.	HS SPHERE TW=540
104	.0000	.1674

TEST DATA

RUN NUMBER	XO MS	YO MS	T/C NO	H/HREF R=1.0	H/HREF R=.900	H/HREF R=.850	QREF BTU/ FT2SEC	QDOT BTU/ FT2SEC	HW/HT	TW DEG. R	STN NO R=.900
104	27.268	.92800	2113.0	.2028-01	.2407-01	.2654-01	39.07	.7926	.3635	555.9	.6237-03
104	27.268	1.8190	2191.0	.1177-01	.1397-01	.1541-01	39.03	.4595	.3642	557.0	.3621-03

IH103 60-OT LOWER BODYFLAP (R3PK17)

LWR BODYFLAP

PARAMETRIC DATA

MACH = 5.250 ALPHA = -10.00 BETA = -9.000 ELEVON = .0000
BDFLAP = .0000 SPDBRK = .0000

TEST CONDITIONS

RUN NUMBER	ALPHA DEG.	BETA DEG.	MACH	RN/FT /FT X10 6	PT PSIA	TT DEG. R	HT BTU/ LBM	PINF PSIA	TINF DEG. R	RHO SLUGS/ FT3	VINF FT/SEC	SCALE
109	-10.00	-9.000	5.250	1.078	103.6	1468.	361.2	.1431	231.2	.5196-04	3912.	.1750-01

RUN NUMBER	PHI DEG.	HS SPHERE TW=540
109	.0000	.1676

TEST DATA

RUN NUMBER	XO MS	YO MS	T/C NO	H/HREF R=1.0	H/HREF R=.900	H/HREF R=.850	QREF BTU/ FT2SEC	QDOT BTU/ FT2SEC	HW/HT	TW DEG. R	STN NO R=.900
109	27.268	.92800	2113.0	.7823-02	.9321-02	.1031-01	37.62	.2943	.3779	568.8	.2386-03
109	27.268	1.8190	2191.0	.1450-01	.1728-01	.1911-01	37.58	.5449	.3786	569.9	.4423-03

IH103 60-OT LOWER BODYFLAP (R3PK18)

LWR BODYFLAP

PARAMETRIC DATA

MACH = 5.250 ALPHA = -10.00 BETA = -3.000 ELEVON = .0000
BDFLAP = .0000 SPDBRK = .0000

TEST CONDITIONS

RUN NUMBER	ALPHA DEG.	BETA DEG.	MACH	RN/FT /FT X10 6	PT PSIA	TT DEG. R	HT BTU/ LBM	PINF PSIA	TINF DEG. R	RHO SLUGS/ FT3	VINF FT/SEC	SCALE
112	-10.00	-3.000	5.250	1.055	103.0	1483.	365.0	.1422	233.6	.5107-04	3933.	.1750-01

RUN NUMBER	PHI DEG.	HS SPHERE TW=540
112	.0000	.1672

TEST DATA

RUN NUMBER	XO MS	YO MS	T/C NO	H/HREF R=1.0	H/HREF R=.900	H/HREF R=.850	QREF BTU/ FT2SEC	QDOT BTU/ FT2SEC	HW/HT	TW DEG. R	STN NO R=.900
112	27.268	.92800	2113.0	.1093-01	.1294-01	.1426-01	39.20	.4285	.3576	544.0	.3349-03
112	27.268	1.8190	2191.0	.6883-02	.8153-02	.8982-02	39.17	.2696	.3581	544.8	.2109-03

IH103 60-OT LOWER BODYFLAP (R3PK19)

LWR BODYFLAP

PARAMETRIC DATA

MACH = 5.250 ALPHA = -10.00 BETA = -5.000 ELEVON = .0000
BDFLAP = .0000 SPDBRK = .0000

TEST CONDITIONS

RUN NUMBER	ALPHA DEG.	BETA DEG.	MACH	RN/FT /FT X10 6	PT PSIA	TT DEG. R	HT BTU/ LBM	PINF PSIA	TINF DEG. R	RHO SLUGS/ FT3	VINF FT/SEC	SCALE
119	-10.00	-5.000	5.250	1.047	104.7	1505.	370.7	.1442	237.2	.5101-04	3963.	.1750-01

RUN NUMBER	PHI DEG.	HS SPHERE TW=540
119	.0000	.1687

TEST DATA

RUN NUMBER	XO MS	YO MS	T/C NO	H/HREF R=1.0	H/HREF R=.900	H/HREF R=.850	QREF BTU/ FT2SEC	QDOT BTU/ FT2SEC	HW/HT	TW DEG. R	STN NO R=.900
119	27.268	.92800	2113.0	.2617-01	.3101-01	.3418-01	39.97	1.046	.3602	556.5	.8036-03
119	27.268	1.8190	2191.0	.2605-01	.3088-01	.3404-01	39.91	1.039	.3612	558.0	.8001-03

IH103 60-OT LOWER BODYFLAP (R3PK20)

LWR BODYFLAP

PARAMETRIC DATA

MACH = 5.250 ALPHA = -10.00 BETA = .0000 ELEVON = .0000
BDFLAP = .0000 SPDBRK = .0000

TEST CONDITIONS

RUN NUMBER	ALPHA DEG.	BETA DEG.	MACH	RN/FT /FT X10 6	PT PSIA	TT DEG. R	HT BTU/ LBM	PINF PSIA	TINF DEG. R	RHO SLUGS/ FT3	VINF FT/SEC	SCALE
122	-10.00	.0000	5.250	1.012	103.5	1525.	376.0	.1423	240.6	.4964-04	3992.	.1750-01

RUN NUMBER	PHI DEG.	HS SPHERE TW=540
122	.0000	.1678

TEST DATA

RUN NUMBER	XO MS	YO MS	T/C NO	H/HREF R=1.0	H/HREF R=.900	H/HREF R=.850	QREF BTU/ FT2SEC	QDOT BTU/ FT2SEC	HW/HT	TW DEG. R	STN NO R=.900
122	27.268	.92800	2113.0	.2079-01	.2459-01	.2708-01	40.71	.8461	.3544	555.4	.6470-03
122	27.268	1.8190	2191.0	.6352-02	.7517-02	.8276-02	40.68	.2584	.3549	556.1	.1977-03

IH103 60-OT LOWER BODYFLAP

LWR BODYFLAP

(R3PK21)

PARAMETRIC DATA

MACH = 5.250 ALPHA = .0000 BETA = .0000 ELEVON = .0000
BDFLAP = .0000 SPDBRK = .0000

TEST CONDITIONS

RUN NUMBER	ALPHA DEG.	BETA DEG.	MACH	RN/FT /FT X10 6	PT PSIA	TT DEG. R	HT BTU/ LBM	PINF PSIA	TINF DEG. R	RHO SLUGS/ FT3	VINF FT/SEC	SCALE
130	.0000	.0000	5.250	.6533	104.0	1992.	502.2	.1374	321.4	.3588-04	4613.	.1750-01

RUN NUMBER	PHI DEG.	HS SPHERE TW=540
130	.0000	.1693

TEST DATA

RUN NUMBER	XO MS	YO MS	T/C NO	H/HREF R=1.0	H/HREF R=.900	H/HREF R=.850	QREF BTU/ FT2SEC	QDOT BTU/ FT2SEC	HW/HT	TW DEG. R	STN NO R=.900
130	27.268	.92800	2113.0	.2598-01	.3007-01	.3263-01	62.51	1.624	.2642	552.9	.9551-03
130	27.268	1.8190	2191.0	.2085-01	.2413-01	.2620-01	62.41	1.301	.2653	555.3	.7665-03

IH103 60-OT BODYFLAP EDGE (R3PL01)

BODYFLAP EDGE

PARAMETRIC DATA

MACH = 5.250 ALPHA = .0000 BETA = .0000 ELEVON = .0000
BDFLAP = .0000 SPDBRK = .0000

TEST CONDITIONS

RUN NUMBER	ALPHA DEG.	BETA DEG.	MACH	RN/FT /FT X10 6	PT PSIA	TT DEG. R	HT BTU/ LBM	PINF PSIA	TINF DEG. R	RHO SLUGS/ FT3	VINF FT/SEC	SCALE
85	.0000	.0000	5.250	1.025	103.2	1511.	372.3	.1421	238.3	.5006-04	3972.	.1750-01

RUN NUMBER	PHI DEG.	HS SPHERE TW=540
85	.0000	.1675

TEST DATA

RUN NUMBER	XO MS	ZO MS	T/C NO	H/HREF R=1.0	H/HREF R=.900	H/HREF R=.850	QREF BTU/ FT2SEC	QDOT BTU/ FT2SEC	HW/HT	TW DEG. R	STN NO R=.900
85	26.994	5.0640	2192.0	.2310-01	.2733-01	.3008-01	40.34	.9321	.3529	547.7	.7154-03
85	27.265	5.0920	2193.0	.2451-01	.2899-01	.3191-01	40.34	.9889	.3530	547.7	.7590-03

IH103 60-OT BODYFLAP EDGE (R3PL02)

BODYFLAP EDGE

PARAMETRIC DATA

MACH = 5.250 ALPHA = -5.000 BETA = .0000 ELEVON = .0000
BDFLAP = .0000 SPDBRK = .0000

TEST CONDITIONS

RUN NUMBER	ALPHA DEG.	BETA DEG.	MACH	RN/FT /FT X10 6	PT PSIA	TT DEG. R	HT BTU/ LBM	PINF PSIA	TINF DEG. R	RHO SLUGS/ FT3	VINF FT/SEC	SCALE
86	-5.000	.0000	5.250	1.032	103.2	1504.	370.6	.1422	237.2	.5031-04	3963.	.1750-01

RUN NUMBER	PHI DEG.	HS SPHERE TW=540
86	.0000	.1675

TEST DATA

RUN NUMBER	XO MS	ZO MS	T/C NO	H/HREF R=1.0	H/HREF R=.900	H/HREF R=.850	QREF BTU/ FT2SEC	QDOT BTU/ FT2SEC	HW/HT	TW DEG. R	STN NO R=.900
86	26.994	5.0640	2192.0	.2264-01	.2675-01	.2941-01	40.45	.9159	.3483	538.0	.6984-03
86	27.265	5.0920	2193.0	.2442-01	.2885-01	.3173-01	40.44	.9876	.3485	538.3	.7534-03

IH103 60-OT BODYFLAP EDGE (R3PL03)

BODYFLAP EDGE

PARAMETRIC DATA

MACH = 5.250 ALPHA = 5.000 BETA = .0000 ELEVON = .0000
BDFLAP = .0000 SPDBRK = .0000

TEST CONDITIONS

RUN NUMBER	ALPHA DEG.	BETA DEG.	MACH	RN/FT /FT X10 6	PT PSIA	TT DEG. R	HT BTU/ LBM	PINF PSIA	TINF DEG. R	RHO SLUGS/ FT3	VINF FT/SEC	SCALE
87	5.000	.0000	5.250	1.026	102.1	1500.	369.5	.1407	236.4	.4992-04	3957.	.1750-01

RUN NUMBER	PHI DEG.	HS SPHERE TW=540
87	.0000	.1665

TEST DATA

RUN NUMBER	XO MS	ZO MS	T/C NO	H/HREF R=1.0	H/HREF R=.900	H/HREF R=.850	QREF BTU/ FT2SEC	QDOT BTU/ FT2SEC	HW/HT	TW DEG. R	STN NO R=.900
87	26.994	5.0640	2192.0	.3200-01	.3783-01	.4161-01	39.95	1.278	.3507	540.1	.9911-03
87	27.265	5.0920	2193.0	.3429-01	.4054-01	.4460-01	39.92	1.369	.3511	540.6	.1062-02

IH103 60-OT BODYFLAP EDGE (R3PL04)

BODYFLAP EDGE

PARAMETRIC DATA

MACH = 5.250 ALPHA = 10.00 BETA = .0000 ELEVON = .0000
BDFLAP = .0000 SPDBRK = .0000

TEST CONDITIONS

RUN NUMBER	ALPHA DEG.	BETA DEG.	MACH	RN/FT /FT X10 6	PT PSIA	TT DEG. R	HT BTU/ LBM	PINF PSIA	TINF DEG. R	RHO SLUGS/ FT3	VINF FT/SEC	SCALE
88	10.00	.0000	5.250	1.044	103.7	1498.	369.0	.1429	236.1	.5079-04	3954.	.1750-01

RUN NUMBER	PHI DEG.	HS SPHERE TW=540
88	.0000	.1678

TEST DATA

RUN NUMBER	XO MS	ZO MS	T/C NO	H/HREF R=1.0	H/HREF R=.900	H/HREF R=.850	QREF BTU/ FT2SEC	QDOT BTU/ FT2SEC	HW/HT	TW DEG. R	STN NO R=.900
88	26.994	5.0640	2192.0	.2522-01	.2983-01	.3284-01	39.99	1.008	.3542	544.6	.7748-03
88	27.265	5.0920	2193.0	.2938-01	.3476-01	.3827-01	39.97	1.174	.3544	545.1	.9028-03

IH103 60-OT BODYFLAP EDGE

BODYFLAP EDGE (R3PL05)

PARAMETRIC DATA

MACH = 5.250 ALPHA = .0000 BETA = -5.000 ELEVON = .0000
BDFLAP = .0000 SPDBRK = .0000

TEST CONDITIONS

RUN NUMBER	ALPHA DEG.	BETA DEG.	MACH	RN/FT /FT X10 6	PT PSIA	TT DEG. R	HT BTU/ LBM	PINF PSIA	TINF DEG. R	RHO SLUGS/ FT3	VINF FT/SEC	SCALE
76	.0000	-5.000	5.250	1.033	102.9	1501.	369.7	.1418	236.6	.5028-04	3958.	.1750-01

RUN NUMBER	PHI DEG.	HS SPHERE TW=540
76	.0000	.1672

TEST DATA

RUN NUMBER	XO MS	ZO MS	T/C NO	H/HREF R=1.0	H/HREF R=.900	H/HREF R=.850	QREF BTU/ FT2SEC	QDOT BTU/ FT2SEC	HW/HT	TW DEG. R	STN NO R=.900
76	26.994	5.0640	2192.0	.3511-01	.4153-01	.4571-01	39.96	1.403	.3534	544.6	.1084-02
76	27.265	5.0920	2193.0	.3540-01	.4188-01	.4609-01	39.96	1.414	.3534	544.5	.1093-02

IH103 60-OT BODYFLAP EDGE (R3PL06)

BODYFLAP EDGE

PARAMETRIC DATA

MACH = 5.250 ALPHA = -5.000 BETA = -5.000 ELEVON = .0000
BDFLAP = .0000 SPDBRK = .0000

TEST CONDITIONS

RUN NUMBER	ALPHA DEG.	BETA DEG.	MACH	RN/FT /FT X10 6	PT PSIA	TT DEG. R	HT BTU/ LBM	PINF PSIA	TINF DEG. R	RHO SLUGS/ FT3	VINF FT/SEC	SCALE
75	-5.000	-5.000	5.250	1.039	103.3	1499.	369.3	.1424	236.3	.5057-04	3956.	.1750-01

RUN NUMBER	PHI DEG.	HS SPHERE TW=540
75	.0000	.1676

TEST DATA

RUN NUMBER	XO MS	ZO MS	T/C NO	H/HREF R=1.0	H/HREF R=.900	H/HREF R=.850	QREF BTU/ FT2SEC	QDOT BTU/ FT2SEC	HW/HT	TW DEG. R	STN NO R=.900
75	26.994	5.0640	2192.0	.1934-01	.2289-01	.2521-01	39.85	.7707	.3557	547.5	.5958-03
75	27.265	5.0920	2193.0	.2867-01	.3394-01	.3737-01	39.85	1.143	.3557	547.5	.8833-03

IH103 60-OT BODYFLAP EDGE (R3PL07)

BODYFLAP EDGE

PARAMETRIC DATA

MACH = 5.250 ALPHA = 5.000 BETA = -5.000 ELEVON = .0000
BDFLAP = .0000 SPDBRK = .0000

TEST CONDITIONS

RUN NUMBER	ALPHA DEG.	BETA DEG.	MACH	RN/FT /FT X10 6	PT PSIA	TT DEG. R	HT BTU/ LBM	PINF PSIA	TINF DEG. R	RHO SLUGS/ FT3	VINF FT/SEC	SCALE
74	5.000	-5.000	5.250	1.035	103.4	1503.	370.4	.1424	237.0	.5042-04	3962.	.1750-01

RUN NUMBER	PHI DEG.	HS SPHERE TW=540
74	.0000	.1676

TEST DATA

RUN NUMBER	XO MS	ZO MS	T/C NO	H/HREF R=1.0	H/HREF R=.900	H/HREF R=.850	QREF BTU/ FT2SEC	QDOT BTU/ FT2SEC	HW/HT	TW DEG. R	STN NO R=.900
74	26.994	5.0640	2192.0	.2725-01	.3225-01	.3550-01	40.08	1.092	.3542	546.7	.8407-03
74	27.265	5.0920	2193.0	.2633-01	.3116-01	.3430-01	40.08	1.055	.3541	546.6	.8123-03

IH103 60-OT BODYFLAP EDGE (R3PL08)

BODYFLAP EDGE

PARAMETRIC DATA

MACH = 5.250 ALPHA = 10.00 BETA = -5.000 ELEVON = .0000
BDFLAP = .0000 SPDBRK = .0000

TEST CONDITIONS

RUN NUMBER	ALPHA DEG.	BETA DEG.	MACH	RN/FT /FT X10 6	PT PSIA	TT DEG. R	HT BTU/ LBM	PINF PSIA	TINF DEG. R	RHO SLUGS/ FT3	VINF FT/SEC	SCALE
73	5.000	-5.000	5.250	1.032	103.4	1506.	371.0	.1424	237.4	.5031-04	3965.	.1750-01

RUN NUMBER	PHI DEG.	HS SPHERE TW=540
73	.0000	.1676

TEST DATA

RUN NUMBER	XO MS	ZO MS	T/C NO	H/HREF R=1.0	H/HREF R=.900	H/HREF R=.850	QREF BTU/ FT2SEC	QDOT BTU/ FT2SEC	HW/HT	TW DEG. R	STN NO R=.900
73	26.994	5.0640	2192.0	.2151-01	.2543-01	.2799-01	40.28	.8664	.3522	544.6	.6640-03
73	27.265	5.0920	2193.0	.2301-01	.2721-01	.2994-01	40.27	.9266	.3523	544.8	.7103-03

IH103 60-OT BODYFLAP EDGE (R3PL09)

BODYFLAP EDGE

PARAMETRIC DATA

MACH = 5.250 ALPHA = .0000 BETA = -3.000 ELEVON = .0000
BDFLAP = .0000 SPDBRK = .0000

TEST CONDITIONS

RUN NUMBER	ALPHA DEG.	BETA DEG.	MACH	RN/FT /FT X10 6	PT PSIA	TT DEG. R	HT BTU/ LBM	PINF PSIA	TINF DEG. R	RHO SLUGS/ FT3	VINF FT/SEC	SCALE
92	.0000	-3.000	5.250	1.145	111.7	1482.	364.8	.1541	233.4	.5541-04	3932.	.1750-01

RUN NUMBER	PHI DEG.	HS SPHERE TW=540
92	.0000	.1741

TEST DATA

RUN NUMBER	XO MS	ZO MS	T/C NO	H/HREF R=1.0	H/HREF R=.900	H/HREF R=.850	QREF BTU/ FT2SEC	QDOT BTU/ FT2SEC	HW/HT	TW DEG. R	STN NO R=.900
92	26.994	5.0640	2192.0	.2177-01	.2581-01	.2846-01	40.50	.8817	.3620	550.4	.6410-03
92	27.265	5.0920	2193.0	.2331-01	.2764-01	.3048-01	40.51	.9442	.3620	550.3	.6864-03

IH103 60-OT BODYFLAP EDGE (R3PL10)

BODYFLAP EDGE

PARAMETRIC DATA

MACH = 5.250 ALPHA = -5.000 BETA = -3.000 ELEVON = .0000
BDFLAP = .0000 SPDBRK = .0000

TEST CONDITIONS

RUN NUMBER	ALPHA DEG.	BETA DEG.	MACH	RN/FT /FT X10 6	PT PSIA	TT DEG. R	HT BTU/ LBM	PINF PSIA	TINF DEG. R	RHO SLUGS/ FT3	VINF FT/SEC	SCALE
91	-5.000	-3.000	5.250	1.041	102.5	1490.	366.9	.1413	234.8	.5052-04	3943.	.1750-01

RUN NUMBER	PHI DEG.	HS SPHERE TW=540
91	.0000	.1668

TEST DATA

RUN NUMBER	XO MS	ZO MS	T/C NO	H/HREF R=1.0	H/HREF R=.900	H/HREF R=.850	QREF BTU/ FT2SEC	QDOT BTU/ FT2SEC	HW/HT	TW DEG. R	STN NO R=.900
91	26.994	5.0640	2192.0	.1624-01	.1924-01	.2120-01	39.24	.6374	.3585	548.2	.5007-03
91	27.265	5.0920	2193.0	.2309-01	.2735-01	.3014-01	39.23	.9058	.3587	548.5	.7118-03

IH103 60-OT BODYFLAP EDGE

BODYFLAP EDGE

PARAMETRIC DATA

MACH = 5.250 ALPHA = 5.000 BETA = -3.000 ELEVON = .0000
BDFLAP = .0000 SPDBRK = .0000

TEST CONDITIONS

RUN NUMBER	ALPHA DEG.	BETA DEG.	MACH	RN/FT /FT X10 6	PT PSIA	TT DEG. R	HT BTU/ LBM	PINF PSIA	TINF DEG. R	RHO SLUGS/ FT3	VINF FT/SEC	SCALE
90	5.000	-3.000	5.250	1.038	102.4	1492.	367.4	.1412	235.1	.5041-04	3946.	.1750-01

RUN NUMBER	PHI DEG.	HS SPHERE TW=540
90	.0000	.1668

TEST DATA

RUN NUMBER	XO MS	ZO MS	T/C NO	H/HREF R=1.0	H/HREF R=.900	H/HREF R=.850	QREF BTU/ FT2SEC	QDOT BTU/ FT2SEC	HW/HT	TW DEG. R	STN NO R=.900
90	26.994	5.0640	2192.0	.1910-01	.2261-01	.2491-01	39.39	.7522	.3570	546.6	.5892-03
90	27.265	5.0920	2193.0	.2158-01	.2555-01	.2814-01	39.38	.8498	.3571	546.7	.6658-03

IH103 60-OT BODYFLAP EDGE (R3PL12)

BODYFLAP EDGE

PARAMETRIC DATA

MACH = 5.250 ALPHA = 10.00 BETA = -3.000 ELEVON = .0000
BDFLAP = .0000 SPDBRK = .0000

TEST CONDITIONS

RUN NUMBER	ALPHA DEG.	BETA DEG.	MACH	RN/FT /FT X10 6	PT PSIA	TT DEG. R	HT BTU/ LBM	PINF PSIA	TINF DEG. R	RHO SLUGS/ FT3	VINF FT/SEC	SCALE
89	10.00	-3.000	5.250	1.034	104.5	1514.	373.3	.1439	238.9	.5056-04	3977.	.1750-01

RUN NUMBER	PHI DEG.	HS SPHERE TW=540
89	.0000	.1686

TEST DATA

RUN NUMBER	XO MS	ZO MS	T/C NO	H/HREF R=1.0	H/HREF R=.900	H/HREF R=.850	QREF BTU/ FT2SEC	QDOT BTU/ FT2SEC	HW/HT	TW DEG. R	STN NO R=.900
89	26.994	5.0640	2192.0	.2231-01	.2638-01	.2903-01	40.75	.9091	.3523	548.0	.6873-03
89	27.265	5.0920	2193.0	.2319-01	.2743-01	.3019-01	40.74	.9449	.3525	548.4	.7147-03

IH103 60-OT BODYFLAP EDGE

BODYFLAP EDGE

PARAMETRIC DATA

MACH = 5.250 ALPHA = .0000 BETA = -9.000 ELEVON = .0000
BDFLAP = .0000 SPDBRK = .0000

TEST CONDITIONS

RUN NUMBER	ALPHA DEG.	BETA DEG.	MACH	RN/FT /FT X10 6	PT PSIA	TT DEG. R	HT BTU/ LBM	PINF PSIA	TINF DEG. R	RHO SLUGS/ FT3	VINF FT/SEC	SCALE
101	.0000	-9.000	5.250	1.049	103.1	1488.	366.4	.1421	234.5	.5087-04	3940.	.1750-01

RUN NUMBER	PHI DEG.	HS SPHERE TW=540
101	.0000	.1673

TEST DATA

RUN NUMBER	XO MS	ZO MS	T/C NO	H/HREF R=1.0	H/HREF R=.900	H/HREF R=.850	QREF BTU/ FT2SEC	QDOT BTU/ FT2SEC	HW/HT	TW DEG. R	STN NO R=.900
101	26.994	5.0640	2192.0	.2828-01	.3352-01	.3694-01	39.16	1.107	.3607	550.7	.8689-03
101	27.265	5.0920	2193.0	.3345-01	.3965-01	.4370-01	39.16	1.310	.3607	550.8	.1028-02

IH103 60-OT BODYFLAP EDGE (R3PL14)

BODYFLAP EDGE

PARAMETRIC DATA

MACH = 5.250 ALPHA = -5.000 BETA = -9.000 ELEVON = .0000
BDFLAP = .0000 SPDBRK = .0000

TEST CONDITIONS

RUN NUMBER	ALPHA DEG.	BETA DEG.	MACH	RN/FT /FT X10 6	PT PSIA	TT DEG. R	HT BTU/ LBM	PINF PSIA	TINF DEG. R	RHO SLUGS/ FT3	VINF FT/SEC	SCALE
102	-5.000	-9.000	5.250	1.049	102.4	1483.	364.9	.1413	233.5	.5078-04	3932.	.1750-01

RUN NUMBER	PHI DEG.	HS SPHERE TW=540
102	.0000	.1667

TEST DATA

RUN NUMBER	XO MS	ZO MS	T/C NO	H/HREF R=1.0	H/HREF R=.900	H/HREF R=.850	QREF BTU/ FT2SEC	QDOT BTU/ FT2SEC	HW/HT	TW DEG. R	STN NO R=.900
102	26.994	5.0640	2192.0	.1322-01	.1568-01	.1729-01	38.77	.5126	.3625	551.4	.4068-03
102	27.265	5.0920	2193.0	.2371-01	.2813-01	.3101-01	38.76	.9191	.3626	551.5	.7295-03

IH103 60-OT BODYFLAP EDGE (R3PL15)

BODYFLAP EDGE

PARAMETRIC DATA

MACH = 5.250 ALPHA = 5.000 BETA = -9.000 ELEVON = .0000
BDFLAP = .0000 SPDBRK = .0000

TEST CONDITIONS

RUN NUMBER	ALPHA DEG.	BETA DEG.	MACH	RN/FT /FT X10 6	PT PSIA	TT DEG. R	HT BTU/ LBM	PINF PSIA	TINF DEG. R	RHO SLUGS/ FT3	VINF FT/SEC	SCALE
103	5.000	-9.000	5.250	1.053	103.3	1486.	365.9	.1424	234.2	.5105-04	3938.	.1750-01

RUN NUMBER	PHI DEG.	HS SPHERE TW=540
103	.0000	.1674

TEST DATA

RUN NUMBER	XO MS	ZO MS	T/C NO	H/HREF R=1.0	H/HREF R=.900	H/HREF R=.850	QREF BTU/ FT2SEC	QDOT BTU/ FT2SEC	HW/HT	TW DEG. R	STN NO R=.900
103	26.994	5.0640	2192.0	.4201-01	.4984-01	.5496-01	38.97	1.637	.3635	554.4	.1289-02
103	27.265	5.0920	2193.0	.4193-01	.4975-01	.5486-01	38.96	1.633	.3637	554.6	.1287-02

IH103 60-OT BODYFLAP EDGE

BODYFLAP EDGE

PARAMETRIC DATA

MACH = 5.250 ALPHA = 10.00 BETA = -9.000 ELEVON = .0000
BDFLAP = .0000 SPDBRK = .0000

TEST CONDITIONS

RUN NUMBER	ALPHA DEG.	BETA DEG.	MACH	RN/FT /FT X10 6	PT PSIA	TT DEG. R	HT BTU/ LBM	PINF PSIA	TINF DEG. R	RHO SLUGS/ FT3	VINF FT/SEC	SCALE
104	10.00	-9.000	5.250	1.049	103.3	1490.	366.9	.1424	234.8	.5090-04	3943.	.1750-01

RUN NUMBER	PHI DEG.	HS SPHERE TW=540
104	.0000	.1674

TEST DATA

RUN NUMBER	XO MS	ZO MS	T/C NO	H/HREF R=1.0	H/HREF R=.900	H/HREF R=.850	QREF BTU/ FT2SEC	QDOT BTU/ FT2SEC	HW/HT	TW DEG. R	STN NO R=.900
104	26.994	5.0640	2192.0	.3306-01	.3922-01	.4326-01	39.04	1.291	.3640	556.6	.1017-02
104	27.265	5.0920	2193.0	.3608-01	.4281-01	.4721-01	39.05	1.409	.3639	556.5	.1109-02

IH103 60-OT BODYFLAP EDGE

BODYFLAP EDGE

PARAMETRIC DATA

MACH = 5.250 ALPHA = -10.00 BETA = -9.000 ELEVON = .0000
BDFLAP = .0000 SPDBRK = .0000

TEST CONDITIONS

RUN NUMBER	ALPHA DEG.	BETA DEG.	MACH	RN/FT /FT X10 6	PT PSIA	TT DEG. R	HT BTU/ LBM	PINF PSIA	TINF DEG. R	RHO SLUGS/ FT3	VINF FT/SEC	SCALE
109	-10.00	-9.000	5.250	1.078	103.6	1468.	361.2	.1431	231.2	.5196-04	3912.	.1750-01

RUN NUMBER	PHI DEG.	HS SPHERE TW=540
109	.0000	.1676

TEST DATA

RUN NUMBER	XO MS	ZO MS	T/C NO	H/HREF R=1.0	H/HREF R=.900	H/HREF R=.850	QREF BTU/ FT2SEC	QDOT BTU/ FT2SEC	HW/HT	TW DEG. R	STN NO R=.900
109	26.994	5.0640	2192.0	.1894-01	.2258-01	.2497-01	37.58	.7119	.3785	569.8	.5779-03
109	27.265	5.0920	2193.0	.2145-01	.2557-01	.2828-01	37.57	.8059	.3787	570.1	.6543-03

IH103 60-OT BODYFLAP EDGE

(R3PL18)

BODYFLAP EDGE

PARAMETRIC DATA

MACH = 5.250 ALPHA = -10.00 BETA = -3.000 ELEVON = .0000
BDFLAP = .0000 SPDBRK = .0000

TEST CONDITIONS

RUN NUMBER	ALPHA DEG.	BETA DEG.	MACH	RN/FT /FT X10 6	PT PSIA	TT DEG. R	HT BTU/ LBM	PINF PSIA	TINF DEG. R	RHO SLUGS/ FT3	VINF FT/SEC	SCALE
112	-10.00	-3.000	5.250	1.055	103.0	1483.	365.0	.1422	233.6	.5107-04	3933.	.1750-01

RUN NUMBER	PHI DEG.	HS SPHERE TW=540
112	.0000	.1672

TEST DATA

RUN NUMBER	XO MS	ZO MS	T/C NO	H/HREF R=1.0	H/HREF R=.900	H/HREF R=.850	QREF BTU/ FT2SEC	QDOT BTU/ FT2SEC	HW/HT	TW DEG. R	STN NO R=.900
112	26.994	5.0640	2192.0	.2227-01	.2639-01	.2908-01	39.11	.8712	.3590	546.2	.6828-03
112	27.265	5.0920	2193.0	.2741-01	.3248-01	.3579-01	39.09	1.072	.3594	546.7	.8403-03

IH103 60-OT BODYFLAP EDGE (R3PL19)

BODYFLAP EDGE

PARAMETRIC DATA

MACH = 5.250 ALPHA = -10.00 BETA = -5.000 ELEVON = .0000
BDFLAP = .0000 SPDBRK = .0000

TEST CONDITIONS

RUN NUMBER	ALPHA DEG.	BETA DEG.	MACH	RN/FT /FT X10 6	PT PSIA	TT DEG. R	HT BTU/ LBM	PINF PSIA	TINF DEG. R	RHO SLUGS/ FT3	VINF FT/SEC	SCALE
119	-10.00	-5.000	5.250	1.047	104.7	1505.	370.7	.1442	237.2	.5101-04	3963.	.1750-01

RUN NUMBER	PHI DEG.	HS SPHERE TW=540
119	.0000	.1687

TEST DATA

RUN NUMBER	XO MS	ZO MS	T/C NO	H/HREF R=1.0	H/HREF R=.900	H/HREF R=.850	QREF BTU/ FT2SEC	QDOT BTU/ FT2SEC	HW/HT	TW DEG. R	STN NO R=.900
119	26.994	5.0640	2192.0	.3585-01	.4250-01	.4684-01	39.92	1.431	.3610	557.7	.1101-02
119	27.265	5.0920	2193.0	.3789-01	.4493-01	.4953-01	39.89	1.512	.3614	558.3	.1164-02

IH103 60-OT BODYFLAP EDGE (R3PL20)

BODYFLAP EDGE

PARAMETRIC DATA

MACH = 5.250 ALPHA = -10.00 BETA = .0000 ELEVON = .0000
BDFLAP = .0000 SPDBRK = .0000

TEST CONDITIONS

RUN NUMBER	ALPHA DEG.	BETA DEG.	MACH	RN/FT /FT X10 6	PT PSIA	TT DEG. R	HT BTU/ LBM	PINF PSIA	TINF DEG. R	RHO SLUGS/ FT3	VINF FT/SEC	SCALE
122	-10.00	.0000	5.250	1.012	103.5	1525.	376.0	.1423	240.6	.4964-04	3992.	.1750-01

RUN NUMBER	PHI DEG.	HS SPHERE TW=540
122	.0000	.1678

TEST DATA

RUN NUMBER	XO MS	ZO MS	T/C NO	H/HREF R=1.0	H/HREF R=.900	H/HREF R=.850	QREF BTU/ FT2SEC	QDOT BTU/ FT2SEC	HW/HT	TW DEG. R	STN NO R=.900
122	26.994	5.0640	2192.0	.2357-01	.2789-01	.3071-01	40.66	.9582	.3551	556.5	.7337-03
122	27.265	5.0920	2193.0	.2770-01	.3279-01	.3610-01	40.64	1.126	.3554	557.0	.8624-03

IH103 60-OT BODYFLAP EDGE (R3PL21)

BODYFLAP EDGE

PARAMETRIC DATA

MACH = 5.250 ALPHA = .0000 BETA = .0000 ELEVON = .0000
BDFLAP = .0000 SPDBRK = .0000

TEST CONDITIONS

RUN NUMBER	ALPHA DEG.	BETA DEG.	MACH	RN/FT /FT X10 6	PT PSIA	TT DEG. R	HT BTU/ LBM	PINF PSIA	TINF DEG. R	RHO SLUGS/ FT3	VINF FT/SEC	SCALE
130	.0000	.0000	5.250	.6533	104.0	1992.	502.2	.1374	321.4	.3588-04	4613.	.1750-01

RUN NUMBER	PHI DEG.	HS SPHERE TW=540
130	.0000	.1693

TEST DATA

RUN NUMBER	XO MS	ZO MS	T/C NO	H/HREF R=1.0	H/HREF R=.900	H/HREF R=.850	QREF BTU/ FT2SEC	QDOT BTU/ FT2SEC	HW/HT	TW DEG. R	STN NO R=.900
130	26.994	5.0640	2192.0	.2256-01	.2611-01	.2834-01	62.47	1.409	.2646	553.9	.8293-03
130	27.265	5.0920	2193.0	.2395-01	.2772-01	.3009-01	62.43	1.495	.2651	554.9	.8805-03

IH103 60-OT VERTICAL TAIL (R3PM01)

VERTICAL TAIL

PARAMETRIC DATA

MACH = 5.250 ALPHA = .0000 BETA = .0000 ELEVON = .0000
BDFLAP = .0000 SPDBRK = .0000

TEST CONDITIONS

RUN NUMBER	ALPHA DEG.	BETA DEG.	MACH	RN/FT /FT X10 6	PT PSIA	TT DEG. R	HT BTU/ LBM	PINF PSIA	TINF DEG. R	RHO SLUGS/ FT3	VINF FT/SEC	SCALE
85	.0000	.0000	5.250	1.025	103.2	1511.	372.3	.1421	238.3	.5006-04	3972.	.1750-01

RUN NUMBER	PHI DEG.	HS SPHERE TW=540
85	.0000	.1675

TEST DATA

RUN NUMBER	XO MS	ZO MS	T/C NO	H/HREF R=1.0	H/HREF R=.900	H/HREF R=.850	QREF BTU/ FT2SEC	QDOT BTU/ FT2SEC	HW/HT	TW DEG. R	STN NO R=.900
85	26.091	9.3030	2368.0	.2104-01	.2488-01	.2738-01	40.35	.8487	.3529	547.6	.6513-03

IH103 60-OT VERTICAL TAIL

VERTICAL TAIL

PARAMETRIC DATA

MACH = 5.250 ALPHA = -5.000 BETA = .0000 ELEVON = .0000
BDFLAP = .0000 SPDBRK = .0000

TEST CONDITIONS

RUN NUMBER	ALPHA DEG.	BETA DEG.	MACH	RN/FT /FT X10 6	PT PSIA	TT DEG. R	HT BTU/ LBM	PINF PSIA	TINF DEG. R	RHO SLUGS/ FT3	VINF FT/SEC	SCALE
86	-5.000	.0000	5.250	1.032	103.2	1504.	370.6	.1422	237.2	.5031-04	3963.	.1750-01

RUN NUMBER	PHI DEG.	HS SPHERE TW=540
86	.0000	.1675

TEST DATA

RUN NUMBER	XO MS	ZO MS	T/C NO	H/HREF R=1.0	H/HREF R=.900	H/HREF R=.850	QREF BTU/ FT2SEC	QDOT BTU/ FT2SEC	HW/HT	TW DEG. R	STN NO R=.900
86	26.091	9.3030	2368.0	.1696-01	.2003-01	.2203-01	40.40	.6850	.3491	539.2	.5231-03

IH103 60-OT VERTICAL TAIL (R3PM03)

VERTICAL TAIL

PARAMETRIC DATA

MACH = 5.250 ALPHA = 5.000 BETA = .0000 ELEVON = .0000
BDFLAP = .0000 SPDBRK = .0000

TEST CONDITIONS

RUN NUMBER	ALPHA DEG.	BETA DEG.	MACH	RN/FT /FT X10 6	PT PSIA	TT DEG. R	HT BTU/ LBM	PINF PSIA	TINF DEG. R	RHO SLUGS/ FT3	VINF FT/SEC	SCALE
87	5.000	.0000	5.250	1.026	102.1	1500.	369.5	.1407	236.4	.4992-04	3957.	.1750-01

RUN NUMBER	PHI DEG.	HS SPHERE TW=540
87	.0000	.1665

TEST DATA

RUN NUMBER	XO MS	ZO MS	T/C NO	H/HREF R=1.0	H/HREF R=.900	H/HREF R=.850	QREF BTU/ FT2SEC	QDOT BTU/ FT2SEC	HW/HT	TW DEG. R	STN NO R=.900
87	26.091	9.3030	2368.0	.2436-01	.2879-01	.3168-01	39.93	.9726	.3510	540.4	.7545-03

IH103 60-OT VERTICAL TAIL

VERTICAL TAIL

PARAMETRIC DATA

MACH = 5.250 ALPHA = 10.00 BETA = .0000 ELEVON = .0000
BDFLAP = .0000 SPDBRK = .0000

TEST CONDITIONS

RUN NUMBER	ALPHA DEG.	BETA DEG.	MACH	RN/FT /FT X10 6	PT PSIA	TT DEG. R	HT BTU/ LBM	PINF PSIA	TINF DEG. R	RHO SLUGS/ FT3	VINF FT/SEC	SCALE
88	10.00	.0000	5.250	1.044	103.7	1498.	369.0	.1429	236.1	.5079-04	3954.	.1750-01

RUN NUMBER	PHI DEG.	HS SPHERE TW=540
88	.0000	.1678

TEST DATA

RUN NUMBER	XO MS	ZO MS	T/C NO	H/HREF R=1.0	H/HREF R=.900	H/HREF R=.850	QREF BTU/ FT2SEC	QDOT BTU/ FT2SEC	HW/HT	TW DEG. R	STN NO R=.900
88	26.091	9.3030	2368.0	.1547-01	.1830-01	.2015-01	39.96	.6180	.3547	545.4	.4753-03

IH103 60-OT VERTICAL TAIL (R3PM05)

VERTICAL TAIL

PARAMETRIC DATA

MACH = 5.250 ALPHA = .0000 BETA = -5.000 ELEVON = .0000
BDFLAP = .0000 SPDBRK = .0000

TEST CONDITIONS

RUN NUMBER	ALPHA DEG.	BETA DEG.	MACH	RN/FT /FT X10 6	PT PSIA	TT DEG. R	HT BTU/ LBM	PINF PSIA	TINF DEG. R	RHO SLUGS/ FT3	VINF FT/SEC	SCALE
76	.0000	-5.000	5.250	1.033	102.9	1501.	369.7	.1418	236.6	.5028-04	3958.	.1750-01

RUN NUMBER	PHI DEG.	HS SPHERE TW=540
76	.0000	.1672

TEST DATA

RUN NUMBER	XO MS	ZO MS	T/C NO	H/HREF R=1.0	H/HREF R=.900	H/HREF R=.850	QREF BTU/ FT2SEC	QDOT BTU/ FT2SEC	HW/HT	TW DEG. R	STN NO R=.900
76	26.091	9.3030	2368.0	.1333-01	.1577-01	.1736-01	39.95	.5325	.3536	544.8	.4117-03

IH103 60-OT VERTICAL TAIL

VERTICAL TAIL

PARAMETRIC DATA

MACH = 5.250 ALPHA = -5.000 BETA = -5.000 ELEVON = .0000
BDFLAP = .0000 SPDBRK = .0000

TEST CONDITIONS

RUN NUMBER	ALPHA DEG.	BETA DEG.	MACH	RN/FT /FT X10 6	PT PSIA	TT DEG. R	HT BTU/ LBM	PINF PSIA	TINF DEG. R	RHO SLUGS/ FT3	VINF FT/SEC	SCALE
75	-5.000	-5.000	5.250	1.039	103.3	1499.	369.3	.1424	236.3	.5057-04	3956.	.1750-01

RUN NUMBER	PHI DEG.	HS SPHERE TW=540
75	.0000	.1676

TEST DATA

RUN NUMBER	XO MS	ZO MS	T/C NO	H/HREF R=1.0	H/HREF R=.900	H/HREF R=.850	QREF BTU/ FT2SEC	QDOT BTU/ FT2SEC	HW/HT	TW DEG. R	STN NO R=.900
75	26.091	9.3030	2368.0	.1145-01	.1356-01	.1493-01	39.83	.4562	.3560	547.9	.3528-03

IH103 60-OT VERTICAL TAIL (R3PM07)

VERTICAL TAIL

PARAMETRIC DATA

MACH = 5.250 ALPHA = 5.000 BETA = -5.000 ELEVON = .0000
BDFLAP = .0000 SPDBRK = .0000

TEST CONDITIONS

RUN NUMBER	ALPHA DEG.	BETA DEG.	MACH	RN/FT /FT X10 6	PT PSIA	TT DEG. R	HT BTU/ LBM	PINF PSIA	TINF DEG. R	RHO SLUGS/ FT3	VINF FT/SEC	SCALE
74	5.000	-5.000	5.250	1.035	103.4	1503.	370.4	.1424	237.0	.5042-04	3962.	.1750-01

RUN NUMBER	PHI DEG.	HS SPHERE TW=540
74	.0000	.1676

TEST DATA

RUN NUMBER	XO MS	ZO MS	T/C NO	H/HREF R=1.0	H/HREF R=.900	H/HREF R=.850	QREF BTU/ FT2SEC	QDOT BTU/ FT2SEC	HW/HT	TW DEG. R	STN NO R=.900
74	26.091	9.3030	2368.0	.7323-02	.8665-02	.9539-02	40.07	.2934	.3543	546.9	.2259-03

IH103 60-OT VERTICAL TAIL (R3PM08)

VERTICAL TAIL

PARAMETRIC DATA

MACH = 5.250 ALPHA = 10.00 BETA = -5.000 ELEVON = .0000
BDFLAP = .0000 SPDBRK = .0000

TEST CONDITIONS

RUN NUMBER	ALPHA DEG.	BETA DEG.	MACH	RN/FT /FT X10 6	PT PSIA	TT DEG. R	HT BTU/ LBM	PINF PSIA	TINF DEG. R	RHO SLUGS/ FT3	VINF FT/SEC	SCALE
73	5.000	-5.000	5.250	1.032	103.4	1506.	371.0	.1424	237.4	.5031-04	3965.	.1750-01

RUN NUMBER	PHI DEG.	HS SPHERE TW=540
73	.0000	.1676

TEST DATA

RUN NUMBER	XO MS	ZO MS	T/C NO	H/HREF R=1.0	H/HREF R=.900	H/HREF R=.850	QREF BTU/ FT2SEC	QDOT BTU/ FT2SEC	HW/HT	TW DEG. R	STN NO R=.900
73	26.091	9.3030	2368.0	.5761-02	.6813-02	.7497-02	40.29	.2321	.3521	544.4	.1779-03

IH103 60-OT VERTICAL TAIL (R3PM09)

VERTICAL TAIL

PARAMETRIC DATA

MACH = 5.250 ALPHA = .0000 BETA = -3.000 ELEVON = .0000
BDFLAP = .0000 SPDBRK = .0000

TEST CONDITIONS

RUN NUMBER	ALPHA DEG.	BETA DEG.	MACH	RN/FT /FT X10 6	PT PSIA	TT DEG. R	HT BTU/ LBM	PINF PSIA	TINF DEG. R	RHO SLUGS/ FT3	VINF FT/SEC	SCALE
92	.0000	-3.000	5.250	1.145	111.7	1482.	364.8	.1541	233.4	.5541-04	3932.	.1750-01

RUN NUMBER	PHI DEG.	HS SPHERE TW=540
92	.0000	.1741

TEST DATA

RUN NUMBER	XO MS	ZO MS	T/C NO	H/HREF R=1.0	H/HREF R=.900	H/HREF R=.850	QREF BTU/ FT2SEC	QDOT BTU/ FT2SEC	HW/HT	TW DEG. R	STN NO R=.900
92	26.091	9.3030	2368.0	.1583-01	.1878-01	.2070-01	40.50	.6412	.3621	550.5	.4662-03

IH103 60-OT VERTICAL TAIL (R3PM10)

VERTICAL TAIL

PARAMETRIC DATA

MACH = 5.250 ALPHA = -5 000 BETA = -3.000 ELEVON = .0000
BDFLAP = .0000 SPDBRK = .0000

TEST CONDITIONS

RUN NUMBER	ALPHA DEG.	BETA DEG.	MACH	RN/FT /FT X10 6	PT PSIA	TT DEG. R	HT BTU/ LBM	PINF PSIA	TINF DEG. R	RHO SLUGS/ FT3	VINF FT/SEC	SCALE
91	-5.000	-3.000	5.250	1.041	102.5	1490.	366.9	.1413	234.8	.5052-04	3943.	.1750-01

RUN NUMBER	PHI DEG.	HS SPHERE TW=540
91	.0000	.1668

TEST DATA

RUN NUMBER	XO MS	ZO MS	T/C NO	H/HREF R=1.0	H/HREF R=.900	H/HREF R=.850	QREF BTU/ FT2SEC	QDOT BTU/ FT2SEC	HW/HT	TW DEG. R	STN NO R=.900
91	26.091	9.3030	2368.0	.2529-01	.2996-01	.3301-01	39.25	.9926	.3585	548.1	.7796-03

IH103 60-OT VERTICAL TAIL (R3PM11)

VERTICAL TAIL

PARAMETRIC DATA

MACH = 5.250 ALPHA = 5.000 BETA = -3.000 ELEVON = .0000
BDFLAP = .0000 SPDBRK = .0000

TEST CONDITIONS

RUN NUMBER	ALPHA DEG.	BETA DEG.	MACH	RN/FT /FT X10 6	PT PSIA	TT DEG. R	HT BTU/ LBM	PINF PSIA	TINF DEG. R	RHO SLUGS/ FT3	VINF FT/SEC	SCALE
90	5.000	-3.000	5.250	1.038	102.4	1492.	367.4	.1412	235.1	.5041-04	3946.	.1750-01

RUN NUMBER	PHI DEG.	HS SPHERE TW=540
90	.0000	.1668

TEST DATA

RUN NUMBER	XO MS	ZO MS	T/C NO	H/HREF R=1.0	H/HREF R=.900	H/HREF R=.850	QREF BTU/ FT2SEC	QDOT BTU/ FT2SEC	HW/HT	TW DEG. R	STN NO R=.900
90	26.091	9.3030	2368.0	.1176-01	.1393-01	.1535-01	39.33	.4627	.3579	548.0	.3630-03

IH103 60-OT VERTICAL TAIL (R3PM12)

VERTICAL TAIL

PARAMETRIC DATA

MACH = 5.250 ALPHA = 10.00 BETA = -3.000 ELEVON = .0000
BDFLAP = .0000 SPDBRK = .0000

TEST CONDITIONS

RUN NUMBER	ALPHA DEG.	BETA DEG.	MACH	RN/FT /FT X10 6	PT PSIA	TT DEG. R	HT BTU/ LBM	PINF PSIA	TINF DEG. R	RHO SLUGS/ FT3	VINF FT/SEC	SCALE
89	10.00	-3.000	5.250	1.034	104.5	1514.	373.3	.1439	238.9	.5056-04	3977.	.1750-01

RUN NUMBER	PHI DEG.	HS SPHERE TW=540
89	.0000	.1686

TEST DATA

RUN NUMBER	XO MS	ZO MS	T/C NO	H/HREF R=1.0	H/HREF R=.900	H/HREF R=.850	QREF BTU/ FT2SEC	QDOT BTU/ FT2SEC	HW/HT	TW DEG. R	STN NO R=.900
89	26.091	9.3030	2368.0	.1609-01	.1903-01	.2094-01	40.78	.6563	.3519	547.4	.4959-03

IH103 60-OT VERTICAL TAIL (R3PM13)

VERTICAL TAIL

PARAMETRIC DATA

MACH = 5.250 ALPHA = .0000 BETA = -9.000 ELEVON = .0000
BDFLAP = .0000 SPDBRK = .0000

TEST CONDITIONS

RUN NUMBER	ALPHA DEG.	BETA DEG.	MACH	RN/FT /FT X10 6	PT PSIA	TT DEG. R	HT BTU/ LBM	PINF PSIA	TINF DEG. R	RHO SLUGS/ FT3	VINF FT/SEC	SCALE
101	.0000	-9.000	5.250	1.049	103.1	1488.	366.4	.1421	234.5	.5087-04	3940.	.1750-01

RUN NUMBER	PHI DEG.	HS SPHERE TW=540
101	.0000	.1673

TEST DATA

RUN NUMBER	XO MS	ZO MS	T/C NO	H/HREF R=1.0	H/HREF R=.900	H/HREF R=.850	QREF BTU/ FT2SEC	QDOT BTU/ FT2SEC	HW/HT	TW DEG. R	STN NO R=.900
101	26.091	9.3030	2368.0	.2675-01	.3170-01	.3493-01	39.20	1.049	.3600	549.8	.8218-03

IH103 60-OT VERTICAL TAIL (R3PM14)

VERTICAL TAIL

PARAMETRIC DATA

MACH = 5.250 ALPHA = -5.000 BETA = -9.000 ELEVON = .0000
BDFLAP = .0000 SPDBRK = .0000

TEST CONDITIONS

RUN NUMBER	ALPHA DEG.	BETA DEG.	MACH	RN/FT /FT X10 6	PT PSIA	TT DEG. R	HT BTU/ LBM	PINF PSIA	TINF DEG. R	RHO SLUGS/ FT3	VINF FT/SEC	SCALE
102	-5.000	-9.000	5.250	1.049	102.4	1483.	364.9	.1413	233.5	.5078-04	3932.	.1750-01

RUN NUMBER	PHI DEG.	HS SPHERE TW=540
102	.0000	.1667

TEST DATA

RUN NUMBER	XO MS	ZO MS	T/C NO	H/HREF R=1.0	H/HREF R=.900	H/HREF R=.850	QREF BTU/ FT2SEC	QDOT BTU/ FT2SEC	HW/HT	TW DEG. R	STN NO R=.900
102	26.091	9.3030	2368.0	.3818-01	.4528-01	.4992-01	38.77	1.480	.3624	551.2	.1174-02

IH103 60-OT VERTICAL TAIL (R3PM15)

VERTICAL TAIL

PARAMETRIC DATA

MACH = 5.250 ALPHA = 5.000 BETA = -9.000 ELEVON = .0000
BDFLAP = .0000 SPDBRK = .0000

TEST CONDITIONS

RUN NUMBER	ALPHA DEG.	BETA DEG.	MACH	RN/FT /FT X10 6	PT PSIA	TT DEG. R	HT BTU/ LBM	PINF PSIA	TINF DEG. R	RHO SLUGS/ FT3	VINF FT/SEC	SCALE
103	5.000	-9.000	5.250	1.053	103.3	1486.	365.9	.1424	234.2	.5105-04	3938.	.1750-01

RUN NUMBER	PHI DEG.	HS SPHERE TW=540
103	.0000	.1674

TEST DATA

RUN NUMBER	XO MS	ZO MS	T/C NO	H/HREF R=1.0	H/HREF R=.900	H/HREF R=.850	QREF BTU/ FT2SEC	QDOT BTU/ FT2SEC	HW/HT	TW DEG. R	STN NO R=.900
103	26.091	9.3030	2368.0	.1712-01	.2030-01	.2239-01	38.99	.6674	.3631	553.8	.5253-03

IH103 60-OT VERTICAL TAIL (R3PM16)

VERTICAL TAIL

PARAMETRIC DATA

MACH = 5.250 ALPHA = 10.00 BETA = -9.000 ELEVON = .0000
BDFLAP = .0000 SPDBRK = .0000

TEST CONDITIONS

RUN NUMBER	ALPHA DEG.	BETA DEG.	MACH	RN/FT /FT X10 6	PT PSIA	TT DEG. R	HT BTU/ LBM	PINF PSIA	TINF DEG. R	RHO SLUGS/ FT3	VINF FT/SEC	SCALE
104	10.00	-9.000	5.250	1.049	103.3	1490.	366.9	.1424	234.8	.5090-04	3943.	.1750-01

RUN NUMBER	PHI DEG.	HS SPHERE TW=540
104	.0000	.1674

TEST DATA

RUN NUMBER	XO MS	ZO MS	T/C NO	H/HREF R=1.0	H/HREF R=.900	H/HREF R=.850	QREF BTU/ FT2SEC	QDOT BTU/ FT2SEC	HW/HT	TW DEG. R	STN NO R=.900
104	26.091	9.3030	2368.0	.1630-01	.1934-01	.2133-01	39.05	.6367	.3638	556.3	.5013-03

IH103 60-OT VERTICAL TAIL (R3PM17)

VERTICAL TAIL

PARAMETRIC DATA

MACH = 5.250 ALPHA = -10.00 BETA = -9.000 ELEVON = .0000
BDFLAP = .0000 SPDBRK = .0000

TEST CONDITIONS

RUN NUMBER	ALPHA DEG.	BETA DEG.	MACH	RN/FT /FT X10 6	PT PSIA	TT DEG. R	HT BTU/ LBM	PINF PSIA	TINF DEG. R	RHO SLUGS/ FT3	VINF FT/SEC	SCALE
109	-10.00	-9.000	5.250	1.078	103.6	1468.	361.2	.1431	231.2	.5196-04	3912.	.1750-01

RUN NUMBER	PHI DEG.	HS SPHERE TW=540
109	.0000	.1676

TEST DATA

RUN NUMBER	XO MS	ZO MS	T/C NO	H/HREF R=1.0	H/HREF R=.900	H/HREF R=.850	QREF BTU/ FT2SEC	QDOT BTU/ FT2SEC	HW/HT	TW DEG. R	STN NO R=.900
109	26.091	9.3030	2368.0	.5948-01	.7086-01	.7836-01	37.64	2.239	.3776	568.4	.1814-02

IH103 60-OT VERTICAL TAIL

(R3PM18)

VERTICAL TAIL

PARAMETRIC DATA

MACH = 5.250 ALPHA = -10.00 BETA = -3.000 ELEVON = .0000
BDFLAP = .0000 SPDBRK = .0000

TEST CONDITIONS

RUN NUMBER	ALPHA DEG.	BETA DEG.	MACH	RN/FT /FT X10 6	PT PSIA	TT DEG. R	HT BTU/ LBM	PINF PSIA	TINF DEG. R	RHO SLUGS/ FT3	VINF FT/SEC	SCALE
112	-10.00	-3.000	5.250	1.055	103.0	1483.	365.0	.1422	233.6	.5107-04	3933.	.1750-01

RUN NUMBER	PHI DEG.	HS SPHERE TW=540
112	.0000	.1672

TEST DATA

RUN NUMBER	XO MS	ZO MS	T/C NO	H/HREF R=1.0	H/HREF R=.900	H/HREF R=.850	QREF BTU/ FT2SEC	QDOT BTU/ FT2SEC	HW/HT	TW DEG. R	STN NO R=.900
112	26.091	9.3030	2368.0	.4431-01	.5249-01	.5783-01	39.17	1.736	.3581	544.8	.1358-02

VERTICAL TAIL

PARAMETRIC DATA

MACH = 5.250 ALPHA = -10.00 BETA = -5.000 ELEVON = .0000
BDFLAP = .0000 SPDBRK = .0000

TEST CONDITIONS

RUN NUMBER	ALPHA DEG.	BETA DEG.	MACH	RN/FT /FT X10 6	PT PSIA	TT DEG. R	HT BTU/ LBM	PINF PSIA	TINF DEG. R	RHO SLUGS/ FT3	VINF FT/SEC	SCALE
119	-10.00	-5.000	5.250	1.047	104.7	1505.	370.7	.1442	237.2	.5101-04	3963.	.1750-01

RUN NUMBER	PHI DEG.	HS SPHERE TW=540
119	.0000	.1687

TEST DATA

RUN NUMBER	XO MS	ZO MS	T/C NO	H/HREF R=1.0	H/HREF R=.900	H/HREF R=.850	QREF BTU/ FT2SEC	QDOT BTU/ FT2SEC	HW/HT	TW DEG. R	STN NO R=.900
119	26.091	9.3030	2368.0	.1591-01	.1886-01	.2079-01	39.92	.6352	.3610	557.7	.4888-03

IH103 60-OT VERTICAL TAIL (R3PM20)

VERTICAL TAIL

PARAMETRIC DATA

MACH = 5.250 ALPHA = -10.00 BETA = .0000 ELEVON = .0000
BDFLAP = .0000 SPDBRK = .0000

TEST CONDITIONS

RUN NUMBER	ALPHA DEG.	BETA DEG.	MACH	RN/FT /FT X10 6	PT PSIA	TT DEG. R	HT BTU/ LBM	PINF PSIA	TINF DEG. R	RHO SLUGS/ FT3	VINF FT/SEC	SCALE
122	-10.00	.0000	5.250	1.012	103.5	1525.	376.0	.1423	240.6	.4964-04	3992.	.1750-01

RUN NUMBER	PHI DEG.	HS SPHERE TW=540
122	.0000	.1678

TEST DATA

RUN NUMBER	XO MS	ZO MS	T/C NO	H/HREF R=1.0	H/HREF R=.900	H/HREF R=.850	QREF BTU/ FT2SEC	QDOT BTU/ FT2SEC	HW/HT	TW DEG. R	STN NO R=.900
122	26.091	9.3030	2368.0	.1006-01	.1191-01	.1311-01	40.69	.4095	.3547	555.8	.3133-03

IH103 60-OT VERTICAL TAIL (R3PM21)

VERTICAL TAIL

PARAMETRIC DATA

MACH = 5.250 ALPHA = .0000 BETA = .0000 ELEVON = .0000
BDFLAP = .0000 SPDBRK = .0000

TEST CONDITIONS

RUN NUMBER	ALPHA DEG.	BETA DEG.	MACH	RN/FT /FT X10 6	PT PSIA	TT DEG. R	HT BTU/ LBM	PINF PSIA	TINF DEG. R	RHO SLUGS/ FT3	VINF FT/SEC	SCALE
130	.0000	.0000	5.250	.6533	104.0	1992.	502.2	.1374	321.4	.3588-04	4613.	.1750-01

RUN NUMBER	PHI DEG.	HS SPHERE TW=540
130	.0000	.1693

TEST DATA

RUN NUMBER	XO MS	ZO MS	T/C NO	H/HREF R=1.0	H/HREF R=.900	H/HREF R=.850	QREF BTU/ FT2SEC	QDOT BTU/ FT2SEC	HW/HT	TW DEG. R	STN NO R=.900
130	26.091	9.3030	2368.0	.1975-01	.2286-01	.2481-01	62.53	1.235	.2640	552.6	.7261-03

IH103 60-OT UPPER MID FUSELAGE (R3PN01)

UPPER MID FUSE

PARAMETRIC DATA

MACH = 5.250 ALPHA = .0000 BETA = .0000 ELEVON = .0000
BDFLAP = .0000 SPDBRK = .0000

TEST CONDITIONS

RUN NUMBER	ALPHA DEG.	BETA DEG.	MACH	RN/FT /FT X10 6	PT PSIA	TT DEG. R	HT BTU/ LBM	PINF PSIA	TINF DEG. R	RHO SLUGS/ FT3	VINF FT/SEC	SCALE
84	.0000	.0000	5.250	1.008	102.8	1523.	375.5	.1415	240.3	.4941-04	3989.	.1750-01

RUN NUMBER	PHI DEG.	HS SPHERE TW=540
84	.0000	.1673

TEST DATA

RUN NUMBER	XO MS	YO MS	T/C NO	H/HREF R=1.0	H/HREF R=.900	H/HREF R=.850	QREF BTU/ FT2SEC	QDOT BTU/ FT2SEC	HW/HT	TW DEG. R	STN NO R=.900
84	9.7050	.67200	2088.0	.3954-01	.4670-01	.5135-01	40.96	1.620	.3478	544.3	.1232-02
84	9.7170	1.7090	2089.0	.8981-02	.1061-01	.1166-01	40.99	.3681	.3474	543.7	.2798-03
84	10.806	.86700	2103.0	.9535-02	.1126-01	.1238-01	40.97	.3906	.3477	544.2	.2970-03
84	10.806	1.6380	2102.0	.3605-01	.4257-01	.4681-01	40.98	1.477	.3475	543.9	.1123-02
84	13.077	.86800	2125.0	.6621-02	.7818-02	.8595-02	41.02	.2716	.3469	543.0	.2062-03
84	13.077	1.6840	2122.0	.1381-01	.1631-01	.1793-01	41.00	.5662	.3473	543.5	.4302-03
84	13.107	.56000	2126.0	.1484-01	.1752-01	.1926-01	41.02	.6086	.3469	542.9	.4621-03
84	15.347	.86800	2140.0	.1043-01	.1232-01	.1354-01	41.03	.4280	.3467	542.6	.3249-03
84	15.347	1.5840	2139.0	.9386-02	.1108-01	.1218-01	41.02	.3850	.3469	542.9	.2923-03
84	17.549	1.1200	2405.0	.2430-02	.2869-02	.3154-02	41.04	.9971-01	.3467	542.5	.7567-04
84	17.574	.28000	2408.0	.1145-01	.1352-01	.1486-01	41.01	.4695	.3470	543.0	.3566-03
84	17.574	.56000	2407.0	.1319-01	.1557-01	.1712-01	41.03	.5411	.3467	542.6	.4107-03
84	17.574	.86800	2406.0	.8358-02	.9868-02	.1085-01	41.03	.3429	.3467	542.7	.2603-03
84	17.574	1.5720	2404.0	.1845-02	.2179-02	.2396-02	40.98	.7562-01	.3474	543.8	.5747-04
84	19.845	1.5720	2410.0	.7014-02	.8283-02	.9106-02	41.00	.2876	.3472	543.3	.2185-03
84	22.000	.86800	2156.0	.1748-01	.2064-01	.2270-01	41.00	.7167	.3472	543.4	.5445-03
84	22.000	1.5720	2155.0	.2273-01	.2684-01	.2951-01	40.99	.9314	.3474	543.8	.7079-03
84	22.610	.14000-01	2036.0	.8610-01	.1017	.1118	41.00	3.530	.3473	543.5	.2682-02
84	22.640	.30800	2160.0	.6065-01	.7162-01	.7875-01	40.98	2.486	.3475	543.8	.1889-02
84	22.640	.86800	2159.0	.4835-01	.5710-01	.6278-01	41.00	1.983	.3472	543.3	.1506-02
84	22.640	1.2180	2158.0	.4602-01	.5434-01	.5975-01	40.98	1.886	.3475	543.8	.1433-02

IH103 60-OT UPPER MID FUSELAGE (R3PN02)

UPPER MID FUSE

PARAMETRIC DATA

MACH = 5.250 ALPHA = -5.000 BETA = .0000 ELEVON = .0000
BDFLAP = .0000 SPDBRK = .0000

TEST CONDITIONS

RUN NUMBER	ALPHA DEG.	BETA DEG.	MACH	RN/FT /FT X10 6	PT PSIA	TT DEG. R	HT BTU/ LBM	PINF PSIA	TINF DEG. R	RHO SLUGS/ FT3	VINF FT/SEC	SCALE
83	-5.000	.0000	5.250	1.048	103.8	1496.	368.3	.1430	235.7	.5092-04	3951.	.1750-01

RUN NUMBER	PHI DEG.	HS SPHERE TW=540
83	.0000	.1679

TEST DATA

RUN NUMBER	XO MS	YO MS	T/C NO	H/HREF R=1.0	H/HREF R=.900	H/HREF R=.850	QREF BTU/ FT2SEC	QDOT BTU/ FT2SEC	HW/HT	TW DEG. R	STN NO R=.900
83	9.7050	.67200	2088.0	.3722-01	.4405-01	.4851-01	39.82	1.482	.3559	546.3	.1142-02
83	9.7170	1.7090	2089.0	.1211-01	.1433-01	.1578-01	39.83	.4823	.3556	545.9	.3716-03
83	10.806	.86700	2103.0	.8141-02	.9638-02	.1061-01	39.81	.3241	.3560	546.5	.2499-03
83	10.806	1.6380	2102.0	.4158-01	.4922-01	.5420-01	39.83	1.656	.3557	546.0	.1276-02
83	13.077	.86800	2125.0	.9029-02	.1069-01	.1176-01	39.88	.3600	.3549	544.9	.2771-03
83	13.077	1.6840	2122.0	.1541-01	.1824-01	.2008-01	39.85	.6141	.3554	545.5	.4730-03
83	13.107	.56000	2126.0	.2081-01	.2463-01	.2712-01	39.88	.8299	.3550	544.9	.6387-03
83	15.347	.86800	2140.0	.2603-01	.3081-01	.3392-01	39.89	1.039	.3547	544.4	.7989-03
83	15.347	1.5840	2139.0	.7794-02	.9224-02	.1016-01	39.88	.3108	.3549	544.7	.2392-03
83	17.549	1.1200	2405.0	.3112-01	.3682-01	.4054-01	39.89	1.241	.3547	544.5	.9550-03
83	17.574	.28000	2408.0	.3989-01	.4720-01	.5197-01	39.88	1.591	.3549	544.7	.1224-02
83	17.574	.56000	2407.0	.3412-01	.4038-01	.4446-01	39.89	1.361	.3547	544.5	.1047-02
83	17.574	.86800	2406.0	.2911-01	.3445-01	.3793-01	39.88	1.161	.35[illegible].3	544.7	.8935-03
83	17.574	1.5720	2404.0	.4687-02	.5547-02	.6108-02	39.86	.1868	.3552	545.3	.1438-03
83	19.845	1.5720	2410.0	.1852-01	.2191-01	.2413-01	39.88	.7384	.3549	544.8	.5683-03
83	22.000	.86800	2156.0	.3672-01	.4346-01	.4785-01	39.88	1.464	.3549	544.8	.1127-02
83	22.000	1.5720	2155.0	.4119-01	.4875-01	.5368-01	39.86	1.642	.3552	545.3	.1264-02
83	22.610	.14000-01	2036.0	.1218	.1442	.1588	39.86	4.856	.3552	545.3	.3739-02
83	22.640	.30800	2160.0	.9944-01	.1177	.1296	39.87	3.965	.3550	545.0	.3052-02
83	22.640	.86800	2159.0	.1035	.1225	.1348	39.86	4.124	.3552	545.3	.3176-02
83	22.640	1.2180	2158.0	.9803-01	.1160	.1278	39.85	3.907	.3553	545.4	.3009-02

IH103 60-OT UPPER MID FUSELAGE

(R3PN03)

UPPER MID FUSE

PARAMETRIC DATA

MACH = 5.250 ALPHA = 5.000 BETA = .0000 ELEVON = .0000
BDFLAP = .0000 SPDBRK = .0000

TEST CONDITIONS

RUN NUMBER	ALPHA DEG.	BETA DEG.	MACH	RN/FT /FT X10 6	PT PSIA	TT DEG. R	HT BTU/ LBM	PINF PSIA	TINF DEG. R	RHO SLUGS/ FT3	VINF FT/SEC	SCALE
82	5.000	.0000	5.250	1.000	101.7	1521.	374.9	.1400	239.9	.4897-04	3986.	.1750-01

RUN NUMBER	PHI DEG.	HS SPHERE TW=540
82	.0000	.1664

TEST DATA

RUN NUMBER	XO MS	YO MS	T/C NO	H/HREF R=1.0	H/HREF R=.900	H/HREF R=.850	QREF BTU/ FT2SEC	QDOT BTU/ FT2SEC	HW/HT	TW DEG. R	STN NO R=.900
82	9.7050	.67200	2088.0	.3032-01	.3583-01	.3942-01	40.52	1.228	.3501	547.0	.9491-03
82	9.7170	1.7090	2089.0	.8164-02	.9646-02	.1061-01	40.57	.3312	.3493	545.7	.2555-03
82	10.806	.86700	2103.0	.7749-02	.9157-02	.1007-01	40.53	.3140	.3500	546.8	.2425-03
82	10.806	1.6380	2102.0	.3141-01	.3712-01	.4083-01	40.54	1.274	.3497	546.4	.9832-03
82	13.077	.86800	2125.0	.6097-02	.7204-02	.7923-02	40.59	.2475	.3490	545.2	.1908-03
82	13.077	1.6840	2122.0	.1487-01	.1757-01	.1933-01	40.57	.6033	.3493	545.7	.4654-03
82	13.107	.56000	2126.0	.1248-01	.1474-01	.1621-01	40.59	.5064	.3491	545.3	.3905-03
82	15.347	.86800	2140.0	.9275-02	.1096-01	.1205-01	40.61	.3766	.3487	544.8	.2903-03
82	15.347	1.5840	2139.0	.1394-01	.1647-01	.1812-01	40.60	.5661	.3489	545.1	.4364-03
82	17.549	1.1200	2405.0	.3348-02	.3956-02	.4350-02	40.60	.1359	.3489	545.0	.1048-03
82	17.574	.28000	2408.0	.1280-01	.1512-01	.1663-01	40.59	.5196	.3490	545.2	.4006-03
82	17.574	.56000	2407.0	.1120-01	.1324-01	.1456-01	40.60	.4548	.3489	545.1	.3506-03
82	17.574	.86800	2406.0	.1123-01	.1327-01	.1460-01	40.59	.4560	.3490	545.2	.3515-03
82	17.574	1.5720	2404.0	.1609-02	.1902-02	.2092-02	40.56	.6528-01	.3495	546.0	.5037-04
82	19.845	1.5720	2410.0	.6672-02	.7884-02	.8671-02	40.58	.2707	.3492	545.6	.2088-03
82	22.000	.86800	2156.0	.1362-01	.1610-01	.1770-01	40.57	.5526	.3494	545.8	.4263-03
82	22.000	1.5720	2156.0	.1753-01	.2071-01	.2278-01	40.55	.7108	.3496	546.2	.5486-03
82	22.610	.14000-01	2036.0	.4240-01	.5010-01	.5511-01	40.54	1.719	.3497	546.4	.1327-02
82	22.640	.30800	2160.0	.3143-01	.3715-01	.4086-01	40.53	1.274	.3499	546.7	.9839-03
82	22.640	.86800	2159.0	.3349-01	.3957-01	.4353-01	40.56	1.358	.3495	546.1	.1048-02
82	22.640	1.2180	2158.0	.3314-01	.3917-01	.4308-01	40.54	1.344	.3498	546.5	.1037-02

IH103 60-OT UPPER MID FUSELAGE (R3PN04)

UPPER MID FUSE

PARAMETRIC DATA

MACH = 5.250 ALPHA = 10.00 BETA = .0000 ELEVON = .0000
BDFLAP = .0000 SPDBRK = .0000

TEST CONDITIONS

RUN NUMBER	ALPHA DEG.	BETA DEG.	MACH	RN/FT /FT X10 6	PT PSIA	TT DEG. R	HT BTU/ LBM	PINF PSIA	TINF DEG. R	RHO SLUGS/ FT3	VINF FT/SEC	SCALE
81	10.00	-5.000	5.250	1.029	101.8	1494.	368.0	.1404	235.5	.5001-04	3949.	.1750-01

RUN NUMBER	PHI DEG.	HS SPHERE TW=540
81	.0000	.1663

TEST DATA

RUN NUMBER	XO MS	YO MS	T/C NO	H/HREF R=1.0	H/HREF R=.900	H/HREF R=.850	QREF BTU/ FT2SEC	QDOT BTU/ FT2SEC	HW/HT	TW DEG. R	STN NO R=.900
81	9.7050	.67200	2088.0	.2434-01	.2883-01	.3175-01	39.34	.9578	.3569	547.4	.7541-03
81	9.7170	1.7090	2089.0	.8216-02	.9726-02	.1071-01	39.41	.3238	.3558	545.6	.2545-03
81	10.806	.86700	2103.0	.5478-02	.6486-02	.7144-02	39.36	.2156	.3567	547.1	.1697-03
81	10.806	1.6360	2102.0	.2549-01	.3018-01	.3323-01	39.37	1.003	.3564	546.7	.7895-03
81	13.077	.86800	2125.0	.3280-02	.3883-02	.4275-02	39.43	.1293	.3555	545.2	.1016-03
81	13.077	1.6840	2122.0	.1779-01	.2106-01	.2319-01	39.40	.7011	.3559	545.9	.5511-03
81	13.107	.56000	2126.0	.5946-02	.7038-02	.7750-02	39.43	.2344	.3556	545.4	.1841-03
81	15.347	.86800	2140.0	.1499-02	.1775-02	.1954-02	39.46	.5916-01	.3551	544.6	.4643-04
81	15.347	1.5840	2139.0	.4265-02	.5049-02	.5559-02	39.44	.1682	.3553	545.0	.1321-03
81	17.549	1.1200	2405.0	.2218-02	.2625-02	.2890-02	39.46	.8750-01	.3551	544.6	.6867-04
81	17.574	.28000	2408.0	.1011-01	.1197-01	.1318-01	39.45	.3989	.3552	544.8	.3131-03
81	17.574	.56000	2407.0	.4148-02	.4909-02	.5405-02	39.46	.1637	.3551	544.6	.1284-03
81	17.574	.86800	2406.0	.2024-02	.2396-02	.2638-02	39.45	.7986-01	.3552	544.8	.6269-04
81	19.845	1.5720	2410.0	.4255-02	.5037-02	.5546-02	39.43	.1678	.3555	545.2	.1318-03
81	22.000	.86800	2156.0	.1129-01	.1336-01	.1471-01	39.42	.4450	.3556	545.4	.3496-03
81	22.000	1.5720	2155.0	.9640-02	.1141-01	.1257-01	39.38	.3796	.3563	546.5	.2986-03
81	22.610	.14000-01	2036.0	.5797-01	.6862-01	.7557-01	39.40	2.284	.3560	546.0	.1795-02
81	22.640	.30800	2160.0	.3634-01	.4303-01	.4738-01	39.38	1.431	.3563	546.5	.1126-02
81	22.640	.86800	2159.0	.1286-01	.1522-01	.1676-01	39.40	.5066	.3560	546.0	.3982-03
81	22.640	1.2180	2158.0	.1264-01	.1497-01	.1648-01	39.37	.4978	.3564	546.6	.3916-03

IH103 60-OT UPPER MID FUSELAGE (R3PN05)

UPPER MID FUSE

PARAMETRIC DATA

MACH = 5.250 ALPHA = .0000 BETA = -5.000 ELEVON = .0000
BDFLAP = .0000 SPDBRK = .0000

TEST CONDITIONS

RUN NUMBER	ALPHA DEG.	BETA DEG.	MACH	RN/FT /FT X10 6	PT PSIA	TT DEG. R	HT BTU/ LBM	PINF PSIA	TINF DEG. R	RHO SLUGS/ FT3	VINF FT/SEC	SCALE
77	.0000	-5.000	5.250	1.043	103.3	1496.	368.4	.1425	235 8	.5070-04	3951.	.1750-01

RUN NUMBER	PHI DEG.	HS SPHERE TW=540
77	.0000	.1675

TEST DATA

RUN NUMBER	XO MS	YO MS	T/C NO	H/HREF R=1.0	H/HREF R=.900	H/HREF R=.850	QREF BTU/ FT2SEC	QDOT BTU/ FT2SEC	HW/HT	TW DEG. R	STN NO R=.900
77	9.7050	.67200	2088.0	.4695-01	.5565-01	.6133-01	39.47	1.853	.3603	553.3	.1446-02
77	9.7170	1.7090	2089.0	.1625-01	.1926-01	.2123-01	39.48	.6416	.3601	552.9	.5004-03
77	10.806	.86700	2103.0	.1381-01	.1637-01	.1804-01	39.46	.5449	.3604	553.4	.4252-03
77	10.806	1.6380	2102.0	.5070-01	.6008-01	.6621-01	39.50	2.002	.3598	552.5	.1561-02
77	13.077	.86800	2125.0	.1136-01	.1346-01	.1483-01	39.53	.4491	.3592	551.6	.3497-03
77	13.077	1.6840	2122.0	.3227-01	.3824-01	.4214-01	39.50	1.275	.3597	552.4	.9935-03
77	13.107	.56000	2126.0	.9356-02	.1109-01	.1221-01	39.54	.3699	.3592	551.5	.2880-03
77	15.347	.86800	2140.J	.6028-02	.7142-02	.7869-02	39.55	.2384	.3590	551.2	.1856-03
77	15.347	1.5840	2139.0	.2891-01	.3425-01	.3774-01	39.53	1.143	.3593	551.8	.8900-03
77	17.549	1.1200	2405.0	.1380-01	.1635-01	.1801-01	39.55	.5458	.3590	551.2	.4248-03
77	17.574	.28000	2408.0	.3420-02	.4052-02	.4465-02	39.56	.1353	.3589	551.1	.1053-03
77	17.574	.86800	2406.0	.1009-01	.1195-01	.1317-01	39.55	.3989	.3590	551.2	.3105-03
77	17.574	1.5720	2404.0	.5678-02	.6728-02	.7414-02	39.51	.2243	.3596	552.2	.1748-03
77	19.845	1.5720	2410.0	.1798-01	.2131-01	.2348-01	39.53	.7107	.3594	551.8	.5536-03
77	22.000	.86800	2156.0	.2030-01	.2405-01	.2650-01	39.52	.8023	.3594	551.9	.6249-03
77	22.000	1.5720	2155.0	.1364-01	.1616-01	.1781-01	39.48	.5384	.3600	552.8	.4199-03
77	22.610	.14000-01	2036.0	.4796-01	.5683-01	.6263-01	39.52	1.896	.3594	551.9	.1477-02
77	22.640	.30800	2160.0	.3722-01	.4411-01	.4861-01	39.51	1.470	.3597	552.3	.1146-02
77	22.640	.86800	2159.0	.4336-01	.5139-01	.5664-01	39.48	1.712	.3601	553.0	.1335-02
77	22.640	1.2180	2158.0	.4133-01	.4898-01	.5398-01	39.48	1.632	.3601	552.9	.1273-02

IH103 60-OT UPPER MID FUSELAGE (R3PN06)

UPPER MID FUSE

PARAMETRIC DATA

MACH = 5.250 ALPHA = -5.000 BETA = -5.000 ELEVON = .0000
BDFLAP = .0000 SPDBRK = .0000

TEST CONDITIONS

RUN NUMBER	ALPHA DEG.	BETA DEG.	MACH	RN/FT /FT X10 6	PT PSIA	TT DEG. R	HT BTU/ LBM	PINF PSIA	TINF DEG. R	RHO SLUGS/ FT3	VINF FT/SEC	SCALE
78	-5.000	-5.000	5.250	.9991	96.86	1476.	363.2	.1337	232.4	.4828-04	3923.	.1750-01

RUN NUMBER	PHI DEG.	HS SPHERE TW=540
78	.0000	.1621

TEST DATA

RUN NUMBER	XO MS	YO MS	T/C NO	H/HREF R=1.0	H/HREF R=.900	H/HREF R=.850	QREF BTU/ FT2SEC	QDOT BTU/ FT2SEC	HW/HT	TW DEG. R	STN NO R=.900
78	9.7050	.67200	2088.0	.4577-01	.5437-01	.6001-01	37.19	1.702	.3678	556.7	.1445-02
78	9.7170	1.7090	2089.0	.2809-01	.3336-01	.3682-01	37.23	1.046	.3671	555.6	.8869-03
78	10.806	.86700	2103.0	.1436-01	.1705-01	.1882-01	37.19	.5339	.3678	556.7	.4534-03
78	10.806	1.6380	2102.0	.5604-01	.6656-01	.7346-01	37.23	2.086	.3672	555.7	.1769-02
78	13.077	.86800	2125.0	.1393-01	.1654-01	.1825-01	37.28	.5193	.3663	554.5	.4398-03
78	13.077	1.6840	2122.0	.3788-01	.4499-01	.4964-01	37.25	1.411	.3669	555.3	.1196-02
78	13.107	.56000	2126.0	.1120-01	.1329-01	.1467-01	37.28	.4174	.3663	554.4	.3534-03
78	13.107	1.1280	2124.0	.4643-03	.5514-03	.6084-03	37.24	.1729-01	.3669	555.4	.1466-04
78	15.347	.86800	2140.0	.7787-02	.9245-02	.1020-01	37.31	.2906	.3658	553.6	.2458-03
78	15.347	1.5840	2139.0	.3240-01	.3847-01	.4244-01	37.29	1.208	.3661	554.1	.1023-02
78	17.549	1.1200	2405.0	.1056-01	.1254-01	.1383-01	37.30	.3940	.3659	553.9	.3333-03
78	17.574	.28000	2408.0	.2794-01	.3317-01	.3660-01	37.30	1.042	.3660	553.9	.8819-03
78	17.574	.86800	2406.0	.1537-01	.1825-01	.2014-01	37.30	.5734	.3661	554.0	.4853-03
78	17.574	1.5720	2404.0	.3015-02	.3580-02	.3950-02	37.26	.1123	.3667	555.0	.9517-04
78	19.845	1.5720	2410.0	.2750-01	.3265-01	.3603-01	37.28	1.025	.3664	554.5	.8681-03
78	22.000	.86800	2156.0	.4549-01	.5402-01	.5960-01	37.28	1.696	.3664	554.5	.1436-02
78	22.000	1.5720	2155.0	.3707-01	.4402-01	.4858-01	37.24	1.380	.3670	555.5	.1170-02
78	22.610	.14000-01	2036.0	.1144	.1359	.1499	37.23	4.259	.3671	555.6	.3612-02
78	22.640	.30800	2160.0	.9649-01	.1146	.1265	37.23	3.592	.3671	555.6	.3046-02
78	22.640	.86800	2159.0	.1029	.1222	.1349	37.23	3.831	.3671	555.7	.3249-02
78	22.640	1.2180	2158.0	.9674-01	.1149	.1268	37.22	3.601	.3673	555.9	.3054-02

IH103 60-OT UPPER MID FUSELAGE (R3PN07)

UPPER MID FUSE

PARAMETRIC DATA

MACH = 5.250 ALPHA = 5.000 BETA = -5.000 ELEVON = .0000
BDFLAP = .0000 SPDBRK = .0000

TEST CONDITIONS

RUN NUMBER	ALPHA DEG.	BETA DEG.	MACH	RN/FT /FT X10 6	PT PSIA	TT DEG. R	HT BTU/ LBM	PINF PSIA	TINF DEG. R	RHO SLUGS/ FT3	VINF FT/SEC	SCALE
79	5.000	-5.000	5.250	1.004	99.07	1492.	367.3	.1366	235.1	.4877-04	3945.	.1750-01

RUN NUMBER	PHI DEG.	HS SPHERE TW=540
79	.0000	.1640

TEST DATA

RUN NUMBER	XO MS	YO MS	T/C NO	H/HREF R=1.0	H/HREF R=.900	H/HREF R=.850	QREF BTU/ FT2SEC	QDOT BTU/ FT2SEC	HW/HT	TW DEG. R	STN NO R=.900
79	9.7050	.67200	2088.0	.4199-01	.4966-01	.5465-01	39.00	1.637	.3527	539.9	.1316-02
79	9.7170	1.7090	2089.0	.2201-01	.2603-01	.2865-01	39.02	.8589	.3524	539.4	.6898-03
79	10.806	.86700	2103.0	.1277-01	.1511-01	.1663-01	38.98	.4980	.3529	540.2	.4003-03
79	10.806	1.6380	2102.0	.3498-01	.4138-01	.4554-01	38.98	1.364	.3530	540.4	.1096-02
79	13.077	.86800	2125.0	.9996-02	.1182-01	.1301-01	39.03	.3901	.3522	539.1	.3132-03
79	13.077	1.6840	2122.0	.2988-01	.3533-01	.3889-01	39.00	1.165	.3526	539.8	.9362-03
79	13.107	.56000	2126.0	.9081-02	.1074-01	.1182-01	39.03	.3544	.3522	539.2	.2846-03
79	15.347	.86800	2140.0	.7796-02	.9219-02	.1014-01	39.04	.3044	.3520	538.8	.2443-03
79	15.347	1.5840	2139.0	.1820-01	.2153-01	.2369-01	39.03	.7105	.3522	539.1	.5704-03
79	17.549	1.1200	2405.0	.6688-02	.7909-02	.8703-02	39.04	.2611	.3520	538.8	.2096-03
79	17.574	.28000	2408.0	.3161-02	.3738-02	.4114-02	39.03	.1234	.3521	539.0	.9906-04
79	17.574	.56000	2407.0	.4912-02	.5809-02	.6392-02	39.04	.1918	.3520	538.9	.1539-03
79	17.574	.86800	2406.0	.6072-02	.7180-02	.7901-02	39.03	.2370	.3522	539.1	.1902-03
79	17.574	1.5720	2404.0	.2140-02	.2530-02	.2784-02	39.02	.8348-01	.3523	539.3	.6704-04
79	19.845	1.5720	2410.0	.1322-01	.1563-01	.1720-01	39.02	.5157	.3523	539.4	.4142-03
79	22.000	.86800	2156.0	.1918-01	.2268-01	.2496-01	39.01	.7481	.3524	539.5	.6009-03
79	22.000	1.5720	2155.0	.1045-01	.1236-01	.1360-01	38.97	.4072	.3531	540.6	.3275-03
79	22.610	.14000-01	2036.0	.2457-01	.2906-01	.3198-01	38.98	.9577	.3529	540.3	.7699-03
79	22.640	.30800	2160.0	.2559-01	.3027-01	.3331-01	38.97	.9973	.3531	540.5	.8020-03
79	22.640	.86800	2159.0	.2946-01	.3485-01	.3836-01	38.97	1.148	.3532	540.7	.9234-03
79	22.640	1.2180	2158.0	.2742-01	.3243-01	.3570-01	38.97	1.069	.3531	540.6	.8594-03

IH103 60-OT UPPER MID FUSELAGE (R3PN08)

UPPER MID FUSE

PARAMETRIC DATA

MACH = 5.250 ALPHA = 10.00 BETA = -5.000 ELEVON = .0000
BDFLAP = .0000 SPDBRK = .0000

TEST CONDITIONS

RUN NUMBER	ALPHA DEG.	BETA DEG.	MACH	RN/FT /FT X10 E	PT PSIA	TT DEG. R	HT BTU/ LBM	PINF PSIA	TINF DEG. R	RHO SLUGS/ FT3	VINF FT/SEC	SCALE
80	10.00	-5.000	5.250	1.024	102.2	1503.	370.2	.1408	236.9	.4989-04	3961.	.1750-01

RUN NUMBER	PHI DEG.	HS SPHERE TW=540
80	.0000	.1667

TEST DATA

RUN NUMBER	XO MS	YO MS	T/C NO	H/HREF R=1.0	H/HREF R=.900	H/HREF R=.850	QREF BTU/ FT2SEC	QDOT BTU/ FT2SEC	HW/HT	TW DEG. R	STN NO R=.900
80	9.7050	.67200	2088.0	.3218-01	.3807-01	.4190-01	39.90	1.284	.3532	544.9	.9979-03
80	9.7170	1.7090	2089.0	.1985-01	.2348-01	.2584-01	39.95	.7930	.3525	543.8	.6154-03
80	10.806	.86700	2103.0	.9068-02	.1073-01	.1180-01	39.91	.3619	.3530	544.7	.2811-03
80	10.806	1.6380	2102.0	.2351-01	.2781-01	.3060-01	39.92	.9386	.3529	544.5	.7289-03
80	13.077	.86800	2125.0	.5426-02	.6416-02	.7060-02	39.97	.2169	.3521	543.3	.1682-03
80	13.077	1.6840	2122.0	.1490-01	.1762-01	.1939-01	39.95	.5951	.3525	543.9	.4618-03
80	13.107	.56000	2126.0	.4660-02	.5510-02	.6064-02	39.97	.1863	.3521	543.3	.1444-03
80	15.347	.86800	2140.0	.2701-02	.3194-02	.3514-02	39.99	.1080	.3518	542.9	.8372-04
80	15.347	1.5840	2139.0	.5510-02	.6515-02	.7169-02	39.98	.2203	.3520	543.2	.1708-03
80	17.549	1.1200	2405.0	.1019-02	.1205-02	.1326-02	39.98	.4074-01	.3519	543.0	.3158-04
80	17.574	.28000	2408.0	.1056-02	.1249-02	.1374-02	39.98	.4223-01	.3520	543.1	.3274-04
80	17.574	.56000	2407.0	.1372-02	.1623-02	.1786-02	39.98	.5487-01	.3519	543.0	.4254-04
80	17.574	.86800	2406.0	.1621-02	.1917-02	.2109-02	39.97	.6480-01	.3521	543.2	.5025-04
80	17.574	1.5720	2404.0	.3860-04	.4565-04	.5024-04	39.96	.1543-02	.3523	543.5	.1197-05
80	19.845	1.5720	2410.0	.3560-02	.4210-02	.4633-02	39.97	.1423	.3522	543.4	.1104-03
80	22.000	.86800	2156.0	.6608-02	.7814-02	.8599-02	39.96	.2640	.3523	543.6	.2048-03
80	22.000	1.5720	2155.0	.2394-02	.2832-02	.3117-02	39.92	.9557-01	.3530	544.6	.7423-04
80	22.610	.14000-01	2036.0	.6966-02	.8239-02	.9067-02	39.94	.2782	.3527	544.1	.2160-03
80	22.640	.30800	2160.0	.9617-02	.1137-01	.1252-01	39.93	.3840	.3528	544.3	.2982-03
80	22.640	.86800	2159.0	.1110-01	.1313-01	.1446-01	39.91	.4432	.3530	544.7	.3443-03
80	22.640	1.2180	2158.0	.1005-01	.1189-01	.1309-01	39.90	.4011	.3532	544.9	.3117-03

IH103 60-OT UPPER MID FUSELAGE (R3PN09)

UPPER MID FUSE

PARAMETRIC DATA

MACH = 5.250 ALPHA = .0000 BETA = -3.000 ELEVON = .0000
BDFLAP = .0000 SPDBRK = .0000

TEST CONDITIONS

RUN NUMBER	ALPHA DEG.	BETA DEG.	MACH	RN/FT /FT X10 6	PT PSIA	TT DEG. R	HT BTU/ LBM	PINF PSIA	TINF DEG. R	RHO SLUGS/ FT3	VINF FT/SEC	SCALE
93	.0000	-3.000	5.250	1.074	104.3	1478.	363.7	.1440	232.7	.5192-04	3926.	.1750-01

RUN NUMBER	PHI DEG.	HS SPHERE TW=540
93	.0000	.1682

TEST DATA

RUN NUMBER	XO MS	YO MS	T/C NO	H/HREF R=1.0	H/HREF R=.900	H/HREF R=.850	QREF BTU/ FT2SEC	QDOT BTU/ FT2SEC	HW/HT	TW DEG. R	STN NO R=.900
93	9.7050	.67200	2088.0	.4160-01	.4939-01	.5449-01	38.75	1.612	.3663	555.1	.1266-02
93	9.7170	1.7090	2089.0	.1216-01	.1444-01	.1593-01	38.78	.4716	.3658	554.4	.3702-03
93	10.806	.86700	2103.0	.1203-01	.1428-01	.1576-01	38.75	.4660	.3662	555.1	.3661-03
93	10.806	1.6380	2102.0	.4363-01	.5179-01	.5714-01	38.77	1.691	.3659	554.5	.1328-02
93	13.077	.86800	2125.0	.8368-02	.9933-02	.1096-01	38.80	.3247	.3654	553.8	.2547-03
93	13.077	1.6840	2122.0	.2333-01	.2769-01	.3055-01	38.78	.9046	.3658	554.4	.7101-03
93	13.107	.56000	2126.0	.8436-02	.1001-01	.1105-01	38.79	.3273	.3655	554.0	.2568-03
93	15.347	.86800	2140.0	.3900-02	.4629-02	.5107-02	38.80	.1513	.3655	554.0	.1187-03
93	15.347	1.5840	2139.0	.2721-01	.3230-01	.3564-01	38.79	1.055	.3657	554.2	.8282-03
93	17.549	1.1200	2405.0	.1212-01	.1439-01	.1587-01	38.79	.4701	.3656	554.1	.3688-03
93	17.574	.28000	2408.0	.1340-01	.1591-01	.1755-01	38.80	.5199	.3655	553.9	.4078-03
93	17.574	.56000	2407.0	.4867-02	.5778-02	.6374-02	38.80	.1888	.3655	554.0	.1481-03
93	17.574	.86800	2406.0	.2154-02	.2557-02	.2821-02	38.78	.8353-01	.3657	554.3	.6555-04
93	17.574	1.5720	2404.0	.4046-02	.4802-02	.5298-02	38.81	.1570	.3653	553.7	.1231-03
93	19.845	1.5720	2410.0	.5511-02	.6542-02	.7218-02	38.78	.2137	.3657	554.3	.1677-03
93	22.000	.86800	2156.0	.2627-01	.3119-01	.3441-01	38.79	1.019	.3656	554.1	.7997-03
93	22.000	1.5720	2155.0	.1832-01	.2175-01	.2399-01	38.78	.7103	.3658	554.4	.5575-03
93	22.610	.14000-01	2036.0	.6895-01	.8186-01	.9031-01	38.79	2.674	.3657	554.2	.2099-02
93	22.640	.30800	2160.0	.4730-01	.5615-01	.6195-01	38.79	1.835	.3657	554.2	.1440-02
93	22.640	.86800	2159.0	.3850-01	.4571-01	.5043-01	38.76	1.492	.3661	554.9	.1172-02
93	22.640	1.2180	2158.0	.3603-01	.4278-01	.4720-01	38.76	1.396	.3661	554.8	.1097-02

IH103 60-OT UPPER MID FUSELAGE (R3PN10)

UPPER MID FUSE

PARAMETRIC DATA

MACH = 5.250 ALPHA = -5.000 BETA = -3.000 ELEVON = .0000
BDFLAP = .0000 SPDBRK = .0000

TEST CONDITIONS

RUN NUMBER	ALPHA DEG.	BETA DEG.	MACH	RN/FT /FT X10 6	PT PSIA	TT DEG. R	HT BTU/ LBM	PINF PSIA	TINF DEG. R	RHO SLUGS/ FT3	VINF FT/SEC	SCALE
94	-5.000	-3.000	5.250	1.005	103.7	1534.	378.4	.1425	242.1	.4939-04	4004.	.1750-01

RUN NUMBER	PHI DEG.	HS SPHERE TW=540
94	.0000	.1680

TEST DATA

RUN NUMBER	XO MS	YO MS	T/C NO	H/HREF R=1.0	H/HREF R=.900	H/HREF R=.850	QREF BTU/ FT2SEC	QDOT BTU/ FT2SEC	HW/HT	TW DEG. R	STN NO R=.900
94	9.7050	.67200	2088.0	.3838-01	.4539-01	.4995-01	41.14	1.579	.3525	555.8	.1198-02
94	9.7170	1.7090	2089.0	.2024-01	.2393-01	.2633-01	41.18	.8334	.3518	554.8	.6315-03
94	10.806	.86700	2103.0	.9147-02	.1082-01	.1190-01	41.13	.3762	.3525	555.8	.2854-03
94	10.806	1.6380	2102.0	.4670-01	.5522-01	.6077-01	41.16	1.922	.3520	555.1	.1457-02
94	13.077	.86800	2125.0	.1028-01	.1216-01	.1337-01	41.19	.4234	.3517	554.6	.3207-03
94	13.077	1.6840	2122.0	.2575-01	.3045-01	.3351-01	41.17	1.060	.3520	555.1	.8035-03
94	13.107	.56000	2126.0	.1002-01	.1185-01	.1304-01	41.19	.4128	.3517	554.6	.3127-03
94	15.347	.86800	2140.0	.1151-01	.1361-01	.1497-01	41.19	.4740	.3517	554.6	.3591-03
94	15.347	1.5840	2139.0	.2697-01	.3190-01	.3510-01	41.17	1.110	.3520	555.1	.8416-03
94	17.549	1.1200	2405.0	.1890-01	.2235-01	.2460-01	41.18	.7784	.3518	554.8	.5898-03
94	17.574	.28000	2408.0	.3033-01	.3586-01	.3946-01	41.19	1.249	.3517	554.5	.9463-03
94	17.574	.56000	2407.0	.3249-01	.3842-01	.4227-01	41.19	1.338	.3517	554.5	.1014-02
94	17.574	.86800	2406.0	.3421-01	.4045-01	.4450-01	41.18	1.409	.3518	554.8	.1067-02
94	17.574	1.5720	2404.0	.1930-02	.2282-02	.2511-02	41.16	.7943-01	.3521	555.2	.6021-04
94	19.845	1.5720	2410.0	.1907-01	.2256-01	.2482-01	41.14	.7848	.3523	555.6	.5952-03
94	22.000	.86800	2156.0	.4437-01	.5247-01	.5775-01	41.14	1.825	.3525	555.8	.1385-02
94	22.000	1.5720	2155.0	.4236-01	.5010-01	.5514-01	41.11	1.741	.3529	556.5	.1322-02
94	22.610	.14000-01	2036.0	.1024	.1211	.1333	41.14	4.213	.3523	555.6	.3195-02
94	22.640	.30800	2160.0	.7679-01	.9082-01	.9995-01	41.13	3.158	.3526	556.0	.2396-02
94	22.640	.86800	2159.0	.9483-01	.1122	.1234	41.11	3.898	.3529	556.5	.2959-02
94	22.640	1.2180	2158.0	.9297-01	.1100	.1210	41.09	3.820	.3532	556.9	.2902-02

IH103 60-OT UPPER MID FUSELAGE

(R3PN11)

UPPER MID FUSE

PARAMETRIC DATA

MACH = 5.250 ALPHA = 5.000 BETA = -3.000 ELEVON = .0000
BDFLAP = .0000 SPDBRK = .0000

TEST CONDITIONS

RUN NUMBER	ALPHA DEG.	BETA DEG.	MACH	RN/FT /FT X10 6	PT PSIA	TT DEG. R	HT BTU/ LBM	PINF PSIA	TINF DEG. R	RHO SLUGS/ FT3	VINF FT/SEC	SCALE
95	5.000	-3.000	5.250	1.012	102.9	1520.	374.9	.1416	239.9	.4954-04	3986.	.1750-01

RUN NUMBER	PHI DEG.	HS SPHERE TW=540
95	.0000	.1673

TEST DATA

RUN NUMBER	XO MS	YO MS	T/C NO	H/HREF R=1.0	H/HREF R=.900	H/HREF R=.850	QREF BTU/ FT2SEC	QDOT BTU/ FT2SEC	HW/HT	TW DEG. R	STN NO R=.900
95	9.7050	.67200	2088.0	.3597-01	.4260-01	.4693-01	40.25	1.448	.3578	558.9	.1121-02
95	9.7170	1.7090	2089.0	.1531-01	.1813-01	.1996-01	40.29	.6166	.3572	558.1	.4771-03
95	10.806	.86700	2103.0	.1058-01	.1253-01	.1381-01	40.24	.4259	.3579	559.2	.3299-03
95	10.806	1.6380	2102.0	.3738-01	.4427-01	.4876-01	40.29	1.506	.3572	558.1	.1165-02
95	13.077	.86800	2125.0	.7402-02	.8764-02	.9652-02	40.33	.2985	.3566	557.0	.2307-03
95	13.077	1.8840	2122.0	.2556-01	.3026-01	.3333-01	40.30	1.030	.3570	557.7	.7965-03
95	13.107	.56000	2126.0	.7165-02	.8483-02	.9343-02	40.33	.2890	.3566	557.0	.2233-03
95	15.347	.86800	2140.0	.3487-02	.4128-02	.4546-02	40.36	.1407	.3561	556.4	.1087-03
95	15.347	1.5840	2139.0	.1764-01	.2088-01	.2300-01	40.34	.7115	.3565	556.9	.5497-03
95	17.549	1.1200	2405.0	.7959-02	.9423-02	.1038-01	40.34	.3211	.3563	556.7	.2480-03
95	17.574	.28000	2408.0	.1085-01	.1284-01	.1414-01	40.35	.4377	.3563	556.6	.3380-03
95	17.574	.56000	2407.0	.3512-02	.4157-02	.4578-02	40.35	.1417	.3562	556.5	.1094-03
95	17.574	.86800	2406.0	.4416-02	.5228-02	.5758-02	40.34	.1781	.3564	556.8	.1376-03
95	17.574	1.5720	2404.0	.2465-02	.2919-02	.3215-02	40.31	.9937-01	.3569	557.6	.7683-04
95	19.845	1.5720	2410.0	.1378-01	.1632-01	.1798-01	40.31	.5557	.3568	557.5	.4296-03
95	22.000	.86800	2156.0	.1698-01	.2011-01	.2215-01	40.30	.6843	.3570	557.7	.5292-03
95	22.000	1.5720	2155.0	.1839-01	.2178-01	.2399-01	40.26	.7405	.3576	558.7	.5733-03
95	22.610	.14000-01	2036.0	.3497-01	.4141-01	.4562-01	40.27	1.408	.3575	558.6	.1090-02
95	22.640	.30800	2160.0	.2810-01	.3328-01	.3666-01	40.28	1.132	.3573	558.3	.8760-03
95	22.640	.86800	2159.0	.3454-01	.4091-01	.4507-01	40.24	1.390	.3579	559.2	.1077-02
95	22.640	1.2180	2158.0	.3293-01	.3901-01	.4297-01	40.25	1.325	.3578	559.0	.1027-02

IH103 60-OT UPPER MID FUSELAGE

(R3PN12)

UPPER MID FUSE

PARAMETRIC DATA

MACH = 5.250 ALPHA = 10.00 BETA = -3.000 ELEVON = .0000
BDFLAP = .0000 SPDBRK = .0000

TEST CONDITIONS

RUN NUMBER	ALPHA DEG.	BETA DEG.	MACH	RN/FT /FT X10 6	PT PSIA	TT DEG. R	HT BTU/ LBM	PINF PSIA	TINF DEG. R	RHO SLUGS/ FT3	VINF FT/SEC	SCALE
96	10.00	-3.000	5.250	1.046	102.9	1490.	366.9	.1420	234.8	.5074-04	3943.	.1750-01

RUN NUMBER	PHI DEG.	HS SPHERE TW=540
96	.0000	.1672

TEST DATA

RUN NUMBER	XO MS	YO MS	T/C NO	H/HREF R=1.0	H/HREF R=.900	H/HREF R=.850	QREF BTU/ FT2SEC	QDOT BTU/ FT2SEC	HW/HT	TW DEG. R	STN NO R=.900
96	9.7050	.67200	2088.0	.3240-01	.3836-01	.4224-01	39.48	1.279	.3562	544.7	.9961-03
96	9.7170	1.7090	2089.0	.1387-01	.1642-01	.1808-01	39.53	.5484	.3555	543.6	.4265-03
96	10.806	.86700	2103.0	.8404-02	.9950-02	.1096-01	39.48	.3317	.3563	544.8	.2584-03
96	10.806	1.6380	2102.0	.2142-01	.2536-01	.2793-01	39.49	.8459	.3561	544.4	.6585-03
96	13.077	.86800	2125.0	.5033-02	.5958-02	.6560-02	39.53	.1990	.3554	543.5	.1547-03
96	13.077	1.6840	2122.0	.1163-01	.1377-01	.1516-01	39.52	.4596	.3556	543.8	.3575-03
96	13.107	.56000	2126.0	.4897-02	.5797-02	.6383-02	39.53	.1936	.3555	543.6	.1505-03
96	15.347	.86800	2140.0	.1396-02	.1652-02	.1819-02	39.55	.5522-01	.3551	542.9	.4291-04
96	15.347	1.5840	2139.0	.4577-02	.5417-02	.5965-02	39.54	.1810	.3552	543.2	.1407-03
96	17.549	1.1200	2405.0	.2178-02	.2575-02	.2833-02	39.77	.8661-01	.3517	537.8	.6689-04
96	17.574	.28000	2408.0	.1810-02	.2143-02	.2359-02	39.54	.7158-01	.3553	543.2	.5564-04
96	17.574	.56000	2407.0	.1571-02	.1860-02	.2048-02	39.54	.6214-01	.3552	543.1	.4830-04
96	17.574	.86800	2406.0	.1848-02	.2188-02	.2409-02	39.54	.7309-01	.3552	543.2	.5681-04
96	19.845	1.5720	2410.0	.2919-02	.3455-02	.3804-02	39.53	.1154	.3555	543.5	.8972-04
96	22.000	.86800	2156.0	.7252-02	.8584-02	.9451-02	39.53	.2866	.3555	543.5	.2229-03
96	22.000	1.5720	2155.0	.4574-02	.5415-02	.5963-02	39.49	.1806	.3560	544.3	.1406-03
96	22.610	.14000-01	2036.0	.1158-01	.1371-01	.1510-01	39.49	.4572	.3561	544.5	.3560-03
96	22.640	.30800	2160.0	.9814-02	.1162-01	.1280-01	39.47	.3874	.3564	544.9	.3017-03
96	22.640	.86800	2159.0	.1366-01	.1618-01	.1781-01	39.49	.5396	.3560	544.4	.4201-03
96	22.640	1.2180	2158.0	.1372-01	.1625-01	.1789-01	39.47	.5417	.3563	544.8	.4219-03

IH103 60-OT UPPER MID FUSELAGE

(R3PN13)

UPPER MID FUSE

PARAMETRIC DATA

MACH = 5.250 ALPHA = .0000 BETA = -9.000 ELEVON = .0000
BDFLAP = .0000 SPDBRK = .0000

TEST CONDITIONS

RUN NUMBER	ALPHA DEG.	BETA DEG.	MACH	RN/FT /FT X10 6	PT PSIA	TT DEG. R	HT BTU/ LBM	PINF PSIA	TINF DEG. R	RHO SLUGS/ FT3	VINF FT/SEC	SCALE
100	.0000	-9.000	5.250	1.056	104.1	1491.	367.2	.1435	235.0	.5127-04	3944.	.1750-01

RUN NUMBER	PHI DEG.	HS SPHERE TW=540
100	.0000	.1681

TEST DATA

RUN NUMBER	XO MS	YO MS	T/C NO	H/HREF R=1.0	H/HREF R=.900	H/HREF R=.850	QREF BTU/ FT2SEC	QDOT BTU/ FT2SEC	HW/HT	TW DEG. R	STN NO R=.900
100	9.7050	.67200	2088.0	.4959-01	.5876-01	.6475-01	39.54	1.961	.3592	549.6	.1518-02
100	9.7170	1.7090	2089.0	.3126-01	.3703-01	.4080-01	39.58	1.237	.3586	548.7	.9566-03
100	10.806	.86700	2103.0	.1445-01	.1712-01	.1886-01	39.54	.5712	.3592	549.7	.4422-03
100	10.806	1.6380	2102.0	.5429-01	.6432-01	.7087-01	39.56	2.148	.3589	549.1	.1661-02
100	13.077	.86800	2125.0	.1183-01	.1402-01	.1544-01	39.61	.4686	.3582	548.1	.3621-03
100	13.077	1.6840	2122.0	.4539-01	.5377-01	.5924-01	39.59	1.797	.3585	548.5	.1389-02
100	13.107	.56000	2126.0	.8404-02	.9956-02	.1097-01	39.60	.3328	.3583	548.2	.2572-03
100	15.347	.86800	2140.0	.1706-01	.2021-01	.2226-01	39.63	.6762	.3578	547.5	.5221-03
100	15.347	1.5840	2139.0	.3021-01	.3578-01	.3942-01	39.63	1.197	.3578	547.5	.9244-03
100	17.549	1.1200	2405.0	.1650-01	.1952-01	.2149-01	39.84	.6573	.3545	542.4	.5044-03
100	17.574	.28000	2408.0	.7844-02	.9291-02	.1024-01	39.61	.3107	.3580	547.9	.2400-03
100	17.574	.56000	2407.0	.1017-01	.1204-01	.1327-01	39.62	.4028	.3580	547.8	.3111-03
100	17.574	.86800	2406.0	.1321-01	.1564-01	.1723-01	39.62	.5232	.3580	547.8	.4041-03
100	17.574	1.5720	2404.0	.4248-02	.5032-02	.5545-02	39.58	.1681	.3586	548.8	.1300-03
100	19.845	1.5720	2410.0	.2499-01	.2960-01	.3261-01	39.61	.9898	.3581	548.0	.7646-03
100	22.000	.86800	2156.0	.2014-01	.2385-01	.2628-01	39.61	.7976	.3581	548.0	.6162-03
100	22.000	1.5720	2155.0	.1844-01	.2184-01	.2406-01	39.57	.7296	.3587	548.8	.5642-03
100	22.610	.14000-01	2036.0	.4144-01	.4910-01	.5409-01	39.58	1.640	.3586	548.7	.1268-02
100	22.640	.30800	2160.0	.3644-01	.4317-01	.4757-01	39.58	1.442	.3586	548.8	.1115-02
100	22.640	.86800	2159.0	.4928-01	.5837-01	.6431-01	39.59	1.951	.3584	548.4	.1508-02
100	22.640	1.2180	2158.0	.4810-01	.5698-01	.6278-01	39.58	1.904	.3585	548.6	.1472-02

IH103 60-OT UPPER MID FUSELAGE (R3PN14)

UPPER MID FUSE

PARAMETRIC DATA

MACH = 5.250 ALPHA = -5.000 BETA = -9.000 ELEVON = .0000
BDFLAP = .0000 SPDBRK = .0000

TEST CONDITIONS

RUN NUMBER	ALPHA DEG.	BETA DEG.	MACH	RN/FT /FT X10 6	PT PSIA	TT DEG. R	HT BTU/ LBM	PINF PSIA	TINF DEG. R	RHO SLUGS/ FT3	VINF FT/SEC	SCALE
99	-5.000	-9.000	5.250	1.045	102.9	1490.	366.9	.1420	234.8	.5073-04	3943.	.1750-01

RUN NUMBER	PHI DEG.	HS SPHERE TW=540
99	.0000	.1672

TEST DATA

RUN NUMBER	XO MS	YO MS	T/C NO	H/HREF R=1.0	H/HREF R=.900	H/HREF R=.850	QREF BTU/ FT2SEC	QDOT BTU/ FT2SEC	HW/HT	TW DEG. R	STN NO R=.900
99	9.7050	.67200	2088.0	.5298-01	.6285-01	.6931-01	39.03	2.068	.3634	555.8	.1632-02
99	9.7170	1.7090	2089.0	.4504-01	.5344-01	.5892-01	39.04	1.759	.3632	555.4	.1387-02
99	10.806	.86700	2103.0	.1754-01	.2081-01	.2295-01	39.01	.6842	.3637	556.3	.5403-03
99	10.806	1.6380	2102.0	.5723-01	.6789-01	.7486-01	39.05	2.235	.3630	555.1	.1763-02
99	13.077	.86800	2125.0	.1408-01	.1670-01	.1841-01	39.10	.5506	.3622	553.9	.4335-03
99	13.077	1.6840	2122.0	.4866-01	.5771-01	.6363-01	39.08	1.902	.3625	554.4	.1498-02
99	13.107	.56000	2126.0	.9710-02	.1152-01	.1270-01	39.10	.3796	.3623	554.1	.2990-03
99	15.347	.86800	2140.0	.7624-02	.9040-02	.9966-02	39.13	.2984	.3617	553.2	.2347-03
99	15.347	1.6840	2139.0	.3234-01	.3834-01	.4227-01	39.13	1.265	.3618	553.2	.9955-03
99	17.549	1.1200	2[illegible]5.0	.1662-01	.1969-01	.2170-01	39.34	.6540	.3584	548.2	.5114-03
99	17.574	.28000	2408.0	.1014-01	.1203-01	.1326-01	39.12	.3969	.3619	553.4	.3123-03
99	17.574	.56000	2407.0	.1534-01	.1819-01	.2006-01	39.13	.6004	.3618	553.2	.4723-03
99	17.574	.86800	2406.0	.1604-01	.1901-01	.2096-01	39.13	.6274	.3619	553.4	.4937-03
99	17.574	1.5720	2404.0	.7147-02	.8477-02	.9347-02	39.07	.2792	.3627	554.7	.2201-03
99	19.845	1.5720	2410.0	.3048-01	.3614-01	.3985-01	39.11	1.192	.3620	553.7	.9383-03
99	22.000	.86800	2156.0	.4108-01	.4872-01	.5371-01	39.11	1.607	.3620	553.7	.1265-02
99	22.000	1.5720	2155.0	.5961-01	.7071-01	.7796-01	39.08	2.329	.3626	554.6	.1836-02
99	22.610	.14000-01	2036.0	.1120	.1329	.1465	39.08	4.378	.3626	554.6	.3450-02
99	22.640	.30800	2160.0	.1006	.1193	.1316	39.08	3.931	.3626	554.6	.3098-02
99	22.640	.86800	2159.0	.1078	.1278	.1409	39.08	4.212	.3626	554.5	.3319-02
99	22.640	1.2180	2158.0	.1028	.1219	.1344	39.09	4.018	.3625	554.3	.3165-02

IH103 60-OT UPPER MID FUSELAGE (R3PN15)

UPPER MID FUSE

PARAMETRIC DATA

MACH = 5.250 ALPHA = 5.000 BETA = -9.000 ELEVON = .0000
BDFLAP = .0000 SPDBRK = .0000

TEST CONDITIONS

RUN NUMBER	ALPHA DEG.	BETA DEG.	MACH	RN/FT /FT X10 6	PT PSIA	TT DEG. R	HT BTU/ LBM	PINF PSIA	TINF DEG. R	RHO SLUGS/ FT3	VINF FT/SEC	SCALE
98	5.000	-9.000	5.250	1.057	103.4	1484.	365.2	.1426	233.7	.5120-04	3934.	.1750-01

RUN NUMBER	PHI DEG.	HS SPHERE TW=540
98	.0000	.1675

TEST DATA

RUN NUMBER	XO MS	YO MS	T/C NO	H/HREF R=1.0	H/HREF R=.900	H/HREF R=.850	QREF BTU/ FT2SEC	QDOT BTU/ FT2SEC	HW/HT	TW DEG. R	STN NO R=.900
98	9.7050	.67200	2088.0	.4314-01	.5115-01	.5639-01	39.03	1.684	.3615	550.2	.1321-02
98	9.7170	1.7090	2089.0	.2910-01	.3450-01	.3802-01	39.08	1.137	.3608	549.1	.8912-03
98	10.806	.86700	2103.0	.1311-01	.1554-01	.1713-01	39.03	.5116	.3615	550.2	.4015-03
98	10.806	1.6380	2102.0	.4756-01	.5638-01	.6215-01	39.06	1.858	.3611	549.6	.1457-02
98	13.077	.86800	2125.0	.1110-01	.1315-01	.1450-01	39.11	.4341	.3602	548.3	.3398-03
98	13.077	1.6840	2122.0	.2411-01	.2858-01	.3150-01	39.09	.9425	.3606	548.9	.7384-03
98	13.107	.56000	2126.0	.9495-02	.1125-01	.1240-01	39.11	.3713	.3603	548.4	.2907-03
98	15.347	.86800	2140.0	.1170-01	.1387-01	.1529-01	39.13	.4580	.3599	547.8	.3583-03
98	15.347	1.5840	2139.0	.1951-01	.2312-01	.2548-01	39.13	.7632	.3600	548.0	.5973-03
98	17.549	1.1200	2405.0	.9458-02	.1120-01	.1233-01	39.34	.3721	.3566	542.8	.2894-03
98	17.574	.28000	2408.0	.3020-02	.3579-02	.3945-02	39.11	.1181	.3603	548.3	.9247-04
98	17.574	.56000	2407.0	.5345-02	.6335-02	.6982-02	39.13	.2091	.3601	548.0	.1637-03
98	17.574	.86800	2406.0	.6961-02	.8250-02	.9092-02	39.12	.2723	.3601	548.1	.2131-03
98	17.574	1.5720	2404.0	.1551-02	.1838-02	.2026-02	39.10	.6062-01	.3605	548.7	.4749-04
98	19.845	1.5720	2410.0	.1128-01	.1337-01	.1474-01	39.10	.4412	.3604	548.6	.3455-03
98	22.000	.86800	2156.0	.1268-01	.1503-01	.1656-01	39.10	.4957	.3604	548.5	.3882-03
98	22.000	1.5720	2155.0	.1073-01	.1272-01	.1402-01	39.07	.4191	.3610	549.4	.3286-03
98	22.610	.14000-01	2036.0	.2621-01	.3107-01	.3425-01	39.07	1.024	.3609	549.3	.8027-03
98	22.640	.30800	2160.0	.2564-01	.3039-01	.3350-01	39.06	1.001	.3610	549.5	.7852-03
98	22.640	.86800	2159.0	.2802-01	.3321-01	.3661-01	39.07	1.094	.3610	549.4	.8580-03
98	22.640	1.2180	2158.0	.2713-01	.3217-01	.3546-01	39.05	1.060	.3612	549.8	.8311-03

IH103 60-OT UPPER MID FUSELAGE (R3PN16)

UPPER MID FUSE

PARAMETRIC DATA

MACH = 5.250 ALPHA = 10.00 BETA = -9.000 ELEVON = .0000
BDFLAP = .0000 SPDBRK = .0000

TEST CONDITIONS

RUN NUMBER	ALPHA DEG.	BETA DEG.	MACH	RN/FT /FT X10 6	PT PSIA	TT DEG. R	HT BTU/ LBM	PINF PSIA	TINF DEG. R	RHO SLUGS/ FT3	VINF FT/SEC	SCALE
97	10.00	-9.000	5.250	1.033	103.2	1504.	370.5	.1422	237.1	.5033-04	3962.	.1750-01

RUN NUMBER	PHI DEG.	HS SPHERE TW=540
97	.0000	.1675

TEST DATA

RUN NUMBER	XO MS	YO MS	T/C NO	H/HREF R=1.0	H/HREF R=.900	H/HREF R=.850	QREF BTU/ FT2SEC	QDOT BTU/ FT2SEC	HW/HT	TW DEG. R	STN NO R=.900
97	9.7050	.67200	2088.0	.3647-01	.4315-01	.4750-01	40.07	1.461	.3541	546.7	.1126-02
97	9.7170	1.7090	2089.0	.2433-01	.2878-01	.3168-01	40.12	.9761	.3533	545.6	.7511-03
97	10.806	.86700	2103.0	.9065-02	.1073-01	.1181-01	40.06	.3632	.3541	546.8	.2799-03
97	10.806	1.6380	2102.0	.1443-01	.1708-01	.1880-01	40.10	.5788	.3536	546.0	.4456-03
97	13.077	.86800	2125.0	.5647-02	.6679-02	.7351-02	40.14	.2267	.3529	544.9	.1743-03
97	13.077	1.6840	2122.0	.2223-01	.2630-01	.2895-01	40.13	.8924	.3531	545.1	.6864-03
97	13.107	.56000	2126.0	.3957-02	.4681-02	.5152-02	40.14	.1588	.3530	545.1	.1222-03
97	15.347	.86800	2140.0	.5811-02	.6872-02	.7562-02	40.18	.2335	.3524	544.1	.1793-03
97	15.347	1.5840	2139.0	.7291-02	.8622-02	.9488-02	40.18	.2929	.3523	544.0	.2250-03
97	17.549	1.1200	2405.0	.6173-02	.7293-02	.8021-02	40.40	.2494	.3489	538.7	.1904-03
97	17.574	.28000	2408.0	.1040-02	.1230-02	.1354-02	40.17	.4180-01	.3524	544.2	.3211-04
97	17.574	.56000	2407.0	.2054-02	.2430-02	.2674-02	40.17	.8253-01	.3524	544.2	.6341-04
97	17.574	.86800	2406.0	.2353-02	.2783-02	.3063-02	40.18	.9455-01	.3524	544.1	.7263-04
97	17.574	1.5720	2404.0	.1576-02	.1864-02	.2052-02	40.13	.6325-01	.3532	545.3	.4865-04
97	19.845	1.5720	2410.0	.1223-01	.1447-01	.1592-01	40.17	.4914	.3525	544.2	.3776-03
97	22.000	.86800	2156.0	.3249-02	.3843-02	.4229-02	40.16	.1305	.3527	544.6	.1003-03
97	22.000	1.5720	2155.0	.8761-02	.1036-01	.1141-01	40.12	.3515	.3533	545.5	.2705-03
97	22.610	.14000-01	2036.0	.1631-01	.1930-01	.2124-01	40.11	.6544	.3534	545.7	.5036-03
97	22.640	.30800	2160.0	.2313-01	.2736-01	.3012-01	40.10	.9275	.3536	545.9	.7140-03
97	22.640	.86800	2159.0	.1490-01	.1763-01	.1940-01	40.13	.5981	.3531	545.2	.4601-03
97	22.640	1.2180	2158.0	.1633-01	.1932-01	.2127-01	40.11	.6552	.3534	545.7	.5043-03

IH103 60-OT UPPER MID FUSELAGE (R3PN17)

UPPER MID FUSE

PARAMETRIC DATA

MACH = 5.250 ALPHA = -10.00 BETA = -9.000 ELEVON = .0000
BDFLAP = .0000 SPDBRK = .0000

TEST CONDITIONS

RUN NUMBER	ALPHA DEG.	BETA DEG.	MACH	RN/FT /FT X10 6	PT PSIA	TT DEG. R	HT BTU/ LBM	PINF PSIA	TINF DEG. R	RHO SLUGS/ FT3	VINF FT/SEC	SCALE
110	-10.00	-9.000	5.250	1.092	103.7	1458.	358.4	.1434	229.4	.5246-04	3897.	.1750-01

RUN NUMBER	PHI DEG.	HS SPHERE TW=540
110	.0000	.1676

TEST DATA

RUN NUMBER	XO MS	YO MS	T/C NO	H/HREF R=1.0	H/HREF R=.900	H/HREF R=.850	QREF BTU/ FT2SEC	QDOT BTU/ FT2SEC	HW/HT	TW DEG. R	STN NO R=.900
110	9.7050	.67200	2088.0	.7040-01	.8403-01	.9303-01	37.00	2.605	.3834	572.6	.2139-02
110	9.7170	1.7090	2089.0	.2392-01	.2854-01	.3159-01	37.05	.8862	.3825	571.4	.7264-03
110	10.806	.86700	2103.0	.1377-01	.1644-01	.1821-01	36.97	.5092	.3839	573.4	.4185-03
110	10.806	1.6380	2102.0	.7930-01	.9462-01	.1047	37.06	2.939	.3824	571.2	.2408-02
110	13.077	.86800	2125.0	.1660-01	.1980-01	.2192-01	37.09	.6156	.3819	570.4	.5040-03
110	13.077	1.6840	2122.0	.5269-01	.6285-01	.6956-01	37.11	1.955	.3815	570.0	.1600-02
110	13.107	.56000	2126.0	.3731-01	.4452-01	.4928-01	37.08	1.384	.3820	570.7	.1133-02
110	13.107	1.1280	2124.0	.1071-02	.1278-02	.1415-02	37.02	.3964-01	.3830	572.1	.3252-04
110	15.347	.86800	2140.0	.5658-01	.6749-01	.7468-01	37.14	2.102	.3810	569.2	.1718-02
110	15.347	1.5840	2139.0	.5679-01	.6772-01	.7494-01	37.16	2.110	.3808	568.8	.1724-02
110	17.549	1.1200	2405.0	.7167-01	.8549-01	.9461-01	37.12	2.660	.3814	569.8	.2176-02
110	17.574	.28000	2408.0	.6256-01	.7463-01	.8260-01	37.10	2.321	.3817	570.2	.1900-02
110	17.574	.56000	2407.0	.6474-01	.7723-01	.8547-01	37.10	2.402	.3817	570.1	.1966-02
110	17.574	.86800	2406.0	.6452-01	.7697-01	.8518-01	37.10	2.394	.3817	570.1	.1959-02
110	17.574	1.5720	2404.0	.1940-01	.2315-01	.2562-01	37.06	.7190	.3824	571.2	.5892-03
110	19.845	1.5720	2410.0	.6579-01	.7849-01	.8687-01	37.11	2.441	.3816	570.0	.1998-02
110	22.000	.86800	2156.0	.4555-01	.5434-01	.6015-01	37.08	1.689	.3820	570.6	.1383-02
110	22.000	1.5720	2155.0	.4657-01	.5556-01	.6150-01	37.07	1.726	.3823	571.0	.1414-02
110	22.610	.14000-01	2036.0	.1164	.1389	.1538	37.01	4.308	.3832	572.4	.3536-02
110	22.640	.30800	2160.0	.1067	.1273	.1409	37.04	3.951	.3827	571.6	.3239-02
110	22.640	.86800	2159.0	.1183	.1412	.1563	37.06	4.385	.3823	571.1	.3593-02

IH103 60-OT UPPER MID FUSELAGE (R3PN17)

RUN NUMBER	XO MS	YO MS	T/C NO	H/HREF R=1.0	H/HREF R=.900	H/HREF R=.850	QREF BTU/ FT2SEC	QDOT BTU/ FT2SEC	HW/HT	TW DEG. R	STN NO R=.900
110	22.640	1.2180	2158.0	.1140	.1361	.1506	37.07	4.227	.3822	571.0	.3463-02

IH103 60-OT UPPER MID FUSELAGE

(R3PN18)

UPPER MID FUSE

PARAMETRIC DATA

MACH = 5.250 ALPHA = -10.00 BETA = -3.000 ELEVON = .0000
BDFLAP = .0000 SPDBRK = .0000

TEST CONDITIONS

RUN NUMBER	ALPHA DEG.	BETA DEG.	MACH	RN/FT /FT X10 6	PT PSIA	TT DEG. R	HT BTU/ LBM	PINF PSIA	TINF DEG. R	RHO SLUGS/ FT3	VINF FT/SEC	SCALE
111	-10.00	-3.000	5.250	1.024	103.5	1514.	373.3	.1425	238.9	.5005-04	3977.	.1750-01

RUN NUMBER	PHI DEG.	HS SPHERE TW=540
111	.0000	.1678

TEST DATA

RUN NUMBER	XO MS	YO MS	T/C NO	H/HREF R=1.0	H/HREF R=.900	H/HREF R=.850	QREF BTU/ FT2SEC	QDOT BTU/ FT2SEC	HW/HT	TW DEG. R	STN NO R=.900
111	9.7050	.67200	2088.0	.6012-01	.7106-01	.7817-01	40.66	2.444	.3506	545.3	.1861-02
111	9.7170	1.7090	2089.0	.1290-01	.1524-01	.1677-01	40.70	.5250	.3499	544.3	.3992-03
111	10.806	.86700	2103.0	.1385-01	.1638-01	.1802-01	40.65	.5632	.3507	545.5	.4289-03
111	10.806	1.6380	2102.0	.7452-01	.8807-01	.9689-01	40.68	3.031	.3502	544.8	.2307-02
111	13.077	.86800	2125.0	.3666-01	.4333-01	.4766-01	40.71	1.493	.3497	544.0	.1135-02
111	13.077	1.6840	2122.0	.2300-01	.2718-01	.2990-01	40.71	.9363	.3498	544.2	.7119-03
111	13.107	.56000	2126.0	.2562-01	.3028-01	.3331-01	40.70	1.043	.3499	544.4	.7931-03
111	15.347	.86800	2140.0	.2383-01	.2816-01	.3097-01	40.72	.9703	.3496	543.9	.7375-03
111	15.347	1.5840	2139.0	.3560-01	.4206-01	.4626-01	40.73	1.450	.3495	543.6	.1102-02
111	17.549	1.1200	2405.0	.3114-01	.3679-01	.4047-01	40.73	1.268	.3495	543.6	.9636-03
111	17.574	.28000	2408.0	.3174-01	.3751-01	.4126-01	40.71	1.292	.3497	544.0	.9825-03
111	17.574	.56000	2407.0	.3773-01	.4458-01	.4903-01	40.72	1.536	.3496	543.9	.1168-02
111	17.574	.86800	2406.0	.3295-01	.3894-01	.4283-01	40.72	1.342	.3497	544.0	.1020-02
111	17.574	1.5720	2404.0	.1545-01	.1825-01	.2008-01	40.71	.6288	.3498	544.1	.4781-03
111	19.845	1.5720	2410.0	.6179-01	.7301-01	.8031-01	40.72	2.516	.3497	543.9	.1912-02
111	22.000	.86800	2156.0	.4231-01	.5000-01	.5500-01	40.70	1.722	.3499	544.3	.1310-02
111	22.000	1.5720	2155.0	.5052-01	.5971-01	.6569-01	40.67	2.055	.3504	545.0	.1564-02
111	22.610	.14000-01	2036.0	.1368	.1617	.1779	40.67	5.565	.3503	544.9	.4235-02
111	22.640	.30800	2160.0	.1229	.1453	.1598	40.68	5.000	.3503	544.9	.3805-02
111	22.640	.86800	2159.0	.1461	.1727	.1900	40.65	5.941	.3506	545.4	.4524-02
111	22.640	1.2180	2158.0	.1406	.1661	.1828	40.66	5.715	.3505	545.3	.4351-02

IH103 60-OT UPPER MID FUSELAGE

(R3PN19)

UPPER MID FUSE

PARAMETRIC DATA

MACH = 5.250 ALPHA = -10.00 BETA = -5.000 ELEVON = .0000
BDFLAP = .0000 SPDBRK = .0000

TEST CONDITIONS

RUN NUMBER	ALPHA DEG.	BETA DEG.	MACH	RN/FT /FT X10 6	PT PSIA	TT DEG. R	HT BTU/ LBM	PINF PSIA	TINF DEG. R	RHO SLUGS/ FT3	VINF FT/SEC	SCALE
120	-10.00	-5.000	5.250	1.081	103.6	1466.	360.5	.1432	230.7	.5207-04	3909.	.1750-01

RUN NUMBER	PHI DEG.	HS SPHERE TW=540
120	.0000	.1676

TEST DATA

RUN NUMBER	XO MS	YO MS	T/C NO	H/HREF R=1.0	H/HREF R=.900	H/HREF R=.850	QREF BTU/ FT2SEC	QDOT BTU/ FT2SEC	HW/HT	TW DEG. R	STN NO R=.900
120	9.7050	.67200	2088.0	.6485-01	.7710-01	.8514-01	38.00	2.464	.3706	556.9	.1972-02
120	9.7170	1.7090	2089.0	.1570-01	.1867-01	.2061-01	38.05	.5976	.3698	555.7	.4775-03
120	10.806	.86700	2103.0	.1362-01	.1619-01	.1788-01	38.00	.5175	.3707	557.0	.4142-03
120	10.806	1.6380	2102.0	.7905-01	.9396-01	.1037	38.05	3.008	.3699	555.7	.2403-02
120	13.077	.86800	2125.0	.2858-01	.3396-01	.3750-01	38.06	1.088	.3696	555.4	.8688-03
120	13.077	1.6840	2122.0	.3532-01	.4198-01	.4635-01	38.06	1.344	.3698	555.6	.1074-02
120	13.107	.56000	2126.0	.3669-01	.4361-01	.4815-01	38.06	1.396	.3698	555.6	.1115-02
120	13.107	1.1280	2124.0	.8122-03	.9654-03	.1066-02	38.06	.3091-01	.3698	555.6	.2469-04
120	15.347	.86800	2140.0	.4320-01	.5135-01	.5669-01	38.06	1.644	.3697	555.5	.1313-02
120	15.347	1.5840	2139.0	.4727-01	.5619-01	.6204-01	38.06	1.799	.3697	555.5	.1437-02
120	17.549	1.1200	2405.0	.6520-01	.7749-01	.8556-01	38.05	2.481	.3699	555.7	.1982-02
120	17.574	.28000	2408.0	.3130-01	.3720-01	.4108-01	38.05	1.191	.3699	555.8	.9517-03
120	17.574	.56000	2407.0	.3760-01	.4470-01	.4935-01	38.05	1.431	.3699	555.8	.1143-02
120	17.574	.86800	2406.0	.5944-01	.7065-01	.7801-01	38.04	2.261	.3700	555.9	.1807-02
120	17.574	1.5720	2404.0	.1368-01	.1626-01	.1795-01	38.05	.5205	.3698	555.7	.4159-03
120	19.845	1.5720	2410.0	.6536-01	.7771-01	.8581-01	38.02	2.485	.3704	556.5	.1988-02
120	22.000	.86800	2156.0	.4113-01	.4890-01	.5401-01	37.99	1.562	.3709	557.3	.1251-02
120	22.000	1.5720	2155.0	.5402-01	.6424-01	.7095-01	37.96	2.051	.3713	558.0	.1643-02
120	22.610	.14000-01	2036.0	.1415	.1682	.1858	37.96	5.370	.3713	557.9	.4303-02
120	22.640	.30800	2160.0	.1231	.1464	.1617	37.97	4.674	.3716	557.7	.3744-02
120	22.640	.86800	2159.0	.1304	.1551	.1713	37.92	4.946	.3719	558.7	.3967-02

IH103 60-OT UPPER MID FUSELAGE (R3PN19)

RUN NUMBER	XO MS	YO MS	T/C NO	H/HREF R=1.0	H/HREF R=.900	H/HREF R=.850	QREF BTU/ FT2SEC	QDOT BTU/ FT2SEC	HW/HT	TW DEG. R	STN NO R=.900
120	22.640	1.2180	2158.0	.1273	.1514	.1672	37.93	4.829	.3718	558.6	.3873-02

IH103 60-OT UPPER MID FUSELAGE

(R3PN20)

UPPER MID FUSE

PARAMETRIC DATA

MACH = 5.250 ALPHA = -10.00 BETA = .0000 ELEVON = .0000
BDFLAP = .0000 SPDBRK = .0000

TEST CONDITIONS

RUN NUMBER	ALPHA DEG.	BETA DEG.	MACH	RN/FT /FT X10 6	PT PSIA	TT DEG. R	HT BTU/ LBM	PINF PSIA	TINF DEG. R	RHO SLUGS/ FT3	VINF FT/SEC	SCALE
121	-10.00	.0000	5.250	.9993	103.7	1539.	379.8	.1425	243.0	.4920-04	4011.	.1750-01

RUN NUMBER	PHI DEG.	HS SPHERE TW=540
121	.0000	.1681

TEST DATA

RUN NUMBER	XO MS	YO MS	T/C NO	H/HREF R=1.0	H/HREF R=.900	H/HREF R=.850	QREF BTU/ FT2SEC	QDOT BTU/ FT2SEC	HW/HT	TW DEG. R	STN NO R=.900
121	9.7050	.67200	2088.0	.5465-01	.6463-01	.7112-01	41.31	2.258	.3522	557.4	.1709-02
121	9.7170	1.7090	2089.0	.1086-01	.1284-01	.1413-01	41.41	.4498	.3507	555.1	.3396-03
121	10.806	.86700	2103.0	.1166-01	.1379-01	.1517-01	41.32	.4818	.3520	557.1	.3646-03
121	10.806	1.6380	2102.0	.5392-01	.6375-01	.7014-01	41.36	2.230	.3515	556.3	.1686-02
121	13.077	.86800	2125.0	.2045-01	.2417-01	.2660-01	41.39	.8462	.3511	555.6	.6393-03
121	13.077	1.6840	2122.0	.7002-02	.8278-02	.9109-02	41.36	.2896	.3515	556.3	.2189-03
121	13.107	.56000	2126.0	.3416-01	.4038-01	.4443-01	41.38	1.413	.3512	555.8	.1068-02
121	15.347	.86800	2140.0	.4313-01	.5099-01	.5610-01	41.38	1.785	.3511	555.7	.1349-02
121	15.347	1.5840	2139.0	.3002-01	.3549-01	.3905-01	41.36	1.242	.3515	556.3	.9386-03
121	17.549	1.1200	2405.0	.3292-01	.3892-01	.4283-01	41.37	1.362	.3513	556.0	.1029-02
121	17.574	.28000	2408.0	.5610-01	.6632-01	.7297-01	41.37	2.321	.3513	555.9	.1754-02
121	17.574	.56000	2407.0	.5267-01	.6227-01	.6851-01	41.37	2.179	.3513	556.0	.1647-02
121	17.574	.86800	2406.0	.3820-01	.4517-01	.4970-01	41.36	1.580	.3515	556.3	.1194-02
121	17.574	1.5720	2404.0	.1126-01	.1332-01	.1465-01	41.37	.4660	.3513	556.0	.3522-03
121	19.845	1.5720	2410.0	.3709-01	.4386-01	.4827-01	41.30	1.532	.3523	557.6	.1160-02
121	22.000	.86800	2156.0	.4137-01	.4893-01	.5385-01	41.29	1.708	.3525	557.8	.1294-02
121	22.000	1.5720	2155.0	.5625-01	.6655-01	.7325-01	41.22	2.319	.3535	559.5	.1760-02
121	22.610	.14000-01	2036.0	.1366	.1616	.1778	41.27	5.637	.3528	558.4	.4272-02
121	22.640	.30800	2160.0	.1201	.1420	.1563	41.26	4.953	.3530	558.7	.3755-02
121	22.640	.86800	2159.0	.1130	.1337	.1471	41.20	4.654	.3539	560.1	.3534-02
121	22.640	1.2180	2158.0	.1060	.1254	.1380	41.19	4.365	.3541	560.4	.3316-02

IH103 60-OT UPPER MID FUSELAGE (R3PN21)

UPPER MID FUSE

PARAMETRIC DATA

MACH = 5.250 ALPHA = .0000 BETA = .0000 ELEVON = .0000
BDFLAP = .0000 SPDBRK = .0000

TEST CONDITIONS

RUN NUMBER	ALPHA DEG.	BETA DEG.	MACH	RN/FT /FT X10 6	PT PSIA	TT DEG. R	HT BTU/ LBM	PINF PSIA	TINF DEG. R	RHO SLUGS/ FT3	VINF FT/SEC	SCALE
131	.0000	.0000	5.250	.6469	103.6	1999.	504.0	.1367	322.6	.3557-04	4622.	.1750-01

RUN NUMBER	PHI DEG.	HS SPHERE TW=540
131	.0000	.1689

TEST DATA

RUN NUMBER	XO MS	YO MS	T/C NO	H/HREF R=1.0	H/HREF R=.900	H/HREF R=.850	QREF BTU/ FT2SEC	QDOT BTU/ FT2SEC	HW/HT	TW DEG. R	STN NO R=.900
131	9.7050	.67200	2088.0	.4429-01	.5120-01	.5553-01	63.07	2.793	.2590	544.0	.1635-02
131	9.7170	1.7090	2089.0	.9315-02	.1076-01	.1167-01	63.32	.5898	.2562	538.1	.3436-03
131	10.806	.86700	2103.0	.1126-01	.1301-01	.1412-01	63.04	.7097	.2593	544.7	.4155-03
131	10.806	1.6380	2102.0	.4000-01	.4623-01	.5013-01	63.19	2.528	.2576	541.2	.1476-02
131	13.077	.86800	2125.0	.8196-02	.9474-02	.1028-01	63.09	.5171	.2587	543.5	.3025-03
131	13.077	1.6840	2122.0	.1781-01	.2059-01	.2233-01	63.10	1.124	.2586	543.3	.6574-03
131	13.107	.56000	2126.0	.1737-01	.2008-01	.2178-01	63.08	1.096	.2589	543.8	.6411-03
131	15.347	.86800	2140.0	.1238-01	.1431-01	.1552-01	63.02	.7801	.2595	545.2	.4569-03
131	15.347	1.5840	2139.0	.9524-02	.1101-01	.1194-01	63.00	.6000	.2598	545.7	.3515-03
131	17.549	1.1200	2405.0	.3066-02	.3545-02	.3845-02	62.96	.1930	.2601	546.5	.1132-03
131	17.574	.28000	2408.0	.1031-01	.1192-01	.1293-01	62.96	.6492	.2601	546.4	.3806-03
131	17.574	.56000	2407.0	.9281-02	.1073-01	.1164-01	62.96	.5844	.2601	546.4	.3426-03
131	17.574	.86800	2406.0	.5324-02	.6156-02	.6678-02	62.96	.3352	.2602	546.6	.1965-03
131	17.574	1.5720	2404.0	.2056-02	.2377-02	.2579-02	62.99	.1295	.2598	545.8	.7589-04
131	19.645	1.5720	2410.0	.7040-02	.8142-02	.8833-02	62.87	.4426	.2612	548.6	.2599-03
131	22.000	.86800	2156.0	.1551-01	.1795-01	.1947-01	62.79	.9742	.2620	550.4	.5728-03
131	22.000	1.5720	2155.0	.2295-01	.2655-01	.2881-01	62.74	1.440	.2626	551.6	.8473-03
131	22.610	.14000-01	2036.0	.9805-01	.1134	.1231	62.73	6.151	.2627	551.9	.3620-02
131	22.640	.30800	2160.0	.6810-01	.7879-01	.8549-01	62.72	4.271	.2629	552.2	.2514-02
131	22.640	.86800	2159.0	.3096-01	.3583-01	.3888-01	62.70	1.941	.2631	552.6	.1143-02
131	22.640	1.2180	2158.0	.2921-01	.3379-01	.3667-01	62.70	1.831	.2631	552.6	.1078-02

IH103 60-OT UPPER RH WING (R3P001)

UPPER RH WING

PARAMETRIC DATA

MACH = 5.250 ALPHA = .0000 BETA = .0000 ELEVON = .0000
BDFLAP = .0000 SPDBRK = .0000

TEST CONDITIONS

RUN NUMBER	ALPHA DEG.	BETA DEG.	MACH	RN/FT /FT X10 6	PT PSIA	TT DEG. R	HT BTU/ LBM	PINF PSIA	TINF DEG. R	RHO SLUGS/ FT3	VINF FT/SEC	SCALE
61	.0000	.0000	5.250	1.040	103.5	1499.	369.3	.1426	236.3	.5062-04	3956.	.1750-01

RUN NUMBER	PHI DEG.	HS SPHERE TW=540
61	.0000	.1677

TEST DATA

RUN NUMBER	XO MS	2Y/BW	T/C NO	H/HREF R=1.0	H/HREF R=.900	H/HREF R=.850	QREF BTU/ FT2SEC	QDOT BTU/ FT2SEC	HW/HT	TW DEG. R	STN NO R=.900
61	24.036	.50000	460.00	.3877-03	.4598-03	.5069-03	39.48	.1531-01	.3619	557.0	.1195-04
61	24.036	.55000	461.00	.1643-02	.1948-02	.2147-02	39.49	.6487-01	.3617	556.8	.5065-04
61	24.036	.60000	462.00	.1516-02	.1797-02	.1980-02	39.55	.5994-01	.3608	555.2	.4672-04
61	24.036	.65000	463.00	.5938-02	.7040-02	.7760-02	39.53	.2348	.3611	555.7	.1831-03
61	24.036	.70000	464.00	.8546-02	.1013-01	.1117-01	39.54	.3380	.3609	555.5	.2635-03
61	24.036	.72500	465.00	.1021-01	.1211-01	.1334-01	39.56	.4040	.3607	555.2	.3148-03
61	24.036	.75000	466.00	.1157-01	.1372-01	.1512-01	39.55	.4577	.3608	555.3	.3567-03
61	24.036	.77500	467.00	.1160-01	.1376-01	.1516-01	39.58	.4593	.3604	554.7	.3577-03
61	24.036	.80000	468.00	.1002-01	.1188-01	.1309-01	39.58	.3967	.3603	554.5	.3089-03
61	24.036	.82500	469.00	.1582-01	.1875-01	.2066-01	39.63	.6271	.3595	553.4	.4876-03
61	24.036	.85000	470.00	.1520-01	.1801-01	.1985-01	39.65	.6027	.3593	553.0	.4684-03
61	24.036	.87500	471.00	.1759-01	.2084-01	.2296-01	39.63	.6970	.3595	553.4	.5419-03
61	24.036	.92500	472.00	.2023-01	.2396-01	.2640-01	39.66	.8022	.3590	552.6	.6232-03
61	24.036	.97500	473.00	.4708-01	.5582-01	.6153-01	39.53	1.861	.3611	555.9	.1451-02

IH103 60-OT UPPER RH WING (R3P002)

UPPER RH WING

PARAMETRIC DATA

MACH = 5.250 ALPHA = -5.000 BETA = .0000 ELEVON = .0000
BDFLAP = .0000 SPDBRK = .0000

TEST CONDITIONS

RUN NUMBER	ALPHA DEG.	BETA DEG.	MACH	RN/FT /FT X10 6	PT PSIA	TT DEG. R	HT BTU/ LBM	PINF PSIA	TINF DEG. R	RHO SLUGS/ FT3	VINF FT/SEC	SCALE
62	-5.000	.0000	5.250	1.040	103.4	1499.	369.2	.1425	236.3	.5060-04	3955.	.1750-01

RUN NUMBER	PHI DEG.	HS SPHERE TW=540
62	.0000	.1676

TEST DATA

RUN NUMBER	XO MS	2Y/BW	T/C NO	H/HREF R=1.0	H/HREF R=.900	H/HREF R=.850	QREF BTU/ FT2SEC	QDOT BTU/ FT2SEC	HW/HT	TW DEG. R	STN NO R=.900
62	24.036	.50000	460.00	.4294-02	.5093-02	.5616-02	39.39	.1691	.3628	558.2	.1324-03
62	24.036	.55000	461.00	.1080-01	.1281-01	.1412-01	39.40	.4254	.3627	558.1	.3331-03
62	24.036	.60000	462.00	.8746-02	.1037-01	.1143-01	39.45	.3450	.3619	556.9	.2697-03
62	24.036	.65000	463.00	.1236-01	.1465-01	.1616-01	39.44	.4874	.3621	557.1	.3811-03
62	24.036	.70000	464.00	.1428-01	.1693-01	.1867-01	39.44	.5633	.3620	557.0	.4404-03
62	24.036	.72500	465.00	.1620-01	.1921-01	.2118-01	39.45	.6391	.3618	556.7	.4996-03
62	24.036	.75000	466.00	.1815-01	.2153-01	.2373-01	39.45	.7162	.3619	556.8	.5598-03
62	24.036	.77500	467.00	.1833-01	.2174-01	.2396-01	39.47	.7236	.3616	556.4	.5653-03
62	24.036	.80000	468.00	.1647-01	.1953-01	.2153-01	39.48	.6504	.3614	556.1	.5080-03
62	24.036	.82500	469.00	.1351-01	.1602-01	.1765-01	39.53	.5341	.3607	555.0	.4166-03
62	24.036	.85000	470.00	.1965-01	.2329-01	.2567-01	39.53	.7766	.3607	555.0	.6058-03
62	24.036	.87500	471.00	.2212-01	.2622-01	.2890-01	39.54	.8747	.3605	554.7	.6820-03
62	24.036	.92500	472.00	.3132-01	.3713-01	.4092-01	39.54	1.238	.3605	554.7	.9656-03
62	24.036	.97500	473.00	.5542-01	.6574-01	.7249-01	39.39	2.183	.3628	558.2	.1710-02

IH103 60-OT UPPER RH WING

(R3P003)

UPPER RH WING

PARAMETRIC DATA

MACH = 5.250 ALPHA = 5.000 BETA = .0000 ELEVON = .0000
BDFLAP = .0000 SPDBRK = .0000

TEST CONDITIONS

RUN NUMBER	ALPHA DEG.	BETA DEG.	MACH	RN/FT /FT X10 6	PT PSIA	TT DEG. R	HT BTU/ LBM	PINF PSIA	TINF DEG. R	RHO SLUGS/ FT3	VINF FT/SEC	SCALE
63	5.000	.0000	5.250	1.039	103.3	1499.	369.3	.1423	236.4	.5054-04	3956.	.1750-01

RUN NUMBER	PHI DEG.	HS SPHERE TW=540
63	.0000	.1675

TEST DATA

RUN NUMBER	XO MS	2Y/BW	T/C NO	H/HREF R=1.0	H/HREF R=.900	H/HREF R=.850	QREF BTU/ FT2SEC	QDOT BTU/ FT2SEC	HW/HT	TW DEG. R	STN NO R=.900
63	24.036	.50000	460.00	.2856-03	.3383-03	.3727-03	39.70	.1134-01	.3580	551.0	.8806-05
63	24.036	.55000	461.00	.7311-03	.8660-03	.9540-03	39.71	.2903-01	.3579	550.9	.2254-04
63	24.036	.60000	462.00	.1167-02	.1382-02	.1522-02	39.76	.4640-01	.3571	549.7	.3597-04
63	24.036	.65000	463.00	.1508-02	.1786-02	.1967-02	39.75	.5994-01	.3573	550.0	.4649-04
63	24.036	.70000	464.00	.4009-02	.4748-02	.5230-02	39.75	.1594	.3572	549.9	.1236-03
63	24.036	.72500	465.00	.6735-02	.7976-02	.8785-02	39.76	.2678	.3572	549.8	.2076-03
63	24.036	.75000	466.00	.9809-02	.1162-01	.1279-01	39.75	.3899	.3572	549.9	.3024-03
63	24.036	.77500	467.00	.1014-01	.1201-01	.1323-01	39.77	.4034	.3570	549.5	.3127-03
63	24.036	.80000	468.00	.8349-02	.9885-02	.1089-01	39.78	.3321	.3567	549.1	.2573-03
63	24.036	.82500	469.00	.8006-02	.9478-02	.1044-01	39.82	.3188	.3561	548.2	.2467-03
63	24.036	.85000	470.00	.7905-02	.9358-02	.1031-01	39.83	.3149	.3560	547.9	.2436-03
63	24.036	.87500	471.00	.1257-01	.1488-01	.1639-01	39.82	.5005	.3562	548.3	.3874-03
63	24.036	.92500	472.00	.1969-01	.2331-01	.2567-01	39.84	.7846	.3559	547.8	.6069-03
63	24.036	.97500	473.00	.3914-01	.4636-01	.5108-01	39.68	1.553	.3584	551.7	.1207-02

IH103 60-OT UPPER RH WING (R3P004)

UPPER RH WING

PARAMETRIC DATA

MACH = 5.250 ALPHA = 10.00 BETA = .0000 ELEVON = .0000
BDFLAP = .0000 SPDBRK = .0000

TEST CONDITIONS

RUN NUMBER	ALPHA DEG.	BETA DEG.	MACH	RN/FT /FT X10 6	PT PSIA	TT DEG. R	HT BTU/ LBM	PINF PSIA	TINF DEG. R	RHO SLUGS/ FT3	VINF FT/SEC	SCALE
64	10.00	.0000	5.250	.9958	103.5	1541.	380.2	.1422	243.3	.4905-04	4014.	.1750-01

RUN NUMBER	PHI DEG.	HS SPHERE TW=540
64	.0000	.1679

TEST DATA

RUN NUMBER	XO MS	2Y/BW	T/C NO	H/HREF R=1.0	H/HREF R=.900	H/HREF R=.850	QREF BTU/ FT2SEC	QDOT BTU/ FT2SEC	HW/HT	TW DEG. R	STN NO R=.900
64	24.036	.50000	460.00	.1694-02	.1997-02	.2192-02	42.21	.7152-01	.3390	537.3	.5293-04
64	24.036	.55000	461.00	.2140-02	.2522-02	.2769-02	42.18	.9028-01	.3394	537.8	.6686-04
64	24.036	.60000	462.00	.2160-02	.2545-02	.2795-02	42.19	.9114-01	.3393	537.6	.6748-04
64	24.036	.65000	463.00	.2692-02	.3172-02	.3482-02	42.18	.1135	.3395	538.0	.8408-04
64	24.036	.70000	464.00	.3522-02	.4151-02	.4558-02	42.14	.1484	.3400	538.8	.1100-03
64	24.036	.72500	465.00	.3363-02	.3963-02	.4352-02	42.15	.1417	.3399	538.7	.1051-03
64	24.036	.75000	466.00	.3627-02	.4274-02	.4694-02	42.13	.1528	.3402	539.1	.1133-03
64	24.036	.77500	467.00	.3051-02	.3596-02	.3949-02	42.13	.1285	.3402	539.1	.9533-04
64	24.036	.80000	468.00	.3157-02	.3720-02	.4085-02	42.14	.1330	.3400	538.8	.9862-04
64	24.036	.82500	469.00	.7746-02	.9130-02	.1003-01	42.11	.3261	.3406	539.7	.2420-03
64	24.036	.85000	470.00	.6662-02	.7851-02	.8620-02	42.16	.2809	.3397	538.3	.2081-03
64	24.036	.87500	471.00	.7834-02	.9232-02	.1014-01	42.15	.3302	.3399	538.6	.2447-03
64	24.036	.92500	472.00	.1589-01	.1873-01	.2056-01	42.09	.6686	.3408	540.1	.4964-03
64	24.036	.95000	277.00	.2870-01	.3384-01	.3716-01	42.06	1.207	.3412	540.8	.8969-03
64	24.036	.97500	473.00	.3523-01	.4156-01	.4566-01	41.91	1.476	.3435	544.3	.1101-02

IH103 60-OT UPPER RH WING (R3P005)

UPPER RH WING

PARAMETRIC DATA

MACH = 5.250 ALPHA = .0000 BETA = -5.000 ELEVON = .0000
BDFLAP = .0000 SPDBRK = .0000

TEST CONDITIONS

RUN NUMBER	ALPHA DEG.	BETA DEG.	MACH	RN/FT /FT X10 6	PT PSIA	TT DEG. R	HT BTU/ LBM	PINF PSIA	TINF DEG. R	RHO SLUGS/ FT3	VINF FT/SEC	SCALE
68	.0000	-5.000	5.250	1.031	103.1	1505.	370.7	.1420	237.3	.5023-04	3964.	.1750-01

RUN NUMBER	PHI DEG.	HS SPHERE TW=540
68	.0000	.1674

TEST DATA

RUN NUMBER	XO MS	2Y/BW	T/C NO	H/HREF R=1.0	H/HREF R=.900	H/HREF R=.850	QREF BTU/ FT2SEC	QDOT BTU/ FT2SEC	HW/HT	TW DEG. R	STN NO R=.900
68	24.036	.50000	460.00	.1027-01	.1215-01	.1338-01	40.07	.4116	.3541	547.1	.3175-03
68	24.036	.55000	461.00	.1357-01	.1605-01	.1767-01	40.06	.5434	.3543	547.5	.4193-03
68	24.036	.60000	462.00	.1739-01	.2057-01	.2265-01	40.07	.6966	.3542	547.2	.5374-03
68	24.036	.65000	463.00	.1604-01	.1897-01	.2088-01	40.08	.6426	.3540	547.0	.4956-03
68	24.036	.70000	464.00	.1583-01	.1874-01	.2063-01	40.05	.6342	.3544	547.6	.4894-03
68	24.036	.72500	465.00	.1578-01	.1867-01	.2055-01	40.05	.6320	.3544	547.5	.4877-03
68	24.036	.75000	466.00	.1530-01	.1811-01	.1994-01	40.04	.6127	.3546	548.0	.4731-03
68	24.036	.77500	467.00	.1292-01	.1528-01	.1683-01	40.05	.5173	.3544	547.6	.3992-03
68	24.036	.80000	468.00	.1113-01	.1317-01	.1450-01	40.07	.4460	.3542	547.2	.3440-03
68	24.036	.82500	469.00	.7060-02	.8354-02	.9197-02	40.05	.2827	.3545	547.7	.2182-03
68	24.036	.85000	470.00	.1063-01	.1258-01	.1385-01	40.10	.4263	.3537	546.6	.3286-03
68	24.036	.87500	471.00	.1100-01	.1302-01	.1433-01	40.11	.4414	.3534	546.1	.3400-03
68	24.036	.92500	472.00	.1736-01	.2054-01	.2261-01	40.09	.6960	.3539	546.8	.5366-03
68	24.036	.95000	277.00	.2455-01	.2904-01	.3197-01	40.06	.9832	.3543	547.4	.7587-03
68	24.036	.97500	473.00	.3069-01	.3634-01	.4002-01	39.92	1.225	.3564	550.7	.9491-03

IH103 60-OT UPPER RH WING

UPPER RH WING

(R3P006)

PARAMETRIC DATA

MACH = 5.250 ALPHA = -5.000 BETA = -5.000 ELEVON = .0000
BDFLAP = .0000 SPDBRK = .0000

TEST CONDITIONS

RUN NUMBER	ALPHA DEG.	BETA DEG.	MACH	RN/FT /FT X10 6	PT PSIA	TT DEG. R	HT BTU/ LBM	PINF PSIA	TINF DEG. R	RHO SLUGS/ FT3	VINF FT/SEC	SCALE
67	-5.000	-5.000	5.250	1.036	103.6	1504.	370.6	.1427	237.2	.5051-04	3963.	.1750-01

RUN NUMBER	PHI DEG.	HS SPHERE TW=540
67	.0000	.1678

TEST DATA

RUN NUMBER	XO MS	2Y/BW	T/C NO	H/HREF R=1.0	H/HREF R=.900	H/HREF R=.850	QREF BTU/ FT2SEC	QDOT BTU/ FT2SEC	HW/HT	TW DEG. R	STN NO R=.900
67	24.036	.50000	460.00	.2994-02	.3542-02	.3899-02	40.19	.1203	.3536	546.2	.9228-04
67	24.036	.55000	461.00	.3109-02	.3678-02	.4048-02	40.18	.1249	.3538	546.4	.9581-04
67	24.036	.60000	462.00	.3760-02	.4448-02	.4896-02	40.20	.1511	.3534	545.8	.1159-03
67	24.036	.65000	463.00	.7954-02	.9409-02	.1036-01	40.20	.3197	.3535	545.9	.2451-03
67	24.036	.70000	464.00	.1369-01	.1619-01	.1782-01	40.19	.5500	.3536	546.1	.4218-03
67	24.036	.72500	465.00	.1497-01	.1771-01	.1949-01	40.19	.6015	.3536	546.1	.4612-03
67	24.036	.75000	466.00	.1569-01	.1856-01	.2043-01	40.17	.6302	.3539	546.6	.4835-03
67	24.036	.77500	467.00	.1659-01	.1963-01	.2160-01	40.19	.6667	.3536	546.1	.5113-03
67	24.036	.80000	468.00	.1673-01	.1979-01	.2178-01	40.19	.6723	.3535	546.0	.5155-03
67	24.036	.82500	469.00	.1808-01	.2138-01	.2353-01	40.24	.7274	.3528	544.9	.5570-03
67	24.036	.85000	470.00	.1867-01	.2208-01	.2430-01	40.24	.7513	.3528	545.0	.5753-03
67	24.036	.87500	471.00	.2134-01	.2524-01	.2778-01	40.22	.8583	.3531	545.4	.6576-03
67	24.036	.92500	472.00	.2581-01	.3053-01	.3360-01	40.23	1.038	.3529	545.1	.7953-03
67	24.036	.95000	277.00	.3215-01	.3803-01	.4186-01	40.20	1.292	.3534	545.8	.9908-03
67	24.036	.97500	473.00	.4320-01	.5113-01	.5630-01	40.07	1.731	.3554	548.9	.1332-02

IH103 60-OT UPPER RH WING

(R3P007)

UPPER RH WING

PARAMETRIC DATA

MACH = 5.250 ALPHA = 5.000 BETA = -5.000 ELEVON = .0000
BDFLAP = .0000 SPDBRK = .0000

TEST CONDITIONS

RUN NUMBER	ALPHA DEG.	BETA DEG.	MACH	RN/FT /FT X10 6	PT PSIA	TT DEG. R	HT BTU/ LBM	PINF PSIA	TINF DEG. R	RHO SLUGS/ FT3	VINF FT/SEC	SCALE
66	5.000	-5.000	5.250	1.033	103.6	1507.	371.4	.1427	237.7	.5037-04	3967.	.1750-01

RUN NUMBER	PHI DEG.	HS SPHERE TW=540
66	.0000	.1678

TEST DATA

RUN NUMBER	XO MS	2Y/BW	T/C NO	H/HREF R=1.0	H/HREF R=.900	H/HREF R=.850	QREF BTU/ FT2SEC	QDOT BTU/ FT2SEC	HW/HT	TW DEG. R	STN NO R=.900
66	24.036	.50000	460.00	.8578-02	.1014-01	.1116-01	40.37	.3463	.3521	545.0	.2647-03
66	24.036	.55000	461.00	.1216-01	.1438-01	.1582-01	40.36	.4908	.3522	545.3	.3752-03
66	24.036	.60000	462.00	.1459-01	.1725-01	.1898-01	40.40	.5894	.3516	544.3	.4501-03
66	24.036	.65000	463.00	.1016-01	.1202-01	.1322-01	40.40	.4105	.3517	544.5	.3136-03
66	24.036	.70000	464.00	.6617-02	.7824-02	.8609-02	40.39	.2673	.3518	544.6	.2042-03
66	24.036	.72500	465.00	.6161-02	.7284-02	.8015-02	40.40	.2489	.3516	544.3	.1901-03
66	24.036	.75000	466.00	.5329-02	.6301-02	.6933-02	40.40	.2153	.3516	544.3	.1644-03
66	24.036	.77500	467.00	.4169-02	.4929-02	.5423-02	40.42	.1685	.3514	543.9	.1286-03
66	24.036	.80000	468.00	.4143-02	.4898-02	.5388-02	40.45	.1676	.3509	543.3	.1278-03
66	24.036	.82500	469.00	.1120-02	.1324-02	.1457-02	40.41	.4527-01	.3515	544.0	.3456-04
66	24.036	.85000	470 00	.4651-02	.5498-02	.6048-02	40.48	.1883	.3504	542.4	.1435-03
66	24.036	.87500	471.00	.6259-02	.7397-02	.8136-02	40.51	.2535	.3501	541.9	.1930-03
66	24.036	.92500	472.00	.1228-01	.1451-01	.1596-01	40.49	.4970	.3504	542.3	.3787-03
66	24.036	.95000	277.00	.2048-01	.2421-01	.2663-01	40.46	.8286	.3507	542.8	.6317-03
66	24.036	.97500	473.00	.2601-01	.3076-01	.3385-01	40.35	1.049	.3525	545.6	.8026-03

IH103 60-OT UPPER RH WING (R3P008)

UPPER RH WING

PARAMETRIC DATA

MACH = 5.250 ALPHA = 10.00 BETA = -5.000 ELEVON = .0000
BDFLAP = .0000 SPDBRK = .0000

TEST CONDITIONS

RUN NUMBER	ALPHA DEG.	BETA DEG.	MACH	RN/FT /FT X10 6	PT PSIA	TT DEG. R	HT BTU/ LBM	PINF PSIA	TINF DEG. R	RHO SLUGS/ FT3	VINF FT/SEC	SCALE
65	10.00	.0000	5.250	1.036	103.7	1505.	370.9	.1429	237.4	.5052-04	3964.	.1750-01

RUN NUMBER	PHI DEG.	HS SPHERE TW=540
65	.0000	.1679

TEST DATA

RUN NUMBER	XO MS	2Y/BW	T/C NO	H/HREF R=1.0	H/HREF R=.900	H/HREF R=.850	QREF BTU/ FT2SEC	QDOT BTU/ FT2SEC	HW/HT	TW DEG. R	STN NO R=.900
65	24.036	.50000	460.00	.4279-02	.5060-02	.5568-02	40.35	.1727	.3519	544.0	.1318-03
65	24.036	.55000	461.00	.5046-02	.5968-02	.6567-02	40.33	.2035	.3523	544.6	.1555-03
65	24.036	.60000	462.00	.4990-02	.5901-02	.6493-02	40.33	.2013	.3522	544.4	.1537-03
65	24.036	.65000	463.00	.4187-02	.4951-02	.5449-02	40.32	.1688	.3524	544.8	.1290-03
65	24.036	.70000	464.00	.4138-02	.4894-02	.5386-02	40.30	.1667	.3528	545.3	.1275-03
65	24.036	.72500	465.00	.3897-02	.4609-02	.5073-02	40.30	.1571	.3528	545.3	.1201-03
65	24.036	.75000	466.00	.3916-02	.4633-02	.5099-02	40.27	.1577	.3532	546.0	.1207-03
65	24.036	.77500	467.00	.2889-02	.3417-02	.3761-02	40.27	.1164	.3531	545.8	.8903-04
65	24.036	.80000	468.00	.2683-02	.3174-02	.3493-02	40.28	.1081	.3531	545.8	.8268-04
65	24.036	.82500	469.00	.2080-02	.2459-02	.2707-02	40.31	.8382-01	.3526	545.1	.6408-04
65	24.036	.85000	470.00	.3526-02	.4170-02	.4590-02	40.29	.1420	.3529	545.5	.1086-03
65	24.036	.87500	471.00	.3603-02	.4261-02	.4690-02	40.29	.1452	.3529	545.4	.1110-03
65	24.036	.92500	472.00	.1678-01	.1985-01	.2185-01	40.22	.6748	.3539	547.1	.5170-03
65	24.036	.95000	277.00	.2681-01	.3172-01	.3492-01	40.21	1.078	.3541	547.4	.8264-03
65	24.036	.97500	473.00	.3313-01	.3922-01	.4319-01	40.07	1.327	.3562	550.7	.1021-02

IH103 60-OT UPPER RH WING (R3P009)

UPPER RH WING

PARAMETRIC DATA

MACH = 5.250 ALPHA = .0000 BETA = -3.000 ELEVON = .0000
BDFLAP = .0000 SPDBRK = .0000

TEST CONDITIONS

RUN NUMBER	ALPHA DEG.	BETA DEG.	MACH	RN/FT /FT X10 6	PT PSIA	TT DEG. R	HT BTU/ LBM	PINF PSIA	TINF DEG. R	RHO SLUGS/ FT3	VINF FT/SEC	SCALE
51	.0000	-3.000	5.250	1.016	101.5	1504.	370.5	.1399	237.1	.4949-04	3963.	.1750-01

RUN NUMBER	PHI DEG.	HS SPHERE TW=540
51	.0000	.1661

TEST DATA

RUN NUMBER	XO MS	2Y/BW	T/C NO	H/HREF R=1.0	H/HREF R=.900	H/HREF R=.850	QREF BTU/ FT2SEC	QDOT BTU/ FT2SEC	HW/HT	TW DEG. R	STN NO R=.900
51	24.036	.50000	460.00	.2538-02	.3003-02	.3305-02	39.79	.1010	.3533	545.5	.7902-04
51	24.036	.55000	461.00	.2392-02	.2829-02	.3114-02	39.79	.9518-01	.3533	545.6	.7446-04
51	24.036	.60000	462.00	.2362-02	.2793-02	.3074-02	39.82	.9404-01	.3529	544.9	.7351-04
51	24.036	.65000	463.00	.4462-02	.5278-02	.5809-02	39.81	.1776	.3531	545.3	.1389-03
51	24.036	.70000	464.00	.6197-02	.7330-02	.8068-02	39.80	.2466	.3532	545.4	.1929-03
51	24.036	.72500	465.00	.7783-02	.9206-02	.1013-01	39.80	.3097	.3532	545.4	.2423-03
51	24.036	.75000	466.00	.9126-02	.1079-01	.1188-01	39.80	.3632	.3532	545.5	.2841-03
51	24.036	.77500	467.00	.9611-02	.1137-01	.1251-01	39.81	.3826	.3530	545.2	.2992-03
51	24.036	.80000	468.00	.1029-01	.1218-01	.1340-01	39.82	.4099	.3529	544.9	.3204-03
51	24.036	.82500	469.00	.7267-02	.8593-02	.9455-02	39.88	.2898	.3520	543.5	.2262-03
51	24.036	.85000	470.00	.1243-01	.1469-01	.1617-01	39.88	.4955	.3520	543.5	.3867-03
51	24.036	.87500	471.00	.1525-01	.1803-01	.1984-01	39.89	.6083	.3518	543.3	.4746-03
51	24.036	.92500	472.00	.2094-01	.2476-01	.2725-01	39.91	.8358	.3515	542.9	.6518-03
51	24.036	.95000	277.00	.2328-01	.2753-01	.3029-01	39.88	.9284	.3519	543.4	.7245-03
51	24.036	.97500	473.00	.3685-01	.4360-01	.4798-01	39.78	1.466	.3534	545.8	.1147-02

IH103 60-OT UPPER RH WING (R3P010)

UPPER RH WING

PARAMETRIC DATA

MACH = 5.250 ALPHA = -5.000 BETA = -3.000 ELEVON = .0000
BDFLAP = .0000 SPDBRK = .0000

TEST CONDITIONS

RUN NUMBER	ALPHA DEG.	BETA DEG.	MACH	RN/FT /FT X10 6	PT PSIA	TT DEG. R	HT BTU/ LBM	PINF PSIA	TINF DEG. R	RHO SLUGS/ FT3	VINF FT/SEC	SCALE
52	-5.000	-3.000	5.250	1.047	102.9	1488.	366.4	.1419	234.5	.5080-04	3940.	.1750-01

RUN NUMBER	PHI DEG.	HS SPHERE TW=540
52	.0000	.1672

TEST DATA

RUN NUMBER	XO MS	2Y/BW	T/C NO	H/HREF R=1.0	H/HREF R=.900	H/HREF R=.850	QREF BTU/ FT2SEC	QDOT BTU/ FT2SEC	HW/HT	TW DEG. R	STN NO R=.900
52	24.036	.50000	460.00	.7961-03	.9435-03	.1040-02	39.19	.3120-01	.3599	549.5	.2448-04
52	24.036	.55000	461.00	.5779-02	.6848-02	.7547-02	39.19	.2265	.3598	549.5	.1777-03
52	24.036	.60000	462.00	.6589-02	.7807-02	.8602-02	39.23	.2585	.3593	548.6	.2026-03
52	24.036	.65000	463.00	.9858-02	.1168-01	.1287-01	39.21	.3866	.3595	548.9	.3031-03
52	24.036	.70000	464.00	.1369-01	.1622-01	.1788-01	39.19	.5365	.3598	549.5	.4209-03
52	24.036	.72500	465.00	.1506-01	.1784-01	.1966-01	39.21	.5904	.3596	549.1	.4630-03
52	24.036	.75000	466.00	.1684-01	.1995-01	.2199-01	39.21	.6601	.3596	549.1	.5177-03
52	24.036	.77500	467.00	.1772-01	.2100-01	.2314-01	39.22	.6951	.3593	548.7	.5448-03
52	24.036	.80000	468.00	.1692-01	.2005-01	.2209-01	39.24	.6641	.3590	548.2	.5203-03
52	24.036	.82500	469.00	.1859-01	.2203-01	.2427-01	39.23	.7293	.3592	548.5	.5715-03
52	24.036	.85000	470.00	.1808-01	.2142-01	.2359-01	39.31	.7108	.3580	546.7	.5558-03
52	24.036	.87500	471.00	.2043-01	.2420-01	.2666-01	39.31	.8033	.3579	546.5	.6280-03
52	24.036	.92500	472.00	.2723-01	.3225-01	.3552-01	39.35	1.072	.3573	545.5	.8369-03
52	24.036	.95000	277.00	.3533-01	.4184-01	.4609-01	39.34	1.390	.3575	545.9	.1086-02
52	24.036	.97500	473.00	.4765-01	.5646-01	.6221-01	39.25	1.870	.3589	548.1	.1465-02

IH103 60-OT UPPER RH WING (R3P011)

UPPER RH WING

PARAMETRIC DATA

MACH = 5.250 ALPHA = 5.000 BETA = -3.000 ELEVON = .0000
BDFLAP = .0000 SPDBRK = .0000

TEST CONDITIONS

RUN NUMBER	ALPHA DEG.	BETA DEG.	MACH	RN/FT /FT X10 6	PT PSIA	TT DEG. R	HT BTU/ LBM	PINF PSIA	TINF DEG. R	RHO SLUGS/ FT3	VINF FT/SEC	SCALE
46	5.000	-3.000	5.200	1.027	103.9	1538.	379.4	.1511	246.8	.5138-04	4004.	.1750-01

RUN NUMBER	PHI DEG.	HS SPHERE TW=540
46	.0000	.1714

TEST DATA

RUN NUMBER	XO MS	2Y/BW	T/C NO	H/HREF R=1.0	H/HREF R=.900	H/HREF R=.850	QREF BTU/ FT2SEC	QDOT BTU/ FT2SEC	HW/HT	TW DEG. R	STN NO R=.900
46	24.036	.50000	460.00	.3915-03	.4631-03	.5097-03	42.00	.1644-01	.3535	559.0	.1198-04
46	24.036	.55000	461.00	.6765-03	.8003-03	.8810-03	42.00	.2841-01	.3536	559.1	.2071-04
46	24.036	.65000	463.00	.1468-02	.1736-02	.1911-02	42.04	.6170-01	.3530	558.2	.4492-04
46	24.036	.70000	464.00	.3442-02	.4072-02	.4482-02	42.03	.1447	.3532	558.4	.1054-03
46	24.036	.72500	465.00	.5174-02	.6120-02	.6735-02	42.05	.2176	.3528	557.9	.1583-03
46	24.036	.75000	466.00	.6083-02	.7195-02	.7918-02	42.06	.2558	.3527	557.7	.1862-03
46	24.036	.77500	467.00	.6474-02	.7657-02	.8427-02	42.06	.2723	.3527	557.6	.1981-03
46	24.036	.80000	468.00	.6033-02	.7135-02	.7852-02	42.08	.2539	.3524	557.2	.1846-03
46	24.036	.82500	469.00	.8990-02	.1063-01	.1170-01	42.07	.3782	.3525	557.3	.2751-03
46	24.036	.85000	470.00	.8511-02	.1006-01	.1107-01	42.12	.3585	.3517	556.2	.2604-03
46	24.036	.87500	471.00	.1129-01	.1335-01	.1469-01	42.12	.4756	.3518	556.2	.3454-03
46	24.036	.92500	472.00	.1109-01	.1311-01	.1442-01	42.16	.4674	.3512	555.3	.3391-03
46	24.036	.95000	277.00	.1974-01	.2334-01	.2568-01	42.14	.8318	.3515	555.8	.6039-03
46	24.036	.97500	473.00	.2877-01	.3403-01	.3746-01	42.05	1.210	.3529	558.0	.8806-03

IH103 60-OT UPPER RH WING (R3P012)

UPPER RH WING

PARAMETRIC DATA

MACH = 5.250 ALPHA = 10.00 BETA = -3.000 ELEVON = .0000
BDFLAP = .0000 SPDBRK = .0000

TEST CONDITIONS

RUN NUMBER	ALPHA DEG.	BETA DEG.	MACH	RN/FT /FT X10 6	PT PSIA	TT DEG. R	HT BTU/ LBM	PINF PSIA	TINF DEG. R	RHO SLUGS/ FT3	VINF FT/SEC	SCALE
45	10.00	-3.000	5.250	1.036	103.0	1500.	369.5	.1420	236.4	.5040-04	3957.	.1750-01

RUN NUMBER	PHI DEG.	HS SPHERE TW=540
45	.0000	.1673

TEST DATA

RUN NUMBER	XO MS	2Y/BW	T/C NO	H/HREF R=1.0	H/HREF R=.900	H/HREF R=.850	QREF BTU/ FT2SEC	QDOT BTU/ FT2SEC	HW/HT	TW DEG. R	STN NO R=.900
45	24.036	.50000	460.00	.5882-03	.6971-03	.7683-03	39.54	.2326-01	.3600	554.3	.1817-04
45	24.036	.55000	461.00	.7346-03	.8706-03	.9595-03	39.54	.2905-01	.3599	554.2	.2269-04
45	24.036	.60000	462.00	.1411-02	.1671-02	.1842-02	39.59	.5585-01	.3592	553.0	.4356-04
45	24.036	.65000	463.00	.1575-02	.1866-02	.2056-02	39.58	.6232-01	.3594	553.4	.4863-04
45	24.036	.70000	464.00	.2274-02	.2695-02	.2969-02	39.57	.8997-01	.3596	553.7	.7023-04
45	24.036	.72500	465.00	.2451-02	.2904-02	.3200-02	39.57	.9699-01	.3595	553.5	.7569-04
45	24.036	.75000	466.00	.2614-02	.3097-02	.3413-02	39.58	.1035	.3593	553.3	.8072-04
45	24.036	.77500	467.00	.2569-02	.3044-02	.3354-02	39.58	.1017	.3593	553.3	.7934-04
45	24.036	.80000	468.00	.2520-02	.2985-02	.3289-02	39.61	.9980-01	.3589	552.7	.7781-04
45	24.036	.82500	469.00	.5243-02	.6213-02	.6846-02	39.58	.2075	.3594	553.4	.1619-03
45	24.036	.85000	470.00	.5400-02	.6397-02	.7048-02	39.64	.2141	.3584	551.8	.1667-03
45	24.036	.87500	471.00	.7684-02	.9102-02	.1003-01	39.66	.3047	.3582	551.5	.2372-03
45	24.036	.92500	472.00	.1314-01	.1556-01	.1714-01	39.67	.5212	.3580	551.3	.4056-03
45	24.036	.95000	277.00	.2969-01	.3517-01	.3875-01	39.64	1.177	.3585	552.0	.9168-03
45	24.036	.97500	473.00	.2046-01	.2425-01	.2672-01	39.53	.8088	.3601	554.5	.6320-03

IH103 60-OT UPPER RH WING (R3P013)

UPPER RH WING

PARAMETRIC DATA

MACH = 5.250 ALPHA = .0000 BETA = -9.000 ELEVON = .0000
BDFLAP = .0000 SPDBRK = .0000

TEST CONDITIONS

RUN NUMBER	ALPHA DEG.	BETA DEG.	MACH	RN/FT /FT X10 6	PT PSIA	TT DEG. R	HT BTU/ LBM	PINF PSIA	TINF DEG. R	RHO SLUGS/ FT3	VINF FT/SEC	SCALE
41	.0000	-9.000	5.250	.9914	101.7	1528.	376.9	.1399	241.2	.4866-04	3997.	.1750-01

RUN NUMBER	PHI DEG.	HS SPHERE TW=540
41	.0000	.1664

TEST DATA

RUN NUMBER	XO MS	2Y/BW	T/C NO	H/HREF R=1.0	H/HREF R=.900	H/HREF R=.850	QREF BTU/ FT2SEC	QDOT BTU/ FT2SEC	HW/HT	TW DEG. R	STN NO R=.900
41	24.036	.50000	460.00	.1835-01	.2167-01	.2382-01	40.91	.7506	.3474	545.8	.5760-03
41	24.036	.55000	461.00	.2271-01	.2682-01	.2949-01	40.90	.9289	.3477	546.1	.7131-03
41	24.036	.60000	462.00	.2650-01	.3129-01	.3440-01	40.93	1.085	.3471	545.3	.8319-03
41	24.036	.65000	463.00	.2433-01	.2873-01	.3158-01	40.92	.9954	.3473	545.6	.7637-03
41	24.036	.70000	464.00	.2791-01	.3296-01	.3624-01	40.92	1.142	.3474	545.8	.8762-03
41	24.036	.72500	465.00	.2687-01	.3173-01	.3489-01	40.92	1.100	.3473	545.6	.8435-03
41	24.036	.75000	466.00	.2608-01	.3080-01	.3386-01	40.94	1.068	.3471	545.3	.8188-03
41	24.036	.77500	467.00	.2378-01	.2808-01	.3087-01	40.94	.9735	.3471	545.2	.7465-03
41	24.036	.80000	468.00	.2089-01	.2467-01	.2712-01	40.95	.8556	.3469	544.9	.6559-03
41	24.036	.82500	469.00	.2102-01	.2482-01	.2728-01	41.01	.8622	.3460	543.5	.6599-03
41	24.036	.85000	470.00	.2334-01	.2755-01	.3029-01	41.01	.9573	.3459	543.4	.7326-03
41	24.036	.87500	471.00	.1795-01	.2119-01	.2329-01	41.03	.7364	.3457	543.1	.5634-03
41	24.036	.92500	472.00	.1821-01	.2150-01	.2363-01	41.06	.7479	.3452	542.3	.5716-03
41	24.036	.95000	277.00	.1682-01	.1985-01	.2181-01	41.04	.6902	.3454	542.7	.5277-03
41	24.036	.97500	473.00	.2286-01	.2700-01	.2968-01	40.96	.9366	.3467	544.6	.7177-03

IH103 60-OT UPPER RH WING (R3P014)

UPPER RH WING

PARAMETRIC DATA

MACH = 5.250 ALPHA = -5.000 BETA = -9.000 ELEVON = .0000
BDFLAP = .0000 SPDBRK = .0000

TEST CONDITIONS

RUN NUMBER	ALPHA DEG.	BETA DEG.	MACH	RN/FT /FT X10 6	PT PSIA	TT DEG. R	HT BTU/ LBM	PINF PSIA	TINF DEG. R	RHO SLUGS/ FT3	VINF FT/SEC	SCALE
42	-5.000	-9.000	5.250	1.011	102.2	1515.	373.5	.1407	239.0	.4941-04	3978.	.1750-01

RUN NUMBER	PHI DEG.	HS SPHERE TW=540
42	.0000	.1667

TEST DATA

RUN NUMBER	XO MS	2Y/BW	T/C NO	H/HREF R=1.0	H/HREF R=.900	H/HREF R=.850	QREF BTU/ FT2SEC	QDOT BTU/ FT2SEC	HW/HT	TW DEG. R	STN NO R=.900
42	24.036	.50000	460.00	.3917-02	.4633-02	.5098-02	40.31	.1579	.3525	548.6	.1221-03
42	24.036	.55000	461.00	.5526-02	.6535-02	.7192-02	40.30	.2227	.3526	548.8	.1722-03
42	24.036	.60000	462.00	.5542-02	.6554-02	.7212-02	40.32	.2235	.3522	548.3	.1728-03
42	24.036	.65000	463.00	.3384-02	.4002-02	.4404-02	40.32	.1364	.3524	548.5	.1055-03
42	24.036	.70000	464.00	.5059-02	.5983-02	.6585-02	40.32	.2040	.3524	548.5	.1577-03
42	24.036	.72500	465.00	.7875-02	.9313-02	.1025-01	40.31	.3174	.3525	548.7	.2455-03
42	24.036	.75000	466.00	.1011-01	.1196-01	.1316-01	40.31	.4077	.3525	548.7	.3153-03
42	24.036	.77500	467.00	.1145-01	.1355-01	.1491-01	40.31	.4617	.3524	548.6	.3570-03
42	24.036	.80000	468.00	.1294-01	.1530-01	.1684-01	40.31	.5215	.3524	548.6	.4032-03
42	24.036	.82500	469.00	.1271-01	.1503-01	.1654-01	40.36	.5130	.3518	547.5	.3962-03
42	24.036	.85000	470.00	.1620-01	.1916-01	.2108-01	40.36	.6538	.3518	547.6	.5049-03
42	24.036	.87500	471.00	.1928-01	.2280-01	.2509-01	40.34	.7778	.3520	547.9	.6009-03
42	24.036	.92500	472.00	.2648-01	.3130-01	.3444-01	40.38	1.069	.3514	546.9	.8251-03
42	24.036	.95000	277.00	.3127-01	.3697-01	.4068-01	40.35	1.262	.3518	547.6	.9745-03
42	24.036	.97500	473.00	.4049-01	.4789-01	.5272-01	40.26	1.630	.3533	549.9	.1262-02

IH103 60-OT UPPER RH WING (R3P015)

UPPER RH WING

PARAMETRIC DATA

MACH = 5.250 ALPHA = 5.000 BETA = -9.000 ELEVON = .0000
BDFLAP = .0000 SPDBRK = .0000

TEST CONDITIONS

RUN NUMBER	ALPHA DEG.	BETA DEG.	MACH	RN/FT /FT X10 6	PT PSIA	TT DEG. R	HT BTU/ LBM	PINF PSIA	TINF DEG. R	RHO SLUGS/ FT3	VINF FT/SEC	SCALE
43	5.000	-9.000	5.250	1.042	103.7	1500.	369.4	.1429	236.4	.5072-04	3956.	.1750-01

RUN NUMBER	PHI DEG.	HS SPHERE TW=540
43	.0000	.1678

TEST DATA

RUN NUMBER	XO MS	2Y/BW	T/C NO	H/HREF R=1.0	H/HREF R=.900	H/HREF R=.850	QREF BTU/ FT2SEC	QDOT BTU/ FT2SEC	HW/HT	TW DEG. R	STN NO R=.900
43	24.036	.50000	460.00	.2379-01	.2819-01	.3106-01	39.71	.9450	.3590	552.7	.7325-03
43	24.036	.55000	461.00	.2747-01	.3255-01	.3587-01	39.71	1.091	.3591	552.8	.8457-03
43	24.036	.60000	462.00	.2846-01	.3372-01	.3715-01	39.74	1.131	.3586	552.0	.8760-03
43	24.036	.65000	463.00	.2828-01	.3351-01	.3692-01	39.73	1.124	.3588	552.3	.8706-03
43	24.036	.70000	464.00	.3103-01	.3676-01	.4050-01	39.74	1.233	.3587	552.2	.9551-03
43	24.036	.72500	465.00	.3241-01	.3839-01	.4230-01	39.73	1.287	.3588	552.3	.9975-03
43	24.036	.75000	466.00	.3325-01	.3940-01	.4341-01	39.73	1.321	.3587	552.2	.1024-02
43	24.036	.77500	467.00	.3052-01	.3615-01	.3983-01	39.74	1.213	.3586	552.1	.9394-03
43	24.036	.80000	468.00	.2701-01	.3200-01	.3525-01	39.74	1.073	.3586	552.1	.8313-03
43	24.036	.82500	469.00	.2421-01	.2868-01	.3159-01	39.82	.9641	.3574	550.2	.7451-03
43	24.036	.85000	470.00	.2918-01	.3457-01	.3808-01	39.79	1.161	.3579	550.9	.8982-03
43	24.036	.87500	471.00	.2563-01	.3036-01	.3344-01	39.77	1.019	.3581	551.3	.7888-03
43	24.036	.92500	472.00	.2194-01	.2599-01	.2862-01	39.81	.8735	.3575	550.4	.6752-03
43	24.036	.95000	277.00	.1698-01	.2012-01	.2216-01	39.78	.6756	.3579	551.0	.5227-03
43	24.036	.97500	473.00	.2420-01	.2867-01	.3160-01	39.69	.9604	.3594	553.3	.7450-03

IH103 60-OT UPPER RH WING (R3P016)

UPPER RH WING

PARAMETRIC DATA

MACH = 5.250 ALPHA = 10.00 BETA = -9.000 ELEVON = .0000
BDFLAP = .0000 SPDBRK = .0000

TEST CONDITIONS

RUN NUMBER	ALPHA DEG.	BETA DEG.	MACH	RN/FT /FT X10 6	PT PSIA	TT DEG. R	HT BTU/ LBM	PINF PSIA	TINF DEG. R	RHO SLUGS/ FT3	VINF FT/SEC	SCALE
44	10.00	-9.000	5.250	1.040	101.3	1480.	364.3	.1399	233.1	.5034-04	3929.	.1750-01

RUN NUMBER	PHI DEG.	HS SPHERE TW=540
44	.0000	.1658

TEST DATA

RUN NUMBER	XO MS	2Y/BW	T/C NO	H/HREF R=1.0	H/HREF R=.900	H/HREF R=.850	QREF BTU/ FT2SEC	QDOT BTU/ FT2SEC	HW/HT	TW DEG. R	STN NO R=.900
44	24.036	.50000	460.00	.1341-01	.1592-01	.1757-01	38.26	.5131	.3663	556.1	.4147-03
44	24.036	.55000	461.00	.1508-01	.1791-01	.1976-01	38.25	.5769	.3664	556.3	.4663-03
44	24.036	.60000	462.00	.1505-01	.1786-01	.1971-01	38.30	.5763	.3656	555.2	.4652-03
44	24.036	.65000	463.00	.1264-01	.1500-01	.1655-01	38.29	.4838	.3658	555.5	.3907-03
44	24.036	.70000	464.00	.1290-01	.1531-01	.1689-01	38.29	.4938	.3658	555.4	.3987-03
44	24.036	.72500	465.00	.1332-01	.1581-01	.1744-01	38.29	.5099	.3657	555.3	.4117-03
44	24.036	.75000	466.00	.1369-01	.1625-01	.1793-01	38.30	.5244	.3656	555.1	.4232-03
44	24.036	.77500	467.00	.1235-01	.1466-01	.1617-01	38.31	.4730	.3654	554.9	.3817-03
44	24.036	.80000	468.00	.1063-01	.1262-01	.1392-01	38.33	.4075	.3652	554.5	.3286-03
44	24.036	.82500	469.00	.1222-01	.1451-01	.1600-01	38.37	.4690	.3645	553.5	.3778-03
44	24.036	.85000	470.00	.1126-01	.1336-01	.1474-01	38.38	.4321	.3644	553.3	.3480-03
44	24.036	.87500	471.00	.8344-02	.9901-02	.1092-01	38.40	.3204	.3640	552.8	.2579-03
44	24.036	.92500	472.00	.1378-01	.1634-01	.1802-01	38.42	.5292	.3637	552.3	.4257-03
44	24.036	.95000	277.00	.1298-01	.1540-01	.1699-01	38.40	.4985	.3641	552.8	.4012-03
44	24.036	.97500	473.00	.1451-01	.1723-01	.1901-01	38.31	.5560	.3655	554.9	.4487-03

IH103 60-OT UPPER RH WING (R3P017)

UPPER RH WING

PARAMETRIC DATA

MACH = 5.250 ALPHA = -10.00 BETA = -9.000 ELEVON = .0000
BDFLAP = .0000 SPDBRK = .0000

TEST CONDITIONS

RUN NUMBER	ALPHA DEG.	BETA DEG.	MACH	RN/FT /FT X10 6	PT PSIA	TT DEG. R	HT BTU/ LBM	PINF PSIA	TINF DEG. R	RHO SLUGS/ FT3	VINF FT/SEC	SCALE
107	-10.00	-9.000	5.250	1.083	103.6	1464.	360.0	.1432	230.4	.5214-04	3906.	.1750-01

RUN NUMBER	PHI DEG.	HS SPHERE TW=540
107	.0000	.1676

TEST DATA

RUN NUMBER	XO MS	2Y/BW	T/C NO	H/HREF R=1.0	H/HREF R=.900	H/HREF R=.850	QREF BTU/ FT2SEC	QDOT BTU/ FT2SEC	HW/HT	TW DEG. R	STN NO R=.900
107	24.036	.50000	460.00	.5248-02	.6249-02	.6907-02	37.63	.1975	.3756	563.7	.1596-03
107	24.036	.55000	461.00	.2385-02	.2840-02	.3139-02	37.64	.8977-01	.3756	563.6	.7256-04
107	24.036	.60000	462.00	.4686-03	.5579-03	.6166-03	37.68	.1766-01	.3749	562.6	.1425-04
107	24.036	.65000	463.00	.4407-02	.5246-02	.5798-02	37.67	.1660	.3751	562.9	.1340-03
107	24.036	.70000	464.00	.9267-02	.1103-01	.1219-01	37.68	.3491	.3750	562.7	.2819-03
107	24.036	.72500	465.00	.1133-01	.1349-01	.1491-01	37.71	.4273	.3745	561.9	.3446-03
107	24.036	.75000	466.00	.1230-01	.1464-01	.1618-01	37.71	.4639	.3744	561.7	.3741-03
107	24.036	.77500	467.00	.1180-01	.1405-01	.1552-01	37.73	.4452	.3742	561.5	.3589-03
107	24.036	.80000	468.00	.1319-01	.1570-01	.1735-01	37.74	.4979	.3740	561.1	.4012-03
107	24.036	.82500	469.00	.1450-01	.1726-01	.1907-01	37.74	.5473	.3739	561.0	.4410-03
107	24.036	.85000	470.00	.1559-01	.1855-01	.2049-01	37.80	.5892	.3730	559.7	.4739-03
107	24.036	.87500	471.00	.1948-01	.2317-01	.2560-01	37.79	.7360	.3732	559.9	.5921-03
107	24.036	.92500	472.00	.2693-01	.3204-01	.3539-01	37.83	1.019	.3726	559.0	.8187-03
107	24.036	.95000	277.00	.3228-01	.3841-01	.4243-01	37.80	1.220	.3730	559.7	.9814-03
107	24.036	.97500	473.00	.4301-01	.5120-01	.5659-01	37.69	1.621	.3748	562.3	.1308-02

IH103 60-OT UPPER RH WING (R3P018)

UPPER RH WING

PARAMETRIC DATA

MACH = 5.250 ALPHA = -10.00 BETA = -3.000 ELEVON = .0000
BDFLAP = .0000 SPDBRK = .0000

TEST CONDITIONS

RUN NUMBER	ALPHA DEG.	BETA DEG.	MACH	RN/FT /FT X10 6	PT PSIA	TT DEG. R	HT BTU/ LBM	PINF PSIA	TINF DEG. R	RHO SLUGS/ FT3	VINF FT/SEC	SCALE
114	-10.00	-3.000	5.250	1.078	103.6	1468.	361.0	.1430	231.1	.5194-04	3911.	.1750-01

RUN NUMBER	PHI DEG.	HS SPHERE TW=540
114	.0000	.1675

TEST DATA

RUN NUMBER	XO MS	2Y/BW	T/C NO	H/HREF R=1.0	H/HREF R=.900	H/HREF R=.850	QREF BTU/ FT2SEC	QDOT BTU/ FT2SEC	HW/HT	TW DEG. R	STN NO R=.900
114	24.036	.50000	460.00	.1126-02	.1337-02	.1475-02	38.31	.4313-01	.3664	551.4	.3425-04
114	24.036	.55000	461.00	.5296-02	.6289-02	.6940-02	38.30	.2028	.3666	551.6	.1611-03
114	24.036	.60000	462.00	.5896-02	.7000-02	.7723-02	38.33	.2260	.3660	550.8	.1793-03
114	24.036	.65000	463.00	.9374-02	.1113-01	.1228-01	38.32	.3592	.3663	551.2	.2851-03
114	24.036	.70000	464.00	.1239-01	.1472-01	.1624-01	38.31	.4748	.3664	551.3	.3770-03
114	24.036	.72500	465.00	.1398-01	.1660-01	.1832-01	38.32	.5359	.3662	551.1	.4254-03
114	24.036	.75000	466.00	.1410-01	.1674-01	.1847-01	38.31	.5403	.3663	551.2	.4289-03
114	24.036	.77500	467.00	.1575-01	.1870-01	.2063-01	38.32	.6034	.3662	551.0	.4789-03
114	24.036	.80000	468.00	.1567-01	.1861-01	.2053-01	38.33	.6007	.3661	550.8	.4767-03
114	24.036	.82500	469.00	.1359-01	.1613-01	.1780-01	38.38	.5216	.3653	549.7	.4133-03
114	24.036	.85000	470.00	.1881-01	.2233-01	.2463-01	38.38	.7218	.3653	549.7	.5720-03
114	24.036	.87500	471.00	.2368-01	.2811-01	.3101-01	38.39	.9091	.3651	549.4	.7202-03
114	24.036	.92500	472.00	.3107-01	.3689-01	.4069-01	38.37	1.192	.3654	549.8	.9450-03
114	24.036	.95000	277.00	.3969-01	.4712-01	.5199-01	38.36	1.522	.3657	550.2	.1207-02
114	24.036	.97500	473.00	.5307-01	.6303-01	.6957-01	38.23	2.029	.3676	553.2	.1615-02

IH103 60-OT UPPER RH WING (R3P019)

UPPER RH WING

PARAMETRIC DATA

MACH = 5.250 ALPHA = -10.00 BETA = -5.000 ELEVON = .0000
BDFLAP = .0000 SPDBRK = .0000

TEST CONDITIONS

RUN NUMBER	ALPHA DEG.	BETA DEG.	MACH	RN/FT /FT X10 6	PT PSIA	TT DEG. R	HT BTU/ LBM	PINF PSIA	TINF DEG. R	RHO SLUGS/ FT3	VINF FT/SEC	SCALE
117	-10.00	-5.000	5.250	1.076	103.9	1472.	362.2	.1434	231.8	.5192-04	3918.	.1750-01

RUN NUMBER	PHI DEG.	HS SPHERE TW=540
117	.0000	.1678

TEST DATA

RUN NUMBER	XO MS	2Y/BW	T/C NO	H/HREF R=1.0	H/HREF R=.900	H/HREF R=.850	QREF BTU/ FT2SEC	QDOT BTU/ FT2SEC	HW/HT	TW DEG. R	STN NO R=.900
117	24.036	.50000	460.00	.1135-02	.1348-02	.1487-02	38.51	.4371-01	.3661	552.5	.3454-04
117	24.036	.55000	461.00	.1429-02	.1697-02	.1872-02	38.51	.5502-01	.3661	552.6	.4349-04
117	24.036	.60000	462.00	.2257-02	.2680-02	.2956-02	38.55	.8703-01	.3654	551.5	.6869-04
117	24.036	.65000	463.00	.8343-02	.9904-02	.1093-01	38.53	.3214	.3657	552.1	.2539-03
117	24.036	.70000	464.00	.1261-01	.1497-01	.1651-01	38.53	.4858	.3657	551.9	.3836-03
117	24.036	.72500	465.00	.1332-01	.1581-01	.1744-01	38.55	.5134	.3654	551.6	.4052-03
117	24.036	.75000	466.00	.1387-01	.1647-01	.1816-01	38.55	.5348	.3654	551.5	.4221-03
117	24.036	.77500	467.00	.1472-01	.1747-01	.1927-01	38.56	.5675	.3653	551.3	.4478-03
117	24.036	.80000	468.00	.1475-01	.1751-01	.1931-01	38.57	.5689	.3651	551.1	.4488-03
117	24.036	.82500	469.00	.1728-01	.2050-01	.2262-01	38.62	.6672	.3644	550.0	.5256-03
117	24.036	.85000	470.00	.1841-01	.2185-01	.2410-01	38.63	.7112	.3642	549.7	.5601-03
117	24.036	.87500	471.00	.2257-01	.2678-01	.2954-01	38.61	.8713	.3645	550.1	.6865-03
117	24.036	.92500	472.00	.3124-01	.3706-01	.4088-01	38.64	1.207	.3641	549.5	.9501-03
117	24.036	.95000	277.00	.3839-01	.4556-01	.5025-01	38.61	1.482	.3645	550.1	.1168-02
117	24.036	.97500	473.00	.5184-01	.6156-01	.6792-01	38.49	1.996	.3663	553.0	.1578-02

IH103 60-OT UPPER RH WING (R3P020)

UPPER RH WING

PARAMETRIC DATA

MACH = 5.250 ALPHA = -10.00 BETA = .0000 ELEVON = .0000
BDFLAP = .0000 SPDBRK = .0000

TEST CONDITIONS

RUN NUMBER	ALPHA DEG.	BETA DEG.	MACH	RN/FT /FT X10 6	PT PSIA	TT DEG. R	HT BTU/ LBM	PINF PSIA	TINF DEG. R	RHO SLUGS/ FT3	VINF FT/SEC	SCALE
124	-10.00	.0000	5.250	1.031	103.1	1504.	370.6	.1420	237.2	.5026-04	3963.	.1750-01

RUN NUMBER	PHI DEG.	HS SPHERE TW=540
124	.0000	.1674

TEST DATA

RUN NUMBER	XO MS	2Y/BW	T/C NO	H/HREF R=1.0	H/HREF R=.900	H/HREF R=.850	QREF BTU/ FT2SEC	QDOT BTU/ FT2SEC	HW/HT	TW DEG. R	STN NO R=.900
124	24.036	.50000	460.00	.2476-02	.2931-02	.3229-02	39.87	.9871-01	.3570	551.4	.7654-04
124	24.036	.55000	461.00	.6858-02	.8122-02	.8946-02	39.87	.2734	.3571	551.5	.2121-03
124	24.036	.60000	462.00	.6331-02	.7496-02	.8256-02	39.88	.2525	.3569	551.2	.1957-03
124	24.036	.65000	463.00	.1170-01	.1386-01	.1527-01	39.87	.4666	.3571	551.5	.3619-03
124	24.036	.70000	464.00	.1589-01	.1882-01	.2073-01	39.85	.6334	.3573	551.9	.4915-03
124	24.036	.72500	465.00	.1581-01	.1873-01	.2063-01	39.85	.6301	.3574	552.0	.4889-03
124	24.036	.75000	466.00	.1765-01	.2090-01	.2303-01	39.83	.7031	.3576	552.3	.5458-03
124	24.036	.77500	467.00	.1913-01	.2266-01	.2496-01	39.84	.7622	.3575	552.1	.5915-03
124	24.036	.80000	468.00	.1815-01	.2149-01	.2368-01	39.84	.7230	.3575	552.2	.5612-03
124	24.036	.82500	469.00	.1696-01	.2008-01	.2211-01	39.92	.6770	.3563	550.2	.5243-03
124	24.036	.85000	470.00	.2228-01	.2638-01	.2905-01	39.89	.8887	.3567	550.9	.6887-03
124	24.036	.87500	471.00	.2733-01	.3236-01	.3564-01	39.88	1.090	.3568	551.1	.8449-03
124	24.036	.92500	472.00	.3591-01	.4253-01	.4684-01	39.88	1.432	.3568	551.1	.1110-02
124	24.036	.95000	277.00	.4389-01	.5198-01	.5726-01	39.84	1.749	.3574	552.0	.1357-02
124	24.036	.97500	473.00	.5982-01	.7089-01	.7812-01	39.69	2.374	.3597	555.6	.1851-02

IH103 60-OT UPPER RH WING (R3P021)

UPPER RH WING

PARAMETRIC DATA

MACH = 5.250 ALPHA = .0000 BETA = .0000 ELEVON = .0000
BDFLAP = .0000 SPDBRK = .0000

TEST CONDITIONS

RUN NUMBER	ALPHA DEG.	BETA DEG.	MACH	RN/FT /FT X10 6	PT PSIA	TT DEG. R	HT BTU/ LBM	PINF PSIA	TINF DEG. R	RHO SLUGS/ FT3	VINF FT/SEC	SCALE
128	.0000	.0000	5.250	.6494	103.9	1998.	503.7	.1372	322.4	.3570-04	4620.	.1750-01

RUN NUMBER	PHI DEG.	HS SPHERE TW=540
128	.0000	.1691

TEST DATA

RUN NUMBER	XO MS	2Y/BW	T/C NO	H/HREF R=1.0	H/HREF R=.900	H/HREF R=.850	QREF BTU/ FT2SEC	QDOT BTU/ FT2SEC	HW/HT	TW DEG. R	STN NO R=.900
128	24.036	.50000	460.00	.1082-02	.1251-02	.1358-02	62.89	.6804-01	.2616	549.1	.3987-04
128	24.036	.55000	461.00	.2054-02	.2376-02	.2578-02	62.88	.1291	.2617	549.4	.7568-04
128	24.036	.60000	462.00	.2532-02	.2929-02	.3178-02	62.90	.1593	.2614	548.9	.9330-04
128	24.036	.65000	463.00	.8207-02	.9492-02	.1030-01	62.88	.5161	.2616	549.2	.3024-03
128	24.036	.70000	464.00	.9756-02	.1128-01	.1224-01	62.86	.6133	.2618	549.7	.3595-03
128	24.036	.72500	465.00	.1158-01	.1339-01	.1453-01	62.87	.7280	.2618	549.5	.4267-03
128	24.036	.75000	466.00	.1359-01	.1572-01	.1706-01	62.87	.8545	.2618	549.5	.5008-03
128	24.036	.77500	467.00	.1321-01	.1527-01	.1657-01	62.88	.8303	.2617	549.4	.4866-03
128	24.036	.80000	468.00	.1286-01	.1488-01	.1614-01	62.88	.8089	.2616	549.3	.4740-03
128	24.036	.82500	469.00	.1368-01	.1582-01	.1717-01	62.94	.8612	.2610	548.0	.5041-03
128	24.036	.85000	470.00	.1741-01	.2014-01	.2185-01	62.93	1.096	.2611	548.1	.6416-03
128	24.036	.87500	471.00	.2107-01	.2437-01	.2644-01	62.94	1.326	.2609	547.8	.7763-03
128	24.036	.92500	472.00	.2329-01	.2694-01	.2923-01	62.90	1.465	.2614	548.8	.8583-03
128	24.036	.95000	277.00	.3315-01	.3834-01	.4160-01	62.84	2.083	.2621	550.2	.1221-02
128	24.036	.97500	473.00	.4651-01	.5382-01	.5842-01	62.64	2.913	.2643	555.0	.1714-02

IH103 60-OT WING MISC.

(R3PP01)

WING MISC.

PARAMETRIC DATA

MACH = 5.250 ALPHA = .0000 BETA = .0000 ELEVON = .0000
BDFLAP = .0000 SPDBRK = .0000

TEST CONDITIONS

RUN NUMBER	ALPHA DEG.	BETA DEG.	MACH	RN/FT /FT X10 6	PT PSIA	TT DEG. R	HT BTU/ LBM	PINF PSIA	TINF DEG. R	RHO SLUGS/ FT3	VINF FT/SEC	SCALE
61	.0000	.0000	5.250	1.040	103.5	1499.	369.3	.1426	236.3	.5062-04	3956.	.1750-01

RUN NUMBER	PHI DEG.	HS SPHERE TW=540
61	.0000	.1677

TEST DATA

RUN NUMBER	DUMMY	T/C NO	H/HREF R=1.0	H/HREF R=.900	H/HREF R=.850	QREF BTU/ FT2SEC	QDOT BTU/ FT2SEC	HW/HT	TW DEG. R	STN NO R=.900
61	1.0000	482.00	.32832-02	.3890-02	.4286-02	39.68	.1303	.3587	552.2	.1012-03
61	1.0000	483.00	.37487-02	.4441-02	.4893-02	39.68	.1488	.3588	552.2	.1155-03
61	1.0000	484.00	.76938-02	.9116-02	.1004-01	39.67	.3052	.3589	552.5	.2371-03
61	1.0000	485.00	.93164-02	.1104-01	.1216-01	39.65	.3694	.3593	553.0	.2871-03
61	1.0000	491.00	.12468-01	.1478-01	.1628-01	39.63	.4941	.3595	553.4	.3842-03

IH103 60-OT WING MISC. (R3PP02)

WING MISC.

PARAMETRIC DATA

MACH = 5.250 ALPHA = -5.000 BETA = .0000 ELEVON = .0000
BDFLAP = .0000 SPDBRK = .0000

TEST CONDITIONS

RUN NUMBER	ALPHA DEG.	BETA DEG.	MACH	RN/FT /FT X10 6	PT PSIA	TT DEG. R	HT BTU/ LBM	PINF PSIA	TINF DEG. R	RHO SLUGS/ FT3	VINF FT/SEC	SCALE
62	-5.000	.0000	5.250	1.040	103.4	1499.	369.2	.1425	236.3	.5060-04	3955.	.1750-01

RUN NUMBER	PHI DEG.	HS SPHERE TW=540
62	.0000	.1676

TEST DATA

RUN NUMBER	DUMMY	T/C NO	H/HREF R=1.0	H/HREF R=.900	H/HREF R=.850	QREF BTU/ FT2SEC	QDOT BTU/ FT2SEC	HW/HT	TW DEG. R	STN NO R=.900
62	1.0000	482.00	.15247-01	.1807-01	.1992-01	39.55	.6029	.3604	554.5	.4700-03
62	1.0000	483.00	.15456-01	.1832-01	.2019-01	39.54	.6112	.3605	554.6	.4765-03
62	1.0000	484.00	.15671-01	.1858-01	.2047-01	39.53	.6194	.3607	555.0	.4831-03
62	1.0000	485.00	.17016-01	.2017-01	.2224-01	39.51	.6722	.3610	555.5	.5247-03
62	1.0000	491.00	.23475-01	.2783-01	.3068-01	39.49	.9271	.3612	555.8	.7238-03

IH103 60-OT WING MISC. (R3PP03)

WING MISC.

PARAMETRIC DATA

MACH = 5.250 ALPHA = 5.000 BETA = .0000 ELEVON = .0000
BDFLAP = .0000 SPDBRK = .0000

TEST CONDITIONS

RUN NUMBER	ALPHA DEG.	BETA DEG.	MACH	RN/FT /FT X10 6	PT PSIA	TT DEG. R	HT BTU/ LBM	PINF PSIA	TINF DEG. R	RHO SLUGS/ FT3	VINF FT/SEC	SCALE
63	5.000	.0000	5.250	1.039	103.3	1499.	369.3	.1423	236.4	.5054-04	3956.	.1750-01

RUN NUMBER	PHI DEG.	HS SPHERE TW=540
63	.0000	.1675

TEST DATA

RUN NUMBER	DUMMY	T/C NO	H/HREF R=1.0	H/HREF R=.900	H/HREF R=.850	QREF BTU/ FT2SEC	QDOT BTU/ FT2SEC	HW/HT	TW DEG. R	STN NO R=.900
63	1.0000	482.00	.10422-02	.1234-02	.1358-02	39.85	.4154-01	.3557	547.5	.3212-04
63	1.0000	483.00	.83978-03	.9941-03	.1095-02	39.85	.3347-01	.3557	547.5	.2588-04
63	1.0000	484.00	.12721-02	.1506-02	.1658-02	39.84	.5068-01	.3559	547.9	.3920-04
63	1.0000	485.00	.17274-02	.2045-02	.2252-02	39.81	.6877-01	.3563	548.4	.5324-04
63	1.0000	491.00	.74842-02	.8861-02	.9759-02	39.79	.2978	.3566	548.9	.2307-03

IH103 60-OT WING MISC. (R3PP04)

WING MISC.

PARAMETRIC DATA

MACH = 5.250 ALPHA = 10.00 BETA = .0000 ELEVON = .0000
BDFLAP = .0000 SPDBRK = .0000

TEST CONDITIONS

RUN NUMBER	ALPHA DEG.	BETA DEG.	MACH	RN/FT /FT X10 6	PT PSIA	TT DEG. R	HT BTU/ LBM	PINF PSIA	TINF DEG. R	RHO SLUGS/ FT3	VINF FT/SEC	SCALE
64	10.00	.0000	5.250	.9958	103.5	1541.	380.2	.1422	243.3	.4905-04	4014.	.1750-01

RUN NUMBER	PHI DEG.	HS SPHERE TW=540
64	.0000	.1679

TEST DATA

RUN NUMBER	DUMMY	T/C NO	H/HREF R=1.0	H/HREF R=.900	H/HREF R=.850	QREF BTU/ FT2SEC	QDOT BTU/ FT2SEC	HW/HT	TW DEG. R	STN NO R=.900
64	1.0000	482.00	.39671-03	.4676-03	.5134-03	42.14	.1672-01	.3400	538.8	.1239-04
64	1.0000	483.00	.79427-03	.9361-03	.1028-02	42.14	.3347-01	.3400	538.8	.2481-04
64	1.0000	484.00	.13238-02	.1560-02	.1713-02	42.12	.5575-01	.3404	539.4	.4136-04
64	1.0000	485.00	.23329-02	.2750-02	.3020-02	42.09	.9819-01	.3408	540.0	.7290-04
64	1.0000	490.00	.29280-03	.3451-03	.3789-03	42.15	.1234-01	.3399	538.7	.9148-05
64	1.0000	491.00	.42769-02	.5042-02	.5537-02	42.09	.1800	.3408	540.1	.1336-03

IH103 60-OT WING MISC. (R3PP05)

WING MISC.

PARAMETRIC DATA

MACH = 5.250 ALPHA = .0000 BETA = -5.000 ELEVON = .0000
BDFLAP = .0000 SPDBRK = .0000

TEST CONDITIONS

RUN NUMBER	ALPHA DEG.	BETA DEG.	MACH	RN/FT /FT X10 6	PT PSIA	TT DEG. R	HT BTU/ LBM	PINF PSIA	TINF DEG. R	RHO SLUGS/ FT3	VINF FT/SEC	SCALE
68	.0000	-5.000	5.250	1.031	103.1	1505.	370.7	.1420	237.3	.5023-04	3964.	.1750-01

RUN NUMBER	PHI DEG.	HS SPHERE TW=540
68	.0000	.1674

TEST DATA

RUN NUMBER	DUMMY	T/C NO	H/HREF R=1.0	H/HREF R=.900	H/HREF R=.850	QREF BTU/ FT2SEC	QDOT BTU/ FT2SEC	HW/HT	TW DEG. R	STN NO R=.900
68	1.0000	482.00	.13096-01	.1549-01	.1706-01	40.09	.5250	.3539	546.8	.4048-03
68	1.0000	483.00	.12817-01	.1516-01	.1669-01	40.08	.5137	.3540	547.0	.3961-03
68	1.0000	484.00	.13186-01	.1560-01	.1718-01	40.03	.5278	.3548	548.2	.4076-03
68	1.0000	485.00	.14906-01	.1764-01	.1943-01	40.00	.5962	.3552	548.9	.4608-03
68	1.0000	490.00	.10769-01	.1274-01	.1403-01	40.08	.4316	.3539	546.9	.3328-03
68	1.0000	491.00	.10277-01	.1216-01	.1339-01	40.01	.4112	.3550	548.5	.3177-03

IH103 60-OT WING MISC. (R3PP06)

WING MISC.

PARAMETRIC DATA

MACH = 5.250 ALPHA = -5.000 BETA = -5.000 ELEVON = .0000
BDFLAP = .0000 SPDBRK = .0000

TEST CONDITIONS

RUN NUMBER	ALPHA DEG.	BETA DEG.	MACH	RN/FT /FT X10 6	PT PSIA	TT DEG. R	HT BTU/ LBM	PINF PSIA	TINF DEG. R	RHO SLUGS/ FT3	VINF FT/SEC	SCALE
67	-5.000	-5.000	5.250	1.036	103.6	1504.	370.6	.1427	237.2	.5051-04	3963.	.1750-01

RUN NUMBER	PHI DEG.	HS SPHERE TW=540
67	.0000	.1678

TEST DATA

RUN NUMBER	DUMMY	T/C NO	H/HREF R=1.0	H/HREF R=.900	H/HREF R=.850	QREF BTU/ FT2SEC	QDOT BTU/ FT2SEC	HW/HT	TW DEG. R	STN NO R=.900
67	1.0000	482.00	.14262-01	.1687-01	.1857-01	40.24	.5739	.3528	544.9	.4395-03
67	1.0000	483.00	.15790-01	.1868-01	.2055-01	40.24	.6353	.3528	544.9	.4865-03
67	1.0000	484.00	.14512-01	.1717-01	.1890-01	40.20	.5834	.3534	545.8	.4472-03
67	1.0000	485.00	.15882-01	.1879-01	.2068-01	40.17	.6380	.3538	546.5	.4895-03
67	1.0000	490.00	.15618-01	.1847-01	.2033-01	40.24	.6284	.3528	544.9	.4812-03
67	1.0000	491.00	.22599-01	.2674-01	.2943-01	40.18	.9081	.3537	546.3	.6965-03

IH103 60-OT WING MISC.

WING MISC.

PARAMETRIC DATA

MACH = 5.250 ALPHA = 5.000 BETA = -5.000 ELEVON = .0000
BDFLAP = .0000 SPDBRK = .0000

TEST CONDITIONS

RUN NUMBER	ALPHA DEG.	BETA DEG.	MACH	RN/FT /FT X10 6	PT PSIA	TT DEG. R	HT BTU/ LBM	PINF PSIA	TINF DEG. R	RHO SLUGS/ FT3	VINF FT/SEC	SCALE
66	5.000	-5.000	5.250	1.033	103.6	1507.	371.4	.1427	237.7	.5037-04	3967.	.1750-01

RUN NUMBER	PHI DEG.	HS SPHERE TW=540
66	.0000	.1678

TEST DATA

RUN NUMBER	DUMMY	T/C NO	H/HREF R=1.0	H/HREF R=.900	H/HREF R=.850	QREF BTU/ FT2SEC	QDOT BTU/ FT2SEC	HW/HT	TW DEG. R	STN NO R=.900
66	1.0000	482.00	.54750-02	.6470-02	.7118-02	40.51	.2215	.3500	541.8	.1689-03
66	1.0000	483.00	.55840-02	.6599-02	.7260-02	40.50	.2262	.3501	541.9	.1722-03
66	1.0000	484.00	.85727-02	.1013-01	.1115-01	40.49	.3471	.3503	542.3	.2644-03
66	1.0000	485.00	.11117-01	.1314-01	.1446-01	40.47	.4500	.3505	542.6	.3429-03
66	1.0000	490.00	.55789-02	.6593-02	.7253-02	40.50	.2260	.3501	541.9	.1721-03
66	1.0000	491.00	.85892-02	.1015-01	.1117-01	40.48	.3477	.3505	542.5	.2649-03

IH103 60-OT WING MISC. (R3PP08)

WING MISC.

PARAMETRIC DATA

MACH = 5.250 ALPHA = 10.00 BETA = -5.000 ELEVON = .0000
BDFLAP = .0000 SPDBRK = .0000

TEST CONDITIONS

RUN NUMBER	ALPHA DEG.	BETA DEG.	MACH	RN/FT /FT X10 6	PT PSIA	TT DEG. R	HT BTU/ LBM	PINF PSIA	TINF DEG. R	RHO SLUGS/ FT3	VINF FT/SEC	SCALE
65	10.00	.0000	5.250	1.036	103.7	1505.	370.9	.1429	237.4	.5052-04	3964.	.1750-01

RUN NUMBER	PHI DEG.	HS SPHERE TW=540
65	.0000	.1679

TEST DATA

RUN NUMBER	DUMMY	T/C NO	H/HREF R=1.0	H/HREF R=.900	H/HREF R=.850	QREF BTU/ FT2SEC	QDOT BTU/ FT2SEC	HW/HT	TW DEG. R	STN NO R=.900
65	1.0000	482.00	.52831-03	.6249-03	.6877-03	40.29	.2128-01	.3529	545.5	.1628-04
65	1.0000	483.00	.54947-03	.6499-03	.7153-03	40.28	.2213-01	.3531	545.8	.1693-04
65	1.0000	484.00	.24822-02	.2936-02	.3232-02	40.25	.9990-01	.3535	546.5	.7650-04
65	1.0000	485.00	.33500-02	.3963-02	.4363-02	40.22	.1347	.3539	547.1	.1032-03
65	1.0000	490.00	.80254-03	.9493-03	.1045-02	40.28	.3232-01	.3531	545.8	.2473-04
65	1.0000	491.00	.25301-02	.2994-02	.3295-02	40.22	.1018	.3540	547.2	.7798-04

IH103 60-OT WING MISC.

(R3PP09)

WING MISC.

PARAMETRIC DATA

MACH = 5.250 ALPHA = .0000 BETA = -3.000 ELEVON = .0000
BDFLAP = .0000 SPDBRK = .0000

TEST CONDITIONS

RUN NUMBER	ALPHA DEG.	BETA DEG.	MACH	RN/FT /FT X10 6	PT PSIA	TT DEG. R	HT BTU/ LBM	PINF PSIA	TINF DEG. R	RHO SLUGS/ FT3	VINF FT/SEC	SCALE
51	.0000	-3.000	5.250	1.016	101.5	1504.	370.5	.1399	237.1	.4949-04	3963.	.1750-01

RUN NUMBER	PHI DEG.	HS SPHERE TW=540
51	.0000	.1661

TEST DATA

RUN NUMBER	DUMMY	T/C NO	H/HREF R=1.0	H/HREF R=.900	H/HREF R=.850	QREF BTU/ FT2SEC	QDOT BTU/ FT2SEC	HW/HT	TW DEG. R	STN NO R=.900
51	1.0000	482.00	.32173-02	.3804-02	.4186-02	39.89	.1283	.3518	543.3	.1001-03
51	1.0000	483.00	.36604-02	.4328-02	.4763-02	39.88	.1460	.3519	543.5	.1139-03
51	1.0000	484.00	.55913-02	.6612-02	.7276-02	39.87	.2229	.3520	543.7	.1740-03
51	1.0000	485.00	.62658-02	.7410-02	.8154-02	39.86	.2497	.3523	544.1	.1950-03
51	1.0000	491.00	.12850-01	.1520-01	.1672-01	39.84	.5120	.3525	544.3	.4000-03

IH103 60-OT WING MISC. (R3PP10)

WING MISC.

PARAMETRIC DATA

MACH = 5.250 ALPHA = -5.000 BETA = -3.000 ELEVON = .0000
BDFLAP = .0000 SPDBRK = .0000

TEST CONDITIONS

RUN NUMBER	ALPHA DEG.	BETA DEG.	MACH	RN/FT /FT X10 6	PT PSIA	TT DEG. R	HT BTU/ LBM	PINF PSIA	TINF DEG. R	RHO SLUGS/ FT3	VINF FT/SEC	SCALE
52	-5.000	-3.000	5.250	1.047	102.9	1488.	366.4	.1419	234.5	.5080-04	3940.	.1750-01

RUN NUMBER	PHI DEG.	HS SPHERE TW=540
52	.0000	.1672

TEST DATA

RUN NUMBER	DUMMY	T/C NO	H/HREF R=1.0	H/HREF R=.900	H/HREF R=.850	QREF BTU/ FT2SEC	QDOT BTU/ FT2SEC	HW/HT	TW DEG. R	STN NO R=.900
52	1.0000	482.00	.17646-01	.2090-01	.2302-01	39.31	.6937	.3579	546.6	.5423-03
52	1.0000	483.00	.18175-01	.2153-01	.2371-01	39.31	.7145	.3579	546.5	.5586-03
52	1.0000	484.00	.16385-01	.1941-01	.2138-01	39.33	.6444	.3577	546.2	.5036-03
52	1.0000	485.00	.17726-01	.2100-01	.2313-01	39.31	.6969	.3579	546.5	.5448-03
52	1.0000	491.00	.23253-01	.2754-01	.3034-01	39.31	.9140	.3580	546.7	.7147-03

IH103 60-OT WING MISC. (R3PP11)

WING MISC.

PARAMETRIC DATA

MACH = 5.250 ALPHA = 5.000 BETA = -3.000 ELEVON = .0000
BDFLAP = .0000 SPDBRK = .0000

TEST CONDITIONS

RUN NUMBER	ALPHA DEG.	BETA DEG.	MACH	RN/FT /FT X10 6	PT PSIA	TT DEG. R	HT BTU/ LBM	PINF PSIA	TINF DEG. R	RHO SLUGS/ FT3	VINF FT/SEC	SCALE
46	5.000	-3.000	5.200	1.027	103.9	1538.	379.4	.1511	246.8	.5138-04	4004.	.1750-01

RUN NUMBER	PHI DEG.	HS SPHERE TW=540
46	.0000	.1714

TEST DATA

RUN NUMBER	DUMMY	T/C NO	H/HREF R=1.0	H/HREF R=.900	H/HREF R=.850	QREF BTU/ FT2SEC	QDOT BTU/ FT2SEC	HW/HT	TW DEG. R	STN NO R=.900
46	1.0000	482.00	.12612-02	.1491-02	.1640-02	42.16	.5318-01	.3511	555.2	.3858-04
46	1.0000	483.00	.96854-03	.1145-02	.1260-02	42.16	.4083-01	.3512	555.4	.2963-04
46	1.0000	484.00	.19115-02	.2260-02	.2486-02	42.15	.8057-01	.3513	555.5	.5848-04
46	1.0000	485.00	.22600-02	.2672-02	.2940-02	42.14	.9523-01	.3515	555.8	.6914-04
46	1.0000	491.00	.54874-02	.6488-02	.7139-02	42.14	.2312	.3515	555.8	.1679-03

IH103 60-OT WING MISC. (R3PP12)

WING MISC.

PARAMETRIC DATA

MACH = 5.250 ALPHA = 10.00 BETA = -3.000 ELEVON = .0000
BDFLAP = .0000 SPDBRK = .0000

TEST CONDITIONS

RUN NUMBER	ALPHA DEG.	BETA DEG.	MACH	RN/FT /FT X10 6	PT PSIA	TT DEG. R	HT BTU/ LBM	PINF PSIA	TINF DEG. R	RHO SLUGS/ FT3	VINF FT/SEC	SCALE
45	10.00	-3.000	5.250	1.036	103.0	1500.	369.5	.1420	236.4	.5040-04	3957.	.1750-01

RUN NUMBER	PHI DEG.	HS SPHERE TW=540
45	.0000	.1673

TEST DATA

RUN NUMBER	DUMMY	T/C NO	H/HREF R=1.0	H/HREF R=.900	H/HREF R=.850	QREF BTU/ FT2SEC	QDOT BTU/ FT2SEC	HW/HT	TW DEG. R	STN NO R=.900
45	1.0000	482.00	.28075-03	.3325-03	.3663-03	39.69	.1114-01	.3576	550.7	.8667-05
45	1.0000	484.00	.63802-04	.7557-04	.8325-04	39.68	.2532-02	.3578	550.9	.1970-05
45	1.0000	485.00	.12451-02	.1475-02	.1625-02	39.67	.4939-01	.3580	551.3	.3844-04
45	1.0000	491.00	.31882-02	.3777-02	.4161-02	39.66	.1264	.3582	551.6	.9844-04

IH103 60-OT WING MISC. (R3PP13)

WING MISC.

PARAMETRIC DATA

MACH = 5.250 ALPHA = .0000 BETA = -9.000 ELEVON = .0000
BDFLAP = .0000 SPDBRK = .0000

TEST CONDITIONS

RUN NUMBER	ALPHA DEG.	BETA DEG.	MACH	RN/FT /FT X10 6	PT PSIA	TT DEG. R	HT BTU/ LBM	PINF PSIA	TINF DEG. R	RHO SLUGS/ FT3	VINF FT/SEC	SCALE
41	.0000	-9.000	5.250	.9914	101.7	1528.	376.9	.1399	241.2	.4866-04	3997.	.1750-01

RUN NUMBER	PHI DEG.	HS SPHERE TW=540
41	.0000	.1664

TEST DATA

RUN NUMBER	DUMMY	T/C NO	H/HREF R=1.0	H/HREF R=.900	H/HREF R=.850	QREF BTU/ FT2SEC	QDOT BTU/ FT2SEC	HW/HT	TW DEG. R	STN NO R=.900
41	1.0000	482.00	.22748-01	.2685-01	.2952-01	41.02	.9332	.3458	543.2	.7140-03
41	1.0000	483.00	.23642-01	.2791-01	.3068-01	41.02	.9698	.3458	543.2	.7420-03
41	1.0000	484.00	.25665-01	.3030-01	.3330-01	41.02	1.053	.3458	543.2	.8055-03
41	1.0000	485.00	.30906-01	.3648-01	.4010-01	41.02	1.268	.3458	543.1	.9700-03
41	1.0000	491.00	.20586-01	.2430-01	.2671-01	41.02	.8445	.3458	543.2	.6461-03

IH103 60-OT WING MISC. (R3PP14)

WING MISC.

PARAMETRIC DATA

MACH = 5.250 ALPHA = -5.000 BETA = -9.000 ELEVON = .0000
BDFLAP = .0000 SPDBRK = .0000

TEST CONDITIONS

RUN NUMBER	ALPHA DEG.	BETA DEG.	MACH	RN/FT /FT X10 6	PT PSIA	TT DEG. R	HT BTU/ LBM	PINF PSIA	TINF DEG. R	RHO SLUGS/ FT3	VINF FT/SEC	SCALE
42	-5.000	-9.000	5.250	1.011	102.2	1515.	373.5	.1407	239.0	.4941-04	3978.	.1750-01

RUN NUMBER	PHI DEG.	HS SPHERE TW=540
42	.0000	.1667

TEST DATA

RUN NUMBER	DUMMY	T/C NO	H/HREF R=1.0	H/HREF R=.900	H/HREF R=.850	QREF BTU/ FT2SEC	QDOT BTU/ FT2SEC	HW/HT	TW DEG. R	STN NO R=.900
42	1.0000	482.00	.81866-02	.9679-02	.1065-01	40.38	.3306	.3514	546.9	.2551-03
42	1.0000	483.00	.10498-01	.1241-01	.1366-01	40.37	.4239	.3515	547.1	.3272-03
42	1.0000	484.00	.11244-01	.1329-01	.1463-01	40.35	.4537	.3518	547.6	.3504-03
42	1.0000	485.00	.12501-01	.1478-01	.1627-01	40.34	.5042	.3521	548.0	.3896-03
42	1.0000	491.00	.18243-01	.2157-01	.2374-01	40.33	.7357	.3522	548.2	.5686-03

IH103 60-OT WING MISC. (R3PP15)

WING MISC.

PARAMETRIC DATA

MACH = 5.250 ALPHA = 5.000 BETA = -9.000 ELEVON = .0000
BDFLAP = .0000 SPDBRK = .0000

TEST CONDITIONS

RUN NUMBER	ALPHA DEG.	BETA DEG.	MACH	RN/FT /FT X10 6	PT PSIA	TT DEG. R	HT BTU/ LBM	PINF PSIA	TINF DEG. R	RHO SLUGS/ FT3	VINF FT/SEC	SCALE
43	5.000	-9.000	5.250	1.042	103.7	1500.	369.4	.1429	236.4	.5072-04	3956.	.1750-01

RUN NUMBER	PHI DEG.	HS SPHERE TW=540
43	.0000	.1678

TEST DATA

RUN NUMBER	DUMMY	T/C NO	H/HREF R=1.0	H/HREF R=.900	H/HREF R=.850	QREF BTU/ FT2SEC	QDOT BTU/ FT2SEC	HW/HT	TW DEG. R	STN NO R=.900
43	1.0000	482.00	.30162-01	.3572-01	.3935-01	39.81	1.201	.3575	550.3	.9282-03
43	1.0000	483.00	.30726-01	.3639-01	.4009-01	39.81	1.223	.3576	550.5	.9456-03
43	1.0000	484.00	.28736-01	.3404-01	.3749-01	39.79	1.143	.3578	550.9	.8844-03
43	1.0000	485.00	.33393-01	.3955-01	.4357-01	39.78	1.328	.3580	551.2	.1028-02
43	1.0000	491.00	.27129-01	.3214-01	.3540-01	39.77	1.079	.3582	551.4	.8350-03

IH103 60-OT WING MISC. (R3PP16)

WING MISC.

PARAMETRIC DATA

MACH = 5.250 ALPHA = 10.00 BETA = -9.000 ELEVON = .0000
BDFLAP = .0000 SPDBRK = .0000

TEST CONDITIONS

RUN NUMBER	ALPHA DEG.	BETA DEG.	MACH	RN/FT /FT X10 6	PT PSIA	TT DEG. R	HT BTU/ LBM	PINF PSIA	TINF DEG. R	RHO SLUGS/ FT3	VINF FT/SEC	SCALE
44	10.00	-9.000	5.250	1.040	101.3	1480.	364.3	.1399	233.1	.5034-04	3929.	.1750-01

RUN NUMBER	PHI DEG.	HS SPHERE TW=540
44	.0000	.1658

TEST DATA

RUN NUMBER	DUMMY	T/C NO	H/HREF R=1.0	H/HREF R=.900	H/HREF R=.850	QREF BTU/ FT2SEC	QDOT BTU/ FT2SEC	HW/HT	TW DEG. R	STN NO R=.900
44	1.0000	482.00	.44542-02	.5285-02	.5829-02	38.41	.1711	.3639	552.6	.1377-03
44	1.0000	483.00	.47499-02	.5636-02	.6216-02	38.40	.1824	.3640	552.7	.1468-03
44	1.0000	484.00	.94730-02	.1124-01	.1240-01	38.39	.3637	.3642	553.0	.2928-03
44	1.0000	485.00	.12529-01	.1487-01	.1640-01	38.39	.4810	.3642	553.0	.3872-03
44	1.0000	491.00	.10398-01	.1234-01	.1361-01	38.39	.3992	.3642	553.0	.3214-03

IH103 60-OT WING MISC. (R3PP17)

WING MISC.

PARAMETRIC DATA

MACH = 5.250 ALPHA = -10.00 BETA = -9.000 ELEVON = .0000
BDFLAP = .0000 SPDBRK = .0000

TEST CONDITIONS

RUN NUMBER	ALPHA DEG.	BETA DEG.	MACH	RN/FT /FT X10 6	PT PSIA	TT DEG. R	HT BTU/ LBM	PINF PSIA	TINF DEG. R	RHO SLUGS/ FT3	VINF FT/SEC	SCALE
107	-10.00	-9.000	5.250	1.083	103.6	1464.	360.0	.1432	230.4	.5214-04	3906.	.1750-01

RUN NUMBER	PHI DEG.	HS SPHERE TW=540
107	.0000	.1676

TEST DATA

RUN NUMBER	DUMMY	T/C NO	H/HREF R=1.0	H/HREF R=.900	H/HREF R=.850	QREF BTU/ FT2SEC	QDOT BTU/ FT2SEC	HW/HT	TW DEG. R	STN NO R=.900
107	1.0000	482.00	.90537-02	.1077-01	.1190-01	37.82	.3424	.3727	559.2	.2752-03
107	1.0000	483.00	.10107-01	.1202-01	.1328-01	37.83	.3824	.3725	558.9	.3072-03
107	1.0000	484.00	.11759-01	.1399-01	.1545-01	37.82	.4447	.3727	559.2	.3575-03
107	1.0000	485.00	.14206-01	.1690-01	.1867-01	37.79	.5368	.3732	560.0	.4319-03
107	1.0000	490.00	.11498-01	.1368-01	.1511-01	37.83	.4350	.3725	559.0	.3495-03
107	1.0000	491.00	.17654-01	.2100-01	.2320-01	37.81	.6675	.3729	559.5	.5367-03

IH103 60-OT WING MISC. (R3PP18)

WING MISC.

PARAMETRIC DATA

MACH = 5.250 ALPHA = -10.00 BETA = -3.000 ELEVON = .0000
BDFLAP = .0000 SPDBRK = .0000

TEST CONDITIONS

RUN NUMBER	ALPHA DEG.	BETA DEG.	MACH	RN/FT /FT X10 6	PT PSIA	TT DEG. R	HT BTU/ LBM	PINF PSIA	TINF DEG. R	RHO SLUGS/ FT3	VINF FT/SEC	SCALE
114	-10.00	-3.000	5.250	1.078	103.6	1468.	361.0	.1430	231.1	.5194-04	3911.	.1750-01

RUN NUMBER	PHI DEG.	HS SPHERE TW=540
114	.0000	.1675

TEST DATA

RUN NUMBER	DUMMY	T/C NO	H/HREF R=1.0	H/HREF R=.900	H/HREF R=.850	QREF BTU/ FT2SEC	QDOT BTU/ FT2SEC	HW/HT	TW DEG. R	STN NO R=.900
114	1.0000	482.00	.13053-01	.1550-01	.1709-01	38.37	.5009	.3654	549.9	.3970-03
114	1.0000	483.00	.13813-01	.1640-01	.1809-01	38.37	.5301	.3654	549.8	.4201-03
114	1.0000	484.00	.13306-01	.1580-01	.1743-01	38.35	.5103	.3657	550.2	.4047-03
114	1.0000	485.00	.14730-01	.1749-01	.1930-01	38.33	.5647	.3660	550.7	.4480-03
114	1.0000	490.00	.15447-01	.1834-01	.2023-01	38.37	.5927	.3654	549.8	.4698-03
114	1.0000	491.00	.21967-01	.2608-01	.2877-01	38.34	.8422	.3659	550.6	.6682-03

IH103 60-OT WING MISC.

(R3PP19)

WING MISC.

PARAMETRIC DATA

MACH = 5.250 ALPHA = -10.00 BETA = -5.000 ELEVON = .0000
BDFLAP = .0000 SPDBRK = .0000

TEST CONDITIONS

RUN NUMBER	ALPHA DEG.	BETA DEG.	MACH	RN/FT /FT X10 6	PT PSIA	TT DEG. R	HT BTU/ LBM	PINF PSIA	TINF DEG. R	RHO SLUGS/ FT3	VINF FT/SEC	SCALE
117	-10.00	-5.000	5.250	1.076	103.9	1472.	362.2	.1434	231.8	.5192-04	3918.	.1750-01

RUN NUMBER	PHI DEG.	HS SPHERE TW=540
117	.0000	.1678

TEST DATA

RUN NUMBER	DUMMY	T/C NO	H/HREF R=1.0	H/HREF R=.900	H/HREF R=.850	QREF BTU/ FT2SEC	QDOT BTU/ FT2SEC	HW/HT	TW DEG. R	STN NO R=.900
117	1.0000	482.00	.12903-01	.1531-01	.1688-01	38.65	.4987	.3638	549.1	.3924-03
117	1.0000	483.00	.13813-01	.1639-01	.1807-01	38.66	.5340	.3637	549.0	.4201-03
117	1.0000	484.00	.13388-01	.1589-01	.1752-01	38.65	.5174	.3639	549.2	.4072-03
117	1.0000	485.00	.15103-01	.1792-01	.1977-01	38.64	.5835	.3641	549.5	.4594-03
117	1.0000	490.00	.14949-01	.1774-01	.1956-01	38.66	.5779	.3637	548.9	.4547-03
117	1.0000	491.00	.20493-01	.2432-01	.2682-01	38.64	.7918	.3641	549.5	.6233-03

IH103 60-OT WING MISC. (R3PP20)

WING MISC.

PARAMETRIC DATA

MACH = 5.250 ALPHA = -10.00 BETA = .0000 ELEVON = .0000
BDFLAP = .0000 SPDBRK = .0000

TEST CONDITIONS

RUN NUMBER	ALPHA DEG.	BETA DEG.	MACH	RN/FT /FT X10 6	PT PSIA	TT DEG. R	HT BTU/ LBM	PINF PSIA	TINF DEG. R	RHO SLUGS/ FT3	VINF FT/SEC	SCALE
124	-10.00	.0000	5.250	1.031	103.1	1504.	370.6	.1420	237.2	.5026-04	3963.	.1750-01

RUN NUMBER	PHI DEG.	HS SPHERE TW=540
124	.0000	.1674

TEST DATA

RUN NUMBER	DUMMY	T/C NO	H/HREF R=1.0	H/HREF R=.900	H/HREF R=.850	QREF BTU/ FT2SEC	QDOT BTU/ FT2SEC	HW/HT	TW DEG. R	STN NO R=.900
124	1.0000	482.00	.18195-01	.2154-01	.2373-01	39.90	.7260	.3566	550.7	.5625-03
124	1.0000	483.00	.18263-01	.2162-01	.2381-01	39.90	.7288	.3565	550.6	.5346-03
124	1.0000	484.00	.17385-01	.2059-01	.2267-01	39.88	.6933	.3569	551.2	.5375-03
124	1.0000	485.00	.19305-01	.2286-01	.2518-01	39.85	.7692	.3574	552.0	.5969-03
124	1.0000	490.00	.20564-01	.2435-01	.2681-01	39.90	.8206	.3565	550.6	.6357-03
124	1.0000	491.00	.26470-01	.3135-01	.3453-01	39.85	1.055	.3573	551.8	.8184-03

IH103 60-OT WING MISC. (R3PP21)

WING MISC.

PARAMETRIC DATA

MACH = 5.250 ALPHA = .0000 BETA = .0000 ELEVON = .0000
BDFLAP = .0000 SPDBRK = .0000

TEST CONDITIONS

RUN NUMBER	ALPHA DEG.	BETA DEG.	MACH	RN/FT /FT X10 6	PT PSIA	TT DEG. R	HT BTU/ LBM	PINF PSIA	TINF DEG. R	RHO SLUGS/ FT3	VINF FT/SEC	SCALE
128	.0000	.0000	5.250	.6494	103.9	1998.	503.7	.1372	322.4	.3570-04	4620.	.1750-01

RUN NUMBER	PHI DEG.	HS SPHERE TW=540
128	.0000	.1691

TEST DATA

RUN NUMBER	DUMMY	T/C NO	H/HREF R=1.0	H/HREF R=.900	H/HREF R=.850	QREF BTU/ FT2SEC	QDOT BTU/ FT2SEC	HW/HT	TW DEG. R	STN NO R=.900
128	1.0000	482.00	.36235-02	.4190-02	.4546-02	62.95	.2281	.2609	547.7	.1335-03
128	1.0000	483.00	.38686-02	.4474-02	.4854-02	62.95	.2435	.2608	547.6	.1425-03
128	1.0000	484.00	.86036-02	.9950-02	.1080-01	62.93	.5414	.2612	548.3	.3170-03
128	1.0000	485.00	.10586-01	.1224-01	.1328-01	62.89	.6657	.2616	549.2	.3901-03
128	1.0000	490.00	.46798-02	.5412-02	.5871-02	62.95	.2946	.2609	547.7	.1724-03
128	1.0000	491.00	.11612-01	.1343-01	.1457-01	62.88	.7302	.2616	549.2	.4279-03

IH103 60-OT WING LOWER SURFACE (R3PQ01)

WING LOWER SURF

PARAMETRIC DATA

MACH = 5.250 ALPHA = .0000 BETA = .0000 ELEVON = .0000
BDFLAP = .0000 SPDBRK = .0000

TEST CONDITIONS

RUN NUMBER	ALPHA DEG.	BETA DEG.	MACH	RN/FT /FT X10 6	PT PSIA	TT DEG. R	HT BTU/ LBM	PINF PSIA	TINF DEG. R	RHO SLUGS/ FT3	VINF FT/SEC	SCALE
60	.0000	.0000	5.250	1.059	102.9	1478.	363.8	.1420	232.8	.5119-04	3926.	.1750-01
61	.0000	.0000	5.250	1.040	103.5	1499.	369.3	.1426	236.3	.5062-04	3956.	.1750-01
85	.0000	.0000	5.250	1.025	103.2	1511.	372.3	.1421	238.3	.5006-04	3972.	.1750-01

RUN NUMBER	PHI DEG.	HS SPHERE TW=540
60	.0000	.1671
61	.0000	.1677
85	.0000	.1675

TEST DATA

RUN NUMBER	2Y/BW	XW/CW	T/C NO	H/HREF R=1.0	H/HREF R=.900	H/HREF R=.850	QREF BTU/ FT2SEC	QDOT BTU/ FT2SEC	HW/HT	TW DEG. R	STN NO R=.900
85	.30000	.10000+00	1075.0	.3482-01	.4122-01	.4539-01	40.15	1.398	.3559	552.3	.1079-02
85	.30000	.20000	1076.0	.3145-01	.3722-01	.4099-01	40.18	1.264	.3555	551.6	.9743-03
85	.30000	.30000	1077.0	.2623-01	.3104-01	.3418-01	40.19	1.054	.3554	551.4	.8125-03
85	.30000	.40000	1078.0	.2455-01	.2905-01	.3199-01	40.20	.9867	.3552	551.2	.7605-03
85	.30000	.50000	1079.0	.2166-01	.2564-01	.2823-01	40.17	.8702	.3556	551.7	.6711-03
85	.30000	.60000	1080.0	.4392-01	.5198-01	.5723-01	40.20	1.765	.3552	551.1	.1360-02
85	.30000	.70000	1081.0	.5457-01	.6459-01	.7111-01	40.20	2.194	.3552	551.2	.1690-02
85	.30000	.80000	1082.0	.5414-01	.6409-01	.7058-01	40.15	2.174	.3559	552.3	.1677-02
61	.30000	.90000	83.000	.2032-01	.2411-01	.2659-01	39.34	.7995	.3640	560.2	.6269-03
61	.30000	.95000	84.000	.2454-01	.2912-01	.3212-01	39.31	.9646	.3646	561.1	.7571-03
85	.40000	.30000	1090.0	.1595-01	.1888-01	.2079-01	40.16	.6405	.3557	552.0	.4941-03
85	.40000	.60000	1092.0	.4531-01	.5362-01	.5904-01	40.22	1.822	.3549	550.7	.1404-02
85	.40000	.70000	1093.0	.3642-01	.4311-01	.4747-01	40.16	1.462	.3558	552.1	.1128-02
85	.40000	.75000	1094.0	.3199-01	.3787-01	.4170-01	40.15	1.285	.3559	552.2	.9912-03
61	.40000	.85000	95.000	.2155-01	.2557-01	.2821-01	39.29	.8466	.3648	561.4	.6647-03
61	.40000	.90000	96.000	.1691-01	.2008-01	.2215-01	39.21	.6631	.3661	563.4	.5219-03
61	.40000	.95000	97.000	.1335-01	.1585-01	.1750-01	39.17	.5229	.3667	564.4	.4121-03

IH103 60-OT WING LOWER SURFACE (R3PQ01)

RUN NUMBER	2Y/BW	XW/CW	T/C NO	H/HREF R=1.0	H/HREF R=.900	H/HREF R=.850	QREF BTU/ FT2SEC	QDOT BTU/ FT2SEC	HW/HT	TW DEG. R	STN NO R=.900
85	.50000	.60000	1105.0	.2458-01	.2910-01	.3204-01	40.13	.9862	.3563	552.8	.7615-03
85	.50000	.70000	1106.0	.2502-01	.2961-01	.3261-01	40.16	1.005	.3558	552.2	.7751-03
85	.60000	.25000-01	1110.0	.2350	.2787	.3073	39.77	9.347	.3519	561.5	.7292-02
85	.60000	.75000-01	1112.0	.9000-01	.1067	.1176	39.82	3.584	.3610	560.2	.2792-02
85	.60000	.10000+00	1113.0	.6367-01	.7548-01	.8319-01	39.83	2.536	.3609	560.0	.1975-02
85	.60000	.20000	1114.0	.3324-01	.3939-01	.4341-01	39.87	1.325	.3602	558.9	.1031-02
85	.60000	.30000	1115.0	.2762-01	.3272-01	.3606-01	39.93	1.103	.3593	557.6	.8563-03
85	.60000	.40000	1116.0	.2137-01	.2532-01	.2789-01	39.97	.8542	.3586	556.5	.6625-03
85	.60000	.50000	1117.0	.1321-01	.1565-01	.1724-01	39.98	.5282	.3585	556.3	.4096-03
85	.60000	.70000	1119.0	.1248-01	.1479-01	.1629-01	40.00	.4993	.3582	555.8	.3870-03
61	.60000	.80000	120.00	.1401-01	.1663-01	.1834-01	39.27	.5502	.3651	562.0	.4323-03
61	.60000	.90000	122.00	.1357-01	.1612-01	.1779-01	39.09	.5304	.3679	566.2	.4189-03
61	.60000	.95000	123.00	.1149-01	.1366-01	.1508-01	39.02	.4484	.3691	568.0	.3549-03
61	.70000	.60000	131.00	.2100-01	.2494-01	.2753-01	39.09	.8208	.3679	566.3	.6483-03
61	.70000	.90000	132.00	.1126-01	.1339-01	.1478-01	38.99	.4392	.3694	568.6	.3479-03
61	.75000	.40000	139.00	.2312-01	.2746-01	.3031-01	39.09	.9036	.3680	566.4	.7138-03
61	.75000	.60000	140.00	.2283-01	.2713-01	.2995-01	38.99	.8900	.3695	568.7	.7050-03
85	.75000	.70000	1141.0	.1695-01	.2009-01	.2214-01	39.90	.6763	.3598	558.3	.5257-03
61	.75000	.80000	142.00	.1070-01	.1271-01	.1402-01	39.12	.4185	.3675	565.6	.3303-03
61	.75000	.90000	143.00	.8723-02	.1037-01	.1145-01	38.95	.3397	.3702	569.7	.2695-03
61	.75000	.95000	144.00	.6916-02	.8223-02	.9081-02	38.89	.2690	.3710	571.0	.2137-03
61	.80000	.40000	147.00	.3503-01	.4168-01	.4605-01	38.76	1.358	.3731	574.2	.1083-02
61	.85000	.20000	150.00	.5985-01	.7133-01	.7890-01	38.40	2.298	.3787	582.9	.1853-02
61	.85000	.40000	151.00	.4347-01	.5178-01	.5725-01	38.54	1.675	.3765	579.5	.1345-02
61	.90000	.00000	152.00	.1907	.2276	.2520	38.08	7.262	.3837	590.5	.5911-02
61	.90000	.10000+00	153.00	.1044	.1246	.1380	38.09	3.977	.3836	590.3	.3237-02
61	.90000	.20000	154.00	.7126-01	.8503-01	.9412-01	38.16	2.720	.3824	588.5	.2208-02
85	.90000	.60000	1157.0	.3857-01	.4579-01	.5053-01	39.48	1.523	.3663	568.4	.1198-02
61	.90000	.80000	158.00	.2073-01	.2466-01	.2724-01	38.81	.8046	.3723	573.0	.6407-03
61	.90000	.90000	159.00	.1460-01	.1738-01	.1920-01	38.67	.5644	.3745	576.5	.4514-03
61	.95000	.10000+00	162.00	.8629-01	.1032	.1143	37.77	3.260	.3884	597.8	.2678-02
61	.95000	.30000	164.00	.6118-01	.7306-01	.8092-01	37.97	2.323	.3853	593.1	.1897-02
61	.95000	.50000	165.00	.4110-01	.4903-01	.5427-01	36.22	1.571	.3815	587.2	.1273-02
61	.95000	.70000	166.00	.2105-01	.2506-01	.2769-01	38.66	.8139	.3746	576.5	.6510-03
60	.95000	.80000	167.00	.2123-01	.2531-01	.2800-01	37.66	.7995	.3794	575.2	.6529-03
60	.95000	.90000	168.00	.1695-01	.2021-01	.2237-01	37.59	.6372	.3805	576.8	.5215-03

IH103 60-OT WING LOWER SURFACE (R3PQ02)

WING LOWER SURF

PARAMETRIC DATA

MACH = 5.250 ALPHA = -5.000 BETA = .0000 ELEVON = .0000
BDFLAP = .0000 SPDBRK = .0000

TEST CONDITIONS

RUN NUMBER	ALPHA DEG.	BETA DEG.	MACH	RN/FT /FT X10 6	PT PSIA	TT DEG. R	HT BTU/ LBM	PINF PSIA	TINF DEG. R	RHO SLUGS/ FT3	VINF FT/SEC	SCALE
59	-5.000	.0000	5.250	1.045	101.3	1476.	363.2	.1398	232.4	.5048-04	3923.	.1750-01
62	-5.000	.0000	5.250	1.040	103.4	1499.	369.2	.1425	236.3	.5060-04	3055.	.1750-01
86	-5.000	.0000	5.250	1.032	103.2	1504.	370.6	.1422	237.2	.5031-04	3963.	.1750-01

RUN NUMBER	PHI DEG.	HS SPHERE TW=540
59	.0000	.1658
62	.0000	.1676
86	.0000	.1675

TEST DATA

RUN NUMBER	2Y/BW	XW/CW	T/C NO	H/HREF R=1.0	H/HREF R=.900	H/HREF R=.850	QREF BTU/ FT2SEC	QDOT BTU/ FT2SEC	HW/HT	TW DEG. R	STN NO R=.900
86	.30000	.10000+00	1075.0	.4387-01	.5188-01	.5708-01	40.23	1.765	.3518	543.3	.1354-02
86	.30000	.20000	1076.0	.2783-01	.3291-01	.3621-01	40.25	1.120	.3515	542.8	.8591-03
86	.30000	.30000	1077.0	.2416-01	.2857-01	.3143-01	40.25	.9727	.3514	542.7	.7458-03
86	.30000	.40000	1078.0	.2600-01	.3074-01	.3382-01	40.26	1.047	.3513	542.7	.8025-03
86	.30000	.50000	1079.0	.2363-01	.2794-01	.3075-01	40.24	.9510	.3516	543.1	.7295-03
86	.30000	.60000	1080.0	.3903-01	.4614-01	.5076-01	40.27	1.572	.3511	542.3	.1204-02
86	.30000	.70000	1081.0	.5723-01	.6767-01	.7446-01	40.23	2.303	.3517	543.2	.1767-02
86	.30000	.80000	1082.0	.5706-01	.6748-01	.7426-01	40.20	2.294	.3523	544.1	.1762-02
62	.30000	.90000	83.000	.1230-01	.1460-01	.1611-01	39.18	.4819	.3661	563.3	.3797-03
62	.30000	.95000	84.000	.2267-01	.2692-01	.2971-01	39.11	.6865	.3672	565.0	.6999-03
86	.40000	.30000	1090.0	.1505-01	.1780-01	.1958-01	40.23	.6056	.3517	543.2	.4646-03
86	.40000	.60000	1092.0	.3596-01	.4251-01	.4677-01	40.25	1.447	.3514	542.8	.1110-02
86	.40000	.70000	1093.0	.3795-01	.4488-01	.4939-01	40.19	1.525	.3523	544.1	.1172-02
86	.40000	.75000	1094.0	.3341-01	.3951-01	.4348-01	40.19	1.343	.3523	544.2	.1031-02
62	.40000	.85000	95.000	.1854-01	.2202-01	.2429-01	39.15	.7260	.3665	563.9	.5724-03
62	.40000	.90000	96.000	.1393-01	.1655-01	.1826-01	39.05	.5440	.3680	566.3	.4301-03
62	.40000	.95000	97.000	.1021-01	.1213-01	.1340-01	38.99	.3982	.3690	567.8	.3154-03

IH103 MODELS 60-OT AND 560/60T AT ARC 3.5 FT. TUNNEL

IH103 60-OT WING LOWER SURFACE

(R3PQ02)

RUN NUMBER	2Y/BW	XW/CW	T/C NO	H/HREF R=1.0	H/HREF R=.900	H/HREF R=.850	QREF BTU/ FT2SEC	QDOT BTU/ FT2SEC	HW/HT	TW DEG. R	STN NO R=.900
86	.50000	.60000	1105.0	.2274-01	.2689-01	.2960-01	40.17	.9136	.3526	544.6	.7021-03
86	.50000	.70000	1106.0	.2413-01	.2853-01	.3140-01	40.21	.9703	.3520	543.7	.7449-03
86	.60000	.25000-01	1110.0	.2330	.2759	.3039	39.89	9.295	.3569	551.3	.7200-02
86	.60000	.75000-01	1112.0	.8504-01	.1007	.1109	39.97	3.400	.3557	549.4	.2627-02
86	.60000	.10000+00	1113.0	.5995-01	.7096-01	.7814-01	39.98	2.397	.3555	549.2	.1852-02
86	.60000	.20000	1114.0	.3099-01	.3668-01	.4038-01	40.03	1.241	.3548	548.0	.9573-03
86	.60000	.30000	1115.0	.2425-01	.2870-01	.3159-01	40.05	.9715	.3544	547.4	.7491-03
86	.60000	.40000	1116.0	.1731-01	.2048-01	.2254-01	40.07	.6935	.3542	547.1	.5345-03
86	.60000	.50000	1117.0	.9530-02	.1128-01	.1241-01	40.05	.3817	.3545	547.5	.2943-03
86	.60000	.70000	1119.0	.1618-01	.1914-01	.2107-01	40.09	.6485	.3540	546.7	.4996-03
62	.60000	.80000	120.00	.1291-01	.1533-01	.1692-01	39.13	.5053	.3669	564.5	.3986-03
62	.60000	.90000	122.00	.1141-01	.1356-01	.1497-01	38.93	.4441	.3699	569.2	.3524-03
62	.60000	.95000	123.00	.7881-02	.9372-02	.1035-01	38.85	.3062	.3713	571.3	.2436-03
62	.70000	.60000	131.00	.1858-01	.2208-01	.2437-01	38.97	.7240	.3693	568.2	.5739-03
62	.70000	.90000	132.00	.1666-02	.1982-02	.2189-02	38.82	.6469-01	.3717	571.9	.5150-04
62	.75000	.40000	139.00	.2753-01	.3271-01	.3610-01	39.02	1.074	.3686	567.1	.8502-03
62	.75000	.60000	140.00	.2035-01	.2419-01	.2672-01	38.88	.7912	.3707	570.4	.6288-03
86	.75000	.70000	1141.0	.1536-01	.1818-01	.2002-01	40.02	.6147	.3551	548.4	.4746-03
62	.75000	.80000	142.00	.5250-02	.6240-02	.6889-02	38.98	.2046	.3693	568.2	.1622-03
62	.75000	.90000	143.00	.3062-02	.3643-02	.4024-02	38.77	.1187	.3725	573.1	.9467-04
62	.75000	.95000	144.00	.4651-02	.5534-02	.6115-02	38.70	.1800	.3735	574.7	.1438-03
62	.80000	.40000	147.00	.2891-01	.3441-01	.3803-01	38.65	1.117	.3744	576.1	.8941-03
62	.85000	.20000	150.00	.5030-01	.5998-01	.6637-01	38.27	1.925	.3803	585.1	.1558-02
62	.85000	.40000	151.00	.3685-01	.4391-01	.4856-01	38.43	1.416	.3777	581.2	.1141-02
62	.90000	.00000	152.00	.2017	.2410	.2669	37.93	7.652	.3856	593.3	.6257-02
62	.90000	.10000+00	153.00	.9290-01	.1109	.1229	37.95	3.525	.3853	592.8	.2881-02
62	.90000	.20000	154.00	.5652-01	.6747-01	.7471-01	38.02	2.149	.3842	591.1	.1752-02
86	.90000	.60000	1157.0	.3329-01	.3945-01	.4346-01	39.76	1.324	.3590	554.5	.1029-02
62	.90000	.80000	158.00	.1354-01	.1611-01	.1780-01	38.66	.5233	.3742	575.7	.4186-03
62	.90000	.90000	159.00	.1073-01	.1278-01	.1413-01	38.51	.4133	.3765	579.3	.3321-03
62	.95000	.10000+00	162.00	.8257-01	.9875-01	.1095	37.68	3.111	.3895	599.2	.2563-02
62	.95000	.20000	163.00	.7029-01	.8403-01	.9314-01	37.73	2.652	.3887	598.1	.2182-02
62	.95000	.30000	164.00	.5480-01	.6548-01	.7255-01	37.86	2.075	.3867	595.0	.1700-02
62	.95000	.50000	165.00	.3954-01	.4719-01	.5225-01	38.08	1.506	.3832	589.6	.1226-02
62	.95000	.70000	166.00	.1637-01	.1949-01	.2155-01	38.51	.6302	.3755	579.3	.5064-03
59	.95000	.80000	167.00	.1737-01	.2066-01	.2282-01	37.73	.6552	.3726	564.1	.5369-03
59	.95000	.90000	168.00	.1623-01	.1931-01	.2134-01	37.64	.6108	.3741	566.3	.5019-03

IH103 60-OT WING LOWER SURFACE (R3PQ03)

WING LOWER SURF

PARAMETRIC DATA

MACH = 5.250 ALPHA = 5.000 BETA = .0000 ELEVON = .0000
BDFLAP = .0000 SPDBRK = .0000

TEST CONDITIONS

RUN NUMBER	ALPHA DEG.	BETA DEG.	MACH	RN/FT /FT X10 6	PT PSIA	TT DEG. R	HT BTU/ LBM	PINF PSIA	TINF DEG. R	RHO SLUGS/ FT3	VINF FT/SEC	SCALE
58	5.000	.0000	5.250	1.018	101.8	1504.	370.5	.1402	237.1	.4962-04	3962.	.1750-01
63	5.000	.0000	5.250	1.039	103.3	1499.	369.3	.1423	236.4	.5054-04	3956.	.1750-01
87	5.000	.0000	5.250	1.026	102.1	1500.	369.5	.1407	236.4	.4992-04	3957.	.1750-01

RUN NUMBER	PHI DEG.	HS SPHERE TW=540
58	.0000	.1663
63	.0000	.1675
87	.0000	.1665

TEST DATA

RUN NUMBER	2Y/BW	XW/CW	T/C NO	H/HREF R=1.0	H/HREF R=.900	H/HREF R=.850	QREF BTU/ FT2SEC	QDOT BTU/ FT2SEC	HW/HT	TW DEG. R	STN NO R=.900
87	.30000	.10000+00	1075.0	.4142-01	.4901-01	.5396-01	39.70	1.644	.3546	546.0	.1284-02
87	.30000	.20000	1076.0	.3203-01	.3790-01	.4172-01	39.71	1.272	.3544	545.7	.9929-03
87	.30000	.30000	1077.0	.2694-01	.3187-01	.3509-01	39.72	1.070	.3542	545.4	.8350-03
87	.30000	.40000	1078.0	.1987-01	.2351-01	.2588-01	39.72	.7892	.3543	545.5	.6153-03
87	.30000	.50000	1079.0	.1559-01	.1844-01	.2030-01	39.76	.6197	.3536	544.5	.4830-03
87	.30000	.60000	1080.0	.4890-01	.5785-01	.6368-01	39.75	1.944	.3538	544.8	.1516-02
87	.30000	.70000	1081.0	.7928-01	.9382-01	.1033	39.71	3.148	.3545	545.8	.2458-02
87	.30000	.80000	1082.0	.7690-01	.9101-01	.1002	39.68	3.052	.3549	546.4	.2384-02
63	.30000	.90000	83.000	.1604-01	.1902-01	.2096-01	39.49	.6334	.3613	556.2	.4949-03
63	.30000	.95000	84.000	.2044-01	.2424-01	.2673-01	39.43	.8060	.3622	557.5	.6308-03
87	.40000	.30000	1090.0	.1349-01	.1596-01	.1757-01	39.72	.5360	.3542	545.4	.4182-03
87	.40000	.60000	1092.0	.3823-01	.4523-01	.4978-01	39.76	1.520	.3536	544.5	.1185-02
87	.40000	.70000	1093.0	.5692-01	.6735-01	.7415-01	39.70	2.260	.3545	545.9	.1764-02
87	.40000	.75000	1094.0	.5935-01	.7024-01	.7732-01	39.70	2.356	.3546	545.9	.1840-02
63	.40000	.85000	95.000	.4006-01	.4750-01	.5236-01	39.47	1.581	.3615	556.5	.1236-02
63	.40000	.90000	96.000	.2982-01	.3538-01	.3901-01	39.37	1.174	.3631	558.9	.9205-03
63	.40000	.95000	97.000	.2393-01	.2839-01	.3131-01	39.32	.9408	.3640	560.2	.7387-03

IH103 60-OT WING LOWER SURFACE

(R3PQ03)

RUN NUMBER	2Y/BW	XW/CW	T/C NO	H/HREF R=1.0	H/HREF R=.900	H/HREF R=.850	QREF BTU/ FT2SEC	QDOT BTU/ FT2SEC	HW/HT	TW DEG. R	STN NO R=.900
87	.50000	.60000	1105.0	.3709-01	.4389-01	.4832-01	39.69	1.472	.3548	546.3	.1150-02
87	.50000	.70000	1106.0	.4775-01	.5650-01	.6220-01	39.73	1.897	.3542	545.4	.1480-02
87	.60000	.25000-01	1110.0	.2791	.3307	.3644	39.39	10.99	.3594	553.4	.8661-02
87	.60000	.75000-01	1112.0	.1171	.1387	.1528	39.46	4.621	.3584	551.8	.3633-02
87	.60000	.10000+00	1113.0	.8463-01	.1003	.1104	39.47	3.340	.3582	551.6	.2626-02
87	.60000	.20000	1114.0	.4590-01	.5436-01	.5987-01	39.51	1.813	.3575	550.5	.1424-02
87	.60000	.30000	1115.0	.3723-01	.4409-01	.4856-01	39.55	1.472	.3569	549.6	.1155-02
87	.60000	.40000	1116.0	.2617-01	.3099-01	.3413-01	39.57	1.036	.3567	549.2	.8118-03
87	.60000	.50000	1117.0	.1822-01	.2157-01	.2376-01	39.57	.7208	.3566	549.2	.5649-03
87	.60000	.70000	1119.0	.1445-01	.1711-01	.1884-01	39.60	.5722	.3562	548.4	.4481-03
63	.60000	.80000	120.00	.1339-01	.1588-01	.1750-01	39.46	.5284	.3618	556.9	.4132-03
63	.60000	.90000	122.00	.1544-01	.1833-01	.2022-01	39.25	.6060	.3651	562.0	.4769-03
63	.60000	.95000	123.00	.1552-01	.1843-01	.2034-01	39.16	.6079	.3664	564.0	.4795-03
63	.70000	.60000	131.00	.3126-01	.3710-01	.4092-01	39.27	1.227	.3648	561.5	.9652-03
63	.70000	.90000	132.00	.2055-01	.2440-01	.2692-01	39.14	.8041	.3668	564.6	.6348-03
63	.75000	.40000	139.00	.3619-01	.4298-01	.4743-01	39.14	1.416	.3668	564.6	.1118-02
63	.75000	.60000	140.00	.3070-01	.3645-01	.4022-01	39.16	1.202	.3665	564.2	.9483-03
87	.75000	.70000	1141.0	.2600-01	.3079-01	.3391-01	39.52	1.027	.3574	550.3	.8064-03
63	.75000	.80000	142.00	.1881-01	.2233-01	.2463-01	39.27	.7389	.3647	561.4	.5810-03
63	.75000	.90000	143.00	.1526-01	.1812-01	.2000-01	39.08	.5963	.3676	565.9	.4714-03
63	.75000	.95000	144.00	.1092-01	.1298-01	.1432-01	39.03	.4263	.3684	567.1	.3375-03
63	.80000	.40000	147.00	.4611-01	.5482-01	.6053-01	38.90	1.734	.3705	570.3	.1426-02
63	.85000	.20000	150.00	.7689-01	.9157-01	.1012	38.51	2.961	.3765	579.5	.2381-02
63	.85000	.40000	151.00	.5552-01	.6609-01	.7303-01	38.66	2.146	.3743	576.1	.1718-02
63	.90000	.00000	152.00	.1630	.1944	.2151	38.22	6.228	.3811	586.6	.5052-02
63	.90000	.10000+00	153.00	.1095	.1307	.1446	38.21	4.185	.3812	586.9	.3396-02
63	.90000	.20000	154.00	.7706-01	.9188-01	.1017	38.27	2.949	.3803	585.4	.2388-02
87	.90000	.60000	1157.0	.6322-01	.7498-01	.8267-01	39.20	2.478	.3624	558.1	.1963-02
63	.90000	.80000	158.00	.2723-01	.3236-01	.3573-01	38.93	1.060	.3700	569.5	.8417-03
63	.90000	.90000	159.00	.2033-01	.2418-01	.2671-01	38.78	.7883	.3723	573.0	.6288-03
63	.95000	.10000+00	162.00	.9615-01	.1149	.1272	37.89	3.643	.3862	594.4	.2984-02
63	.95000	.20000	163.00	.7624-01	.9104-01	.1008	37.96	2.894	.3851	592.8	.2366-02
63	.95000	.30000	154.00	.6240-01	.7448-01	.8246-01	38.07	2.375	.3835	590.2	.1935-02
63	.95000	.50000	165.00	.4242-01	.5057-01	.5594-01	38.34	1.627	.3791	583.6	.1314-02
63	.95000	.70000	166.00	.3180-01	.3782-01	.4178-01	38.78	1.233	.3723	573.1	.9837-03
58	.95000	.80000	167.00	.3113-01	.3689-01	.4066-01	39.38	1.226	.3603	556.2	.9692-03
58	.95000	.90000	168.00	.2469-01	.2926-01	.3225-01	39.36	.9716	.3607	556.9	.7688-03

IH103 60-OT WING LOWER SURFACE (R3PQ04)

WING LOWER SURF

PARAMETRIC DATA

MACH = 5.250 ALPHA = 10.00 BETA = .0000 ELEVON = .0000
BDFLAP = .0000 SPDBRK = .0000

TEST CONDITIONS

RUN NUMBER	ALPHA DEG.	BETA DEG.	MACH	RN/FT /FT X10 6	PT PSIA	TT DEG. R	HT BTU/ LBM	PINF PSIA	TINF DEG. R	RHO SLUGS/ FT3	VINF FT/SEC	SCALE
57	10.00	.0000	5.250	1.013	101.8	1509.	371.9	.1402	238.0	.4942-04	3970.	.1750-01
64	10.00	.0000	5.250	.9958	103.5	1541.	380.2	.1422	243.3	.4905-04	4014.	.1750-01
88	10.00	.0000	5.250	1.044	103.7	1498.	369.0	.1429	236.1	.5079-04	3954.	.1750-01

RUN NUMBER	PHI DEG.	HS SPHERE TW=540
57	.0000	.1663
64	.0000	.1679
88	.0000	.1678

TEST DATA

RUN NUMBER	2Y/BW	XW/CW	T/C NO	H/HREF R=1.0	H/HREF R=.900	H/HREF R=.850	QREF BTU/ FT2SEC	QDOT BTU/ FT2SEC	HW/HT	TW DEG. R	STN NO R=.900
88	.30000	.10000+00	1075.0	.5740-01	.6798-01	.7488-01	39.77	2.283	.3576	549.9	.1765-02
88	.30000	.20000	1076.0	.4939-01	.5849-01	.6443-01	39.79	1.965	.3572	549.4	.1519-02
88	.30000	.30000	1077.0	.3818-01	.4521-01	.4980-01	39.80	1.520	.3571	549.2	.1174-02
88	.30000	.40000	1078.0	.2270-01	.2688-01	.2960-01	39.80	.9033	.3571	549.2	.6979-03
88	.30000	.50000	1079.0	.6600-02	.7813-02	.8604-02	39.87	.2631	.3561	547.6	.2029-03
88	.30000	.60000	1080.0	.4527-01	.5361-01	.5904-01	39.83	1.803	.3566	548.4	.1392-02
88	.30000	.70000	1081.0	.8851-01	.1048	.1154	39.81	3.523	.3570	549.0	.2722-02
88	.30000	.80000	1082.0	.9328-01	.1105	.1217	39.78	3.711	.3573	549.5	.2868-02
64	.30000	.90000	83.000	.2083-01	.2456-01	.2698-01	42.02	.8752	.3419	541.8	.6510-03
64	.30000	.95000	84.000	.2256-01	.2662-01	.2924-01	41.91	.9455	.3435	544.4	.7054-03
88	.40000	.30000	1090.0	.3421-01	.4051-01	.4462-01	39.81	1.362	.3570	548.9	.1052-02
88	.40000	.60000	1092.0	.5903-01	.6988-01	.7696-01	39.87	2.353	.3561	547.6	.1815-02
88	.40000	.70000	1093.0	.6190-01	.7329-01	.8073-01	39.81	2.464	.3570	549.0	.1903-02
88	.40000	.75000	1094.0	.5682-01	.6728-01	.7411-01	39.81	2.262	.3570	549.0	.1747-02
64	.40000	.85000	95.000	.3639-01	.4292-01	.4715-01	41.97	1.527	.3425	542.8	.1138-02
64	.40000	.90000	96.000	.2693-01	.3177-01	.3491-01	41.86	1.127	.3442	545.4	.8420-03
64	.40000	.95000	97.000	.2187-01	.2581-01	.2836-01	41.78	.9136	.3454	547.4	.6839-03

IH103 60-OT WING LOWER SURFACE (R3PQ04)

RUN NUMBER	2Y/BW	XW/CW	T/C NO	H/HREF R=1.0	H/HREF R=.900	H/HREF R=.850	QREF BTU/ FT2SEC	QDOT BTU/ FT2SEC	HW/HT	TW DEG. R	STN NO R=.900
88	.50000	.60000	1105.0	.6842-01	.8103-01	.8925-01	39.78	2.722	.3573	549.5	.2104-02
88	.50000	.70000	1106.0	.7240-01	.8572-01	.9441-01	39.82	2.883	.3568	548.6	.2226-02
88	.60000	.25000-01	1110.0	.3076	.3649	.4023	39.42	12.12	.3630	558.3	.9470-02
88	.60000	.75000-01	1112.0	.1403	.1663	.1834	39.50	5.541	.3618	556.3	.4318-02
88	.60000	.10000+00	1113.0	.1042	.1236	.1362	39.51	4.118	.3615	556.0	.3208-02
88	.60000	.20000	1114.0	.5569-01	.6602-01	.7277-01	39.57	2.204	.3606	554.6	.1714-02
88	.60000	.30000	1115.0	.4461-01	.5287-01	.5826-01	39.62	1.768	.3599	553.4	.1373-02
88	.60000	.40000	1116.0	.3246-01	.3846-01	.4238-01	39.64	1.287	.3596	553.0	.9985-03
88	.60000	.50000	1117.0	.1948-01	.2309-01	.2544-01	39.65	.7725	.3594	552.7	.5993-03
88	.60000	.70000	1119.0	.2586-01	.3064-01	.3375-01	39.68	1.026	.3589	551.9	.7954-03
64	.60000	.80000	120.00	.3085-01	.3640-01	.4000-01	41.88	1.292	.3440	7+5.1	.9647-03
64	.60000	.90000	122.00	.3528-01	.4167-01	.4581-01	41.64	1.469	.3476	550.8	.1104-02
64	.60000	.95000	123.00	.3185-01	.3763-01	.4138-01	41.54	1.323	.3490	553.0	.9968-03
64	.70000	.60000	131.00	.3795-01	.4482-01	.4928-01	41.65	1.581	.3474	550.5	.1188-02
64	.70000	.90000	132.00	.2997-01	.3543-01	.3897-01	41.42	1.241	.3508	556.0	.9384-03
64	.75000	.40000	139.00	.4603-01	.5439-01	.5983-01	41.51	1.911	.3496	553.9	.1441-02
64	.75000	.60000	140.00	.4051-01	.4788-01	.5267-01	41.49	1.681	.3499	554.4	.1268-02
88	.75000	.70000	1141.0	.3391-01	.4019-01	.4429-01	39.61	1.343	.3601	553.8	.1043-02
64	.75000	.80000	142.00	.2849-01	.3365-01	.3701-01	41.56	1.184	.3487	552.6	.8916-03
64	.75000	.90000	143.00	.2057-01	.2432-01	.2677-01	41.33	.8503	.3521	558.0	.6443-03
64	.75000	.95000	144.00	.1937-01	.2291-01	.2521-01	41.32	.8004	.3523	558.3	.6067-03
64	.80000	.40000	147.00	.5681-01	.6722-01	.7400-01	41.20	2.341	.3542	561.3	.1780-02
64	.85000	.20000	150.00	.8655-01	.1026	.1131	40.74	3.526	.3611	572.2	.2716-02
64	.85000	.40000	151.00	.6201-01	.7347-01	.8095-01	40.89	2.536	.3588	568.6	.1945-02
64	.90000	.00000	152.00	.1763	.2093	.2309	40.42	7.124	.3559	579.8	.5538-02
64	.90000	.10000+00	153.00	.1280	.1520	.1678	40.39	5.171	.3664	580.6	.4023-02
64	.90000	.20000	154.00	.8767-01	.1041	.1148	40.43	3.544	.3658	579.6	.2754-02
88	.90000	.60000	1157.0	.5460-01	.6481-01	.7150-01	38.27	2.144	.3654	561.9	.1682-02
64	.90000	.80000	158.00	.4034-01	.4774-01	.5256-01	41.15	1.660	.3549	562.4	.1264-02
64	.90000	.90000	159.00	.3067-01	.3631-01	.4000-01	41.00	1.257	.3571	566.0	.9615-03
64	.95000	.10000+00	162.00	.1153	.1371	.1514	40.04	4.615	.3716	588.9	.3626-02
64	.95000	.30000	164.00	.7854-01	.9334-01	.1030	40.19	3.156	.3694	585.3	.2469-02
64	.95000	.50000	165.00	.5107-01	.6060-01	.6684-01	40.52	2.069	.3644	577.4	.1604-02
64	.95000	.70000	166.00	.3892-01	.4610-01	.5079-01	40.97	1.595	.3576	566.7	.1220-02
57	.95000	.80000	167.00	.3872-01	.4586-01	.5052-01	39.72	1.538	.3575	554.1	.1208-02
57	.95000	.90000	168.00	.2857-01	.3384-01	.3728-01	39.71	1.135	.3576	554.3	.8912-03

IH103 60-OT WING LOWER SURFACE (R3PQ05)

WING LOWER SURF

PARAMETRIC DATA

MACH = 5.250 ALPHA = .0000 BETA = -5.000 ELEVON = .0000
BDFLAP = .0000 SPDBRK = .0000

TEST CONDITIONS

RUN NUMBER	ALPHA DEG.	BETA DEG.	MACH	RN/FT /FT X10 6	PT PSIA	TT DEG. R	HT BTU/ LBM	PINF PSIA	TINF DEG. R	RHO SLUGS/ FT3	VINF FT/SEC	SCALE
68	.0000	-5.000	5.250	1.031	103.1	1505.	370.7	.1420	237.3	.5023-04	3964.	.1750-01
69	.0000	-5.000	5.250	1.031	103.0	1504.	370.5	.1419	237.1	.5023-04	3962.	.1750-01
76	.0000	-5.000	5.250	1.033	102.9	1501.	369.7	.1418	236.6	.5028-04	3958.	.1750-01

RUN NUMBER	PHI DEG.	HS SPHERE TW=540
68	.0000	.1674
69	.0000	.1673
76	.0000	.1672

TEST DATA

RUN NUMBER	2Y/BW	XW/CW	T/C NO	H/HREF R=1.0	H/HREF R=.900	H/HREF R=.850	QREF BTU/ FT2SEC	QDOT BTU/ FT2SEC	HW/HT	TW DEG. R	STN NO R=.900
76	.30000	.10000+00	1075.0	.4314-01	.5106-01	.5623-01	39.81	1.718	.3556	547.9	.1333-02
76	.30000	.20000	1076.0	.3955-01	.4681-01	.5154-01	39.83	1.575	.3553	547.5	.1222-02
76	.30000	.30000	1077.0	.2647-01	.3133-01	.3450-01	39.83	1.054	.3554	547.6	.8179-03
76	.30000	.40000	1078.0	.2022-01	.2393-01	.2635-01	39.83	.8051	.3554	547.6	.6245-03
76	.30000	.50000	1079.0	.1510-01	.1787-01	.1967-01	39.86	.6019	.3548	546.7	.4664-03
76	.30000	.60000	1080.0	.9031-02	.1069-01	.1177-01	39.83	.3597	.3553	547.5	.2790-03
76	.30000	.70000	1081.0	.5328-01	.6306-01	.6944-01	39.83	2.122	.3554	547.6	.1646-02
76	.30000	.80000	1082.0	.1124	.1330	.1465	39.79	4.470	.3561	548.6	.3472-02
68	.30000	.90000	83.000	.3096-01	.3669-01	.4043-01	39.71	1.230	.3597	555.7	.9581-03
68	.30000	.95000	84.000	.1062-01	.1260-01	.1389-01	39.57	.4203	.3619	559.1	.3289-03
76	.40000	.30000	1090.0	.2353-01	.2785-01	.3066-01	39.83	.9372	.3553	547.5	.7269-03
76	.40000	.60000	1092.0	.3131-01	.3706-01	.4080-01	39.86	1.248	.3548	546.7	.9673-03
76	.40000	.70000	1093.0	.3920-01	.4640-01	.5110-01	39.82	1.561	.3555	547.7	.1211-02
76	.40000	.75000	1094.0	.3989-01	.4721-01	.5198-01	39.83	1.589	.3554	547.6	.1232-02
68	.40000	.85000	95.000	.4304-01	.5100-01	.5620-01	39.72	1.709	.3596	555.6	.1332-02
68	.40000	.90000	96.000	.3963-01	.4700-01	.5182-01	39.56	1.568	.3620	559.4	.1227-02
68	.40000	.95000	97.000	.3667-01	.4351-01	.4798-01	39.45	1.447	.3636	561.9	.1136-02

IH103 60-OT WING LOWER SURFACE (R3PQ05)

RUN NUMBER	2Y/BW	XW/CW	T/C NO	H/HREF R=1.0	H/HREF R=.900	H/HREF R=.850	QREF BTU/ FT2SEC	QDOT BTU/ FT2SEC	HW/HT	TW DEG. R	STN NO R=.900
76	.50000	.60000	1105.0	.1597-01	.1891-01	.2082-01	39.83	.6362	.3554	547.6	.4935-03
76	.50000	.70000	1106.0	.2161-01	.2558-01	.2816-01	39.86	.8615	.3550	546.9	.6677-03
76	.60000	.25000-01	1110.0	.3012	.3570	.3934	39.57	11.92	.3594	553.8	.9315-02
76	.60000	.75000-01	1112.0	.1217	.1441	.1588	39.60	4.817	.3590	553.1	.3761-02
76	.60000	.10000+00	1113.0	.8811-01	.1044	.1150	39.63	3.492	.3585	552.4	.2724-02
76	.60000	.20000	1114.0	.4610-01	.5460-01	.6015-01	39.67	1.829	.3579	551.4	.1425-02
76	.60000	.30000	1115.0	.3723-01	.4409-01	.4857-01	39.71	1.479	.3572	550.3	.1151-02
76	.60000	.40000	1116.0	.3140-01	.3718-01	.4095-01	39.73	1.248	.3569	549.9	.9705-03
76	.60000	.50000	1117.0	.2561-01	.3032-01	.3340-01	39.74	1.018	.3568	549.8	.7914-03
76	.60000	.70000	1119.0	.1596-01	.1890-01	.2081-01	39.76	.6346	.3565	549.2	.4932-03
68	.60000	.80000	120.00	.1047-01	.1241-01	.1368-01	39.68	.4155	.3601	556.5	.3241-03
68	.60000	.90000	122.00	.9227-02	.1095-01	.1208-01	39.42	.3637	.3642	562.8	.2858-03
68	.60000	.95000	123.00	.7649-02	.9081-02	.1002-01	39.30	.3006	.3661	565.6	.2370-03
68	.70000	.60000	131.00	.3993-01	.4735-01	.5220-01	39.57	1.580	.3619	559.2	.1236-02
68	.70000	.90000	132.00	.1438-01	.1708-01	.1884-01	39.27	.5648	.3665	566.3	.4458-03
68	.75000	.40000	139.00	.5000-01	.5934-01	.6545-01	39.40	1.970	.3644	563.1	.1549-02
68	.75000	.60000	140.00	.3545-01	.4207-01	.4639-01	39.45	1.399	.3637	562.0	.1098-02
76	.75000	.70000	1141.0	.2576-01	.3050-01	.3359-01	39.74	1.024	.3568	549.7	.7960-03
68	.75000	.80000	142.00	.1844-01	.2188-01	.2413-01	39.47	.7279	.3634	561.6	.5712-03
68	.75000	.90000	143.00	.1186-01	.1409-01	.1555-01	39.19	.4648	.3677	568.1	.3676-03
68	.75000	.95000	144.00	.1124-01	.1336-01	.1474-01	39.17	.4405	.3680	568.6	.3486-03
68	.80000	.40000	147.00	.4004-01	.4756-01	.5250-01	39.19	1.569	.3677	568.2	.1241-02
68	.85000	.20000	150.00	.7534-01	.8964-01	.9904-01	38.84	2.927	.3731	576.5	.2339-02
68	.85000	.40000	151.00	.5930-01	.7051-01	.7787-01	38.96	2.310	.3712	573.6	.1840-02
68	.90000	.00000	152.00	.2280	.2714	.3000	38.72	8.830	.3750	579.4	.7081-02
68	.90000	.10000+00	153.00	.1203	.1433	.1584	38.66	4.651	.3760	581.0	.3738-02
68	.90000	.20000	154.00	.7540-01	.8980-01	.9928-01	38.65	2.914	.3762	581.2	.2342-02
76	.90000	.60000	1157.0	.4119-01	.4883-01	.5382-01	39.48	1.626	.3609	556.0	.1274-02
68	.90000	.80000	158.00	.2563-01	.3046-01	.3362-01	39.10	1.002	.3691	570.3	.7949-03
68	.90000	.90000	159.00	.1825-01	.2170-01	.2397-01	38.93	.7105	.3717	574.4	.5663-03
68	.95000	.10000+00	162.00	.1207	.1439	.1592	38.43	4.639	.3795	586.4	.3753-02
68	.95000	.30000	164.00	.7466-01	.8898-01	.9842-01	38.48	2.873	.3787	585.1	.2321-02
68	.95000	.50000	165.00	.4961-01	.5909-01	.6533-01	38.60	1.915	.3769	582.3	.1541-02
68	.95000	.70000	166.00	.3149-01	.3745-01	.4136-01	38.94	1.226	.3716	574.1	.9771-03
69	.95000	.80000	167.00	.2985-01	.3550-01	.3921-01	38.90	1.161	.3715	573.7	.9264-03
69	.95000	.90000	168.00	.2352-01	.2799-01	.3092-01	38.82	.9133	.3727	575.5	.7302-03

IH103 60-OT WING LOWER SURFACE (R3PQ06)

WING LOWER SURF

PARAMETRIC DATA

MACH = 5.250 ALPHA = -5.000 BETA = -5.000 ELEVON = .0000
BDFLAP = .0000 SPDBRK = .0000

TEST CONDITIONS

RUN NUMBER	ALPHA DEG.	BETA DEG.	MACH	RN/FT /FT X10 6	PT PSIA	TT DEG. R	HT BTU/ LBM	PINF PSIA	TINF DEG. R	RHO SLUGS/ FT3	VINF FT/SEC	SCALE
67	-5.000	-5.000	5.250	1.036	103.6	1504.	370.6	.1427	237.2	.5051-04	3963.	.1750-01
70	.0000	-5.000	5.250	1.044	103.5	1497.	368.6	.1426	235.9	.5074-04	3952.	.1750-01
75	-5.000	-5.000	5.250	1.039	103.3	1499.	369.3	.1424	236.3	.5057-04	3956.	.1750-01

RUN NUMBER	PHI DEG.	HS SPHERE TW=540
67	.0000	.1678
70	.0000	.1677
75	.0000	.1676

TEST DATA

RUN NUMBER	2Y/BW	XW/CW	T/C NO	H/HREF R=1.0	H/HREF R=.900	H/HREF R=.850	QREF BTU/ FT2SEC	QDOT BTU/ FT2SEC	HW/HT	TW DEG. R	STN NO R=.900
75	.30000	.10000+00	1075.0	.2647-01	.3137-01	.3457-01	39.61	1.049	.3594	553.2	.8162-03
75	.30000	.20000	1076.0	.2432-01	.2881-01	.3175-01	39.63	.9638	.3591	552.7	.7497-03
75	.30000	.30000	1077.0	.1986-01	.2353-01	.2593-01	39.62	.7870	.3593	552.9	.6123-03
75	.30000	.40000	1078.0	.2253-01	.2670-01	.2942-01	39.62	.8928	.3593	553.0	.6947-03
75	.30000	.50000	1079.0	.2166-01	.2567-01	.2828-01	39.67	.8594	.3586	551.9	.6678-03
75	.30000	.60000	1080.0	.2726-01	.3230-01	.3559-01	39.65	1.081	.3588	552.2	.8405-03
75	.30000	.70000	1081.0	.7403-01	.8771-01	.9665-01	39.63	2.934	.3591	552.7	.2282-02
75	.30000	.80000	1082.0	.6743-01	.7991-01	.8806-01	39.60	2.671	.3596	553.4	.2079-02
67	.30000	.90000	83.000	.2022-01	.2395-01	.2638-01	39.93	.8074	.3576	552.4	.6238-03
67	.30000	.95000	84.000	.1294-01	.1533-01	.1689-01	39.84	.5155	.3590	554.5	.3993-03
75	.40000	.30000	1090.0	.2128-01	.2521-01	.2778-01	39.65	.8436	.3589	552.3	.6560-03
75	.40000	.60000	1092.0	.3023-01	.3581-01	.3945-01	39.70	1.200	.3580	551.0	.9318-03
75	.40000	.70000	1093.0	.4047-01	.4794-01	.5282-01	39.66	1.605	.3587	552.0	.1247-02
75	.40000	.75000	1094.0	.3671-01	.4349-01	.4791-01	39.66	1.456	.3587	552.0	.1132-02
67	.40000	.85000	95.000	.3575-01	.4234-01	.4664-01	39.92	1.427	.3577	552.5	.1103-02
67	.40000	.90000	96.000	.2929-01	.3471-01	.3825-01	39.80	1.166	.3595	555.3	.9038-03
67	.40000	.95000	97.000	.2440-01	.2892-01	.3187-01	39.73	.9693	.3606	557.0	.7530-03

IH103 60-OT WING LOWER SURFACE (R3PQ06)

RUN NUMBER	2Y/BW	XW/CW	T/C NO	H/HREF R=1.0	H/HREF R=.900	H/HREF R=.850	QREF BTU/ FT2SEC	QDOT BTU/ FT2SEC	HW/HT	TW DEG. R	STN NO R=.900
75	.50000	.60000	1105.0	.1962-01	.2324-01	.2560-01	39.67	.7782	.3585	551.8	.6047-03
75	.50000	.70000	1106.0	.2926-01	.3466-01	.3819-01	39.71	1.162	.3579	550.8	.9020-03
75	.60000	.25000-01	1110.0	.2949	.3498	.3857	39.38	11.61	.3630	558.7	.9100-02
75	.60000	.75000-01	1112.0	.1132	.1343	.1481	39.42	4.464	.3624	557.7	.3494-02
75	.60000	.10000+00	1113.0	.8118-01	.9627-01	.1061	39.45	3.203	.3620	557.1	.2505-02
75	.60000	.20000	1114.0	.4130-01	.4897-01	.5398-01	39.49	1.631	.3613	556.0	.1274-02
75	.60000	.30000	1115.0	.3347-01	.3967-01	.4373-01	39.55	1.324	.3604	554.7	.1032-02
75	.60000	.40000	1116.0	.2763-01	.3275-01	.3609-01	39.57	1.093	.3601	554.2	.8521-03
75	.60000	.50000	1117.0	.2428-01	.2878-01	.3172-01	39.58	.9611	.3600	554.0	.7488-03
75	.60000	.70000	1119.0	.1341-01	.1589-01	.1751-01	39.61	.5310	.3595	553.2	.4133-03
67	.60000	.80000	120.00	.7224-02	.8556-02	.9425-02	39.92	.2884	.3577	552.5	.2228-03
67	.60000	.90000	122.00	.7609-02	.9021-02	.9943-02	39.72	.3022	.3609	557.4	.2349-03
67	.60000	.95000	123.00	.7883-02	.9349-02	.1031-01	39.62	.3123	.3623	559.6	.2434-03
67	.70000	.60000	131.00	.2639-01	.3127-01	.3446-01	39.82	1.051	.3593	554.9	.8144-03
67	.70000	.90000	132.00	.5157-02	.6116-02	.6743-02	39.62	.2043	.3623	559.6	.1592-03
67	.75000	.40000	139.00	.3690-01	.4375-01	.4822-01	39.72	1.466	.3608	557.2	.1139-02
67	.75000	.60000	140.00	.3251-01	.3854-01	.4247-01	39.74	1.292	.3605	556.8	.1003-02
75	.75000	.70000	1141.0	.2544-01	.3015-01	.3323-01	39.61	1.008	.3595	553.3	.7845-03
67	.75000	.80000	142.00	.1559-01	.1847-01	.2036-01	39.77	.6200	.3600	556.0	.4811-03
67	.75000	.90000	143.00	.1042-01	.1236-01	.1363-01	39.55	.4120	.3634	561.2	.3217-03
67	.75000	.95000	144.00	.9303-02	.1104-01	.1217-01	39.54	.3679	.3636	561.5	.2874-03
67	.80000	.40000	147.00	.4638-01	.5504-01	.6070-01	39.50	1.832	.3642	562.4	.1433-02
67	.85000	.20000	150.00	.6961-01	.8268-01	.9125-01	39.29	2.735	.3675	567.6	.2152-02
67	.85000	.40000	151.00	.5451-01	.6473-01	.7142-01	39.37	2.146	.3663	565.7	.1685-02
67	.90000	.00000	152.00	.2182	.2594	.2864	39.13	8.539	.3699	571.3	.6750-02
67	.90000	.10000+00	153.00	.1065	.1266	.1399	39.09	4.164	.3706	572.3	.3296-02
67	.90000	.20000	154.00	.6618-01	.7867-01	.8687-01	39.10	2.588	.3703	572.0	.2047-02
75	.90000	.60000	1157.0	.4803-01	.5698-01	.6284-01	39.32	1.889	.3639	560.0	.1482-02
67	.90000	.80000	158.00	.2417-01	.2868-01	.3164-01	39.47	.9538	.3647	563.3	.7467-03
67	.90000	.90000	159.00	.2047-01	.2432-01	.2683-01	39.30	.8044	.3674	567.4	.6329-03
67	.95000	.10000+00	162.00	.1108	.1319	.1458	38.82	4.302	.3747	578.7	.3432-02
67	.95000	.30000	164.00	.7750-01	.9222-01	.1019	38.90	3.015	.3735	576.8	.2399-02
67	.95000	.50000	165.00	.6155-01	.7319-01	.8084-01	39.02	2.402	.3716	574.0	.1905-02
67	.95000	.70000	166.00	.2812-01	.3340-01	.3685-01	39.32	1.106	.3669	566.7	.8693-03
70	.95000	.80000	167.00	.2766-01	.3296-01	.3645-01	38.37	1.061	.3780	580.8	.8549-03
70	.95000	.90000	168.00	.2244-01	.2675-01	.2959-01	38.27	.8588	.3796	583.2	.6938-03

IH103 60-OT WING LOWER SURFACE (R3PQ07)

WING LOWER SURF

PARAMETRIC DATA

MACH = 5.250 ALPHA = 5.000 BETA = -5.000 ELEVON = .0000
BDFLAP = .0000 SPDBRK = .0000

TEST CONDITIONS

RUN NUMBER	ALPHA DEG.	BETA DEG.	MACH	RN/FT /FT X10 6	PT PSIA	TT DEG. R	HT BTU/ LBM	PINF PSIA	TINF DEG. R	RHO SLUGS/ FT3	VINF FT/SEC	SCALE
66	5.000	-5.000	5.250	1.033	103.6	1507.	371.4	.1427	237.7	.5037-04	3967.	.1750-01
71	5.000	-5.000	5.250	.9992	103.8	1540.	380.0	.1426	243.2	.4920-04	4013.	.1750-01
74	5.000	-5.000	5.250	1.035	103.4	1503.	370.4	.1424	237.0	.5042-04	3962.	.1750-01

RUN NUMBER	PHI DEG.	HS SPHERE TW=540
66	.0000	.1678
71	.0000	.1681
74	.0000	.1676

TEST DATA

RUN NUMBER	2Y/BW	XW/CW	T/C NO	H/HREF R=1.0	H/HREF R=.900	H/HREF R=.850	QREF BTU/ FT2SEC	QDOT BTU/ FT2SEC	HW/HT	TW DEG. R	STN NO R=.900
74	.30000	.10000+00	1075.0	.6063-01	.7181-01	.7911-01	39.84	2.415	.3579	552.4	.1872-02
74	.30000	.20000	1076.0	.4566-01	.5409-01	.5958-01	39.85	1.820	.3577	552.1	.1410-02
74	.30000	.30000	1077.0	.3780-01	.4477-01	.4932-01	39.85	1.507	.3576	552.0	.1167-02
74	.30000	.40000	1078.0	.2866-01	.3394-01	.3739-01	39.87	1.143	.3573	551.6	.8848-03
74	.30000	.50000	1079.0	.1051-01	.1244-01	.1371-01	39.86	.4189	.3575	551.8	.3244-03
74	.30000	.60000	1080.0	.3064-01	.3628-01	.3997-01	39.89	1.222	.3571	551.3	.9458-03
74	.30000	.70000	1081.0	.6098-01	.7220-01	.7952-01	39.90	2.433	.3569	550.9	.1882-02
74	.30000	.80000	1082.0	.1234	.1461	.1610	39.87	4.919	.3574	551.7	.3809-02
66	.30000	.90000	83.000	.4402-01	.5209-01	.5735-01	40.21	1.770	.3546	548.9	.1359-02
66	.30000	.95000	84.000	.3667-01	.4340-01	.4779-01	40.15	1.472	.3555	550.4	.1132-02
74	.40000	.30000	1090.0	.2429-01	.2877-01	.3169-01	39.89	.9692	.3570	551.1	.7499-03
74	.40000	.60000	1092.0	.2148-01	.2544-01	.2801-01	39.93	.8579	.3564	550.1	.6631-03
74	.40000	.70000	1093.0	.4939-01	.5848-01	.6441-01	39.91	1.971	.3568	550.7	.1525-02
74	.40000	.75000	1094.0	.5493-01	.6504-01	.7163-01	39.92	2.192	.3567	550.6	.1695-02
66	.40000	.85000	95.000	.4379-01	.5183-01	.5707-01	40.18	1.760	.3551	549.7	.1352-02
66	.40000	.90000	96.000	.3437-01	.4069-01	.4481-01	40.10	1.378	.3563	551.5	.1062-02
66	.40000	.95000	97.000	.2911-01	.3447-01	.3797-01	40.06	1.166	.3570	552.6	.8992-03

IH103 60-OT WING LOWER SURFACE

(R3PQ07)

RUN NUMBER	2Y/BW	XW/CW	T/C NO	H/HREF R=1.0	H/HREF R=.900	H/HREF R=.850	QREF BTU/ FT2SEC	QDOT BTU/ FT2SEC	HW/HT	TW DEG. R	STN NO R=.900
74	.50000	.60000	1105.0	.2661-01	.3150-01	.3470-01	39.91	1.062	.3568	550.7	.8212-03
74	.50000	.70000	1106.0	.1928-01	.2282-01	.2513-01	39.94	.7698	.3563	550.0	.5949-03
74	.60000	.25000-01	1110.0	.3361	.3983	.4390	39.66	13.33	.3606	556.6	.1038-01
74	.60000	.75000-01	1112.0	.1415	.1677	.1848	39.70	5.617	.3600	555.7	.4371-02
74	.60000	.10000+00	1113.0	.1039	.1232	.1357	39.73	4.130	.3596	555.0	.3210-02
74	.60000	.20000	1114.0	.5548-01	.6573-01	.7243-01	39.77	2.206	.3589	554.0	.1713-02
74	.60000	.30000	1115.0	.4491-01	.5320-01	.5861-01	39.81	1.788	.3584	553.2	.1387-02
74	.60000	.40000	1116.0	.3856-01	.4568-01	.5032-01	39.81	1.535	.3582	553.0	.1191-02
74	.60000	.50000	1117.0	.3540-01	.4194-01	.4620-01	39.81	1.409	.3583	553.1	.1093-02
74	.60000	.70000	1119.0	.2985-01	.3535-01	.3895-01	39.84	1.189	.3578	552.3	.9216-03
66	.60000	.80000	120.00	.2123-01	.2512-01	.2766-01	40.17	.8527	.3552	549.8	.6554-03
66	.60000	.90000	122.00	.1860-01	.2204-01	.2427-01	40.01	.7443	.3577	553.8	.5748-03
66	.60000	.95000	123.00	.1436-01	.1702-01	.1875-01	39.93	.5736	.3589	555.5	.4439-03
66	.70000	.60000	131.00	.4003-01	.4740-01	.5221-01	40.05	1.603	.3571	552.7	.1236-02
66	.70000	.90000	132.00	.2328-01	.2758-01	.3039-01	39.92	.9294	.3590	555.7	.7194-03
66	.75000	.40000	139.00	.5878-01	.6964-01	.7672-01	39.97	2.349	.3584	554.7	.1816-02
66	.75000	.60000	140.00	.5272-01	.6245-01	.6880-01	39.97	2.108	.3582	554.5	.1629-02
74	.75000	.70000	1141.0	.4236-01	.5018-01	.5528-01	39.81	1.687	.3583	553.0	.1308-02
66	.75000	.80000	142.00	.3155-01	.3737-01	.4116-01	40.03	1.263	.3573	553.1	.9747-03
66	.75000	.90000	143.00	.2274-01	.2695-01	.2970-01	39.87	.9067	.3599	557.1	.7030-03
66	.75000	.95000	144.00	.2061-01	.2443-01	.2692-01	39.85	.8214	.3601	557.5	.6371-03
66	.80000	.40000	147.00	.5029-01	.5962-01	.6571-01	39.82	2.003	.3606	558.2	.1555-02
66	.85000	.20000	150.00	.7842-01	.9307-01	.1027	39.55	3.101	.3648	564.7	.2426-02
66	.85000	.40000	151.00	.5661-01	.6716-01	.7407-01	39.62	2.242	.3638	563.1	.1751-02
66	.90000	.00000	152.00	.2204	.2617	.2887	39.44	8.691	.3665	567.3	.6822-02
66	.90000	.10000+00	153.00	.1335	.1586	.1750	39.38	5.257	.3674	568.8	.4133-02
66	.90000	.20000	154.00	.8650-01	.1027	.1134	39.36	3.405	.3676	569.1	.2678-02
74	.90000	.60000	1157.0	.4829-01	.5728-01	.6316-01	39.51	1.908	.3629	560.2	.1492-02
66	.90000	.80000	158.00	.3455-01	.4097-01	.4516-01	39.75	1.373	.3617	559.9	.1068-02
66	.90000	.90000	159.00	.2424-01	.2876-01	.3172-01	39.63	.9607	.3636	562.8	.7499-03
66	.95000	.10000+00	162.00	.1306	.1552	.1714	39.16	5.113	.3708	574.0	.4046-02
66	.95000	.30000	164.00	.8494-01	.1010	.1115	39.19	3.328	.3704	573.4	.2632-02
66	.95000	.50000	165.00	.5397-01	.6411-01	.7077-01	39.33	2.122	.3682	569.9	.1671-02
66	.95000	.70000	166.00	.3866-01	.4587-01	.5059-01	39.61	1.532	.3638	563.1	.1196-02
71	.95000	.80000	167.00	.3502-01	.4142-01	.4558-01	41.30	1.446	.3529	558.9	.1095-02
71	.95000	.90000	168.00	.2765-01	.3271-01	.3601-01	41.23	1.140	.3540	560.6	.8649-03

IH103 60-OT WING LOWER SURFACE (R3PQ08)

WING LOWER SURF

PARAMETRIC DATA

MACH = 5.250 ALPHA = 10.00 BETA = -5.000 ELEVON = .0000
BDFLAP = .0000 SPDBRK = .0000

TEST CONDITIONS

RUN NUMBER	ALPHA DEG.	BETA DEG.	MACH	RN/FT /FT X10 6	PT PSIA	TT DEG. R	HT BTU/ LBM	PINF PSIA	TINF DEG. R	RHO SLUGS/ FT3	VINF FT/SEC	SCALE
65	10.00	.0000	5.250	1.036	103.7	1505.	370.9	.1429	237.4	.5052-04	3964.	.1750-01
72	5.000	-5.000	5.250	1.044	103.8	1499.	369.3	.1431	236.3	.5082-04	3956.	.1750-01
73	5.000	-5.000	5.250	1.032	103.4	1506.	371.0	.1424	237.4	.5031-04	3965.	.1750-01

RUN NUMBER	PHI DEG.	HS SPHERE TW=540
65	.0000	.1679
72	.0000	.1680
73	.0000	.1676

TEST DATA

RUN NUMBER	2Y/BW	XW/CW	T/C NO	H/HREF R=1.0	H/HREF R=.900	H/HREF R=.850	QREF BTU/ FT2SEC	QDOT BTU/ FT2SEC	HW/HT	TW DEG. R	STN NO R=.900
73	.30000	.10000+00	1075.0	.7758-01	.9181-01	.1011	40.09	3.110	.3552	549.2	.2396-02
73	.30000	.20000	1076.0	.6441-01	.7622-01	.8392-01	40.10	2.583	.3549	548.8	.1989-02
73	.30000	.30000	1077.0	.5250-01	.6213-01	.6841-01	40.10	2.105	.3550	548.9	.1622-02
73	.30000	.40000	1078.0	.4115-01	.4869-01	.5361-01	40.10	1.650	.3549	548.8	.1271-02
73	.30000	.50000	1079.0	.2546-01	.3013-01	.3318-01	40.07	1.020	.3555	549.7	.7865-03
73	.30000	.60000	1080.0	.3692-01	.4370-01	.4811-01	40.11	1.481	.3549	548.7	.1141-02
73	.30000	.70000	1081.0	.4810-01	.5693-01	.6267-01	40.12	1.930	.3547	548.5	.1486-02
73	.30000	.80000	1082.0	.6222-01	.7363-01	.8107-01	40.09	2.494	.3551	549.1	.1922-02
65	.30000	.90000	83.000	.4043-01	.4784-01	.5266-01	40.21	1.626	.3542	547.5	.1246-02
65	.30000	.95000	84.000	.3801-01	.4499-01	.4954-01	40.12	1.525	.3555	549.5	.1172-02
73	.40000	.30000	1090.0	.4714-01	.5579-01	.6143-01	40.09	1.890	.3551	549.1	.1456-02
73	.40000	.60000	1092.0	.3150-01	.3728-01	.4104-01	40.13	1.264	.3544	548.1	.9730-03
73	.40000	.70000	1093.0	.3450-01	.4083-01	.4495-01	40.11	1.384	.3548	548.7	.1066-02
73	.40000	.75000	1094.0	.3951-01	.4675-01	.5147-01	40.11	1.584	.3548	548.7	.1220-02
65	.40000	.85000	95.000	.2988-01	.3536-01	.3893-01	40.18	1.201	.3545	548.0	.9211-03
65	.40000	.90000	96.000	.2127-01	.2518-01	.2773-01	40.10	.8531	.3558	550.0	.6560-03
65	.40000	.95000	97.000	.2249-01	.2663-01	.2933-01	40.03	.9004	.3568	551.6	.6936-03

IH103 60-OT WING LOWER SURFACE (R3PQ08)

RUN NUMBER	2Y/BW	XW/CW	T/C NO	H/HREF R=1.0	H/HREF R=.900	H/HREF R=.850	QREF BTU/ FT2SEC	QDOT BTU/ FT2SEC	HW/HT	TW DEG. R	STN NO R=.900
73	.50000	.60000	1105.0	.4583-01	.5424-01	.5972-01	40.08	1.837	.3552	549.3	.1416-02
73	.50000	.70000	1106.0	.3420-01	.4047-01	.4456-01	40.11	1.372	.3548	548.7	.1056-02
73	.60000	.25000-01	1110.0	.3666	.4344	.4787	39.78	14.58	.3599	556.5	.1134-01
73	.60000	.75000-01	1112.0	.1661	.1968	.2169	39.83	6.615	.3592	555.4	.5136-02
73	.60000	.10000+00	1113.0	.1254	.1486	.1637	39.85	4.999	.3588	554.8	.3878-02
73	.60000	.20000	1114.0	.7420-01	.8790-01	.9684-01	39.88	2.959	.3583	554.1	.2294-02
73	.60000	.30000	1115.0	.5733-01	.6790-01	.7480-01	39.93	2.289	.3576	553.0	.1772-02
73	.60000	.40000	1116.0	.4645-01	.5501-01	.6059-01	39.96	1.856	.3572	552.3	.1436-02
73	.60000	.50000	1117.0	.4041-01	.4785-01	.5271-01	39.96	1.615	.3572	552.3	.1249-02
73	.60000	.70000	1119.0	.3124-01	.3699-01	.4074-01	39.99	1.249	.3566	551.5	.9655-03
65	.60000	.80000	120.00	.2200-01	.2605-01	.2868-01	40.12	.8827	.3556	549.6	.6785-03
65	.60000	.90000	122.00	.2081-01	.2466-01	.2716-01	39.94	.8314	.3582	553.7	.6421-03
65	.60000	.95000	123.00	.1648-01	.1953-01	.2152-01	39.86	.6570	.3594	555.6	.5086-03
65	.70000	.60000	131.00	.5148-01	.6097-01	.6716-01	39.97	2.058	.3577	553.0	.1588-02
65	.70000	.90000	132.00	.3413-01	.4047-01	.4461-01	39.74	1.356	.3613	558.6	.1054-02
65	.75000	.40000	139.00	.4781-01	.5665-01	.6243-01	39.86	1.906	.3595	555.7	.1475-02
65	.75000	.60000	140.00	.3690-01	.4373-01	.4819-01	39.86	1.471	.3595	555.8	.1139-02
73	.75000	.70000	1141.0	.3430-01	.4063-01	.4476-01	39.91	1.369	.3579	553.4	.1060-02
65	.75000	.80000	142.00	.2757-01	.3267-01	.3600-01	39.87	1.099	.3594	555.5	.8508-03
65	.75000	.90000	143.00	.2058-01	.2441-01	.2692-01	39.65	.8162	.3627	560.6	.6356-03
65	.75000	.95000	144.00	.1892-01	.2244-01	.2474-01	39.65	.7500	.3628	560.8	.5842-03
65	.80000	.40000	147.00	.4510-01	.5348-01	.5896-01	39.70	1.791	.3619	559.5	.1392-02
65	.85000	.20000	150.00	.9374-01	.1113	.1228	39.38	3.692	.3669	567.1	.2898-02
65	.85000	.40000	151.00	.6649-01	.7895-01	.8711-01	39.42	2.621	.3663	566.2	.2055-02
65	.90000	.00000	152.00	.2152	.2558	.2824	39.20	8.437	.3697	571.4	.6657-02
65	.90000	.10000+00	153.00	.1545	.1837	.2028	39.14	6.046	.3706	572.9	.4779-02
65	.90000	.20000	154.00	.1037	.1233	.1362	39.12	4.058	.3710	573.4	.3209-02
73	.90000	.60000	1157.0	.6056-01	.7185-01	.7924-01	39.54	2.394	.3637	562.4	.1874-02
65	.90000	.80000	158.00	.4395-01	.5218-01	.5757-01	39.46	1.734	.3657	565.3	.1358-02
65	.90000	.90000	159.00	.3028-01	.3597-01	.3970-01	39.33	1.191	.3676	568.3	.9362-03
65	.95000	.10000+00	162.00	.1419	.1689	.1867	38.87	5.517	.3748	579.3	.4395-02
65	.95000	.20000	163.00	.7805-03	.9216-03	.1013-02	40.67	.3174-01	.3470	536.3	.2402-04
65	.95000	.30000	164.00	.9982-01	.1188	.1313	38.87	3.880	.3748	579.4	.3091-02
65	.95000	.50000	165.00	.6320-01	.7519-01	.8307-01	39.00	2.465	.3728	576.3	.1956-02
65	.95000	.70000	166.00	.4877-01	.5795-01	.6396-01	39.29	1.917	.3682	569.2	.1508-02
72	.95000	.80000	167.00	.4581-01	.5437-01	.5998-01	39.34	1.802	.3651	561.9	.1411-02
72	.95000	.90000	168.00	.3205-01	.3805-01	.4198-01	39.28	1.259	.3660	563.3	.9871-03

IH103 60-OT WING LOWER SURFACE (R3PQ09)

WING LOWER SURF

PARAMETRIC DATA

MACH = 5.250 ALPHA = .0000 BETA = -3.000 ELEVON = .0000
BDFLAP = .0000 SPDBRK = .0000

TEST CONDITIONS

RUN NUMBER	ALPHA DEG.	BETA DEG.	MACH	RN/FT /FT X10 6	PT PSIA	TT DEG. R	HT BTU/ LBM	PINF PSIA	TINF DEG. R	RHO SLUGS/ FT3	VINF FT/SEC	SCALE
48	.0000	-3.000	5.250	1.062	103.9	1484.	365.3	.1434	233.8	.5146-04	3934.	.1750-01
51	.0000	-3.000	5.250	1.016	101.5	1504.	370.5	.1399	237.1	.4949-04	3963.	.1750-01
92	.0000	-3.000	5.250	1.145	111.7	1482.	364.8	.1541	233.4	.5541-04	3932.	.1750-01

RUN NUMBER	PHI DEG.	HS SPHERE TW=540
48	.0000	.1679
51	.0000	.1661
92	.0000	.1741

TEST DATA

RUN NUMBER	2Y/BW	XW/CW	T/C NO	H/HREF R=1.0	H/HREF R=.900	H/HREF R=.850	QREF BTU/ FT2SEC	QDOT BTU/ FT2SEC	HW/HT	TW DEG. R	STN NO R=.900
92	.30000	.10000+00	1075.0	.3279-01	.3892-01	.4293-01	40.29	1.321	.3653	555.4	.9662-03
92	.30000	.20000	1076.0	.2847-01	.3379-01	.3727-01	40.30	1.147	.3650	555.0	.8388-03
92	.30000	.30000	1077.0	.2143-01	.2543-01	.2805-01	40.30	.8634	.3651	555.0	.6313-03
92	.30000	.40000	1078.0	.1866-01	.2215-01	.2443-01	40.31	.7523	.3649	554.7	.5498-03
92	.30000	.50000	1079.0	.1312-01	.1557-01	.1718-01	40.29	.5285	.3652	555.3	.3865-03
92	.30000	.60000	1080.0	.1260-01	.1496-01	.1650-01	40.32	.5082	.3648	554.6	.3713-03
92	.30000	.70000	1081.0	.6149-01	.7298-01	.8050-01	40.33	2.480	.3646	554.3	.1812-02
92	.30000	.80000	1082.0	.6496-01	.7710-01	.8504-01	40.31	2.618	.3649	554.8	.1914-02
51	.30000	.90000	83.000	.1960-01	.2320-01	.2555-01	39.63	.7767	.3559	549.5	.6105-03
51	.30000	.95000	84.000	.9992-02	.1183-01	.1303-01	39.55	.3952	.3571	551.4	.3113-03
92	.40000	.30000	1090.0	.2157-01	.2560-01	.2824-01	40.35	.8704	.3644	553.9	.6356-03
92	.40000	.60000	1092.0	.2339-01	.2775-01	.3060-01	40.39	.9448	.3637	552.9	.6890-03
92	.40000	.70000	1093.0	.3604-01	.4276-01	.4716-01	40.36	1.454	.3642	553.6	.1062-02
92	.40000	.75000	1094.0	.3856-01	.4575-01	.5046-01	40.37	1.556	.3640	553.5	.1136-02
51	.40000	.85000	95.000	.4247-01	.5029-01	.5538-01	39.59	1.682	.3564	550.3	.1323-02
51	.40000	.90000	96.000	.3412-01	.4041-01	.4451-01	39.51	1.348	.3577	552.4	.1063-02
51	.40000	.95000	97.000	.2964-01	.3511-01	.3869-01	39.46	1.169	.3585	553.7	.9238-03

IH103 60-OT WING LOWER SURFACE (R3PQ09)

RUN NUMBER	2Y/BW	XW/CW	T/C NO	H/HREF R=1.0	H/HREF R=.900	H/HREF R=.850	QREF BTU/ FT2SEC	QDOT BTU/ FT2SEC	HW/HT	TW DEG. R	STN NO R=.900
92	.50000	.60000	1105.0	.1614-01	.1915-01	.2112-01	40.37	.6515	.3640	553.4	.4754-03
92	.50000	.70000	1106.0	.2052-01	.2435-01	.2685-01	40.40	.8291	.3635	552.7	.6045-03
92	.60000	.25000-01	1110.0	.2592	.3079	.3398	40.16	10.41	.3673	558.4	.7642-02
92	.60000	.75000-01	1112.0	.1031	.1224	.1350	40.19	4.142	.3668	557.6	.3038-02
92	.60000	.10000+00	1113.0	.7439-01	.8834-01	.9748-01	40.20	2.990	.3666	557.4	.2193-02
92	.60000	.20000	1114.0	.3944-01	.4683-01	.5166-01	40.24	1.587	.3660	556.4	.1162-02
92	.60000	.30000	1115.0	.3248-01	.3855-01	.4253-01	40.27	1.308	.3655	555.7	.9571-03
92	.60000	.40000	1116.0	.2726-01	.3236-01	.3570-01	40.28	1.098	.3655	555.6	.8033-03
92	.60000	.50000	1117.0	.2198-01	.2610-01	.2879-01	40.27	.8853	.3655	555.7	.6478-03
92	.60000	.70000	1119.0	.1358-01	.1612-01	.1778-01	40.30	.5475	.3650	555.0	.4002-03
51	.60000	.80000	120.00	.8284-02	.9809-02	.1080-01	39.58	.3279	.3565	550.6	.2581-03
51	.60000	.90000	122.00	.7110-02	.8415-02	.9265-02	39.66	.2820	.3553	548.7	.2214-03
51	.60000	.95000	123.00	.6606-02	.7830-02	.8630-02	39.33	.2598	.3605	556.7	.2060-03
51	.70000	.60000	131.00	.2924-01	.3464-01	.3816-01	39.44	1.153	.3587	554.0	.9112-03
51	.70000	.90000	132.00	.1272-01	.1508-01	.1662-01	39.34	.5003	.3604	556.5	.3966-03
51	.75000	.40000	139.00	.3866-01	.4581-01	.5049-01	39.37	1.522	.3599	555.8	.1205-02
51	.75000	.60000	140.00	.3324-01	.3921-01	.4307-01	40.49	1.346	.3425	528.9	.1033-02
92	.75000	.70000	1141.0	.2389-01	.2836-01	.3128-01	40.31	.9632	.3649	554.8	.7041-03
51	.75000	.80000	142.00	.1826-01	.2163-01	.2383-01	39.46	.7205	.3584	553.5	.5690-03
51	.75000	.95000	144.00	.1105-01	.1311-01	.1445-01	39.25	.4338	.3618	558.7	.3447-03
51	.80000	.40000	147.00	.4899-01	.5810-01	.6405-01	39.24	1.923	.3618	558.8	.1528-02
51	.85000	.20000	150.00	.6213-01	.7375-01	.8136-01	39.01	2.423	.3655	564.5	.1939-02
51	.85000	.40000	151.00	.4622-01	.5484-01	.6049-01	39.09	1.807	.3643	562.5	.1442-02
51	.90000	.00000	152.00	.2036	.2418	.2669	38.88	7.914	.3676	567.7	.6358-02
51	.90000	.10000+00	153.00	.1144	.1359	.1500	38.84	4.443	.3682	568.6	.3574-02
51	.90000	.20000	154.00	.7679-01	.9123-01	.1007	38.85	2.983	.3680	568.3	.2399-02
92	.90000	.60000	1157.0	.4821-01	.5728-01	.6323-01	40.06	1.931	.3687	560.5	.1422-02
51	.90000	.80000	158.00	.3024-01	.3586-01	.3953-01	39.25	1.187	.3617	558.6	.9431-03
51	.90000	.90000	159.00	.2130-01	.2527-01	.2787-01	39.13	.8335	.3636	561.4	.6646-03
51	.95000	.10000+00	162.00	.1100	.1308	.1445	38.67	4.254	.3709	572.7	.3439-02
51	.95000	.20000	163.00	.8945-01	.1064	.1175	38.66	3.458	.3710	573.0	.2796-02
51	.95000	.30000	164.00	.6844-01	.8136-01	.8984-01	38.72	2.650	.3701	571.5	.2139-02
51	.95000	.50000	165.00	.4478-01	.5319-01	.5870-01	38.90	1.742	.3672	567.1	.1399-02
51	.95000	.70000	166.00	.2440-02	.2894-02	.3190-02	39.23	.9574-01	.3620	559.1	.7612-04
48	.95000	.80000	167.00	.2448-01	.2910-01	.3214-01	38.53	.9432	.3712	565.1	.7495-03
48	.95000	.90000	168.00	.1952-01	.2323-01	.2566-01	38.45	.7508	.3725	567.0	.5981-03

IH103 60-OT WING LOWER SURFACE (R3PQ10)

WING LOWER SURF

PARAMETRIC DATA

MACH = 5.250 ALPHA = -5.000 BETA = -3.000 ELEVON = .0000
BDFLAP = .0000 SPDBRK = .0000

TEST CONDITIONS

RUN NUMBER	ALPHA DEG.	BETA DEG.	MACH	RN/FT /FT X10 6	PT PSIA	TT DEG. R	HT BTU/ LBM	PINF PSIA	TINF DEG. R	RHO SLUGS/ FT3	VINF FT/SEC	SCALE
47	-5.000	-3.000	5.250	1.069	103.7	1477.	363.3	.1431	232.5	.5165-04	3924.	.1750-01
52	-5.000	-3.000	5.250	1.047	102.9	1488.	366.4	.1419	234.5	.5080-04	3940.	.1750-01
91	-5.000	-3.000	5.250	1.041	102.5	1490.	366.9	.1413	234.8	.5052-04	3943.	.1750-01

RUN NUMBER	PHI DEG.	HS SPHERE TW=540
47	.0000	.1677
52	.0000	.1672
91	.0000	.1668

TEST DATA

RUN NUMBER	2Y/BW	XW/CW	T/C NO	H/HREF R=1.0	H/HREF R=.900	H/HREF R=.850	QREF BTU/ FT2SEC	QDOT BTU/ FT2SEC	HW/HT	TW DEG. R	STN NO R=.900
91	.30000	.10000+00	1075.0	.3201-01	.3799-01	.4190-01	38.88	1.245	.3642	556.8	.9882-03
91	.30000	.20000	1076.0	.2801-01	.3320-01	.3660-01	39.09	1.095	.3609	551.9	.8639-03
91	.30000	.30000	1077.0	.3362-01	.3986-01	.4394-01	39.09	1.314	.3609	551.9	.1037-02
91	.30000	.40000	1078.0	.3210-01	.3805-01	.4194-01	39.09	1.255	.3609	551.9	.9901-03
91	.30000	.50000	1079.0	.2774-01	.3288-01	.3623-01	39.15	1.086	.3600	550.5	.8555-03
91	.30000	.60000	1080.0	.2506-01	.2970-01	.3274-01	39.11	.9800	.3606	551.3	.7728-03
91	.30000	.70000	1081.0	.6251-01	.7410-01	.8168-01	39.09	2.444	.3609	551.8	.1928-02
91	.30000	.80000	1082.0	.6945-01	.8234-01	.9077-01	39.07	2.714	.3612	552.2	.2142-02
52	.30000	.90000	83.000	.1309-01	.1552-01	.1711-01	39.05	.5110	.3620	552.9	.4026-03
52	.30000	.95000	84.000	.1074-01	.1275-01	.1406-01	38.95	.4185	.3636	555.2	.3307-03
91	.40000	.30000	1090.0	.1650-01	.1956-01	.2155-01	39.12	.6454	.3604	551.1	.5088-03
91	.40000	.60000	1092.0	.3486-01	.4131-01	.4552-01	39.16	1.365	.3598	550.1	.1075-02
91	.40000	.70000	1093.0	.4117-01	.4880-01	.5378-01	39.13	1.611	.3603	550.9	.1270-02
91	.40000	.75000	1094.0	.3646-01	.4321-01	.4763-01	39.14	1.427	.3602	550.7	.1124-02
52	.40000	.85000	95.000	.3202-01	.3798-01	.4188-01	39.01	1.249	.3627	553.8	.9852-03
52	.40000	.90000	96.000	.2491-01	.2955-01	.3259-01	38.94	.9698	.3638	555.5	.7665-03
52	.40000	.95000	97.000	.1961-01	.2328-01	.2568-01	38.89	.7628	.3645	556.7	.6038-03

IH103 60-OT WING LOWER SURFACE (R3PQ10)

RUN - NUMBER	2Y/BW	XW/CW	T/C NO	H/HREF R=1.0	H/HREF R=.900	H/HREF R=.850	QREF BTU/ FT2SEC	QDOT BTU/ FT2SEC	HW/HT	TW DEG. R	STN NO R=.900
91	.50000	.60000	1105.0	.1573-01	.1864-01	.2054-01	39.13	.6154	.3603	551.0	.4850-03
91	.50000	.70000	1106.0	.2155-01	.2553-01	.2814-01	39.16	.8437	.3598	550.2	.6644-03
91	.60000	.25000-01	1110.0	.2716	.3222	.3554	38.92	10.57	.3636	556.0	.8383-02
91	.60000	.75000-01	1112.0	.1029	.1221	.1346	38.94	4.008	.3632	555.4	.3176-02
91	.60000	.10000+00	1113.0	.7276-01	.8631-01	.9517-01	38.96	2.835	.3629	554.9	.2245-02
91	.60000	.20000	1114.0	.3650-01	.4328-01	.4772-01	39.00	1.423	.3624	554.1	.1126-02
91	.60000	.30000	1115.0	.2883-01	.3418-01	.3768-01	39.03	1.125	.3619	553.4	.8893-03
91	.60000	.40000	1116.0	.2406-01	.2853-01	.3145-01	39.03	.9391	.3618	553.2	.7422-03
91	.60000	.50000	1117.0	.2016-01	.2390-01	.2635-01	39.05	.7870	.3616	552.9	.6218-03
91	.60000	.70000	1119.0	.1118-01	.1326-01	.1462-01	39.07	.4369	.3613	552.4	.3450-03
52	.60000	.80000	120.00	.7924-02	.9399-02	.1036-01	39.01	.3091	.3626	553.8	.2438-03
52	.60000	.90000	122.00	.9432-02	.1118-01	.1233-01	39.09	.3687	.3614	551.8	.2901-03
52	.60000	.95000	123.00	.1042-01	.1238-01	.1366-01	38.76	.4041	.3665	559.7	.3210-03
52	.70000	.60000	131.00	.2153-01	.2555-01	.2818-01	38.87	.8369	.3648	557.1	.6627-03
52	.70000	.90000	132.00	.3648-02	.4332-02	.4781-02	38.75	.1413	.3668	560.1	.1123-03
52	.75000	.40000	139.00	.3236-01	.3841-01	.4238-01	38.82	1.256	.3656	558.3	.9963-03
91	.75000	.70000	1141.0	.2029-01	.2405-01	.2651-01	39.08	.7928	.3611	552.2	.6258-03
52	.75000	.80000	142.00	.1126-01	.1336-01	.1474-01	38.87	.4376	.3648	557.0	.3465-03
52	.75000	.90000	143.00	.7693-02	.9138-02	.1008-01	38.71	.2978	.3673	560.9	.2370-03
52	.75000	.95000	144.00	.6467-02	.7683-02	.8480-02	38.67	.2501	.3680	562.0	.1992-03
52	.80000	.40000	147.00	.3626-01	.4307-01	.4754-01	38.69	1.403	.3677	561.6	.1117-02
52	.85000	.20000	150.00	.6293-01	.7484-01	.8266-01	38.46	2.420	.3713	567.1	.1940-02
52	.85000	.40000	151.00	.4572-01	.5435-01	.6001-01	38.55	1.762	.3699	564.9	.1409-02
52	.90000	.00000	152.00	.2373	.2823	.3119	38.34	9.096	.3732	569.9	.7318-02
52	.90000	.10000+00	153.00	.1105	.1315	.1453	38.32	4.233	.3735	570.4	.3408-02
52	.90000	.20000	154.00	.7257-01	.8635-01	.9541-01	38.32	2.781	.3734	570.2	.2238-02
91	.90000	.60000	1157.0	.4638-01	.5503-01	.6070-01	38.89	1.804	.3641	556.7	.1432-02
52	.90000	.80000	158.00	.1794-01	.2131-01	.2352-01	38.70	.6944	.3675	561.2	.5526-03
52	.90000	.90000	159.00	.1462-01	.1738-01	.1919-01	38.56	.5637	.3698	564.7	.4505-03
52	.95000	.10000+00	162.00	.9715-01	.1157	.1279	38.12	3.703	.3767	575.2	.2999-02
52	.95000	.20000	163.00	.8245-01	.9818-01	.1085	38.17	3.147	.3759	574.1	.2545-02
52	.95000	.30000	164.00	.6422-01	.7645-01	.8450-01	38.21	2.454	.3752	572.9	.1982-02
52	.95000	.50000	165.00	.5165-01	.6144-01	.6787-01	38.39	1.983	.3724	568.7	.1593-02
52	.95000	.70000	166.00	.4512-01	.5370-01	.5934-01	38.26	1.726	.3744	571.7	.1392-02
47	.95000	.80000	167.00	.2469-01	.2935-01	.3240-01	38.38	.9478	.3695	559.6	.7542-03
47	.95000	.90000	168.00	.2105-01	.2503-01	.2765-01	38.29	.8062	.3710	561.8	.6433-03

IH103 60-OT WING LOWER SURFACE (R3PQ11)

WING LOWER SURF

PARAMETRIC DATA

MACH = 5.250 ALPHA = 5.000 BETA = -3.000 ELEVON = .0000
BDFLAP = .0000 SPDBRK = .0000

TEST CONDITIONS

RUN NUMBER	ALPHA DEG.	BETA DEG.	MACH	RN/FT /FT X10 6	PT PSIA	TT DEG. R	HT BTU/ LBM	PINF PSIA	TINF DEG. R	RHO SLUGS/ FT3	VINF FT/SEC	SCALE
46	5.000	-3.000	5.200	1.027	103.9	1538.	379.4	.1511	246.8	.5138-04	4004.	.1750-01
49	5.000	-3.000	5.250	1.047	102.8	1487.	366.2	.1418	234.3	.5077-04	3939.	.1750-01
90	5.000	-3.000	5.250	1.038	102.4	1492.	367.4	.1412	235.1	.5041-04	3946.	.1750-01

RUN NUMBER	PHI DEG.	HS SPHERE TW=540
46	.0000	.1714
49	.0000	.1670
90	.0000	.1668

TEST DATA

RUN NUMBER	2Y/BW	XW/CW	T/C NO	H/HREF R=1.0	H/HREF R=.900	H/HREF R=.850	QREF BTU/ FT2SEC	QDOT BTU/ FT2SEC	HW/HT	TW DEG. R	STN NO R=.900
90	.30000	.10000+00	1075.0	.5383-01	.6386-01	.7042-01	38.99	2.099	.3633	556.3	.1663-02
90	.30000	.20000	1076.0	.4170-01	.4943-01	.5447-01	39.18	1.634	.3602	551.5	.1288-02
90	.30000	.30000	1077.0	.3400-01	.4030-01	.4441-01	39.18	1.332	.3603	551.6	.1050-02
90	.30000	.40000	1078.0	.2554-01	.3027-01	.3336-01	39.20	1.001	.3600	551.2	.7884-03
90	.30000	.50000	1079.0	.9619-02	.1140-01	.1257-01	39.17	.3767	.3605	551.9	.2970-03
90	.30000	.60000	1080.0	.4158-01	.4928-01	.5431-01	39.20	1.630	.3599	551.1	.1284-02
90	.30000	.70000	1081.0	.6444-01	.7638-01	.8417-01	39.19	2.526	.3601	551.3	.1990-02
90	.30000	.80000	1082.0	.1175	.1393	.1535	39.16	4.601	.3606	552.1	.3628-02
46	.30000	.90000	83.000	.3360-01	.3976-01	.4377-01	41.95	1.410	.3543	560.2	.1029-02
46	.30000	.95000	84.000	.2798-01	.3312-01	.3647-01	41.88	1.172	.3554	561.9	.8568-03
90	.40000	.30000	1090.0	.2259-01	.2677-01	.2950-01	39.20	.8856	.3599	551.1	.6974-03
90	.40000	.60000	1092.0	.3511-01	.4160-01	.4584-01	39.24	1.378	.3593	550.1	.1084-02
90	.40000	.70000	1093.0	.5020-01	.5950-01	.6557-01	39.19	1.967	.3601	551.3	.1550-02
90	.40000	.75000	1094.0	.4937-01	.5851-01	.6448-01	39.20	1.935	.3600	551.2	.1524-02
46	.40000	.85000	95.000	.3177-01	.3760-01	.4139-01	41.93	1.332	.3547	560.8	.9726-03
46	.40000	.90000	96.000	.2586-01	.3062-01	.3371-01	41.84	1.082	.3559	562.7	.7920-03
46	.40000	.95000	97.000	.2193-01	.2596-01	.2859-01	41.80	.9167	.3565	563.7	.6716-03

IH103 60-OT WING LOWER SURFACE (R3PQ11)

RUN NUMBER	2Y/BW	XW/CW	T/C NO	H/HREF R=1.0	H/HREF R=.900	H/HREF R=.850	QREF BTU/ FT2SEC	QDOT BTU/ FT2SEC	HW/HT .	TW DEG. R	STN NO R=.900
90	.50000	.60000	1105.0	.1874-01	.2222-01	.2448-01	39.19	.7345	.3601	551.4	.5787-03
90	.50000	.70000	1106.0	.1599-01	.1895-01	.2088-01	39.23	.6272	.3595	550.5	.4936-03
90	.60000	.25000-01	1110.0	.3131	.3716	.4099	38.91	12.18	.3645	558.1	.9678-02
90	.60000	.75000-01	1112.0	.1300	.1542	.1700	38.98	5.066	.3635	556.5	.4016-02
90	.60000	.10000+00	1113.0	.9523-01	.1130	.1246	38.99	3.713	.3633	556.2	.2942-02
90	.60000	.20000	1114.0	.5117-01	.6069-01	.6692-01	39.03	1.997	.3625	555.1	.1581-02
90	.60000	.30000	1115.0	.4148-01	.4919-01	.5423-01	39.07	1.621	.3620	554.3	.1281-02
90	.60000	.40000	1116.0	.3440-01	.4079-01	.4496-01	39.08	1.344	.3618	554.0	.1062-02
90	.60000	.50000	1117.0	.2960-01	.3510-01	.3870-01	39.08	1.157	.3619	554.1	.9142-03
90	.60000	.70000	1119.0	.2150-01	.2549-01	.2810-01	39.11	.8409	.3613	553.2	.6639-03
46	.60000	.80000	120.00	.1350-01	.1598-01	.1759-01	41.91	.5658	.3549	561.2	.4134-03
46	.60000	.90000	122.00	.1300-01	.1540-01	.1696-01	41.73	.5425	.3575	565.3	.3983-03
46	.60000	.95000	123.00	.1049-01	.1243-01	.1370-01	41.66	.4372	.3586	567.0	.3216-03
46	.70000	.60000	131.00	.3974-01	.4706-01	.5183-01	41.77	1.660	.3569	564.3	.1217-02
46	.70000	.90000	132.00	.2066-01	.2448-01	.2697-01	41.63	.8601	.3590	567.7	.6331-03
46	.75000	.40000	139.00	.4064-01	.4814-01	.5304-01	41.66	1.693	.3586	567.0	.1245-02
46	.75000	.60000	140.00	.3038-01	.3599-01	.3965-01	41.65	1.265	.3587	567.1	.9308-03
90	.75000	.70000	1141.0	.2880-01	.3415-01	.3765-01	39.08	1.126	.3618	553.9	.8896-03
46	.75000	.80000	142.00	.1906-01	.2257-01	.2486-01	41.74	.7955	.3574	565.1	.5838-03
46	.75000	.90000	143.00	.1467-01	.1739-01	.1916-01	41.58	.6101	.3598	568.9	.4497-03
46	.75000	.95000	144.00	.9715-02	.1152-01	.1269-01	41.53	.4035	.3605	570.0	.2978-03
46	.80000	.40000	147.00	.5386-01	.6386-01	.7040-01	41.47	2.234	.3614	571.5	.1651-02
46	.85000	.20000	150.00	.6325-01	.7510-01	.8285-01	41.16	2.604	.3659	578.6	.1941-02
46	.85000	.40000	151.00	.4508-01	.5350-01	.5901-01	41.25	1.860	.3646	576.5	.1383-02
46	.90000	.00000	152.00	.1756	.2086	.2302	41.01	7.200	.3681	582.1	.5391-02
46	.90000	.10000+00	153.00	.1120	.1331	.1469	40.96	4.587	.3690	583.4	.3440-02
46	.90000	.20000	154.00	.7104-01	.8442-01	.9319-01	40.95	2.909	.3690	583.5	.2182-02
90	.90000	.60000	1157.0	.4986-01	.5919-01	.6531-01	38.81	1.935	.3660	560.4	.1541-02
46	.90000	.80000	158.00	.2997-01	.3554-01	.3918-01	41.41	1.241	.3623	572.9	.9190-03
46	.90000	.90000	159.00	.2273-01	.2697-01	.2975-01	41.26	.9377	.3644	576.2	.6972-03
46	.95000	.20000	163.00	.8738-01	.1040	.1148	40.70	3.557	.3727	589.3	.2686-02
46	.95000	.30000	164.00	.6908-01	.8216-01	.9075-01	40.76	2.815	.3719	588.1	.2123-02
46	.95000	.50000	165.00	.4317-01	.5131-01	.5665-01	40.92	1.766	.3695	584.3	.1326-02
46	.95000	.70000	166.00	.3080-01	.3655-01	.4032-01	41.26	1.271	.3645	576.4	.9450-03
49	.95000	.80000	167.00	.3271-01	.3889-01	.4295-01	38.43	1.257	.3710	566.1	.1009-02
49	.95000	.90000	168.00	.2556-01	.3040-01	.3358-01	38.36	.9804	.3721	567.8	.7883-03

IH103 60-OT WING LOWER SURFACE (R3PQ12)

WING LOWER SURF

PARAMETRIC DATA

MACH = 5.250 ALPHA = 10.00 BETA = -3.000 ELEVON = .0000
BDFLAP = .0000 SPDBRK = .0000

TEST CONDITIONS

RUN NUMBER	ALPHA DEG.	BETA DEG.	MACH	RN/FT /FT X10 6	PT PSIA	TT DEG. R	HT BTU/ LBM	PINF PSIA	TINF DEG. R	RHO SLUGS/ FT3	VINF FT/SEC	SCALE
45	10.00	-3.000	5.250	1.036	103.0	1500.	369.5	.1420	236.4	.5040-04	3957.	.1750-01
50	10.00	-3.000	5.250	1.015	101.8	1507.	371.4	.1402	237.7	.4950-04	3967.	.1750-01
89	10.00	-3.000	5.250	1.034	104.5	1514.	373.3	.1439	238.9	.5056-04	3977.	.1750-01

RUN NUMBER	PHI DEG.	HS SPHERE TW=540
45	.0000	.1673
50	.0000	.1664
89	.0000	.1686

TEST DATA

RUN NUMBER	2Y/BW	XW/CW	T/C NO	H/HREF R=1.0	H/HREF R=.900	H/HREF R=.850	QREF BTU/ FT2SEC	QDOT BTU/ FT2SEC	HW/HT	TW DEG. R	STN NO R=.900
89	.30000	.10000+00	1075.0	.7329-01	.8678-01	.9558-01	40.45	2.965	.3569	555.2	.2260-02
89	.30000	.20000	1076.0	.5685-01	.6726-01	.7404-01	40.66	2.312	.3537	550.2	.1752-02
89	.30000	.30000	1077.0	.4646-01	.5496-01	.6050-01	40.67	1.890	.3535	550.0	.1432-02
89	.30000	.40000	1078.0	.3584-01	.4240-01	.4667-01	40.68	1.458	.3533	549.7	.1105-02
89	.30000	.50000	1079.0	.2088-01	.2470-01	.2719-01	40.67	.8492	.3535	550.0	.6435-03
89	.30000	.60000	1080.0	.6359-01	.7521-01	.8277-01	40.71	2.589	.3529	549.0	.1959-02
89	.30000	.70000	1081.0	.6800-01	.8043-01	.8853-01	40.71	2.768	.3530	549.1	.2096-02
89	.30000	.80000	1082.0	.6338-01	.7498-01	.8253-01	40.68	2.578	.3534	549.8	.1953-02
45	.30000	.90000	83.000	.3957-01	.4690-01	.5168-01	39.53	1.564	.3602	554.6	.1222-02
45	.30000	.95000	84.000	.3425-01	.4060-01	.4475-01	39.49	1.352	.3608	555.5	.1058-02
89	.40000	.30000	1090.0	.4191-01	.4958-01	.5457-01	40.67	1.705	.3535	550.0	.1292-02
89	.40000	.60000	1092.0	.2631-01	.3111-01	.3424-01	40.74	1.072	.3525	548.4	.8106-03
89	.40000	.70000	1093.0	.4205-01	.4975-01	.5476-01	40.68	1.711	.3535	549.9	.1296-02
89	.40000	.75000	1094.0	.4236-01	.5011-01	.5515-01	40.68	1.723	.3534	549.8	.1305-02
45	.40000	.85000	95.000	.3486-01	.4132-01	.4553-01	39.53	1.378	.3601	554.5	.1077-02
45	.40000	.90000	96.000	.2718-01	.3223-01	.3552-01	39.48	1.073	.3610	555.8	.8399-03
45	.40000	.95000	97.000	.2298-01	.2725-01	.3004-01	39.44	.9065	.3615	556.7	.7102-03

IH103 60-OT WING LOWER SURFACE (R3PQ12)

RUN NUMBER	2Y/BW	XW/CW	T/C NO	H/HREF R=1.0	H/HREF R=.900	H/HREF R=.850	QREF BTU/ FT2SEC	QDOT BTU/ FT2SEC	HW/HT	TW DEG. R	STN NO R=.900
89	.50000	.60000	1105.0	.4113-01	.4866-01	.5356-01	40.64	1.671	.3540	550.6	.1268-02
89	.50000	.70000	1106.0	.3068-01	.3629-01	.3994-01	40.67	1.248	.3535	549.9	.9454-03
89	.60000	.25000-01	1110.0	.3459	.4099	.4517	40.27	13.93	.3597	559.6	.1067-01
89	.60000	.75000-01	1112.0	.1554	.1842	.2029	40.33	6.269	.3588	558.1	.4796-02
89	.60000	.10000+00	1113.0	.1154	.1367	.1506	40.34	4.655	.3585	557.8	.3560-02
89	.60000	.20000	1114.0	.6322-01	.7488-01	.8248-01	40.40	2.554	.3577	556.5	.1950-02
89	.60000	.30000	1115.0	.5502-01	.6515-01	.7175-01	40.45	2.225	.3569	555.2	.1697-02
89	.60000	.40000	1116.0	.4422-01	.5236-01	.5766-01	40.49	1.791	.3563	554.3	.1364-02
89	.60000	.50000	1117.0	.3776-01	.4470-01	.4923-01	40.50	1.529	.3562	554.1	.1164-02
89	.60000	.70000	1119.0	.2702-01	.3198-01	.3521-01	40.52	1.095	.3558	553.5	.8330-03
45	.60000	.80000	120.00	.1736-01	.2058-01	.2268-01	39.52	.6862	.3603	554.8	.5364-03
45	.60000	.90000	122.00	.1678-01	.1990-01	.2194-01	39.37	.6605	.3627	558.4	.5185-03
45	.60000	.95000	123.00	.1316-01	.1561-01	.1721-01	39.31	.5172	.3635	559.8	.4067-03
45	.70000	.60000	131.00	.4979-01	.5905-01	.6510-01	39.38	1.961	.3625	558.2	.1539-02
45	.70000	.90000	132.00	.3332-01	.3954-01	.4360-01	39.29	1.309	.3639	560.3	.1030-02
45	.75000	.40000	139.00	.4876-01	.5786-01	.6381-01	39.28	1.915	.3641	560.6	.1508-02
45	.75000	.60000	140.00	.4282-01	.5080-01	.5603-01	39.29	1.682	.3639	560.3	.1324-02
89	.75000	.70000	1141.0	.3960-01	.4689-01	.5164-01	40.44	1.601	.3570	555.4	.1221-02
45	.75000	.80000	142.00	.3071-01	.3642-01	.4015-01	39.39	1.210	.3623	557.9	.9490-03
45	.75000	.90000	143.00	.2466-01	.2926-01	.3228-01	39.24	.9676	.3646	561.5	.7624-03
45	.75000	.95000	144.00	.1728-01	.2051-01	.2263-01	39.20	.6775	.3652	562.4	.5344-03
45	.80000	.40000	147.00	.5719-01	.6791-01	.7494-01	39.12	2.237	.3665	564.4	.1769-02
45	.85000	.20000	150.00	.8801-01	.1046	.1156	38.85	3.419	.3708	570.9	.2725-02
45	.85000	.40000	151.00	.6406-01	.7614-01	.8406-01	38.93	2.494	.3695	569.0	.1983-02
45	.90000	.00000	152.00	.1974	.2348	.2594	38.70	7.638	.3731	574.4	.6115-02
45	.90000	.10000+00	153.00	.1436	.1709	.1888	38.65	5.549	.3738	575.6	.4449-02
45	.90000	.20000	154.00	.9467-01	.1127	.1245	38.65	3.659	.3739	575.7	.2934-02
89	.90000	.60000	1157.0	.5755-01	.6824-01	.7523-01	40.13	2.310	.3618	562.8	.1777-02
45	.90000	.80000	158.00	.4287-01	.5091-01	.5617-01	39.11	1.676	.3668	564.7	.1326-02
45	.90000	.90000	159.00	.3122-01	.3710-01	.4095-01	38.99	1.217	.3686	567.5	.9663-03
45	.95000	.20000	163.00	.1125	.1340	.1482	38.42	4.323	.3774	581.1	.3489-02
45	.95000	.30000	164.00	.9111-01	.1085	.1200	38.48	3.506	.3765	579.8	.2825-02
45	.95000	.50000	165.00	.5835-01	.6943-01	.7671-01	38.67	2.256	.3736	575.2	.1808-02
45	.95000	.70000	166.00	.4516-01	.5366-01	.5924-01	38.97	1.760	.3688	567.9	.1398-02
50	.95000	.80000	167.00	.4326-01	.5140-01	.5673-01	39.00	1.687	.3681	569.8	.1351-02
50	.95000	.90000	168.00	.3077-01	.3656-01	.4037-01	38.92	1.197	.3694	571.8	.9614-03

IH103 60-OT WING LOWER SURFACE (R3PQ13)

WING LOWER SURF

PARAMETRIC DATA

MACH = 5.250 ALPHA = .0000 BETA = -9.000 ELEVON = .0000
BDFLAP = .0000 SPDBRK = .0000

TEST CONDITIONS

RUN NUMBER	ALPHA DEG.	BETA DEG.	MACH	RN/FT /FT X10 6	PT PSIA	TT DEG. R	HT BTU/ LBM	PINF PSIA	TINF DEG. R	RHO SLUGS/ FT3	VINF FT/SEC	SCALE
41	.0000	-9.000	5.250	.9914	101.7	1528.	376.9	.1399	241.2	.4866-04	3997.	.1750-01
53	.0000	-9.000	5.250	1.015	101.9	1509.	371.8	.1404	237.9	.4952-04	3969.	.1750-01
101	.0000	-9.000	5.250	1.049	103.1	1488.	366.4	.1421	234.5	.5087-04	3940.	.1750-01

RUN NUMBER	PHI DEG.	HS SPHERE TW=540
41	.0000	.1664
53	.0000	.1665
101	.0000	.1673

TEST DATA

RUN NUMBER	2Y/BW	XW/CW	T/C NO	H/HREF R=1.0	H/HREF R=.900	H/HREF R=.850	QREF BTU/ FT2SEC	QDOT BTU/ FT2SEC	HW/HT	TW DEG. R	STN NO R=.900
101	.30000	.10000+00	1075.0	.6577-01	.7805-01	.8608-01	38.93	2.560	.3643	556.3	.2023-02
101	.30000	.20000	1076.0	.4239-01	.5030-01	.5547-01	38.95	1.651	.3640	555.8	.1304-02
101	.30000	.30000	1077.0	.3285-01	.3898-01	.4299-01	38.95	1.280	.3640	555.8	.1010-02
101	.30000	.40000	1078.0	.2520-01	.2991-01	.3298-01	38.95	.9818	.3640	555.8	.7751-03
101	.30000	.50000	1079.0	.1169-01	.1386-01	.1529-01	39.00	.4558	.3632	554.6	.3594-03
101	.30000	.60000	1080.0	.3674-01	.4358-01	.4806-01	38.99	1.432	.3634	554.9	.1130-02
101	.30000	.70000	1081.0	.9299-01	.1103	.1217	38.97	3.624	.3637	555.4	.2860-02
101	.30000	.80000	1082.0	.1406	.1668	.1840	38.94	5.475	.3642	556.1	.4324-02
41	.30000	.90000	83.000	.4267-01	.5040-01	.5543-01	40.85	1.743	.3485	547.4	.1340-02
41	.30000	.95000	84.000	.2956-01	.3493-01	.3842-01	40.78	1.205	.3495	549.0	.9284-03
101	.40000	.30000	1090.0	.1432-01	.1699-01	.1874-01	38.98	.5583	.3635	555.0	.4403-03
101	.40000	.60000	1092.0	.4631-01	.5492-01	.6056-01	39.04	1.808	.3626	553.7	.1424-02
101	.40000	.70000	1093.0	.7182-01	.8520-01	.9395-01	39.01	2.801	.3632	554.5	.2208-02
101	.40000	.75000	1094.0	.7064-01	.8379-01	.9239-01	39.02	2.757	.3629	554.1	.2172-02
41	.40000	.85000	95.000	.6188-01	.7311-01	.8040-01	40.82	2.526	.3489	548.1	.1943-02
41	.40000	.90000	96.000	.4994-01	.5901-01	.6491-01	40.76	2.036	.3498	549.5	.1569-02
41	.40000	.95000	97.000	.4280-01	.5059-01	.5565-01	40.72	1.743	.3504	550.4	.1345-02

IH103 60-OT WING LOWER SURFACE

(R3PQ13)

RUN NUMBER	2Y/BW	XW/CW	T/C NO	H/HREF R=1.0	H/HREF R=.900	H/HREF R=.850	QREF BTU/ FT2SEC	QDOT BTU/ FT2SEC	HW/HT	TW DEG. R	STN NO R=.900
101	.50000	.60000	1105.0	.2486-01	.2949-01	.3252-01	39.01	.9698	.3631	554.4	.7644-03
101	.50000	.70000	1106.0	.2772-01	.3288-01	.3625-01	39.04	1.082	.3626	553.6	.8521-03
101	.60000	.25000-01	1110.0	.3561	.4230	.4668	38.75	13.80	.3671	560.5	.1096-01
101	.60000	.75000-01	1112.0	.1449	.1720	.1898	38.80	5.620	.3664	559.5	.4458-02
101	.60000	.10000+00	1113.0	.1051	.1248	.1377	38.81	4.079	.3662	559.2	.3234-02
101	.60000	.20000	1114.0	.5471-01	.6494-01	.7164-01	38.86	2.126	.3655	558.1	.1683-02
101	.60000	.30000	1115.0	.4476-01	.5313-01	.5860-01	38.90	1.741	.3648	557.1	.1377-02
101	.60000	.40000	1116.0	.3839-01	.4556-01	.5025-01	38.92	1.494	.3645	556.6	.1181-02
101	.60000	.50000	1117.0	.3739-01	.4437-01	.4894-01	38.93	1.456	.3643	556.3	.1150-02
101	.60000	.70000	1119.0	.3106-01	.3686-01	.4065-01	38.97	1.210	.3638	555.4	.9553-03
41	.60000	.80000	120.00	.1897-01	.2241-01	.2465-01	40.83	.7746	.3487	547.8	.5958-03
41	.60000	.90000	122.00	.1603-01	.1895-01	.2085-01	40.68	.6523	.3510	551.3	.5037-03
41	.60000	.95000	123.00	.1126-01	.1331-01	.1465-01	40.63	.4574	.3518	552.6	.3537-03
41	.70000	.60000	131.00	.3626-01	.4286-01	.4715-01	40.74	1.477	.3502	550.1	.1139-02
41	.70000	.90000	132.00	.2221-01	.2626-01	.2890-01	40.64	.9027	.3516	552.4	.6980-03
41	.75000	.40000	139.00	.7316-01	.8647-01	.9513-01	40.71	2.978	.3506	550.8	.2298-02
41	.75000	.60000	140.00	.6341-01	.7495-01	.8246-01	40.70	2.581	.3507	550.9	.1992-02
101	.75000	.70000	1141.0	.2405-01	.2850-01	.3140-01	39.26	.9443	.3591	548.3	.7388-03
41	.75000	.80000	142.00	.3865-01	.4568-01	.5025-01	40.76	1.575	.3499	549.6	.1214-02
41	.75000	.90000	143.00	.2780-01	.3287-01	.3617-01	40.62	1.129	.3520	552.9	.8736-03
41	.75000	.95000	144.00	.1820-01	.2153-01	.2369-01	40.58	.7386	.3526	553.9	.5721-03
41	.80000	.40000	147.00	.5183-01	.6129-01	.6744-01	40.63	2.106	.3518	552.6	.1629-02
41	.85000	.20000	150.00	.8546-01	.1011	.1113	40.50	3.461	.3538	555.9	.2687-02
41	.85000	.40000	151.00	.5977-01	.7070-01	.7782-01	40.53	2.422	.3533	555.1	.1879-02
41	.90000	.00000	152.00	.2758	.3264	.3593	40.44	11.15	.3547	557.2	.8672-02
41	.90000	.10000+00	153.00	.1518	.1796	.1978	40.39	6.130	.3554	558.3	.4773-02
41	.90000	.20000	154.00	.9763-01	.1156	.1273	40.38	3.942	.3557	558.7	.3071-02
101	.90000	.60000	1157.0	.3699-01	.4389-01	.4841-01	38.94	1.441	.3641	556.0	.1138-02
41	.90000	.80000	158.00	.3224-01	.3813-01	.4196-01	40.60	1.309	.3523	553.5	.1013-02
41	.90000	.90000	159.00	.2251-01	.2663-01	.2931-01	40.49	.9112	.3539	556.0	.7076-03
41	.95000	.20000	163.00	.1251	.1482	.1632	40.25	5.035	.3577	561.9	.3937-02
41	.95000	.30000	164.00	.8834-01	.1045	.1151	40.45	3.573	.3545	557.0	.2778-02
41	.95000	.50000	165.00	.6313-01	.7472-01	.8228-01	40.37	2.549	.3557	558.8	.1985-02
41	.95000	.70000	166.00	.3954-01	.4677-01	.5148-01	40.52	1.602	.3534	555.2	.1243-02
53	.95000	.80000	167.00	.3532-01	.4190-01	.4620-01	39.38	1.391	.3632	562.7	.1102-02
53	.95000	.90000	168.00	.2893-01	.3433-01	.3787-01	39.30	1.137	.3644	564.7	.9030-03

IH103 60-OT WING LOWER SURFACE (R3PQ14)

WING LOWER SURF

PARAMETRIC DATA

MACH = 5.250 ALPHA = -5.000 BETA = -9.000 ELEVON = .0000
BDFLAP = .0000 SPDBRK = .0000

TEST CONDITIONS

RUN NUMBER	ALPHA DEG.	BETA DEG.	MACH	RN/FT /FT X10 6	PT PSIA	TT DEG. R	HT BTU/ LBM	PINF PSIA	TINF DEG. R	RHO SLUGS/ FT3	VINF FT/SEC	SCALE
42	-5.000	-9.000	5.250	1.011	102.2	1515.	373.5	.1407	239.0	.4941-04	3978.	.1750-01
54	-5.000	-9.000	5.250	1.031	101.6	1491.	367.2	.1401	235.0	.5004-04	3945.	.1750-01
102	-5.000	-9.000	5.250	1.049	102.4	1483.	364.9	.1413	233.5	.5078-04	3932.	.1750-01

RUN NUMBER	PHI DEG.	HS SPHERE TW=540
42	.0000	.1667
54	.0000	.1661
102	.0000	.1667

TEST DATA

RUN NUMBER	2Y/BW	XW/CW	T/C NO	H/HREF R=1.0	H/HREF R=.900	H/HREF R=.850	QREF BTU/ FT2SEC	QDOT BTU/ FT2SEC	HW/HT	TW DEG. R	STN NO R=.900
102	.30000	.10000+00	1075.0	.4855-01	.5769-01	.6369-01	38.35	1.862	.3691	561.4	.1496-02
102	.30000	.20000	1076.0	.4616-01	.5481-01	.6046-01	38.56	1.780	.3658	556.3	.1421-02
102	.30000	.30000	1077.0	.2702-01	.3208-01	.3539-01	38.55	1.042	.3659	556.5	.8319-03
102	.30000	.40000	1078.0	.1503-01	.1785-01	.1969-01	38.55	.5794	.3660	556.6	.4628-03
102	.30000	.50000	1079.0	.9150-02	.1086-01	.1198-01	38.61	.3533	.3650	555.2	.2816-03
102	.30000	.60000	1080.0	.9842-02	.1168-01	.1289-01	38.57	.3796	.3656	556.0	.3030-03
102	.30000	.70000	1081.0	.7940-01	.9426-01	.1040	38.55	3.061	.3659	556.5	.2444-02
102	.30000	.80000	1082.0	.1397	.1659	.1831	38.52	5.383	.3664	557.2	.4302-02
42	.30000	.90000	83.000	.4091-01	.4840-01	.5327-01	40.25	1.647	.3534	550.2	.1276-02
42	.30000	.95000	84.000	.2043-01	.2418-01	.2661-01	40.20	.8215	.3541	551.2	.6371-03
102	.40000	.30000	1090.0	.1965-01	.2333-01	.2573-01	38.59	.7583	.3653	555.7	.6049-03
102	.40000	.60000	1092.0	.4016-01	.4766-01	.5258-01	38.62	1.551	.3648	554.8	.1236-02
102	.40000	.70000	1093.0	.6560-01	.7787-01	.8590-01	38.58	2.531	.3654	555.7	.2019-02
102	.40000	.75000	1094.0	.6257-01	.7428-01	.8194-01	38.59	2.414	.3654	555.7	.1926-02
42	.40000	.85000	95.000	.5916-01	.6999-01	.7705-01	40.22	2.379	.3539	550.9	.1845-02
42	.40000	.90000	96.000	.5252-01	.6216-01	.6844-01	40.15	2.108	.3550	552.6	.1638-02
42	.40000	.95000	97.000	.4774-01	.5650-01	.6221-01	40.12	1.915	.3555	553.3	.1489-02

IH103 60-OT WING LOWER SURFACE (R3PQ14)

RUN NUMBER	2Y/BW	XW/CW	T/C NO	H/HREF R=1.0	H/HREF R=.900	H/HREF R=.850	QREF BTU/ FT2SEC	QDOT BTU/ FT2SEC	HW/HT	TW DEG. R	STN NO R=.900
102	.50000	.60000	1105.0	.4230-01	.5021-01	.5539-01	38.59	1.632	.3653	555.6	.1302-02
102	.50000	.70000	1106.0	.5146-01	.6107-01	.6736-01	38.63	1.988	.3646	554.6	.1584-02
102	.60000	.25000-01	1110.0	.3520	.4183	.4617	38.37	13.51	.3688	560.9	.1084-01
102	.60000	.75000-01	1112.0	.1342	.1594	.1759	38.43	5.156	.3679	559.5	.4132-02
102	.60000	.10000+00	1113.0	.9596-01	.1140	.1258	38.44	3.688	.3677	559.3	.2956-02
102	.60000	.20000	1114.0	.4950-01	.5879-01	.6488-01	38.48	1.905	.3670	558.2	.1524-02
102	.60000	.30000	1115.0	.4116-01	.4888-01	.5393-01	38.51	1.585	.3665	557.4	.1267-02
102	.60000	.40000	1116.0	.3716-01	.4413-01	.4869-01	38.52	1.431	.3665	557.4	.1144-02
102	.60000	.50000	1117.0	.3272-01	.3885-01	.4287-01	38.52	1.260	.3664	557.3	.1007-02
102	.60000	.70000	1119.0	.1927-01	.2287-01	.2524-01	38.56	.7429	.3658	556.4	.5932-03
42	.60000	.80000	120.00	.1266-01	.1498-01	.1648-01	40.24	.5094	.3535	550.2	.3947-03
42	.60000	.90000	122.00	.1148-01	.1359-01	.1497-01	40.12	.4606	.3555	553.3	.3582-03
42	.60000	.95000	123.00	.1044-01	.1236-01	.1361-01	40.06	.4183	.3563	554.6	.3258-03
42	.70000	.60000	131.00	.4185-01	.4952-01	.5451-01	40.18	1.681	.3544	551.7	.1305-02
42	.70000	.90000	132.00	.1127-01	.1334-01	.1469-01	40.10	.4518	.3557	553.7	.3514-03
42	.75000	.40000	139.00	.5715-01	.6764-01	.7447-01	40.15	2.295	.3549	552.4	.1783-02
42	.75000	.60000	140.00	.4309-01	.5100-01	.5615-01	40.15	1.730	.3549	552.4	.1344-02
102	.75000	.70000	1141.0	.3516-01	.4174-01	.4605-01	38.57	1.356	.3656	556.0	.1082-02
42	.75000	.80000	142.00	.1829-01	.2164-01	.2382-01	40.19	.7350	.3543	551.5	.5703-03
42	.75000	.90000	143.00	.1349-01	.1597-01	.1759-01	40.09	.5408	.3559	554.0	.4208-03
42	.75000	.95000	144.00	.1217-01	.1441-01	.1587-01	40.05	.4875	.3565	554.9	.3797-03
42	.80000	.40000	147.00	.4133-01	.4892-01	.5387-01	40.08	1.657	.3559	554.1	.1289-02
42	.85000	.20000	150.00	.9003-01	.1066	.1175	39.98	3.600	.3575	556.5	.2810-02
42	.85000	.40000	151.00	.8357-01	.9897-01	.1090	40.00	3.343	.3572	556.0	.2608-02
42	.90000	.00000	152.00	.2007	.2378	.2620	39.94	8.017	.3582	557.6	.6265-02
42	.90000	.10000+00	153.00	.1172	.1390	.1533	39.60	4.641	.3634	565.6	.3661-02
42	.90000	.20000	154.00	.7613-01	.9020-01	.9938-01	39.91	3.038	.3587	558.3	.2376-02
102	.90000	.60000	1157.0	.5425-01	.6443-01	.7111-01	38.46	2.086	.3674	558.8	.1671-02
42	.90000	.80000	158.00	.2425-01	.2871-01	.3162-01	40.04	.9710	.3566	555.1	.7566-03
42	.90000	.90000	159.00	.1950-01	.2310-01	.2545-01	39.92	.7785	.3584	557.9	.6086-03
42	.95000	.20000	163.00	.1017	.1205	.1329	39.76	4.043	.3609	561.8	.3175-02
42	.95000	.30000	164.00	.7837-01	.9290-01	.1024	39.77	3.117	.3607	561.5	.2447-02
42	.95000	.50000	165.00	.6223-01	.7375-01	.8127-01	39.84	2.479	.3597	559.9	.1943-02
42	.95000	.70000	166.00	.2563-01	.3035-01	.3343-01	39.97	1.024	.3577	556.7	.7997-03
54	.95000	.80000	167.00	.2615-01	.3108-01	.3433-01	38.36	1.003	.3705	567.1	.8122-03
54	.95000	.90000	168.00	.2543-01	.3024-01	.3341-01	38.27	.9732	.3719	569.1	.7901-03

IH103 60-OT WING LOWER SURFACE (R3PQ15)

WING LOWER SURF

PARAMETRIC DATA

MACH = 5.250 ALPHA = 5.000 BETA = -9.000 ELEVON = .0000
BDFLAP = .0000 SPDBRK = .0000

TEST CONDITIONS

RUN NUMBER	ALPHA DEG.	BETA DEG.	MACH	RN/FT /FT X10 6	PT PSIA	TT DEG. R	HT BTU/ LBM	PINF PSIA	TINF DEG. R	RHO SLUGS/ FT3	VINF FT/SEC	SCALE
43	5.000	-9.000	5.250	1.042	103.7	1500.	369.4	.1429	236.4	.5072-04	3956.	.1750-01
55	-5.000	-9.000	5.250	1.043	101.7	1481.	364.6	.1404	233.3	.5049-04	3930.	.1750-01
103	5.000	-9.000	5.250	1.053	103.3	1486.	365.9	.1424	234.2	.5105-04	3938.	.1750-01

RUN NUMBER	PHI DEG.	HS SPHERE TW=540
43	.0000	.1678
55	.0000	.1661
103	.0000	.1674

TEST DATA

RUN NUMBER	2Y/BW	XW/CW	T/C NO	H/HREF R=1.0	H/HREF R=.900	H/HREF R=.850	QREF BTU/ FT2SEC	QDOT BTU/ FT2SEC	HW/HT	TW DEG. R	STN NO R=.900
103	.30000	.10000+00	1075.0	.7788-01	.9257-01	.1022	38.57	3.004	.3697	563.8	.2394-02
103	.30000	.20000	1076.0	.5119-01	.6078-01	.6707-01	38.78	1.985	.3664	558.8	.1572-02
103	.30000	.30000	1077.0	.4373-01	.5192-01	.5729-01	38.79	1.696	.3664	558.7	.1343-02
103	.30000	.40000	1078.0	.3526-01	.4187-01	.4620-01	38.79	1.368	.3663	558.6	.1083-02
103	.30000	.50000	1079.0	.1592-01	.1890-01	.2086-01	38.79	.6177	.3663	558.5	.4890-03
103	.30000	.60000	1080.0	.3571-01	.4240-01	.4678-01	38.83	1.387	.3658	557.8	.1097-02
103	.30000	.70000	1081.0	.9906-01	.1176	.1298	38.81	3.844	.3660	558.1	.3042-02
103	.30000	.80000	1082.0	.1350	.1603	.1769	38.79	5.237	.3663	558.6	.4146-02
43	.30000	.90000	83.000	.5105-01	.6052-01	.6670-01	39.61	2.023	.3606	555.1	.1572-02
43	.30000	.95000	84.000	.4269-01	.5061-01	.5578-01	39.58	1.689	.3611	556.0	.1315-02
103	.40000	.30000	1090.0	.3755-01	.4458-01	.4918-01	38.84	1.458	.3656	557.5	.1153-02
103	.40000	.60000	1092.0	.2611-01	.3099-01	.3419-01	38.89	1.016	.3647	556.2	.8018-03
103	.40000	.70000	1093.0	.7513-01	.8918-01	.9838-01	38.87	2.920	.3651	556.8	.2307-02
103	.40000	.75000	1094.0	.8079-01	.9589-01	.1058	38.87	3.140	.3651	556.8	.2481-02
43	.40000	.85000	95.000	.5860-01	.6946-01	.7655-01	39.61	2.321	.3606	555.1	.1804-02
43	.40000	.90000	96.000	.4518-01	.5357-01	.5905-01	39.55	1.787	.3615	556.5	.1392-02
43	.40000	.95000	97.000	.3767-01	.4467-01	.4925-01	39.52	1.488	.3621	557.4	.1160-02

IH103 60-OT WING LOWER SURFACE

(R3PQ15)

RUN NUMBER	2Y/BW	XW/CW	T/C NO	H/HREF R=1.0	H/HREF R=.900	H/HREF R=.850	QREF BTU/ FT2SEC	QDOT BTU/ FT2SEC	HW/HT	TW DEG. R	STN NO R=.900
103	.50000	.60000	1105.0	.4017-01	.4768-01	.5259-01	38.86	1.561	.3652	556.8	.1233-02
103	.50000	.70000	1106.0	.2814-01	.3340-01	.3684-01	38.89	1.095	.3647	556.2	.8640-03
103	.60000	.25000-01	1110.0	.3812	.4530	.5001	38.62	14.72	.3690	562.7	.1172-01
103	.60000	.75000-01	1112.0	.1676	.1991	.2198	38.67	6.481	.3682	561.5	.5149-02
103	.60000	.10000+00	1113.0	.1230	.1461	.1612	38.67	4.755	.3681	561.4	.3778-02
103	.60000	.20000	1114.0	.6852-01	.8139-01	.8982-01	38.71	2.652	.3676	560.5	.2105-02
103	.60000	.30000	1115.0	.6286-01	.7465-01	.8238-01	38.76	2.436	.3669	559.5	.1931-02
103	.60000	.40000	1116.0	.5348-01	.6350-01	.7007-01	38.78	2.074	.3665	558.9	.1643-02
103	.60000	.50000	1117.0	.4658-01	.5531-01	.6102-01	38.78	1.806	.3665	558.6	.1431-02
103	.60000	.70000	1119.0	.3091-01	.3670-01	.4049-01	38.82	1.200	.3658	557.8	.9493-03
43	.60000	.80000	120.00	.1801-01	.2135-01	.2354-01	39.61	.7137	.3605	555.0	.5548-03
43	.60000	.90000	122.00	.1856-01	.2201-01	.2427-01	39.49	.7330	.3624	558.0	.5718-03
43	.60000	.95000	123.00	.1406-01	.1668-01	.1839-01	39.43	.5544	.3634	559.4	.4333-03
43	.70000	.60000	131.00	.5643-01	.6691-01	.7376-01	39.54	2.231	.3617	556.8	.1738-02
43	.70000	.90000	132.00	.3125-01	.3707-01	.4088-01	39.46	1.233	.3630	558.8	.9629-03
43	.75000	.40000	139.00	.4847-01	.5749-01	.6338-01	39.49	1.914	.3626	558.1	.1493-02
43	.75000	.60000	140.00	.4258-01	.5050-01	.5568-01	39.50	1.682	.3623	557.7	.1312-02
103	.75000	.70000	1141.0	.3496-01	.4150-01	.4579-01	38.82	1.357	.3658	557.9	.1074-02
43	.75000	.80000	142.00	.2925-01	.3468-01	.3823-01	39.55	1.157	.3615	556.5	.9008-03
43	.75000	.90000	143.00	.2407-01	.2855-01	.3149-01	39.43	.9490	.3634	559.4	.7416-03
43	.75000	.95000	144.00	.1864-01	.2212-01	.2440-01	39.39	.7344	.3640	560.4	.5746-03
43	.80000	.40000	147.00	.5849-01	.6940-01	.7653-01	39.41	2.305	.3637	559.8	.1803-02
43	.85000	.20000	150.00	.9111-01	.1082	.1193	39.28	3.579	.3658	563.1	.2809-02
43	.85000	.40000	151.00	.6219-01	.7382-01	.8143-01	39.31	2.445	.3652	562.3	.1917-02
43	.90000	.00000	152.00	.2562	.3042	.3357	39.22	10.05	.3667	564.6	.7900-02
43	.90000	.10000+00	153.00	.1525	.1814	.2003	38.88	5.929	.3719	572.5	.4708-02
43	.90000	.20000	154.00	.1010	.1199	.1323	39.18	3.955	.3673	565.5	.3114-02
103	.90000	.60000	1157.0	.5056-01	.6006-01	.6630-01	38.67	1.955	.3682	561.4	.1553-02
43	.90000	.80000	158.00	.3770-01	.4474-01	.4935-01	39.35	1.484	.3646	561.3	.1162-02
43	.90000	.90000	159.00	.2662-01	.3161-01	.3488-01	39.24	1.045	.3663	563.9	.8210-03
43	.95000	.20000	163.00	.1315	.1563	.1726	39.03	5.133	.3696	569.0	.4059-02
43	.95000	.30000	164.00	.1026	.1219	.1346	39.05	4.006	.3694	568.6	.3166-02
43	.95000	.50000	165.00	.6523-01	.7750-01	.8555-01	39.11	2.551	.3684	567.1	.2012-02
43	.95000	.70000	166.00	.4546-01	.5397-01	.5955-01	39.26	1.785	.3660	563.5	.1402-02
55	.95000	.80000	167.00	.4264-01	.5078-01	.5614-01	37.73	1.609	.3763	571.7	.1320-02
55	.95000	.90000	168.00	.3109-01	.3704-01	.4096-01	37.65	1.170	.3775	573.5	.9624-03

IH103 60-OT WING LOWER SURFACE (R3PQ16)

WING LOWER SURF

PARAMETRIC DATA

MACH = 5.250 ALPHA = 10.00 BETA = -9.000 ELEVON = .0000
BDFLAP = .0000 SPDBRK = .0000

TEST CONDITIONS

RUN NUMBER	ALPHA DEG.	BETA DEG.	MACH	RN/FT /FT X10 6	PT PSIA	TT DEG. R	HT BTU/ LBM	PINF PSIA	TINF DEG. R	RHO SLUGS/ FT3	VINF FT/SEC	SCALE
44	10.00	-9.000	5.250	1.040	101.3	1480.	364.3	.1399	233.1	.5034-04	3929.	.1750-01
56	10.00	-9.000	5.250	1.019	101.9	1504.	370.6	.1403	237.2	.4965-04	3963.	.1750-01
104	10.00	-9.000	5.250	1.049	103.3	1490.	366.9	.1424	234.8	.5090-04	3943.	.1750-01

RUN NUMBER	PHI DEG.	HS SPHERE TW=540
44	.0000	.1658
56	.0000	.1664
104	.0000	.1674

TEST DATA

RUN NUMBER	2Y/BW	XW/CW	T/C NO	H/HREF R=1.0	H/HREF R=.900	H/HREF R=.850	QREF BTU/ FT2SEC	QDOT BTU/ FT2SEC	HW/HT	TW DEG. R	STN NO R=.900
104	.30000	.10000+00	1075.0	.8537-01	.1015	.1121	38.61	3.297	.3707	566.9	.2629-02
104	.30000	.20000	1076.0	.6888-01	.8182-01	.9030-01	38.82	2.674	.3676	562.0	.2120-02
104	.30000	.30000	1077.0	.6169-01	.7328-01	.8087-01	38.82	2.395	.3675	562.0	.1899-02
104	.30000	.40000	1078.0	.5179-01	.6152-01	.6789-01	38.82	2.010	.3676	562.0	.1594-02
104	.30000	.50000	1079.0	.3373-01	.4006-01	.4420-01	38.89	1.312	.3665	560.4	.1038-02
104	.30000	.60000	1080.0	.3733-01	.4433-01	.4892-01	38.86	1.451	.3668	560.9	.1149-02
104	.30000	.70000	1081.0	.7289-01	.8656-01	.9552-01	38.86	2.833	.3669	561.0	.2243-02
104	.30000	.80000	1082.0	.9601-01	.1140	.1258	38.84	3.729	.3671	561.4	.2954-02
44	.30000	.90000	83.000	.6230-01	.7397-01	.8162-01	38.27	2.385	.3661	555.8	.1926-02
44	.30000	.95000	84.000	.3971-01	.4715-01	.5203-01	38.23	1.518	.3668	556.9	.1228-02
104	.40000	.30000	1090.0	.5077-01	.6029-01	.6653-01	38.87	1.974	.3667	560.7	.1562-02
104	.40000	.60000	1092.0	.3589-01	.4261-01	.4701-01	38.94	1.398	.3656	559.1	.1104-02
104	.40000	.70000	1093.0	.4098-01	.4866-01	.5369-01	38.92	1.595	.3660	559.6	.1261-02
104	.40000	.75000	1094.0	.4722-01	.5605-01	.6184-01	38.93	1.838	.3658	559.3	.1452-02
44	.40000	.85000	95.000	.3397-01	.4034-01	.4451-01	38.24	1.299	.3665	556.5	.1050-02
44	.40000	.90000	96.000	.2261-01	.2685-01	.2963-01	38.21	.8638	.3671	557.4	.6992-03
44	.40000	.95000	97.000	.3407-01	.4047-01	.4467-01	38.18	1.301	.3675	558.0	.1054-02

IH103 60-OT WING LOWER SURFACE

(R3PQ16)

RUN NUMBER	2Y/BW	XW/CW	T/C NO	H/HREF R=1.0	H/HREF R=.900	H/HREF R=.850	QREF BTU/ FT2SEC	QDOT BTU/ FT2SEC	HW/HT	TW DEG. R	STN NO R=.900
104	.50000	.60000	1105.0	.5050-01	.5996-01	.6615-01	38.91	1.965	.3661	559.8	.1554-02
104	.50000	.70000	1106.0	.3717-01	.4412-01	.4868-01	38.94	1.448	.3656	559.0	.1143-02
104	.60000	.25000-01	1110.0	.3516	.4180	.4616	38.62	13.58	.3707	566.8	.1083-01
104	.60000	.75000-01	1112.0	.1710	.2032	.2244	38.67	6.612	.3699	565.5	.5265-02
104	.60000	.10000+00	1113.0	.1291	.1534	.1694	38.68	4.994	.3697	565.2	.3975-02
104	.60000	.20000	1114.0	.7483-01	.8892-01	.9816-01	38.72	2.898	.3690	564.3	.2304-02
104	.60000	.30000	1115.0	.7159-01	.8505-01	.9388-01	38.77	2.775	.3683	563.1	.2203-02
104	.60000	.40000	1116.0	.6277-01	.7457-01	.8230-01	38.80	2.435	.3679	562.5	.1932-02
104	.60000	.50000	1117.0	.5845-01	.6942-01	.7662-01	38.82	2.269	.3675	562.0	.1799-02
104	.60000	.70000	1119.0	.4579-01	.5438-01	.6001-01	38.86	1.780	.3668	560.9	.1409-02
44	.60000	.80000	120.00	.3519-01	.4178-01	.4610-01	38.26	1.347	.3662	556.0	.1088-02
44	.60000	.90000	122.00	.3316-01	.3940-01	.4348-01	38.16	1.266	.3678	558.4	.1026-02
44	.60000	.95000	123.00	.2575-01	.3060-01	.3377-01	38.12	.9815	.3685	559.6	.7966-03
44	.70000	.60000	131.00	.5784-01	.6870-01	.7581-01	38.21	2.210	.3671	557.4	.1789-02
44	.70000	.90000	132.00	.4101-01	.4871-01	.5377-01	38.16	1.565	.3678	558.5	.1268-02
44	.75000	.40000	139.00	.6438-01	.7648-01	.8441-01	38.15	2.456	.3680	558.7	.1991-02
44	.75000	.60000	140.00	.5382-01	.6393-01	.7055-01	38.18	2.055	.3675	558.0	.1665-02
104	.75000	.70000	1141.0	.4684-01	.5563-01	.6139-01	38.84	1.819	.3672	561.4	.1441-02
44	.75000	.80000	142.00	.4113-01	.4884-01	.5389-01	38.24	1.573	.3665	556.5	.1272-02
44	.75000	.90000	143.00	.3304-01	.3925-01	.4332-01	38.15	1.260	.3681	558.9	.1022-02
44	.75000	.95000	144.00	.2508-01	.2980-01	.3290-01	38.11	.9558	.3687	559.8	.7759-03
44	.80000	.40000	147.00	.7139-01	.8482-01	.9362-01	38.13	2.722	.3683	559.2	.2208-02
44	.85000	.20000	150.00	.1109	.1319	.1456	38.03	4.220	.3699	561.6	.3434-02
44	.85000	.40000	151.00	.7770-01	.9234-01	.1019	38.06	2.957	.3694	560.9	.2404-02
44	.90000	.00000	152.00	.2580	.3067	.3386	38.00	9.803	.3703	562.3	.7984-02
44	.90000	.10000+00	153.00	.1758	.2093	.2313	37.68	6.623	.3755	570.2	.5447-02
44	.90000	.20000	154.00	.1215	.1444	.1595	37.95	4.610	.3711	563.5	.3760-02
104	.90000	.60000	1157.0	.6328-01	.7522-01	.8306-01	38.66	2.446	.3700	565.8	.1949-02
44	.90000	.80000	158.00	.5074-01	.6028-01	.6654-01	38.13	1.934	.3684	559.4	.1570-02
44	.90000	.90000	159.00	.3495-01	.4154-01	.4586-01	38.04	1.329	.3697	561.4	.1081-02
44	.95000	.20000	163.00	.1500	.1784	.1971	37.86	5.679	.3726	565.7	.4645-02
44	.95000	.30000	164.00	.1183	.1407	.1554	37.88	4.481	.3723	565.3	.3663-02
44	.95000	.50000	165.00	.7583-01	.9017-01	.9958-01	37.96	2.879	.3710	563.4	.2348-02
44	.95000	.70000	166.00	.5731-01	.6811-01	.7520-01	38.07	2.182	.3693	560.7	.1773-02
56	.95000	.80000	167.00	.5264-01	.6252-01	.6899-01	38.97	2.051	.3673	567.4	.1641-02
56	.95000	.90000	168.00	.3611-01	.4290-01	.4735-01	38.90	1.405	.3684	569.1	.1126-02

IH103 60-OT WING LOWER SURFACE (R3PQ17)

WING LOWER SURF

PARAMETRIC DATA

MACH = 5.250 ALPHA = -10.00 BETA = -9.000 ELEVON = .0000
BDFLAP = .0000 SPDBRK = .0000

TEST CONDITIONS

RUN NUMBER	ALPHA DEG.	BETA DEG.	MACH	RN/FT /FT X10 6	PT PSIA	TT DEG. R	HT BTU/ LBM	PINF PSIA	TINF DEG. R	RHO SLUGS/ FT3	VINF FT/SEC	SCALE
107	-10.00	-9.000	5.250	1.083	103.6	1464.	360.0	.1432	230.4	.5214-04	3906.	.1750-01
108	-10.00	-9.000	5.250	1.066	103.4	1476.	363.2	.1427	232.5	.5153-04	3923.	.1750-01
109	-10.00	-9.000	5.250	1.078	103.6	1468.	361.2	.1431	231.2	.5196-04	3912.	.1750-01

RUN NUMBER	PHI DEG.	HS SPHERE TW=540
107	.0000	.1676
108	.0000	.1675
109	.0000	.1676

TEST DATA

RUN NUMBER	2Y/BW	XW/CW	T/C NO	H/HREF R=1.0	H/HREF R=.900	H/HREF R=.850	QREF BTU/ FT2SEC	QDOT BTU/ FT2SEC	HW/HT	TW DEG. R	STN NO R=.900
109	.30000	.10000+00	1075.0	.5292-01	.6310-01	.6982-01	37.48	1.983	.3802	572.3	.1615-02
109	.30000	.20000	1076.0	.4268-01	.5089-01	.5631-01	37.49	1.600	.3800	572.0	.1302-02
109	.30000	.30000	1077.0	.1973-01	.2353-01	.2603-01	37.48	.7396	.3801	572.2	.6022-03
109	.30000	.40000	1078.0	.1533-01	.1827-01	.2022-01	37.48	.5744	.3801	572.2	.4677-03
109	.30000	.50000	1079.0	.2254-01	.2688-01	.2974-01	37.48	.8448	.3802	572.3	.6879-03
109	.30000	.60000	1080.0	.3640-01	.4339-01	.4801-01	37.50	1.365	.3798	571.7	.1111-02
109	.30000	.70000	1081.0	.1007	.1200	.1328	37.49	3.774	.3799	572.0	.3072-02
109	.30000	.80000	1082.0	.1040	.1240	.1372	37.47	3.896	.3803	572.5	.3174-02
107	.30000	.90000	83.000	.3226-01	.3841-01	.4245-01	37.65	1.215	.3754	563.2	.9813-03
107	.30000	.95000	84.000	.2428-01	.2891-01	.3196-01	37.63	.9137	.3757	563.8	.7387-03
109	.40000	.30000	1090.0	.1598-01	.1905-01	.2108-01	37.52	.5998	.3794	571.2	.4877-03
109	.40000	.60000	1092.0	.5219-01	.6220-01	.6879-01	37.58	1.961	.3785	569.8	.1592-02
109	.40000	.70000	1093.0	.6974-01	.8312-01	.9195-01	37.55	2.619	.3789	570.4	.2128-02
109	.40000	.75000	1094.0	.5945-01	.7085-01	.7838-01	37.55	2.232	.3789	570.5	.1813-02
107	.40000	.85000	95.000	.4662-01	.5551-01	.6136-01	37.65	1.755	.3754	563.4	.1418-02
107	.40000	.90000	96.000	.3927-01	.4676-01	.5169-01	37.62	1.477	.3759	564.0	.1195-02
107	.40000	.95000	97.000	.3547-01	.4224-01	.4670-01	37.58	1.333	.3765	564.9	.1079-02

IH103 60-OT WING LOWER SURFACE (R3PQ17)

RUN NUMBER	2Y/BW	XW/CW	T/C NO	H/HREF R=1.0	H/HREF R=.900	H/HREF R=.850	QREF BTU/ FT2SEC	QDOT BTU/ FT2SEC	HW/HT	TW DEG. R	STN NO R=.900
109	.50000	.60000	1105.0	.4052-01	.4829-01	.5342-01	37.56	1.522	.3788	570.2	.1236-02
109	.50000	.70000	1106.0	.5262-01	.6271-01	.6935-01	37.59	1.978	.3783	569.5	.1605-02
109	.60000	.25000-01	1110.0	.2863	.3417	.3782	37.29	10.67	.3832	576.8	.8742-02
109	.60000	.75000-01	1112.0	.1115	.1330	.1472	37.34	4.161	.3824	575.6	.3403-02
109	.60000	.10000+00	1113.0	.8140-01	.9713-01	.1075	37.34	3.040	.3823	575.6	.2485-02
109	.60000	.20000	1114.0	.4560-01	.5440-01	.6021-01	37.37	1.704	.3818	574.8	.1392-02
109	.60000	.30000	1115.0	.4024-01	.4799-01	.5311-01	37.42	1.506	.3811	573.7	.1228-02
109	.60000	.40000	1116.0	.3623-01	.4321-01	.4781-01	37.45	1.357	.3805	572.9	.1106-02
109	.60000	.50000	1117.0	.3601-01	.4294-01	.4751-01	37.46	1.349	.3804	572.6	.1099-02
109	.60000	.70000	1119.0	.2947-01	.3513-01	.3887-01	37.50	1.105	.3798	571.8	.8991-03
107	.60000	.80000	120.00	.1742-01	.2073-01	.2292-01	37.67	.6560	.3751	562.9	.5297-03
107	.60000	.90000	122.00	.1968-01	.2344-01	.2592-01	37.58	.7396	.3765	565.0	.5988-03
107	.60000	.95000	123.00	.2267-01	.2701-01	.2987-01	37.52	.8506	.3774	566.3	.6899-03
107	.70000	.60000	131.00	.3094-01	.3684-01	.4073-01	37.61	1.164	.3760	564.1	.9413-03
107	.70000	.90000	132.00	.6743-02	.8030-02	.8878-02	37.60	.2535	.3763	564.6	.2052-03
107	.75000	.40000	139.00	.3382-01	.4028-01	.4453-01	37.58	1.271	.3765	564.9	.1029-02
107	.75000	.60000	140.00	.3640-01	.4336-01	.4793-01	37.59	1.368	.3763	564.7	.1108-02
109	.75000	.70000	1141.0	.2650-01	.3159-01	.3494-01	37.53	.9945	.3793	571.0	.8085-03
107	.75000	.80000	142.00	.1385-01	.1649-01	.1823-01	37.66	.5216	.3752	563.0	.4213-03
107	.75000	.90000	143.00	.8935-02	.1064-01	.1177-01	37.56	.3356	.3768	565.4	.2719-03
107	.75000	.95000	144.00	.9107-02	.1085-01	.1199-01	37.55	.3420	.3769	565.6	.2771-03
107	.85000	.20000	150.00	.6098-01	.7269-01	.8040-01	37.42	2.282	.3790	568.7	.1857-02
107	.85000	.40000	151.00	.5295-01	.6310-01	.6979-01	37.47	1.984	.3783	567.7	.1612-02
107	.90000	.00000	152.00	.1788	.2132	.2359	37.34	6.676	.3803	570.6	.5445-02
107	.90000	.10000+00	153.00	.8651-01	.1032	.1141	37.33	3.230	.3804	570.9	.2635-02
107	.90000	.20000	154.00	.5187-01	.6186-01	.6844-01	37.34	1.937	.3803	570.6	.1580-02
109	.90000	.60000	1157.0	.3530-01	.4212-01	.4663-01	37.33	1.318	.3825	575.8	.1078-02
107	.90000	.80000	158.00	.1230-01	.1466-01	.1621-01	37.53	.4617	.3774	566.2	.3745-03
107	.90000	.90000	159.00	.1363-01	.1624-01	.1797-01	37.40	.5096	.3794	569.4	.4149-03
107	.95000	.20000	163.00	.8922-01	.1064	.1178	37.26	3.324	.3816	572.6	.2718-02
107	.95000	.30000	164.00	.8776-01	.1047	.1159	37.26	3.270	.3816	572.6	.2674-02
107	.95000	.50000	165.00	.8455-01	.1008	.1116	37.31	3.154	.3808	571.5	.2575-02
107	.95000	.70000	166.00	.3026-01	.3607-01	.3989-01	37.45	1.133	.3786	568.2	.9213-03
108	.95000	.80000	167.00	.3196-01	.3813-01	.4221-01	37.54	1.200	.3819	578.2	.9803-03
108	.95000	.90000	168.00	.3109-01	.3711-01	.4108-01	37.45	1.164	.3833	580.3	.9539-03

IH103 60-OT WING LOWER SURFACE (R3PQ18)

WING LOWER SURF

PARAMETRIC DATA

MACH = 5.250 ALPHA = -10.00 BETA = -3.000 ELEVON = .0000
BDFLAP = .0000 SPDBRK = .0000

TEST CONDITIONS

RUN NUMBER	ALPHA DEG.	BETA DEG.	MACH	RN/FT /FT X10 6	PT PSIA	TT DEG. R	HT BTU/ LBM	PINF PSIA	TINF DEG. R	RHO SLUGS/ FT3	VINF FT/SEC	SCALE
112	-10.00	-3.000	5.250	1.055	103.0	1483.	365.0	.1422	233.6	.5107-04	3933.	.1750-01
113	-10.00	-3.000	5.250	1.041	103.0	1494.	367.9	.1419	235.5	.5058-04	3949.	.1750-01
114	-10.00	-3.000	5.250	1.078	103.6	1468.	361.0	.1430	231.1	.5194-04	3911.	.1750-01

RUN NUMBER	PHI DEG.	HS SPHERE TW=540
112	.0000	.1672
113	.0000	.1672
114	.0000	.1675

TEST DATA

RUN NUMBER	2Y/BW	XW/CW	T/C NO	H/HREF R=1.0	H/HREF R=.900	H/HREF R=.850	QREF BTU/ FT2SEC	QDOT BTU/ FT2SEC	HW/HT	TW DEG. R	STN NO R=.900
112	.30000	.10000+00	1075.0	.4944-01	.5862-01	.6461-01	38.97	1.927	.3612	549.5	.1516-02
112	.30000	.20000	1076.0	.4426-01	.5247-01	.5784-01	38.98	1.725	.3611	549.3	.1357-02
112	.30000	.30000	1077.0	.3994-01	.4735-01	.5219-01	39.00	1.558	.3609	549.0	.1225-02
112	.30000	.40000	1078.0	.4039-01	.4789-01	.5278-01	38.99	1.575	.3610	549.1	.1239-02
112	.30000	.50000	1079.0	.3122-01	.3700-01	.4078-01	39.06	1.220	.3598	547.4	.9572-03
112	.30000	.60000	1080.0	.2996-01	.3551-01	.3914-01	39.03	1.170	.3603	548.1	.9187-03
112	.30000	.70000	1081.0	.6950-01	.8238-01	.9079-01	39.02	2.712	.3604	548.3	.2131-02
112	.30000	.80000	1082.0	.7403-01	.8775-01	.9672-01	39.01	2.888	.3607	548.7	.2270-02
114	.30000	.90000	83.000	.1608-01	.1911-01	.2110-01	38.15	.6135	.3690	555.3	.4895-03
114	.30000	.95000	84.000	.1463-01	.1739-01	.1920-01	38.08	.5571	.3700	556.8	.4454-03
112	.40000	.30000	1090.0	.1519-01	.1801-01	.1985-01	39.02	.5927	.3606	548.5	.4658-03
112	.40000	.60000	1092.0	.4272-01	.5062-01	.5578-01	39.08	1.670	.3595	546.9	.1310-02
112	.40000	.70000	1093.0	.4884-01	.5789-01	.6379-01	39.05	1.907	.3600	547.6	.1497-02
112	.40000	.75000	1094.0	.4198-01	.4975-01	.5482-01	39.05	1.639	.3600	547.6	.1287-02
114	.40000	.85000	95.000	.3979-01	.4728-01	.5219-01	38.16	1.518	.3688	555.0	.1211-02
114	.40000	.90000	96.000	.2985-01	.3549-01	.3918-01	38.08	1.137	.3700	556.7	.9089-03
114	.40000	.95000	97.000	.2323-01	.2763-01	.3051-01	38.02	.8833	.3710	558.3	.7075-03

IH103 60-OT WING LOWER SURFACE (R3PQ18)

RUN NUMBER	2Y/BW	XW/CW	T/C NO	H/HREF R=1.0	H/HREF R=.900	H/HREF R=.850	QREF BTU/ FT2SEC	QDOT BTU/ FT2SEC	HW/HT	TW DEG. R	STN NO R=.900
112	.50000	.60000	1105.0	.1925-01	.2282-01	.2515-01	39.05	.7518	.3601	547.7	.5903-03
112	.50000	.70000	1106.0	.2751-01	.3260-01	.3593-01	39.08	1.075	.3595	547.0	.8434-03
112	.60000	.25000-01	1110.0	.2685	.3187	.3516	38.73	10.40	.3650	555.3	.8243-02
112	.60000	.75000-01	1112.0	.9644-01	.1144	.1262	38.80	3.742	.3640	553.7	.2959-02
112	.60000	.10000+00	1113.0	.6804-01	.8073-01	.8903-01	38.81	2.641	.3637	553.3	.2088-02
112	.60000	.20000	1114.0	.3433-01	.4072-01	.4490-01	38.86	1.334	.3631	552.3	.1053-02
112	.60000	.30000	1115.0	.2827-01	.3353-01	.3697-01	38.91	1.100	.3622	551.0	.8673-03
112	.60000	.40000	1116.0	.2432-01	.2884-01	.3179-01	38.94	.9470	.3617	550.2	.7458-03
112	.60000	.50000	1117.0	.2131-01	.2526-01	.2785-01	38.97	.8305	.3612	549.5	.6535-03
112	.60000	.70000	1119.0	.1108-01	.1313-01	.1447-01	39.01	.4321	.3606	548.6	.3396-03
114	.60000	.80000	120.00	.8625-02	.1025-01	.1131-01	38.15	.3290	.3690	555.2	.2625-03
114	.60000	.90000	122.00	.1267-01	.1506-01	.1664-01	37.99	.4812	.3715	559.0	.3858-03
114	.60000	.95000	123.00	.1463-01	.1740-01	.1922-01	37.90	.5544	.3728	561.0	.4456-03
114	.70000	.60000	131.00	.2423-01	.2880-01	.3180-01	38.09	.9227	.3700	556.7	.7376-03
114	.70000	.90000	132.00	.2419-02	.2878-02	.3180-02	37.91	.9171-01	.3728	560.9	.7370-04
114	.75000	.40000	139.00	.3207-01	.3813-01	.4211-01	38.01	1.219	.3712	558.5	.9765-03
112	.75000	.70000	1141.0	.5363-03	.6338-03	.6972-03	39.68	.2128-01	.3501	532.6	.1641-04
114	.75000	.80000	142.00	.7596-02	.9031-02	.9972-02	38.05	.2891	.3705	557.4	.2313-03
114	.75000	.90000	143.00	.5439-02	.6472-02	.7151-02	37.86	.2059	.3736	562.2	.1657-03
114	.75000	.95000	144.00	.5673-02	.6752-02	.7460-02	37.85	.2147	.3738	562.4	.1729-03
114	.80000	.40000	147.00	.3294-01	.3919-01	.4329-01	37.92	1.249	.3726	560.7	.1004-02
114	.85000	.20000	150.00	.5034-01	.5994-01	.6627-01	37.70	1.898	.3760	565.8	.1535-02
114	.85000	.40000	151.00	.3891-01	.4631-01	.5118-01	37.79	1.470	.3747	563.8	.1186-02
114	.90000	.00000	152.00	.2175	.2593	.2869	37.49	8.156	.3794	570.9	.6638-02
114	.90000	.10000+00	153.00	.8516-01	.1015	.1123	37.50	3.193	.3793	570.8	.2599-02
114	.90000	.20000	154.00	.5038-01	.6005-01	.6642-01	37.52	1.890	.3789	570.2	.1537-02
112	.90000	.60000	1157.0	.3904-01	.4633-01	.5111-01	38.73	1.512	.3650	555.3	.1198-02
114	.90000	.80000	158.00	.1090-01	.1297-01	.1434-01	37.81	.4121	.3743	563.2	.3322-03
114	.90000	.90000	159.00	.1165-01	.1388-01	.1535-01	37.66	.4388	.3768	566.9	.3554-03
114	.95000	.10000+00	162.00	.8490-01	.1013	.1121	37.30	3.167	.3825	575.6	.2593-02
114	.95000	.30000	164.00	.6293-01	.7506-01	.8307-01	37.37	2.352	.3813	573.8	.1921-02
114	.95000	.50000	165.00	.5471-01	.6524-01	.7218-01	37.45	2.049	.3800	571.8	.1670-02
114	.95000	.70000	166.00	.1674-01	.1993-01	.2204-01	37.67	.6305	.3765	566.5	.5103-03
113	.95000	.80000	167.00	.1765-01	.2094-01	.2310-01	39.09	.6900	.3641	558.3	.5446-03

IH103 60-OT WING LOWER SURFACE (R3PQ19)

WING LOWER SURF

PARAMETRIC DATA

MACH = 5.250 ALPHA = -10.00 BETA = -5.000 ELEVON = .0000
BDFLAP = .0000 SPDBRK = .0000

TEST CONDITIONS

RUN NUMBER	ALPHA DEG.	BETA DEG.	MACH	RN/FT /FT X10 6	PT PSIA	TT DEG. R	HT BTU/ LBM	PINF PSIA	TINF DEG. R	RHO SLUGS/ FT3	VINF FT/SEC	SCALE
117	-10.00	-5.000	5.250	1.076	103.9	1472.	362.2	.1434	231.8	.5192-04	3918.	.1750-01
118	-10.00	-5.000	5.250	1.036	102.9	1498.	368.8	.1418	236.0	.5040-04	3953.	.1750-01
119	-10.00	-5.000	5.250	1.047	104.7	1505.	370.7	.1442	237.2	.5101-04	3963.	.1750-01

RUN NUMBER	PHI DEG.	HS SPHERE TW=540
117	.0000	.1678
118	.0000	.1672
119	.0000	.1687

TEST DATA

RUN NUMBER	2Y/BW	XW/CW	T/C NO	H/HREF R=1.0	H/HREF R=.900	H/HREF R=.850	QREF BTU/ FT2SEC	QDOT BTU/ FT2SEC	HW/HT	TW DEG. R	STN NO R=.900
119	.30000	.10000+00	1075.0	.4007-01	.4753-01	.5241-01	39.78	1.594	.3632	561.1	.1231-02
119	.30000	.20000	1076.0	.3432-01	.4071-01	.4489-01	39.79	1.366	.3630	560.8	.1055-02
119	.30000	.30000	1077.0	.4425-01	.5249-01	.5788-01	39.80	1.761	.3629	560.6	.1360-02
119	.30000	.40000	1078.0	.4387-01	.5204-01	.5738-01	39.81	1.747	.3627	560.3	.1348-02
119	.30000	.50000	1079.0	.4489-01	.5324-01	.5870-01	39.82	1.787	.3626	560.2	.1379-02
119	.30000	.60000	1080.0	.4045-01	.4797-01	.5289-01	39.85	1.612	.3621	559.5	.1243-02
119	.30000	.70000	1081.0	.8541-01	.1013	.1117	39.83	3.402	.3624	559.8	.2624-02
119	.30000	.80000	1082.0	.8981-01	.1065	.1175	39.80	3.575	.3628	560.5	.2760-02
117	.30000	.90000	83.000	.2083-01	.2473-01	.2729-01	38.47	.8011	.3667	553.5	.6338-03
117	.30000	.95000	84.000	.1589-01	.1887-01	.2082-01	38.43	.6106	.3672	554.3	.4836-03
119	.40000	.30000	1090.0	.2190-01	.2598-01	.2864-01	39.83	.8725	.3623	559.7	.6731-03
119	.40000	.60000	1092.0	.4328-01	.5131-01	.5655-01	39.92	1.728	.3610	557.7	.1329-02
119	.40000	.70000	1093.0	.5662-01	.6714-01	.7402-01	39.87	2.257	.3618	559.0	.1740-02
119	.40000	.75000	1094.0	.4834-01	.5732-01	.6319-01	39.87	1.927	.3618	558.9	.1485-02
117	.40000	.85000	95.000	.3719-01	.4417-01	.4874-01	38.46	1.430	.3668	553.7	.1132-02
117	.40000	.90000	96.000	.3022-01	.3589-01	.3961-01	38.42	1.161	.3675	554.7	.9199-03
117	.40000	.95000	97.000	.2464-01	.2927-01	.3230-01	38.38	.9456	.3681	555.6	.7501-03

IH103 60-OT WING LOWER SURFACE

(R3PQ19)

RUN NUMBER	2Y/BW	XW/CW	T/C NO	H/HREF R=1.0	H/HREF R=.900	H/HREF R=.850	QREF BTU/ FT2SEC	QDOT BTU/ FT2SEC	HW/HT	TW DEG. R	STN NO R=.900
119	.50000	.60000	1105.0	.2183-01	.2589-01	.2854-01	39.87	.8705	.3618	558.9	.6708-03
119	.50000	.70000	1106.0	.3137-01	.3719-01	.4100-01	39.90	1.252	.3612	558.1	.9637-03
119	.60000	.25000-01	1110.0	.2851	.3387	.3738	39.48	11.26	.3677	568.1	.8771-02
119	.60000	.75000-01	1112.0	.1048	.1244	.1373	39.56	4.145	.3666	566.3	.3223-02
119	.60000	.10000+00	1113.0	.7500-01	.8905-01	.9825-01	39.58	2.968	.3662	565.8	.2307-02
119	.60000	.20000	1114.0	.3979-01	.4723-01	.5211-01	39.63	1.577	.3654	564.5	.1224-02
119	.60000	.30000	1115.0	.3384-01	.4016-01	.4429-01	39.69	1.343	.3646	563.2	.1040-02
119	.60000	.40000	1116.0	.2776-01	.3294-01	.3633-01	39.73	1.103	.3638	562.1	.8533-03
119	.60000	.50000	1117.0	.2407-01	.2856-01	.3150-01	39.75	.9571	.3635	561.6	.7400-03
119	.60000	.70000	1119.0	.1295-01	.1536-01	.1694-01	39.80	.5154	.3628	560.5	.3979-03
117	.60000	.80000	120.00	.8242-02	.9787-02	.1080-01	38.48	.3171	.3666	553.3	.2508-03
117	.60000	.90000	122.00	.1258-01	.1494-01	.1649-01	38.38	.4828	.3681	555.6	.3830-03
117	.60000	.95000	123.00	.1643-01	.1953-01	.2156-01	38.31	.6295	.3692	557.2	.5004-03
117	.70000	.60000	131.00	.2747-01	.3263-01	.3601-01	38.41	1.055	.3676	554.8	.8362-03
117	.70000	.90000	132.00	.4079-02	.4846-02	.5349-02	38.36	.1565	.3684	556.1	.1242-03
119	.75000	.40000	139.00	.3207-01	.3810-01	.4206-01	38.37	1.231	.3683	555.9	.9765-03
117	.75000	.70000	1141.0	.2264-01	.2685-01	.2961-01	39.80	.9009	.3629	560.6	.6957-03
117	.75000	.80000	142.00	.1103-01	.1309-01	.1445-01	38.44	.4238	.3671	554.2	.3356-03
117	.75000	.90000	143.00	.6489-02	.7710-02	.8512-02	38.33	.2487	.3689	556.8	.1976-03
117	.75000	.95000	144.00	.6777-02	.8054-02	.8892-02	38.31	.2597	.3692	557.3	.2064-03
117	.80000	.40000	147.00	.3539-01	.4206-01	.4644-01	38.31	1.356	.3692	557.2	.1078-02
117	.85000	.20000	150.00	.4949-01	.5885-01	.6500-01	38.18	1.890	.3713	560.4	.1508-02
117	.85000	.40000	151.00	.3797-01	.4514-01	.4985-01	38.23	1.451	.3706	559.3	.1157-02
117	.90000	.00000	152.00	.2214	.2635	.2911	38.04	8.421	.3735	563.8	.6749-02
117	.90000	.10000+00	153.00	.9049-01	.1077	.1190	38.04	3.442	.3735	563.8	.2759-02
117	.90000	.20000	154.00	.5661-01	.6736-01	.7442-01	38.07	2.155	.3730	563.1	.1726-02
119	.90000	.60000	1157.0	.3730-01	.4428-01	.4884-01	39.64	1.478	.3653	564.4	.1147-02
117	.90000	.80000	158.00	.1127-01	.1340-01	.1479-01	38.27	.4313	.3699	558.3	.3433-03
117	.90000	.90000	159.00	.1194-01	.1420-01	.1568-01	38.13	.4551	.3720	561.6	.3637-03
117	.95000	.10000+00	162.00	.9088-01	.1082	.1197	37.84	3.439	.3767	568.6	.2773-02
117	.95000	.30000	164.00	.6802-01	.8090-01	.8937-01	38.14	2.594	.3720	561.5	.2073-02
117	.95000	.50000	165.00	.6762-01	.8049-01	.8896-01	37.97	2.567	.3746	565.4	.2062-02
117	.95000	.70000	166.00	.1867-01	.2220-01	.2452-01	38.15	.7123	.3717	561.1	.5689-03
118	.95000	.80000	167.00	.2059-01	.2445-01	.2698-01	38.98	.8025	.3671	564.3	.6369-03

IH103 60-OT WING LOWER SURFACE (R3PQ20)

WING LOWER SURF

PARAMETRIC DATA

MACH = 5.250 ALPHA = -10.00 BETA = .0000 ELEVON = .0000
BDFLAP = .0000 SPDBRK = .0000

TEST CONDITIONS

RUN NUMBER	ALPHA DEG.	BETA DEG.	MACH	RN/FT /FT X10 6	PT PSIA	TT DEG. R	HT BTU/ LBM	PINF PSIA	TINF DEG. R	RHO SLUGS/ FT3	VINF FT/SEC	SCALE
122	-10.00	.0000	5.250	1.012	103.5	1525.	376.0	.1423	240.6	.4964-04	3992.	.1750-01
123	-10.00	.0000	5.250	1.039	103.6	1501.	369.8	.1427	236.6	.5060-04	3959.	.1750-01
124	-10.00	.0000	5.250	1.031	103.1	1504.	370.6	.1420	237.2	.5026-04	3963.	.1750-01

RUN NUMBER	PHI DEG.	HS SPHERE TW=540
122	.0000	.1678
123	.0000	.1677
124	.0000	.1674

TEST DATA

RUN NUMBER	2Y/BW	XW/CW	T/C NO	H/HREF R=1.0	H/HREF R=.900	H/HREF R=.850	QREF BTU/ FT2SEC	QDOT BTU/ FT2SEC	HW/HT	TW DEG. R	STN NO R=.900
122	.30000	.10000+00	1075.0	.5875-01	.6958-01	.7664-01	40.53	2.381	.3571	559.6	.1830-02
122	.30000	.20000	1076.0	.4780-01	.5660-01	.6234-01	40.54	1.938	.3569	559.3	.1489-02
122	.30000	.30000	1077.0	.4083-01	.4835-01	.5325-01	40.55	1.656	.3568	559.0	.1272-02
122	.30000	.40000	1078.0	.4177-01	.4946-01	.5448-01	40.56	1.694	.3567	558.9	.1301-02
122	.30000	.50000	1079.0	.3031-01	.3587-01	.3950-01	40.64	1.232	.3555	557.0	.9436-03
122	.30000	.60000	1080.0	.3901-01	.4617-01	.5085-01	40.61	1.584	.3558	557.6	.1214-02
122	.30000	.70000	1081.0	.6284-01	.7440-01	.8193-01	40.59	2.551	.3561	558.0	.1957-02
122	.30000	.80000	1082.0	.6438-01	.7623-01	.8395-01	40.58	2.612	.3564	558.5	.2005-02
124	.30000	.90000	83.000	.1366-01	.1620-01	.1785-01	39.66	.5419	.3603	556.4	.4228-03
124	.30000	.95000	84.000	.1559-01	.1848-01	.2037-01	39.58	.6169	.3615	558.4	.4824-03
122	.40000	.30000	1090.0	.1907-01	.2258-01	.2486-01	40.62	.7747	.3557	557.4	.5938-03
122	.40000	.60000	1092.0	.4489-01	.5312-01	.5849-01	40.69	1.826	.3547	555.9	.1397-02
122	.40000	.70000	1093.0	.3513-01	.4158-01	.4578-01	40.65	1.428	.3553	556.8	.1094-02
122	.40000	.75000	1094.0	.3301-01	.3907-01	.4302-01	40.65	1.342	.3553	556.8	.1028-02
124	.40000	.85000	95.000	.1888-01	.2237-01	.2466-01	39.69	.7494	.3597	555.6	.5841-03
124	.40000	.90000	96.000	.1753-01	.2079-01	.2292-01	39.57	.6938	.3616	558.5	.5426-03
124	.40000	.95000	97.000	.1570-01	.1862-01	.2053-01	39.49	.6198	.3629	560.6	.4859-03

IH103 60-OT WING LOWER SURFACE (R3PQ20)

RUN NUMBER	2Y/BW	XW/CW	T/C NO	H/HREF R=1.0	H/HREF R=.900	H/HREF R=.850	QREF BTU/ FT2SEC	QDOT BTU/ FT2SEC	HW/HT	TW DEG. R	STN NO R=.900
122	.50000	.60000	1105.0	.2571-01	.3043-01	.3351-01	40.67	1.046	.3550	556.3	.8005-03
122	.50000	.70000	1106.0	.2879-01	.3407-01	.3751-01	40.70	1.172	.3546	555.6	.8963-03
122	.60000	.25000-01	1110.0	.2359	.2796	.3080	40.40	9.532	.3591	562.7	.7352-02
122	.60000	.75000-01	1112.0	.8338-01	.9877-01	.1088	40.45	3.373	.3582	561.4	.2597-02
122	.60000	.10000+00	1113.0	.5815-01	.6888-01	.7588-01	40.47	2.353	.3581	561.1	.1812-02
122	.60000	.20000	1114.0	.3026-01	.3584-01	.3948-01	40.51	1.226	.3574	560.0	.9426-03
122	.60000	.30000	1115.0	.2522-01	.2986-01	.3288-01	40.56	1.023	.3567	558.9	.7853-03
122	.60000	.40000	1116.0	.1892-01	.2240-01	.2467-01	40.57	.7675	.3565	558.7	.5891-03
122	.60000	.50000	1117.0	.1169-01	.1384-01	.1524-01	40.59	.4745	.3562	558.1	.3640-03
122	.60000	.70000	1119.0	.1932-01	.2287-01	.2519-01	40.62	.7850	.3557	557.4	.6017-03
124	.60000	.80000	120.00	.1627-01	.1928-01	.2125-01	39.72	.6463	.3594	555.1	.5034-03
124	.60000	.90000	122.00	.1254-01	.1487-01	.1640-01	39.46	.4948	.3633	561.1	.3882-03
124	.60000	.95000	123.00	.9034-02	.1072-01	.1183-01	39.35	.3555	.3651	563.8	.2798-03
124	.70000	.60000	131.00	.1929-01	.2288-01	.2522-01	39.58	.7637	.3615	558.3	.5971-03
124	.70000	.90000	132.00	.2183-02	.2591-02	.2857-02	39.40	.8601-01	.3643	562.7	.6761-04
124	.75000	.40000	139.00	.2609-01	.3095-01	.3413-01	39.47	1.030	.3631	560.9	.8078-03
124	.75000	.60000	140.00	.1833-01	.2157-01	.2366-01	41.37	.7583	.3339	515.7	.5641-03
122	.75000	.70000	1141.0	.1658-01	.1962-01	.2161-01	40.63	.6735	.3556	557.2	.5161-03
124	.75000	.80000	142.00	.4872-02	.5776-02	.6367-02	39.59	.1929	.3614	558.1	.1508-03
124	.75000	.90000	143.00	.4841-02	.5746-02	.6339-02	39.33	.1904	.3654	564.3	.1499-03
124	.75000	.95000	144.00	.5353-02	.6354-02	.7010-02	39.32	.2104	.3656	564.6	.1658-03
124	.80000	.40000	147.00	.2810-01	.3335-01	.3679-01	39.34	1.105	.3652	564.1	.8703-03
124	.85000	.20000	150.00	.4482-01	.5327-01	.5881-01	39.05	1.750	.3697	570.9	.1390-02
124	.85000	.40000	151.00	.3413-01	.4054-01	.4474-01	39.19	1.337	.3676	567.7	.1058-02
124	.90000	.00000	152.00	.1993	.2371	.2620	38.79	7.729	.3738	577.3	.6184-02
124	.90000	.10000+00	153.00	.8539-01	.1016	.1123	38.83	3.316	.3732	576.4	.2650-02
124	.90000	.20000	154.00	.5115-01	.6084-01	.6720-01	38.89	1.989	.3722	574.8	.1587-02
122	.90000	.60000	1157.0	.2813-01	.3331-01	.3669-01	40.51	1.139	.3575	560.2	.8761-03
124	.90000	.80000	158.00	.9712-02	.1153-01	.1271-01	39.36	.3823	.3648	563.5	.3008-03
124	.90000	.90000	159.00	.9539-02	.1133-01	.1251-01	39.16	.3735	.3680	568.4	.2957-03
124	.95000	.10000+00	162.00	.7969-01	.9492-01	.1049	38.60	3.076	.3766	581.7	.2475-02
124	.95000	.30000	164.00	.5498-01	.6544-01	.7231-01	38.78	2.132	.3739	577.6	.1707-02
124	.95000	.50000	165.00	.4235-01	.5035-01	.5561-01	38.96	1.650	.3712	573.3	.1314-02
124	.95000	.70000	166.00	.1109-01	.1317-01	.1453-01	39.26	.4354	.3665	566.1	.3436-03
123	.95000	.80000	167.00	.1337-01	.1587-01	.1750-01	39.37	.5263	.3648	562.2	.4126-03

IH103 60-OT WING LOWER SURFACE (R3PQ21)

WING LOWER SURF

PARAMETRIC DATA

MACH = 5.250 ALPHA = .0000 BETA = .0000 ELEVON = .0000
BDFLAP = .0000 SPDBRK = .0000

TEST CONDITIONS

RUN NUMBER	ALPHA DEG.	BETA DEG.	MACH	RN/FT /FT X10 6	PT PSIA	TT DEG. R	HT BTU/ LBM	PINF PSIA	TINF DEG. R	RHO SLUGS/ FT3	VINF FT/SEC	SCALE
128	.0000	.0000	5.250	.6494	103.9	1998.	503.7	.1372	322.4	.3570-04	4620.	.1750-01
129	.0000	.0000	5.250	.6601	103.8	1978.	498.3	.1374	318.9	.3615-04	4595.	.1750-01
130	.0000	.0000	5.250	.6533	104.0	1992.	502.2	.1374	321.4	.3588-04	4613.	.1750-01

RUN NUMBER	PHI DEG.	HS SPHERE TW=540
128	.0000	.1691
129	.0000	.1691
130	.0000	.1693

TEST DATA

RUN NUMBER	2Y/BW	XW/CW	T/C NO	H/HREF R=1.0	H/HREF R=.900	H/HREF R=.850	QREF BTU/ FT2SEC	QDOT BTU/ FT2SEC	HW/HT	TW DEG. R	STN NO R=.900
130	.30000	.10000+00	1075.0	.3308-01	.3830-01	.4159-01	62.30	2.061	.2666	558.0	.1216-02
130	.30000	.20000	1076.0	.2980-01	.3451-01	.3746-01	62.35	1.858	.2660	556.7	.1096-02
130	.30000	.30000	1077.0	.2568-01	.2973-01	.3228-01	62.37	1.602	.2658	556.3	.9443-03
130	.30000	.40000	1078.0	.2574-01	.2980-01	.3235-01	62.37	1.606	.2657	556.2	.9466-03
130	.30000	.50000	1079.0	.1881-01	.2177-01	.2363-01	62.43	1.174	.2651	554.8	.6915-03
130	.30000	.60000	1080.0	.4197-01	.4858-01	.5274-01	62.42	2.620	.2653	555.2	.1543-02
130	.30000	.70000	1081.0	.5592-01	.6473-01	.7026-01	62.41	3.490	.2653	555.3	.2056-02
130	.30000	.80000	1082.0	.5710-01	.6610-01	.7176-01	62.34	3.559	.2661	557.0	.2099-02
128	.30000	.90000	83.000	.1810-01	.2095-01	.2274-01	62.58	1.132	.2649	556.2	.6671-03
128	.30000	.95000	84.000	.2255-01	.2611-01	.2835-01	62.43	1.408	.2666	559.7	.8315-03
130	.40000	.30000	1090.0	.1892-01	.2191-01	.2378-01	62.33	1.179	.2662	557.1	.6957-03
130	.40000	.60000	1092.0	.4616-01	.5343-01	.5800-01	62.42	2.881	.2652	555.1	.1697-02
130	.40000	.70000	1093.0	.4265-01	.4938-01	.5361-01	62.31	2.658	.2664	557.6	.1568-02
130	.40000	.75000	1094.0	.3714-01	.4301-01	.4669-01	62.30	2.314	.2665	557.8	.1366-02
128	.40000	.85000	95.000	.2312-01	.2677-01	.2906-01	62.51	1.446	.2657	557.8	.8525-03
128	.40000	.90000	96.000	.1710-01	.1981-01	.2151-01	62.34	1.066	.2676	561.8	.6306-03
128	.40000	.95000	97.000	.1311-01	.1519-01	.1650-01	62.23	.8161	.2688	564.3	.4836-03

IH103 60-OT WING LOWER SURFACE

(R3PQ21)

RUN NUMBER	2Y/BW	XW/CW	T/C NO	H/HREF R=1.0	H/HREF R=.900	H/HREF R=.850	QREF BTU/ FT2SEC	QDOT BTU/ FT2SEC	HW/HT	TW DEG. R	STN NO R=.900
130	.50000	.60000	1105.0	.2374-01	.2749-01	.2985-01	62.25	1.478	.2671	559.1	.8730-03
130	.50000	.70000	1106.0	.2496-01	.2890-01	.3138-01	62.28	1.554	.2667	558.3	.9178-03
130	.60000	.25000-01	1110.0	.2590	.3003	.3264	61.65	15.96	.2738	573.0	.9532-02
130	.60000	.75000-01	1112.0	.9987-01	.1158	.1258	61.72	6.164	.2730	571.4	.3676-02
130	.60000	.10000+00	1113.0	.7109-01	.8243-01	.8957-01	61.73	4.388	.2729	571.2	.2616-02
130	.60000	.20000	1114.0	.3707-01	.4297-01	.4669-01	61.78	2.290	.2723	570.0	.1364-02
130	.60000	.30000	1115.0	.2994-01	.3470-01	.3769-01	61.87	1.852	.2713	567.9	.1101-02
130	.60000	.40000	1116.0	.2372-01	.2749-01	.2986-01	61.96	1.470	.2703	565.7	.8728-03
130	.60000	.50000	1117.0	.1450-01	.1680-01	.1825-01	62.00	.8990	.2699	564.9	.5335-03
130	.60000	.70000	1119.0	.9543-02	.1106-01	.1201-01	62.02	.5918	.2696	564.4	.3511-03
128	.60000	.80000	120.00	.9691-02	.1122-01	.1218-01	62.39	.6047	.2670	560.6	.3573-03
128	.60000	.90000	122.00	.1036-01	.1201-01	.1305-01	62.01	.6425	.2712	569.4	.3822-03
128	.60000	.95000	123.00	.9213-02	.1068-01	.1161-01	61.90	.5702	.2725	572.1	.3399-03
128	.70000	.60000	131.00	.2449-01	.2839-01	.3084-01	62.02	1.519	.2711	569.2	.9036-03
128	.70000	.90000	132.00	.1196-01	.1387-01	.1508-01	61.73	.7382	.2744	576.1	.4414-03
128	.75000	.40000	139.00	.3355-01	.3891-01	.4229-01	61.77	2.073	.2739	575.1	.1238-02
128	.75000	.60000	140.00	.2919-01	.3358-01	.3631-01	65.31	1.907	.2350	493.3	.1072-02
130	.75000	.70000	1141.0	.2210-01	.2563-01	.2786-01	61.55	1.360	.2748	575.2	.8134-03
128	.75000	.80000	142.00	.1145-01	.1328-01	.1442-01	62.00	.7101	.2714	569.7	.4226-03
128	.75000	.90000	143.00	.9241-02	.1072-01	.1166-01	61.59	.5692	.2759	579.2	.3411-03
128	.75000	.95000	144.00	.9105-02	.1056-01	.1149-01	61.58	.5607	.2760	579.5	.3361-03
128	.80000	.40000	147.00	.3988-01	.4630-01	.5034-01	61.36	2.447	.2784	584.5	.1473-02
128	.85000	.20000	150.00	.6626-01	.7707-01	.8391-01	60.61	4.016	.2868	602.1	.2450-02
128	.85000	.40000	151.00	.4905-01	.5701-01	.6204-01	60.91	2.988	.2834	594.9	.1813-02
128	.90000	.00000	152.00	.2234	.2603	.2837	59.95	13.39	.2940	617.3	.8268-02
128	.90000	.10000+00	153.00	.1126	.1312	.1430	59.98	6.756	.2937	616.6	.4168-02
128	.90000	.20000	154.00	.7509-01	.8744-01	.9528-01	60.13	4.515	.2921	613.2	.2778-02
130	.90000	.60000	1157.0	.3984-01	.4629-01	.5038-01	60.82	2.423	.2830	592.3	.1468-02
128	.90000	.80000	158.00	.2413-01	.2801-01	.3046-01	61.41	1.482	.2779	583.4	.8912-03
128	.90000	.90000	159.00	.1865-01	.2166-01	.2356-01	61.18	1.141	.2804	588.8	.6889-03
128	.95000	.30000	164.00	.5318-01	.6197-01	.6755-01	59.86	3.183	.2950	619.4	.1968-02
128	.95000	.50000	165.00	.4160-01	.4843-01	.5275-01	60.31	2.509	.2900	608.9	.1539-02
128	.95000	.70000	166.00	.2298-01	.2670-01	.2904-01	61.13	1.405	.2810	589.9	.8490-03
129	.95000	.80000	167.00	.2272-01	.2638-01	.2869-01	60.68	1.379	.2788	579.0	.8334-03

IH103 60-OT WING UPPER SURFACE (R3PR01)

WING UPPER SURF

PARAMETRIC DATA

MACH = 5.250 ALPHA = .0000 BETA = .0000 ELEVON = .0000
BDFLAP = .0000 SPDBRK = .0000

TEST CONDITIONS

RUN NUMBER	ALPHA DEG.	BETA DEG.	MACH	RN/FT /FT X10 6	PT PSIA	TT DEG. R	HT BTU/ LBM	PINF PSIA	TINF DEG. R	RHO SLUGS/ FT3	VINF FT/SEC	SCALE
61	.0000	.0000	5.250	1.040	103.5	1499.	369.3	.1426	236.3	.5062-04	3956.	.1750-01

RUN NUMBER	PHI DEG.	HS SPHERE TW=540
61	.0000	.1677

TEST DATA

RUN NUMBER	2Y/BW	XW/CW	T/C NO	H/HREF R=1.0	H/HREF R=.900	H/HREF R=.850	QREF BTU/ FT2SEC	QDOT BTU/ FT2SEC	HW/HT	TW DEG. R	STN NO R=.900
61	.40000	.95000	252.00	.6202-02	.7354-02	.8107-02	39.51	.2451	.3614	556.3	.1912-03
61	.60000	.25000-01	253.00	.1259	.1495	.1649	39.23	4.938	.3658	563.0	.3885-02
61	.60000	.50000-01	254.00	.1053	.1250	.1379	39.25	4.133	.3655	562.5	.3249-02
61	.60000	.10000+00	255.00	.7821-01	.9282-01	.1024	39.30	3.073	.3647	561.4	.2413-02
61	.60000	.20000	256.00	.3107-01	.3686-01	.4065-01	39.37	1.223	.3635	559.5	.9582-03
61	.60000	.40000	257.00	.1415-01	.1678-01	.1850-01	39.44	.5580	.3625	557.9	.4363-03
61	.60000	.60000	258.00	.7773-02	.9217-02	.1016-01	39.49	.3070	.3617	556.7	.2397-03
61	.60000	.75000	259.00	.4183-02	.4960-02	.5467-02	39.51	.1653	.3614	556.2	.1290-03
61	.60000	.85000	260.00	.2866-02	.3399-02	.3746-02	39.52	.1133	.3613	556.1	.8837-04
61	.60000	.95000	261.00	.1438-02	.1705-02	.1879-02	39.48	.5676-01	.3618	556.9	.4433-04
61	.70000	.90000	264.00	.3191-02	.3781-02	.4166-02	39.67	.1266	.3589	552.4	.9833-04
61	.75000	.80000	269.00	.6389-02	.7570-02	.8340-02	39.68	.2535	.3588	552.3	.1969-03
61	.75000	.90000	270.00	.7457-02	.8836-02	.9736-02	39.65	.2956	.3593	553.0	.2298-03
61	.80000	.90000	271.00	.8720-02	.1033-01	.1138-01	39.65	.3458	.3592	552.8	.2687-03
61	.90000	.60000	274.00	.2209-01	.2618-01	.2885-01	39.64	.8756	.3594	553.2	.6808-03
61	.95000	.40000	276.00	.6942-01	.8230-01	.9072-01	39.52	2.743	.3613	556.1	.2140-02
61	.95000	.70000	278.00	.1261-01	.1494-01	.1646-01	39.67	.5002	.3590	552.5	.3886-03
61	.95000	.80000	279.00	.1473-01	.1746-01	.1924-01	39.64	.5840	.3594	553.2	.4541-03
61	.95000	.90000	280.00	.1381-01	.1636-01	.1803-01	39.60	.5468	.3600	554.0	.4255-03

IH103 60-OT WING UPPER SURFACE (R3PR02)

WING UPPER SURF

PARAMETRIC DATA

MACH = 5.250 ALPHA = -5.000 BETA = .0000 ELEVON = .0000
BDFLAP = .0000 SPDBRK = .0000

TEST CONDITIONS

RUN NUMBER	ALPHA DEG.	BETA DEG.	MACH	RN/FT /FT X10 6	PT PSIA	TT DEG. R	HT BTU/ LBM	PINF PSIA	TINF DEG. R	RHO SLUGS/ FT3	VINF FT/SEC	SCALE
62	-5.000	.0000	5.250	1.040	103.4	1499.	369.2	.1425	236.3	.5060-04	3955.	.1750-01

RUN NUMBER	PHI DEG.	HS SPHERE TW=540
62	.0000	.1676

TEST DATA

RUN NUMBER	2Y/BW	XW/CW	T/C NO	H/HREF R=1.0	H/HREF R=.900	H/HREF R=.850	QREF BTU/ FT2SEC	QDOT BTU/ FT2SEC	HW/HT	TW DEG. R	STN NO R=.900
62	.40000	.80000	251.00	.5359-03	.6355-03	.7006-03	39.45	.2114-01	.3619	556.9	.1653-04
62	.40000	.95000	252.00	.8672-02	.1029-01	.1134-01	39.40	.3417	.3627	558.1	.2675-03
62	.60000	.25000-01	253.00	.1334	.1584	.1748	39.14	5.223	.3667	564.2	.4119-02
62	.60000	.50000-01	254.00	.1173	.1393	.1537	39.17	4.595	.3663	563.5	.3621-02
62	.60000	.10000+00	255.00	.9415-01	.1118	.1233	39.22	3.693	.3654	562.2	.2906-02
62	.60000	.20000	256.00	.3947-01	.4684-01	.5166-01	39.30	1.551	.3642	560.4	.1218-02
62	.60000	.40000	257.00	.1853-01	.2198-01	.2423-01	39.37	.7293	.3632	558.8	.5715-03
62	.60000	.60000	258.00	.1167-01	.1384-01	.1526-01	39.41	.4599	.3625	557.8	.3599-03
62	.60000	.75000	259.00	.9983-02	.1184-01	.1305-01	39.43	.3936	.3623	557.4	.3079-03
62	.60000	.85000	260.00	.1161-01	.1377-01	.1518-01	39.42	.4575	.3624	557.6	.3580-03
62	.60000	.95000	261.00	.1135-01	.1347-01	.1485-01	39.37	.4470	.3632	558.8	.3502-03
62	.70000	.90000	264.00	.1233-01	.1462-01	.1611-01	39.53	.4875	.3607	555.0	.3802-03
62	.75000	.80000	269.00	.1628-01	.1930-01	.2127-01	39.54	.6437	.3605	554.7	.5019-03
62	.75000	.90000	270.00	.1704-01	.2020-01	.2227-01	39.51	.6732	.3610	555.5	.5254-03
62	.80000	.90000	271.00	.1950-01	.2312-01	.2549-01	39.51	.7705	.3610	555.5	.6013-03
62	.90000	.60000	274.00	.2971-01	.3523-01	.3883-01	39.51	1.174	.3610	555.4	.9161-03
62	.95000	.40000	276.00	.6534-01	.7751-01	.8547-01	39.38	2.573	.3630	558.6	.2016-02
62	.95000	.70000	278.00	.2945-01	.3491-01	.3848-01	39.53	1.164	.3607	555.0	.9080-03
62	.95000	.80000	279.00	.3151-01	.3736-01	.4118-01	39.50	1.245	.3611	555.7	.9716-03
62	.95000	.90000	280.00	.2865-01	.3397-01	.3745-01	39.46	1.130	.3618	556.7	.8835-03

WING UPPER SURF

PARAMETRIC DATA

MACH = 5.250 ALPHA = 5.000 BETA = .0000 ELEVON = .0000
BDFLAP = .0000 SPDBRK = .0000

TEST CONDITIONS

RUN NUMBER	ALPHA DEG.	BETA DEG.	MACH	RN/FT /FT X10 6	PT PSIA	TT DEG. R	HT BTU/ LBM	PINF PSIA	TINF DEG. R	RHO SLUGS/ FT3	VINF FT/SEC	SCALE
63	5.000	.0000	5.250	1.039	103.3	1499.	369.3	.1423	236.4	.5054-04	3956.	.1750-01

RUN NUMBER	PHI DEG.	HS SPHERE TW=540
63	.0000	.1675

TEST DATA

RUN NUMBER	2Y/BW	XW/CW	T/C NO	H/HREF R=1.0	H/HREF R=.900	H/HREF R=.850	QREF BTU/ FT2SEC	QDOT BTU/ FT2SEC	HW/HT	TW DEG. R	STN NO R=.900
63	.40000	.95000	252.00	.6725-02	.7966-02	.8775-02	39.71	.2671	.3579	550.9	.2073-03
63	.60000	.25000-01	253.00	.1160	.1376	.1516	39.45	4.577	.3619	557.0	.3580-02
63	.60000	.50000-01	254.00	.9570-01	.1135	.1251	39.48	3.778	.3615	556.4	.2953-02
63	.60000	.10000+00	255.00	.7000-01	.8298-01	.9146-01	39.53	2.767	.3606	555.1	.2160-02
63	.60000	.20000	256.00	.2745-01	.3253-01	.3585-01	39.62	1.088	.3593	553.1	.8467-03
63	.60000	.40000	257.00	.1070-01	.1268-01	.1397-01	39.68	.4247	.3583	551.5	.3300-03
63	.60000	.60000	258.00	.2180-02	.2582-02	.2844-02	39.72	.8659-01	.3577	550.6	.6721-04
63	.60000	.75000	259.00	.9558-03	.1132-02	.1247-02	39.74	.3798-01	.3575	550.3	.2947-04
63	.60000	.85000	260.00	.2466-02	.2921-02	.3217-02	39.72	.9795-01	.3577	550.6	.7602-04
63	.60000	.95000	261.00	.3635-02	.4306-02	.4744-02	39.67	.1442	.3585	551.8	.1121-03
63	.70000	.90000	264.00	.3278-02	.3880-02	.4273-02	39.83	.1306	.3560	547.9	.1010-03
63	.75000	.80000	269.00	.2271-02	.2689-02	.2961-02	39.84	.9049-01	.3559	547.8	.7000-04
63	.75000	.90000	270.00	.1697-02	.2009-02	.2212-02	39.80	.6753-01	.3564	548.6	.5229-04
63	.80000	.90000	271.00	.1831-02	.2167-02	.2387-02	39.82	.7289-01	.3562	548.3	.5642-04
63	.90000	.60000	274.00	.1612-01	.1909-01	.2102-01	39.81	.6419	.3563	548.4	.4969-03
63	.95000	.40000	276.00	.5203-01	.6164-01	.6791-01	39.69	2.065	.3583	551.5	.1604-02
63	.95000	.70000	278.00	.9771-02	.1157-01	.1274-01	39.83	.3891	.3561	548.1	.3011-03
63	.95000	.80000	279.00	.1403-01	.1661-01	.1830-01	39.79	.5583	.3566	548.9	.4324-03
63	.95000	.90000	280.00	.1541-01	.1825-01	.2011-01	39.75	.6128	.3572	549.8	.4752-03

IH103 60-OT WING UPPER SURFACE

WING UPPER SURF

PARAMETRIC DATA

MACH = 5.250 ALPHA = 10.00 BETA = .0000 ELEVON = .0000
BDFLAP = .0000 SPDBRK = .0000

TEST CONDITIONS

RUN NUMBER	ALPHA DEG.	BETA DEG.	MACH	RN/FT /FT X10 6	PT PSIA	TT DEG. R	HT BTU/ LBM	PINF PSIA	TINF DEG. R	RHO SLUGS/ FT3	VINF FT/SEC	SCALE
64	10.00	.0000	5.250	.9958	103.5	1541.	380.2	.1422	243.3	.4905-04	4014.	.1750-01

RUN NUMBER	PHI DEG.	HS SPHERE TW=540
64	.0000	.1679

TEST DATA

RUN NUMBER	2Y/BW	XW/CW	T/C NO	H/HREF R=1.0	H/HREF R=.900	H/HREF R=.850	QREF BTU/ FT2SEC	QDOT BTU/ FT2SEC	HW/HT	TW DEG. R	STN NO R=.900
64	.40000	.95000	252.00	.1107-01	.1305-01	.1433-01	42.16	.4668	.3397	538.3	.3459-03
64	.60000	.25000-01	253.00	.1084	.1278	.1404	41.96	4.547	.3427	543.0	.3387-02
64	.60000	.50000-01	254.00	.8773-01	.1035	.1136	41.99	3.684	.3423	542.4	.2742-02
64	.60000	.10000+00	255.00	.6227-01	.7342-01	.8063-01	42.05	2.618	.3415	541.1	.1946-02
64	.60000	.20000	256.00	.2282-01	.2690-01	.2953-01	42.14	.9618	.3400	538.8	.7130-03
64	.60000	.40000	257.00	.7006-02	.8256-02	.9064-02	42.19	.2956	.3393	537.7	.2189-03
64	.60000	.60000	258.00	.2561-02	.3017-02	.3313-02	42.20	.1080	.3392	537.5	.7999-04
64	.60000	.75000	259.00	.2367-02	.2789-02	.3062-02	42.19	.9985-01	.3393	537.7	.7394-04
64	.60000	.85000	260.00	.7425-02	.8750-02	.9607-02	42.16	.3130	.3397	538.3	.2320-03
64	.60000	.95000	261.00	.8596-02	.1013-01	.1113-01	42.10	.3619	.3407	539.9	.2686-03
64	.70000	.90000	264.00	.4773-02	.5626-02	.6178-02	42.13	.2011	.3402	539.1	.1491-03
64	.75000	.80000	269.00	.3662-02	.4316-02	.4740-02	42.14	.1543	.3400	538.8	.1144-03
64	.75000	.90000	270.00	.4305-02	.5075-02	.5573-02	42.09	.1812	.3408	540.0	.1345-03
64	.80000	.90000	271.00	.2654-02	.3129-02	.3436-02	42.09	.1117	.3408	540.0	.8293-04
64	.90000	.60000	274.00	.1176-01	.1386-01	.1521-01	42.13	.4952	.3402	539.2	.3673-03
64	.95000	.40000	276.00	.4525-01	.5336-01	.5862-01	41.99	1.900	.3423	542.5	.1414-02
64	.95000	.50000	277.00	.2870-01	.3384-01	.3716-01	42.06	1.207	.3412	540.8	.8969-03
64	.95000	.70000	278.00	.4911-02	.5790-02	.6358-02	42.09	.2067	.3408	540.1	.1535-03
64	.95000	.80000	279.00	.7225-02	.8518-02	.9356-02	42.05	.3038	.3414	541.0	.2258-03
64	.95000	.90000	280.00	.8953-02	.1056-01	.1160-01	42.00	.3760	.3421	542.2	.2798-03

IH103 60-OT WING UPPER SURFACE (R3PR05)

WING UPPER SURF

PARAMETRIC DATA

MACH = 5.250 ALPHA = .0000 BETA = -5.000 ELEVON = .0000
BDFLAP = .0000 SPDBRK = .0000

TEST CONDITIONS

RUN NUMBER	ALPHA DEG.	BETA DEG.	MACH	RN/FT /FT X10 6	PT PSIA	TT DEG. R	HT BTU/ LBM	PINF PSIA	TINF DEG. R	RHO SLUGS/ FT3	VINF FT/SEC	SCALE
68	.0000	-5.000	5.250	1.031	103.1	1505.	370.7	.1420	237.3	.5023-04	3964.	.1750-01

RUN NUMBER	PHI DEG.	HS SPHERE TW=540
68	.0000	.1674

TEST DATA

RUN NUMBER	2Y/BW	XW/CW	T/C NO	H/HREF R=1.0	H/HREF R=.900	H/HREF R=.850	QREF BTU/ FT2SEC	QDOT BTU/ FT2SEC	HW/HT	TW DEG. R	STN NO R=.900
68	.40000	.80000	251.00	.3637-02	.4303-02	.4736-02	40.10	.1458	.3537	546.5	.1124-03
68	.40000	.95000	252.00	.1659-01	.1964-01	.2162-01	40.01	.6639	.3551	548.6	.5130-03
68	.60000	.25000-01	253.00	.1094	.1296	.1428	39.81	4.355	.3581	553.4	.3384-02
68	.60000	.50000-01	254.00	.9103-01	.1078	.1188	39.85	3.628	.3575	552.4	.2816-02
68	.60000	.10000+00	255.00	.6836-01	.8095-01	.8915-01	39.90	2.728	.3567	551.2	.2114-02
68	.60000	.20000	256.00	.2827-01	.3346-01	.3685-01	39.99	1.131	.3554	549.1	.8741-03
68	.60000	.40000	257.00	.9518-02	.1126-01	.1240-01	40.04	.3811	.3546	547.9	.2942-03
68	.60000	.60000	258.00	.1171-01	.1386-01	.1525-01	40.08	.4693	.3540	547.0	.3619-03
68	.60000	.75000	259.00	.1252-01	.1482-01	.1631-01	40.07	.5019	.3540	547.0	.3871-03
68	.60000	.85000	260.00	.1852-01	.2192-01	.2414-01	40.02	.7414	.3549	548.3	.5726-03
68	.60000	.95000	261.00	.1929-01	.2284-01	.2515-01	39.93	.7703	.3563	550.5	.5965-03
68	.70000	.90000	264.00	.1860-01	.2201-01	.2424-01	40.03	.7447	.3548	548.2	.5751-03
68	.75000	.80000	269.00	.1626-01	.1923-01	.2117-01	40.10	.6518	.3537	546.6	.5024-03
68	.75000	.90000	270.00	.1781-01	.2108-01	.2321-01	39.99	.7122	.3553	549.0	.5506-03
68	.80000	.90000	271.00	.1669-01	.1976-01	.2176-01	40.00	.6677	.3553	549.0	.5161-03
68	.90000	.60000	274.00	.1427-01	.1688-01	.1859-01	40.09	.5722	.3537	546.6	.4411-03
68	.95000	.40000	276.00	.3916-01	.4636-01	.5106-01	39.94	1.564	.3561	550.3	.1211-02
68	.95000	.50000	277.00	.2455-01	.2904-01	.3197-01	40.06	.9832	.3543	547.4	.7587-03
68	.95000	.70000	278.00	.8359-02	.9891-02	.1089-01	40.05	.3348	.3545	547.7	.2584-03
68	.95000	.80000	279.00	.8981-02	.1063-01	.1170-01	40.00	.3593	.3552	548.8	.2776-03
68	.95000	.90000	280.00	.8241-02	.9756-02	.1074-01	39.95	.3292	.3560	550.0	.2548-03

IH103 60-OT WING UPPER SURFACE (R3PR06)

WING UPPER SURF

PARAMETRIC DATA

MACH = 5.250 ALPHA = -5.000 BETA = -5.000 ELEVON = .0000
BDFLAP = .0000 SPDBRK = .0000

TEST CONDITIONS

RUN NUMBER	ALPHA DEG.	BETA DEG.	MACH	RN/FT /FT X10 6	PT PSIA	TT DEG. R	HT BTU/ LBM	PINF PSIA	TINF DEG. R	RHO SLUGS/ FT3	VINF FT/SEC	SCALE
67	-5.000	-5.000	5.250	1.036	103.6	1504.	370.6	.1427	237.2	.5051-04	3963.	.1750-01

RUN NUMBER	PHI DEG.	HS SPHERE TW=540
67	.0000	.1678

TEST DATA

RUN NUMBER	2Y/BW	XW/CW	T/C NO	H/HREF R=1.0	H/HREF R=.900	H/HREF R=.850	QREF BTU/ FT2SEC	QDOT BTU/ FT2SEC	HW/HT	TW DEG. R	STN NO R=.900
67	.40000	.80000	251.00	.2767-02	.3273-02	.3602-02	40.22	.1113	.3532	545.5	.8525-04
67	.40000	.95000	252.00	.2937-01	.3475-01	.3825-01	40.15	1.179	.3542	547.0	.9051-03
67	.60000	.25000-01	253.00	.1134	.1343	.1479	39.93	4.527	.3576	552.4	.3498-02
67	.60000	.50000-01	254.00	.9995-01	.1184	.1304	39.96	3.994	.3571	551.5	.3083-02
67	.60000	.10000+00	255.00	.8187-01	.9692-01	.1067	40.02	3.277	.3562	550.1	.2525-02
67	.60000	.20000	256.00	.3675-01	.4349-01	.4788-01	40.10	1.474	.3549	548.2	.1133-02
67	.60000	.40000	257.00	.1833-01	.2169-01	.2387-01	40.16	.7361	.3540	546.7	.5649-03
67	.60000	.60000	258.00	.8573-02	.1014-01	.1116-01	40.19	.3446	.3535	546.0	.2642-03
67	.60000	.75000	259.00	.4036-02	.4775-02	.5256-02	40.20	.1623	.3534	545.8	.1244-03
67	.60000	.85000	260.00	.8663-02	.1025-01	.1128-01	40.16	.3479	.3540	546.7	.2670-03
67	.60000	.95000	261.00	.1373-01	.1625-01	.1789-01	40.09	.5504	.3551	548.5	.4233-03
67	.70000	.90000	264.00	.9537-02	.1128-01	.1242-01	40.20	.3834	.3534	545.8	.2939-03
67	.75000	.80000	269.00	.1240-01	.1467-01	.1614-01	40.31	.5000	.3517	543.2	.3821-03
67	.75000	.90000	270.00	.1237-01	.1463-01	.1611-01	40.17	.4969	.3539	546.5	.3812-03
67	.80000	.90000	271.00	.1653-01	.1955-01	.2152-01	40.18	.6639	.3538	546.4	.5093-03
67	.90000	.60000	274.00	.2706-01	.3201-01	.3524-01	40.21	1.088	.3532	545.5	.8340-03
67	.95000	.40000	276.00	.4883-01	.5779-01	.6363-01	40.08	1.957	.3552	548.6	.1505-02
67	.95000	.50000	277.00	.3215-01	.3803-01	.4186-01	40.20	1.292	.3534	545.8	.9908-03
67	.95000	.70000	278.00	.2610-01	.3087-01	.3398-01	40.21	1.049	.3533	545.6	.8043-03
67	.95000	.80000	279.00	.3048-01	.3606-01	.3970-01	40.16	1.224	.3540	546.7	.9394-03
67	.95000	.90000	280.00	.2855-01	.3378-01	.3719-01	40.12	1.145	.3547	547.8	.8800-03

IH103 60-OT WING UPPER SURFACE (R3PR07)

WING UPPER SURF

PARAMETRIC DATA

MACH = 5.250 ALPHA = 5.000 BETA = -5.000 ELEVON = .0000
BDFLAP = .0000 SPDBRK = .0000

TEST CONDITIONS

RUN NUMBER	ALPHA DEG.	BETA DEG.	MACH	RN/FT /FT X10 6	PT PSIA	TT DEG. R	HT BTU/ LBM	PINF PSIA	TINF DEG. R	RHO SLUGS/ FT3	VINF FT/SEC	SCALE
66	5.000	-5.000	5.250	1.033	103.6	1507.	371.4	.1427	237.7	.5037-04	3967.	.1750-01

RUN NUMBER	PHI DEG.	HS SPHERE TW=540
66	.0000	.1678

TEST DATA

RUN NUMBER	2Y/BW	XW/CW	T/C NO	H/HREF R=1.0	H/HREF R=.900	H/HREF R=.850	QREF BTU/ FT2SEC	QDOT BTU/ FT2SEC	HW/HT	TW DEG. R	STN NO R=.900
66	.40000	.80000	251.00	.1570-02	.1857-02	.2043-02	40.42	.6348-01	.3513	543.8	.4845-04
66	.40000	.95000	252.00	.1241-01	.1467-01	.1614-01	40.38	.5010	.3520	544.8	.3828-03
66	.60000	.25000-01	253.00	.9968-01	.1180	.1300	40.12	3.999	.3560	551.1	.3078-02
66	.60000	.50000-01	254.00	.7987-01	.9454-01	.1041	40.15	3.207	.3555	550.2	.2466-02
66	.60000	.10000+00	255.00	.5580-01	.6603-01	.7270-01	40.21	2.244	.3546	549.0	.1723-02
66	.60000	.20000	256.00	.2154-01	.2548-01	.2805-01	40.29	.8680	.3533	547.0	.6649-03
66	.60000	.40000	257.00	.5226-02	.6181-02	.6802-02	40.34	.2108	.3526	545.8	.1613-03
66	.60000	.60000	258.00	.8083-02	.9558-02	.1052-01	40.39	.3264	.3519	544.7	.2494-03
66	.60000	.75000	259.00	.9807-02	.1160-01	.1276-01	40.39	.3962	.3518	544.5	.3026-03
66	.60000	.85000	260.00	.1689-01	.1997-01	.2198-01	40.39	.6822	.3519	544.7	.5212-03
66	.60000	.95000	261.00	.1757-01	.2078-01	.2287-01	40.34	.7089	.3526	545.7	.5422-03
66	.70000	.90000	264.00	.1212-01	.1433-01	.1576-01	40.49	.4909	.3502	542.2	.3739-03
66	.75000	.80000	269.00	.8766-02	.1036-01	.1139-01	40.52	.3552	.3498	541.4	.2704-03
66	.75000	.90000	270.00	.1386-01	.1638-01	.1802-01	40.46	.5607	.3507	542.9	.4275-03
66	.80000	.90000	271.00	.1251-01	.1478-01	.1626-01	40.47	.5061	.3506	542.8	.3857-03
66	.90000	.60000	274.00	.9109-02	.1077-01	.1184-01	40.49	.3688	.3503	542.2	.2810-03
66	.95000	.40000	276.00	.3990-01	.4718-01	.5192-01	40.36	1.610	.3523	545.3	.1231-02
66	.95000	.50000	277.00	.2048-01	.2421-01	.2663-01	40.46	.8286	.3507	542.8	.6317-03
66	.95000	.70000	278.00	.4602-02	.5440-02	.5984-02	40.49	.1863	.3504	542.3	.1420-03
66	.95000	.80000	279.00	.6798-02	.8036-02	.8841-02	40.45	.2750	.3509	543.1	.2097-03
66	.95000	.90000	280.00	.8897-02	.1052-01	.1157-01	40.41	.3595	.3515	544.1	.2745-03

IH103 60-OT WING UPPER SURFACE (R3PR08)

WING UPPER SURF

PARAMETRIC DATA

MACH = 5.250 ALPHA = 10.00 BETA = -5.000 ELEVON = .0000
BDFLAP = .0000 SPDBRK = .0000

TEST CONDITIONS

RUN NUMBER	ALPHA DEG.	BETA DEG.	MACH	RN/FT /FT X10 6	PT PSIA	TT DEG. R	HT BTU/ LBM	PINF PSIA	TINF DEG. R	RHO SLUGS/ FT3	VINF FT/SEC	SCALE
65	10.00	.0000	5.250	1.036	103.7	1505.	370.9	.1429	237.4	.5052-04	3964.	.1750-01

RUN NUMBER	PHI DEG.	HS SPHERE TW=540
65	.0000	.1679

TEST DATA

RUN NUMBER	2Y/BW	XW/CW	T/C NO	H/HREF R=1.0	H/HREF R=.900	H/HREF R=.850	QREF BTU/ FT2SEC	QDOT BTU/ FT2SEC	HW/HT	TW DEG. R	STN NO R=.900
65	.40000	.80000	251.00	.7134-03	.8435-03	.9282-03	40.36	.2880-01	.3517	543.7	.2198-04
65	.40000	.95000	252.00	.8073-02	.9548-02	.1051-01	40.30	.3253	.3527	545.2	.2487-03
65	.60000	.25000-01	253.00	.9463-01	.1120	.1234	40.10	3.795	.3557	549.9	.2918-02
65	.60000	.50000-01	254.00	.7575-01	.8965-01	.9871-01	40.13	3.040	.3553	549.2	.2335-02
65	.60000	.10000+00	255.00	.5254-01	.6217-01	.6845-01	40.19	2.111	.3545	548.0	.1620-02
65	.60000	.20000	256.00	.1901-01	.2248-01	.2474-01	40.28	.7655	.3531	545.8	.5857-03
65	.60000	.40000	257.00	.4903-02	.5798-02	.6380-02	40.33	.1977	.3522	544.4	.1511-03
65	.60000	.60000	258.00	.4151-02	.4909-02	.5402-02	40.35	.1675	.3520	544.1	.1279-03
65	.60000	.75000	259.00	.3432-02	.4058-02	.4466-02	40.34	.1384	.3521	544.3	.1057-03
65	.60000	.85000	260.00	.9078-02	.1074-01	.1182-01	40.31	.3659	.3526	545.1	.2797-03
65	.60000	.95000	261.00	.1118-01	.1323-01	.1456-01	40.25	.4501	.3535	546.5	.3446-03
65	.70000	.90000	264.00	.4528-02	.5356-02	.5895-02	40.28	.1824	.3531	545.8	.1395-03
65	.75000	.80000	269.00	.3698-02	.4374-02	.4814-02	40.30	.1490	.3527	545.2	.1140-03
65	.75000	.90000	270.00	.5283-02	.6250-02	.6880-02	40.24	.2126	.3536	546.6	.1628-03
65	.80000	.90000	271.00	.4403-02	.5209-02	.5734-02	40.23	.1771	.3538	546.9	.1357-03
65	.90000	.60000	274.00	.9114-02	.1078-01	.1187-01	40.26	.3669	.3533	546.2	.2809-03
65	.95000	.40000	276.00	.5149-01	.6095-01	.6711-01	40.10	2.065	.3558	549.9	.1588-02
65	.95000	.50000	277.00	.2681-01	.3172-01	.3492-01	40.21	1.078	.3541	547.4	.8264-03
65	.95000	.70000	278.00	.6186-02	.7319-02	.8057-02	40.22	.2488	.3540	547.2	.1907-03
65	.95000	.80000	279.00	.8529-02	.1009-01	.1111-01	40.18	.3427	.3546	548.2	.2629-03
65	.95000	.90000	280.00	.9453-02	.1119-01	.1232-01	40.13	.3794	.3553	549.2	.2914-03

IH103 60-OT WING UPPER SURFACE (R3PR09)

WING UPPER SURF

PARAMETRIC DATA

MACH = 5.250 ALPHA = .0000 BETA = -3.000 ELEVON = .0000
BDFLAP = .0000 SPDBRK = .0000

TEST CONDITIONS

RUN NUMBER	ALPHA DEG.	BETA DEG.	MACH	RN/FT /FT X10 6	PT PSIA	TT DEG. R	HT BTU/ LBM	PINF PSIA	TINF DEG. R	RHO SLUGS/ FT3	VINF FT/SEC	SCALE
51	.0000	-3.000	5.250	1.016	101.5	1504.	370.5	.1399	237.1	.4949-04	3963.	.1750-01

RUN NUMBER	PHI DEG.	HS SPHERE TW=540
51	.0000	.1661

TEST DATA

RUN NUMBER	2Y/BW	XW/CW	T/C NO	H/HREF R=1.0	H/HREF R=.900	H/HREF R=.850	QREF BTU/ FT2SEC	QDOT BTU/ FT2SEC	HW/HT	TW DEG. R	STN NO R=.900
51	.40000	.80000	251.00	.6782-03	.8020-03	.8826-03	39.85	.2702-01	.3525	544.3	.2111-04
51	.40000	.95000	252.00	.1376-01	.1627-01	.1791-01	39.79	.5474	.3533	545.7	.4283-03
51	.60000	.25000-01	253.00	.1172	.1388	.1528	39.62	4.645	.3560	549.7	.3652-02
51	.60000	.50000-01	254.00	.1009	.1195	.1316	39.64	4.001	.3557	549.3	.3144-02
51	.60000	.10000+00	255.00	.7685-01	.9095-01	.1001	39.68	3.049	.3550	548.3	.2393-02
51	.60000	.20000	256.00	.3149-01	.3725-01	.4101-01	39.74	1.251	.3540	546.8	.9804-03
51	.60000	.40000	257.00	.1361-01	.1610-01	.1773-01	39.78	.5416	.3534	545.8	.4238-03
51	.60000	.60000	258.00	.4588-02	.5427-02	.5973-02	39.81	.1826	.3531	545.3	.1428-03
51	.60000	.75000	259.00	.2152-02	.2545-02	.2801-02	39.80	.8563-01	.3532	545.5	.6699-04
51	.60000	.85000	260.00	.3840-02	.4542-02	.4999-02	39.79	.1528	.3533	545.6	.1195-03
51	.60000	.95000	261.00	.8694-02	.1029-01	.1132-01	39.72	.3454	.3543	547.2	.2707-03
51	.70000	.90000	264.00	.2792-02	.3302-02	.3634-02	39.87	.1113	.3522	543.8	.8691-04
51	.75000	.80000	269.00	.4177-02	.4939-02	.5434-02	39.90	.1667	.3517	543.1	.1300-03
51	.75000	.90000	270.00	.3952-02	.4674-02	.5143-02	39.83	.1574	.3527	544.6	.1230-03
51	.80000	.90000	271.00	.6326-02	.7481-02	.8233-02	39.84	.2520	.3525	544.3	.1969-03
51	.90000	.60000	274.00	.2006-01	.2372-01	.2611-01	39.87	.7999	.3521	543.7	.6244-03
51	.95000	.40000	276.00	.5208-01	.6161-01	.6781-01	39.78	2.071	.3535	545.9	.1621-02
51	.95000	.50000	277.00	.2328-01	.2753-01	.3029-01	39.88	.9284	.3519	543.4	.7245-03
51	.95000	.70000	278.00	.1462-01	.1729-01	.1903-01	39.88	.5832	.3519	543.4	.4551-03
51	.95000	.80000	279.00	.1750-01	.2069-01	.2277-01	39.85	.6973	.3524	544.2	.5447-03
51	.95000	.90000	280.00	.1568-01	.1855-01	.2041-01	39.81	.6242	.3530	545.2	.4881-03

IH103 60-OT WING UPPER SURFACE (R3PR10)

WING UPPER SURF

PARAMETRIC DATA

MACH = 5.250 ALPHA = -5.000 BETA = -3.000 ELEVON = .0000
BDFLAP = .0000 SPDBRK = .0000

TEST CONDITIONS

RUN NUMBER	ALPHA DEG.	BETA DEG.	MACH	RN/FT /FT X10 6	PT PSIA	TT DEG. R	HT BTU/ LBM	PINF PSIA	TINF DEG. R	RHO SLUGS/ FT3	VINF FT/SEC	SCALE
52	-5.000	-3.000	5.250	1.047	102.9	1488.	366.4	.1419	234.5	.5080-04	3940.	.1750-01

RUN NUMBER	PHI DEG.	HS SPHERE TW=540
52	.0000	.1672

TEST DATA

RUN NUMBER	2Y/BW	XW/CW	T/C NO	H/HREF R=1.0	H/HREF R=.900	H/HREF R=.850	QREF BTU/ FT2SEC	QDOT BTU/ FT2SEC	HW/HT	TW DEG. R	STN NO R=.900
52	.40000	.95000	252.00	.2102-01	.2492-01	.2746-01	39.20	.8242	.3596	549.2	.6464-03
52	.60000	.25000-01	253.00	.1237	.1467	.1617	39.05	4.830	.3620	552.8	.3805-02
52	.60000	.50000-01	254.00	.1082	.1282	.1414	39.06	4.225	.3619	552.6	.3327-02
52	.60000	.10000+00	255.00	.8675-01	.1029	.1134	39.10	3.392	.3613	551.7	.2668-02
52	.60000	.20000	256.00	.3751-01	.4446-01	.4900-01	39.15	1.469	.3604	550.4	.1154-02
52	.60000	.40000	257.00	.1816-01	.2153-01	.2372-01	39.18	.7116	.3601	549.8	.5585-03
52	.60000	.60000	258.00	.1153-01	.1366-01	.1506-01	39.20	.4520	.3597	549.2	.3545-03
52	.60000	.75000	259.00	.8913-02	.1056-01	.1164-01	39.20	.3494	.3597	549.2	.2740-03
52	.60000	.85000	260.00	.9510-02	.1127-01	.1242-01	39.21	.3728	.3596	549.1	.2924-03
52	.60000	.95000	261.00	.8963-02	.1062-01	.1171-01	39.15	.3509	.3604	550.4	.2756-03
52	.70000	.90000	264.00	.9974-02	.1182-01	.1302-01	39.30	.3920	.3581	546.8	.3066-03
52	.75000	.80000	269.00	.1476-01	.1748-01	.1925-01	39.31	.5801	.3579	546.5	.4535-03
52	.75000	.90000	270.00	.1444-01	.1711-01	.1885-01	39.28	.5673	.3584	547.3	.4439-03
52	.80000	.90000	271.00	.1969-01	.2332-01	.2569-01	39.30	.7738	.3581	546.9	.6052-03
52	.90000	.60000	274.00	.2664-01	.3156-01	.3476-01	39.30	1.047	.3581	546.8	.8188-03
52	.95000	.40000	276.00	.5584-01	.6617-01	.7291-01	39.24	2.191	.3590	548.2	.1717-02
52	.95000	.50000	277.00	.3533-01	.4184-01	.4609-01	39.34	1.390	.3575	545.9	.1086-02
52	.95000	.70000	278.00	.2530-01	.2997-01	.3301-01	39.33	.9951	.3577	546.2	.7777-03
52	.95000	.80000	279.00	.2849-01	.3375-01	.3718-01	39.30	1.120	.3580	546.8	.8756-03
52	.95000	.90000	280.00	.2674-01	.3168-01	.3490-01	39.27	1.050	.3587	547.7	.8220-03

IH103 60-OT WING UPPER SURFACE (R3PR11)

WING UPPER SURF

PARAMETRIC DATA

MACH = 5.250 ALPHA = 5.000 BETA = -3.000 ELEVON = .0000
BDFLAP = .0000 SPDBRK = .0000

TEST CONDITIONS

RUN NUMBER	ALPHA DEG.	BETA DEG.	MACH	RN/FT /FT X10 6	PT PSIA	TT DEG. R	HT BTU/ LBM	PINF PSIA	TINF DEG. R	RHO SLUGS/ FT3	VINF FT/SEC	SCALE
46	5.000	-3.000	5.200	1.027	103.9	1538.	379.4	.1511	246.8	.5138-04	4004.	.1750-01

RUN NUMBER	PHI DEG.	HS SPHERE TW=540
46	.0000	.1714

TEST DATA

RUN NUMBER	2Y/BW	XW/CW	T/C NO	H/HREF R=1.0	H/HREF R=.900	H/HREF R=.850	QREF BTU/ FT2SEC	QDOT BTU/ FT2SEC	HW/HT	TW DEG. R	STN NO R=.900
46	.40000	.95000	252.00	.8574-02	.1014-01	.1116-01	42.02	.3603	.3533	558.7	.2624-03
46	.60000	.25000-01	253.00	.9043-01	.1071	.1180	41.73	3.774	.3576	565.4	.2770-02
46	.60000	.50000-01	254.00	.7432-01	.8800-01	.9693-01	41.76	3.104	.3571	564.6	.2276-02
46	.60000	.10000+00	255.00	.5430-01	.6429-01	.7080-01	41.81	2.271	.3563	563.4	.1663-02
46	.60000	.20000	256.00	.2197-01	.2600-01	.2862-01	41.90	.9203	.3551	561.4	.6725-03
46	.60000	.40000	257.00	.9774-02	.1156-01	.1273-01	41.95	.4101	.3542	560.1	.2992-03
46	.60000	.60000	258.00	.2594-02	.3068-02	.3377-02	42.01	.1090	.3535	558.9	.7938-04
46	.60000	.75000	259.00	.1193-02	.1411-02	.1553-02	42.01	.5013-01	.3534	558.8	.3652-04
46	.60000	.85000	260.00	.2226-02	.2633-02	.2898-02	42.02	.9355-01	.3532	558.5	.6813-04
46	.60000	.95000	261.00	.5903-02	.6983-02	.7687-02	41.99	.2478	.3538	559.4	.1807-03
46	.70000	.90000	264.00	.2962-02	.3502-02	.3853-02	42.15	.1249	.3513	555.5	.9062-04
46	.75000	.80000	269.00	.1223-02	.1446-02	.1590-02	42.16	.5156-01	.3511	555.2	.3741-04
46	.75000	.90000	270.00	.2088-02	.2469-02	.2716-02	42.13	.8797-01	.3516	556.0	.6388-04
46	.80000	.90000	271.00	.2051-02	.2424-02	.2668-02	42.14	.8641-01	.3515	555.8	.6274-04
46	.90000	.60000	274.00	.1436-01	.1698-01	.1869-01	42.12	.6051	.3517	556.2	.4395-03
46	.95000	.40000	276.00	.4094-01	.4843-01	.5331-01	42.01	1.720	.3535	558.9	.1253-02
46	.95000	.50000	277.00	.1974-01	.2334-01	.2568-01	42.14	.8318	.3515	555.8	.6039-03
46	.95000	.70000	278.00	.5375-02	.6354-02	.6991-02	42.15	.2265	.3514	555.6	.1644-03
46	.95000	.80000	279.00	.7643-02	.9037-02	.9944-02	42.12	.3219	.3518	556.3	.2338-03
46	.95000	.90000	280.00	.9619-02	.1138-01	.1252-01	42.08	.4047	.3524	557.2	.2943-03

IH103 60-OT WING UPPER SURFACE

(R3PR12)

WING UPPER SURF

PARAMETRIC DATA

MACH = 5.250 ALPHA = 10.00 BETA = -3.000 ELEVON = .0000
BDFLAP = .0000 SPDBRK = .0000

TEST CONDITIONS

RUN NUMBER	ALPHA DEG.	BETA DEG.	MACH	RN/FT /FT X10 6	PT PSIA	TT DEG. R	HT BTU/ LBM	PINF PSIA	TINF DEG. R	RHO SLUGS/ FT3	VINF FT/SEC	SCALE
45	10.00	-3.000	5.250	1.036	103.0	1500.	369.5	.1420	236.4	.5040-04	3957.	.1750-01

RUN NUMBER	PHI DEG.	HS SPHERE TW=540
45	.0000	.1673

TEST DATA

RUN NUMBER	2Y/BW	XW/CW	T/C NO	H/HREF R=1.0	H/HREF R=.900	H/HREF R=.850	QREF BTU/ FT2SEC	QDOT BTU/ FT2SEC	HW/HT	TW DEG. R	STN NO R=.900
45	.40000	.95000	252.00	.1125-01	.1333-01	.1468-01	39.58	.4451	.3594	553.4	.3473-03
45	.60000	.25000-01	253.00	.9663-01	.1147	.1265	39.24	3.792	.3647	561.5	.2988-02
45	.60000	.50000-01	254.00	.7741-01	.9185-01	.1013	39.28	3.040	.3641	560.6	.2393-02
45	.60000	.10000+00	255.00	.5434-01	.6447-01	.7109-01	39.34	2.138	.3632	559.2	.1680-02
45	.60000	.20000	256.00	.2043-01	.2422-01	.2670-01	39.43	.8054	.3617	556.9	.6311-03
45	.60000	.40000	257.00	.6838-02	.8106-02	.8935-02	39.49	.2701	.3607	555.4	.2113-03
45	.60000	.60000	258.00	.1759-02	.2085-02	.2297-02	39.55	.6956-01	.3599	554.1	.5433-04
45	.60000	.75000	259.00	.1281-02	.1518-02	.1673-02	39.55	.5067-01	.3598	554.0	.3956-04
45	.60000	.85000	260.00	.4749-02	.5628-02	.6201-02	39.57	.1879	.3595	553.5	.1467-03
45	.60000	.95000	261.00	.6057-02	.7179-02	.7912-02	39.53	.2395	.3601	554.5	.1871-03
45	.70000	.90000	264.00	.3778-02	.4475-02	.4930-02	39.69	.1500	.3577	550.8	.1166-03
45	.75000	.80000	269.00	.2208-02	.2615-02	.2881-02	39.69	.8764-01	.3576	550.7	.6816-04
45	.75000	.90000	270.00	.3367-02	.3988-02	.4394-02	39.66	.1335	.3582	551.6	.1040-03
45	.80000	.90000	271.00	.1483-02	.1756-02	.1935-02	39.66	.5880-01	.3582	551.5	.4578-04
45	.90000	.60000	274.00	.9839-02	.1166-01	.1284-01	39.65	.3901	.3583	551.7	.3038-03
45	.95000	.40000	276.00	.4865-01	.5768-01	.6357-01	39.49	1.921	.3607	555.4	.1503-02
45	.95000	.50000	277.00	.2969-01	.3517-01	.3875-01	39.64	1.177	.3585	552.0	.9168-03
45	.95000	.70000	278.00	.7753-02	.9184-02	.1012-01	39.65	.3074	.3583	551.6	.2394-03
45	.95000	.80000	279.00	.1060-01	.1256-01	.1384-01	39.63	.4200	.3587	552.3	.3273-03
45	.95000	.90000	280.00	.1284-01	.1521-01	.1676-01	39.59	.5082	.3593	553.2	.3965-03

IH103 60-OT WING UPPER SURFACE (R3PR13)

WING UPPER SURF

PARAMETRIC DATA

MACH = 5.250 ALPHA = .0000 BETA = -9.000 ELEVON = .0000
BDFLAP = .0000 SPDBRK = .0000

TEST CONDITIONS

RUN NUMBER	ALPHA DEG.	BETA DEG.	MACH	RN/FT /FT X10 6	PT PSIA	TT DEG. R	HT BTU/ LBM	PINF PSIA	TINF DEG. R	RHO SLUGS/ FT3	VINF FT/SEC	SCALE
41	.0000	-9.000	5.250	.9914	101.7	1528.	376.9	.1399	241.2	.4866-04	3997.	.1750-01

RUN NUMBER	PHI DEG.	HS SPHERE TW=540
41	.0000	.1564

TEST DATA

RUN NUMBER	2Y/BW	XW/CW	T/C NO	H/HREF R=1.0	H/HREF R=.900	H/HREF R=.850	QREF BTU/ FT2SEC	QDOT BTU/ FT2SEC	HW/HT	TW DEG. R	STN NO R=.900
41	.40000	.80000	251.00	.1083-01	.1279-01	.1406-01	40.97	.4439	.3467	544.6	.3401-03
41	.40000	.95000	252.00	.2585-01	.3053-01	.3356-01	40.92	1.058	.3474	545.7	.8115-03
41	.60000	.25000-01	253.00	.9710-01	.1148	.1262	40.76	3.958	.3498	549.5	.3050-02
41	.60000	.50000-01	254.00	.7982-01	.9431-01	.1037	40.79	3.256	.3493	548.8	.2507-02
41	.60000	.10000+00	255.00	.5955-01	.7035-01	.7737-01	40.83	2.431	.3487	547.8	.1870-02
41	.60000	.20000	256.00	.2511-01	.2965-01	.3261-01	40.89	1.026	.3479	546.5	.7883-03
41	.60000	.40000	257.00	.1253-01	.1480-01	.1627-01	40.91	.5127	.3476	546.0	.3935-03
41	.60000	.60000	258.00	.1689-01	.1995-01	.2194-01	40.93	.6914	.3473	545.5	.5304-03
41	.60000	.75000	259.00	.1910-01	.2255-01	.2480-01	40.91	.7813	.3475	545.8	.5996-03
41	.60000	.85000	260.00	.2678-01	.3162-01	.3477-01	40.92	1.096	.3474	545.8	.8408-03
41	.60000	.95000	261.00	.2019-01	.2385-01	.2622-01	40.86	.8250	.3482	547.0	.6339-03
41	.70000	.90000	264.00	.2502-01	.2954-01	.3247-01	41.00	1.026	.3461	543.7	.7853-03
41	.75000	.80000	269.00	.3044-01	.3593-01	.3950-01	41.00	1.248	.3461	543.7	.9553-03
41	.75000	.90000	270.00	.3450-01	.4073-01	.4477-01	40.98	1.414	.3464	544.1	.1083-02
41	.80000	.90000	271.00	.3455-01	.4079-01	.4483-01	41.00	1.417	.3461	543.6	.1084-02
41	.90000	.60000	274.00	.1918-01	.2264-01	.2488-01	41.04	.7871	.3456	542.9	.6019-03
41	.95000	.40000	276.00	.3000-01	.3542-01	.3894-01	40.96	1.229	.3467	544.7	.9417-03
41	.95000	.50000	277.00	.1682-01	.1985-01	.2181-01	41.04	.6902	.3454	542.7	.5277-03
41	.95000	.70000	278.00	.1465-01	.1729-01	.1900-01	41.03	.6010	.3456	543.0	.4597-03
41	.95000	.80000	279.00	.1799-01	.2124-01	.2334-01	41.01	.7377	.3460	543.6	.5646-03
41	.95000	.90000	280.00	.1813-01	.2140-01	.2353-01	40.97	.7428	.3465	544.4	.5690-03

IH103 60-OT WING UPPER SURFACE (R3PR14)

WING UPPER SURF

PARAMETRIC DATA

MACH = 5.250 ALPHA = -5.000 BETA = -9.000 ELEVON = .0000
BDFLAP = .0000 SPDBRK = .0000

TEST CONDITIONS

RUN NUMBER	ALPHA DEG.	BETA DEG.	MACH	RN/FT /FT X10 6	PT PSIA	TT DEG. R	HT BTU/ LBM	PINF PSIA	TINF DEG. R	RHO SLUGS/ FT3	VINF FT/SEC	SCALE
42	-5.000	-9.000	5.250	1.011	102.2	1515.	373.5	.1407	239.0	.4941-04	3978.	.1750-01

RUN NUMBER	PHI DEG.	HS SPHERE TW=540
42	.0000	.1667

TEST DATA

RUN NUMBER	2Y/BW	XW/CW	T/C NO	H/HREF R=1.0	H/HREF R=.900	H/HREF R=.850	QREF BTU/ FT2SEC	QDOT BTU/ FT2SEC	HW/HT	TW DEG. R	STN NO R=.900
42	.40000	.80000	251.00	.1373-01	.1623-01	.1786-01	40.35	.5539	.3519	547.8	.4279-03
42	.40000	.95000	252.00	.3013-01	.3564-01	.3922-01	40.29	1.214	.3527	549.1	.9393-03
42	.60000	.25000-01	253.00	.1034	.1224	.1348	40.06	4.143	.3563	554.6	.3226-02
42	.60000	.50000-01	254.00	.9055-01	.1072	.1180	40.10	3.631	.3557	553.7	.2825-02
42	.60000	.10000+00	255.00	.7406-01	.8765-01	.9650-01	40.16	2.974	.3548	552.3	.2310-02
42	.60000	.20000	256.00	.3342-01	.3954-01	.4352-01	40.23	1.345	.3537	550.5	.1042-02
42	.60000	.40000	257.00	.1414-01	.1672-01	.1840-01	40.28	.5694	.3529	549.3	.4407-03
42	.60000	.60000	258.00	.3468-02	.4101-02	.4513-02	40.31	.1398	.3524	548.6	.1081-03
42	.60000	.75000	259.00	.3747-02	.4431-02	.4877-02	40.31	.1510	.3525	548.6	.1168-03
42	.60000	.85000	260.00	.1022-01	.1209-01	.1330-01	40.30	.4120	.3526	548.8	.3186-03
42	.60000	.95000	261.00	.1707-01	.2019-01	.2222-01	40.25	.6869	.3534	550.1	.5321-03
42	.70000	.90000	264.00	.7954-02	.9404-02	.1035-01	40.36	.3210	.3517	547.5	.2479-03
42	.75000	.80000	269.00	.5892-02	.6966-02	.7665-02	40.37	.2379	.3515	547.1	.1836-03
42	.75000	.90000	270.00	.7867-02	.9303-02	.1024-01	40.32	.3172	.3522	548.3	.2452-03
42	.80000	.90000	271.00	.1032-01	.1220-01	.1343-01	40.33	.4161	.3521	548.1	.3216-03
42	.90000	.60000	274.00	.2561-01	.3028-01	.3332-01	40.35	1.033	.3518	547.6	.7982-03
42	.95000	.40000	276.00	.3889-01	.4601-01	.5064-01	40.23	1.565	.3536	550.4	.1213-02
42	.95000	.50000	277.00	.3127-01	.3697-01	.4068-01	40.35	1.262	.3518	547.6	.9745-03
42	.95000	.70000	278.00	.2534-01	.2996-01	.3297-01	40.35	1.022	.3519	547.7	.7897-03
42	.95000	.80000	279.00	.2743-01	.3244-01	.3570-01	40.32	1.106	.3524	548.5	.8552-03
42	.95000	.90000	280.00	.2435-01	.2880-01	.3170-01	40.28	.9808	.3529	549.4	.7591-03

IH103 60-OT WING UPPER SURFACE (R3PR15)

WING UPPER SURF

PARAMETRIC DATA

MACH = 5.250 ALPHA = 5.000 BETA = -9.000 ELEVON = .0000
BDFLAP = .0000 SPDBRK = .0000

TEST CONDITIONS

RUN NUMBER	ALPHA DEG.	BETA DEG.	MACH	RN/FT /FT X10 6	PT PSIA	TT DEG. R	HT BTU/ LBM	PINF PSIA	TINF DEG. R	RHO SLUGS/ FT3	VINF FT/SEC	SCALE
43	5.000	-9.000	5.250	1.042	103.7	1500.	369.4	.1429	236.4	.5072-04	3956.	.1750-01

RUN NUMBER	PHI DEG.	HS SPHERE TW=540
43	.0000	.1678

TEST DATA

RUN NUMBER	2Y/BW	XW/CW	T/C NO	H/HREF R=1.0	H/HREF R=.900	H/HREF R=.850	QREF BTU/ FT2SEC	QDOT BTU/ FT2SEC	HW/HT	TW DEG. R	STN NO R=.900
43	.40000	.80000	251.00	.1683-01	.1994-01	.2197-01	39.75	.6692	.3584	551.7	.5182-03
43	.40000	.95000	252.00	.3061-01	.3627-01	.3996-01	39.71	1.216	.3590	552.7	.9423-03
43	.60000	.25000-01	253.00	.9214-01	.1093	.1205	39.47	3.637	.3628	558.6	.2839-02
43	.60000	.50000-01	254.00	.7291-01	.8648-01	.9535-01	39.49	2.880	.3624	557.9	.2246-02
43	.60000	.10000+00	255.00	.4988-01	.5914-01	.6519-01	39.55	1.973	.3615	556.6	.1536-02
43	.60000	.20000	256.00	.1423-01	.1686-01	.1859-01	39.63	.5639	.3603	554.6	.4381-03
43	.60000	.40000	257.00	.1905-01	.2257-01	.2487-01	39.69	.7559	.3594	553.3	.5864-03
43	.60000	.60000	258.00	.2241-01	.2655-01	.2925-01	39.72	.8901	.3589	552.5	.6898-03
43	.60000	.75000	259.00	.2263-01	.2681-01	.2954-01	39.72	.8986	.3590	552.6	.6965-03
43	.60000	.85000	260.00	.2707-01	.3208-01	.3534-01	39.72	1.075	.3589	552.6	.8334-03
43	.60000	.95000	261.00	.2300-01	.2725-01	.3003-01	39.68	.9125	.3596	553.5	.7081-03
43	.70000	.90000	264.00	.2391-01	.2832-01	.3119-01	39.79	.9514	.3578	550.8	.7358-03
43	.75000	.80000	269.00	.3172-01	.3757-01	.4138-01	39.80	1.262	.3577	550.6	.9761-03
43	.75000	.90000	270.00	.3403-01	.4031-01	.4441-01	39.77	1.353	.3582	551.4	.1048-02
43	.80000	.90000	271.00	.3579-01	.4238-01	.4669-01	39.77	1.423	.3581	551.3	.1101-02
43	.90000	.60000	274.00	.2658-01	.3149-01	.3469-01	39.78	1.058	.3580	551.1	.8182-03
43	.95000	.40000	276.00	.2008-01	.2379-01	.2622-01	39.67	.7964	.3597	553.8	.6182-03
43	.95000	.50000	277.00	.1698-01	.2012-01	.2216-01	39.78	.6756	.3579	551.0	.5227-03
43	.95000	.70000	278.00	.1776-01	.2103-01	.2317-01	39.78	.7065	.3580	551.1	.5466-03
43	.95000	.80000	279.00	.2269-01	.2688-01	.2962-01	39.75	.9021	.3584	551.7	.6985-03
43	.95000	.90000	280.00	.2347-01	.2781-01	.3065-01	39.72	.9324	.3589	552.6	.7227-03

IH103 60-OT WING UPPER SURFACE

WING UPPER SURF

(R3PR16)

PARAMETRIC DATA

MACH = 5.250 ALPHA = 10.00 BETA = -9.000 ELEVON = .0000
BDFLAP = .0000 SPDBRK = .0000

TEST CONDITIONS

RUN NUMBER	ALPHA DEG.	BETA DEG.	MACH	RN/FT /FT X10 6	PT PSIA	TT DEG. R	HT BTU/ LBM	PINF PSIA	TINF DEG. R	RHO SLUGS/ FT3	VINF FT/SEC	SCALE
44	10.00	-9.000	5.250	1.040	101.3	1480.	364.3	.1399	233.1	.5034-04	3929.	.1750-01

RUN NUMBER	PHI DEG.	HS SPHERE TW=540
44	.0000	.1658

TEST DATA

RUN NUMBER	2Y/BW	XW/CW	T/C NO	H/HREF R=1.0	H/HREF R=.900	H/HREF R=.850	QREF BTU/ FT2SEC	QDOT BTU/ FT2SEC	HW/HT	TW DEG. R	STN NO R=.900
44	.40000	.80000	251.00	.9956-02	.1182-01	.1304-01	38.32	.3815	.3653	554.7	.3078-03
44	.40000	.95000	252.00	.2613-01	.3102-01	.3423-01	38.28	1.000	.3660	555.7	.8079-03
44	.60000	.25000-01	253.00	.6504-01	.7732-01	.8538-01	38.01	2.472	.3702	562.2	.2013-02
44	.60000	.50000-01	254.00	.5259-01	.6251-01	.6902-01	38.04	2.001	.3697	561.4	.1628-02
44	.60000	.10000+00	255.00	.3786-01	.4498-01	.4966-01	38.10	1.442	.3688	560.0	.1171-02
44	.60000	.20000	256.00	.1446-01	.1717-01	.1895-01	38.18	.5519	.3676	558.1	.4471-03
44	.60000	.40000	257.00	.1407-01	.1670-01	.1843-01	38.23	.5377	.3667	556.8	.4350-03
44	.60000	.60000	258.00	.1187-01	.1409-01	.1554-01	38.27	.4542	.3660	555.8	.3669-03
44	.60000	.75000	259.00	.1062-01	.1261-01	.1391-01	38.27	.4063	.3661	555.8	.3283-03
44	.60000	.85000	260.00	.1790-01	.2126-01	.2345-01	38.28	.6854	.3659	555.6	.5535-03
44	.60000	.95000	261.00	.1889-01	.2243-01	.2475-01	38.24	.7225	.3665	556.5	.5842-03
44	.70000	.90000	264.00	.1076-01	.1277-01	.1409-01	38.39	.4132	.3641	552.9	.3327-03
44	.75000	.80000	269.00	.1158-01	.1374-01	.1515-01	38.40	.4447	.3640	552.6	.3579-03
44	.75000	.90000	270.00	.1452-01	.1723-01	.1900-01	38.37	.5570	.3646	553.6	.4487-03
44	.80000	.90000	271.00	.1397-01	.1657-01	.1828-01	38.38	.5360	.3644	553.3	.4317-03
44	.90000	.60000	274.00	.1101-01	.1306-01	.1441-01	38.40	.4227	.3641	552.8	.3402-03
44	.95000	.40000	276.00	.3741-01	.4441-01	.4900-01	38.28	1.432	.3659	555.6	.1157-02
44	.95000	.50000	277.00	.1298-01	.1540-01	.1699-01	38.40	.4985	.3641	552.8	.4012-03
44	.95000	.70000	278.00	.6513-02	.7729-02	.8525-02	38.39	.2500	.3642	553.1	.2013-03
44	.95000	.80000	279.00	.1043-01	.1238-01	.1366-01	38.36	.4002	.3647	553.7	.3225-03
44	.95000	.90000	280.00	.1302-01	.1545-01	.1705-01	38.33	.4990	.3652	554.5	.4024-03

IH103 60-OT WING UPPER SURFACE (R3PR17)

WING UPPER SURF

PARAMETRIC DATA

MACH = 5.250 ALPHA = -10.00 BETA = -9.000 ELEVON = .0000
BDFLAP = .0000 SPDBRK = .0000

TEST CONDITIONS

RUN NUMBER	ALPHA DEG.	BETA DEG.	MACH	RN/FT /FT X10 6	PT PSIA	TT DEG. R	HT BTU/ LBM	PINF PSIA	TINF DEG. R	RHO SLUGS/ FT3	VINF FT/SEC	SCALE
107	-10.00	-9.000	5.250	1.083	103.6	1464.	360.0	.1432	230.4	.5214-04	3906.	.1750-01

RUN NUMBER	PHI DEG.	HS SPHERE TW=540
107	.0000	.1676

TEST DATA

RUN NUMBER	2Y/BW	XW/CW	T/C NO	H/HREF R=1.0	H/HREF R=.900	H/HREF R=.850	QREF BTU/ FT2SEC	QDOT BTU/ FT2SEC	HW/HT	TW DEG. R	STN NO R=.900
107	.40000	.80000	251.00	.1240-01	.1476-01	.1631-01	37.68	.4671	.3749	562.6	.3770-03
107	.40000	.95000	252.00	.3617-01	.4306-01	.4760-01	37.64	1.361	.3756	563.6	.1100-02
107	.60000	.25000-01	253.00	.1149	.1369	.1514	37.45	4.301	.3787	568.2	.3497-02
107	.60000	.50000-01	254.00	.1023	.1219	.1348	37.46	3.831	.3784	567.8	.3113-02
107	.60000	.10000+00	255.00	.8263-01	.9845-01	.1089	37.50	3.098	.3778	566.9	.2515-02
107	.60000	.20000	256.00	.3465-01	.4127-01	.4563-01	37.57	1.302	.3767	565.2	.1054-02
107	.60000	.40000	257.00	.1368-01	.1629-01	.1801-01	37.61	.5146	.3760	564.2	.4163-03
107	.60000	.60000	258.00	.5064-02	.6030-02	.6665-02	37.64	.1906	.3756	563.6	.1540-03
107	.60000	.75000	259.00	.1546-02	.1839-02	.2033-02	37.73	.5831-01	.3741	561.4	.4700-04
107	.60000	.85000	260.00	.3989-02	.4750-02	.5250-02	37.66	.1502	.3753	563.1	.1213-03
107	.60000	.95000	261.00	.5933-02	.7065-02	.7810-02	37.61	.2231	.3760	564.2	.1805-03
107	.70000	.90000	264.00	.3849-02	.4580-02	.5060-02	37.81	.1455	.3729	559.5	.1170-03
107	.75000	.80000	269.00	.9237-02	.1099-01	.1214-01	37.81	.3493	.3728	559.4	.2808-03
107	.75000	.90000	270.00	.9007-02	.1072-01	.1184-01	37.78	.3403	.3734	560.2	.2738-03
107	.80000	.90000	271.00	.1258-01	.1497-01	.1654-01	37.79	.4754	.3731	559.9	.3824-03
107	.90000	.60000	274.00	.2636-01	.3137-01	.3466-01	37.78	.9961	.3733	560.1	.8015-03
107	.95000	.40000	276.00	.4626-01	.5506-01	.6086-01	37.68	1.743	.3749	562.6	.1407-02
107	.95000	.50000	277.00	.3228-01	.3841-01	.4243-01	37.80	1.220	.3730	559.7	.9814-03
107	.95000	.70000	278.00	.2652-01	.3155-01	.3485-01	37.80	1.002	.3730	559.7	.8061-03
107	.95000	.80000	279.00	.2807-01	.3340-01	.3691-01	37.78	1.060	.3734	560.3	.8535-03
107	.95000	.90000	280.00	.2452-01	.2918-01	.3224-01	37.74	.9251	.3740	561.3	.7455-03

IH103 60-OT WING UPPER SURFACE (R3PR18)

WING UPPER SURF

PARAMETRIC DATA

MACH = 5.250 ALPHA = -10.00 BETA = -3.000 ELEVON = .0000
BDFLAP = .0000 SPDBRK = .0000

TEST CONDITIONS

RUN NUMBER	ALPHA DEG.	BETA DEG.	MACH	RN/FT /FT X10 6	PT PSIA	TT DEG. R	HT BTU/ LBM	PINF PSIA	TINF DEG. R	RHO SLUGS/ FT3	VINF FT/SEC	SCALE
114	-10.00	-3.000	5.250	1.078	103.6	1468.	361.0	.1430	231.1	.5194-04	3911.	.1750-01

RUN NUMBER	PHI DEG.	HS SPHERE TW=540
114	.0000	.1675

TEST DATA

RUN NUMBER	2Y/BW	XW/CW	T/C NO	H/HREF R=1.0	H/HREF R=.900	H/HREF R=.850	QREF BTU/ FT2SEC	QDOT BTU/ FT2SEC	HW/HT	TW DEG. R	STN NO R=.900
114	.40000	.80000	251.00	.5727-02	.6799-02	.7500-02	38.35	.2196	.3657	550.3	.1742-03
114	.40000	.95000	252.00	.4286-01	.5090-01	.5616-01	38.30	1.641	.3666	551.6	.1304-02
114	.60000	.25000-01	253.00	.1332	.1593	.1748	38.08	5.070	.3701	556.8	.4054-02
114	.60000	.50000-01	254.00	.1212	.1441	.1591	38.11	4.619	.3696	556.2	.3690-02
114	.60000	.10000+00	255.00	.1012	.1203	.1328	38.15	3.862	.3689	555.1	.3081-02
114	.60000	.20000	256.00	.4421-01	.5251-01	.5795-01	38.23	1.690	.3676	553.1	.1345-02
114	.60000	.40000	257.00	.1930-01	.2292-01	.2529-01	38.29	.7390	.3667	551.8	.5871-03
114	.60000	.60000	258.00	.1210-01	.1437-01	.1586-01	38.32	.4638	.3662	551.1	.3682-03
114	.60000	.75000	259.00	.8650-02	.1027-01	.1133-01	38.32	.3315	.3662	551.0	.2631-03
114	.60000	.85000	260.00	.6838-02	.8119-02	.8959-02	38.30	.2619	.3665	551.5	.2080-03
114	.60000	.95000	261.00	.4726-02	.5613-02	.6195-02	38.24	.1807	.3675	553.0	.1438-03
114	.70000	.90000	264.00	.9923-02	.1178-01	.1300-01	38.36	.3806	.3656	550.2	.3018-03
114	.75000	.80000	269.00	.1209-01	.1436-01	.1584-01	38.38	.4642	.3652	549.6	.3678-03
114	.75000	.90000	270.00	.1252-01	.1486-01	.1640-01	38.32	.4797	.3662	551.0	.3808-03
114	.80000	.90000	271.00	.1581-01	.1877-01	.2071-01	38.33	.6060	.3661	550.9	.4809-03
114	.90000	.60000	274.00	.3039-01	.3607-01	.3979-01	38.37	1.166	.3654	549.8	.9241-03
114	.95000	.40000	276.00	.5949-01	.7065-01	.7797-01	38.25	2.276	.3673	552.6	.1810-02
114	.95000	.50000	277.00	.3969-01	.4712-01	.5199-01	38.36	1.522	.3657	550.2	.1207-02
114	.95000	.70000	278.00	.3177-01	.3772-01	.4161-01	38.34	1.218	.3660	550.7	.9662-03
114	.95000	.80000	279.00	.3289-01	.3905-01	.4309-01	38.31	1.260	.3664	551.4	.1001-02
114	.95000	.90000	280.00	.2926-01	.3475-01	.3835-01	38.27	1.120	.3670	552.3	.8903-03

IH103 60-OT WING UPPER SURFACE (R3PR19)

WING UPPER SURF

PARAMETRIC DATA

MACH = 5.250 ALPHA = -10.00 BETA = -5.000 ELEVON = .0000
BDFLAP = .0000 SPDBRK = .0000

TEST CONDITIONS

RUN NUMBER	ALPHA DEG.	BETA DEG.	MACH	RN/FT /FT X10 6	PT PSIA	TT DEG. R	HT BTU/ LBM	PINF PSIA	TINF DEG. R	RHO SLUGS/ FT3	VINF FT/SEC	SCALE
117	-10.00	-5.000	5.250	1.076	103.9	1472.	362.2	.1434	231.8	.5192-04	3918.	.1750-01

RUN NUMBER	PHI DEG.	HS SPHERE TW=540
117	.0000	.1678

TEST DATA

RUN NUMBER	2Y/BW	XW/CW	T/C NO	H/HREF R=1.0	H/HREF R=.900	H/HREF R=.850	QREF BTU/ FT2SEC	QDOT BTU/ FT2SEC	HW/HT	TW DEG. R	STN NO R=.900
117	.40000	.80000	251.00	.1375-01	.1632-01	.1800-01	38.56	.5301	.3652	551.3	.4183-03
117	.40000	.95000	252.00	.4216-01	.5006-01	.5523-01	38.53	1.624	.3658	552.2	.1283-02
117	.60000	.25000-01	253.00	.1324	.1573	.1737	38.26	5.064	.3700	558.5	.4032-02
117	.60000	.50000-01	254.00	.1244	.1478	.1632	38.28	4.761	.3697	558.0	.3788-02
117	.60000	.10000+00	255.00	.1051	.1249	.1378	38.33	4.027	.3689	556.8	.3200-02
117	.60000	.20000	256.00	.4510-01	.5357-01	.5913-01	38.42	1.733	.3675	554.7	.1373-02
117	.60000	.40000	257.00	.1747-01	.2074-01	.2288-01	38.48	.6721	.3665	553.3	.5316-03
117	.60000	.60000	258.00	.9485-02	.1126-01	.1242-01	38.51	.3653	.3660	552.4	.2886-03
117	.60000	.75000	259.00	.4993-02	.5923-02	.6531-02	38.70	.1932	.3630	547.9	.1518-03
117	.60000	.85000	260.00	.2814-02	.3341-02	.3685-02	38.53	.1084	.3657	552.1	.8562-04
117	.60000	.95000	261.00	.4222-02	.5013-02	.5531-02	38.48	.1625	.3665	553.1	.1285-03
117	.70000	.90000	264.00	.9403-02	.1116-01	.1230-01	38.66	.3635	.3637	549.1	.2860-03
117	.75000	.80000	269.00	.1302-01	.1545-01	.1704-01	38.64	.5032	.3640	549.4	.3961-03
117	.75000	.90000	270.00	.1279-01	.1518-01	.1674-01	38.62	.4940	.3643	549.9	.3891-03
117	.80000	.90000	271.00	.1568-01	.1861-01	.2052-01	38.64	.6059	.3641	549.5	.4771-03
117	.90000	.60000	274.00	.2827-01	.3355-01	.3700-01	38.60	1.091	.3646	550.4	.8599-03
117	.95000	.40000	276.00	.5507-01	.6539-01	.7215-01	38.49	2.120	.3663	552.9	.1676-02
117	.95000	.50000	277.00	.3839-01	.4556-01	.5025-01	38.61	1.482	.3645	550.1	.1168-02
117	.95000	.70000	278.00	.3177-01	.3770-01	.4158-01	38.62	1.227	.3643	550.0	.9665-03
117	.95000	.80000	279.00	.3211-01	.3810-01	.4203-01	38.59	1.239	.3648	550.6	.9767-03
117	.95000	.90000	280.00	.2866-01	.3403-01	.3754-01	38.56	1.105	.3653	551.4	.8722-03

IH103 60-OT WING UPPER SURFACE (R3PR20)

WING UPPER SURF

PARAMETRIC DATA

MACH = 5.250 ALPHA = -10.00 BETA = .0000 ELEVON = .0000
BDFLAP = .0000 SPDBRK = .0000

TEST CONDITIONS

RUN NUMBER	ALPHA DEG.	BETA DEG.	MACH	RN/FT /FT X10 6	PT PSIA	TT DEG. R	HT BTU/ LBM	PINF PSIA	TINF DEG. R	RHO SLUGS/ FT3	VINF FT/SEC	SCALE
124	-10.00	.0000	5.250	1.031	103.1	1504.	370.6	.1420	237.2	.5026-04	3963.	.1750-01

RUN NUMBER	PHI DEG.	HS SPHERE TW=540
124	.0000	.1674

TEST DATA

RUN NUMBER	2Y/BW	XW/CW	T/C NO	H/HREF R=1.0	H/HREF R=.900	H/HREF R=.850	QREF BTU/ FT2SEC	QDOT BTU/ FT2SEC	HW/HT	TW DEG. R	STN NO R=.900
124	.40000	.80000	251.00	.1649-02	.1952-02	.2150-02	39.91	.6580-01	.3564	550.5	.5098-04
124	.40000	.95000	252.00	.2177-01	.2579-01	.2841-01	39.83	.8672	.3576	552.4	.6733-03
124	.60000	.25000-01	253.00	.1510	.1791	.1974	39.59	5.979	.3613	558.1	.4674-02
124	.60000	.50000-01	254.00	.1358	.1610	.1775	39.62	5.381	.3609	557.4	.4203-02
124	.60000	.10000+00	255.00	.1137	.1348	.1485	39.68	4.512	.3599	555.9	.3518-02
124	.60000	.20000	256.00	.5011-01	.5936-01	.6540-01	39.78	1.993	.3584	553.6	.1550-02
124	.60000	.40000	257.00	.2041-01	.2417-01	.2663-01	39.85	.8136	.3572	551.8	.6312-03
124	.60000	.60000	258.00	.1144-01	.1355-01	.1492-01	39.87	.4562	.3570	551.4	.3538-03
124	.60000	.75000	259.00	.8892-02	.1053-01	.1160-01	39.90	.3548	.3565	550.6	.2749-03
124	.60000	.85000	260.00	.1137-01	.1347-01	.1484-01	39.83	.4530	.3576	552.3	.3516-03
124	.60000	.95000	261.00	.1403-01	.1663-01	.1832-01	39.75	.5577	.3589	554.4	.4340-03
124	.70000	.90000	264.00	.1399-01	.1656-01	.1824-01	39.87	.5577	.3570	551.3	.4324-03
124	.75000	.80000	269.00	.1654-01	.1959-01	.2157-01	39.93	.6606	.3561	549.9	.5114-03
124	.75000	.90000	270.00	.1705-01	.2020-01	.2225-01	39.83	.6793	.3576	552.3	.5273-03
124	.80000	.90000	271.00	.2032-01	.2406-01	.2650-01	39.84	.8095	.3574	552.0	.6282-03
124	.90000	.60000	274.00	.3427-01	.4059-01	.4471-01	39.85	1.366	.3572	551.8	.1060-02
124	.95000	.40000	276.00	.6532-01	.7740-01	.8529-01	39.72	2.594	.3594	555.1	.2021-02
124	.95000	.50000	277.00	.4389-01	.5198-01	.5726-01	39.84	1.749	.3574	552.0	.1357-02
124	.95000	.70000	278.00	.3857-01	.4568-01	.5032-01	39.85	1.537	.3574	552.0	.1193-02
124	.95000	.80000	279.00	.3935-01	.4660-01	.5134-01	39.81	1.566	.3580	552.9	.1217-02
124	.95000	.90000	280.00	.3469-01	.4109-01	.4527-01	39.76	1.379	.3587	554.0	.1073-02

IH103 60-OT WING UPPER SURFACE (R3PR21)

WING UPPER SURF

PARAMETRIC DATA

MACH = 5.250 ALPHA = .0000 BETA = .0000 ELEVON = .0000
BDFLAP = .0000 SPDBRK = .0000

TEST CONDITIONS

RUN NUMBER	ALPHA DEG.	BETA DEG.	MACH	RN/FT /FT X10 6	PT PSIA	TT DEG. R	HT BTU/ LBM	PINF PSIA	TINF DEG. R	RHO SLUGS/ FT3	VINF FT/SEC	SCALE
128	.0000	.0000	5.250	.6494	103.9	1998.	503.7	.1372	322.4	.3570-04	4620.	.1750-01

RUN NUMBER	PHI DEG.	HS SPHERE TW=540
128	.0000	.1691

TEST DATA

RUN NUMBER	2Y/BW	XW/CW	T/C NO	H/HREF R=1.0	H/HREF R=.900	H/HREF R=.850	QREF BTU/ FT2SEC	QDOT BTU/ FT2SEC	HW/HT	TW DEG. R	STN NO R=.900
128	.40000	.95000	252.00	.5385-02	.6229-02	.6758-02	62.84	.3384	.2621	550.2	.1984-03
128	.60000	.25000-01	253.00	.1450	.1678	.1822	62.51	9.063	.2657	557.8	.5345-02
128	.60000	.50000-01	254.00	.1184	.1370	.1487	62.57	7.407	.2650	556.4	.4363-02
128	.60000	.10000+00	255.00	.8714-01	.1008	.1095	62.66	5.461	.2641	554.4	.3212-02
128	.60000	.20000	256.00	.3532-01	.4086-01	.4434-01	62.79	2.218	.2627	551.5	.1302-02
128	.60000	.40000	257.00	.1684-01	.1948-01	.2114-01	62.86	1.059	.2619	549.8	.6206-03
128	.60000	.60000	258.00	.9907-02	.1146-01	.1243-01	62.88	.6230	.2616	549.3	.3651-03
128	.60000	.85000	260.00	.3587-02	.4149-02	.4502-02	62.87	.2255	.2618	549.7	.1322-03
128	.60000	.95000	261.00	.2403-02	.2780-02	.3017-02	62.77	.1508	.2629	551.9	.8856-04
128	.70000	.90000	264.00	.3897-02	.4507-02	.4890-02	62.93	.2453	.2611	548.2	.1436-03
128	.75000	.80000	269.00	.7446-02	.8611-02	.9341-02	62.95	.4687	.2608	547.6	.2743-03
128	.75000	.90000	270.00	.8732-02	.1010-01	.1096-01	62.88	.5491	.2616	549.3	.3218-03
128	.80000	.90000	271.00	.9946-02	.1150-01	.1248-01	62.88	.6255	.2616	549.2	.3665-03
128	.90000	.60000	274.00	.2468-01	.2854-01	.3096-01	62.93	1.553	.2611	548.2	.9092-03
128	.95000	.40000	276.00	.6427-01	.7437-01	.8071-01	62.71	4.030	.2636	553.3	.2369-02
128	.95000	.50000	277.00	.3315-01	.3834-01	.4160-01	62.84	2.083	.2621	550.2	.1221-02
128	.95000	.70000	278.00	.1486-01	.1719-01	.1865-01	62.89	.9347	.2615	549.1	.5476-03
128	.95000	.80000	279.00	.1723-01	.1993-01	.2162-01	62.84	1.083	.2621	550.2	.6349-03
128	.95000	.90000	280.00	.1660-01	.1920-01	.2084-01	62.77	1.042	.2628	551.8	.6116-03

IH103 60-OT OMS POD

(R3PS01)

OMS POD

PARAMETRIC DATA

MACH = 5.250 ALPHA = .0000 BETA = .0000 ELEVON = .0000
BDFLAP = .0000 SPDBRK = .0000

TEST CONDITIONS

RUN NUMBER	ALPHA DEG.	BETA DEG.	MACH	RN/FT /FT X10 6	PT PSIA	TT DEG. R	HT BTU/ LBM	PINF PSIA	TINF DEG. R	RHO SLUGS/ FT3	VINF FT/SEC	SCALE
25	.0000	.0000	5.250	.9655	100.4	1541.	380.2	.1379	243.3	.4756-04	4014.	.1750-01
61	.0000	.0000	5.250	1.040	103.5	1499.	369.3	.1426	236.3	.5062-04	3956.	.1750-01

RUN NUMBER	PHI DEG.	HS SPHERE TW=540
25	.0000	.1654
61	.0000	.1677

TEST DATA

RUN NUMBER	XO	ZO	T/C NO	H/HREF R=1.0	H/HREF R=.900	H/HREF R=.850	QREF BTU/ FT2SEC	QDOT BTU/ FT2SEC	HW/HT	TW DEG. R	STN NO R=.900
25	1325.0	428.60	298.00	.4319-01	.5096-01	.5600-01	41.22	1.780	.3443	545.6	.1371-02
25	1325.0	489.20	299.00	.1947	.2297	.2525	41.17	8.014	.3450	546.8	.6182-02
25	1325.0	506.70	301.00	.2132	.2516	.2765	41.16	8.774	.3452	547.1	.6771-02
25	1350.0	440.40	302.00	.8442-01	.9965-01	.1095	41.11	3.470	.3459	548.2	.2682-02
25	1350.0	498.50	304.00	.1693	.1998	.2196	41.11	6.958	.3460	548.3	.5377-02
25	1350.0	515.50	306.00	.1404	.1657	.1821	41.13	5.774	.3457	547.8	.4460-02
25	1375.0	421.60	308.00	.3157-01	.3726-01	.4095-01	41.16	1.299	.3451	547.0	.1003-02
25	1375.0	440.00	309.00	.7521-01	.8880-01	.9762-01	41.07	3.089	.3466	549.2	.2390-02
25	1375.0	460.00	310.00	.1202	.1419	.1560	41.04	4.933	.3470	549.9	.3819-02
25	1375.0	503.40	311.00	.1090	.1287	.1415	41.10	4.482	.3460	548.4	.3464-02
25	1375.0	531.00	312.00	.9198-01	.1086	.1194	41.10	3.781	.3461	548.5	.2922-02
25	1400.0	523.40	313.00	.9212-01	.1087	.1195	41.14	3.790	.3455	547.5	.2926-02
25	1425.0	415.10	315.00	.5137-01	.6063-01	.6664-01	41.14	2.114	.3454	547.4	.1632-02
25	1425.0	437.70	316.00	.5432-01	.6413-01	.7050-01	41.07	2.231	.3465	549.2	.1726-02
25	1425.0	466.30	317.00	.5394-01	.6368-01	.7000-01	41.08	2.216	.3465	549.1	.1714-02
25	1425.0	536.50	319.00	.6300-01	.7436-01	.8172-01	41.15	2.593	.3453	547.2	.2001-02
25	1450.0	418.20	320.00	.3582-01	.4228-01	.4647-01	41.14	1.474	.3454	547.5	.1138-02
25	1450.0	436.00	321.00	.4320-01	.5100-01	.5606-01	41.10	1.776	.3460	548.4	.1372-02
25	1450.0	468.20	322.00	.4000-01	.4722-01	.5191-01	41.10	1.644	.3462	548.6	.1271-02

IH103 60-OT OMS POD (R3PS01)

RUN NUMBER	XO	ZO	T/C NO	H/HREF R=1.0	H/HREF R=.900	H/HREF R=.850	QREF BTU/ FT2SEC	QDOT BTU/ FT2SEC	HW/HT	TW DEG. R	STN NO R=.900
25	1450.0	511.10	323.00	.6273-01	.7406-01	.8140-01	41.12	2.579	.3459	548.1	.1993-02
25	1450.0	526.60	325.00	.8232-01	.9715-01	.1068	41.18	3.390	.3449	546.5	.2614-02
25	1500.0	437.00	327.00	.2473-01	.2918-01	.3207-01	41.21	1.019	.3444	545.8	.7854-03
25	1500.0	532.30	331.00	.5392-01	.6363-01	.6992-01	41.20	2.222	.3446	546.1	.1712-02
25	1525.0	424.00	332.00	.4666-01	.5506-01	.6050-01	41.23	1.924	.3441	545.3	.1482-02
25	1525.0	431.00	333.00	.3551-01	.4190-01	.4604-01	41.20	1.463	.3445	546.0	.1128-02
25	1525.0	440.00	334.00	.2700-01	.3186-01	.3501-01	41.21	1.113	.3444	545.8	.8575-03
25	1525.0	493.00	335.00	.3190-01	.3764-01	.4136-01	41.21	1.314	.3445	545.9	.1013-02
61	1545.0	434.00	338.00	.3051-01	.3618-01	.3990-01	39.43	1.203	.3626	558.2	.9408-03
61	1545.0	443.00	339.00	.2524-01	.2994-01	.3301-01	39.46	.9961	.3622	557.5	.7784-03

IH103 60-OT OMS POD (R3PS02)

OMS POD

PARAMETRIC DATA

MACH = 5.250 ALPHA = -5.000 BETA = .0000 ELEVON = .0000
BDFLAP = .0000 SPDBRK = .0000

TEST CONDITIONS

RUN NUMBER	ALPHA DEG.	BETA DEG.	MACH	RN/FT /FT X10 6	PT PSIA	TT DEG. R	HT BTU/ LBM	PINF PSIA	TINF DEG. R	RHO SLUGS/ FT3	VINF FT/SEC	SCALE
26	-5.000	.0000	5.250	.9896	101.7	1530.	377.4	.1399	241.5	.4859-04	3999.	.1750-01
62	-5.000	.0000	5.250	1.040	103.4	1499.	369.2	.1425	236.3	.5060-04	3955.	.1750-01

RUN NUMBER	PHI DEG.	HS SPHERE TW=540
26	.0000	.1664
62	.0000	.1676

TEST DATA

RUN NUMBER	XO	ZO	T/C NO	H/HREF R=1.0	H/HREF R=.900	H/HREF R=.850	QREF BTU/ FT2SEC	QDOT BTU/ FT2SEC	HW/HT	TW DEG. R	STN NO R=.900
26	1325.0	428.60	298.00	.5319-01	.6283-01	.6909-01	40.92	2.177	.3481	547.5	.1672-02
26	1325.0	489.20	299.00	.4803	.5674	.6240	40.88	19.63	.3487	548.5	.1510-01
26	1325.0	506.70	301.00	.4068	.4806	.5286	40.84	16.61	.3494	549.5	.1279-01
26	1350.0	440.40	302.00	.7270-01	.8590-01	.9448-01	40.83	2.969	.3494	549.6	.2285-02
26	1350.0	458.60	303.00	.1660	.1961	.2157	40.81	6.774	.3498	550.1	.5218-02
26	1350.0	498.50	304.00	.1946	.2300	.2530	40.82	7.946	.3496	549.8	.6119-02
26	1350.0	515.50	306.00	.1753	.2072	.2279	40.81	7.154	.3498	550.2	.5511-02
26	1375.0	421.60	308.00	.3542-01	.4185-01	.4603-01	40.86	1.447	.3490	549.0	.1113-02
26	1375.0	440.00	309.00	.6986-01	.8256-01	.9082-01	40.79	2.850	.3501	550.6	.2196-02
26	1375.0	460.00	310.00	.1235	.1460	.1606	40.77	5.035	.3505	551.2	.3883-02
26	1375.0	503.40	311.00	.1160	.1371	.1508	40.83	4.736	.3495	549.7	.3646-02
26	1375.0	531.00	312.00	.8114-01	.9590-01	.1055	40.79	3.309	.3502	550.8	.2551-02
26	1400.0	523.40	313.00	.1069	.1264	.1390	40.83	4.366	.3495	549.7	.3361-02
26	1425.0	415.10	315.00	.6031-01	.7126-01	.7838-01	40.84	2.463	.3493	549.4	.1896-02
26	1425.0	437.70	316.00	.6015-01	.7109-01	.7820-01	40.80	2.454	.3500	550.5	.1891-02
26	1425.0	466.30	317.00	.6884-01	.8136-01	.8949-01	40.81	2.809	.3498	550.2	.2164-02
26	1425.0	536.50	319.00	.3698-01	.4370-01	.4806-01	40.85	1.511	.3493	549.3	.1162-02
26	1450.0	418.20	320.00	.4743-01	.5604-01	.6164-01	40.85	1.938	.3492	549.2	.1491-02
26	1450.0	436.00	321.00	.5144-01	.6078-01	.6686-01	40.82	2.100	.3496	549.9	.1617-02

IH103 60-OT OMS POD (R3PS02)

RUN NUMBER	XO	ZO	T/C NO	H/HREF R=1.0	H/HREF R=.900	H/HREF R=.850	QREF BTU/ FT2SEC	QDOT BTU/ FT2SEC	HW/HT	TW DEG. R	STN NO R=.900
26	1450.0	468.20	322.00	.5212-01	.6159-01	.6774-01	40.83	2.128	.3495	549.7	.1638-02
26	1450.0	511.10	323.00	.7096-01	.8385-01	.9222-01	40.85	2.899	.3492	549.3	.2231-02
26	1450.0	526.60	325.00	.9557-01	.1129	.1242	40.88	3.907	.3487	548.5	.3004-02
26	1500.0	437.00	327.00	.3506-01	.4141-01	.4554-01	40.93	1.435	.3480	547.3	.1102-02
26	1500.0	532.30	331.00	.6557-01	.7747-01	.8520-01	40.87	2.680	.3489	548.7	.2061-02
26	1525.0	424.00	332.00	.3219-01	.3803-01	.4182-01	40.91	1.317	.3483	547.9	.1012-02
26	1525.0	431.00	333.00	.2811-01	.3319-01	.3650-01	40.94	1.151	.3477	546.9	.8831-03
26	1525.0	440.00	334.00	.4459-01	.5266-01	.5791-01	40.94	1.825	.3479	547.2	.1401-02
26	1525.0	493.00	335.00	.4097-01	.4839-01	.5320-01	40.94	1.677	.3479	547.1	.1287-02
62	1545.0	434.00	338.00	.2084-01	.2474-01	.2729-01	39.21	.8171	.3656	562.5	.6431-03
62	1545.0	443.00	339.00	.3708-01	.4401-01	.4855-01	39.24	1.455	.3652	562.0	.1144-02

IH103 60-OT OMS POD (R3PS03)

OMS POD

PARAMETRIC DATA

MACH = 5.250 ALPHA = 5.000 BETA = .0000 ELEVON = .0000
BDFLAP = .0000 SPDBRK = .0000

TEST CONDITIONS

RUN NUMBER	ALPHA DEG.	BETA DEG.	MACH	RN/FT /FT X10 6	PT PSIA	TT DEG. R	HT BTU/ LBM	PINF PSIA	TINF DEG. R	RHO SLUGS/ FT3	VINF FT/SEC	SCALE
27	5.000	.0000	5.250	.9966	101.6	1522.	375.4	.1398	240.2	.4883-04	3988.	.1750-01
63	5.000	.0000	5.250	1.039	103.3	1499.	369.3	.1423	236.4	.5054-04	3956.	.1750-01

RUN NUMBER	PHI DEG.	HS SPHERE TW=540
27	.0000	.1663
63	.0000	.1675

TEST DATA

RUN NUMBER	XO	ZO	T/C NO	H/HREF R=1.0	H/HREF R=.900	H/HREF R=.850	QREF BTU/ FT2SEC	QDOT BTU/ FT2SEC	HW/HT	TW DEG. R	STN NO R=.900
27	1325.0	428.60	298.00	.4320-01	.5101-01	.5609-01	40.72	1.759	.3474	543.4	.1353-02
27	1325.0	489.20	299.00	.2085	.2462	.2708	40.65	8.474	.3484	545.0	.6533-02
27	1325.0	506.70	301.00	.1142	.1349	.1483	40.62	4.636	.3490	545.9	.3578-02
27	1350.0	440.40	302.00	.6455-01	.7627-01	.8388-01	40.61	2.621	.3491	546.1	.2023-02
27	1350.0	458.60	303.00	.1376	.1626	.1789	40.58	5.585	.3496	546.8	.4315-02
27	1350.0	498.50	304.00	.1610	.1903	.2093	40.58	6.535	.3495	546.7	.5048-02
27	1350.0	515.50	306.00	.1139	.1346	.1481	40.58	4.623	.3496	546.8	.3572-02
27	1375.0	421.60	308.00	.3143-01	.3712-01	.4082-01	40.66	1.278	.3483	544.8	.9849-03
27	1375.0	440.00	309.00	.5484-01	.6480-01	.7128-01	40.56	2.224	.3498	547.2	.1719-02
27	1375.0	460.00	310.00	.9511-01	.1124	.1237	40.53	3.855	.3503	548.0	.2982-02
27	1375.0	503.40	311.00	.8294-01	.9800-01	.1078	40.60	3.367	.3493	546.4	.2600-02
27	1400.0	523.40	313.00	.6439-01	.7608-01	.8368-01	40.59	2.613	.3494	546.6	.2018-02
27	1425.0	415.10	315.00	.4721-01	.5577-01	.6134-01	40.62	1.918	.3489	545.7	.1480-02
27	1425.0	437.70	316.00	.4378-01	.5174-01	.5692-01	40.55	1.775	.3500	547.5	.1373-02
27	1425.0	466.30	317.00	.5230-01	.6181-01	.6799-01	40.55	2.121	.3500	547.5	.1640-02
27	1425.0	536.50	319.00	.3221-01	.3806-01	.4186-01	40.61	1.308	.3491	546.1	.1010-02
27	1450.0	418.20	320.00	.3189-01	.3768-01	.4144-01	40.62	1.296	.3489	545.7	.9996-03
27	1450.0	436.00	321.00	.3526-01	.4166-01	.4583-01	40.58	1.431	.3496	546.8	.1105-02
27	1450.0	468.20	322.00	.4030-01	.4763-01	.5239-01	40.57	1.635	.3497	547.1	.1263-02

IH103 60-OT OMS POD (R3PS03)

RUN NUMBER	XO	ZO	T/C NO	H/HREF R=1.0	H/HREF R=.900	H/HREF R=.850	QREF BTU/ FT2SEC	QDOT BTU/ FT2SEC	HW/HT	TW DEG. R	STN NO R=.900
27	1450.0	511.10	323.00	.4070-01	.4809-01	.5289-01	40.59	1.652	.3493	546.4	.1276-02
27	1450.0	526.60	325.00	.5964-01	.7046-01	.7749-01	40.63	2.423	.3488	545.7	.1869-02
27	1500.0	437.00	327.00	.2292-01	.2708-01	.2978-01	40.65	.9318	.3485	545.2	.7185-03
27	1500.0	532.30	331.00	.4434-01	.5239-01	.5762-01	40.59	1.800	.3493	546.5	.1390-02
27	1525.0	424.00	332.00	.4501-01	.5318-01	.5848-01	40.64	1.829	.3487	545.4	.1411-02
27	1525.0	431.00	333.00	.3307-01	.3907-01	.4297-01	40.65	1.344	.3485	545.1	.1037-02
27	1525.0	440.00	334.00	.2975-01	.3515-01	.3865-01	40.65	1.209	.3485	545.2	.9324-03
27	1525.0	493.00	335.00	.2754-01	.3253-01	.3578-01	40.64	1.119	.3487	545.4	.8630-03
63	1545.0	434.00	338.00	.3038-01	.3602-01	.3971-01	39.48	1.200	.3614	556.3	.9374-03
63	1545.0	443.00	339.00	.3011-01	.3569-01	.3934-01	39.51	1.190	.3610	555.7	.9289-03

IH103 60-OT OMS POD (R3PS04)

OMS POD

PARAMETRIC DATA

MACH = 5.250 ALPHA = 10.00 BETA = .0000 ELEVON = .0000
BDFLAP = .0000 SPDBRK = .0000

TEST CONDITIONS

RUN NUMBER	ALPHA DEG.	BETA DEG.	MACH	RN/FT /FT X10 6	PT PSIA	TT DEG. R	HT BTU/ LBM	PINF PSIA	TINF DEG. R	RHO SLUGS/ FT3	VINF FT/SEC	SCALE
28	10.00	.0000	5.250	1.037	104.9	1515.	373.4	.1444	239.0	.5070-04	3978.	.1750-01
64	10.00	.0000	5.250	.9958	103.5	1541.	380.2	.1422	243.3	.4905-04	4014.	.1750-01

RUN NUMBER	PHI DEG.	HS SPHERE TW=540
28	.0000	.1689
64	.0000	.1679

TEST DATA

RUN NUMBER	XO	ZO	T/C NO	H/HREF R=1.0	H/HREF R=.900	H/HREF R=.850	QREF BTU/ FT2SEC	QDOT BTU/ FT2SEC	HW/HT	TW DEG. R	STN NO R=.900
28	1325.0	428.60	298.00	.3061-01	.3620-01	.3983-01	40.86	1.251	.3519	547.7	.9418-03
28	1325.0	489.20	299.00	.4365-01	.5162-01	.5681-01	40.82	1.782	.3526	548.7	.1343-02
28	1325.0	506.70	301.00	.6366-01	.7529-01	.8287-01	40.80	2.597	.3529	549.2	.1959-02
28	1350.0	440.40	302.00	.1107	.1310	.1442	40.75	4.513	.3536	550.3	.3408-02
28	1350.0	458.60	303.00	.1201	.1421	.1564	40.73	4.890	.3540	550.9	.3696-02
28	1350.0	498.50	304.00	.7630-01	.9026-01	.9935-01	40.76	3.110	.3535	550.2	.2348-02
28	1350.0	515.50	306.00	.6275-01	.7423-01	.8171-01	40.76	2.558	.3534	550.0	.1931-02
28	1375.0	421.60	308.00	.3936-01	.4655-01	.5124-01	40.80	1.606	.3529	549.3	.1211-02
28	1375.0	440.00	309.00	.8289-01	.9809-01	.1080	40.70	3.374	.3544	551.6	.2552-02
28	1375.0	460.00	310.00	.8742-01	.1034	.1139	40.68	3.556	.3546	552.0	.2691-02
28	1375.0	503.40	311.00	.4916-01	.5815-01	.6400-01	40.77	2.004	.3533	549.9	.1513-02
28	1400.0	523.40	313.00	.4559-01	.5393-01	.5935-01	40.78	1.859	.3531	549.6	.1403-02
28	1425.0	415.10	315.00	.7439-01	.8801-01	.9687-01	40.76	3.032	.3535	550.2	.2290-02
28	1425.0	437.70	316.00	.5494-01	.6501-01	.7156-01	40.71	2.237	.3542	551.2	.1691-02
28	1425.0	466.30	317.00	.4860-01	.5750-01	.6329-01	40.74	1.980	.3538	550.7	.1496-02
28	1425.0	536.50	319.00	.2880-01	.3406-01	.3749-01	40.79	1.175	.3530	549.4	.8862-03
28	1450.0	418.20	320.00	.6167-01	.7295-01	.8029-01	40.77	2.515	.3533	549.8	.1898-02
28	1450.0	436.00	321.00	.4674-01	.5530-01	.6087-01	40.75	1.905	.3536	550.3	.1439-02
28	1450.0	468.20	322.00	.3704-01	.4381-01	.4823-01	40.76	1.509	.3535	550.2	.1140-02

IH103 60-OT OMS POD (R3PS04)

RUN NUMBER	XO	ZO	T/C NO	H/HREF R=1.0	H/HREF R=.900	H/HREF R=.850	QREF BTU/ FT2SEC	QDOT BTU/ FT2SEC	HW/HT	TW DEG. R	STN NO R=.900
28	1450.0	511.10	323.00	.1995-01	.2361-01	.2598-01	40.77	.8135	.3534	549.9	.6141-03
28	1450.0	526.60	325.00	.4488-01	.5307-01	.5841-01	40.82	1.832	.3526	548.8	.1381-02
28	1500.0	437.00	327.00	.2768-01	.3273-01	.3601-01	40.89	1.132	.3515	547.1	.8517-03
28	1500.0	532.30	331.00	.3065-01	.3625-01	.3989-01	40.83	1.252	.3524	548.5	.9432-03
28	1525.0	424.00	332.00	.3075-01	.3636-01	.4000-01	40.90	1.258	.3514	546.9	.9461-03
28	1525.0	431.00	333.00	.2855-01	.3375-01	.3714-01	40.89	1.167	.3515	547.1	.8782-03
28	1525.0	440.00	334.00	.3024-01	.3575-01	.3934-01	40.89	1.236	.3516	547.2	.9302-03
28	1525.0	493.00	335.00	.1833-01	.2167-01	.2385-01	40.89	.7496	.3515	547.1	.5639-03
64	1545.0	434.00	338.00	.1904-01	.2245-01	.2467-01	41.94	.7983	.3431	543.7	.5951-03
64	1545.0	443.00	339.00	.2619-01	.3324-01	.3652-01	41.96	1.183	.3428	543.2	.8811-03

IH103 60-OT OMS POD (R3PS05)

OMS POD

PARAMETRIC DATA

MACH = 5.250 ALPHA = .0000 BETA = -5.000 ELEVON = .0000
BDFLAP = .0000 SPDBRK = .0000

TEST CONDITIONS

RUN NUMBER	ALPHA DEG.	BETA DEG.	MACH	RN/FT /FT X10 6	PT PSIA	TT DEG. R	HT BTU/ LBM	PINF PSIA	TINF DEG. R	RHO SLUGS/ FT3	VINF FT/SEC	SCALE
29	.0000	-5.000	5.250	1.014	101.6	1506.	371.0	.1399	237.4	.4946-04	3965.	.1750-01
68	.0000	-5.000	5.250	1.031	103.1	1505.	370.7	.1420	237.3	.5023-04	3964.	.1750-01

RUN NUMBER	PHI DEG.	HS SPHERE TW=540
29	.0000	.1662
68	.0000	.1674

TEST DATA

RUN NUMBER	XO	ZO	T/C NO	H/HREF R=1.0	H/HREF R=.900	H/HREF R=.850	QREF BTU/ FT2SEC	QDOT BTU/ FT2SEC	HW/HT	TW DEG. R	STN NO R=.900
29	1325.0	428.60	298.00	.7681-01	.9091-01	.1001	39.74	3.053	.3550	548.8	.2393-02
29	1325.0	489.20	299.00	.4998	.5915	.6513	39.72	19.85	.3552	549.2	.1557-01
29	1325.0	506.70	301.00	.8514-01	.1008	.1110	39.70	3.380	.3557	549.9	.2653-02
29	1350.0	440.40	302.00	.1371	.1623	.1787	39.65	5.435	.3565	551.1	.4272-02
29	1350.0	458.00	303.00	.1803	.2135	.2352	39.63	7.146	.3567	551.5	.5620-02
29	1350.0	498.50	304.00	.1533	.1815	.1999	39.67	6.081	.3561	550.5	.4777-02
29	1350.0	515.50	306.00	.6818-01	.8072-01	.8889-01	39.67	2.705	.3561	550.5	.2125-02
29	1375.0	421.60	308.00	.5537-01	.6555-01	.7219-01	39.68	2.197	.3560	550.3	.1726-02
29	1375.0	440.00	309.00	.9799-01	.1160	.1278	39.60	3.881	.3571	552.1	.3054-02
29	1375.0	460.00	310.00	.1219	.1443	.1590	39.59	4.825	.3573	552.4	.3799-02
29	1375.0	503.40	311.00	.6853-01	.8112-01	.8933-01	39.69	2.720	.3557	550.0	.2135-02
29	1400.0	523.40	313.00	.5527-01	.6542-01	.7204-01	39.70	2.194	.3557	549.9	.1722-02
29	1425.0	415.10	315.00	.8582-01	.1016	.1119	39.64	3.402	.3565	551.2	.2675-02
29	1425.0	437.70	316.00	.6667-01	.7894-01	.8695-01	39.60	2.640	.3571	552.1	.2078-02
29	1425.0	466.30	317.00	.6693-01	.7925-01	.8729-01	39.63	2.653	.3567	551.5	.2086-02
29	1425.0	536.50	319.00	.3109-01	.3680-01	.4052-01	39.73	1.235	.3552	549.1	.9688-03
29	1450.0	418.20	320.00	.6105-01	.7228-01	.7960-01	39.65	2.421	.3563	550.9	.1903-02
29	1450.0	436.00	321.00	.5150-01	.6098-01	.6716-01	39.64	2.041	.3566	551.3	.1605-02
29	1450.0	468.20	322.00	.5278-01	.6248-01	.6881-01	39.66	2.093	.3562	550.6	.1645-02

IH103 60-OT OMS POD (R3PS05)

RUN NUMBER	XO	ZO	T/C NO	H/HREF R=1.0	H/HREF R=.900	H/HREF R=.850	QREF BTU/ FT2SEC	QDOT BTU/ FT2SEC	HW/HT	TW DEG. R	STN NO R=.900
29	1450.0	511.10	323.00	.3428-01	.4057-01	.4467-01	39.73	1.362	.3552	549.1	.1068-02
29	1450.0	526.60	325.00	.8833-01	.1045	.1151	39.75	3.511	.3548	548.5	.2752-02
29	1500.0	437.00	327.00	.2973-01	.3518-01	.3873-01	39.78	1.183	.3544	547.9	.9263-03
29	1500.0	532.30	331.00	.5526-01	.6540-01	.7201-01	39.74	2.198	.3549	548.7	.1722-02
29	1525.0	424.00	332.00	.1483-01	.1754-01	.1932-01	39.75	.5893	.3548	548.5	.4619-03
29	1525.0	431.00	333.00	.2360-01	.2793-01	.3074-01	39.79	.9392	.3542	547.6	.7352-03
29	1525.0	440.00	334.00	.3970-01	.4698-01	.5172-01	39.79	1.580	.3543	547.7	.1237-02
29	1525.0	493.00	335.00	.3072-01	.3635-01	.4001-01	39.80	1.223	.3540	547.3	.9569-03
68	1545.0	434.00	338.00	.1506-01	.1785-01	.1968-01	39.64	.5968	.3608	557.5	.4661-03
68	1545.0	443.00	339.00	.3441-01	.4079-01	.4495-01	39.66	1.364	.3605	557.1	.1065-02

IH103 60-OT OMS POD (R3PS06)

OMS POD

PARAMETRIC DATA

MACH = 5.250 ALPHA = -5.000 BETA = -5.000 ELEVON = .0000
BDFLAP = .0000 SPDBRK = .0000

TEST CONDITIONS

RUN NUMBER	ALPHA DEG.	BETA DEG.	MACH	RN/FT /FT X10 6	PT PSIA	TT DEG. R	HT BTU/ LBM	PINF PSIA	TINF DEG. R	RHO SLUGS/ FT3	VINF FT/SEC	SCALE
30	-5.000	-5.000	5.250	1.009	101.7	1511.	372.5	.1400	238.4	.4929-04	3973.	.1750-01
67	-5.000	-5.000	5.250	1.036	103.6	1504.	370.6	.1427	237.2	.5051-04	3963.	.1750-01

RUN NUMBER	PHI DEG.	HS SPHERE TW=540
30	.0000	.1663
67	.0000	.1678

TEST DATA

RUN NUMBER	XO	ZO	T/C NO	H/HREF R=1.0	H/HREF R=.900	H/HREF R=.850	QREF BTU/ FT2SEC	QDOT BTU/ FT2SEC	HW/HT	TW DEG. R	STN NO R=.900
30	1325.0	428.60	298.00	.8990-01	.1064	.1171	39.93	3.589	.3550	551.0	.2807-02
30	1325.0	489.20	299.00	.5655	.6693	.7369	39.91	22.57	.3552	551.4	.1765-01
30	1325.0	506.70	301.00	.2477	.2932	.3228	39.90	9.883	.3554	551.6	.7734-02
30	1350.0	440.40	302.00	.1378	.1632	.1797	39.82	5.489	.3566	553.5	.4305-02
30	1350.0	458.60	303.00	.2691	.3186	.3509	39.80	10.71	.3569	554.0	.8403-02
30	1350.0	498.50	304.00	.2707	.3205	.3530	39.85	10.79	.3561	552.8	.8455-02
30	1350.0	515.50	306.00	.1302	.1542	.1698	39.86	5.191	.3560	552.5	.4066-02
30	1375.0	421.60	308.00	.6037-01	.7147-01	.7870-01	39.85	2.406	.3561	552.8	.1885-02
30	1375.0	440.00	309.00	.1197	.1418	.1562	39.75	4.759	.3577	555.2	.3740-02
30	1375.0	460.00	310.00	.1683	.1994	.2196	39.74	6.690	.3578	555.4	.5259-02
30	1375.0	503.40	311.00	.1288	.1525	.1679	39.85	5.134	.3561	552.8	.4023-02
30	1400.0	523.40	313.00	.1038	.1229	.1353	39.89	4.141	.3556	552.0	.3242-02
30	1425.0	415.10	315.00	.9512-01	.1126	.1241	39.79	3.785	.3571	554.3	.2971-02
30	1425.0	437.70	316.00	.9533-01	.1129	.1244	39.75	3.789	.3578	555.3	.2978-02
30	1425.0	466.30	317.00	.8842-01	.1047	.1153	39.78	3.517	.3573	554.6	.2762-02
30	1425.0	536.50	319.00	.4132-01	.4891-01	.5386-01	39.90	1.649	.3554	551.6	.1290-02
30	1450.0	418.20	320.00	.7680-01	.9094-01	.1002	39.80	3.057	.3569	554.1	.2399-02
30	1450.0	436.00	321.00	.8073-01	.9561-01	.1053	39.77	3.211	.3573	554.7	.2522-02
30	1450.0	468.20	322.00	.7076-01	.8379-01	.9229-01	39.80	2.816	.3569	554.1	.2210-02

IH103 60-OT OMS POD

(R3PS06)

RUN NUMBER	XO	ZO	T/C NO	H/HREF R=1.0	H/HREF R=.900	H/HREF R=.850	QREF BTU/ FT2SEC	QDOT BTU/ FT2SEC	HW/HT	TW DEG. R	STN NO R=.900
30	1450.0	511.10	323.00	.7036-01	.8329-01	.9173-01	39.86	2.804	.3560	552.6	.2197-02
30	1450.0	526.60	325.00	.9826-01	.1163	.1280	39.91	3.921	.3553	551.5	.3068-02
30	1500.0	437.00	327.00	.5423-01	.6418-01	.7066-01	39.93	2.165	.3550	551.0	.1693-02
30	1500.0	532.30	331.00	.6200-01	.7337-01	.8077-01	39.95	2.477	.3546	550.5	.1935-02
30	1525.0	424.00	332.00	.1045-01	.1237-01	.1362-01	39.95	.4175	.3546	550.4	.3263-03
30	1525.0	431.00	333.00	.4246-01	.5025-01	.5533-01	39.93	1.696	.3549	550.9	.1326-02
30	1525.0	440.00	334.00	.7762-01	.9185-01	.1011	39.94	3.100	.3548	550.7	.2423-02
30	1525.0	493.00	335.00	.4746-01	.5616-01	.6183-01	39.96	1.897	.3545	550.2	.1482-02
67	1545.0	434.00	338.00	.2428-01	.2876-01	.3168-01	39.93	.9696	.3576	552.3	.7490-03
67	1545.0	443.00	339.00	.6426-01	.7610-01	.8382-01	39.96	2.568	.3571	551.6	.1982-02

IH103 60-OT OMS POD (R3PS07)

OMS POD

PARAMETRIC DATA

MACH = 5.250 ALPHA = 5.000 BETA = -5.000 ELEVON = .0000
BDFLAP = .0000 SPDBRK = .0000

TEST CONDITIONS

RUN NUMBER	ALPHA DEG.	BETA DEG.	MACH	RN/FT /FT X10 6	PT PSIA	TT DEG. R	HT BTU/ LBM	PINF PSIA	TINF DEG. R	RHO SLUGS/ FT3	VINF FT/SEC	SCALE
31	5.000	-5.000	5.250	1.013	101.6	1507.	371.3	.1400	237.6	.4943-04	3967.	.1750-01
66	5.000	-5.000	5.250	1.033	103.6	1507.	371.4	.1427	237.7	.5037-04	3967.	.1750-01

RUN NUMBER	PHI DEG.	HS SPHERE TW=540
31	.0000	.1662
66	.0000	.1678

TEST DATA

RUN NUMBER	XO	ZO	T/C NO	H/HREF R=1.0	H/HREF R=.900	H/HREF R=.850	QREF BTU/ FT2SEC	QDOT BTU/ FT2SEC	HW/HT	TW DEG. R	STN NO R=.900
31	1325.0	428.60	298.00	.5716-01	.6772-01	.7462-01	39.54	2.260	.3588	555.3	.1783-02
31	1325.0	489.20	299.00	.2928	.3470	.3823	39.49	11.56	.3597	556.6	.9135-02
31	1325.0	506.70	301.00	.6981-01	.8273-01	.9117-01	39.49	2.757	.3597	556.7	.2178-02
31	1350.0	440.40	302.00	.1305	.1547	.1705	39.44	5.147	.3605	557.9	.4073-02
31	1350.0	458.60	303.00	.1452	.1722	.1898	39.40	5.722	.3610	558.7	.4533-02
31	1350.0	498.50	304.00	.1246	.1477	.1628	39.43	4.913	.3606	558.0	.3888-02
31	1350.0	515.50	306.00	.4890-01	.5797-01	.6389-01	39.44	1.929	.3605	557.9	.1526-02
31	1375.0	421.60	308.00	.5934-01	.7033-01	.7750-01	39.49	2.343	.3597	556.6	.1852-02
31	1375.0	440.00	309.00	.8560-01	.1015	.1119	39.37	3.370	.3615	559.4	.2672-02
31	1375.0	460.00	310.00	.1093	.1297	.1430	39.35	4.302	.3619	560.1	.3413-02
31	1375.0	503.40	311.00	.5738-01	.6801-01	.7496-01	39.44	2.263	.3604	557.8	.1791-02
31	1400.0	523.40	313.00	.3721-01	.4411-01	.4861-01	39.46	1.468	.3602	557.4	.1161-02
31	1425.0	415.10	315.00	.1040	.1233	.1359	39.42	4.101	.3607	558.2	.3246-02
31	1425.0	437.70	316.00	.5078-01	.6021-01	.6638-01	39.36	1.999	.3617	559.8	.1585-02
31	1425.0	466.30	317.00	.6653-01	.7889-01	.8697-01	39.36	2.619	.3616	559.6	.2077-02
31	1425.0	536.50	319.00	.2305-01	.2732-01	.3011-01	39.45	.9095	.3602	557.5	.7194-03
31	1450.0	418.20	320.00	.5323-01	.6310-01	.6954-01	39.43	2.099	.3607	558.1	.1661-02
31	1450.0	436.00	321.00	.3788-01	.4492-01	.4951-01	39.38	1.492	.3614	559.3	.1182-02
31	1450.0	468.20	322.00	.5263-01	.6241-01	.6880-01	39.37	2.072	.3616	559.6	.1643-02

IH103 60-OT OMS POD (R3PS07)

RUN NUMBER	XO	ZO	T/C NO	H/HREF R=1.0	H/HREF R=.900	H/HREF R=.850	QREF BTU/ FT2SEC	QDOT BTU/ FT2SEC	HW/HT	TW DEG. R	STN NO R=.900
31	1450.0	511.10	323.00	.2781-01	.3296-01	.3633-01	39.41	1.096	.3609	558.5	.8678-03
31	1450.0	526.60	325.00	.5137-01	.6088-01	.6710-01	39.47	2.028	.3600	557.1	.1603-02
31	1500.0	437.00	327.00	.2175-01	.2577-01	.2840-01	39.47	.8584	.3599	557.0	.6786-03
31	1500.0	532.30	331.00	.3368-01	.3992-01	.4399-01	39.48	1.330	.3598	556.7	.1051-02
31	1525.0	424.00	332.00	.1807-01	.2141-01	.2359-01	39.49	.7133	.3597	556.7	.5637-03
31	1525.0	431.00	333.00	.1644-01	.1949-01	.2148-01	39.48	.6492	.3599	556.9	.5131-03
31	1525.0	440.00	334.00	.3240-01	.3841-01	.4232-01	39.47	1.279	.3600	557.2	.1011-02
31	1525.0	493.00	335.00	.3304-01	.3916-01	.4315-01	39.49	1.305	.3597	556.6	.1031-02
66	1545.0	434.00	338.00	.1122-01	.1327-01	.1461-01	40.26	.4517	.3538	547.7	.3463-03
66	1545.0	443.00	339.00	.2859-01	.3382-01	.3722-01	40.29	1.152	.3533	546.9	.8823-03

IH103 60-OT OMS POD (R3PS08)

OMS POD

PARAMETRIC DATA

MACH = 5.250 ALPHA = 10.00 BETA = -5.000 ELEVON = .0000
BDFLAP = .0000 SPDBRK = .0000

TEST CONDITIONS

RUN NUMBER	ALPHA DEG.	BETA DEG.	MACH	RN/FT /FT X10 6	PT PSIA	TT DEG. R	HT BTU/ LBM	PINF PSIA	TINF DEG. R	RHO SLUGS/ FT3	VINF FT/SEC	SCALE
32	10.00	-5.000	5.250	1.013	102.5	1516.	373.7	.1412	239.1	.4954-04	3979.	.1750-01
65	10.00	.0000	5.250	1.036	103.7	1505.	370.9	.1429	237.4	.5052-04	3964.	.1750-01

RUN NUMBER	PHI DEG.	HS SPHERE TW=540
32	.0000	.1670
65	.0000	.1679

TEST DATA

RUN NUMBER	XO	ZO	T/C NO	H/HREF R=1.0	H/HREF R=.900	H/HREF R=.850	QREF BTU/ FT2SEC	QDOT BTU/ FT2SEC	HW/HT	TW DEG. R	STN NO R=.900
32	1325.0	428.60	298.00	.4849-01	.5724-01	.6292-01	40.80	1.978	.3462	539.2	.1507-02
32	1325.0	489.20	299.00	.1946	.2298	.2526	40.82	7.945	.3459	538.7	.6051-02
32	1325.0	506.70	301.00	.1808-01	.2134-01	.2346-01	40.77	.7371	.3466	539.8	.5621-03
32	1350.0	440.40	302.00	.1302	.1538	.1691	40.72	5.302	.3474	541.1	.4049-02
32	1350.0	498.50	304.00	.7680-01	.9068-01	.9968-01	40.78	3.132	.3465	539.6	.2388-02
32	1350.0	515.50	306.00	.2665-01	.3147-01	.3460-01	40.76	1.086	.3468	540.1	.8288-03
32	1375.0	421.60	308.00	.5686-01	.6714-01	.7382-01	40.73	2.316	.3473	540.9	.1768-02
32	1375.0	440.00	309.00	.8256-01	.9752-01	.1072	40.68	3.359	.3480	541.9	.2568-02
32	1375.0	460.00	310.00	.9662-01	.1141	.1255	40.69	3.932	.3479	541.8	.3005-02
32	1375.0	503.40	311.00	.3486-01	.4117-01	.4526-01	40.74	1.420	.3471	540.6	.1084-02
32	1375.0	531.00	312.00	.3138-01	.3705-01	.4074-01	40.76	1.279	.3469	540.2	.9757-03
32	1400.0	523.40	313.00	.4649-01	.5489-01	.6034-01	40.79	1.897	.3463	539.3	.1445-02
32	1425.0	415.10	315.00	.9879-01	.1167	.1283	40.69	4.020	.3479	541.8	.3073-02
32	1425.0	437.70	316.00	.4729-01	.5585-01	.6142-01	40.68	1.924	.3480	542.0	.1471-02
32	1425.0	466.30	317.00	.6085-01	.7186-01	.7900-01	40.74	2.479	.3471	540.5	.1892-02
32	1425.0	536.50	319.00	.1417-01	.1673-01	.1839-01	40.83	.5788	.3457	538.4	.4406-03
32	1450.0	418.20	320.00	.5251-01	.6202-01	.6820-01	40.71	2.138	.3476	541.4	.1633-02
32	1450.0	436.00	321.00	.3571-01	.4217-01	.4637-01	40.73	1.455	.3473	540.9	.1111-02
32	1450.0	468.20	322.00	.4832-01	.5705-01	.6272-01	40.77	1.970	.3468	540.0	.1502-02

IH103 60-OT OMS POD (R3PS08)

RUN NUMBER	XO	ZO	T/C NO	H/HREF R=1.0	H/HREF R=.900	H/HREF R=.850	QREF BTU/ FT2SEC	QDOT BTU/ FT2SEC	HW/HT	TW DEG. R	STN NO R=.900
32	1450.0	511.10	323.00	.2160-01	.2550-01	.2803-01	40.81	.8817	.3460	538.9	.6716-03
32	1450.0	526.60	325.00	.5604-01	.6614-01	.7270-01	40.84	2.288	.3456	538.3	.1742-02
32	1500.0	437.00	327.00	.1713-01	.2021-01	.2221-01	40.89	.7003	.3449	537.1	.5323-03
32	1500.0	532.30	331.00	.1645-01	.1942-01	.2134-01	40.90	.6730	.3447	536.8	.5114-03
32	1525.0	424.00	332.00	.1799-01	.2123-01	.2333-01	40.91	.7362	.3445	536.6	.5593-03
32	1525.0	431.00	333.00	.1590-01	.1877-01	.2063-01	40.89	.6504	.3448	536.9	.4943-03
32	1525.0	440.00	334.00	.2433-01	.2871-01	.3155-01	40.91	.9952	.3446	536.7	.7561-03
32	1525.0	493.00	335.00	.2652-01	.3129-01	.3438-01	40.93	1.085	.3443	536.1	.8241-03
65	1545.0	434.00	338.00	.1196-01	.1416-01	.1560-01	40.09	.4796	.3560	550.3	.3689-03
65	1545.0	443.00	339.00	.2233-01	.2644-01	.2911-01	40.09	.8954	.3559	550.1	.6886-03

IH103 60-OT OMS POD (R3PS09)

OMS POD

PARAMETRIC DATA

MACH = 5.250 ALPHA = .0000 BETA = -3.000 ELEVON = .0000
BDFLAP = .0000 SPDBRK = .0000

TEST CONDITIONS

RUN NUMBER	ALPHA DEG.	BETA DEG.	MACH	RN/FT /FT X10 6	PT PSIA	TT DEG. R	HT BTU/ LBM	PINF PSIA	TINF DEG. R	RHO SLUGS/ FT3	VINF FT/SEC	SCALE
34	10.00	-5.000	5.250	1.050	103.6	1492.	367.4	.1429	235.1	.5098-04	3946.	.1750-01
51	.0000	-3.000	5.250	1.016	101.5	1504.	370.5	.1399	237.1	.4949-04	3963.	.1750-01

RUN NUMBER	PHI DEG.	HS SPHERE TW=540
34	.0000	.1677
51	.0000	.1661

TEST DATA

RUN NUMBER	XO	ZO	T/C NO	H/HREF R=1.0	H/HREF R=.900	H/HREF R=.850	QREF BTU/ FT2SEC	QDOT BTU/ FT2SEC	HW/HT	TW DEG. R	STN NO R=.900
34	1325.0	428.60	298.00	.6849-01	.8109-01	.8931-01	39.64	2.715	.3567	546.2	.2101-02
34	1325.0	489.20	299.00	.3657	.4331	.4770	39.61	14.49	.3570	546.7	.1122-01
34	1325.0	506.70	301.00	.9851-01	.1167	.1285	39.61	3.902	.3571	546.8	.3022-02
34	1350.0	440.40	302.00	.1235	.1463	.1612	39.54	4.884	.3581	548.4	.3790-02
34	1350.0	498.50	304.00	.2013	.2384	.2626	39.56	7.964	.3578	548.0	.6177-02
34	1350.0	515.50	306.00	.1041	.1233	.1358	39.58	4.120	.3576	547.6	.3194-02
34	1375.0	421.60	308.00	.4799-01	.5683-01	.6259-01	39.60	1.900	.3572	547.0	.1472-02
34	1375.0	440.00	309.00	.8742-01	.1036	.1141	39.49	3.452	.3590	549.8	.2683-02
34	1375.0	460.00	310.00	.1046	.1240	.1366	39.47	4.130	.3592	550.1	.3211-02
34	1375.0	503.40	311.00	.8551-01	.1013	.1116	39.55	3.381	.3581	548.4	.2624-02
34	1375.0	531.00	312.00	.9339-01	.1106	.1219	39.55	3.694	.3580	548.2	.2866-02
34	1400.0	523.40	313.00	.6546-01	.7752-01	.8538-01	39.61	2.593	.3572	546.9	.2008-02
34	1425.0	415.10	315.00	.6926-01	.8202-01	.9034-01	39.60	2.742	.3573	547.2	.2125-02
34	1425.0	437.70	316.00	.5567-01	.6596-01	.7267-01	39.51	2.199	.3587	549.3	.1709-02
34	1425.0	466.30	317.00	.5393-01	.6389-01	.7039-01	39.51	2.131	.3587	549.3	.1655-02
34	1425.0	536.50	319.00	.4072-01	.4822-01	.5311-01	39.64	1.614	.3566	546.1	.1249-02
34	1450.0	418.20	320.00	.4354-01	.5156-01	.5680-01	39.60	1.724	.3573	547.1	.1336-02
34	1450.0	436.00	321.00	.4302-01	.5096-01	.5614-01	39.54	1.701	.3582	548.6	.1320-02
34	1450.0	468.20	322.00	.4169-01	.4939-01	.5441-01	39.54	1.648	.3583	548.6	.1279-02

IH103 60-OT OMS POD (R3PS09)

RUN NUMBER	XO	ZO	T/C NO	H/HREF R=1.0	H/HREF R=.900	H/HREF R=.850	QREF BTU/ FT2SEC	QDOT BTU/ FT2SEC	HW/HT	TW DEG. R	STN NO R=.900
34	1450.0	511.10	323.00	.4004-01	.4742-01	.5223-01	39.61	1.586	.3571	546.8	.1228-02
34	1450.0	526.60	325.00	.6655-01	.7879-01	.8677-01	39.66	2.640	.3563	545.6	.2041-02
34	1500.0	437.00	327.00	.2433-01	.2881-01	.3172-01	39.65	.9647	.3564	545.8	.7463-03
34	1500.0	532.30	331.00	.4529-01	.5361-01	.5904-01	39.69	1.797	.3559	545.0	.1389-02
34	1525.0	424.00	332.00	.9183-02	.1087-01	.1197-01	39.67	.3643	.3561	545.4	.2817-03
34	1525.0	431.00	333.00	.1788-01	.2116-01	.2331-01	39.66	.7090	.3563	545.6	.5483-03
34	1525.0	440.00	334.00	.3214-01	.3806-01	.4191-01	39.66	1.275	.3563	545.6	.9860-03
34	1525.0	493.00	335.00	.2238-01	.2650-01	.2918-01	39.68	.8882	.3559	545.1	.6865-03
51	1545.0	434.00	338.00	.1339-01	.1585-01	.1745-01	39.64	.5306	.3557	549.3	.4170-03
51	1545.0	443.00	339.00	.3013-01	.3566-01	.3926-01	39.67	1.195	.3552	548.5	.9384-03

IH103 60-OT OMS POD (R3PS10)

OMS POD

PARAMETRIC DATA

MACH = 5.250 ALPHA = -5.000 BETA = -3.000 ELEVON = .0000
BDFLAP = .0000 SPDBRK = .0000

TEST CONDITIONS

RUN NUMBER	ALPHA DEG.	BETA DEG.	MACH	RN/FT /FT X10 6	PT PSIA	TT DEG. R	HT BTU/ LBM	PINF PSIA	TINF DEG. R	RHO SLUGS/ FT3	VINF FT/SEC	SCALE
35	10.00	-5.000	5.250	1.015	101.6	1505.	370.9	.1399	237.4	.4947-04	3964.	.1750-01
52	-5.000	-3.000	5.250	1.047	102.9	1488.	366.4	.1419	234.5	.5080-04	3940.	.1750-01

RUN NUMBER	PHI DEG.	HS SPHERE TW=540
35	.0000	.1662
52	.0000	.1672

TEST DATA

RUN NUMBER	XO	ZO	T/C NO	H/HREF R=1.0	H/HREF R=.900	H/HREF R=.850	QREF BTU/ FT2SEC	QDOT BTU/ FT2SEC	HW/HT	TW DEG. R	STN NO R=.900
35	1325.0	428.60	298.00	.7772-01	.9203-01	.1014	39.63	3.080	.3567	551.3	.2422-02
35	1325.0	489.20	299.00	.3193	.3780	.4163	39.66	12.66	.3561	550.5	.9948-02
35	1325.0	506.70	301.00	.3305	.3913	.4309	39.64	13.10	.3564	551.0	.1030-01
35	1350.0	440.40	302.00	.1104	.1308	.1441	39.55	4.367	.3579	553.3	.3442-02
35	1350.0	498.50	304.00	.2507	.2968	.3269	39.63	9.933	.3567	551.4	.7811-02
35	1350.0	515.50	306.00	.1445	.1711	.1884	39.63	5.726	.3567	551.4	.4503-02
35	1375.0	421.60	308.00	.5104-01	.6046-01	.6660-01	39.56	2.019	.3578	553.1	.1591-02
35	1375.0	440.00	309.00	.9626-01	.1141	.1257	39.49	3.801	.3589	554.8	.3001-02
35	1375.0	460.00	310.00	.1499	.1776	.1957	39.51	5.924	.3586	554.3	.4675-02
35	1375.0	503.40	311.00	.1386	.1641	.1807	39.62	5.491	.3568	551.5	.4319-02
35	1375.0	531.00	312.00	.9035-01	.1070	.1178	39.62	3.580	.3568	551.5	.2816-02
35	1400.0	523.40	313.00	.9023-01	.1068	.1176	39.67	3.580	.3560	550.3	.2811-02
35	1425.0	415.10	315.00	.8159-01	.9664-01	.1065	39.57	3.228	.3577	552.9	.2543-02
35	1425.0	437.70	316.00	.7548-01	.8942-01	.9851-01	39.52	2.983	.3584	554.1	.2353-02
35	1425.0	466.30	317.00	.7692-01	.9109-01	.1003	39.58	3.044	.3575	552.7	.2397-02
35	1425.0	536.50	319.00	.3909-01	.4627-01	.5094-01	39.72	1.553	.3552	549.1	.1218-02
35	1450.0	410.20	320.00	.5625-01	.6661-01	.7337-01	39.59	2.227	.3573	552.4	.1753-02
35	1450.0	436.00	321.00	.6240-01	.7390-01	.8141-01	39.56	2.469	.3577	552.9	.1945-02
35	1450.0	468.20	322.00	.5961-01	.7058-01	.7774-01	39.61	2.361	.3570	551.8	.1858-02

IH103 60-OT OMS POD

(R3PS10)

RUN NUMBER	XO	ZO	T/C NO	H/HREF R=1.0	H/HREF R=.900	H/HREF R=.850	QREF BTU/ FT2SEC	QDOT BTU/ FT2SEC	HW/HT	TW DEG. R	STN NO R=.900
35	1450.0	511.10	323.00	.7075-01	.8374-01	.9221-01	39.71	2.810	.3554	549.4	.2204-02
35	1450.0	526.60	325.00	.1236	.1463	.1611	39.73	4.912	.3552	549.0	.3852-02
35	1500.0	437.00	327.00	.4281-01	.5066-01	.5577-01	39.74	1.701	.3549	548.6	.1333-02
35	1500.0	532.30	331.00	.6838-01	.8092-01	.8908-01	39.77	2.720	.3545	547.9	.2130-02
35	1525.0	424.00	332.00	.8501-02	.1006-01	.1107-01	39.76	.3380	.3547	548.3	.2648-03
35	1525.0	431.00	333.00	.3239-01	.3832-01	.4219-01	39.77	1.288	.3545	548.1	.1009-02
35	1525.0	440.00	334.00	.5784-01	.6844-01	.7534-01	39.78	2.301	.3544	547.8	.1801-02
35	1525.0	493.00	335.00	.4482-01	.5302-01	.5836-01	39.82	1.784	.3537	546.8	.1396-02
52	1545.0	434.00	338.00	.1997-01	.2368-01	.2611-01	39.06	.7600	.3619	552.6	.6144-03
52	1545.0	443.00	339.00	.5362-01	.6357-01	.7008-01	39.10	2.096	.3613	551.7	.1649-02

IH103 60-OT OMS POD (R3PS11)

OMS POD

PARAMETRIC DATA

MACH = 5.250 ALPHA = 5.000 BETA = -3.000 ELEVON = .0000
BDFLAP = .0000 SPDBRK = .0000

TEST CONDITIONS

RUN NUMBER	ALPHA DEG.	BETA DEG.	MACH	RN/FT /FT X10 6	PT PSIA	TT DEG. R	HT BTU/ LBM	PINF PSIA	TINF DEG. R	RHO SLUGS/ FT3	VINF FT/SEC	SCALE
36	10.00	-5.000	5.250	1.003	101.4	1514.	373.3	.1396	238.9	.4905-04	3977.	.1750-01
46	5.000	-3.000	5.200	1.027	103.9	1538.	379.4	.1511	246.8	.5138-04	4004.	.1750-01

RUN NUMBER	PHI DEG.	HS SPHERE TW=540
36	.0000	.1661
46	.0000	.1714

TEST DATA

RUN NUMBER	XO	ZO	T/C NO	H/HREF R=1.0	H/HREF R=.900	H/HREF R=.850	QREF BTU/ FT2SEC	QDOT BTU/ FT2SEC	HW/HT	TW DEG. R	STN NO R=.900
36	1325.0	428.60	298.00	.5014-01	.5929-01	.6524-01	40.15	2.013	.3522	547.9	.1568-02
36	1325.0	489.20	299.00	.2125	.2513	.2765	40.13	8.526	.3525	548.4	.6647-02
36	1325.0	506.70	301.00	.8083-01	.9561-01	.1052	40.09	3.241	.3530	549.2	.2529-02
36	1350.0	440.40	302.00	.1125	.1331	.1465	40.06	4.506	.3535	550.0	.3520-02
36	1350.0	498.50	304.00	.1366	.1616	.1779	40.08	5.475	.3533	549.6	.4274-02
36	1350.0	515.50	306.00	.5296-01	.6265-01	.6895-01	40.07	2.122	.3534	549.8	.1657-02
36	1375.0	421.60	308.00	.4428-01	.5238-01	.5765-01	40.09	1.775	.3530	549.2	.1385-02
36	1375.0	440.00	309.00	.9130-01	.1080	.1189	40.02	3.654	.3542	551.0	.2857-02
36	1375.0	460.00	310.00	.1090	.1290	.1420	40.01	4.361	.3543	551.3	.3411-02
36	1375.0	503.40	311.00	.6877-01	.8135-01	.8953-01	40.08	2.756	.3532	549.5	.2152-02
36	1375.0	531.00	312.00	.5853-01	.6925-01	.7623-01	40.05	2.344	.3537	550.2	.1832-02
36	1400.0	523.40	313.00	.3627-01	.4290-01	.4722-01	40.09	1.454	.3530	549.2	.1135-02
36	1425.0	415.10	315.00	.6395-01	.7564-01	.8325-01	40.11	2.565	.3528	548.8	.2001-02
36	1425.0	437.70	316.00	.6184-01	.7316-01	.8053-01	40.05	2.476	.3537	550.3	.1935-02
36	1425.0	466.30	317.00	.5889-01	.6967-01	.7669-01	40.06	2.359	.3535	549.9	.1843-02
36	1425.0	536.50	319.00	.2613-01	.3090-01	.3401-01	40.13	1.049	.3525	548.4	.8175-03
36	1450.0	418.20	320.00	.4131-01	.4886-01	.5378-01	40.11	1.657	.3528	548.8	.1293-02
36	1450.0	436.00	321.00	.4824-01	.5706-01	.6280-01	40.09	1.934	.3531	549.4	.1509-02
36	1450.0	468.20	322.00	.4637-01	.5484-01	.6036-01	40.09	1.859	.3531	549.3	.1451-02

IH103 60-OT OMS POD (R3PS11)

RUN NUMBER	XO	ZO	T/C NO	H/HREF R=1.0	H/HREF R=.900	H/HREF R=.850	QREF BTU/ FT2SEC	QDOT BTU/ FT2SEC	HW/HT	TW DEG. R	STN NO R=.900
36	1450.0	511.10	323.00	.3568-01	.4220-01	.4644-01	40.12	1.432	.3526	548.5	.1116-02
36	1450.0	526.60	325.00	.4965-01	.5871-01	.6461-01	40.14	1.993	.3522	548.0	.1553-02
36	1500.0	437.00	327.00	.2815-01	.3328-01	.3661-01	40.22	1.132	.3510	546.1	.8804-03
36	1500.0	532.30	331.00	.3554-01	.4201-01	.4623-01	40.19	1.428	.3515	546.9	.1111-02
36	1525.0	424.00	332.00	.2183-01	.2580-01	.2839-01	40.24	.8785	.3507	545.6	.6826-03
36	1525.0	431.00	333.00	.2171-01	.2566-01	.2824-01	40.23	.8735	.3509	545.9	.6790-03
36	1525.0	440.00	334.00	.3499-01	.4136-01	.4550-01	40.24	1.408	.3507	545.6	.1094-02
36	1525.0	493.00	335.00	.2893-01	.3419-01	.3761-01	40.26	1.165	.3505	545.2	.9045-03
46	1545.0	434.00	338.00	.1381-01	.1634-01	.1799-01	41.96	.5795	.3541	559.9	.4227-03
46	1545.0	443.00	339.00	.2488-01	.2943-01	.3240-01	41.99	1.045	.3538	559.4	.7615-03

IH103 60-OT OMS POD (R3PS12)

OMS POD

PARAMETRIC DATA

MACH = 5.250 ALPHA = 10.00 BETA = -3.000 ELEVON = .0000
BDFLAP = .0000 SPDBRK = .0000

TEST CONDITIONS

RUN NUMBER	ALPHA DEG.	BETA DEG.	MACH	RN/FT /FT X10 6	PT PSIA	TT DEG. R	HT BTU/ LBM	PINF PSIA	TINF DEG. R	RHO SLUGS/ FT3	VINF FT/SEC	SCALE
33	10.00	-5.000	5.250	1.038	103.4	1501.	369.7	.1425	236.6	.5054-04	3958.	.1750-01
45	10.00	-3.000	5.250	1.036	103.0	1500.	369.5	.1420	236.4	.5040-04	3957.	.1750-01

RUN NUMBER	PHI DEG.	HS SPHERE TW=540
33	.0000	.1676
45	.0000	.1673

TEST DATA

RUN NUMBER	XO	ZO	T/C NO	H/HREF R=1.0	H/HREF R=.900	H/HREF R=.850	QREF BTU/ FT2SEC	QDOT BTU/ FT2SEC	HW/HT	TW DEG. R	STN NO R=.900
33	1325.0	428.60	298.00	.4104-01	.4852-01	.5339-01	40.19	1.649	.3515	541.7	.1264-02
33	1325.0	489.20	299.00	.1518	.1795	.1975	40.19	6.101	.3514	541.5	.4674-02
33	1325.0	506.70	301.00	.1470-01	.1739-01	.1913-01	40.16	.5904	.3520	542.4	.4528-03
33	1350.0	440.40	302.00	.1215	.1437	.1581	40.13	4.876	.3524	543.0	.3742-02
33	1350.0	498.50	304.00	.7519-01	.8891-01	.9784-01	40.16	3.020	.3519	542.2	.2315-02
33	1350.0	515.50	306.00	.2462-01	.2912-01	.3204-01	40.15	.9886	.3521	542.6	.7583-03
33	1375.0	421.60	308.00	.4732-01	.5596-01	.6158-01	40.14	1.900	.3522	542.7	.1457-02
33	1375.0	440.00	309.00	.8454-01	.9999-01	.1100	40.11	3.391	.3527	543.5	.2604-02
33	1375.0	460.00	310.00	.9061-01	.1072	.1179	40.12	3.635	.3526	543.3	.2791-02
33	1375.0	503.40	311.00	.3563-01	.4214-01	.4637-01	40.14	1.430	.3522	542.7	.1097-02
33	1375.0	531.00	312.00	.3344-01	.3954-01	.4352-01	40.14	1.342	.3523	542.8	.1030-02
33	1400.0	523.40	313.00	.3910-01	.4623-01	.5087-01	40.19	1.571	.3515	541.7	.1204-02
33	1425.0	415.10	315.00	.7991-01	.9448-01	.1040	40.18	3.210	.3517	541.9	.2461-02
33	1425.0	437.70	316.00	.4768-01	.5639-01	.6205-01	40.16	1.915	.3520	542.3	.1468-02
33	1425.0	466.30	317.00	.5363-01	.6341-01	.6977-01	40.19	2.155	.3515	541.7	.1651-02
33	1425.0	536.50	319.00	.1466-01	.1733-01	.1907-01	40.23	.5898	.3508	540.6	.4514-03
33	1450.0	418.20	320.00	.4626-01	.5470-01	.6018-01	40.20	1.860	.3514	541.5	.1424-02
33	1450.0	436.00	321.00	.3635-01	.4298-01	.4729-01	40.19	1.461	.3514	541.5	.1119-02
33	1450.0	468.20	322.00	.4220-01	.4988-01	.5488-01	40.22	1.697	.3510	540.9	.1299-02

IH103 60-OT OMS POD

(R3PS12)

RUN NUMBER	XO	ZO	T/C NO	H/HREF R=1.0	H/HREF R=.900	H/HREF R=.850	QREF BTU/ FT2SEC	QDOT BTU/ FT2SEC	HW/HT	TW DEG. R	STN NO R=.900
33	1450.0	511.10	323.00	.1848-01	.2185-01	.2403-01	40.25	.7439	.3506	540.2	.5690-03
33	1450.0	526.60	325.00	.4343-01	.5133-01	.5647-01	40.24	1.747	.3507	540.4	.1337-02
33	1500.0	437.00	327.00	.1807-01	.2135-01	.2348-01	40.32	.7285	.3495	538.6	.5561-03
33	1500.0	532.30	331.00	.2401-01	.2838-01	.3121-01	40.28	.9670	.3501	539.5	.7391-03
33	1525.0	424.00	332.00	.2246-01	.2654-01	.2918-01	40.34	.9061	.3491	537.9	.6912-03
33	1525.0	431.00	333.00	.1749-01	.2067-01	.2273-01	40.34	.7055	.3492	538.0	.5383-03
33	1525.0	440.00	334.00	.2184-01	.2581-01	.2838-01	40.35	.8813	.3491	537.9	.6722-03
33	1525.0	493.00	335.00	.2234-01	.2639-01	.2903-01	40.36	.9016	.3489	537.6	.6875-03
45	1545.0	434.00	338.00	.1454-01	.1724-01	.1900-01	39.49	.5743	.3608	555.5	.4493-03
45	1545.0	443.00	339.00	.1789-01	.2120-01	.2337-01	39.52	.7069	.3604	554.9	.5526-03

IH103 60-OT OMS POD (R3PS13)

OMS POD

PARAMETRIC DATA

MACH = 5.250 ALPHA = .0000 BETA = -9.000 ELEVON = .0000
BDFLAP = .0000 SPDBRK = .0000

TEST CONDITIONS

RUN NUMBER	ALPHA DEG.	BETA DEG.	MACH	RN/FT /FT X10 6	PT PSIA	TT DEG. R	HT BTU/ LBM	PINF PSIA	TINF DEG. R	RHO SLUGS/ FT3	VINF FT/SEC	SCALE
39	10.00	-5.000	5.250	1.033	102.6	1498.	368.9	.1414	236.1	.5026-04	3954.	.1750-01
41	.0000	-9.000	5.250	.9914	101.7	1528.	376.9	.1399	241.2	.4866-04	3997.	.1750-01

RUN NUMBER	PHI DEG.	HS SPHERE TW=540
39	.0000	.1669
41	.0000	.1664

TEST DATA

RUN NUMBER.	XO	ZO	T/C NO	H/HREF R=1.0	H/HREF R=.900	H/HREF R=.850	QREF BTU/ FT2SEC	QDOT BTU/ FT2SEC	HW/HT	TW DEG. R	STN NO R=.900
39	1325.0	428.60	298.00	.1165	.1382	.1525	39.11	4.557	.3642	559.9	.3607-02
39	1325.0	489.20	299.00	.4672	.5544	.6116	39.09	18.26	.3647	560.6	.1446-01
39	1325.0	506.70	301.00	.1178	.1398	.1542	39.10	4.605	.3645	560.3	.3647-02
39	1350.0	440.40	302.00	.1801	.2138	.2359	39.02	7.028	.3657	562.2	.5577-02
39	1350.0	498.50	304.00	.1736	.2061	.2274	39.03	6.777	.3656	562.0	.5377-02
39	1350.0	515.50	306.00	.6518-01	.7737-01	.8535-01	39.06	2.546	.3651	561.3	.2018-02
39	1375.0	421.60	308.00	.7773-01	.9225-01	.1018	39.08	3.037	.3648	560.8	.2406-02
39	1375.0	440.00	309.00	.1374	.1632	.1801	38.97	5.355	.3665	563.5	.4257-02
39	1375.0	460.00	310.00	.1577	.1873	.2067	38.95	6.143	.3669	564.0	.4886-02
39	1375.0	503.40	311.00	.8728-01	.1036	.1143	39.03	3.406	.3656	562.0	.2703-02
39	1375.0	531.00	312.00	.4960-01	.5889-01	.6497-01	39.03	1.936	.3656	562.1	.1536-02
39	1400.0	523.40	313.00	.4282-01	.5083-01	.5606-01	39.07	1.673	.3649	560.9	.1326-02
39	1425.0	415.10	315.00	.1118	.1327	.1464	39.07	4.369	.3649	561.0	.3463-02
39	1425.0	437.70	316.00	.9276-01	.1101	.1215	38.99	3.616	.3662	563.0	.2873-02
39	1425.0	466.30	317.00	.8883-01	.1055	.1164	38.97	3.462	.3665	563.4	.2751-02
39	1425.0	536.50	319.00	.3560-01	.4224-01	.4659-01	39.09	1.392	.3645	560.4	.1102-02
39	1450.0	418.20	320.00	.7271-01	.8630-01	.9520-01	39.06	2.840	.3650	561.1	.2251-02
39	1450.0	436.00	321.00	.7575-01	.8993-01	.9922-01	39.01	2.955	.3659	562.5	.2346-02
39	1450.0	468.20	322.00	.7166-01	.8509-01	.9388-01	38.98	2.794	.3663	563.1	.2219-02

IH103 60-OT OMS POD (R3PS13)

RUN NUMBER	XO	ZO	T/C NO	H/HREF R=1.0	H/HREF R=.900	H/HREF R=.850	QREF BTU/ FT2SEC	QDOT BTU/ FT2SEC	HW/HT	TW DEG. R	STN NO R=.900
39	1450.0	511.10	323.00	.4440-01	.5271-01	.5814-01	39.04	1.734	.3653	561.6	.1375-02
39	1450.0	526.60	325.00	.7457-01	.8850-01	.9761-01	39.10	2.916	.3644	560.2	.2309-02
39	1500.0	437.00	327.00	.4658-01	.5528-01	.6097-01	39.10	1.821	.3645	560.4	.1442-02
39	1500.0	532.30	331.00	.6228-01	.7390-01	.8150-01	39.13	2.437	.3639	559.5	.1928-02
39	1525.0	424.00	332.00	.1293-01	.1534-01	.1692-01	39.11	.5055	.3643	560.1	.4002-03
39	1525.0	431.00	333.00	.3604-01	.4277-01	.4718-01	39.08	1.408	.3648	560.8	.1116-02
39	1525.0	440.00	334.00	.5649-01	.6705-01	.7395-01	39.08	2.208	.3648	560.8	.1749-02
39	1525.0	493.00	335.00	.4698-01	.5575-01	.6150-01	39.10	1.837	.3645	560.3	.1454-02
41	1545.0	434.00	338.00	.2190-01	.2586-01	.2844-01	40.88	.8952	.3479	546.5	.6876-03
41	1545.0	443.00	339.00	.4688-01	.5536-01	.6087-01	40.92	1.919	.3473	545.6	.1472-02

IH103 60-OT OMS POD

(R3PS14)

OMS POD

PARAMETRIC DATA

MACH = 5.250 ALPHA = -5.000 BETA = -9.000 ELEVON = .0000
BDFLAP = .0000 SPDBRK = .0000

TEST CONDITIONS

RUN NUMBER	ALPHA DEG.	BETA DEG.	MACH	RN/FT /FT X10 6	PT PSIA	TT DEG. R	HT BTU/ LBM	PINF PSIA	TINF DEG. R	RHO SLUGS/ FT3	VINF FT/SEC	SCALE
42	-5.000	-9.000	5.250	1.011	102.2	1515.	373.5	.1407	239.0	.4941-04	3978.	.1750-01
105	-5.000	-9.000	5.250	1.035	102.8	1498.	369.0	.1417	236.1	.5037-04	3954.	.1750-01

RUN NUMBER	PHI DEG.	HS SPHERE TW=540
42	.0000	.1667
105	.0000	.1671

TEST DATA

RUN NUMBER	XO	ZO	T/C NO	H/HREF R=1.0	H/HREF R=.900	H/HREF R=.850	QREF BTU/ FT2SEC	QDOT BTU/ FT2SEC	HW/HT	TW DEG. R	STN NO R=.900
105	1325.0	428.60	298.00	.1259	.1496	.1650	39.02	4.914	.3667	563.8	.3897-02
105	1325.0	489.20	299.00	.5123	.6084	.6713	39.02	19.99	.3666	563.8	.1585-01
105	1325.0	506.70	301.00	.2069	.2457	.2711	39.00	8.069	.3670	564.3	.6402-02
105	1350.0	440.40	302.00	.2004	.2381	.2628	38.93	7.803	.3680	565.9	.6204-02
105	1350.0	458.60	303.00	.2754	.3272	.3612	38.88	10.71	.3688	567.1	.8524-02
105	1350.0	498.50	304.00	.2812	.3341	.3687	38.96	10.96	.3676	565.3	.8704-02
105	1375.0	421.60	308.00	.8437-01	.1002	.1106	38.96	3.287	.3676	565.2	.2611-02
105	1375.0	440.00	309.00	.1580	.1878	.2073	38.89	6.146	.3687	566.9	.4892-02
105	1375.0	460.00	310.00	.1923	.2285	.2523	38.87	7.474	.3690	567.4	.5953-02
105	1375.0	503.40	311.00	.1305	.1550	.1711	38.96	5.085	.3675	565.1	.4039-02
105	1375.0	531.00	312.00	.7169-01	.8517-01	.9400-01	38.94	2.792	.3679	565.7	.2219-02
105	1400.0	523.40	313.00	.8415-01	.9995-01	.1103	38.98	3.281	.3672	564.6	.2604-02
105	1425.0	415.10	315.00	.1232	.1463	.1615	38.95	4.796	.3677	565.5	.3812-02
105	1425.0	437.70	316.00	.1193	.1417	.1564	38.94	4.645	.3679	565.7	.3692-02
105	1425.0	466.30	317.00	.1150	.1367	.1509	38.86	4.470	.3691	567.6	.3561-02
105	1425.0	536.50	319.00	.4595-01	.5457-01	.6022-01	39.00	1.792	.3669	564.1	.1422-02
105	1450.0	418.20	320.00	.8767-01	.1041	.1149	38.98	3.417	.3673	564.8	.2713-02
105	1450.0	436.00	321.00	.1053	.1251	.1380	38.93	4.098	.3680	565.9	.3258-02
105	1450.0	468.20	322.00	.8614-01	.1023	.1129	38.93	3.353	.3680	565.9	.2666-02

IH103 60-OT OMS POD (R3PS14)

RUN NUMBER	XO	ZO	T/C NO	H/HREF R=1.0	H/HREF R=.900	H/HREF R=.850	QREF BTU/ FT2SEC	QDOT BTU/ FT2SEC	HW/HT	TW DEG. R	STN NO R=.900
105	1450.0	511.10	323.00	.7669-01	.9108-01	.1005	39.00	2.991	.3669	564.2	.2373-02
105	1450.0	526.60	325.00	.1132	.1345	.1484	39.04	4.421	.3663	563.3	.3504-02
105	1500.0	437.00	327.00	.7158-01	.8499-01	.9378-01	39.04	2.794	.3663	563.3	.2215-02
105	1500.0	532.30	331.00	.7345-01	.8722-01	.9624-01	39.03	2.867	.3665	563.5	.2273-02
105	1525.0	424.00	332.00	.2102-01	.2497-01	.2755-01	39.01	.8202	.3667	563.9	.6505-03
105	1525.0	431.00	333.00	.5198-01	.6172-01	.6809-01	39.06	2.030	.3660	562.9	.1608-02
105	1525.0	440.00	334.00	.9174-01	.1089	.1202	39.05	3.582	.3662	563.1	.2838-02
105	1525.0	493.00	335.00	.6839-01	.8120-01	.8958-01	39.08	2.673	.3658	562.4	.2116-02
42	1545.0	434.00	338.00	.3342-01	.3954-01	.4352-01	40.25	1.345	.3534	550.1	.1042-02
42	1545.0	443.00	339.00	.7720-01	.9132-01	.1005	40.28	3.110	.3530	549.4	.2407-02

IH103 60-OT OMS POD (R3PS15)

OMS POD

PARAMETRIC DATA

MACH = 5.250 ALPHA = 5.000 BETA = -9.000 ELEVON = .0000
BDFLAP = .0000 SPDBRK = .0000

TEST CONDITIONS

RUN NUMBER	ALPHA DEG.	BETA DEG.	MACH	RN/FT /FT X10 6	PT PSIA	TT DEG. R	HT BTU/ LBM	PINF PSIA	TINF DEG. R	RHO SLUGS/ FT3	VINF FT/SEC	SCALE
37	10.00	-5.000	5.250	1.022	103.7	1517.	374.0	.1427	239.4	.5002-04	3981.	.1750-01
43	5.000	-9.000	5.250	1.042	103.7	1500.	369.4	.1429	236.4	.5072-04	3956.	.1750-01

RUN NUMBER	PHI DEG.	HS SPHERE TW=540
37	.0000	.1679
43	.0000	.1678

TEST DATA

RUN NUMBER	XO	ZO	T/C NO	H/HREF R=1.0	H/HREF R=.900	H/HREF R=.850	QREF BTU/ FT2SEC	QDOT BTU/ FT2SEC	HW/HT	TW DEG. R	STN NO R=.900
37	1325.0	428.60	298.00	.7269-01	.8597-01	.9461-01	40.65	2.954	.3526	549.6	.2252-02
37	1325.0	489.20	299.00	.2655	.3140	.3455	40.68	10.80	.3520	548.7	.8225-02
37	1325.0	506.70	301.00	.8845-01	.1046	.1151	40.63	3.594	.3528	549.9	.2741-02
37	1350.0	440.40	302.00	.1516	.1793	.1974	40.61	6.157	.3532	550.5	.4698-02
37	1350.0	498.50	304.00	.1021	.1207	.1329	40.67	4.153	.3522	549.0	.3163-02
37	1350.0	515.50	306.00	.3719-01	.4398-01	.4841-01	40.63	1.511	.3528	550.0	.1152-02
37	1375.0	421.60	308.00	.9274-01	.1097	.1208	40.58	3.764	.3536	551.2	.2874-02
37	1375.0	440.00	309.00	.9123-01	.1079	.1188	40.60	3.704	.3533	550.7	.2827-02
37	1375.0	460.00	310.00	.1356	.1604	.1766	40.62	5.510	.3529	550.2	.4203-02
37	1375.0	503.40	311.00	.5409-01	.6396-01	.7038-01	40.68	2.201	.3520	548.7	.1676-02
37	1375.0	531.00	312.00	.3755-01	.4442-01	.4888-01	40.63	1.526	.3529	550.0	.1164-02
37	1400.0	523.40	313.00	.3622-01	.4284-01	.4714-01	40.67	1.473	.3522	549.1	.1122-02
37	1425.0	415.10	315.00	.1232	.1457	.1603	40.61	5.001	.3532	550.5	.3816-02
37	1425.0	437.70	316.00	.5184-01	.6131-01	.6748-01	40.63	2.106	.3528	549.9	.1606-02
37	1425.0	466.30	317.00	.8642-01	.1022	.1124	40.69	3.516	.3519	548.6	.2677-02
37	1425.0	536.50	319.00	.2105-01	.2489-01	.2739-01	40.70	.8567	.3518	548.3	.6521-03
37	1450.0	418.20	320.00	.5671-01	.6707-01	.7382-01	40.63	2.304	.3528	550.0	.1757-02
37	1450.0	436.00	321.00	.3792-01	.4484-01	.4935-01	40.66	1.542	.3523	549.2	.1175-02
37	1450.0	468.20	322.00	.6920-01	.8181-01	.9002-01	40.71	2.817	.3515	548.0	.2143-02

IH103 60-OT OMS POD (R3PS15)

RUN NUMBER	XO	ZO	T/C NO	H/HREF R=1.0	H/HREF R=.900	H/HREF R=.850	QREF BTU/ FT2SEC	QDOT BTU/ FT2SEC	HW/HT	TW DEG. R	STN NO R=.900
37	1450.0	511.10	323.00	.3058-01	.3616-01	.3978-01	40.74	1.246	.3512	547.5	.9473-03
37	1450.0	526.60	325.00	.6095-01	.7206-01	.7928-01	40.73	2.482	.3514	547.7	.1888-02
37	1500.0	437.00	327.00	.2308-01	.2727-01	.3000-01	40.82	.9421	.3499	545.5	.7147-03
37	1500.0	532.30	331.00	.4836-01	.5715-01	.6287-01	40.80	1.973	.3502	545.9	.1497-02
37	1525.0	424.00	332.00	.1170-01	.1383-01	.1521-01	40.83	.4779	.3497	545.2	.3624-03
37	1525.0	431.00	333.00	.1651-01	.1951-01	.2146-01	40.83	.6741	.3498	545.2	.5112-03
37	1525.0	440.00	334.00	.3828-01	.4523-01	.4975-01	40.84	1.563	.3496	544.9	.1185-02
37	1525.0	493.00	335.00	.4094-01	.4838-01	.5321-01	40.87	1.673	.3491	544.2	.1268-02
43	1545.0	434.00	338.00	.1395-01	.1654-01	.1823-01	39.61	.5526	.3607	555.3	.4297-03
43	1545.0	443.00	339.00	.3405-01	.4036-01	.4448-01	39.63	1.349	.3603	554.7	.1049-02

IH103 60-OT OMS POD (R3PS16)

OMS POD

PARAMETRIC DATA

MACH = 5.250 ALPHA = 10.00 BETA = -9.000 ELEVON = .0000
BDFLAP = .0000 SPDBRK = .0000

TEST CONDITIONS

RUN NUMBER	ALPHA DEG.	BETA DEG.	MACH	RN/FT /FT X10 6	PT PSIA	TT DEG. R	HT BTU/ LBM	PINF PSIA	TINF DEG. R	RHO SLUGS/ FT3	VINF FT/SEC	SCALE
38	10.00	-5.000	5.250	1.028	102.7	1503.	370.3	.1415	237.0	.5009-04	3961.	.1750-01
44	10.00	-9.000	5.250	1.040	101.3	1480.	364.3	.1399	233.1	.5034-04	3929.	.1750-01

RUN NUMBER	PHI DEG.	HS SPHERE TW=540
38	.0000	.1670
44	.0000	.1658

TEST DATA

RUN NUMBER	XO	ZO	T/C NO	H/HREF R=1.0	H/HREF R=.900	H/HREF R=.850	QREF BTU/ FT2SEC	QDOT BTU/ FT2SEC	HW/HT	TW DEG. R	STN NO R=.900
38	1325.0	428.60	298.00	.6685-01	.7925-01	.8735-01	39.51	2.641	.3608	556.9	.2072-02
38	1325.0	489.20	299.00	.1671	.1981	.2183	39.49	6.599	.3610	557.1	.5179-02
38	1325.0	506.70	301.00	.3130-01	.3711-01	.4091-01	39.48	1.236	.3612	557.4	.9703-03
38	1350.0	440.40	302.00	.1428	.1693	.1867	39.43	5.630	.3621	558.8	.4427-02
38	1350.0	498.50	304.00	.7152-01	.8481-01	.9350-01	39.45	2.821	.3618	558.3	.2217-02
38	1350.0	515.50	306.00	.1396-01	.1655-01	.1824-01	39.45	.5506	.3617	558.1	.4326-03
38	1375.0	421.60	308.00	.7567-01	.8973-01	.9891-01	39.46	2.986	.3615	557.9	.2346-02
38	1375.0	440.00	309.00	.9007-01	.1068	.1178	39.39	3.548	.3626	559.6	.2793-02
38	1375.0	460.00	310.00	.1201	.1424	.1571	39.37	4.728	.3629	560.0	.3724-02
38	1375.0	503.40	311.00	.3890-01	.4612-01	.5084-01	39.46	1.535	.3616	558.0	.1206-02
38	1375.0	531.00	312.00	.2281-01	.2705-01	.2982-01	39.42	.8991	.3621	558.8	.7070-03
38	1400.0	523.40	313.00	.1993-01	.2363-01	.2605-01	39.47	.7867	.3613	557.6	.6178-03
38	1425.0	415.10	315.00	.1012	.1200	.1323	39.48	3.995	.3613	557.5	.3137-02
38	1425.0	437.70	316.00	.5235-01	.6209-01	.6845-01	39.41	2.063	.3624	559.2	.1623-02
38	1425.0	466.30	317.00	.7312-01	.8672-01	.9561-01	39.41	2.882	.3623	559.2	.2267-02
38	1425.0	536.50	319.00	.1679-01	.1991-01	.2194-01	39.50	.6634	.3608	556.9	.5205-03
38	1450.0	418.20	320.00	.4929-01	.5844-01	.6442-01	39.48	1.946	.3613	557.6	.1528-02
38	1450.0	436.00	321.00	.3765-01	.4464-01	.4922-01	39.44	1.485	.3618	558.4	.1167-02
38	1450.0	468.20	322.00	.5758-01	.6828-01	.7528-01	39.43	2.271	.3619	558.6	.1785-02

IH103 60-OT OMS POD (R3PS16)

RUN NUMBER	XO	ZO	T/C NO	H/HREF R=1.0	H/HREF R=.900	H/HREF R=.850	QREF BTU/ FT2SEC	QDOT BTU/ FT2SEC	HW/HT	TW DEG. R	STN NO R=.900
38	1450.0	511.10	323.00	.2449-01	.2903-01	.3200-01	39.50	.9674	.3609	556.9	.7590-03
38	1450.0	526.60	325.00	.3500-01	.4149-01	.4573-01	39.54	1.384	.3603	556.1	.1085-02
38	1500.0	437.00	327.00	.2084-01	.2470-01	.2722-01	39.53	.8238	.3604	556.2	.6458-03
38	1500.0	532.30	331.00	.2651-01	.3142-01	.3463-01	39.53	1.048	.3605	556.3	.8216-03
38	1525.0	424.00	332.00	.2438-01	.2889-01	.3185-01	39.52	.9635	.3605	556.4	.7555-03
38	1525.0	431.00	333.00	.1681-01	.1992-01	.2195-01	39.55	.6648	.3601	555.8	.5209-03
38	1525.0	440.00	334.00	.2976-01	.3527-01	.3887-01	39.54	1.177	.3603	556.0	.9221-03
38	1525.0	493.00	335.00	.3165-01	.3751-01	.4134-01	39.55	1.252	.3601	555.7	.9807-03
44	1545.0	434.00	338.00	.1742-01	.2069-01	.2283-01	38.26	.6666	.3662	556.1	.5387-03
44	1545.0	443.00	339.00	.2764-01	.3282-01	.3621-01	38.29	1.058	.3658	555.5	.8546-03

IH103 60-OT OMS POD (R3PS17)

OMS POD

PARAMETRIC DATA

MACH = 5.250 ALPHA = -10.00 BETA = -9.000 ELEVON = .0000
BDFLAP = .0000 SPDBRK = .0000

TEST CONDITIONS

RUN NUMBER	ALPHA DEG.	BETA DEG.	MACH	RN/FT /FT X10 6	PT PSIA	TT DEG. R	HT BTU/ LBM	PINF PSIA	TINF DEG. R	RHO SLUGS/ FT3	VINF FT/SEC	SCALE
106	-10.00	-9.000	5.250	.9984	101.9	1524.	375.8	.1402	240.5	.4894-04	3990.	.1750-01
107	-10.00	-9.000	5.250	1.083	103.6	1464.	360.0	.1432	230.4	.5214-04	3906.	.1750-01

RUN NUMBER	PHI DEG.	HS SPHERE TW=540
106	.0000	.1666
107	.0000	.1676

TEST DATA

RUN NUMBER	XO	ZO	T/C NO	H/HREF R=1.0	H/HREF R=.900	H/HREF R=.850	QREF BTU/ FT2SEC	QDOT BTU/ FT2SEC	HW/HT	TW DEG. R	STN NO R=.900
106	1325.0	428.60	298.00	.1457	.1726	.1901	40.11	5.842	.3586	561.5	.4570-02
106	1325.0	489.20	299.00	.5856	.6936	.7640	40.18	23.53	.3574	559.8	.1837-01
106	1325.0	506.70	301.00	.2268	.2687	.2961	40.09	9.094	.3588	561.9	.7117-02
106	1350.0	440.40	302.00	.2094	.2481	.2734	40.03	8.381	.3597	563.3	.6570-02
106	1350.0	458.60	303.00	.2705	.3206	.3533	40.03	10.83	.3598	563.4	.8489-02
106	1350.0	498.50	304.00	.2728	.3232	.3561	40.11	10.94	.3585	561.4	.8560-02
106	1375.0	421.60	308.00	.8924-01	.1058	.1166	40.00	3.569	.3602	564.1	.2801-02
106	1375.0	440.00	309.00	.1645	.1950	.2149	39.98	6.577	.3606	564.7	.5164-02
106	1375.0	460.00	310.00	.1652	.1958	.2158	40.00	6.610	.3601	564.0	.5186-02
106	1375.0	503.40	311.00	.1341	.1588	.1750	40.12	5.379	.3583	561.2	.4206-02
106	1375.0	531.00	312.00	.7868-01	.9322-01	.1027	40.07	3.153	.3591	562.4	.2469-02
106	1400.0	523.40	313.00	.1355	.1606	.1769	40.09	5.434	.3588	561.9	.4253-02
106	1425.0	415.10	315.00	.1291	.1531	.1687	40.00	5.166	.3602	564.1	.4053-02
106	1425.0	437.70	316.00	.1238	.1468	.1618	39.99	4.952	.3603	564.3	.3887-02
106	1425.0	466.30	317.00	.9694-01	.1149	.1266	40.03	3.881	.3597	563.4	.3042-02
106	1425.0	536.50	319.00	.6038-01	.7153-01	.7881-01	40.11	2.422	.3585	561.5	.1894-02
106	1450.0	418.20	320.00	.9082-01	.1076	.1186	40.02	3.634	.3599	563.7	.2850-02
106	1450.0	436.00	321.00	.1026	.1216	.1340	40.00	4.103	.3601	564.0	.3219-02
106	1450.0	468.20	322.00	.7647-01	.9062-01	.9985-01	40.04	3.062	.3595	563.0	.2400-02

IH103 60-OT OMS POD (R3PS17)

RUN NUMBER	XO	ZO	T/C NO	H/HREF R=1.0	H/HREF R=.900	H/HREF R=.850	QREF BTU/ FT2SEC	QDOT BTU/ FT2SEC	HW/HT	TW DEG. R	STN NO R=.900
106	1450.0	511.10	323.00	.9299-01	.1102	.1214	40.10	3.729	.3586	561.6	.2917-02
106	1450.0	526.60	325.00	.1522	.1803	.1986	40.12	6.105	.3584	561.2	.4775-02
106	1500.0	437.00	327.00	.6607-01	.7826-01	.8622-01	40.12	2.651	.3583	561.1	.2073-02
106	1500.0	532.30	331.00	.1211	.1435	.1580	40.13	4.860	.3582	561.0	.3799-02
106	1525.0	424.00	332.00	.2090-01	.2477-01	.2729-01	40.09	.8380	.3588	561.9	.6559-03
106	1525.0	431.00	333.00	.5062-01	.5996-01	.6606-01	40.14	2.032	.3581	560.8	.1588-02
106	1525.0	440.00	334.00	.1436	.1707	.1885	39.35	5.650	.3703	579.8	.4518-02
106	1525.0	493.00	335.00	.9703-01	.1149	.1266	40.18	3.899	.3574	559.8	.3043-02
107	1545.0	434.00	338.00	.3122-01	.3716-01	.4108-01	37.67	1.176	.3751	562.9	.9495-03
107	1545.0	443.00	339.00	.7363-01	.8764-01	.9686-01	37.69	2.775	.3747	562.3	.2239-02

IH103 60-OT OMS POD

(R3PS18)

OMS POD

PARAMETRIC DATA

MACH = 5.250 ALPHA = -10.00 BETA = -3.000 ELEVON = .0000
BDFLAP = .0000 SPDBRK = .0000

TEST CONDITIONS

RUN NUMBER	ALPHA DEG.	BETA DEG.	MACH	RN/FT /FT X10 6	PT PSIA	TT DEG. R	HT BTU/ LBM	PINF PSIA	TINF DEG. R	RHO SLUGS/ FT3	VINF FT/SEC	SCALE
114	-10.00	-3.000	5.250	1.078	103.6	1468.	361.0	.1430	231.1	.5194-04	3911.	.1750-01
115	-10.00	-3.000	5.250	1.049	103.3	1490.	366.9	.1425	234.8	.5093-04	3943.	.1750-01

RUN NUMBER	PHI DEG.	HS SPHERE TW=540
114	.0000	.1675
115	.0000	.1675

TEST DATA

RUN NUMBER	XO	ZO	T/C NO	H/HREF R=1.0	H/HREF R=.900	H/HREF R=.850	QREF BTU/ FT2SEC	QDOT BTU/ FT2SEC	HW/HT	TW DEG. R	STN NO R=.900
115	1325.0	428.60	298.00	.9574-01	.1135	.1250	39.32	3.764	.3598	550.2	.2941-02
115	1325.0	489.20	299.00	.4175	.4947	.5452	39.33	16.42	.3596	549.7	.1282-01
115	1325.0	506.70	301.00	.2877	.3410	.3758	39.28	11.30	.3603	550.9	.8836-02
115	1350.0	440.40	302.00	.1301	.1542	.1700	39.24	5.105	.3610	551.9	.3997-02
115	1350.0	458.60	303.00	.2190	.2597	.2862	39.24	8.596	.3609	551.8	.6729-02
115	1350.0	498.50	304.00	.2414	.2861	.3153	39.29	9.486	.3602	550.7	.7415-02
115	1350.0	515.50	306.00	.1581	.1874	.2065	39.27	6.207	.3606	551.3	.4855-02
115	1375.0	421.60	308.00	.6611-01	.7838-01	.8639-01	39.24	2.594	.3610	551.9	.2031-02
115	1375.0	440.00	309.00	.1151	.1365	.1504	39.21	4.513	.3615	552.6	.3536-02
115	1375.0	460.00	310.00	.1365	.1618	.1784	39.22	5.353	.3613	552.4	.4194-02
115	1375.0	503.40	311.00	.1301	.1541	.1699	39.29	5.111	.3602	550.6	.3995-02
115	1375.0	531.00	312.00	.8095-01	.9595-01	.1058	39.26	3.178	.3606	551.4	.2486-02
115	1400.0	523.40	313.00	.1316	.1559	.1718	39.31	5.172	.3599	550.2	.4040-02
115	1425.0	415.10	315.00	.9368-01	.1111	.1224	39.26	3.677	.3608	551.6	.2878-02
115	1425.0	437.70	316.00	.9082-01	.1077	.1187	39.24	3.563	.3610	552.0	.2790-02
115	1425.0	466.30	317.00	.7002-01	.8300-01	.9148-01	39.27	2.750	.3605	551.2	.2151-02
115	1425.0	536.50	319.00	.4514-01	.5349-01	.5893-01	39.36	1.777	.3591	549.0	.1386-02
115	1450.0	418.20	320.00	.6369-01	.7549-01	.8321-01	39.27	2.501	.3605	551.2	.1956-02
115	1450.0	436.00	321.00	.7685-01	.9109-01	.1004	39.26	3.017	.3606	551.4	.2361-02

IH103 60-OT OMS POD (R3PS18)

RUN NUMBER	XO	ZO	T/C NO	H/HREF R=1.0	H/HREF R=.900	H/HREF R=.850	QREF BTU/ FT2SEC	QDOT BTU/ FT2SEC	HW/HT	TW DEG. R	STN NO R=.900
115	1450.0	468.20	322.00	.5571-01	.6602-01	.7275-01	39.32	2.190	.3598	550.0	.1711-02
115	1450.0	511.10	323.00	.6524-01	.7730-01	.8517-01	39.38	2.569	.3588	548.6	.2003-02
115	1500.0	437.00	327.00	.4875-01	.5775-01	.6362-01	39.42	1.922	.3582	547.6	.1497-02
115	1500.0	532.30	331.00	.8460-01	.1002	.1104	39.40	3.333	.3585	548.1	.2597-02
115	1525.0	424.00	332.00	.1858-01	.2200-01	.2424-01	39.43	.7324	.3581	547.4	.5703-03
115	1525.0	431.00	333.00	.3666-01	.4341-01	.4782-01	39.45	1.446	.3577	546.9	.1125-02
115	1525.0	440.00	334.00	.6572-01	.7783-01	.8574-01	39.47	2.594	.3575	546.6	.2017-02
115	1525.0	493.00	335.00	.4414-01	.5227-01	.5758-01	39.48	1.742	.3573	546.3	.1355-02
114	1545.0	434.00	338.00	.2471-01	.2935-01	.3240-01	38.20	.9436	.3682	554.0	.7518-03
114	1545.0	443.00	339.00	.6096-01	.7242-01	.7993-01	38.22	2.330	.3679	553.5	.1855-02

IH103 60-OT OMS POD (R3PS19)

OMS POD

PARAMETRIC DATA

MACH = 5.250 ALPHA = -10.00 BETA = -5.000 ELEVON = .0000
BDFLAP = .0000 SPDBRK = .0000

TEST CONDITIONS

RUN NUMBER	ALPHA DEG.	BETA DEG.	MACH	RN/FT /FT X10 6	PT PSIA	TT DEG. R	HT BTU/ LBM	PINF PSIA	TINF DEG. R	RHO SLUGS/ FT3	VINF FT/SEC	SCALE
116	-10.00	-5.000	5.250	1.030	103.5	1509.	372.0	.1426	238.0	.5026-04	3970.	.1750-01
117	-10.00	-5.000	5.250	1.076	103.9	1472.	362.2	.1434	231.8	.5192-04	3918.	.1750-01

RUN NUMBER	PHI DEG.	HS SPHERE TW=540
116	.0000	.1678
117	.0000	.1678

TEST DATA

RUN NUMBER	XO	ZO	T/C NO	H/HREF R=1.0	H/HREF R=.900	H/HREF R=.850	QREF BTU/ FT2SEC	QDOT BTU/ FT2SEC	HW/HT	TW DEG. R	STN NO R=.900
116	1325.0	428.60	298.00	.1199	.1419	.1563	40.18	4.817	.3559	551.6	.3707-02
116	1325.0	489.20	299.00	.6027	.7134	.7856	40.19	24.22	.3556	551.2	.1863-01
116	1325.0	506.70	301.00	.2457	.2909	.3204	40.13	9.860	.3565	552.7	.7597-02
116	1350.0	440.40	302.00	.1737	.2056	.2265	40.10	6.963	.3570	553.5	.5370-02
116	1350.0	458.60	303.00	.2499	.2959	.3259	40.11	10.02	.3569	553.3	.7727-02
116	1350.0	498.50	304.00	.2560	.3031	.3338	40.15	10.28	.3562	552.1	.7917-02
116	1350.0	515.50	306.00	.1371	.1623	.1788	40.12	5.500	.3567	552.9	.4240-02
116	1375.0	421.60	308.00	.7871-01	.9321-01	.1027	40.10	3.156	.3570	553.5	.2434-02
116	1375.0	440.00	309.00	.1445	.1711	.1885	40.07	5.789	.3574	554.1	.4468-02
116	1375.0	460.00	310.00	.1556	.1842	.2029	40.08	6.235	.3573	553.8	.4811-02
116	1375.0	503.40	311.00	.1320	.1562	.1721	40.16	5.300	.3561	552.0	.4081-02
116	1375.0	531.00	312.00	.8936-01	.1058	.1165	40.12	3.585	.3567	552.9	.2763-02
116	1400.0	523.40	313.00	.1374	.1627	.1792	40.15	5.518	.3562	552.2	.4249-02
116	1425.0	415.10	315.00	.1121	.1328	.1462	40.13	4.500	.3566	552.8	.3468-02
116	1425.0	437.70	316.00	.1081	.1280	.1410	40.12	4.337	.3568	553.1	.3344-02
116	1425.0	466.30	317.00	.8664-01	.1026	.1130	40.15	3.479	.3562	552.2	.2679-02
116	1425.0	536.50	319.00	.4570-01	.5409-01	.5956-01	40.19	1.837	.3556	551.2	.1413-02
116	1450.0	418.20	320.00	.8142-01	.9640-01	.1062	40.14	3.268	.3564	552.5	.2518-02
116	1450.0	436.00	321.00	.8776-01	.1039	.1144	40.15	3.523	.3563	552.3	.2714-02

IH103 60-OT OMS POD (R3PS19)

RUN NUMBER	XO	ZO	T/C NO	H/HREF R=1.0	H/HREF R=.900	H/HREF R=.850	QREF BTU/ FT2SEC	QDOT BTU/ FT2SEC	HW/HT	TW DEG. R	STN NO R=.900
116	1450.0	468.20	322.00	.7119-01	.8427-01	.9279-01	40.19	2.861	.3556	551.3	.2201-02
116	1450.0	511.10	323.00	.6601-01	.7812-01	.8602-01	40.22	2.655	.3552	550.6	.2041-02
116	1500.0	437.00	327.00	.5797-01	.6858-01	.7549-01	40.31	2.337	.3537	548.3	.1791-02
116	1500.0	532.30	331.00	.8531-01	.1010	.1111	40.25	3.434	.3547	549.9	.2637-02
116	1525.0	424.00	332.00	.1655-01	.1958-01	.2155-01	40.32	.6671	.3537	548.3	.5114-03
116	1525.0	431.00	333.00	.4761-01	.5632-01	.6199-01	40.33	1.920	.3535	547.9	.1471-02
116	1525.0	440.00	334.00	.8030-01	.9498-01	.1045	40.35	3.240	.3532	547.5	.2481-02
116	1525.0	493.00	335.00	.6519-01	.7710-01	.8485-01	40.37	2.631	.3529	547.0	.2014-02
117	1545.0	434.00	338.00	.2806-01	.3331-01	.3674-01	38.55	1.081	.3655	551.7	.8537-03
117	1545.0	443.00	339.00	.6871-01	.8156-01	.8997-01	38.57	2.650	.3651	551.1	.2091-02

IH103 60-OT OMS POD (R3PS20)

OMS POD

PARAMETRIC DATA

MACH = 5.250 ALPHA = -10.00 BETA = .0000 ELEVON = .0000
BDFLAP = .0000 SPDBRK = .0000

TEST CONDITIONS

RUN NUMBER	ALPHA DEG.	BETA DEG.	MACH	RN/FT /FT X10 6	PT PSIA	TT DEG. R	HT BTU/ LBM	PINF PSIA	TINF DEG. R	RHO SLUGS/ FT3	VINF FT/SEC	SCALE
124	-10.00	.0000	5.250	1.031	103.1	1504.	370.6	.1420	237.2	.5026-04	3963.	.1750-01
125	-10.00	.0000	5.250	1.058	103.2	1482.	364.7	.1424	233.4	.5122-04	3931.	.1750-01

RUN NUMBER	PHI DEG.	HS SPHERE TW=540
124	.0000	.1674
125	.0000	.1674

TEST DATA

RUN NUMBER	XO	ZO	T/C NO	H/HREF R=1.0	H/HREF R=.900	H/HREF R=.850	QREF BTU/ FT2SEC	QDOT BTU/ FT2SEC	HW/HT	TW DEG. R	STN NO R=.900
125	1325.0	428.60	298.00	.9133-01	.1086	.1199	38.42	3.509	.3700	562.3	.2802-02
125	1325.0	489.20	299.00	.4979	.5918	.6534	38.45	19.14	.3696	561.7	.1528-01
125	1325.0	506.70	301.00	.3072	.3653	.4034	38.36	11.79	.3709	563.7	.9428-02
125	1350.0	440.40	302.00	.9464-01	.1125	.1243	38.34	3.628	.3713	564.3	.2905-02
125	1350.0	458.60	303.00	.1643	.1954	.2158	38.32	6.297	.3715	564.7	.5044-02
125	1350.0	498.50	304.00	.2311	.2748	.3035	38.35	8.863	.3711	564.0	.7093-02
125	1350.0	515.50	306.00	.1815	.2158	.2384	38.32	6.954	.3715	564.7	.5570-02
125	1375.0	421.60	308.00	.5380-01	.6397-01	.7064-01	38.36	2.064	.3709	563.7	.1651-02
125	1375.0	440.00	309.00	.8436-01	.1003	.1108	38.29	3.230	.3720	565.4	.2589-02
125	1375.0	460.00	310.00	.1061	.1262	.1394	38.27	4.059	.3722	565.8	.3256-02
125	1375.0	503.40	311.00	.1148	.1365	.1507	38.35	4.401	.3711	564.1	.3523-02
125	1375.0	531.00	312.00	.6381-01	.7464-01	.8156-01	42.20	2.693	.3106	472.1	.1934-02
125	1400.0	523.40	313.00	.1105	.1314	.1451	38.35	4.236	.3711	564.1	.3390-02
125	1425.0	415.10	315.00	.7358-01	.8750-01	.9663-01	38.35	2.822	.3711	564.0	.2258-02
125	1425.0	437.70	316.00	.7009-01	.8334-01	.9204-01	38.34	2.687	.3712	564.1	.2151-02
125	1425.0	466.30	317.00	.5706-01	.6786-01	.7495-01	38.31	2.186	.3717	564.9	.1751-02
125	1425.0	536.50	319.00	.5743-01	.6828-01	.7540-01	38.37	2.204	.3707	563.5	.1762-02
125	1450.0	418.20	320.00	.4957-01	.5893-01	.6508-01	38.38	1.903	.3705	563.1	.1521-02
125	1450.0	436.00	321.00	.5810-01	.6908-01	.7630-01	38.34	2.227	.3712	564.2	.1783-02

IH103 60-OT OMS POD (R3PS20)

RUN NUMBER	XO	ZO	T/C NO	H/HREF R=1.0	H/HREF R=.900	H/HREF R=.850	QREF BTU/ FT2SEC	QDOT BTU/ FT2SEC	HW/HT	TW DEG. R	STN NO R=.900
125	1450.0	468.20	322.00	.4115-01	.4893-01	.5404-01	38.34	1.578	.3712	564.1	.1263-02
125	1450.0	511.10	323.00	.5362-01	.6375-01	.7040-01	38.38	2.058	.3707	563.4	.1645-02
125	1500.0	437.00	327.00	.3619-01	.4301-01	.4748-01	38.47	1.392	.3692	561.1	.1110-02
125	1500.0	532.30	331.00	.6175-01	.7340-01	.8104-01	38.42	2.372	.3700	562.3	.1895-02
125	1525.0	424.00	332.00	.9802-02	.1165-01	.1286-01	38.46	.3770	.3693	561.3	.3007-03
125	1525.0	431.00	333.00	.3266-01	.3882-01	.4285-01	38.49	1.257	.3689	560.7	.1002-02
125	1525.0	440.00	334.00	.4852-01	.5765-01	.6364-01	38.48	1.867	.3690	560.8	.1488-02
125	1525.0	493.00	335.00	.2782-01	.3306-01	.3649-01	38.50	1.071	.3686	560.3	.8534-03
124	1545.0	434.00	338.00	.1908-01	.2263-01	.2495-01	39.57	.7552	.3616	558.5	.5907-03
124	1545.0	443.00	339.00	.4443-01	.5267-01	.5806-01	39.61	1.760	.3611	557.7	.1375-02

IH103 60-OT OMS POD (R3PS21)

OMS POD

PARAMETRIC DATA

MACH = 5.250 ALPHA = .0000 BETA = .0000 ELEVON = .0000
BDFLAP = .0000 SPDBRK = .0000

TEST CONDITIONS

RUN NUMBER	ALPHA DEG.	BETA DEG.	MACH	RN/FT /FT X10 6	PT PSIA	TT DEG. R	HT BTU/ LBM	PINF PSIA	TINF DEG. R	RHO SLUGS/ FT3	VINF FT/SEC	SCALE
127	.0000	.0000	5.250	.6432	102.6	1994.	502.8	.1355	321.8	.3534-04	4616.	.1750-01
128	.0000	.0000	5.250	.6494	103.9	1998.	503.7	.1372	322.4	.3570-04	4620.	.1750-01

RUN NUMBER	PHI DEG.	HS SPHERE TW=540
127	.0000	.1681
128	.0000	.1691

TEST DATA

RUN NUMBER	XO	ZO	T/C NO	H/HREF R=1.0	H/HREF R=.900	H/HREF R=.850	QREF BTU/ FT2SEC	QDOT BTU/ FT2SEC	HW/HT	TW DEG. R	STN NO R=.900
127	1325.0	428.60	298.00	.3262-01	.3772-01	.4092-01	62.42	2.036	.2612	547.3	.1208-02
127	1325.0	489.20	299.00	.6073-01	.7024-01	.7621-01	62.36	3.787	.2618	548.5	.2249-02
127	1325.0	506.70	301.00	.1971	.2280	.2474	62.31	12.28	.2624	549.8	.7299-02
127	1350.0	440.40	302.00	.7674-01	.8879-01	.9635-01	62.26	4.778	.2629	550.9	.2842-02
127	1350.0	458.60	303.00	.1955	.2263	.2455	62.21	12.17	.2634	552.0	.7243-02
127	1350.0	498.50	304.00	.1010	.1168	.1268	62.26	6.286	.2629	550.9	.3739-02
127	1350.0	515.50	306.00	.1517	.1755	.1905	62.25	9.445	.2630	551.1	.5619-02
127	1375.0	421.60	308.00	.2888-01	.3340-01	.3624-01	62.34	1.800	.2620	549.0	.1069-02
127	1375.0	440.00	309.00	.7492-01	.8670-01	.9409-01	62.17	4.658	.2639	553.0	.2775-02
127	1375.0	460.00	310.00	.1275	.1476	.1602	62.15	7.926	.2642	553.6	.4724-02
127	1375.0	503.40	311.00	.9340-01	.1081	.1173	62.23	5.812	.2633	551.7	.3459-02
127	1375.0	531.00	312.00	.9438-01	.1092	.1185	62.22	5.873	.2633	551.8	.3496-02
127	1400.0	523.40	313.00	.9522-01	.1102	.1195	62.31	5.933	.2623	549.7	.3527-02
127	1425.0	415.10	315.00	.5492-01	.6354-01	.6894-01	62.29	3.421	.2625	550.1	.2034-02
127	1425.0	437.70	316.00	.5393-01	.6239-01	.6771-01	62.27	3.358	.2628	550.7	.1997-02
127	1425.0	466.30	317.00	.5910-01	.6838-01	.7421-01	62.21	3.677	.2635	552.1	.2189-02
127	1425.0	536.50	319.00	.7109-01	.8223-01	.8923-01	62.34	4.432	.2620	549.0	.2633-02
127	1450.0	418.20	320.00	.3341-01	.3865-01	.4193-01	62.35	2.083	.2620	548.9	.1237-02
127	1450.0	436.00	321.00	.4594-01	.5315-01	.5768-01	62.27	2.861	.2628	550.7	.1702-02

IH103 60-OT OMS POD (R3PS21)

RUN NUMBER	XO	ZO	T/C NO	H/HREF R=1.0	H/HREF R=.900	H/HREF R=.850	QREF BTU/ FT2SEC	QDOT BTU/ FT2SEC	HW/HT	TW DEG. R	STN NO R=.900
127	1450.0	468.20	322.00	.4288-01	.4961-01	.5384-01	62.26	2.670	.2630	551.0	.1588-02
127	1450.0	511.10	323.00	.7179-01	.8305-01	.9011-01	62.32	4.474	.2622	549.5	.2659-02
127	1500.0	437.00	327.00	.2664-01	.3081-01	.3342-01	62.44	1.663	.2609	546.7	.9865-03
127	1500.0	532.30	331.00	.6099-01	.7054-01	.7652-01	62.43	3.808	.2610	547.0	.2258-02
127	1525.0	424.00	332.00	.5080-01	.5874-01	.6373-01	62.47	3.173	.2606	546.1	.1881-02
127	1525.0	431.00	333.00	.3257-01	.3767-01	.4086-01	62.46	2.034	.2607	546.4	.1206-02
127	1525.0	440.00	334.00	.2995-01	.3463-01	.3757-01	62.45	1.870	.2608	546.4	.1109-02
127	1525.0	493.00	335.00	.3471-01	.4014-01	.4355-01	62.45	2.168	.2608	546.4	.1285-02
128	1545.0	434.00	338.00	.3080-01	.3565-01	.3870-01	62.60	1.928	.2648	555.9	.1135-02
128	1545.0	443.00	339.00	.2610-01	.3020-01	.3278-01	62.63	1.634	.2645	555.2	.9619-03

IH103 60-OT VERTICAL TAIL (R3PT01)

VERT TAIL

PARAMETRIC DATA

MACH = 5.250 ALPHA = .0000 BETA = .0000 ELEVON = .0000
BDFLAP = .0000 SPDBRK = .0000

TEST CONDITIONS

RUN NUMBER	ALPHA DEG.	BETA DEG.	MACH	RN/FT /FT X10 6	PT PSIA	TT DEG. R	HT BTU/ LBM	PINF PSIA	TINF DEG. R	RHO SLUGS/ FT3	VINF FT/SEC	SCALE
25	.0000	.0000	5.250	.9655	100.4	1541.	380.2	.1379	243.3	.4756-04	4014.	.1750-01

RUN NUMBER	PHI DEG.	HS SPHERE TW=540
25	.0000	.1654

TEST DATA

RUN NUMBER	ZV/BV	XV/CV	T/C NO	H/HREF R=1.0	H/HREF R=.900	H/HREF R=.850	QREF BTU/ FT2SEC	QDOT BTU/ FT2SEC	HW/HT	TW DEG. R	STN NO R=.900
25	.10000+00	.10000+00	340.00	.1190	.1404	.1543	41.14	4.894	.3454	547.4	.3778-02
25	.10000+00	.30000	341.00	.8688-01	.1025	.1126	41.24	3.583	.3440	545.2	.2759-02
25	.10000+00	.50000	342.00	.1134	.1337	.1469	41.26	4.677	.3437	544.6	.3599-02
25	.20000	.10000+00	343.00	.1101	.1300	.1429	41.08	4.523	.3464	548.9	.3498-02
25	.20000	.20000	344.00	.5111-01	.6033-01	.6630-01	41.15	2.103	.3453	547.2	.1623-02
25	.20000	.40000	345.00	.8188-01	.9661-01	.1062	41.22	3.375	.3443	545.6	.2600-02
25	.30000	.50000-01	348.00	.1812	.2140	.2353	41.04	7.437	.3471	550.0	.5758-02
25	.30000	.20000	349.00	.5616-01	.6629-01	.7286-01	41.15	2.311	.3453	547.2	.1784-02
25	.30000	.40000	350.00	.3111-01	.3671-01	.4034-01	41.21	1.282	.3444	545.8	.9880-03
25	.30000	.50000	351.00	.5780-01	.6820-01	.7494-01	41.23	2.383	.3441	545.3	.1836-02
25	.30000	.90000	352.00	.3369-01	.3973-01	.4365-01	41.32	1.392	.3428	543.2	.1069-02
25	.40000	.20000	354.00	.6237-01	.7360-01	.8089-01	41.18	2.568	.3449	546.5	.1981-02
25	.40000	.50000	356.00	.2106-01	.2484-01	.2729-01	41.30	.8699	.3431	543.7	.6687-03
25	.40000	.70000	357.00	.2032-01	.2396-01	.2631-01	41.37	.8405	.3420	541.9	.6449-03
25	.40000	.90000	358.00	.2597-01	.3064-01	.3366-01	41.29	1.073	.3431	543.8	.8246-03
25	.50000	.50000-01	359.00	.2096	.2474	.2719	41.13	8.620	.3457	547.9	.6658-02
25	.50000	.70000	360.00	.1109-01	.1307-01	.1436-01	41.39	.4589	.3417	541.4	.3519-03
25	.50000	.90000	361.00	.7705-02	.9089-02	.9986-02	41.29	.3181	.3433	544.0	.2446-03
25	.60000	.50000-01	362.00	.1999	.2359	.2593	41.17	8.229	.3451	546.9	.6349-02
25	.60000	.10000+00	363.00	.1264	.1491	.1639	41.19	5.205	.3448	546.4	.4014-02
25	.60000	.20000	364.00	.6058-01	.7154-01	.7866-01	41.01	2.484	.3474	550.6	.1925-02

IH103 60-OT VERTICAL TAIL (R3PT01)

RUN NUMBER	ZV/BV	XV/CV	T/C NO	H/HREF R=1.0	H/HREF R=.900	H/HREF R=.850	QREF BTU/ FT2SEC	QDOT BTU/ FT2SEC	HW/HT	TW DEG. R	STN NO R=.900
25	.60000	.40000	365.00	.3975-01	.4688-01	.5149-01	41.34	1.643	.3425	542.8	.1262-02
25	.60000	.50000	366.00	.3146-01	.3710-01	.4075-01	41.39	1.302	.3417	541.5	.9986-03
25	.70000	.50000-01	369.00	.2237	.2640	.2902	41.18	9.212	.3449	546.6	.7105-02
25	.70000	.70000	370.00	.1648-01	.1944-01	.2135-01	41.35	.6816	.3422	542.4	.5232-03
25	.70000	.90000	371.00	.1020-01	.1203-01	.1322-01	41.28	.4212	.3433	544.1	.3239-03
25	.80000	.10000+00	373.00	.1730	.2041	.2243	41.20	7.128	.3445	546.0	.5494-02
25	.80000	.40000	374.00	.5237-01	.6178-01	.6787-01	41.29	2.162	.3433	544.0	.1663-02
25	.80000	.50000	375.00	.3955-01	.4665-01	.5125-01	41.31	1.634	.3429	543.4	.1255-02
25	.80000	.70000	376.00	.1875-01	.2211-01	.2430-01	41.29	.7740	.3432	544.0	.5952-03
25	.80000	.90000	377.00	.1181-01	.1394-01	.1532-01	41.23	.4871	.3441	545.3	.3751-03
25	.90000	.10000+00	378.00	.2460	.2904	.3192	41.14	10.12	.3455	547.6	.7815-02
25	.90000	.30000	379.00	.7219-01	.8519-01	.9363-01	41.17	2.972	.3450	546.7	.2293-02
25	.90000	.70000	381.00	.1528-01	.1803-01	.1981-01	41.26	.6305	.3437	544.7	.4853-03
25	.90000	.90000	382.00	.1285-01	.1517-01	.1667-01	41.18	.5294	.3448	546.4	.4083-03
25	.95000	.30000	383.00	.8205-01	.9681-01	.1064	41.24	3.383	.3440	545.2	.2605-02
25	.95000	.50000	384.00	.5688-01	.6710-01	.7372-01	41.28	2.348	.3433	544.1	.1806-02
25	.95000	.90000	385.00	.2030-01	.2396-01	.2633-01	41.19	.8361	.3448	546.4	.6447-03

IH103 60-OT VERTICAL TAIL (R3PT02)

VERT TAIL

PARAMETRIC DATA

MACH = 5.250 ALPHA = -5.000 BETA = .0000 ELEVON = .0000
BDFLAP = .0000 SPDBRK = .0000

TEST CONDITIONS

RUN NUMBER	ALPHA DEG.	BETA DEG.	MACH	RN/FT /FT X10 6	PT PSIA	TT DEG. R	HT BTU/ LBM	PINF PSIA	TINF DEG. R	RHO SLUGS/ FT3	VINF FT/SEC	SCALE
26	-5.000	.0000	5.250	.9896	101.7	1530.	377.4	.1399	241.5	.4859-04	3999.	.1750-01

RUN NUMBER	PHI DEG.	HS SPHERE TW=540
26	.0000	.1664

TEST DATA

RUN NUMBER	ZV/BV	XV/CV	T/C NO	H/HREF R=1.0	H/HREF R=.900	H/HREF R=.850	QREF BTU/ FT2SEC	QDOT BTU/ FT2SEC	HW/HT	TW DEG. R	STN NO R=.900
26	.10000+00	.10000+00	340.00	.1311	.1550	.1705	40.79	5.350	.3501	550.6	.4123-02
26	.10000+00	.30000	341.00	.1711	.2021	.2223	40.88	6.994	.3487	548.5	.5377-02
26	.10000+00	.50000	342.00	.1370	.1618	.1780	40.90	5.604	.3484	547.9	.4305-02
26	.20000	.10000+00	343.00	.1118	.1322	.1454	40.74	4.554	.3510	552.0	.3516-02
26	.20000	.20000	344.00	.4592-01	.5426-01	.5969-01	40.80	1.874	.3499	550.3	.1443-02
26	.20000	.40000	345.00	.1754	.2073	.2279	40.87	7.170	.3489	548.8	.5514-02
26	.30000	.50000-01	348.00	.1846	.2183	.2402	40.70	7.513	.3516	552.9	.5806-02
26	.30000	.20000	349.00	.3840-01	.4538-01	.4991-01	40.81	1.567	.3498	550.2	.1207-02
26	.30000	.40000	350.00	.1423	.1681	.1848	40.87	5.815	.3489	548.7	.4471-02
26	.30000	.50000	351.00	.1711	.2022	.2223	40.89	6.997	.3486	548.3	.5378-02
26	.30000	.90000	352.00	.2896-01	.3420-01	.3761-01	40.97	1.187	.3473	546.3	.9100-03
26	.40000	.20000	354.00	.3718-01	.4393-01	.4832-01	40.84	1.518	.3494	549.5	.1169-02
26	.40000	.50000	356.00	.1090	.1288	.1416	40.96	4.466	.3475	546.5	.3426-02
26	.40000	.70000	357.00	.8464-01	.9994-01	.1099	41.03	3.473	.3465	545.0	.2659-02
26	.40000	.90000	358.00	.4586-01	.5416-01	.5955-01	40.95	1.878	.3476	546.8	.1441-02
26	.50000	.50000-01	359.00	.2428	.2870	.3157	40.78	9.903	.3503	550.9	.7634-02
26	.50000	.70000	360.00	.4978-01	.5876-01	.6459-01	41.05	2.043	.3462	544.4	.1564-02
26	.50000	.90000	361.00	.6473-01	.7645-01	.8406-01	40.95	2.651	.3476	546.8	.2034-02
26	.60000	.50000-01	362.00	.2673	.3159	.3474	40.82	10.91	.3497	549.9	.8403-02
26	.60000	.10000+00	363.00	.1651	.1951	.2145	40.85	6.743	.3492	549.3	.5189-02
26	.60000	.20000	364.00	.7003-01	.8280-01	.9111-01	40.67	2.848	.3519	553.5	.2202-02

IH103 60-OT VERTICAL TAIL (R3PT02)

RUN NUMBER	ZV/BV	XV/CV	T/C NO	H/HREF R=1.0	H/HREF R=.900	H/HREF R=.850	QREF BTU/ FT2SEC	QDOT BTU/ FT2SEC	HW/HT	TW DEG. R	STN NO R=.900
26	.60000	.40000	365.00	.2696-01	.3184-01	.3500-01	41.00	1.106	.3469	545.6	.8471-03
26	.60000	.50000	366.00	.2521-01	.2976-01	.3271-01	41.04	1.034	.3463	544.7	.7918-03
26	.70000	.50000-01	369.00	.2915	.3444	.3788	40.84	11.90	.3494	549.6	.9163-02
26	.70000	.70000	370.00	.1570-01	.1853-01	.2037-01	41.02	.6438	.3466	545.2	.4931-03
26	.70000	.90000	371.00	.7354-02	.8605-02	.9549-02	40.95	.3012	.3476	546.7	.2311-03
26	.80000	.10000+00	373.00	.2172	.2566	.2822	40.86	8.875	.3490	548.9	.6827-02
26	.80000	.40000	374.00	.6314-01	.7457-01	.8199-01	40.95	2.585	.3477	546.9	.1984-02
26	.80000	.50000	375.00	.4792-01	.5659-01	.6222-01	40.97	1.963	.3473	546.2	.1506-02
26	.80000	.70000	376.00	.2268-01	.2678-01	.2944-01	40.97	.9289	.3474	546.5	.7125-03
26	.80000	.90000	377.00	.1318-01	.1557-01	.1712-01	40.91	.5391	.3483	547.8	.4141-03
26	.90000	.30000	379.00	.8852-01	.1046	.1150	40.85	3.616	.3492	549.2	.2782-02
26	.90000	.70000	381.00	.2016-01	.2381-01	.2619-01	40.90	.8246	.3484	547.9	.6335-03
26	.90000	.90000	382.00	.1461-01	.1726-01	.1899-01	40.84	.5966	.3494	549.5	.4592-03
26	.95000	.30000	383.00	.9733-01	.1150	.1264	40.90	3.981	.3484	547.9	.3059-02
26	.95000	.50000	384.00	.6681-01	.7891-01	.8676-01	40.96	2.737	.3476	546.6	.2099-02
26	.95000	.90000	385.00	.1916-01	.2264-01	.2490-01	40.86	.7829	.3490	549.0	.6022-03

IH103 60-OT VERTICAL TAIL (R3PT03)

VERT TAIL

PARAMETRIC DATA

MACH = 5.250 ALPHA = 5.000 BETA = .0000 ELEVON = .0000
BDFLAP = .0000 SPDBRK = .0000

TEST CONDITIONS

RUN NUMBER	ALPHA DEG.	BETA DEG.	MACH	RN/FT /FT X10 6	PT PSIA	TT DEG. R	HT BTU/ LBM	PINF PSIA	TINF DEG. R	RHO SLUGS/ FT3	VINF FT/SEC	SCALE
27	5.000	.0000	5.250	.9966	101.6	1522.	375.4	.1398	240.2	.4883-04	3988.	.1750-01

RUN NUMBER	PHI DEG.	HS SPHERE TW=540
27	.0000	.1663

TEST DATA

RUN NUMBER	ZV/BV	XV/CV	T/C NO	H/HREF R=1.0	H/HREF R=.900	H/HREF R=.850	QREF BTU/ FT2SEC	QDOT BTU/ FT2SEC	HW/HT	TW DEG. R	STN NO R=.900
27	.10000+00	.10000+00	340.00	.9564-01	.1130	.1243	40.58	3.881	.3495	546.8	.2998-02
27	.10000+00	.30000	341.00	.4209-01	.4971-01	.5466-01	40.67	1.712	.3482	544.7	.1319-02
27	.10000+00	.50000	342.00	.8571-01	.1012	.1113	40.70	3.488	.3477	543.9	.2686-02
27	.20000	.10000+00	343.00	.9318-01	.1101	.1212	40.51	3.775	.3506	548.4	.2922-02
27	.20000	.20000	344.00	.5536-01	.6541-01	.7195-01	40.58	2.247	.3495	546.7	.1735-02
27	.20000	.40000	345.00	.3648-01	.4310-01	.4739-01	40.64	1.482	.3487	545.4	.1143-02
27	.30000	.50000-01	348.00	.1491	.1762	.1939	40.47	6.032	.3513	549.5	.4675-02
27	.30000	.20000	349.00	.4992-01	.5899-01	.6489-01	40.57	2.025	.3497	547.0	.1565-02
27	.30000	.40000	350.00	.2270-01	.2682-01	.2949-01	40.63	.9221	.3488	545.7	.7114-03
27	.30000	.50000	351.00	.3939-01	.4654-01	.5118-01	40.64	1.601	.3485	545.2	.1235-02
27	.30000	.90000	352.00	.1990-01	.2350-01	.2584-01	40.71	.8102	.3475	543.6	.6236-03
27	.40000	.20000	354.00	.5432-01	.6419-01	.7060-01	40.59	2.205	.3493	546.5	.1703-02
27	.40000	.50000	356.00	.1852-01	.2188-01	.2405-01	40.71	.7541	.3476	543.7	.5804-03
27	.40000	.70000	357.00	.1518-01	.1793-01	.1971-01	40.76	.6189	.3467	542.3	.4756-03
27	.40000	.90000	358.00	.1723-01	.2035-01	.2238-01	40.68	.7008	.3480	544.4	.5399-03
27	.50000	.50000-01	359.00	.1877	.2219	.2441	40.53	7.609	.3503	548.0	.5886-02
27	.50000	.70000	360.00	.1112-01	.1313-01	.1443-01	40.78	.4535	.3465	542.0	.3484-03
27	.50000	.90000	361.00	.9324-02	.1101-01	.1211-01	40.67	.3792	.3481	544.6	.2922-03
27	.60000	.50000-01	362.00	.1997	.2360	.2596	40.56	8.098	.3498	547.3	.6260-02
27	.60000	.10000+00	363.00	.1213	.1434	.1577	40.59	4.925	.3494	546.5	.3803-02
27	.60000	.20000	364.00	.5534-01	.6537-01	.7189-01	40.64	2.249	.3486	545.4	.1734-02

IH103 60-OT VERTICAL TAIL

(R3PT03)

RUN NUMBER	ZV/BV	XV/CV	T/C NO	H/HREF R=1.0	H/HREF R=.900	H/HREF R=.850	QREF BTU/ FT2SEC	QDOT BTU/ FT2SEC	HW/HT	TW DEG. R	STN NO R=.900
27	.60000	.40000	365.00	.3682-01	.4348-01	.4781-01	40.74	1.500	.3470	542.8	.1154-02
27	.60000	.50000	366.00	.2879-01	.3399-01	.3737-01	40.78	1.174	.3465	542.1	.9020-03
27	.70000	.50000-01	369.00	.2137	.2525	.2778	40.57	8.669	.3497	547.1	.6700-02
27	.70000	.70000	370.00	.1334-01	.1575-01	.1732-01	40.73	.5433	.3472	543.1	.4179-03
27	.70000	.90000	371.00	.8088-02	.9554-02	.1051-01	40.66	.3289	.3482	544.8	.2535-03
27	.80000	.10000+00	373.00	.1514	.1789	.1968	40.58	6.144	.3495	546.7	.4746-02
27	.80000	.40000	374.00	.4466-01	.5276-01	.5801-01	40.67	1.816	.3481	544.6	.1400-02
27	.80000	.50000	375.00	.3352-01	.3959-01	.4353-01	40.69	1.364	.3478	544.1	.1050-02
27	.80000	.70000	376.00	.1565-01	.1849-01	.2033-01	40.66	.6364	.3483	544.8	.4905-03
27	.80000	.90000	377.00	.1030-01	.1217-01	.1338-01	40.61	.4183	.3491	546.1	.3228-03
27	.90000	.10000+00	378.00	.2004	.2369	.2606	40.50	8.118	.3507	548.6	.6284-02
27	.90000	.30000	379.00	.5614-01	.6632-01	.7294-01	40.62	2.280	.3490	545.9	.1760-02
27	.90000	.70000	381.00	.1428-01	.1688-01	.1856-01	40.59	.5797	.3494	546.6	.4478-03
27	.90000	.90000	382.00	.1066-01	.1261-01	.1387-01	40.51	.4321	.3505	548.4	.3344-03
27	.95000	.30000	383.00	.6072-01	.7174-01	.7890-01	40.61	2.466	.3490	546.0	.1903-02
27	.95000	.50000	384.00	.4048-01	.4782-01	.5258-01	40.65	1.645	.3484	545.1	.1269-02
27	.95000	.90000	385.00	.1466-01	.1733-01	.1906-01	40.55	.5945	.3500	547.6	.4596-03

IH103 60-OT VERTICAL TAIL (R3PT04)

VERT TAIL

PARAMETRIC DATA

MACH = 5.250 ALPHA = 10.00 BETA = .0000 ELEVON = .0000
BDFLAP = .0000 SPDBRK = .0000

TEST CONDITIONS

RUN NUMBER	ALPHA DEG.	BETA DEG.	MACH	RN/FT /FT X10 6	PT PSIA	TT DEG. R	HT BTU/ LBM	PINF PSIA	TINF DEG. R	RHO SLUGS/ FT3	VINF FT/SEC	SCALE
28	10.00	.0000	5.250	1.037	104.9	1515.	373.4	.1444	239.0	.5070-04	3978.	.1750-01

RUN NUMBER	PHI DEG.	HS SPHERE TW=540
28	.0000	.1689

TEST DATA

RUN NUMBER	ZV/BV	XV/CV	T/C NO	H/HREF R=1.0	H/HREF R=.900	H/HREF R=.850	QREF BTU/ FT2SEC	QDOT BTU/ FT2SEC	HW/HT	TW DEG. R	STN NO R=.900
28	.10000+00	.10000+00	340.00	.7521-01	.8897-01	.9793-01	40.76	3.065	.3535	550.2	.2315-02
28	.10000+00	.30000	341.00	.4023-01	.4758-01	.5235-01	40.85	1.643	.3521	548.0	.1238-02
28	.10000+00	.50000	342.00	.4450-01	.5261-01	.5789-01	40.88	1.819	.3516	547.2	.1369-02
28	.20000	.10000+00	343.00	.7614-01	.9010-01	.9919-01	40.69	3.098	.3546	551.9	.2344-02
28	.20000	.20000	344.00	.5533-01	.6546-01	.7205-01	40.76	2.255	.3535	550.1	.1703-02
28	.20000	.40000	345.00	.3577-01	.4231-01	.4656-01	40.82	1.460	.3525	548.6	.1101-02
28	.30000	.50000-01	348.00	.1304	.1543	.1699	40.66	5.301	.3551	552.6	.4014-02
28	.30000	.20000	349.00	.4590-01	.5430-01	.5977-01	40.77	1.871	.3534	550.0	.1413-02
28	.30000	.40000	350.00	.4553-01	.5385-01	.5926-01	40.83	1.859	.3525	548.6	.1401-02
28	.30000	.50000	351.00	.3965-01	.4689-01	.5160-01	40.85	1.620	.3522	548.1	.1220-02
28	.30000	.90000	352.00	.1019-01	.1204-01	.1325-01	40.93	.4170	.3509	546.1	.3134-03
28	.40000	.20000	354.00	.4667-01	.5520-01	.6075-01	40.80	1.904	.3529	549.2	.1436-02
28	.40000	.50000	356.00	.3868-01	.4573-01	.5031-01	40.93	1.583	.3510	546.2	.1190-02
28	.40000	.70000	357.00	.1775-01	.2097-01	.2307-01	41.00	.7275	.3499	544.6	.5458-03
28	.40000	.90000	358.00	.1238-01	.1463-01	.1610-01	40.90	.5062	.3513	546.8	.3807-03
28	.50000	.50000-01	359.00	.1634	.1933	.2128	40.75	6.657	.3537	550.4	.5029-02
28	.50000	.70000	360.00	.1423-01	.1682-01	.1850-01	41.03	.5840	.3494	543.7	.4377-03
28	.50000	.90000	361.00	.1213-01	.1434-01	.1577-01	40.91	.4962	.3512	546.6	.3731-03
28	.60000	.50000-01	362.00	.1689	.1998	.2199	40.79	6.888	.3531	549.5	.5197-02
28	.60000	.10000+00	363.00	.1030	.1218	.1341	40.81	4.204	.3527	548.9	.3170-02
28	.60000	.20000	364.00	.4942-01	.5844-01	.6431-01	40.86	2.020	.3519	547.7	.1521-02

IH103 60-OT VERTICAL TAIL (R3PT04)

RUN NUMBER	ZV/BV	XV/CV	T/C NO	H/HREF R=1.0	H/HREF R=.900	H/HREF R=.850	QREF BTU/ FT2SEC	QDOT BTU/ FT2SEC	HW/HT	TW DEG. R	STN NO R=.900
28	.60000	.40000	365.00	.3099-01	.3663-01	.4029-01	40.98	1.270	.3501	544.9	.9531-03
28	.60000	.50000	366.00	.2708-01	.3200-01	.3519-01	41.02	1.111	.3495	544.0	.8326-03
28	.70000	.50000-01	369.00	.1695	.2004	.2206	40.81	6.916	.3528	549.0	.5215-02
28	.70000	.70000	370.00	.1334-01	.1577-01	.1735-01	40.99	.5470	.3500	544.7	.4104-03
28	.70000	.90000	371.00	.9711-02	.1148-01	.1263-01	40.91	.3973	.3512	546.6	.2987-03
28	.80000	.10000+00	373.00	.1209	.1430	.1574	40.83	4.937	.3524	548.5	.3720-02
28	.80000	.40000	374.00	.3345-01	.3954-01	.4351-01	40.92	1.369	.3511	546.4	.1029-02
28	.80000	.50000	375.00	.2547-01	.3011-01	.3312-01	40.96	1.043	.3505	545.5	.7834-03
28	.80000	.70000	376.00	.1402-01	.1657-01	.1823-01	40.93	.5736	.3509	546.2	.4311-03
28	.80000	.90000	377.00	.1097-01	.1297-01	.1428-01	40.86	.4483	.3519	547.7	.3375-03
28	.90000	.10000+00	378.00	.1639	.1939	.2134	40.77	6.683	.3533	549.8	.5045-02
28	.90000	.30000	379.00	.4707-01	.5567-01	.6127-01	40.79	1.920	.3530	549.5	.1448-02
28	.90000	.70000	381.00	.9548-02	.1129-01	.1242-01	40.89	.3904	.3515	547.0	.2937-03
28	.90000	.90000	382.00	.7914-02	.9360-02	.1030-01	40.80	.3229	.3529	549.3	.2435-03
28	.95000	.30000	383.00	.4785-01	.5658-01	.6225-01	40.88	1.956	.3517	547.3	.1472-02
28	.95000	.50000	384.00	.3084-01	.3646-01	.4011-01	40.93	1.262	.3509	546.1	.9486-03
28	.95000	.90000	385.00	.1158-01	.1369-01	.1507-01	40.81	.4724	.3528	549.0	.3562-03

IH103 60-OT VERTICAL TAIL (R3PT05)

VERT TAIL

PARAMETRIC DATA

MACH = 5.250 ALPHA = .0000 BETA = -5.000 ELEVON = .0000
BDFLAP = .0000 SPDBRK = .0000

TEST CONDITIONS

RUN NUMBER	ALPHA DEG.	BETA DEG.	MACH	RN/FT /FT X10 6	PT PSIA	TT DEG. R	HT BTU/ LBM	PINF PSIA	TINF DEG. R	RHO SLUGS/ FT3	VINF FT/SEC	SCALE
29	.0000	-5.000	5.250	1.014	101.6	1506.	371.0	.1399	237.4	.4946-04	3965.	.1750-01

RUN NUMBER	PHI DEG.	HS SPHERE TW=540
29	.0000	.1662

TEST DATA

RUN NUMBER	ZV/BV	XV/CV	T/C NO	H/HREF R=1.0	H/HREF R=.900	H/HREF R=.850	QREF BTU/ FT2SEC	QDOT BTU/ FT2SEC	HW/HT	TW DEG. R	STN NO R=.900
29	.10000+00	.10000+00	340.00	.1476	.1748	.1925	39.67	5.857	.3561	550.5	.460[illegible]-02
29	.10000+00	.30000	341.00	.9131-01	.1080	.1190	39.77	3.632	.3545	548.1	.2845-02
29	.10000+00	.50000	342.00	.1105	.1307	.1439	39.82	4.399	.3537	546.8	.3441-02
29	.20000	.10000+00	343.00	.1462	.1731	.1906	39.62	5.792	.3568	551.7	.4556-02
29	.20000	.20000	344.00	.9250-01	.1095	.1206	39.70	3.672	.3557	549.9	.2882-02
29	.20000	.40000	345.00	.9118-01	.1079	.1188	39.77	3.626	.3545	548.0	.2840-02
29	.30000	.50000-01	348.00	.2215	.2623	.2889	39.60	8.769	.3572	552.3	.6903-02
29	.30000	.20000	349.00	.8706-01	.1030	.1135	39.72	3.458	.3553	549.3	.2713-02
29	.30000	.40000	350.00	.4112-01	.4865-01	.5356-01	39.80	1.636	.3541	547.4	.1281-02
29	.30000	.50000	351.00	.1142	.1351	.1487	39.83	4.547	.3536	546.7	.3556-02
29	.30000	.90000	352.00	.4318-01	.5105-01	.5618-01	39.95	1.725	.3517	543.7	.1344-02
29	.40000	.20000	354.00	.8647-01	.1023	.1126	39.78	3.439	.3544	547.9	.2694-02
29	.40000	.50000	356.00	.3084-01	.3646-01	.4012-01	39.93	1.231	.3521	544.3	.9601-03
29	.40000	.70000	357.00	.5054-01	.5974-01	.6572-01	40.02	2.022	.3507	542.2	.1573-02
29	.40000	.90000	358.00	.4936-01	.5837-01	.6423-01	39.93	1.971	.3520	544.2	.1537-02
29	.50000	.50000-01	359.00	.2356	.2788	.3070	39.74	9.361	.3550	548.9	.7340-02
29	.50000	.70000	360.00	.1440-01	.1702-01	.1873-01	40.05	.5768	.3502	541.5	.4483-03
29	.50000	.90000	361.00	.2278-01	.2694-01	.2964-01	39.94	.9099	.3519	544.0	.7093-03
29	.60000	.50000-01	362.00	.2236	.2645	.2912	39.80	8.897	.3541	547.5	.6964-02
29	.60000	.10000+00	363.00	.1475	.1745	.1921	39.83	5.876	.3536	546.7	.4595-02
29	.60000	.20000	364.00	.7215-01	.8534-01	.9392-01	39.88	2.877	.3528	545.4	.2247-02

IH103 60-OT VERTICAL TAIL (R3PT05)

RUN NUMBER	ZV/BV	XV/CV	T/C NO	H/HREF R=1.0	H/HREF R=.900	H/HREF R=.850	QREF BTU/ FT2SEC	QDOT BTU/ FT2SEC	HW/HT	TW DEG. R	STN NO R=.900
29	.60000	.40000	365.00	.4638-01	.5483-01	.6033-01	39.99	1.855	.3510	542.7	.1444-02
29	.60000	.50000	366.00	.3431-01	.4056-01	.4461-01	40.05	1.374	.3502	541.5	.1068-02
29	.70000	.50000-01	369.00	.2477	.2931	.3226	39.83	9.867	.3536	546.7	.7717-02
29	.70000	.70000	370.00	.2308-01	.2728-01	.3001-01	40.02	.9236	.3506	542.1	.7184-03
29	.70000	.90000	371.00	.1748-01	.2067-01	.2275-01	39.95	.6984	.3518	543.8	.5443-03
29	.80000	.10000+00	373.00	.1907	.2256	.2483	39.86	7.603	.3531	545.9	.5940-02
29	.80000	.40000	374.00	.6168-01	.7293-01	.8025-01	39.95	2.464	.3518	543.8	.1920-02
29	.80000	.50000	375.00	.4731-01	.5593-01	.6154-01	39.97	1.891	.3514	543.2	.1473-02
29	.80000	.70000	376.00	.2488-01	.2942-01	.3238-01	39.94	.9939	.3519	544.0	.7748-03
29	.80000	.90000	377.00	.2032-01	.2403-01	.2644-01	39.89	.8105	.3526	545.1	.6326-03
29	.90000	.10000+00	378.00	.2613	.3091	.3403	39.79	10.39	.3543	547.7	.8139-02
29	.90000	.30000	379.00	.8030-01	.9499-01	.1045	39.86	3.201	.3531	545.9	.2501-02
29	.90000	.70000	381.00	.2542-01	.3006-01	.3309-01	39.89	1.014	.3527	545.3	.7916-03
29	.90000	.90000	382.00	.2736-01	.3236-01	.3562-01	39.83	1.089	.3537	546.8	.8521-03
29	.95000	.30000	383.00	.9619-01	.1138	.1252	39.90	3.838	.3525	545.0	.2995-02
29	.95000	.50000	384.00	.6743-01	.7973-01	.8773-01	39.95	2.694	.3517	543.8	.2099-02
29	.95000	.90000	385.00	.2763-01	.3268-01	.3597-01	39.86	1.101	.3532	546.0	.8604-03

IH103 60-OT VERTICAL TAIL (R3PT06)

VERT TAIL

PARAMETRIC DATA

MACH = 5.250 ALPHA = -5.000 BETA = -5.000 ELEVON = .0000
BDFLAP = .0000 SPDBRK = .0000

TEST CONDITIONS

RUN NUMBER	ALPHA DEG.	BETA DEG.	MACH	RN/FT /FT X10 6	PT PSIA	TT DEG. R	HT BTU/ LBM	PINF PSIA	TINF DEG. R	RHO SLUGS/ FT3	VINF FT/SEC	SCALE
30	-5.000	-5.000	5.250	1.009	101.7	1511.	372.5	.1400	238.4	.4929-04	3973.	.1750-01

RUN NUMBER	PHI DEG.	HS SPHERE TW=540
30	.0000	.1663

TEST DATA

RUN NUMBER	ZV/BV	XV/CV	T/C NO	H/HREF R=1.0	H/HREF R=.900	H/HREF R=.850	QREF BTU/ FT2SEC	QDOT BTU/ FT2SEC	HW/HT	TW DEG. R	STN NO R=.900
30	.10000+00	.10000+00	340.00	.1876	.2221	.2446	39.85	7.478	.3561	552.8	.5859-02
30	.10000+00	.30000	341.00	.1833	.2169	.2388	39.95	7.321	.3547	550.5	.5722-02
30	.10000+00	.50000	342.00	.1269	.1501	.1652	39.99	5.074	.3540	549.5	.3960-02
30	.20000	.10000+00	343.00	.1257	.1489	.1640	39.79	5.002	.3571	554.3	.3927-02
30	.20000	.20000	344.00	.1029	.1218	.1341	39.86	4.100	.3560	552.6	.3212-02
30	.20000	.40000	345.00	.1375	.1627	.1791	39.93	5.489	.3549	550.9	.4291-02
30	.30000	.50000-01	348.00	.2079	.2462	.2712	39.76	8.264	.3576	555.0	.6493-02
30	.30000	.20000	349.00	.5589-01	.6616-01	.7286-01	39.87	2.229	.3558	552.3	.1745-02
30	.30000	.40000	350.00	.1493	.1767	.1946	39.94	5.965	.3547	550.6	.4662-02
30	.30000	.50000	351.00	.1211	.1433	.1578	39.97	4.841	.3543	549.9	.3781-02
30	.30000	.90000	352.00	.2984-01	.3529-01	.3884-01	40.08	1.196	.3526	547.3	.9311-03
30	.40000	.20000	354.00	.4690-01	.5551-01	.6111-01	39.92	1.872	.3551	551.2	.1464-02
30	.40000	.50000	356.00	.1600	.1892	.2082	40.06	6.408	.3529	547.8	.4992-02
30	.40000	.70000	357.00	.6178-01	.7304-01	.8037-01	40.14	2.480	.3516	545.8	.1927-02
30	.40000	.90000	358.00	.4413-01	.5219-01	.5744-01	40.05	1.767	.3530	548.0	.1377-02
30	.50000	.50000-01	359.00	.2693	.3187	.3510	39.88	10.74	.3557	552.2	.8407-02
30	.50000	.70000	360.00	.7815-01	.9238-01	.1016	40.17	3.139	.3512	545.1	.2438-02
30	.50000	.90000	361.00	.6561-01	.7761-01	.8541-01	40.06	2.628	.3529	547.8	.2047-02
30	.60000	.50000-01	362.00	.2881	.3409	.3754	39.93	11.50	.3549	550.9	.8994-02
30	.60000	.10000+00	363.00	.1863	.2205	.2427	39.95	7.444	.3546	550.4	.5816-02
30	.60000	.20000	364.00	.8385-01	.9920-01	.1092	40.00	3.354	.3538	549.2	.2617-02

IH103 60-OT VERTICAL TAIL (R3PT06)

RUN NUMBER	ZV/BV	XV/CV	T/C NO	H/HREF R=1.0	H/HREF R=.900	H/HREF R=.850	QREF BTU/ FT2SEC	QDOT BTU/ FT2SEC	HW/HT	TW DEG. R	STN NO R=.900
30	.60000	.40000	365.00	.3047-01	.3603-01	.3965-01	40.13	1.223	.3519	546.2	.9507-03
30	.60000	.50000	366.00	.3481-01	.4116-01	.4528-01	40.17	1.398	.3512	545.1	.1086-02
30	.70000	.50000-01	369.00	.3100	.3669	.4039	39.95	12.39	.3545	550.3	.9678-02
30	.70000	.70000	370.00	.1696-01	.2005-01	.2206-01	40.14	.6807	.3516	545.8	.5290-03
30	.70000	.90000	371.00	.1222-01	.1445-01	.1591-01	40.06	.4895	.3528	547.7	.3813-03
30	.80000	.10000+00	373.00	.2357	.2789	.3070	39.99	9.425	.3540	549.5	.7357-02
30	.80000	.40000	374.00	.7453-01	.8815-01	.9702-01	40.07	2.986	.3528	547.6	.2326-02
30	.80000	.50000	375.00	.5668-01	.6702-01	.7375-01	40.10	2.273	.3523	546.8	.1768-02
30	.80000	.70000	376.00	.2979-01	.3523-01	.3878-01	40.07	1.194	.3527	547.6	.9296-03
30	.80000	.90000	377.00	.2329-01	.2755-01	.3033-01	40.02	.9321	.3536	548.8	.7269-03
30	.90000	.10000+00	378.00	.3270	.3870	.4261	39.91	13.05	.3552	551.3	.1021-01
30	.90000	.30000	379.00	.1035	.1224	.1347	40.01	4.139	.3537	549.1	.3229-02
30	.90000	.70000	381.00	.2614-01	.3092-01	.3404-01	40.04	1.047	.3532	548.2	.8158-03
30	.90000	.90000	382.00	.2807-01	.3322-01	.3657-01	39.96	1.122	.3544	550.1	.8762-03
30	.95000	.30000	383.00	.1125	.1331	.1465	40.03	4.503	.3534	548.6	.3511-02
30	.95000	.50000	384.00	.7566-01	.8948-01	.9848-01	40.07	3.032	.3527	547.5	.2361-02
30	.95000	.90000	385.00	.2892-01	.3422-01	.3767-01	39.98	1.156	.3541	549.7	.9028-03

IH103 60-OT VERTICAL TAIL (R3PT07)

VERT TAIL

PARAMETRIC DATA

MACH = 5.250 ALPHA = 5.000 BETA = -5.000 ELEVON = .0000
BDFLAP = .0000 SPDBRK = .0000

TEST CONDITIONS

RUN NUMBER	ALPHA DEG.	BETA DEG.	MACH	RN/FT /FT X10 6	PT PSIA	TT DEG. R	HT BTU/ LBM	PINF PSIA	TINF DEG. R	RHO SLUGS/ FT3	VINF FT/SEC	SCALE
31	5.000	-5.000	5.250	1.013	101.6	1507.	371.3	.1400	237.6	.4943-04	3967.	.1750-01

RUN NUMBER	PHI DEG.	HS SPHERE TW=540
31	.0000	.1662

TEST DATA

RUN NUMBER	ZV/BV	XV/CV	T/C NO	H/HREF R=1.0	H/HREF R=.900	H/HREF R=.850	QREF BTU/ FT2SEC	QDOT BTU/ FT2SEC	HW/HT	TW DEG. R	STN NO R=.900
31	.10000+00	.10000+00	340.00	.1348	.1598	.1761	39.43	5.316	.3603	558.0	.4207-02
31	.10000+00	.30000	341.00	.9465-01	.1122	.1236	39.50	3.738	.3596	556.5	.2953-02
31	.10000+00	.50000	342.00	.7245-01	.8586-01	.9461-01	39.50	2.862	.3596	556.4	.2261-02
31	.20000	.10000+00	343.00	.1190	.1411	.1556	39.34	4.681	.3620	560.2	.3715-02
31	.20000	.20000	344.00	.7433-01	.8813-01	.9714-01	39.40	2.929	.3611	558.8	.2320-02
31	.20000	.40000	345.00	.1037	.1229	.1355	39.44	4.090	.3605	557.9	.3237-02
31	.30000	.50000-01	348.00	.1805	.2141	.2360	39.29	7.091	.3628	561.5	.5635-02
31	.30000	.20000	349.00	.6718-01	.7966-01	.8781-01	39.37	2.645	.3615	559.4	.2097-02
31	.30000	.40000	350.00	.5881-01	.6972-01	.7685-01	39.41	2.318	.3609	558.5	.1835-02
31	.30000	.50000	351.00	.9234-01	.1095	.1206	39.42	3.640	.3607	558.2	.2882-02
31	.30000	.90000	352.00	.3019-01	.3577-01	.3942-01	39.48	1.192	.3599	556.9	.9419-03
31	.40000	.20000	354.00	.7410-01	.8786-01	.9685-01	39.39	2.919	.3612	559.1	.2313-02
31	.40000	.50000	356.00	.3577-01	.4239-01	.4671-01	39.48	1.412	.3598	556.9	.1116-02
31	.40000	.70000	357.00	.4312-01	.5109-01	.5630-01	39.54	1.705	.3589	555.5	.1345-02
31	.40000	.90000	358.00	.3096-01	.3670-01	.4044-01	39.44	1.221	.3604	557.7	.9661-03
31	.50000	.50000-01	359.00	.2199	.2608	.2875	39.33	8.649	.3621	560.4	.6865-02
31	.50000	.70000	360.00	.1794-01	.2126-01	.2342-01	39.56	.7097	.3586	555.0	.5597-03
31	.50000	.90000	361.00	.2199-01	.2607-01	.2873-01	39.45	.8675	.3603	557.6	.6863-03
31	.60000	.50000-01	362.00	.2292	.2718	.2996	39.35	9.019	.3619	560.0	.7155-02
31	.60000	.10000+00	363.00	.1504	.1784	.1966	39.37	5.923	.3616	559.5	.4696-02
31	.60000	.20000	364.00	.7380-01	.8758-01	.9659-01	39.19	2.892	.3643	563.8	.2305-02

IH103 60-OT VERTICAL TAIL (R3PT07)

RUN NUMBER	ZV/BV	XV/CV	T/C NO	H/HREF R=1.0	H/HREF R=.900	H/HREF R=.850	QREF BTU/ FT2SEC	QDOT BTU/ FT2SEC	HW/HT	TW DEG. R	STN NO R=.900
31	.60000	.40000	365.00	.4852-01	.5750-01	.6336-01	39.50	1.917	.3595	556.3	.1514-02
31	.60000	.50000	366.00	.3967-01	.4701-01	.5179-01	39.54	1.569	.3589	555.4	.1238-02
31	.70000	.50000-01	369.00	.2368	.2808	.3095	39.36	9.321	.3616	559.7	.7392-02
31	.70000	.70000	370.00	.2158-01	.2558-01	.2818-01	39.51	.8529	.3593	556.1	.6734-03
31	.70000	.90000	371.00	.1490-01	.1766-01	.1946-01	39.44	.5875	.3604	557.8	.4649-03
31	.80000	.10000+00	373.00	.1718	.2037	.2246	39.38	6.766	.3614	559.3	.5363-02
31	.80000	.40000	374.00	.5615-01	.6656-01	.7336-01	39.44	2.215	.3604	557.8	.1752-02
31	.80000	.50000	375.00	.4313-01	.5112-01	.5633-01	39.48	1.703	.3598	556.8	.1346-02
31	.80000	.70000	376.00	.2346-01	.2781-01	.3065-01	39.45	.9256	.3603	557.6	.7322-03
31	.80000	.90000	377.00	.1836-01	.2177-01	.2400-01	39.40	.7235	.3611	558.8	.5731-03
31	.90000	.10000+00	378.00	.2203	.2613	.2881	39.32	8.663	.3624	560.8	.6879-02
31	.90000	.30000	379.00	.7468-01	.8856-01	.9763-01	39.35	2.939	.3618	560.0	.2331-02
31	.90000	.70000	381.00	.2203-01	.2612-01	.2878-01	39.44	.8689	.3605	557.9	.6875-03
31	.90000	.90000	382.00	.2455-01	.2911-01	.3209-01	39.37	.9664	.3616	559.6	.7662-03
31	.95000	.30000	383.00	.7266-01	.8613-01	.9493-01	39.42	2.864	.3607	558.2	.2268-02
31	.95000	.50000	384.00	.4969-01	.5889-01	.6490-01	39.47	1.962	.3599	557.0	.1551-02
31	.95000	.90000	385.00	.2145-01	.2543-01	.2804-01	39.40	.8452	.3611	558.9	.6696-03

IH103 60-OT VERTICAL TAIL (R3PT08)

VERT TAIL

PARAMETRIC DATA

MACH = 5.250 ALPHA = 10.00 BETA = -5.000 ELEVON = .0000
BDFLAP = .0000 SPDBRK = .0000

TEST CONDITIONS

RUN NUMBER	ALPHA DEG.	BETA DEG.	MACH	RN/FT /FT X10 6	PT PSIA	TT DEG. R	HT BTU/ LBM	PINF PSIA	TINF DEG. R	RHO SLUGS/ FT3	VINF FT/SEC	SCALE
32	10.00	-5.000	5.250	1.013	102.5	1516.	373.7	.1412	239.1	.4954-04	3979.	.1750-01

RUN NUMBER	PHI DEG.	HS SPHERE TW=540
32	.0000	.1670

TEST DATA

RUN NUMBER	ZV/BV	XV/CV	T/C NO	H/HREF R=1.0	H/HREF R=.900	H/HREF R=.850	QREF BTU/ FT2SEC	QDOT BTU/ FT2SEC	HW/HT	TW DEG. R	STN NO R=.900
32	.10000+00	.10000+00	340.00	.1902-01	.2246-01	.2470-01	40.72	.7745	.3474	541.1	.5915-03
32	.10000+00	.30000	341.00	.1368-01	.1615-01	.1775-01	40.83	.5586	.3458	538.6	.4254-03
32	.10000+00	.50000	342.00	.1735-01	.2048-01	.2250-01	40.87	.7091	.3451	537.5	.5393-03
32	.20000	.10000+00	343.00	.1170	.1382	.1519	40.69	4.760	.3479	541.8	.3638-02
32	.20000	.20000	344.00	.7842-01	.9259-01	.1018	40.76	3.197	.3468	540.0	.2438-02
32	.20000	.40000	345.00	.6685-01	.7891-01	.8674-01	40.82	2.729	.3459	538.7	.2078-02
32	.30000	.50000-01	348.00	.1652	.1951	.2146	40.66	6.716	.3483	542.5	.5137-02
32	.30000	.20000	349.00	.7265-01	.8578-01	.9430-01	40.78	2.962	.3466	539.8	.2259-02
32	.30000	.40000	350.00	.5430-01	.6410-01	.7046-01	40.82	2.216	.3460	538.8	.1688-02
32	.30000	.50000	351.00	.6873-01	.8113-01	.8917-01	40.83	2.806	.3457	538.4	.2137-02
32	.30000	.90000	352.00	.2186-01	.2579-01	.2834-01	40.91	.8942	.3445	536.5	.6793-03
32	.40000	.20000	354.00	.7431-01	.8772-01	.9643-01	40.81	3.032	.3461	539.0	.2310-02
32	.40000	.50000	356.00	.3618-01	.4269-01	.4692-01	40.91	1.480	.3446	536.6	.1124-02
32	.40000	.70000	357.00	.2992-01	.3530-01	.3878-01	40.98	1.226	.3435	534.9	.9297-03
32	.40000	.90000	358.00	.2050-01	.2419-01	.2659-01	40.90	.8383	.3448	536.9	.6371-03
32	.50000	.50000-01	359.00	.1975	.2333	.2564	40.75	8.050	.3470	540.4	.6143-02
32	.50000	.70000	360.00	.2187-01	.2579-01	.2834-01	41.01	.8967	.3431	534.3	.6794-03
32	.50000	.90000	361.00	.2292-01	.2704-01	.2972-01	40.89	.9371	.3448	537.0	.7123-03
32	.60000	.50000-01	362.00	.1988	.2347	.2581	40.78	8.108	.3465	539.7	.6182-02
32	.60000	.10000+00	363.00	.1333	.1573	.1729	40.80	5.437	.3462	539.1	.4143-02
32	.60000	.20000	364.00	.6893-01	.8144-01	.8956-01	40.63	2.801	.3489	543.3	.2144-02

IH103 60-OT VERTICAL TAIL (R3PT08)

RUN NUMBER	ZV/BV	XV/CV	T/C NO	H/HREF R=1.0	H/HREF R=.900	H/HREF R=.850	QREF BTU/ FT2SEC	QDOT BTU/ FT2SEC	HW/HT	TW DEG. R	STN NO R=.900
32	.60000	.40000	365.00	.5308-01	.6262-01	.6880-01	40.96	2.174	.3437	535.3	.1649-02
32	.60000	.50000	366.00	.4621-01	.5451-01	.5988-01	41.01	1.895	.3430	534.1	.1436-02
32	.70000	.50000-01	369.00	.2056	.2427	.2668	40.79	8.385	.3464	539.4	.6391-02
32	.70000	.70000	370.00	.2100-01	.2477-01	.2721-01	41.00	.8610	.3431	534.3	.6524-03
32	.70000	.90000	371.00	.1530-01	.1805-01	.1984-01	40.94	.6264	.3440	535.8	.4754-03
32	.80000	.10000+00	373.00	.1501	.1772	.1948	40.84	6.130	.3457	538.3	.4667-02
32	.80000	.40000	374.00	.5227-01	.6167-01	.6777-01	40.94	2.140	.3441	535.9	.1624-02
32	.80000	.50000	375.00	.4168-01	.4917-01	.5403-01	40.98	1.708	.3435	534.9	.1295-02
32	.80000	.70000	376.00	.2400-01	.2831-01	.3111-01	40.96	.9828	.3438	535.4	.7456-03
32	.80000	.90000	377.00	.2004-01	.2365-01	.2599-01	40.91	.8201	.3445	536.5	.6230-03
32	.90000	.10000+00	378.00	.1889	.2230	.2452	40.80	7.707	.3463	539.3	.5873-02
32	.90000	.30000	379.00	.6270-01	.7401-01	.8134-01	40.85	2.561	.3455	538.1	.1949-02
32	.90000	.70000	381.00	.1966-01	.2320-01	.2549-01	40.98	.8058	.3434	534.8	.6110-03
32	.90000	.90000	382.00	.2354-01	.2778-01	.3053-01	40.91	.9631	.3446	536.6	.7317-03
32	.95000	.30000	383.00	.6209-01	.7326-01	.8051-01	40.92	2.540	.3444	536.4	.1930-02
32	.95000	.50000	384.00	.4307-01	.5081-01	.5583-01	40.99	1.766	.3433	534.7	.1338-02
32	.95000	.90000	385.00	.1984-01	.2341-01	.2573-01	40.90	.8113	.3447	536.9	.6166-03

IH103 60-OT VERTICAL TAIL (R3PT09)

VERT TAIL

PARAMETRIC DATA

MACH = 5.250 ALPHA = .0000 BETA = -3.000 ELEVON = .0000
BDFLAP = .0000 SPDBRK = .0000

TEST CONDITIONS

RUN NUMBER	ALPHA DEG.	BETA DEG.	MACH	RN/FT /FT X10 6	PT PSIA	TT DEG. R	HT BTU/ LBM	PINF PSIA	TINF DEG. R	RHO SLUGS/ FT3	VINF FT/SEC	SCALE
34	10.00	-5.000	5.250	1.050	103.6	1492.	367.4	.1429	235.1	.5098-04	3946.	.1750-01

RUN NUMBER	PHI DEG.	HS SPHERE TW=540
34	.0000	.1677

TEST DATA

RUN NUMBER	ZV/BV	XV/CV	T/C NO	H/HREF R=1.0	H/HREF R=.900	H/HREF R=.850	QREF BTU/ FT2SEC	QDOT BTU/ FT2SEC	HW/HT	TW DEG. R	STN NO R=.900
34	.10000+00	.10000+00	340.00	.1079	.1278	.1408	39.58	4.270	.3576	547.6	.3310-02
34	.10000+00	.30000	341.00	.8515-01	.1008	.1110	39.68	3.378	.3561	545.3	.2612-02
34	.10000+00	.50000	342.00	.7711-01	.9127-01	.1005	39.71	3.062	.3555	544.4	.2365-02
34	.20000	.10000+00	343.00	.1348	.1597	.1759	39.52	5.327	.3584	548.9	.4136-02
34	.20000	.20000	344.00	.8185-01	.9693-01	.1068	39.60	3.241	.3573	547.2	.2511-02
34	.20000	.40000	345.00	.8153-01	.9654-01	.1063	39.65	3.233	.3565	545.9	.2501-02
34	.30000	.50000-01	348.00	.1932	.2289	.2522	39.48	7.626	.3591	549.9	.5929-02
34	.30000	.20000	349.00	.7513-01	.8897-01	.9800-01	39.60	2.975	.3573	547.1	.2305-02
34	.30000	.40000	350.00	.5114-01	.6055-01	.6668-01	39.66	2.028	.3563	545.6	.1569-02
34	.30000	.50000	351.00	.5109-01	.6048-01	.6660-01	39.69	2.028	.3559	545.0	.1567-02
34	.30000	.90000	352.00	.2287-01	.2706-01	.2979-01	39.79	.9100	.3542	542.4	.7011-03
34	.40000	.20000	354.00	.7506-01	.8868-01	.9789-01	39.64	2.975	.3567	546.2	.2303-02
34	.40000	.50000	356.00	.4270-01	.5053-01	.5563-01	39.76	1.698	.3547	543.2	.1309-02
34	.40000	.70000	357.00	.2241-01	.2651-01	.2918-01	39.84	.8928	.3536	541.4	.6870-03
34	.40000	.90000	358.00	.1885-01	.2230-01	.2455-01	39.77	.7494	.3547	543.1	.5779-03
34	.50000	.50000-01	359.00	.2161	.2560	.2819	39.58	8.554	.3576	547.5	.6631-02
34	.50000	.70000	360.00	.1980-01	.2342-01	.2578-01	39.86	.7892	.3532	540.9	.6069-03
34	.50000	.90000	361.00	.1569-01	.1856-01	.2044-01	39.76	.6237	.3548	543.3	.4810-03
34	.60000	.50000-01	362.00	.2088	.2473	.2723	39.63	8.275	.3568	546.4	.6406-02
34	.60000	.10000+00	363.00	.1358	.1608	.1771	39.66	5.387	.3564	545.7	.4167-02
34	.60000	.20000	364.00	.6574-01	.7789-01	.8582-01	39.48	2.595	.3591	549.9	.2018-02

IH103 60-OT VERTICAL TAIL (R3PT09)

RUN NUMBER	ZV/BV	XV/CV	T/C NO	H/HREF R=1.0	H/HREF R=.900	H/HREF R=.850	QREF BTU/ FT2SEC	QDOT BTU/ FT2SEC	HW/HT	TW DEG. R	STN NO R=.900
34	.60000	.40000	365.00	.4302-01	.5090-01	.5603-01	39.82	1.713	.3539	541.9	.1319-02
34	.60000	.50000	366.00	.3459-01	.4092-01	.4504-01	39.86	1.379	.3533	541.0	.1060-02
34	.70000	.50000-01	369.00	.2314	.2740	.3017	39.65	9.174	.3565	546.0	.7098-02
34	.70000	.70000	370.00	.1964-01	.2323-01	.2557-01	39.82	.7820	.3538	541.8	.6020-03
34	.70000	.90000	371.00	.1597-01	.1891-01	.2081-01	39.75	.6350	.3549	543.4	.4899-03
34	.80000	.10000+00	373.00	.1792	.2122	.2337	39.67	7.110	.3561	545.3	.5497-02
34	.80000	.40000	374.00	.5592-01	.6617-01	.7285-01	39.77	2.224	.3547	543.1	.1715-02
34	.80000	.50000	375.00	.4246-01	.5025-01	.5532-01	39.79	1.689	.3544	542.7	.1302-02
34	.80000	.70000	376.00	.2145-01	.2539-01	.2795-01	39.75	.8526	.3550	543.6	.6578-03
34	.80000	.90000	377.00	.1712-01	.2027-01	.2232-01	39.71	.6800	.3555	544.4	.5252-03
34	.90000	.10000+00	378.00	.1457	.1725	.1899	39.66	5.777	.3564	545.8	.4468-02
34	.90000	.30000	379.00	.6757-01	.7998-01	.8806-01	39.73	2.685	.3553	544.0	.2072-02
34	.90000	.70000	381.00	.1858-01	.2199-01	.2422-01	39.71	.7378	.3556	544.5	.5699-03
34	.90000	.90000	382.00	.1660-01	.1965-01	.2164-01	39.64	.6579	.3566	546.1	.5091-03
34	.95000	.30000	383.00	.8120-01	.9612-01	.1058	39.70	3.224	.3557	544.7	.2490-02
34	.95000	.50000	384.00	.5447-01	.6446-01	.7097-01	39.75	2.165	.3549	543.5	.1670-02
34	.95000	.90000	385.00	.2119-01	.2508-01	.2762-01	39.66	.8402	.3563	545.7	.6499-03

IH103 60-OT VERTICAL TAIL (R3PT10)

VERT TAIL

PARAMETRIC DATA

MACH = 5.250 ALPHA = -5.000 BETA = -3.000 ELEVON = .0000
BDFLAP = .0000 SPDBRK = .0000

TEST CONDITIONS

RUN NUMBER	ALPHA DEG.	BETA DEG.	MACH	RN/FT /FT X10 6	PT PSIA	TT DEG. R	HT BTU/ LBM	PINF PSIA	TINF DEG. R	RHO SLUGS/ FT3	VINF FT/SEC	SCALE
35	10.00	-5.000	5.250	1.015	101.6	1505.	370.9	.1399	237.4	.4947-04	3964.	.1750-01

RUN NUMBER	PHI DEG.	HS SPHERE TW=540
35	.0000	.1662

TEST DATA

RUN NUMBER	ZV/BV	XV/CV	T/C NO	H/HREF R=1.0	H/HREF R=.900	H/HREF R=.850	QREF BTU/ FT2SEC	QDOT BTU/ FT2SEC	HW/HT	TW DEG. R	STN NO R=.900
35	.10000+00	.10000+00	340.00	.1707	.2022	.2227	39.59	6.759	.3574	552.4	.5321-02
35	.10000+00	.30000	341.00	.1551	.1835	.2021	39.69	6.154	.3558	550.0	.4831-02
35	.10000+00	.50000	342.00	.1410	.1669	.1837	39.75	5.606	.3548	548.4	.4393-02
35	.20000	.10000+00	343.00	.1311	.1553	.1711	39.55	5.187	.3579	553.2	.4088-02
35	.20000	.20000	344.00	.6873-01	.8138-01	.8963-01	39.63	2.724	.3567	551.4	.2142-02
35	.20000	.40000	345.00	.1981	.2345	.2582	39.71	7.867	.3555	549.5	.6173-02
35	.30000	.50000-01	348.00	.1946	.2305	.2539	39.55	7.697	.3579	553.3	.6066-02
35	.30000	.20000	349.00	.5471-01	.6477-01	.7133-01	39.68	2.171	.3560	550.2	.1705-02
35	.30000	.40000	350.00	.1626	.1925	.2119	39.75	6.465	.3548	548.5	.5066-02
35	.30000	.50000	351.00	.1470	.1739	.1915	39.79	5.849	.3542	547.5	.4578-02
35	.30000	.90000	352.00	.2906-01	.3436-01	.3781-01	39.93	1.160	.3519	544.0	.9045-03
35	.40000	.20000	354.00	.4860-01	.5751-01	.6332-01	39.75	1.932	.3548	548.5	.1514-02
35	.40000	.50000	356.00	.1439	.1702	.1873	39.90	5.743	.3524	544.8	.4480-02
35	.40000	.70000	357.00	.6828-01	.8071-01	.8880-01	40.01	2.732	.3508	542.3	.2125-02
35	.40000	.90000	358.00	.4532-01	.5359-01	.5898-01	39.91	1.808	.3524	544.7	.1411-02
35	.50000	.50000-01	359.00	.2536	.3002	.3305	39.72	10.07	.3553	549.3	.7900-02
35	.50000	.70000	360.00	.6453-01	.7627-01	.8390-01	40.05	2.584	.3502	541.3	.2008-02
35	.50000	.90000	361.00	.6446-01	.7623-01	.8389-01	39.92	2.574	.3521	544.3	.2007-02
35	.60000	.50000-01	362.00	.2744	.3247	.3574	39.78	10.91	.3544	547.8	.8546-02
35	.60000	.10000+00	363.00	.1769	.2093	.2304	39.81	7.041	.3539	547.1	.5508-02
35	.60000	.20000	364.00	.8037-01	.9516-01	.1048	39.64	3.186	.3566	551.2	.2504-02

IH103 60-OT VERTICAL TAIL

(R3PT10)

RUN NUMBER	ZV/BV	XV/CV	T/C NO	H/HREF R=1.0	H/HREF R=.900	H/HREF R=.850	QREF BTU/ FT2SEC	QDOT BTU/ FT2SEC	HW/HT	TW DEG. R	STN NO R=.900
35	.60000	.40000	365.00	.3001-01	.3548-01	.3903-01	39.99	1.200	.3510	542.6	.9340-03
35	.60000	.50000	366.00	.2214-01	.2616-01	.2878-01	40.05	.8866	.3502	541.3	.6889-03
35	.70000	.50000-01	369.00	.2994	.3542	.3899	39.81	11.92	.3538	546.9	.9324-02
35	.70000	.70000	370.00	.1830-01	.2163-01	.2379-01	40.03	.7325	.3505	541.8	.5695-03
35	.70000	.90000	371.00	.9963-02	.1178-01	.1296-01	39.95	.3980	.3517	543.6	.3101-03
35	.80000	.10000+00	373.00	.2280	.2697	.2968	39.85	9.086	.3532	546.0	.7099-02
35	.80000	.40000	374.00	.7006-01	.8283-01	.9114-01	39.96	2.799	.3515	543.4	.2181-02
35	.80000	.50000	375.00	.5332-01	.6304-01	.6935-01	39.99	2.133	.3510	542.6	.1660-02
35	.80000	.70000	376.00	.2530-01	.2991-01	.3291-01	39.96	1.011	.3515	543.3	.7875-03
35	.80000	.90000	377.00	.1884-01	.2228-01	.2452-01	39.91	.7520	.3523	544.6	.5866-03
35	.90000	.10000+00	378.00	.1624	.1922	.2116	39.74	6.454	.3549	548.6	.5059-02
35	.90000	.30000	379.00	.8653-01	.1023	.1126	39.93	3.455	.3520	544.2	.2694-02
35	.90000	.70000	381.00	.2326-01	.2751-01	.3027-01	39.93	.9288	.3520	544.1	.7241-03
35	.90000	.90000	382.00	.2010-01	.2378-01	.2617-01	39.86	.8014	.3531	545.8	.6260-03
35	.95000	.30000	383.00	.1095	.1294	.1424	39.92	4.370	.3522	544.4	.3408-02
35	.95000	.50000	384.00	.7697-01	.9100-01	.1001	39.98	3.077	.3512	542.9	.2396-02
35	.95000	.90000	385.00	.2859-01	.3381-01	.3721-01	39.88	1.140	.3527	545.2	.8900-03

IH103 60-OT VERTICAL TAIL (R3PT11)

VERT TAIL

PARAMETRIC DATA

MACH = 5.250 ALPHA = 5.000 BETA = -3.000 ELEVON = .0000
BDFLAP = .0000 SPDBRK = .0000

TEST CONDITIONS

RUN NUMBER	ALPHA DEG.	BETA DEG.	MACH	RN/FT /FT X10 6	PT PSIA	TT DEG. R	HT BTU/ LBM	PINF PSIA	TINF DEG. R	RHO SLUGS/ FT3	VINF FT/SEC	SCALE
36	10.00	-5.000	5.250	1.003	101.4	1514.	373.3	.1396	238.9	.4905-04	3977.	.1750-01

RUN NUMBER	PHI DEG.	HS SPHERE TW=540
36	.0000	.1661

TEST DATA

RUN NUMBER	ZV/BV	XV/CV	T/C NO	H/HREF R=1.0	H/HREF R=.900	H/HREF R=.850	QREF BTU/ FT2SEC	QDOT BTU/ FT2SEC	HW/HT	TW DEG. R	STN NO R=.900
36	.10000+00	.10000+00	340.00	.8232-01	.9740-01	.1072	40.04	3.296	.3539	550.6	.2576-02
36	.10000+00	.30000	341.00	.7718-01	.9127-01	.1004	40.14	3.098	.3523	548.1	.2414-02
36	.10000+00	.50000	342.00	.7105-01	.8401-01	.9244-01	40.18	2.855	.3517	547.1	.2222-02
36	.20000	.10000+00	343.00	.1252	.1482	.1631	39.99	5.007	.3547	551.8	.3919-02
36	.20000	.20000	344.00	.8679-01	.1027	.1130	40.06	3.477	.3535	549.9	.2716-02
36	.20000	.40000	345.00	.7748-01	.9163-01	.1008	40.13	3.109	.3525	548.4	.2424-02
36	.30000	.50000-01	348.00	.1697	.2008	.2211	39.95	6.778	.3553	552.7	.5310-02
36	.30000	.20000	349.00	.6372-01	.7537-01	.8296-01	40.08	2.554	.3533	549.6	.1994-02
36	.30000	.40000	350.00	.5024-01	.5941-01	.6537-01	40.14	2.017	.3522	548.0	.1571-02
36	.30000	.50000	351.00	.6740-01	.7969-01	.8769-01	40.17	2.707	.3519	547.4	.2108-02
36	.30000	.90000	352.00	.2300-01	.2718-01	.2990-01	40.28	.9264	.3501	544.6	.7191-03
36	.40000	.20000	354.00	.6500-01	.7687-01	.8460-01	40.12	2.608	.3526	548.6	.2033-02
36	.40000	.50000	356.00	.3633-01	.4294-01	.4723-01	40.26	1.463	.3505	545.2	.1136-02
36	.40000	.70000	357.00	.2285-01	.2699-01	.2969-01	40.35	.9217	.3491	543.1	.7142-03
36	.40000	.90000	358.00	.2179-01	.2575-01	.2833-01	40.26	.8773	.3504	545.1	.6813-03
36	.50000	.50000-01	359.00	.2059	.2436	.2682	40.07	8.252	.3535	549.9	.6444-02
36	.50000	.70000	360.00	.1661-01	.1962-01	.2158-01	40.37	.6707	.3487	542.5	.5192-03
36	.50000	.90000	361.00	.1566-01	.1851-01	.2036-01	40.26	.6305	.3504	545.1	.4896-03
36	.60000	.50000-01	362.00	.2173	.2570	.2828	40.12	8.716	.3527	548.6	.6797-02
36	.60000	.10000+00	363.00	.1392	.1646	.1811	40.14	5.587	.3523	548.1	.4354-02
36	.60000	.20000	364.00	.6642-01	.7860-01	.8654-01	39.97	2.655	.3549	552.1	.2079-02

IH103 60-OT VERTICAL TAIL (R3PT11)

RUN NUMBER	ZV/BV	XV/CV	T/C NO	H/HREF R=1.0	H/HREF R=.900	H/HREF R=.850	QREF BTU/ FT2SEC	QDOT BTU/ FT2SEC	HW/HT	TW DEG. R	STN NO R=.900
36	.60000	.40000	365.00	.4653-01	.5498-01	.6048-01	40.32	1.876	.3495	543.8	.1455-02
36	.60000	.50000	366.00	.3789-01	.4476-01	.4922-01	40.37	1.530	.3487	542.5	.1184-02
36	.70000	.50000-01	369.00	.2294	.2713	.2985	40.14	9.207	.3524	548.2	.7176-02
36	.70000	.70000	370.00	.1871-01	.2210-01	.2431-01	40.35	.7548	.3491	543.1	.5848-03
36	.70000	.90000	371.00	.1408-01	.1664-01	.1830-01	40.28	.5670	.3501	544.7	.4401-03
36	.80000	.10000+00	373.00	.1633	.1931	.2125	40.18	6.562	.3517	547.2	.5108-02
36	.80000	.40000	374.00	.5131-01	.6064-01	.6671-01	40.27	2.066	.3503	545.0	.1604-02
36	.80000	.50000	375.00	.3859-01	.4561-01	.5016-01	40.30	1.555	.3498	544.2	.1207-02
36	.80000	.70000	376.00	.1987-01	.2348-01	.2583-01	40.28	.8002	.3502	544.8	.6212-03
36	.80000	.90000	377.00	.1544-01	.1826-01	.2009-01	40.23	.6214	.3509	545.9	.4830-03
36	.90000	.10000+00	378.00	.1393	.1648	.1813	40.13	5.592	.3524	548.2	.4359-02
36	.90000	.30000	379.00	.6874-01	.8128-01	.8945-01	40.15	2.760	.3521	547.8	.2150-02
36	.90000	.70000	381.00	.1699-01	.2008-01	.2209-01	40.26	.6840	.3504	545.2	.5312-03
36	.90000	.90000	382.00	.1616-01	.1911-01	.2102-01	40.18	.6492	.3517	547.1	.5054-03
36	.95000	.30000	383.00	.6662-01	.7875-01	.8663-01	40.24	2.680	.3508	545.8	.2083-02
36	.95000	.50000	384.00	.4511-01	.5332-01	.5865-01	40.29	1.818	.3500	544.5	.1411-02
36	.95000	.90000	385.00	.1832-01	.2166-01	.2383-01	40.19	.7363	.3516	546.9	.5730-03

IH103 60-OT VERTICAL TAIL (R3PT12)

VERT TAIL

PARAMETRIC DATA

MACH = 5.250 ALPHA = 10.00 BETA = -3.000 ELEVON = .0000
BDFLAP = .0000 SPDBRK = .0000

TEST CONDITIONS

RUN NUMBER	ALPHA DEG.	BETA DEG.	MACH	RN/FT /FT X10 6	PT PSIA	TT DEG. R	HT BTU/ LBM	PINF PSIA	TINF DEG. R	RHO SLUGS/ FT3	VINF FT/SEC	SCALE
33	10.00	-5.000	5.250	1.038	103.4	1501.	369.7	.1425	236.6	.5054-04	3958.	.1750-01

RUN NUMBER	PHI DEG.	HS SPHERE TW=540
33	.0000	.1676

TEST DATA

RUN NUMBER	ZV/BV	XV/CV	T/C NO	H/HREF R=1.0	H/HREF R=.900	H/HREF R=.850	QREF BTU/ FT2SEC	QDOT BTU/ FT2SEC	HW/HT	TW DEG. R	STN NO R=.900
33	.10000+00	.10000+00	340.00	.2377-01	.2811-01	.3094-01	40.10	.9530	.3529	543.8	.7321-03
33	.10000+00	.30000	341.00	.1429-01	.1690-01	.1859-01	40.20	.5745	.3514	541.5	.4401-03
33	.10000+00	.50000	342.00	.1679-01	.1984-01	.2183-01	40.25	.6757	.3505	540.1	.5168-03
33	.20000	.10000+00	343.00	.9972-01	.1180	.1298	40.08	3.997	.3532	544.3	.3072-02
33	.20000	.20000	344.00	.6452-01	.7630-01	.8396-01	40.15	2.591	.3520	542.5	.1987-02
33	.20000	.40000	345.00	.4869-01	.5755-01	.6332-01	40.22	1.958	.3510	540.8	.1499-02
33	.30000	.50000-01	348.00	.1464	.1732	.1907	40.05	5.865	.3536	544.8	.4511-02
33	.30000	.20000	349.00	.6366-01	.7527-01	.8282-01	40.18	2.558	.3516	541.9	.1960-02
33	.30000	.40000	350.00	.4998-01	.5908-01	.6499-01	40.25	2.012	.3506	540.2	.1539-02
33	.30000	.50000	351.00	.4959-01	.5861-01	.6447-01	40.27	1.997	.3502	539.6	.1526-02
33	.30000	.90000	352.00	.1401-01	.1655-01	.1821-01	40.38	.5658	.3486	537.2	.4312-03
33	.40000	.20000	354.00	.6290-01	.7436-01	.8181-01	40.22	2.530	.3510	540.8	.1937-02
33	.40000	.50000	356.00	.4055-01	.4791-01	.5269-01	40.35	1.636	.3490	537.8	.1248-02
33	.40000	.70000	357.00	.1893-01	.2236-01	.2459-01	40.41	.7650	.3480	536.3	.5825-03
33	.40000	.90000	358.00	.1570-01	.1855-01	.2040-01	40.36	.6338	.3488	537.4	.4832-03
33	.50000	.50000-01	359.00	.1790	.2116	.2329	40.17	7.190	.3518	542.1	.5512-02
33	.50000	.70000	360.00	.1825-01	.2155-01	.2369-01	40.44	.7379	.3476	535.6	.5614-03
33	.50000	.90000	361.00	.1499-01	.1771-01	.1948-01	40.36	.6050	.3489	537.6	.4613-03
33	.60000	.50000-01	362.00	.1827	.2159	.2376	40.22	7.347	.3510	540.8	.5624-02
33	.60000	.10000+00	363.00	.1186	.1401	.1542	40.25	4.772	.3506	540.2	.3650-02
33	.60000	.20000	364.00	.5908-01	.6989-01	.7692-01	40.07	2.367	.3533	544.4	.1820-02

IH103 60-OT VERTICAL TAIL (R3PT12)

RUN NUMBER	ZV/BV	XV/CV	T/C NO	H/HREF R=1.0	H/HREF R=.900	H/HREF R=.850	QREF BTU/ FT2SEC	QDOT BTU/ FT2SEC	HW/HT	TW DEG. R	STN NO R=.900
33	.60000	.40000	365.00	.4350-01	.5138-01	.5650-01	40.40	1.757	.3482	536.6	.1338-02
33	.60000	.50000	366.00	.3762-01	.4443-01	.4885-01	40.44	1.521	.3475	535.5	.1157-02
33	.70000	.50000-01	369.00	.1919	.2269	.2496	40.24	7.723	.3507	540.4	.5909-02
33	.70000	.70000	370.00	.1813-01	.2142-01	.2355-01	40.43	.7332	.3477	535.8	.5579-03
33	.70000	.90000	371.00	.1462-01	.1728-01	.1900-01	40.37	.5904	.3487	537.3	.4500-03
33	.80000	.10000+00	373.00	.1399	.1654	.1819	40.28	5.637	.3501	539.5	.4308-02
33	.80000	.40000	374.00	.4589-01	.5420-01	.5961-01	40.39	1.853	.3484	536.8	.1412-02
33	.80000	.50000	375.00	.3588-01	.4238-01	.4660-01	40.41	1.450	.3481	536.4	.1104-02
33	.80000	.70000	376.00	.1992-01	.2354-01	.2588-01	40.39	.8048	.3484	536.8	.6131-03
33	.80000	.90000	377.00	.1610-01	.1903-01	.2092-01	40.35	.6497	.3490	537.8	.4956-03
33	.90000	.10000+00	378.00	.1067	.1262	.1388	40.22	4.293	.3510	540.8	.3286-02
33	.90000	.30000	379.00	.4881-01	.5767-01	.6342-01	40.38	1.971	.3485	537.1	.1502-02
33	.90000	.70000	381.00	.1657-01	.1958-01	.2153-01	40.36	.6688	.3488	537.5	.5099-03
33	.90000	.90000	382.00	.1674-01	.1979-01	.2176-01	40.29	.6746	.3499	539.1	.5153-03
33	.95000	.30000	383.00	.5588-01	.6603-01	.7262-01	40.35	2.255	.3490	537.8	.1720-02
33	.95000	.50000	384.00	.3756-01	.4436-01	.4878-01	40.40	1.517	.3482	536.6	.1156-02
33	.95000	.90000	385.00	.1642-01	.1940-01	.2134-01	40.30	.6615	.3498	539.1	.5053-03

IH103 60-OT VERTICAL TAIL (R3PT13)

VERT TAIL

PARAMETRIC DATA

MACH = 5.250 ALPHA = .0000 BETA = -9.000 ELEVON = .0000
BDFLAP = .0000 SPDBRK = .0000

TEST CONDITIONS

RUN NUMBER	ALPHA DEG.	BETA DEG.	MACH	RN/FT /FT X10 6	PT PSIA	TT DEG. R	HT BTU/ LBM	PINF PSIA	TINF DEG. R	RHO SLUGS/ FT3	VINF FT/SEC	SCALE
39	10.00	-5.000	5.250	1.033	102.6	1498.	368.9	.1414	236.1	.5026-04	3954.	.1750-01

RUN NUMBER	PHI DEG.	HS SPHERE TW=540
39	.0000	.1669

TEST DATA

RUN NUMBER	ZV/BV	XV/CV	T/C NO	H/HREF R=1.0	H/HREF R=.900	H/HREF R=.850	QREF BTU/ FT2SEC	QDOT BTU/ FT2SEC	HW/HT	TW DEG. R	STN NO R=.900
39	.10000+00	.10000+00	340.00	.1860	.2207	.2435	39.09	7.272	.3646	560.4	.5759-02
39	.10000+00	.30000	341.00	.1889	.2241	.2471	39.16	7.396	.3635	558.8	.5846-02
39	.10000+00	.50000	342.00	.1138	.1349	.1488	39.20	4.459	.3629	557.9	.3520-02
39	.20000	.10000+00	343.00	.1654	.1963	.2166	39.02	6.453	.3657	562.2	.5121-02
39	.20000	.20000	344.00	.8261-01	.9804-01	.1081	39.09	3.229	.3646	560.5	.2557-02
39	.20000	.40000	345.00	.1927	.2286	.2522	39.15	7.544	.3638	559.2	.5965-02
39	.30000	.50000-01	348.00	.2392	.2840	.3134	38.99	9.328	.3662	562.9	.7409-02
39	.30000	.20000	349.00	.5776-01	.6855-01	.7560-01	39.10	2.259	.3644	560.2	.1788-02
39	.30000	.40000	350.00	.1957	.2322	.2560	39.16	7.665	.3635	558.8	.6057-02
39	.30000	.50000	351.00	.1531	.1816	.2003	39.19	6.001	.3631	558.2	.4739-02
39	.30000	.90000	352.00	.4170-01	.4944-01	.5450-01	39.31	1.639	.3612	555.3	.1290-02
39	.40000	.20000	354.00	.6092-01	.7228-01	.7971-01	39.15	2.385	.3636	559.0	.1886-02
39	.40000	.50000	356.00	.1740	.2063	.2274	39.27	6.833	.3618	556.1	.5383-02
39	.40000	.70000	357.00	.7276-01	.8625-01	.9506-01	39.35	2.863	.3605	554.2	.2251-02
39	.40000	.90000	358.00	.5137-01	.6091-01	.6714-01	39.29	2.018	.3615	555.8	.1589-02
39	.50000	.50000-01	359.00	.2462	.2921	.3222	39.10	9.625	.3644	560.2	.7621-02
39	.50000	.70000	360.00	.7281-01	.8629-01	.9510-01	39.38	2.867	.3601	553.6	.2252-02
39	.50000	.90000	361.00	.5494-01	.6514-01	.7181-01	39.28	2.158	.3616	555.9	.1700-02
39	.60000	.50000-01	362.00	.2333	.2768	.3053	39.15	9.135	.3636	559.0	.7222-02
39	.60000	.10000+00	363.00	.1576	.1869	.2061	39.17	6.172	.3633	558.5	.4877-02
39	.60000	.20000	364.00	.6267-01	.7440-01	.8209-01	39.00	2.444	.3660	562.7	.1941-02

IH103 60-OT VERTICAL TAIL (R3PT13)

RUN NUMBER	ZV/BV	XV/CV	T/C NO	H/HREF R=1.0	H/HREF R=.900	H/HREF R=.850	QREF BTU/ FT2SEC	QDOT BTU/ FT2SEC	HW/HT	TW DEG. R	STN NO R=.900
39	.60000	.40000	365.00	.2807-01	.3327-01	.3667-01	39.33	1.104	.3609	554.8	.8682-03
39	.60000	.50000	366.00	.4864-01	.5765-01	.6353-01	39.38	1.915	.3601	553.6	.1504-02
39	.70000	.50000-01	369.00	.2649	.3143	.3466	39.17	10.38	.3633	558.5	.8200-02
39	.70000	.70000	370.00	.1993-01	.2363-01	.2604-01	39.34	.7841	.3607	554.5	.6166-03
39	.70000	.90000	371.00	.2712-01	.3215-01	.3545-01	39.27	1.065	.3619	556.3	.8390-03
39	.80000	.10000+00	373.00	.2092	.2482	.2737	39.20	8.201	.3629	558.0	.6475-02
39	.80000	.40000	374.00	.6554-01	.7771-01	.8567-01	39.28	2.574	.3617	556.0	.2028-02
39	.80000	.50000	375.00	.5050-01	.5988-01	.6600-01	39.29	1.984	.3615	555.7	.1562-02
39	.80000	.70000	376.00	.3097-01	.3673-01	.4049-01	39.26	1.216	.3620	556.5	.9582-03
39	.80000	.90000	377.00	.1905-01	.2260-01	.2492-01	39.22	.7472	.3626	557.4	.5896-03
39	.90000	.10000+00	378.00	.2960-01	.3511-01	.3871-01	39.20	1.160	.3629	557.9	.9160-03
39	.90000	.30000	379.00	.8555-01	.1015	.1119	39.22	3.355	.3626	557.4	.2647-02
39	.90000	.70000	381.00	.3046-01	.3612-01	.3983-01	39.23	1.195	.3624	557.2	.9424-03
39	.90000	.90000	382.00	.3951-01	.4688-01	.5170-01	39.16	1.548	.3635	558.7	.1223-02
39	.95000	.30000	383.00	.9839-01	.1167	.1287	39.23	3.860	.3625	557.3	.3045-02
39	.95000	.50000	384.00	.6654-01	.7890-01	.8698-01	39.27	2.613	.3618	556.1	.2059-02
39	.95000	.90000	385.00	.2960-01	.3512-01	.3872-01	39.19	1.160	.3631	558.2	.9162-03

IH103 60-OT VERTICAL TAIL

VERT TAIL (R3PT14)

PARAMETRIC DATA

MACH = 5.250 ALPHA = -5.000 BETA = -9.000 ELEVON = .0000
BDFLAP = .0000 SPDBRK = .0000

TEST CONDITIONS

RUN NUMBER	ALPHA DEG.	BETA DEG.	MACH	RN/FT /FT X10 6	PT PSIA	TT DEG. R	HT BTU/ LBM	PINF PSIA	TINF DEG. R	RHO SLUGS/ FT3	VINF FT/SEC	SCALE
105	-5.000	-9.000	5.250	1.035	102.8	1498.	369.0	.1417	236.1	.5037-04	3954.	.1750-01

RUN NUMBER	PHI DEG.	HS SPHERE TW=540
105	.0000	.1671

TEST DATA

RUN NUMBER	ZV/BV	XV/CV	T/C NO	H/HREF R=1.0	H/HREF R=.900	H/HREF R=.850	QREF BTU/ FT2SEC	QDOT BTU/ FT2SEC	HW/HT	TW DEG. R	STN NO R=.900
105	.10000+00	.10000+00	340.00	.2381	.2828	.3122	38.95	9.273	.3678	565.5	.7369-02
105	.10000+00	.30000	341.00	.2109	.2505	.2764	39.04	8.236	.3663	563.2	.6527-02
105	.10000+00	.50000	342.00	.1419	.1684	.1858	39.10	5.549	.3653	561.7	.4390-02
105	.20000	.10000+00	343.00	.1500	.1782	.1967	38.90	5.835	.3684	566.5	.4643-02
105	.20000	.20000	344.00	.1100	.1307	.1442	38.97	4.288	.3674	564.9	.3405-02
105	.20000	.40000	345.00	.1779	.2112	.2330	39.05	6.947	.3661	563.0	.5503-02
105	.30000	.50000-01	348.00	.2186	.2598	.2868	38.87	8.498	.3690	567.4	.6768-02
105	.30000	.20000	349.00	.8088-01	.9606-01	.1060	39.00	3.154	.3669	564.3	.2503-02
105	.30000	.40000	350.00	.1628	.1933	.2132	39.11	6.368	.3653	561.7	.5037-02
105	.30000	.50000	351.00	.1377	.1634	.1803	39.09	5.381	.3655	562.0	.4258-02
105	.30000	.90000	352.00	.3919-01	.4649-01	.5127-01	39.23	1.537	.3634	558.8	.1212-02
105	.40000	.20000	354.00	.5257-01	.6242-01	.6887-01	39.05	2.053	.3661	562.9	.1627-02
105	.40000	.50000	356.00	.1193	.1416	.1561	39.20	4.677	.3639	559.6	.3689-02
105	.40000	.70000	357.00	.5452-01	.6467-01	.7130-01	39.27	2.141	.3627	557.7	.1685-02
105	.40000	.90000	358.00	.4065-01	.4823-01	.5319-01	39.20	1.593	.3638	559.5	.1257-02
105	.50000	.50000-01	359.00	.2739	.3253	.3589	39.01	10.68	.3668	564.0	.8476-02
105	.50000	.70000	360.00	.7259-01	.8603-01	.9481-01	39.44	2.863	.3601	553.7	.2243-02
105	.50000	.90000	361.00	.5644-01	.6697-01	.7385-01	39.20	2.213	.3637	559.3	.1745-02
105	.60000	.50000-01	362.00	.2964	.3519	.3883	39.06	11.58	.3660	562.8	.9170-02
105	.60000	.10000+00	363.00	.1934	.2296	.2532	39.10	7.560	.3654	561.9	.5982-02
105	.60000	.20000	364.00	.6685-01	.7934-01	.8751-01	39.15	2.618	.3645	560.6	.2068-02

IH103 60-OT VERTICAL TAIL

RUN NUMBER	ZV/BV	XV/CV	T/C NO	H/HREF R=1.0	H/HREF R=.900	H/HREF R=.850	QREF BTU/ FT2SEC	QDOT BTU/ FT2SEC	HW/HT	TW DEG. R	STN NO R=.900
105	.60000	.40000	365.00	.7540-01	.8943-01	.9861-01	39.27	2.961	.3627	557.8	.2331-02
105	.60000	.50000	366.00	.1311	.1555	.1714	39.30	5.153	.3622	557.0	.4053-02
105	.60000	.70000	367.00	.7755-01	.9197-01	.1014	39.31	3.048	.3621	556.8	.2397-02
105	.70000	.50000-01	369.00	.3162	.3753	.4140	39.10	12.36	.3654	561.9	.9780-02
105	.70000	.70000	370.00	.3228-01	.3829-01	.4222-01	39.28	1.268	.3625	557.5	.9980-03
105	.70000	.90000	371.00	.4277-01	.5074-01	.5596-01	39.21	1.677	.3636	559.2	.1322-02
105	.80000	.10000+00	373.00	.2453	.2911	.3211	39.12	9.596	.3650	561.2	.7586-02
105	.80000	.40000	374.00	.6835-01	.8109-01	.8942-01	39.22	2.680	.3636	559.1	.2113-02
105	.80000	.50000	375.00	.5067-01	.6011-01	.6628-01	39.23	1.988	.3633	558.6	.1567-02
105	.80000	.70000	376.00	.2897-01	.3437-01	.3791-01	39.20	1.136	.3637	559.3	.8958-03
105	.80000	.90000	377.00	.1884-01	.2235-01	.2466-01	39.15	.7375	.3645	560.5	.5825-03
105	.90000	.10000+00	378.00	.1301	.1544	.1704	39.07	5.082	.3659	562.6	.4025-02
105	.90000	.30000	379.00	.1133	.1345	.1484	39.11	4.431	.3652	561.6	.3505-02
105	.90000	.70000	381.00	.3922-01	.4654-01	.5133-01	39.15	1.535	.3646	560.7	.1213-02
105	.90000	.90000	382.00	.4712-01	.5593-01	.6171-01	39.08	1.841	.3657	562.3	.1458-02
105	.95000	.30000	383.00	.1250	.1484	.1636	39.16	4.896	.3644	560.3	.3866-02
105	.95000	.50000	384.00	.8549-01	.1014	.1119	39.21	3.352	.3636	559.1	.2643-02
105	.95000	.90000	385.00	.3543-01	.4206-01	.4639-01	39.12	1.386	.3651	561.3	.1096-02

IH103 60-OT VERTICAL TAIL (R3PT15)

VERT TAIL

PARAMETRIC DATA

MACH = 5.250 ALPHA = 5.000 BETA = -9.000 ELEVON = .0000
BDFLAP = .0000 SPDBRK = .0000

TEST CONDITIONS

RUN NUMBER	ALPHA DEG.	BETA DEG.	MACH	RN/FT /FT X10 6	PT PSIA	TT DEG. R	HT BTU/ LBM	PINF PSIA	TINF DEG. R	RHO SLUGS/ FT3	VINF FT/SEC	SCALE
37	10.00	-5.000	5.250	1.022	103.7	1517.	374.0	.1427	239.4	.5002-04	3981.	.1750-01

RUN NUMBER	PHI DEG.	HS SPHERE TW=540
37	.0000	.1679

TEST DATA

RUN NUMBER	ZV/BV	XV/CV	T/C NO	H/HREF R=1.0	H/HREF R=.900	H/HREF R=.850	QREF BTU/ FT2SEC	QDOT BTU/ FT2SEC	HW/HT	TW DEG. R	STN NO R=.900
37	.10000+00	.10000+00	340.00	.1461	.1729	.1903	40.55	5.924	.3541	551.9	.4528-02
37	.10000+00	.30000	341.00	.1657	.1960	.2157	40.63	6.733	.3528	549.9	.5134-02
37	.10000+00	.50000	342.00	.9278-01	.1097	.1207	40.67	3.773	.3522	549.1	.2874-02
37	.20000	.10000+00	343.00	.1370	.1621	.1785	40.55	5.555	.3541	552.0	.4246-02
37	.20000	.20000	344.00	.8217-01	.9720-01	.1070	40.60	3.337	.3532	550.6	.2546-02
37	.20000	.40000	345.00	.1346	.1592	.1752	40.64	5.470	.3526	549.7	.4170-02
37	.30000	.50000-01	348.00	.1890	.2236	.2461	40.54	7.660	.3542	552.2	.5856-02
37	.30000	.20000	349.00	.7374-01	.8721-01	.9598-01	40.65	2.997	.3526	549.6	.2285-02
37	.30000	.40000	350.00	.1466	.1733	.1907	40.69	5.964	.3520	548.6	.4541-02
37	.30000	.50000	351.00	.1146	.1355	.1491	40.70	4.663	.3517	548.3	.3549-02
37	.30000	.90000	352.00	.2732-01	.3229-01	.3553-01	40.80	1.115	.3502	546.0	.8462-03
37	.40000	.20000	354.00	.4753-01	.5620-01	.6184-01	40.69	1.934	.3519	548.6	.1472-02
37	.40000	.50000	356.00	.1185	.1400	.1541	40.78	4.832	.3505	546.4	.3669-02
37	.40000	.70000	357.00	.5392-01	.6372-01	.7008-01	40.84	2.202	.3495	544.9	.1670-02
37	.40000	.90000	358.00	.3735-01	.4415-01	.4857-01	40.79	1.524	.3504	546.2	.1157-02
37	.50000	.50000-01	359.00	.2325	.2750	.3026	40.65	9.451	.3525	549.5	.7204-02
37	.50000	.70000	360.00	.5797-01	.6849-01	.7533-01	40.87	2.369	.3491	544.2	.1795-02
37	.50000	.90000	361.00	.4755-01	.5620-01	.6182-01	40.79	1.940	.3503	546.1	.1472-02
37	.60000	.50000-01	362.00	.2434	.2879	.3168	40.69	9.904	.3520	548.7	.7542-02
37	.60000	.10000+00	363.00	.1648	.1949	.2144	40.71	6.709	.3517	548.2	.5106-02
37	.60000	.20000	364.00	.7296-01	.8633-01	.9504-01	40.53	2.957	.3543	552.3	.2261-02

IH103 60-OT VERTICAL TAIL (R3PT15)

RUN NUMBER	ZV/BV	XV/CV	T/C NO	H/HREF R=1.0	H/HREF R=.900	H/HREF R=.850	QREF BTU/ FT2SEC	QDOT BTU/ FT2SEC	HW7HT	TW DEG. R	STN NO R=.900
37	.60000	.40000	365.00	.3901-01	.4610-01	.5070-01	40.84	1.593	.3495	544.9	.1208-02
37	.60000	.50000	366.00	.5216-01	.6162-01	.6777-01	40.89	2.133	.3489	543.8	.1615-02
37	.70000	.50000-01	369.00	.2549	.3014	.3316	40.71	10.38	.3516	548.1	.7896-02
37	.70000	.70000	370.00	.2573-01	.3040-01	.3344-01	40.89	1.052	.3488	543.7	.7967-03
37	.70000	.90000	371.00	.2236-01	.2642-01	.2906-01	40.84	.9131	.3496	544.9	.6922-03
37	.80000	.10000+00	373.00	.1927	.2278	.2507	40.75	7.855	.3509	547.1	.5970-02
37	.80000	.40000	374.00	.5971-01	.7055-01	.7760-01	40.85	2.439	.3494	544.7	.1849-02
37	.80000	.50000	375.00	.4526-01	.5347-01	.5881-01	40.89	1.851	.3488	543.7	.1401-02
37	.80000	.70000	376.00	.2828-01	.3341-01	.3675-01	40.87	1.156	.3491	544.2	.8756-03
37	.80000	.90000	377.00	.2429-01	.2871-01	.3158-01	40.83	.9919	.3498	545.2	.7522-03
37	.90000	.10000+00	378.00	.2315-01	.2738-01	.3014-01	40.60	.9400	.3532	550.6	.7174-03
37	.90000	.30000	379.00	.8165-01	.9652-01	.1062	40.76	3.329	.3508	546.8	.2529-02
37	.90000	.70000	381.00	.3039-01	.3590-01	.3948-01	40.90	1.243	.3487	543.6	.9408-03
37	.90000	.90000	382.00	.3756-01	.4439-01	.4882-01	40.83	1.534	.3497	545.2	.1163-02
37	.95000	.30000	383.00	.8137-01	.9614-01	.1057	40.88	3.327	.3490	544.0	.2519-02
37	.95000	.50000	384.00	.6074-01	.7174-01	.7889-01	40.94	2.487	.3480	542.5	.1880-02
37	.95000	.90000	385.00	.2965-01	.3504-01	.3854-01	40.85	1.211	.3494	544.7	.9181-03

IH103 60-OT VERTICAL TAIL (R3PT16)

VERT TAIL

PARAMETRIC DATA

MACH = 5.250 ALPHA = 10.00 BETA = -9.000 ELEVON = .0000
BDFLAP = .0000 SPDBRK = .0000

TEST CONDITIONS

RUN NUMBER	ALPHA DEG.	BETA DEG.	MACH	RN/FT /FT X10 6	PT PSIA	TT DEG. R	HT BTU/ LBM	PINF PSIA	TINF DEG. R	RHO SLUGS/ FT3	VINF FT/SEC	SCALE
38	10.00	-5.000	5.250	1.028	102.7	1503.	370.3	.1415	237.0	.5009-04	3961.	.1750-01

RUN NUMBER	PHI DEG.	HS SPHERE TW=540
38	.0000	.1670

TEST DATA

RUN NUMBER	ZV/BV	XV/CV	T/C NO	H/HREF R=1.0	H/HREF R=.900	H/HREF R=.850	QREF BTU/ FT2SEC	QDOT BTU/ FT2SEC	HW/HT	TW DEG. R	STN NO R=.900
38	.10000+00	.10000+00	340.00	.4221-01	.5004-01	.5516-01	39.48	1.666	.3613	557.5	.1308-02
38	.10000+00	.30000	341.00	.4126-01	.4890-01	.5389-01	39.55	1.632	.3601	555.8	.1278-02
38	.10000+00	.50000	342.00	.4642-01	.5501-01	.6062-01	39.60	1.838	.3594	554.7	.1438-02
38	.20000	.10000+00	343.00	.1370	.1624	.1791	39.42	5.399	.3622	558.9	.4246-02
38	.20000	.20000	344.00	.1327	.1573	.1734	39.49	5.238	.3611	557.3	.4112-02
38	.20000	.40000	345.00	.1401	.1661	.1831	39.54	5.542	.3603	556.0	.4343-02
38	.30000	.50000-01	348.00	.1571	.1864	.2055	39.39	6.190	.3626	559.6	.4873-02
38	.30000	.20000	349.00	.7733-01	.9167-01	.1010	39.50	3.055	.3609	556.9	.2397-02
38	.30000	.40000	350.00	.1044	.1237	.1364	39.57	4.131	.3599	555.4	.3236-02
38	.30000	.50000	351.00	.8318-01	.9857-01	.1086	39.59	3.293	.3596	554.9	.2577-02
38	.30000	.90000	352.00	.1841-01	.2180-01	.2401-01	39.71	.7310	.3576	551.9	.5701-03
38	.40000	.20000	354.00	.4324-01	.5125-01	.5648-01	39.56	1.711	.3600	555.6	.1340-02
38	.40000	.50000	356.00	.8399-01	.9950-01	.1096	39.67	3.332	.3582	552.9	.2602-02
38	.40000	.70000	357.00	.3941-01	.4667-01	.5140-01	39.75	1.567	.3570	550.9	.1220-02
38	.40000	.90000	358.00	.2561-01	.3034-01	.3342-01	39.68	1.016	.3581	552.6	.7933-03
38	.50000	.50000-01	359.00	.1916	.2271	.2503	39.51	7.569	.3608	556.8	.5938-02
38	.50000	.70000	360.00	.3381-01	.4003-01	.4409-01	39.77	1.345	.3567	550.5	.1047-02
38	.50000	.90000	361.00	.2654-01	.3144-01	.3463-01	39.69	1.053	.3580	552.6	.8221-03
38	.60000	.50000-01	362.00	.2037	.2414	.2661	39.56	8.058	.3601	555.7	.6313-02
38	.60000	.10000+00	363.00	.1425	.1689	.1861	39.58	5.640	.3596	555.0	.4415-02
38	.60000	.20000	364.00	.7149-01	.8479-01	.9349-01	39.40	2.817	.3625	559.4	.2217-02

IH103 60-OT VERTICAL TAIL (R3PT16)

RUN NUMBER	ZV/BV	XV/CV	T/C NO	H/HREF R=1.0	H/HREF R=.900	H/HREF R=.850	QREF BTU/ FT2SEC	QDOT BTU/ FT2SEC	HW/HT	TW DEG. R	STN NO R=.900
38	.60000	.40000	365.00	.5737-01	.6794-01	.7483-01	39.73	2.279	.3573	551.4	.1777-02
38	.60000	.50000	366.00	.5086-01	.6022-01	.6632-01	39.78	2.023	.3566	550.3	.1575-02
38	.70000	.50000-01	369.00	.2098	.2486	.2739	39.57	8.301	.3598	555.3	.6500-02
38	.70000	.70000	370.00	.3198-01	.3788-01	.4172-01	39.75	1.271	.3571	551.1	.9905-03
38	.70000	.90000	371.00	.2366-01	.2802-01	.3087-01	39.68	.9386	.3582	552.8	.7328-03
38	.80000	.10000+00	373.00	.1620	.1919	.2115	39.60	6.415	.3593	554.5	.5019-02
38	.80000	.40000	374.00	.5556-01	.6582-01	.7251-01	39.68	2.205	.3581	552.7	.1721-02
38	.80000	.50000	375.00	.4883-01	.5784-01	.6372-01	39.70	1.939	.3578	552.3	.1513-02
38	.80000	.70000	376.00	.3522-01	.4172-01	.4597-01	39.67	1.397	.3583	553.0	.1091-02
38	.80000	.90000	377.00	.2901-01	.3437-01	.3787-01	39.63	1.150	.3589	553.9	.8987-03
38	.90000	.10000+00	378.00	.2084-01	.2470-01	.2722-01	39.57	.8246	.3599	555.4	.6457-03
38	.90000	.30000	379.00	.6894-01	.8168-01	.9000-01	39.61	2.731	.3592	554.3	.2136-02
38	.90000	.70000	381.00	.3025-01	.3585-01	.3950-01	39.62	1.198	.3591	554.2	.9373-03
38	.90000	.90000	382.00	.4083-01	.4839-01	.5333-01	39.56	1.615	.3600	555.5	.1265-02
38	.95000	.30000	383.00	.6667-01	.7899-01	.8703-01	39.64	2.643	.3588	553.7	.2065-02
38	.95000	.50000	384.00	.5047-01	.5978-01	.6586-01	39.68	2.003	.3581	552.6	.1563-02
38	.95000	.90000	385.00	.2952-01	.3498-01	.3854-01	39.60	1.169	.3594	554.6	.9145-03

IH103 60-OT VERTICAL TAIL (R3PT17)

VERT TAIL

PARAMETRIC DATA

MACH = 5.250 ALPHA = -10.00 BETA = -9.000 ELEVON = .0000
BDFLAP = .0000 SPDBRK = .0000

TEST CONDITIONS

RUN NUMBER	ALPHA DEG.	BETA DEG.	MACH	RN/FT /FT X10 6	PT PSIA	TT DEG. R	HT BTU/ LBM	PINF PSIA	TINF DEG. R	RHO SLUGS/ FT3	VINF FT/SEC	SCALE
106	-10.00	-9.000	5.250	.9984	101.9	1524.	375.8	.1402	240.5	.4894-04	3990.	.1750-01

RUN NUMBER	PHI DEG.	HS SPHERE TW=540
106	.0000	.1666

TEST DATA

RUN NUMBER	ZV/BV	XV/CV	T/C NO	H/HREF R=1.0	H/HREF R=.900	H/HREF R=.850	QREF BTU/ FT2SEC	QDOT BTU/ FT2SEC	HW/HT	TW DEG. R	STN NO R=.900
106	.10000+00	.10000+00	340.00	.2517	.2984	.3289	39.96	10.06	.3609	565.2	.7901-02
106	.10000+00	.30000	341.00	.2220	.2631	.2899	40.02	8.883	.3599	563.7	.6967-02
106	.10000+00	.50000	342.00	.1440	.1706	.1880	40.03	5.764	.3597	563.3	.4519-02
106	.20000	.10000+00	343.00	.1546	.1833	.2021	39.89	6.166	.3619	566.7	.4853-02
106	.20000	.20000	344.00	.1328	.1574	.1735	39.93	5.301	.3613	565.8	.4168-02
106	.20000	.40000	345.00	.1543	.1829	.2016	39.95	6.164	.3609	565.2	.4843-02
106	.30000	.50000-01	348.00	.2300	.2728	.3008	39.85	9.166	.3625	567.6	.7222-02
106	.30000	.20000	349.00	.2172	.2576	.2839	39.91	8.671	.3615	566.1	.6820-02
106	.30000	.40000	350.00	.1365	.1618	.1784	39.96	5.455	.3608	565.0	.4285-02
106	.30000	.50000	351.00	.1193	.1414	.1559	39.90	4.759	.3617	566.5	.3745-02
106	.30000	.90000	352.00	.4365-01	.5176-01	.5706-01	39.89	1.741	.3618	566.6	.1371-02
106	.40000	.20000	354.00	.1671	.1981	.2184	39.92	6.671	.3614	565.9	.5246-02
106	.40000	.50000	356.00	.1660	.1968	.2170	39.94	6.631	.3611	565.6	.5212-02
106	.40000	.70000	357.00	.6848-01	.8118-01	.8948-01	39.96	2.737	.3608	565.0	.2150-02
106	.40000	.90000	358.00	.4417-01	.5239-01	.5776-01	39.86	1.761	.3624	567.5	.1387-02
106	.50000	.50000-01	359.00	.3450	.4092	.4511	39.84	13.74	.3626	567.9	.1063-01
106	.50000	.70000	360.00	.8420-01	.9980-01	.1100	40.00	3.368	.3601	564.0	.2543-02
106	.50000	.90000	361.00	.6607-01	.7836-01	.8639-01	39.86	2.633	.3624	567.5	.2075-02
106	.60000	.50000-01	362.00	.3582	.4248	.4685	39.82	14.26	.3629	568.4	.1125-01
106	.60000	.10000+00	363.00	.2380	.2823	.3113	39.84	9.483	.3627	567.9	.7475-02
106	.60000	.20000	364.00	.9796-01	.1162	.1281	39.88	3.906	.3621	567.1	.3076-02

(R3PT17)

IH103 60-OT VERTICAL TAIL

RUN NUMBER	ZV/BV	XV/CV	T/C NO	H/HREF R=1.0	H/HREF R=.900	H/HREF R=.850	QREF BTU/ FT2SEC	QDOT BTU/ FT2SEC	HW/HT	TW DEG. R	STN NO R=.900
106	.60000	.40000	365.00	.8680-01	.1029	.1134	39.96	3.468	.3608	565.1	.2725-02
106	.60000	.50000	366.00	.1504	.1783	.1965	39.97	6.012	.3607	564.9	.4722-02
106	.60000	.70000	367.00	.8663-01	.1027	.1132	39.99	3.464	.3603	564.3	.2719-02
106	.70000	.50000-01	369.00	.3851	.4568	.5036	39.83	15.34	.3629	568.3	.1209-01
106	.70000	.70000	370.00	.2328-01	.2759-01	.3041-01	39.99	.9308	.3604	564.4	.7306-03
106	.70000	.90000	371.00	.2332-01	.2765-01	.3048-01	39.93	.9312	.3613	565.9	.7323-03
106	.80000	.10000+00	373.00	.3006	.3565	.3931	39.84	11.98	.3627	567.9	.9440-02
106	.80000	.40000	374.00	.1033	.1225	.1350	39.93	4.126	.3612	565.7	.3244-02
106	.80000	.50000	375.00	.8099-01	.9599-01	.1058	40.00	3.240	.3602	564.0	.2542-02
106	.80000	.70000	376.00	.4604-01	.5457-01	.6015-01	39.98	1.840	.3606	564.6	.1445-02
106	.80000	.90000	377.00	.3679-01	.4362-01	.4808-01	39.91	1.468	.3615	566.2	.1155-02
106	.90000	.10000+00	378.00	.1849	.2192	.2416	39.99	7.396	.3603	564.3	.5805-02
106	.90000	.30000	379.00	.1437	.1704	.1879	39.88	5.731	.3620	566.9	.4512-02
106	.90000	.70000	381.00	.4658-01	.5521-01	.6084-01	40.01	1.864	.3601	563.9	.1462-02
106	.90000	.90000	382.00	.5969-01	.7077-01	.7800-01	39.94	2.384	.3612	565.6	.1874-02
106	.95000	.30000	383.00	.1243	.1473	.1623	40.00	4.971	.3601	564.0	.3900-02
106	.95000	.50000	384.00	.8270-01	.9798-01	.1080	40.08	3.314	.3590	562.2	.2595-02
106	.95000	.90000	385.00	.3248-01	.3850-01	.4243-01	40.00	1.299	.3603	564.2	.1020-02

IH103 60-OT VERTICAL TAIL (R3PT18)

VERT TAIL

PARAMETRIC DATA

MACH = 5.250 ALPHA = -10.00 BETA = -3.000 ELEVON = .0000
BDFLAP = .0000 SPDBRK = .0000

TEST CONDITIONS

RUN NUMBER	ALPHA DEG.	BETA DEG.	MACH	RN/FT /FT X10 6	PT PSIA	TT DEG. R	HT BTU/ LBM	PINF PSIA	TINF DEG. R	RHO SLUGS/ FT3	VINF FT/SEC	SCALE
115	-10.00	-3.000	5.250	1.049	103.3	1490.	366.9	.1425	234.8	.5093-04	3943.	.1750-01

RUN NUMBER	PHI DEG.	HS SPHERE TW=540
115	.0000	.1675

TEST DATA

RUN NUMBER	ZV/BV	XV/CV	T/C NO	H/HREF R=1.0	H/HREF R=.900	H/HREF R=.850	QREF BTU/ FT2SEC	QDOT BTU/ FT2SEC	HW/HT	TW DEG. R	STN NO R=.900
115	.10000+00	.10000+00	340.00	.1851	.2195	.2419	39.23	7.263	.3611	552.2	.5688-02
115	.10000+00	.30000	341.00	.1944	.2304	.2539	39.34	7.649	.3594	549.5	.5970-02
115	.10000+00	.50000	342.00	.1343	.1591	.1752	39.42	5.293	.3582	547.7	.4123-02
115	.20000	.10000+00	343.00	.1162	.1377	.1518	39.21	4.555	.3615	552.6	.3569-02
115	.20000	.20000	344.00	.1095	.1298	.1431	39.29	4.303	.3603	550.9	.3364-02
115	.20000	.40000	345.00	.1578	.1869	.2060	39.38	6.213	.3589	548.7	.4845-02
115	.30000	.50000-01	348.00	.2261	.2681	.2955	39.19	8.861	.3617	553.0	.6947-02
115	.30000	.20000	349.00	.1115	.1321	.1456	39.33	4.384	.3596	549.8	.3423-02
115	.30000	.40000	350.00	.1733	.2051	.2259	39.57	6.857	.3559	544.1	.5318-02
115	.30000	.50000	351.00	.1233	.1461	.1609	39.43	4.862	.3581	547.5	.3786-02
115	.30000	.90000	352.00	.3842-01	.4548-01	.5009-01	39.56	1.520	.3560	544.3	.1179-02
115	.40000	.20000	354.00	.8304-01	.9838-01	.1084	39.39	3.271	.3587	548.4	.2550-02
115	.40000	.50000	356.00	.1882	.2228	.2454	39.53	7.440	.3564	544.9	.5775-02
115	.40000	.70000	357.00	.7264-01	.8598-01	.9466-01	39.61	2.877	.3552	543.1	.2229-02
115	.40000	.90000	358.00	.4694-01	.5558-01	.6121-01	39.54	1.856	.3564	544.8	.1441-02
115	.50000	.50000-01	359.00	.3135	.3715	.4094	39.35	12.34	.3593	549.4	.9628-02
115	.50000	.70000	360.00	.7179-01	.8494-01	.9350-01	39.68	2.849	.3541	541.4	.2202-02
115	.50000	.90000	361.00	.6812-01	.8064-01	.8881-01	39.54	2.693	.3563	544.7	.2090-02
115	.60000	.50000-01	362.00	.3323	.3937	.4338	39.40	13.10	.3585	548.1	.1020-01
115	.60000	.10000+00	363.00	.2113	.2502	.2757	39.43	8.331	.3580	547.3	.6486-02
115	.60000	.20000	364.00	.9590-01	.1136	.1251	39.49	3.788	.3570	545.9	.2944-02

IH103 60-OT VERTICAL TAIL (R3PT18)

RUN NUMBER	ZV/BV	XV/CV	T/C NO	H/HREF R=1.0	H/HREF R=.900	H/HREF R=.850	QREF BTU/ FT2SEC	QDOT BTU/ FT2SEC	HW/HT	TW DEG. R	STN NO R=.900
115	.60000	.40000	365.00	.3663-01	.4335-01	.4773-01	39.61	1.451	.3552	543.1	.1124-02
115	.60000	.50000	366.00	.3447-01	.4079-01	.4491-01	39.66	1.367	.3545	542.0	.1058-02
115	.60000	.70000	367.00	.2674-01	.3164-01	.3483-01	39.65	1.060	.3546	542.1	.8202-03
115	.70000	.50000-01	369.00	.3494	.4139	.4559	39.44	13.78	.3578	547.1	.1073-01
115	.70000	.70000	370.00	.2305-01	.2727-01	.3003-01	39.64	.9136	.3547	542.3	.7070-03
115	.70000	.90000	371.00	.1469-01	.1739-01	.1915-01	39.57	.5813	.3558	544.0	.4508-03
115	.80000	.10000+00	373.00	.2647	.3135	.3453	39.48	10.45	.3573	546.3	.8124-02
115	.80000	.40000	374.00	.9121-01	.1080	.1189	39.57	3.610	.3558	544.0	.2799-02
115	.80000	.50000	375.00	.7284-01	.8621-01	.9492-01	39.61	2.885	.3552	543.1	.2235-02
115	.80000	.70000	376.00	.3476-01	.4114-01	.4530-01	39.59	1.376	.3555	543.6	.1066-02
115	.80000	.90000	377.00	.2644-01	.3130-01	.3447-01	39.54	1.045	.3563	544.8	.8114-03
115	.90000	.10000+00	378.00	.8422-01	.9980-01	.1100	39.34	3.314	.3594	549.5	.2586-02
115	.90000	.30000	379.00	.1128	.1336	.1472	39.52	4.459	.3566	545.3	.3463-02
115	.90000	.70000	381.00	.2814-01	.3331-01	.3669-01	39.56	1.113	.3561	544.4	.8635-03
115	.90000	.90000	382.00	.2873-01	.3403-01	.3748-01	39.49	1.135	.3571	546.0	.8819-03
115	.95000	.30000	383.00	.1218	.1442	.1588	39.55	4.818	.3562	544.6	.3739-02
115	.95000	.50000	384.00	.5627-01	.6660-01	.7334-01	39.58	2.227	.3557	543.8	.1726-02
115	.95000	.90000	385.00	.3104-01	.3676-01	.4048-01	39.51	1.226	.3568	545.5	.9527-03

IH103 60-OT VERTICAL TAIL (R3PT19)

VERT TAIL

PARAMETRIC DATA

MACH = 5.250 ALPHA = -10.00 BETA = -5.000 ELEVON = .0000
BDFLAP = .0000 SPDBRK = .0000

TEST CONDITIONS

RUN NUMBER	ALPHA DEG.	BETA DEG.	MACH	RN/FT /FT X10 6	PT PSIA	TT DEG. R	HT BTU/ LBM	PINF PSIA	TINF DEG. R	RHO SLUGS/ FT3	VINF FT/SEC	SCALE
116	-10.00	-5.000	5.250	1.030	103.5	1509.	372.0	.1426	238.0	.5026-04	3970.	.1750-01

RUN NUMBER	PHI DEG.	HS SPHERE TW=540
116	.0000	.1678

TEST DATA

RUN NUMBER	ZV/BV	XV/CV	T/C NO	H/HREF R=1.0	H/HREF R=.900	H/HREF R=.850	QREF BTU/ FT2SEC	QDOT BTU/ FT2SEC	HW/HT	TW DEG. R	STN NO R=.900
116	.10000+00	.10000+00	340.00	.2079	.2462	.2712	40.04	8.323	.3580	554.9	.6430-02
116	.10000+00	.30000	341.00	.2053	.2431	.2677	40.16	8.245	.3561	552.0	.6348-02
116	.10000+00	.50000	342.00	.1426	.1688	.1858	40.23	5.736	.3550	550.4	.4408-02
116	.20000	.10000+00	343.00	.1233	.1461	.1610	40.01	4.935	.3584	555.5	.3815-02
116	.20000	.20000	344.00	.1276	.1511	.1664	40.09	5.115	.3572	553.7	.3946-02
116	.20000	.40000	345.00	.1521	.1801	.1983	40.18	6.112	.3557	551.4	.4703-02
116	.30000	.50000-01	348.00	.2324	.2753	.3034	39.99	9.294	.3587	556.1	.7190-02
116	.30000	.20000	349.00	.1251	.1482	.1632	40.13	5.022	.3565	552.6	.3869-02
116	.30000	.40000	350.00	.1578	.1866	.2053	40.38	6.370	.3527	546.7	.4874-02
116	.30000	.50000	351.00	.1217	.1440	.1586	40.23	4.896	.3550	550.3	.3761-02
116	.30000	.90000	352.00	.4179-01	.4943-01	.5440-01	40.37	1.687	.3529	547.1	.1291-02
116	.40000	.20000	354.00	.7911-01	.9364-01	.1031	40.18	3.179	.3557	551.4	.2446-02
116	.40000	.50000	356.00	.1823	.2156	.2373	40.35	7.354	.3532	547.5	.5632-02
116	.40000	.70000	357.00	.7018-01	.8293-01	.9131-01	40.43	2.837	.3519	545.5	.2168-02
116	.40000	.90000	358.00	.4503-01	.5326-01	.5862-01	40.35	1.817	.3532	547.5	.1391-02
116	.50000	.50000-01	359.00	.3313	.3922	.4319	40.15	13.30	.3563	552.3	.1024-01
116	.50000	.70000	360.00	.9168-01	.1084	.1192	40.50	3.713	.3509	543.9	.2832-02
116	.50000	.90000	361.00	.7470-01	.8836-01	.9725-01	40.36	3.015	.3531	547.3	.2308-02
116	.60000	.50000-01	362.00	.3442	.4074	.4486	40.20	13.84	.3555	551.1	.1064-01
116	.60000	.10000+00	363.00	.2198	.2601	.2864	40.23	8.841	.3550	550.3	.6793-02
116	.60000	.20000	364.00	.9746-01	.1153	.1269	40.30	3.927	.3540	548.8	.3012-02

(R3PT19)

IH103 60-OT VERTICAL TAIL

RUN NUMBER	ZV/BV	XV/CV	T/C NO	H/HREF R=1.0	H/HREF R=.900	H/HREF R=.850	QREF BTU/ FT2SEC	QDOT BTU/ FT2SEC	HW/HT	TW DEG. R	STN NO R=.900
116	.60000	.40000	365.00	.4121-01	.4873-01	.5362-01	40.43	1.666	.3520	545.7	.1273-02
116	.60000	.50000	366.00	.5402-01	.6386-01	.7026-01	40.48	2.187	.3511	544.3	.1668-02
116	.60000	.70000	367.00	.4823-01	.5702-01	.6273-01	40.48	1.952	.3511	544.3	.1490-02
116	.70000	.50000-01	369.00	.3750	.4437	.4885	40.24	15.09	.3548	550.0	.1159-01
116	.70000	.70000	370.00	.3065-01	.3624-01	.3987-01	40.47	1.241	.3513	544.6	.9468-03
116	.70000	.90000	371.00	.1860-01	.2200-01	.2421-01	40.39	.7513	.3525	546.5	.5747-03
116	.80000	.10000+00	373.00	.2777	.3286	.3617	40.29	11.19	.3541	548.9	.8583-02
116	.80000	.40000	374.00	.9219-01	.1090	.1200	40.39	3.724	.3525	546.4	.2848-02
116	.80000	.50000	375.00	.7015-01	.8294-01	.9127-01	40.43	2.836	.3519	545.4	.2167-02
116	.80000	.70000	376.00	.3487-01	.4124-01	.4538-01	40.40	1.409	.3523	546.2	.1077-02
116	.80000	.90000	377.00	.2690-01	.3181-01	.3502-01	40.35	1.085	.3531	547.4	.8311-03
116	.90000	.10000+00	378.00	.7870-01	.9316-01	.1026	40.20	3.164	.3555	551.0	.2433-02
116	.90000	.30000	379.00	.1186	.1403	.1544	40.28	4.776	.3542	549.0	.3664-02
116	.90000	.70000	381.00	.3126-01	.3697-01	.4068-01	40.38	1.262	.3527	546.7	.9657-03
116	.90000	.90000	382.00	.3519-01	.4163-01	.4583-01	40.30	1.418	.3539	548.7	.1088-02
116	.95000	.30000	383.00	.1310	.1549	.1705	40.37	5.288	.3529	547.1	.4048-02
116	.95000	.50000	384.00	.9063-01	.1072	.1179	40.43	3.664	.3519	545.6	.2800-02
116	.95000	.90000	385.00	.3604-01	.4264-01	.4694-01	40.31	1.453	.3538	548.4	.1114-02

IH103 60-OT VERTICAL TAIL

(R3PT20)

VERT TAIL

PARAMETRIC DATA

MACH = 5.250 ALPHA = -10.00 BETA = .0000 ELEVON = .0000
BDFLAP = .0000 SPDBRK = .0000

TEST CONDITIONS

RUN NUMBER	ALPHA DEG.	BETA DEG.	MACH	RN/FT /FT X10 6	PT PSIA	TT DEG. R	HT BTU/ LBM	PINF PSIA	TINF DEG. R	RHO SLUGS/ FT3	VINF FT/SEC	SCALE
125	-10.00	.0000	5.250	1.058	103.2	1482.	364.7	.1424	233.4	5122-04	3931.	.1750-01

RUN NUMBER	PHI DEG.	HS SPHERE TW=540
125	.0000	.1674

TEST DATA

RUN NUMBER	ZV/BV	XV/CV	T/C NO	H/HREF R=1.0	H/HREF R=.900	H/HREF R=.850	QREF BTU/ FT2SEC	QDOT BTU/ FT2SEC	HW/HT	TW DEG. R	STN NO R=.900
125	.10000+00	.10000+00	340.00	.1663	.1979	.2186	38.24	6.361	.3727	566.5	.5107-02
125	.10000+00	.30000	341.00	.1833	.2180	.2408	38.32	7.025	.3716	564.8	.5627-02
125	.10000+00	.50000	342.00	.1179	.1401	.1548	38.36	4.521	.3709	563.7	.3617-02
125	.20000	.10000+00	343.00	.1097	.1305	.1442	38.15	4.184	.3741	568.7	.3368-02
125	.20000	.20000	344.00	.7964-01	.9475-01	.1047	38.21	3.043	.3733	567.3	.2445-02
125	.20000	.40000	345.00	.1549	.1842	.2035	38.27	5.927	.3723	565.8	.4754-02
125	.30000	.50000-01	348.00	.2071	.2465	.2725	38.10	7.891	.3750	569.9	.6362-02
125	.30000	.20000	349.00	.4375-01	.5206-01	.5752-01	38.19	1.671	.3735	567.7	.1343-02
125	.30000	.40000	350.00	.2021	.2403	.2655	38.29	7.738	.3719	565.3	.6203-02
125	.30000	.50000	351.00	.1583	.1883	.2081	38.24	6.053	.3728	566.6	.4860-02
125	.30000	.90000	352.00	.4071-01	.4842-01	.5348-01	38.28	1.558	.3721	565.6	.1250-02
125	.40000	.20000	354.00	.5276-01	.6277-01	.6936-01	38.21	2.016	.3733	567.4	.1620-02
125	.40000	.50000	356.00	.1563	.1859	.2053	38.29	5.984	.3720	565.4	.4797-02
125	.40000	.70000	357.00	.7771-01	.9241-01	.1021	38.33	2.979	.3713	564.3	.2385-02
125	.40000	.90000	358.00	.5025-01	.5978-01	.6604-01	38.25	1.922	.3726	566.3	.1543-02
125	.50000	.50000-01	359.00	.2977	.3543	.3916	38.15	11.36	.3742	568.8	.9144-02
125	.50000	.70000	360.00	.4919-01	.5847-01	.6457-01	38.41	1.889	.3702	562.6	.1509-02
125	.50000	.90000	361.00	.5372-01	.6390-01	.7059-01	38.27	2.056	.3724	566.0	.1649-02
125	.60000	.50000-01	362.00	.3174	.3777	.4174	38.16	12.11	.3741	568.6	.9747-02
125	.60000	.10000+00	363.00	.1970	.2345	.2591	38.18	7.524	.3737	567.9	.6051-02
125	.60000	.20000	364.00	.9126-01	.1086	.1199	38.24	3.489	.3729	566.7	.2802-02

IH103 60-OT VERTICAL TAIL (R3PT20)

RUN NUMBER	ZV/BV	XV/CV	T/C NO	H/HREF R=1.0	H/HREF R=.900	H/HREF R=.850	QREF BTU/ FT2SEC	QDOT BTU/ FT2SEC	HW/HT	TW DEG. R	STN NO R=.900
125	.60000	.40000	365.00	.4480-01	.5328-01	.5884-01	38.32	1.717	.3715	564.6	.1375-02
125	.60000	.50000	366.00	.2922-01	.3474-01	.3837-01	38.35	1.121	.3710	563.9	.8967-03
125	.60000	.70000	367.00	.1229-01	.1462-01	.1614-01	38.36	.4717	.3709	563.7	.3773-03
125	.70000	.50000-01	369.00	.3378	.4020	.4442	38.19	12.90	.3736	567.9	.1037-01
125	.70000	.70000	370.00	.2601-01	.3093-01	.3416-01	38.35	.9975	.3711	564.0	.7982-03
125	.70000	.90000	371.00	.1877-01	.2233-01	.2466-01	38.30	.7189	.3719	565.3	.5762-03
125	.80000	.10000+00	373.00	.2516	.2994	.3308	38.21	9.612	.3733	567.4	.7726-02
125	.80000	.40000	374.00	.7563-01	.8996-01	.9937-01	38.28	2.895	.3722	565.7	.2322-02
125	.80000	.50000	375.00	.5812-01	.6911-01	.7633-01	38.33	2.228	.3713	564.4	.1784-02
125	.80000	.70000	376.00	.2649-01	.3150-01	.3480-01	38.31	1.015	.3717	565.0	.8131-03
125	.80000	.90000	377.00	.1976-01	.2351-01	.2597-01	38.27	.7564	.3723	565.8	.6067-03
125	.90000	.10000+00	378.00	.5916-01	.7033-01	.7766-01	38.41	2.272	.3702	562.6	.1815-02
125	.90000	.30000	379.00	.1007	.1198	.1323	38.20	3.845	.3734	567.5	.3091-02
125	.90000	.70000	381.00	.1959-01	.2330-01	.2573-01	38.30	.7503	.3718	565.1	.6013-03
125	.90000	.90000	382.00	.1620-01	.1927-01	.2129-01	38.24	.6196	.3728	566.6	.4974-03
125	.95000	.30000	383.00	.1125	.1338	.1478	38.30	4.309	.3719	565.3	.3454-02
125	.95000	.50000	384.00	.1417-01	.1687-01	.1864-01	38.16	.5407	.3741	568.6	.4352-03
125	.95000	.90000	385.00	.2403-01	.2858-01	.3157-01	38.29	.9201	.3720	565.5	.7377-03

IH103 60-OT VERTICAL TAIL (R3PT21)

VERT TAIL

PARAMETRIC DATA

MACH = 5.250 ALPHA = .0000 BETA = .0000 ELEVON = .0000
BDFLAP = .0000 SPDBRK = .0000

TEST CONDITIONS

RUN NUMBER	ALPHA DEG.	BETA DEG.	MACH	RN/FT /FT X10 6	PT PSIA	TT DEG. R	HT BTU/ LBM	PINF PSIA	TINF DEG. R	RHO SLUGS/ FT3	VINF FT/SEC	SCALE
127	.0000	.0000	5.250	.6432	102.6	1994.	502.8	.1355	321.8	.3534-04	4616.	.1750-01

RUN NUMBER	PHI DEG.	HS SPHERE TW=540
127	.0000	.1681

TEST DATA

RUN NUMBER	ZV/BV	XV/CV	T/C NO	H/HREF R=1.0	H/HREF R=.900	H/HREF R=.850	QREF BTU/ FT2SEC	QDOT BTU/ FT2SEC	HW/HT	TW DEG. R	STN NO R=.900
127	.10000+00	.10000+00	340.00	.1508	.1745	.1893	62.28	9.393	.2627	550.4	.5586-02
127	.10000+00	.30000	341.00	.7582-01	.8768-01	.9512-01	62.45	4.735	.2608	546.5	.2807-02
127	.10000+00	.50000	342.00	.1353	.1564	.1696	62.54	8.460	.2598	544.3	.5008-02
127	.20000	.10000+00	343.00	.1223	.1416	.1536	62.19	7.609	.2637	552.5	.4532-02
127	.20000	.20000	344.00	.5799-01	.6709-01	.7280-01	62.31	3.613	.2624	549.8	.2148-02
127	.20000	.40000	345.00	.6292-01	.7277-01	.7894-01	62.43	3.928	.2611	547.0	.2330-02
127	.30000	.50000-01	348.00	.2025	.2343	.2543	62.12	12.58	.2645	554.3	.7501-02
127	.30000	.20000	349.00	.6716-01	.7769-01	.8430-01	62.32	4.186	.2622	549.5	.2487-02
127	.30000	.40000	350.00	.2671-01	.3089-01	.3351-01	62.45	1.668	.2608	546.5	.9890-03
127	.30000	.50000	351.00	.4141-01	.4789-01	.5195-01	62.44	2.586	.2609	546.6	.1533-02
127	.30000	.90000	352.00	.3199-01	.3698-01	.4011-01	62.58	2.002	.2593	543.4	.1184-02
127	.40000	.20000	354.00	.7227-01	.8359-01	.9070-01	62.36	4.507	.2618	548.6	.2676-02
127	.40000	.50000	356.00	.2562-01	.2962-01	.3213-01	62.56	1.603	.2595	543.9	.9485-03
127	.40000	.70000	357.00	.1409-01	.1629-01	.1766-01	62.66	.8830	.2584	541.5	.5216-03
127	.40000	.90000	358.00	.1639-01	.1895-01	.2056-01	62.53	1.025	.2599	544.5	.6069-03
127	.50000	.50000-01	359.00	.2265	.2621	.2844	62.26	14.10	.2629	550.9	.8390-02
127	.50000	.70000	360.00	.1717-01	.1985-01	.2152-01	62.77	1.078	.2572	539.0	.6356-03
127	.50000	.90000	361.00	.1070-01	.1237-01	.1342-01	62.53	.6691	.2599	544.6	.3962-03
127	.60000	.50000-01	362.00	.2155	.2493	.2705	62.32	13.43	.2623	549.6	.7980-02
127	.60000	.10000+00	363.00	.1334	.1543	.1674	62.36	8.318	.2618	548.6	.4940-02
127	.60000	.20000	364.00	.6578-01	.7607-01	.8253-01	62.47	4.109	.2606	546.1	.2436-02

IH103 60-OT VERTICAL TAIL (R3PT21)

RUN NUMBER	ZV/BV	XV/CV	T/C NO	H/HREF R=1.0	H/HREF R=.900	H/HREF R=.850	QREF BTU/ FT2SEC	QDOT BTU/ FT2SEC	HW/HT	TW DEG. R	STN NO R=.900
127	.60000	.40000	365.00	.4298-01	.4968-01	.5388-01	62.63	2.692	.2588	542.2	.1591-02
127	.60000	.50000	366.00	.3508-01	.4055-01	.4397-01	62.71	2.200	.2579	540.4	.1299-02
127	.60000	.70000	367.00	.1634-01	.1889-01	.2048-01	62.70	1.025	.2580	540.7	.6049-03
127	.70000	.50000-01	369.00	.2421	.2801	.3039	62.35	15.10	.2619	548.8	.8967-02
127	.70000	.70000	370.00	.1850-01	.2138-01	.2319-01	62.65	1.159	.2585	541.8	.6847-03
127	.70000	.90000	371.00	.1252-01	.1448-01	.1570-01	62.52	.7829	.2600	544.8	.4636-03
127	.80000	.10000+00	373.00	.1837	.2125	.2306	62.38	11.46	.2616	548.2	.6805-02
127	.80000	.40000	374.00	.5735-01	.6631-01	.7193-01	62.55	3.587	.2597	544.2	.2123-02
127	.80000	.50000	375.00	.4401-01	.5088-01	.5518-01	62.59	2.754	.2592	543.2	.1629-02
127	.80000	.70000	376.00	.2150-01	.2486-01	.2696-01	62.56	1.345	.2596	544.0	.7960-03
127	.80000	.90000	377.00	.1398-01	.1617-01	.1754-01	62.47	.8735	.2606	546.0	.5177-03
127	.90000	.10000+00	378.00	.1137	.1315	.1427	62.46	7.103	.2607	546.2	.4211-02
127	.90000	.30000	379.00	.7976-01	.9223-01	.1001	62.46	4.982	.2607	546.2	.2953-02
127	.90000	.70000	381.00	.1895-01	.2192-01	.2377-01	62.49	1.184	.2604	545.6	.7018-03
127	.90000	.90000	382.00	.1632-01	.1888-01	.2048-01	62.37	1.018	.2617	548.3	.6044-03
127	.95000	.30000	383.00	.8802-01	.1018	.1104	62.43	5.495	.2610	546.9	.3259-02
127	.95000	.50000	384.00	.5867-01	.6783-01	.7358-01	62.52	3.668	.2600	544.8	.2172-02
127	.95000	.90000	385.00	.2185-01	.2528-01	.2743-01	62.36	1.363	.2618	548.6	.8093-03

IH103 60-OT SPEEDBRAKE CAVITY (R3PU02)

SPDBRK CAVITY

PARAMETRIC DATA

MACH = 5.250 ALPHA = -5.000 BETA = .0000 ELEVON = .0000
BDFLAP = .0000 SPDBRK = .0000

TEST CONDITIONS

RUN NUMBER	ALPHA DEG.	BETA DEG.	MACH	RN/FT /FT X10 6	PT PSIA	TT DEG. R	HT BTU/ LBM	PINF PSIA	TINF DEG. R	RHO SLUGS/ FT3	VINF FT/SEC	SCALE
86	-5.000	.0000	5.250	1.032	103.2	1504.	370.6	.1422	237.2	.5031-04	3963.	.1750-01

RUN NUMBER	PHI DEG.	HS SPHERE TW=540
86	.0000	.1675

TEST DATA

RUN NUMBER	DUMMY	T/C NO	H/HREF R=1.0	H/HREF R=.900	H/HREF R=.850	QREF BTU/ FT2SEC	QDOT BTU/ FT2SEC	HW/HT	TW DEG. R	STN NO R=.900
86	1.0000	1399.0	.35624-03	.4207-03	.4626-03	40.50	.1443-01	.3475	536.7	.1099-04

IH103 60-OT SPEEDBRAKE CAVITY (R3PU03)

SPDBRK CAVITY

PARAMETRIC DATA

MACH = 5.250 ALPHA = 5.000 BETA = .0000 ELEVON = .0000
BDFLAP = .0000 SPDBRK = .0000

TEST CONDITIONS

RUN NUMBER	ALPHA DEG.	BETA DEG.	MACH	RN/FT /FT X10 6	PT PSIA	TT DEG. R	HT BTU/ LBM	PINF PSIA	TINF DEG. R	RHO SLUGS/ FT3	VINF FT/SEC	SCALE
87	5.000	.0000	5.250	1.026	102.1	1500.	369.5	.1407	236.4	.4992-04	3957.	.1750-01

RUN NUMBER	PHI DEG.	HS SPHERE TW=540
87	.0000	.1665

TEST DATA

RUN NUMBER	DUMMY	T/C NO	H/HREF R=1.0	H/HREF R=.900	H/HREF R=.850	QREF BTU/ FT2SEC	QDOT BTU/ FT2SEC	HW/HT	TW DEG. R	STN NO R=.900
87	1.0000	1399.0	.20019-03	.2366-03	.2602-03	40.01	.8010-02	.3497	538.5	.6199-05

IH103 60-OT SPEEDBRAKE CAVITY (R3PU04)

SPDBRK CAVITY

PARAMETRIC DATA

MACH = 5.250 ALPHA = 10.00 BETA = .0000 ELEVON = .0000
BDFLAP = .0000 SPDBRK = .0000

TEST CONDITIONS

RUN NUMBER	ALPHA DEG.	BETA DEG.	MACH	RN/FT /FT X10 6	PT PSIA	TT DEG. R	HT BTU/ LBM	PINF PSIA	TINF DEG. R	RHO SLUGS/ FT3	VINF FT/SEC	SCALE
88	10.00	.0000	5.250	1.044	103.7	1498.	369.0	.1429	236.1	.5079-04	3954.	.1750-01

RUN NUMBER	PHI DEG.	HS SPHERE TW=540
88	.0000	.1678

TEST DATA

RUN NUMBER	DUMMY	T/C NO	H/HREF R=1.0	H/HREF R=.900	H/HREF R=.850	QREF BTU/ FT2SEC	QDOT BTU/ FT2SEC	HW/HT	TW DEG. R	STN NO R=.900
88	1.0000	1399.0	.11978-03	.1417-03	.1560-03	40.05	.4797-02	.3533	543.3	.3680-05

IH103 60-OT SPEEDBRAKE CAVITY (R3PU05)

SPDBRK CAVITY

PARAMETRIC DATA

MACH = 5.250 ALPHA = .0000 BETA = -5.000 ELEVON = .0000
BDFLAP = .0000 SPDBRK = .0000

TEST CONDITIONS

RUN NUMBER	ALPHA DEG.	BETA DEG.	MACH	RN/FT /FT X10 6	PT PSIA	TT DEG. R	HT BTU/ LBM	PINF PSIA	TINF DEG. R	RHO SLUGS/ FT3	VINF FT/SEC	SCALE
76	.0000	-5.000	5.250	1.033	102.9	1501.	369.7	.1418	236.6	.5028-04	3958.	.1750-01

RUN NUMBER	PHI DEG.	HS SPHERE TW=540
76	.0000	.1672

TEST DATA

RUN NUMBER	DUMMY	T/C NO	H/HREF R=1.0	H/HREF R=.900	H/HREF R=.850	QREF BTU/ FT2SEC	QDOT BTU/ FT2SEC	HW/HT	TW DEG. R	STN NO R=.900
76	1.0000	1399.0	.18641-03	.2204-03	.2426-03	40.04	.7464-02	.3521	542.5	.5755-05

IH103 60-OT SPEEDBRAKE CAVITY (R3PU06)

SPDBRK CAVITY

PARAMETRIC DATA

MACH = 5.250 ALPHA = -5.000 BETA = -5.000 ELEVON = .0000
BDFLAP = .0000 SPDBRK = .0000

TEST CONDITIONS

RUN NUMBER	ALPHA DEG.	BETA DEG.	MACH	RN/FT /FT X10 6	PT PSIA	TT DEG. R	HT BTU/ LBM	PINF PSIA	TINF DEG. R	RHO SLUGS/ FT3	VINF FT/SEC	SCALE
75	-5.000	-5.000	5.250	1.039	103.3	1499.	369.3	.1424	236.3	.5057-04	3956.	.1750-01

RUN NUMBER	PHI DEG.	HS SPHERE TW=540
75	.0000	.1676

TEST DATA

RUN NUMBER	DUMMY	T/C NO	H/HREF R=1.0	H/HREF R=.900	H/HREF R=.850	QREF BTU/ FT2SEC	QDOT BTU/ FT2SEC	HW/HT	TW DEG. R	STN NO R=.900
75	1.0000	1399.0	.34677-03	.4103-03	.4517-03	39.93	.1385-01	.3545	545.6	.1068-04

IH103 60-OT SPEEDBRAKE CAVITY (R3PU07)

SPDBRK CAVITY

PARAMETRIC DATA

MACH = 5.250 ALPHA = 5.000 BETA = -5.000 ELEVON = .0000
BDFLAP = .0000 SPDBRK = .0000

TEST CONDITIONS

RUN NUMBER	ALPHA DEG.	BETA DEG.	MACH	RN/FT /FT X10 6	PT PSIA	TT DEG. R	HT BTU/ LBM	PINF PSIA	TINF DEG. R	RHO SLUGS/ FT3	VINF FT/SEC	SCALE
74	5.000	-5.000	5.250	1.035	103.4	1503.	370.4	.1424	237.0	.5042-04	3962.	.1750-01

RUN NUMBER	PHI DEG.	HS SPHERE TW=540
74	.0000	.1676

TEST DATA

RUN NUMBER	DUMMY	T/C NO	H/HREF R=1.0	H/HREF R=.900	H/HREF R=.850	QREF BTU/ FT2SEC	QDOT BTU/ FT2SEC	HW/HT	TW DEG. R	STN NO R=.900
74	1.0000	1399.0	.19912-03	.2356-03	.2593-03	40.11	.7987-02	.3536	545.8	.6142-05

IH103 60-OT SPEEDBRAKE CAVITY (R3PU08)

SPDBRK CAVITY

PARAMETRIC DATA

MACH = 5.250 ALPHA = 10.00 BETA = -5.000 ELEVON = .0000
BDFLAP = .0000 SPDBRK = .0000

TEST CONDITIONS

RUN NUMBER	ALPHA DEG.	BETA DEG.	MACH	RN/FT /FT X10 6	PT PSIA	TT DEG. R	HT BTU/ LBM	PINF PSIA	TINF DEG. R	RHO SLUGS/ FT3	VINF FT/SEC	SCALE
73	5.000	-5.000	5.250	1.032	103.4	1506.	371.0	.1424	237.4	.5031-04	3965.	.1750-01

RUN NUMBER	PHI DEG.	HS SPHERE TW=540
73	.0000	.1676

TEST DATA

RUN NUMBER	DUMMY	T/C NO	H/HREF R=1.0	H/HREF R=.900	H/HREF R=.850	QREF BTU/ FT2SEC	QDOT BTU/ FT2SEC	HW/HT	TW DEG. R	STN NO R=.900
73	1.0000	1399.0	.22469-03	.2657-03	.2923-03	40.32	.9060-02	.3515	543.6	.6936-05

IH103 60-OT SPEEDBRAKE CAVITY (R3PU10)

SPDBRK CAVITY

PARAMETRIC DATA

MACH = 5.250 ALPHA = -5.000 BETA = -3.000 ELEVON = .0000
BDFLAP = .0000 SPDBRK = .0000

TEST CONDITIONS

RUN NUMBER	ALPHA DEG.	BETA DEG.	MACH	RN/FT /FT X10 6	PT PSIA	TT DEG. R	HT BTU/ LBM	PINF PSIA	TINF DEG. R	RHO SLUGS/ FT3	VINF FT/SEC	SCALE
91	-5.000	-3.000	5.250	1.041	102.5	1490.	366.9	.1413	234.8	.5052-04	3943.	.1750-01

RUN NUMBER	PHI DEG.	HS SPHERE TW=540
91	.0000	.1668

TEST DATA

RUN NUMBER	DUMMY	T/C NO	H/HREF R=1.0	H/HREF R=.900	H/HREF R=.850	QREF BTU/ FT2SEC	QDOT BTU/ FT2SEC	HW/HT	TW DEG. R	STN NO R=.900
91	1.0000	1399.0	.24385-03	.2888-03	.3182-03	39.28	.9579-02	.3579	547.2	.7516-05

IH103 60-OT SPEEDBRAKE CAVITY (R3PU14)

SPDBRK CAVITY

PARAMETRIC DATA

MACH = 5.250 ALPHA = -5.000 BETA = -9.000 ELEVON = .0000
BDFLAP = .0000 SPDBRK = .0000

TEST CONDITIONS

RUN NUMBER	ALPHA DEG.	BETA DEG.	MACH	RN/FT /FT X10 6	PT PSIA	TT DEG. R	HT BTU/ LBM	PINF PSIA	TINF DEG. R	RHO SLUGS/ FT3	VINF FT/SEC	SCALE
102	-5.000	-9.000	5.250	1.049	102.4	1483.	364.9	.1413	233.5	.5078-04	3932.	.1750-01

RUN NUMBER	PHI DEG.	HS SPHERE TW=540
102	.0000	.1667

TEST DATA

RUN NUMBER	DUMMY	T/C NO	H/HREF R=1.0	H/HREF R=.900	H/HREF R=.850	QREF BTU/ FT2SEC	QDOT BTU/ FT2SEC	HW/HT	TW DEG. R	STN NO R=.900
102	1.0000	1399.0	.27379-03	.3246-03	.3578-03	38.85	.1064-01	.3612	549.4	.8420-05

IH103 60-OT SPEEDBRAKE CAVITY (R3PU17)

SPDBRK CAVITY

PARAMETRIC DATA

MACH = 5.250 ALPHA = -10.00 BETA = -9.000 ELEVON = .0000
BDFLAP = .0000 SPDBRK = .0000

TEST CONDITIONS

RUN NUMBER	ALPHA DEG.	BETA DEG.	MACH	RN/FT /FT X10 6	PT PSIA	TT DEG. R	HT BTU/ LBM	PINF PSIA	TINF DEG. R	RHO SLUGS/ FT3	VINF FT/SEC	SCALE
109	-10.00	-9.000	5.250	1.078	103.6	1468.	361.2	.1431	231.2	.5196-04	3912.	.1750-01

RUN NUMBER	PHI DEG.	HS SPHERE TW=540
109	.0000	.1676

TEST DATA

RUN NUMBER	DUMMY	T/C NO	H/HREF R=1.0	H/HREF R=.900	H/HREF R=.850	QREF BTU/ FT2SEC	QDOT BTU/ FT2SEC	HW/HT	TW DEG. R	STN NO R=.900
109	1.0000	1399.0	.30887-03	.3679-03	.4068-03	37.67	.1163-01	.3771	567.7	.9418-05

IH103 60-OT SPEEDBRAKE CAVITY (R3PU18)

SPDBRK CAVITY

PARAMETRIC DATA

MACH = 5.250 ALPHA = -10.00 BETA = -3.000 ELEVON = .0000
BDFLAP = .0000 SPDBRK = .0000

TEST CONDITIONS

RUN NUMBER	ALPHA DEG.	BETA DEG.	MACH	RN/FT /FT X10 6	PT PSIA	TT DEG. R	HT BTU/ LBM	PINF PSIA	TINF DEG. R	RHO SLUGS/ FT3	VINF FT/SEC	SCALE
112	-10.00	-3.000	5.250	1.055	103.0	1483.	365.0	.1422	233.6	.5107-04	3933.	.1750-01

RUN NUMBER	PHI DEG.	HS SPHERE TW=540
112	.0000	.1672

TEST DATA

RUN NUMBER	DUMMY	T/C NO	H/HREF R=1.0	H/HREF R=.900	H/HREF R=.850	QREF BTU/ FT2SEC	QDOT BTU/ FT2SEC	HW/HT	TW DEG. R	STN NO R=.900
112	1.0000	1399.0	.51618-03	.6112-03	.6732-03	39.24	.2026-01	.3570	543.0	.1582-04

IH103 60-OT SPEEDBRAKE CAVITY (R3PU19)

SPDBRK CAVITY

PARAMETRIC DATA

MACH = 5.250 ALPHA = -10.00 BETA = -5.000 ELEVON = .0000
BDFLAP = .0000 SPDBRK = .0000

TEST CONDITIONS

RUN NUMBER	ALPHA DEG.	BETA DEG.	MACH	RN/FT /FT X10 6	PT PSIA	TT DEG. R	HT BTU/ LBM	PINF PSIA	TINF DEG. R	RHO SLUGS/ FT3	VINF FT/SEC	SCALE
119	-10.00	-5.000	5.250	1.047	104.7	1505.	370.7	.1442	237.2	.5101-04	3963.	.1750-01

RUN NUMBER	PHI DEG.	HS SPHERE TW=540
119	.0000	.1687

TEST DATA

RUN NUMBER	DUMMY	T/C NO	H/HREF R=1.0	H/HREF R=.900	H/HREF R=.850	QREF BTU/ FT2SEC	QDOT BTU/ FT2SEC	HW/HT	TW DEG. R	STN NO R=.900
119	1.0000	1399.0	.55698-03	.6600-03	.7273-03	40.03	.2229-01	.3594	555.2	.1710-04

IH103 60-OT - SPEEDBRAKE CAVITY (R3PU20)

SPDBRK CAVITY

PARAMETRIC DATA

MACH = 5.250 ALPHA = -10.00 BETA = .0000 ELEVON = .0000
BDFLAP = .0000 SPDBRK = .0000

TEST CONDITIONS

RUN NUMBER	ALPHA DEG.	BETA DEG.	MACH	RN/FT /FT X10 6	PT PSIA	TT DEG. R	HT BTU/ LBM	PINF PSIA	TINF DEG. R	RHO SLUGS/ FT3	VINF FT/SEC	SCALE
122	-10.00	.0000	5.250	1.012	103.5	1525.	376.0	.1423	240.6	.4964-04	3992.	.1750-01

RUN NUMBER	PHI DEG.	HS SPHERE TW=540
122	.0000	.1678

TEST DATA

RUN NUMBER	DUMMY	T/C NO	H/HREF R=1.0	H/HREF R=.900	H/HREF R=.850	QREF BTU/ FT2SEC	QDOT BTU/ FT2SEC	HW/HT	TW DEG. R	STN NO R=.900
122	1.0000	1399.0	.42995-03	.5087-03	.5599-03	40.75	.1752-01	.3537	554.2	.1338-04

IH103 60-OT SPEEDBRAKE CAVITY (R3PU21)

SPDBRK CAVITY

PARAMETRIC DATA

MACH = 5.250 ALPHA = .0000 BETA = .0000 ELEVON = .0000
BDFLAP = .0000 SPDBRK = .0000

TEST CONDITIONS

RUN NUMBER	ALPHA DEG.	BETA DEG.	MACH	RN/FT /FT X10 6	PT PSIA	TT DEG. R	HT BTU/ LBM	PINF PSIA	TINF DEG. R	RHO SLUGS/ FT3	VINF FT/SEC	SCALE
130	.0000	.0000	5.250	.6533	104.0	1992.	502.2	.1374	321.4	.3588-04	4613.	.1750-01

RUN NUMBER	PHI DEG.	HS SPHERE TW=540
130	.0000	.1693

TEST DATA

RUN NUMBER	DUMMY	T/C NO	H/HREF R=1.0	H/HREF R=.900	H/HREF R=.850	QREF BTU/ FT2SEC	QDOT BTU/ FT2SEC	HW/HT	TW DEG. R	STN NO R=.900
130	1.0000	1399.0	.11886-03	.1375-03	.1492-03	62.61	.7442-02	.2631	550.8	.4369-05

IH103 560/60T FUSELAGE (R3PV22)

FUSELAGE

PARAMETRIC DATA

MACH = 5.250 ALPHA = -5.000 BETA = .0000 ELEVON = .0000
BDFLAP = .0000 SPDBRK = .0000

TEST CONDITIONS

RUN NUMBER	ALPHA DEG.	BETA DEG.	MACH	RN/FT /FT X10 6	PT PSIA	TT DEG. R	HT BTU/ LBM	PINF PSIA	TINF DEG. R	RHO SLUGS/ FT3	VINF FT/SEC	SCALE
6	-5.000	.0000	5.250	.9975	103.6	1540.	379.9	.1423	243.1	.4912-04	4012.	.1750-01

RUN NUMBER	PHI DEG.	HS SPHERE TW=540
6	.0000	.1679

TEST DATA

RUN NUMBER	ZO	XB/LB	T/C NO	H/HREF R=1.0	H/HREF R=.900	H/HREF R=.850	QREF BTU/ FT2SEC	QDOT BTU/ FT2SEC	HW/HT	TW DEG. R	STN NO R=.900
6	355.00	.20000	71.000	.3592-01	.4238-01	.4657-01	41.83	1.503	.3442	545.1	.1122-02
6	355.00	.22500	72.000	.2440-01	.2879-01	.3164-01	41.81	1.020	.3446	545.7	.7624-03
6	355.00	.25000	73.000	.1659-01	.1958-01	.2152-01	41.79	.6934	.3449	546.1	.5186-03
6	355.00	.27500	74.000	.9461-02	.1117-01	.1227-01	41.79	.3954	.3448	546.0	.2957-03
6	355.00	.80000	75.000	.2992-01	.3532-01	.3882-01	41.74	1.249	.3456	547.2	.9352-03
6	355.00	.85000	76.000	.4373-01	.5162-01	.5674-01	41.75	1.826	.3455	547.1	.1367-02
6	355.00	.90000	78.000	.5212-01	.6153-01	.6763-01	41.73	2.175	.3457	547.4	.1629-02
6	355.00	.95000	80.000	.3802-01	.4486-01	.4930-01	41.80	1.589	.3447	545.8	.1188-02
6	372.50	.30000	56.000	.9136-02	.1078-01	.1185-01	41.75	.3815	.3454	546.9	.2855-03
6	372.50	.32500	57.000	.6726-02	.7939-02	.8726-02	41.75	.2808	.3454	546.9	.2102-03
6	372.50	.35000	58.000	.6260-02	.7389-02	.8121-02	41.76	.2614	.3454	546.8	.1957-03
6	372.50	.37500	59.000	.6711-02	.7922-02	.8707-02	41.73	.2801	.3457	547.4	.2098-03
6	372.50	.40000	60.000	.1153-01	.1361-01	.1496-01	41.73	.4813	.3457	547.4	.3605-03
6	372.50	.42500	61.000	.1814-01	.2141-01	.2353-01	41.74	.7572	.3456	547.2	.5669-03
6	372.50	.45000	62.000	.2248-01	.2653-01	.2916-01	41.76	.9388	.3453	546.7	.7026-03
6	372.50	.50000	64.000	.2722-01	.3213-01	.3531-01	41.76	1.137	.3453	546.7	.8507-03
6	372.50	.55000	66.000	.2962-01	.3495-01	.3841-01	41.79	1.238	.3449	546.1	.9255-03
6	372.50	.60000	67.000	.2910-01	.3435-01	.3776-01	41.76	1.215	.3454	546.8	.9097-03
6	372.50	.65000	68.000	.3317-01	.3915-01	.4303-01	41.76	1.385	.3454	546.8	.1037-02
6	372.50	.70000	69.000	.3249-01	.3839-01	.4223-01	41.50	1.349	.3491	552.8	.1016-02
6	372.50	.75000	70.000	.3231-01	.3814-01	.4193-01	41.72	1.348	.3460	547.8	.1010-02

IH103 560/60T FUSELAGE (R3PV22)

RUN NUMBER	ZO	XB/LB	T/C NO	H/HREF R=1.0	H/HREF R=.900	H/HREF R=.850	QREF BTU/ FT2SEC	QDOT BTU/ FT2SEC	HW/HT	TW DEG. R	STN NO R=.900
6	400.00	.20000	31.000	.3100-01	.3658-01	.4021-01	41.78	1.295	.3451	546.4	.9687-03
6	400.00	.22500	32.000	.2426-01	.2864-01	.3148-01	41.70	1.012	.3462	548.1	.7584-03
6	400.00	.25000	33.000	.1792-01	.2116-01	.2326-01	41.69	.7471	.3463	548.4	.5602-03
6	400.00	.27500	34.000	.1594-01	.1881-01	.2068-01	41.69	.6645	.3463	548.3	.4982-03
6	400.00	.30000	35.000	.1830-01	.2161-01	.2375-01	41.69	.7631	.3464	548.4	.5722-03
6	400.00	.32500	36.000	.2488-01	.2937-01	.3228-01	41.69	1.037	.3464	548.4	.7776-03
6	400.00	.35000	37.000	.2974-01	.3512-01	.3860-01	41.68	1.240	.3466	548.7	.9298-03
6	400.00	.37500	38.000	.3631-01	.4287-01	.4713-01	41.69	1.514	.3463	548.3	.1135-02
6	400.00	.40000	39.000	.2594-01	.3062-01	.3366-01	41.70	1.082	.3463	548.3	.8109-03
6	400.00	.42500	40.000	.2958-01	.3493-01	.3840-01	41.67	1.233	.3467	549.0	.9249-03
6	400.00	.45000	41.000	.2713-01	.3204-01	.3522-01	41.68	1.131	.3465	548.7	.8483-03
6	400.00	.47500	42.000	.2522-01	.2977-01	.3273-01	41.72	1.052	.3459	547.6	.7884-03
6	400.00	.50000	43.000	.2482-01	.2930-01	.3220-01	41.73	1.036	.3457	547.4	.7758-03
6	400.00	.52500	44.000	.2681-01	.3164-01	.3478-01	41.72	1.119	.3459	547.6	.8379-03
6	400.00	.55000	45.000	.3017-01	.3562-01	.3915-01	41.73	1.259	.3458	547.6	.9431-03
6	400.00	.60000	46.000	.3930-01	.4640-01	.5100-01	41.71	1.640	.3460	547.8	.1229-02
6	400.00	.65000	47.000	.4266-01	.5036-01	.5536-01	41.70	1.779	.3462	548.2	.1334-02
6	400.00	.70000	48.000	.4021-01	.4747-01	.5218-01	41.70	1.677	.3462	548.2	.1257-02
6	400.00	.75000	49.000	.3729-01	.4403-01	.4840-01	41.67	1.554	.3466	548.9	.1166-02
6	400.00	.80000	50.000	.3296-01	.3891-01	.4278-01	41.67	1.373	.3466	548.8	.1030-02
6	400.00	.85000	51.000	.6448-01	.7611-01	.8365-01	41.76	2.693	.3453	546.7	.2015-02
6	400.00	.87500	52.000	.6004-01	.7086-01	.7787-01	41.78	2.508	.3450	546.3	.1876-02
6	400.00	.90000	53.000	.4864-01	.5741-01	.6310-01	41.77	2.032	.3452	546.5	.1520-02
6	400.00	.92500	54.000	.4787-01	.5649-01	.6208-01	41.79	2.000	.3449	546.1	.1496-02
6	400.00	.95000	55.000	.4355-01	.5138-01	.5646-01	41.84	1.822	.3441	544.8	.1361-02
6	420.00	.28500	18.000	.3212-01	.3791-01	.4167-01	41.72	1.340	.3459	547.7	.1004-02
6	420.00	.33700	19.000	.3870-01	.4568-01	.5022-01	41.71	1.614	.3461	548.0	.1210-02
6	420.00	.39000	20.000	.3461-01	.4086-01	.4492-01	41.70	1.443	.3462	548.2	.1082-02
6	420.00	.42600	21.000	.2993-01	.3533-01	.3884-01	41.69	1.248	.3463	548.4	.9356-03
6	420.00	.47800	22.000	.2275-01	.2686-01	.2952-01	41.71	.9489	.3460	547.9	.7111-03
6	420.00	.53000	23.000	.1794-01	.2118-01	.2329-01	41.71	.7484	.3461	548.1	.5609-03
6	420.00	.56700	24.000	.1790-01	.2113-01	.2323-01	41.70	.7463	.3463	548.3	.5595-03
6	420.00	.62000	25.000	.2359-01	.2785-01	.3062-01	41.68	.9832	.3465	548.6	.7374-03
6	420.00	.67000	26.000	.3006-01	.3550-01	.3902-01	41.68	1.253	.3465	548.6	.9399-03
6	420.00	.70500	27.000	.3556-01	.4198-01	.4615-01	41.67	1.482	.3467	548.9	.1112-02
6	420.00	.75000	28.000	.3953-01	.4668-01	.5131-01	41.65	1.646	.3469	549.3	.1236-02
6	420.00	.80000	29.000	.3639-01	.4296-01	.4723-01	41.69	1.517	.3464	548.4	.1138-02
6	420.00	.82400	30.000	.4019-01	.4743-01	.5213-01	41.78	1.679	.3450	546.3	.1256-02
6	437.50	.27500	1.0000	.4465-01	.5270-01	.5792-01	41.77	1.865	.3452	546.6	.1396-02
6	442.00	.30000	2.0000	.3447-01	.4068-01	.4471-01	41.78	1.440	.3450	546.3	.1077-02
6	445.00	.32500	3.0000	.2701-01	.3188-01	.3503-01	41.79	1.129	.3448	546.0	.8441-03
6	445.00	.35000	4.0000	.2409-01	.2843-01	.3124-01	41.79	1.007	.3448	546.0	.7528-03
6	445.00	.37500	5.0000	.2340-01	.2761-01	.3035-01	41.80	.9781	.3448	545.9	.7313-03

IH103 560/60T FUSELAGE

(R3PV22)

RUN NUMBER	ZO	XB/LB	T/C NO	H/HREF R=1.0	H/HREF R=.900	H/HREF R=.850	QREF BTU/ FT2SEC	QDOT BTU/ FT2SEC	HW/HT	TW DEG. R	STN NO R=.900
6	445.00	.40000	6.0000	.2751-01	.3247-01	.3568-01	41.78	1.149	.3450	546.3	.8597-03
6	445.00	.42500	7.0000	.2779-01	.3280-01	.3604-01	41.78	1.161	.3450	546.2	.8685-03
6	445.00	.45000	8.0000	.2871-01	.3388-01	.3723-01	41.78	1.199	.3450	546.2	.8971-03
6	445.00	.47500	9.0000	.2868-01	.3385-01	.3720-01	41.78	1.198	.3450	546.3	.8963-03
6	445.00	.50000	10.000	.2772-01	.3271-01	.3595-01	41.78	1.158	.3450	546.3	.8662-03
6	445.00	.55000	12.000	.1870-01	.2206-01	.2425-01	41.78	.7811	.3450	546.2	.5843-03
6	445.00	.60000	13.000	.7269-02	.8579-02	.9429-02	41.77	.3036	.3451	546.5	.2272-03
6	445.00	.65000	14.000	.6885-02	.8126-02	.8931-02	41.76	.2875	.3453	546.7	.2152-03
6	445.00	.70000	15.000	.1252-01	.1477-01	.1624-01	41.75	.5226	.3455	547.0	.3912-03
6	445.00	.75000	16.000	.2160-01	.2550-01	.2802-01	41.74	.9016	.3456	547.2	.6751-03
6	445.00	.80000	17.000	.5469-01	.6455-01	.7094-01	41.77	2.285	.3452	546.5	.1709-02

IH103 560/60T FUSELAGE (R3PV23)

FUSELAGE

PARAMETRIC DATA

MACH = 5.250 ALPHA = .0000 BETA = .0000 ELEVON = .0000
BDFLAP = .0000 SPDBRK = .0000

TEST CONDITIONS

RUN NUMBER	ALPHA DEG.	BETA DEG.	MACH	RN/FT /FT X10 6	PT PSIA	TT DEG. R	HT BTU/ LBM	PINF PSIA	TINF DEG. R	RHO SLUGS/ FT3	VINF FT/SEC	SCALE
3	.0000	.0000	5.250	1.011	105.7	1547.	381.8	.1452	244.3	.4987-04	4022.	.1750-01

RUN NUMBER	PHI DEG.	HS SPHERE TW=540
3	.0000	.1697

TEST DATA

RUN NUMBER	ZO	XB/LB	T/C NO	H/HREF R=1.0	H/HREF R=.900	H/HREF R=.850	QREF BTU/ FT2SEC	QDOT BTU/ FT2SEC	HW/HT	TW DEG. R	STN NO R=.900
3	355.00	.20000	71.000	.2288-01	.2699-01	.2965-01	42.55	.9736	.3432	546.1	.7097-03
3	355.00	.22500	72.000	.1358-01	.1603-01	.1761-01	42.51	.5775	.3438	547.0	.4214-03
3	355.00	.25000	73.000	.9069-02	.1070-01	.1176-01	42.49	.3853	.3441	547.5	.2813-03
3	355.00	.27500	74.000	.4983-02	.5879-02	.6460-02	42.50	.2118	.3439	547.2	.1546-03
3	355.00	.80000	75.000	.1742-01	.2057-01	.2260-01	42.39	.7386	.3455	549.7	.5406-03
3	355.00	.85000	76.000	.2517-01	.2971-01	.3266-01	42.40	1.067	.3453	549.5	.7811-03
3	355.00	.90000	78.000	.2845-01	.3358-01	.3691-01	42.42	1.207	.3452	549.2	.8828-03
3	355.00	.95000	80.000	.2773-01	.3271-01	.3595-01	42.48	1.178	.3442	547.7	.8601-03
3	372.50	.30000	56.000	.6955-02	.8208-02	.9020-02	42.43	.2951	.3449	548.8	.2158-03
3	372.50	.32500	57.000	.6670-02	.7871-02	.8650-02	42.44	.2831	.3447	548.5	.2069-03
3	372.50	.35000	58.000	.8296-02	.9790-02	.1076-01	42.43	.3519	.3450	548.9	.2574-03
3	372.50	.37500	59.000	.7955-02	.9388-02	.1032-01	42.43	.3375	.3449	548.8	.2468-03
3	372.50	.40000	60.000	.1087-01	.1282-01	.1409-01	42.43	.4610	.3450	548.9	.3371-03
3	372.50	.42500	61.000	.1351-01	.1594-01	.1752-01	42.43	.5732	.3450	548.9	.4192-03
3	372.50	.45000	62.000	.1345-01	.1588-01	.1745-01	42.44	.5709	.3448	548.6	.4173-03
3	372.50	.50000	64.000	.1722-01	.2032-01	.2233-01	42.44	.7308	.3448	548.6	.5342-03
3	372.50	.55000	66.000	.2257-01	.2663-01	.2926-01	42.46	.9581	.3445	548.2	.7001-03
3	372.50	.60000	67.000	.2575-01	.3039-01	.3339-01	42.43	1.093	.3449	548.8	.7988-03
3	372.50	.65000	68.000	.2612-01	.3082-01	.3388-01	42.42	1.108	.3451	549.0	.8103-03
3	372.50	.70000	69.000	.2314-01	.2734-01	.3006-01	42.16	.9754	.3490	555.3	.7184-03
3	372.50	.75000	70.000	.2228-01	.2630-01	.2892-01	42.34	.9433	.3463	551.0	.6914-03

IH103 MODELS 60-OT AND 560/60T AT ARC 3.5 FT. TUNNEL

IH103 560/60T FUSELAGE

(R3PV23)

RUN NUMBER	ZO	XB/LB	T/C NO	H/HREF R=1.0	H/HREF R=.900	H/HREF R=.850	QREF BTU/ FT2SEC	QDOT BTU/ FT2SEC	HW/HT	TW DEG. R	STN NO R=.900
3	400.00	.20000	31.000	.2855-01	.3369-01	.3702-01	42.48	1.213	.3443	547.7	.8857-03
3	400.00	.22500	32.000	.2334-01	.2756-01	.3029-01	42.38	.9893	.3457	550.1	.7244-03
3	400.00	.25000	33.000	.1736-01	.2050-01	.2253-01	42.35	.7353	.3462	550.8	.5389-03
3	400.00	.27500	34.000	.1735-01	.2048-01	.2251-01	42.34	.7346	.3462	550.9	.5384-03
3	400.00	.30000	35.000	.1802-01	.2127-01	.2338-01	42.33	.7626	.3464	551.2	.5591-03
3	400.00	.32500	36.000	.2236-01	.2640-01	.2903-01	42.33	.9466	.3465	551.3	.6941-03
3	400.00	.35000	37.000	.2581-01	.3047-01	.3350-01	42.31	1.092	.3467	551.7	.8010-03
3	400.00	.37500	38.000	.2595-01	.3063-01	.3367-01	42.36	1.099	.3460	550.5	.8052-03
3	400.00	.40000	39.000	.2084-01	.2460-01	.2704-01	42.32	.8818	.3465	551.4	.6467-03
3	400.00	.42500	40.000	.2394-01	.2826-01	.3107-01	42.30	1.012	.3469	552.0	.7429-03
3	400.00	.45000	41.000	.2246-01	.2651-01	.2915-01	42.31	.9500	.3468	551.8	.6970-03
3	400.00	.47500	42.000	.2058-01	.2430-01	.2671-01	42.35	.8717	.3461	550.6	.6387-03
3	400.00	.50000	43.000	.1812-01	.2139-01	.2351-01	42.36	.7674	.3460	550.5	.5622-03
3	400.00	.52500	44.000	.1665-01	.1965-01	.2160-01	42.35	.7049	.3461	550.7	.5166-03
3	400.00	.55000	45.000	.1705-01	.2013-01	.2213-01	42.35	.7222	.3462	550.8	.5293-03
3	400.00	.60000	46.000	.2123-01	.2506-01	.2755-01	42.33	.8985	.3464	551.2	.6588-03
3	400.00	.65000	47.000	.2760-01	.3259-01	.3582-01	42.32	1.168	.3466	551.5	.8566-03
3	400.00	.70000	48.000	.2993-01	.3534-01	.3885-01	42.32	1.267	.3466	551.5	.9289-03
3	400.00	.75000	49.000	.2978-01	.3517-01	.3867-01	42.27	1.259	.3473	552.6	.9245-03
3	400.00	.80000	50.000	.2241-01	.2646-01	.2909-01	42.28	.9473	.3472	552.4	.6955-03
3	400.00	.85000	51.000	.3395-01	.4007-01	.4403-01	42.42	1.440	.3451	549.1	.1053-02
3	400.00	.87500	52.000	.4067-01	.4800-01	.5275-01	42.44	1.726	.3448	548.5	.1262-02
3	400.00	.90000	53.000	.3939-01	.4649-01	.5109-01	42.44	1.672	.3448	548.6	.1222-02
3	400.00	.92500	54.000	.4276-01	.5046-01	.5544-01	42.48	1.816	.3442	547.7	.1327-02
3	400.00	.95000	55.000	.3908-01	.4611-01	.5066-01	42.52	1.662	.3436	546.7	.1212-02
3	420.00	.28500	18.000	.2856-01	.3372-01	.3706-01	42.36	1.210	.3459	550.4	.8863-03
3	420.00	.33700	19.000	.3230-01	.3813-01	.4191-01	42.34	1.367	.3462	550.9	.1002-02
3	420.00	.39000	20.000	.3071-01	.3626-01	.3986-01	42.35	1.301	.3461	550.7	.9532-03
3	420.00	.42600	21.000	.2717-01	.3207-01	.3526-01	42.32	1.150	.3465	551.3	.8431-03
3	420.00	.47800	22.000	.2048-01	.2418-01	.2658-01	42.33	.8669	.3464	551.2	.6355-03
3	420.00	.53000	23.000	.1614-01	.1906-01	.2095-01	42.32	.6832	.3465	551.4	.5010-03
3	420.00	.56700	24.000	.1327-01	.1567-01	.1723-01	42.32	.5616	.3466	551.5	.4119-03
3	420.00	.62000	25.000	.1500-01	.1772-01	.1948-01	42.30	.6347	.3468	551.8	.4657-03
3	420.00	.67000	26.000	.1945-01	.2296-01	.2525-01	42.29	.8224	.3470	552.2	.6036-03
3	420.00	.70500	27.000	.2309-01	.2727-01	.2998-01	42.28	.9764	.3472	552.4	.7168-03
3	420.00	.75000	28.000	.2514-01	.2969-01	.3265-01	42.25	1.062	.3476	553.0	.7804-03
3	420.00	.80000	29.000	.1634-01	.1930-01	.2122-01	42.31	.6914	.3468	551.7	.5073-03
3	420.00	.82400	30.000	.1555-01	.1835-01	.2016-01	42.43	.6597	.3449	548.8	.4823-03
3	437.50	.27500	1.0000	.3584-01	.4229-01	.4648-01	42.43	1.521	.3450	548.9	.1112-02
3	442.00	.30000	2.0000	.2627-01	.3100-01	.3407-01	42.44	1.115	.3448	548.6	.8150-03
3	445.00	.32500	3.0000	.2109-01	.2488-01	.2735-01	42.45	.8952	.3446	548.3	.6542-03
3	445.00	.35000	4.0000	.1856-01	.2190-01	.2407-01	42.45	.7878	.3447	548.5	.5758-03
3	445.00	.37500	5.0000	.1808-01	.2134-01	.2345-01	42.45	.7675	.3446	548.3	.5609-03

IH103 560/60T FUSELAGE (R3PV23)

RUN NUMBER	ZO	XB/LB	T/C NO	H/HREF R=1.0	H/HREF R=.900	H/HREF R=.850	QREF BTU/ FT2SEC	QDOT BTU/ FT2SEC	HW/HT	TW DEG. R	STN NO R=.900
3	445.00	.40000	6.0000	.2204-01	.2602-01	.2859-01	42.43	.9354	.3449	548.8	.6839-03
3	445.00	.42500	7.0000	.2253-01	.2659-01	.2922-01	42.44	.9563	.3448	548.6	.6991-03
3	445.00	.45000	8.0000	.2457-01	.2900-01	.3187-01	42.43	1.043	.3449	548.8	.7623-03
3	445.00	.47500	9.0000	.2369-01	.2795-01	.3072-01	42.43	1.005	.3449	548.8	.7349-03
3	445.00	.50000	10.000	.2152-01	.2540-01	.2791-01	42.43	.9131	.3449	548.8	.6676-03
3	445.00	.55000	12.000	.1756-01	.2073-01	.2278-01	42.43	.7452	.3450	548.9	.5449-03
3	445.00	.60000	13.000	.1300-01	.1534-01	.1686-01	42.41	.5512	.3453	549.3	.4033-03
3	445.00	.65000	14.000	.1218-01	.1438-01	.1580-01	42.40	.5165	.3454	549.6	.3780-03
3	445.00	.70000	15.000	.1058-01	.1249-01	.1373-01	42.39	.4485	.3456	549.8	.3283-03
3	445.00	.75000	16.000	.1018-01	.1202-01	.1321-01	42.37	.4314	.3458	550.2	.3159-03
3	445.00	.80000	17.000	.2773-01	.3273-01	.3597-01	42.42	1.176	.3451	549.1	.8605-03

IH103 560/60T FUSELAGE

(R3PV24)

FUSELAGE

PARAMETRIC DATA

MACH = 5.250 ALPHA = 5.000 BETA = .0000 ELEVON = .0000
BDFLAP = .0000 SPDBRK = .0000

TEST CONDITIONS

RUN NUMBER	ALPHA DEG.	BETA DEG.	MACH	RN/FT /FT X10 6	PT PSIA	TT DEG. R	HT BTU/ LBM	PINF PSIA	TINF DEG. R	RHO SLUGS/ FT3	VINF FT/SEC	SCALE
7	5.000	.0000	5.250	.9678	100.9	1544.	381.0	.1386	243.8	.4771-04	4018.	.1750-01

RUN NUMBER	PHI DEG.	HS SPHERE TW=540
7	.0000	.1658

TEST DATA

RUN NUMBER	ZO	XB/LB	T/C NO	H/HREF R=1.0	H/HREF R=.900	H/HREF R=.850	QREF BTU/ FT2SEC	QDOT BTU/ FT2SEC	HW/HT	TW DEG. R	STN NO R=.900
7	355.00	.20000	71.000	.2483-01	.2930-01	.3220-01	41.40	1.028	.3445	547.1	.7875-03
7	355.00	.22500	72.000	.1554-01	.1834-01	.2016-01	41.36	.6429	.3451	548.0	.4929-03
7	355.00	.25000	73.000	.9717-02	.1147-01	.1261-01	41.34	.4017	.3455	548.6	.3082-03
7	355.00	.27500	74.000	.5200-02	.6138-02	.6746-02	41.35	.2150	.3454	548.5	.1649-03
7	355.00	.80000	75.000	.1270-01	.1499-01	.1648-01	41.22	.5234	.3473	551.5	.4028-03
7	355.00	.85000	76.000	.1686-01	.1991-01	.2189-01	41.23	.6952	.3471	551.2	.5350-03
7	355.00	.90000	78.000	.2136-01	.2522-01	.2773-01	41.23	.8805	.3472	551.4	.6777-03
7	355.00	.95000	80.000	.3214-01	.3793-01	.4169-01	41.33	1.328	.3456	548.8	.1019-02
7	372.50	.30000	56.000	.3979-02	.4698-02	.5164-02	41.25	.1641	.3468	550.7	.1262-03
7	372.50	.32500	57.000	.3448-02	.4071-02	.4476-02	41.27	.1423	.3466	550.4	.1094-03
7	372.50	.35000	58.000	.2962-02	.3498-02	.3845-02	41.26	.1222	.3467	550.6	.9398-04
7	372.50	.37500	59.000	.3922-02	.4631-02	.5092-02	41.23	.1617	.3471	551.2	.1244-03
7	372.50	.40000	60.000	.5264-02	.6216-02	.6833-02	41.26	.2172	.3467	550.6	.1670-03
7	372.50	.42500	61.000	.7826-02	.9241-02	.1016-01	41.26	.3229	.3468	550.7	.2483-03
7	372.50	.45000	62.000	.9940-02	.1174-01	.1290-01	41.26	.4101	.3467	550.5	.3154-03
7	372.50	.50000	64.000	.1300-01	.1535-01	.1688-01	41.27	.5366	.3465	550.3	.4125-03
7	372.50	.55000	66.000	.1641-01	.1938-01	.2130-01	41.28	.6776	.3463	550.0	.5207-03
7	372.50	.60000	67.000	.1890-01	.2231-01	.2453-01	41.28	.7803	.3463	550.0	.5996-03
7	372.50	.65000	68.000	.2063-01	.2435-01	.2677-01	41.26	.8510	.3467	550.6	.6544-03
7	372.50	.70000	69.000	.1841-01	.2176-01	.2394-01	40.09	.7545	.3507	557.0	.5845-03
7	372.50	.75000	70.000	.1840-01	.2173-01	.2390-01	41.14	.7568	.3485	553.4	.5839-03

IH103 560/60T FUSELAGE (R3PV24)

RUN NUMBER	ZO	XB/LB	T/C NO	H/HREF R=1.0	H/HREF R=.900	H/HREF R=.850	QREF BTU/ FT2SEC	QDOT BTU/ FT2SEC	HW/HT	TW DEG. R	STN NO R=.900
7	400.00	.20000	31.000	.2057-01	.2428-01	.2669-01	41.33	.8500	.3457	549.0	.6524-03
7	400.00	.22500	32.000	.1677-01	.1981-01	.2178-01	41.22	.6913	.3474	551.6	.5322-03
7	400.00	.25000	33.000	.1228-01	.1451-01	.1595-01	41.17	.5056	.3481	552.7	.3897-03
7	400.00	.27500	34.000	.1022-01	.1208-01	.1328-01	41.17	.4209	.3481	552.8	.3245-03
7	400.00	.30000	35.000	.9369-02	.1107-01	.1217-01	41.16	.3856	.3482	553.0	.2973-03
7	400.00	.32500	36.000	.9422-02	.1113-01	.1224-01	41.16	.3878	.3482	553.0	.2990-03
7	400.00	.35000	37.000	.7553-02	.8922-02	.9811-02	41.16	.3108	.3483	553.1	.2397-03
7	400.00	.37500	38.000	.6248-02	.7381-02	.8117-02	41.13	.2570	.3487	553.7	.1983-03
7	400.00	.40000	39.000	.4459-02	.5268-02	.5793-02	41.15	.1835	.3483	553.1	.1415-03
7	400.00	.42500	40.000	.3703-02	.4375-02	.4811-02	41.15	.1524	.3484	553.3	.1175-03
7	400.00	.45000	41.000	.4561-02	.5388-02	.5925-02	41.15	.1877	.3484	553.2	.1448-03
7	400.00	.47500	42.000	.6152-02	.7266-02	.7989-02	41.19	.2534	.3477	552.1	.1952-03
7	400.00	.50000	43.000	.6883-02	.8129-02	.8938-02	41.20	.2836	.3476	552.0	.2184-03
7	400.00	.52500	44.000	.8690-02	.1026-01	.1129-01	41.19	.3579	.3478	552.3	.2758-03
7	400.00	.55000	45.000	.1040-01	.1228-01	.1350-01	41.19	.4282	.3478	552.3	.3299-03
7	400.00	.60000	46.000	.1281-01	.1513-01	.1664-01	41.17	.5275	.3481	552.8	.4066-03
7	400.00	.65000	47.000	.1414-01	.1670-01	.1837-01	41.14	.5817	.3485	553.4	.4487-03
7	400.00	.70000	48.000	.1776-01	.2099-01	.2308-01	41.13	.7306	.3487	553.7	.5638-03
7	400.00	.75000	49.000	.2068-01	.2444-01	.2688-01	41.07	.8493	.3495	555.1	.6564-03
7	400.00	.80000	50.000	.2076-01	.2453-01	.2698-01	41.09	.8529	.3493	554.7	.6590-03
7	400.00	.85000	51.000	.2370-01	.2793-01	.3076-01	41.27	.9782	.3465	550.3	.7519-03
7	400.00	.87500	52.000	.3139-01	.3705-01	.4073-01	41.31	1.297	.3460	549.4	.9957-03
7	400.00	.90000	53.000	.3008-01	.3551-01	.3904-01	41.30	1.242	.3461	549.6	.9543-03
7	400.00	.92500	54.000	.3103-01	.3663-01	.4026-01	41.32	1.282	.3458	549.1	.9843-03
7	400.00	.95000	55.000	.2780-01	.3281-01	.3606-01	41.37	1.150	.3449	547.8	.8817-03
7	420.00	.28500	18.000	.1706-01	.2015-01	.2216-01	41.20	.7031	.3476	552.0	.5415-03
7	420.00	.33700	19.000	.2002-01	.2364-01	.2600-01	41.18	.8243	.3479	552.4	.6352-03
7	420.00	.39000	20.000	.1999-01	.2361-01	.2596-01	41.18	.8234	.3478	552.4	.6344-03
7	420.00	.42600	21.000	.1909-01	.2254-01	.2479-01	41.17	.7859	.3480	552.7	.6057-03
7	420.00	.47800	22.000	.1455-01	.1719-01	.1890-01	41.18	.5992	.3479	552.5	.4617-03
7	420.00	.53000	23.000	.1086-01	.1283-01	.1411-01	41.17	.4473	.3481	552.7	.3448-03
7	420.00	.56700	24.000	.8576-02	.1013-01	.1114-01	41.15	.3529	.3483	553.1	.2722-03
7	420.00	.62000	25.000	.1015-01	.1199-01	.1318-01	41.14	.4174	.3486	553.6	.3221-03
7	420.00	.67000	26.000	.1488-01	.1759-01	.1934-01	41.12	.6121	.3488	553.9	.4724-03
7	420.00	.70500	27.000	.1948-01	.2302-01	.2532-01	41.11	.8010	.3490	554.2	.6185-03
7	420.00	.75000	28.000	.2160-01	.2552-01	.2807-01	41.06	.8869	.3497	555.3	.6857-03
7	420.00	.80000	29.000	.1860-01	.2197-01	.2416-01	41.14	.7652	.3485	553.5	.5903-03
7	420.00	.82400	30.000	.1157-01	.1366-01	.1501-01	41.30	.4777	.3461	549.7	.3669-03
7	437.50	.27500	1.0000	.2992-01	.3533-01	.3884-01	41.27	1.235	.3465	550.2	.9493-03
7	442.00	.30000	2.0000	.2702-01	.3190-01	.3507-01	41.29	1.116	.3462	549.8	.8572-03
7	445.00	.32500	3.0000	.2488-01	.2937-01	.3228-01	41.31	1.028	.3459	549.3	.7891-03
7	445.00	.35000	4.0000	.2664-01	.3145-01	.3457-01	41.31	1.101	.3460	549.4	.8451-03
7	445.00	.37500	5.0000	.2719-01	.3210-01	.3528-01	41.32	1.124	.3458	549.2	.8626-03

IH103 560/60T FUSELAGE (R3PV24)

RUN NUMBER	ZO	XB/LB	T/C NO	H/HREF R=1.0	H/HREF R=.900	H/HREF R=.850	QREF BTU/ FT2SEC	QDOT BTU/ FT2SEC	HW/HT	TW DEG. R	STN NO R=.900
7	445.00	.40000	6.0000	.3035-01	.3583-01	.3939-01	41.30	1.253	.3461	549.6	.9629-03
7	445.00	.42500	7.0000	.2830-01	.3341-01	.3673-01	41.30	1.169	.3460	549.5	.8979-03
7	445.00	.45000	8.0000	.2765-01	.3264-01	.3588-01	41.30	1.142	.3460	549.5	.8770-03
7	445.00	.47500	9.0000	.2609-01	.3080-01	.3385-01	41.30	1.078	.3460	549.5	.8275-03
7	445.00	.50000	10.000	.2493-01	.2943-01	.3235-01	41.30	1.030	.3461	549.6	.7909-03
7	445.00	.55000	12.000	.2195-01	.2591-01	.2848-01	41.30	.9064	.3461	549.7	.6963-03
7	445.00	.60000	13.000	.1743-01	.2058-01	.2262-01	41.28	.7194	.3464	550.2	.5529-03
7	445.00	.65000	14.000	.1687-01	.1992-01	.2190-01	41.26	.6961	.3467	550.5	.5353-03
7	445.00	.70000	15.000	.1924-01	.2272-01	.2498-01	41.24	.7935	.3469	551.0	.6104-03
7	445.00	.75000	16.000	.1802-01	.2128-01	.2340-01	41.22	.7430	.3473	551.5	.5719-03
7	445.00	.80000	17.000	.2194-01	.2590-01	.2848-01	41.28	.9058	.3463	550.0	.6961-03

IH103 560/60T FUSELAGE (R3PV25)

FUSELAGE

PARAMETRIC DATA

MACH = 5.250 ALPHA = 10.00 BETA = .0000 ELEVON = .0000
BDFLAP = .0000 SPDBRK = .0000

TEST CONDITIONS

RUN NUMBER	ALPHA DEG.	BETA DEG.	MACH	RN/FT /FT X10 6	PT PSIA	TT DEG. R	HT BTU/ LBM	PINF PSIA	TINF DEG. R	RHO SLUGS/ FT3	VINF FT/SEC	SCALE
8	10.00	.0000	5.250	.9902	101.1	1524.	375.9	.1392	240.5	.4854-04	3991.	.1750-01

RUN NUMBER	PHI DEG.	HS SPHERE TW=540
8	.0000	.1659

TEST DATA

RUN NUMBER	ZO	XB/LB	T/C NO	H/HREF R=1.0	H/HREF R=.900	H/HREF R=.850	QREF BTU/ FT2SEC	QDOT BTU/ FT2SEC	HW/HT	TW DEG. R	STN NO R=.900
8	355.00	.20000	71.000	.1567-01	.1852-01	.2037-01	40.52	.6348	.3501	548.4	.4927-03
8	355.00	.22500	72.000	.1142-01	.1350-01	.1485-01	40.48	.4622	.3507	549.3	.3592-03
8	355.00	.25000	73.000	.9754-02	.1153-01	.1269-01	40.44	.3945	.3512	550.1	.3068-03
8	355.00	.27500	74.000	.8003-02	.9461-02	.1041-01	40.45	.3238	.3510	549.9	.2517-03
8	355.00	.80000	75.000	.1931-01	.2284-01	.2514-01	40.37	.7797	.3524	552.0	.6076-03
8	355.00	.85000	76.000	.3618-01	.4279-01	.4709-01	40.37	1.461	.3523	551.9	.1138-02
8	355.00	.90000	78.000	.3584-01	.4239-01	.4665-01	40.37	1.447	.3523	551.8	.1128-02
8	355.00	.95000	80.000	.1835-01	.2169-01	.2387-01	40.44	.7419	.3513	550.2	.5771-03
8	372.50	.30000	56.000	.6507-02	.7695-02	.8467-02	40.39	.2628	.3520	551.4	.2047-03
8	372.50	.32500	57.000	.5857-02	.6925-02	.7620-02	40.40	.2366	.3518	551.1	.1842-03
8	372.50	.35000	58.000	.5527-02	.6536-02	.7192-02	40.38	.2232	.3522	551.7	.1739-03
8	372.50	.37500	59.000	.6667-02	.7884-02	.8676-02	40.38	.2692	.3522	551.7	.2097-03
8	372.50	.40000	60.000	.6713-02	.7939-02	.8736-02	40.38	.2711	.3522	551.7	.2112-03
8	372.50	.42500	61.000	.6343-02	.7500-02	.8254-02	40.39	.2562	.3521	551.5	.1995-03
8	372.50	.45000	62.000	.5807-02	.6867-02	.7556-02	40.40	.2346	.3519	551.3	.1827-03
8	372.50	.50000	64.000	.8421-02	.9957-02	.1096-01	40.40	.3402	.3519	551.2	.2649-03
8	372.50	.55000	66.000	.1818-01	.2149-01	.2365-01	40.42	.7348	.3515	550.6	.5717-03
8	372.50	.60000	67.000	.2407-01	.2846-01	.3132-01	40.39	.9721	.3520	551.4	.7572-03
8	372.50	.65000	68.000	.2340-01	.2767-01	.3045-01	40.38	.9448	.3521	551.6	.7361-03
8	372.50	.70000	69.000	.2229-01	.2639-01	.2906-01	40.13	.8946	.3560	557.7	.7019-03
8	372.50	.75000	70.000	.2277-01	.2694-01	.2965-01	40.32	.9183	.3530	553.0	.7166-03

IH103 560/60T FUSELAGE (R3PV25)

RUN NUMBER	ZO	XB/LB	T/C NO	H/HREF R=1.0	H/HREF R=.900	H/HREF R=.850	QREF BTU/ FT2SEC	QDOT BTU/ FT2SEC	HW/HT	TW DEG. R	STN NO R=.900
8	400.00	.20000	31.000	.1738-01	.2055-01	.2261-01	40.43	.7029	.3513	550.4	.5468-03
8	400.00	.22500	32.000	.1299-01	.1536-01	.1690-01	40.34	.5239	.3527	552.6	.4086-03
8	400.00	.25000	33.000	.9347-02	.1106-01	.1217-01	40.32	.3768	.3532	553.2	.2941-03
8	400.00	.27500	34.000	.6390-02	.7559-02	.8320-02	40.31	.2576	.3533	553.4	.2011-03
8	400.00	.30000	35.000	.5119-02	.6056-02	.6666-02	40.30	.2063	.3534	553.6	.1611-03
8	400.00	.32500	36.000	.4484-02	.5304-02	.5838-02	40.30	.1807	.3534	553.6	.1411-03
8	400.00	.35000	37.000	.4246-02	.5024-02	.5530-02	40.28	.1711	.3537	554.0	.1336-03
8	400.00	.37500	38.000	.4860-02	.5749-02	.6327-02	40.30	.1959	.3534	553.5	.1529-03
8	400.00	.40000	39.000	.4050-02	.4791-02	.5274-02	40.30	.1632	.3534	553.7	.1275-03
8	400.00	.42500	40.000	.5834-02	.6902-02	.7597-02	40.27	.2349	.3539	554.4	.1836-03
8	400.00	.45000	41.000	.6507-02	.7698-02	.8474-02	40.27	.2621	.3538	554.2	.2048-03
8	400.00	.47500	42.000	.6671-02	.7890-02	.8684-02	40.32	.2690	.3530	553.0	.2099-03
8	400.00	.50000	43.000	.6384-02	.7551-02	.8310-02	40.33	.2575	.3529	552.8	.2009-03
8	400.00	.52500	44.000	.5884-02	.6959-02	.7659-02	40.33	.2373	.3530	553.0	.1851-03
8	400.00	.55000	45.000	.6468-02	.7651-02	.8420-02	40.33	.2608	.3520	552.9	.2035-03
8	400.00	.60000	46.000	.1148-01	.1358-01	.1494-01	40.32	.4627	.3532	553.2	.3611-03
8	400.00	.65000	47.000	.1812-01	.2144-01	.2360-01	40.30	.7304	.3534	553.6	.5703-03
8	400.00	.70000	48.000	.2198-01	.2600-01	.2861-01	40.30	.8856	.3534	553.6	.6915-03
8	400.00	.75000	49.000	.2449-01	.2898-01	.3190-01	40.26	.9860	.3540	554.6	.7708-03
8	400.00	.80000	50.000	.2392-01	.2830-01	.3115-01	40.27	.9632	.3539	554.4	.7527-03
8	400.00	.85000	51.000	.1475-01	.1745-01	.1920-01	40.38	.5958	.3521	551.6	.4642-03
8	400.00	.87500	52.000	.1249-01	.1477-01	.1625-01	40.41	.5046	.3518	551.1	.3928-03
8	400.00	.90000	53.000	.1587-01	.1877-01	.2065-01	40.40	.6412	.3518	551.2	.4992-03
8	400.00	.92500	54.000	.3308-01	.3911-01	.4303-01	40.43	1.337	.3515	550.6	.1040-02
8	400.00	.95000	55.000	.2720-01	.3215-01	.3537-01	40.47	1.101	.3508	549.5	.8554-03
8	420.00	.28500	18.000	.9114-02	.1078-01	.1186-01	40.34	.3676	.3528	552.7	.2868-03
8	420.00	.33700	19.000	.9109-02	.1077-01	.1186-01	40.32	.3673	.3531	553.2	.2866-03
8	420.00	.39000	20.000	.5279-02	.6245-02	.6873-02	40.31	.2128	.3532	553.3	.1661-03
8	420.00	.42600	21.000	.3791-02	.4484-02	.4936-02	40.29	.1527	.3535	553.7	.1193-03
8	420.00	.47800	22.000	.5524-02	.6534-02	.7192-02	40.30	.2226	.3533	553.5	.1738-03
8	420.00	.53000	23.000	.6056-02	.7164-02	.7885-02	40.30	.2441	.3534	553.6	.1906-03
8	420.00	.56700	24.000	.6176-02	.7306-02	.8042-02	40.29	.2488	.3535	553.8	.1943-03
8	420.00	.62000	25.000	.9134-02	.1081-01	.1189-01	40.28	.3679	.3537	554.1	.2874-03
8	420.00	.67000	26.000	.1313-01	.1554-01	.1711-01	40.27	.5289	.3539	554.3	.4133-03
8	420.00	.70500	27.000	.1617-01	.1913-01	.2106-01	40.26	.6510	.3540	554.6	.5089-03
8	420.00	.75000	28.000	.2012-01	.2381-01	.2621-01	40.23	.8096	.3544	555.2	.6334-03
8	420.00	.80000	29.000	.1934-01	.2288-01	.2518-01	40.28	.7790	.3537	554.1	.6086-03
8	420.00	.82400	30.000	.8471-02	.1002-01	.1102-01	40.39	.3422	.3520	551.4	.2665-03
8	437.50	.27500	1.0000	.1850-01	.2188-01	.2408-01	40.39	.7474	.3520	551.4	.5821-03
8	442.00	.30000	2.0000	.1832-01	.2167-01	.2384-01	40.40	.7403	.3518	551.1	.5764-03
8	445.00	.32500	3.0000	.1835-01	.2169-01	.2387-01	40.42	.7416	.3516	550.7	.5771-03
8	445.00	.35000	4.0000	.1691-01	.1999-01	.2200-01	40.42	.6833	.3516	550.8	.5318-03
8	445.00	.37500	5.0000	.1548-01	.1830-01	.2014-01	40.41	.6258	.3518	550.8	.4870-03

(R3PV25)

IH103 560/60T FUSELAGE

RUN NUMBER	ZO	XB/LB	T/C NO	H/HREF R=1.0	H/HREF R=.900	H/HREF R=.850	QREF BTU/ FT2SEC	QDOT BTU/ FT2SEC	HW/HT	TW DEG. R	STN NO R=.900
8	445.00	.40000	6.0000	.1717-01	.2031-01	.2234-01	40.40	.6937	.3519	551.3	.5402-03
8	445.00	.42500	7.0000	.1562-01	.1847-01	.2033-01	40.40	.6312	.3519	551.2	.4915-03
8	445.00	.45000	8.0000	.9755-02	.1154-01	.1269-01	40.40	.3941	.3519	551.3	.3069-03
8	445.00	.47500	9.0000	.4442-02	.5253-02	.5780-02	40.40	.1794	.3519	551.3	.1397-03
8	445.00	.50000	10.000	.3806-02	.4501-02	.4952-02	40.39	.1537	.3519	551.3	.1197-03
8	445.00	.55000	12.000	.6292-02	.7440-02	.8187-02	40.39	.2542	.3519	551.3	.1979-03
8	445.00	.60000	13.000	.5561-02	.6577-02	.7237-02	40.37	.2245	.3523	551.9	.1750-03
8	445.00	.65000	14.000	.8089-02	.9566-02	.1053-01	40.36	.3265	.3524	552.1	.2545-03
8	445.00	.70000	15.000	.1138-01	.1346-01	.1481-01	40.35	.4591	.3526	552.4	.3580-03
8	445.00	.75000	16.000	.1455-01	.1721-01	.1894-01	40.34	.5869	.3528	552.7	.4578-03
8	445.00	.80000	17.000	.1535-01	.1815-01	.1997-01	40.38	.6198	.3522	551.7	.4829-03

IH103 560/60T FUSELAGE (R3PV26)

FUSELAGE

PARAMETRIC DATA

MACH = 5.250 ALPHA = 10.00 BETA = -5.000 ELEVON = .0000
BDFLAP = .0000 SPDBRK = .0000

TEST CONDITIONS

RUN NUMBER	ALPHA DEG.	BETA DEG.	MACH	RN/FT /FT X10 6	PT PSIA	TT DEG. R	HT BTU/ LBM	PINF PSIA	TINF DEG. R	RHO SLUGS/ FT3	VINF FT/SEC	SCALE
12	10.00	-5.000	5.250	1.003	101.0	1511.	372.5	.1391	238.4	.4897-04	3973.	.1750-01

RUN NUMBER	PHI DEG.	HS SPHERE TW=540
12	.0000	.1657

TEST DATA

RUN NUMBER	ZO	XB/LB	T/C NO	H/HREF R=1.0	H/HREF R=.900	H/HREF R=.850	QREF BTU/ FT2SEC	QDOT BTU/ FT2SEC	HW/HT	TW DEG. R	STN NO R=.900
12	355.00	.20000	71.000	.3319-01	.3928-01	.4324-01	39.83	1.322	.3544	550.1	.1040-02
12	355.00	.22500	72.000	.2317-01	.2742-01	.3018-01	39.83	.9228	.3545	550.2	.7256-03
12	355.00	.25000	73.000	.1614-01	.1910-01	.2103-01	39.82	.6427	.3546	550.4	.5055-03
12	355.00	.27500	74.000	.9610-02	.1137-01	.1252-01	39.83	.3828	.3544	550.2	.3010-03
12	355.00	.80000	75.000	.2256-01	.2670-01	.2940-01	39.78	.8975	.3551	551.3	.7066-03
12	355.00	.85000	76.000	.3000-01	.3550-01	.3909-01	39.79	1.194	.3550	551.1	.9395-03
12	355.00	.90000	78.000	.2303-01	.2726-01	.3001-01	39.80	.9166	.3549	551.0	.7214-03
12	355.00	.95000	80.000	.1219-01	.1442-01	.1587-01	39.84	.4855	.3542	549.9	.3816-03
12	372.50	.30000	56.000	.9707-02	.1149-01	.1265-01	39.78	.3861	.3552	551.4	.3041-03
12	372.50	.32500	57.000	.7409-02	.8768-02	.9653-02	39.80	.2949	.3548	550.8	.2321-03
12	372.50	.35000	58.000	.7272-02	.8607-02	.9476-02	39.79	.2894	.3550	551.1	.2278-03
12	372.50	.37500	59.000	.8747-02	.1035-01	.1140-01	39.76	.3478	.3555	551.9	.2740-03
12	372.50	.40000	60.000	.1445-01	.1711-01	.1883-01	39.77	.5748	.3553	551.5	.4527-03
12	372.50	.42500	61.000	.2236-01	.2647-01	.2914-01	39.78	.8895	.3553	551.5	.7005-03
12	372.50	.45000	62.000	.2925-01	.3462-01	.3812-01	39.78	1.164	.3552	551.4	.9163-03
12	372.50	.50000	64.000	.3357-01	.3973-01	.4375-01	39.79	1.336	.3551	551.2	.1052-02
12	372.50	.55000	66.000	.2811-01	.3327-01	.3663-01	39.80	1.119	.3549	550.9	.8804-03
12	372.50	.60000	67.000	.2390-01	.2828-01	.3113-01	39.81	.9513	.3548	550.7	.7484-03
12	372.50	.65000	68.000	.2371-01	.2807-01	.3090-01	39.79	.9437	.3550	551.0	.7428-03
12	372.50	.70000	69.000	.2459-01	.2914-01	.3211-01	39.54	.9725	.3589	557.1	.7710-03
12	372.50	.75000	70.000	.2636-01	.3120-01	.3436-01	39.74	1.047	.3559	552.4	.8257-03

IH103 560/60T FUSELAGE (R3PV26)

RUN NUMBER	ZO	XB/LB	T/C NO	H/HREF R=1.0	H/HREF R=.900	H/HREF R=.850	QREF BTU/ FT2SEC	QDOT BTU/ FT2SEC	HW/HT	TW DEG. R	STN NO R=.900
12	400.00	.20000	31.000	.5414-01	.6408-01	.7056-01	39.77	2.153	.3553	551.6	.1696-02
12	400.00	.22500	32.000	.3821-01	.4524-01	.4981-01	39.73	1.518	.3561	552.7	.1197-02
12	400.00	.25000	33.000	.2631-01	.3115-01	.3431-01	39.71	1.045	.3563	553.1	.8244-03
12	400.00	.27500	34.000	.1901-01	.2250-01	.2478-01	39.72	.7549	.3562	552.9	.5955-03
12	400.00	.30000	35.000	.1415-01	.1675-01	.1844-01	39.72	.5518	.3562	552.9	.4432-03
12	400.00	.32500	36.000	.1176-01	.1393-01	.1534-01	39.72	.4672	.3562	552.9	.3686-03
12	400.00	.35000	37.000	.9941-02	.1177-01	.1296-01	39.71	.3948	.3562	553.0	.3115-03
12	400.00	.37500	38.000	.6614-02	.7832-02	.8626-02	39.68	.2624	.3568	553.8	.2073-03
12	400.00	.40000	39.000	.7811-02	.9247-02	.1018-01	39.73	.3103	.3560	552.7	.2447-03
12	400.00	.42500	40.000	.7053-02	.8350-02	.9195-02	39.72	.2802	.3561	552.7	.2210-03
12	400.00	.45000	41.000	.9499-02	.1125-01	.1238-01	39.72	.3773	.3561	552.8	.2976-03
12	400.00	.47500	42.000	.1399-01	.1655-01	.1823-01	39.76	.5561	.3555	551.8	.4381-03
12	400.00	.50000	43.000	.1936-01	.2291-01	.2522-01	39.77	.7698	.3553	551.5	.6063-03
12	400.00	.52500	44.000	.2520-01	.2983-01	.3284-01	39.77	1.002	.3554	551.7	.7894-03
12	400.00	.55000	45.000	.2938-01	.3478-01	.3829-01	39.77	1.169	.3554	551.6	.9204-03
12	400.00	.60000	46.000	.2918-01	.3454-01	.3803-01	39.76	1.160	.3554	551.8	.9141-03
12	400.00	.65000	47.000	.2623-01	.3105-01	.3419-01	39.75	1.043	.3556	552.1	.8218-03
12	400.00	.70000	48.000	.2645-01	.3131-01	.3448-01	39.75	1.051	.3556	552.0	.8286-03
12	400.00	.75000	49.000	.2707-01	.3205-01	.3530-01	39.73	1.076	.3560	552.7	.8482-03
12	400.00	.80000	50.000	.2696-01	.3192-01	.3515-01	39.73	1.071	.3560	552.6	.8447-03
12	400.00	.85000	51.000	.1854-01	.2194-01	.2415-01	39.80	.7379	.3548	550.8	.5806-03
12	400.00	.87500	52.000	.2176-01	.2576-01	.2835-01	39.82	.8667	.3546	550.4	.6817-03
12	400.00	.90000	53.000	.3062-01	.3623-01	.3989-01	39.81	1.219	.3547	550.6	.9590-03
12	400.00	.92500	54.000	.3587-01	.4245-01	.4673-01	39.82	1.428	.3546	550.4	.1123-02
12	400.00	.95000	55.000	.4798-01	.5677-01	.6249-01	39.86	1.912	.3540	549.5	.1503-02
12	420.00	.28500	18.000	.1849-01	.2189-01	.2410-01	39.73	.7346	.3560	552.6	.5793-03
12	420.00	.33700	19.000	.1484-01	.1756-01	.1934-01	39.72	.5893	.3561	552.7	.4648-03
12	420.00	.39000	20.000	.1009-01	.1194-01	.1315-01	39.73	.4007	.3560	552.6	.3160-03
12	420.00	.42600	21.000	.8392-02	.9935-02	.1094-01	39.72	.3333	.3562	552.9	.2629-03
12	420.00	.47800	22.000	.8700-02	.1030-01	.1134-01	39.74	.3457	.3559	552.4	.2726-03
12	420.00	.53000	23.000	.1671-01	.1978-01	.2178-01	39.73	.6637	.3560	552.6	.5234-03
12	420.00	.56700	24.000	.2294-01	.2716-01	.2991-01	39.72	.9113	.3561	552.8	.7188-03
12	420.00	.62000	25.000	.2706-01	.3204-01	.3529-01	39.72	1.075	.3562	552.9	.8479-03
12	420.00	.67000	26.000	.2588-01	.3064-01	.3374-01	39.71	1.028	.3562	553.0	.8107-03
12	420.00	.70500	27.000	.2627-01	.3111-01	.3426-01	39.70	1.043	.3564	553.2	.8232-03
12	420.00	.75000	28.000	.2842-01	.3365-01	.3706-01	39.69	1.128	.3566	553.5	.8905-03
12	420.00	.80000	29.000	.2533-01	.2999-01	.3303-01	39.72	1.006	.3561	552.7	.7937-03
12	420.00	.82400	30.000	.1157-01	.1369-01	.1507-01	39.80	.4603	.3549	551.0	.3622-03
12	437.50	.27500	1.0000	.1681-01	.1990-01	.2191-01	39.76	.6685	.3554	551.8	.5266-03
12	442.00	.30000	2.0000	.1474-01	.1745-01	.1921-01	39.78	.5864	.3553	551.5	.4618-03
12	445.00	.32500	3.0000	.1570-01	.1858-01	.2046-01	39.79	.6245	.3551	551.2	.4917-03
12	445.00	.35000	4.0000	.1970-01	.2331-01	.2567-01	39.78	.7836	.3551	551.3	.6170-03
12	445.00	.37500	5.0000	.1919-01	.2271-01	.2500-01	39.79	.7634	.3551	551.2	.6010-03

IH103 560/60T FUSELAGE (R3PV26)

RUN NUMBER	ZO	XB/LB	T/C NO	H/HREF R=1.0	H/HREF R=.900	H/HREF R=.850	QREF BTU/ FT2SEC	QDOT BTU/ FT2SEC	HW/HT	TW DEG. R	STN NO R=.900
12	445.00	.40000	6.0000	.1695-01	.2006-01	.2209-01	39.78	.6743	.3552	551.4	.5310-03
12	445.00	.42500	7.0000	.1275-01	.1509-01	.1661-01	39.78	.5071	.3552	551.3	.3993-03
12	445.00	.45000	8.0000	.1106-01	.1309-01	.1441-01	39.78	.4400	.3552	551.3	.3465-03
12	445.00	.47500	9.0000	.9756-02	.1155-01	.1271-01	39.79	.3882	.3551	551.2	.3056-03
12	445.00	.50000	10.000	.8729-02	.1033-01	.1137-01	39.78	.3472	.3552	551.4	.2734-03
12	445.00	.55000	12.000	.1269-01	.1501-01	.1653-01	39.79	.5047	.3551	551.3	.3974-03
12	445.00	.60000	13.000	.1859-01	.2201-01	.2423-01	39.78	.7396	.3553	551.5	.5824-03
12	445.00	.65000	14.000	.2490-01	.2947-01	.3245-01	39.77	.9901	.3554	551.7	.7799-03
12	445.00	.70000	15.000	.2527-01	.2992-01	.3294-01	39.76	1.005	.3555	551.8	.7917-03
12	445.00	.75000	16.000	.2630-01	.3113-01	.3428-01	39.76	1.046	.3556	552.0	.8239-03
12	445.00	.80000	17.000	.2761-01	.3268-01	.3598-01	39.78	1.098	.3551	551.3	.8648-03

IH103 560/60T FUSELAGE (R3PV27)

FUSELAGE

PARAMETRIC DATA

MACH = 5.250 ALPHA = 5.000 BETA = -5.000 ELEVON = .0000
BDFLAP = .0000 SPDBRK = .0000

TEST CONDITIONS

RUN NUMBER	ALPHA DEG.	BETA DEG.	MACH	RN/FT /FT X10 6	PT PSIA	TT DEG. R	HT BTU/ LBM	PINF PSIA	TINF DEG. R	RHO SLUGS/ FT3	VINF FT/SEC	SCALE
11	5.000	-5.000	5.250	.9986	101.2	1517.	373.9	.1393	239.2	.4884-04	3980.	.1750-01

RUN NUMBER	PHI DEG.	HS SPHERE TW=540
11	.0000	.1659

TEST DATA

RUN NUMBER	ZO	XB/LB	T/C NO	H/HREF R=1.0	H/HREF R=.900	H/HREF R=.850	QREF BTU/ FT2SEC	QDOT BTU/ FT2SEC	HW/HT	TW DEG. R	STN NO R=.900
11	355.00	.20000	71.000	.3923-01	.4638-01	.5103-01	40.21	1.577	.3515	547.6	.1230-02
11	355.00	.22500	72.000	.2858-01	.3379-01	.3718-01	40.19	1.149	.3517	548.0	.8958-03
11	355.00	.25000	73.000	.1998-01	.2362-01	.2600-01	40.18	.8028	.3519	548.3	.6263-03
11	355.00	.27500	74.000	.1235-01	.1460-01	.1607-01	40.18	.4963	.3519	548.2	.3872-03
11	355.00	.80000	75.000	.1945-01	.2301-01	.2532-01	40.14	.7810	.3524	549.1	.6099-03
11	355.00	.85000	76.000	.2526-01	.2988-01	.3288-01	40.15	1.014	.3523	548.9	.7920-03
11	355.00	.90000	78.000	.1819-01	.2151-01	.2367-01	40.14	.7302	.3524	549.1	.5703-03
11	355.00	.95000	80.000	.1729-01	.2044-01	.2249-01	40.21	.6951	.3515	547.6	.5419-03
11	372.50	.30000	56.000	.1210-01	.1431-01	.1575-01	40.13	.4856	.3526	549.4	.3794-03
11	372.50	.32500	57.000	.7933-02	.9381-02	.1032-01	40.16	.3186	.3522	548.8	.2487-03
11	372.50	.35000	58.000	.5912-02	.6992-02	.7695-02	40.14	.2373	.3526	549.3	.1854-03
11	372.50	.37500	59.000	.6217-02	.7353-02	.8093-02	40.11	.2493	.3530	550.0	.1949-03
11	372.50	.40000	60.000	.9501-02	.1124-01	.1237-01	40.13	.3812	.3527	549.5	.2979-03
11	372.50	.42500	61.000	.1423-01	.1683-01	.1852-01	40.13	.5710	.3527	549.5	.4462-03
11	372.50	.45000	62.000	.1762-01	.2083-01	.2293-01	40.13	.7070	.3526	549.4	.5523-03
11	372.50	.50000	64.000	.3235-01	.3826-01	.4211-01	40.14	1.299	.3525	549.2	.1014-02
11	372.50	.55000	66.000	.4048-01	.4787-01	.5267-01	40.15	1.625	.3523	548.9	.1269-02
11	372.50	.60000	67.000	.3297-01	.3899-01	.4291-01	40.16	1.324	.3522	548.8	.1034-02
11	372.50	.65000	68.000	.2779-01	.3286-01	.3617-01	40.14	1.116	.3524	549.1	.8712-03
11	372.50	.70000	69.000	.2526-01	.2991-01	.3294-01	39.89	1.008	.3563	555.2	.7927-03
11	372.50	.75000	70.000	.2655-01	.3140-01	.3456-01	40.10	1.064	.3532	550.3	.8324-03

IH103 560/60T FUSELAGE

(R3PV27)

RUN NUMBER	ZO	XB/LB	T/C NO	H/HREF R=1.0	H/HREF R=.900	H/HREF R=.850	QREF BTU/ FT2SEC	QDOT BTU/ FT2SEC	HW/HT	TW DEG. R	STN NO R=.900
11	400.00	.20000	31.000	.4812-01	.5691-01	.6263-01	40.15	1.932	.3524	549.1	.1509-02
11	400.00	.22500	32.000	.3504-01	.4144-01	.4561-01	40.09	1.405	.3532	550.4	.1099-02
11	400.00	.25000	33.000	.2352-01	.2783-01	.3063-01	40.07	.9425	.3536	550.9	.7377-03
11	400.00	.27500	34.000	.1536-01	.1817-01	.2000-01	40.08	.6156	.3535	550.8	.4817-03
11	400.00	.30000	35.000	.1165-01	.1378-01	.1517-01	40.07	.4667	.3535	550.8	.3653-03
11	400.00	.32500	36.000	.1014-01	.1199-01	.1320-01	40.07	.4062	.3536	550.9	.3179-03
11	400.00	.35000	37.000	.8465-02	.1001-01	.1102-01	40.07	.3392	.3536	550.9	.2655-03
11	400.00	.37500	38.000	.8940-02	.1058-01	.1164-01	40.04	.3579	.3541	551.7	.2804-03
11	400.00	.40000	39.000	.5493-02	.6498-02	.7153-02	40.08	.2202	.3534	550.6	.1723-03
11	400.00	.42500	40.000	.3484-02	.4122-02	.4537-02	40.07	.1396	.3536	551.0	.1093-03
11	400.00	.45000	41.000	.5279-02	.6245-02	.6874-02	40.07	.2115	.3536	550.9	.1656-03
11	400.00	.47500	42.000	.9300-02	.1100-01	.1211-01	40.12	.3731	.3529	549.8	.2916-03
11	400.00	.50000	43.000	.1254-01	.1484-01	.1633-01	40.12	.5033	.3528	549.7	.3933-03
11	400.00	.52500	44.000	.1547-01	.1829-01	.2013-01	40.12	.6204	.3529	549.8	.4850-03
11	400.00	.55000	45.000	.1735-01	.2053-01	.2259-01	40.11	.6961	.3529	549.9	.5441-03
11	400.00	.60000	46.000	.2262-01	.2675-01	.2944-01	40.11	.9072	.3529	549.9	.7092-03
11	400.00	.65000	47.000	.3800-01	.4494-01	.4947-01	40.10	1.524	.3531	550.2	.1191-02
11	400.00	.70000	48.000	.4044-01	.4784-01	.5265-01	40.10	1.622	.3531	550.2	.1268-02
11	400.00	.75000	49.000	.3462-01	.4095-01	.4508-01	40.08	1.387	.3534	550.7	.1086-02
11	400.00	.80000	50.000	.2965-01	.3507-01	.3860-01	40.08	1.188	.3533	550.5	.9297-03
11	400.00	.85000	51.000	.2125-01	.2512-01	.2765-01	40.17	.8533	.3521	548.6	.6660-03
11	400.00	.87500	52.000	.3326-01	.3933-01	.4327-01	40.19	1.337	.3518	548.1	.1043-02
11	400.00	.90000	53.000	.4726-01	.5588-01	.6149-01	40.18	1.899	.3518	548.2	.1481-02
11	400.00	.92500	54.000	.6713-01	.7938-01	.8734-01	40.19	2.698	.3518	548.1	.2104-02
11	400.00	.95000	55.000	.5760-01	.6809-01	.7491-01	40.23	2.317	.3511	547.0	.1805-02
11	420.00	.28500	18.000	.1654-01	.1956-01	.2153-01	40.09	.6631	.3533	550.4	.5187-03
11	420.00	.33700	19.000	.2144-01	.2537-01	.2792-01	40.08	.8594	.3534	550.7	.6724-03
11	420.00	.39000	20.000	.2159-01	.2554-01	.2812-01	40.08	.8654	.3534	550.7	.6771-03
11	420.00	.42600	21.000	.1631-01	.1929-01	.2124-01	40.07	.6535	.3536	550.9	.5115-03
11	420.00	.47800	22.000	.6694-02	.7919-02	.8716-02	40.09	.2683	.3533	550.5	.2099-03
11	420.00	.53000	23.000	.1102-01	.1304-01	.1435-01	40.08	.4419	.3534	550.6	.3457-03
11	420.00	.56700	24.000	.1540-01	.1822-01	.2006-01	40.07	.6172	.3535	550.8	.4830-03
11	420.00	.62000	25.000	.2104-01	.2490-01	.2740-01	40.07	.8432	.3536	551.0	.6600-03
11	420.00	.67000	26.000	.2411-01	.2852-01	.3140-01	40.06	.9660	.3537	551.0	.7561-03
11	420.00	.70500	27.000	.2657-01	.3143-01	.3460-01	40.06	1.064	.3538	551.2	.8331-03
11	420.00	.75000	28.000	.3815-01	.4514-01	.4969-01	40.05	1.528	.3539	551.5	.1197-02
11	420.00	.80000	29.000	.3262-01	.3858-01	.4247-01	40.08	1.307	.3534	550.6	.1023-02
11	420.00	.82400	30.000	.1602-01	.1895-01	.2085-01	40.16	.6435	.3522	548.8	.5024-03
11	437.50	.27500	1.0000	.3351-01	.3963-01	.4362-01	40.12	1.344	.3528	549.7	.1051-02
11	442.00	.30000	2.0000	.3467-01	.4101-01	.4513-01	40.13	1.391	.3527	549.5	.1087-02
11	445.00	.32500	3.0000	.3641-01	.4306-01	.4738-01	40.14	1.461	.3525	549.2	.1141-02
11	445.00	.35000	4.0000	.4071-01	.4815-01	.5299-01	40.13	1.634	.3526	549.3	.1276-02
11	445.00	.37500	5.0000	.4004-01	.4736-01	.5212-01	40.14	1.607	.3525	549.2	.1255-02

DATE 08 NOV 79

1H103 MODELS 60-0T AND 560/60T AT ARC 3.5 FT. TUNNEL

1H103 560/60T FUSELAGE

RUN NUMBER	ZO	XB/LB	T/C NO	H/HREF R=1.0	H/HREF R=.900	H/HREF R=.850	QREF BTU/ FT2SEC	QDOT BTU/ FT2SEC	HW/HT	TW DEG. R	STN NO R=.900
11	445.00	.40000	6.0000	.4115-01	.4867-01	.5356-01	40.13	1.651	.3527	549.5	.1290-02
11	445.00	.42500	7.0000	.3776-01	.4466-01	.4915-01	40.13	1.515	.3527	549.5	.1184-02
11	445.00	.45000	8.0000	.3364-01	.3979-01	.4379-01	40.13	1.350	.3526	549.5	.1055-02
11	445.00	.47500	9.0000	.2833-01	.3350-01	.3687-01	40.13	1.137	.3526	549.3	.8882-03
11	445.00	.50000	10.000	.2262-01	.2676-01	.2945-01	40.13	.9078	.3527	549.5	.7093-03
11	445.00	.55000	12.000	.1749-01	.2068-01	.2276-01	40.13	.7019	.3526	549.4	.5484-03
11	445.00	.60000	13.000	.2167-01	.2564-01	.2821-01	40.12	.8697	.3527	549.6	.6796-03
11	445.00	.65000	14.000	.2655-01	.3140-01	.3456-01	40.12	1.065	.3529	549.8	.8324-03
11	445.00	.70000	15.000	.3047-01	.3603-01	.3966-01	40.11	1.222	.3530	550.0	.9553-03
11	445.00	.75000	16.000	.2993-01	.3541-01	.3897-01	40.11	1.200	.3530	550.0	.9386-03
11	445.00	.80000	17.000	.3097-01	.3663-01	.4031-01	40.14	1.243	.3524	549.2	.9710-03

IH103 560/60T FUSELAGE (R3PV28)

FUSELAGE

PARAMETRIC DATA

MACH = 5.250 ALPHA = .0000 BETA = -5.000 ELEVON = .0000
BDFLAP = .0000 SPDBRK = .0000

TEST CONDITIONS

RUN NUMBER	ALPHA DEG.	BETA DEG.	MACH	RN/FT /FT X10 6	PT PSIA	TT DEG. R	HT BTU/ LBM	PINF PSIA	TINF DEG. R	RHO SLUGS/ FT3	VINF FT/SEC	SCALE
9	.0000	-5.000	5.250	.9918	101.0	1521.	375.1	.1390	240.1	.4858-04	3987.	.1750-01

RUN NUMBER	PHI DEG.	HS SPHERE TW=540
9	.0000	.1658

TEST DATA

RUN NUMBER	ZO	XB/LB	T/C NO	H/HREF R=1.0	H/HREF R=.900	H/HREF R=.850	QREF BTU/ FT2SEC	QDOT BTU/ FT2SEC	HW/HT	TW DEG. R	STN NO R=.900
9	355.00	.20000	71.000	.4266-01	.5045-01	.5552-01	40.26	1.718	.3522	550.7	.1341-02
9	355.00	.22500	72.000	.2908-01	.3439-01	.3785-01	40.26	1.171	.3524	550.9	.9144-03
9	355.00	.25000	73.000	.2039-01	.2411-01	.2653-01	40.26	.8207	.3524	550.9	.6410-03
9	355.00	.27500	74.000	.1271-01	.1503-01	.1654-01	40.26	.5117	.3522	550.7	.3996-03
9	355.00	.80000	75.000	.3207-01	.3792-01	.4173-01	40.27	1.292	.3521	550.5	.1008-02
9	355.00	.85000	76.000	.4921-01	.5818-01	.6402-01	40.30	1.983	.3517	549.9	.1547-02
9	355.00	.90000	78.000	.4636-01	.5481-01	.6031-01	40.32	1.869	.3514	549.3	.1457-02
9	355.00	.95000	80.000	.4756-01	.5621-01	.6184-01	40.37	1.920	.3506	548.2	.1495-02
9	372.50	.30000	56.000	.9379-02	.1109-01	.1221-01	40.22	.3772	.3530	551.9	.2950-03
9	372.50	.32500	57.000	.6415-02	.7587-02	.8349-02	40.24	.2581	.3527	551.4	.2017-03
9	372.50	.35000	58.000	.4377-02	.5177-02	.5698-02	40.23	.1761	.3528	551.6	.1377-03
9	372.50	.37500	59.000	.4630-02	.5477-02	.6028-02	40.20	.1862	.3532	552.2	.1456-03
9	372.50	.40000	60.000	.8222-02	.9725-02	.1070-01	40.22	.3307	.3529	551.7	.2586-03
9	372.50	.42500	61.000	.1469-01	.1737-01	.1912-01	40.21	.5907	.3530	551.9	.4619-03
9	372.50	.45000	62.000	.1896-01	.2242-01	.2468-01	40.22	.7623	.3530	551.9	.5961-03
9	372.50	.50000	64.000	.1995-01	.2360-01	.2597-01	40.23	.8026	.3528	551.6	.6274-03
9	372.50	.55000	66.000	.2648-01	.3131-01	.3446-01	40.24	1.065	.3526	551.3	.8326-03
9	372.50	.60000	67.000	.3709-01	.4386-01	.4827-01	40.26	1.493	.3523	550.8	.1166-02
9	372.50	.65000	68.000	.4388-01	.5190-01	.5711-01	40.25	1.766	.3525	551.1	.1380-02
9	372.50	.70000	69.000	.4219-01	.4995-01	.5500-01	40.01	1.688	.3562	556.8	.1328-02
9	372.50	.75000	70.000	.4160-01	.4920-01	.5415-01	40.22	1.673	.3530	551.9	.1308-02

IH103 560/60T FUSELAGE (R3PV28)

RUN NUMBER	ZO	XB/LB	T/C NO	H/HREF R=1.0	H/HREF R=.900	H/HREF R=.850	QREF BTU/ FT2SEC	QDOT BTU/ FT2SEC	HW/HT	TW DEG. R	STN NO R=.900
9	400.00	.20000	31.000	.3365-01	.3981-01	.4381-01	40.20	1.353	.3532	552.2	.1058-02
9	400.00	.22500	32.000	.2569-01	.3040-01	.3346-01	40.16	1.032	.3539	553.3	.8082-03
9	400.00	.25000	33.000	.1840-01	.2177-01	.2397-01	40.14	.7388	.3541	553.6	.5789-03
9	400.00	.27500	34.000	.1483-01	.1755-01	.1932-01	40.15	.5956	.3540	553.4	.4666-03
9	400.00	.30000	35.000	.1548-01	.1831-01	.2016-01	40.15	.6214	.3540	553.4	.4868-03
9	400.00	.32500	36.000	.1980-01	.2342-01	.2578-01	40.15	.7949	.3539	553.4	.6227-03
9	400.00	.35000	37.000	.2315-01	.2739-01	.3015-01	40.16	.9296	.3539	553.2	.7281-03
9	400.00	.37500	38.000	.2817-01	.3333-01	.3669-01	40.14	1.131	.3542	553.7	.8862-03
9	400.00	.40000	39.000	.2415-01	.2857-01	.3145-01	40.17	.9700	.3537	553.0	.7595-03
9	400.00	.42500	40.000	.2715-01	.3212-01	.3535-01	40.17	1.090	.3537	553.0	.8539-03
9	400.00	.45000	41.000	.3128-01	.3701-01	.4073-01	40.17	1.257	.3537	553.0	.9839-03
9	400.00	.47500	42.000	.3501-01	.4141-01	.4558-01	40.21	1.408	.3531	552.1	.1101-02
9	400.00	.50000	43.000	.3704-01	.4382-01	.4822-01	40.22	1.490	.3530	551.8	.1165-02
9	400.00	.52500	44.000	.3591-01	.4248-01	.4675-01	40.22	1.444	.3530	551.9	.1129-02
9	400.00	.55000	45.000	.3909-01	.4623-01	.5089-01	40.22	1.572	.3530	551.9	.1229-02
9	400.00	.60000	46.000	.4333-01	.5125-01	.5640-01	40.22	1.743	.3529	551.8	.1363-02
9	400.00	.65000	47.000	.4617-01	.5462-01	.6011-01	40.21	1.857	.3531	552.0	.1452-02
9	400.00	.70000	48.000	.4228-01	.5000-01	.5504-01	40.21	1.700	.3530	551.9	.1329-02
9	400.00	.75000	49.000	.3825-01	.4524-01	.4979-01	40.20	1.538	.3532	552.1	.1203-02
9	400.00	.80000	50.000	.3514-01	.4156-01	.4574-01	40.22	1.413	.3529	551.8	.1105-02
9	400.00	.85000	51.000	.3859-01	.4563-01	.5020-01	40.31	1.555	.3516	549.7	.1213-02
9	400.00	.87500	52.000	.5058-01	.5980-01	.6580-01	40.33	2.040	.3513	549.2	.1590-02
9	400.00	.90000	53.000	.5337-01	.6310-01	.6942-01	40.33	2.152	.3512	549.1	.1678-02
9	400.00	.92500	54.000	.5774-01	.6826-01	.7510-01	40.34	2.330	.3510	548.7	.1815-02
9	400.00	.95000	55.000	.5140-01	.6075-01	.6683-01	40.38	2.075	.3504	547.9	.1615-02
9	420.00	.28500	18.000	.2850-01	.3372-01	.3711-01	40.17	1.145	.3537	553.0	.8964-03
9	420.00	.33700	19.000	.4206-01	.4976-01	.5478-01	40.16	1.689	.3538	553.2	.1323-02
9	420.00	.39000	20.000	.4301-01	.5088-01	.5601-01	40.17	1.728	.3537	553.0	.1353-02
9	420.00	.42600	21.000	.3951-01	.4674-01	.5145-01	40.16	1.587	.3539	553.2	.1243-02
9	420.00	.47800	22.000	.3602-01	.4261-01	.4691-01	40.18	1.447	.3536	552.8	.1133-02
9	420.00	.53000	23.000	.3652-01	.4320-01	.4756-01	40.17	1.467	.3537	552.9	.1149-02
9	420.00	.56700	24.000	.3817-01	.4515-01	.4970-01	40.17	1.533	.3537	553.0	.1200-02
9	420.00	.62000	25.000	.4209-01	.4980-01	.5482-01	40.17	1.691	.3537	553.0	.1324-02
9	420.00	.67000	26.000	.4353-01	.5150-01	.5669-01	40.17	1.749	.3536	552.9	.1369-02
9	420.00	.70500	27.000	.4722-01	.5586-01	.6149-01	40.17	1.897	.3537	552.9	.1485-02
9	420.00	.75000	28.000	.4763-01	.5635-01	.6203-01	40.17	1.913	.3537	553.0	.1498-02
9	420.00	.80000	29.000	.3930-01	.4648-01	.5116-01	40.21	1.580	.3531	552.0	.1236-02
9	420.00	.82400	30.000	.2056-01	.2431-01	.2675-01	40.29	.8283	.3519	550.1	.6464-03
9	437.50	.27500	1.0000	.4738-01	.5605-01	.6169-01	40.20	1.904	.3533	552.4	.1490-02
9	442.00	.30000	2.0000	.4305-01	.5092-01	.5605-01	40.21	1.731	.3531	552.0	.1354-02
9	445.00	.32500	3.0000	.3947-01	.4669-01	.5138-01	40.20	1.587	.3532	552.2	.1241-02
9	445.00	.35000	4.0000	.4271-01	.5052-01	.5560-01	40.22	1.718	.3529	551.8	.1343-02
9	445.00	.37500	5.0000	.4245-01	.5020-01	.5525-01	40.23	1.707	.3528	551.3	.1335-02

IH103 560/60T FUSELAGE (R3PV28)

RUN NUMBER	ZO	XB/LB	T/C NO	H/HREF R=1.0	H/HREF R=.900	H/HREF R=.850	QREF BTU/ FT2SEC	QDOT BTU/ FT2SEC	HW/HT	TW DEG. R	STN NO R=.900
9	445.00	.40000	6.0000	.4508-01	.5333-01	.5869-01	40.22	1.813	.3530	551.8	.1418-02
9	445.00	.42500	7.0000	.4294-01	.5079-01	.5589-01	40.22	1.727	.3529	551.8	.1350-02
9	445.00	.45000	8.0000	.4181-01	.4945-01	.5443-01	40.22	1.682	.3529	551.7	.1315-02
9	445.00	.47500	9.0000	.3875-01	.4583-01	.5044-01	40.23	1.559	.3528	551.6	.1218-02
9	445.00	.50000	10.000	.3503-01	.4143-01	.4560-01	40.22	1.409	.3529	551.7	.1102-02
9	445.00	.55000	12.000	.3188-01	.3771-01	.4150-01	40.23	1.283	.3527	551.5	.1003-02
9	445.00	.60000	13.000	.3202-01	.3787-01	.4168-01	40.23	1.288	.3528	551.6	.1007-02
9	445.00	.65000	14.000	.3906-01	.4620-01	.5084-01	40.23	1.571	.3528	551.6	.1228-02
9	445.00	.70000	15.000	.4007-01	.4740-01	.5216-01	40.23	1.612	.3528	551.6	.1260-02
9	445.00	.75000	16.000	.4363-01	.5160-01	.5679-01	40.23	1.755	.3527	551.4	.1372-02
9	445.00	.80000	17.000	.4156-01	.4914-01	.5408-01	40.27	1.674	.3521	550.5	.1307-02

IH103 560/60T FUSELAGE (R3PV29)

FUSELAGE

PARAMETRIC DATA

MACH = 5.250 ALPHA = -5.000 BETA = -5.000 ELEVON = .0000
BDFLAP = .0000 SPDBRK = .0000

TEST CONDITIONS

RUN NUMBER	ALPHA DEG.	BETA DEG.	MACH	RN/FT /FT X10 6	PT PSIA	TT DEG. R	HT BTU/ LBM	PINF PSIA	TINF DEG. R	RHO SLUGS/ FT3	VINF FT/SEC	SCALE
10	-5.000	-5.000	5.250	1.000	101.1	1514.	373.2	.1391	238.8	.4989-04	3977.	.1750-01

RUN NUMBER	PHI DEG.	HS SPHERE TW=540
10	.0000	.1658

TEST DATA

RUN NUMBER	ZO	XB/LB	T/C NO	H/HREF R=1.0	H/HREF R=.900	H/HREF R=.850	QREF BTU/ FT2SEC	QDOT BTU/ FT2SEC	HW/HT	TW DEG. R	STN NO R=.900
10	355.00	.20000	71.000	.5367-01	.6353-01	.6996-01	39.82	2.137	.3560	553.7	.1683-02
10	355.00	.22500	72.000	.3878-01	.4591-01	.5056-01	39.81	1.544	.3562	554.0	.1216-02
10	355.00	.25000	73.000	.2810-01	.3327-01	.3663-01	39.81	1.119	.3562	554.0	.8812-03
10	355.00	.27500	74.000	.1940-01	.2296-01	.2529-01	39.82	.7725	.3560	553.7	.6083-03
10	355.00	.80000	75.000	.4120-01	.4879-01	.5374-01	39.76	1.638	.3570	555.3	.1292-02
10	355.00	.85000	76.000	.6468-01	.7658-01	.8435-01	39.77	2.572	.3569	555.1	.2029-02
10	355.00	.90000	78.000	.6470-01	.7661-01	.8437-01	39.79	2.575	.3565	554.5	.2029-02
10	355.00	.95000	80.000	.6969-01	.8249-01	.9083-01	39.85	2.777	.3556	553.2	.2185-02
10	372.50	.30000	56.000	.1862-01	.2205-01	.2429-01	39.77	.7406	.3568	555.0	.5841-03
10	372.50	.32500	57.000	.1310-01	.1551-01	.1708-01	39.78	.5211	.3566	554.7	.4108-03
10	372.50	.35000	58.000	.9373-02	.1110-01	.1222-01	39.78	.3728	.3567	554.8	.2940-03
10	372.50	.37500	59.000	.6239-02	.7387-02	.8137-02	39.76	.2481	.3569	555.2	.1957-03
10	372.50	.40000	60.000	.7499-02	.8880-02	.9780-02	39.78	.2983	.3568	554.9	.2352-03
10	372.50	.42500	61.000	.1400-01	.1657-01	.1826-01	39.76	.5566	.3569	555.1	.4390-03
10	372.50	.45000	62.000	.2196-01	.2600-01	.2864-01	39.77	.8732	.3568	555.0	.6887-03
10	372.50	.50000	64.000	.3803-01	.4503-01	.4960-01	39.78	1.513	.3567	554.9	.1193-02
10	372.50	.55000	66.000	.4606-01	.5454-01	.6006-01	39.79	1.833	.3565	554.6	.1445-02
10	372.50	.60000	67.000	.5086-01	.6022-01	.6632-01	39.80	2.024	.3564	554.4	.1595-02
10	372.50	.65000	68.000	.5378-01	.6368-01	.7013-01	39.78	2.139	.3566	554.7	.1687-02
10	372.50	.70000	69.000	.5357-01	.6350-01	.6998-01	39.53	2.117	.3606	560.9	.1681-02
10	372.50	.75000	70.000	.5172-01	.6126-01	.6749-01	39.71	2.054	.3578	556.6	.1623-02

IH103 560/60T FUSELAGE (R3PV29)

RUN NUMBER	ZO	XB/LB	T/C NO	H/HREF R=1.0	H/HREF R=.900	H/HREF R=.850	QREF BTU/ FT2SEC	QDOT BTU/ FT2SEC	HW/HT	TW DEG. R	STN NO R=.900
10	400.00	.20000	31.000	.7124-01	.8436-01	.9292-01	39.76	2.832	.3570	555.3	.2234-02
10	400.00	.22500	32.000	.5044-01	.5975-01	.6582-01	39.70	2.003	.3579	556.7	.1582-02
10	400.00	.25000	33.000	.3420-01	.4051-01	.4463-01	39.69	1.357	.3581	557.0	.1073-02
10	400.00	.27500	34.000	.2281-01	.2702-01	.2977-01	39.70	.9057	.3579	556.7	.7157-03
10	400.00	.30000	35.000	.1661-01	.1968-01	.2168-01	39.69	.6594	.3580	556.8	.5212-03
10	400.00	.32500	36.000	.1572-01	.1862-01	.2051-01	39.70	.6241	.3580	556.8	.4932-03
10	400.00	.35000	37.000	.1676-01	.1986-01	.2188-01	39.69	.6653	.3581	557.0	.5259-03
10	400.00	.37500	38.000	.1809-01	.2143-01	.2361-01	39.71	.7184	.3578	556.5	.5676-03
10	400.00	.40000	39.000	.2014-01	.2385-01	.2628-01	39.70	.7996	.3579	556.7	.6318-03
10	400.00	.42500	40.000	.1529-01	.1811-01	.1995-01	39.70	.6071	.3579	556.7	.4797-03
10	400.00	.45000	41.000	.1563-01	.1852-01	.2040-01	39.70	.6207	.3579	556.6	.4905-03
10	400.00	.47500	42.000	.2052-01	.2430-01	.2677-01	39.74	.8156	.3572	555.6	.6437-03
10	400.00	.50000	43.000	.2634-01	.3120-01	.3436-01	39.75	1.047	.3571	555.4	.8263-03
10	400.00	.52500	44.000	.2793-01	.3307-01	.3643-01	39.75	1.110	.3572	555.6	.8759-03
10	400.00	.55000	45.000	.3383-01	.4007-01	.4413-01	39.74	1.345	.3572	555.6	.1061-02
10	400.00	.60000	46.000	.3945-01	.4672-01	.5146-01	39.74	1.568	.3573	555.8	.1237-02
10	400.00	.65000	47.000	.4430-01	.5247-01	.5780-01	39.72	1.760	.3575	556.1	.1390-02
10	400.00	.70000	48.000	.5144-01	.6093-01	.6711-01	39.72	2.043	.3576	556.2	.1614-02
10	400.00	.75000	49.000	.5220-01	.6184-01	.6813-01	39.69	2.072	.3581	557.1	.1638-02
10	400.00	.80000	50.000	.4971-01	.5888-01	.6487-01	39.69	1.973	.3580	556.9	.1560-02
10	400.00	.85000	51.000	.7288-01	.8629-01	.9503-01	39.80	2.900	.3564	554.4	.2286-02
10	400.00	.87500	52.000	.8133-01	.9628-01	.1060	39.82	3.238	.3561	553.8	.2550-02
10	400.00	.90000	53.000	.6759-01	.8002-01	.8812-01	39.82	2.691	.3561	553.9	.2120-02
10	400.00	.92500	54.000	.6294-01	.7451-01	.8204-01	39.85	2.508	.3556	553.2	.1974-02
10	400.00	.95000	55.000	.5581-01	.6605-01	.7272-01	39.88	2.225	.3551	552.4	.1750-02
10	420.00	.28500	18.000	.2181-01	.2583-01	.2846-01	39.71	.8662	.3577	556.4	.6842-03
10	420.00	.33700	19.000	.3875-01	.4589-01	.5056-01	39.71	1.539	.3578	556.6	.1216-02
10	420.00	.39000	20.000	.5135-01	.6082-01	.6700-01	39.71	2.039	.3577	556.4	.1611-02
10	420.00	.42600	21.000	.5056-01	.5988-01	.6597-01	39.70	2.007	.3579	556.7	.1586-02
10	420.00	.47800	22.000	.4834-01	.5726-01	.6307-01	39.72	1.920	.3577	556.3	.1516-02
10	420.00	.53000	23.000	.5388-01	.6381-01	.7030-01	39.70	2.139	.3579	556.6	.1690-02
10	420.00	.56700	24.000	.5851-01	.6930-01	.7634-01	39.70	2.323	.3580	556.8	.1836-02
10	420.00	.62000	25.000	.5963-01	.7064-01	.7782-01	39.69	2.367	.3581	556.9	.1871-02
10	420.00	.67000	26.000	.5398-01	.6394-01	.7044-01	39.68	2.142	.3582	557.1	.1694-02
10	420.00	.70500	27.000	.5066-01	.6001-01	.6611-01	39.67	2.010	.3583	557.3	.1589-02
10	420.00	.75000	28.000	.4463-01	.5287-01	.5825-01	39.66	1.770	.3586	557.8	.1400-02
10	420.00	.80000	29.000	.3709-01	.4393-01	.4840-01	39.70	1.472	.3579	556.7	.1164-02
10	420.00	.82400	30.000	.3545-01	.4197-01	.4622-01	39.80	1.411	.3564	554.4	.1112-02
10	437.50	.27500	1.0000	.5449-01	.6452-01	.7106-01	39.76	2.166	.3570	555.4	.1709-02
10	442.00	.30000	2.0000	.4948-01	.5859-01	.6453-01	39.77	1.968	.3568	555.0	.1552-02
10	445.00	.32500	3.0000	.4331-01	.5128-01	.5649-01	39.77	1.723	.3568	555.0	.1358-02
10	445.00	.35000	4.0000	.4801-01	.5685-01	.6261-01	39.78	1.910	.3567	554.8	.1506-02
10	445.00	.37500	5.0000	.4778-01	.5658-01	.6231-01	39.79	1.901	.3566	554.6	.1499-02

IH103 560/60T FUSELAGE (R3PV29)

RUN NUMBER	ZO	XB/LB	T/C NO	H/HREF R=1.0	H/HREF R=.900	H/HREF R=.850	QREF BTU/ FT2SEC	QDOT BTU/ FT2SEC	HW/HT	TW DEG. R	STN NO R=.900
10	445.00	.40000	6.0000	.5254-01	.6221-01	.6852-01	39.77	2.090	.3568	555.0	.1648-02
10	445.00	.42500	7.0000	.4966-01	.5880-01	.6476-01	39.78	1.976	.3566	554.7	.1558-02
10	445.00	.45000	8.0000	.5168-01	.6119-01	.6740-01	39.78	2.056	.3567	554.8	.1621-02
10	445.00	.47500	9.0000	.5371-01	.6359-01	.7004-01	39.78	2.136	.3567	554.8	.1684-02
10	445.00	.50000	10.000	.5303-01	.6279-01	.6915-01	39.78	2.109	.3567	554.8	.1663-02
10	445.00	.55000	12.000	.5091-01	.6028-01	.6639-01	39.78	2.025	.3567	554.8	.1597-02
10	445.00	.60000	13.000	.4751-01	.5625-01	.6195-01	39.77	1.889	.3568	554.9	.1490-02
10	445.00	.65000	14.000	.5326-01	.6307-01	.6946-01	39.76	2.118	.3569	555.2	.1671-02
10	445.00	.70000	15.000	.5346-01	.6331-01	.5973-01	39.76	2.126	.3570	555.3	.1677-02
10	445.00	.75000	16.000	.5154-01	.6103-01	.6722-01	39.75	2.049	.3571	555.5	.1617-02
10	445.00	.80000	17.000	.5708-01	.6758-01	.7443-01	39.79	2.271	.3565	554.6	.1790-02

IH103 560/60T FUSELAGE (R3PV30)

FUSELAGE

PARAMETRIC DATA

MACH = 5.250 ALPHA = -5.000 BETA = -3.000 ELEVON = .0000
BDFLAP = .0000 SPDBRK = .0000

TEST CONDITIONS

RUN NUMBER	ALPHA DEG.	BETA DEG.	MACH	RN/FT /FT X10 6	PT PSIA	TT DEG. R	HT BTU/ LBM	PINF PSIA	TINF DEG. R	RHO SLUGS/ FT3	VINF FT/SEC	SCALE
14	-5.000	-3.000	5.250	.9809	99.96	1522.	375.3	.1375	240.2	.4805-04	3988.	.1750-01

RUN NUMBER	PHI DEG.	HS SPHERE TW=540
14	.0000	.1649

TEST DATA

RUN NUMBER	ZO	XB/LB	T/C NO	H/HREF R=1.0	H/HREF R=.900	H/HREF R=.850	QREF BTU/ FT2SEC	QDOT BTU/ FT2SEC	HW/HT	TW DEG. R	STN NO R=.900
14	355.00	.20000	71.000	.4566-01	.5395-01	.5934-01	40.26	1.838	.3494	546.5	.1443-02
14	355.00	.22500	72.000	.3455-01	.4082-01	.4490-01	40.24	1.390	.3497	547.0	.1092-02
14	355.00	.25000	73.000	.2630-01	.3108-01	.3419-01	40.21	1.058	.3500	547.5	.8310-03
14	355.00	.27500	74.000	.1813-01	.2143-01	.2357-01	40.23	.7295	.3498	547.1	.5730-03
14	355.00	.80000	75.000	.3433-01	.4059-01	.4465-01	40.17	1.379	.3508	548.6	.1085-02
14	355.00	.85000	76.000	.4941-01	.5840-01	.6425-01	40.16	1.984	.3508	548.7	.1562-02
14	355.00	.90000	78.000	.6984-01	.8256-01	.9083-01	40.15	2.804	.3511	549.1	.2207-02
14	355.00	.95000	80.000	.5890-01	.6961-01	.7657-01	40.23	2.369	3498	547.1	.1861-02
14	372.50	.30000	56.000	.1544-01	.1825-01	.2007-01	40.19	.6204	.3504	548.1	.4879-03
14	372.50	.32500	57.000	.1104-01	.1305-01	.1436-01	40.18	.4437	.3505	548.2	.3489-03
14	372.50	.35000	58.000	.7798-02	.9217-02	.1014-01	40.18	.3133	.3505	548.2	.2464-03
14	372.50	.37500	59.000	.5083-02	.6008-02	.6609-02	40.18	.2042	.3506	548.4	.1606-03
14	372.50	.40000	60.000	.8079-02	.9549-02	.1051-01	40.18	.3246	.3505	548.2	.2553-03
14	372.50	.42500	61.000	.1310-01	.1548-01	.1703-01	40.19	.5264	.3504	548.1	.4140-03
14	372.50	.45000	62.000	.1851-01	.2188-01	.2407-01	40.20	.7442	.3502	547.7	.5850-03
14	372.50	.50000	64.000	.3539-01	.4182-01	.4601-01	40.21	1.423	.3501	547.6	.1118-02
14	372.50	.55000	66.000	.3536-01	.4178-01	.4596-01	40.23	1.422	.3498	547.1	.1117-02
14	372.50	.60000	67.000	.4241-01	.5013-01	.5514-01	40.21	1.706	.3501	547.5	.1340-02
14	372.50	.65000	68.000	.5470-01	.6465-01	.7111-01	40.21	2.199	.3501	547.6	.1729-02
14	372 50	.70000	69.000	.5304-01	.6275-01	.6908-01	39.95	2.119	.3542	553.9	.1678-02
14	372.50	.75000	70.000	.4822-01	.5701-01	.6273-01	40.12	1.935	.3514	549.7	.1524-02

IH103 560/60T FUSELAGE (R3PV30)

RUN NUMBER	ZO	XB/LB	T/C NO	H/HREF R=1.0	H/HREF R=.900	H/HREF R=.850	QREF BTU/ FT2SEC	QDOT BTU/ FT2SEC	HW/HT	TW DEG. R	STN NO R=.900
14	400.00	.20000	31.000	.5501-01	.6501-01	.7151-01	40.21	2.212	.3500	547.5	.1738-02
14	400.00	.22500	32.000	.3823-01	.4520-01	.4973-01	40.14	1.535	.3511	549.2	.1208-02
14	400.00	.25000	33.000	.2351-01	.2780-01	.3059-01	40.13	.9435	.3514	549.6	.7432-03
14	400.00	.27500	34.000	.1505-01	.1779-01	.1957-01	40.13	.6038	.3513	549.5	.4757-03
14	400.00	.30000	35.000	.1270-01	.1502-01	.1653-01	40.12	.5096	.3515	549.8	.4016-03
14	400.00	.32500	36.000	.1564-01	.1850-01	.2035-01	40.12	.6277	.3515	549.7	.4945-03
14	400.00	.35000	37.000	.1971-01	.2331-01	.2564-01	40.11	.7906	.3516	550.0	.6231-03
14	400.00	.37500	38.000	.2321-01	.2744-01	.3019-01	40.13	.9312	.3514	549.6	.7336-03
14	400.00	.40000	39.000	.2145-01	.2536-01	.2790-01	40.12	.8605	.3515	549.8	.6780-03
14	400.00	.42500	40.000	.2071-01	.2449-01	.2695-01	40.10	.8304	.3519	550.3	.6547-03
14	400.00	.45000	41.000	.2300-01	.2719-01	.2992-01	40.11	.9224	.3517	550.0	.7270-03
14	400.00	.47500	42.000	.2743-01	.3242-01	.3567-01	40.15	1.101	.3510	548.9	.8670-03
14	400.00	.50000	43.000	.3276-01	.3872-01	.4260-01	40.16	1.315	.3509	548.8	.1035-02
14	400.00	.52500	44.000	.3569-01	.4219-01	.4642-01	40.14	1.433	.3511	549.1	.1128-02
14	400.00	.55000	45.000	.4238-01	.5011-01	.5513-01	40.15	1.702	.3511	549.1	.1340-02
14	400.00	.60000	46.000	.4445-01	.5256-01	.5783-01	40.12	1.784	.3514	549.6	.1405-02
14	400.00	.65000	47.000	.4087-01	.4833-01	.5317-01	40.11	1.639	.3516	550.0	.1292-02
14	400.00	.70000	48.000	3636-01	.4299-01	.4730-01	40.10	1.458	.3518	550.2	.1149-02
14	400.00	.75000	49.000	.3373-01	.3989-01	.4390-01	40.05	1.351	.3526	551.4	.1066-02
14	400.00	.80000	50.000	.3266-01	.3863-01	.4251-01	40.04	1.308	.3527	551.6	.1033-02
14	400.00	.85000	51.000	.5966-01	.7051-01	.7757-01	40.19	2.397	.3505	548.1	.1885-02
14	400.00	.87500	52.000	.5561-01	.6573-01	.7230-01	40.21	2.236	.3502	547.7	.1758-02
14	400.00	.90000	53.000	.5239-01	.6192-01	.6811-01	40.20	2.106	.3503	547.9	.1656-02
14	400.00	.92500	54.000	.5629-01	.6653-01	.7318-01	40.23	2.265	.3498	547.2	.1779-02
14	400.00	.95000	55.000	.5237-01	.6188-01	.6806-01	40.27	2.109	.3491	546.1	.1655-02
14	420.00	.28500	18.000	.2377-01	.2810-01	.3092-01	40.15	.9545	.3510	549.0	.7513-03
14	420.00	.33700	19.000	.4260-01	.5036-01	.5540-01	40.14	1.710	.3512	549.2	.1346-02
14	420.00	.39000	20.000	.4757-01	.5624-01	.6187-01	40.14	1.909	.3512	549.3	.1504-02
14	420.00	.42600	21.000	.4304-01	.5089-01	.5599-01	40.13	1.727	.3514	549.5	.1361-02
14	420.00	.47800	22.000	.3961-01	.4683-01	.5153-01	40.13	1.590	.3514	549.6	.1252-02
14	420.00	.53000	23.000	.4206-01	.4973-01	.5472-01	40.12	1.688	.3515	549.7	.1330-02
14	420.00	.56700	24.000	.4729-01	.5592-01	.6153-01	40.11	1.897	.3516	550.0	.1495-02
14	420.00	.62000	25.000	.5044-01	.5965-01	.6563-01	40.10	2.023	.3519	550.3	.1595-02
14	420.00	.67000	26.000	.4756-01	.5624-01	.6189-01	40.08	1.906	.3521	550.7	.1504-02
14	420.00	.70500	27.000	.4836-01	.5719-01	.6293-01	40.07	1.938	.3522	550.9	.1529-02
14	420.00	.75000	28.000	.4547-01	.5378-01	.5919-01	40.04	1.821	.3528	551.7	.1438-02
14	420.00	.80000	29.000	.3478-01	.4113-01	.4526-01	40.09	1.394	.3520	550.6	.1100-02
14	420.00	.82400	30.000	.3964-01	.4685-01	.5153-01	40.22	1.594	.3500	547.4	.1253-02
14	437.50	.27500	1.0000	.5106-01	.6034-01	.6638-01	40.20	2.053	.3502	547.7	.1614-02
14	442.00	.30000	2.0000	.4424-01	.5228-01	.5751-01	40.22	1.779	.3500	547.4	.1398-02
14	445.00	.32500	3.0000	.3726-01	.4403-01	.4843-01	40.24	1.500	.3496	546.7	.1177-02
14	445.00	.35000	4.0000	.3978-01	.4701-01	.5171-01	40.23	1.600	.3498	547.1	.1257-02
14	445.00	.37500	5.0000	.3993-01	.4719-01	.5191-01	40.23	1.607	.3497	547.0	.1262-02

IH103 560/60T FUSELAGE (R3PV30)

RUN NUMBER	ZO	XB/LB	T/C NO	H/HREF R=1.0	H/HREF R=.900	H/HREF R=.850	QREF BTU/ FT2SEC	QDOT BTU/ FT2SEC	HW/HT -	TW DEG. R	STN NO R=.900
14	445.00	.40000	6.0000	.4330-01	.5117-01	.5629-01	40.21	1.741	.3500	547.5	.1368-02
14	445.00	.42500	7.0000	.4129-01	.4879-01	.5367-01	40.22	1.661	.3499	547.3	.1305-02
14	445.00	.45000	8.0000	.4018-01	.4748-01	.5223-01	40.22	1.616	.3500	547.4	.1270-02
14	445.00	.47500	9.0000	.4058-01	.4796-01	.5276-01	40.22	1.632	.3500	547.4	.1283-02
14	445.00	.50000	10.000	.3937-01	.4653-01	.5119-01	40.22	1.583	.3500	547.4	.1244-02
14	445.00	.55000	12.000	.3574-01	.4224-01	.4646-01	40.21	1.437	.3500	547.5	.1129-02
14	445.00	.60000	13.000	.3172-01	.3749-01	.4124-01	40.21	1.275	.3501	547.6	.1002-02
14	445.00	.65000	14.000	.3878-01	.4584-01	.5043-01	40.19	1.559	.3504	548.0	.1226-02
14	445.00	.70000	15.000	.4499-01	.5318-01	.5850-01	40.18	1.808	.3506	548.3	.1422-02
14	445.00	.75000	16.000	.4847-01	.5730-01	.6304-01	40.16	1.947	.3508	548.7	.1532-02
14	445.00	.80000	17.000	.6358-01	.7514-01	.8266-01	40.20	2.556	.3502	547.7	.2009-02

IH103 560/60T FUSELAGE (R3PV31)

FUSELAGE

PARAMETRIC DATA

MACH = 5.250 ALPHA = .0000 BETA = -3.000 ELEVON = .0000
BDFLAP = .0000 SPDBRK = .0000

TEST CONDITIONS

RUN NUMBER	ALPHA DEG.	BETA DEG.	MACH	RN/FT /FT X10 6	PT PSIA	TT DEG. R	HT BTU/ LBM	PINF PSIA	TINF DEG. R	RHO SLUGS/ FT3	VINF FT/SEC	SCALE
13	.0000	-3.000	5.250	1.012	101.1	1503.	370.2	.1392	236.9	.4931-04	3961.	.1750-01

RUN NUMBER	PHI DEG.	HS SPHERE TW=540
13	.0000	.1657

TEST DATA

RUN NUMBER	ZO	XB/LB	T/C NO	H/HREF R=1.0	H/HREF R=.300	H/HREF R=.850	QREF BTU/ FT2SEC	QDOT BTU/ FT2SEC	HW/HT	TW DEG. R	STN NO R=.900
13	355.00	.20000	71.000	.3784-01	.4479-01	.4931-01	39.56	1.497	.3550	547.7	.1181-02
13	355.00	.22500	72.000	.2501-01	.2960-01	.3260-01	39.55	.9893	.3552	548.0	.7804-03
13	355.00	.25000	73.000	.1725-01	.2041-01	.2247-01	39.55	.6820	.3553	548.2	.5381-03
13	355.00	.27500	74.000	.9781-02	.1158-01	.1274-01	39.56	.3869	.3550	547.8	.3051-03
13	355.00	.80000	75.000	.2888-01	.3418-01	.3763-01	39.56	1.143	.3550	547.8	.9011-03
13	355.00	.85000	76.000	.4409-01	.5218-01	.5744-01	39.58	1.745	.3546	547.2	.1375-02
13	355.00	.90000	78.000	.3943-01	.4665-01	.5135-01	39.62	1.562	.3541	546.3	.1230-02
13	355.00	.95000	80.000	.3977-01	.4705-01	.5179-01	39.66	1.578	.3534	545.3	.1240-02
13	372.50	.30000	56.000	.6173-02	.7307-02	.8046-02	39.62	.2439	.3557	548.9	.1926-03
13	372.50	.32500	57.000	.4898-02	.5797-02	.6384-02	39.53	.1936	.3555	548.5	.1528-03
13	372.50	.35000	58.000	.3939-02	.4662-02	.5134-02	39.51	.1556	.3557	548.9	.1229-03
13	372.50	.37500	59.000	.3542-02	.4193-02	.4618-02	39.51	.1400	.3558	549.1	.1105-03
13	372.50	.40000	60.000	.7234-02	.8563-02	.9429-02	39.52	.2859	.3557	548.8	.2257-03
13	372.50	.42500	61.000	.1048-01	.1241-01	.1366-01	39.51	.4141	.3558	549.1	.3270-03
13	372.50	.45000	62.000	.1221-01	.1446-01	.1592-01	39.52	.4826	.3557	548.8	.3811-03
13	372.50	.50000	64.000	.1532-01	.1813-01	.1997-01	39.53	.6055	.3555	548.6	.4780-03
13	372.50	.55000	66.000	.2086-01	.2468-01	.2718-01	39.54	.8247	.3553	548.2	.6507-03
13	372.50	.60000	67.000	.3505-01	.4149-01	.4568-01	39.54	1.386	.3553	548.3	.1094-02
13	372.50	.65000	68.000	.3861-01	.4570-01	.5032-01	39.53	1.526	.3554	548.5	.1205-02
13	372.50	.70000	69.000	.3675-01	.4355-01	.4799-01	39.29	1.444	.3592	554.3	.1148-02
13	372.50	.75000	70.000	.3550-01	.4203-01	.4628-01	39.50	1.402	.3559	549.2	.1108-02

IH103 560/60T FUSELAGE (R3PV31)

RUN NUMBER	ZO	XB/LB	T/C NO	H/HREF R=1.0	H/HREF R=.900	H/HREF R=.850	QREF BTU/ FT2SEC	QDOT BTU/ FT2SEC	HW/HT	TW DEG. R	STN NO R=.900
13	400.00	.20000	31.000	.2791-01	.3304-01	.3638-01	39.50	1.102	.3559	549.2	.8709-03
13	400.00	.22500	32.000	.2244-01	.2658-01	.2927-01	39.44	.8853	.3568	550.6	.7005-03
13	400.00	.25000	33.000	.1570-01	.1859-01	.2047-01	39.43	.6190	.3570	550.8	.4899-03
13	400.00	.27500	34.000	.1340-01	.1587-01	.1748-01	39.44	.5286	.3569	550.6	.4183-03
13	400.00	.30000	35.000	.1411-01	.1671-01	.1840-01	39.44	.5564	.3569	550.8	.4403-03
13	400.00	.32500	36.000	.1706-01	.2020-01	.2224-01	39.44	.6727	.3569	550.7	.5323-03
13	400.00	.35000	37.000	.1861-01	.2203-01	.2427-01	39.43	.7336	.3571	551.0	.5808-03
13	400.00	.37500	38.000	.1880-01	.2226-01	.2452-01	39.47	.7421	.3565	550.1	.5868-03
13	400.00	.40000	39.000	.1855-01	.2197-01	.2420-01	39.45	.7321	.3567	550.4	.5791-03
13	400.00	.42500	40.000	.2110-01	.2499-01	.2752-01	39.44	.8323	.3569	550.7	.6587-03
13	400.00	.45000	41.000	.2385-01	.2824-01	.3110-01	39.44	.9407	.3568	550.6	.7444-03
13	400.00	.47500	42.000	.2616-01	.3097-01	.3411-01	39.48	1.033	.3562	549.7	.8164-03
13	400.00	.50000	43.000	.2653-01	.3141-01	.3459-01	39.49	1.048	.3561	549.4	.8279-03
13	400.00	.52500	44.000	.2477-01	.2932-01	.3229-01	39.49	.9782	.3561	549.4	.7729-03
13	400.00	.55000	45.000	.2686-01	.3179-01	.3501-01	39.49	1.061	.3561	549.5	.8380-03
13	400.00	.60000	46.000	.3188-01	.3775-01	.4157-01	39.49	1.259	.3562	549.6	.9950-03
13	400.00	.65000	47.000	.3716-01	.4399-01	.4844-01	39.48	1.467	.3562	549.7	.1159-02
13	400.00	.70000	48.000	.3877-01	.4589-01	.5054-01	39.49	1.531	.3561	549.5	.1210-02
13	400.00	.75000	49.000	.3593-01	.4253-01	.4684-01	39.48	1.418	.3563	549.8	.1121-02
13	400.00	.80000	50.000	.3231-01	.3825-01	.4213-01	39.49	1.276	.3560	549.4	.1008-02
13	400.00	.85000	51.000	.3553-01	.4204-01	.4628-01	39.60	1.407	.3545	546.9	.1108-02
13	400.00	.87500	52.000	.4473-01	.5292-01	.5826-01	39.61	1.772	.3542	546.5	.1395-02
13	400.00	.90000	53.000	.4851-01	.5740-01	.6319-01	39.62	1.922	.3540	546.3	.1513-02
13	400.00	.92500	54.000	.5368-01	.6350-01	.6990-01	39.66	2.129	.3534	545.3	.1674-02
13	400.00	.95000	55.000	.4791-01	.5667-01	.6237-01	39.70	1.902	.3529	544.5	.1494-02
13	420.00	.28500	18.000	.2512-01	.2975-01	.3276-01	39.45	.9911	.3567	550.4	.7840-03
13	420.00	.33700	19.000	.3549-01	.4202-01	.4629-01	39.44	1.400	.3568	550.6	.1108-02
13	420.00	.39000	20.000	.4055-01	.4801-01	.5288-01	39.45	1.600	.3567	550.4	.1266-02
13	420.00	.42600	21.000	.3673-01	.4349-01	.4790-01	39.44	1.449	.3569	550.7	.1146-02
13	420.00	.47800	22.000	.3132-01	.3708-01	.4084-01	39.46	1.236	.3566	550.3	.9774-03
13	420.00	.53000	23.000	.2868-01	.3396-01	.3740-01	39.45	1.132	.3567	550.4	.8952-03
13	420.00	.56700	24.000	.2815-01	.3333-01	.3671-01	39.45	1.111	.3568	550.5	.8786-03
13	420.00	.62000	25.000	.2971-01	.3518-01	.3875-01	39.44	1.172	.3569	550.7	.9273-03
13	420.00	.67000	26.000	.3038-01	.3597-01	.3962-01	39.45	1.199	.3567	550.4	.9482-03
13	420.00	.70500	27.000	.3505-01	.4150-01	.4571-01	39.45	1.383	.3568	550.5	.1094-02
13	420.00	.75000	28.000	.3999-01	.4735-01	.5215-01	39.45	1.578	.3568	550.6	.1248-02
13	420.00	.80000	29.000	.3409-01	.4036-01	.4445-01	39.49	1.346	.3561	549.4	.1064-02
13	420.00	.82400	30.000	.1709-01	.2023-01	.2227-01	39.59	.6766	.3546	547.2	.5332-03
13	437.50	.27500	1.0000	.4446-01	.5263-01	.5796-01	39.49	1.756	.3562	549.6	.1387-02
13	442.00	.30000	2.0000	.4019-01	.4758-01	.5239-01	39.50	1.587	.3560	549.3	.1254-02
13	445.00	.32500	3.0000	.3579-01	.4237-01	.4665-01	39.51	1.414	.3558	549.1	.1117-02
13	445.00	.35000	4.0000	.3872-01	.4584-01	.5047-01	39.51	1.530	.3558	549.1	.1208-02
13	445.00	.37500	5.0000	.3840-01	.4546-01	.5006-01	39.51	1.517	.3558	548.9	.1198-02

(R3PV31)

IH103 560/60T FUSELAGE

RUN NUMBER	ZO	XB/LB	T/C NO	H/HREF R=1.0	H/HREF R=.900	H/HREF R=.850	QREF BTU/ FT2SEC	QDOT BTU/ FT2SEC	HW/HT	TW DEG. R	STN NO R=.900
13	445.00	.40000	6.0000	.4141-01	.4902-01	.5398-01	39.50	1.636	.3559	549.2	.1292-02
13	445.00	.42500	7.0000	.3881-01	.4595-01	.5059-01	39.51	1.534	.3558	549.0	.1211-02
13	445.00	.45000	8.0000	.3780-01	.4475-01	.4928-01	39.51	1.493	.3558	549.1	.1180-02
13	445.00	.47500	9.0000	.3477-01	.4115-01	.4532-01	39.51	1.374	.3558	549.0	.1085-02
13	445.00	.50000	10.000	.3080-01	.3646-01	.4015-01	39.51	1.217	.3558	548.9	.9612-03
13	445.00	.55000	12.000	.2698-01	.3193-01	.3516-01	39.52	1.066	.3557	548.8	.8418-03
13	445.00	.60000	13.000	.2505-01	.2965-01	.3265-01	39.51	.9896	.3552	549.0	.7815-03
13	445.00	.65000	14.000	.2922-01	.3459-01	.3809-01	39.51	1.154	.3559	549.1	.9117-03
13	445.00	.70000	15.000	.2946-01	.3487-01	.3840-01	39.51	1.164	.3558	549.0	.9192-03
13	445.00	.75000	16.000	.2974-01	.3520-01	.3876-01	39.52	1.175	.3557	548.9	.9278-03
13	445.00	.80000	17.000	.2807-01	.3322-01	.3658-01	39.56	1.111	.3550	547.8	.8757-03

IH103 560/60T FUSELAGE (R3PV32)

FUSELAGE

PARAMETRIC DATA

MACH = 5.250 ALPHA = 5.000 BETA = -3.000 ELEVON = .0000
BDFLAP = .0000 SPDBRK = .0000

TEST CONDITIONS

RUN NUMBER	ALPHA DEG.	BETA DEG.	MACH	RN/FT /FT X10 6	PT PSIA	TT DEG. R	HT BTU/ LBM	PINF PSIA	TINF DEG. R	RHO SLUGS/ FT3	VINF FT/SEC	SCALE
15	5.000	-3.000	5.250	1.024	101.4	1496.	368.4	.1398	235.7	.4978-04	3951.	.1750-01

RUN NUMBER	PHI DEG.	HS SPHERE TW=540
15	.0000	.1660

TEST DATA

RUN NUMBER	ZO	XB/LB	T/C NO	H/HREF R=1.0	H/HREF R=.900	H/HREF R=.850	QREF BTU/ FT2SEC	QDOT BTU/ FT2SEC	HW/HT	TW DEG. R	STN NO R=.900
15	355.00	.20000	71.000	.3333-01	.3947-01	.4348-01	39.27	1.309	.3575	548.8	.1035-02
15	355.00	.22500	72.000	.2275-01	.2694-01	.2968-01	39.26	.8931	.3576	549.0	.7065-03
15	355.00	.25000	73.000	.1576-01	.1867-01	.2056-01	39.27	.6190	.3575	548.8	.4896-03
15	355.00	.27500	74.000	.9004-02	.1066-01	.1174-01	39.29	.3537	.3572	548.4	.2796-03
15	355.00	.80000	75.000	.1812-01	.2147-01	.2366-01	39.14	.7092	.3595	551.9	.5630-03
15	355.00	.85000	76.000	.2203-01	.2610-01	.2876-01	39.15	.8623	.3594	551.8	.6844-03
15	355.00	.90000	78.000	.1879-01	.2227-01	.2454-01	39.16	.7358	.3593	551.6	.5838-03
15	355.00	.95000	80.000	.2728-01	.3231-01	.3560-01	39.22	1.070	.3583	550.0	.8473-03
15	372.50	.30000	56.000	.6210-02	.7356-02	.8103-02	39.23	.2436	.3581	549.8	.1929-03
15	372.50	.32500	57.000	.4577-02	.5422-02	.5973-02	39.24	.1796	.3580	549.6	.1422-03
15	372.50	.35000	58.000	.4256-02	.5042-02	.5555-02	39.23	.1670	.3581	549.8	.1322-03
15	372.50	.37500	59.000	.3383-02	.4007-02	.4415-02	39.22	.1327	.3583	550.1	.1051-03
15	372.50	.40000	60.000	.7114-02	.8428-02	.9285-02	39.21	.2789	.3585	550.3	.2210-03
15	372.50	.42500	61.000	.1083-01	.1283-01	.1414-01	39.20	.4246	.3585	550.4	.3364-03
15	372.50	.45000	62.000	.1410-01	.1670-01	.1840-01	39.21	.5528	.3585	550.3	.4380-03
15	372.50	.50000	64.000	.2114-01	.2504-01	.2759-01	39.21	.8289	.3584	550.2	.6567-03
15	372.50	.55000	66.000	.2686-01	.3181-01	.3505-01	39.22	1.053	.3582	549.9	.8343-03
15	372.50	.60000	67.000	.3010-01	.3565-01	.3928-01	39.21	1.180	.3584	550.2	.9349-03
15	372.50	.65000	68.000	.2890-01	.3424-01	.3772-01	39.20	1.133	.3586	550.5	.8979-03
15	372.50	.70000	69.000	.2553-01	.3029-01	.3339-01	38.94	.9942	.3627	556.9	.7939-03
15	372.50	.75000	70.000	.2357-01	.2793-01	.3079-01	39.10	.9216	.3601	552.9	.7324-03

IH103 560/60T FUSELAGE (R3PV32)

RUN NUMBER	ZO	XB/LB	T/C NO	H/HREF R=1.0	H/HREF R=.900	H/HREF R=.850	QREF BTU/ FT2SEC	QDOT BTU/ FT2SEC	HW/HT	TW DEG. R	STN NO R=.900
15	400.00	.20000	31.000	.2644-01	.3132-01	.3450-01	39.22	1.037	.3583	550.0	.8213-03
15	400.00	.22500	32.000	.2045-01	.2423-01	.2670-01	39.16	.8006	.3593	551.6	.6353-03
15	400.00	.25000	33.000	.1370-01	.1623-01	.1788-01	39.15	.5362	.3594	551.9	.4255-03
15	400.00	.27500	34.000	.9608-02	.1139-01	.1255-01	39.15	.3762	.3594	551.7	.2985-03
15	400.00	.30000	35.000	.9284-02	.1100-01	.1212-01	39.14	.3634	.3595	551.8	.2885-03
15	400.00	.32500	36.000	.9377-02	.1111-01	.1224-01	39.14	.3671	.3595	551.8	.2914-03
15	400.00	.35000	37.000	.8499-02	.1007-01	.1110-01	39.13	.3326	.3597	552.2	.2641-03
15	400.00	.37500	38.000	.5010-02	.5936-02	.6541-02	39.16	.1962	.3592	551.4	.1556-03
15	400.00	.40000	39.000	.5101-02	.6045-02	.6662-02	39.13	.1996	.3596	552.1	.1585-03
15	400.00	.42500	40.000	.3883-02	.4602-02	.5072-02	39.13	.1519	.3597	552.3	.1207-03
15	400.00	.45000	41.000	.4676-02	.5541-02	.6106-02	39.13	.1830	.3597	552.2	.1453-03
15	400.00	.47500	42.000	.6718-02	.7960-02	.8771-02	39.16	.2631	.3592	551.4	.2087-03
15	400.00	.50000	43.000	.8851-02	.1049-01	.1156-01	39.17	.3466	.3591	551.4	.2750-03
15	400.00	.52500	44.000	.1180-01	.1398-01	.1541-01	39.16	.4620	.3593	551.6	.3666-03
15	400.00	.55000	45.000	.1503-01	.1781-01	.1962-01	39.15	.5884	.3593	551.7	.4670-03
15	400.00	.60000	46.000	.1972-01	.2337-01	.2575-01	39.13	.7717	.3596	552.1	.6127-03
15	400.00	.65000	47.000	.2127-01	.2521-01	.2779-01	39.11	.8321	.3600	552.6	.6611-03
15	400.00	.70000	48.000	.2394-01	.2837-01	.3127-01	39.10	.9359	.3601	552.9	.7439-03
15	400.00	.75000	49.000	.2814-01	.3336-01	.3677-01	39.05	1.099	.3609	554.1	.8746-03
15	400.00	.80000	50.000	.2881-01	.3416-01	.3765-01	39.04	1.125	.3611	554.3	.8956-03
15	400.00	.85000	51.000	.3029-01	.3589-01	.3955-01	39.16	1.186	.3592	551.4	.9411-03
15	400.00	.87500	52.000	.3954-01	.4685-01	.5162-01	39.18	1.549	.3589	551.0	.1229-02
15	400.00	.90000	53.000	.4130-01	.4893-01	.5391-01	39.17	1.618	.3590	551.2	.1283-02
15	400.00	.92500	54.000	.4117-01	.4877-01	.5373-01	39.22	1.614	.3583	550.1	.1279-02
15	400.00	.95000	55.000	.3676-01	.4354-01	.4796-01	39.26	1.443	.3577	549.1	.1142-02
15	420.00	.28500	18.000	.1647-01	.1951-01	.2149-01	39.18	.6451	.3589	551.1	.5115-03
15	420.00	.33700	19.000	.2162-01	.2562-01	.2823-01	39.16	.8466	.3592	551.5	.6717-03
15	420.00	.39000	20.000	.2238-01	.2652-01	.2922-01	39.15	.8762	.3594	551.7	.6954-03
15	420.00	.42600	21.000	.2076-01	.2460-01	.2711-01	39.14	.8125	.3596	552.0	.6450-03
15	420.00	.47800	22.000	.1495-01	.1772-01	.1953-01	39.14	.5853	.3595	551.9	.4647-03
15	420.00	.53000	23.000	.1505-01	.1784-01	.1966-01	39.12	.5889	.3598	552.4	.4677-03
15	420.00	.56700	24.000	.1815-01	.2151-01	.2370-01	39.11	.7097	.3600	552.7	.5639-03
15	420.00	.62000	25.000	.2365-01	.2804-01	.3090-01	39.09	.9247	.3603	553.1	.7351-03
15	420.00	.67000	26.000	.2730-01	.3236-01	.3566-01	39.09	1.067	.3604	553.3	.8483-03
15	420.00	.70500	27.000	.2937-01	.3482-01	.3838-01	39.06	1.147	.3607	553.8	.9130-03
15	420.00	.75000	28.000	.2909-01	.3448-01	.3800-01	39.03	1.175	.3613	554.7	.9039-03
15	420.00	.80000	29.000	.2649-01	.3140-01	.3460-01	39.07	1.035	.3606	553.5	.8231-03
15	420.00	.82400	30.000	.1452-01	.1720-01	.1895-01	39.19	.5692	.3587	550.7	.4511-03
15	437.50	.27500	1.0000	.3083-01	.3652-01	.4023-01	39.22	1.209	.3583	550.0	.9576-03
15	442.00	.30000	2.0000	.3264-01	.3866-01	.4259-01	39.24	1.281	.3580	549.6	.1014-02
15	445.00	.32500	3.0000	.3362-01	.3982-01	.4386-01	39.26	1.320	.3576	549.1	.1044-02
15	445.00	.35000	4.0000	.3774-01	.4470-01	.4924-01	39.25	1.481	.3578	549.2	.1172-02
15	445.00	.37500	5.0000	.3733-01	.4422-01	.4871-01	39.25	1.465	.3578	549.3	.1160-02

IH103 560/60T FUSELAGE (R3PV32)

RUN NUMBER	ZO	XB/LB	T/C NO	H/HREF R=1.0	H/HREF R=.900	H/HREF R=.850	QREF BTU/ FT2SEC	QDOT BTU/ FT2SEC	HW/HT	TW DEG. R	STN NO R=.900
15	445.00	.40000	6.0000	.3874-01	.4589-01	.5056-01	39.23	1.520	.3581	549.7	.1203-02
15	445.00	.42500	7.0000	.3587-01	.4249-01	.4680-01	39.24	1.407	.3580	549.6	.1114-02
15	445.00	.45000	8.0000	.3504-01	.4151-01	.4573-01	39.24	1.375	.3580	549.6	.1088-02
15	445.00	.47500	9.0000	.3319-01	.3931-01	.4331-01	39.23	1.302	.3581	549.7	.1031-02
15	445.00	.50000	10.000	.3065-01	.3631-01	.4000-01	39.23	1.203	.3581	549.8	.9522-03
15	445.00	.55000	12.000	.2603-01	.3084-01	.3397-01	39.23	1.021	.3582	549.9	.8087-03
15	445.00	.60000	13.000	.2623-01	.3108-01	.3424-01	39.21	1.029	.3584	550.3	.8149-03
15	445.00	.65000	14.000	.3205-01	.3797-01	.4184-01	39.19	1.256	.3587	550.7	.9958-03
15	445.00	.70000	15.000	.3063-01	.3629-01	.3999-01	39.18	1.200	.3590	551.1	.9517-03
15	445.00	.75000	16.000	.3001-01	.3556-01	.3919-01	39.16	1.175	.3593	551.6	.9325-03
15	445.00	.80000	17.000	.2616-01	.3099-01	.3415-01	39.19	1.025	.3587	550.7	.8127-03

IH103 560/60T FUSELAGE

FUSELAGE

PARAMETRIC DATA

MACH = 5.250 ALPHA = 10.00 BETA = -3.000 ELEVON = .0000
BDFLAP = .0000 SPDBRK = .0000

TEST CONDITIONS

RUN NUMBER	ALPHA DEG.	BETA DEG.	MACH	RN/FT /FT X10 6	PT PSIA	TT DEG. R	HT BTU/ LBM	PINF PSIA	TINF DEG. R	RHO SLUGS/ FT3	VINF FT/SEC	SCALE
16	10.00	-3.000	5.250	.9936	101.0	1520.	374.7	.1390	239.8	.4865-04	3985.	.1750-01

RUN NUMBER	PHI DEG.	HS SPHERE TW=540
16	.0000	.1658

TEST DATA

RUN NUMBER	ZO	XB/LB	T/C NO	H/HREF R=1.0	H/HREF R=.900	H/HREF R=.850	QREF BTU/ FT2SEC	QDOT BTU/ FT2SEC	HW/HT	TW DEG. R	STN NO R=.900
16	355.00	.20000	71.000	.2665-01	.3152-01	.3470-01	40.12	1.069	.3538	552.6	.8375-03
16	355.00	.22500	72.000	.1828-01	.2163-01	.2381-01	40.10	.7331	.3541	553.0	.5747-03
16	355.00	.25000	73.000	.1263-01	.1494-01	.1645-01	40.09	.5064	.3542	553.1	.3970-03
16	355.00	.27500	74.000	.7995-02	.9459-02	.1041-01	40.10	.3206	.3540	552.9	.2513-03
16	355.00	.80000	75.000	.2151-01	.2546-01	.2803-01	40.03	.8609	.3552	554.8	.6762-03
16	355.00	.85000	76.000	.3074-01	.3638-01	.4006-01	40.03	1.230	.3552	554.7	.9664-03
16	355.00	.90000	78.000	.2841-01	.3363-01	.3703-01	40.03	1.137	.3552	554.8	.8933-03
16	355.00	.95000	80.000	.1800-01	.2130-01	.2345-01	40.10	.7218	.3541	553.0	.5658-03
16	372.50	.30000	56.000	.7304-02	.8643-02	.9516-02	40.07	.2927	.3546	553.7	.2296-03
16	372.50	.32500	57.000	.6325-02	.7484-02	.8239-02	40.07	.2535	.3545	553.6	.1988-03
16	372.50	.35000	58.000	.6907-02	.8174-02	.8999-02	40.06	.2767	.3548	554.0	.2171-03
16	372.50	.37500	59.000	.8269-02	.9785-02	.1077-01	40.06	.3312	.3548	554.0	.2599-03
16	372.50	.40000	60.000	.1369-01	.1620-01	.1784-01	40.05	.5482	.3549	554.2	.4304-03
16	372.50	.42500	61.000	.1884-01	.2229-01	.2455-01	40.06	.7547	.3547	554.0	.5923-03
16	372.50	.45000	62.000	.2298-01	.2719-01	.2993-01	40.08	.9209	.3545	553.5	.7223-03
16	372.50	.50000	64.000	.2757-01	.3262-01	.3592-01	40.07	1.105	.3545	553.6	.8666-03
16	372.50	.55000	66.000	.2517-01	.2978-01	.3278-01	40.09	1.009	.3542	553.1	.7911-03
16	372.50	.60000	67.000	.2515-01	.2976-01	.3277-01	40.06	1.007	.3548	554.0	.7907-03
16	372.50	.65000	68.000	.2550-01	.3018-01	.3322-01	40.06	1.021	.3548	554.0	.8017-03
16	372.50	.70000	69.000	.2535-01	.3004-01	.3310-01	39.80	1.009	.3588	560.3	.7978-03
16	372.50	.75000	70.000	.2499-01	.2958-01	.3257-01	39.99	.9992	.3558	555.6	.7856-03

IH103 560/60T FUSELAGE

(R3PV33)

RUN NUMBER	ZO	XB/LB	T/C NO	H/HREF R=1.0	H/HREF R=.900	H/HREF R=.850	QREF BTU/ FT2SEC	QDOT BTU/ FT2SEC	HW/HT	TW DEG. R	STN NO R=.900
16	400.00	.20000	31.000	.4144-01	.4904-01	.5399-01	40.06	1.660	.3548	554.0	.1303-02
16	400.00	.22500	32.000	.3031-01	.3588-01	.3951-01	39.99	1.212	.3558	555.7	.9531-03
16	400.00	.25000	33.000	.2058-01	.2436-01	.2683-01	39.98	.8228	.3560	555.9	.6471-03
16	400.00	.27500	34.000	.1400-01	.1658-01	.1825-01	39.99	.5600	.3558	555.6	.4403-03
16	400.00	.30000	35.000	.1022-01	.1210-01	.1332-01	39.99	.4086	.3559	555.7	.3214-03
16	400.00	.32500	36.000	.8322-02	.9852-02	.1085-01	39.98	.3328	.3559	555.8	.2617-03
16	400.00	.35000	37.000	.7954-02	.9416-02	.1037-01	39.97	.3179	.3561	556.1	.2501-03
16	400.00	.37500	38.000	.5162-02	.6111-02	.6729-02	39.99	.2064	.3558	555.6	.1623-03
16	400.00	.40000	39.000	.6321-02	.7483-02	.8240-02	39.98	.2527	.3559	555.8	.1988-03
16	400.00	.42500	40.000	.6789-02	.8038-02	.8852-02	39.96	.2713	.3563	556.4	.2135-03
16	400.00	.45000	41.000	.8381-02	.9922-02	.1093-01	39.97	.3350	.3561	556.2	.2635-03
16	400.00	.47500	42.000	.1083-01	.1282-01	.1412-01	40.02	.4335	.3553	554.8	.3406-03
16	400.00	.50000	43.000	.1477-01	.1748-01	.1924-01	40.03	.5911	.3552	554.7	.4643-03
16	400.00	.52500	44.000	.2037-01	.2411-01	.2655-01	40.02	.8152	.3554	555.0	.6405-03
16	400.00	.55000	45.000	.2425-01	.2870-01	.3160-01	40.01	.9702	.3554	555.0	.7624-03
16	400.00	.60000	46.000	.2668-01	.3159-01	.3478-01	39.99	1.067	.3558	555.6	.8391-03
16	400.00	.65000	47.000	.2420-01	.2865-01	.3154-01	39.98	.9674	.3559	555.9	.7609-03
16	400.00	.70000	48.000	.2344-01	.2775-01	.3056-01	39.97	.9369	.3561	556.1	.7371-03
16	400.00	.75000	49.000	.2391-01	.2832-01	.3119-01	39.93	.9549	.3567	557.1	.7521-03
16	400.00	.80000	50.000	.2426-01	.2872-01	.3163-01	39.93	.9685	.3568	557.1	.7629-03
16	400.00	.85000	51.000	.1728-01	.2045-01	.2252-01	40.05	.6920	.3549	554.3	.5433-03
16	400.00	.87500	52.000	.1685-01	.1993-01	.2195-01	40.07	.6749	.3546	553.8	.5295-03
16	400.00	.90000	53.000	.2198-01	.2601-01	.2864-01	40.05	.8805	.3548	554.1	.6911-03
16	400.00	.92500	54.000	.3037-01	.3594-01	.3956-01	40.09	1.218	.3542	553.2	.9547-03
16	400.00	.95000	55.000	.4187-01	.4953-01	.5452-01	40.13	1.680	.3536	552.2	.1316-02
16	420.00	.28500	18.000	.1055-01	.1249-01	.1375-01	40.02	.4221	.3554	555.0	.3317-03
16	420.00	.33700	19.000	.8511-02	.1007-01	.1109-01	40.00	.3404	.3556	555.4	.2676-03
16	420.00	.39000	20.000	.7456-02	.8827-02	.9719-02	39.99	.2982	.3558	555.6	.2345-03
16	420.00	.42600	21.000	.6626-02	.7843-02	.8637-02	39.99	.2649	.3559	555.7	.2083-03
16	420.00	.47800	22.000	.6870-02	.8133-02	.8956-02	39.99	.2748	.3558	555.6	.2160-03
16	420.00	.53000	23.000	.1196-01	.1416-01	.1559-01	39.98	.4783	.3559	555.8	.3761-03
16	420.00	.56700	24.000	.1789-01	.2118-01	.2332-01	39.98	.7151	.3560	556.0	.5625-03
16	420.00	.62000	25.000	.2469-01	.2924-01	.3220-01	39.96	.9867	.3563	556.4	.7766-03
16	420.00	.67000	26.000	.2396-01	.2836-01	.3124-01	39.95	.9570	.3565	556.7	.7534-03
16	420.00	.70500	27.000	.2366-01	.2802-01	.3085-01	39.94	.9449	.3566	556.9	.7441-03
16	420.00	.75000	28.000	.2453-01	.2905-01	.3200-01	39.90	.9790	.3571	557.7	.7717-03
16	420.00	.80000	29.000	.2210-01	.2616-01	.2881-01	39.95	.8827	.3564	556.6	.6949-03
16	420.00	.82400	30.000	.9822-02	.1162-01	.1280-01	40.06	.3935	.3547	554.0	.3088-03
16	437.50	.27500	1.0000	.1507-01	.1783-01	.1963-01	40.06	.6037	.3547	553.9	.4737-03
16	442.00	.30000	2.0000	.1488-01	.1761-01	.1938-01	40.06	.5963	.3544	553.5	.4677-03
16	445.00	.32500	3.0000	.1481-01	.1752-01	.1929-01	40.11	.5940	.3540	552.8	.4655-03
16	445.00	.35000	4.0000	.1373-01	.1624-01	.1788-01	40.09	.5503	.3542	553.2	.4314-03
16	445.00	.37500	5.0000	.1126-01	.1332-01	.1466-01	40.09	.4513	.3542	553.2	.3538-03

(R3PV33)

IH103 560/60T FUSELAGE

RUN NUMBER	ZO	XB/LB	T/C NO	H/HREF R=1.0	H/HREF R=.900	H/HREF R=.850	QREF BTU/ FT2SEC	QDOT BTU/ FT2SEC	HW/HT	TW DEG. R	STN NO R=.900
16	445.00	.40000	6.0000	.9482-02	.1122-01	.1235-01	40.08	.3800	.3545	553.6	.2981-03
16	445.00	.42500	7.0000	.8296-02	.9816-02	.1081-01	40.08	.3325	.3544	553.4	.2608-03
16	445.00	.45000	8.0000	.8252-02	.9765-02	.1075-01	40.08	.3307	.3544	553.5	.2594-03
16	445.00	.47500	9.0000	.7709-02	.9122-02	.1004-01	40.08	.3089	.3545	553.6	.2423-03
16	445.00	.50000	10.000	.6936-02	.8207-02	.9035-02	40.07	.2779	.3545	553.6	.2180-03
16	445.00	.55000	12.000	.9249-02	.1095-01	.1205-01	40.07	.3706	.3545	553.7	.2908-03
16	445.00	.60000	13.000	.1391-01	.1646-01	.1812-01	40.05	.5570	.3548	554.1	.4372-03
16	445.00	.65000	14.000	.2095-01	.2479-01	.2729-01	40.05	.8389	.3549	554.2	.6585-03
16	445.00	.70000	15.000	.2322-01	.2748-01	.3026-01	40.04	.9296	.3551	554.5	.7300-03
16	445.00	.75000	16.000	.2292-01	.2712-01	.2986-01	40.02	.9170	.3554	555.0	.7205-03
16	445.00	.80000	17.000	.2283-01	.2702-01	.2975-01	40.05	.9144	.3548	554.1	.7177-03

IH103 560/60T FUSELAGE

(R3PV34)

FUSELAGE

PARAMETRIC DATA

MACH = 5.250 ALPHA = 10.00 BETA = -9.000 ELEVON = .0000
BDFLAP = .0000 SPDBRK = .0000

TEST CONDITIONS

RUN NUMBER	ALPHA DEG.	BETA DEG.	MACH	RN/FT /FT X10 6	PT PSIA	TT DEG. R	HT BTU/ LBM	PINF PSIA	TINF DEG. R	RHO SLUGS/ FT3	VINF FT/SEC	SCALE
20	10.00	-9.000	5.250	1.001	100.0	1504.	370.5	.1378	237.1	.4878-04	3962.	.1750-01

RUN NUMBER	PHI DEG.	HS SPHERE TW=540
20	.0000	.1649

TEST DATA

RUN NUMBER	ZO	XB/LB	T/C NO	H/HREF R=1.0	H/HREF R=.900	H/HREF R=.850	QREF BTU/ FT2SEC	QDOT BTU/ FT2SEC	HW/HT	TW DEG. R	STN NO R=.900
20	355.00	.20000	71.000	.4413-01	.5227-01	.5759-01	39.18	1.729	.3583	553.2	.1385-02
20	355.00	.22500	72.000	.3289-01	.3896-01	.4293-01	39.16	1.288	.3585	553.5	.1033-02
20	355.00	.25000	73.000	.2484-01	.2942-01	.3242-01	39.15	.9722	.3587	553.9	.7797-03
20	355.00	.27500	74.000	.1638-01	.1940-01	.2137-01	39.17	.6414	.3584	553.4	.5141-03
20	355.00	.80000	75.000	.2663-01	.3155-01	.3476-01	39.13	1.042	.3590	554.2	.8361-03
20	355.00	.85000	76.000	.3293-01	.3901-01	.4299-01	39.13	1.288	.3590	554.3	.1034-02
20	355.00	.90000	78.000	.2366-01	.2803-01	.3089-01	39.12	.9256	.3591	554.4	.7428-03
20	355.00	.95000	80.000	.1847-01	.2188-01	.2411-01	39.19	.7239	.3581	552.9	.5799-03
20	372.50	.30000	56.000	.1566-01	.1855-01	.2044-01	39.13	.6128	.3590	554.2	.4916-03
20	372.50	.32500	57.000	.1243-01	.1473-01	.1623-01	39.14	.4865	.3588	554.0	.3902-03
20	372.50	.35000	58.000	.1057-01	.1253-01	.1380-01	39.14	.4138	.3589	554.1	.3319-03
20	372.50	.37500	59.000	.1250-01	.1480-01	.1631-01	39.14	.4891	.3588	554.0	.3923-03
20	372.50	.40000	60.000	.1566-01	.1856-01	.2045-01	39.14	.6131	.3588	553.9	.4917-03
20	372.50	.42500	61.000	.2094-01	.2480-01	.2733-01	39.16	.8198	.3586	553.7	.6573-03
20	372.50	.45000	62.000	.2613-01	.3095-01	.3410-01	39.17	1.023	.3583	553.3	.8201-03
20	372.50	.50000	64.000	.3475-01	.4117-01	.4536-01	39.18	1.362	.3582	553.1	.1091-02
20	372.50	.55000	66.000	.3240-01	.3838-01	.4228-01	39.19	1.270	.3580	552.8	.1017-02
20	372.50	.60000	67.000	.2906-01	.3443-01	.3793-01	39.18	1.138	.3583	553.2	.9123-03
20	372.50	.65000	68.000	.3029-01	.3589-01	.3954-01	39.16	1.186	.3585	553.5	.9510-03
20	372.50	.70000	69.000	.3084-01	.3653-01	.4025-01	39.15	1.207	.3586	553.7	.9681-03
20	372.50	.75000	70.000	.3313-01	.3926-01	.4327-01	39.09	1.295	.3596	555.2	.1040-02

IH103 560/60T FUSELAGE (R3PV34)

RUN NUMBER	ZO	XB/LB	T/C NO	H/HREF R=1.0	H/HREF R=.900	H/HREF R=.850	QREF BTU/ FT2SEC	QDOT BTU/ FT2SEC	HW/HT	TW DEG. R	STN NO R=.900
20	400.00	.20000	31.000	.7224-01	.8560-01	.9432-01	39.11	2.825	.3593	554.7	.2268-02
20	400.00	.22500	32.000	.5113-01	.6061-01	.6679-01	39.05	1.997	.3603	556.3	.1606-02
20	400.00	.25000	33.000	.3689-01	.4373-01	.4820-01	39.04	1.440	.3605	556.5	.1159-02
20	400.00	.27500	34.000	.2746-01	.3255-01	.3587-01	39.05	1.072	.3602	556.1	.8623-03
20	400.00	.30000	35.000	.2156-01	.2556-01	.2816-01	39.05	.8418	.3603	556.3	.6771-03
20	400.00	.32500	36.000	.1793-01	.2125-01	.2342-01	39.05	.7000	.3603	556.2	.5630-03
20	400.00	.35000	37.000	.1434-01	.1700-01	.1873-01	39.05	.5600	.3603	556.3	.4504-03
20	400.00	.37500	38.000	.1421-01	.1685-01	.1857-01	39.06	.5551	.3601	556.0	.4464-03
20	400.00	.40000	39.000	.1037-01	.1229-01	.1354-01	39.07	.4050	.3599	555.7	.3256-03
20	400.00	.42500	40.000	.9729-02	.1153-01	.1271-01	39.04	.3798	.3604	556.5	.3056-03
20	400.00	.45000	41.000	.1080-01	.1280-01	.1410-01	39.05	.4216	.3602	556.2	.3391-03
20	400.00	.47500	42.000	.1325-01	.1570-01	.1730-01	39.12	.5183	.3592	554.6	.4160-03
20	400.00	.50000	43.000	.1733-01	.2053-01	.2262-01	39.12	.6780	.3591	554.4	.5441-03
20	400.00	.52500	44.000	.2243-01	.2658-01	.2929-01	39.12	.8775	.3591	554.5	.7043-03
20	400.00	.55000	45.000	.2619-01	.3104-01	.3420-01	39.12	1.025	.3591	554.5	.8224-03
20	400.00	.60000	46.000	.3290-01	.3898-01	.4295-01	39.11	1.286	.3594	554.9	.1033-02
20	400.00	.65000	47.000	.3363-01	.3985-01	.4391-01	39.09	1.315	.3596	555.2	.1056-02
20	400.00	.70000	48.000	.3393-01	.4021-01	.4430-01	39.09	1.326	.3596	555.3	.1065-02
20	400.00	.75000	49.000	.3481-01	.4127-01	.4548-01	39.05	1.359	.3603	556.3	.1093-02
20	400.00	.80000	50.000	.3485-01	.4130-01	.4552-01	39.05	1.361	.3603	556.2	.1094-02
20	400.00	.85000	51.000	.2324-01	.2753-01	.3033-01	39.16	.9100	.3585	553.5	.7295-03
20	400.00	.87500	52.000	.3147-01	.3728-01	.4107-01	39.18	1.233	.3582	553.0	.9880-03
20	400.00	.90000	53.000	.4726-01	.5598-01	.6168-01	39.18	1.851	.3583	553.2	.1484-02
20	400.00	.92500	54.000	.6697-01	.7933-01	.8739-01	39.20	2.625	.3579	552.6	.2102-02
20	400.00	.95000	55.000	.6832-01	.8091-01	.8913-01	39.23	2.680	.3574	551.8	.2144-02
20	420.00	.28500	18.000	.2806-01	.3326-01	.3665-01	39.06	1.096	.3600	555.9	.8813-03
20	420.00	.33700	19.000	.2194-01	.2600-01	.2866-01	39.06	.8569	.3601	556.0	.6890-03
20	420.00	.39000	20.000	.1587-01	.1881-01	.2074-01	39.05	.6198	.3603	556.3	.4985-03
20	420.00	.42600	21.000	.1314-01	.1557-01	.1716-01	39.06	.5133	.3601	555.9	.4126-03
20	420.00	.47800	22.000	.1059-01	.1255-01	.1383-01	39.07	.4137	.3599	555.6	.3325-03
20	420.00	.53000	23.000	.1562-01	.1851-01	.2040-01	39.08	.6106	.3597	555.4	.4906-03
20	420.00	.56700	24.000	.2257-01	.2675-01	.2948-01	39.08	.8820	.3598	555.6	.7088-03
20	420.00	.62000	25.000	.2909-01	.3448-01	.3800-01	39.07	1.137	.3599	555.7	.9136-03
20	420.00	.67000	26.000	.3159-01	.3745-01	.4127-01	39.05	1.234	.3602	556.2	.9922-03
20	420.00	.70500	27.000	.3480-01	.4125-01	.4547-01	39.05	1.359	.3603	556.3	.1093-02
20	420.00	.75000	28.000	.3693-01	.4378-01	.4825-01	39.02	1.441	.3607	557.0	.1160-02
20	420.00	.80000	29.000	.3334-01	.3951-01	.4354-01	39.06	1.302	.3601	555.9	.1047-02
20	420.00	.82400	30.000	.1535-01	.1819-01	.2004-01	39.16	.6013	.3585	553.5	.4820-03
20	437.50	.27500	1.0000	.3762-01	.4457-01	.4912-01	39.11	1.471	.3593	554.8	.1181-02
20	442.00	.30000	2.0000	.3569-01	.4229-01	.4660-01	39.12	1.396	.3592	554.5	.1121-02
20	445.00	.32500	3.0000	.3693-01	.4375-01	.4820-01	39.15	1.446	.3587	553.9	.1159-02
20	445.00	.35000	4.0000	.3638-01	.4310-01	.4749-01	39.13	1.424	.3590	554.2	.1142-02
20	445.00	.37500	5.0000	.3076-01	.3644-01	.4015-01	39.14	1.204	.3589	554.1	.9657-03

IH103 560/60T FUSELAGE

(R3PV34)

RUN NUMBER	ZO	XB/LB	T/C NO	H/HREF R=1.0	H/HREF R=.900	H/HREF R=.850	QREF BTU/ FT2SEC	QDOT BTU/ FT2SEC	HW/HT	TW DEG. R	STN NO R=.900
20	445.00	.40000	6.0000	.2721-01	.3224-01	.3552-01	39.13	1.065	.3590	554.3	.8542-03
20	445.00	.42500	7.0000	.2258-01	.2675-01	.2948-01	39.14	.8839	.3588	554.0	.7090-03
20	445.00	.45000	8.0000	.1929-01	.2286-01	.2518-01	39.14	.7550	.3589	554.1	.6057-03
20	445.00	.47500	9.0000	.1593-01	.1887-01	.2079-01	39.14	.6235	.3588	553.9	.5000-03
20	445.00	.50000	10.000	.1349-01	.1598-01	.1761-01	39.15	.5281	.3587	553.8	.4235-03
20	445.00	.55000	12.000	.1549-01	.1835-01	.2022-01	39.15	.6065	.3587	553.8	.4863-03
20	445.00	.60000	13.000	.2028-01	.2403-01	.2647-01	39.15	.7939	.3587	553.9	.6367-03
20	445.00	.65000	14.000	.3041-01	.3603-01	.3970-01	39.13	1.190	.3589	554.2	.9547-03
20	445.00	.70000	15.000	.3114-01	.3690-01	.4066-01	39.13	1.219	.3590	554.2	.9778-03
20	445.00	.75000	16.000	.3578-01	.4240-01	.4672-01	39.11	1.399	.3593	554.7	.1124-02
20	445.00	.80000	17.000	.3771-01	.4467-01	.4922-01	39.15	1.476	.3587	553.8	.1184-02

IH103 560/60T FUSELAGE (R3PV35)

FUSELAGE

PARAMETRIC DATA

MACH = 5.250 ALPHA = 5.000 BETA = -9.000 ELEVON = .0000
BDFLAP = .0000 SPDBRK = .0000

TEST CONDITIONS

RUN NUMBER	ALPHA DEG.	BETA DEG.	MACH	RN/FT /FT X10 6	PT PSIA	TT DEG. R	HT BTU/ LBM	PINF PSIA	TINF DEG. R	RHO SLUGS/ FT3	VINF FT/SEC	SCALE
19	5.000	-9.000	5.250	.9762	100.0	1527.	376.6	.1376	241.0	.4789-04	3995.	.1750-01

RUN NUMBER	PHI DEG.	HS SPHERE TW=540
19	.0000	.1650

TEST DATA

RUN NUMBER	ZO	XB/LB	T/C NO	H/HREF R=1.0	H/HREF R=.900	H/HREF R=.850	QREF BTU/ FT2SEC	QDOT BTU/ FT2SEC	HW/HT	TW DEG. R	STN NO R=.900
19	355.00	.20000	71.000	.5353-01	.6330-01	.6966-01	40.24	2.154	.3521	552.6	.1696-02
19	355.00	.22500	72.000	.4041-01	.4779-01	.5259-01	40.22	1.625	.3524	553.0	.1280-02
19	355.00	.25000	73.000	.3053-01	.3611-01	.3973-01	40.22	1.228	.3524	553.1	.9672-03
19	355.00	.27500	74.000	.2007-01	.2373-01	.2612-01	40.23	.8074	.3521	552.7	.6358-03
19	355.00	.80000	75.000	.2523-01	.2984-01	.3284-01	40.18	1.014	.3530	554.0	.7993-03
19	355.00	.85000	76.000	.3189-01	.3772-01	.4151-01	40.18	1.281	.3529	553.9	.1010-02
19	355.00	.90000	78.000	.2139-01	.2530-01	.2784-01	40.20	.8599	.3526	553.4	.6777-03
19	355.00	.95000	80.000	.2604-01	.3079-01	.3389-01	40.24	1.048	.3519	552.4	.8249-03
19	372.50	.30000	56.000	.2004-01	.2370-01	.2609-01	40.19	.8054	.3528	553.8	.6350-03
19	372.50	.32500	57.000	.1427-01	.1687-01	.1857-01	40.19	.5734	.3527	553.6	.4519-03
19	372.50	.35000	58.000	.9696-02	.1147-01	.1262-01	40.17	.3895	.3530	554.1	.3072-03
19	372.50	.37500	59.000	.8125-02	.9610-02	.1058-01	40.18	.3265	.3530	554.0	.2574-03
19	372.50	.40000	60.000	.9888-02	.1170-01	.1287-01	40.18	.3972	.3530	554.0	.3133-03
19	372.50	.42500	61.000	.1382-01	.1634-01	.1799-01	40.18	.5551	.3530	554.0	.4377-03
19	372.50	.45000	62.000	.1915-01	.2264-01	.2492-01	40.18	.7693	.3529	553.9	.6065-03
19	372.50	.50000	64.000	.3935-01	.4654-01	.5122-01	40.19	1.582	.3528	553.7	.1247-02
19	372.50	.55000	66.000	.4077-01	.4822-01	.5307-01	40.21	1.639	.3525	553.3	.1292-02
19	372.50	.60000	67.000	.3135-01	.3707-01	.4080-01	40.21	1.260	.3525	553.3	.9930-03
19	372.50	.65000	68.000	.2853-01	.3375-01	.3714-01	40.20	1.147	.3527	553.6	.9040-03
19	372.50	.70000	69.000	.2955-01	.3495-01	.3847-01	40.18	1.187	.3529	553.9	.9362-03
19	372.50	.75000	70.000	.3227-01	.3818-01	.4203-01	40.12	1.295	.3539	555.5	.1023-02

IH103 560/60T FUSELAGE (R3PV35)

RUN NUMBER	ZO	XB/LB	T/C NO	H/HREF R=1.0	H/HREF R=.900	H/HREF R=.850	QREF BTU/ FT2SEC	QDOT BTU/ FT2SEC	HW/HT	TW DEG. R	STN NO R=.900
19	400.00	.20000	31.000	.8366-01	.9895-01	.1089	40.18	3.362	.3529	553.9	.2650-02
19	400.00	.22500	32.000	.5805-01	.6868-01	.7560-01	40.12	2.329	.3539	555.4	.1839-02
19	400.00	.25000	33.000	.4012-01	.4746-01	.5225-01	40.11	1.609	.3541	555.7	.1271-02
19	400.00	.27500	34.000	.2937-01	.3475-01	.3825-01	40.11	1.178	.3540	555.6	.9307-03
19	400.00	.30000	35.000	.2309-01	.2732-01	.3008-01	40.10	.9260	.3542	555.9	.7318-03
19	400.00	.32500	36.000	.2025-01	.2395-01	.2637-01	40.10	.8119	.3541	555.8	.6416-03
19	400.00	.35000	37.000	.1683-01	.1992-01	.2192-01	40.10	.6749	.3542	556.0	.5334-03
19	400.00	.37500	38.000	.1386-01	.1640-01	.1805-01	40.12	.5560	.3538	555.3	.4391-03
19	400.00	.40000	39.000	.9524-02	.1127-01	.1240-01	40.11	.3820	.3540	555.7	.3018-03
19	400.00	.42500	40.000	.8003-02	.9469-02	.1042-01	40.10	.3209	.3542	555.9	.2536-03
19	400.00	.45000	41.000	.7379-02	.8731-02	.9611-02	40.11	.2959	.3541	555.7	.2338-03
19	400.00	.47500	42.000	.7919-02	.9368-02	.1031-01	40.15	.3179	.3534	554.7	.2509-03
19	400.00	.50000	43.000	.9797-02	.1159-01	.1276-01	40.16	.3934	.3533	554.5	.3104-03
19	400.00	.52500	44.000	.1273-01	.1506-01	.1658-01	40.15	.5113	.3534	554.6	.4035-03
19	400.00	.55000	45.000	.1646-01	.1947-01	.2143-01	40.15	.6606	.3535	554.8	.5214-03
19	400.00	.60000	46.000	.3430-01	.4058-01	.4466-01	40.13	1.376	.3537	555.1	.1087-02
19	400.00	.65000	47.000	.4807-01	.5688-01	.6261-01	40.12	1.929	.3538	555.3	.1523-02
19	400.00	.70000	48.000	.4209-01	.4980-01	.5482-01	40.12	1.689	.3539	555.4	.1334-02
19	400.00	.75000	49.000	.3839-01	.4542-01	.5000-01	40.08	1.539	.3544	556.3	.1217-02
19	400.00	.80000	50.000	.3669-01	.4341-01	.4779-01	40.09	1.471	.3543	556.0	.1163-02
19	400.00	.85000	51.000	.2358-01	.2789-01	.3069-01	40.20	.9479	.3526	553.5	.7470-03
19	400.00	.87500	52.000	.4249-01	.5025-01	.5530-01	40.22	1.709	.3523	553.0	.1346-02
19	400.00	.90000	53.000	.6913-01	.8175-01	.8997-01	40.22	2.780	.3524	553.0	.2190-02
19	400.00	.92500	54.000	.8630-01	.1020	.1123	40.25	3.474	.3518	552.2	.2734-02
19	400.00	.95000	55.000	.7413-01	.8765-01	.9644-01	40.28	2.986	.3514	551.5	.2348-02
19	420.00	.28500	18.000	.2856-01	.3379-01	.3720-01	40.12	1.146	.3538	555.3	.9051-03
19	420.00	.33700	19.000	.2552-01	.3019-01	.3324-01	40.11	1.024	.3539	555.5	.8087-03
19	420.00	.39000	20.000	.2230-01	.2639-01	.2905-01	40.09	.8940	.3543	556.2	.7067-03
19	420.00	.42600	21.000	.1719-01	.2034-01	.2239-01	40.11	.6895	.3540	555.7	.5448-03
19	420.00	.47800	22.000	.9583-02	.1134-01	.1248-01	40.11	.3844	.3540	555.6	.3037-03
19	420.00	.53000	23.000	.9859-02	.1166-01	.1284-01	40.11	.3954	.3540	555.7	.3124-03
19	420.00	.56700	24.000	.1302-01	.1540-01	.1695-01	40.10	.5220	.3541	555.8	.4125-03
19	420.00	.62000	25.000	.2006-01	.2374-01	.2613-01	40.09	.8043	.3543	556.0	.6357-03
19	420.00	.67000	26.000	.2943-01	.3482-01	.3833-01	40.08	1.179	.3544	556.3	.9326-03
19	420.00	.70500	27.000	.4202-01	.4972-01	.5474-01	40.07	1.684	.3546	556.5	.1332-02
19	420.00	.75000	28.000	.4599-01	.5443-01	.5993-01	40.05	1.842	.3549	557.0	.1458-02
19	420.00	.80000	29.000	.3644-01	.4312-01	.4746-01	40.10	1.461	.3542	555.9	.1155-02
19	420.00	.82400	30.000	.1500-01	.1774-01	.1952-01	40.21	.6030	.3525	553.3	.4751-03
19	437.50	.27500	1.0000	.2955-01	.3496-01	.3847-01	40.17	1.187	.3531	554.2	.9363-03
19	442.00	.30000	2.0000	.2587-01	.3060-01	.3368-01	40.18	1.039	.3529	554.0	.8196-03
19	445.00	.32500	3.0000	.2834-01	.3352-01	.3689-01	40.21	1.140	.3525	553.3	.8979-03
19	445.00	.35000	4.0000	.3656-01	.4325-01	.4760-01	40.19	1.469	.3523	553.7	.1158-02
19	445.00	.37500	5.0000	.3846-01	.4549-01	.5007-01	40.19	1.546	.3528	553.7	.1219-02

IH103 560/60T FUSELAGE

RUN NUMBER	ZO	XB/LB	T/C NO	H/HREF R=1.0	H/HREF R=.900	H/HREF R=.850	QREF BTU/ FT2SEC	QDOT BTU/ FT2SEC	HW/HT	TW DEG. R	STN NO R=.900
19	445.00	.40000	6.0000	.4106-01	.4857-01	.5345-01	40.18	1.650	.3530	554.0	.1301-02
19	445.00	.42500	7.0000	.3834-01	.4535-01	.4991-01	40.19	1.541	.3528	553.8	.1215-02
19	445.00	.45000	8.0000	.3426-01	.4053-01	.4460-01	40.18	1.377	.3529	554.0	.1085-02
19	445.00	.47500	9.0000	.2682-01	.3173-01	.3492-01	40.18	1.078	.3529	554.0	.8498-03
19	445.00	.50000	10.000	.1819-01	.2152-01	.2368-01	40.18	.7309	.3529	553.9	.5763-03
19	445.00	.55000	12.000	.1242-01	.1469-01	.1616-01	40.18	.4989	.3529	553.9	.3934-03
19	445.00	.60000	13.000	.1282-01	.1516-01	.1668-01	40.18	.5149	.3530	554.0	.4060-03
19	445.00	.65000	14.000	.1949-01	.2306-01	.2538-01	40.16	.7829	.3532	554.4	.6176-03
19	445.00	.70000	15.000	.2436-01	.2882-01	.3172-01	40.16	.9784	.3533	554.5	.7719-03
19	445.00	.75000	16.000	.3179-01	.3760-01	.4139-01	40.15	1.276	.3534	554.7	.1007-02
19	445.00	.80000	17.000	.4307-01	.5094-01	.5606-01	40.19	1.731	.3528	553.8	.1365-02

IH103 560/60T FUSELAGE (R3PV36)

FUSELAGE

PARAMETRIC DATA

MACH = 5.250 ALPHA = .0000 BETA = -9.000 ELEVON = .0000
BDFLAP = .0000 SPDBRK = .0000

TEST CONDITIONS

RUN NUMBER	ALPHA DEG.	BETA DEG.	MACH	RN/FT /FT X10 6	PT PSIA	TT DEG. R	HT BTU/ LBM	PINF PSIA	TINF DEG. R	RHO SLUGS/ FT3	VINF FT/SEC	SCALE
17	.0000	-9.000	5.250	.9587	100.2	1546.	381.5	.1376	244.1	.4729-04	4021.	.1750-01

RUN NUMBER	PHI DEG.	HS SPHERE TW=540
17	.0000	.1652

TEST DATA

RUN NUMBER	ZO	XB/LB	T/C NO	H/HREF R=1.0	H/HREF R=.900	H/HREF R=.850	QREF BTU/ FT2SEC	QDOT BTU/ FT2SEC	HW/HT	TW DEG. R	STN NO R=.900
17	355.00	.20000	71.000	.5800-01	.6850-01	.7531-01	41.10	2.384	.3474	552.4	.1849-02
17	355.00	.22500	72.000	.4456-01	.5263-01	.5786-01	41.10	1.831	.3475	552.6	.1420-02
17	355.00	.25000	73.000	.3498-01	.4132-01	.4543-01	41.10	1.438	.3475	552.5	.1115-02
17	355.00	.27500	74.000	.2525-01	.2982-01	.3278-01	41.11	1.038	.3474	552.2	.8048-03
17	355.00	.80000	75.000	.3516-01	.4152-01	.4564-01	41.12	1.446	.3471	551.9	.1121-02
17	355.00	.85000	76.000	.5685-01	.6712-01	.7379-01	41.15	2.339	.3467	551.2	.1812-02
17	355.00	.90000	78.000	.5694-01	.6722-01	.7390-01	41.18	2.345	.3463	550.5	.1815-02
17	355.00	.95000	80.000	.7171-01	.8464-01	.9302-01	41.24	2.957	.3454	549.1	.2285-02
17	372.50	.30000	56.000	.2376-01	.2806-01	.3086-01	41.06	.9755	.3481	553.4	.7574-03
17	372.50	.32500	57.000	.1650-01	.1949-01	.2143-01	41.09	.6780	.3476	552.7	.5260-03
17	372.50	.35000	58.000	.1147-01	.1355-01	.1490-01	41.07	.4712	.3479	553.1	.3657-03
17	372.50	.37500	59.000	.9546-02	.1128-01	.1240-01	41.04	.3918	.3483	553.8	.3043-03
17	372.50	.40000	60.000	.7961-02	.9403-02	.1034-01	41.07	.3269	.3479	553.2	.2538-03
17	372.50	.42500	61.000	.1292-01	.1526-01	.1678-01	41.06	.5303	.3481	553.5	.4118-03
17	372.50	.45000	62.000	.2063-01	.2437-01	.2679-01	41.06	.8470	.3481	553.4	.6577-03
17	372.50	.50000	64.000	.3173-01	.3748-01	.4121-01	41.07	1.303	.3479	553.1	.1012-02
17	372.50	.55000	66.000	.4113-01	.4858-01	.5342-01	41.09	1.690	.3477	552.7	.1311-02
17	372.50	.60000	67.000	.7157-01	.8452-01	.9292-01	41.11	2.942	.3474	552.3	.2281-02
17	372.50	.65000	68.000	.6434-01	.7598-01	.8354-01	41.11	2.645	.3474	552.3	.2051-02
17	372.50	.70000	69.000	.5396-01	.6379-01	.7019-01	40.86	2.205	.3511	558.2	.1721-02
17	372.50	.75000	70.000	.5108-01	.6034-01	.6634-01	41.07	2.098	.3480	553.2	.1629-02

(R3PV36)

IH103 560/60T FUSELAGE

RUN NUMBER	ZO	XB/LB	T/C NO	H/HREF R=1.0	H/HREF R=.900	H/HREF R=.850	QREF BTU/ FT2SEC	QDOT BTU/ FT2SEC	HW/HT	TW DEG. R	STN NO R=.900
17	400.00	.20000	31.000	.8950-01	.1057	.1163	41.04	3.673	.3484	553.9	.2854-02
17	400.00	.22500	32.000	.6325-01	.7473-01	.8219-01	40.99	2.592	.3491	555.1	.2017-02
17	400.00	.25000	33.000	.4293-01	.5073-01	.5579-01	40.98	1.759	.3494	555.4	.1369-02
17	400.00	.27500	34.000	.2854-01	.3372-01	.3709-01	40.99	1.170	.3492	555.2	.9102-03
17	400.00	.30000	35.000	.2077-01	.2454-01	.2699-01	40.99	.8512	.3492	555.2	.6623-03
17	400.00	.32500	36.000	.1815-01	.2144-01	.2358-01	40.99	.7439	.3492	555.1	.5787-03
17	400.00	.35000	37.000	.1558-01	.1841-01	.2024-01	41.00	.6386	.3491	555.0	.4968-03
17	400.00	.37500	38.000	.1735-01	.2050-01	.2254-01	40.98	.7109	.3493	555.3	.5532-03
17	400.00	.40000	39.000	.1052-01	.1243-01	.1367-01	41.01	.4314	.3489	554.7	.3354-03
17	400.00	.42500	40.000	.8554-02	.1011-01	.1111-01	41.01	.3508	.3489	554.6	.2728-03
17	400.00	.45000	41.000	.7279-02	.8599-02	.9457-02	41.01	.2985	.3488	554.5	.2321-03
17	400.00	.47500	42.000	.6326-02	.7473-02	.8217-02	41.05	.2597	.3482	553.6	.2017-03
17	400.00	.50000	43.000	.8302-02	.9806-02	.1078-01	41.06	.3409	.3480	553.3	.2647-03
17	400.00	.52500	44.000	.1331-01	.1572-01	.1729-01	41.06	.5466	.3481	553.4	.4244-03
17	400.00	.55000	45.000	.1692-01	.1999-01	.2198-01	41.07	.6950	.3480	553.3	.5396-03
17	400.00	.60000	46.000	.2779-01	.3283-01	.3610-01	41.07	1.141	.3480	553.3	.8861-03
17	400.00	.65000	47.000	.5019-01	.5928-01	.6519-01	41.06	2.061	.3481	553.5	.1600-02
17	400.00	.70000	48.000	.5448-01	.6435-01	.7076-01	41.06	2.237	.3481	553.4	.1737-02
17	400.00	.75000	49.000	.5347-01	.6316-01	.6945-01	41.05	2.195	.3482	553.7	.1705-02
17	400.00	.80000	50.000	.5282-01	.6238-01	.6860-01	41.07	2.169	.3480	553.2	.1684-02
17	400.00	.85000	51.000	.6452-01	.7617-01	.8374-01	41.16	2.656	.3465	551.0	.2056-02
17	400.00	.87500	52.000	.8340-01	.9846-01	.1082	41.18	3.435	.3462	550.4	.2658-02
17	400.00	.90000	53.000	.8068-01	.9525-01	.1047	41.19	3.323	.3462	550.3	.2571-02
17	400.00	.92500	54.000	.8525-01	.1006	.1106	41.21	3.513	.3458	549.7	.2716-02
17	400.00	.95000	55.000	.7692-01	.9079-01	.9978-01	41.25	3.173	.3452	548.9	.2451-02
17	420.00	.28500	18.000	.2132-01	.2519-01	.2770-01	41.01	.8742	.3489	554.7	.6798-03
17	420.00	.33700	19.000	.2642-01	.3121-01	.3432-01	41.00	1.083	.3490	554.8	.8423-03
17	420.00	.39000	20.000	.3543-01	.4186-01	.4604-01	41.00	1.453	.3490	554.9	.1130-02
17	420.00	.42600	21.000	.3484-01	.4116-01	.4527-01	41.00	1.429	.3490	554.8	.1111-02
17	420.00	.47800	22.000	.2019-01	.2385-01	.2622-01	41.03	.8281	.3486	554.2	.6436-03
17	420.00	.53000	23.000	.1211-01	.1431-01	.1573-01	41.02	.4967	.3487	554.4	.3861-03
17	420.00	.56700	24.000	.1624-01	.1918-01	.2110-01	41.02	.6660	.3487	554.5	.5177-03
17	420.00	.62000	25.000	.2576-01	.3043-01	.3347-01	41.02	1.057	.3486	554.3	.8214-03
17	420.00	.67000	26.000	.3617-01	.4273-01	.4699-01	41.02	1.484	.3486	554.3	.1153-02
17	420.00	.70500	27.000	.4468-01	.5278-01	.5805-01	41.02	1.833	.3487	554.4	.1425-02
17	420.00	.75000	28.000	.5650-01	.6675-01	.7341-01	41.01	2.317	.3488	554.5	.1802-02
17	420.00	.80000	29.000	.5303-01	.6264-01	.6888-01	41.06	2.177	.3481	553.4	.1691-02
17	420.00	.82400	30.000	.3173-01	.3747-01	.4119-01	41.15	1.306	.3468	551.3	.1011-02
17	437.50	.27500	1.0000	.4823-01	.5697-01	.6265-01	41.04	1.979	.3484	553.9	.1538-02
17	442.00	.30000	2.0000	.5781-01	.6829-01	.7509-01	41.06	2.374	.3481	553.5	.1843-02
17	445.00	.32500	3.0000	.6301-01	.7442-01	.8183-01	41.07	2.588	.3479	553.1	.2009-02
17	445.00	.35000	4.0000	.6504-01	.7682-01	.8447-01	41.07	2.671	.3479	553.1	.2074-02
17	445.00	.37500	5.0000	.6055-01	.7152-01	.7864-01	41.08	2.488	.3478	552.9	.1930-02

IH103 560/60T FUSELAGE (R3PV36)

RUN NUMBER	ZO	XB/LB	T/C NO	H/HREF R=1.0	H/HREF R=.900	H/HREF R=.850	QREF BTU/ FT2SEC	QDOT BTU/ FT2SEC	HW/HT	TW DEG. R	STN NO R=.900
17	445.00	.40000	6.0000	.6035-01	.7128-01	.7837-01	41.07	2.478	.3479	553.2	.1924-02
17	445.00	.42500	7.0000	.5503-01	.6500-01	.7147-01	41.08	2.260	.3478	553.0	.1754-02
17	445.00	.45000	8.0000	.5191-01	.6131-01	.6741-01	41.08	2.132	.3478	552.9	.1655-02
17	445.00	.47500	9.0000	.4600-01	.5433-01	.5974-01	41.08	1.890	.3478	553.0	.1466-02
17	445.00	.50000	10.000	.4021-01	.4749-01	.5222-01	41.08	1.652	.3478	552.9	.1282-02
17	445.00	.55000	12.000	.2995-01	.3538-01	.3890-01	41.09	1.231	.3476	552.7	.9548-03
17	445.00	.60000	13.000	.2378-01	.2808-01	.3088-01	41.08	.9769	.3477	552.8	.7580-03
17	445.00	.65000	14.000	.4142-01	.4892-01	.5379-01	41.09	1.702	.3476	552.7	.1320-02
17	445.00	.70000	15.000	.4661-01	.5504-01	.6052-01	41.08	1.915	.3477	552.8	.1486-02
17	445.00	.75000	16.000	.5479-01	.6471-01	.7115-01	41.09	2.251	.3476	552.7	.1747-02
17	445.00	.80000	17.000	.5541-01	.6543-01	.7194-01	41.13	2.279	.3470	551.8	.1766-02

IH103 560/60T FUSELAGE

FUSELAGE

PARAMETRIC DATA

MACH = 5.250 ALPHA = -5.000 BETA = -9.000 ELEVON = .0000
BDFLAP = .0000 SPDBRK = .0000

TEST CONDITIONS

RUN NUMBER	ALPHA DEG.	BETA DEG.	MACH	RN/FT /FT X10 6	PT PSIA	TT DEG. R	HT BTU/ LBM	PINF PSIA	TINF DEG. R	RHO SLUGS/ FT3	VINF FT/SEC	SCALE
18	-5.000	-9.000	5.250	.9930	100.7	1518.	374.1	.1386	239.4	.4858-04	3982.	.1750-01

RUN NUMBER	PHI DEG.	HS SPHERE TW=540
18	.0000	.1655

TEST DATA

RUN NUMBER	ZO	XB/LB	T/C NO	H/HREF R=1.0	H/HREF R=.900	H/HREF R=.850	QREF BTU/ FT2SEC	QDOT BTU/ FT2SEC	HW/HT	TW DEG. R	STN NO R=.900
18	355.00	.20000	71.000	.6340-01	.7504-01	.8262-01	39.92	2.531	.3550	553.5	.1994-02
18	355.00	.22500	72.000	.4871-01	.5765-01	.6348-01	39.91	1.944	.3552	553.9	.1532-02
18	355.00	.25000	73.000	.3846-01	.4553-01	.5013-01	39.89	1.535	.3554	554.2	.1210-02
18	355.00	.27500	74.000	.2922-01	.3458-01	.3808-01	39.90	1.166	.3553	554.0	.9192-03
18	355.00	.80000	75.000	.4824-01	.5709-01	.6287-01	39.88	1.924	.3556	554.4	.1517-02
18	355.00	.85000	76.000	.8649-01	.1024	.1127	39.88	3.450	.3556	554.5	.2721-02
18	355.00	.90000	78.000	.8611-01	.1019	.1122	39.88	3.434	.3556	554.5	.2709-02
18	355.00	.95000	80.000	.9145-01	.1082	.1192	39.93	3.651	.3549	553.4	.2877-02
18	372.50	.30000	56.000	.3231-01	.3824-01	.4211-01	39.88	1.288	.3556	554.6	.1016-02
18	372.50	.32500	57.000	.2682-01	.3174-01	.3495-01	39.91	1.070	.3552	553.9	.8436-03
18	372.50	.35000	58.000	.1728-01	.2046-01	.2253-01	39.88	.6891	.3557	554.7	.5437-03
18	372.50	.37500	59.000	.1171-01	.1386-01	.1526-01	39.88	.4668	.3556	554.6	.3683-03
18	372.50	.40000	60.000	.1197-01	.1417-01	.1561-01	39.87	.4773	.3558	554.8	.3767-03
18	372.50	.42500	61.000	.1782-01	.2110-01	.2323-01	39.89	.7109	.3555	554.4	.5607-03
18	372.50	.45000	62.000	.2518-01	.2981-01	.3282-01	39.90	1.005	.3553	554.0	.7922-03
18	372.50	.50000	64.000	.5407-01	.6399-01	.7046-01	39.90	2.158	.3552	553.9	.1701-02
18	372.50	.55000	66.000	.7989-01	.9455-01	.1041	39.93	3.190	.3549	553.4	.2513-02
18	372.50	.60000	67.000	.6800-01	.8049-01	.8862-01	39.90	2.713	.3554	554.2	.2139-02
18	372.50	.65000	68.000	.6624-01	.7840-01	.8632-01	39.90	2.643	.3553	554.0	.2084-02
18	372.50	.70000	69.000	.6793-01	.8049-01	.8869-01	39.64	2.693	.3593	560.3	.2139-02
18	372.50	.75000	70.000	.6570-01	.7779-01	.8566-01	39.85	2.618	.3561	555.3	.2067-02

IH103 560/60T FUSELAGE (R3PV37)

RUN NUMBER	ZO	XB/LB	T/C NO	H/HREF R=1.0	H/HREF R=.900	H/HREF R=.850	QREF BTU/ FT2SEC	QDOT BTU/ FT2SEC	HW/HT	TW DEG. R	STN NO R=.900
18	400.00	.20000	31.000	.1111	.1316	.1449	39.87	4.431	.3558	554.9	.3497-02
18	400.00	.22500	32.000	.7651-01	.9059-01	.9978-01	39.81	3.046	.3567	556.2	.2408-02
18	400.00	.25000	33.000	.5053-01	.5983-01	.6590-01	39.80	2.011	.3569	556.5	.1590-02
18	400.00	.27500	34.000	.3500-01	.4144-01	.4564-01	39.81	1.393	.3567	556.2	.1101-02
18	400.00	.30000	35.000	.2664-01	.3155-01	.3475-01	39.80	1.061	.3568	556.4	.8384-03
18	400.00	.32500	36.000	.2336-01	.2766-01	.3047-01	39.80	.9299	.3568	556.4	.7352-03
18	400.00	.35000	37.000	.2130-01	.2522-01	.2778-01	39.79	.8475	.3570	556.6	.6702-03
18	400.00	.37500	38.000	.1648-01	.1951-01	.2149-01	39.81	.6561	.3567	556.2	.5186-03
18	400.00	.40000	39.000	.1260-01	.1492-01	.1643-01	39.81	.5016	.3568	556.3	.3965-03
18	400.00	.42500	40.000	.1062-01	.1258-01	.1386-01	39.78	.4226	.3571	556.9	.3343-03
18	400.00	.45000	41.000	.8972-02	.1062-01	.1170-01	39.79	.3570	.3570	556.7	.2823-03
18	400.00	.47500	42.000	.8728-02	.1033-01	.1138-01	39.85	.3478	.3560	555.2	.2746-03
18	400.00	.50000	43.000	.1249-01	.1478-01	.1628-01	39.86	.4977	.3559	555.0	.3928-03
18	400.00	.52500	44.000	.1890-01	.2238-01	.2464-01	39.86	.7534	.3560	555.1	.5947-03
18	400.00	.55000	45.000	.2964-01	.3509-01	.3864-01	39.86	1.181	.3560	555.1	.9325-03
18	400.00	.60000	46.000	.5108-01	.6048-01	.6660-01	39.84	2.035	.3563	555.6	.1607-02
18	400.00	.65000	47.000	.7788-01	.9221-01	.1016	39.83	3.102	.3564	555.7	.2451-02
18	400.00	.70000	48.000	.7440-01	.8809-01	.9701-01	39.83	2.963	.3564	555.7	.2341-02
18	400.00	.75000	49.000	.6799-01	.8051-01	.8868-01	39.80	2.706	.3569	556.6	.2140-02
18	400.00	.80000	50.000	.6416-01	.7597-01	.8367-01	39.80	2.554	.3568	556.4	.2019-02
18	400.00	.85000	51.000	.8291-01	.9814-01	.1081	39.89	3.308	.3554	554.2	.2608-02
18	400.00	.87500	52.000	.1038	.1229	.1353	39.91	4.144	.3552	553.9	.3267-02
18	400.00	.90000	53.000	.1023	.1211	.1333	39.90	4.082	.3553	554.0	.3218-02
18	400.00	.92500	54.000	.1016	.1203	.1324	39.93	4.059	.3549	553.4	.3197-02
18	400.00	.95000	55.000	.9391-01	.1111	.1223	39.96	3.752	.3545	552.7	.2954-02
18	420.00	.28500	18.000	.2747-01	.3252-01	.3582-01	39.82	1.094	.3565	555.9	.8644-03
18	420.00	.33700	19.000	.2582-01	.3057-01	.3367-01	39.81	1.028	.3566	556.1	.8124-03
18	420.00	.39000	20.000	.2956-01	.3500-01	.3855-01	39.81	1.177	.3567	556.2	.9301-03
18	420.00	.42600	21.000	.2710-01	.3209-01	.3535-01	39.80	1.079	.3568	556.4	.8529-03
18	420.00	.47800	22.000	.1560-01	.1847-01	.2035-01	39.81	.6211	.3567	556.2	.4910-03
18	420.00	.53000	23.000	.1691-01	.2003-01	.2206-01	39.81	.6733	.3567	556.3	.5322-03
18	420.00	.56700	24.000	.2363-01	.2798-01	.3082-01	39.81	.9406	.3568	556.3	.7436-03
18	420.00	.62000	25.000	.3703-01	.4385-01	.4830-01	39.80	1.474	.3569	556.5	.1165-02
18	420.00	.67000	26.000	.5901-01	.6988-01	.7697-01	39.78	2.347	.3572	556.9	.1857-02
18	420.00	.70500	27.000	.7025-01	.8320-01	.9164-01	39.78	2.794	.3572	557.1	.2211-02
18	420.00	.75000	28.000	.7445-01	.8818-01	.9713-01	39.75	2.960	.3576	557.6	.2343-02
18	420.00	.80000	29.000	.6305-01	.7466-01	.8223-01	39.79	2.509	.3570	556.6	.1984-02
18	420.00	.82400	30.000	.3773-01	.4466-01	.4918-01	39.88	1.505	.3556	554.5	.1187-02
18	437.50	.27500	1.0000	.4883-01	.5780-01	.6365-01	39.86	1.946	.3559	555.0	.1536-02
18	442.00	.30000	2.0000	.5836-01	.6909-01	.7608-01	39.87	2.327	.3558	554.8	.1836-02
18	445.00	.32500	3.0000	.6483-01	.7675-01	.8451-01	39.87	2.585	.3558	554.7	.2040-02
18	445.00	.35000	4.0000	.6961-01	.8240-01	.9073-01	39.87	2.776	.3557	554.7	.2190-02
18	445.00	.37500	5.0000	.6708-01	.7941-01	.8744-01	39.87	2.675	.3557	554.7	.2110-02

IH103 560/60T FUSELAGE (R3PV37)

RUN NUMBER	ZO	XB/LB	T/C NO	H/HREF R=1.0	H/HREF R=.900	H/HREF R=.850	QREF BTU/ FT2SEC	QDOT BTU/ FT2SEC	HW/HT	TW DEG. R	STN NO R=.900
18	445.00	.40000	6.0000	.6807-01	.8059-01	.8874-01	39.86	2.714	.3559	555.0	.2142-02
18	445.00	.42500	7.0000	.6236-01	.7381-01	.8128-01	39.87	2.486	.3557	554.7	.1962-02
18	445.00	.45000	8.0000	.6032-01	.7141-01	.7863-01	39.87	2.405	.3558	554.8	.1898-02
18	445.00	.47500	9.0000	.5769-01	.6829-01	.7520-01	39.86	2.300	.3559	554.9	.1815-02
18	445.00	.50000	10.000	.5291-01	.6264-01	.6898-01	39.87	2.109	.3559	554.9	.1665-02
18	445.00	.55000	12.000	.4152-01	.4915-01	.5412-01	39.87	1.655	.3558	554.8	.1306-02
18	445.00	.60000	13.000	.3598-01	.4260-01	.4691-01	39.85	1.434	.3560	555.1	.1132-02
18	445.00	.65000	14.000	.4452-01	.5270-01	.5804-01	39.85	1.774	.3561	555.3	.1401-02
18	445.00	.70000	15.000	.4761-01	.5636-01	.6207-01	39.84	1.897	.3562	555.4	.1498-02
18	445.00	.75000	16.000	.6806-01	.8058-01	.8874-01	39.83	2.711	.3563	555.6	.2141-02
18	445.00	.80000	17.000	.5863-01	.6941-01	.7643-01	39.87	2.338	.3558	554.8	.1845-02

IH103 560/60T FUSELAGE (R3PV38)

FUSELAGE

PARAMETRIC DATA

MACH = 5.250 ALPHA = -10.00 BETA = .0000 ELEVON = .0000
BDFLAP = .0000 SPDBRK = .0000

TEST CONDITIONS

RUN NUMBER	ALPHA DEG.	BETA DEG.	MACH	RN/FT /FT X10 6	PT PSIA	TT DEG. R	HT BTU/ LBM	PINF PSIA	TINF DEG. R	RHO SLUGS/ FT3	VINF FT/SEC	SCALE
24	10.00	-9.000	5.250	1.018	102.2	1509.	371.8	.1408	237.9	.4966-04	3969.	.1750-01

RUN NUMBER	PHI DEG.	HS SPHERE TW=540
24	.0000	.1667

TEST DATA

RUN NUMBER	ZO	XB/LB	T/C NO	H/HREF R=1.0	H/HREF R=.900	H/HREF R=.850	QREF BTU/ FT2SEC	QDOT BTU/ FT2SEC	HW/HT	TW DEG. R	STN NO R=.900
24	355.00	.20000	71.000	.2970-01	.3517-01	.3874-01	39.81	1.182	.3573	553.6	.9240-03
24	355.00	.22500	72.000	.1506-01	.1783-01	.1964-01	39.80	.5992	.3574	553.8	.4684-03
24	355.00	.25000	73.000	.1170-01	.1385-01	.1526-01	39.79	.4655	.3575	553.9	.3640-03
24	355.00	.27500	74.000	.1324-01	.1568-01	.1727-01	39.81	.5270	.3572	553.4	.4118-03
24	355.00	.80000	75.000	.2943-01	.3486-01	.3840-01	39.77	1.170	.3579	554.5	.9159-03
24	355.00	.85000	76.000	.5630-01	.6668-01	.7345-01	39.78	2.240	.3577	554.2	.1752-02
24	355.00	.90000	78.000	.6612-01	.7831-01	.8625-01	39.81	2.632	.3573	553.6	.2057-02
24	355.00	.95000	80.000	.6029-01	.7138-01	.7861-01	39.86	2.403	.3564	552.2	.1875-02
24	372.50	.30000	56.000	.1915-01	.2269-01	.2499-01	39.78	.7619	.3577	554.2	.5960-03
24	372.50	.32500	57.000	.3078-01	.3645-01	.4015-01	39.78	1.224	.3577	554.2	.9576-03
24	372.50	.35000	58.000	.4359-01	.5162-01	.5687-01	39.78	1.734	.3577	554.2	.1356-02
24	372.50	.37500	59.000	.4001-01	.4739-01	.5220-01	39.79	1.592	.3576	554.1	.1245-02
24	372.50	.40000	60.000	.3811-01	.4514-01	.4973-01	39.78	1.516	.3578	554.3	.1186-02
24	372.50	.42500	61.000	.3652-01	.4326-01	.4765-01	39.78	1.453	.3577	554.2	.1136-02
24	372.50	.45000	62.000	.3581-01	.4241-01	.4671-01	39.79	1.425	.3575	553.9	.1114-02
24	372.50	.50000	64.000	.4314-01	.5109-01	.5627-01	39.80	1.717	.3574	553.7	.1342-02
24	372.50	.55000	66.000	.4971-01	.5887-01	.6484-01	39.82	1.980	.3571	553.3	.1547-02
24	372.50	.60000	67.000	.4985-01	.5904-01	.6503-01	39.81	1.985	.3572	553.5	.1551-02
24	372.50	.65000	68.000	.4673-01	.5534-01	.6095-01	39.81	1.860	.3573	553.5	.1454-02
24	372.50	.70000	69.000	.4021-01	.4768-01	.5255-01	39.55	1.590	.3613	559.8	.1252-02
24	372.50	.75000	70.000	.4183-01	.4956-01	.5460-01	39.73	1.662	.3585	555.4	.1302-02

IH103 560/60T FUSELAGE (R3PV38)

RUN NUMBER	ZO	XB/LB	T/C NO	H/HREF R=1.0	H/HREF R=.900	H/HREF R=.850	QREF BTU/ FT2SEC	QDOT BTU/ FT2SEC	HW/HT	TW DEG. R	STN NO R=.900
24	400.00	.20000	31.000	.4075-01	.4827-01	.5317-01	39.77	1.620	.3579	554.6	.1268-02
24	400.00	.22500	32.000	.3643-01	.4316-01	.4755-01	39.71	1.447	.3588	555.8	.1134-02
24	400.00	.25000	33.000	.3071-01	.3638-01	.4008-01	39.71	1.219	.3588	555.9	.9557-03
24	400.00	.27500	34.000	.3450-01	.4087-01	.4503-01	39.71	1.370	.3588	555.9	.1074-02
24	400.00	.30000	35.000	.3770-01	.4467-01	.4921-01	39.71	1.497	.3588	556.0	.1173-02
24	400.00	.32500	36.000	.3876-01	.4592-01	.5060-01	39.71	1.539	.3588	556.0	.1206-02
24	400.00	.35000	37.000	.3973-01	.4707-01	.5187-01	39.69	1.577	.3591	556.4	.1237-02
24	400.00	.37500	38.000	.4028-01	.4772-01	.5257-01	39.74	1.601	.3583	555.1	.1254-02
24	400.00	.40000	39.000	.3067-01	.3633-01	.4003-01	39.72	1.218	.3587	555.7	.9545-03
24	400.00	.42500	40.000	.3521-01	.4172-01	.4597-01	39.70	1.398	.3590	556.2	.1096-02
24	400.00	.45000	41.000	.3490-01	.4134-01	.4555-01	39.71	1.386	.3588	556.0	.1086-02
24	400.00	.47500	42.000	.3239-01	.3836-01	.4226-01	39.76	1.288	.3581	554.8	.1008-02
24	400.00	.50000	43.000	.2840-01	.3364-01	.3705-01	39.77	1.129	.3579	554.5	.8837-03
24	400.00	.52500	44.000	.2656-01	.3146-01	.3466-01	39.76	1.056	.3580	554.6	.8266-03
24	400.00	.55000	45.000	.2664-01	.3155-01	.3476-01	39.76	1.059	.3580	554.6	.8290-03
24	400.00	.60000	46.000	.3737-01	.4426-01	.4876-01	39.76	1.486	.3581	554.8	.1163-02
24	400.00	.65000	47.000	.5398-01	.6394-01	.7044-01	39.74	2.145	.3583	555.1	.1680-02
24	400.00	.70000	48.000	.5967-01	.7069-01	.7788-01	39.74	2.372	.3583	555.1	.1857-02
24	400.00	.75000	49.000	.5831-01	.6908-01	.7612-01	39.69	2.314	.3591	556.3	.1815-02
24	400.00	.80000	50.000	.5555-01	.6582-01	.7252-01	39.69	2.205	.3591	556.4	.1729-02
24	400.00	.85000	51.000	.8194-01	.9704-01	.1069	39.80	3.261	.3575	553.8	.2549-02
24	400.00	.87500	52.000	.7154-01	.8472-01	.9331-01	39.82	2.848	.3571	553.3	.2226-02
24	400.00	.90000	53.000	.6706-01	.7951-01	.8764-01	39.55	2.652	.3613	559.8	.2088-02
24	400.00	.92500	54.000	.6526-01	.7727-01	.8509-01	39.86	2.601	.3564	552.2	.2030-02
24	400.00	.95000	55.000	.5691-01	.6737-01	.7418-01	39.90	2.271	.3558	551.3	.1770-02
24	420.00	.28500	18.000	.4505-01	.5337-01	.5880-01	39.74	1.790	.3583	555.2	.1402-02
24	420.00	.33700	19.000	.4167-01	.4937-01	.5439-01	39.74	1.656	.3584	555.3	.1297-02
24	420.00	.39000	20.000	.4174-01	.4945-01	.5448-01	39.74	1.659	.3583	555.2	.1299-02
24	420.00	.42600	21.000	.3886-01	.4604-01	.5072-01	39.73	1.544	.3585	555.5	.1209-02
24	420.00	.47800	22.000	.2705-01	.3204-01	.3530-01	39.74	1.075	.3584	555.3	.8417-03
24	420.00	.53000	23.000	.1687-01	.1999-01	.2202-01	39.74	.6705	.3584	555.3	.5251-03
24	420.00	.56700	24.000	.1304-01	.1545-01	.1702-01	39.73	.5180	.3585	555.4	.4058-03
24	420.00	.62000	25.000	.1727-01	.2046-01	.2254-01	39.72	.6861	.3586	555.6	.5375-03
24	420.00	.67000	26.000	.3278-01	.3884-01	.4279-01	39.72	1.302	.3587	555.7	.1020-02
24	420.00	.70500	27.000	.4928-01	.5839-01	.6433-01	39.71	1.957	.3588	555.9	.1534-02
24	420.00	.75000	28.000	.5825-01	.6902-01	.7605-01	39.68	2.311	.3593	556.7	.1813-02
24	420.00	.80000	29.000	.4921-01	.5830-01	.6423-01	39.71	1.954	.3588	555.8	.1532-02
24	420.00	.82400	30.000	.4359-01	.5162-01	.5686-01	39.81	1.735	.3573	553.5	.1356-02
24	437.50	.27500	1.0000	.4858-01	.5753-01	.6337-01	39.79	1.933	.3576	554.1	.1511-02
24	442.00	.30000	2.0000	.3382-01	.4007-01	.4415-01	39.71	1.343	.3589	556.0	.1053-02
24	445.00	.32500	3.0000	.3542-01	.4194-01	.4619-01	39.83	1.411	.3569	553.0	.1102-02
24	445.00	.35000	4.0000	.3357-01	.3976-01	.4379-01	39.82	1.337	.3570	553.2	.1045-02
24	445.00	.37500	5.0000	.3812-01	.4514-01	.4972-01	39.83	1.518	.3570	553.1	.1186-02

IH103 560/60T FUSELAGE (R3PV38)

RUN NUMBER	ZO	XB/LB	T/C NO	H/HREF R=1.0	H/HREF R=.900	H/HREF R=.850	QREF BTU/ FT2SEC	QDOT BTU/ FT2SEC	HW/HT	TW DEG. R	STN NO R=.900
24	445.00	.40000	6.0000	.4453-01	.5282-01	.5824-01	39.47	1.758	.3626	561.8	.1387-02
24	445.00	.42500	7.0000	.4004-01	.4742-01	.5222-01	39.83	1.595	.3570	553.1	.1246-02
24	445.00	.45000	8.0000	.3772-01	.4467-01	.4920-01	39.82	1.502	.3571	553.2	.1174-02
24	445.00	.47500	9.0000	.3527-01	.4176-01	.4600-01	39.82	1.404	.3571	553.2	.1097-02
24	445.00	.50000	10.000	.3331-01	.3944-01	.4344-01	39.83	1.327	.3570	553.1	.1036-02
24	445.00	.55000	12.000	.3471-01	.4110-01	.4527-01	39.83	1.382	.3569	553.0	.1080-02
24	445.00	.60000	13.000	.4738-01	.5611-01	.6180-01	39.83	1.887	.3570	553.1	.1474-02
24	445.00	.65000	14.000	.6046-01	.7160-01	.7886-01	39.81	2.407	.3572	553.4	.1881-02
24	445.00	.70000	15.000	.5738-01	.6795-01	.7484-01	39.81	2.284	.3573	553.5	.1785-02
24	445.00	.75000	16.000	.5477-01	.6487-01	.7145-01	39.79	2.179	.3576	554.0	.1704-02
24	445.00	.80000	17.000	.4968-01	.5883-01	.6480-01	39.81	1.978	.3572	553.5	.1546-02

IH103 560/60T FUSELAGE

FUSELAGE

PARAMETRIC DATA

MACH = 5.250 ALPHA = -10.00 BETA = -5.000 ELEVON = .0000
BDFLAP = .0000 SPDBRK = .0000

TEST CONDITIONS

RUN NUMBER	ALPHA DEG.	BETA DEG.	MACH	RN/FT /FT X10 6	PT PSIA	TT DEG. R	HT BTU/ LBM	PINF PSIA	TINF DEG. R	RHO SLUGS/ FT3	VINF FT/SEC	SCALE
23	10.00	-9.000	5.250	1.011	101.2	1505.	370.9	.1394	237.4	.4929-04	3965.	.1750-01

RUN NUMBER	PHI DEG.	HS SPHERE TW=540
23	.0000	.1659

TEST DATA

RUN NUMBER	ZO	XB/LB	T/C NO	H/HREF R=1.0	H/HREF R=.900	H/HREF R=.850	QREF BTU/ FT2SEC	QDOT BTU/ FT2SEC	HW/HT	TW DEG. R	STN NO R=.900
23	355.00	.20000	71.000	.5979-01	.7076-01	.7790-01	39.68	2.372	.3548	548.5	.1866-02
23	355.00	.22500	72.000	.3503-01	.4146-01	.4565-01	39.66	1.389	.3550	548.8	.1093-02
23	355.00	.25000	73.000	.2170-01	.2568-01	.2828-01	39.65	.8604	.3552	549.0	.6772-03
23	355.00	.27500	74.000	.1348-01	.1595-01	.1756-01	39.67	.5346	.3549	548.7	.4206-03
23	355.00	.60000	75.000	.4827-01	.5714-01	.6293-01	39.62	1.912	.3558	549.9	.1507-02
23	355.00	.85000	76.000	.8465-01	.1002	.1103	39.65	3.356	.3553	549.2	.2642-02
23	355.00	.90000	78.000	.8080-01	.9563-01	.1053	39.67	3.205	.3550	548.7	.2522-02
23	355.00	.95000	80.000	.5902-01	.6982-01	.7686-01	39.74	2.345	.3539	547.0	.1841-02
23	372.50	.30000	56.000	.2581-01	.3055-01	.3364-01	39.63	1.023	.3556	549.6	.8055-03
23	372.50	.32500	57.000	.2913-01	.3448-01	.3797-01	39.62	1.154	.3557	549.8	.9092-03
23	372.50	.35000	58.000	.3729-01	.4414-01	.4860-01	39.62	1.478	.3556	549.8	.1164-02
23	372.50	.37500	59.000	.4399-01	.5207-01	.5733-01	39.63	1.743	.3556	549.6	.1373-02
23	372.50	.40000	60.000	.4951-01	.5860-01	.6453-01	39.62	1.962	.3556	549.8	.1545-02
23	372.50	.42500	61.000	.5450-01	.6451-01	.7103-01	39.62	2.159	.3556	549.8	.1701-02
23	372.50	.45000	62.000	.5649-01	.6686-01	.7362-01	39.64	2.239	.3554	549.4	.1763-02
23	372.50	.50000	64.000	.6147-01	.7276-01	.8012-01	39.64	2.437	.3554	549.3	.1919-02
23	372.50	.55000	66.000	.5880-01	.6959-01	.7662-01	39.67	2.332	.3550	548.8	.1835-02
23	372.50	.60000	67.000	.5595-01	.6623-01	.7292-01	39.64	2.218	.3554	549.4	.1746-02
23	372.50	.65000	68.000	.5911-01	.6996-01	.7703-01	39.64	2.343	.3554	549.4	.1845-02
23	372.50	.70000	69.000	.5425-01	.6429-01	.7084-01	39.38	2.137	.3594	555.6	.1695-02
23	372.50	.75000	70.000	.5631-01	.6666-01	.7342-01	39.58	2.229	.3563	550.8	.1758-02

IH103 560/60T FUSELAGE (R3PV39)

RUN NUMBER	ZO	XB/LB	T/C NO	H/HREF R=1.0	H/HREF R=.900	H/HREF R=.850	QREF BTU/ FT2SEC	QDOT BTU/ FT2SEC	HW/HT	TW DEG. R	STN NO R=.900
23	400.00	.20000	31.000	.4599-01	.5444-01	.5995-01	39.63	1.822	.3556	549.7	.1436-02
23	400.00	.22500	32.000	.4125-01	.4884-01	.5379-01	39.56	1.632	.3566	551.3	.1288-02
23	400.00	.25000	33.000	.3398-01	.4024-01	.4432-01	39.55	1.344	.3568	551.5	.1061-02
23	400.00	.27500	34.000	.3886-01	.4602-01	.5068-01	39.55	1.537	.3568	551.5	.1213-02
23	400.00	.30000	35.000	.5264-01	.6233-01	.6865-01	39.55	2.082	.3568	551.6	.1643-02
23	400.00	.32500	36.000	.5823-01	.6895-01	.7594-01	39.55	2.303	.3568	551.6	.1818-02
23	400.00	.35000	37.000	.5739-01	.6796-01	.7485-01	39.54	2.269	.3570	551.8	.1792-02
23	400.00	.37500	38.000	.5927-01	.7017-01	.7727-01	39.59	2.346	.3562	550.6	.1850-02
23	400.00	.40000	39.000	.5164-01	.6115-01	.6734-01	39.56	2.043	.3566	551.3	.1612-02
23	400.00	.42500	40.000	.6161-01	.7296-01	.8036-01	39.54	2.436	.3569	551.8	.1924-02
23	400.00	.45000	41.000	.6144-01	.7275-01	.8013-01	39.55	2.430	.3568	551.5	.1918-02
23	400.00	.47500	42.000	.5748-01	.6805-01	.7494-01	39.60	2.276	.3561	550.4	.1794-02
23	400.00	.50000	43.000	.5336-01	.6317-01	.6956-01	39.61	2.113	.3559	550.1	.1666-02
23	400.00	.52500	44.000	.5240-01	.6203-01	.6831-01	39.60	2.075	.3560	550.3	.1636-02
23	400.00	.55000	45.000	.5617-01	.6649-01	.7322-01	39.60	2.224	.3560	550.3	.1753-02
23	400.00	.60000	46.000	.6767-01	.8011-01	.8822-01	39.59	2.679	.3562	550.7	.2112-02
23	400.00	.65000	47.000	.6806-01	.8058-01	.8874-01	39.58	2.693	.3564	550.9	.2125-02
23	400.00	.70000	48.000	.6393-01	.7569-01	.8336-01	39.57	2.530	.3564	551.0	.1996-02
23	400.00	.75000	49.000	.6036-01	.7147-01	.7872-01	39.54	2.386	.3570	551.8	.1884-02
23	400.00	.80000	50.000	.5760-01	.6821-01	.7512-01	39.54	2.278	.3569	551.8	.1798-02
23	400.00	.85000	51.000	.8989-01	.1064	.1171	39.66	3.565	.3550	548.8	.2806-02
23	400.00	.87500	52.000	.8045-01	.9521-01	.1048	39.69	3.193	.3546	548.2	.2511-02
23	400.00	.90000	53.000	.7415-01	.8786-01	.9680-01	39.42	2.923	.3588	554.6	.2316-02
23	400.00	.92500	54.000	.7747-01	.9166-01	.1009	39.73	3.078	.3540	547.2	.2417-02
23	400.00	.95000	55.000	.7431-01	.8790-01	.9675-01	39.77	2.955	.3533	546.2	.2318-02
23	420.00	.28500	18.000	.6618-01	.7835-01	.8629-01	39.58	2.620	.3563	550.7	.2066-02
23	420.00	.33700	19.000	.5898-01	.6983-01	.7690-01	39.58	2.334	.3564	550.9	.1841-02
23	420.00	.39000	20.000	.6827-01	.8082-01	.8901-01	39.58	2.702	.3564	550.9	.2131-02
23	420.00	.42600	21.000	.5904-01	.6990-01	.7698-01	39.57	2.336	.3565	551.0	.1843-02
23	420.00	.47800	22.000	.4706-01	.5572-01	.6136-01	39.58	1.863	.3563	550.8	.1469-02
23	420.00	.53000	23.000	.4405-01	.5215-01	.5743-01	39.57	1.743	.3564	551.0	.1375-02
23	420.00	.56700	24.000	.4585-01	.5428-01	.5978-01	39.57	1.814	.3565	551.1	.1431-02
23	420.00	.62000	25.000	.6186-01	.7324-01	.8067-01	39.56	2.447	.3567	551.3	.1931-02
23	420.00	.67000	26.000	.7409-01	.8773-01	.9662-01	39.56	2.931	.3566	551.3	.2313-02
23	420.00	.70500	27.000	.7741-01	.9166-01	.1010	39.54	3.061	.3569	551.7	.2417-02
23	420.00	.75000	28.000	.7172-01	.8493-01	.9355-01	39.52	2.834	.3572	552.2	.2239-02
23	420.00	.80000	29.000	.5789-01	.6854-01	.7549-01	39.57	2.291	.3565	551.1	.1807-02
23	420.00	.82400	30.000	.5032-01	.5955-01	.6557-01	39.67	1.996	.3549	548.6	.1570-02
23	437.50	.27500	1.0000	.6686-01	.7914-01	.8715-01	39.62	2.649	.3557	549.9	.2087-02
23	442.00	.30000	2.0000	.5249-01	.6213-01	.6841-01	39.64	2.081	.3554	549.4	.1638-02
23	445.00	.32500	3.0000	.5919-01	.7005-01	.7713-01	39.66	2.347	.3551	548.9	.1847-02
23	445.00	.35000	4.0000	.6408-01	.7585-01	.8351-01	39.66	2.542	.3551	548.9	.2000-02
23	445.00	.37500	5.0000	.5679-01	.6721-01	.7400-01	39.69	2.252	.3550	548.8	.1772-02

(R3PV39)

IH103 560/60T FUSELAGE

RUN NUMBER	ZO	XB/LB	T/C NO	H/HREF R=1.0	H/HREF R=.900	H/HREF R=.850	QREF BTU/ FT2SEC	QDOT BTU/ FT2SEC	HW/HT	TW DEG. R	STN NO R=.900
23	445.00	.40000	6.0000	.5395-01	.6395-01	.7049-01	39.31	2.121	.3606	557.4	.1686-02
23	445.00	.42500	7.0000	.4478-01	.5299-01	.5835-01	39.66	1.776	.3550	548.8	.1397-02
23	445.00	.45000	8.0000	.4191-01	.4960-01	.5461-01	39.66	1.662	.3550	548.8	.1308-02
23	445.00	.47500	9.0000	.3719-01	.4402-01	.4846-01	39.68	1.476	.3547	548.3	.1161-02
23	445.00	.50000	10.000	.3305-01	.3912-01	.4307-01	39.66	1.311	.3550	548.8	.1032-02
23	445.00	.55000	12.000	.2814-01	.3331-01	.3667-01	39.67	1.116	.3550	548.7	.8783-03
23	445.00	.60000	13.000	.3102-01	.3671-01	.4042-01	39.66	1.230	.3551	549.0	.9680-03
23	445.00	.65000	14.000	.5949-01	.7041-01	.7753-01	39.65	2.359	.3553	549.2	.1857-02
23	445.00	.70000	15.000	.7534-01	.8917-01	.9819-01	39.64	2.986	.3554	549.4	.2351-02
23	445.00	.75000	16.000	.7277-01	.8614-01	.9485-01	39.63	2.884	.3555	549.6	.2271-02
23	445.00	.80000	17.000	.6065-01	.7177-01	.7902-01	39.66	2.405	.3550	548.8	.1893-02

IH103 560/60T FUSELAGE (R3PV40)

FUSELAGE

PARAMETRIC DATA

MACH = 5.250 ALPHA = -10.00 BETA = -3.000 ELEVON = .0000
BDFLAP = .0000 SPDBRK = .0000

TEST CONDITIONS

RUN NUMBER	ALPHA DEG.	BETA DEG.	MACH	RN/FT /FT X10 6	PT PSIA	TT DEG. R	HT BTU/ LBM	PINF PSIA	TINF DEG. R	RHO SLUGS/ FT3	VINF FT/SEC	SCALE
22	10.00	-9.000	5.250	1.051	102.5	1481.	364.5	.1414	233.3	.5088-04	3930.	.1750-01

RUN NUMBER	PHI DEG.	HS SPHERE TW=540
22	.0000	.1668

TEST DATA

RUN NUMBER	ZO	XB/LB	T/C NO	H/HREF R=1.0	H/HREF R=.900	H/HREF R=.850	QREF BTU/ FT2SEC	QDOT BTU/ FT2SEC	HW/HT	TW DEG. R	STN NO R=.900
22	355.00	.20000	71.000	.4499-01	.5335-01	.5882-01	38.75	1.743	.3622	550.2	.1382-02
22	355.00	.22500	72.000	.2307-01	.2736-01	.3017-01	38.69	.8924	.3632	551.7	.7089-03
22	355.00	.25000	73.000	.1319-01	.1565-01	.1726-01	38.67	.5101	.3635	552.1	.4055-03
22	355.00	.27500	74.000	.8805-02	.1045-01	.1152-01	38.69	.3407	.3632	551.7	.2706-03
22	355.00	.80000	75.000	.3396-01	.4030-01	.4446-01	38.58	1.310	.3648	554.2	.1044-02
22	355.00	.85000	76.000	.5547-01	.6583-01	.7260-01	38.63	2.143	.3641	553.1	.1705-02
22	355.00	.90000	78.000	.6708-01	.7959-01	.8778-01	38.65	2.593	.3638	552.6	.2062-02
22	355.00	.95000	80.000	.5909-01	.7009-01	.7726-01	38.76	2.290	.3621	550.0	.1816-02
22	372.50	.30000	56.000	.4942-01	.5867-01	.6472-01	38.54	1.905	.3654	555.1	.1520-02
22	372.50	.32500	57.000	.4599-01	.5459-01	.6022-01	38.54	1.772	.3655	555.2	.1414-02
22	372.50	.35000	58.000	.4201-01	.4987-01	.5501-01	38.57	1.620	.3650	554.5	.1292-02
22	372.50	.37500	59.000	.4761-01	.5651-01	.6234-01	38.56	1.835	.3653	554.8	.1464-02
22	372.50	.40000	60.000	.5793-01	.6876-01	.7584-01	38.58	2.235	.3648	554.2	.1781-02
22	372.50	.42500	61.000	.6436-01	.7639-01	.8426-01	38.58	2.483	.3649	554.3	.1979-02
22	372.50	.45000	62.000	.6297-01	.7473-01	.8243-01	38.59	2.430	.3647	553.9	.1936-02
22	372.50	.50000	64.000	.6538-01	.7758-01	.8556-01	38.63	2.526	.3641	553.1	.2010-02
22	372.50	.55000	66.000	.6442-01	.7643-01	.8428-01	38.66	2.490	.3636	552.3	.1980-02
22	372.50	.60000	67.000	.5920-01	.7023-01	.7745-01	38.68	2.290	.3633	551.9	.1820-02
22	372.50	.65000	68.000	.5179-01	.6145-01	.6777-01	38.65	2.002	.3637	552.5	.1592-02
22	372.50	.70000	69.000	.4101-01	.4872-01	.5377-01	38.38	1.574	.3681	559.1	.1262-02
22	372.50	.75000	70.000	.4239-01	.5034-01	.5555-01	38.47	1.631	.3667	557.0	.1304-02

IH103 560/60T FUSELAGE

RUN NUMBER	ZO	XB/LB	T/C NO	H/HREF R=1.0	H/HREF R=.900	H/HREF R=.850	QREF BTU/ FT2SEC	QDOT BTU/ FT2SEC	HW/HT	TW DEG. R	STN NO R=.900
22	400.00	.20000	31.000	.4341-01	.5150-01	.5680-01	38.66	1.678	-.3636	552.3	.1334-02
22	400.00	.22500	32.000	.4817-01	.5719-01	.6310-01	38.51	1.855	.3660	556.0	.1482-02
22	400.00	.25000	33.000	.5354-01	.6359-01	.7017-01	38.44	2.058	.3671	557.7	.1647-02
22	400.00	.27500	34.000	.6873-01	.8164-01	.9010-01	38.41	2.640	.3676	558.4	.2114-02
22	400.00	.30000	35.000	.6688-01	.7945-01	.8769-01	38.40	2.568	.3678	558.7	.2058-02
22	400.00	.32500	36.000	.5918-01	.7029-01	.7758-01	38.40	2.272	.3677	558.6	.1821-02
22	400.00	.35000	37.000	.5130-01	.6094-01	.6726-01	38.39	1.970	.3678	558.7	.1579-02
22	400.00	.37500	38.000	.4874-01	.5789-01	.6389-01	38.43	1.873	.3672	557.8	.1500-02
22	400.00	.40000	39.000	.4075-01	.4840-01	.5342-01	38.42	1.566	.3674	558.1	.1254-02
22	400.00	.42500	40.000	.4863-01	.5777-01	.6375-01	38.43	1.869	.3673	558.0	.1496-02
22	400.00	.45000	41.000	.4854-01	.5765-01	.6363-01	38.44	1.866	.3672	557.7	.1493-02
22	400.00	.47500	42.000	.4616-01	.5481-01	.6048-01	38.47	1.776	.3665	556.8	.1420-02
22	400.00	.50000	43.000	.4351-01	.5166-01	.5700-01	38.49	1.674	.3663	556.5	.1338-02
22	400.00	.52500	44.000	.4243-01	.5038-01	.5559-01	38.49	1.633	.3663	556.4	.1305-02
22	400.00	.55000	45.000	.4623-01	.5489-01	.6056-01	38.49	1.779	.3663	556.4	.1422-02
22	400.00	.60000	46.000	.5872-01	.6972-01	.7693-01	38.49	2.260	.3663	556.4	.1806-02
22	400.00	.65000	47.000	.5981-01	.7103-01	.7838-01	38.46	2.301	.3667	557.0	.1840-02
22	400.00	.70000	48.000	.5685-01	.6752-01	.7451-01	38.44	2.186	.3670	557.5	.1749-02
22	400.00	.75000	49.000	.5420-01	.6440-01	.7108-01	38.34	2.078	.3686	559.9	.1668-02
22	400.00	.80000	50.000	.5241-01	.6227-01	.6874-01	38.35	2.010	.3685	559.7	.1613-02
22	400.00	.85000	51.000	.8462-01	.1004	.1107	38.65	3.270	.3638	552.6	.2601-02
22	400.00	.87500	52.000	.7548-01	.8953-01	.9872-01	38.71	2.922	.3629	551.2	.2320-02
22	400.00	.90000	53.000	.7010-01	.8325-01	.9186-01	38.45	2.695	.3670	557.4	.2156-02
22	400.00	.92500	54.000	.7288-01	.8642-01	.9528-01	38.77	2.826	.3619	549.7	.2239-02
22	400.00	.95000	55.000	.6735-01	.7985-01	.8801-01	38.82	2.614	.3611	548.6	.2069-02
22	420.00	.28500	18.000	.5659-01	.6720-01	.7416-01	38.47	2.177	.3666	556.9	.1741-02
22	420.00	.33700	19.000	.4861-01	.5773-01	.6370-01	38.45	1.869	.3670	557.4	.1495-02
22	420.00	.39000	20.000	.5226-01	.6206-01	.6848-01	38.47	2.010	.3667	557.0	.1608-02
22	420.00	.42600	21.000	.4676-01	.5552-01	.6127-01	38.46	1.798	.3668	557.2	.1438-02
22	420.00	.47800	22.000	.3702-01	.4396-01	.4851-01	38.47	1.424	.3667	557.0	.1139-02
22	420.00	.53000	23.000	.3336-01	.3961-01	.4371-01	38.47	1.283	.3666	556.9	.1026-02
22	420.00	.56700	24.000	.3357-01	.3986-01	.4399-01	38.46	1.291	.3667	557.0	.1033-02
22	420.00	.62000	25.000	.4871-01	.5785-01	.6383-01	38.45	1.873	.3669	557.3	.1498-02
22	420.00	.67000	26.000	.6655-01	.7904-01	.8722-01	38.44	2.559	.3670	557.5	.2047-02
22	420.00	.70500	27.000	.7203-01	.8556-01	.9442-01	38.43	2.768	.3673	557.9	.2216-02
22	420.00	.75000	28.000	.6741-01	.8009-01	.8841-01	38.35	2.585	.3685	559.8	.2074-02
22	420.00	.80000	29.000	.5418-01	.6434-01	.7100-01	38.46	2.083	.3668	557.3	.1667-02
22	420.00	.82400	30.000	.4844-01	.5746-01	.6336-01	38.70	1.874	.3630	551.5	.1489-02
22	437.50	.27500	1.0000	.5702-01	.6767-01	.7464-01	38.59	2.200	.3647	554.0	.1753-02
22	442.00	.30000	2.0000	.4725-01	.5607-01	.6184-01	38.62	1.825	.3643	553.4	.1453-02
22	445.00	.32500	3.0000	.4619-01	.5481-01	.6044-01	38.66	1.786	.3636	552.4	.1420-02
22	445.00	.35000	4.0000	.5131-01	.6087-01	.6713-01	38.65	1.983	.3638	552.7	.1577-02
22	445.00	.37500	5.0000	.5082-01	.6029-01	.6649-01	38.66	1.965	.3636	552.3	.1562-02

IH103 560/60T FUSELAGE

(R3PV40)

RUN NUMBER	ZO	XB/LB	T/C NO	H/HREF R=1.0	H/HREF R=.900	H/HREF R=.850	QREF BTU/ FT2SEC	QDOT BTU/ FT2SEC	HW/HT	TW DEG. R	STN NO R=.900
22	445.00	.40000	6.0000	.4996-01	.5938-01	.6555-01	38.29	1.913	.3694	561.2	.1538-02
22	445.00	.42500	7.0000	.4269-01	.5064-01	.5585-01	38.65	1.650	.3637	552.5	.1312-02
22	445.00	.45000	8.0000	.3851-01	.4569-01	.5039-01	38.65	1.488	.3638	552.6	.1184-02
22	445.00	.47500	9.0000	.3302-01	.3917-01	.4320-01	38.66	1.276	.3637	552.4	.1015-02
22	445.00	.50000	10.000	.2824-01	.3350-01	.3695-01	38.66	1.092	.3637	552.5	.8680-03
22	445.00	.55000	12.000	.2018-01	.2395-01	.2641-01	38.66	.7803	.3637	552.4	.6204-03
22	445.00	.60000	13.000	.1877-01	.2228-01	.2457-01	38.65	.7257	.3637	552.5	.5771-03
22	445.00	.65000	14.000	.3464-01	.4110-01	.4533-01	38.63	1.338	.3641	553.1	.1065-02
22	445.00	.70000	15.000	.5319-01	.6312-01	.6962-01	38.61	2.054	.3644	553.6	.1635-02
22	445.00	.75000	16.000	.6398-01	.7594-01	.8376-01	38.58	2.468	.3649	554.4	.1967-02
22	445.00	.80000	17.000	.5754-01	.6827-01	.7529-01	38.66	2.225	.3635	552.2	.1769-02

IH103 560/60T FUSELAGE (R3PV41)

FUSELAGE

PARAMETRIC DATA

MACH = 5.250 ALPHA = -10.00 BETA = -9.000 ELEVON = .0000
BDFLAP = .0000 SPDBRK = .0000

TEST CONDITIONS

RUN NUMBER	ALPHA DEG.	BETA DEG.	MACH	RN/FT /FT X10 6	PT PSIA	TT DEG. R	HT BTU/ LBM	PINF PSIA	TINF DEG. R	RHO SLUGS/ FT3	VINF FT/SEC	SCALE
21	10.00	-9.000	5.250	.9885	100.1	1516.	373.7	.1378	239.2	.4834-04	3980.	.1750-01

RUN NUMBER	PHI DEG.	HS SPHERE TW=540
21	.0000	.1650

TEST DATA

RUN NUMBER	ZO	XB/LB	T/C NO	H/HREF R=1.0	H/HREF R=.900	H/HREF R=.850	QREF BTU/ FT2SEC	QDOT BTU/ FT2SEC	HW/HT	TW DEG. R	STN NO R=.900
21	355.00	.20000	71.000	.8157-01	.9637-01	.1060	40.15	3.275	.3488	543.3	.2569-02
21	355.00	.22500	72.000	.5562-01	.6572-01	.7228-01	40.14	2.233	.3490	543.6	.1752-02
21	355.00	.25000	73.000	.3884-01	.4589-01	.5047-01	40.14	1.559	.3489	543.5	.1223-02
21	355.00	.27500	74.000	.2665-01	.3148-01	.3462-01	40.15	1.070	.3488	543.3	.8390-03
21	355.00	.80000	75.000	.5535-01	.6541-01	.7194-01	40.09	2.219	.3498	544.9	.1743-02
21	355.00	.85000	76.000	.1051	.1242	.1366	40.11	4.217	.3495	544.3	.3311-02
21	355.00	.90000	78.000	.1111	.1312	.1444	40.11	4.455	.3495	544.4	.3498-02
21	355.00	.95000	80.000	.9507-01	.1123	.1235	40.18	3.820	.3485	542.8	.2993-02
21	372.50	.30000	56.000	.1339-01	.1582-01	.1740-01	40.10	.5369	.3496	544.6	.4217-03
21	372.50	.32500	57.000	.9455-02	.1117-01	.1229-01	40.09	.3790	.3498	544.8	.2978-03
21	372.50	.35000	58.000	.1644-01	.1942-01	.2136-01	40.11	.6593	.3495	544.4	.5177-03
21	372.50	.37500	59.000	.2782-01	.3288-01	.3617-01	40.07	1.115	.3500	545.2	.8764-03
21	372.50	.40000	60.000	.3867-01	.4569-01	.5026-01	40.10	1.551	.3496	544.6	.1218-02
21	372.50	.42500	61.000	.4920-01	.5815-01	.6396-01	40.08	1.972	.3499	545.0	.1550-02
21	372.50	.45000	62.000	.5810-01	.6866-01	.7552-01	40.09	2.329	.3498	544.9	.1830-02
21	372.50	.50000	64.000	.7521-01	.8887-01	.9776-01	40.10	3.016	.3497	544.7	.2369-02
21	372.50	.55000	66.000	.7840-01	.9264-01	.1019	40.11	3.145	.3494	544.3	.2469-02
21	372.50	.60000	67.000	.6777-01	.8007-01	.8806-01	40.13	2.719	.3492	543.9	.2134-02
21	372.50	.65000	68.000	.6880-01	.8129-01	.8941-01	40.11	2.759	.3494	544.3	.2167-02
21	372.50	.70000	69.000	.6715-01	.7944-01	.8743-01	39.86	2.677	.3534	550.4	.2117-02
21	372.50	.75000	70.000	.6740-01	.7968-01	.8766-01	40.02	2.698	.3508	546.4	.2123-02

IH103 560/60T FUSELAGE

(R3PV41)

RUN NUMBER	ZO	XB/LB	T/C NO	H/HREF R=1.0	H/HREF R=.900	H/HREF R=.850	QREF BTU/ FT2SEC	QDOT BTU/ FT2SEC	HW/HT	TW DEG. R	STN NO R=.900
21	400.00	.20000	31.000	.4051-01	.4787-01	.5264-01	40.12	1.625	.3493	544.1	.1276-02
21	400.00	.22500	32.000	.3443-01	.4069-01	.4475-01	40.07	1.379	.3501	545.3	.1084-02
21	400.00	.25000	33.000	.2802-01	.3312-01	.3644-01	40.05	1.122	.3504	545.7	.8828-03
21	400.00	.27500	34.000	.3394-01	.4012-01	.4413-01	40.05	1.359	.3504	545.7	.1069-02
21	400.00	.30000	35.000	.5322-01	.6291-01	.6920-01	40.05	2.131	.3504	545.9	.1677-02
21	400.00	.32500	36.000	.6857-01	.8104-01	.8916-01	40.05	2.746	.3504	545.9	.2160-02
21	400.00	.35000	37.000	.8204-01	.9697-01	.1067	40.04	3.285	.3505	546.0	.2584-02
21	400.00	.37500	38.000	.1007	.1190	.1309	40.03	4.029	.3507	546.3	.3171-02
21	400.00	.40000	39.000	.8574-01	.1013	.1115	40.05	3.434	.3504	545.8	.2701-02
21	400.00	.42500	40.000	.1017	.1202	.1323	40.05	4.074	.3504	545.8	.3204-02
21	400.00	.45000	41.000	.9354-01	.1106	.1216	40.05	3.746	.3504	545.8	.2946-02
21	400.00	.47500	42.000	.8496-01	.1004	.1104	40.06	3.405	.3499	545.1	.2676-02
21	400.00	.50000	43.000	.7961-01	.9408-01	.1035	40.09	3.191	.3498	544.9	.2507-02
21	400.00	.52500	44.000	.7718-01	.9121-01	.1003	40.08	3.093	.3499	545.1	.2431-02
21	400.00	.55000	45.000	.7842-01	.9268-01	.1019	40.08	3.143	.3500	545.2	.2470-02
21	400.00	.60000	46.000	.8123-01	.9600-01	.1056	40.07	3.255	.3501	545.3	.2559-02
21	400.00	.65000	47.000	.8176-01	.9664-01	.1063	40.05	3.275	.3504	545.8	.2576-02
21	400.00	.70000	48.000	.7930-01	.9373-01	.1031	40.04	3.175	.3506	546.1	.2498-02
21	400.00	.75000	49.000	.7389-01	.8735-01	.9611-01	39.99	2.955	.3513	547.2	.2328-02
21	400.00	.80000	50.000	.7141-01	.8443-01	.9290-01	39.98	2.855	.3514	547.4	.2250-02
21	400.00	.85000	51.000	.9874-01	.1167	.1283	40.12	3.951	.3493	544.1	.3109-02
21	400.00	.87500	52.000	.1071	.1265	.1392	40.14	4.300	.3489	543.5	.3373-02
21	400.00	.90000	53.000	.9674-01	.1144	.1259	39.87	3.857	.3532	550.1	.3049-02
21	400.00	.92500	54.000	.1048	.1238	.1361	40.15	4.206	.3488	543.3	.3299-02
21	400.00	.95000	55.000	.9419-01	.1113	.1223	40.20	3.787	.3480	542.1	.2966-02
21	420.00	.28500	18.000	.1014	.1199	.1318	40.08	4.065	.3499	545.0	.3194-02
21	420.00	.33700	19.000	.9444-01	.1116	.1228	40.07	3.784	.3501	545.3	.2975-02
21	420.00	.39000	20.000	.8990-01	.1063	.1169	40.07	3.602	.3501	545.4	.2832-02
21	420.00	.42600	21.000	.7392-01	.8736-01	.9610-01	40.06	2.961	.3502	545.6	.2328-02
21	420.00	.47800	22.000	.6583-01	.7780-01	.8558-01	40.07	2.638	.3501	545.4	.2073-02
21	420.00	.53000	23.000	.6626-01	.7831-01	.8614-01	40.06	2.654	.3503	545.6	.2087-02
21	420.00	.56700	24.000	.6903-01	.8159-01	.8975-01	40.05	2.764	.3505	545.9	.2174-02
21	420.00	.62000	25.000	.8056-01	.9523-01	.1048	40.04	3.225	.3506	546.1	.2538-02
21	420.00	.67000	26.000	.8532-01	.1009	.1109	40.03	3.415	.3507	546.3	.2688-02
21	420.00	.70500	27.000	.9175-01	.1085	.1193	40.02	3.671	.3509	546.6	.2890-02
21	420.00	.75000	28.000	.9209-01	.1089	.1198	39.98	3.682	.3514	547.4	.2902-02
21	420.00	.80000	29.000	.7707-01	.9110-01	.1002	40.03	3.085	.3507	546.3	.2428-02
21	420.00	.82400	30.000	.5083-01	.6005-01	.6604-01	40.15	2.040	.3489	543.5	.1601-02
21	437.50	.27500	1.0000	.9295-01	.1098	.1208	40.11	3.729	.3494	544.3	.2927-02
21	442.00	.30000	2.0000	.8095-01	.9565-01	.1052	40.13	3.249	.3491	543.8	.2549-02
21	445.00	.32500	3.0000	.8170-01	.9652-01	.1062	40.16	3.281	.3487	543.2	.2573-02
21	445.00	.35000	4.0000	.8203-01	.9691-01	.1066	40.15	3.293	.3489	543.4	.2583-02
21	445.00	.37500	5.0000	.7054-01	.8334-01	.9165-01	40.15	2.832	.3488	543.4	.2221-02

IH103 560/60T FUSELAGE (R3PV41)

RUN NUMBER	ZO	XB/LB	T/C NO	H/HREF R=1.0	H/HREF R=.900	H/HREF R=.850	QREF BTU/ FT2SEC	QDOT BTU/ FT2SEC	HW/HT	TW DEG. R	STN NO R=.900
21	445.00	.40000	6.0000	.7025-01	.8312-01	.9151-01	39.79	2.795	.3544	552.1	.2215-02
21	445.00	.42500	7.0000	.6219-01	.7348-01	.8081-01	40.14	2.496	.3490	543.6	.1958-02
21	445.00	.45000	8.0000	.6216-01	.7344-01	.8077-01	40.14	2.495	.3490	543.6	.1957-02
21	445.00	.47500	9.0000	.5754-01	.6798-01	.7476-01	40.14	2.309	.3490	543.6	.1812-02
21	445.00	.50000	10.000	.5379-01	.6355-01	.6989-01	40.14	2.159	.3490	543.7	.1694-02
21	445.00	.55000	12.000	.5777-01	.6825-01	.7506-01	40.14	2.319	.3490	543.6	.1819-02
21	445.00	.60000	13.000	.6524-01	.7709-01	.8478-01	40.13	2.618	.3491	543.8	.2055-02
21	445.00	.65000	14.000	.8349-01	.9865-01	.1085	40.12	3.349	.3493	544.1	.2629-02
21	445.00	.70000	15.000	.8699-01	.1028	.1131	40.11	3.489	.3495	544.4	.2740-02
21	445.00	.75000	16.000	.8469-01	.1001	.1101	40.09	3.396	.3497	544.8	.2667-02
21	445.00	.80000	17.000	.7277-01	.8598-01	.9457-01	40.13	2.920	.3491	543.8	.2292-02