National Aeronautics and
Space Administration

Lyndon B. Johnson Space Center
Houston, Texas 77058

DMS-DR-2364
NASA-CR-160,529

VOLUME 3 of 3

RESULTS OF AN INVESTIGATION TO VERIFY SHUTTLE ORBITER VEHICLE 102 AERO CHARACTERISTICS UTILIZING AN .05-SCALE HI-FIDELITY REMOTE CONTROL MODEL (39-0) IN THE AMES RESEARCH CENTER UNITARY WIND TUNNEL (OA145B)

(NASA-CR-160529) RESULTS OF AN INVESTIGATION TO VERIFY SHUTTLE ORBITER VEHICLE 102 AERO CHARACTERISTICS UTILIZING AN .05-SCALE HI-FIDELITY REMOTE CONTROL MODEL (39-0) IN THE AMES RESEARCH CENTER N81-76221

Unclas
00/16 32757

SPACE SHUTTLE AEROTHERMODYNAMIC DATA REPORT

Data Management SERVICES

HUNTSVILLE ELECTRONICS DIVISION CHRYSLER CORPORATION

AUG 1981
RECEIVED
NASA STI FACILITY
ACCESS DEPT.

November 1980

DMS-DR-2364
NASA-CR-160,529

VOLUME 3 of 3

RESULTS OF AN INVESTIGATION TO VERIFY SHUTTLE ORBITER VEHICLE 102 AERO CHARACTERISTICS UTILIZING AN .05-SCALE HI-FIDELITY REMOTE CONTROL MODEL (39-0) IN THE AMES RESEARCH CENTER UNITARY WIND TUNNEL (OA145B)

by

R. H. Mulfinger
Rockwell International STS D&P Division

Prepared under NASA Contract Number NAS9-13247

by

Data Management Services
Chrysler Huntsville Electronics Division
Slidell Engineering Office
New Orleans, Louisiana 70189

for

Engineering Analysis Division

Johnson Space Center
National Aeronautics and Space Administration
Houston, Texas

WIND TUNNEL TEST SPECIFICS:

Test Number:	118-1-11, -97, -87
NASA Series Number:	OA145A, B, C
Model Number:	39-0
Test Dates:	March 7, 1977 through May 4, 1977
Occupancy Hours:	OA145A 480
	OA145B 348
	OA145C 100

FACILITY COORDINATOR:

Jack J. Brownson
Ames Research Center
Mail Stop 227-5
Moffett Field, CA 94035

Phone: (415) 965-6262

AERODYNAMIC ANALYSIS ENGINEERS:

D. C. Schlosser
F. F. Fitzgerald
Rockwell International
STS D&P Division
Mail Code AC07
12214 Lakewood Boulevard
Downey, CA 90241

Phone: (213) 922-4738

PROJECT ENGINEERS:

R. H. Mulfinger
R. H. Spangler
Rockwell International
STS D&P Division
Mail Code AD38
12214 Lakewood Boulevard
Downey, CA 90241

Phone: (213) 922-4994

R. Guist
J. J. Brownson
Ames Research Center
Mail Stop 227-5
Moffett Field, CA 94035

Phone: (415) 965-6262

DATA MANAGEMENT SERVICES:

Prepared by: Liaison - D. W. Hersey
Operations - M. M. Mann
H. C. Zimmerle

Approved: J. L. Glynn, Manager
Data Operations

Concurrence: N. D. Kemp, Manager
Data Management Services

Chrysler Huntsville Electronics Division/Slidell Engineering Office assumes no responsibility for the data presented other than display characteristics.

RESULTS OF AN INVESTIGATION TO VERIFY SHUTTLE ORBITER VEHICLE 102 AERO CHARACTERISTICS UTILIZING AN .05-SCALE HI-FIDELITY REMOTE CONTROL MODEL (39-0) IN THE AMES RESEARCH CENTER UNITARY WIND TUNNEL (OA145B)

by

R. H. Mulfinger, Rockwell International STS D&P Division

ABSTRACT

This report documents the data obtained in wind tunnel test ØA145B, part of a transonic verification test program (ØA145A, B, C) conducted in the Ames unitary plan tunnel. Data from tests ØA145A and C are documented in DMS-DR-2380 and DMS-DR-2389, respectively. The objective of this test series was to verify orbiter vehicle 102 aerodynamic characteristics with regard to:

1. Basic stability and control over the structural design envelope
2. Fine cut stability and control characteristics along a nominal entry trajectory
3. Control surface hinge moments
4. Reynolds number effects on stability and control, control surface effectiveness and hinge moments
5. Certain hysteresis and control surface interactions observed on other smaller scale model tests
6. Proposed inboard/outboard elevon interaction math model

Testing was conducted over a Mach number range 0.4 to 3.5 with Reynolds number variations between 3.0×10^6 and 9×10^6 per foot for subsonic/transonic tests and 1.0×10^6 to 4.5×10^6 per foot for supersonic tests. The

test program included investigations to evaluate model blockage, reflected shock and flow angularity effects in the 11 ft. and 9 x 7 tunnels. Mach ramps were run in the 11 ft. tunnel to help establish data validity near Mach 1.0. Control surface hinge moments were obtained from the integration of measured pressure data on all control surfaces.

TABLE OF CONTENTS

	Page
ABSTRACT	iii
INDEX OF MODEL FIGURES	3
INDEX OF DATA FIGURES	4
INTRODUCTION	19
NOMENCLATURE	21
REMARKS	26
CONFIGURATIONS INVESTIGATED	32
INSTRUMENTATION	34
TEST FACILITY DESCRIPTION	37
DATA REDUCTION	38
REFERENCES	44
TABLES	
I. TEST CONDITIONS	45
II. DATA SET/RUN COLLATION SUMMARY	46
III. WING AND ELEVON PRESSURE TAP LOCATIONS	62
IV. FLIPPER DOOR PRESSURE TAP LOCATIONS	63
V. BODY FLAP PRESSURE TAP LOCATIONS	64
VI. SPEED BRAKE PRESSURE TAP LOCATIONS	65
VII. AIR DATA PROBE AND STING PRESSURE TAP LOCATIONS	66
VIII. COEFFICIENT TOLERANCES FOR THE 4-INCH TASK MKIVA BALANCE	67
FIGURES	
MODEL	68

TABLE OF CONTENTS (Concluded)

	Page
DATA	83
FORCE - VOLUME 1 - Figures 4 thru 34, pages 1 thru 185	
PRESSURE - Figures 35 thru 158, pages 186 thru 1011	
APPENDICES - SOURCE DATA	
VOLUME 2 (FORCE DATA - TABULATION)	
VOLUME 3 (PRESSURE DATA - MICROFICHE)	

NOTE: Distribution of Volume 3 was limited due to the volume of microfiche. Requests for pressure data tabulations should be directed to Chrysler Data Management Services.

INDEX OF MODEL FIGURES

Figure	Title	Page
1.	Axes systems and sign convention.	
	a. Axes Systems Definition	68
	b. Control Surface Deflections	69
	c. Orbiter Reference Dimensions	70
	d. Rudder/Speed Brake Deflections	71
	e. Elevon and Body Flap Deflections	72
2.	Model sketches.	
	a. Orbiter Configuration	73
	b. Protuberances and Penetrations	74
	c. Elevon and Wing Pressure Tap Locations	75
	d. Flipper Door and Elevon Cavity Pressure Tap Locations	76
	e. Body Flap Pressure Tap Locations	77
	f. Rudder/Speed Brake Surface Pressure Tap Locations	78
	g. Air Data Probe Pressure Tap Locations	79
	h. Base Pressure Tap Locations	80
3.	Model installation photographs.	
	a. Model Installed in 11 x 11 Foot Test Section (OA145A)	81
	b. Model Installed in 9 x 7 Foot Test Section with Base Detail (OA145B)	82

INDEX OF DATA FIGURES

FIGURE NUMBER	TITLE	COEFFICIENT SCHEDULE	CONDITIONS VARYING	PAGES
VOLUME 1 - FORCE DATA				
4	REYNOLDS NUMBER EFFECT ON LONGITUDINAL DATA	A	RN/L	1-6
5	LONGITUDINAL STABILITY	A	RN/L, MACH	7-24
6	LATERAL-DIRECTIONAL STABILITY, SPEEDBRAKE=55 DEG	B	ALPHA,MACH	25-33
7	REYNOLDS NUMBER EFFECT ON LATERAL-DIRECTIONAL DATA	B	RN/L	34-36
8	ELEVON EFFECTIVENESS	A,C	ELEVON	37-47
9	BODYFLAP LONGITUDINAL EFFECTIVENESS	A	BDFLAP	48-53
10	EFFECT OF SPEEDBRAKE DEFLECTION ON LONGITUDINAL DATA	A	SPDBRK,MACH	54-67
11	EFFECT OF SPEEDBRAKE DEFLECTION ON LATERAL-DIRECTIONAL DATA, ALPHA=10 DEG	B,D	SPDBRK,MACH	68-75
12	RUDDER EFFECTIVENESS, SPEEDBRAKE=0 DEG, BETA=0 DEG	B,D	ALPHA	76-79
13	RUDDER EFFECTIVENESS, SPEEDBRAKE=25 DEG, BETA=0 DEG	E	ALPHA	80-83
14	RUDDER EFFECTIVENESS, SPEEDBRAKE=40 DEG, BETA=0 DEG	E	ALPHA	84-87
15	RUDDER EFFECTIVENESS, SPEEDBRAKE=70 DEG. BETA=0 DEG	E	ALPHA	88-91
16	RUDDER EFFECTIVENESS, SPEEDBRAKE-87.2 DEG, BETA=0 DEG	E	ALPHA	92-95
17	RUDDER EFFECTIVENESS, VARIOUS SPDBRK SETTINGS, ALPHA=5, BETA=0 DEG	F	SPDBRK	96-98
18	RUDDER EFFECTIVENESS, VARIOUS SPDBRK SETTINGS, ALPHA=10, BETA=0 DEG	F	SPDBRK,MACH	99-106

INDEX OF DATA FIGURES (Continued)

FIGURE NUMBER	TITLE	COEFFICIENT SCHEDULE	CONDITIONS VARYING	PAGES
19	RUDDER EFFECTIVENESS, VARIOUS SPDBRK SETTINGS, ALPHA=15, BETA=0 DEG	F	SPDBRK	107-109
20	INB'D/OUTB'D ELEV EFFECTS: INB'D MOVE, OUTB'D FIX, ALPHA=10, BETA=0, AILRON=0	G	ELV-ØB	110-115
21	INB'D/OUTB'D ELEV EFFECTS: OUTB'D MOVE, INB'D FIX, ALPHA=10, BETA=0, AILRON=0	H	ELV-IB	116-121
22	INB'D/OUTB'D ELEV EFFECTS: INBOARD MOVING AS AILRON, ALPHA=10, BETA=0	I	ELEVON	122-129
23	INB'D/OUTB'D ELEV EFFECTS: OUTB'D MOVING AS AILRON, ALPHA=10, BETA=0	J	ELEVON	130-137
24	CONTROL SURF. INTERACTIONS: ELEV VARY, BDFL AP=0, AP=0, SPDBRK=55, RUD=0, BETA=0	K	ALPHA	138-140
25	CONTROL SURF. INTERACTIONS: ELEV=10, BDFLAP=-11.7, 16.3, RUDDER=0 DEG	A	BDFLAP	141-146
26	CONTROL SURF. INTERACTIONS: ELEV=-10, BDFLAP=-11.7, 16.3, RUDDER=0 DEG	A	BDFLAP	147-152
27	CONTROL SURF. INTERACTIONS: BDFLAP SWEEP, ELEVON FIXED, ALPHA=10, BETA=0	L	ELEVON	153-155
28	CONTROL SURF. INTERACTIONS: RUDDER SWEEP, BDFLAP FIX, ALPHA=10, BETA=0, ELV=0	F	BDFLAP	156-158
29	CONTROL SURF. INTERACTIONS: SIDESLIP SWEEP, VARY BDFLP, RUD=-5, ALP=10, ELV=0	B	BDFLAP	159-161

INDEX OF DATA FIGURES (Continued)

FIGURE NUMBER	TITLE	COEFFICIENT SCHEDULE	CONDITIONS VARYING	PAGES
30	CONTROL SURF. INTERACTIONS: BDFLAP SWEEP, VARY SPDBRK, ALPHA=10, BETA=ELV=0	L	SPDBRK	162-164
31	ELEVON IN SIDESLIP SWEEP: ALPHA=5 DEG	M	ELEVON	165-170
32	ELEVON IN SIDESLIP SWEEP: ALPHA=10 DEG	M	ELEVON	171-176
33	ELEVON IN SIDESLIP SWEEP: ALPHA=15 DEG	M	ELEVON	177-182
34	FULL-SPAN AILERON EFFECTS: PITCH SWEEP, ELEVON=0 DEG	N	AILRON	183-185
VOLUME 1 - PRESSURE DATA				
35	OA145B ELEVON CP VS. XE/CE INBOARD UPPER SURFACE, ALPHA EFFECT AT ELEVON = 0			186-193
36	OA145B ELEVON CP VS. XE/CE INBOARD UPPER SURFACE, ELEVON EFFECT AT ALPHA = 5			194-197
37	OA145B ELEVON CP VS. XE/CE INBOARD UPPER SURFACE, ELEVON EFFECT AT ALPHA = 10			198-205
38	OA145B ELEVON CP VS. XE/CE INBOARD UPPER SURFACE, ELEVON EFFECT AT ALPHA = 15			206-209
39	OA145B ELEVON CP VS. XE/CE INBOARD UPPER SURFACE, ELEVON EFFECT AT ALPHA = 20			210-213
40	OA145B ELEVON CP VS. XE/CE INBOARD UPPER SURFACE, ALPHA EFFECT AT ELEVON = -10			214-217
41	OA145B ELEVON CP VS. XE/CE INBOARD UPPER SURFACE, ALPHA EFFECT AT ELEVON = 10			218-221

INDEX OF DATA FIGURES (Continued)

FIGURE NUMBER	TITLE	COEFFICIENT SCHEDULE	CONDITIONS VARYING	PAGES
42	OA145B ELEVON CP VS. XE/CE OUTBOARD UPPER SURFACE, ALPHA EFFECT AT ELEVON = 0			222-229
43	OA145B ELEVON CP VS. XE/CE OUTBOARD UPPER SURFACE, ELEVON EFFECT AT ALPHA = 5			230-233
44	OA145B ELEVON CP VS. XE/CE OUTBOARD UPPER SURFACE, ELEVON EFFECT AT ALPHA = 10			234-241
45	OA145B ELEVON CP VS. XE/CE OUTBOARD UPPER SURFACE, ELEVON EFFECT AT ALPHA = 15			242-245
46	OA145B ELEVON CP VS. XE/CE OUTBOARD UPPER SURFACE, ELEVON EFFECT AT ALPHA = 20			246-249
47	OA145B ELEVON CP VS. XE/CE OUTBOARD UPPER SURFACE, ALPHA EFFECT AT ELEVON = -10			250-253
48	OA145B ELEVON CP VS. XE/CE OUTBOARD LOWER SURFACE, ALPHA EFFECT AT ELEVON = 10			254-257
49	OA145B ELEVON CP VS. XE/CE INBOARD LOWER SURFACE, ALPHA EFFECT AT ELEVON = 0			258-265
50	OA145B ELEVON CP VS. XE/CE INBOARD LOWER SURFACE, ELEVON EFFECT AT ALPHA = 5			266-269
51	OA145B ELEVON CP VS. XE/CE INBOARD LOWER SURFACE, ELEVON EFFECT AT ALPHA = 10			270-277
52	OA145B ELEVON CP VS. XE/CE INBOARD LOWER SURFACE, ELEVON EFFECT AT ALPHA = 15			278-281

INDEX OF DATA FIGURES (Continued)

FIGURE NUMBER	TITLE	COEFFICIENT SCHEDULE	CONDITIONS VARYING	PAGES
53	OA145B ELEVON CP VS. XE/CE INBOARD LOWER SURFACE, ELEVON EFFECT AT ALPHA = 20			282-285
54	OA145B ELEVON CP VS. XE/CE INBOARD LOWER SURFACE, ALPHA EFFECT AT ELEVON = -10			286-289
55	OA145B ELEVON CP VS. XE/CE INBOARD LOWER SURFACE, ALPHA EFFECT AT ELEVON = 10			290-293
56	OA145B ELEVON CP VS. XE/CE OUTBOARD LOWER SURFACE, ALPHA EFFECT AT ELEVON = 0			294-301
57	OA145B ELEVON CP VS. XE/CE OUTBOARD LOWER SURFACE, ELEVON EFFECT AT ALPHA = 5			302-305
58	OA145B ELEVON CP VS. XE/CE OUTBOARD LOWER SURFACE, ELEVON EFFECT AT ALPHA = 10			306-313
59	OA145B ELEVON CP VS. XE/CE OUTBOARD LOWER SURFACE, ELEVON EFFECT AT ALPHA = 15			314-317
60	OA145B ELEVON CP VS. XE/CE OUTBOARD LOWER SURFACE, ELEVON EFFECT AT ALPHA = 20			318-321
61	OA145B ELEVON CP VS. XE/CE OUTBOARD LOWER SURFACE, ALPHA EFFECT AT ELEVON = -10			322-325
62	OA145B ELEVON CP VS. XE/CE OUTBOARD LOWER SURFACE, ALPHA EFFECT AT ELEVON = 10			326-329
63	OA145B ELEVON CP VS. 2Y/BW UPPER SURFACE, ALPHA EFFECT AT ELEVON = θ			330-339
64	OA145B ELEVON CP VS. 2Y/BW UPPER SURFACE, ELEVON EFFECT AT ALPHA = 5			340-344

INDEX OF DATA FIGURES (Continued)

FIGURE NUMBER	TITLE	COEFFICIENT SCHEDULE	CONDITIONS VARYING	PAGES
65	OA145B ELEVON CP VS. 2Y/BW UPPER SURFACE, ELEVON EFFECT AT ALPHA = 10			345-354
66	OA145B ELEVON CP VS. 2Y/BW UPPER SURFACE, ELEVON EFFECT AT ALPHA = 15			355-359
67	OA145B ELEVON CP VS. 2Y/BW UPPER SURFACE, ELEVON EFFECT AT ALPHA = 20			360-364
68	OA145B ELEVON CP VS. 2Y/BW UPPER SURFACE, ALPHA EFFECT AT ELEVON = -10			365-369
69	OA145B ELEVON CP VS. 2Y/BW UPPER SURFACE, ALPHA EFFECT AT ELEVON = 10			370-374
70	OA145B ELEVON CP VS. 2Y/BW LOWER SURFACE, ALPHA EFFECT AT ELEVON = 0			375-386
71	OA145B ELEVON CP VS. 2Y/BW LOWER SURFACE, ELEVON EFFECT AT ALPHA = 5			387-392
72	OA145B ELEVON CP VS. 2Y/BW LOWER SURFACE, ELEVON EFFECT AT ALPHA = 10			393-404
73	OA145B ELEVON CP VS. 2Y/BW LOWER SURFACE, ELEVON EFFECT AT ALPHA = 15			405-410
74	OA145B ELEVON CP VS. 2Y/BW LOWER SURFACE, ELEVON EFFECT AT ALPHA = 20			411-416
75	OA145B ELEVON CP VS. 2Y/BW LOWER SURFACE, ALPHA EFFECT AT ELEVON = -10			417-422

INDEX OF DATA FIGURES (Continued)

FIGURE NUMBER	TITLE	COEFFICIENT SCHEDULE	CONDITIONS VARYING	PAGES
76	OA145B ELEVON CP VS. 2Y/BW LOWER SURFACE, ALPHA EFFECT AT ELEVON = 10			423-428
77	OA145B FLIPPER DOOR CP VS. XF/CF INBD UPPER SURF ALPHA EFFECT AT ELEVON = 0			429-432
78	OA145B FLIPPER DOOR CP VS. XF/CF INBD UPPER SURF ELEFON EFFECT AT ALPHA = 5			433-434
79	OA145B FLIPPER DOOR CP VS. XF/CF INBD UPPER SURF ELEVON EFFECT AT ALPHA = 10			435-438
80	OA145B FLIPPER DOOR CP VS. XF/CF INBD UPPER SURF ELEVON EFFECT AT ALPHA = 15			439-440
81	OA145B FLIPPER DOOR CP VS. XF/CF INBD UPPER SURF ELEVON EFFECT AT ALPHA = 20			441-442
82	OA145B FLIPPER DOOR CP VS. XF/CF INBD UPPER SURF ALPHA EFFECT AT ELEVON = -10			443-444
83	OA145B FLIPPER DOOR CP VS. XF/CF INBD UPPER SURF ALPHA EFFECT AT ELEVON = 10			445-446
84	OA145B FLIPPER DOOR CP VS. XF/CF OUTBD UPPER SURF ALPHA EFFECT AT ELEVON - 0			447-450
85	OA145B FLIPPER DOOR CP VS. XF/CF OUTBD UPPER SURF ELEVON EFFECT AT ALPHA = 5			451-452
86	OA145B FLIPPER DOOR CP VS. XF/CF OUTBD UPPER SURF ELEVON EFFECT AT ALPHA = 10			453-456

INDEX OF DATA FIGURES (Continued)

FIGURE NUMBER	TITLE	COEFFICIENT SCHEDULE	CONDITIONS VARYING	PAGES
87	OA145B FLIPPER DOOR CP VS. XF/CF OUTBD UPPER SURF ELEVON EFFECT AT ALPHA = 15			457-458
88	OA145B FLIPPER DOOR CP VS. XF/CF OUTBD UPPER SURF ELEVON EFFECT AT ALPHA = 20			459-460
89	OA145B FLIPPER DOOR CP VS. XF/CF OUTBD UPPER SURF ALPHA EFFECT AT ELEVON = -10			461-462
90	OA145B FLIPPER DOOR CP VS. XF/CF OUTBD UPPER SURF ALPHA EFFECT AT ELEVON = 10			463-464
91	OA145B BODY FLAP CP VS. XBF/CB UPPER SURFACE, ALPHA EFFECT AT BDFLAP = 0.0			465-466
92	OA145B BODY FLAP CP VS. XBF/CB UPPER SURFACE, BDFLAP EFFECT AT ALPHA = 5.0			467-467
93	OA145B BODY FLAP CP VS. XBF/CB UPPER SURFACE, BDFLAP EFFECT AT ALPHA = 10.0			468-469
94	OA145B BODY FLAP CP VS. XBF/CB UPPER SURFACE, BDFLAP EFFECT AT ALPHA = 15.0			470-470
95	OA145B BODY FLAP CP VS. XBF/CB LOWER SURFACE, ALPHA EFFECT AT BDFLAP = 0.0			471-480
96	OA145B BODY FLAP CP VS. XBF/CB LOWER SURFACE, BDFLAP EFFECT AT ALPHA = 5.0			481-485
97	OA145B BODY FLAP CP VS. XBF/CB LOWER SURFACE, BDFLAP EFFECT AT ALPHA = 10.0			486-495

INDEX OF DATA FIGURES (Continued)

FIGURE NUMBER	TITLE	COEFFICIENT SCHEDULE	CONDITIONS VARYING	PAGES
98	OA145B BODY FLAP CP VS. XBF/CB LOWER SURFACE, BDFLAP EFFECT AT ALPHA = 15.0			496-500
99	OA145B BODY FLAP CP VS. YBF/BB UPPER SURFACE, ALPHA EFFECT AT BDFLAP = 0.0			501-502
100	OA145B BODY FLAP CP VS. YBF/BB UPPER SURFACE, BDFLAP EFFECT AT ALPHA = 5.0			503-503
101	OA145B BODY FLAP CP VS. YBF/BB UPPER SURFACE, BDFLAP EFFECT AT ALPHA = 10.0			504-505
102	OA145B BODY FLAP CP VS. YBF/BB UPPER SURFACE, BDFLAP EFFECT AT ALPHA = 15.0			506-506
103	OA145B BODY FLAP CP VS. YBF/BB LOWER SURFACE, ALPHA EFFECT AT BDFLAP = 0.0			507-514
104	OA145B BODY FLAP CP VS. YBF/BB LOWER SURFACE, BDFLAP EFFECT AT ALPHA = 5.0			515-518
105	OA145B BODY FLAP CP VS. YBF/BB LOWER SURFACE, BDFLAP EFFECT AT ALPHA = 10.0			519-526
106	OA145B BODY FLAP CP VS. YBF/BB LOWER SURFACE, BDFLAP EFFECT AT ALPHA = 15.0			527-530
107	OA145B SPEED BRAKE CP VS. XR/CR INNER SURFACE, ALPHA EFFECT AT SPDBRK = 55			531-536
108	OA145B SPEED BRAKE CP VS. XR/CR INNER SURFACE, ALPHA EFFECT AT SPDBRK = 0			537-542

INDEX OF DATA FIGURES (Continued)

FIGURE NUMBER	TITLE	COEFFICIENT SCHEDULE	CONDITIONS VARYING	PAGES
109	OA145B SPEED BRAKE CP VS. XR/CR INNER SURFACE, ALPHA EFFECT AT SPDBRK = 25			543-548
110	OA145B SPEED BRAKE CP VS. XR/CR INNER SURFACE, ALPHA EFFECT AT SPDBRK = 87.2			549-554
111	OA145B SPEED BRAKE CP VS. XR/CR INNER SURFACE, BETA EFFECT AT SPDBRK = 55			555-560
112	OA145B SPEED BRAKE CP VS. XR/CR INNER SURFACE, BETA EFFECT AT SPDBRK = 0			561-566
113	OA145B SPEED BRAKE CP VS. XR/CR INNER SURFACE, BETA EFFECT AT SPDBRK = 25			567-572
114	OA145B SPEED BRAKE CP VS. XR/CR INNER SURFACE, BETA EFFECT AT SPDBRK = 87.2			573-578
115	OA145B SPEED BRAKE CP VS. XR/CR INNER SURFACE, RUDDER EFFECT AT SPDBRK = 55			579-584
116	OA145B SPEED BRAKE CP VS. XR/CR INNER SURFACE, RUDDER EFFECT AT SPDBRK = 0			585-587
117	OA145B SPEED BRAKE CP VS. XR/CR INNER SURFACE, RUDDER EFFECT AT SPDBRK = 25			588-593
118	OA145B SPEED BRAKE CP VS. XR/CR INNER SURFACE, RUDDER EFFECT AT SPDBRK = 87.2			594-599
119	OA145B SPEED BRAKE CP VS. XR/CR INNER SURFACE, SPDBRK EFFECT AT ALPHA = 10, BETA = 0, RUDDER = 0			600-611

INDEX OF DATA FIGURES (Continued)

FIGURE NUMBER	TITLE	COEFFICIENT SCHEDULE	CONDITIONS VARYING	PAGES
120	OA145B SPEED BRAKE CP VS. XR/CR OUTER SURFACE, ALPHA EFFECT AT SPDBRK = 55			612-629
121	OA145B SPEED BRAKE CP VS. XR/CR OUTER SURFACE, ALPHA EFFECT AT SPDBRK = 0			630-647
122	OA145B SPEED BRAKE CP VS. XR/CR OUTER SURFACE, ALPHA EFFECT AT SPDBRK = 25			648-665
123	OA145B SPEED BRAKE CP VS. XR/CR OUTER SURFACE, ALPHA EFFECT AT SPDBRK = 87.2			666-683
124	OA145B SPEED BRAKE CP VS. XR/XR OUTER SURFACE, BETA EFFECT AT SPDBRK = 55			684-701
125	OA145B SPEED BRAKE CP VS. XR/CR OUTER SURFACE, BETA EFFECT AT SPDBRK = 0			702-719
126	OA145B SPEED BRAKE CP VS. XR/CR OUTER SURFACE, BETA EFFECT AT SPDBRK = 25			720-737
127	OA145B SPEED BRAKE CP VS. XR/CR OUTER SURFACE, BETA EFFECT AT SPDBRK = 87.2			738-755
128	OA145B SPEED BRAKE CP VS. XR/CR OUTER SURFACE, RUDDER EFFECT AT SPDBRK = 55			756-773
129	OA145B SPEED BRAKE CP VS. XR/CR OUTER SURFACE, RUDDER EFFECT AT SPDBRK = 0			774-782
130	OA145B SPEED BRAKE CP VS. XR/CR OUTER SURFACE, RUDDER EFFECT AT SPDBRK = 25			783-800

INDEX OF DATA FIGURES (Continued)

FIGURE NUMBER	TITLE	COEFFICIENT SCHEDULE	CONDITIONS VARYING	PAGES
131	OA145B SPEED BRAKE CP VS. XR/CR OUTER SURFACE, RUDDER EFFECT AT SPDBRK = 87.2			801-818
132	OA145B SPEED BRAKE CP VS. XR/CR OUTER SURFACE, SPDBRK EFFECT AT ALPHA = 10, BETA = 0, RUDDER = 0			819-836
133	OA145B SPEED BRAKE CP VS. ZR/BR OA145B SPEED BRAKE CP VS. ZR/BR, INNER SURFACE, ALPHA EFFECT AT SPDBRK = 55			837-842
134	OA145B SPEED BRAKE CP VS. ZR/BR OA145B SPEED BRAKE CP VS. ZR/BR, INNER SURFACE, ALPHA EFFECT AT SPDBRK = 0			843-848
135	OA145B SPEED BRAKE CP VS. ZR/BR OA145B SPEED BRAKE CP VS. ZR/BR, INNER SURFACE, ALPHA EFFECT AT SPDBRK = 25			849-854
136	OA145B SPEED BRAKE CP VS. ZR/BR INNER SURFACE, ALPHA EFFECT AT SPDBRK = 87.2			855-860
137	OA145B SPEED BRAKE CP VS. ZR/BR INNER SURFACE, BETA EFFECT AT SPDBRK = 55			861-866
138	OA145B SPEED BRAKE CP VS. ZR/BR INNER SURFACE, BETA EFFECT AT SPDBRK = 0			867-872
139	OA145B SPEED BRAKE CP VS. ZR/BR INNER SURFACE, BETA EFFECT AT SPDBRK = 25			873-878
140	OA145B SPEED BRAKE CP VS. ZR/BR INNER SURFACE, BETA EFFECT AT SPDBRK = 87.2			879-884
141	OA145B SPEED BRAKE CP VS. ZR/BR INNER SURFACE, RUDDER EFFECT AT SPDBRK = 55			885-890

INDEX OF DATA FIGURES (Continued)

FIGURE NUMBER	TITLE	COEFFICIENT SCHEDULE	CONDITIONS VARYING	PAGES
142	OA145B SPEED BRAKE CP VS. ZR/BR INNER SURFACE, RUDDER EFFECT AT SPDBRK = 0			891-893
143	OA145B SPEED BRAKE CP VS. ZR/BR INNER SURFACE, RUDDER EFFECT AT SPDBRK = 25			894-899
144	OA145B SPEED BRAKE CP VS. ZR/BR INNER SURFACE, RUDDER EFFECT AT SPDBRK = 87.2			900-905
145	OA145B SPEED BRAKE CP VS. ZR/BR INNER SURFACE, SPDBRK EFFECT AT ALPHA = 10, BETA = 0, RUDDER = 0			906-911
146	OA145B SPEED BRAKE CP VS. ZR/BR OUTER SURFACE, ALPHA EFFECT AT SPDBRK = 55			912-919
147	OA145B SPEED BRAKE CP VS. ZR/BR OUTER SURFACE, ALPHA EFFECT AT SPDBRK = 0			920-927
148	OA145B SPEED BRAKE CP VS. ZR/BR OUTER SURFACE, ALPHA EFFECT AT SPDBRK = 25			928-935
149	OA145B SPEED BRAKE CP VS. ZR/BR OUTER SURFACE, ALPHA EFFECT AT SPDBRK = 87.2			936-943
150	OA145B SPEED BRAKE CP VS. ZR/BR OUTER SURFACE, BETA EFFECT AT SPDBRK = 55			944-951
151	OA145B SPEED BRAKE CP VS. ZR/BR OUTER SURFACE, BETA EFFECT AT SPDBRK = 0			952-959
152	OA145B SPEED BRAKE CP VS. ZR/BR OUTER SURFACE, BETA EFFECT AT SPDBRK = 25			960-967

INDEX OF DATA FIGURES (Continued)

FIGURE NUMBER	TITLE	COEFFICIENT SCHEDULE	CONDITIONS VARYING	PAGES
153	OA145B SPEED BRAKE CP VS. ZR/BR OUTER SURFACE, BETA EFFECT AT SPDBRK = 87.2			968-975
154	OA145B SPEED BRAKE CP VS. ZR/BR OUTER SURFACE, RUDDER EFFECT AT SPDBRK = 55			976-983
155	OA145B SPEED BRAKE CP VS. ZR/BR OUTER SURFACE, RUDDER EFFECT AT SPDBRK = 0			984-987
156	OA145B SPEED BRAKE CP VS. ZR/BR OUTER SURFACE, RUDDER EFFECT AT SPDBRK = 25			988-995
157	OA145B SPEED BRAKE CP VS. ZR/BR OUTER SURFACE, RUDDER EFFECT AT SPDBRK = 87.2			996-1003
158	OA145B SPEED BRAKE CP VS. ZR/BR OUTER SURFACE, SPDBRK EFFECT AT ALPHA = 10, BETA = 0, RUDDER = 0			1004-1011

PLOTTED COEFFICIENT SCHEDULE:

(A) CL, CD, C_m, CA VS. α, CL VS CD, CL VS. C_m

(B) CY, C_n, C_ℓ VS. β

(C) Ch_e, Che_o, Che_I, Ch_{FDo}, Ch_{FDI} VS. α

(D) Ch_{sb} VS. β

(E) CY, C_n, C_ℓ, Ch_{sb} VS. δ_r

(F) CY, C_n, C_ℓ, VS. δ_r

INDEX OF DATA FIGURES (Concluded)

FIGURE NUMBER	TITLE	COEFFICIENT SCHEDULE	CONDITIONS VARYING	PAGES
PLOTTED COEFFICIENT SCHEDULE (Continued):				
(G)	CL, CD, Cm, Che, Che_I, Ch_{FDI} VS. δe_{IB}			
(H)	CL, CD, Cm, Che, $Che_\emptyset$, $Ch_{FD\emptyset}$ VS. $\delta e_{\emptyset B}$			
(I)	CL, CD, Cm, Cy, Cn, Cℓ, Che_I, $Che_\emptyset$ VS. δa_{IB}			
(J)	CL, CD, Cm, Cy, Cn, Cℓ, Che_I, $Che_\emptyset$ VS. $\delta a_{\emptyset B}$			
(K)	CL, CD, Cm, VS. δe			
(L)	CL, CD, Cm VS. δ_{BF}			
(M)	CY, Cn, Cℓ, Che, Che_I, $Che_\emptyset$ VS. β			
(N)	CY, Cn, Cℓ VS. α			

INTRODUCTION

An experimental investigation was performed to determine aerodynamic stability and control characteristics and control surface hinge moments on the OV102 configuration. The test article was an 0.05-scale representation of the SSV orbiter configuration (model 39-0). Tests were performed in the NASA/ARC Unitary Plan Wind Tunnel. Nominal test conditions are given in Table I.

Six-component force data were measured on the complete model using the ARC 4-inch Task MKIVA balance sting mounted through the rear of the model. The model had a total of 280 pressure taps located as shown in Figures 2c through 2h. Control surface pressures were measured on the left hand elevon panels, the body flap and speed brake. These pressures were also integrated to obtain control surface hinge moments.

With the tunnel flowing, data were recorded through an angle-of-attack range from -10° to $+30^{\circ}$ and an angle of sideslip range from -10° to $+10^{\circ}$.

Control surfaces remotely actuated from the control room were: All four elevon panels, the body flap, and the rudder. Speed brake deflections were set manually using a pin indexing system on the rudder shaft.

The report consists of 3 volumes, 1 volume of plotted force data and plotted pressure data, 1 volume of tabulated force data, 1 volume of tabulated pressure data on microfiche. The volumes are arranged in the following manner;

VOLUME NUMBER	CONTENTS	MICROFICHE PAGE NO.
1	oa145B PLOTTED FORCE DATA	
2	OA145A TABULATED FORCE DATA	
3	OA145B TABULATED PRESSURE DATA	
	INBOARD ELEVON LOWER SURFACE	1-8
	OUTBOARD ELEVON LOWER SURFACE	8-14
	INBOARD ELEVON UPPER SURFACE	15-29
	OUTBOARD ELEVON UPPER SURFACE	29-44
	INBOARD FLIPPER DOOR UPPER SURFACE	45-50
	OUTBOARD FLIPPER DOOR UPPER SURFACE	50-55
	BODY FLAP UPPER SURFACE	55-60
	BODY FLAP LOWER SURFACE	61-66
	RUDDER OUTER SURFACE	66-72
	RUDDER INNER SURFACE	72-78
	ORBITER BASE	78-80
	STING LOWER SURFACE	80-82
	STING UPPER SURFACE	82-83

NOMENCLATURE

PLOT SYMBOL	MNEMONIC	DEFINITION
a		speed of sound; m/sec,ft/sec
A_{B_K}		fuselage base area assigned to pressure tap K, ft.^{2}
A_C		fuselage base sting cavity area, ft.^{2}
A_i		upper control surface area assigned to pressure tap i, in.^{2}
A_j		lower control surface area assigned to pressure tap j, in.^{2}
A_m		speed brake outer surface area assigned to pressure tap m, in.^{2}
A_n		speed brake inner surface area assigned to pressure tap n, in.^{2}
b_w		Wind reference span, in. Used to nondimensionalize yawing and rolling moments.
C_A	CA	axial-force coefficient; $\frac{\text{axial force}}{qS}$
C_{A_b}	CAB	base-force coefficient; $\frac{\text{base force}}{qS}$ $-A_b(p_b-p_\infty)/qS$
C_{AC}	CAC	Sting cavity axial force coefficient. Sting cavity pressure is adjusted to an average base pressure.
C_{A_f}	CAF	forebody axial force coefficient, $C_A - C_{A_b}$
C_{AU}		axial force coefficient, unadjusted
c_{BF}		body flap reference chord length, in.
C_D	CD	drag coefficient; $\frac{\text{drag}}{qS}$
C_{D_b}	CDB	base-drag coefficient; $\frac{\text{base drag}}{qS}$
C_{D_f}	CDF	forebody drag coefficient; $C_D - C_{D_b}$

NOMENCLATURE (Continued)

PLOT SYMBOL	MNEMONIC	DEFINITION
c_E		elevon reference chord length, in.
c_{FD}		flipper door reference chord length, in.
$C_{h_{BF}}$	CHBF	body flap hinge moment coefficient
$C_{h_{EI}}$	CHEI	inboard elevon hinge moment coefficient
$C_{h_{EO}}$	CHEO	outboard elevon hinge moment coefficient
$C_{h_{FDI}}$	CHFDI	inboard flipper door hinge moment coefficient
$C_{h_{FDO}}$	CHFDO	outboard flipper door hinge moment coefficient
$C_{h_{SB}}$	CHSB	speed brake hinge moment coefficient
C_L	CL	lift coefficient; $\frac{\text{lift}}{qS}$
C_ℓ	CBL	rolling-moment coefficient; $\frac{\text{rolling moment}}{qSb}$
C_m	CIM	pitching-moment coefficient; $\frac{\text{pitching moment}}{qS\ell_{REF}}$
C_n	CYN	yawing-moment coefficient; $\frac{\text{yawing moment}}{qSb}$
C_N	CN	normal-force coefficient; $\frac{\text{normal force}}{qS}$
C_p	CP	pressure coefficient; $(p_1 - p_\infty)/q$
$\bar{c}_W$		wing reference MAC, in.
C_Y	CY	side-force coefficient; $\frac{\text{side force}}{qS}$
δ_a	AILRON	Aileron deflection. Positive when L.H. elevon is more trailing edge down than R.H. elevon, degrees.
δ_{BF}, δ_{bf}	BDFLAP	Body flap deflection. Positive trailing edge down, degrees.

NOMENCLATURE (Continued)

PLOT SYMBOL	MNEMONIC	DEFINITION
δe	ELEVON	Elevon deflection, average of the four individual panel deflections. Positive trailing edge down, degrees.
$\delta e_{LI,\emptyset}$	ELV-LI,Ø	inboard and outboard L.H. elevon deflections, degrees
DELL	DELL	differential elevon setting, left side, outboard-inboard, degrees
DELR	DELR	differential elevon setting, right side, outboard-inboard, degrees
$\delta e_{RI,\emptyset}$	ELV-RI,Ø	inboard and outboard R.H. elevon deflections, degrees
δr	RUDDER	Rudder deflection in a water plane. Positive trailing edge left, degrees.
DRHL	DRHL	Rudder deflection normal to the hinge line. Positive trailing edge left, degrees.
δSB	SPDBRK	Speed brake deflection. Angle between the inside faces of the left and right panels, always positive, degrees.
H_{mBF}		body flap hinge moment, in-lbs
H_{mEI}		inboard elevon hinge moment, in-lbs
H_{mEO}		outboard elevon hinge moment, in-lbs
H_{MFDI}		inboard flipper door hinge moment, in.lbs
H_{MFDO}		outboard flipper door hinge moment, in.lbs
H_{MSB}		speed brake hinge moment, in-lbs
lB		orbiter body reference length, in.
L/D	L/D	lift-to-drag ratio; C_L/C_D
L/D_f	L/DF	lift-to-forebody drag ratio; C_L/C_{D_f}
M	MACH	Mach number; V/a

NOMENCLATURE (Continued)

PLOT SYMBOL	MNEMONIC	DEFINITION
p		pressure; N/m^2, psf
$P_{i,j,m,n}$		control surface static pressure corresponding to tap i, j, m or n, psfa
P_o	P	freestream static pressure psfa
q	Q(PSF) Q	dynamic pressure; $1/2\rho V^2$, psf
RN/L	RN/L, RN	unit Reynold's number; per m, per ft
S_{BF}		body flap reference area, $in.^2$
S_E		elevon reference area, $in.^2$
S_{FD}		flipper door reference area, $in.^2$
S_{SB}		speed brake reference area, $in.^2$
S_w		wing reference area, $ft.^2$
V		velocity; m/sec, ft/sec
x_{BF}/C_B	XBF/CB	chordwise distance aft of body flap hinge line as a fraction of body flap chord
X_{CG}		distance from orbiter nose (IML) to model moment reference center, in.
X_{CP}	XCP/L	model center of pressure location in the normal force direction, relative to the model nose (IML), in.
x_e/C_e	XE/CE	chordwise distance aft of elevon hinge line as a fraction of local elevon chord
x_{FD}/C_{FD}	XF/CF	chordwise distance aft of flipper door hinge line as a fraction of local flipper door chord
$X_{i,j,m,n}$		transfer distance from static pressure tap i, j, m or n to the corresponding control surface hinge line, in.

NOMENCLATURE (Concluded)

PLOT SYMBOL	MNEMONIC	DEFINITION
x_R/C_R	XR/CR	chordwise distance aft of rudder hinge line as a fraction of local rudder chord
α	ALPHA	angle of attack, degrees
β	BETA	angle of sideslip, degrees
ψ	PSI	angle of yaw, degrees
ϕ	PHI	angle of roll, degrees
ρ		mass density; kg/m^3, $slugs/ft^3$
η_{BF}	YBF/BB	spanwise distance from body flap left edge as a fraction of body flap span at hinge line
η_R	ZR/BR	spanwise distance from rudder bottom edge as a fraction of rudder span on hinge line
η_W	2Y/BW	distance from plane of symmetry as a fraction of wing semi-span

REMARKS

After completion of the OA145 test program, pressure data for all three program phases were reviewed to determine what updating, corrections, or substitutions would be necessary. The following defines for each program phase those corrections that were deemed necessary and were made to the final data prior to preparation of the final data tape for Dataman. Updating and substitutions were applied only where known deficiencies existed that would have severely compromised the final data.

PRESSURE DATA UPDATING FOR 118-1-11 (OA145A)

Run 18 through 56:16

Deleted	SV	Port(s)
	1	3, 4, 5, 8 through 11, 17, 18
	3	18
	7	2, 6, 24
	9	19, 20

Applied				
	Tap 127	(SV3-Port 13)	Pressure to Tap 132	(SV3-Port 18)
	Tap 6	(SV6-Port 2)	Pressure to Tap 7	(SV7-Port 2)
	Tap 216	(SV7-Port 3)	Pressure to Tap 219	(SV7-Port 6)
	Tap 240	(SV8-Port 3)	Pressure to Tap 207	(SV7-Port 24)
	Tap 403	(SV9-Port 18)	Pressure to Tap 404	(SV9-Port 19)
	Tap 403	(SV9-Port 18)	Pressure to Tap 405	(SV9-Port 20)

Run 50:13 through 56:16

Replaced SV8 CAL with SV9 CAL.

Run 60:1 through 74:11

Deleted	SV	Port(s)
	1	3, 5, 8 through 11, 17
	4	2
	7	6, 24
	9	19, 20

Applied Tap 5 (SV5-Port 2) Pressure to Tap 4 (SV4-Port 2)
Tap 216 (SV7-Port 3) Pressure to Tap 219 (SV7-Port 6)
Tap 240 (SV8-Port 3) Pressure to Tap 237 (SV7-Port 24)
Tap 403 (SV9-Port 18) Pressure to Tap 404 (SV9-Port 17)
Tap 403 (SV9-Port 18) Pressure to Tap 405 (SV9-Port 19)

Run 76:1 through 272:9

Deleted	SV	Port(s)
	1	3, 8, through 11, 17
	7	6, 24
	9	19, 20, 24

Applied Tap 216 (SV7-Port 3) Pressure to Tap 219 (SV7-Port 6)
Tap 240 (SV8-Port 3) Pressure to Tap 237 (SV7-Port 24)
Tap 403 (SV9-Port 18) Pressure to Tap 404 (SV9-Port 19)
Tap 403 (SV9-Port 18) Pressure to Tap 405 (SV9-Port 20)
Tap 408 (SV9-Port 23) Pressure to Tap 409 (SV9-Port 24)

Run 67:1 through 341:10

Replaced SV8 CAL with SV9 CAL

Run 185:1 through 272:9

Deleted	SV	Port
	1	5

Applied Tap 35 (SV1-Port 11) Pressure to Tap 25 (SV1-Port 5)

Run 276:1 through 396:10

Deleted	SV	Port(s)
	7	6, 24
	9	19, 20, 24

Applied Tap 216 (SV7-Port 3) Pressure to Tap 219 (SV7-Port 6)
Tap 240 (SV8-Port 3) Pressure to Tap 237 (SV7-Port 24)
Tap 403 (SV9-Port 18) Pressure to Tap 404 (SV9-Port 19)
Tap 403 (SV9-Port 18) Pressure to Tap 405 (SV9-Port 20)
Tap 408 (SV9-Port 23) Pressure to Tap 409 (SV9-Port 24)

Run 370:1 through 384

Deleted SV6 Port 2

Applied Tap 5 (SV5-Port 2) Pressure to Tap 6 (SV6-Port 2)

Run 403 through 918:10

Deleted SV7 Ports 6 and 24

Applied Tap 216 (SV7-Port 2) Pressure to Tap 218 (SV7-Port 6)
Tap 240 (SV8-Port 3) Pressure to Tap 237 (SV7-Port 24)

Run 514 through 534:10

Deleted SV6 Port 2

Applied Taps (SV5-Port 2) Pressure to Tap 6 (SV6-Port 2)

Run 735 through 756:10

Deleted SV2 Port 7

Applied Tap 65 (SV1-Port 25) Pressure to Tap 75 (SV2-Port 7)

Run 874 through 895:8

Deleted SV2 Port 7

Applied Tap 65 (SV1-Port 25) Pressure to Tap 75 (SV2-Port 7)

PRESSURE DATA UPDATING FOR 118-1-97 (OA145B)

Run 156:7 through 337 (End of 5/4/77 running)

Deleted	SV	Port(s)
	3	8
	7	24

Applied Tap 117 (SV3-Port 3) Pressure to Tap 122 (SV3-Port 8)
Tap 240 (SV8-Port 3) Pressure to Tap 237 (SV7-Port 24)

Run 340 through 391 (End of test)

Deleted	SV	Port
	7	24

REMARKS (Continued)

Applied Tap 240 (SV8-Port 3) Pressure to Tap 237 (SV7-Port 24)

P_{BASE} for following runs is lost; substitute as follows:

For Run 228 Substitute P_B from Run 200 Seq. 6
For Run 229 Substitute P_B from Run 200 Seq. 18

PRESSURE DATA UPDATING FOR 118-1-87 (OA145C)

Run 13 through 97

Deleted	SV	Port(s)
	3	8
	7	24

Applied Tap 117 (SV3-Port 3) Pressure to Tap 122 (SV3-Port 8)
Tap 240 (SV8-Port 3) Pressure to Tap 237 (SV7-Port 24)

Run 82 through 96

Deleted SV8 Port 2

Applied Tap 7 (SV7-Port 2) Pressure to Tap 8 (SV8-Port 2)

Run 98 through 188

Deleted SV7 Port 24

Applied Tap 240 (SV8-Port 3) Pressure to Tap 237 (SV7-Port 24)

Run 100 through 188

Deleted SV3 Port 8

Applied Tap 117 (SV3-Port 3) Pressure to Tap 122 (SV3-Port 8)

It should be noted that for the OA145A program aerodynamic coefficient data presented between freestream Mach numbers of about 0.98 and 1.07 may be suspect. Measured aerodynamic characteristics are affected by tunnel wall blockage and/or reflected shock waves. Therefore, data in this Mach range should be used with caution for diagnostic

analysis only. Review of the base pressure data for the OA145C test program revealed significant differences in P_{BASE} between individual pressure taps and are a result of response time problems associated with Scanivalve stepping from the calibrate pressure Port #1 (high positive pressure) to the adjacent (low negative value) base pressure Port #2, on all Scanivalves. For base pressures measured on two adjacent ports, i.e., CP_{B10} and CP_{B11} on Scanivalve 11 the second pressure reads the correct value of P_{BASE}. It was therefore concluded that only Port #2 on each Scanivalve, the base pressure tap, is in error. This anomaly was not discovered until after release of the final data tape to Dataman.

Pressure data used for the DATAMAN integrations for control surface hinge moments (documented as special request SPRT9F) were edited further by DATAMAN to exclude taps designated by Rockwell as bad or suspect. The following is a list of the pressure taps deleted by DATAMAN in accordance with the integration request:

Tap No.	Component	Tap Location
132	Elevon Upper Surface	$\eta_W = 0.8$, $X_e/C_e = 0.2$
155	Elevon Lower Surface	$\eta_W = 0.34$, $X_e/C_e = 0.6$
209	Flipper Door Upper Surface	$\eta_W = 0.534$, $X_F/C_F = 0.9$
215	Flipper Door Upper Surface	$\eta_W = 0.715$, $X_F/C_F = 0.9$
219-221	Flipper Door Upper Surface	$\eta_W = 0.887$, all X_F/C_F
325	Body Flap Lower Surface	centerline @ T. E.

REMARKS (concluded)

Hinge moment data presented in this report are the on line integration results from the test facility. Pressure data tabulated in volume 3 are also facility data.

CONFIGURATIONS INVESTIGATED

The test article (provided by Rockwell) was a 0.05-scale model 39-0 defined by the VC70-000002B configuration control drawing and fabricated to the March 15, 1976 trajectory 14414.1C/C Numerical Control Lines.

The model was constructed primarily of 6061-T6 aluminum alloy and Armco 17-4 stainless steel. The balance block, wing panels and elevons. vertical tail and speed brakes, and body flap are the principal steel components. The fuselage is all aluminum.

The model was tested in the above fixed configuration in all three facilities. No model boundary layer trips were employed for any testing. The only configuration variables were model orientation and control surface deflection. The following range of control surface deflections were tested and controlled remotely from the control room: Elevon deflections of -35° to $+20^{\circ}$, body flap deflections of -11.7 to 22.5 and -22.8 to +22.8 rudder deflection. Speed brake deflections of 0°. 7.5, 15°, 25°, 40°, 55°, 70° and 87.2° were set manually.

The following nomenclature was used to designate the model components:

Component	Definition
B_{75}	OV102 fuselage including T-zero umbilical panels, crew hatch, and cargo bay door gaps.
C_{16}	Canopy including recessed windshields and observation windows.
E_{64}	Elevons, including elevon/elevon and elevon/fuselage gaps.
F_{16}	Body flap.

CONFIGURATIONS INVESTIGATED(Concluded)

Component	Definition
FD_3	Flipper doors.
FR_{22}	Fairings for the forward cargo bay door hinges, 6 per side.
HG_1	Cargo bay door hinges, 13 per side.
M_{52}	OMS pods.
N_{108}	Forward RCS thruster nozzle ports.
N_{109}	Main propulsion system nozzles (inner surfaces cut away for sting clearance).
N_{110}	OMS nozzles.
N_{111}	Aft RCS thruster nozzles and ports.
R_{20}	Rudder, split into left and right speed brake panels.
V_{27}	Vertical tail.
VT_{10}	Cargo bay vents, 4 per side.
VT_{11}	wing/landing gear bay vents, 1 per side.
VT_{12}	Cabin vents, 1 per side.
VT_{13}	Forward RCS vents, 1 per side.
VT_{14}	Aft fuselage vents, 1 per side.
VT_{15}	OMS RCS vents, 1 per side.
VT_{16}	Flipper door vents.
VT_{17}	Miscellaneous vents, ports and penetrations.
W_{131}	OV102 wing.

The above nomenclature is depicted in Figures 2a and 2b.

INSTRUMENTATION

The test was conducted with the following model instrumentation:

1. 4.0-inch Task MKIVA, 6-component internal balance.
2. Eleven Scanco S-type, 48-port Scanivalves for model pressures. One Scanivalve for sting pressures.
3. 36 wing and 97 elevon static pressure taps.
4. 32 flipper door static pressures, 24 external, 8 internal
5. 5 aft fuselage and 23 body flap static pressure taps.
6. 9 vertical tail and 45 speed brake static pressure taps.
7. 9 fuselage base and 2 balance cavity static pressure taps.
8. 2 air data probe forward fuselage flush static pressure taps.
9. 20 sting static pressure taps.

Six model control surfaces were remotely actuated. Included were the following instrumentation:

1. Hydraulic actuation systems for the four elevon panels and the body flap.
2. Electric motor actuation system for the rudder.
3. Angular position pots for each of the control surfaces.
4. A model mounted hydraulic supply system, including pump, and servo-control valves.
5. A model control console housing the electrical components of the servo systems.

Force data for the orbiter was measured by a six-component balance, sting mounted through the rear of the model. The primary balance for this test was the ARC 4-inch Task MKIVA and the backup balance was the Task MK VI provided by Rockwell.

INSTRUMENTATION (Continued)

The model was instrumented with a total of 280 static pressure taps. These pressures were measured by eleven model mounted S-type Scanivalves provided by Rockwell International.

The sting was instrumented with 20 static pressure taps, 10 each top and bottom spaced every 2 inches aft of the base. These pressures were measured by a single S-type Scanivalve mounted in the tunnel strut BOR. The Scanivalve was provided by Rockwell International.

All pressure instrumentation electrical leads were supplied by Rockwell International. ARC provided reference, calibrate, and backing pressure tubes from their source to the aft end of the model. The routing of all instrumentation leads was internal to the sting, except for the sting static taps.

The locations and tap identification numbers of all orifices are shown in Tables III through VI and Figures 2c through 2h.

Tunnel wall static pressure, measured upstream of the test section, was used as the reference pressure for all Scanivalves.

The four elevon panels and the body flap were remotely controlled using a model mounted hydraulic servo control system. The hydraulic system consisted of 1 H.P. AC motor, pump and reservoir, Moog Type 30 servovalves, and Oildyne Style A hydraulic cylinders. The electrical components of the servo-system, the operational amplifiers and balancing pots, were contained in a model control console located in the control room.

The rudder panels were remotely controlled using a Globe planetary gear motor, Type 8L. An electrical servo system for the rudder, utilizing a Moog amplifier, was built into the model control console.

Control surface angular position was read by rotary pots located as closely as possible to each surface hingeline. The pots for the inboard elevon panels and the body flap were 7/8-inch Beckman Helipots, model 6173 single turn, dual element. The pots for the outboard elevons and rudder panels were 1/2-inch Markite Series BM05 pots, also single turn, dual element.

The dual outputs from each pot allowed one output to be utilized as the feedback element in the control servo loop, with the second output being used to set control position and compute surface positions in the data reduction program.

The model control console was operated manually. Unbalancing of the servo to set a given control deflection was accomplished by manually adjusting the Helipots on the control console. The position of each control surface was read by separate digital voltmeters mounted on the console.

TEST FACILITIES DESCRIPTION

Ames 11 x 11-Foot Transonic (ØA145A)

The Ames 11 x 11-Foot Transonic Wind Tunnel is a variable density, closed return, continuous flow type. This tunnel has an adjustable nozzle (two flexible walls) and a slotted test section to permit transonic testing over a Mach number range continuously variable from 0.4 to 1.4.

Ames 8 x 7-Foot Supersonic (ØA145C)

The Ames 8 x 7-Foot Supersonic Wind Tunnel is a closed-return, variable-density tunnel with a 8- by 7-foot rectangular test section. The nozzle has flexible side walls with fixed upper and lower surfaces. Mach number range is continuously variable from 2.45 to 3.5. Tunnel stagnation pressure can be varied from 0.3 to 2.0 atmospheres and Reynold's number per foot varies from 1.0×10^6 to 5.0×10^6.

Ames 9 x 7-Foot Supersonic (ØA145B)

The Ames 9 x 7-Foot Supersonic Wind Tunnel is a variable density, continuous flow type with an adjustable nozzle to permit supersonic testing over a Mach number range continuously variable from 1.5 to 2.5. The nozzle is of the asymmetric, sliding-block type in which the variation of the test section Mach number is achieved by translating, in the streamwise direction, the fixed-contour block that forms the floor of the nozzle.

DATA REDUCTION

Model force and moment data was reduced to coefficient form in both body and stability axes systems. Moment data was reduced about a moment reference center corresponding to 65% of the reference body length at W.L. 375. Model angle of attack and sideslip were corrected for support hardware deflections and tunnel flow angularity. Angle-of-attack flow angularity was determined from upright and inverted model runs at the beginning of the test. Standard facility corrections were applied as required. All model pressure data was reduced to the pressure coefficient form $(P-P_o)/q$.

Six-component body axes data was computed from balance outputs with axial force being adjusted for the differences between the average sting cavity pressure and an average base pressure.

$$C_A = C_{A_U} - C_{A_C}$$

where:

$$C_{A_C} = -\left(C_{P_{C_{avg.}}} - C_{P_{B_{avg.}}}\right) \frac{(A_c)}{S_w}$$

$$C_{P_{C_{avg.}}} = \frac{C_{P10} + C_{P11}}{2}$$

$$C_{P_{B_{avg.}}} = \frac{(C_{P1} + C_{P2} + C_{P5} + C_{P6} + C_{P7} + C_{P8})}{6}$$

Forebody axial force coefficients were computed by adjusting the base pressure to freestream.

$$C_{A_F} = C_A - C_{A_B}$$

where:

$$C_{A_B} = \frac{-1}{S_w}\left[\sum_{K=1}^{9} (C_{P_K} A_{BK}) + (C_{P_{Bavg.}} A_C)\right]$$

Center-of-pressure location of the model normal force was computed as a ratio to the reference body length.

$$\frac{X_{CP}}{lB} = \frac{1}{lB}\left(X_{CG} - \frac{C_m}{C_N}\bar{c}\right)$$

Stability axes coefficients C_L and C_D were computed from body axes coefficients C_N and C_A. Model lift-to-drag ratio was then computed from C_L and C_D.

$$L/D = C_L/C_D$$

Model control surface positions from the run schedule were input to the controller manually, i.e., constant or variable values were input depending on the sweep variable for the given run. Table look up values of δ_e, δ_{BF}, and δ_A, based on calibration data, were stored in the data reduction program and employed to determine control surface position from the actual set values of controller voltages input to the ARC instrumentation system.

Model control surface hinge moments (on line data only) were computed by the facility from control surface pressures using an area-moment arm method as detailed below:

$$H_{MEI} = \sum_{I=101}^{124} \left|(P_i)\ (A_i)\ (x_i)\right| - \sum_{J=150}^{173} \left|(P_j)\ (A_j)\ (x_j)\right|$$

$$C_{HEI} = \frac{H_{MEI}}{qS_E C_E}$$

$$H_{MEO} = \sum_{i=125}^{149} \left[(P_i)\ (A_i)\ (x_i)\right] - \sum_{J=174}^{197} \left[(P_j)\ (A_j)\ (x_j)\right]$$

$$C_{HEO} = \frac{H_{MEO}}{qS_E C_E}$$

Inboard flipper door

$$H_{MFDI} = \sum_{i=201}^{212} \left[(P_i)\ (A_i)\ (x_i)\right] - \sum_{j=225}^{236} \left[(P_j)\ (A_j)\ (x_j)\right]$$

$$Ch_{FDI} = \frac{H_{MFDI}}{qS_{FD} C_{FD}}$$

Outboard flipper door

$$H_{MFDO} = \sum_{i=213}^{224} \left[(P_i)\ (A_i)\ (x_i)\right] - \sum_{j=237}^{248} \left[(P_j)\ (A_j)\ (x_j)\right]$$

$$Ch_{FDO} = \frac{H_{MFDO}}{qS_{FD} C_{FD}}$$

Body flap hinge moments

$$H_{MBF} = \sum_{i=301}^{307} \left[(P_i)\ (A_i)\ (x_i)\right] - \sum_{j=314}^{325} \left[(P_j)\ (A_j)\ (x_j)\right]$$

$$Ch_{BF} = \frac{H_{MBF}}{qS_{BF} C_{BF}}$$

where:

i = upper surface pressure tap numbers

j = lower surface pressure tap numbers

Speed brake hinge moments

$$H_{MSB} = \sum_{m=410}^{436} \left|(P_m)\ (A_m)\ (x_m)\right| - \sum_{n=437}^{454} \left|(P_n)\ (A_n)\ (x_n)\right|$$

$$C_{h_{SB}} = \frac{H_{MSB}}{qS_{SB}C_{SB}}$$

where:

m = outer surface pressure tap numbers

n = inner surface pressure tap numbers

Pressure coefficients judged to be incorrect were deleted and areas reassigned by manual input to the on-line computer program. Final hinge moment data were integrated by Dataman from plotted and smoothed pressure coefficient data.

The following flow angularity corrections were applied to the final data:

<u>OA145A</u> No flow angularity, blockage or wall corrections were applied to the data obtained in the 11 ft. transonic facility.

<u>OA145B</u> Flow angularity corrections based on comprehensive evaluations of "TACT" (Transonic Aircraft Technology) program test data were applied to the final data. These corrections represent large model values above and beyond standard facility corrections.

OA145C Standard facility flow angularity corrections were applied to the data obtained in the 8 x 7 facility.

Reference dimensions and constants used were:

SYMBOL	DESCRIPTION	MODEL SCALE	FULL SCALE
S_W	Wing reference area, ft.^{2}	6.725	2690.
b_W	Wing reference span, in.	46.834	936.68
c_W	Wing reference MAC, in.	23.740	474.81
MRC	Moment Reference Center		
	X, in.	53.834	1076.68
	Y, in.	0.0	0.0
	Z, in.	18.75	375.0
X_{CG}	Length, nose IML to MRC, in.	41.934	838.68
lB	Body reference Length, in.	64.515	1290.3
S_E	Elevon reference area, in.^{2}	75.60	30240.
c_E	Elevon reference chord, in.	4.535	90.7
S_{FD}	Flipper door reference area, in.^{2}	75.60	30240.
c_{FD}	Flipper door reference chord, in	4.535	90.7
S_{BF}	Body flap reference area, in.^{2}	48.60	19440.
c_{BF}	Body flap reference chord, in.	4.050	81.0
S_{SB}	Speed brake reference area, in.^{2}	36.05	14421.6
c_{SB}	Speed brake reference chord, in.	3.660	73.2
A_C	Base sting cavity area, ft.^{2}	0.1963	
A_{B1}	Base area, Tap 1, ft.^{2}	0.0587	
A_{B2}	Base area, Tap 2, ft.^{2}	0.0824	

DATA REDUCTION (Concluded)

SYMBOL		MODEL SCALE	FULL SCALE
A_{B3}	Base area, Tap 3, ft.^{2}	0.0467	
A_{B4}	Base area, Tap 4, ft.^{2}	0.0553	
A_{B5}	Base area, Tap 5, ft.^{2}	0.0772	
A_{B6}	Base area, Tap 6, ft.^{2}	0.1146	
A_{B7}	Base area, Tap 7, ft.^{2}	0.1798	
A_{B8}	Base area, Tap 8, ft.^{2}	0.0860	
A_{B9}	Base area, Tap 9, ft.^{2}	0.1950	

REFERENCES

1. SD76-SH-0189 "Pretest Information for Tests OA145A, B, C of a .05-Scale Model (39-0) of the SSV Orbiter 102 in the NASA/ARC Unitary Plan Wind Tunnel," dated September 30, 1976.

2. Report NA76-662, "Structural Analysis for the 0.05-Scale SSV Orbiter Verification Model 39-0."

3. Rockwell Internal Letter SAS/AERO/77-038, "Model Readiness Review Model 39-0," dated December 20, 1976.

4. SPRT9F-1, "Elevon and Flipper Door Hinge Moments from Pressure Data of Test OA145A, B, C, and OA101", November 1978.

TABLE I.

TEST : OA145A, B, C

DATE :

TEST CONDITIONS

MACH NUMBER	REYNOLDS NUMBER (per unit length) x 10^6	DYNAMIC PRESSURE (pounds/sq. inch)	STAGNATION TEMPERATURE (degrees Fahrenheit)
0.6	5.0, 3.0, 9.0		
0.8			
0.9			
0.95			
1.05			
1.10			
1.20			
1.30			
1.40			
1.55	4.0		
2.0	1.5, 3.5, 4.5		
2.5	2.5, 3.25, 3.5, 4.0		
3.0	1.0, 2.5		
3.5	2.5		

BALANCE UTILIZED: 4 INCH TASK MKIVA

	CAPACITY:	ACCURACY:	COEFFICIENT TOLERANCE:
NF	6000/6000 LBS	0.5%	*
SF	3000/3000 LBS	"	
AF	2500 LBS	0.2%	
PM			
RM	16000 IN-LB	0.5%	
YM			

COMMENTS: Accuracy applies to maximum gage capacity.
*Coefficient tolerance based on root sum square of forward and aft gages, tolerance quoted for range of Mach number tested.
See Table VIII.

TABLE II. DATA SET/RUN COLLATION SUMMARY

TEST: ϕA145B(ARC-97-118)

DATA SET RUN NUMBER COLLATION SUMMARY

DATE:

DATA SET IDENTIFIER	CONFIGURATION	α	β	δe	δa	δBF	δSB	δR	REFT						MACH NUMBERS 1.55	2.0	2.5
R2G001	ϕ, (PHI = 90°)	5	A	0	0	0	55	0	4.0						167	163	158
02	↓	10	↓	↓	↓	↓	↓	↓	↓						166	162	159
03	↓	15	↓	↓	↓	↓	↓	↓	↓						165	161	160
											MACH RAMP			2.5–	1.55		
R2G004	ϕ, (UPRIGHT)	10	0	0	0	0	55	0	4.0				171				
05	MACH SWEEPS	10	0	0	↓	↓	↓	-5	↓				172				
06	↓	10	0	-5	↓	↓	↓	0	↓				173				
07	↓	10	-2	0	↓	↓	↓	0	↓				174				

TEST RUN NUMBER

1 7 13 19 25 31 37 43 49 55 61 67 75 76

FOR COEFFICIENT SCHEDULES SEE PAGE 60

α OR β SCHEDULES β(A) = -6, -4, -2, -1, 0, 1, 2, 3, 4, 6, 8, 10

COEFFICIENTS

IDVAR (1) IDVAR (2) NDV

• DENOTES PRESSURE DATA TAKEN

NASA-MSFC-MAF

TABLE II. DATA SET/RUN COLLATION SUMMARY (Continued)

TEST: ϕA145B (ARC-97-118)

DATA SET/RUN NUMBER COLLATION SUMMARY

DATE:

DATA SET IDENTIFIER	CONFIGURATION	α	β	δe	δa	δBF	δSB	δR	RE/FT	MACH NUMBERS 1.55	2.0	2.5	TEST RUN NUMBERS
R2G008	ϕ, (δSB = 55°)	FC	0	0	0	0	55	0	4.0	175			
09	LONG & LAT. DIR	FC	-2							176			
10	STABILITY	5	A							181			
11		10	A							178			
12		15	A							177			
13		FC	0						3.5		197	182	
14		FC	2								196	183	
15		5	A								193	186	
16		10	A								194	185	
17		15	A								195	184	
18	RE EFFECTS	FC	0						4.5		189		
19		FC	2								188		
20		10	A								187		
21		FC	0						1.5		190		
22		FC	2								191		
23		10	A								192		

1 7 13 19 25 31 37 43 49 55 61 67 75 76

α OR β SCHEDULES

COEFFICIENTS α(FC) = 1.5, 3, 6, 7, 8, 9, 10, 11, 12, 13, 14, 16, 22, 26, 30

IDVAR (1) IDVAR (2) NDV

NASA-MSFC-MAF

TABLE II. DATA SET/RUN COLLATION SUMMARY (Continued)

TEST: ϕA1458(ARC-97-118)

DATA SET/RUN NUMBER COLLATION SUMMARY

DATE:

DATA SET IDENTIFIER	CONFIGURATION	α	β	δe	δa	δBF	δSB	δR	RE/FT	MACH NUMBERS 1.55	2.0	2.5
R26024	ELEVON EFFECTIVE-	5	0	B	0	0	55	0	3.5		198	
25	NESS	10	0	B							199	332
26		15	0	B							200	
27		20	0	A							201	
28		A	0	-10							202	
29		A	0	10							203	
30	ELEVON EFF.	5	2	A							204	
31	IN β	10	2	B							205	369
32		15	2	A							206	
33		5	A	-5							207	
34		5		5							208	
35		10		-10							212	
36		10		-5							211	
37		10		5							213	
38		10		10							214	
39		15		-5							210	
40		15		5							209	

TEST RUN NUMBERS

1 7 13 19 25 31 37 43 49 55 61 67 75 76

α OR β SCHEDULES

COEFFICIENTS

IDVAR (1) IDVAR (2) NDV

δe(A) = -35, -30, -25, -20, -15, -10, -5, 0, 5, 10, 15, 20

δe(B) = -35, -30, -25, -20, -15, -10, -7.5, -5, -3, -2, -1, 0, 1, 2, 3.5, 7.5, 10, 15, 20

NASA-MSFC-MAF

TABLE II. DATA SET/RUN COLLATION SUMMARY (Continued)

TEST: ØA145B (ARC-97-118)

DATA SET RUN NUMBER COLLATION SUMMARY

DATE:

DATA SET IDENTIFIER	CONFIGURATION	α	β	δe	δa	SBF	S+B	SR	REFT	MACH NUMBERS 1.55	2.0	2.5	TEST RUN NUMBERS
R26041	AILERON EFFECTIVE-	5	0	0	A	0	55	0	3.5		215		
42	NESS	10			B						217	371	
43		15			A						216		
44		FC			5						221	370	
* 45		5		A							219		
46		10		B							218	334	
47		15		A							220		
48		A		-10							223		
49		A		10							222		
50		5		-10	A						224		
51		5		10	A						225		
52		10		-10	B						226		
53		10		10	B						227		
54		15		-10	A						228		
55		15			A						229		
56		10	B	0	5						231		
57		10	2	0	B						230	372	
58		FC	2	0	5						232		

1 7 13 19 25 31 37 43 49 55 61 67 75 76

α OR β SCHEDULES

COEFFICIENTS

δa(A) = -5, -3, -2, -1, 0, 2, 3, 5, 8, 10

δa(B) = -5, -3, -2, -1, 0, 1, 2, 3, 5, 8, 10

IDVAR (1) IDVAR (2) NDV

* DATA NOT AVAILABLE

NASA-MSFC-MAF

TABLE II. DATA SET/RUN COLLATION SUMMARY (Continued)

TEST: RA145B (ARC-97-118)

DATA SET/RUN NUMBER COLLATION SUMMARY

DATE:

DATA SET IDENTIFIER	CONFIGURATION	α	β	δe	δa	δBF	δSB	δR	REFT	MACH NUMBERS 1.55	2.0	2.5	TEST RUN NUMBERS
R29059	RUDDER EFFECTIVE-	A	0	0	0	0	55	-5	3.5		233	373	
60	NESS	5	0					B			234		
61		10	0					A			235	374	
62		15	0					B			236		
63		10	2					A			237	375	
64		5	A					-5			238		
65		10	A					-5			239	376	
66		15	A					-5			240		
67		10	0					A	4.0	327			

1 7 13 19 25 31 37 43 49 55 61 67 75 76

α OR β SCHEDULES $\delta_R(A) = -22.8, -18, -15, -10, -5, -2.5, 0, 2.5, 5, 10$

$\delta_R(B) = -10, -5, -2.5, 0, 2.5, 5, 10$

COEFFICIENTS

IDVAR (1) IDVAR (2) NDV

NASA-MSFC-MAF

TABLE II. DATA SET/RUN COLLATION SUMMARY (Continued)

TEST: ΦA145B(ARC-97-118)

DATA SET/RUN NUMBER COLLATION SUMMARY

DATE:

DATA SET IDENTIFIER	CONFIGURATION	α	β	δe	δa	δBF	δ-B	δR	REFT	MACH NUMBERS 1.55	2.0	2.5	TEST RUN NUMBERS
R26068	Φ, BODY FLAP EFF.	5	0	0	0	FC	55	0	3.5		241		
69		10									242	329	
70		15									243		
71		A				-11.7					244		
72		A				16.3					245		
73		A				22.5					246		
74	TRIM LIMITS	A		-35		-11.7					247	330	
75		A		-20		16.3					248	331	

1 7 13 19 25 31 37 43 49 55 61 67 75 76

α OR β SCHEDULES

COEFFICIENTS

δBF(FC) = -11.7, -8, -6, -4, -2, 0, 2, 4, 6, 8, 12, 16, 22.7

α(A) = 1.5, 3, 6, 8, 9, 11, 13, 16, 21, 26, 36

DAR 11 DAR 12 NOV

NASA-MSFC-MAF

TABLE II. DATA SET/RUN COLLATION SUMMARY (Continued)

TEST: ΦA145B (ARC-97-118)

DATA SET RUN NUMBER COLLATION SUMMARY

DATE:

DATA SET IDENTIFIER	CONFIGURATION	α	β	δe	δL	δBF	δSB	δR	REFT	MACH NUMBERS 1.55	2.0	2.5	TEST RUN NUMBERS
R29076	Φ, (δSB = 0°)	A	0	0	0	0	0	0	3.5		378	388	
77		A	2					0			379	389	
78		10	A					0			382	391	
79		A	0					-5			380	390	
80		5	0					B			383		
81		10	0					A			386		
82		15	0					B			384		
83		10	2					A			385		
84		10	A					-5			381		

1 7 13 19 25 31 37 43 49 55 61 67 75 76

α OR β SCHEDULES

COEFFICIENTS

IDVAR (1) IDVAR (2) NDV

NASA-MSFC-MAF

TABLE II. DATA SET/RUN COLLATION SUMMARY (Continued)

TEST: ϕA145B (ARC-97-118)

DATA SET/RUN NUMBER COLLATION SUMMARY

DATE:

DATA SET IDENTIFIER	CONFIGURATION	α	β	δe	δa	δBF	δSB	δR	REFT	MACH NUMBERS 1.55	2.0	2.5	TEST RUN NUMBERS
R24085	ϕ, (δSB = 25°)	A	0	0	0	0	25	0	3.5		260	251	
86		A	2								261	252	
87		5	A								263		
88		10	A								268	254	
89		15	A								264		
90		A	0					-5			262	253	
91		5	0					B			257		
92		10	0					A			256	255	
93		15	0					B			258		
94		10	2					A			259		
95		5	A					-5			266		
96		10	A					-5			267		
97		15	A					-5			265		
98		10	0			FC		0			269		

1 7 13 19 25 31 37 43 49 55 61 67 75 76

α OR β SCHEDULES

COEFFICIENTS

IDVAR (1) IDVAR (2) NDV

NASA-MSFC-MAF

TABLE II. DATA SET/RUN COLLATION SUMMARY (Continued)

TEST: ϕA145B (ARC-97-118)

DATA SET RUN NUMBER COLLATION SUMMARY

DATE:

DATA SET IDENTIFIER	CONFIGURATION	α	β	δe	δa	δBF	δSB	δR	REFT	MACH NUMBERS 1.55	2.0	2.5	TEST RUN NUMBERS
R24094	ϕ1 (δSB = 40°)	A	0	0	0	0	40	0	3.5		320	311	
A0		A	2								321	312	
A1		10	A								322	314	
A2		A	0					-5			323	313	
A3		5	0					B			317		
A4		10	0					A			316	315	
A5		15	0					B			318		
A6		10	2					A			319		
A7		10	A					-5			324		

1 7 13 19 25 31 37 43 49 55 61 67 75 76

α OR β SCHEDULES

COEFFICIENTS

IDVAR (1) IDVAR (2) NDV

NASA-MSFC-MAF

TABLE II. DATA SET/RUN COLLATION SUMMARY (Continued)

TEST : ϕA145B(ARC-97-118)

DATA SET/RUN NUMBER COLLATION SUMMARY

DATE :

DATA SET IDENTIFIER	CONFIGURATION	α	β	δe	δa	δBF	δ±B	δR	RE/FT	MACH NUMBERS 1.55	2.0	2.5	TEST RUN NUMBERS
R290A8	ϕ, (δ±B = 70)	A	0	0	0	0	70	0	3.5		304	295	
A9		A	2								305	296	
B0		10	A								308	298	
B1		A	0					-5			306	297	
B2		5	0					B			301		
B3		10	0					A			300	299	
B4		15	0					B			302		
B5		10	2					A			303		
B6		10	A					-5			307		

1 7 13 19 25 31 37 43 49 55 61 67 75 76

α OR β SCHEDULES

COEFFICIENTS

IDVAR (1) IDVAR (2) NDV

NASA-MSFC-MAF

TABLE II. DATA SET/RUN COLLATION SUMMARY (Continued)

TEST: QA145B (ARC-97-118)

DATA SET RUN NUMBER COLLATION SUMMARY

DATE:

DATA SET IDENTIFIER	CONFIGURATION	α	β	δe	δa	δBF	δSB	δR	REFT	MACH NUMBERS 1.55	2.0	2.5	TEST RUN NUMBERS
R290 B7	Q1 (δSB = 87.2)	A	0	0	0	0	87.2	0	3.5		281	272	
B8		A	2								282	273	
B9		5	A								287		
C0		10	A								288	275	
C1		15	A								286		
C2		A	0					-5			283	274	
C3		5	0					B			278		
C4		10	0					A			277	276	
C5		15	0					B			279		
C6		10	2					A			280		
C7		5	A					-5			284		
C8		10	A					-5			289		
C9		15	A					-5			285		
D0		10	0			FC		0			290		

1 7 13 19 25 31 37 43 49 55 61 67 75 76

α OR β SCHEDULES

COEFFICIENTS

IDVAR (1) IDVAR (2) NDV

NASA-MSFC-MAF

TABLE II. DATA SET/RUN COLLATION SUMMARY (Continued)

TEST : ØA145B(ARC-97-118)

DATA SET/RUN NUMBER COLLATION SUMMARY

DATE :

DATA SET IDENTIFIER	CONFIGURATION	α	β	δe	δa	δBF	δSB	δR	RE/FT	MACH NUMBERS 1.55	2.0	2.5	TEST RUN NUMBERS
R2GOD1	CONTROL INTERACTION	10	0	B	0	-11.7	55	0	3.5		347		
D2	δe / δBF	10		B		16.3					348		
D3		10		-10		FC					349		
D4		10		10		FC					350		
D5		A		-10		-11.7					340		
D6		A		-10		16.3					341		
D7		A		10		-11.7					342		
D8		A		10		16.3					343		
D9	δR / δBF	10		0		-11.7		A			351		
E0		10				16.3		A			352		
E1		10	A			-11.7		-5			345		
E2		10	A			16.3		-5			344		

1 7 13 19 25 31 37 43 49 55 61 67 75 76

α OR β SCHEDULES

COEFFICIENTS

IDVAR (1) IDVAR (2) NDV

NASA-MSFC-MAF

TABLE II. DATA SET/RUN COLLATION SUMMARY (Continued)

TEST: ØA1458 (ARC-97-118)

DATA SET/RUN NUMBER COLLATION SUMMARY

DATE:

DATA SET IDENTIFIER	CONFIGURATION	α	β	δe	δa	δBF	δSB	δR	REFT	δXOUT	δXIN				MACH NUMBERS 1.55	2.0	2.5	
R2410 E3	INBD/ØUTBD ELEVØN	10	0	–	0	0	55	0	3.5	0	B					356		
E4	DIFFERENTIAL DEFL.			–						5	C					357		
E5				–						-5	D					358		
E6				–						B	0					359		
E7				–						C	5					360		
E8				–						D	-5					361		
E9	AILERØN			–	V					0	B					362		
F0				–						5	B					363		
F1				–						-5	B					364		
F2				–						B	0					365		
F3				–						B	5					366		
F4				–						B	-5					367		

TEST RUN NUMBERS

1 7 13 19 25 31 37 43 49 55 61 67 75 76

α OR β SCHEDULES

δexx (B) = -4, -2, 0, 1, 2, 4

δexx (C) = 1, 3, 5, 7, 9

COEFFICIENTS

δexx (D) = -9, -7, -5, -3, -1

δaxx (B) = -4, -2, 0, 2, 4

δa (V) = -2, -1, 0, 1, 2

IDVAR (1) IDVAR (2) NDV

XX = OUT OR IN

NASA-MSFC-MAF

TABLE II. DATA SET/RUN COLLATION SUMMARY (Continued)

TEST: ΦA145B(ARC-97-118)

DATA SET/RUN NUMBER COLLATION SUMMARY

DATE:

DATA SET IDENTIFIER	CONFIGURATION	α	β	δe	δa	δBF	δSB	δR	RE/FT	Z					MACH NUMBERS 1.55	2.0	2.5		TEST RUN NUMBERS
R2E10 F5	REPEAT RUNS	A	0	0	0	0	55	0	3.5							354			
F6		A	2	0	0	0										355			
F7		10	A	0	0	0										353			
F8		10	0	B	0	16.3		-5								346			
F9		10	0	0	0	0		A	4.0	-2					328				
* G0		10	0	0	B	0		0	3.5								336		
G1		FC	0	0	5	0		0	3.5								335		
G2		10	2	B	0	0		0	3.5								333		
G3		15	A	0	0	0		0	4.0							164	168		
G4		10	0	B	0	0		0	3.5								368		

1 7 13 19 25 31 37 43 49 55 61 67 75 76

α OR β SCHEDULES — COEFFICIENTS — IDVAR (1) — IDVAR (2) — NOV

* DATA NOT AVAILABLE

NASA-MSFC-MAF

TABLE II. DATA SET/RUN COLLATION SUMMARY (Continued)

COEFFICIENT SCHEDULES:

First character identified for Force Data

R	CN	CA	CL	CD	CLM	CY	CYN	CBL	ELEVØN	AILRØN	
A	CHEØ	CHEI	CHFDØ	CHFDI	CHBF	CHSB	AILRØN	ELEVØN			
B	CONF	RN	Q	CAB	CAC	CAF	L/D	XCP/L	P		
C	BETA/ALPHA		ELEVØN	AILRØN	BDFLAP	SPDBRK	RUDDER	ELV-IB	ELV-ØB	AIL-IB	AIL-ØB
D	ELV-LØ	ELV-LI	ELV-RØ	ELV-RI	DELL	DELR	DRHL				
E	CP225	CP228	CP231	CP234	CP237	CP240	CP243	CP246	CP12	CP13	

PRESSURE DATA COMPONENTS:

Fourth Character Identifier for Pressure Dataset

C Inboard Elevon Lower Surface

D Outboard Elevon Lower Surface

I Inboard Flipper Door Upper Surface

J Outboard Flipper Door Upper Surface

Q Inboard Elevon Upper Surface

R Outboard Elevon Upper Surface

S Body Flap Upper Surface

TABLE II. DATA SET/RUN COLLATION SUMMARY (Concluded)

T	Body Flap Lower Surface
W	Rudder Outer Surface
X	Rudder Inner Surface
6	Orbiter Base
8	Sting Lower Surface
9	Sting Upper Surface

Note: Eleven cove (flipper door lower surface) pressure coefficient data is presented in force format (schedule E above).

TABLE III. WING AND ELEVON PRESSURE TAP LOCATIONS

Spanwise Location - η	Upper Surface XW/c_W					Upper Surface XE/C_{EL}						
	0.150	0.250	0.400	0.550	X_o1359.6	-0.100	0.100	0.200	0.400	0.600	0.800	1.000
Inboard Edge									101		102	
0.340					15			103	104	105	106	107
0.427					25			108	109	110	111	112
0.534	31	32	33	34	35			113	114	115	116	117
0.615					45			118	119	120	121	122
Inboard Gap Edge									123		124	
Outboard Gap Edge									125		126	
0.715					55			127	128	129	130	131
0.800	61	62	63	64	65			132	133	134	135	136
0.887					75			137	138	139	140	141
0.960					85			142	143	144	145	146
Outboard Edge									147		148	149
	Lower Surface XW/CW					Lower Surface XE/C_{EL}						
Inboard Edge									150		151	
0.340						20	152	153	154	155	156	
0.427						30	157	158	159	160	161	
0.534	36	37	38	39		40	162	163	164	165	166	
0.615						50	167	168	169	170	171	
Inboard Gap Edge									172		173	
Outboard Gap Edge									174		175	
0.715						60	176	177	178	179	180	
0.800	66	67	68	69		70	181	182	183	184	185	
0.887						80	186	187	188	189	190	
0.960						90	191	192	193	194	195	
Outboard Edge									196		197	

TABLE IV. FLIPPER DOOR PRESSURE TAP LOCATIONS

SPANWISE LOCATION WING η	UPPER SURFACE X_{FD}/C_{FD}		
	0.10	0.50	0.90
0.340	201	202	203
0.427	204	205	206
0.534	207	208	209
0.615	210	211	212
0.715	213	214	215
0.800	216	217	218
0.887	219	220	221
0.960	222	223	224
INTERNAL CAVITY X_{FD}/C_{FD}			
	0.10	0.50	0.90
0.340		225	
0.427		228	
0.534		231	
0.615		234	
0.715		237	
0.800		240	
0.887		243	
0.960		246	

TABLE V. BODY FLAP PRESSURE TAP LOCATIONS

SPANWISE LOCATION	UPPER SURFACE X_{BF}/C_{BF}			
η = y/b at Hingeline	-0.20	0.20	0.60	1.00
0.10 (L.H. Side)		301	302	303
0.20			304	
0.35				
0.50 (Y_o = 0)		305	306	307
0.80 (R.H. Side)			308	
	LOWER SURFACE X_{BF}/C_{BF}			
0.10 (L.H. Side)	309	314	315	316
0.20	310	317	318	319
0.35	311	320	321	322
0.50 (Y_o = 0)	312	323	324	325
0.80 (R.H. Side)	313	326	327	328

TABLE VI. SPEED BRAKE PRESSURE TAP LOCATIONS

SPANWISE LOCATION $\eta = y/b$ at HINGELINE	OUTER SURFACE (L.H.) X_R/C_R				
	-0.20	0.20	0.60	0.80	1.00
0.10 (BOTTOM)	401	410	411		
0.20	402	412	413		414
0.30	403	415	416		417
0.40	404	418	419		420
0.50	405	421	422		423
0.60	406	424	425		426
0.70	407	427	428		429
0.80	408	430	431		432
0.90	409	433	434		435
1.03 (TOP)				436	
	INSIDE SURFACE (L.H.) X_R/C_R				
0.10 (BOTTOM)		437	438		
0.20		439	440		441
0.30					
0.40		442	443		444
0.50		445	446		447
0.60					
0.70		448	449		450
0.80					
0.90		451	452		453
1.03 (TOP)				454	

TABLE VII. AIR DATA PROBE AND STING PRESSURE TAP LOCATIONS

AIR DATA PROBE PRESSURES

L.H. SIDE AT X_o 291.67, Z_o 320.46	12
R.H. SIDE AT X_o 291.67, Z_o 320.46	13

STING PRESSURES

DISTANCE FROM MODEL BASE STATION - INCHES	UPPER STING	LOWER STING
0	501	511
2	502	512
4	503	513
6	504	514
8	505	515
10	506	516
12	507	517
14	508	518
16	509	519
18	510	520

TABLE VIII. COEFFICIENT TOLERANCES FOR THE 4-INCH TASK MKIVA BALANCE

COEFFICIENT	MACH NUMBER		
	.6	1.2	3.5
C_N	±0.009600	±0.006100	±0.017100
C_m	±0.002800	±0.001700	±0.005000
C_Y	±0.004800	±0.003000	±0.008500
C_n	±0.000580	±0.003700	±0.001050
C_A	±0.001100	±0.000700	±0.002000
C_ℓ	±0.000385	±0.000240	±0.000690

Notes:

1. Positive directions of force coefficients, moment coefficients, and angles are indicated by arrows
2. For clarity, origins of wind and stability axes have been displaced from the center of gravity

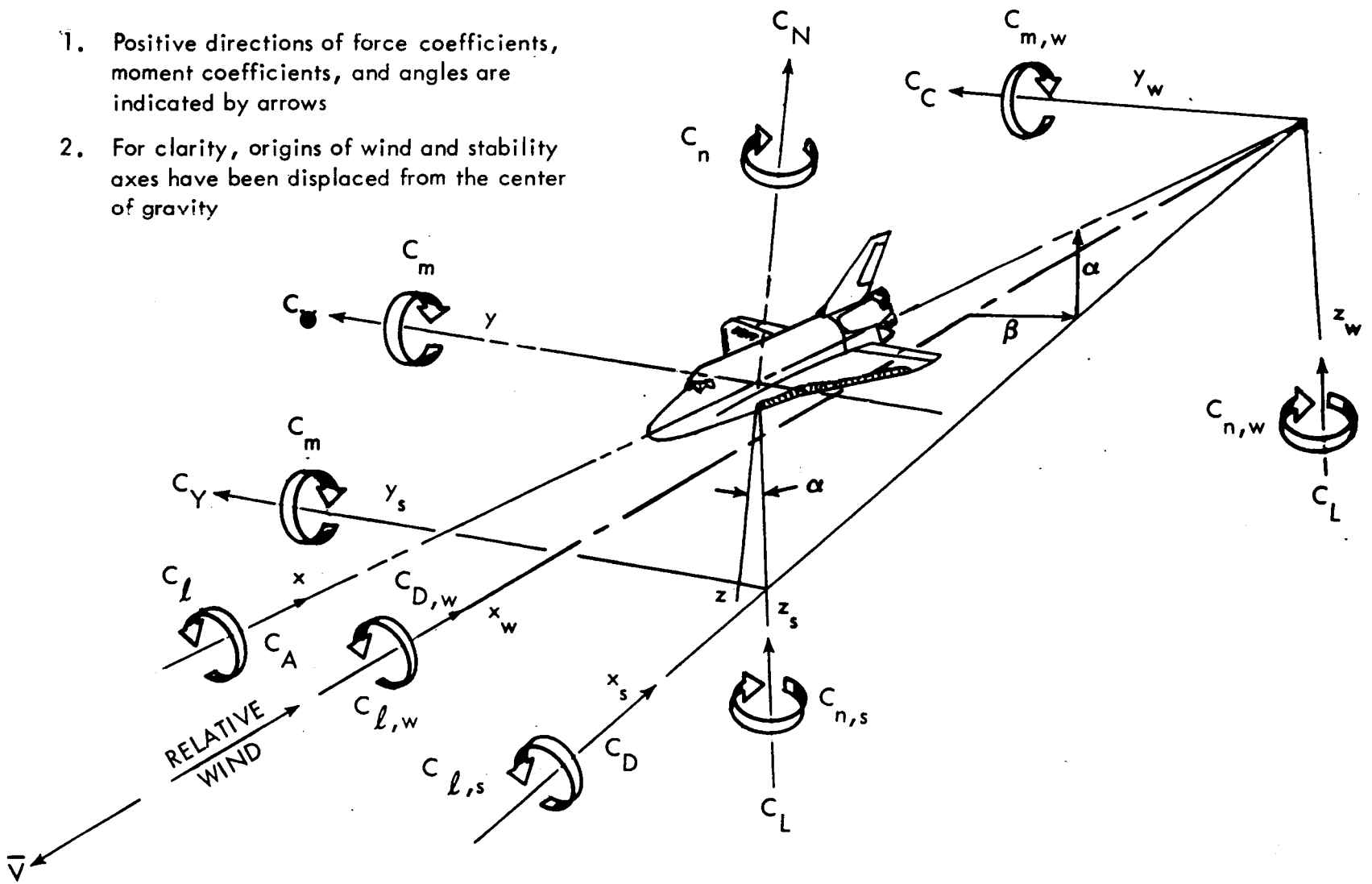

a. Axes Systems Definition

Figure 1. Axes systems and sign convention.

$$\delta e_L = \frac{\delta e_{L_O} + \delta e_{L_I}}{2}$$

$$\delta e_R = \frac{\delta e_{R_O} + \delta e_{R_I}}{2}$$

$$\delta e = \frac{\delta e_L + \delta e_R}{2}$$

$$\delta a = \frac{\delta e_L - \delta e_R}{2}$$

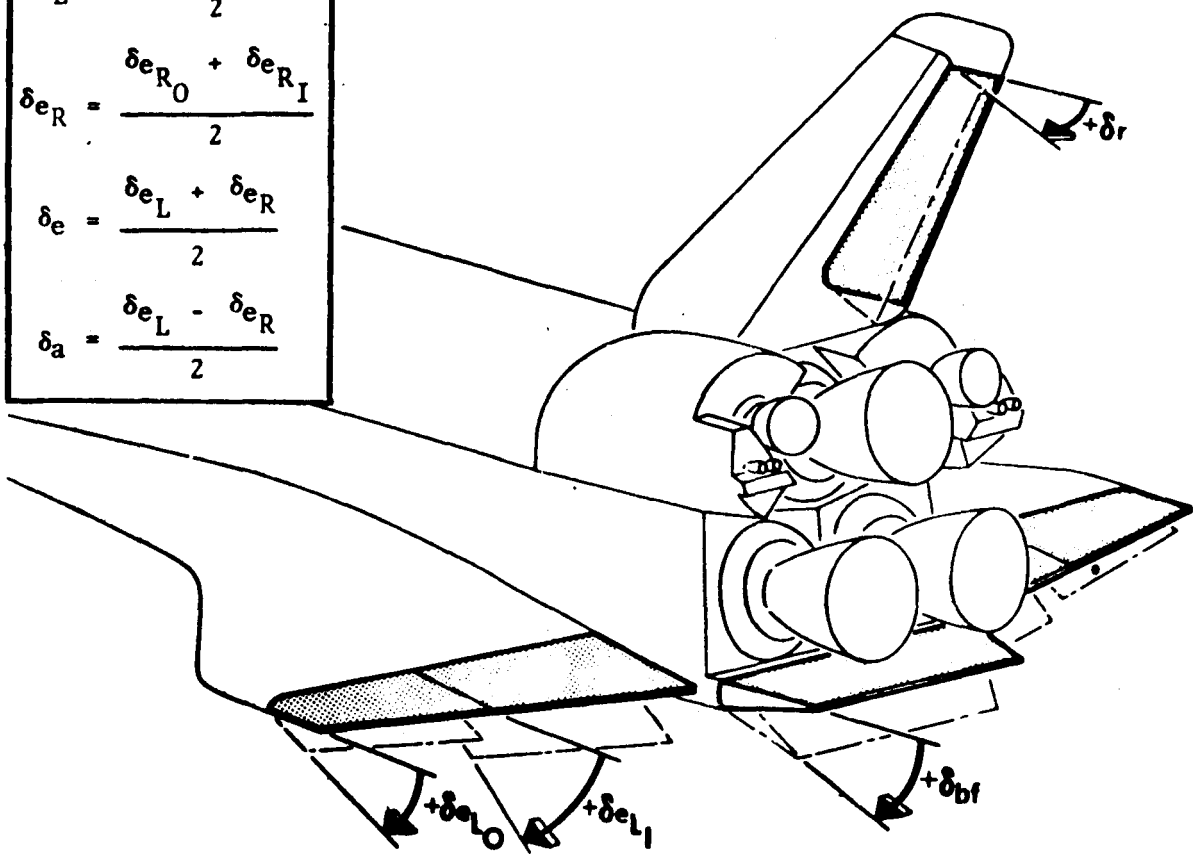

Positive Deflection of	Angle	Aero Forces and Moments	Hinge Moment
Rudder, δr	$+\beta$, $-\psi$	$+C_Y$, $-C_n$	$-C_{h_r}$
Elevon, δe	$-\alpha$, $-\theta$	$-C_m$	C_{h_e}
Right, δe_R	$-\phi$	$-C_\ell$	$-C_{h_{e_R}}$
Left, δe_L	$+\phi$	$+C_\ell$	$-C_{h_{e_L}}$
Aileron, δa	$+\phi$	$+C_\ell$	
Body Flap, δbf	$-\alpha$, $-\theta$	$-C_m$	$-C_{h_{bf}}$

b. Control Surface Deflections
Figure 1. Continued.

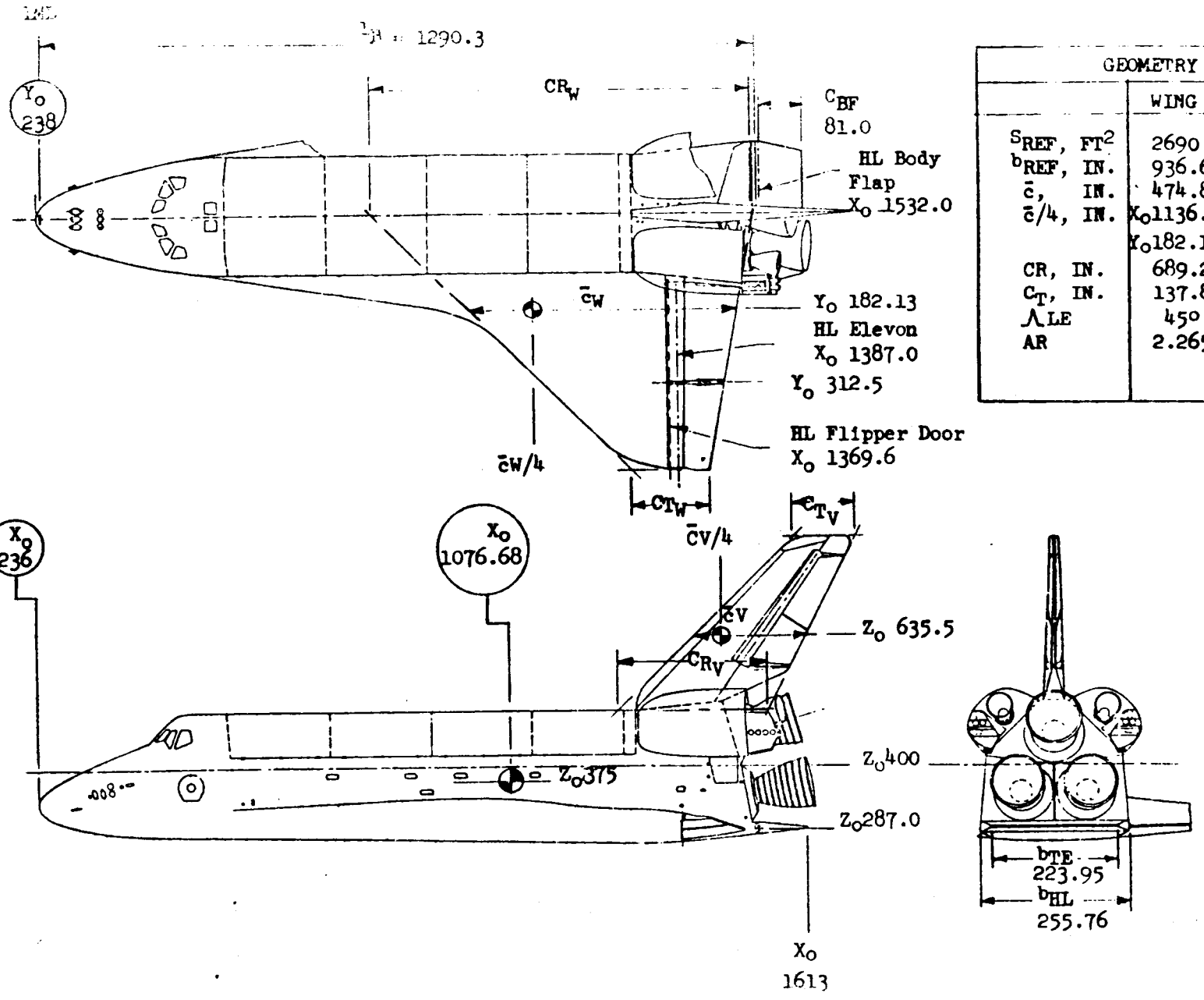

GEOMETRY		
	WING	VERTICAL
S_{REF}, FT^2	2690	413.25
b_{REF}, IN.	936.68	315.72
$\bar{c}$, IN.	474.81	199.81
$\bar{c}/4$, IN.	X_o 1136.83	X_o 1463.65
	Y_o 182.13	Z_o 635.5
CR, IN.	689.24	
C_T, IN.	137.85	
Λ_{LE}	45°	45°
AR	2.265	1.675

c. Orbiter Reference Dimensions
Figure 1. Continued.

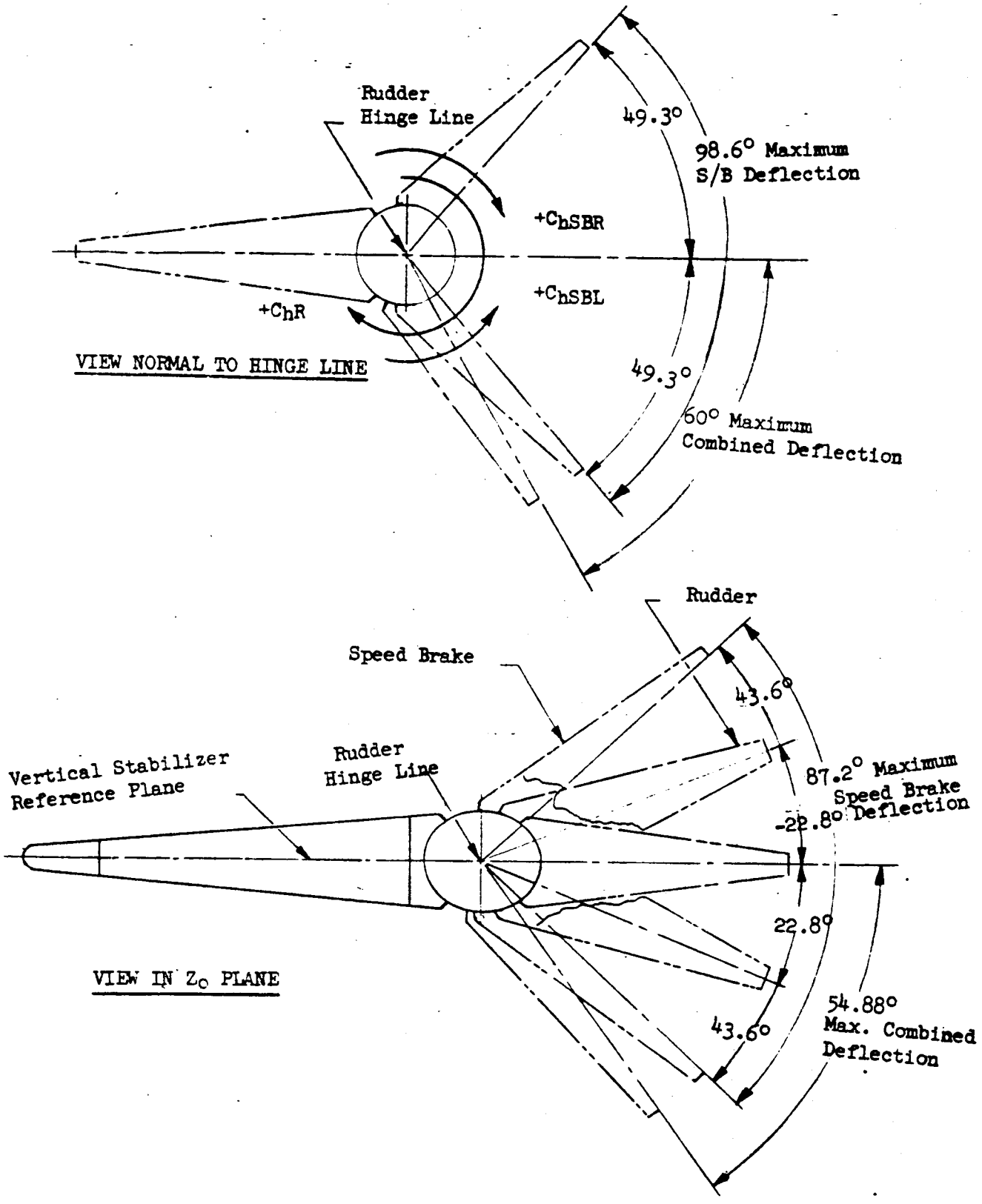

d. Rudder/Speed Brake Deflections
Figure 1. Continued.

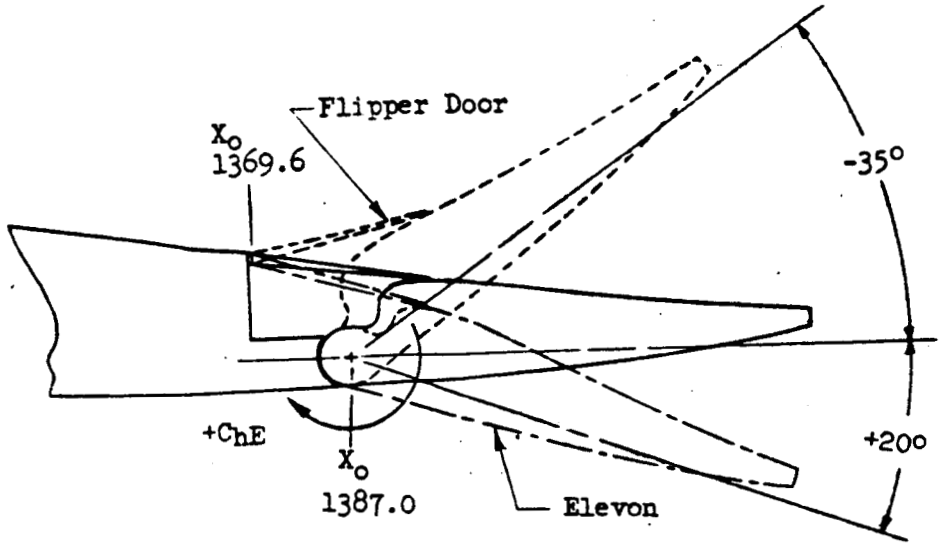

ELEVON DEFLECTIONS

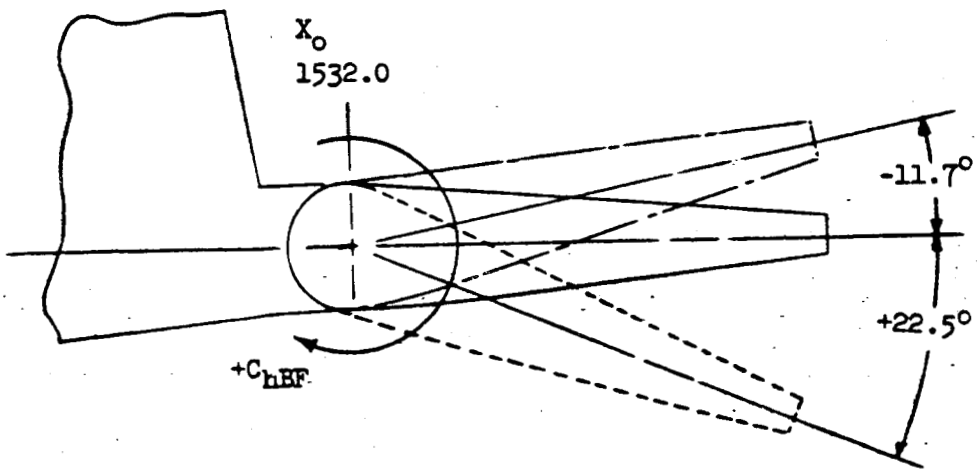

BODY FLAP DEFLECTIONS

e. Elevon and Body Flap Deflections
Figure 1. Concluded.

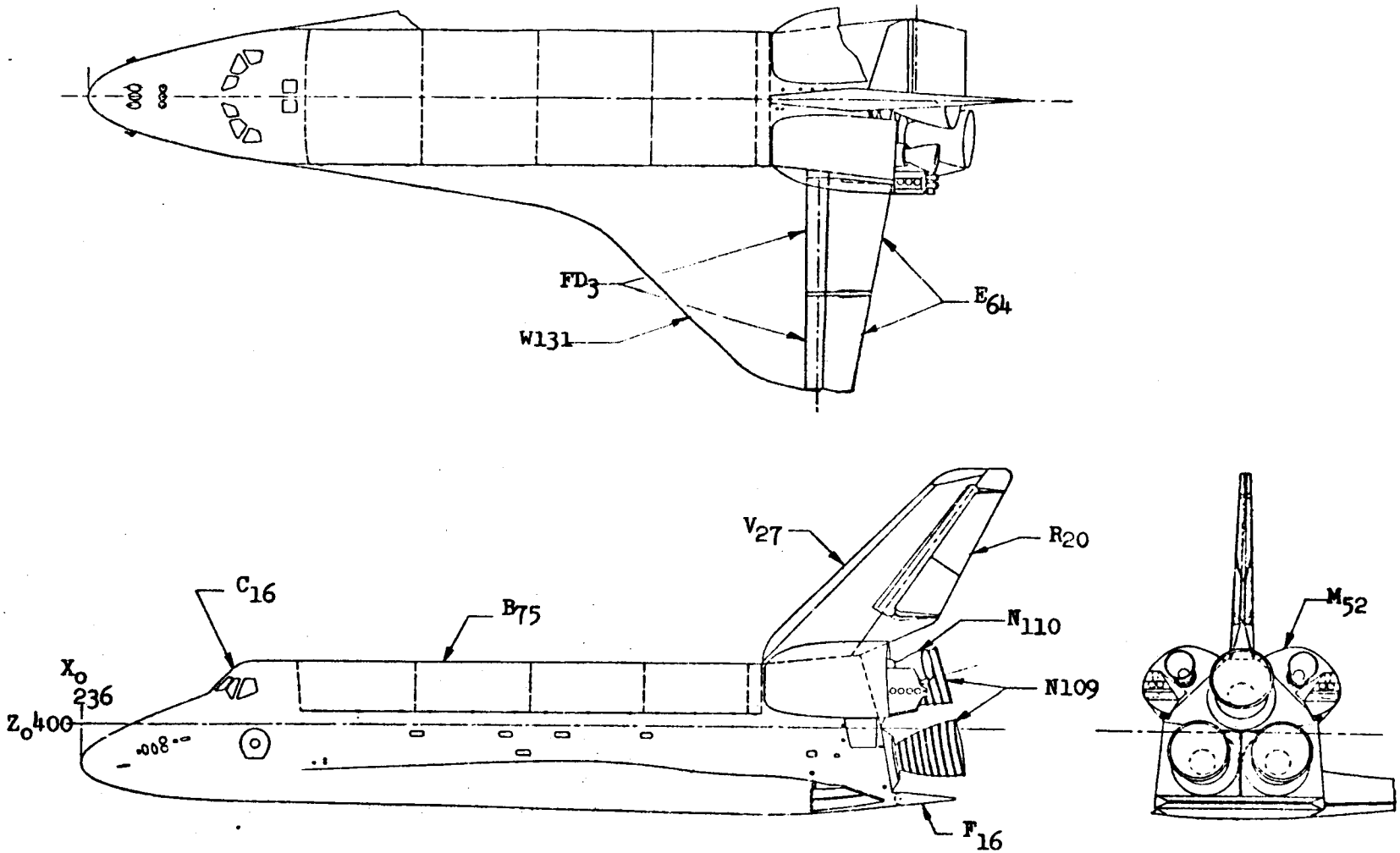

a. Orbiter Configuration
Figure 2. Model sketches.

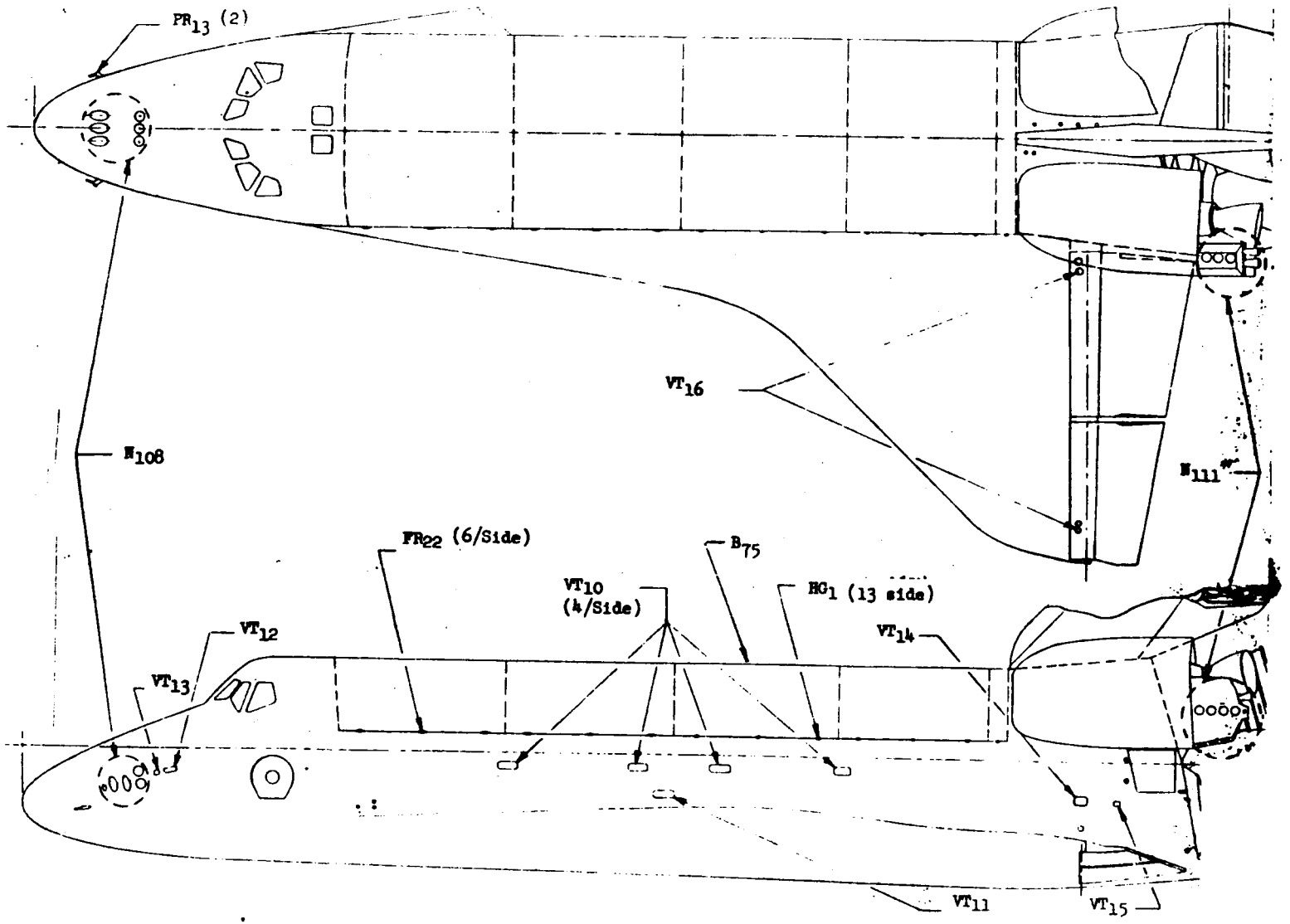

b. Protuberances and Penetrations
Figure 2. Continued.

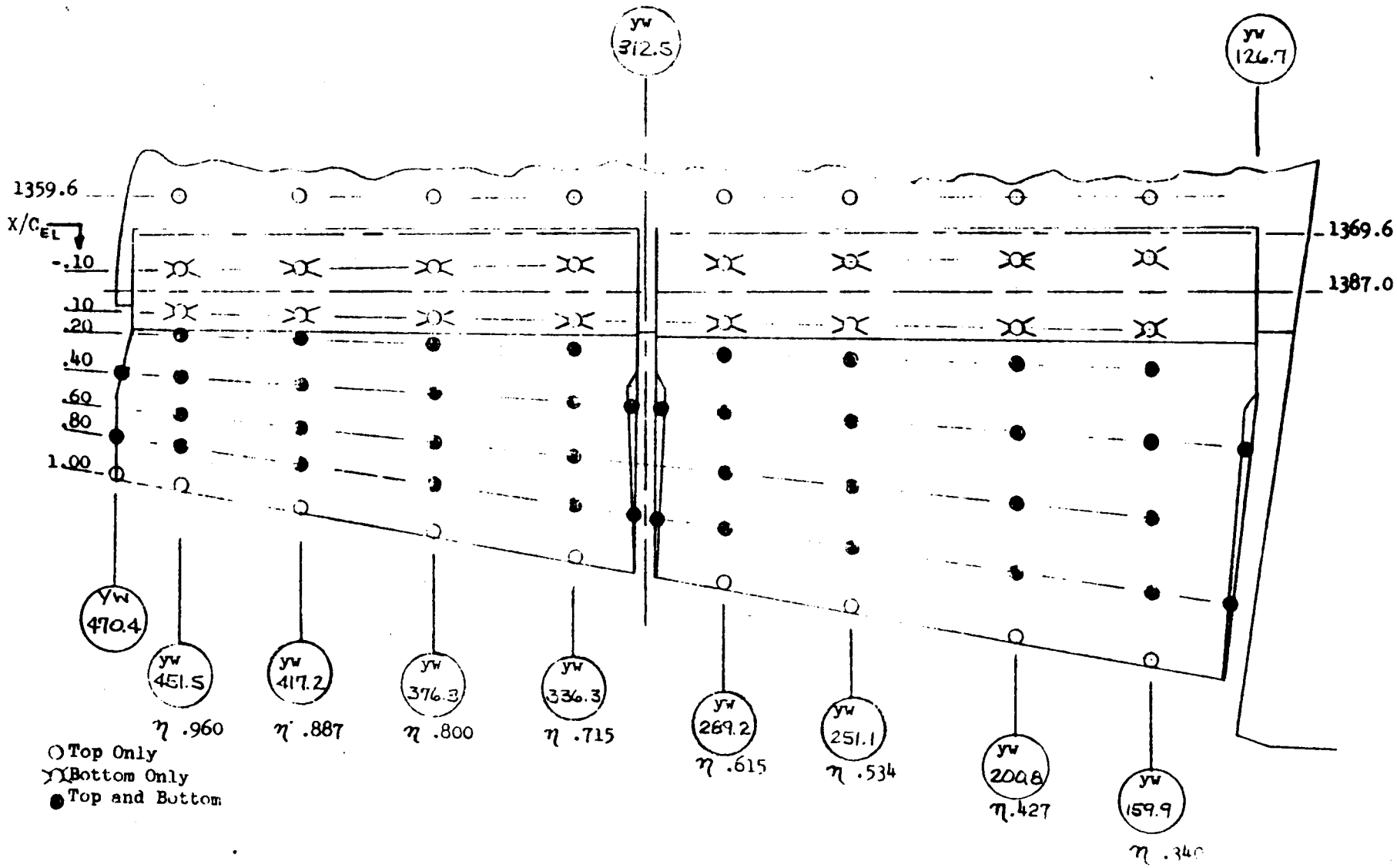

c. Elevon and Wing Pressure Tap Locations
Figure 2. Continued.

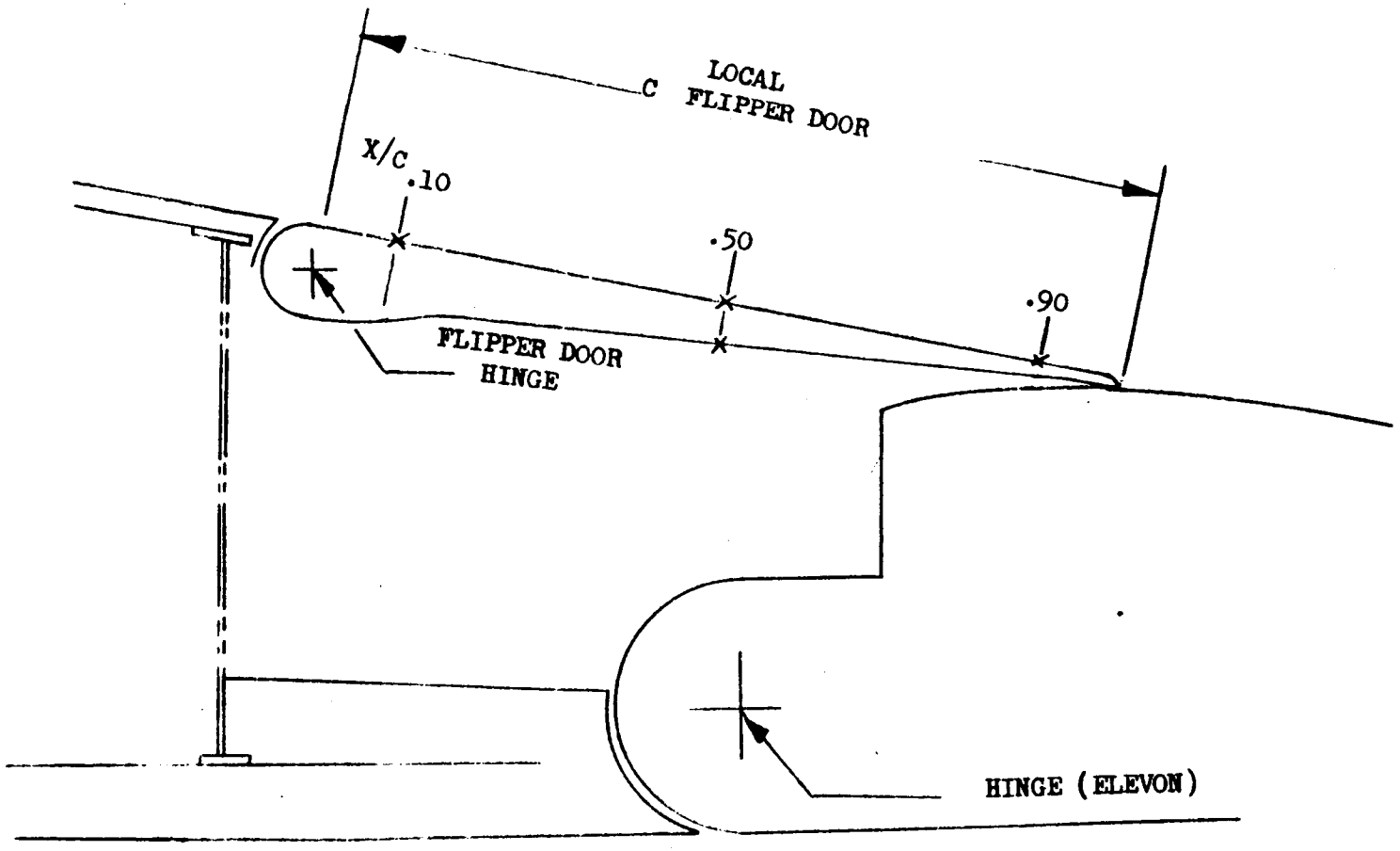

d. Flipper Door and Elevon Cavity Pressure Tap Locations
Figure 2. Continued.

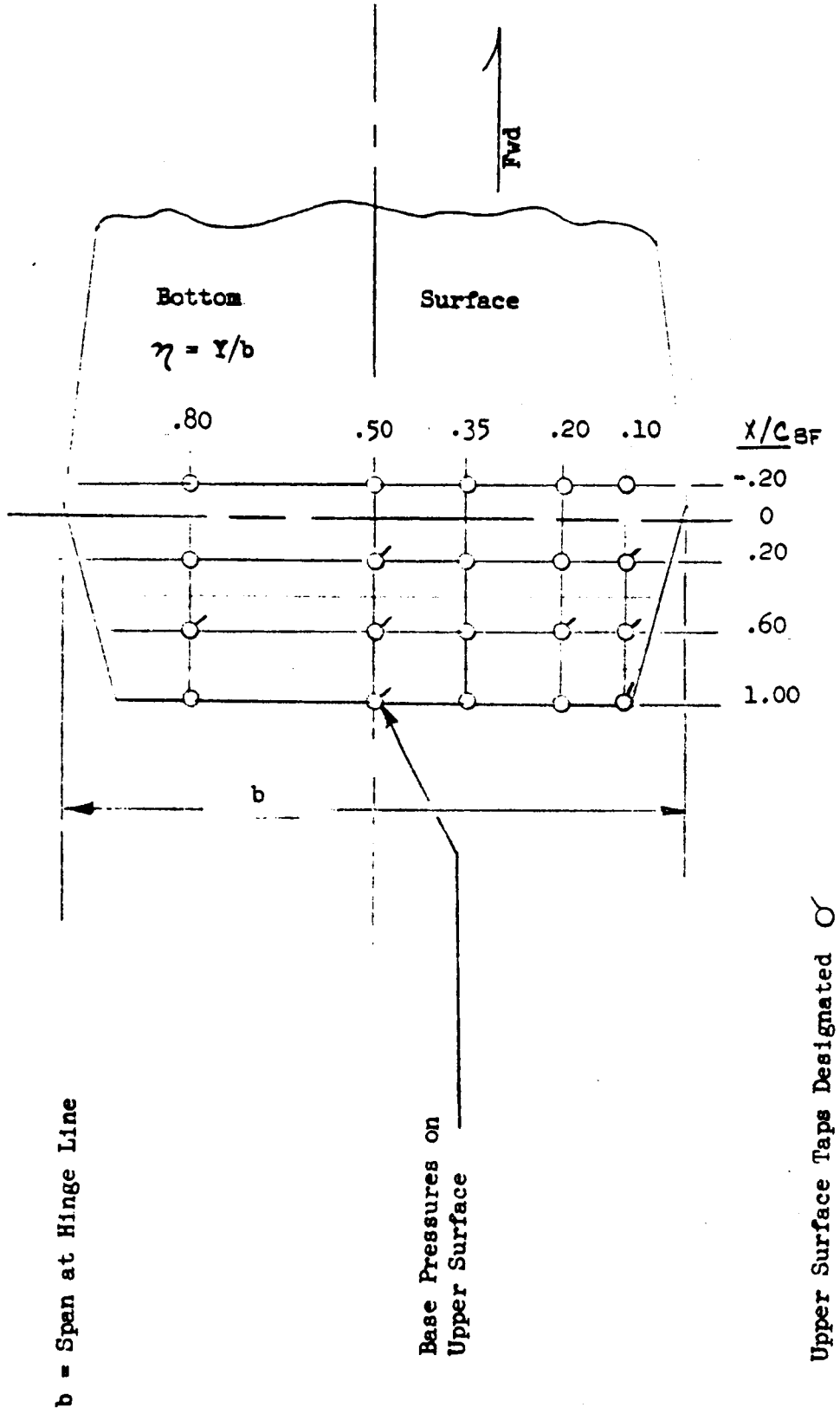

e. Body Flap Pressure Tap Locations
Figure 2. Continued.

- ALL MEASUREMENTS LEFT SIDE ONLY.
- TAPS AT T.E. LOCATED AS CLOSE TO T.E. AS POSSIBLE.
- SPEEDBRAKE BASE PRESSURES LOCATED ON INSIDE OF LEFT PANEL (18 LOCATIONS DESIGNATED σ)

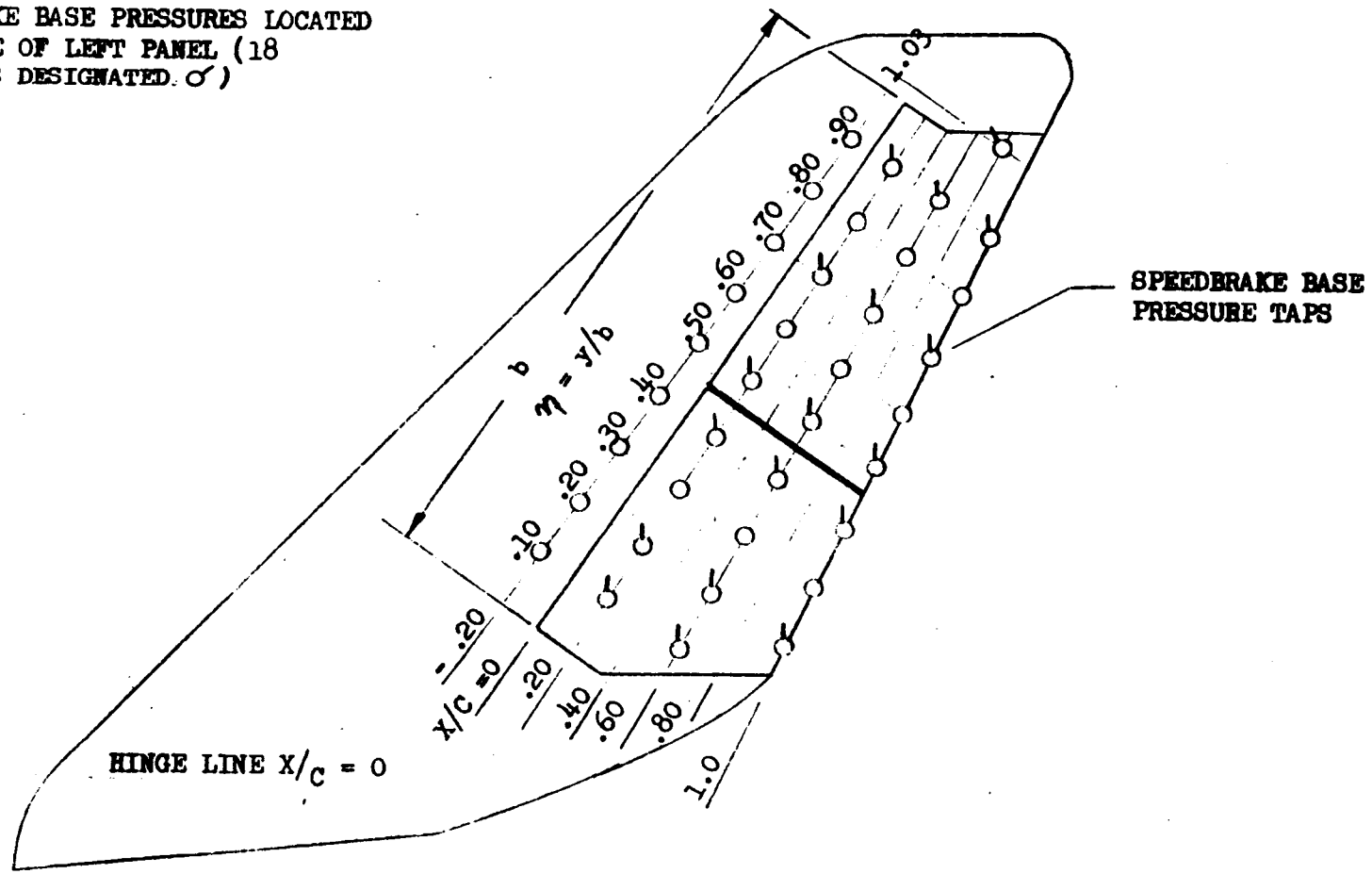

f. Rudder/Speed Brake Surface Pressure Tap Locations
Figure 2. Continued.

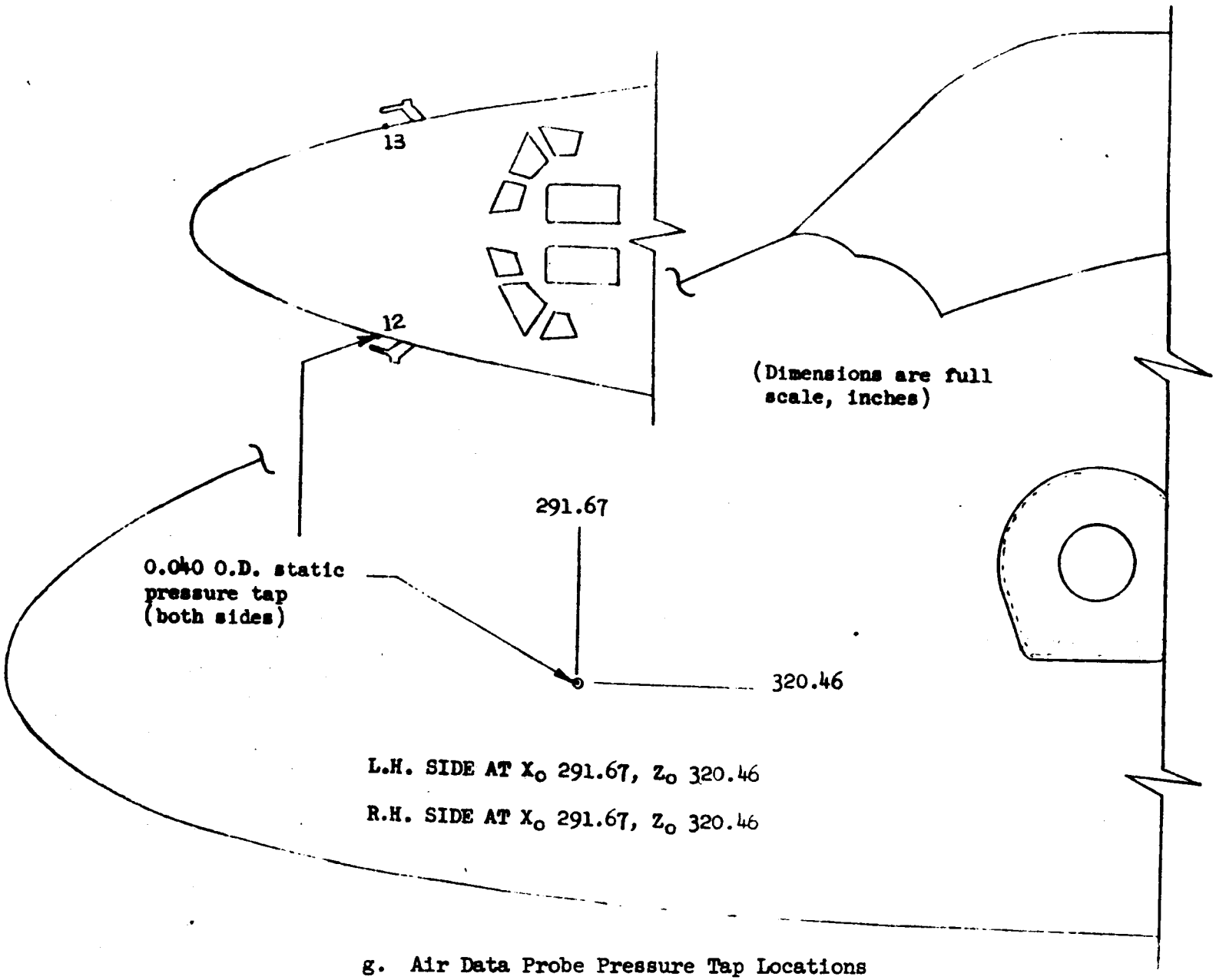

g. Air Data Probe Pressure Tap Locations
Figure 2. Continued.

Tap 1 is on the heat shield under the MPS nozzle.

Tap 3 is in the OMS nozzle.

TAP	W.P., in.	B.P. in.	Area, ft^2
1	489	0	23.48
2	469	49	32.96
3	505	90	18.68
4	439	111	22.12
5	428	99	30.88
6	386	108	45.84
7	305	114	71.92
8	303	0	34.40
9	471	130	78.00
10	390	60	78.52
11	390	-60	
			436.80

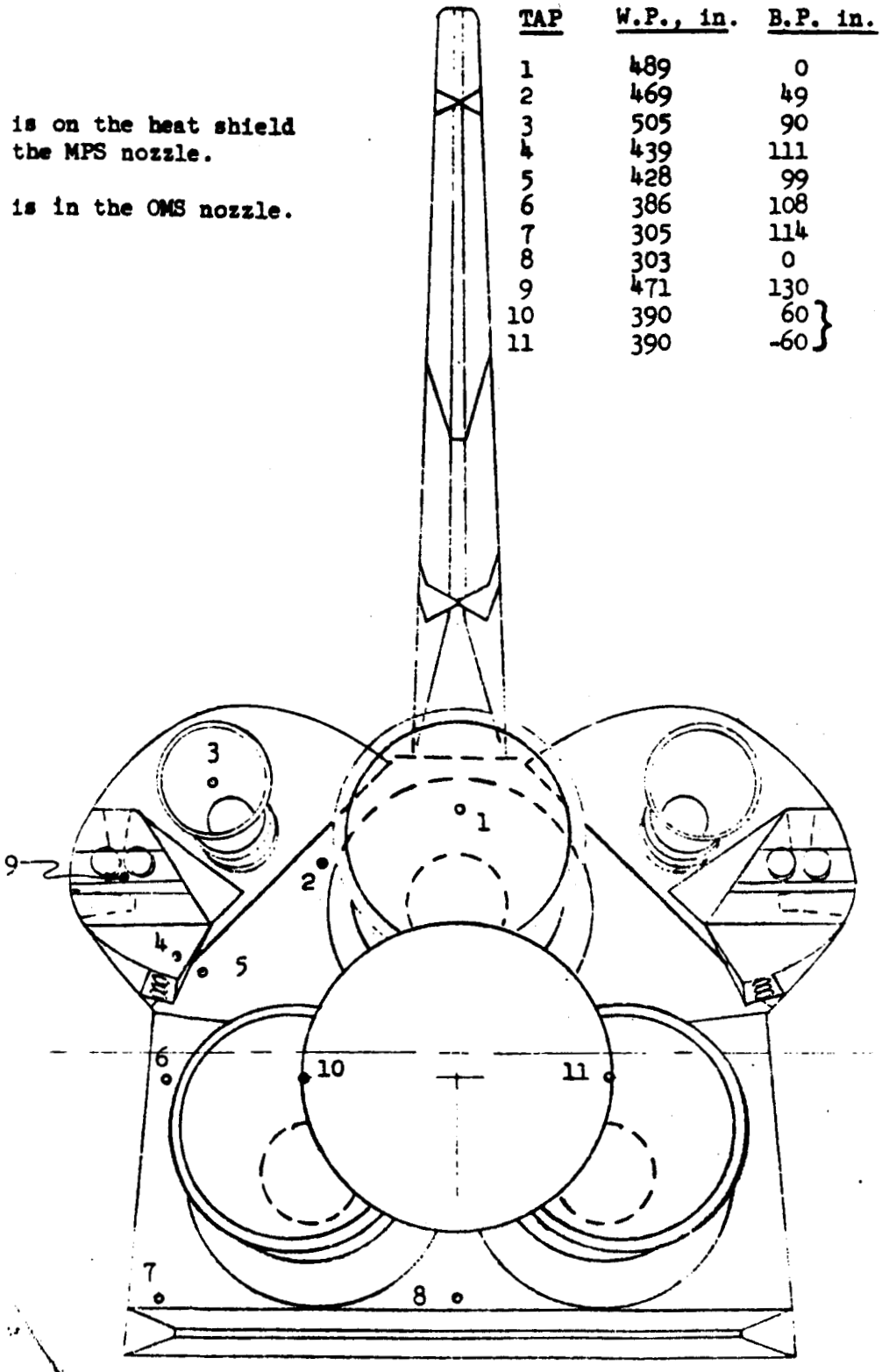

h. Base Pressure Tap Locations
Figure 2. Concluded.

a. Model Installed in 11 x 11 Foot Test Section (OA145A)
Figure 3. Model installation photographs.

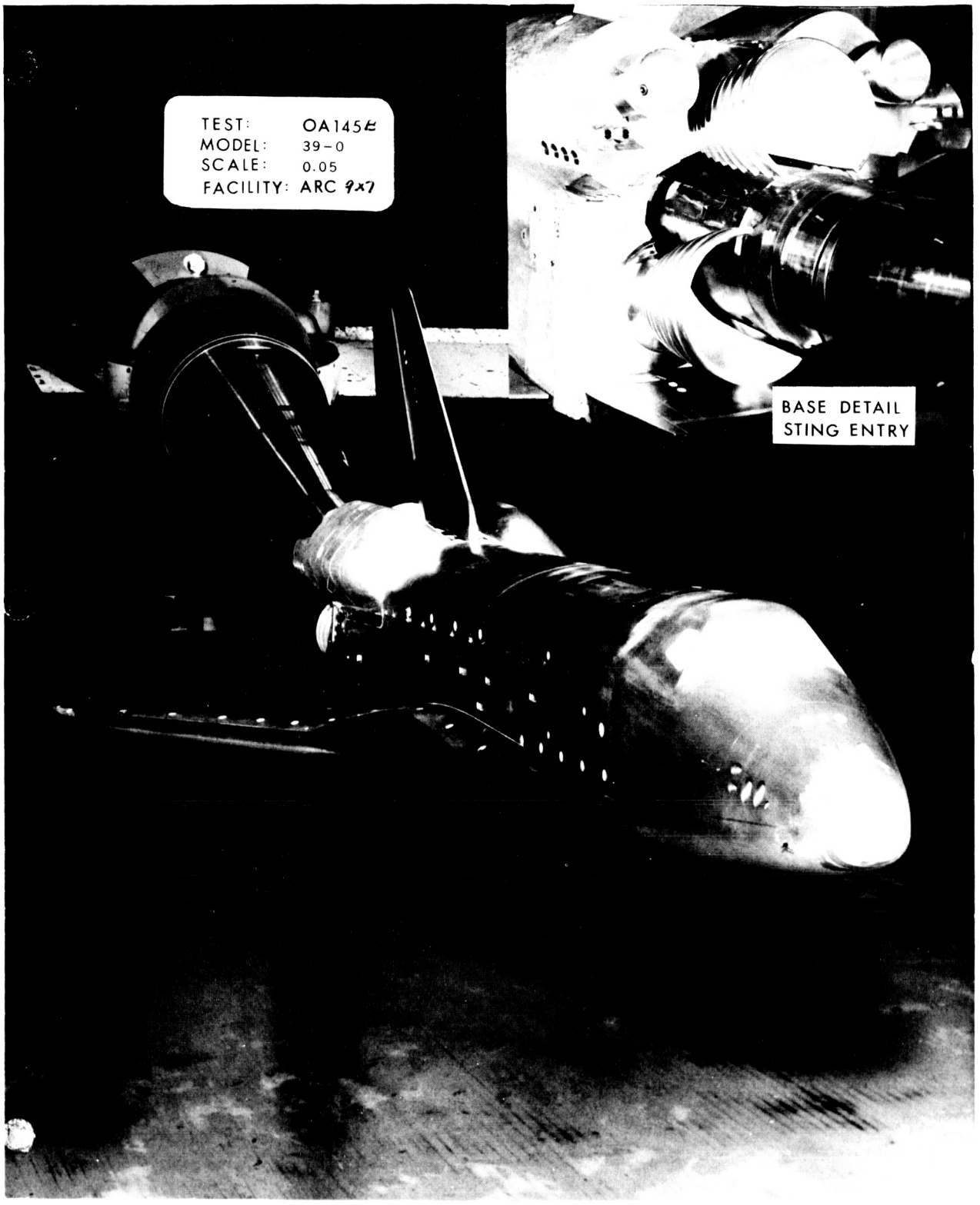

b. Model Installed in 9 x 7 Foot Test Section with Base Detail (OA145B)
Figure 3. Concluded.

APPENDIX

PRESSURE DATA - MICROFICHE

Due to the limited distribution of Volume 3 of this data report, tabulated pressure data are available on request from Data Management Services

(THIS PAGE INTENTIONALLY LEFT BLANK)