National Aeronautics and
Space Administration

NASA-CR-167470

Lyndon B. Johnson Space Center
Houston, Texas 77058

JSC-17091

20 FEBRUARY 1981
24 JUNE 1981 REV. A

SPACE SHUTTLE PROGRAM

SHUTTLE AVIONICS INTEGRATION LABORATORY

SAIL/IUS (CIU) TEST SUPPORT PLAN

(NASA-CR-167470) SPACE SHUTTLE PROGRAM SHUTTLE AVIONICS INTEGRATION LABORATORY. SAIL/IUS (CIU) TEST SUPPORT PLAN Progress Report (McDonnell-Douglas Technical Services) 50 p

N82-71293

Unclas
00/16 08697

JAN 1982
RECEIVED
NASA STI FACILITY
ACCESS DEPT.

Rev. A Approved By
SAIL CCP Directive 1542
on 30 September 1981

Approved 16 March 1981
SAIL CCP Directive 1283

SAIL/IUS (CIU) SUPPORT PLAN

Prepared by

McDonnell Douglas Technical Services Co., Inc.

Houston, Texas

Contract No. NAS-9-16210

for the

Shuttle Avionics Integration Division

NASA, JSC

REVISIONS

REV LETTER	DESCRIPTION	DATE
BASIC	BASELINE (CCP DIRECTIVE 1283)	3/16/81
A	REVISION A - PAGES AFFECTED(CCP DIR. 1542)	9/30/81
	iii, 1, 2, 4, 6, 7, 8, 11, 12, 13, 14, 15, 16, 17	
	APPENDIX B (ADD), APPENDIX C (ADD)	

NOTE: Changes identified by a black line in right-hand margin.

The SAIL payload test documentation tree identifies the standard documentation required for all payloads that utilize the SAIL for interface verification testing. This document corresponds to the Payload Test Support Plan for the SAIL/IUS (CIU) test.

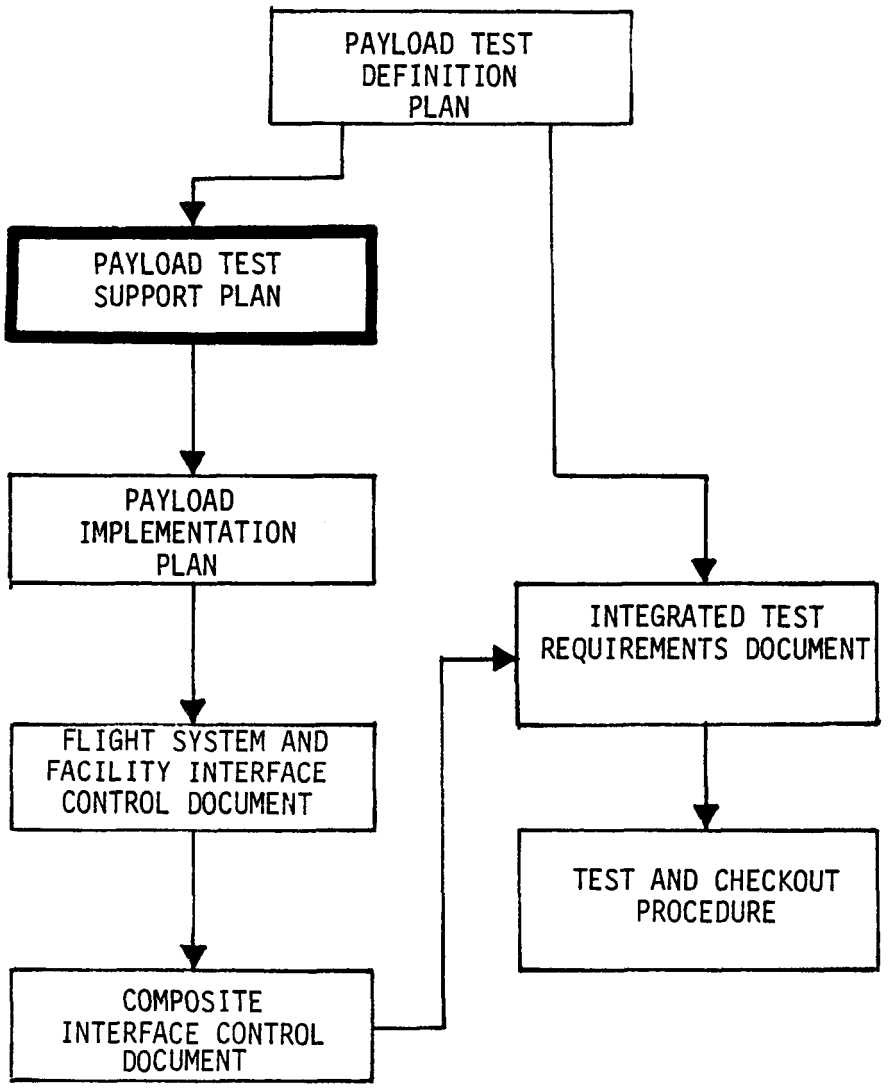

SAIL PAYLOAD TEST DOCUMENTATION TREE

TABLE OF CONTENTS

Paragraph/Section		Page
Cover		i
Document Tree		ii
Table of Contents		iii
List of Figures/Tables		iv
1.0	INTRODUCTION	1
1.1	PURPOSE	1
1.2	SCOPE	1
2.0	REFERENCE DOCUMENT	2
2.1	GOVERNMENT DOCUMENTS	2
2.2	OTHER PUBLICATIONS	2
3.0	TEST ARTICLE CONFIGURATION	3
3.1	IUS (CIU) VERIFICATION REQUIREMENTS	3
4.0	SAIL HARDWARE CONFIGURATION REQUIREMENT	4
4.1	SAIL SHUTTLE TEST STATION FLIGHT SYSTEM	4
4.1.1	SAIL/ORBIT Avionics Hardware Requirement	4
4.1.2	Interface Cable Assembly Requirements	4
4.1.3	Aft Flight Desk Requirement	7
4.2	SAIL/ESTL HARDWARE CONFIGURATION REQUIREMENTS	7
4.2.1	S-Band Antenna Requirement	7
4.3	TEST ELEMENT SUPPORT REQUIREMENT	13
4.3.1	Spacecraft Data Simulation	13
4.3.2	Timing Requirement	13
4.3.3	Special Assessment Requirement	13
5.0	SOFTWARE REQUIREMENTS	14
5.1	FLIGHT SYSTEM SOFTWARE	14
5.2	TEST SUPPORT SOFTWARE	14
6.0	DATA RECORDING AND PROCESSING	15
6.1	COMMAND RECORDING DATA	15
6.2	TEST DATA	15
7.0	FACILITY REQUIREMENTS	16
7.1	ELECTRICAL POWER AND GROUNDING	16
7.2	COOLING	16
7.3	COMMUNICATIONS	16
7.4	SECURITY	16
8.0	ACRONYM LIST	17
APPENDIX A - IUS (CIU) VERIFICATION REQUIREMENTS		A1
APPENDIX B - STS/CARGO INTERFACE TEST REQUIREMENT AND STATUS SHEETS		B1
APPENDIX C - TEST DATA REQUIREMENTS		C1

LIST OF FIGURES

FIGURE		PAGE
4-1	SAIL/IUS Test Article Test Configuration	8
4-2	IUS Test Article General Location	9
4-3	CIU/PCP Installation Location	10
4-4	SAIL AFD/IUS CIU Cooling Interface	11
4-5	SAIL/ESTL Test Configuration Overview	12

LIST OF TABLES

TABLE		PAGE
3-1	IUS Test Article Components	3
4-1	SAIL/Orbiter Hardware	4
4-2	SAIL/IUS Cable Assembly Requirements (Mission Kits)	5
4-3	SAIL/IUS Cable Assembly Requirements (Unique)	6

1.0 INTRODUCTION

1.1 PURPOSE

The Shuttle Avionics Integration Laboratory (SAIL)/Inertial Upper Stage (IUS) Communication Interface Unit (CIU) Support Plan is the second in a series of McDonnell Douglas Technical Service Company (MDTSCO) prepared documents that provides planning data to support the IUS (CIU) test activity. The first document, SAIL/IUS Test Defintion Plan (JSC-17028) identified the payload test requirements, test configuration and established a test schedule date. This document defines the SAIL requirements in support of the scheduled test activity.

1.2 SCOPE

This document identifies/defines the SAIL Shuttle Test Station (STS) Flight System (FS) requirements, test element requirements, flight software requirements and the facility requirements to support the verification test. It will also identify/define the cabling requirements for interfacing the test article to the SAIL STS FS and the SAIL facility.

In addition, this plan defines the requirements to support Orbiter/Payload Standard Services Interfaces as detailed in the Orbiter/IUS Avionics Test Plan - JSC-17232.

2.0 REFERENCE DOCUMENTS

The documents listed were utilized in the development of this Support Plan.

2.1 GOVERNMENT DOCUMENTS

ICD-2-19001	Shuttle Orbiter/Cargo Standard Interface
ICD-D-E0001	Shuttle Orbiter/IUS Cargo Element Interface
ICD-IS-0002	SAIL STS/IUS Interfaces (Composite)
ICD-EE7-604	IUS/ESTL Electrical and Facility Interface
ICD-IS-0001	IUS/SAIL Facility Interface (Part of ICD-IS-0002)
JSC 11845	SAIL Configuration
JSC 17232	Orbiter/IUS Avionics Interface Test Plan (Rev. A, June 8, 1981)

2.2 OTHER PUBLICATIONS

D290-10107-1	IUS System Segment Interface Verification Plan (BAC)
TCP-ZS1-0211R1	IUS/CIU/Orbiter Interface Verification Demonstration at SAIL and ESTL
STS80-0188 Vol 1	Functional Subsystem Software Requirements Payload/Carrier Management
STS79-0282A	IUS Unique Utility Integration Hardware Design Requirements Document
STS79-0293	AFT Flight Deck Standard Mix Cargo Harness Kit Design Requirements Document
VS70-760802	Payload Subsystem Interface (OFT)
VS70-760809	Payload Subsystem Interface (OPS)

3.0 IUS TEST ARTICLE CONFIGURATION

The Boeing Aerospace Company's TCP 211R1 defines the test hardware that the Boeing Aerospace Company (BAC) will bring into the SAIL to conduct the interface verification demonstration test. These hardware items are shown in the following table for reference.

IUS TEST ARTICLE COMPONENTS		
FLT TYPE H/W	P/N	TEST SUPPORT EQUIPMENT
RF DIPLEXER	290-22200-2	
SGLS TRANSPONDER	290-22121-3	IUS AVIONICS SIMULATOR (INCLUDING CRT AND PRINTER)
RF POWER AMPLIFIER	290-22117	MDM I/F SIMULATOR (INCLUDING CRT AND PRINTER)
CIU	290-22235	
PCP	290-26006	INTERCONNECT CABLES
PCU	290-26004	

TABLE 3.1

In addition the BAC will provide the cables that interface with the SAIL payload bay Standard Mix Cargo Harness (SMCH), the cable that interfaces with the Payload Avionics Test Station (PATS), and the cables that connect the Power Control Panel (PCP) to the Communciations Interface Unit (CIU) in the Aft Flight Deck (AFD).

3.1 IUS (CIU) VERIFICATION REQUIREMENTS

The IUS CIU verification requirements identified in BAC TCP 211R1 are shown in Appendix A for reference.

In addition, the requirements detailed in the Orbiter/IUS Avionics Interface Test Plan, JSC-17232, are included as Appendix B for reference.

4.0 SAIL HARDWARE CONFIGURATION REQUIREMENTS

4.1 SHUTTLE TEST STATION FLIGHT SYSTEM

This section defines the SAIL STS FS avionics components and interface cabling required to support the SAIL and SAIL-ESTL/IUS CIU test activity. It does not, however, identify/define the flight cabling that already exists in the FS.

4.1.1 Avionics Hardware Requirements

The SAIL/Orbiter avionics hardware required to support the IUS CIU test activity is shown in Table 4-1.

SAIL/ORBITER HARDWARE		
REQUIREMENT	QUANITY	NEED DATE
GPC (GN&C & PL)	2	11/1/81
MASS MEMORY	1	11/1/81
MCDS	1	11/1/81
MDM (PF-1)	1	11/1/81
MDM (FF1 or 3)	1	11/1/81
PCM MASTER UNIT (STANDARD)	1	11/1/81
PL DATA INTERLEAVER	1	11/1/81
PL RECORDER	1	11/1/81
S-BAND FM RF SYSTEM	1	11/1/81
FM SIG. PROC.	1	11/1/81
S-BAND PM RF SYS.	1	11/1/81
NETWORK SIG. PROC.	1	11/1/81
PL INTERROGATOR	1	11/1/81
KU BAND RF SYS.	1	11/1/81
KU BAND SIG PROC	1	11/1/81
EPD&C SYSTEM	1	11/1/81
PL STANDARD SW PANEL (OPS)	1	11/1/81
PL STA. DIST PANEL (OFT)	1	11/1/81

TABLE 4-1

4.1.2 Interface Cable Assembly Requirements

The interfacing cable assemblies required to support the IUS CIU test activity are defined in Table 4-2 and 4-3. The cables defined in Table 4-2 are components of SAIL mission kits furnished to the SAIL by a Space Shuttle Program Requirements Control Board Directive - S36206 (PRCBD-S36206).

The cables defined in Table 4-3 are unique to the SAIL. Three transition cable assemblies are required to convert the SAIL Payload Station Distribution Panel (PSDP) to the operational configuration. Two of the cable assemblies

SAIL/IUS CABLE ASSEMBLY REQUIREMENTS (MISSION KITS)

MISSION PART NO.	QUAN.	DESCRIPTION/FUNCTION	SOURCE/ AVAILABILITY
MV 0711A			
V711-774003	1	SKI SLOPE - PORT X_0 576 to X_0 603 (HO)	PRCBD-S36206
V711-774007	1	SKI SLOPE - PORT X_0 576 to X_0 603 (RF)	PRCBD-S36206
MV0712A			
V712-774009	1	PAYLOAD BAY SMCH - PORT X_0 603 to CARGO I/F (RF-61FT)	PRCBD-S36206
V712-774013	1	PAYLOAD BAY SMCH - PORT X_0 603 to CARGO I/F (RF-47FT)	PRCBD-S36206
V712-774017	1	PAYLOAD BAY SMCH - PORT X_0 603 to CARGO I/F (HO-47FT)	PRCBD-S36206
V712-774021	1	PAYLOAD BAY SMCH - PORT X_0 603 to CARGO I/F (HO-61 FT)	PRCBD-S36206
MV0719A			
V719-773001	1	PCP TO SIMULATED OPS PSDP (HO)	PRCBD-S36206
V719-773003	1	SSP TO SIMULATED OPS PSDP (HO)	PRCBD-S36206
V719-773005	1	PCP TO SIMULATED OPS PSDP (HO)	PRCBD-S36206
V719-713711	1	BUSSED CONNECTOR - RCDR TRACK SELECT	PRCBD-S36206
V719-713705	1	BUSSED CONNECTOR - RCDR PLAYBACK	PRCBD-S36206
MC0718A			
V718-713701	1	SSP TO PCP (HO)	PRCBD-S36206
V718-713703	1	PCP TO OFT PSDP (HO)	PRCBD-S36206
V718-713705	1	CIU TO SIMULATED OPS PSDP (HO)	PRCBD-S36206
V718-713707	1	CIU TO SIMULATED OPS PSDP (RF)	PRCBD-S36206

TABLE 4-2

SAIL/IUS CABLE ASSEMBLY REQUIREMENTS (UNIQUE)

PART NUMBER	QUANTITY	DESCRIPTION/FUNCTION	AVAILABILITY/ AUTHORITY
V742-813719-002	1	TRANSITION CABLE - (SIM OPS PSDP TO OFT PSDP - PCP)	PRCBD-S36206
V742-813719-001	1	TRANSITION CABLE - (SIM OPS PSDP TO OFT PSDP - CIU)	PRCBD-S36206
V742-814719	1	TRANSITION CABLE - (SIM OPS PSDP TO OFT PSDP - CIU)	PRCBD-S36206
TBD	2	S/C PCM CABLE - (PATS TO PORT SMCH I/F PANEL)	JSC BUILD
TBD	1	TIMING CABLE - (TOC GMT TO IUS SIM RACKS)	JSC BUILD

TABLE 4-3

interface the CIU AFD cables to the current PSDP configuration. The third cable assembly interfaces the PCP to the PSDP.

The remaining two (2) cable assemblies are required to interface the IUS test article to the SAIL test support elements.

Two Interface Control Documents (ICD's) define and control all the electrical and physical interfaces described in this test support plan. SAIL ICD IS-0001 covers the interface between the IUS and the SAIL facility and ICD IS-0002 describes the flight IUS interfaces.

These cable assemblies plus the avionics hardware listed in Table 4-1 support the SAIL/IUS CIU test activity in the attached mode. Figure 4-1 defines the SAIL/IUS test article test configuration. Figure 4-2 shows the general location of the IUS test article positioned on the payload bay work platform.

4.1.3 Aft Flight Deck Requirements

The BAC supplied CIU and PCP will be installed in the AFD locations shown in Figure 4-3. The SAIL is required to provide the Cooling Interface between the Orbiter Air Duct and the CIU. The Interface is shown in Figure 4-4.

4.2 SAIL/ESTL HARDWARE CONFIGURATION REQUIREMENTS

The same hardware configuration utilized for the SAIL test will be used for the SAIL/ESTL test with the following exceptions:

a) For IUS detached mode test, the IUS Avionics Interface Simulator rack, including the printer, CRT and keyboard, will be disconnected from the SAIL flight system. The simulator will be transported to the ESTL and connected into their system per ICD-EE7-604, IUS/ESTL Electrical and Facility Interface.

b) The SAIL S-Band RF systems will be connected to the Roof-top S-Band antenna on building 16. The S-Band systems required are 1.) S-Band PI, 2.) S-Band PM and 3.) S-Band FM.

c) The SAIL KuBand RF system will be connected to the Roof top Ku Band antenna on Building 16. Figure 4-5 provides an overview of the SAIL-ESTL/IUS Test Article test set-up. Ku-band testing will be deferred to a TBD date if the equipment is not available to support this test.

4.2.1 S-Band Antenna Requirements

The joint SAIL-ESTL/IUS interface verification test requires RF transmission of the three S-Band systems. Selection of these links is controlled by a mode switch on the CIU.

The SAIL is required to provide a means to multiplex these S-Band links to support RF transmission thru the single S-Band roof top antenna. Multiplexing of these links will preclude switching any of the transmitters into an open circuit which could result in damage to the LRU.

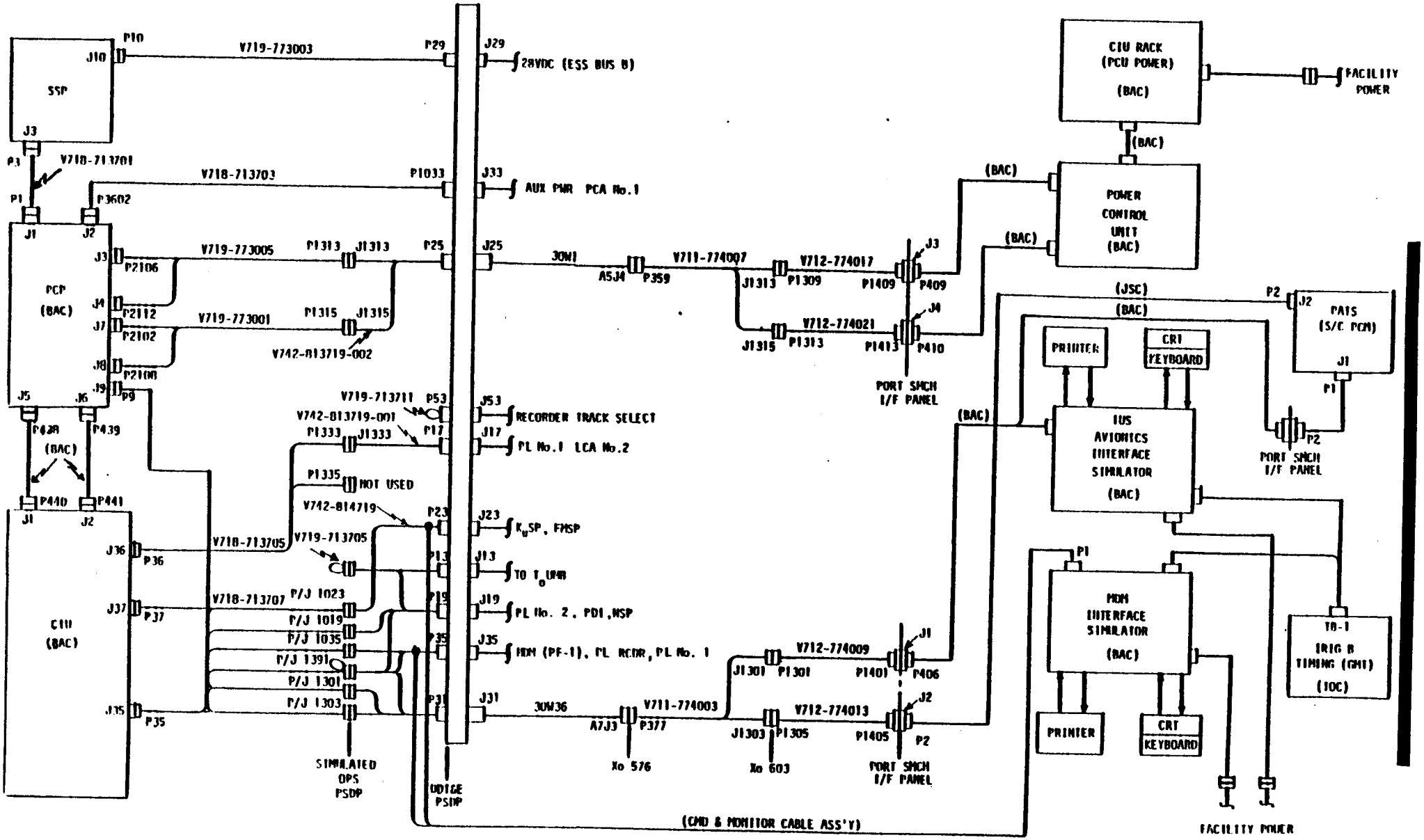

SAIL/IUS TEST ARTICLE TEST CONFIGURATION
FIGURE 4-1

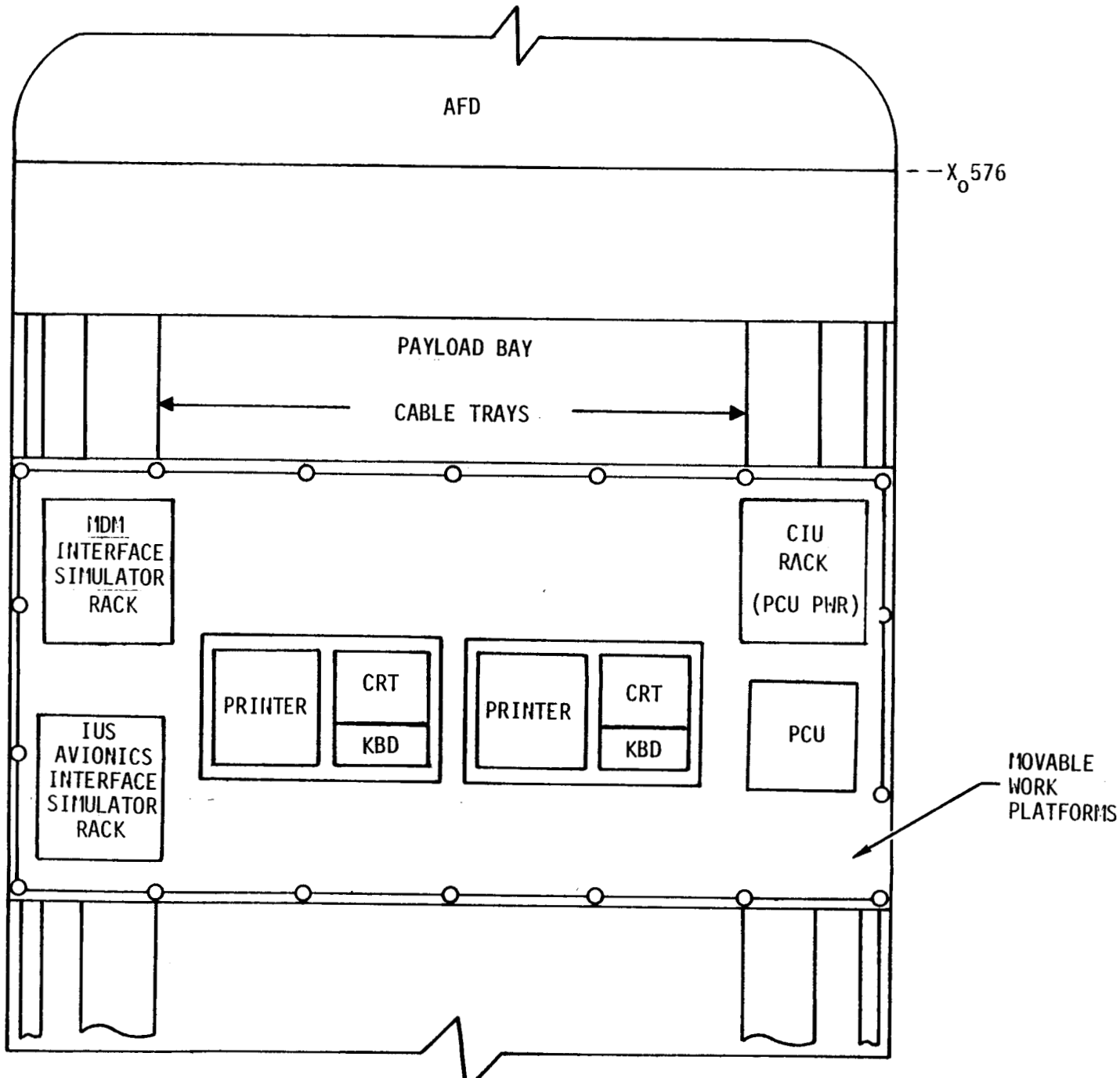

IUS TEST EQUIPMENT GENERAL LOCATION

Figure 4-2

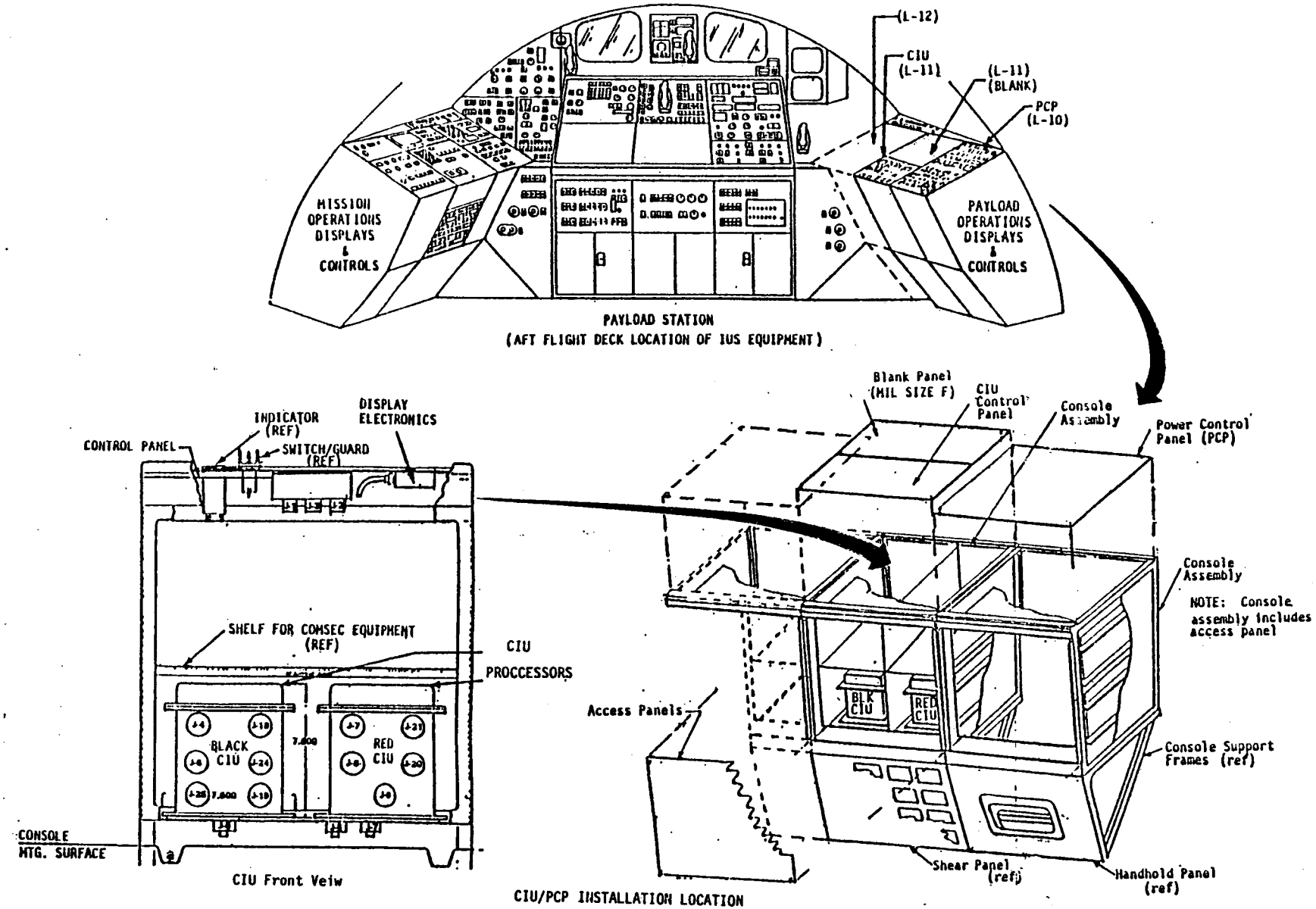
(L-12)
CIU (L-11)
(L-11) (BLANK)
PCP (L-10)
MISSION OPERATIONS DISPLAYS & CONTROLS
PAYLOAD OPERATIONS DISPLAYS & CONTROLS
PAYLOAD STATION
(AFT FLIGHT DECK LOCATION OF IUS EQUIPMENT)
INDICATOR (REF)
DISPLAY ELECTRONICS
CONTROL PANEL
SWITCH/GUARD (REF)
SHELF FOR COMSEC EQUIPMENT (REF)
CIU PROCCESSORS
BLACK CIU
RED CIU
CONSOLE MTG. SURFACE
CIU Front Veiw
Blank Panel (MIL SIZE F)
CIU Control Panel
Console Assembly
Power Control Panel (PCP)
Console Assembly
NOTE: Console assembly includes access panel
Access Panels
BLK CIU
RED CIU
Console Support Frames (ref)
Shear Panel (ref)
Handhold Panel (ref)
CIU/PCP INSTALLATION LOCATION

Figure 4-3

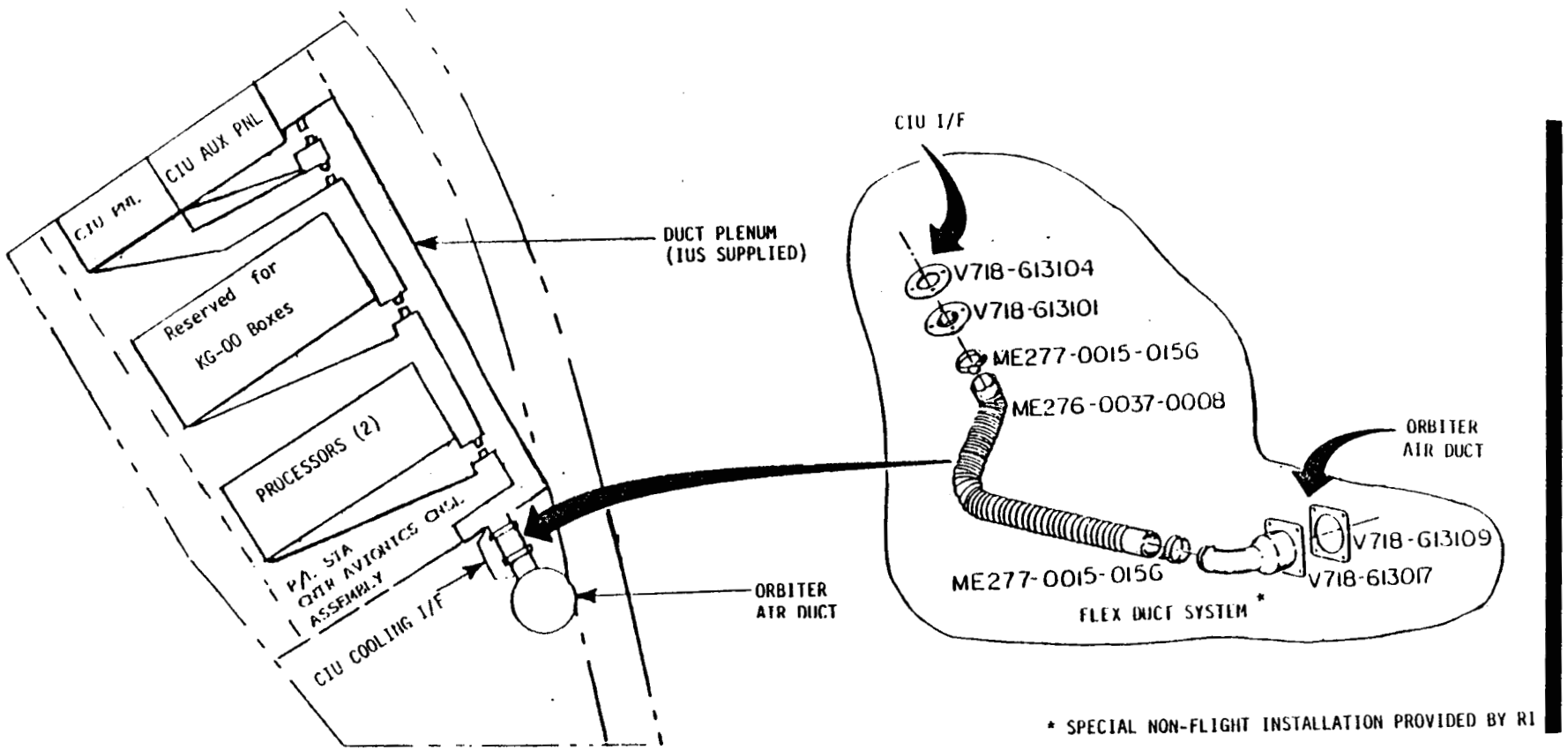

SAIL AFD/IUS CIU COOLING INTERFACE

FIGURE 4-4

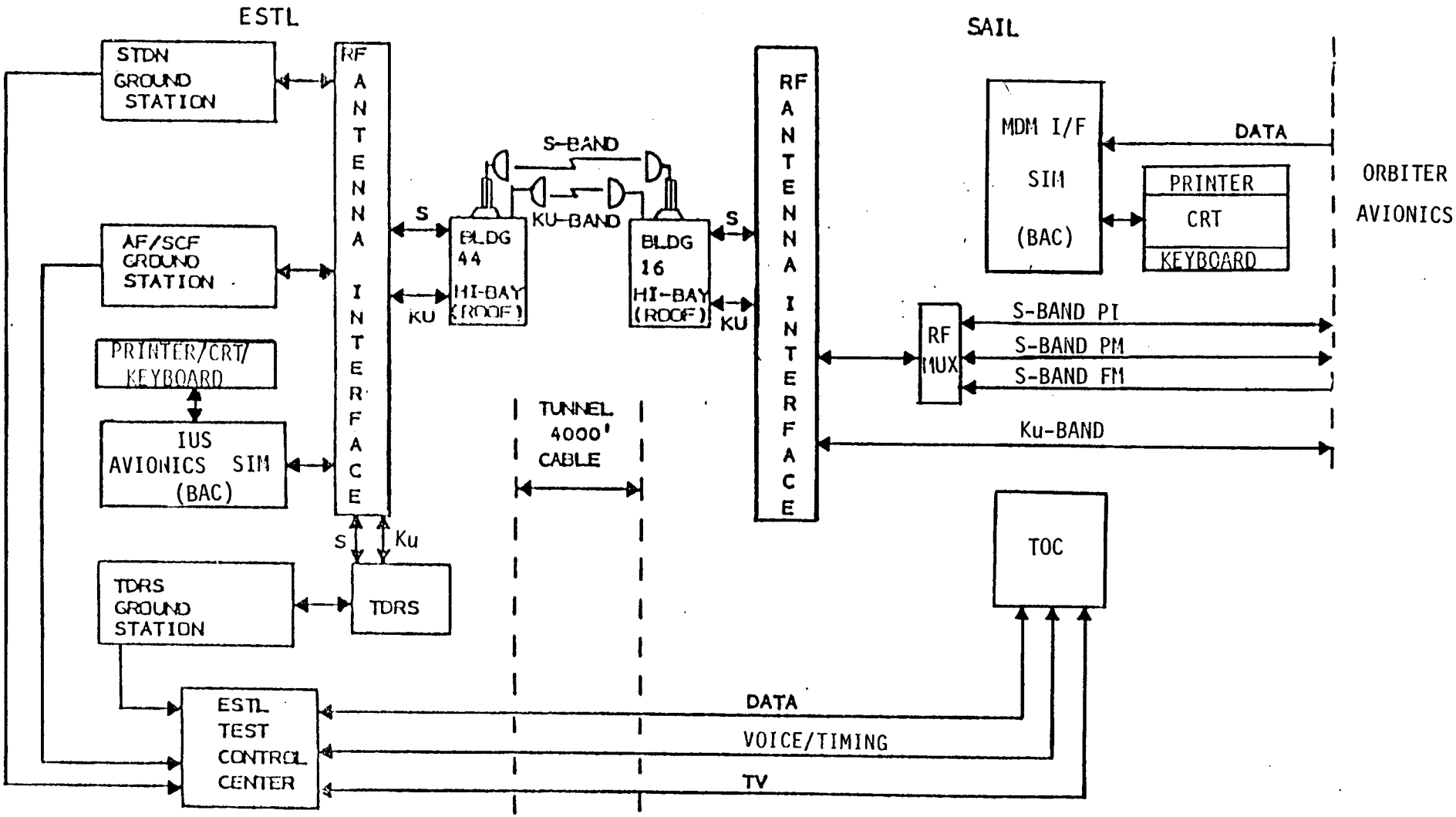

SAIL/ESTL TEST CONFIGURATION OVERVIEW
(DETACHED PAYLOAD)
FIGURE 4-5

4.3 TEST ELEMENT SUPPORT REQUIREMENTS

4.3.1 Spacecraft Data Simulation

A simulated Tracking and Data Relay Satellite (TDRS) telemetry data stream will be provided by SAIL. This data stream will be generated by the Payload Avionics Test Station (PATS) and consist of 1 KBPS NRZ-L data and 1 KBPS clock. The PATS will provide this signal to the IUS Avionics Simulator, via the interface cable assembly, defined in Table 4-3, for thru-put to the Payload Data Interleaver. In addition the PATS is required to provide simulated telemetry data consisting of a 32 KBPS block mode and a 8 KBPS synchronous mode for direct input to the PDI.

4.3.2 Timing Requirements

The IUS Avionics Interface Simulator and the MDM Interface Simulator each require a 100 Pulse-Per-Second (PPS) Inter-Range Instrumentation Group B (IRIG-B) timing signal. This timing signal will be provided by the Test Opertions Center (TOC) time code generator and interfaced to the simulator by the cable assembly defined in Table 4-3.

4.3.3 Special Assessment Requirements

The SAIL is required to provide a breakout cable at the CIU interface which provides the capability to record the level of the data and clock telemetry signals going from the CIU to the PDI. (Refer to TRAS IS-102 in Appendix C.)

5.0 SOFTWARE REQUIREMENTS

5.1 FLIGHT SYSTEM SOFTWARE

The flight system software that will be used to support the SAIL/IUS CIU test activity will be the Primary Avionics System Software (PASS) as defined in the Functional Subsystem Software Requirements (FSSR), Payload/Carrier Management, STS80-0188 Volume 1. This document defines the SAIL Payload Software that will be available to support the IUS CIU test.

5.2 TEST SUPPORT SOFTWARE

Uplink commands to the S-Band PM system and the Ku-Band system will be provided by a command data tape. The command data tape will be used for the SAIL test sequences. A TOC 3030 recorder will be utilized to uplink the commands for the SAIL tests only. The ESTL plans to provide its own computer generated commands for the SAIL/ESTL and ESTL only test sequences. The BAC hardware/software design, for this test, does not have any command sequence requirements. The only criteria for command generation is that the command must be a legitimate IUS DOD clear command of 27 bits with ID, parity, S-bit preamble, etc. The specific command sequence is not critical to the test objective and may be selected by the test procedure writers.

6.0 DATA RECORDING AND PROCESSING

6.1 COMMAND RECORDING DATA

Orbiter Guidance, Navigation and Control (GN&C) data and S-Band and Ku Band uplink commmands will be monitored and recorded at the BAC MDM Interface Simulator Rack. These data will be routed to the simulator rack via a unique cable assembly which is a part of the OPS PSDP to OFT PSDP transition cables.

6.2 TEST DATA

The BAC test data requirements are delineated in Appendix C on a TRAS basis. The SAIL is required to provide a mag tape recording of the Orbiter OI downlink, IUS/TDRS interleaved TLM and TDRS TLM data, at both the high data rate (64KBPS) and low data rate (16 KBPS), for use in validating the MCC/AFSCF/WSGT and STDN/RTS data interface.

7.0 FACILITY REQUIREMENTS

7.1 ELECTRICAL POWER AND GROUNDING

The IUS Test Article (3 equipment racks) will require Facility power rated at 120 VAC, Single Phase, 20 amps for each rack. The IUS test article will utilize the SAIL FS ground system. Isolation of the facility power ground and safety ground is required to maintain the integrity of the SAIL FS ground system.

7.2 COOLING

The IUS Test article will not require special cooling provisions.

7.3 COMMUNICATIONS

The BAC test equipment operators will require access to the SAIL operational intercom system with a minimum of two (2) headsets.

7.4 SECURITY

There are no security requirements relative to Communications Security (COMSEC) during the conduct of the TEMPEST team de-bug procedure evaluation.

8.0 ACRONYM LIST

AFD	AFT FLIGHT DECK
BAC	BOEING AEROSPACE COMPANY
CIU	COMMUNICATIONS INTERFACE UNIT
COMSEC	COMMUNICATIONS SECURITY
CR	CHANGE REQUEST
CRT	CATHODE RAY TUBE
ESTL	ELECTRONICS SYSTEMS TEST LABORATORY
FM	FREQUENCY MODULATION
FS	FLIGHT SYSTEM
FSSR	FUNCTIONAL SUBSYSTEM SOFTWARE REQUIREMENTS
GMT	GREENWICH MEAN TIME
GN&C	GUIDANCE NAVIGATION AND CONTROL
GPC	GENERAL PURPOSE COMPUTER
ICD	INTERFACE CONTROL DOCUMENT
I/F	INTERFACE
IRIG-B	INTER-RANGE INSTRUMENTATION GROUP B
IUS	INERTIAL UPPER STAGE
JSC	JOHNSON SPACE CENTER
KBPS	KILO BITS PER SECOND
LRU	LINE REPLACEABLE UNIT
MCDS	MULTI PURPOSE CRT DISPLAY SYSTEM
MDM	MULTIPLEXER DEMULTIPLEXER
MDTSCO	MCDONNELL DOUGLAS TECHNICAL SERVICES CO.
NRZ	NON RETURN TO ZERO
OFT	ORBITAL FLIGHT TEST
OPS	OPERATIONAL
PASS	PRIMARY AVIONICS SYSTEM SOFTWARE
PATS	PAYLOAD AVIONICS TEST STATION
PCM	PULSE CODE MODULATION
PCP	POWER CONTROL PANEL
PCU	POWER CONTROL UNIT
PI	PAYLOAD INTERROGATOR
PL	PAYLOAD
PM	PULSE MODULATION
PN	PART NUMBER
PRCBD	PROGRAM REQUIREMENTS CONTROL BOARD DIRECTIVE
PSDP	PAYLOAD STATION DISTRIBUTION PANEL
RCDR	RECORDER
RF	RADIO FREQUENCY
SAIL	SHUTTLE AVIONICS INTEGRATION LABORATORY
SGLS	SPACE AND GROUND LINK SYSTEM
SIM	SIMULATOR
SMCH	STANDARD MIX CARGO HARNESS
STS	SHUTTLE TEST STATION
TDRS	TRACKING AND DATA RELAY STATION
TOC	TEST OPERATION CENTER

IUS CIU VERIFICATION REQUIREMENTS	
FACILITY	DESCRIPTION
SAIL & JOINT	a. Verify that the DOD IUS vehicle/ASE accepts and properly responds to Orbiter GN&C data and/or to ground uplink data from the orbiter MDM. (Attached mode)
SAIL	b. Verify that DOD IUS ASE electrical loading of the MDM SIO is within specifications.
* ESTL	c. Verify that the DOD IUS vehicle/ASE accepts and properly responds to FSK-AM modulated commands provided at mission nominal payload interrogator RF levels.
SAIL & JOINT	d. Verify Orbiter standard software services compatibility with DOD IUS vehicle/ASE hardware configuration and with standard (basic) DOD IUS mission software.
* ESTL	e. Verify capability of satisfactory simultaneous uplink-downlink PI-IUS commands and data operations.
SAIL	f. Verify satisfactory acquisition of DOD IUS plus spacecraft and spacecraft asynchronous PCM standard format and non-standard format data streams up to full capability of PDI less status and orbiter time tag data.
* ESTL	g. Verify that IUS 250BPS to 256 KBPS digital data from the CIU is satisfactorily accepted and processed by the FM Signal Processor.
* ESTL	h. Verify that CIU IUS digital data driver electrical characteristics do not significantly affect FM Signal Processor electrical operation and data transmission accuracy.
* ESTL	i. Verify that satisfactory TLM downlink data is received from the PI, at the CIU in the IUS detached mode.
* ESTL	j. Verify satisfactory modulation and uplink radiation and reception of FSK-AM SGLS commands from the CIU.
* ESTL	k. Verify satisfactory transmission and reception of SGLS downlink TLM from the DOD IUS to the Orbiter PI.

IUS CIU VERIFICATION REQUIREMENTS	
FACILITY	DESCRIPTION
SAIL & JOINT	l. Verify that IUS plus spacecraft and spacecraft PCM data is interleaved correctly in the orbiter PDI and that specific data can be subsequently retrieved as necessary.
SAIL & JOINT	m. Verify satisfactory characteristics of and transfer of Orbiter GN&C data from the Orbiter MDM to the IUS vehicle/ASE for PI command links. (Detached mode)
SAIL	n. Verify that the IUS payload station power control panel may be correctly installed in and removed from the shuttle provided payload station console and properly connected to the payload station distribution panel.
SAIL	o. Verify that the IUS payload station CIU console may be properly installed and connected to the payload station distribution panel in conjunction with the installation of the IUS power control panel.
SAIL	p. Verify that the IUS Power Control Panel and CIU console can be electrically connected to Orbiter power at the payload station.
SAIL	q. Verify that the IUS control and display panel and CIU console can be electrically connected to the Orbiter payload station distribution panel and hence to the Orbiter and to the IUS in the payload bay.
* ESTL	r. Verify IUS data from the CIU is satisfactorily accepted and processed by the Ku-band signal processor.
* ESTL	s. Verify that the CIU/IUS digital data driver electrical characteristics do not significantly affect the Ku-band signal processor electrical operation and data transmission accuracy.

*REFERENCE ONLY

STS/CARGO INTERFACE TEST REQUIREMENT AND STATUS (TRAS)				Tras. Number: IV-101	
				Related Tras. Number:	
				TYPE	System Development
					Verification X
					Special
TEST FACILITY	SAIL	CARGO ELEMENT	IUS/CIU	Date Issued	
				Date Revised	
Interface(s): Payload/Recorder		Criteria:		Rev. Number	
				Effectivity	Orbiter Generic
Reference: PIP			Related Documents	SD78-SH-0149	
Requirement Source	ICD-2-19001		Paragraph Number(s)	8.2.3 (c)	

Requirement:

Verify capability to thru-put data from assigned interfaces (SMCH) to the Orbiter Payload Recorder (OPR) located in avionics bay 1.

Method:

Remarks:

ACCEPTANCE

NASA AVIONICS	STSOPO	TEST FACILITY REP.	CARGO ELEMENT

REQUIREMENT CLOSEOUT

Test Procedure Number	Test Report Number	Test Data Package Number

Test Results Summary:

CARGO S/S MGR.	TEST FACILITY REP.	SR&QA REP.
STS S/S MGR.	**STSOPO**	**REQUIREMENT COORDINATOR**

STS/CARGO INTERFACE TEST REQUIREMENT AND STATUS (TRAS)				Tras. Number: IV-102 Related Tras. Number: IV-103, IV-204 TYPE: System Development / Verification [X] / Special	
TEST FACILITY	SAIL	CARGO ELEMENT	IUS/CIU	Date Issued Date Revised	
Interface(s): SIO Serial Input/Output		Criteria:		Rev. Number Effectivity	Orbiter Generic
Reference: PIP			Related Documents		SD78-SH-0149 ICD-D-E0001
Requirement Source	ICD-2-19001		Paragraph Number(s)	8.2.2.5	

Requirement:

Verify data output from the GPC to a payload, via the PLMDM serial input/output (SIO) channels.

Method:

Remarks:

ACCEPTANCE

NASA AVIONICS	STSOPO	TEST FACILITY REP.	CARGO ELEMENT

REQUIREMENT CLOSEOUT

Test Procedure Number	Test Report Number	Test Data Package Number

Test Results Summary:

CARGO S/S MGR.	TEST FACILITY REP.	SR&QA REP.
STS S/S MGR.	**STSOPO**	**REQUIREMENT COORDINATOR**

STS/CARGO INTERFACE TEST REQUIREMENT AND STATUS (TRAS)				Tras. Number: IV-103	
				Related Tras. Number: IV-102, IV-204	
				TYPE	System Development Verification X Special
TEST FACILITY	SAIL	CARGO ELEMENT	IUS/CIU	Date Issued Date Revised	
Interface(s): SIO Software		Criteria:		Rev. Number Effectivity	Orbiter Generic
Reference: PIP			Related Documents	SD78-SH-0149	
Requirement Source	ICD-2-19001		Paragraph Number(s)	9.4.3.1, 9.4.3.1.3.1, 9.4.3.1.3.2, 9.4.3.1.3.3	

Requirement:

Verify that the Orbiter GPC and flight software provides the capability to transmit data via the MDM serial input/output (SIO) channels (uplink and onboard). Data transmission will be under GPC control.

Method:

Remarks:

ACCEPTANCE

NASA AVIONICS	STSOPO	TEST FACILITY REP.	CARGO ELEMENT

REQUIREMENT CLOSEOUT

Test Procedure Number	Test Report Number	Test Data Package Number

Test Results Summary:

CARGO S/S MGR.	TEST FACILITY REP.	SR&QA REP.
STS S/S MGR.	**STSOPO**	**REQUIREMENT COORDINATOR**

STS/CARGO INTERFACE TEST REQUIREMENT AND STATUS (TRAS)				IV-104 Related Tras. Number:	
				TYPE	System Development Verification X Special
TEST FACILITY	SAIL	CARGO ELEMENT	IUS/CIU	Date Issued	March 3, 1981
				Date Revised	
Interface(s): Telemetry		Criteria:		Rev. Number	
				Effectivity	IUS
Reference: PIP			Related Documents		
Requirement Source	ICD-D-E0001		Paragraph Number(s)	E 8.2.1.1, E 8.2.1.2	

Requirement:
Verify satisfactory PDI acquisition of concurrent/separate DOD-IUS plus Spacecraft and Spacecraft asynchronous PCM standard format and non-standard format data. The data shall be as defined in paragraph U 9.4.1.

Method:

Remarks:

ACCEPTANCE

NASA AVIONICS	STSOPO	TEST FACILITY REP.	CARGO ELEMENT

REQUIREMENT CLOSEOUT

Test Procedure Number	Test Report Number	Test Data Package Number

Test Results Summary:

CARGO S/S MGR.	TEST FACILITY REP.	SR&QA REP.
STS S/S MGR.	**STSOPO**	**REQUIREMENT COORDINATOR**

STS/CARGO INTERFACE TEST REQUIREMENT AND STATUS (TRAS)				Tras. Number: IV-105	
				Related Tras. Number: IV-108, IV-104	
				TYPE	System Development Verification X Special
TEST FACILITY	SAIL	CARGO ELEMENT	IUS/CIU	Date Issued	
				Date Revised	
Interface(s): Telemetry/SW		Criteria:		Rev. Number	
				Effectivity	Orbiter Generic
Reference: PIP			Related Documents		
Requirement Source	ICD-2-19001		Paragraph Number(s)	8.2.1.1, 9.4.1.1, 9.4.1.2, 8.2.1.2, 9.4.1.3	

Requirement:

Acquire and display payload telemetry standard format data in the format synchronization mode and verify that the Orbiter GPC cannot acquire block mode data of the PDI. Data via the PDI/PCMMU. Verify non-standard format mode.

Method:

Remarks:

ACCEPTANCE

NASA AVIONICS	STSOPO	TEST FACILITY REP.	CARGO ELEMENT

REQUIREMENT CLOSEOUT

Test Procedure Number	Test Report Number	Test Data Package Number

Test Results Summary:

CARGO S/S MGR.	TEST FACILITY REP.	SR&QA REP.
STS S/S MGR.	**STSOPO**	**REQUIREMENT COORDINATOR**

STS/CARGO INTERFACE TEST REQUIREMENT AND STATUS (TRAS)				Tras. Number: IV-106	
				Related Tras. Number: IV-108	
				TYPE	System Development Verification X Special
TEST FACILITY	SAIL	CARGO ELEMENT	IUS/CIU	Date Issued	
				Date Revised	
Interface(s): Software		Criteria:		Rev. Number	
				Effectivity	Orbiter Generic
Reference: PIP			Related Documents	SD78-SH-0149	
Requirement Source	ICD-2-19001		Paragraph Number(s)	9.4.1	

Requirement:

Verify capability to configure the PDI via the GPC with flight software, and monitor/control the PDI via Orbiter onboard displays/commands.

Method:

Remarks:

ACCEPTANCE

NASA AVIONICS	STSOPO	TEST FACILITY REP.	CARGO ELEMENT

REQUIREMENT CLOSEOUT

Test Procedure Number	Test Report Number	Test Data Package Number

Test Results Summary:

CARGO S/S MGR.	TEST FACILITY REP.	SR&QA REP.
STS S/S MGR.	**STSOPO**	**REQUIREMENT COORDINATOR**

STS/CARGO INTERFACE TEST REQUIREMENT AND STATUS (TRAS)				Tras. Number: IV-107	
				Related Tras. Number:	
				TYPE	System Development Verification X Special
TEST FACILITY	SAIL	CARGO ELEMENT	IUS/CIU	Date Issued Date Revised	
Interface(s): Software PDI/GPC		Criteria: Control of PDI		Rev. Number Effectivity	Orbiter Generic
Reference: PIP			Related Documents	SD78-SH-0149	
Requirement Source	ICD-2-19001		Paragraph Number(s)	9.4.1	

Requirement:

Verify the capability to acquire and verify payload data interleaver (PDI) decommutation format load (DFL) and fetch pointer memory (FPM) load data that is stored on mass memory and load data into PDI decom and RAM and FPM.

Method:

Remarks:

ACCEPTANCE

NASA AVIONICS	STSOPO	TEST FACILITY REP.	CARGO ELEMENT

REQUIREMENT CLOSEOUT

Test Procedure Number	Test Report Number	Test Data Package Number

Test Results Summary:

CARGO S/S MGR.	TEST FACILITY REP.	SR&QA REP.
STS S/S MGR.	**STSOPO**	**REQUIREMENT COORDINATOR**

STS/CARGO INTERFACE TEST REQUIREMENT AND STATUS (TRAS)				Tras. Number: IV-108	
				Related Tras. Number: IV-106	
				TYPE	System Development Verification X Special
TEST FACILITY	SAIL	CARGO ELEMENT	IUS/CIU	Date Issued Date Revised	
Interface(s): Telemetry		Criteria:		Rev. Number Effectivity	Orbiter Generic
Reference: PIP			Related Documents		
Requirement Source	ICD-2-19001		Paragraph Number(s)	8.2.1, 8.2.1.4.1, 8.2.1.1, 8.2.1.2, 8.2.1.3.1, 8.2.1.3.2	

Requirement:

Verify that the Orbiter can provide, via the payload data interleaver (PDI) for acquisition of synchronous telemetry data from up to 4 attached payloads.

Method:

Remarks:

ACCEPTANCE

NASA AVIONICS	STSOPO	TEST FACILITY REP.	CARGO ELEMENT

REQUIREMENT CLOSEOUT

Test Procedure Number	Test Report Number	Test Data Package Number

Test Results Summary:

CARGO S/S MGR.	TEST FACILITY REP.	SR&QA REP.
STS S/S MGR.	**STSOPO**	**REQUIREMENT COORDINATOR**

STS/CARGO INTERFACE TEST REQUIREMENT AND STATUS (TRAS)				Tras. Number: IV-109 Related Tras. Number: IV-105	
				TYPE	System Development Verification X Special
TEST FACILITY	SAIL	CARGO ELEMENT	IUS/CIU	Date Issued Date Revised	
Interface(s): Software		Criteria:		Rev. Number Effectivity	IUS
Reference: PIP			Related Documents		
Requirement Source	ICD-D-E0001		Paragraph Number(s)	9.4.1.2	

Requirement:

Verify that the Orbiter software can acquire, process and display the data types specified in paragraph 9.4.1.2 via the PDI interface.

Method:

Remarks:

ACCEPTANCE

NASA AVIONICS	STSOPO	TEST FACILITY REP.	CARGO ELEMENT

REQUIREMENT CLOSEOUT

Test Procedure Number	Test Report Number	Test Data Package Number

Test Results Summary:

CARGO S/S MGR.	TEST FACILITY REP.	SR&QA REP.
STS S/S MGR.	**STSOPO**	**REQUIREMENT COORDINATOR**

STS/CARGO INTERFACE TEST REQUIREMENT AND STATUS (TRAS)				Tras. Number: IV-110	
				Related Tras. Number: IV-109	
				TYPE	System Development Verification X Special
TEST FACILITY	SAIL	CARGO ELEMENT	IUS/CIU	Date Issued Date Revised	
Interface(s): Displays and Controls		Criteria:		Rev. Number Effectivity	IUS
Reference: PIP			Related Documents		
Requirement Source	C&D ANNEX #4 April 1, 1981 Final Rev A.		Paragraph Number(s)	Tables 2A, 5A	

Requirement:

Verify SPEC 200 display, format, contents, and command functions including FDA, per source paragraphs in SM OPS 2 flight software for the IUS/TDRS-A configuration. Use crew procedures from the flight OPS support annex (FOSA) for nominal and off nominal operations verification.

Method:

Remarks:

-

ACCEPTANCE

NASA AVIONICS	STSOPO	TEST FACILITY REP.	CARGO ELEMENT

REQUIREMENT CLOSEOUT

Test Procedure Number	Test Report Number	Test Data Package Number

Test Results Summary:

CARGO S/S MGR.	TEST FACILITY REP.	SR&QA REP.
STS S/S MGR.	**STSOPO**	**REQUIREMENT COORDINATOR**

STS/CARGO INTERFACE TEST REQUIREMENT AND STATUS (TRAS)				Tras. Number: IV-111	
				Related Tras. Number: IV-101, IV-202	
				TYPE	System Development Verification X Special
TEST FACILITY	SAIL	CARGO ELEMENT	IUS/CIU	Date Issued	
				Date Revised	
Interface(s): Payload Recorder		Criteria:		Rev. Number	
				Effectivity	Orbiter Generic
Reference: PIP			Related Documents	SD78-SH-0149	
Requirement Source	ICD-2-19001		Paragraph Number(s)	8.2.3, 8.2.3.1, 8.2.3.1.1, 8.2.3.1.3, 8.2.3.2, 8.2.3.2.1, 8.2.3.2.3	

Requirement:

Verify that Orbiter Payload Recorder (OPR) provides the capability to record Bi-Phase Level digital data and analog data, both simultaneously and separately on up to 14 tracks.

Method:

Remarks:

ACCEPTANCE

NASA AVIONICS	STSOPO	TEST FACILITY REP.	CARGO ELEMENT

REQUIREMENT CLOSEOUT

Test Procedure Number	Test Report Number	Test Data Package Number

Test Results Summary:

CARGO S/S MGR.	TEST FACILITY REP.	SR&QA REP.
STS S/S MGR.	**STSOPO**	**REQUIREMENT COORDINATOR**

STS/CARGO INTERFACE TEST REQUIREMENT AND STATUS (TRAS)	Tras. Number: ID-112
	Related Tras. Number: ID-113
	TYPE: System Development X; Verification; Special

TEST FACILITY	SAIL	CARGO ELEMENT	
Interface(s): Electrical & Mechanical		Criteria: Fit and Function	
Reference: PIP		Related Documents	
Requirement Source	ICD-D-E0001 ICD-2-19001	Paragraph Number(s)	U 3.4.1, E 3.4.1.1, E 3.4.1.1.3, E 3.4.1.4.4, 3.4.1.7

Date Issued			
Date Revised			
Rev. Number			
Effectivity	IUS		

Requirement:

Confirm that the IUS payload station power control panel may be correctly installed in and removed from the Shuttle provided payload station console and properly connected to the payload station electrical distribution panel. Confirm correct payload station electrical distributin panel pin function and SMCH cable integrity to the simulated IUS.

Method:

Remarks:

ACCEPTANCE

NASA AVIONICS	STSOPO	TEST FACILITY REP.	CARGO ELEMENT

REQUIREMENT CLOSEOUT

Test Procedure Number	Test Report Number	Test Data Package Number

Test Results Summary:

CARGO S/S MGR.	TEST FACILITY REP.	SR&QA REP.
STS S/S MGR.	**STSOPO**	**REQUIREMENT COORDINATOR**

STS/CARGO INTERFACE TEST REQUIREMENT AND STATUS (TRAS)				Tras. Number: ID-113	
				Related Tras. Number: ID-112	
				TYPE	System Development X
					Verification
					Special
TEST FACILITY	SAIL	CARGO ELEMENT	IUS/CIU	Date Issued	
				Date Revised	
Interface(s): Mechanical		Criteria: Physical Fit and Function		Rev. Number	
				Effectivity	IUS
Reference: PIP			Related Documents		
Requirement Source	ICD-D-E0001 ICD-2-19001		Paragraph Number(s)	U 3.4.1, E 3.4.1.1.1, E 3.4.1.1.3, E 3.4.1.4.4, 3.4.1.7	

Requirement:

Confirm that the IUS payload station CIU console may be properly installed and connected to the electrical distribution panel in conjunction with the installation of the IUS power control panel.

Method:

Remarks:

ACCEPTANCE

NASA AVIONICS	STSOPO	TEST FACILITY REP.	CARGO ELEMENT

REQUIREMENT CLOSEOUT

Test Procedure Number	Test Report Number	Test Data Package Number

Test Results Summary:

CARGO S/S MGR.	TEST FACILITY REP.	SR&QA REP.
STS S/S MGR.	**STSOPO**	**REQUIREMENT COORDINATOR**

STS/CARGO INTERFACE TEST REQUIREMENT AND STATUS (TRAS)				Tras. Number: IV-201	
				Related Tras. Number: IV-202, IV-111	
				TYPE	System Development Verification X Special
TEST FACILITY	SAIL/ ESTL	CARGO ELEMENT	IUS/CIU	Date Issued	March 3, 1981
				Date Revised	
Interface(s): Orbiter Payload Recorder/TM		Criteria:		Rev. Number	
				Effectivity	Orbiter Generic
Reference: PIP			Related Documents	SD78-SH-0149, ICD-2-00003	
Requirement Source	ICD-2-19001 ICD-D-E0001		Paragraph Number(s)	8.2.3 U 8.1, U 8.3.1.3.3.1	

Requirement:

Verify the capability of the Orbiter to record telemetry data from an attached IUS and play it back through the S-band FM downlink to the GSTDN.

Method:

Remarks:

ACCEPTANCE

NASA AVIONICS	STSOPO	TEST FACILITY REP.	CARGO ELEMENT

REQUIREMENT CLOSEOUT

Test Procedure Number	Test Report Number	Test Data Package Number

Test Results Summary:

CARGO S/S MGR.	TEST FACILITY REP.	SR&QA REP.
STS S/S MGR.	**STSOPO**	**REQUIREMENT COORDINATOR**

STS/CARGO INTERFACE TEST REQUIREMENT AND STATUS (TRAS)				Tras. Number: IV-202 Related Tras. Number: IV-111, IV-201 TYPE: System Development / Verification [X] / Special
TEST FACILITY	SAIL/ ESTL	CARGO ELEMENT	IUS/CIU	Date Issued Date Revised
Interface(s): Uplink/Downlink		Criteria:		Rev. Number Effectivity: Orbiter Generic
Reference: PIP			Related Documents	SD78-SH-0149 JSC 08118, Vol. 2 App. B
Requirement Source: ICD-2-19001			Paragraph Number(s)	8.2.4 (c)

Requirement:

Verify the capability of dumping the Orbiter Payload Recorder (OPR) through the S-band system, using dump mode initiated via uplink commands.

Method:

Remarks:

ACCEPTANCE

NASA AVIONICS	STSOPO	TEST FACILITY REP.	CARGO ELEMENT

REQUIREMENT CLOSEOUT

Test Procedure Number	Test Report Number	Test Data Package Number

Test Results Summary:

CARGO S/S MGR.	TEST FACILITY REP.	SR&QA REP.
STS S/S MGR.	**STSOPO**	**REQUIREMENT COORDINATOR**

STS/CARGO INTERFACE TEST REQUIREMENT AND STATUS (TRAS)	Tras. Number: IV-203	
	Related Tras. Number: IV-108, IV-106	
	TYPE	System Development
		Verification X
		Special

TEST FACILITY	SAIL/ ESTL	CARGO ELEMENT	IUS/CIU	Date Issued	
				Date Revised	
Interface(s): Telemetry		Criteria:		Rev. Number	
				Effectivity	Orbiter Generic
Reference: PIP			Related Documents	SD78-SH-0149	
Requirement Source	ICD-2-19001		Paragraph Number(s)	8.2.1, 9.4.1.1, 9.4.1.3,	

Requirement:

Verify Orbiter PDI capability of acquisition and decommutation of asynchronous telemetry (up to 4 simultaneous data streams) with a composite thru-put of 64 KBPS in both block and synchronous modes.

Method:

Remarks:

ACCEPTANCE

NASA AVIONICS	STSOPO	TEST FACILITY REP.	CARGO ELEMENT

REQUIREMENT CLOSEOUT

Test Procedure Number	Test Report Number	Test Data Package Number

Test Results Summary:

CARGO S/S MGR.	TEST FACILITY REP.	SR&QA REP.
STS S/S MGR.	**STSOPO**	**REQUIREMENT COORDINATOR**

STS/CARGO INTERFACE TEST REQUIREMENT AND STATUS (TRAS)				Tras. Number: IV-204 Related Tras. Number: IV-205 TYPE: System Development / Verification (X) / Special
TEST FACILITY	SAIL/ ESTL	CARGO ELEMENT	IUS/CIU	Date Issued Date Revised
Interface(s): S-BAND Command		Criteria:		Rev. Number Effectivity: IUS
Reference: PIP			Related Documents	ICD-2-0D004 ICD-2-19001
Requirement Source	ICD-D-E0001		Paragraph Number(s)	E 9.4.3.1

Requirement: (1) Verify that uplink/forward link commands to the CIU are transferred under GPC control from the serial input/output (SIO) channel of the PF MDM per format defined in section 8.2.2.5. Message format shall be as defined in para. E 9.4.3.1.2 (b) and data type as para. E 9.4.3.1.1. (2) Verify that GN&C data to the CIU are transferred under GPC control from the serial input/output channel of the PF MDM performat defined in section 8.2.2.5. Message format shall be as defined in paragraph E 9.4.3.1.2 (a) and data content as in paragraph E 9.4.3.1.3.1.

Method:

Remarks:

ACCEPTANCE

NASA AVIONICS	STSOPO	TEST FACILITY REP.	CARGO ELEMENT

REQUIREMENT CLOSEOUT

Test Procedure Number	Test Report Number	Test Data Package Number

Test Results Summary:

CARGO S/S MGR.	TEST FACILITY REP.	SR&QA REP.
STS S/S MGR.	**STSOPO**	**REQUIREMENT COORDINATOR**

STS/CARGO INTERFACE TEST REQUIREMENT AND STATUS (TRAS)				Tras. Number: IV-205	
				Related Tras. Number: IV-204	
				TYPE	System Development
					Verification X
					Special
TEST FACILITY	SAIL/ ESTL	CARGO ELEMENT	IUS/CIU	Date Issued	
				Date Revised	
Interface(s): PI Power and Control		Criteria: Correct PWR & PI Mode Sel.		Rev. Number	
				Effectivity	
Reference: PIP			Related Documents	ICD-2-19001	
Requirement Source	ICD-D-E0001		Paragraph Number(s)	8.3.1, E 8.3.1.3.3.3	

Requirement:

Verify that LCA (Load Control Assembly) #2 and #3 provide 28 VDC power to the CIU, and then CIU provides Payload Interrogator mode select and 28 VDC power to the PI.

Method:

Remarks:

ACCEPTANCE

NASA AVIONICS	STSOPO	TEST FACILITY REP.	CARGO ELEMENT

REQUIREMENT CLOSEOUT

Test Procedure Number	Test Report Number	Test Data Package Number

Test Results Summary:

CARGO S/S MGR.	TEST FACILITY REP.	SR&QA REP.
STS S/S MGR.	**STSOPO**	**REQUIREMENT COORDINATOR**

STS/CARGO INTERFACE TEST REQUIREMENT AND STATUS (TRAS)				Tras. Number: IV-206	
				Related Tras. Number: IV-201, IV-202, IV-111	
				TYPE	System Development
					Verification X
					Special
TEST FACILITY	SAIL/ ESTL	CARGO ELEMENT	IUS/CIU	Date Issued	
				Date Revised	
Interface(s): Orbiter Payload Recorder/TM		Criteria:		Rev. Number	
				Effectivity	IUS
Reference: PIP			Related Documents	SD78-SH-0149, ICD-2-0D003	
Requirement Source ICD-D-E0001			Paragraph Number(s)	U 8.1, U 8.3.1.3.3.1	

Requirement:

Verify the capability of the Orbiter to record telemetry data from an attached IUS and play it back through the S-band FM downlink to an AFSCF.

Method:

Remarks:

ACCEPTANCE

NASA AVIONICS	STSOPO	TEST FACILITY REP.	CARGO ELEMENT

REQUIREMENT CLOSEOUT

Test Procedure Number	Test Report Number	Test Data Package Number

Test Results Summary:

CARGO S/S MGR.	TEST FACILITY REP.	SR&QA REP.
STS S/S MGR.	STSOPO	REQUIREMENT COORDINATOR

STS/CARGO INTERFACE TEST REQUIREMENT AND STATUS (TRAS)				Tras. Number: IS-101	
				Related Tras. Number:	
				TYPE	System Development
					Verification
					Special X
TEST FACILITY	SAIL	CARGO ELEMENT	IUS/CIU	Date Issued	
				Date Revised	
Interface(s): TLM DOWNLINK		Criteria: VALID MAG TAPE OF OI DOWNLINK		Rev. Number	
				Effectivity	IUS/TDRS
Reference: PIP			Related Documents		
Requirement Source	STS OPO MEMO PF/81-M183		Paragraph Number(s)		

Requirement: Prepare a recording of the Orbiter OI downlink, IUS/TDRS interleaved TLM and TDRS TLM data, at both the high data rate (64KBPS) and low data rate (16 KBPS). Two copies of this tape will be provided to GDSD.

Method:

Remarks:

ACCEPTANCE

NASA AVIONICS	STSOPO	TEST FACILITY REP.	CARGO ELEMENT

REQUIREMENT CLOSEOUT

Test Procedure Number	Test Report Number	Test Data Package Number

Test Results Summary:

CARGO S/S MGR.	TEST FACILITY REP.	SR&QA REP.
STS S/S MGR.	STSOPO	REQUIREMENT COORDINATOR

STS/CARGO INTERFACE TEST REQUIREMENT AND STATUS (TRAS)				Tras. Number: IS-206	
				Related Tras. Number: NONE	
				TYPE	System Development
					Verification
					Special X
TEST FACILITY	SAIL/ STS	CARGO ELEMENT	IUS/CIU	Date Issued	
				Date Revised	
Interface(s):		Criteria: Validation of TEMPEST Evaluation Procedures		Rev. Number	
				Effectivity	
Reference: PIP			Related Documents		
Requirement Source	JSC MEMO PA/CWP-81		Paragraph Number(s)	SPECIAL ASSESSMENT	

Requirement: ORBITER TEMPEST EVALUATION, PRE-EVALUATION SUPPORT. Provide validation of the TEMPEST evaluation sequence and coordinate the procedures required to maintain mode configuration control over the Orbiter vehicle.

Method:

Remarks:

ACCEPTANCE

NASA AVIONICS	STSOPO	TEST FACILITY REP.	CARGO ELEMENT

REQUIREMENT CLOSEOUT

Test Procedure Number	Test Report Number	Test Data Package Number

Test Results Summary:

CARGO S/S MGR.	TEST FACILITY REP.	SR&QA REP.
STS S/S MGR.	**STSOPO**	**REQUIREMENT COORDINATOR**

STS/CARGO INTERFACE TEST REQUIREMENT AND STATUS (TRAS)				Tras. Number: IS-102 Related Tras. Number:	
				TYPE	System Development Verification Special X
TEST FACILITY	SAIL	CARGO ELEMENT	IUS/CIU	Date Issued	Sept. 29, 1981
Interface(s):		Criteria: Operational Capability		Date Revised Rev. Number Effectivity	IUS
Reference: PIP			Related Documents		
Requirement Source	MEMO EA3-029-81		Paragraph Number(s)	Special Assessment	

Requirement:
Measure the voltage level, data skew with respect to clock signal, and rise and fall time of the PDI's and clock signal, between the CIU to PDI interface.

Method:

Remarks:

ACCEPTANCE

NASA AVIONICS	STSOPO	TEST FACILITY REP.	CARGO ELEMENT

REQUIREMENT CLOSEOUT

Test Procedure Number	Test Report Number	Test Data Package Number

Test Results Summary:

CARGO S/S MGR.	TEST FACILITY REP.	SR&QA REP.
STS S/S MGR.	**STSOPO**	**REQUIREMENT COORDINATOR**

APPENDIX C
TEST DATA REQUIREMENTS

TRAS	DATA REQUIRED
IV-101	From TOCFR3030 DATA TAPE Post process and printout minimum of one IUS 16 and/or 64 KBPS MASTER FRAME Post process and printout minimum of one 256 KBPS WBDI FRAME
IV-102	Dump of recorded commands by BAC and comparison of A/V Simulator received commands and MDM Simulator recorded CMDS.
IV-103	Same as IV-102
IV-104	From DECOM CRT TOC - Copy of displayed TLM parameters per Figure 1. From FR3030 TOC post process and printout minimum of one IUS 16 and/or 64 KBPS MASTER FRAME plus one MASTER FRAME of TDRS.
IV-105	Same as IV-104
IV-106	Same as IV-104
IV-107	Same as IV-104
IV-108	From FR3030 DATA TAPE - Post process and printout a minimum of one FRAME of 1) IUS MASTER FRAME (16/64 KBPS) 2) TLM FROM 1 KBPS TDRS 3) TLM FROM 32 KBPS 4) TLM FROM 8 KBPS
IV-109	From FR3030 DATA TAPE - Post process and printout a minimum of one: a) IUS MASTER FRAME (16/64 KBPS) b) TLM FROM 1 KBPS TDRS From the MCDS CRT - Copy of displayed IUS TLM parameters per Figure 1.
IV-110	Same as IV-109

TRAS	DATA REQUIRED
IV-111	From TOC FR3030 DATA TAPE - Post process and printout a minimum of one: a) IUS MASTER FRAME (16/64 KBPS) b) From 256 KBPS WBDI one TLM FRAME
IV-201	From ESTL GSTDM DATA TAPE - Post process and printout a minimum of one: a) IUS MASTER FRAME (16/64 KBPS) b) 256 KBPS WBDI FRAME
IV-202	From MCDS CRT - Copy of the displayed IUS TLM parameters per Figure 1. From SIMULATED GROUND STATION DATA TAPE - Post process and printout a minimum of one: a) IUS MASTER FRAME (16/64 KBPS) b) 256 WBDI TLM FRAME
IV-203	Realtime monitor of command replica word.
IV-204	192 KBPS realtime data monitor of replica word.
IV-205	From MCDS CRT - Copy of displayed IUS TLM parameters per Figure 1. Realtime monitor of command replica word.
IV-206	From ESTL DATA TAPE - Post process and printout a minimum of one IUS TLM MASTER FRAME.

FIGURE 1

MEASUREMENT #	MEASUREMENT NAME	HEX VALUE
U76X0062E	S/C ASE PWR ON	01
U76X0017A	S/C BUS VOLTAGE	40
U76C0018A	S/C BUS CURRENT	B8
U90X1068E	UPDATE OCCURRED STAR 1:	01
U90X1069E	UPDATE OCCURRED STAR 2:	01
U90X1066E	FINE ALIGN COMPLETE: NAV	01
U90X1067E	FINE ALIGN SUCCESSFUL: N	01
U72X0004E	COMPUTE A SELECTED IN	01
U72X0006E	COMPUTE B SELECTED IN	00
U72X0001E	COMPUTER A NOT OK A	00
U72X0003E	COMPUTER B NOT OK A	01
U72X0022E	COMPUTER A NOT OK B	00
U72X0023E	COMPUTER B NOT OK B	01