NASA
National Aeronautics and
Space Administration

Lyndon B. Johnson Space Center
Houston, Texas 77058

DMS-DR-2438 VOLUME 3 OF 3
NASA-CR-160,857

RESULTS OF AN EXPERIMENTAL INVESTIGATION TO DETERMINE ORBITER AND SOLID ROCKET BOOSTER JET PLUME INDUCED EFFECTS UTILIZING A .01-SCALE INTEGRATED VEHICLE SPACE SHUTTLE MODEL (75-OTS) IN THE NASA/ARC 9 x 7-FOOT LEG OF THE UNITARY PLAN WIND TUNNEL (IA138)

SPACE SHUTTLE AEROTHERMODYNAMIC DATA REPORT

2SS 96C002
D100 332S
+26

Data Management SERVICES
HUNTSVILLE ELECTRONICS DIVISION CHRYSLER CORPORATION

November 19 1

DMS-DR-2438 VOLUME 3 OF 3
NASA-CR-160,857

RESULTS OF AN EXPERIMENTAL INVESTIGATION TO DETERMINE ORBITER AND SOLID ROCKET BOOSTER JET PLUME INDUCED EFFECTS UTILIZING A .01-SCALE INTEGRATED VEHICLE SPACE SHUTTLE MODEL (75-OTS) IN THE NASA/ARC 9 x 7-FOOT LEG OF THE UNITARY PLAN WIND TUNNEL (IA138)

by

R. H. Mulfinger and J. Marroquin
Rockwell International Space Transportation System
Development and Production Division

Prepared under NASA Contract Number NAS9-16283

by

Data Management Services
Chrysler Huntsville Electronics Division
Slidell Engineering Office
New Orleans, Louisiana 70189

for

Engineering Analysis Division

Johnson Space Center
National Aeronautics and Space Administration
Houston, Texas

WIND TUNNEL TEST SPECIFICS:

Test Number:	ARC 97SWT 246-1
NASA Series Number:	IA138
Model Number:	75-OTS
Test Dates:	August 15, 1978 through September 1, 1978
Occupancy Hours:	70

FACILITY COORDINATOR:

J. J. Brownson
Mail Stop 227-5
Ames Research Center
Moffett Field, CA 94035

Phone: (415) 965-5647

AERODYNAMIC ANALYSIS ENGINEER:

J. S. Stone
Mail Code AC07
Rockwell International
STS D&P Division
12214 Lakewood Boulevard
Downey, CA 90241

Phone: (213) 922-3226

PROJECT ENGINEERS:

R. H. Mulfinger
S. R. Houlihan
J. Marroquin
Mail Code AC07
Rockwell International
STS D&P Division
12214 Lakewood Boulevard
Downey, CA 90241

Phone: (213) 922-2695

J. J. Brownson
L. R. Guist
Mail Stop 227-5
Ames Research Center
Moffett Field, CA 94035

Phone: (415) 965-5647
-6258

DATA MANAGEMENT SERVICES:

Prepared by: Liaison -- J. E. Vaughn
Operations - H. C. Zimmerle

Approved: J. L. Glynn, Manager
Data Operations

Concurrence: FOR N. D. Kemp, Manager
Data Management Services

Chrysler Huntsville Electronics Division/Slidell Engineering Office assumes no responsibility for the data presented other than display characteristics

RESULTS OF AN EXPERIMENTAL INVESTIGATION TO DETERMINE ORBITER AND SOLID ROCKET BOOSTER JET PLUME INDUCED EFFECTS UTILIZING A .01-SCALE INTEGRATED VEHICLE SPACE SHUTTLE MODEL (75-OTS) IN THE NASA/ARC 9 X 7-FOOT LEG OF THE UNITARY PLAN WIND TUNNEL (IA138)

by

R. H. Mulfinger and J. Marroquin
Rockwell International, STS D&P Division

ABSTRACT

This report documents the data obtained during wind tunnel test IA138; a supersonic, integrated vehicle, jet plume effects test program. The model simulated the jet plumes generated from the SSME and SRB systems by directing unheated high-pressure air through precalibrated flow-through nozzles. IA138 was conducted in the 9 x 7 leg of the Unitary Plan Wind Tunnel using an .01-scale model of the Space Shuttle Launch Vehicle.

The basic objectives of this program were to determine the effect of the Space Shuttle Main Engines and Solid Rocket Booster plumes on:

1. Wing panel shear, bending and torsion
2. Inboard and outboard elevon hinge moments
3. Orbiter, external tank and solid rocket booster afterbody pressure distributions and acoustic environment.

Testing was conducted over the range of Mach numbers from 1.55 to 2.5 with Reynolds number variations between 4.4 and 3.01 x 10^6 per foot

respectively. Angle-of-attack varied from -8 to +6 degrees at sideslip angles of -4, 0 and 4 degrees. Inboard and outboard elevon deflection angles were also varied during the test program.

TABLE OF CONTENTS

	Page
ABSTRACT	iii
INDEX OF MODEL FIGURES	4
INDEX OF DATA FIGURES	6
NOMENCLATURE	12
INTRODUCTION	19
REMARKS	22
CONFIGURATIONS INVESTIGATED	24
TEST FACILITY DESCRIPTION	28
DATA REDUCTION	29
REFERENCES	35
TABLES	
I. TEST CONDITIONS	36
II. DATA SET/RUN NUMBER COLLATION SUMMARY	37
III. ELEMENT NONDIMENSIONAL BASE AREAS	44
IV. PRESSURE DATA DELETIONS	45
FIGURES	
MODEL	50
DATA	74
FORCE - VOLUME I PRESSURE - VOLUME II	

TABLE OF CONTENTS (Concluded)

Page

APPENDIX

TABULATED SOURCE DATA

FORCE - VOLUME I
PRESSURE - VOLUME III (MICROFICHE ONLY)

INDEX OF MODEL FIGURES

Figure	Title	Page
1	Axis systems and sign convention.	
	a. Axis Systems Definition	50
	b. Instrumented Wing Panel Coordinate System	51
	c. Control Surface Deflections	52
2.	Model sketches.	
	a. Orbiter (O_1) Components	53
	b. Integrated Space Shuttle Vehicle Launch Configuration	54
	c. External Tank (T_{28}) Protrusions	55
	d. Solid Rocket Booster (S_{22}) Protrusions	56
	e. SSME Blowing System to Simulate Jet Plumes	57
	f. SRB Blowing System to Simulate Jet Plumes	58
	g. Scanivalve Location and Numbering	59
	h. General Wing Layout	60
	i. Elevon Gauge Details	61
	j. Wing Panel Data Reduction Distances	62
	k. Orbiter Fuselage Pressure Tap Array	63
	l. Orbiter Base Pressure Tap Location	64
	m. Body Flap Pressure Tap Location	65
	n. Orbiter SSME Nozzle Pressure Instrumentation	66
	o. External Tank Pressure Tap Location	67
	p. SRB Basic Pressure Tap Location	68

INDEX OF MODEL FIGURES (Concluded)

Figure	Title	Page
2.	Model sketches. (Continued)	
	q. SRB Nozzle and Base Pressure Tap Locations	69
	r. Model 75-OTS Installation Ames 9 x 7	70
3.	Installation Photographs of Model in Amex 9 x 7 Tunnel	
	a. Three-Quarter Front View of Model 75-OTS	71
	b. Three-quarter Rear View of Model 75-OTS	72
	c. Aft View of Model 75-OTS	73

FIGURE NUMBER	TITLE	CONDITIONS VARYING	PLOT SCHEDULE	PAGES
	PLUME SIZE EFFECTS ON WING LOADS			
4	MACH = 2.5	SRBPR	A	1-3
5	MACH = 2.2	↓	A	4-6
6	MACH = 1.8		A	7-9
7	MACH = 1.55		A	10-12
	PLUME SIZE EFFECTS ON ELEVON HINGE MOMENTS			
8	MACH = 2.5	SRBPR	B	13-14
9	MACH = 2.2	↓	B	15-16
10	MACH = 1.8		B	17-18
11	MACH = 1.55		B	19-20
	PLUME SIZE EFFECTS ON BASE PRESSURES			
12	MACH = 2.5	SRBPR	C	21-24
13	MACH = 2.2	↓	C	25-28
14	MACH = 1.8		C	29-32
15	MACH = 1.55		C	33-36
	EFFECT OF ANGLE OF ATTACK ON WING LOADS, POWER ON/OFF, ELV-IB = 10			
	ELV-IB = 10			
16	MACH = 1.55	ELV-OB	D	37-45
17	MACH = 1.8	↓	D	46-54
18	MACH = 2.2		D	55-63
19	MACH = 2.5		D	64-72
	ELV-IB = 12			
20	MACH = 1.55	ELV-OB	D	73-81
21	MACH = 1.8	↓	D	82-90
	ELV-IB = 8			
22	MACH = 1.55	ELV-OB	D	91-99

FIGURE NUMBER	TITLE	CONDITIONS VARYING	PLOT SCHEDULE	PAGES
	EFFECT OF ANGLE OF ATTACK ON WING LOADS, POWER ON/OFF,			
	ELV-IB = 4			
23	MACH = 1.8	ELV-OB	D	100-108
24	MACH = 2.2	↓	D	109-117
25	MACH = 2.5		D	118-126
	ELV-IB = 0			
26	MACH = 2.2	ELV-OB	D	127-135
27	MACH = 2.5	↓	D	136-144
	EFFECT OF ALPHA ON ELEVON HINGE MOMENTS, POWER ON/OFF			
	ELV-IB = 10			
28	MACH = 1.55	ELV-OB	E	145-150
29	MACH = 1.8	↓	E	151-156
30	MACH = 2.2		E	157-162
31	MACH = 2.5		E	163-168
	ELV-IB = 12			
32	MACH = 1.55	ELV-OB	E	169-174
33	MACH = 1.8	↓	E	175-180
	ELV-IB = 8			
34	MACH = 1.55	ELV-OB	E	181-186
	ELV-IB = 4			
35	MACH = 1.8	ELV-OB	E	187-192
36	MACH = 2.2	↓	E	193-198
37	MACH = 2.5		E	199-204
	ELV-IB = 0			
38	MACH = 2.2	ELV-OB	E	205-210
39	MACH = 2.5	↓	E	211-216
	EFFECT OF ALPHA ON AREA WEIGHTED BASE PRESS.,			
	ELEVON 10/-2			
40	MACH = 1.55	BETA	F	217-220
41	MACH = 1.8	↓	F	221-224
42	MACH = 2.2		F	225-228
43	MACH = 2.5		F	229-232

FIGURE NUMBER	TITLE	CONDITIONS VARYING	PLOT SCHEDULE	PAGES
	EFFECT OF ALPHA ON AREA WEIGHTED BASE PRESS., (Contd)			
	ELEVON 10/-5			
44	MACH = 1.8	BETA	F	233-236
45	MACH = 2.2	↓	F	237-240
46	MACH = 2.5		F	241-244
	ELEVON 10/-7			
47	MACH = 1.55	BETA	F	245-248
48	MACH = 1.8	↓	F	249-252
49	MACH = 2.2		F	253-256
	ELEVON 10/2			
50	MACH = 2.5	BETA	F	257-260
	ELEVON 12/-2			
51	MACH = 1.55	BETA	F	261-264
52	MACH = 1.8	↓		265-268
	ELEVON 12/-5			
53	MACH = 1.8	BETA	F	269-272
	ELEVON 12/-7			
54	MACH = 1.55	BETA	F	273-276
55	MACH = 1.8	↓		277-280
	ELEVON 8/-2			
56	MACH = 1.55	BETA	F	281-284
	ELEVON 8/-7			
57	MACH = 1.55	BETA	F	285-288
	ELEVON 4/-2			
58	MACH = 2.2	BETA	F	289-292
59	MACH = 2.5	↓	F	293-296
	ELEVON 4/-5			
60	MACH = 1.8	BETA	F	297-300
61	MACH = 2.2	↓	F	301-304
62	MACH = 2.5		F	305-308
	ELEVON 4/-7			
[illegible]	MACH = 2.2	BETA	F	309-312
	ELEVON 4/2			
64	MACH = 2.5	BETA	F	313-316

FIGURE NUMBER	TITLE	CONDITIONS VARYING	PLOT SCHEDULE	PAGES
	EFFECT OF ALPHA ON AREA WEIGHTED BASE PRESS., (Contd)			
	ELEVON 0/-2			
65	MACH = 2.2	BETA	F	317-320
66	MACH = 2.5	↓	F	321-324
	ELEVON 0/-5			
67	MACH = 2.2	BETA	F	325-328
68	MACH = 2.5	↓	F	329-332
	ELEVON 0/2			
69	MACH = 2.5	BETA	F	333-336
	SUMMARY - WING LOADS POWER ON INCREMENTS:			
70	ELV-IB = 10	–	G	337-354
71	= 12	–	G	355-363
72	= 8	–	G	364-372
73	= 4	–	G	373-390
74	= 0	–	G	391-399
	SUMMARY - ELEVON LOAD POWER ON INCREMENTS:			
75	ELV-IB = 10	–	H	400-411
76	= 12	–	H	412-417
77	= 8	–	H	418-423
78	= 4	–	H	424-435
79	= 0	–	H	436-441
80	SUMMARY - POWER ON BASE PRESSURES (IA138)	–	I	442-445

PLOT SCHEDULES:

A) CNW, $C_{T_{MW}}$, $C_{B_{MW}}$ vs SSMEPR

B) $C_{h_{e_i}}$, $C_{h_{e_o}}$ vs SSMEPR

C) $C_{p_{B_{ORB}}}$, $C_{p_{B_{ET}}}$, $C_{p_{B_{SL}}}$, $C_{p_{B_{SR}}}$ vs SSMEPR

D) CNW, $C_{T_{MW}}$, $C_{B_{MW}}$ vs α

E) $C_{h_{e_I}}$, $C_{h_{e_o}}$ vs α

F) $C_{p_{B_{ORB}}}$, $C_{p_{B_{ET}}}$, $C_{p_{B_{SL}}}$, $C_{p_{B_{SR}}}$ vs α

G) ΔC_{N_W}, $\Delta C_{T_{MW}}$, $\Delta C_{B_{MW}}$ vs α

H) ΔC_{H_I} , ΔC_{H_O} vs α

I) $C_{p_{B_{ORB}}}$, $C_{p_{B_{ET}}}$, $C_{p_{B_{SL}}}$, $C_{p_{B_{SR}}}$ vs M

FIGURE NUMBER	TITLE	PLOT SCHEDULE	PAGES
PRESSURE DATA - VOLUME II			
4A	PRESS. DISTRIBUTION PWR ON/OFF (ORB FUSELAGE) ELEVON=10/-2, MACH=1.55	A	1-30
4B	PRESS. DISTRIBUTION PWR ON/OFF (ORB FUSELAGE) ELEVON=0/-2, MACH=2.5	A	31-60
5A	PRESS. DISTRIBUTION PWR ON/OFF (BODY FLAP UPPER) ELEVON=10/-2, MACH=1.55	B	61-75
5B	PRESS. DISTRIBUTION PWR ON/OFF (BODY FLAP UPPER) ELEVON=0/-2, MACH=2.5	B	76-90
6A	PRESS. DISTRIBUTION PWR ON/OFF (ORBITER BASE) ELEVON=10/-2, MACH=1.55	C	91-135
6B	PRESS. DISTRIBUTION PWR ON/OFF (ORBITER BASE) ELEVON=0/-2, MACH=2.5	C	136-180
7A	PRESS. DISTRIBUTION PWR ON/OFF (NO 1 SSME NOZZLE) ELEVON=10/-2, MACH=1.55	A	181-195
7B	PRESS. DISTRIBUTION PWR ON/OFF (NO 1 SSME NOZZLE) ELEVON=0/-2, MACH=2.5	A	196-210
8A	PRESS. DISTRIBUTION PWR ON/OFF (NO 3 SSME NOZZLE) ELEVON=10/-2, MACH=1.55	A	211-225
8B	PRESS. DISTRIBUTION PWR ON/OFF (NO 3 SSME NOZZLE) ELEVON=0/-2, MACH=2.5	A	226-240
9A	PRESS. DISTRIBUTION PWR ON/OFF (ET BASE) ELEVON=10/-2, MACH=1.55	A	241-255
9B	PRESS. DISTRIBUTION PWR ON/OFF (ET BASE) ELEVON=0/-2, MACH=2.5	A	256-270
10A	PRESS. DISTRIBUTION PWR ON/OFF (LEFT SRB) ELEVON=10/-2, MACH=1.55	A	271-285
10B	PRESS. DISTRIBUTION PWR ON/OFF (LEFT SRB) ELEVON=0/-2, MACH=2.5	A	286-300
11A	PRESS. DISTRIBUTION PWR ON/OFF (LEFT SRB NOZZLE) ELEVON=10/-2, MACH=1.55	A	[illegible]
11B	PRESS. DISTRIBUTION PWR ON/OFF (LEFT SRB NOZZLE) ELEVON=0/-2, MACH=2.5	A	316-330
12A	PRESS. DISTRIBUTION PWR ON/OFF (LEFT SRB BASE) ELEVON=10/-2, MACH=1.55	A	331-345

FIGURE NUMBER	TITLE		PLOT SCHEDULE	PAGES
PRESSURE DATA - VOLUME II (Continued)				
12B	PRESS. DISTRIBUTION PWR ON/OFF (LEFT SRB BASE)	ELEVON=0/-2, MACH=2.5	A	346-360
13A	PRESS. DISTRIBUTION PWR ON/OFF (RIGHT SRB BASE)	ELEVON=10/-2, MACH=1.55	A	361-375
13B	PRESS. DISTRIBUTION PWR ON/OFF (RIGHT SRB BASE)	ELEVON=0/-2, MACH=2.5	A	376-390

PLOT SCHEDULES:

A) C_p vs Ø

B) C_p vs X/CBF

C) C_p vs YO

NOMENCLATURE

SYMBOL	MNEMONIC	DESCRIPTION
α	ALPHA	model angle-of-attack; degrees
a_m		distance between bending gauge electrical centers
A_{BET}	ABET	external tank base area; ft.^{2}
A_{BORB}	ABORB	orbiter base area; ft.^{2}
A_{BSRB}	ABSRB	base area for both SRB's; ft.^{2}
A_{TMPS}	ATMPS	MPS nozzle throat area; in.^{2}
A_{TSRB}	ATSRB	SRB nozzle throat area, in.^{2}
β	BETA	model angle of sideslip; degrees
b	BREF	model span; in.
B_w	BW	wing-root bending moment, about Y_o = 105; in-lbf.
B_{wi}	BWI	wing-root bending moment at inboard gauge; in-lb.
B_{wo}	BWO	wing-root bending moment at outboard gauge; in-lb.
$\bar{c}$	CBAR	wing mean aerodynamic chord; in.
C_{B_W}	CBW, CBMW	wing-root bending moment coefficient about Y_o = 105
c_e	CE	elevon chord; in.
$C_{h_{e_i}}$	CHEI	inboard elevon hinge moment coefficient, about hingeline
$C_{h_{e_o}}$	CHEO	outboard elevon hinge moment coefficient, about hingeline
C_{N_W}	CHW	wing panel normal force coefficient

NOMENCLATURE (Continued)

SYMBOL	MNEMONIC	DESCRIPTION
C_{p_i}	CP(i)	pressure coefficient, i = tap number; $C_{p_i} = (p_i - p_\infty)/q_\infty$
$(C_{p_b})_{ORB}$	CPBORB	orbiter base pressure coefficient
$(C_{p_b})_{ET}$	CPBET	external tank base pressure coefficient
$(C_{p_b})_{SL}$	CPBSL	left SRB base pressure coefficient
$(C_{p_b})_{SR}$	CPBSR	right SRB base pressure coefficient
C_{T_W}	CTW, CTMW	wing torsion moment coefficient, about $Y_o = 1307$
d		transfer distance from Y = 105 to electrical axis of wing gauge #2; in.
e_m		transfer distance from $X_o = 1307$ to wing gauge #3; inches
$H_{m_{e_i}}$	HMEI	inboard elevon hinge moment about hingeline; in-lb.
$H_{m_{e_o}}$	HMEO	outboard elevon hinge moment about hingeline; in-lb.
$K\Delta$		wing bending deflection constant; ^{o}/in-lb.
$K\Delta EI$		inboard elevon deflection constant; ^{o}/in-lb.
$K\Delta EO$		outboard elevon deflection constant; ^{o}/in-lb.
K_I	KI	inboard elevon hinge moment constant; in-lb/mv/v
K_O	KO	outboard elevon hinge moment constant; in-lb/mv/v
ℓ_B	LREF	reference body length; in.
mv		stain gauge output; millivolts
M_∞	MACH	freestream Mach number

NOMENCLATURE (Continued)

SYMBOL	MNEMONIC	DESCRIPTION
N_W	NW	wing panel normal force; lb.
P_{co} or $P_{c_{ORB}}$	PCORB	orbiter chamber pressure; psia
P_{cs} or $P_{c_{SRM}}$	PCSRM	SRM chamber pressure; psia
P_{C_N}	PCN	nozzle chamber pressure, N indicates chamber location; psia
P_{e_i}	PE(i)	nozzle exit pressure, ith tap number; psia
P_i	P	static pressure, ith tap number; psia
P_∞ or P_o	P or PO	tunnel freestream static pressure; psia
P_{t_∞}	PT	tunnel freestream total pressure; psia
$(p_c/p_\infty)_{ORB}$	SSMEPR or CPR02 (CPR01)	Orbiter main engine #2 (#1) pressure ratio; Orbiter nozzle chamber pressure/freestream static pressure
$(p_c/p_\infty)_{SRB}$	SRBPR or CPRSR (CPRSL)	Right SRB nozzle (Left SRB nozzle) pressure ratio; SRB nozzle chamber pressure/freestream static pressure
q_∞	Q(PSF) or Q	tunnel freestream dynamic pressure; psf
Rn/ft	RN/L	unit Reynolds number; per foot
S_e	SE	elevon reference area; ft.^{2}
S_w	SREF	model wing area; ft.^{2}
T	TR	average tunnel static temperature; ^oR
T_T	TTR	average tunnel total temperature; ^oR
$T_{T_{ORB}}$	TORB	orbiter plume air total temperature; ^oR
$T_{T_{SRM}}$	TSRM	SRM plume air total temperature; ^oR

SYMBOL	MNEMONIC	DESCRIPTION
T_W	TW	wing-root torsion moment at gauge; in-lb.
V		voltage applied to strain gauge; volts
$\dot{W}_{MPS}$		MPS nozzle mass flow; #/sec. per nozzle
$\dot{W}_{SRB}$		SRB nozzle mass flow; #/sec. per nozzle
X_{ON}		orbiter nose station; in.
X_{WRC}		orbiter orbiter longitudinal wing reference station; in.
$(X/C)_{BF}$	X/CBF	longitudinal distance along body flap/body flap chord length
X/D	X/D	longitudinal location of pressure orifice on nozzle/nozzle exit diameter (see Figure 2n or Figure 2q)
X/L	X/L	longitudinal distance along orbiter fuselage/ orbiter body length
$(X/L)_S$	S/LS	longitudinal distance along SRB/SRB length (see Figure 2p)
$(X/L)_T$	X/LT	longitudinal distance along external tank/ external tank length (see Figure 2o)
Y_{WRC}		orbiter lateral wing reference station; in.
Y_o	YO	lateral location of pressure orifice on orbiter base; inches (M.S.) right (+) or left (-) of longitudinal centerline (see Figure 21)
Z_o	ZO	vertical location of pressure orifice on orbiter base; inches (M.S.) above water line zero. (see Figure 21)
-	XMPP YMPP ZMRP	location of Moment Reference Point for data reduction. Longitudinal (X), Lateral (Y) and Vertical (Z) station on orbiter
-	NO.	Station number
ΔC_{N_W}		incremental normal force on wing due to engine plumes
ΔC_{T_W}		incremental torsional moment on wing due to enging plumes
ΔC_{B_W}		incremental root bending moment on wing due to engine plumes

NOMENCLATURE (Continued)

SYMBOL	MNEMONIC	DESCRIPTION
$\Delta C_{H_{E_I}}$		incremental hinge moment on inboard ele on due t o engine plumes
$\Delta C_{H_{E_O}}$		incremental hinge moment on outboard el von due to engine plumes
ΔE_{L_I}	DI	left inboard elevon deflection due to l ad; degrees
ΔE_{L_O}	DO	left outboard elevon deflection due to ɔad; degrees
δE_{L_I}	ELVI	left inboard elevon setting, corrected ɔr load deflection; degrees
δE_{L_O}	ELVO	left outboard elevon setting, corrected for load deflection; degrees
δE_{L_I}(SET)	ELV-IB or EI	inboard elevon deflection setting; degr es
δE_{L_O}(SET)	ELV-OB or	outboard elevon deflection setting; deg ees
η	ETA	spanwise location of pressure orifice o body flap, (wY/b) (see Figure 2m)
ϕ	PHI	radial position of pressure orifice on component, degrees. (see Figure 2k)
ϕ_W		deflection of R/H wing panel in pitch p ne due to torsion moment; degrees (positive LE- p)
θ_W		deflection of R/H wing panel in roll pla e due to bending moment, degrees (positive tip upward)

Pressures

C_{P_i}	CP(i)	pressure coefficient for model surface t p i
$(p_c/p_\infty)_j$	CPR(j)	chamber pressure ratio for nozzle j

NOMENCLATURE (Continued)

SYMBOL	MNEMONIC	DESCRIPTION
$(p_e/p_\infty)_j$	EPR(j)	exit pressure ratio for nozzle j
p_{c_j}	PC(j)	chamber pressure (absolute) for nozzle j; psia
p_{e_j}	PE(j)	exit pressure (absolute) for nozzle j; psia
p_i	P(i)	pressure (absolute) at model surface tap; psia

Subscripts

B	base, body, bending
C	chamber
e	exit
E	elevon
ET	external tank
G	gauge
i	surface pressure tap number
I	inboard
j	location j = 1 upper MPS nozzle chamber j = 2 L.H. MPS nozzle chamber j = 3 R.H. MPS nozzle chamber j = 4 L.H. SRB nozzle chamber j = 5 R.H. SRB nozzle chamber j = 95, j = 96, j = 97 nozzle #2 internal wall (see Figure 2n) j = 98, j = 99, j = 100 nozzle #4 internal wall (see Figure 2n)
N	nozzle, nose (orbiter)
O	outboard
r	right

NOMENCLATURE (Concluded)

SYMBOL	MNEMONIC	DESCRIPTION
S		solid rocket booster (SRB) or (SRM)
SL		L.H. solid rocket booster
SR		R.H. solid rocket booster
SRB		solid rocket booster
SRM		solid rocket motor
T		external tank, total, twisting or torsi n
W		wing
ℓ		left
∞		static freestream

INTRODUCTION

Model 75-OTS, a 0.010-scale model of the integrated space shuttle vehicle, was tested in the ARC Unitary Plan Wind Tunnel. The test was conducted in the 9 x 7-foot supersonic test section between August 15, 1978 and September 1, 1978 for a total of 70 occupancy hours. The shuttle program test designation was IA138 and the facility test number was 97-246-1.

Cold air flow through the space shuttle main propulsion system (SSME), the solid rocket booster (SRB), and Solid Rocket motor (SRM) nozzles were used to simulate the rocket plumes. Air to the main engines was ducted through a single passage from the back of the sting, up through the blade and through three passages to the orbiter afterbody which formed the SSME chamber and nozzle mounts. Air for the SRB's was ducted up the blade strut via two passages to a common plenum inside the External Tank (ET), out to the booster plenums through five passages in each innterstage strut and hence through the nozzle.

Test variables included Mach number ($1.55 \leq M \leq 2.50$), angle-of-attack (-8° to $+6^{\circ}$), sideslip angle ($0, \pm 4^{\circ}$), SSME and SRB nozzle pressures and elevon deflections.

Data gathered in the test included noise levels and steady-state pressure distributions on the aft portion of the orbiter, ET and the left-hand SRB; wing shear, bending and torsion, and left wing inboard and outboard elevon hinge moments were measured also.

This report presents the results of the test in the following fo: nat:

VOLUME I

Wing force and moment data, elevon hinge moment data and element average base pressure data plots and tabulations.

VOLUME II

Individual pressure orifice plots (sample only - comple e set available on request from Chrysler DMS)

VOLUME III

Individual pressure orifice tabulation (Microfiche only - hard copy available on request from Chrysler DMS)

Contents	Micro iche Page umber
Orbiter Fuselage (A) D/S 01-89	1 9
Upper Body Flap (B) D/S 01-89	9- 14
Lower Body Flap (C) D/S 01-89	14- 19
Orbiter Base (D) D/S 01-89	19- 30
Number 1 Space Shuttle Main Engine Nozzle (E) D/S 01-89	30- 38
Number 3 Space Shuttle Main Engine Nozzle (F) D/S 01-89	38- 3
External Tank Base (G) D/S 01-89	44- 1
Left Solid Rocket Booster (H) D/S01-89	51- 6
Left Solid Rocket Booster Nozzle (I) D/S 01-89	56- 4
Left Solid Rocket Booster Base (J) D/S 01-89	65- 6

INTRODUCTION (Concluded)

Contents	Microfiche Page Number
Right Solid Rocket Booster Base (K) D/S 01-89	66-67
Inside Orbiter Maneuvering System (L) D/S 01-89	67-69

REMARKS

Angle-of-attack for the on-line data during the early portion of the test program was recorded from the model strut-mounted danglometer. These measurements were abandoned later because of unsatisfactory danglometer calibrations, and angle-of-attack was computed from the facility knuckle sleeve readings. For the final data tape, all angle-of-attack data were recomputed based on knuckle sleeve outputs.

Pressure taps 55, 61 and 65 (Scanivalve Number 3, Port Numbers 27 33 and 36) were plugged prior to the start of the test program and no attempt was made to recover these pressure taps on site because of model complexity. Several other taps on Scanivalve Numbers 3, 5 and 6 occasionally showed marginally acceptable results on Scanivalve checks made periodically during the test program. The Ports are tabulated below:

Scanivalve #3		Scanivalve #5		Scanivalve #6	
Port No.	Tap No.	Port No.	Tap No.	Port No.	Tap No.
22	51	21	2112	4	2107
23	52	23	2117	7	2110
34	62	32	2155	10	2113
37	65	37	2165	11	2114
				30	2132

Further, post-test analysis of the data generated additional orifices that were judged bad. These are tabulated in Table IV. The data tabulations of Volume III contain the data as collected, (including bad points), so the reader is advised to study Table IV before utilizing the data.

REMARKS (Concluded)

The Kulite dynamic pressure data measurements were recorded directly on magnetic tape at the facility. These data are under the jurisdiction of the Shuttle Structural Dynamics unit at Rockwell, Downey, and will be processed and analyzed by that organization.

Reference dimensions called out on the force plots and tabulated force data are for the total vehicle. Wing force and moment data and elevon hinge moment data were reduced to their own respective dimensions as called out in the Data Reduction Section of this report.

CONFIGURATIONS INVESTIGATED

The model tested was a 0.010-scale representation of the drawing 7C70-000002 mated space shuttle vehicle (see Figures 2a through 2d). The 75-OTS model had the capability of simulating the jet plumes generated from the SSME and SRB systems by directing unheated high-pressure air through precalibrated flow-through nozzles.

The orbiter was rigidly attached to the external tank by fore and aft attach hardware and by the strut used for supplying high-pressure air to the SSME nozzles (see Figures 2e and 2f).

The inboard and outboard elevons on the left wing were spearately strain-gauged for hinge moments (Figures 2h and 2i). The right-hand wing was strain-gauge instrumented for normal force, bending and torsion moments (Figure 2j).

The orbiter was instrumented with 142 surface static pressure taps and 2 acoustic sensors distributed over the fuselage, fuselage base, body flap and MPS nozzles as shown in Figures 2k through 2m.

The external tank was rigidly attached to the main blade air-supply strut. The ET had 34 pressure taps and 3 acoustic sensors as shown in Figure 2o.

The SRB was instrumented with 67 pressure taps and 3 acoustic sensors (see Figures 2p and 2q).

SSME and SRB flow-through nozzles were constructed of Armco steel and were deflected to the initial lift-off configuration setting.

The orbiter configuration was denoted as follows:

$O_1 = B_{62}\ C_{12}\ E_{52}\ F_{10}\ M_{16}\ R_5\ N_{87}\ N_{89}\ V_8\ W_{127}$

Where the individual orbiter components were defined as (see Figure 2a):

Component	Definition
B_{62}	fuselage
C_{12}	canopy
E_{52}	elevon
F_{10}	body flap
M_{16}	OMS/RCS pods
R_5	rudder/speed brake
N_{87}	MPS nozzle
N_{89}	OMS nozzles
V_8	vertical tail
W_{127}	wing

The external tank configuration was denotes as follows (see Figure 2c):

$T = T_{28}\ FR_{10}\ AT_{28}\ AT_{31}\ AT_{32}\ PT_{22}\ PT_{23}\ PT_{24}\ PT_{25}\ PT_{26}\ PT_{27}\ FL_{10}\ FL_{11}$

Component	Definition
T_{28}	external tank
FR_{10}	aft attach cross beam

Component	Definition
AT_{28}	attach structure; Orbiter, aft
AT_{31}	attach structure, SRB
AT_{32}	attach structure, Orbiter, fwd.
PT_{22}	ET protuberance, LO_2 antigeyser 1 ne
PT_{23}	ET protuberance, LH_2 recirculatic line
PT_{24}	ET protuberance, GH_2 pressure lin
PT_{25}	ET protuberance, LH_2 tank cable t ay
PT_{26}	ET protuberance, GO_2 pressure lin
PT_{27}	ET protuberance, LO_2 tank cable t ay
FL_{10}	LO_2 feedline, aft, cross member
FL_{11}	LO_2 feedline, longitudinal member

The SRB nomenclature is as follows (refer to Figure 2d):

$$S = S_{22}\ N_{88}\ P_{S11}\ P_{S12}\ P_{S13}\ P_{S14}\ P_{S15}\ P_{S16}\ P_{S20}\ P_{S21}\ P_{S22}$$

Component	Definition
S_{22}	solid rocket booster
N_{88}	SRB nozzles
P_{S11}	SRB protuberance, separation moto
P_{S12}	SRB protuberance, separation moto
P_{S13}	SRB protuberance, aft structural ı ng
P_{S14}	SRB protuberance, aft attach
P_{S15}	SRB protuberance, data capsule

CONFIGURATIONS INVESTIGATED (Concluded)

Component	Definition
P_{S16}	SRB protuberance, fwd attach footing
P_{S20}	SRB protuberance, cable housing
P_{S21}	SRB protuberance, structural rings (4)
P_{S22}	SRB protuberance, turbine exhaust (4)

TEST FACILITY DESCRIPTION

The Ames Research Center 9- by 7-Foot Supersonic Wind Tunnel is a closed-circuit, air-medium, variable-density facility capable of attaining Mach numbers from 1.55 to 2.50 at Reynolds numbers from 1.5×10^6/ft to 6.5×10^6/ft. The 18-foot-long test section is part of a dual system of supersonic circuits and uses the same motors and compressor as the 8- by 7-foot tunnel. A sliding-block throat arrangement is used to control Tunnel Mach number.

Models are supported by means of stings attached to the wall-to-wall strut/BOR system of the 9- x 7-foot tunnel.

Schlieren photography, shadowgraphs, and pressure monitoring instrumentation are available.

DATA REDUCTION

The data reduction procedures for Test IA138 involved calculation of: operating nozzle chamber-total, exit-static pressures, and pressure ratios for the SRB and main propulsion system (MPS) nozzles; elevon (inboard and outboard panel) hinge moments and hinge moment coefficient; wing normal-force coefficient, wing-root bending moment coefficient, wing-root torsion moment coefficient; and pressure coefficients for the 246 static taps on the orbiter, external tank, and solid rocket booster.

The methods and equations used for reduction of data were as follows:

Blowing System Data

The blowing systems were monitored at two nominal stations; upstream of the nozzle (chamber pressure), and at the nozzle exits (see Figures 2e and 2f).

The ratios of chamber pressure to freestream static were computed:

$$\frac{P_{co}}{P_{\infty}} = \frac{PCORB}{PO} = \begin{cases} CPRO1 = SSMEPR \\ CPRO2 \end{cases}$$

$$\frac{P_{cs}}{P_{\infty}} = \frac{PCSR}{PO} = \begin{cases} CPRSL \\ CPRSR - SRBPR \end{cases}$$

The ratios of exit pressures to chamber pressures were computed:

$$\frac{P_{e_i}}{P_c} = \frac{PEI}{PC} = EPRI \quad (I = 1, 2 \text{ or } 3)$$

Additionally, the ratios of nozzle internal wall to nozzle chamber pressure were computed:

$$\frac{P_{w(i)}}{P_c} = \frac{PI}{PC} = CPRI; \quad (I = 95 \text{ thru } 100)$$

Surface Pressure Tap Data

Individual orifice pressures were converted to coefficient form by

$$\frac{P_i - P_\infty}{q_\infty} = C_{P_i} = CPI$$

Element Average Base Pressure

Elements are : Orbiter, ET and SRB.

$$\text{ELEMENT } CP_{B_{AVG}} = \sum \left[CP_{B_i} \text{ Element } X \frac{A_i \text{ Element}}{A_B \text{ Element}} \right]$$

where:

A_i = area weight for ith tap

A_B = element base area

and

$\sum A_i$ Element = A_B Element

$\frac{A_i \text{ Element}}{A_B \text{ Element}}$ values are given in Table III

For the Orbiter:

i = 302 through 307 (Omit 303)

= 313 through 318 (Omit 314 and 317)

= 323 through 334

For the ET:

i = 1501 through 1509

= 1516 through 1523

= 1530 through 1539 (Omit 1532 and 1538)

= 1546, 1549, 1551, 1553, 1563

= 1574 through 1577

For the SRB:

i = 2202, 2204, 2221, 2222 (Left SRB)

= 2223, 2224, 2218, 2220 (Right SRB)

Wing Panel Loads

With m_1, m_2, and m_3, the output of the three flexures, and using the constants a_m, d, and e_m (see Figure 2j), the right hand wing exposed panel normal force, bending nd torsion moments were computed as follows:

NW = Wing normal force

$$NW = \frac{(m_1 - m_2)}{a_m} \text{ ; lbf}$$

BW = Wing bending moment about Y_o = 105

$$BW = m_2 + \left[\frac{(m_1 - m_2)}{a_m}\right] d; \text{ in-lbf}$$

TW = Wing torsion moment about X_o = 1307

$$TW = m_3 + \left[\frac{(m_1 - m_2)}{a_m}\right] e_m; \text{ in-lbs}$$

Converting to coefficient form:

$$CNW = \frac{NW}{q_\infty S_W}$$

$$CBW = \frac{BW}{q_\infty S_W b}$$

$$CTW = \frac{TW}{q_\infty S_W \bar{c}}$$

Wing Angular Deflection

Deflection due to wing torsion (Θ_W)

$$\Theta_W = (KWT)\ (TW);\ KWT = 0$$

Deflection due to wing bending (Φ_W)

$$\Phi_W = (K\Delta)\ (BW):\ K\Delta = 0.005523^o/\text{in.lb.}$$

Elevon Hinge Moments

Inboard elevon panel and outboard elevon panel hinge moment coeffi ients were computed by:

HMEI = Inboard elevon hinge moment, inch-pounds

$$= \left[\frac{mv}{v}\right]_I (K_I)$$

HMEO = Outboard elevon hinge moment, inch-pounds

$$= \left[\frac{mv}{v}\right]_0 (K_0)$$

so that;

$$CHEI = \frac{HMEI}{q_\infty S_E C_E}$$

$$= \frac{HMEO}{q_\infty S_E C_E}$$

where q_∞ = freestream dynamic pressure, psi

S_E = elevon area = 3.024 in^2

C_E = elevon chord = 0.907 inches

Elevon Deflections under load were computed as:

$$\Delta E_{L_I} = (K\Delta EI)\ (HMEI)$$

$$\Delta E_{L_O} = (K\Delta EO)\ (HMEO)$$

$$\delta E_{L_I} = \delta E_{L_I}\ (set) + \Delta E_{L_I}$$

$$\delta E_{L_O} = \delta E_{L_O}\ (set) + \Delta E_{L_O}$$

Reference dimensions and constants used are listed below:

Symbol	Full Scale	Model Scale
A_{BET}	597.6 ft^2	.05976 ft^2
A_{BORB}	301.0 ft^2	.03010 ft^2
A_{BSRB} (2)	235.0 ft^2	.02350 ft^2
b	936.68 in	9.3668 in

DATA REDUCTION (Concluded)

Symbol	Full Scale	Model Scale
$\bar{c}$	474.81 in.	4.74[illegible] in
ℓ_B	1290.3 in	12.90[illegible] in
$S_{W\ ref}$	2690.0 ft^2	.26[illegible] ft^2
X_{WRC}	1307.0 in	13.07[illegible] in
Y_{WRC}	105.0 in	1.05[illegible] in
S_E	210.0 ft^2	.021 ft^2
C_E	90.7 in	.907 in

Note: The reference dimensions and moment locations called out o the plots and in the tab data refer to the total orbiter. The data have been reduced as specified in this section; (i.e.)

Wing:

reference dimensions - as noted

bending moment reference - Y_o = 105

torsional moment reference - X_o = 1307

Elevons:

reference area - elevon planform area

reference chord - elevon chord

moment reference - elevon hinge line (X_o = 1387)

Pressures:

not applicable

REFERENCES

1. "Pretest Information for Test IA138 of the 0.010-Scale 75-OTS Jet Plume Space Shuttle Model in the 9 x 7-foot Leg of the NASA/ARC Unitary Plan Wind Tunnel," June 12, 1978.

TABLE I.

TEST : IA138

DATE : SEP . 1978

TEST CONDITIONS

MACH NUMBER	REYNOLDS NUMBER (per unit length)	DYNAMIC PRESSURE (pounds/sq. inch)	STAGNATION TEMPERATURE (degrees Fahrenheit)
1.55	4.41	6.26	80
1.80	4.12	5.80	80
2.20	3.45	4.66	80
2.50	3.01	3.76	80

BALANCE UTILIZED: MODEL NON-METRIC*

	CAPACITY:	ACCURACY:	COEFFICIENT TOLERANCE:
NF			
SF			
AF			
PM			
RM			
YM			

COMMENTS: * Model mounted on rigid strut supplying blowing air.

- Three component wing panel balance in right hand wing.
- Individual inboard and outboard elevon hinge moment balances.

IMS 010

Table II

TEST: IA138 (ARC 97-246-1)

DATA SET/RUN NUMBER COLLATION SUMMARY

DATE: 9/5/78

SHEET 1 of 6 JEV

DATA SET IDENTIFIER	CONFIGURATION	α	δ_{BF}	δ_{FC}	MACH	SSME	SRM	BETA -4	BETA 0	BETA 4
* R3D001	ΦTS	C	10	-2	1.55	OFF	OFF	31	32	33
02		A			1.8			43	42	41
03		A			2.2			49	48	47
04		A			2.5			56	55	54
05		A		-5	1.8			58	59	60
06		A			2.2			67	68	69
07		A			2.5			70	71	72
08		C		-7	1.55			77	78	79
09		A			1.8			88	87	86
10		A			2.2			89	90	91
11		A		2	2.5			229	228	227
12		B	12	-2	1.55			101	100	99
13		B		-2	1.8			102	103	104
14		A		-5	1.8			153	152	151
15		B		-7	1.55			130	129	128
16		A		-7	1.8			139	138	137
17		C	8	-2	1.55			176	175	174
18		C	8	-7	1.55			142	143	144

α SCHEDULES

A) -6°, -4°, 0°, 4°, 6°

B) -8°, -6°, -4°, 0°, 4°, 6°

C) -8°, -6°, -4°, 0°, 4°

* Note: See page 43 for configuration schedules.

NASA-MSFC-MAF

Table II (Continued)

TEST: IA138 (ARC 97-246-1)

DATA SET/RUN NUMBER COLLATION SUMMARY

SHEET 2 of 6 JEV

DATE: 9/5/78

DATA SET IDENTIFIER	CONFIGURATION	α	δ_{e_z}	δ_{e_0}	MACH	SSME	SRM	BETA -4	BETA 0	BETA 4
R3D0 19	ØTS	A	4	-2	2.2	ØFF	ØFF	121	122	123
20				-2	2.5			120	119	118
21				-5	1.8			160	159	158
22				-5	2.2			161	162	163
23				-5	2.5			172	171	170
24				-7	2.2			199	198	197
25				2	2.5			108	109	110
26			0	-2	2.2			209	210	211
27				-2	2.5			222	221	220
28				-5	2.2			181	182	183
29				-5	2.5			192	191	190
30				2	2.5			201	202	203

TEST RUN NUMBER

α SCHEDULES A) -6°, -4°, 0°, 4°, 6°

NASA-MSFC-MAF

Table II (Continued)

SHEET 3 of 3 JEV

TEST: IA138 (ARC 97-246-1)

DATA SET/RUN NUMBER COLLATION SUMMARY

DATE: 9/5/78

DATA SET IDENTIFIER	CONFIGURATION	α	δ_{c_2}	δ_{c_1}	MACH	SSME	SRM	BETA -4	BETA 0	BETA 4
R3D031	ΦTS	C	16	-2	1.55	NOM	NOM	35	36	37
32		A			1.8			38	39	40
33		A			2.2			44	45	46
34		A			2.5			55	54	53
35		A		-5	1.8			63	62	61
36		A			2.2			64	65	66
37		A			2.5			75	74	73
38		C		-7	1.55			82	81	80
39		A			1.8			93	84	85
40		A			2.2			94	93	92
41		A		2	2.5			224	225	226
42		B	12	-2	1.55			96	97	98
43		B		-2	1.8			107	106	105
44		A		-5	1.8			148	149	150
45		B		-7	1.55			133	132	131
46		A		-7	1.8			134	135	136
47		C	8	-2	1.55			177	178	179
48		C	8	-7	1.55			147	146	145

TEST RUN NUMBERS

NOMINAL THRUSTER CONDITIONS:

MACH	SSME	SRM
1.55	370 psia	196 psia
1.8	475 psia	275 psia
2.2	745 psia	462 psia
2.5	1325 psia	750 psia

α SCHEDULES

A) -6°, -4°, 0°, 4°, 6°

B) -8°, -6°, -4°, 0°, 4°, 6°

C) -8°, -6°, -4°, 0°, 4°

NASA-MSFC-MAF

Table II (Continued)

TEST: IA138 (ARC 97-246-1)

DATA SET/RUN NUMBER COLLATION SUMMARY

SHEET 1 of 6 JEV

DATE: 9/5/78

DATA SET IDENTIFIER	CONFIGURATION	α	δ_{e_I}	δ_{e_O}	MACH	SSME	SRM	BETA -4	BETA 0	BETA 4
R3D0 49	ΦTS	A	4	-2	2.2	NOM	NOM	126	125	124
50				-2	2.5			115	116	117
51				-5	1.8			155	156	157
52				-5	2.2			166	165	164
53				-5	2.5			167	168	169
54				-7	2.2			194	195	196
55				2	2.5			113	112	111
56			0	-2	2.2			214	213	212
57				-2	2.5			217	218	219
58				-5	2.2			186	185	184
59				-5	2.5			187	188	189
60				2	2.5			206	205	204

TEST RUN NUMBER

NOMINAL TUNNEL CONDITIONS: MACH, TEMP, PRESS

MACH	PT	TT
1.55	370 psia	196 psia
1.8	475 psia	275 psia
2.2	745 psia	412 psia
2.5	1325 psia	750 psia

G SCHEDULES: A) -6°, -4°, 0°, 4°, 6°

NASA-MSFC-MAF

Table II (Continued)

TEST: IA138 (ARC 97-246-1)

DATA SET/RUN NUMBER COLLATION SUMMARY

SHEET 5 of 6 JEV

DATE: 5/5/78

DATA SET IDENTIFIER	CONFIGURATION	α	β	δ_{e_T}	δ_{e_C}	SSME	SRM	MACH NUMBER 1.55	1.8	2.2	2.5
R3D061	ØTS	0	0	10	-2	V_1	245 psia				9
62							332				8
63							431				7
64							587				5
65							787				6
66						V_2	174			15	
67							245			14	
68							326			12	
69							422			11	
70							533			10	
71						V_3	119		22		
72							157		23		
73							200		24		
74							269		25		
75							246		26		
76						V_4	81	17			
77							120	18			
78							154	19			

TEST RUN NUMBER

NOMINAL SCHEDULES

V_1) 700 psia to 1100 psia
V_2) 475 psia to 775 psia
V_3) 250 psia to 500 psia
V_4) 225 psia to 400 psia

NASA-MSFC-MAF

DMS CO.

Table II (Continued)

TEST: IA138 (ARC 97-246-1) | DATA SET/RUN NUMBER COLLATION SUMMARY | DATE: 9/5/78 | SHEET 6 of 6 | REV

DATA SET IDENTIFIER	CONFIGURATION	α	β	δ_{e_2}	δ_{e_4}	SSME	SRM						MACH NUMBER 1.55	1.8	2.2	2.5
R3D079	OTS	0	0	10	-2	V4	197						20			
80	OTS	0	0	10	-2	V4	237						21			
81	OTS	0	0	10	-2	1190	V5									29
82	OTS	0	0	10	-2	1287	V5									30
83	OTS	0	0	10	-2	893	V6								27	
84	OTS	0	0	10	-2	988	V6								28	
86	OTS	0	0	0	-2	800	460								215	
87	OTS	0	0	0	-2	500	870								216	
													BETA			
													-4	0	4	
89	OTS	A		4	-5	328	200						154			
						COEFFICIENT SCHEDULES										
				R	data sets		CNW	CBMW	CTMW	CHEI	CHEØ	CPBØR3	CPBET	CPBSL	CPBSR	Q
				S	data sets		MACH	PT	P	TTR	TR	ELVI	ELVØ	TRB	TSRB	
				T	data sets		EI	EØ	DI	DØ	CPRO2	CPRO1	CPRSL	CPRSR		
				U	data sets		CPR95	CPR96	CPR97	CPR98	CPR99	CPR100	EPR1	ERR2	EPR3	

TEST RUN NUMBER

SCHEDULES

V4) 225 psia to 400 psia

V5) 250 psia to 850 psia

V6) 175 psia to 550 psia

α_A = ±6°, ±4°, 0°

NASA-MSFC-MAF

Table II (Concluded)

DATASET/RUN NUMBER COLLATION SUMMARY

FORCE DATA COEFFICIENT SCHEDULE

DATASET IDENTIFIER 1st Character		CNW	CBMW	CTMW	CHEI	CHEO	CPBORB	CPBET	CPBSL	CPBSR	Q
R	(D/S1-60,89)	MACH	PT	P	TTR	TR	ELVI	ELVO	TORB	TSRB	
S	(D/S61-87)	ALPHA	BETA	PT	P	TTR	TR	ELVI	ELVO	TORB	TSRB
T		EI	EO	DI	DO	CPRO2	CPRO1	CPRSL	CPRSR		
U		CPR95	CPR96	CPR97	CPR98	CPR99	CPR100	EPR1	EPR2	EPR3	

PRESSURE DATA COMPONENT

4th Character	
A	Orbiter Fuselage
B	Upper Body Flap
C	Lower Body Flap
D	Orbiter Base
E	#1 SSME Nozzle
F	#3 SSME Nozzle
G	External Tank Base
H	Left SRB
I	Left SRB Nozzle
J	Left SRB Base
K	Right SRB Base
L	Inside Orbiter Maneuvering System (OMS) (Pressure taps 214 and 215)

DATASET SEQUENCE	Independent Variable First	Independent Variable Second
001-060,089	BETA	ALPHA
061-080,087	MACH	SSMEPR
081-084,086	MACH	SRBPR

TABLE III. ELEMENT NONDIMENSIONAL BASE AREAS

ORBITER BASE		ET BASE		SRB BAS	
TAP NO.	A_i/A_{BORB}	TAP NO.	A_i/A_{BET}	TAP NO.	$A_i/A_{B\ SRB}$
328	0.08920	1574	0.05479	2202	.1250
332	↓	1563	0.24944	2204	↓
333	↓	1546	0.05992	2220	↓
323	0.06113	1549	↓	2221	↓
324	↓	1551	↓	2222	↓
302	0.038133	1553	↓	2223	↓
304	↓	1539	0.02318	2224	↓
305	↓	1537	↓	2218	↓
306	↓	1536	↓		
307	↓	1535	↓		
313	↓	1577	↓		
315	↓	1534	↓		
316	↓	1533	↓		
318	↓	1531	↓		
325	↓	1530	↓		
326	↓	1523	0.01065		
327	↓	1522	↓		
329	↓	1521	↓		
330	↓	1520	↓		
331	↓	1519	↓		
334	↓	1576	↓		
		1518	↓		
		1517	↓		
		1516	↓		
		1502	0.01516		
		1503	↓		
		1501	↓		
		1504	↓		
		1575	↓		
		1505	↓		
		1506	↓		
		1507	↓		
		1508	↓		
		1509	↓		

TABLE IV. IA138 PRESSURE DATA DELETIONS

a. Orbiter Fuselage

DATA SET	BETA	ALPHA	ϕ	X/ℓ_ϕ	TAP NO.
R3DA01/31	-4	ALL	20°	.825	233
02/32	-4	ALL	$0^\circ, 20^\circ$		173,233
03/33	-4,0	ALL			
04/34	-4	ALL			
04/34	0	-6,-4,0			
05/35	-4	ALL			
06/36	-4	ALL			
06/36	0	-6,-4			
07/37	-4,0	ALL			
08/38	-4	-8,-6,-4,0			
08/38	-4	-8,-6,-4,0	$20^\circ, 40^\circ$	.693	222,223
09/39	-4	ALL	$0^\circ, 20^\circ$	.825	173,233
10/40	-4,0	ALL			
11/41	-4,0	ALL			
12/42	-4	-8,-6,-4,0			
13/43	-4	ALL			
14/44	-4	ALL			
15/45	-4	-8,-6,-4,0			
16/46	-4	ALL			
17/47	-4	-8,-6,-4,0			
18/48	-4	-8,-6,-4,0			
19/49	-4	ALL			
20/50	-4	ALL			
20/50	0	-6,-4,0			
21/51	-4	ALL			
22/52	-4	ALL			
22/52	0	-6,-4,0			
23/53	-4	ALL			
23/53	0	-6,-4,0			
24/54	-4	ALL			
24/54	0	-6,-4,0			
25/55	-4	ALL			
25/55	0	-6,-4,0			
26/56	-4	ALL			
26/56	0	-6,-4,0			
27/57	-4	ALL			
27/57	0	-6,-4,0			
28/58	-4	ALL			
28/58	0	-6,-4,0			
29/59	-4	ALL			
29/59	0	-6,-4,0			
30/60	-4	ALL			
30/60	0	-6,-4,0			

TABLE IV. (Continued)

b. Left SRB

DATA SET	BETA	ALPHA	ϕ	X/ℓ_s	AP NO.
R3DH01	-4	ALL	45°,225°	.838	2 12,2117
01	-4	ALL	315°	.997	2179
04	-4	ALL	225°	.838	2117
05	-4	-6,-4,0	45°	.838	2112
↓	-4,0	ALL	225°	.838	2117
	-4,0	ALL	225°	.976	2165
	-4	-6,-4,0	315°	.976	2169
	-4	4,6	315°	.997	2179
	0	ALL	315°	.997	2179
06/36	-4,0	ALL	225°	.976	2165
07	-4	ALL	225°	.838	2117
07	-4,0,4	ALL	225°	.976	2165
08	-4	ALL	225°	.976	2165
08	-4	ALL	315°	.997	2179
10	-4	ALL	225°	.838	2117
10	-4,0,4	ALL	225°	.976	2165
49	-4	-6,-4	225°	.976	2165
51	↓	ALL	↓	↓	↓
52		-6,-4,0			
53		-6,-4			
54		↓			
55					
56					
57					
58					
59					
60					

c. Body Flap - Upper Surface

DATA SET	BETA	ALPHA	η	x/C_{bf}	TAP NO.
R3DB36	0	-6	.50	-.10	413

TABLE IV. (Continued)

d. Left SRB Nozzle

DATA SET	BETA	ALPHA	ϕ	X/D	TAP NO.
R3DI01	4	4	270	.015,.135	2438,2426
03	-4,0,4	ALL	300	.135	2427
04	-4,0,4	ALL	300	.135	2427
05	0	4	60	.015	2431
06	4	4	60	.015	2431
06	-4,0,4	ALL	300	.135	2427
07	-4,0,4	ALL	300	.135	2427
10	-4,0,4	ALL	300	.135	2427
11	-4	6	60,90	.015	2431,2432
11	-4,0,4	ALL	300	.135	2427
19	↓	↓	↓	↓	↓
20/50					
23					
24					
25					
26					
27/57					
28					
29/59					
30/60					

TABLE IV. (Continued)

e. No. 1 SSME Nozzle

DATA SET	BETA	ALPHA	ϕ	X/D	AP NO.
R3DE02	ALL	ALL	0	.058	31
02			300°	.320	53
03/33			0	.058	31
03/33			300	.320	53
04/34			0	.058	31
04/34			300	.320	53
06/36			0	.058	31
06/36			300	.320	53
07/37			0	.058	31
07/37			300	.320	53
09			0	.058	31
09			300	.320	53
10			300	.320	53
40			0	.058	31
40			300	.320	53
11/41			0	.058	31
11/41			300	.320	53
12/42		4	30	.580	56
12/42	4	0	30	.580	56
14	ALL	ALL	300	.320	53
17/47			300	.320	53
19/49			300	.320	53
20/50			0	.058	31
20/50			300	.320	53
20/50			30	.580	56
21			300	.320	53
22/52			0	.058	31
			300	.320	53
23/53			0	.058	31
			300	.320	53
24/54			300	.320	53
25			300	.320	53
55			0	.058	31
55			300	.320	53
55			30	.580	56
26			0	.058	31
26			30	.580	56
26/56			300	.320	53
27/57			0	.058	31
27/57			300	.320	53
28		-4,0	30	.580	56

TABLE IV. (Concluded)

e. (Continued)

DATA SET	BETA	ALPHA	ϕ	X/D	TAP NO.
R3DE28/58	ALL	ALL	0	.058	31
28/58			300	.320	53
29/59			0	.058	31
			300	.320	53
30			30	.580	56
30/60			0	.058	31
30/60			300	.320	53

Notes:

1. Positive directions of force coefficients, moment coefficients, and angles are indicated by arrows
2. For clarity, origins of wind and stability axes have been displaced from the center of gravity

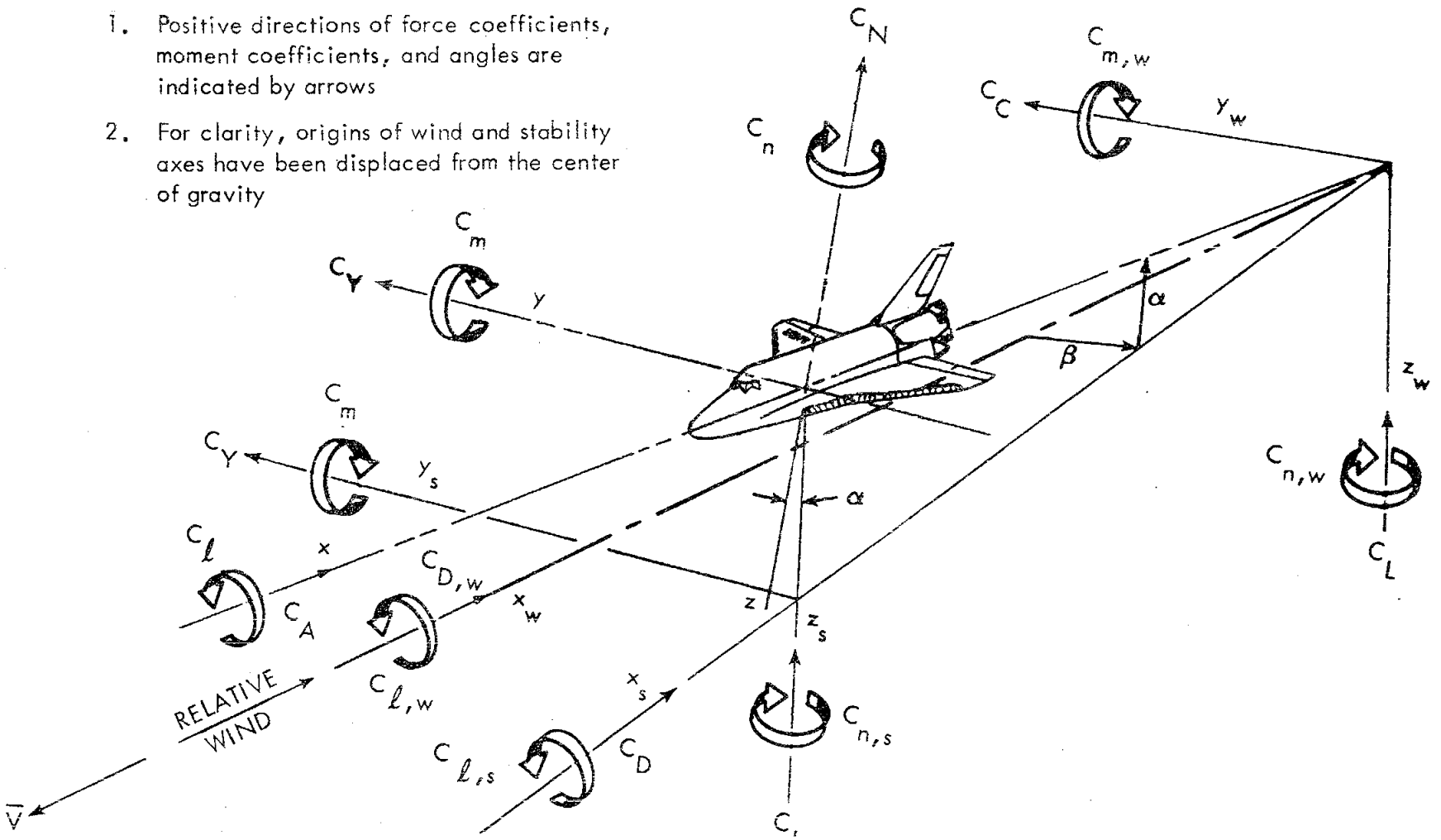

a. Axis Systems Definition

Figure 1. Axis systems and sign convention.

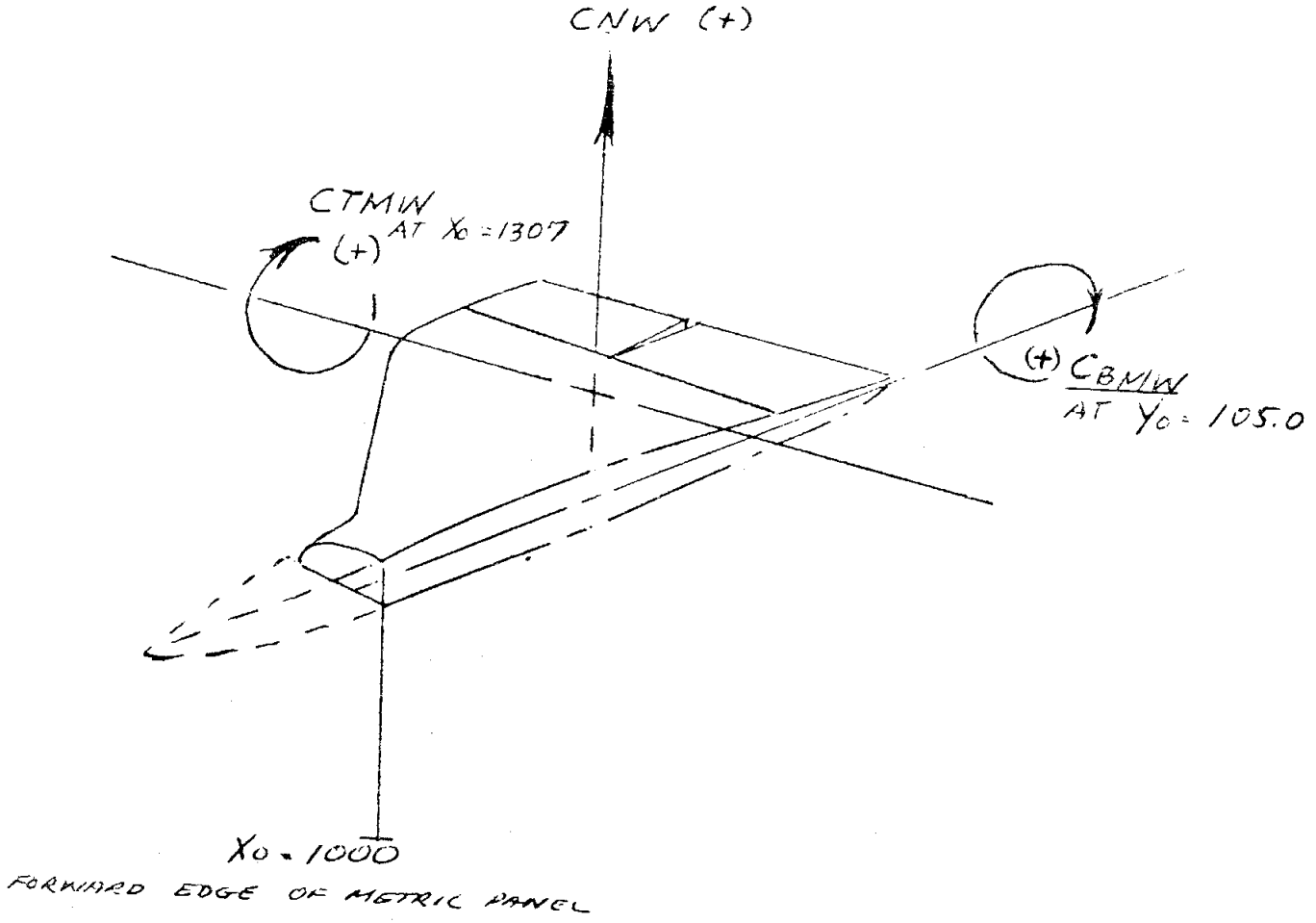

b. Instrumented Wing Panel Coordinate System
Figure 1. Continued.

$$\delta_{e_L} = \frac{\delta_{e_{L_O}} + \delta_{e_{L_I}}}{2}$$

$$\delta_{e_R} = \frac{\delta_{e_{R_O}} + \delta_{e_{R_I}}}{2}$$

$$\delta_e = \frac{\delta_{e_L} + \delta_{e_R}}{2}$$

$$\delta_a = \frac{\delta_{e_L} - \delta_{e_R}}{2}$$

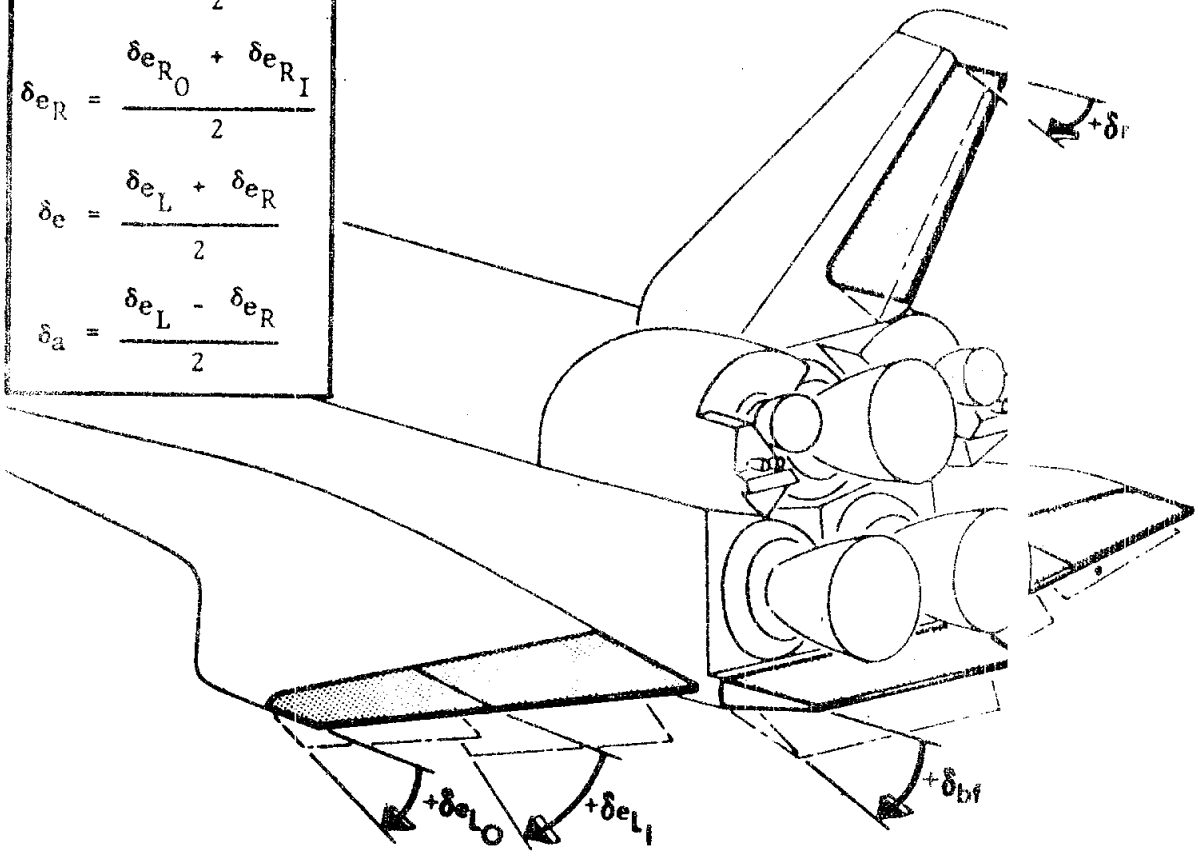

Positive Deflection of	Angle	Aero Forces and Moments	Hinge Moment
Rudder, δr	$+\beta$, $-\psi$	$+C_Y$, $-C_n$	h_r
Elevon, δe	$-\alpha$, $-\theta$	$-C_m$	h_e
Right, δe_R	$-\phi$	$-C_\ell$	h_{e_R}
Left, δe_L	$+\phi$	$+C_\ell$	h_{e_L}
Aileron, δa	$+\phi$	$+C_\ell$	
Body Flap, δbf	$-\alpha$, $-\theta$	$-C_m$	h_{bf}

c. Control Surface Deflections
Figure 1. Concluded.

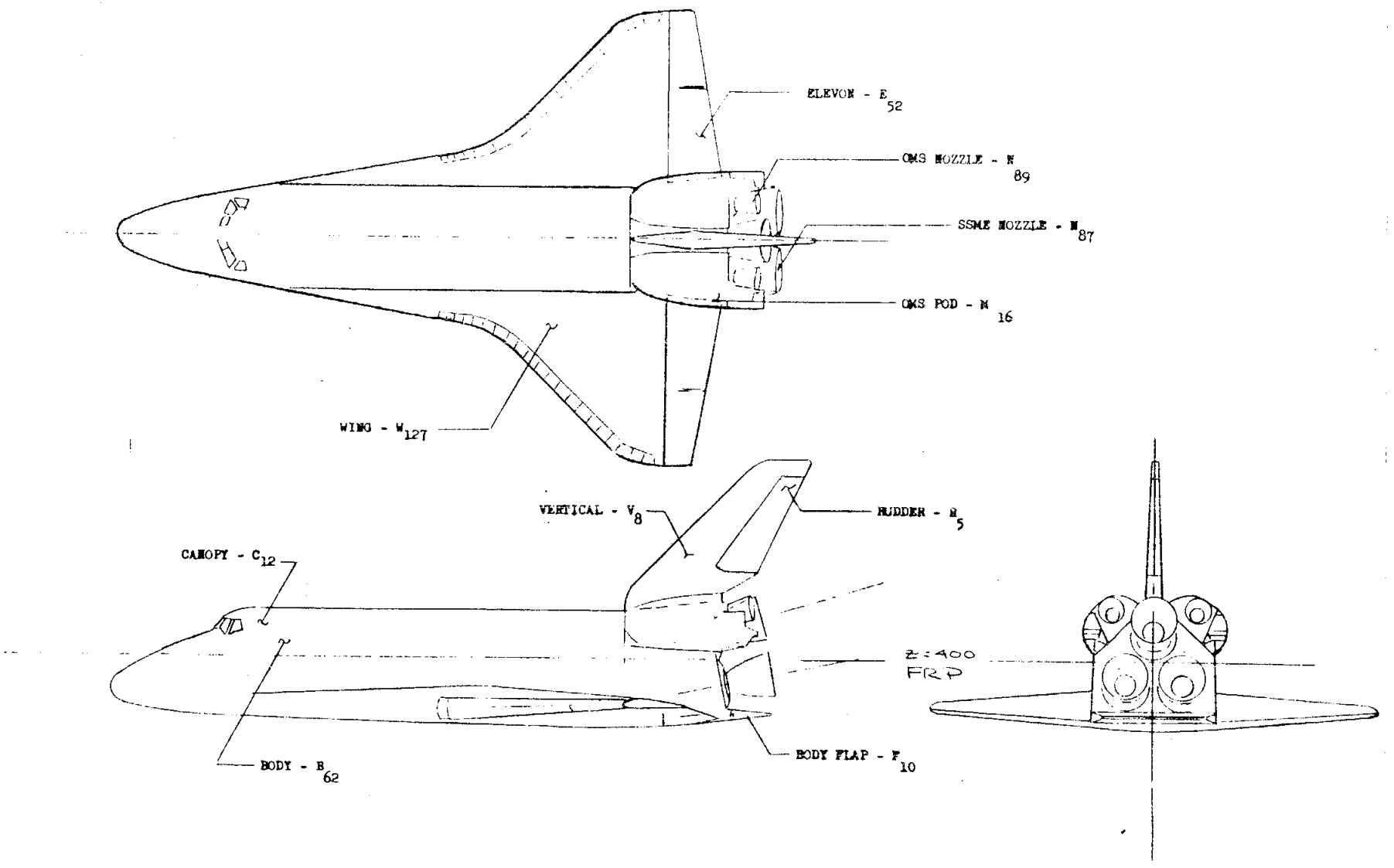

a. Orbiter (O_1) Components
Figure 2. Model sketches.

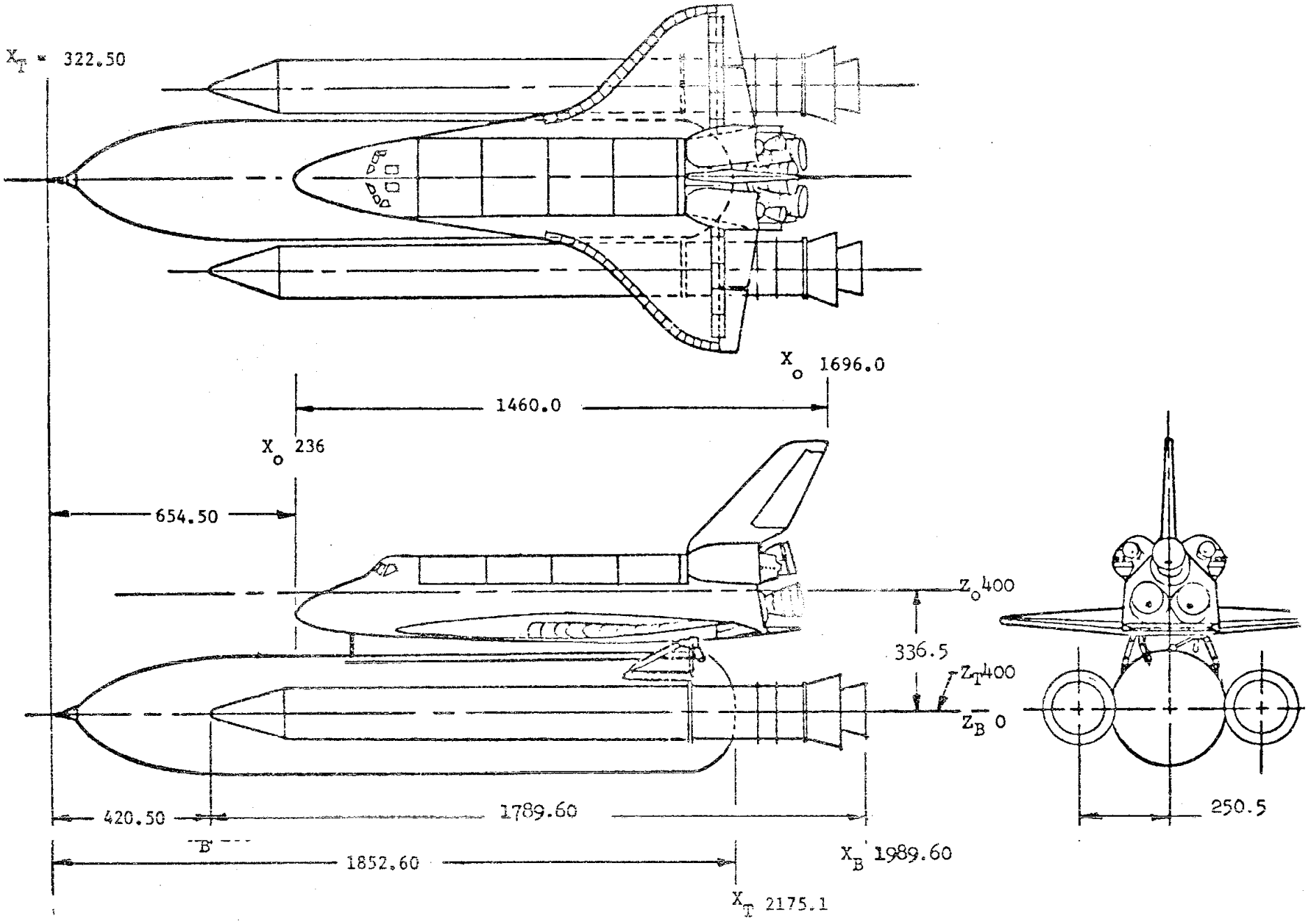

b. Integrated Space Shuttle Vehicle Launch Configuration
Figure 2. Continued

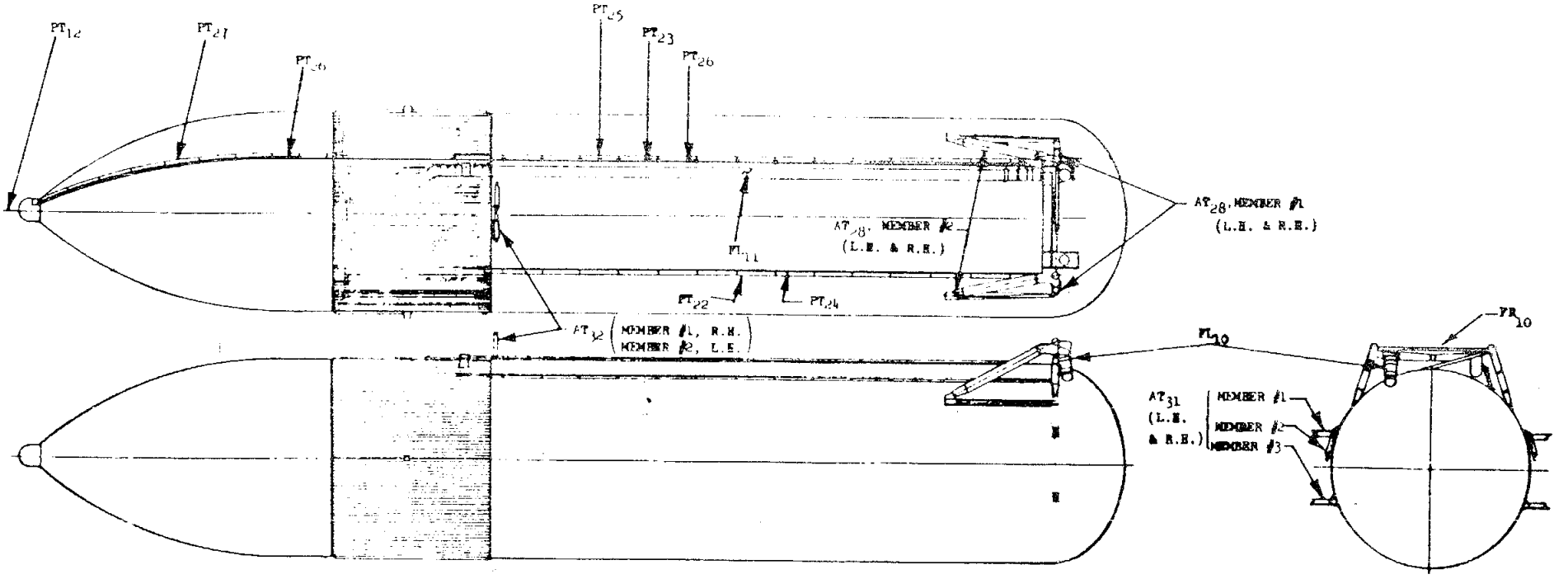

c. External Tank (T_{28}) Protrusions
Figure 2. Continued.

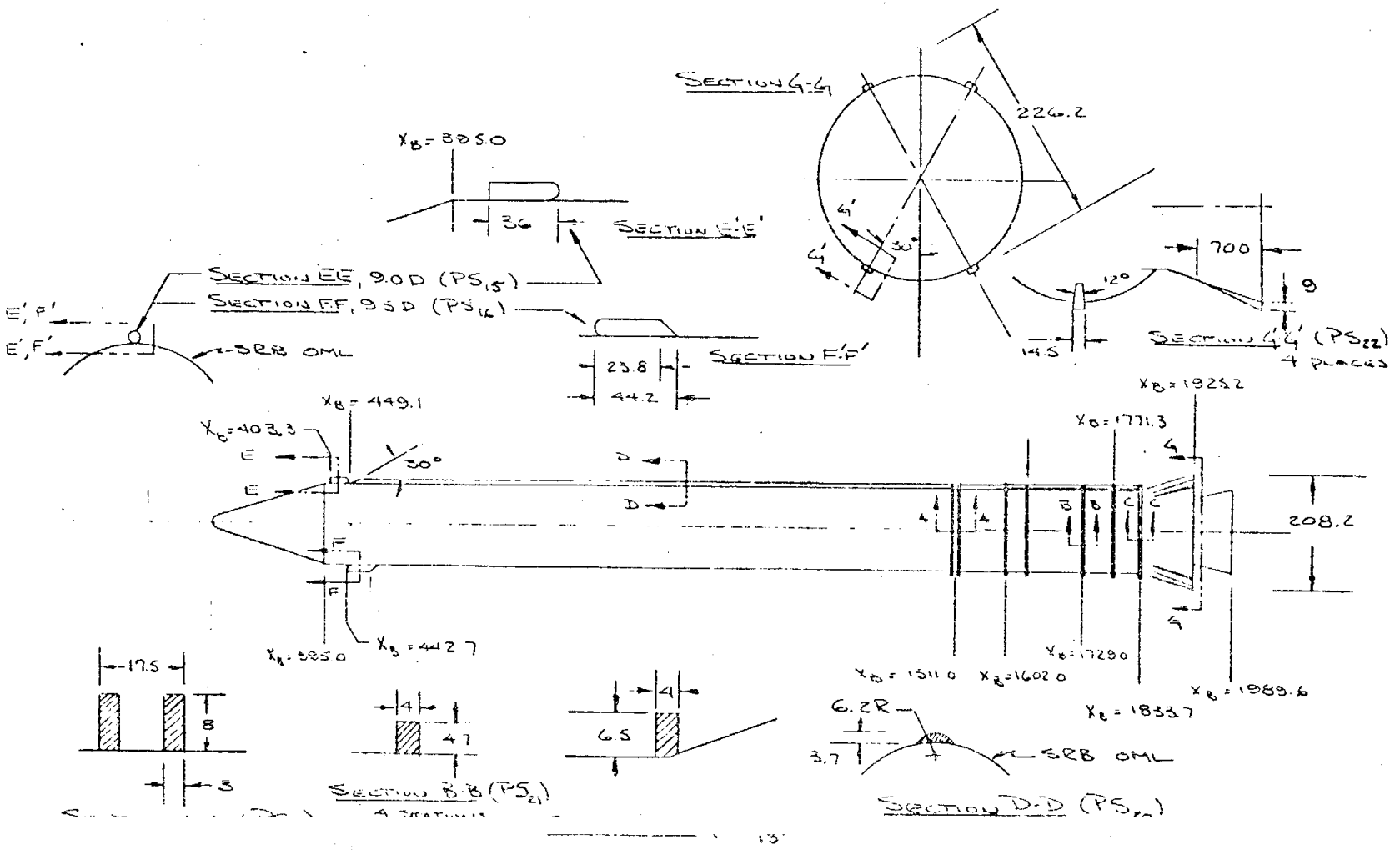

d. Solid Rocket Booster (S22) Protrusions
Figure 2. Continued.

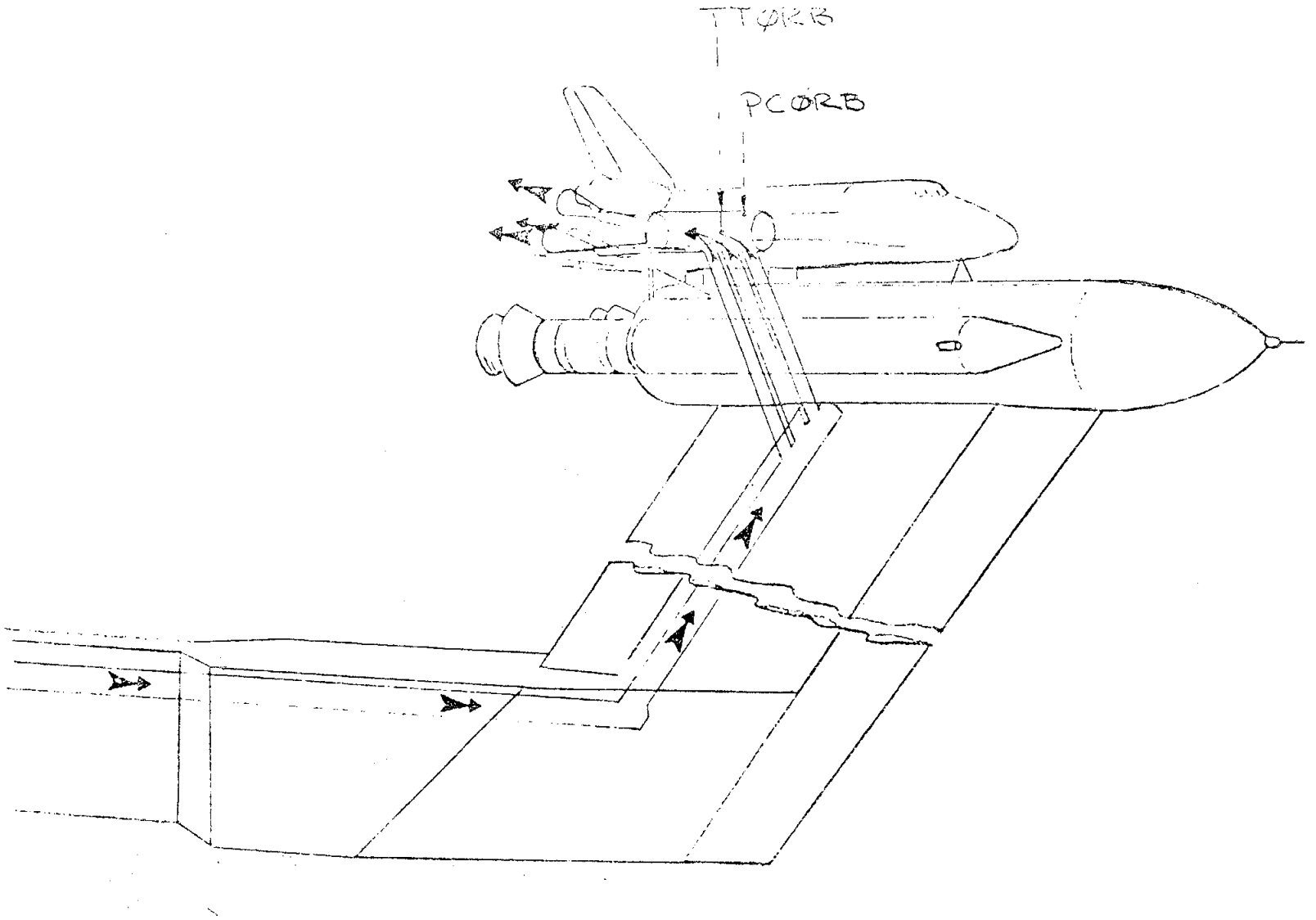

e. SSME Blowing System to Simulate Jet Plumes
Figure 2. Continued.

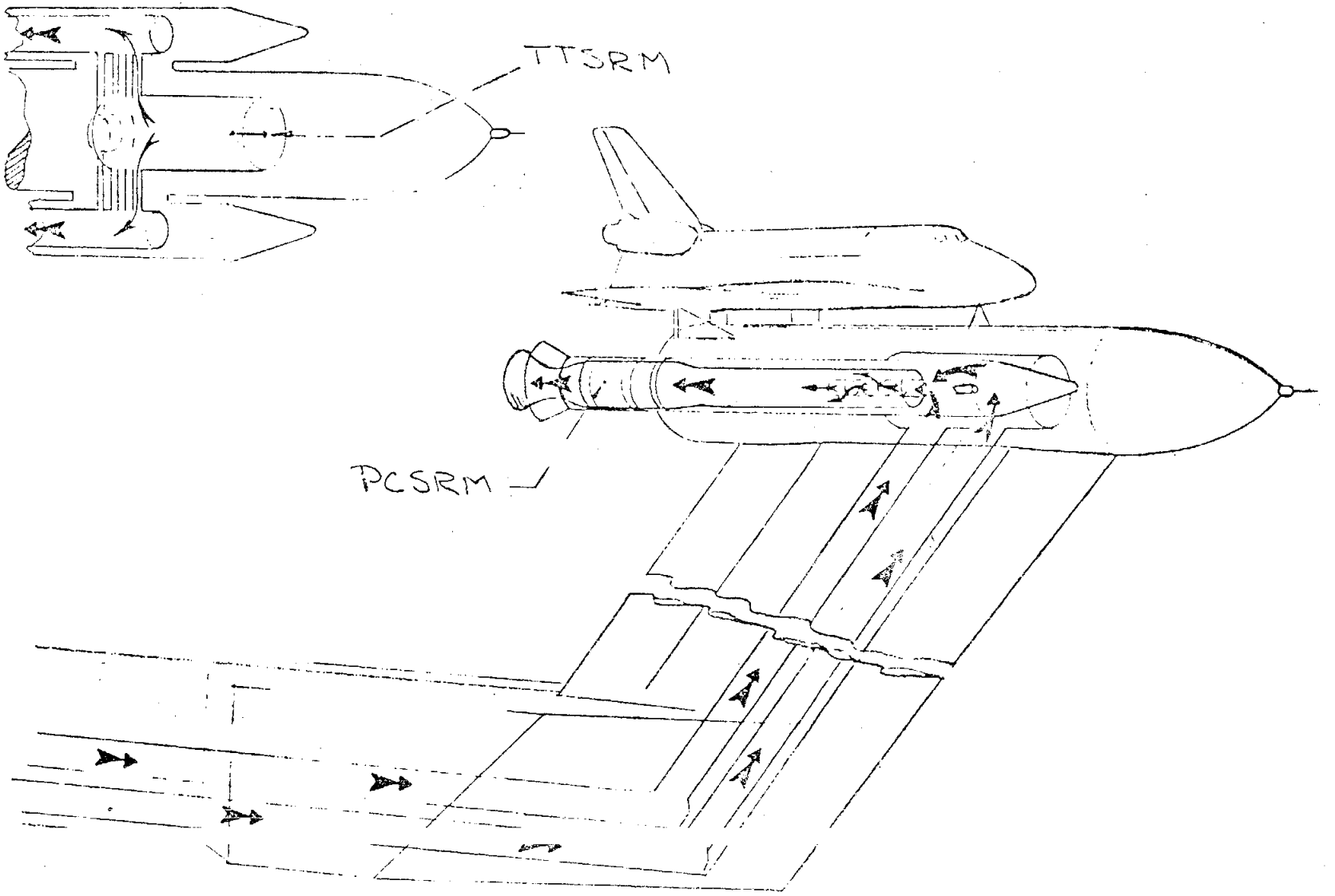

f. SRB Blowing System to Simulate Jet Plumes
Figure 2. Continued.

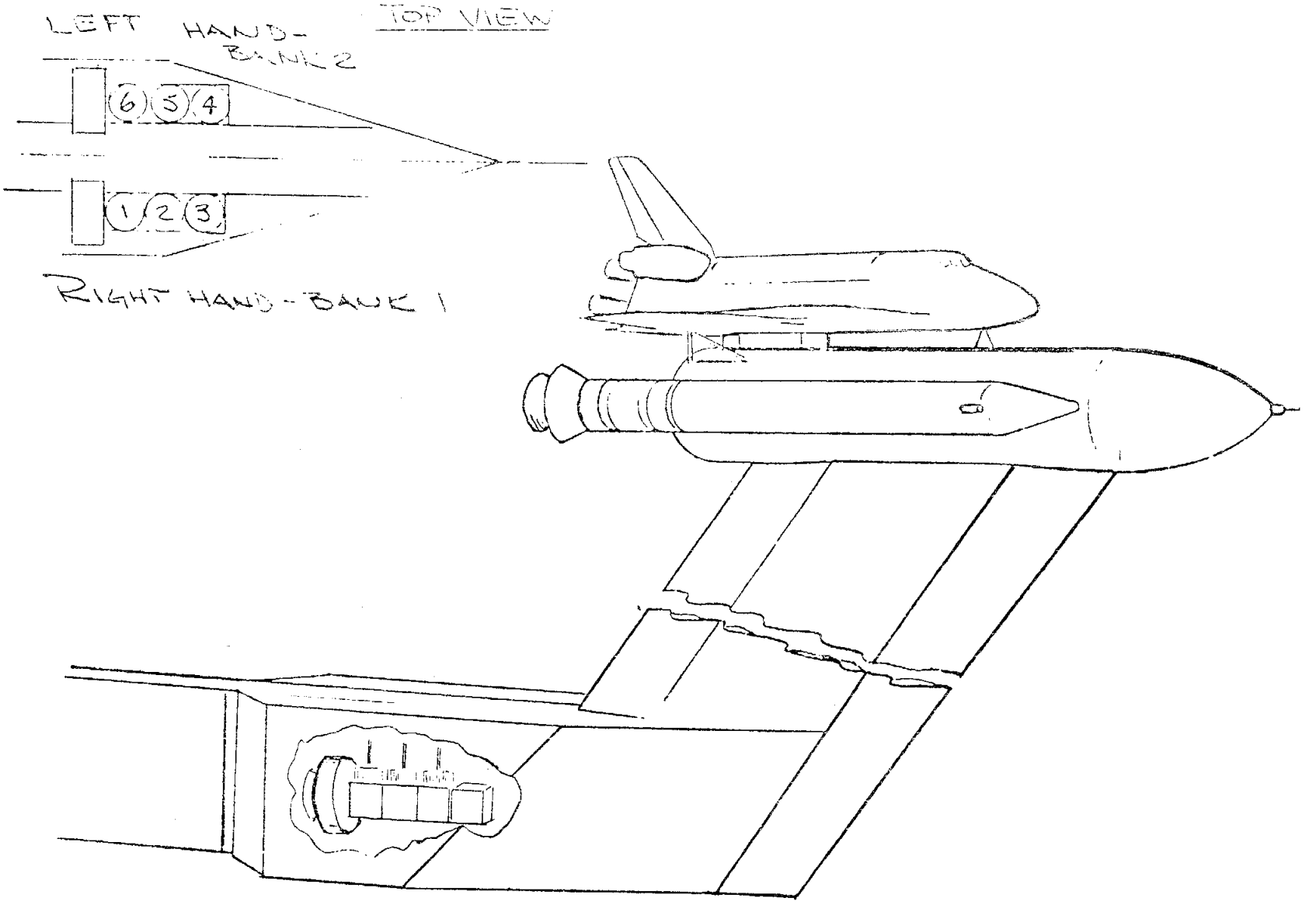

g. Scanivalve Location and Numbering
Figure 2. Continued.

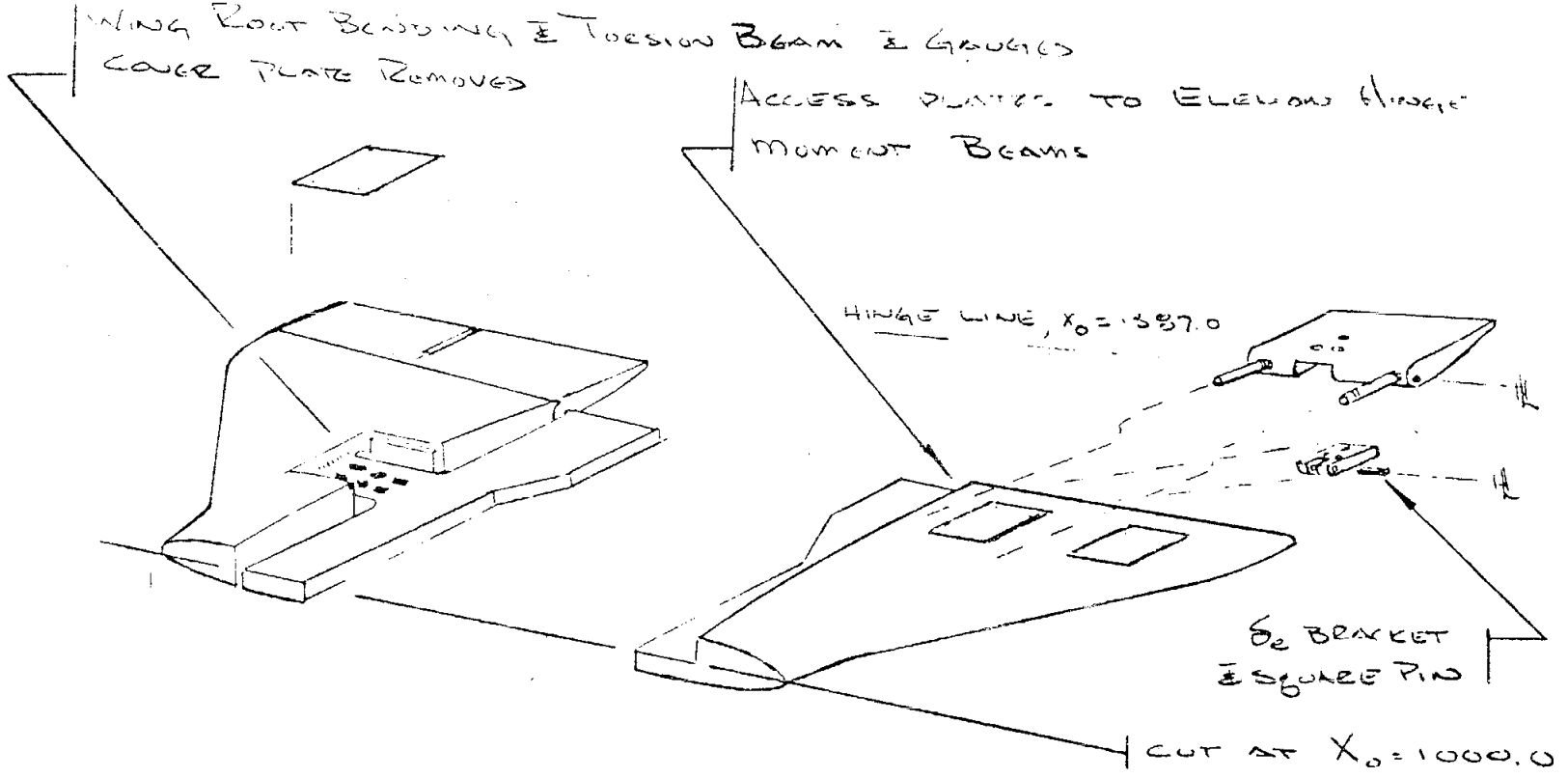

NOTE THAT THE ELEVON IS REMOVED FROM THE WING AND δ_e BRACKET WITH THE HINGES ATTACHED

SSA01278

h. General Wing Layout
Figure 2. Continued.

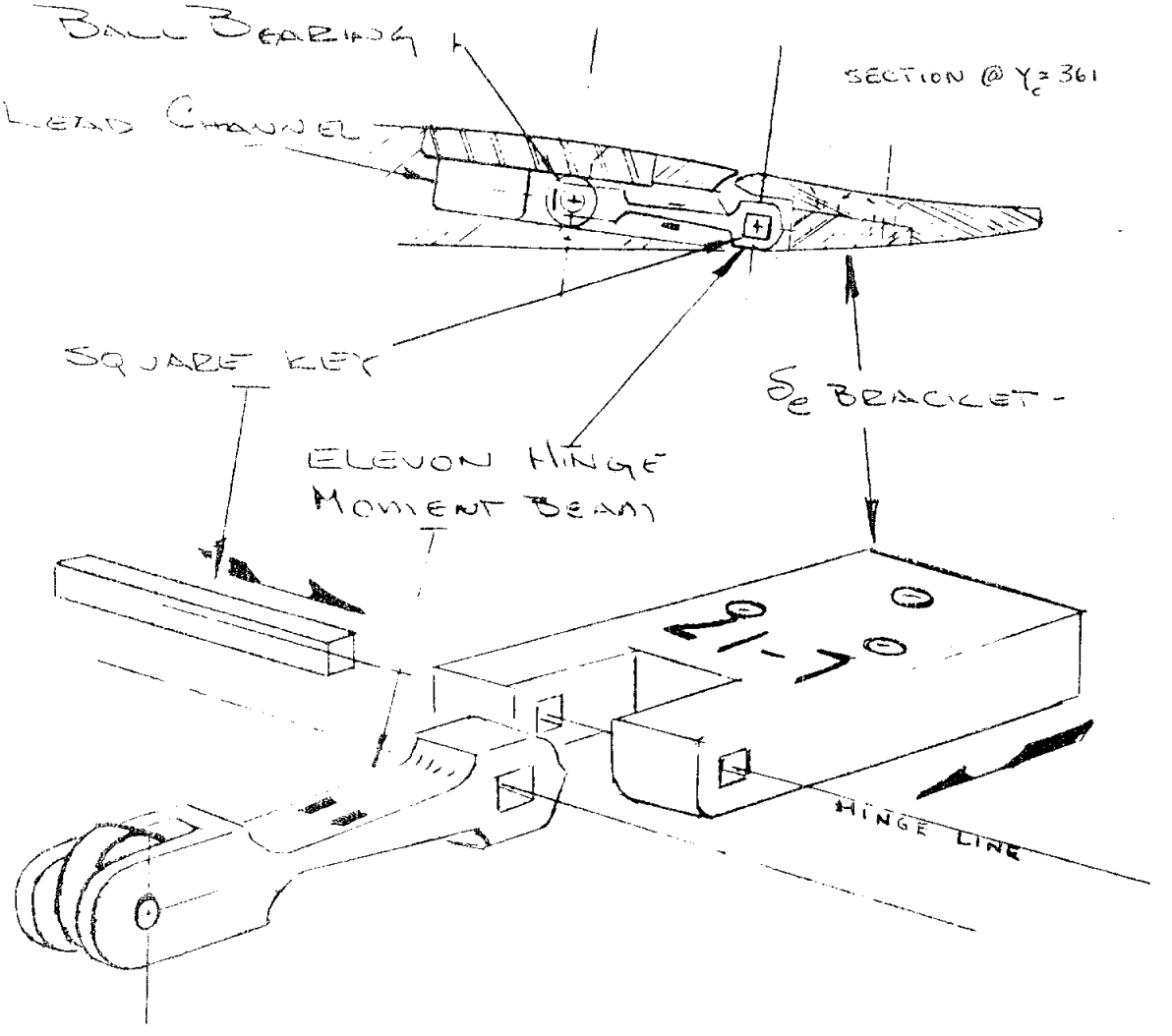

i. Elevon Gauge Details
Figure 2. Continued.

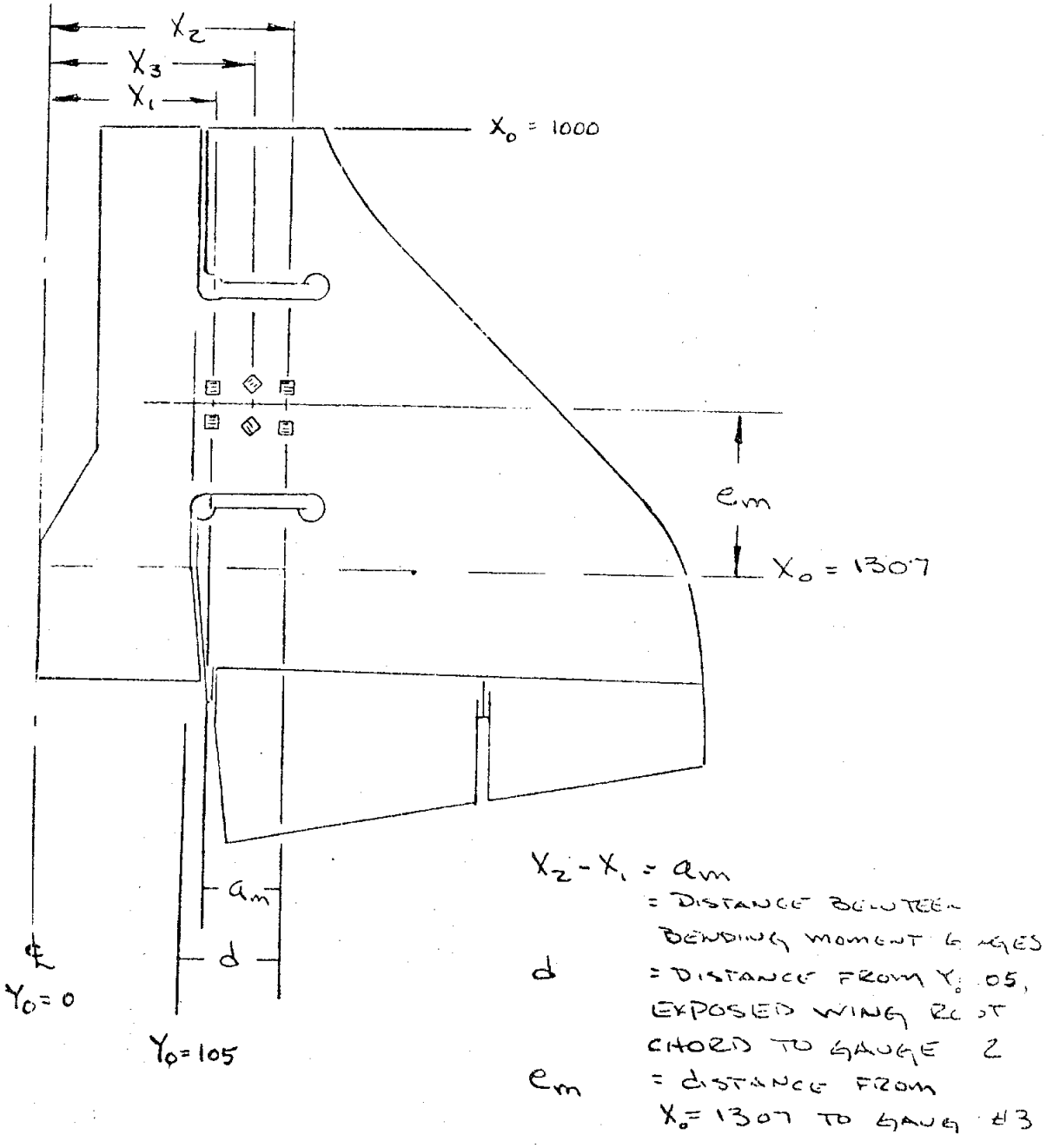

j. Wing Panel Data Reduction Distances
Figure 2. Continued.

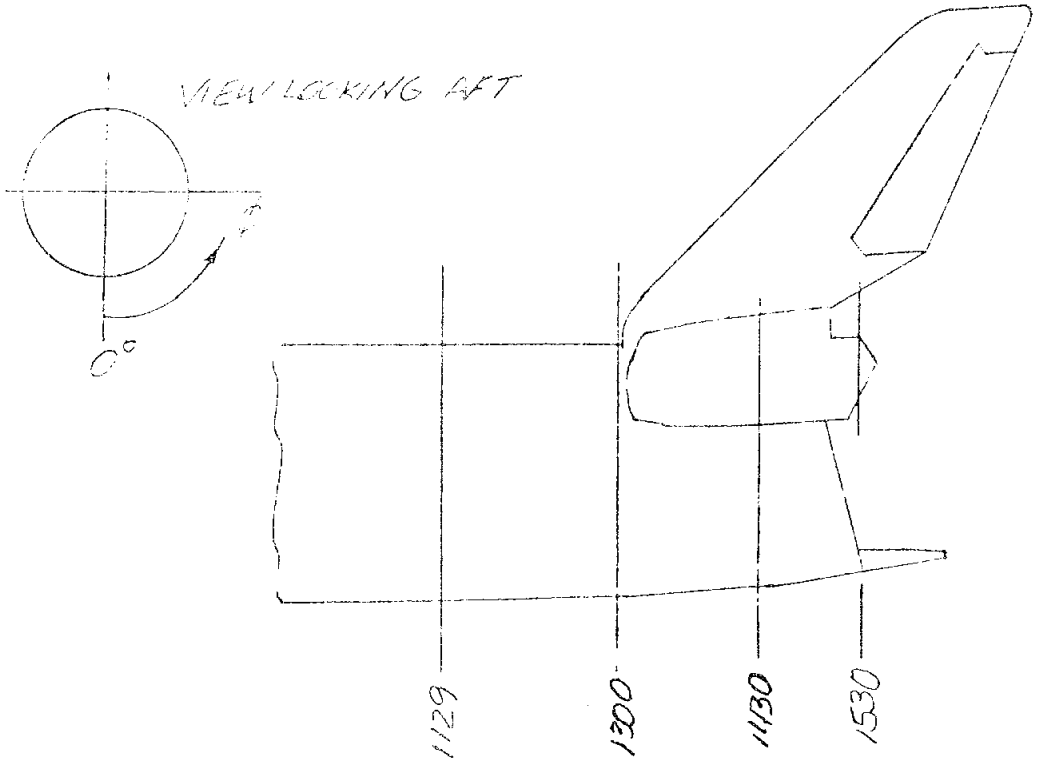

ORB. STA.		Ø RADIAL LOCATION ~ DEG.											
$X_{o,F.S}$	X_o/L_o	0	20	40	70	90	105	110	120	135	150	165	180
1070	.6471												
1129	.6929		222	223	224	225	226	-	227	228	229	230	231
1215	.7595												
1300	.8254	173	233	174	175	176	177	-	178	179	180	234	181
1375	.8835												
1430	.9261	194	236	195	196	197	198	-	199	200	201	202	-
1480	.9649												
1530a	1.0036	-	-	-	-	-	-	214	215	-	-	-	
1530b	1.0036	-	-	-	-	-	-	216	217	-	-	-	
										TOTAL			35

L_o = 1290.3 INCHES

NOTE: $\frac{X_{o,} - 235}{L_o} = X_o/L_o$

k. Orbiter Fuselage Pressure Tap Array
Figure 2. Continued.

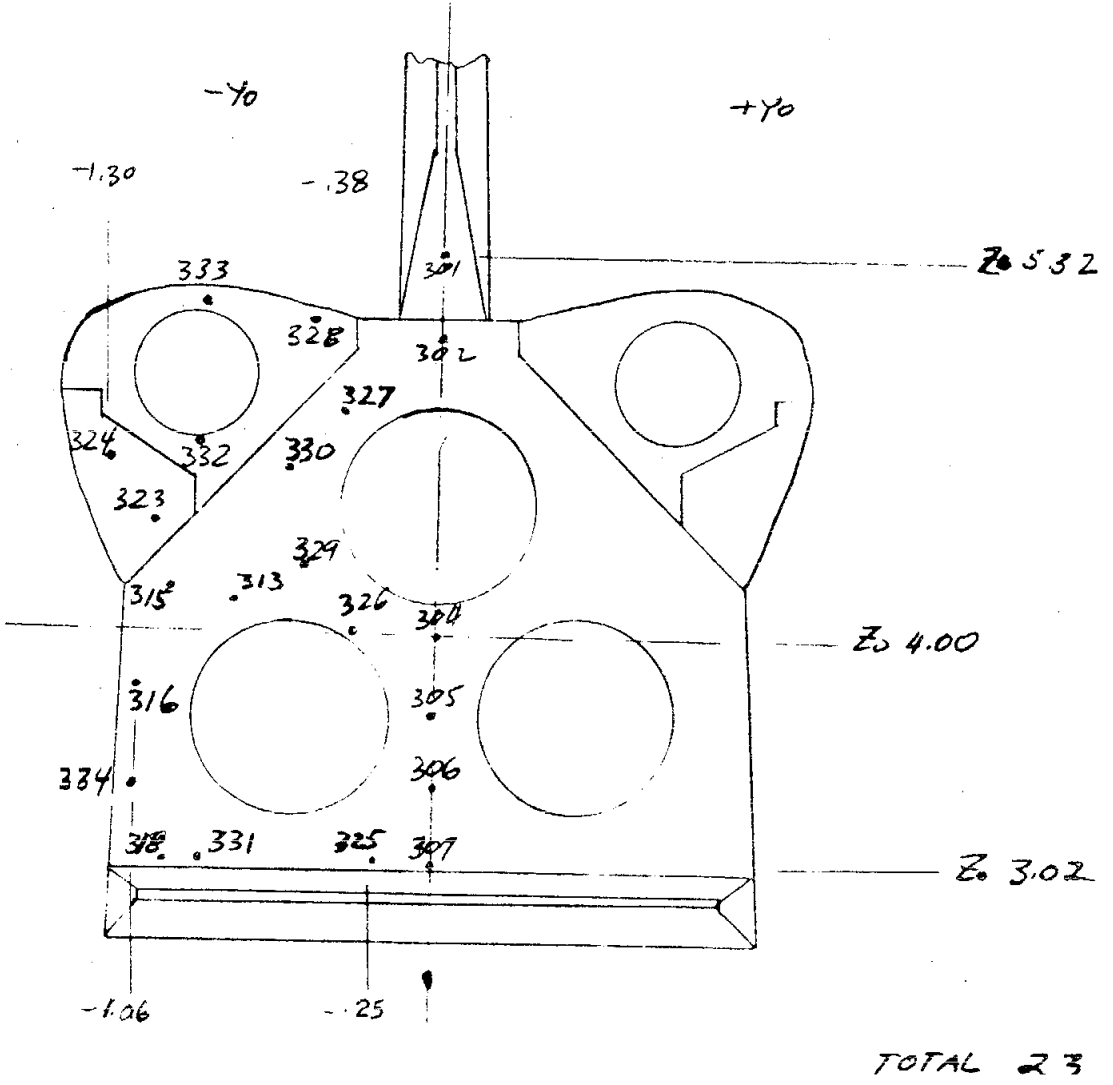

1. Orbiter Base Pressure Tap Location
Figure 2. Continued.

η	X/C_{BF}				LOCATION
	-.10	.20	.60	.95	
.10	405 401	406 402	407 403	408 404	UPPER LOWER
.50	413 409	414 410	415 411	416 412	UPPER LOWER
.90	437 433	438 434	439 435	440 436	UPPER LOWER
				TOTAL	24

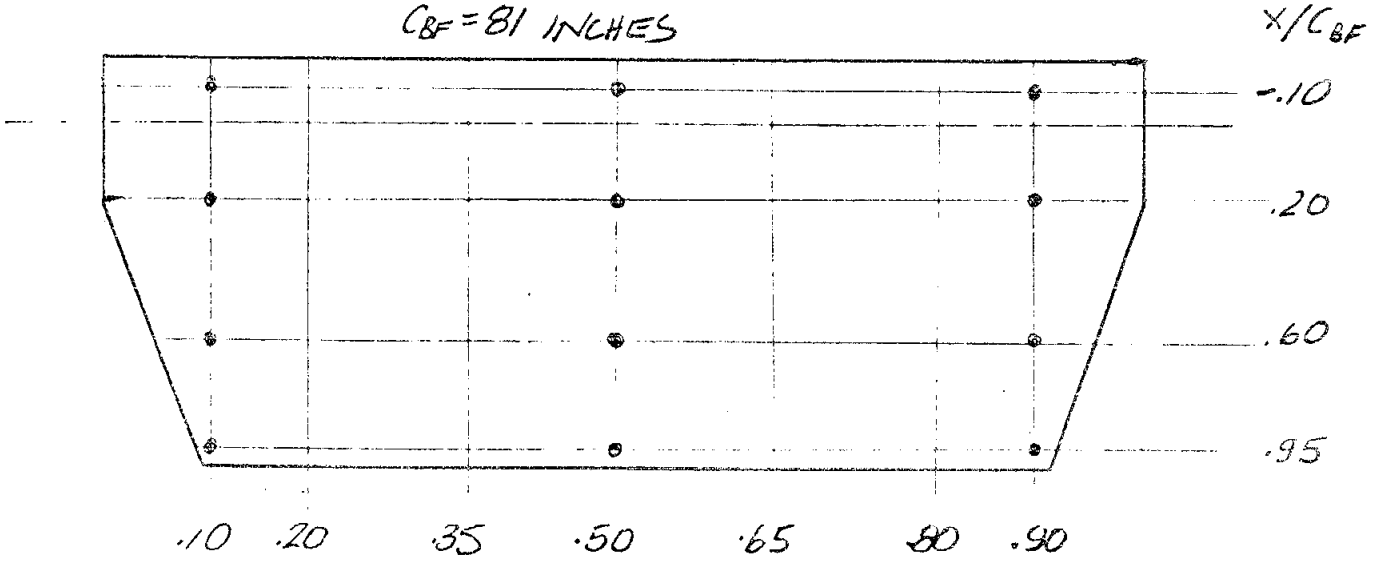

m. Body Flap Pressure Tap Location
Figure 2. Continued.

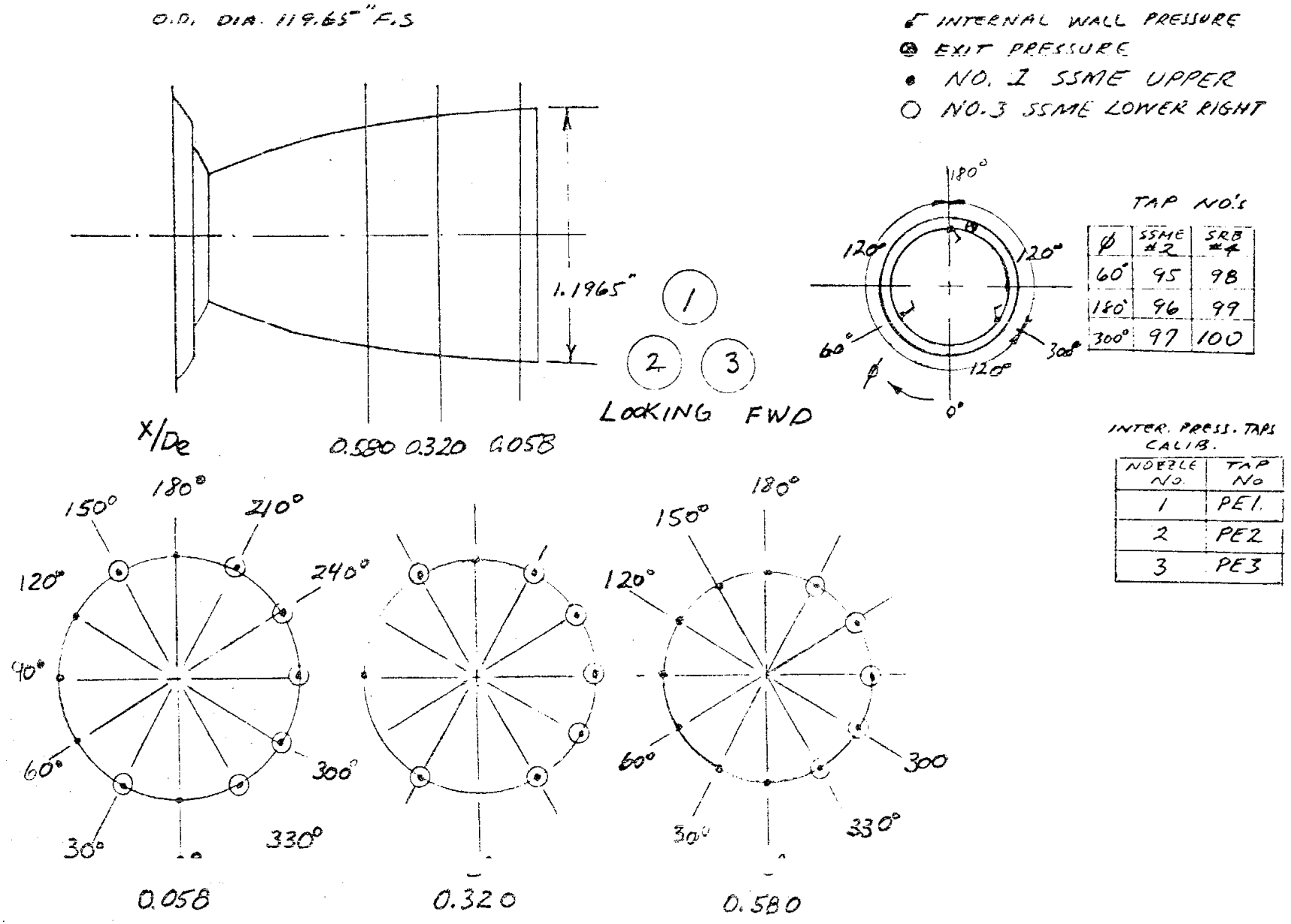

ϕ	SSME #2	SRB #4
60°	95	98
180°	96	99
300°	97	100

NOZZLE NO.	TAP NO
1	PE1
2	PE2
3	PE3

n. Orbiter SSME Nozzle Pressure Instrumentation
Figure 2. Continued.

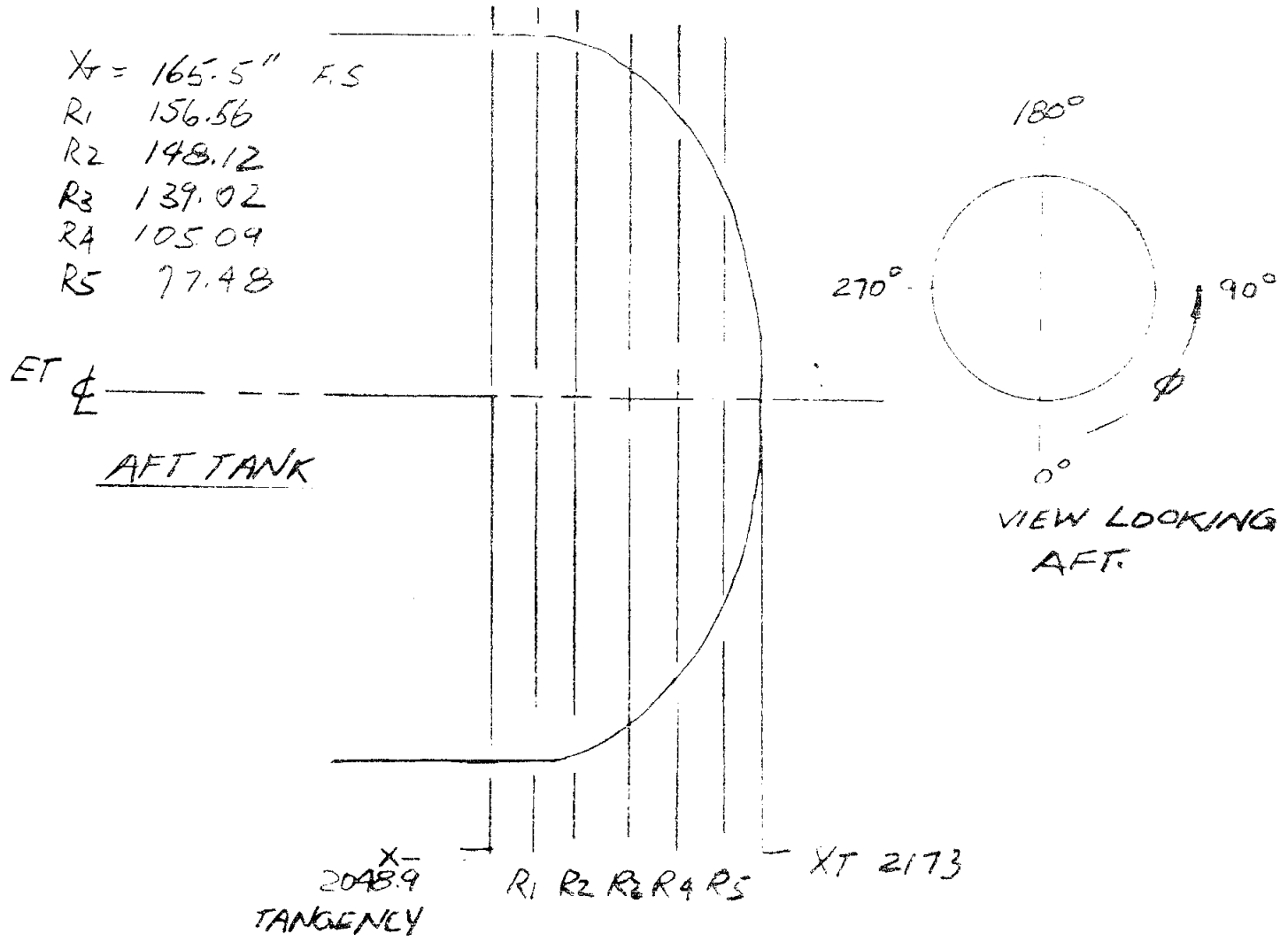

o. External Tank Pressure Tap Location
Figure 2. Continued.

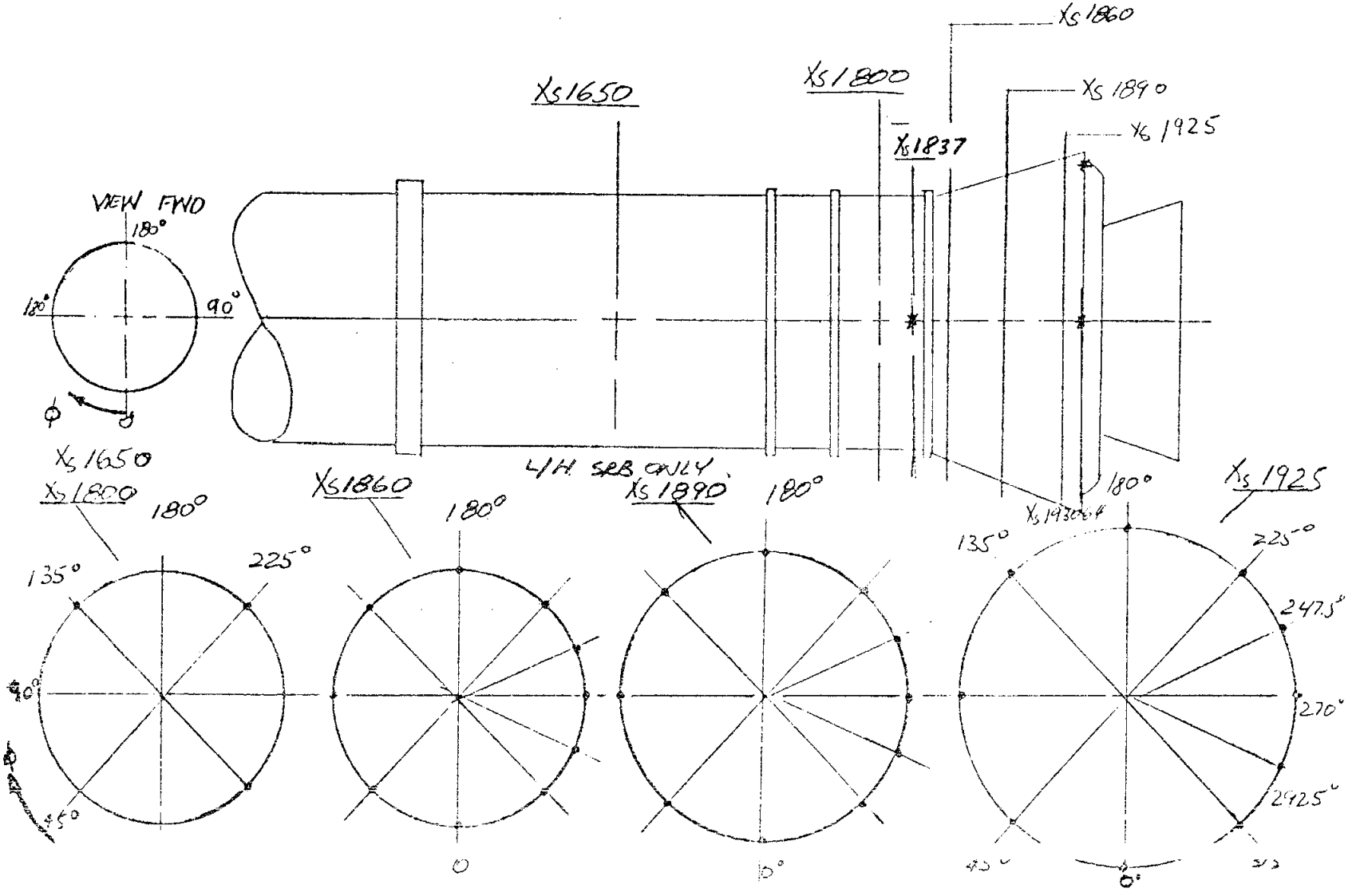

p. SRB Basic Pressure Tap Location
Figure 2. Continued.

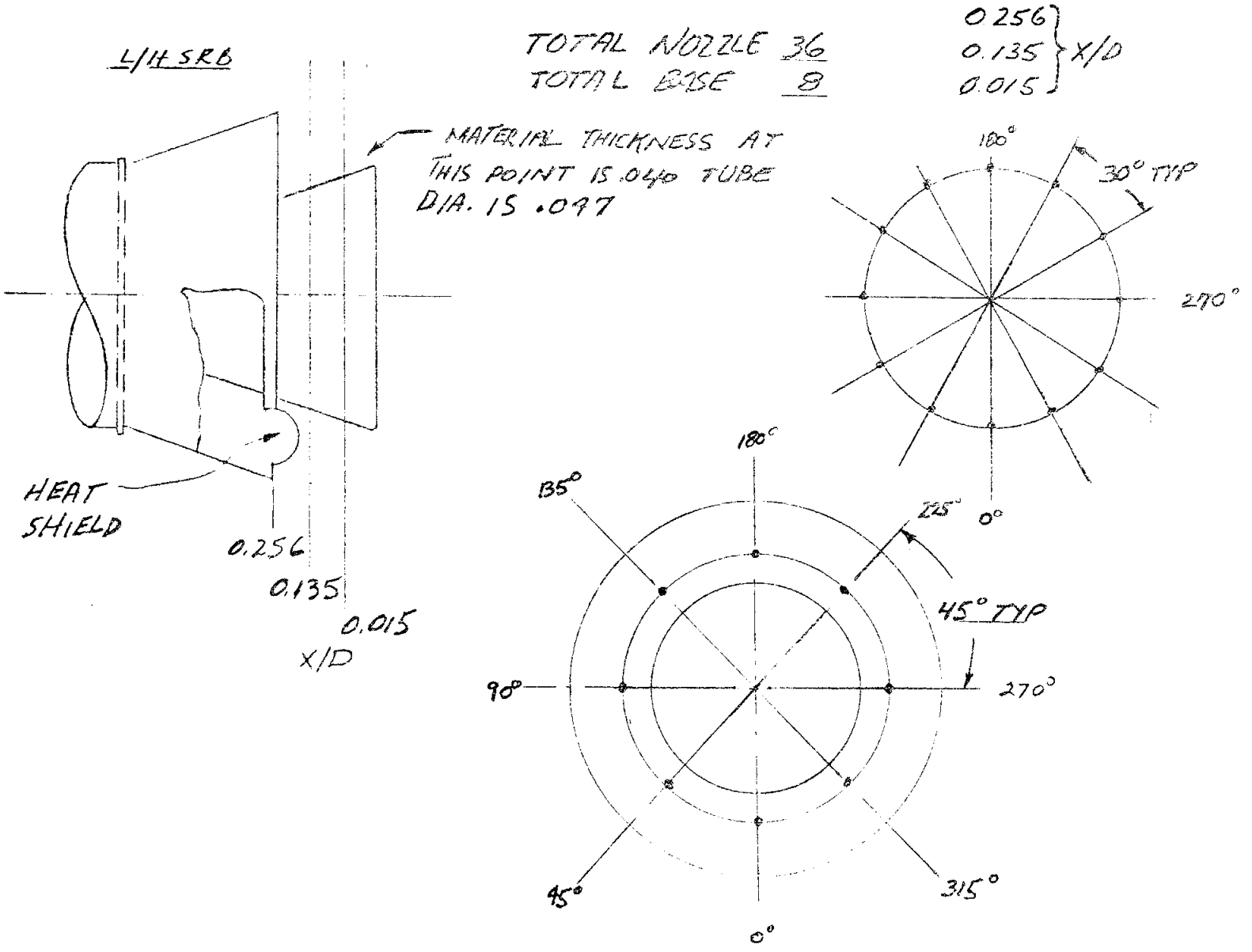

q. SRB Nozzle and Base Pressure Tap Location
Figure 2. Continued.

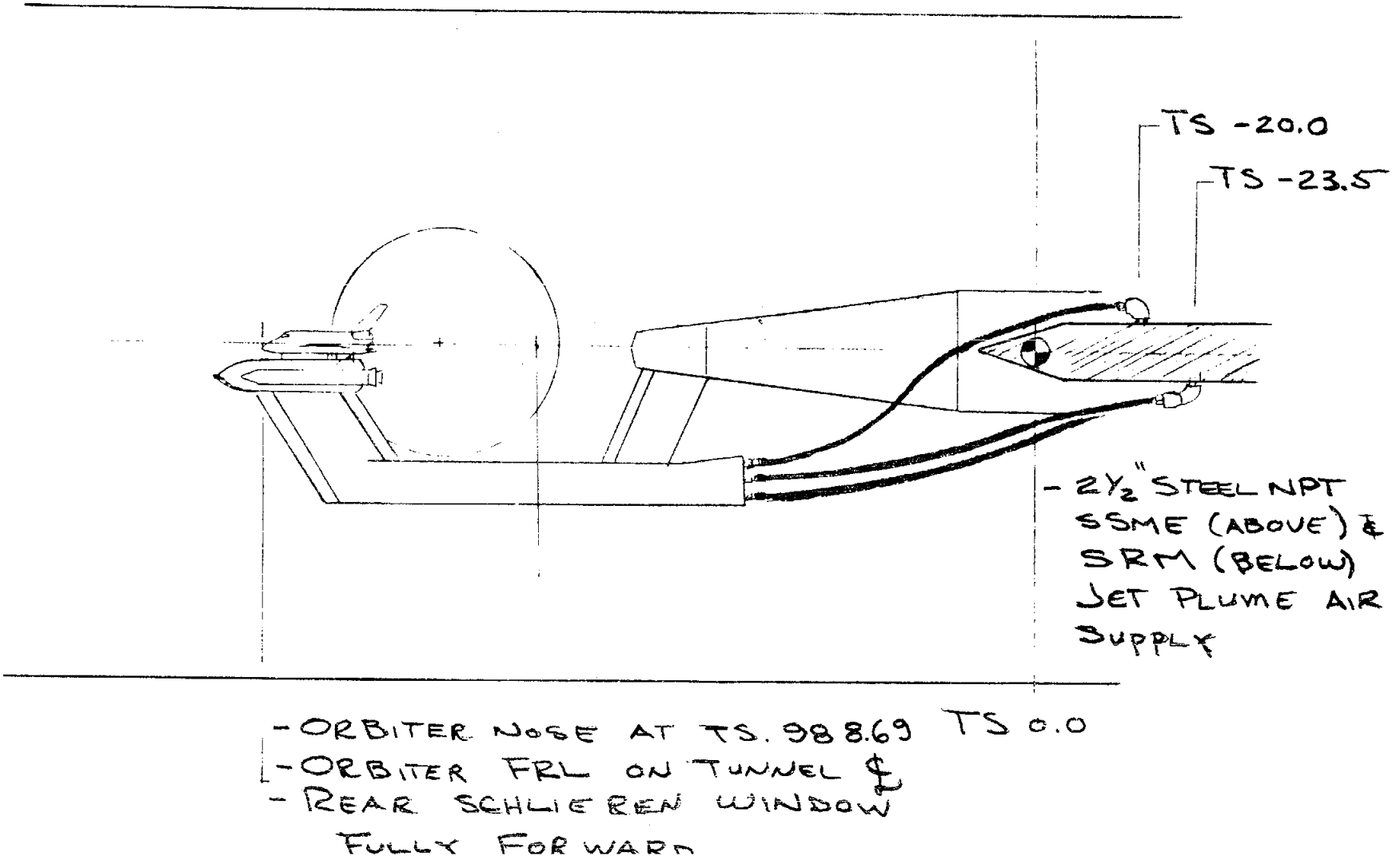

r. Model 75-CTS Installation Ames 9 x 7
Figure 2. Concluded.

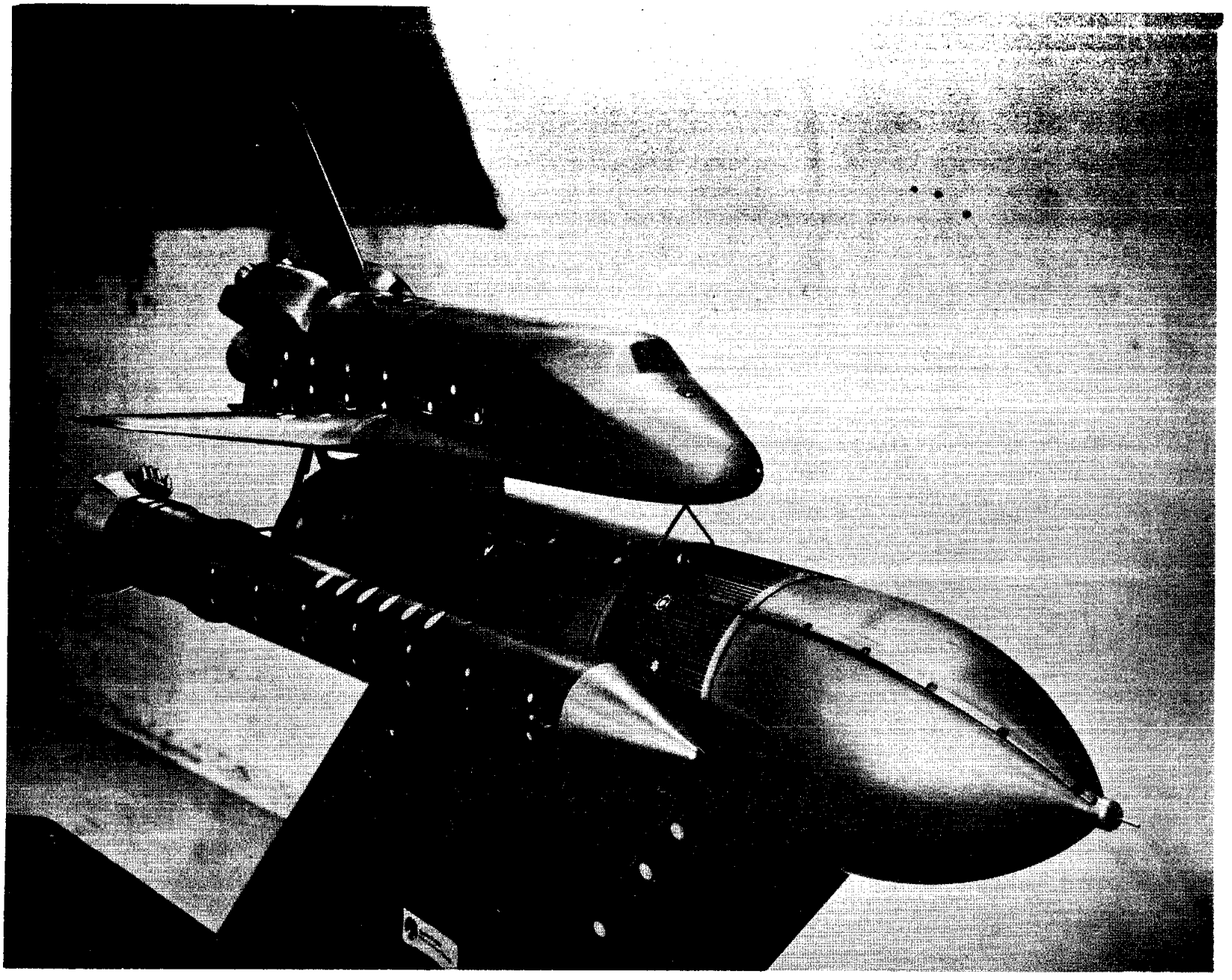

a. Three-quarter front view of model 75-OTS

Figure 3. Installation Photographs of Model in Ames 9x7 Tunnel

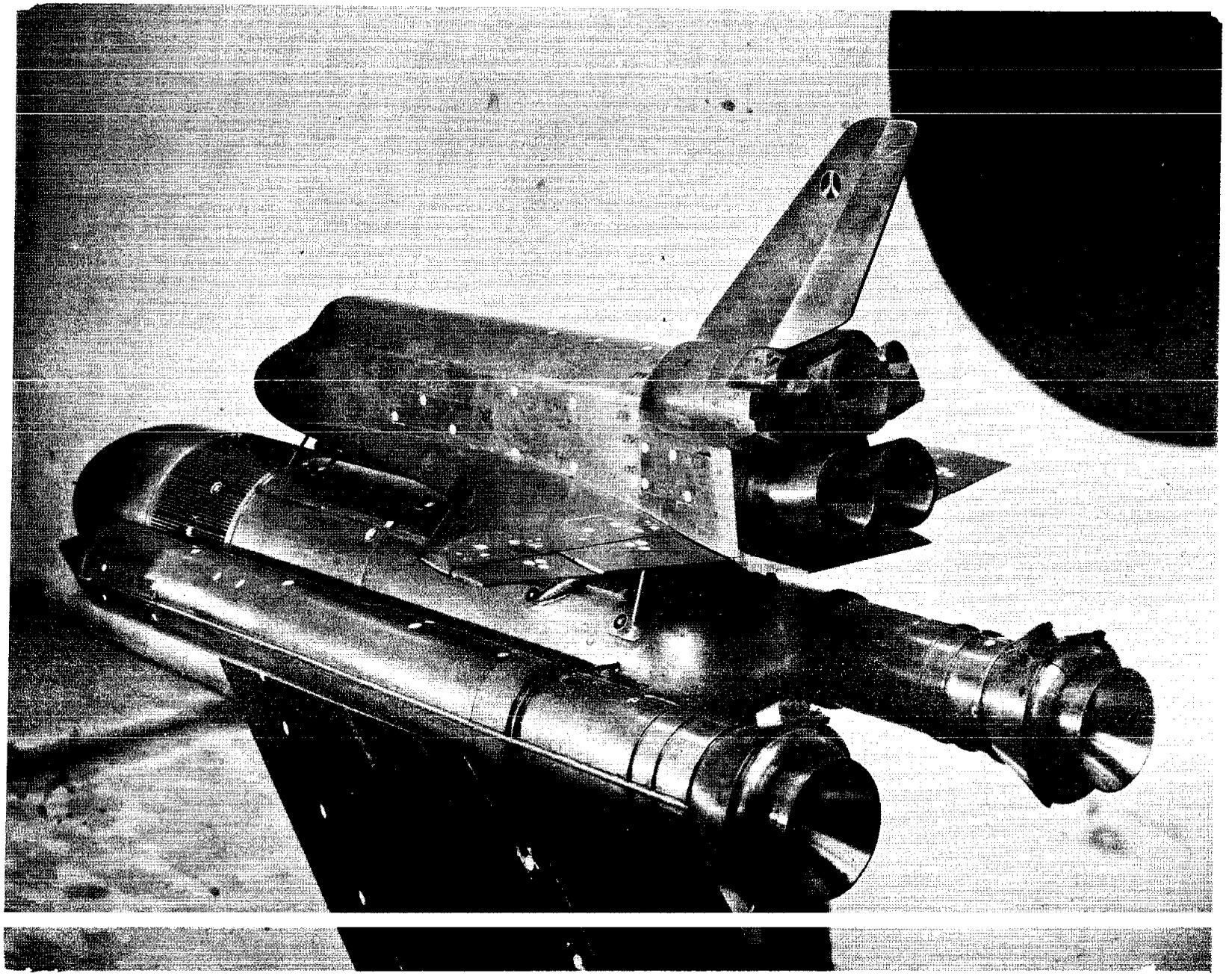

b. Three-quarter rear view of Model 75-OTS
Figure 3. Continued

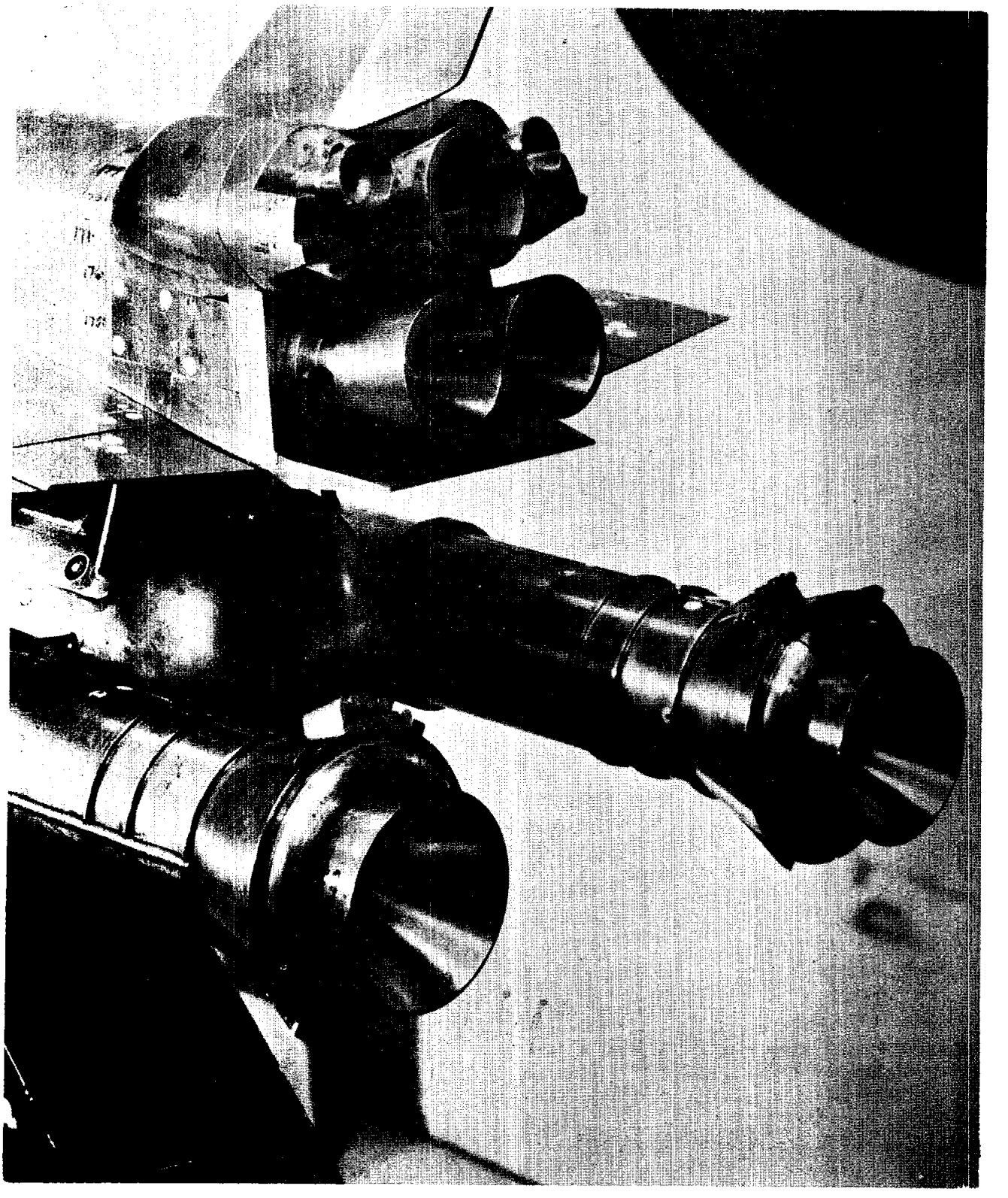

c. Aft view of Model 75-OTS
Figure 3. Concluded

APPENDIX

PRESSURE DATA - MICROFICHE

Contents	Microfiche Page Number
Orbiter Fuselage (A) D/S 01-89	1-9
Upper Body Flap (B) D/S 01-89	9-14
Lower Body Flap (C) D/S 01-89	14-19
Orbiter Base (D) D/S 01-89	19-30
Number 1 Space Shuttle Main Engine Nozzle (E) D/S 01-89	30-38
Number 3 Space Shuttle Main Engine Nozzle (F) D/S 01-89	38-43
External Tank Base (G) D/S 01-89	44-51
Left Solid Rocket Booster (H) D/S 01-89	51-56
Left Solid Rocket Booster Nozzle (I) D/S 01-89	56-64
Left Solid Rocket Booster Base (J) D/S 01-89	65-66
Right Solid Rocket Booster Base (K) D/S 01-89	66-67
Inside Orbiter Maneuvering System (L) D/S 01-89	67-69

Due to the limited distribution of Volume 3 of this data report, tabulated pressure data are available on request from Data Management Service .