(NASA-TM-84099) REPORT OF APOLLO 204 REVIEW BOARD, APPENDIX C SECTION 1 (NASA) 440 p

N82-72194

Unclas
00/18 11539

REPORT OF APOLLO 204 REVIEW BOARD

FEB 1982
RECEIVED
NASA STI FACILITY
ACCESS DEPT.

TO

THE ADMINISTRATOR

NATIONAL AERONAUTICS AND SPACE ADMINISTRATION

(NAS-TM-X-70156) REPORT OF APOLLO 204 REVIEW BOARD, APPENDIX C, SECTION 1 (NASA) 440 p

N74-72948

Unclas
00/99 16141

APPENDIX C

SECTION 1

(NASA-TM-X-70156) REPORT OF APOLLO 204 REVIEW BOARD, APPENDIX C, SECTION 1 (NASA) 440 p LIMITED ACCESS

X75-71244

Unclas
00/98 06684

LIST OF EFFECTIVE PAGES

NOTE: The portion of the text affected by the current changes is indicated by a vertical line in the outer margins of the page.

TOTAL NUMBER OF PAGES IN THIS PUBLICATION IS 816, CONSISTING OF THE FOLLOWING:

Page	Page
Title	2.8-1 thru 2.8-70
A thru E	2.9-1 thru 2.9-38
i thru xii	2.10-1 thru 2.10-10
1-1 thru 1-20	2.11-1 thru 2.11-6
2-1 thru 2-2	3-1 thru 3-212
2.1-1 thru 2.1-10	4-1 thru 4-50
2.2-1 thru 2.2-48	5-1 thru 5-20
2.3-1 thru 2.3-72	6-1 thru 6-52
2.4-1 thru 2.4-38	7-1 thru 7-2
2.5-1 thru 2.5-44	8-1 thru 8-2
2.6-1 thru 2.6-48	A-1 thru A-6
2.7-1 thru 2.7-48	

CHANGE INFORMATION

This handbook is subject to continuous change or revision, on a priority basis, to reflect current engineering or mission changes, or to improve content or arrangement. The content and the changes are accounted for by the above List of Effective Pages, and by the following means:

Record of Publication: The publication date of each basic issue and each change issue is listed on page B as a record of all editions.

Page Change Date: Each page in this handbook has space for entering a change date. The latest publication date will be entered in this space each time a page is changed from the basic issue.

*The asterisk indicates pages changed, added, or deleted by the current change.

Manuals will be distributed as directed by the NASA Apollo Program Office. All requests for manuals should be directed to the NASA Apollo Spacecraft Program Office at Houston, Texas.

RECORD OF PUBLICATION

This issue of the Apollo Operations Handbook, Spacecraft 012, dated 12 November 1966, constitutes a revision of the handbook, dated 16 September 1966. Subsequent changes may be issued to maintain information current with spacecraft configuration through completion of the mission. This record will reflect the publication date of any released changes.

LATE TECHNICAL CHANGES

The items listed below represent technical changes which have been approved too late for inclusion in the 12 November 1966 printing of the Apollo Operations Handbook.

Source	Description of Change	Section Affected
MCR A1735	Change S/M RCS fuel from blended hydrazine mixture to monomethylhydrazine	2.5
MCR 1591 REV 3.	Addition of inverter synchronizer power panel which provides circuit breakers for the control of power to the phase synchronizer unit.	2, 3
FEO M-53025 (10-13-66)	This is a nomenclature correction for the S-Band switch on the MDC panels No. 13, 23 and 26. This change is required due to wiring changes. The S-Band switch was marked "PTT", "OFF" and "VOX". The switch is now marked "OFF", "OFF" and "T/R".	2.8 and 3
MCR A1733 (10-11-66)	Modification of Crew Couch Lockouts. This MCR removes the lockout solenoid actuator and wire harness from the X-X axis strut lockout mechanism. Add an adapter to the lockout mechanism assembly to fix in the locked position. The switch on panel No. 9 and the wire harness assembly on the struts will be removed.	1, 2, 3

SYNOPSIS OF SIGNIFICANT CHANGES

This tabulation does not list all changes, additions, and/or deletions in the handbook. Its purpose is to assist the reader in determining the significant technical changes in each system.

PART I. TECHNICAL CHANGES

Handbook Section(s) Affected	Description	Handbook System(s) Affected
1	Updated lockout mechanisms on shock struts.	GEN
1	Updated forward hatch cover.	GEN
2	Revised RCSC circuit diagram to include entry battery backup power to pyro bus.	SEQ
2	H_2 purge line heater	EPS
2	Fuel cell H_2 and O_2 reactant shutoff valves holding voltage control	EPS
2	Cryogenic system response and operation	EPS
2	Revised, updated, and assembled end-to-end circuit and system diagrams. Added electrical power distribution diagrams and power requirements. Added operating ranges and panel references to measurement lists.	PROP
4	Added tabular data for color markings contained on indicator displays and updated art.	SPS, EPS and ECS
4	Added typical charts from MMDB to determine S/C consumable data.	RCS, SPS and EPS
4	Added data on S/C attitude controls.	RCS
4	Updated SPS Delta V and Engine Gimbal Angle charts.	SPS

FOREWORD

This handbook and its contents are restricted to the requirements for Spacecraft 012. It presents, in one document, descriptions of the spacecraft systems and equipment, and listings of the flight crew operational procedures necessary for the safe and efficient function of the spacecraft throughout its planned mission. This handbook is designed primarily for use by the flight crew, and secondarily for use by the mission flight controllers, flight planners, and trainer operators.

NASA comments or suggested changes to this handbook should be addressed to the Flight Planning Section, FCSD, MSC, Office Code CF 32, Telephone HU3-4271.

TABLE OF CONTENTS

Section	Title	Page
1	GENERAL INFORMATION	1-1
1.1	Spacecraft 012 Configuration	1-1
1.1.1	LES Assembly	1-1
1.1.2	Command Module	1-4
1.1.2.1	Forward Compartment	1-6
1.1.2.2	Crew Compartment	1-6
1.1.2.3	S/C Controls and Displays	1-6
1.1.2.4	C/M Mechanical Controls	1-6
1.1.2.5	Crew Equipment and Equipment Bays	1-12
1.1.2.6	Food and Water	1-15
1.1.2.7	Waste Management	1-15
1.1.2.8	Survival Equipment	1-15
1.1.2.9	Aft Compartment	1-15
1.1.3	Service Module	1-16
1.1.4	Spacecraft LEM Adapter	1-16
1.1.5	Spacecraft Systems	1-16
1.2	Launch Vehicle Configuration	1-16
1.2.1	S-1B Booster	1-19
1.2.2	S-IVB Second Stage	1-19
1.3	Mission 209A Weight Status	1-19
1.4	Postlanding and Recovery	1-19
2	SYSTEMS DATA	2-1
2.1	Guidance and Control	2.1-1
2.1.1	Systems Interface, Guidance and Control	2.1-1
2.1.2	Coasting Flight	2.1-1
2.1.3	Powered Flight	2.1-2
2.1.4	Atmospheric Flight	2.1-2
2.2	Guidance and Navigation Systems (G&N)	2.2-1
2.2.1	Introduction	2.2-1
2.2.2	Functional Description	2.2-1
2.2.2.1	Operational Modes	2.2-7
2.2.3	Major Component/Subsystem Description	2.2-11
2.2.3.1	Inertial Subsystem	2.2-11
2.2.3.2	Optical Subsystem	2.2-13
2.2.3.3	Computer Subsystem	2.2-16
2.2.4	Performance and Design Data	2.2-40
2.2.5	Operational Limitations and Restrictions	2.2-40
2.2.5.1	S/C Attitude	2.2-40
2.2.5.2	IMU Operation	2.2-41

Section	Title	Page
2.2.5.3	Optics Operation	2.2-41
2.2.6	Telemetry Measurements	2.2-41
2.2.7	G&N Power Consumption	2.2-45
2.2.8	Interface Signals	2.2-46
2.3	Stabilization and Control System (SCS)	2.3-1
2.3.1	Introduction	2.3-1
2.3.2	Functional Description	2.3-3
2.3.2.1	Control Capabilities	2.3-3
2.3.2.2	Apollo Reference Axes	2.3-7
2.3.2.3	Subsystems	2.3-8
2.3.3	Flight Control Profiles	2.3-42
2.3.3.1	Ascent	2.3-44
2.3.3.2	Coasting Flight (Earth Orbital)	2.3-45
2.3.3.3	Powered Flight (Earth Orbital)	2.3-48
2.3.3.4	Entry	2.3-51
2.3.4	Major Component/Subsystem Description	2.3-53
2.3.4.1	Rate Gyro Assembly	2.3-53
2.3.4.2	Attitude Gyro Accelerometer Assembly	2.3-54
2.3.4.3	Pitch, Roll, and Yaw Electronic Control Assemblies	2.3-55
2.3.4.4	Auxiliary Electronic Control Assembly	2.3-56
2.3.4.5	Display and Attitude Gyro Accelerometer Assembly Electronic Control Assembly	2.3-56
2.3.4.6	Rotation Controls	2.3-57
2.3.4.7	Translation Controls	2.3-57
2.3.4.8	Flight Director Attitude Indicator	2.3-61
2.3.4.9	Attitude Set/Gimbal Position Indicator	2.3-65
2.3.4.10	Velocity Change Indicator	2.3-66
2.3.4.11	Electrical Power Distribution	2.3-67
2.3.5	Performance and Design Data	2.3-67
2.3.6	Operational Limitations and Restrictions	2.3-67
2.3.6.1	S/C Attitude Change	2.3-67
2.3.7	Telemetry Measurements	2.3-71
2.4	Service Propulsion System (SPS)	2.4-1
2.4.1	Functional Description	2.4-1
2.4.2	Major Component/Subsystem Description	2.4-2
2.4.2.1	Pressurization Subsystem	2.4-2
2.4.2.2	Propellant Subsystem	2.4-6
2.4.2.3	Bipropellant Valve Assembly	2.4-7
2.4.2.4	Engine Injector	2.4-9
2.4.2.5	Ablative Combustion Chamber	2.4-9
2.4.2.6	Nozzle Extension	2.4-9
2.4.2.7	Flight Combustion Stability Monitor (FCSM)	2.4-9
2.4.2.8	SPS Electrical Heaters	2.4-11
2.4.2.9	Thrust Mount Assemblies	2.4-11
2.4.2.10	Propellant Utilization and Gauging Subsystem (PUGS)	2.4-18
2.4.3	Performance and Design Data	2.4-30

Section	Title	Page
2.4.3.1	Design Data	2.4-30
2.4.3.2	Performance Data	2.4-33
2.4.3.3	Power Consumption Data	2.4-33
2.4.3.4	SPS Electrical Power Distribution	2.4-35
2.4.4	Operational Limitations and Restrictions	2.4-35
2.4.5	Telemetry Measurements	2.4-35
2.5	Reaction Control System (RCS)	2.5-1
2.5.1	Introduction	2.5-1
2.5.2	S/M RCS Functional Description	2.5-1
2.5.3	S/M RCS Major Component/Subsystem Description	2.5-4
2.5.3.1	Pressurization Subsystem	2.5-7
2.5.3.2	Propellant Subsystem	2.5-3
2.5.3.3	Engine Assemblies	2.5-9
2.5.3.4	Pressure Versus Temperature Measuring System	2.5-13
2.5.3.5	Engine Thrusting Logic	2.5-15
2.5.4	S/M RCS Performance and Design Data	2.5-16
2.5.4.1	Design Data	2.5-16
2.5.4.2	Performance Data	2.5-18
2.5.4.3	Power Consumption Data S/M RCS and C/M RCS	2.5-18
2.5.4.4	S/M RCS Electrical Power Distribution	2.5-19
2.5.5	S/M RCS Operational Limitations and Restrictions	2.5-19
2.5.6	S/M RCS Telemetry Measurements	2.5-19
2.5.7	C/M RCS Functional Description	2.5-23
2.5.8	C/M RCS Major Components/Subsystem Description	2.5-24
2.5.8.1	Pressurization Subsystem	2.5-27
2.5.8.2	Propellant Subsystem	2.5-28
2.5.8.3	Engine Assembly	2.5-30
2.5.8.4	Propellant Jettison	2.5-34
2.5.9	C/M RCS Performance and Design Data	2.5-39
2.5.9.1	Design Data	2.5-39
2.5.9.2	Performance Data	2.5-41
2.5.9.3	Power Consumption Data	2.5-41
2.5.10	C/M RCS Operational Limitations and Restrictions	2.5-41
2.5.10.1	C/M RCS Electrical Power Distribution	2.5-41
2.5.11	C/M RCS Telemetry Measurements	2.5-41
2.6	Electrical Power System (EPS)	2.6-1
2.6.1	Introduction	2.6-1
2.6.2	Functional Description	2.6-1
2.6.2.1	Energy Storage	2.6-1
2.6.2.2	Power Generation	2.6-2
2.6.2.3	Power Conversion	2.6-2
2.6.2.4	Power Distribution	2.6-2
2.6.3	Major Component/Subsystem Description	2.6-5
2.6.3.1	Cryogenic Storage	2.6-5
2.6.3.2	Batteries	2.6-6
2.6.3.3	Fuel Cell Power Plants	2.6-12
2.6.3.4	Inverters	2.6-17

Section	Title	Page
2.6.3.5	Battery Charger	2.6-22
2.6.3.6	Power Distribution	2.6-25
2.6.4	Performance and Design Data	2.6-30
2.6.4.1	AC and DC Data	2.6-30
2.6.4.2	Power Requirements	2.6-34
2.6.5	Operational Limitations and Restrictions	2.6-36
2.6.5.1	Fuel Cell Power Plants	2.6-36
2.6.5.2	Cryogenic Storage Subsystem	2.6-38
2.6.6	Telemetry Measurements	2.6-39
2.7	Environmental Control System (ECS)	2.7-1
2.7.1	Introduction	2.7-1
2.7.2	Functional Description	2.7-2
2.7.3	Major Component/Subsystem Description	2.7-3
2.7.3.1	Oxygen Supply Subsystem	2.7-3
2.7.3.2	Pressure Suit Circuit Subsystem	2.7-7
2.7.3.3	Cabin Pressure and Temperature Control Subsystem	2.7-13
2.7.3.4	Water-Glycol Coolant Subsystem	2.7-17
2.7.3.5	Water Supply Subsystem	2.7-24
2.7.3.6	ECS-Waste Management System Interface	2.7-26
2.7.3.7	Electrical Power Distribution	2.7-28
2.7.4	Performance and Design Data	2.7-31
2.7.4.1	Metabolic Data	2.7-31
2.7.4.2	Oxygen Supply Subsystem	2.7-31
2.7.4.3	Pressure Suit Circuit Subsystem	2.7-32
2.7.4.4	Cabin Pressure and Temperature Control Subsystem	2.7-32
2.7.4.5	Water-Glycol Coolant Subsystem	2.7-32
2.7.4.6	Water Supply Subsystem	2.7-33
2.7.4.7	Waste Management System	2.7-33
2.7.4.8	ECS Power Consumption Data	2.7-33
2.7.5	Operational Limitations and Restrictions	2.7-38
2.7.5.1	ECS Caution Placards	2.7-38
2.7.5.2	ECS Caution Notes	2.7-38
2.7.5.3	ECS General Data	2.7-39
2.7.5.4	Cabin Depressurization Rates	2.7-39
2.7.5.5	Cabin Repressurization Rates	2.7-39
2.7.6	Telemetry Measurements	2.7-44
2.8	Telecommunication System	2.8-1
2.8.1	Introduction	2.8-1
2.8.2	Functional Description	2.8-2
2.8.2.1	Voice Communications	2.8-2
2.8.2.2	Data Operations	2.8-6
2.8.2.3	Tracking and Ranging	2.8-10
2.8.2.4	Unified S-Band Operations	2.8-12
2.8.3	Major Component/Subsystem Description	2.8-13
2.8.3.1	Instrumentation Equipment Group	2.8-14
2.8.3.2	Voice and Data Equipment Group	2.8-17

Section	Title	Page
2.8.3.3	RF Electronics Equipment Group	2.8-42
2.8.3.4	Antenna Equipment Group	2.8-57
2.8.3.5	Electrical Power Distribution	2.8-62
2.8.4	Performance and Design Data	2.8-62
2.8.5	Operational Limitations and Restrictions	2.8-67
2.8.5.1	Antennas	2.8-67
2.8.5.2	Data Storage Equipment	2.8-67
2.8.5.3	Unified S-Band System	2.8-68
2.8.5.4	General	2.8-68
2.8.6	Telemetry Measurements	2.8-69
2.9	Sequential Systems	2.9-1
2.9.1	Introduction	2.9-1
2.9.2	Functional Description	2.9-1
2.9.2.1	Sequential Events Control System (SECS)	2.9-1
2.9.2.2	Emergency Detection System	2.9-4
2.9.2.3	Launch Escape System	2.9-10
2.9.2.4	Earth Landing System	2.9-11
2.9.3	Major Component/Subsystem Description	2.9-14
2.9.3.1	Sequential Events Control System	2.9-14
2.9.3.2	Emergency Detection System	2.9-24
2.9.3.3	Launch Escape System	2.9-32
2.9.3.4	Earth Landing Subsystem	2.9-33
2.9.4	Performance and Design Data	2.9-33
2.9.4.1	Power Requirements	2.9-35
2.9.5	Operational Limitations and Restrictions	2.9-35
2.9.6	Telemetry Measurements	2.9-36
2.10	Caution and Warning System (C&WS)	2.10-1
2.10.1	Introduction	2.10-1
2.10.2	Functional Description	2.10-1
2.10.3	Major Component/Subsystem Description	2.10-3
2.10.3.1	Electrical Power Distribution	2.10-3
2.10.4	Performance and Design Data	2.10-3
2.10.4.1	C&WS Power Consumption Data	2.10-3
2.10.5	Operational Limitations and Restrictions	2.10-3
2.10.5.1	C&WS General Data	2.10-3
2.10.6	Telemetry Measurements	2.10-10
2.11	Miscellaneous Systems Data	2.11-1
2.11.1	Introduction	2.11-1
2.11.2	Clocks	2.11-1
2.11.3	Digital Event Timers	2.11-1
2.11.4	Accelerometer (G-Meter)	2.11-1
2.11.5	Command Module Interior-Lighting	2.11-1
2.11.5.1	Functional Description	2.11-2
2.11.6	Command Module Uprighting System	2.11-2
2.11.6.1	Functional Description	2.11-2
3	CONTROLS AND DISPLAYS	3-1
3.1	Controls/Displays Locator Index	3-3

Section	Title	Page
4	PERFORMANCE	4-1
	Introduction	4-1
4.1	Crew Display Instrument Markings and Accuracy Data	4-1
4.1.1	Service Propulsion System Indicators	4-3
4.1.2	Reaction Control System Indicators	4-4
4.1.3	Electrical Power System Indicators	4-5
4.1.4	Environmental Control System Indicators	4-11
4.1.5	Telecommunication System Meters	4-13
4.1.6	Sequential Systems Indicators	4-15
4.1.7	Miscellaneous Indicators	4-16
4.2	Consumable Requirements	4-18
4.2.1	S/M RCS Propellant Consumption Data	4-18
4.2.2	C/M RCS Propellant Consumption Data	4-25
4.2.3	SPS Propellant Consumption Data	4-27
4.2.4	EPS and ECS Consumption Data	4-30
4.3	RCS and SPS Thrusting Data	4-34
4.3.1	RCS Translation Control	4-34
4.3.2	RCS Rotation Control	4-34
4.3.3	SPS Engine Thrust Performance	4-39
4.4	S/C Operational Constraints and Limitations	4-39
4.4.1	Operational Constraints	4-39
4.4.2	Operational Limitations	4-43
5	EXPERIMENTS AND SCIENTIFIC EQUIPMENT DATA	5-1
	Introduction	5-1
5.1	Scientific Equipment	5-1
5.1.1	Medical Data Acquisition System (MDAS)	5-1
5.1.2	Electrical Cables and Adapters	5-1
5.1.2.1	Octopus Cable	5-5
5.1.2.2	Cobra Cable T-Adapter	5-5
5.1.2.3	PGA and CWG Electrical Adapter Cables	5-7
5.1.2.4	Hardware Power and Signal Cables	5-7
5.2	Medical Experiments	5-7
5.2.1	In-Flight Exerciser (M-3A) (M003)	5-7
5.2.1.1	Equipment Description	5-7
5.2.1.2	Experiment Procedures	5-9
5.2.1.3	Crewman Participation	5-10
5.2.1.4	Recovery Requirements	5-10
5.2.2	In-Flight Phonocardiogram (M-4A) (M004)	5-10
5.2.2.1	Equipment Description	5-10
5.2.2.2	Experiment Procedures	5-11
5.2.2.3	Crewman Participation	5-11
5.2.2.4	Recovery Requirements	5-11
5.2.3	Bone Demineralization (M-6A) (M006)	5-11

Section		Title	Page
	5.2.3.1	Equipment Description	5-11
	5.2.3.2	Experiment Procedures	5-11
	5.2.3.3	Crewman Participation	5-12
	5.2.3.4	Recovery Requirements	5-12
	5.2.4	Human Otolith Function (Vestibular Effects) (M-9A) (M009)	5-12
	5.2.4.1	Equipment Description	5-12
	5.2.4.2	Experiment Procedures	5-12
	5.2.4.3	Crewman Participation	5-13
	5.2.4.4	Recovery Requirements	5-13
	5.2.5	Cytogenetic Blood Studies (M-11) (M011)	5-13
	5.2.5.1	Equipment Description	5-13
	5.2.5.2	Equipment Procedures	5-13
	5.2.5.3	Crewman Participation	5-14
	5.2.5.4	Recovery Operations	5-14
	5.2.6	Cardiovascular Reflex Conditioning (M-48) (M048)	5-14
	5.2.6.1	Equipment Description	5-14
	5.2.6.2	Experiment Procedures	5-15
	5.2.6.3	Crewman Participation	5-15
	5.2.6.4	Recovery Requirements	5-15
	5.3	Scientific Experiments	5-16
	5.3.1	Synoptic Terrain Photograph (S-5A) (S005)	5-16
	5.3.1.1	Equipment Description	5-16
	5.3.1.2	Experiment Procedures	5-16
	5.3.1.3	Crewman Participation	5-16
	5.3.1.4	Recovery Requirements	5-17
	5.3.2	Synoptic Weather Photography (S-6A) (S006)	5-17
	5.3.2.1	Equipment Description	5-17
	5.3.2.2	Experiment Procedures	5-17
	5.3.2.3	Crewman Participation	5-17
	5.3.2.4	Recovery Requirements	5-17
	5.4	Technical Experiments	5-18
	5.4.1	In-Flight Nephelometer (T-3) (T003)	5-18
	5.4.1.1	Equipment Description	5-18
	5.4.1.2	Experiment Procedures	5-18
	5.4.1.3	Crewman Participation	5-18
	5.4.1.4	Recovery Requirements	5-19
6	CREW PERSONAL EQUIPMENT		6-1
		Introduction	6-1
	6.1	Crew Compartment Configuration and Crew Environment	6-1
	6.2	Mirrors	6-2
	6.2.1	Internal Viewing Mirrors (CFE)	6-2
	6.2.2	External Viewing Mirrors (CFE)	6-3
	6.3	Crewman Optical Alignment Sight (COAS)	6-4
	6.3.1	Operational Use	6-5

Section	Title	Page
6.4	Space Suit Assembly (GFP)	6-6
6.4.1	Space Suit Off or Shirtsleeve Environment	6-6
6.4.1.1	Constant Wear Garment	6-6
6.4.1.2	Flight Coveralls	6-6
6.4.1.3	Communications Soft Hat	6-7
6.4.1.4	Constant Wear Garment Electrical Adapter	6-8
6.4.1.5	Electrical Umbilical "Sleep" Adapter	6-9
6.4.2	Space Suit On Environment	6-9
6.4.2.1	PGA Unpressurized or Ventilated	6-9
6.4.2.2	PGA Pressurized	6-9
6.4.3	PGA Description	6-9
6.4.3.1	PGA Components	6-9
6.5	PGA Stowage	6-12
6.5.1	Torso and Glove Stowage	6-12
6.5.2	Helmet Stowage	6-12
6.6	PGA Connecting Equipment	6-13
6.6.1	Pressure Garment Assembly (PGA) Electrical Adapter (GFP)	6-13
6.6.2	Oxygen Hose (Umbilical) (GFP)	6-13
6.7	Crew Couches	6-13
6.7.1	Crew Couch Structure	6-14
6.7.2	Crew Couch Positions	6-15
6.7.2.1	Occupied Positions	6-15
6.7.2.2	Unoccupied Positions	6-16
6.7.3	Crew Couch Component Description	6-17
6.7.3.1	Headrest	6-17
6.7.3.2	Backrest	6-18
6.7.3.3	Armrests	6-18
6.7.3.4	Seat Pan and Footrest	6-18
6.7.3.5	Crew Couch Pads	6-19
6.7.4	Mechanical Adjustments	6-19
6.7.4.1	Headrest Adjustments	6-19
6.7.4.2	Armrest Adjustments	6-19
6.7.4.3	Seat Pan Adjustment Directions	6-21
6.7.4.4	Footrest and Footstrap Adjustments	6-22
6.7.4.5	D-Ring Handle Extension	6-22
6.7.4.6	Docking Position Adjustment	6-22
6.7.4.7	Shoulder Strap Adjustment	6-23
6.8	Crewman Restraints	6-23
6.8.1	High G-Load Restraints	6-23
6.8.1.1	Crewman Restraint Harness	6-23
6.8.1.2	Weightless Restraint	6-24
6.8.1.3	Guidance and Navigation Station Restraint	6-25
6.8.1.4	Crewman Sleeping Restraints	6-26
6.9	Flight Data File (GFP)	6-27
6.9.1	Commander's Flight Data File	6-28
6.9.2	Senior Pilot's Flight Data File	6-28
6.9.3	Pilot's Flight Data File	6-29

Section	Title	Page
6.10	Crewman In-Flight Tool Set and Workshelf (GFB)	6-30
6.10.1	Torque Wrench (Tool A)	6-31
6.10.2	Adapter Handle (Tool E)	6-31
6.10.3	10-Inch Driver (Tool H)	6-31
6.10.4	4-Inch Driver (Tool L)	6-31
6.10.5	Emergency Wrench (Tool B)	6-31
6.10.6	T-Handle (Tool C)	6-32
6.10.7	End Wrench (Tool F) (2)	6-32
6.10.8	5/32-Inch Short Driver (Tool J)	6-32
6.10.9	4-Inch Torque Set Driver (Tool R)	6-32
6.10.10	In-Flight Tool Set Tether	6-32
6.10.11	D-Ring Extension Handle (Tool N)	6-32
6.10.12	Operational Use	6-32
6.10.13	Stowage	6-32
6.10.13.1	In-Flight Tool Set Stowage Pouch and Tool Set Drawer	6-35
6.10.13.2	Miscellaneous Stowage	6-35
6.10.14	Workshelf Assembly	6-35
6.10.14.1	Usage	6-36
6.11	Drinking Water Subsystem	6-37
6.12	Food	6-38
6.12.1	Use	6-38
6.12.2	Stowage	6-38
6.12.2.1	LEB Food Stowage Compartment	6-38
6.12.2.2	RHEB Auxiliary Food Compartment Drawer	6-39
6.12.2.3	LHEB Food Stowage Compartment	6-39
6.13	Personal Hygiene (GFP)	6-39
6.13.1	Cleansing of Teeth-Oral Hygiene Assembly	6-39
6.13.2	Wet Cleansing Cloth	6-40
6.13.3	Dry Cleaning Cloth	6-40
6.13.4	Towels	6-41
6.13.5	Tissue Dispensers	6-41
6.14	Medical Supplies (GFP)	6-41
6.14.1	Monitoring Equipment	6-41
6.14.1.1	Clinical Physiological Monitoring Instrument Set	6-41
6.14.1.2	Personal Biomedical Sensors Instrument Assembly	6-42
6.14.1.3	Biomedical Preamplifier Instrument Assembly	6-42
6.14.1.4	Bioinstrumentation Accessories Kit	6-42
6.14.1.5	Personal Radiation Dosimeters	6-43
6.14.2	Medical Kit (GFP)	6-43
6.14.2.1	Packaging	6-44
6.14.2.2	Stowage	6-44
6.14.2.3	Medical Kit Additional Usage	6-44
6.15	Survival Kit (GFP)	6-44
6.15.1	Stowage	6-44
6.15.2	Survival Kit Container Operation	6-46
6.15.3	Contents of the Survival Kits	6-46

Section	Title	Page
6.15.4	Description and Use of Survival Kit Components	6-47
6.15.4.1	Liferafts	6-47
6.15.4.2	Beacon/Transceiver	6-47
6.15.4.3	Survival Lights (2)	6-48
6.15.4.4	Survival Glasses (3)	6-48
6.15.4.5	Survival Knives (2)	6-49
6.15.4.6	Water Cans (3)	6-49
6.15.4.7	Desalting Kits (2) Plus Tablets (16)	6-49
6.15.4.8	Emergency Medical Survival Kit	6-49
6.15.5	Sea Water Pump (CFE)	6-49
6.16	Stowage	6-50
7	SYSTEM SCHEMATICS	7-1

SECTION 1

GENERAL INFORMATION

INTRODUCTION.

This section contains information relating to the Apollo spacecraft 012 configuration, and a description of the launch vehicle and booster used for the mission.

1.1 SPACECRAFT 012 CONFIGURATION.

Spacecraft 012 (figure 1-1) conforms to a Block I CSM configuration consisting of a launch escape system (LES) assembly, command module (C/M), service module (S/M), and the spacecraft lunar excursion module adapter (SLA). This spacecraft, designed for an earth orbital mission, does not contain a lunar module (LM) within its adapter. (For a description of the launch vehicle used with spacecraft 012, refer to paragraph 1.2)

NOTE The Block I configuration missions for the Apollo program provide the following:

- Command module and service module development for earth orbital missions
- Demonstration of systems operational capabilities including all types of aborts, land and water recovery, Saturn IB and Saturn V operation and capability, and systems operation during earth orbit
- Development of qualified teams for checkout, launch, manned space flight network (MSFN), recovery, and flight analysis.

1.1.1 LES ASSEMBLY.

The LES assembly (figure 1-1) provides the means for separating the C/M from the launch vehicle during pad or suborbital aborts. This assembly consists of a Q-ball instrumentation assembly (nose cone), ballast compartment, canard surfaces, pitch control motor, tower jettison motor, launch escape motor, a structural skirt, an open-frame tower, and a boost protective cover (BPC). The structural skirt at the base of the housing, which encloses the rocket motors, is secured to the upper portion of the tower.

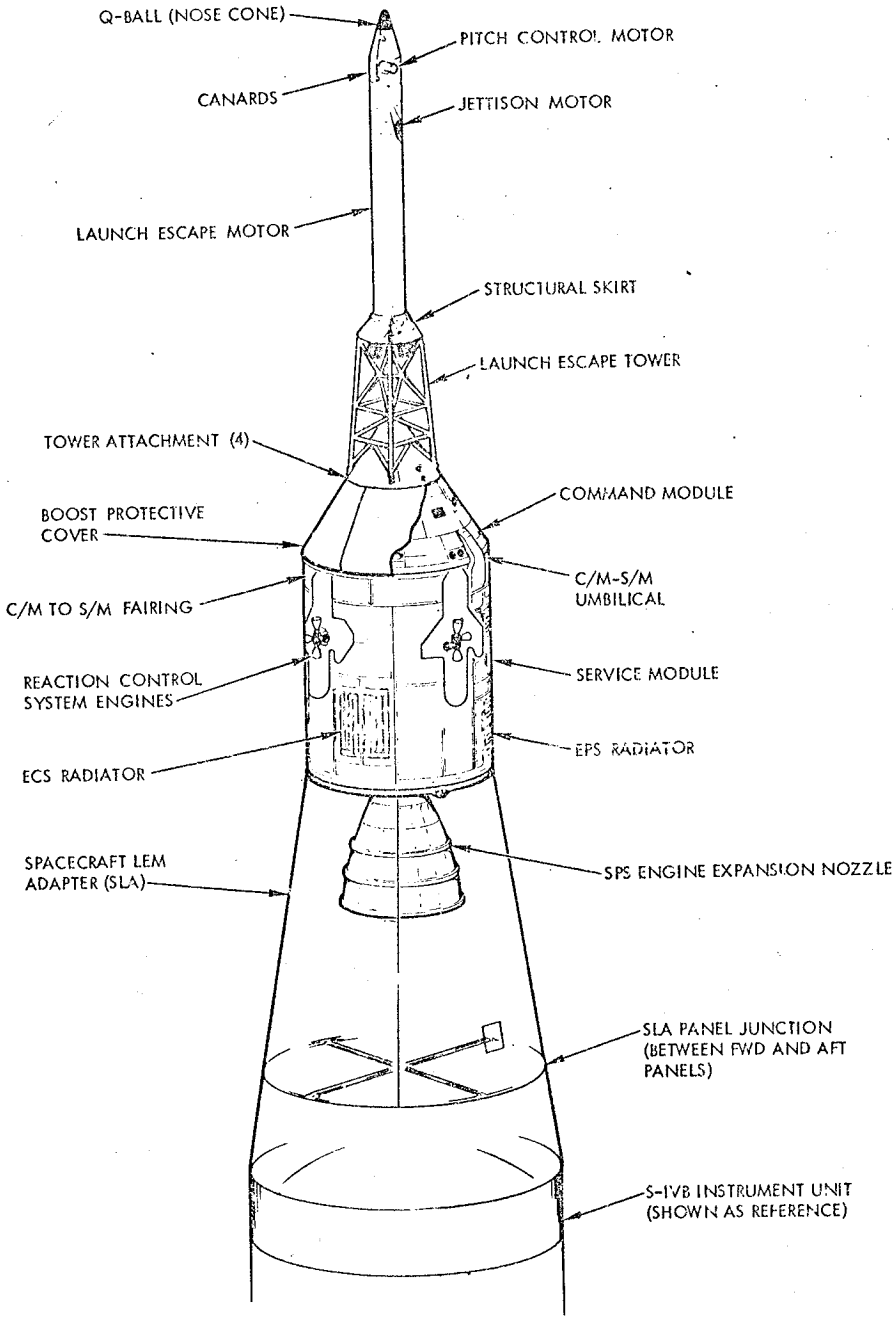

Figure 1-1. Spacecraft 012 Configuration (Sheet 1 of 2)

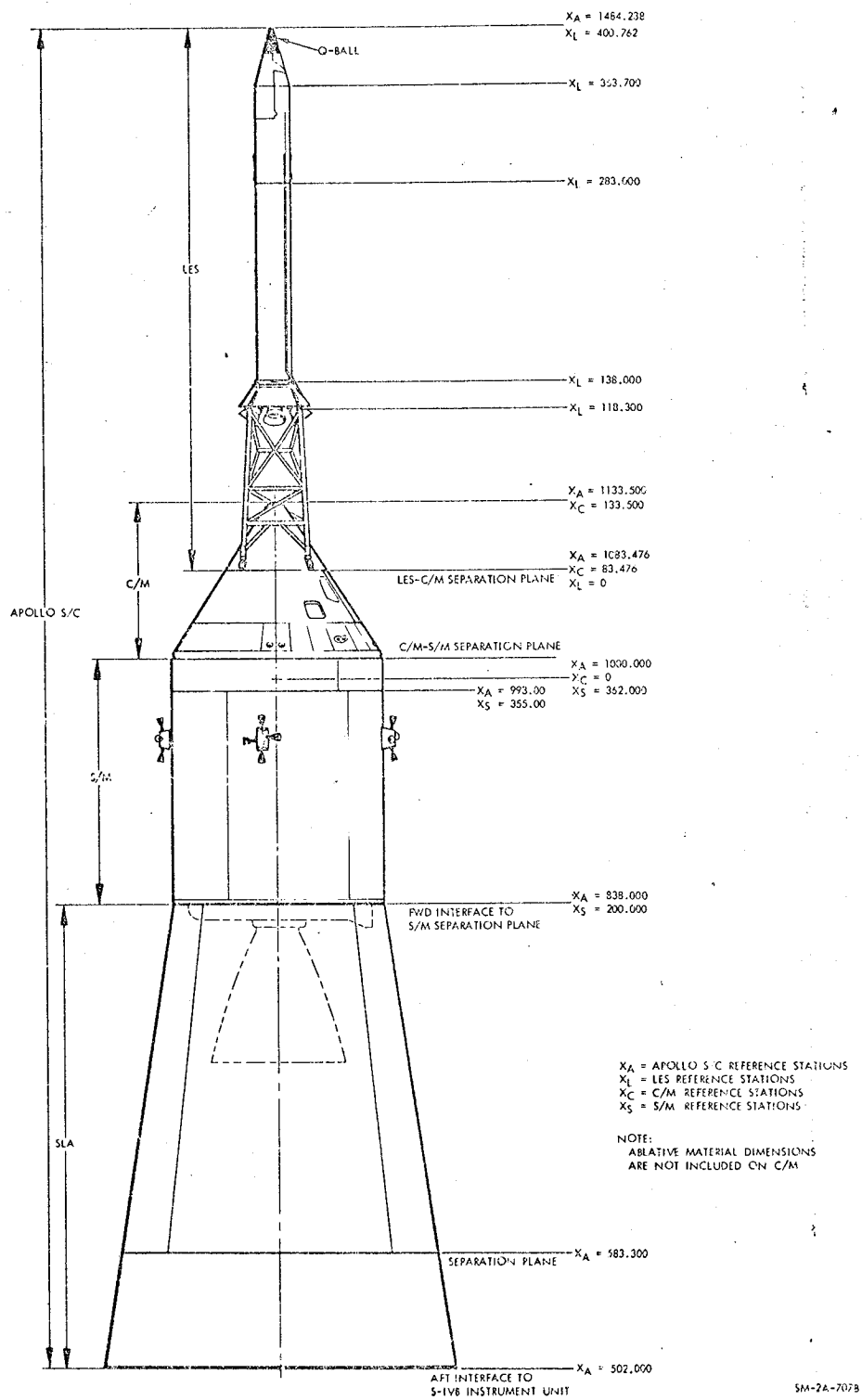

Figure 1-1. Spacecraft 012 Configuration (Sheet 2 of 2)

The BPC (figure 1-2) is attached to the lower end of the tower to protect the C/M from thermal heat during boost and from exhaust damage by the launch escape and tower jettison motors. Explosive nuts, one in each tower well leg, secure the tower to the C/M structure. (For additional information, refer to the sequential systems in section 2.)

1.1.2 COMMAND MODULE.

The C/M (figure 1-3) forms the spacecraft control center, contains necessary automatic and manual equipment to control and monitor the spacecraft systems, and contains the required equipment for safety and conform of the crew. The module is an irregular-shaped, primary structure encompassed by three heat shields (coated with ablative material and joined or fastened to the primary structure) forming a conical-exterior shape. The C/M consists of a forward compartment, a crew compartment, and an aft compartment.

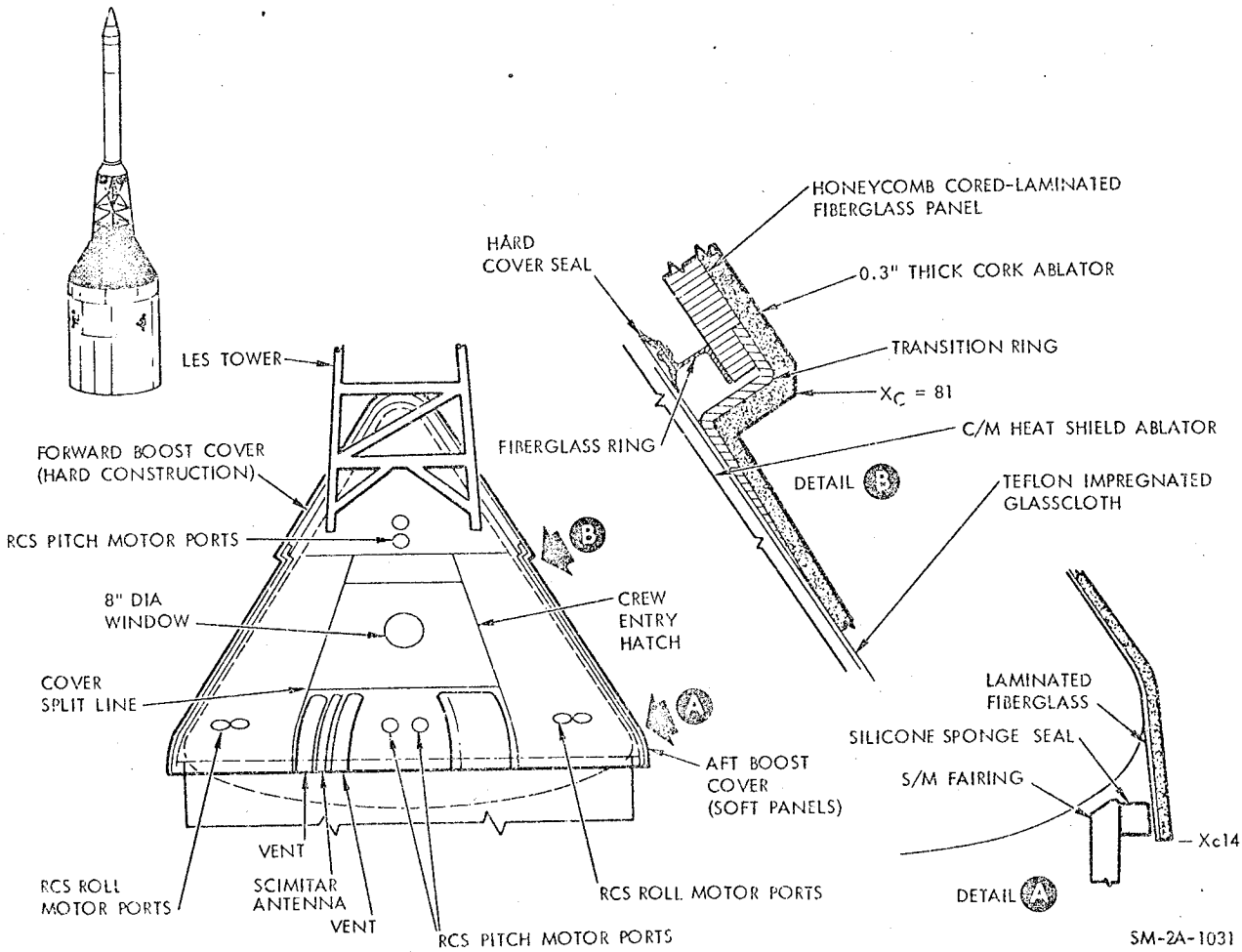

Figure 1-2. Boost Protective Cover

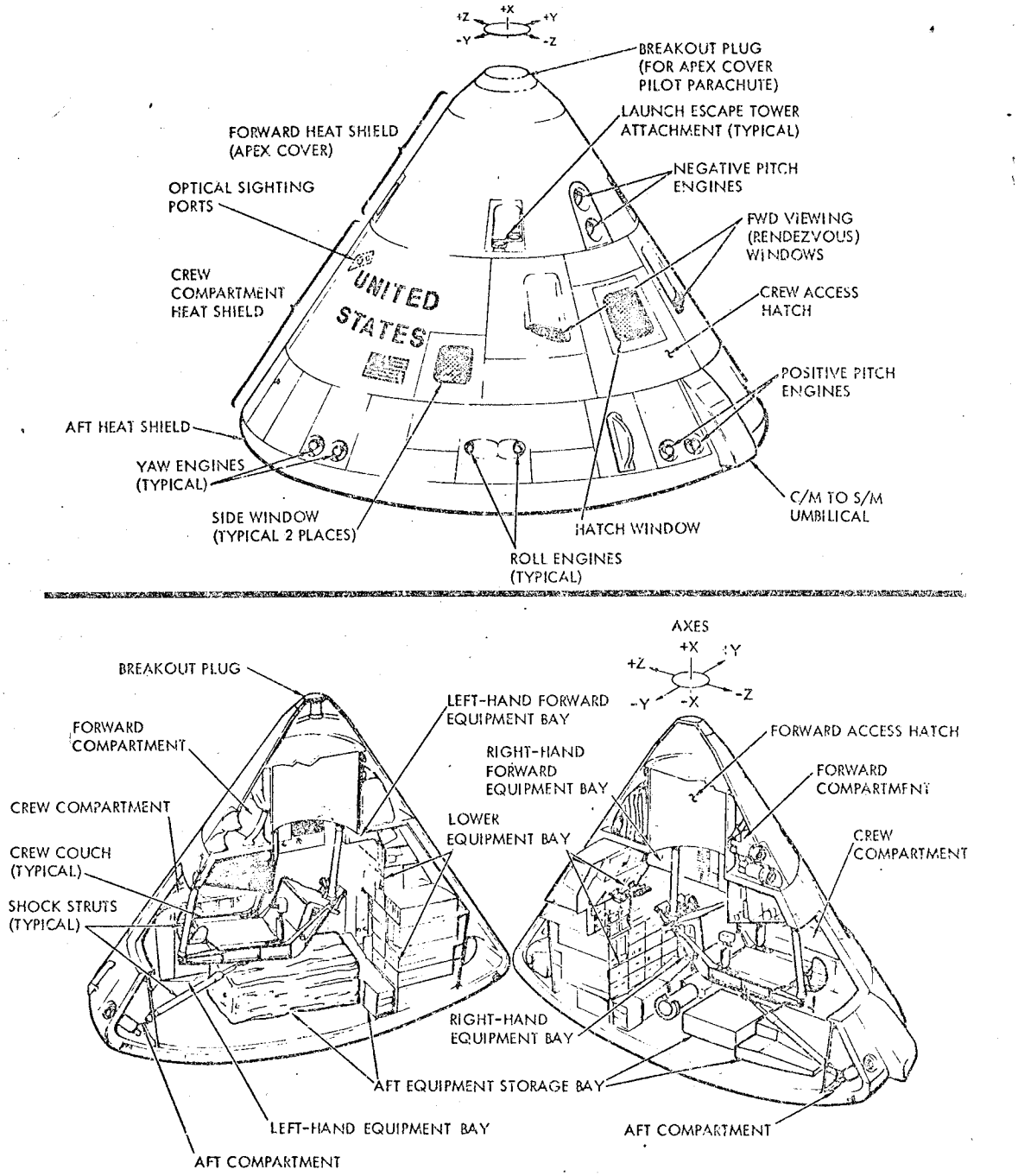

Figure 1-3. Spacecraft 012 Command Module

1.1.2.1 Forward Compartment.

The forward compartment (figure 1-3) is the area outside the forward access tunnel, forward of the crew compartment forward bulkhead and is covered by the forward heat shield. Four 90-degree segments around the perimeter of the tunnel contain the recovery equipment, two negative-pitch reaction control system engines, and the forward heat shield release mechanism. Most of the equipment in the forward compartment consists of earth landing (recovery) system components.

The forward heat shield, or apex cover, is made of brazed stainless-steel honeycomb and covered with ablative material. It contains four recessed fittings which permit the launch escape tower to be attached to the C/M inner structure. Jettison thrusters separate the apex cover from the C/M after entry or after the launch escape assembly is separated during an abort. (For additional information, refer to the sequential systems in section 2.)

1.1.2.2 Crew Compartment.

The crew compartment or inner structure (figure 1-3) is a sealed cabin with pressurization maintained by the environmental control system (ECS). The compartment, protected by a heat shield, contains controls and displays for operation of the spacecraft and spacecraft systems; contains mechanical adjustments for the crew couches, restraint harness assemblies, hatch covers, window shades, etc.; and is provided with crew equipment, food and water, waste management provisions, survival equipment, and scientific experiments equipment. Access hatches, observation windows, and equipment bays are attached as part of the compartment structure.

The crew compartment heat shield, like the apex cover, is made of brazed stainless-steel honeycomb and covered with ablative material. This heat shield, or outer structure, contains the S/C umbilical connector outlet, ablative plugs, and a copper heat sink for the optical sighting ports in the lower equipment bay, two side observation windows, two forward viewing windows, and the outer cover for the side access hatch which also contains an observation window.

1.1.2.3 S/C Controls and Displays.

Information relating to controls and displays for operation of the spacecraft and its systems is provided in section 3.

1.1.2.4 C/M Mechanical Controls.

Mechanical controls (figure 1-4) are provided in the crew compartment for manual operation of the crew couch assembly, side access hatch covers, forward access hatch cover, and manual override levers for the

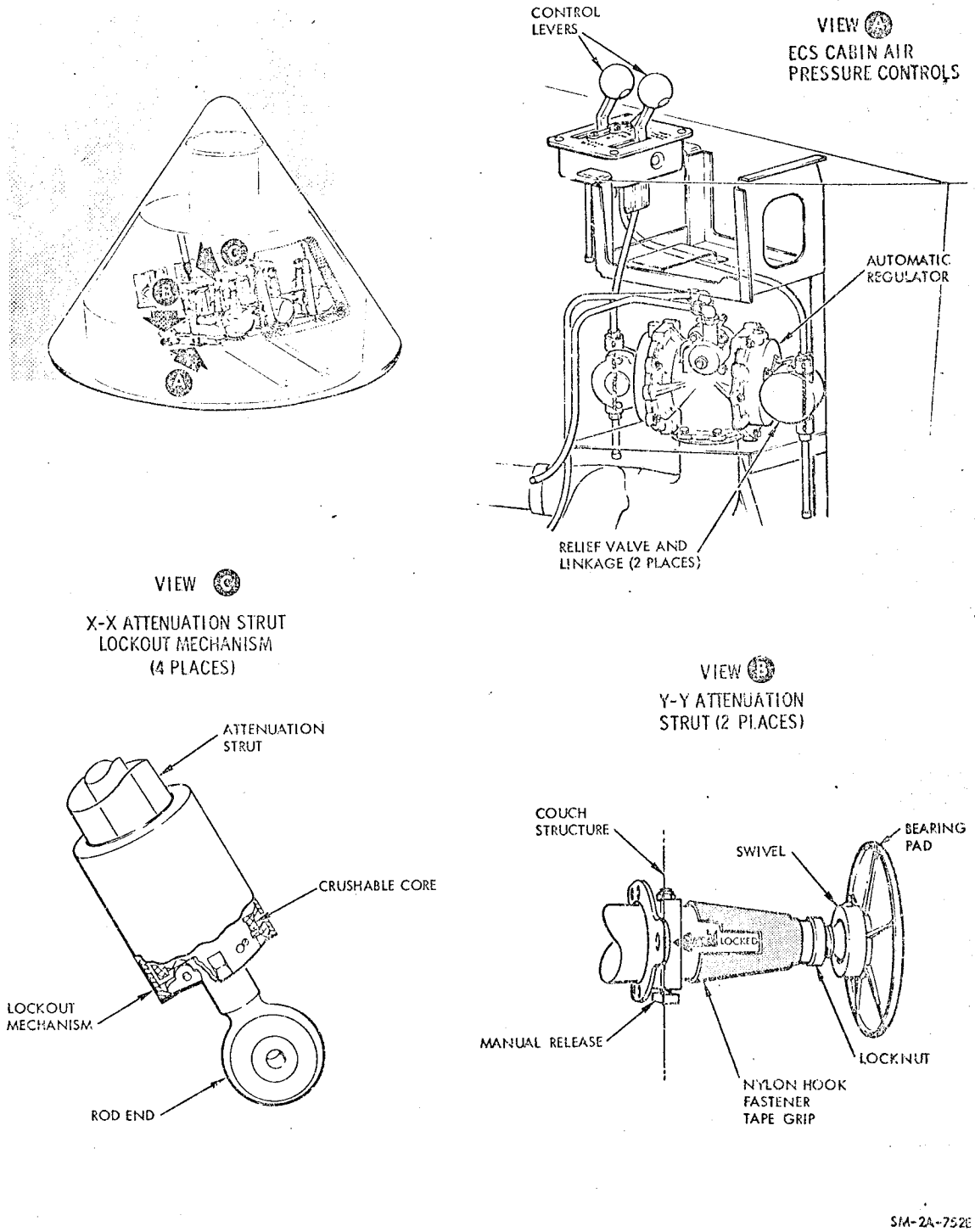

Figure 1-4. C/M Mechanical Controls (Sheet 1 of 3)

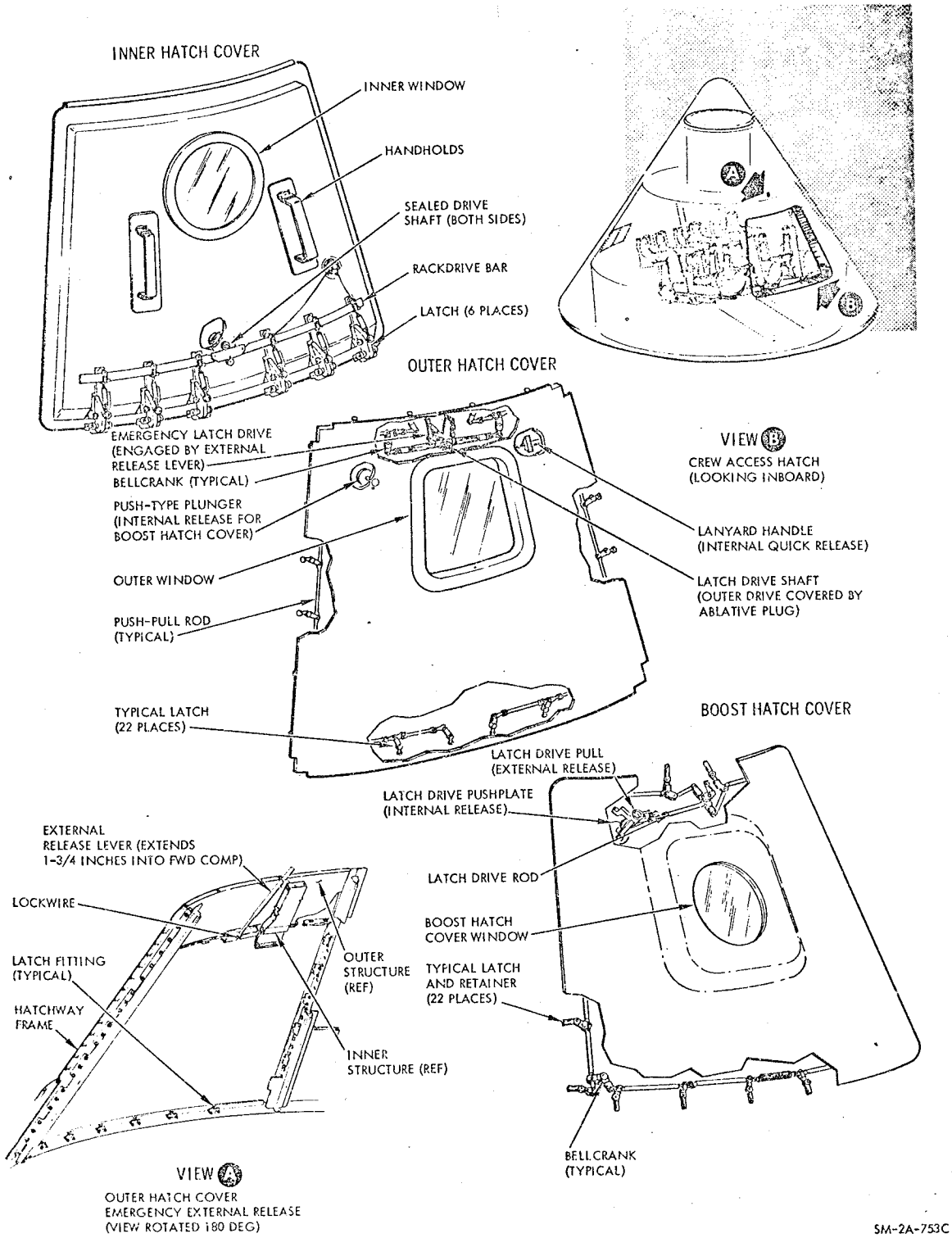

Figure 1-4. C/M Mechanical Controls (Sheet 2 of 3)

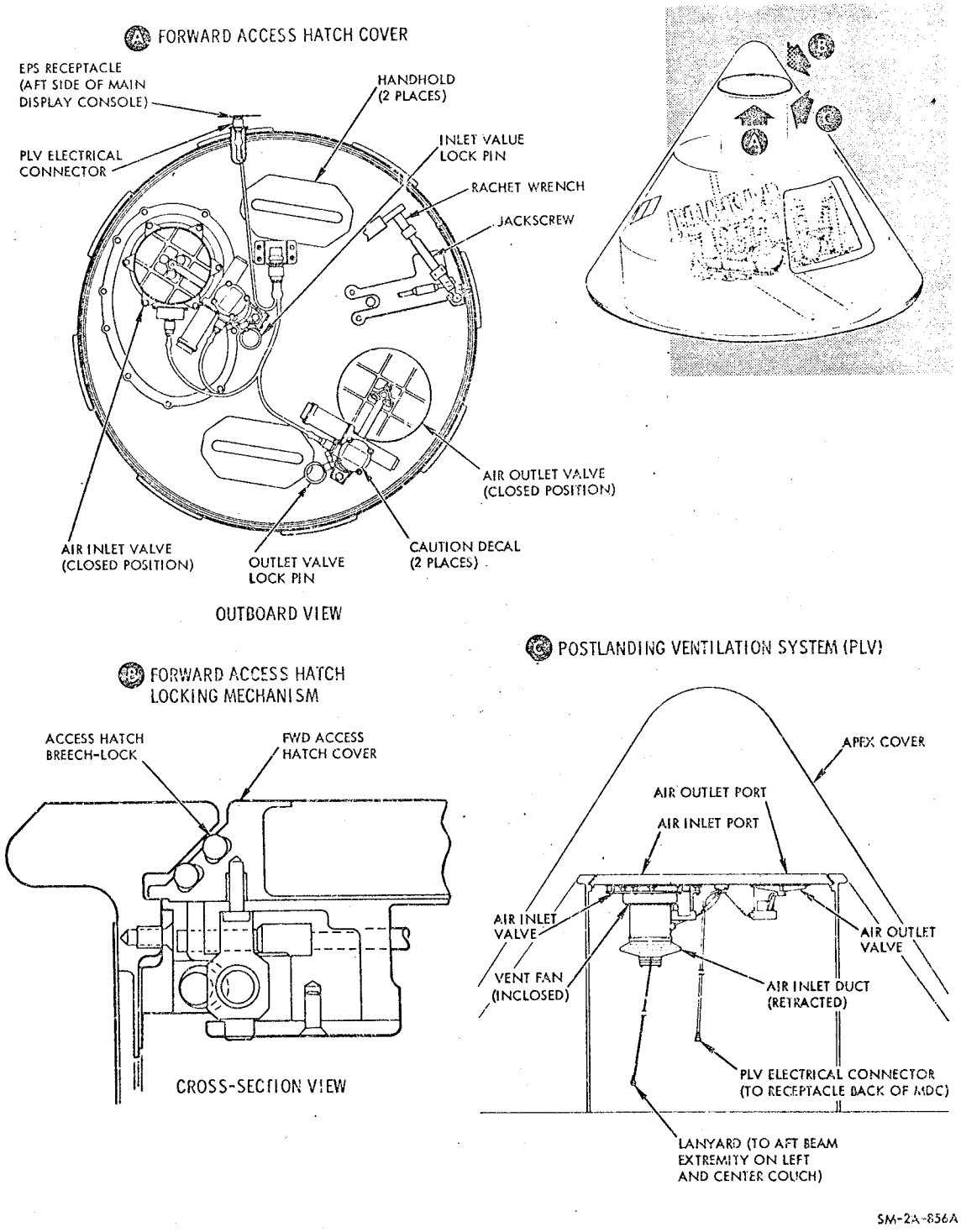

Figure 1-4. C/M Mechanical Controls (Sheet 3 of 3)

ECS cabin pressure regulator. Tools for opening or securing the hatch covers are in the stowage area under the work table in the lower equipment bay; the tools are components of the in-flight tool kit.

1.1.2.4.1 Crew Couch Controls.

Crew couch manual controls for each headrest, armrest, and seat pan assembly are provided for individual crew comfort. The crew couch assembly can also be manually adjusted for crew positioning during simulated docking maneuvers, crew convenience in getting in and out of the couches, and crew access to all equipment bays in the C/M. (For additional information, refer to crew couch assembly in section 6.)

1.1.2.4.2 Couch Attenuation Struts.

Eight attenuation struts are provided for connecting the crew couches to the C/M inner structure. (See figure 1-5.) Each strut is capable of absorbing energy at a predetermined rate through crushable aluminum

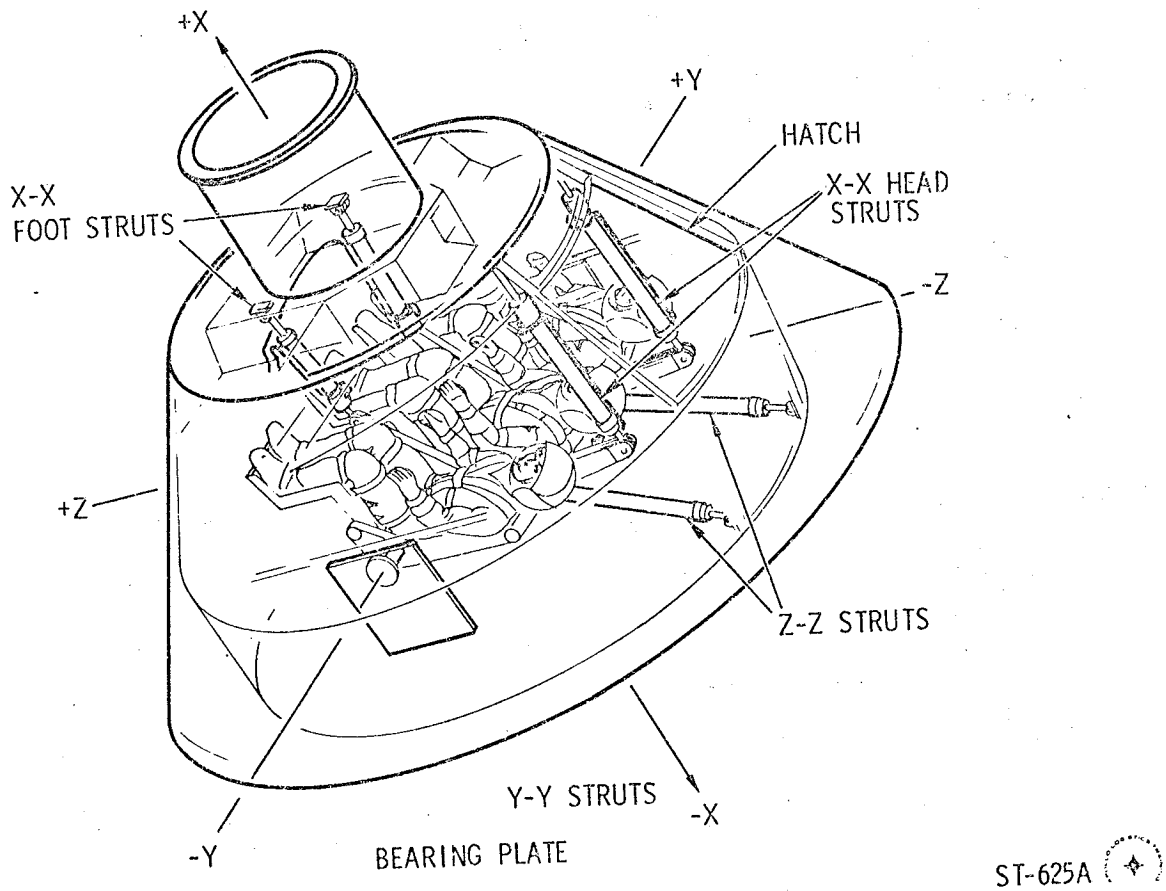

Figure 1-5. Internal Attenuation System

honeycomb cores contained within the strut cylinders. In effect, the strut piston action during C/M impact absorbs energy that the crew is not capable of absorbing.

Two Y-Y axis struts are located at the outer extremities of the couch assembly at the hip beam. The cylinder end of each strut is firmly attached to the unitized couch while the piston end, containing a flat circular foot, reacts against a flat bearing plate (attenuation panel) attached to the structure.

Two Z-Z axis struts are attached to the main couch beams under the unitized backrest and the aft bulkhead of the structure, just below the side access hatch. In addition to the crushable cores within the struts, friction brake snubbers are provided on the end of the pistons for additional breaking action. During a compression stroke or initial tension load, these friction brakes act in conjunction with the inner pistons which simultaneously crush the cylinder inner cores. Additional tension loads are absorbed by a combination of the outer and inner friction mechanisms which continue the crushing action of the cylinder cores.

Four X-X axis struts are attached to the forward C/M structure and the beam extremities of the couch. These struts, except for the addition of lockout mechanisms, are basically the same as the Z-Z axis struts. A lockout mechanism, is provided on each strut to prevent any strut attenuation prior to impact (during normal mission flight loads). Upon impact the honeycomb core will be crushed, allowing the piston rod to stroke.

1.1.2.4.3 Crew Access Hatch Covers.

The C/M crew access hatch is provided with three covers (inner, outer, and boost) and the necessary latching mechanisms for securing the covers to the C/M. (See figure 1-4.) Latches for these covers can be manually operated from either side of the hatch by a removable handcrank or torque wrench with a 7/16-inch drive. The inner cover is equipped with a sealed drive, a rack-drive bar, and six latches which engage fittings on the C/M inner structure (to preload the hatch for sealing). The outer cover is equipped with bellcranks, rollers, and push-pull rods, an overcenter lock, and 22 latches which engage fittings on the C/M outer structure. An ablative screw-in plug is used to protect the outer driver shaft in the outer hatch cover. This plug must be removed before a handcrank can be inserted into the drive shaft from outside the C/M. An emergency latch release is also provided for the outer hatch cover, but can only be operated by personnel outside the C/M during recovery procedures. The boost hatch cover is also equipped with mechanical components (including 22 latches) for installing it flush with the boost protective cover. This hatch cover makes it possible for the crew to get in and out of the S/C during prelaunch operations. A ground support tool (G15-824105 handle) is used to remove (pull) the boost cover from the outside the C/M. A plunger on the inside of the outer hatch engages a latch drive push-plate to release the boost hatch cover from inside the C/M.

1.1.2.4.4 Forward Access Hatch Cover

The C/M forward access hatch is provided with a cover that can be operated from either the inside or outside the crew compartment. (Outside operation is possible only after the launch escape system, boost protective cover, and forward heat shield have been jettisoned. (See figure 1-4.) A breech-lock method is used to engage and rotate the cover in the forward end of the tunnel ring. The internal pressure of the C/M will assist to seal the hatch cover by forcing it against its seat. A jackscrew (with a hex

socket at one end) is mounted on the cover and will bear against a bracket on the tunnel wall. When turned by a handcrank or torque wrench with a 5/32-inch drive, the jackscrew will intend and allow the cover to be rotated and removed. The cover is rotated by use of the inside handholds or the outside by an item of GSE and can only be retrieved from within the crew compartment end of the tunnel.

1.1.2.4.5 Windows and Shades.

Five windows are provided through the inner structure and heat shield of the C/M: two forward viewing, two side observation, and the crew access hatch windows. (See figure 1-3.) During orbital flight, photographs of external objects will be taken through the viewing and observation windows. The inner windows (including the circular inner hatch window) are made of tempered silica glass with 0.25-inch-thick double panes, separated by 0.1 inch of space, and have a softening temperature point of 2000°F. The outer windows (including the square outer hatch window) are made of amorphous fused silicon with a single 0.7-inch-thick pane. Each pane contains an antireflecting coating on the external surface, and has blue-red reflective coating on the inner surface for filtering out most infrared and all ultraviolet rays, a softening temperature point of 2800°F, and a melting point of 3110°F.

Shades are provided for controlling external light entering the C/M through the triangular forward viewing windows, the square side observation windows, and the circular inner hatch window. These shades, individually designed for each window configuration, are made of mylar film which has been heat-treated to roll up when not held flat. The shades are opaque for zero light transmittal, have a nonreflective inner aluminized surface, two snap fasteners and fabric handles for attaching or removing from a particular window, and a 3/4-inch strip of Velcro hook material around the outer surface for holding the shade against the Velcro pile around the perimeter of the window. If desired, a shade can be peeled back from the Velcro pile material and stowed in place on one side of the window.

1.1.2.4.6 Cabin Pressure Controls.

Two control levers for manually operating the ECS cabin pressure relief valves are located near the C/M left couch and left side window. (See figure 1-4.) These levers are provided as a mechanical override for opening and closing the redundant sides of the automatic cabin pressure regulator. (For additional information, refer to the environmental control system in section 2.)

1.1.2.5 Crew Equipment and Equipment Bays.

Each crewmember has personal and accessory equipment provided for his use in the crew compartment. Major items of personal equipment consist of a pressure garment assembly (PGA) with attaching hose and umbilical, a communications assembly, a constant-wear garment, biomedical sensors, and radiation dosimeters. Major items of accessory equipment shared by the crew consist of an in-flight tool set and a medical kit. (For a detailed list of crew equipment, refer to section 6.) (Specific items contained in the C/M equipment and storage bays are listed in figure 1-6.)

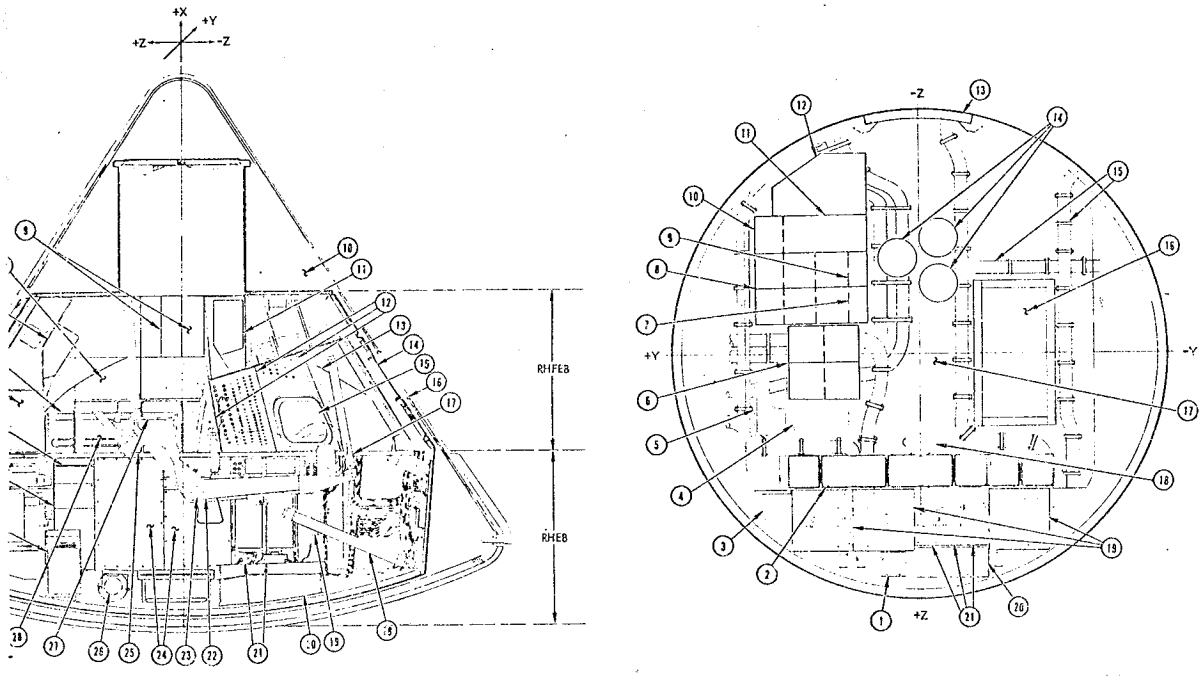

RD EQUIPMENT BAY (RHFEB) AND RIGHT-HAND EQUIPMENT BAY (RHEB)

ment (ref)

(ref)

17 Crew attenuation strut (X-X axis)
18 Crew attenuation strut (Z-Z axis)
19 Phase correcting capacitor fuse box
20 Compartments T, S and Z (ref)
21 Circuit interrupter
22 Right crew couch
23 Crew attenuation strut (Y-Y axis)
24 Side shock attenuation panels
25 Waste storage inlet (on bulkhead)
26 Stowed fecal canister (ref)
27 Sanitation supply stowage
28 Scientific equipment compartment E
29 Battery charger (ref)

AFT EQUIPMENT STOWAGE BAY (AESB)

1 Battery charger
2 CO_2 absorber containers
3 Pyro batteries and circuit breaker panel
4 Fecal canister (stowed)
5 TV lens storage
6 CO_2 absorber containers (4)
7 Pen lights compartment Z
8 CO_2 absorber containers (6)
9 Compartment Y
10 Compartment T
11 Compartment S
12 PGA and sleep restraint stowage bag
13 Crew access hatch (ref)
14 PGA helmet, comm soft hat, light wt headset stowage
15 Bulkhead wireways (typical)
16 Spacesuit (2), life vest (3), sleeping restraint (1) stowage bag
17 Aisleway (under center couch)
18 Fecal canister (usage position)
19 Electrical inverters
20 AC power box
21 Spacecraft storage batteries

SM-2A-817E

Figure 1-6. C/M Equipment and Stowage Bays

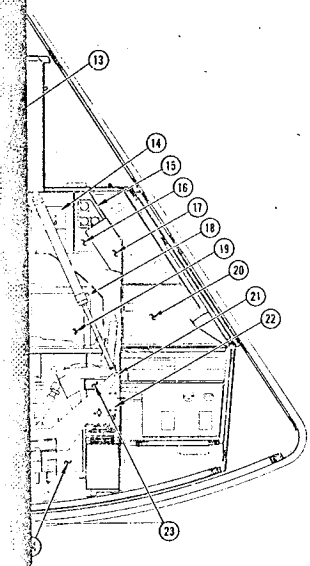

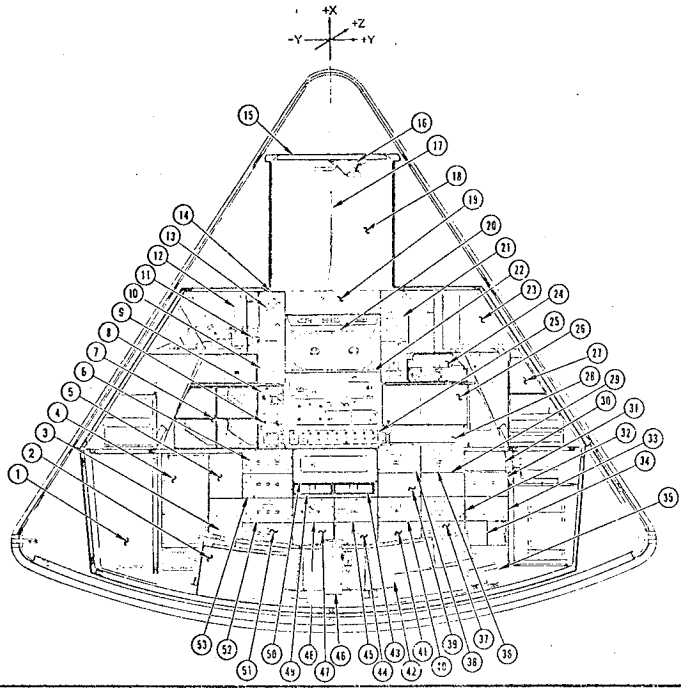

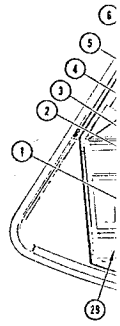

LEFT-HAND EQUIPMENT BAY (LHEB)

ock and event timer panel
N loose parts storage
xtant and telescope compartment (ref)
ow attenuation strut (X-X axis)
thing storage compartment
rtial measurement unit (ref)
t crew couch (attenuated)
ygen control panel
dical kit (left couch)
e shock attenuation panels (removable)
cesuit stowage bag and scientific equipment stowage (ref)
5 valves
5 oxygen, water, and glycol equipment

LOWER EQUIPMENT BAY (LEB)

1 ECS components (ref)
2 Spacesuit stowage bag and scientific equipment stowage (ref)
3 Gas chromotograph
4 Flight qualification tape recorder
5 Scientific equipment compartment A
6 Display/attitude gyro-accelerometer (ECA)
7 Food storage (5 containers)
8 Attitude gyro and accelerometer
9 Rate gyro
10 Coupling and display panel
11 Sr pilot suit connector panel and electrical connector (ref)
12 Cabin air recirculation fan (ref)
13 IMU control panel
14 Lighting control
15 Forward access hatch cover (ref)
16 Postlanding ECS air outlet duct
17 Postlanding ECS power cable
18 Forward access hatch (ref)
19 Sextant telescope eyepiece stowage
20 Sextant and telescope panel
21 Computer display and control panel
22 G&N control panel IMU
23 Survival provisions (ref)
24 Clinical monitoring instrument set compartment
25 Power servo assembly (PSA)
26 Data storage equipment
27 Towel storage
28 Signal conditioning equipment
29 VHF multiplexer
30 Data wiring
31 Fremodulation processor
32 VHF recovery beacon and VHF-AM transmitter-receiver
33 Audio center
34 Central timing
35 TV optics storage (ref)
36 Pulse-code modulation (PCM) unit 2 telemetry equipment
37 VHF-FM transmitter and HF transceiver
38 Pulse-code modulation (PCM) unit 1 telemetry equipment
39 Scientific equipment compartment C
40 S-band power amplifier
41 C-band transponder
42 CO_2 absorber container (ref)
43 Food and work table (in-flight tool set)
44 Digital up-data link
45 Unified S-band equipment
46 Fecal canister (positioned)
47 Scientific equipment compartment B
48 Roll channel ECA
49 Data package container (also on outboard couch beams)
50 G&N computer
51 Pitch channel ECA
52 Auxiliary ECA
53 Yaw channel ECA

RIGHT-HAND E

1 CO_2 absorber contain
2 Waste management sys
3 Computer
4 Vacuum cleaner comp
5 IMU compartment (ref
6 Medical accessories ki
7 Sextant and telescope
8 Food stowage
9 Survival provisions
10 RCS pitch control eng
11 TV camera mount
12 Side console panels (ri
13 Rendezvous window ho
14 Inner hatch cover
15 Side window
16 Outer hatch cover

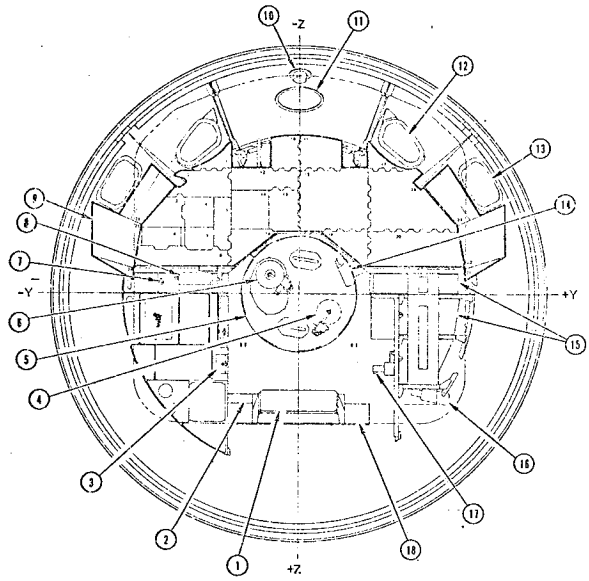

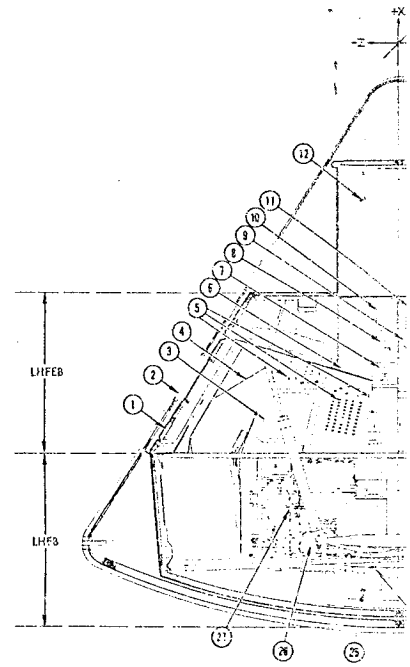

FORWARD REFERENCE VIEW	
1 Optics shroud	11 Crew access hatch inner window
2 LEB lighting control panel	12 Forward viewing or rendezvous windów (2 places)
3 Food reconstitution device	13 Side window (2 places)
4 Postlanding ECS air outlet duct	14 TV camera (launch and entry)
5 Forward access hatch cover	15 Survival provisions
6 Postlanding ECS air inlet duct	16 TV camera mount (optional)
7 Water delivery valve	17 Measurement system instrumentation
8 Water delivery unit	18 Apollo guidance computer navigational display keyboard
9 Main display console (MDC panels 1 through 26)	
10 Crew access hatch actuator (inner cover)	

LEFT-HAND FORWARD EQUIPMENT BAY (LHFE
1 Inner hatch cover
2 Outer hatch cover
3 Side window
4 Rendezvous window housing
5 Side console panels (left)
6 Main display console (ref)
7 Comdr suit connector panel and electrical connector
8 Sr pilot suit connector panel and electrical connector
9 Pilot suit connector panel electrical connector
10 Scientific equipment compartment D
11 Cabin air recirculation fan
12 Forward access hatch or egress tunnel (ref)
13 Postlanding ECS air inlet duct (extended)

1.1.2.6 Food and Water.

Food and water provisions, including water delivery and food preparation equipment, are available in the crew compartment LHEB and LEB, (figure 1-6) for the length of the mission. Food may be prepared by adding water to plastic bags containing the dehydrated food and kneading the mixture. Prepared food can be squeezed directly into the mouth of an astronaut. Hot or cold water is available at the potable water supply panel for food reconstitution. Chilled drinking water is supplied to the crew through a flexible hose from the water delivery unit. The potable water is a by-product of the EPS fuel cells.

1.1.2.7 Waste Management.

Waste management provisions in the crew compartment RHFEB and AESB (figure 1-6) consist of equipment for collecting, sterilizing, and storing human fecal matter and personal hygiene wastes (such as used cleansing pads, towels, etc.). Fecal matter and personal hygiene wastes are collected in polyethylene bags, disinfected, and stored in a vented area. Urine is expelled overboard into space.

1.1.2.8 Survival Equipment.

The survival kits stowed in the crew compartment RHFEB (figure 1-6) are available for the postlanding phase of the mission (land or water). The major items contained in each kit include 6 pounds of water, a desalter kit, a one-man life raft, radio transceiver, portable light, sunglasses, and a machete. Life vests worn by the crew during lift-off and entry are stowed in the space suit stowage bag during the orbit phase of the mission. (See figure 1-6.)

1.1.2.9 Aft Compartment.

The aft compartment (figure 1-3) is the area encompassed by the aft portion of the crew compartment heat shield, aft heat shield, and aft portion of the primary structure. This compartment contains 10 reaction control engines, an impact attenuation structure, instrumentation, and storage tanks for water, fuel, oxidizer, and gaseous helium. (Four crushable ribs, along the S/C +Z axis, are provided as part of the impact attenuation structure to absorb energy during a land impact.)

The aft heat shield, which encloses the large end of the C/M, is a shallow spherically contoured assembly. It is made of the same type of materials as other C/M heat shields. However, the ablative material on this heat shield has a greater thickness for the dissipation of heat during entry. External provisions are made on this heat shield for connecting the C/M to the S/M.

1.1.3 SERVICE MODULE.

The S/M is a cylindrical structure formed by 1-inch-thick aluminum honeycomb panels. Radial beams, from milled aluminum alloy plates, separate the structure interior into six unequal sectors around a circular center section. (See figure 1-7.) Equipment contained within the service module is accessible through maintenance doors located strategically around the exterior surface of the module. Specific items, such as flight control system (SPS and RCS) and most of the S/C on-board consumables (and storage tanks) contained in the S/M compartments, are listed in figure 1-7.

Radial beam trusses on the forward portion of the S/M structure (figure 1-7) provide a means for securing the C/M to the S/M. Alternate beams, one, three, and five, have compression pads for supporting the C/M. Beams two, four, and six, have shear-compression pads, and tension ties. A flat center section in each tension tie incorporates redundant explosive charges for S/M-C/M separation. These beams and separation devices are enclosed within a fairing (26 inches high and 13 feet in diameter) between the C/M and S/M.

1.1.4 SPACECRAFT LEM ADAPTER.

The spacecraft LEM adapter (SLA) is a truncated cone which connects the CSM to the S-IVB instrument unit on the launch vehicle. (See figure 1-1.) This adapter, constructed of eight 2-inch-thick aluminum panels, is 154 inches in diameter at the forward end (C/M interface) and 260 inches at the aft end. Separation of the spacecraft from the SLA is accomplished by means of explosive charges which permit the four SLA forward panels (above station 583.3) to disengage from the CSM and rotate outward 45 degrees from vertical. The four aft panels remain attached to the S-IVB instrument unit. For mission 204A, a cross-shaped stiffener is installed within the SLA in place of a LEM. The S/M SPS nozzle extends into the SLA which also houses an umbilical cable for connecting circuits between the launch vehicle and the spacecraft.

1.1.5 SPACECRAFT SYSTEMS.

Data relating to the operational spacecraft systems and interface information are presented in section 2 of this handbook.

1.2 LAUNCH VEHICLE CONFIGURATION.

A two-stage Saturn IB launch vehicle, consisting of an S-IB booster and an S-IVB second stage, is scheduled to provide the required thrust for inserting S/C 012 into orbit (figure 1-8.) An instrumentation unit, located between the S-IVB and the SLA, controls each of the two boost stages during flight. The total length of the Saturn IB launch vehicle, including the spacecraft, is approximately 224 feet. An emergency detection system sequencer display panel, in the C/M, enables the crew to monitor launch vehicle engine performance during lift-off. (Refer to the sequential systems in section 2.)

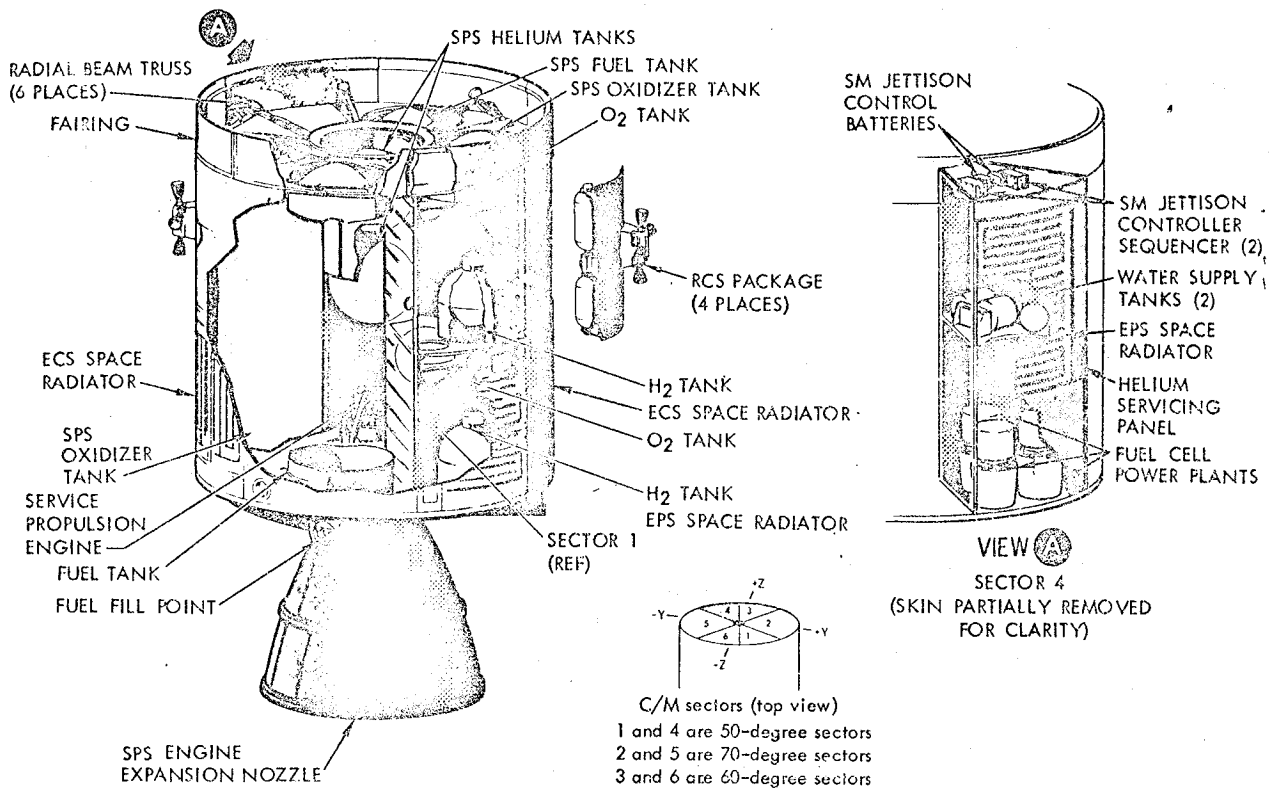

SERVICE MODULE ITEMS

Sector 1
- Electrical power system space radiator
- Super-critical oxygen tank (two)
- Super-critical hydrogen tank (two)

Sector 2
- Environmental control system space radiator
- Service propulsion system oxidizer tank
- Reaction control system package (+Y-axis)
- Space radiator isolation valve (two)

Sector 3
- Service propulsion system fuel tank
- Reaction control system package (+Z-axis)
- Service propulsion system helium tanks (two)

Sector 4
- Electrical power system space radiator
- Fuel cell power plant (three)
- Helium servicing panel
- Reaction control system control unit
- Electrical power system power control relay box
- Service module jettison control battery (two)
- Service module jettison controller sequencer (two)
- Water supply tank (two)

Sector 5
- Environmental control system space radiator
- Service propulsion system oxidizer tank
- Reaction control system package (-Y axis)

Sector 6
- Space radiator selection valve, (two)
- Glycol shutoff valves (two)
- Reaction control system package (-Z axis)
- Service propulsion system fuel tank

Center section
- Service propulsion system helium tank (two)
- Service propulsion system engine

SM-2A-643 E

Figure 1-7. Spacecraft 012 Service Module

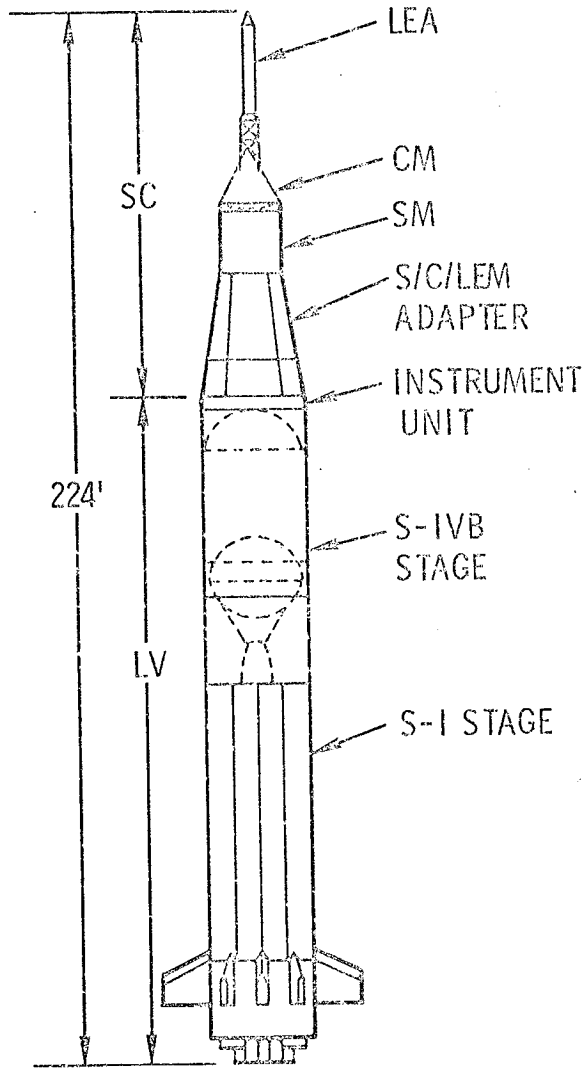

ST-4

Figure 1-8. Apollo Launch Vehicle (Saturn IB)

1.2.1 S-IB BOOSTER.

The S-IB booster (first stage) for Saturn IB is manufactured by the Chrysler Corporation. This booster is 257 inches in diamater, 82 feet in length, and is powered by eight Rocketdyne H-1 engines. Each engine, burning RP-1 and liquid oxygen, produces 200,000 pounds of thrust for a total stage thrust over 1,600,000 pounds.

1.2.2 S-IVB SECOND STAGE.

The S-IVB second stage for Saturn IB is manufactured by the Douglas Aircraft Company. This stage is 260 inches in diameter, 58 feet in length, and is powered by a single Rocketdyne J-2 engine. The engine, burning liquid hydrogen and oxygen, produces a stage thrust of approximately 200,000 pounds. During flight, the J-2 engine uses three different mixture ratios, resulting in values of thrust ranging from 190,000 to 230,000 pounds.

1.3 MISSION 204A WEIGHT STATUS.

NOTE The NASA-MSC is responsible for providing a detailed weight status for Apollo mission 204A as available in the MSC Reference Trajectory Document.

1.4 POSTLANDING AND RECOVERY.

Information relating to postlanding recovery aids is provided under sequential systems in section 2. Postlanding ventilation for the crew is supplied through two vent valves in the forward access hatch cover. (See figure 1-4.) A handpump and flexible hose, stored under the right crew couch (figure 1-6), is used to obtain water from the sea for conversion to potable water. (Refer to crew equipment in section 6.) An Apollo Recovery Operations Handbook will provide a detailed description of recovery equipment and rescue procedures.

SECTION 2

SYSTEMS DATA

INTRODUCTION.

Systems data include description of operations, component description and design data, operational limitations and restrictions, and telemetry measurements. Subsection 2.1 describes the overall spacecraft navigation, guidance, and control requirements and the resultant systems interface. Subsections 2.2 through 2.10 present data grouped by spacecraft systems, arranged in the following order: guidance and navigation, stabilization and control, service propulsion, reaction control, electrical power, environmental control, telecommunications, sequential, and cautions and warnings. Subsection 2.11 deals with miscellaneous systems data.

[illegible]

[illegible]

[illegible]

[illegible]

[illegible]

[illegible]

[illegible]

[illegible]

[illegible]

[illegible]

[illegible]

[illegible]

SECTION 2

SUBSECTION 2.1

GUIDANCE AND CONTROL

2.1.1 SYSTEMS INTERFACE, GUIDANCE AND CONTROL.

Apollo CSM atmospheric and space flight is achieved by application of controlled translation forces and rotational force moments. Guidance and control initiates and terminates the thrust and rotational forces and force moments as a function of the magnitude of the change required. Guidance and control provides the following basic functions:

- Attitude Control
- Guidance
- Navigation

Attitude control is a function associated with spacecraft orientation with respect to an inertial reference or a known coordinate system. Guidance is a function requiring a combination of attitude control with rate stabilization and steering commands for the purpose of modifying spacecraft trajectory via major velocity changes. Navigation determines spacecraft position and velocity, and predicts future position.

To accomplish mission requirements, the guidance and navigation, stabilization and control, service propulsion, and reaction control systems, plus the astronauts, are integrated into an automatic/manual closed loop control system.

Guidance and control activity is grouped into three profiles of flight: coasting, powered, and atmospheric. The primary control loops involved are illustrated in figures 2.1-1 through 2.1-4. Figure 2.1-1 is an abbreviated integration of all major equipments necessary to accomplish the activities in all three flight profiles. Figures 2.1-2 through 2.1-4 divide the equipment into the proper perspective for each profile.

It must be noted that in figure 2.1-1, the loops are closed that represent coasting flight (CF) functions. For powered flight (PF) or atmospheric flight (AF), open the coasting flight loops and close contacts representing the desired loops.

2.1.2 COASTING FLIGHT

The guidance and control activities involved in coasting flight are accomplished through the basic functional loops shown in figure 2.1-2.

These loops provide attitude reference, attitude control, attitude hold, and automatic and manual maneuver capabilities necessary to accomplish the several tasks involved during coasting flight. They are also the central reference and control loops required for all phases of flight.

A reference attitude frame is established by the G&N inertial measurement unit (IMU), and/or by the SCS body-mounted attitude gyros (BMAGs), and attitude gyro coupling unit (AGCU). Inertial sensors sense S/C motion contrary to the reference frame. The sensed attitude errors and rates are conditioned through servo electronics and logic to initiate countermotions via the reaction jet control (RCS) which nullifies the original motion. The AGC inserts automatic control and maneuver commands into the loop. The rotation, translation, and attitude impulse controls insert manual commands into the loop. The flight director attitude indicator (FDAI) is the S/C attitude visual display.

2.1.3 POWERED FLIGHT.

Powered flight is considered that which will use the S/M service propulsion system (SPS) engine to initiate a major velocity change. Figure 2.1-3 illustrates those basic loops necessary for the tasks involved. As shown, the loops are an extension of those required for coasting flight. Added, are the (SPS) engine on-off thrust logic and the SPS gimbal control loops. In coasting flight, all attitude control is through the RCS. Powered flight, by the SPS engine, requires roll control through the RCS, and pitch and yaw control by gimbaling the SPS engine nozzle. Primary control of thrusting is by the AGC. However, figure 2.1-3 shows how various manual controls can be used instead of or to backup automatic functions.

2.1.4 ATMOSPHERIC FLIGHT

Atmospheric flight is encountered during the entry phase of the mission at which time the S/C experiences aerodynamic forces. Figure 2.1-4 illustrates the basic loops required for control of the S/C during this phase. The central loop is identical to that in figure 2.1-2. The main difference is that service module/command module (S/M-C/M) separation has taken place, and the command module RCS system is used. Another difference is that the aerodynamic forces will stabilize the C/M in pitch and yaw, and the entry g-level (lift vector control) will increase or decrease through roll control. Primary control is automatic, with manual rotation control available, in event of automatic control malfunctions.

For detailed operation of the several loops involved in guidance and control, refer to the descriptions of the guidance and navigation system, subsection 2.2, and the stabilization and control system, subsection 2.3.

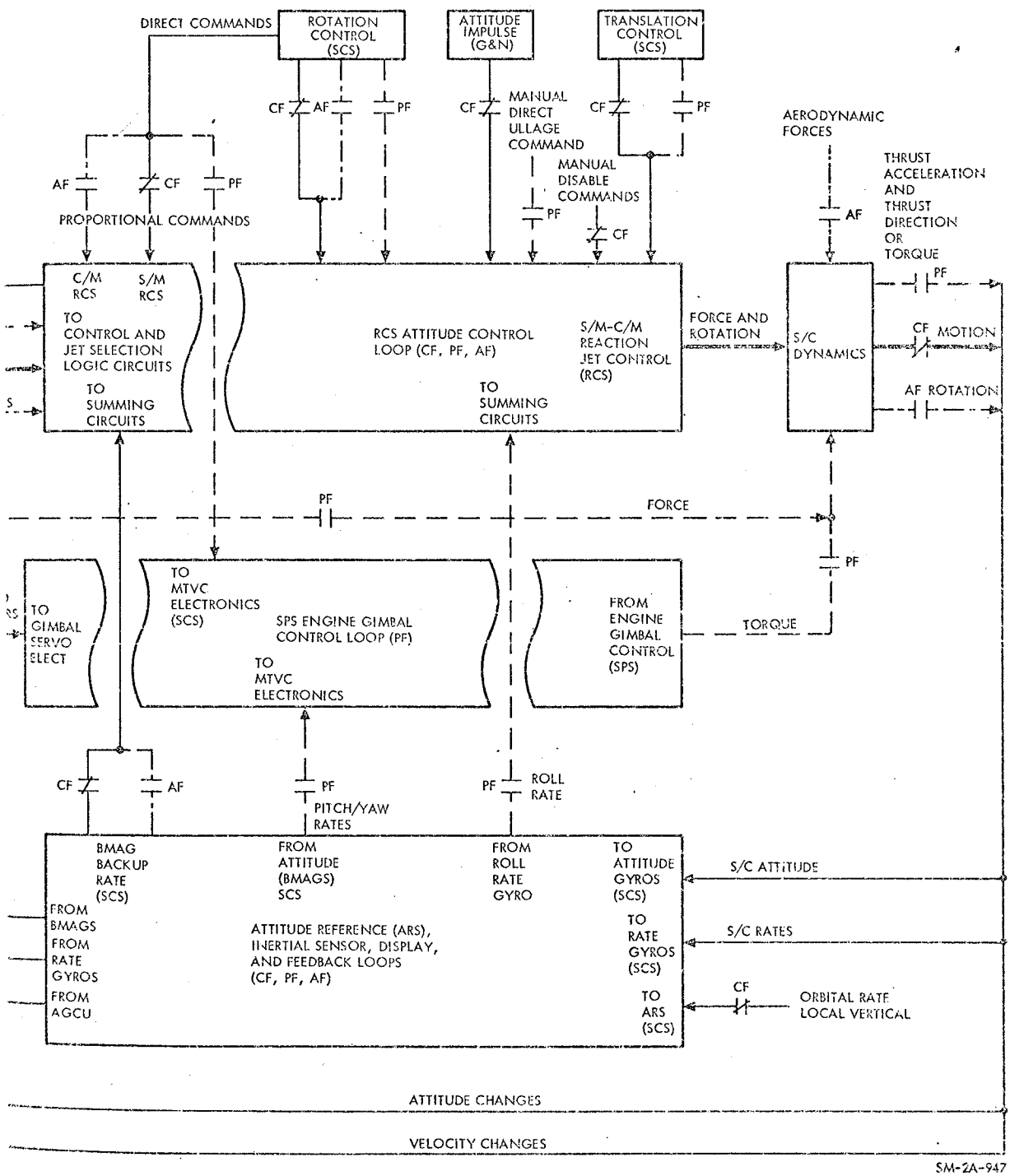

Figure 2.1-1. Integrated Flight Profile Functional Flow Diagram

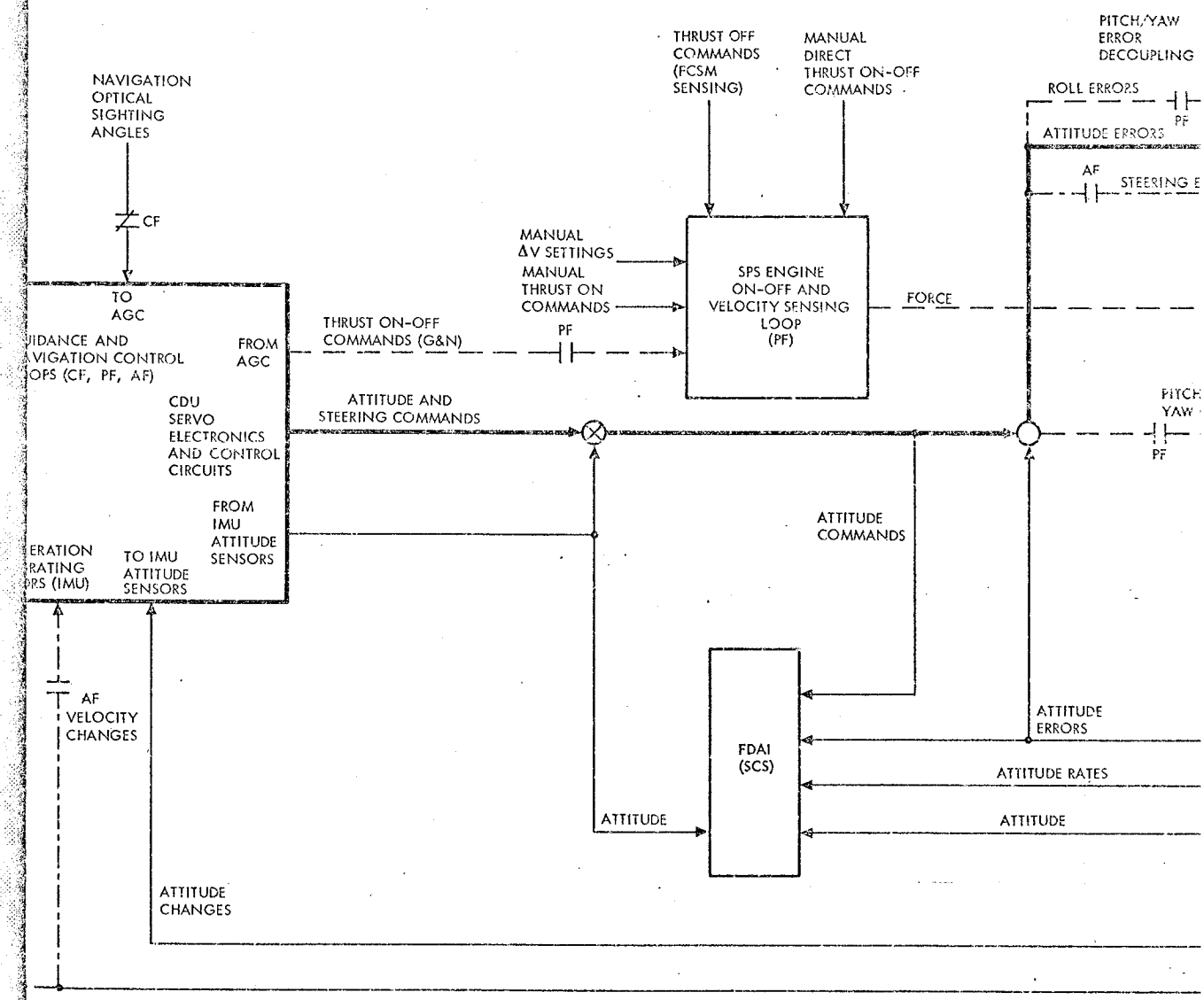
NAVIGATION
OPTICAL
SIGHTING
ANGLES
CF
TO
AGC
IDANCE AND
VIGATION CONTROL
OPS (CF, PF, AF)
FROM
AGC
CDU
SERVO
ELECTRONICS
AND CONTROL
CIRCUITS
FROM
IMU
ATTITUDE
SENSORS
ERATION
RATING
RS (IMU)
TO IMU
ATTITUDE
SENSORS
AF
VELOCITY
CHANGES
ATTITUDE
CHANGES
THRUST ON-OFF
COMMANDS (G&N)
PF
ATTITUDE AND
STEERING COMMANDS
MANUAL
ΔV SETTINGS
MANUAL
THRUST ON
COMMANDS
THRUST OFF
COMMANDS
(FCSM
SENSING)
MANUAL
DIRECT
THRUST ON-OFF
COMMANDS
SPS ENGINE
ON-OFF AND
VELOCITY SENSING
LOOP
(PF)
FORCE
PITCH/YAW
ERROR
DECOUPLING
ROLL ERRORS
PF
ATTITUDE ERRORS
AF
STEERING E
PITCH
YAW
PF
ATTITUDE
COMMANDS
FDAI
(SCS)
ATTITUDE
ATTITUDE
ERRORS
ATTITUDE RATES
ATTITUDE

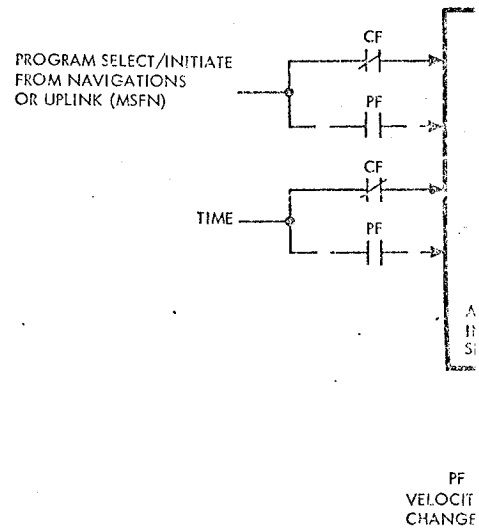

COASTING FLIGHT (CF)

POWERED FLIGHT (PF)

ATMOSPHERIC FLIGHT (AF)

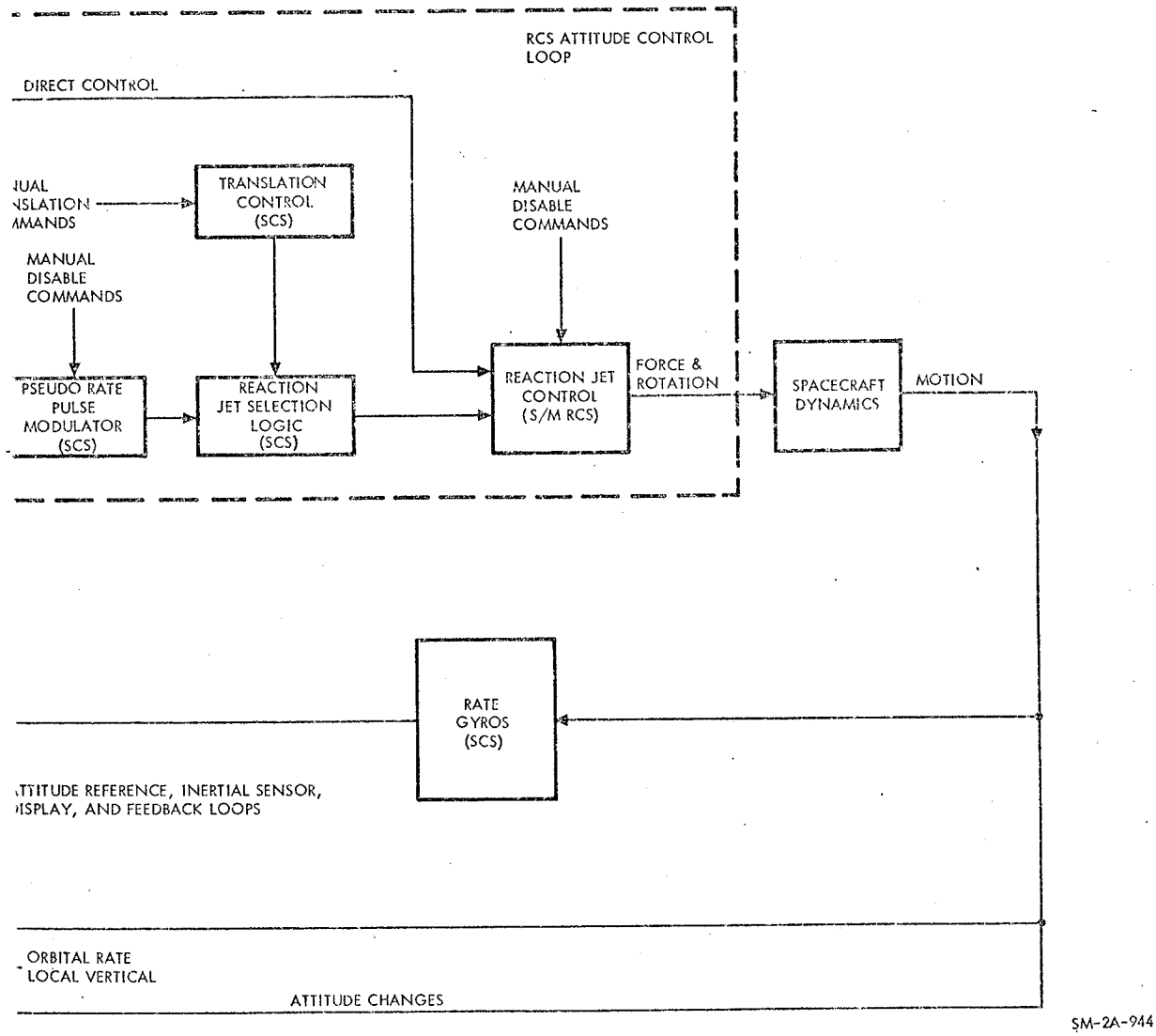

Figure 2.1-2. Coasting Flight Profile Functional Flow Diagram

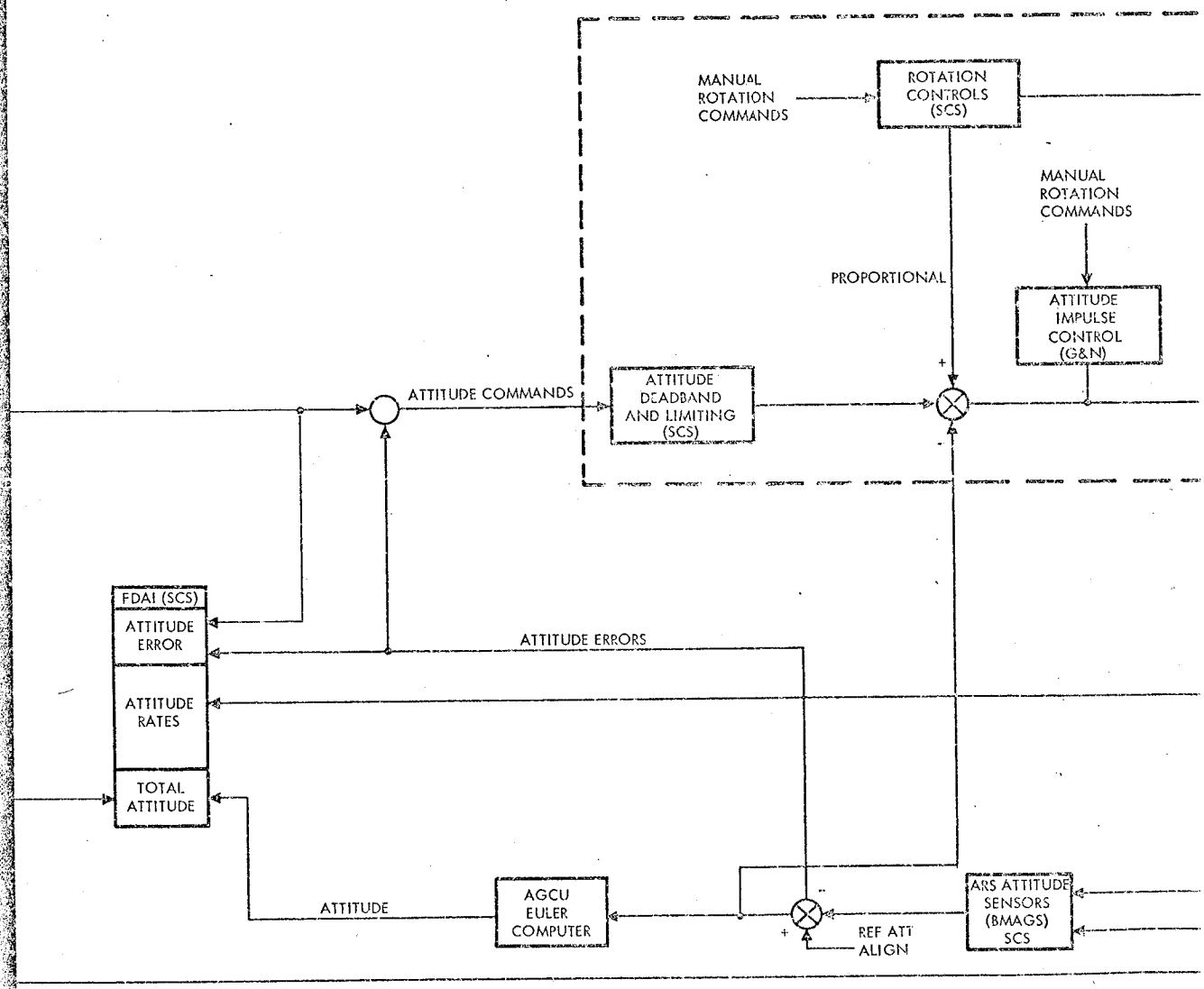
MANUAL ROTATION COMMANDS
ROTATION CONTROLS (SCS)
MANUAL ROTATION COMMANDS
PROPORTIONAL
ATTITUDE IMPULSE CONTROL (G&N)
ATTITUDE COMMANDS
ATTITUDE DEADBAND AND LIMITING (SCS)
FDAI (SCS)
ATTITUDE ERROR
ATTITUDE ERRORS
ATTITUDE RATES
TOTAL ATTITUDE
ATTITUDE
AGCU EULER COMPUTER
REF ATT ALIGN
ARS ATTITUDE SENSORS (BMAGS) SCS

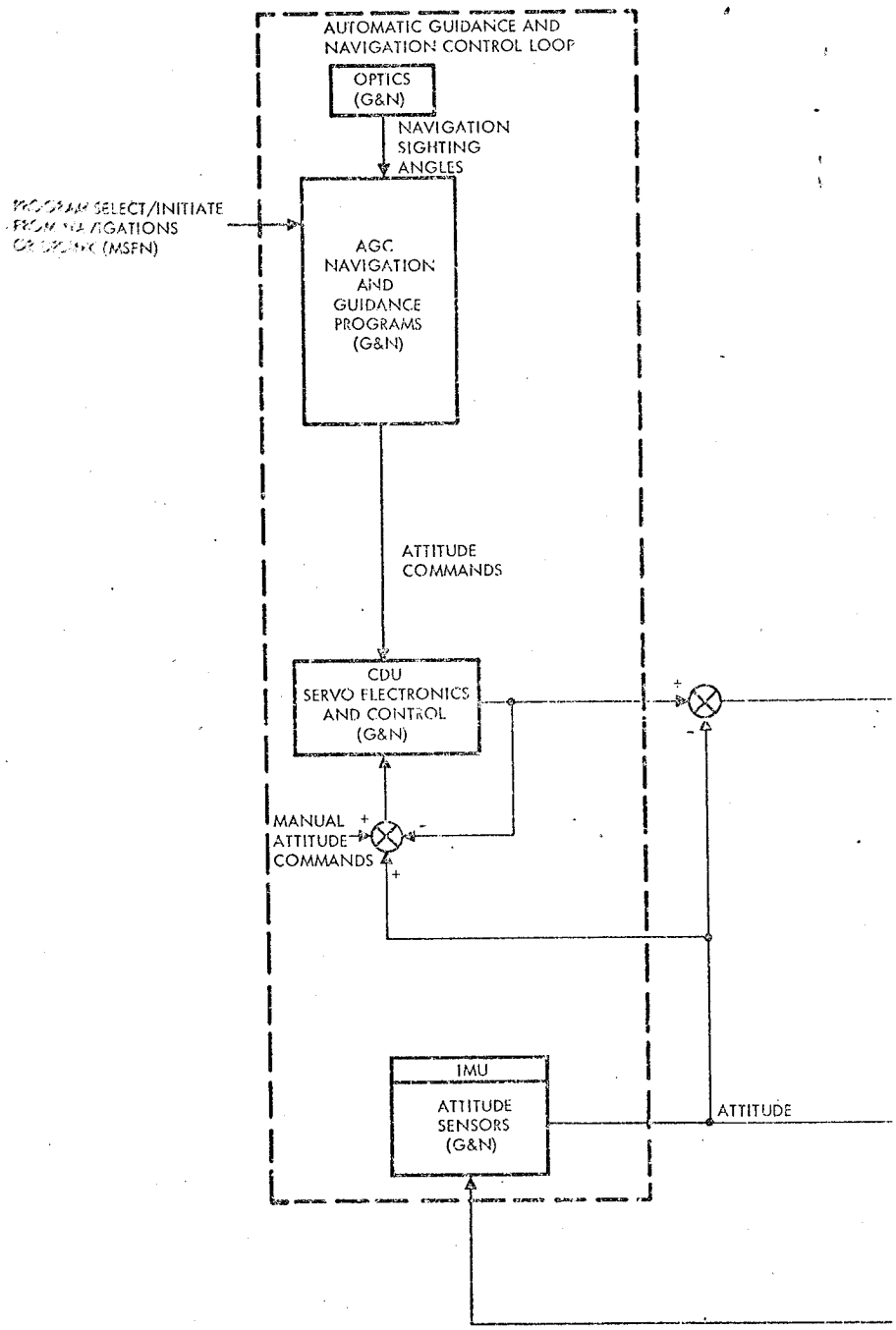
AUTOMATIC GUIDANCE AND
NAVIGATION CONTROL LOOP
OPTICS
(G&N)
NAVIGATION
SIGHTING
ANGLES
PROGRAM SELECT/INITIATE
FROM NAVIGATIONS
OR GROUND (MSFN)
AGC
NAVIGATION
AND
GUIDANCE
PROGRAMS
(G&N)
ATTITUDE
COMMANDS
CDU
SERVO ELECTRONICS
AND CONTROL
(G&N)
MANUAL
ATTITUDE
COMMANDS
IMU
ATTITUDE
SENSORS
(G&N)
ATTITUDE

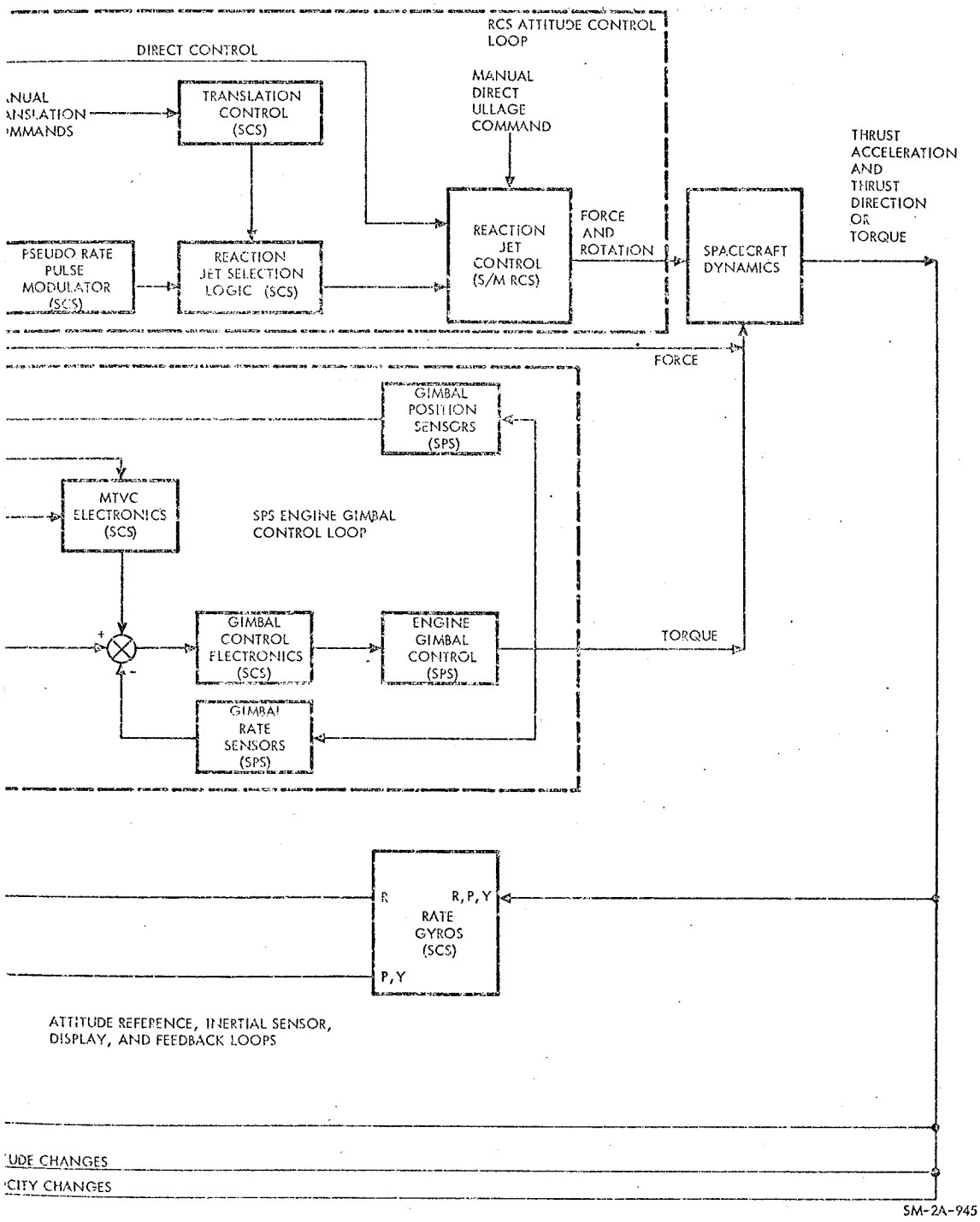

Figure 2.1-3. Powered Flight Profile Functional Flow Diagram

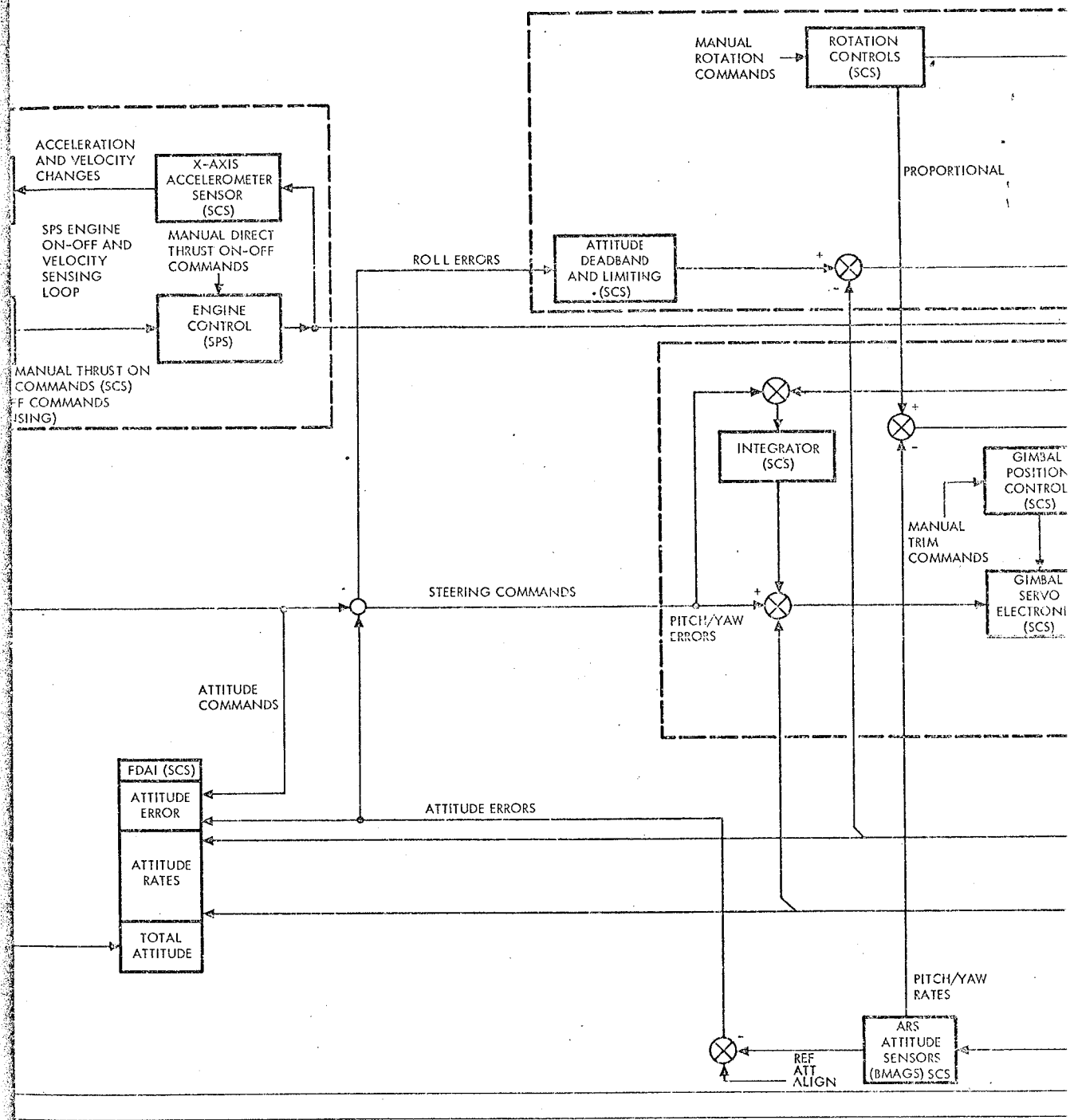
MANUAL ROTATION COMMANDS
ROTATION CONTROLS (SCS)
PROPORTIONAL
ACCELERATION AND VELOCITY CHANGES
X-AXIS ACCELEROMETER SENSOR (SCS)
SPS ENGINE ON-OFF AND VELOCITY SENSING LOOP
MANUAL DIRECT THRUST ON-OFF COMMANDS
ENGINE CONTROL (SPS)
MANUAL THRUST ON COMMANDS (SCS)
F COMMANDS
ISING)
ROLL ERRORS
ATTITUDE DEADBAND AND LIMITING (SCS)
INTEGRATOR (SCS)
GIMBAL POSITION CONTROL (SCS)
MANUAL TRIM COMMANDS
GIMBAL SERVO ELECTRONI (SCS)
STEERING COMMANDS
PITCH/YAW ERRORS
ATTITUDE COMMANDS
FDAI (SCS)
ATTITUDE ERROR
ATTITUDE RATES
TOTAL ATTITUDE
ATTITUDE ERRORS
PITCH/YAW RATES
ARS ATTITUDE SENSORS (BMAGS) SCS
REF ATT ALIGN

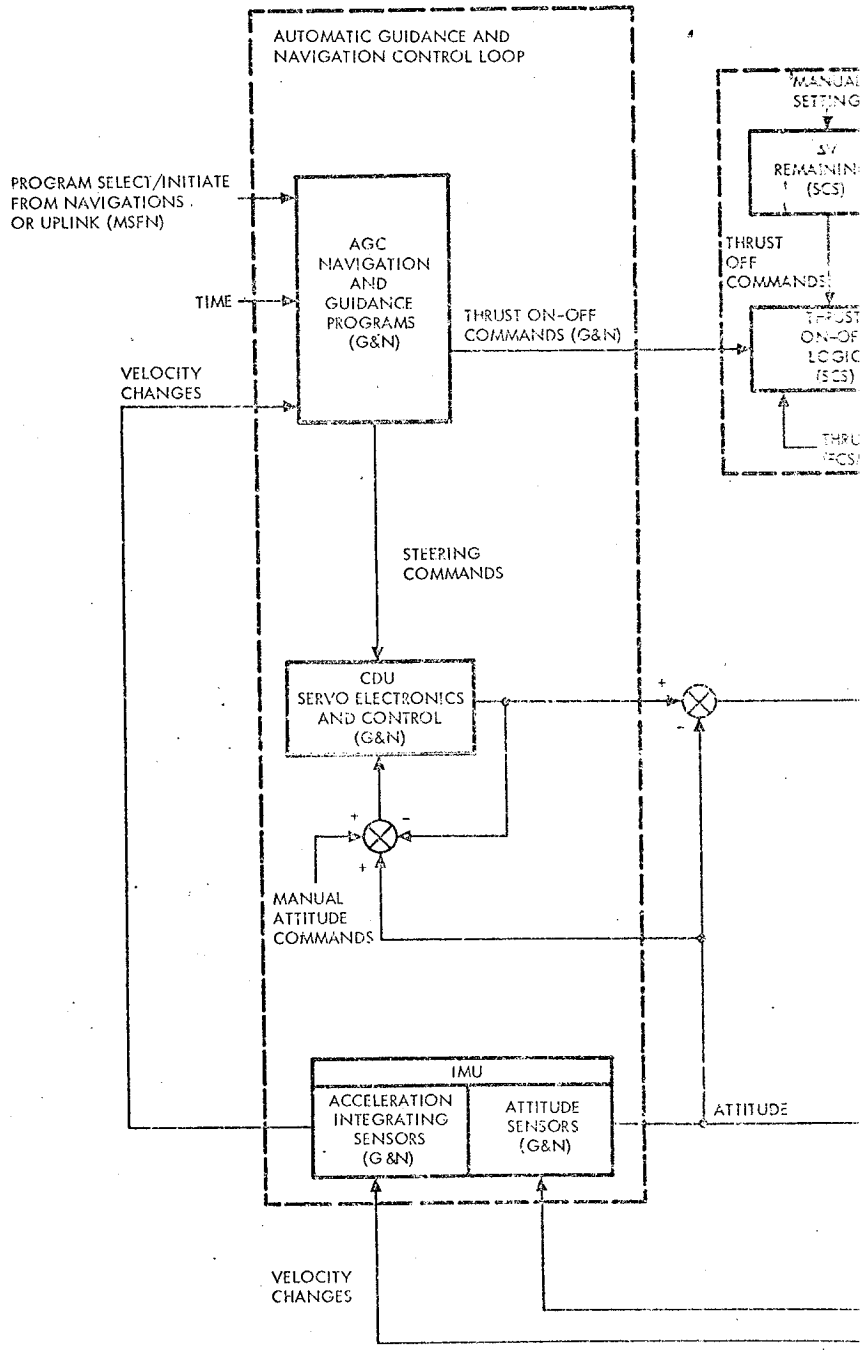
AUTOMATIC GUIDANCE AND NAVIGATION CONTROL LOOP
PROGRAM SELECT/INITIATE FROM NAVIGATIONS OR UPLINK (MSFN)
TIME
VELOCITY CHANGES
AGC NAVIGATION AND GUIDANCE PROGRAMS (G&N)
THRUST ON-OFF COMMANDS (G&N)
THRUST OFF COMMANDS
STEERING COMMANDS
CDU SERVO ELECTRONICS AND CONTROL (G&N)
MANUAL ATTITUDE COMMANDS
IMU
ACCELERATION INTEGRATING SENSORS (G&N)
ATTITUDE SENSORS (G&N)
ATTITUDE
VELOCITY CHANGES

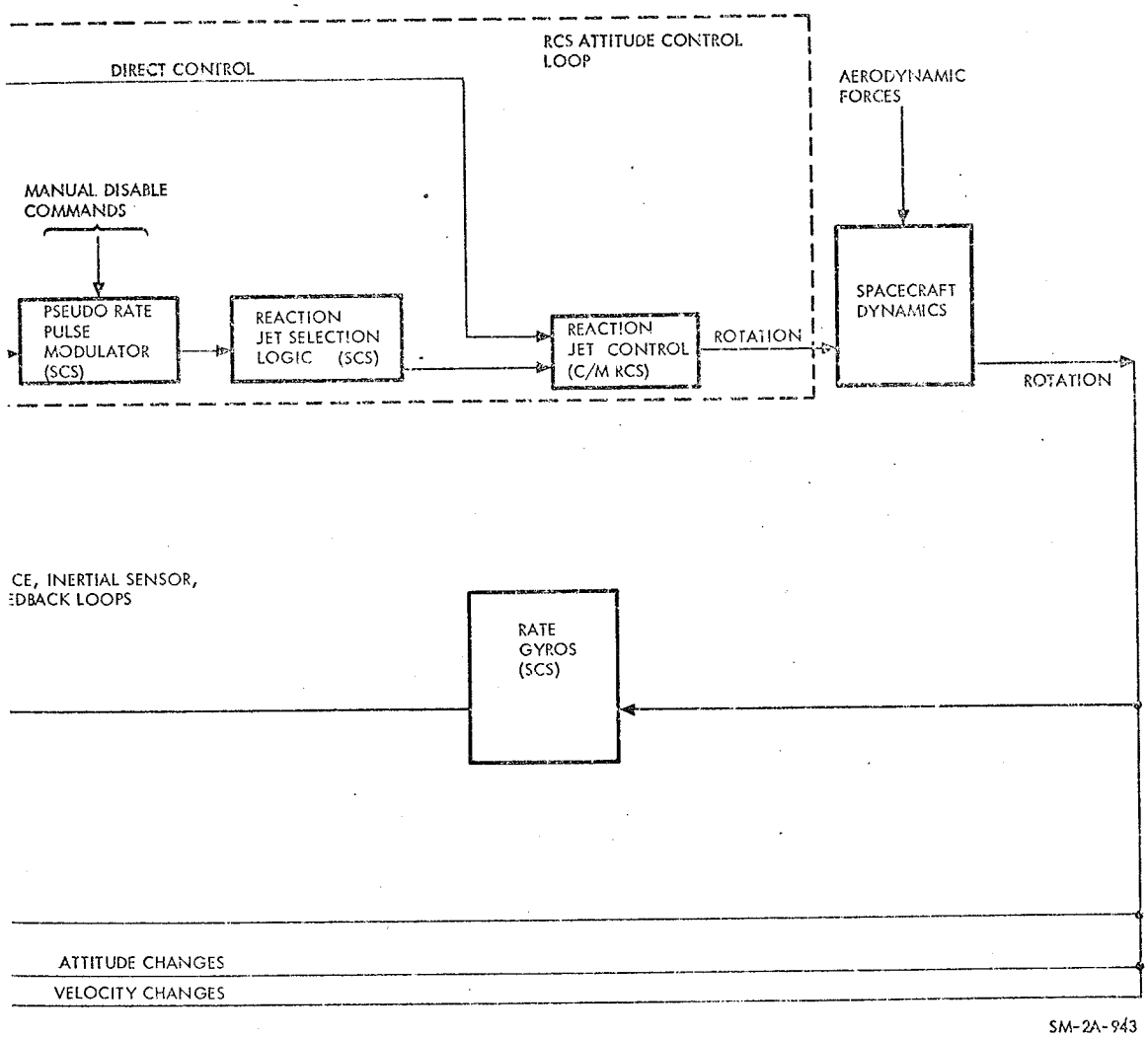

Figure 2.1-4. Atmospheric Flight Profile Functional Flow Diagram

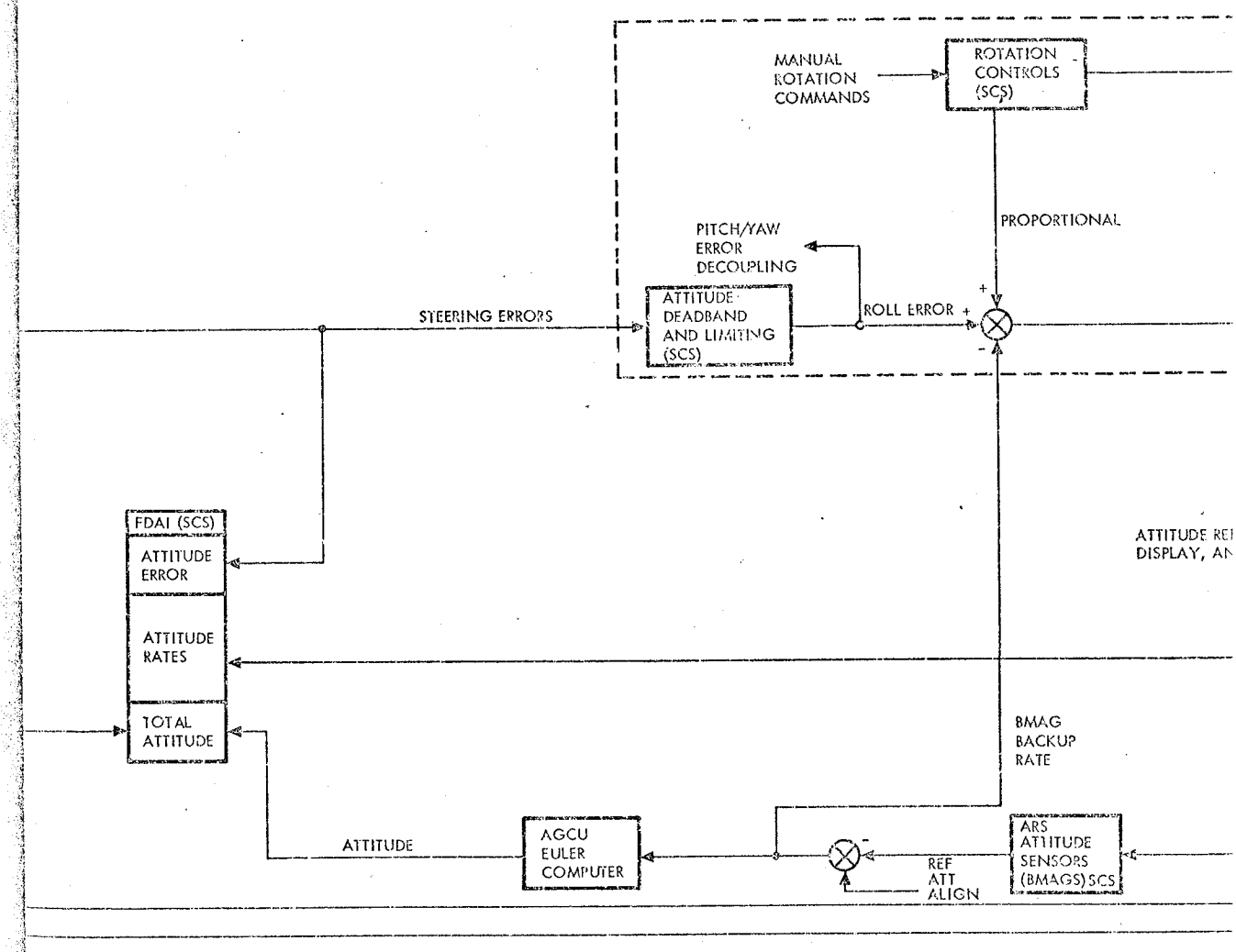
MANUAL
ROTATION
COMMANDS
ROTATION
CONTROLS
(SCS)
PROPORTIONAL
PITCH/YAW
ERROR
DECOUPLING
ATTITUDE
DEADBAND
AND LIMITING
(SCS)
ROLL ERROR
STEERING ERRORS
FDAI (SCS)
ATTITUDE
ERROR
ATTITUDE
RATES
TOTAL
ATTITUDE
ATTITUDE RE
DISPLAY, AN
BMAG
BACKUP
RATE
ATTITUDE
AGCU
EULER
COMPUTER
REF
ATT
ALIGN
ARS
ATTITUDE
SENSORS
(BMAGS) SCS

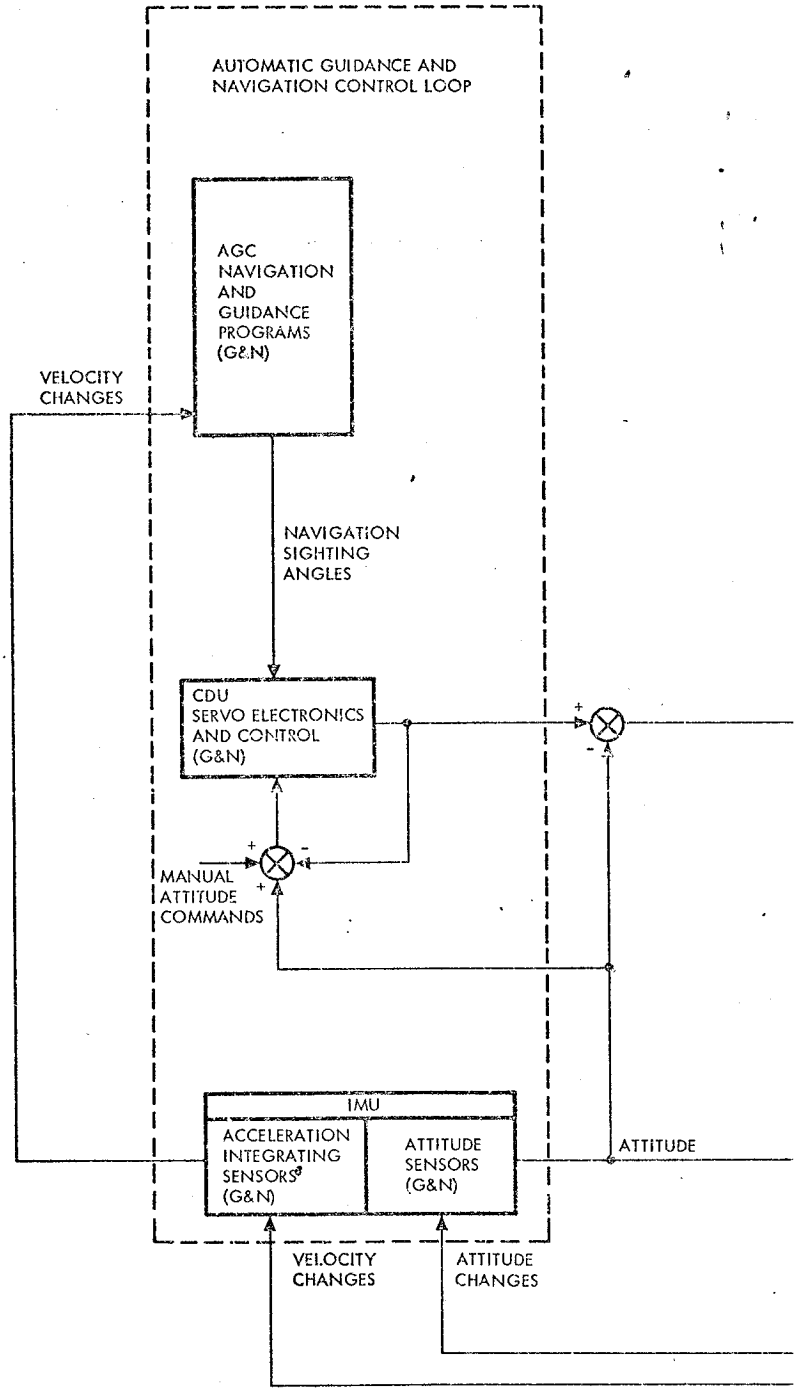
AUTOMATIC GUIDANCE AND NAVIGATION CONTROL LOOP
AGC NAVIGATION AND GUIDANCE PROGRAMS (G&N)
VELOCITY CHANGES
NAVIGATION SIGHTING ANGLES
CDU SERVO ELECTRONICS AND CONTROL (G&N)
MANUAL ATTITUDE COMMANDS
IMU
ACCELERATION INTEGRATING SENSORS (G&N)
ATTITUDE SENSORS (G&N)
ATTITUDE
VELOCITY CHANGES
ATTITUDE CHANGES

SECTION 2

SUBSECTION 2.2

GUIDANCE AND NAVIGATION SYSTEM (G&N)

2.2.1 INTRODUCTION.

The guidance and navigation (G&N) system measures spacecraft attitude and velocity, determines trajectory, controls spacecraft attitude, controls the thrust vector of the service propulsion engine, and provides abort information and display data. Primary determination of the spacecraft velocity and position, and computation of the trajectory parameters is accomplished by the manned space flight network (MSFN).

The G&N system consists of three subsystems as follows:

- Inertial subsystem (ISS)
- Computer subsystem (CSS)
- Optics subsystem (OSS)

The inertial subsystem is composed of an inertial measurement unit (IMU), part of the power and servo assembly (PSA), part of the controls and displays, and three inertial coupling display units (CDUs). The IMU provides an inertial reference with a gimbaled, three-degree-of-freedom, gyro stabilized stable platform.

The computer subsystem is composed of an Apollo guidance computer (AGC), and two display and keyboard panels (DSKYs), which are part of the controls and displays. The AGC is a digital computer which processes and controls information to and from the IMU and optics, and stores programs and reference data.

The optics subsystem is composed of a scanning telescope (SCT), a sextant (SXT), drive motors for positioning the SCT and SXT, parts of the PSA, part of the controls and displays, and two optics CDUs. The SCT and SXT are used to determine the spacecraft position and attitude with relation to stars and/or landmarks.

The three G&N subsystems are configured such that the CSS and OSS may be operated independently. This allows continued use of the CSS and/or OSS in the event of a malfunction in one of these subsystems or the ISS. System power requirements and reference signals are provided by the power and servo assembly (PSA). Major components of the system are located in the command module lower equipment bay (figure 2.2-1). System circuit breakers, caution and warning indicators, and one of the DSKYs are located on the main display console.

2.2.2 FUNCTIONAL DESCRIPTION.

The guidance and navigation system provides capabilities for the following:

- Inertial velocity and position (state vector) computation
- Optical and inertial navigation measurements

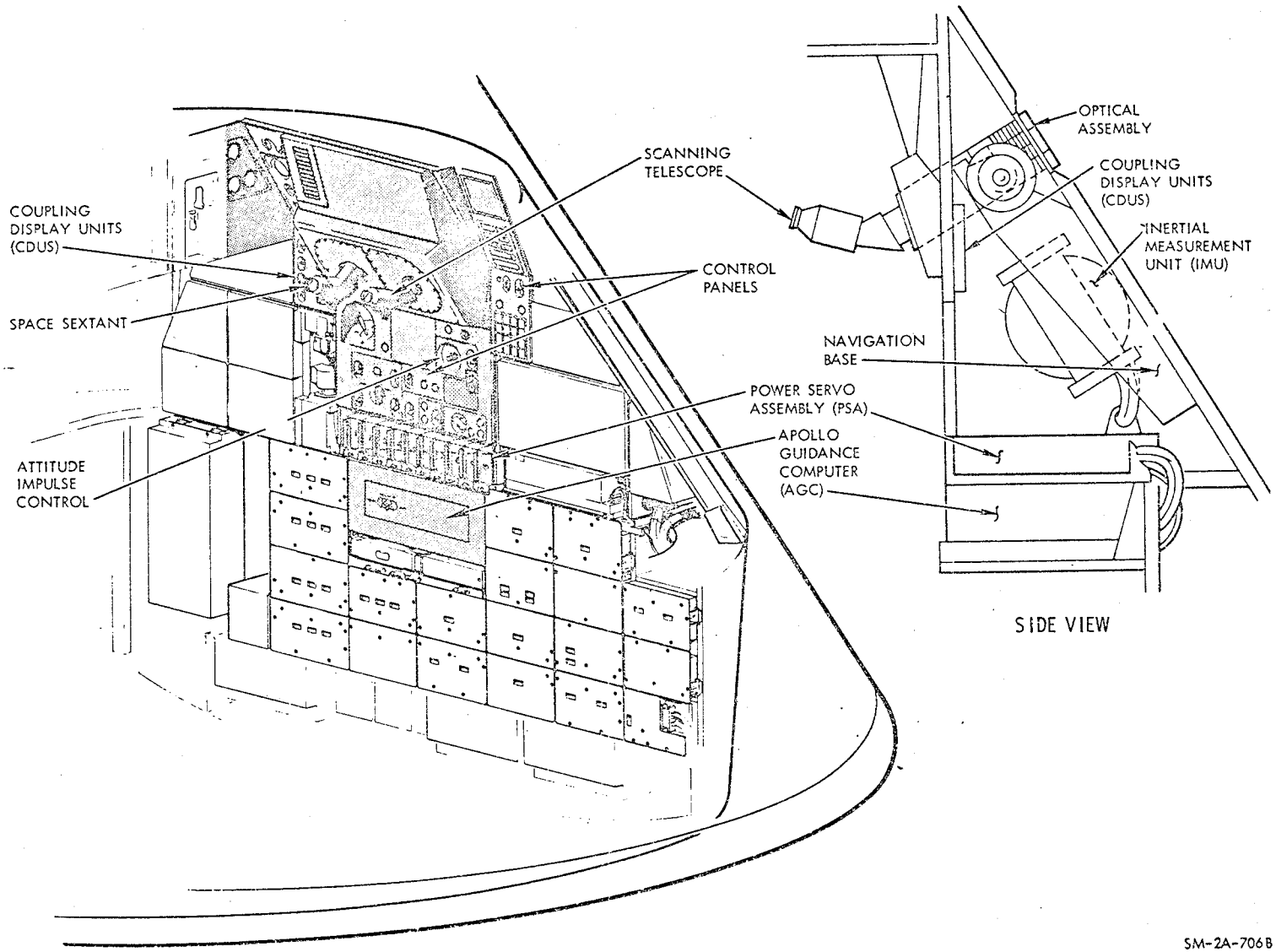

Figure 2.2-1. G&N Equipment Location

- Spacecraft attitude measurement and control
- Generation of guidance commands during CSM-powered flight and C/M atmospheric entry.

The G&N system is initially activated and aligned during the prelaunch phase. During the ascent phase, the system measures velocity and attitude, computes position, compares the actual spacecraft trajectory with a predetermined trajectory, and displays pertinent data. The flight crew uses the displayed information as an aid for decision to abort or continue the mission. However, spacecraft control is maintained by the S-IVB guidance until CSM/S-IVB separation. Upon separation, the G&N system assumes the guidance and navigation functions using the data acquired during ascent.

During periods when onboard velocity and/or attitude change sensing is not required, the IMU is placed in standby operation to conserve electrical power. The AGC is used more extensively than the IMU; however, it will also be placed in standby operation to conserve electrical power. When the guidance and navigation function is to be restored, the IMU and AGC are reactivated, with the AGC using the last computed velocity as the basis for further velocity computations. New positional data must be acquired from optical sightings or MSFN through telemetry or voice communications.

Initial position and attitude information as well as periodic updating of this information is made through use of the optics. This is accomplished by the navigator making two or more landmark and/or star sightings. The sightings are made by acquiring the star-landmark with the SCT and/or SXT. When the viewed object is centered, a mark command is initiated. The AGC reads the optics angles, IMU angles, and time, in conjunction with internal programs to determine the spacecraft position. This position information and the spacecraft velocity are used to compute an estimated trajectory. The actual trajectory is compared with previous trajectory data to generate the trajectory error, if any, for further reference. Optical measurements are also used in aligning the IMU to a specific reference orientation.

The IMU (figure 2.2-2) contains three inertial rate integrating gyros (IRIGs), three angular differentiating accelerometers (ADAs), and three pulsed integrating pendulous accelerometers (PIPAs). The IRIGs, PIPAs, and one ADA are mounted on the stable platform which is gimbaled to provide three degrees of freedom. The two remaining ADAs are mounted on the middle gimbal. The stable platform inertial reference is maintained by the IRIGs and ADAs in conjunction with electronic stabilization loops. Any displacement of the platform is sensed by the IRIGs which produce output signals representative of the magnitude and direction of displacement. The ADAs sense the displacement rate and produce output rate control signals to maintain correct stabilization loop control response. The IRIG and ADA signals are applied to servo amplifiers, which condition the signals to drive gimbal torque motors. The gimbal torque motors then restore the initial platform orientation by driving the gimbals until the IRIG signals are nulled.

The PIPAs are orthogonally mounted and sense changes in spacecraft velocity. An acceleration or deceleration results in output signals which are representative of the magnitude and direction of the velocity change. The output signals are applied to the AGC which uses the information to update spacecraft velocity data. Continual updating of velocity information, with respect to the initial spacecraft position and trajectory, enables the AGC to provide current velocity, position, and trajectory information.

The IMU also provides a space stabilized reference for spacecraft attitude sensing and control. Attitude change sensing is accomplished by monitoring the spacecraft attitude with reference to the stable platform. Resolvers are mounted at the gimbal axes to provide signals representative of the gimbal angles. Inertial CDUs contain resolvers which repeat the platform attitude. Attitude monitoring is afforded by comparing the IMU resolver output signals with the CDU resolver signals. If the angles differ, error signals are generated and applied to the stabilization and control system. If the attitude error is larger than the selected deadband limits, the SCS fires the appropriate RCS engines. The spacecraft is rotated back to the initial reference attitude and the error signals are nulled (within deadband limits).

The AGC provides automatic execution of computer programs, automatic control of ISS and OSS modes, and, in conjunction with the DSKYs, manual control of ISS and OSS modes and computer displays. The AGC contains a two-part memory which consists of a large non-erasable section and a smaller erasable section. Non-erasable memory contains mission and system programs and other predetermined data which are wired in during assembly. Data readout from this section is non-destructive and cannot be changed during operation. The erasable section of memory provides for data storage, retrieval, and operations upon measured data and telemetered information. Data readout from this section is destructive, permitting changes in stored data to be made as desired. Information within the memory may be called up for display on the two DSKYs. The DSKYs enable the flight crew to enter data or instructions into the AGC, request display of data from AGC memory, and offer an interrupt control of AGC operation. The AGC timing section provides timing signals of various frequencies for internal use and to other onboard systems which require accurate or synchronized timing. Data within the AGC is transmitted to MSFN through a "downlink" telemetry function. Telemetered data is transmitted as a function of an AGC program or by request from MSFN. Data within the AGC may be updated through an "uplink" telemetry function controlled by MSFN. The AGC performs guidance functions by executing internal programs using predetermined trajectory parameters, attitude angles from the inertial CDUs, velocity changes from the PIPAs, and commands from the DSKYs (crew) to generate control commands. The navigation function is performed by using stored star-landmark data, optics angles from the optics CDUs, and velocity changes from the PIPAs in the execution of navigation programs.

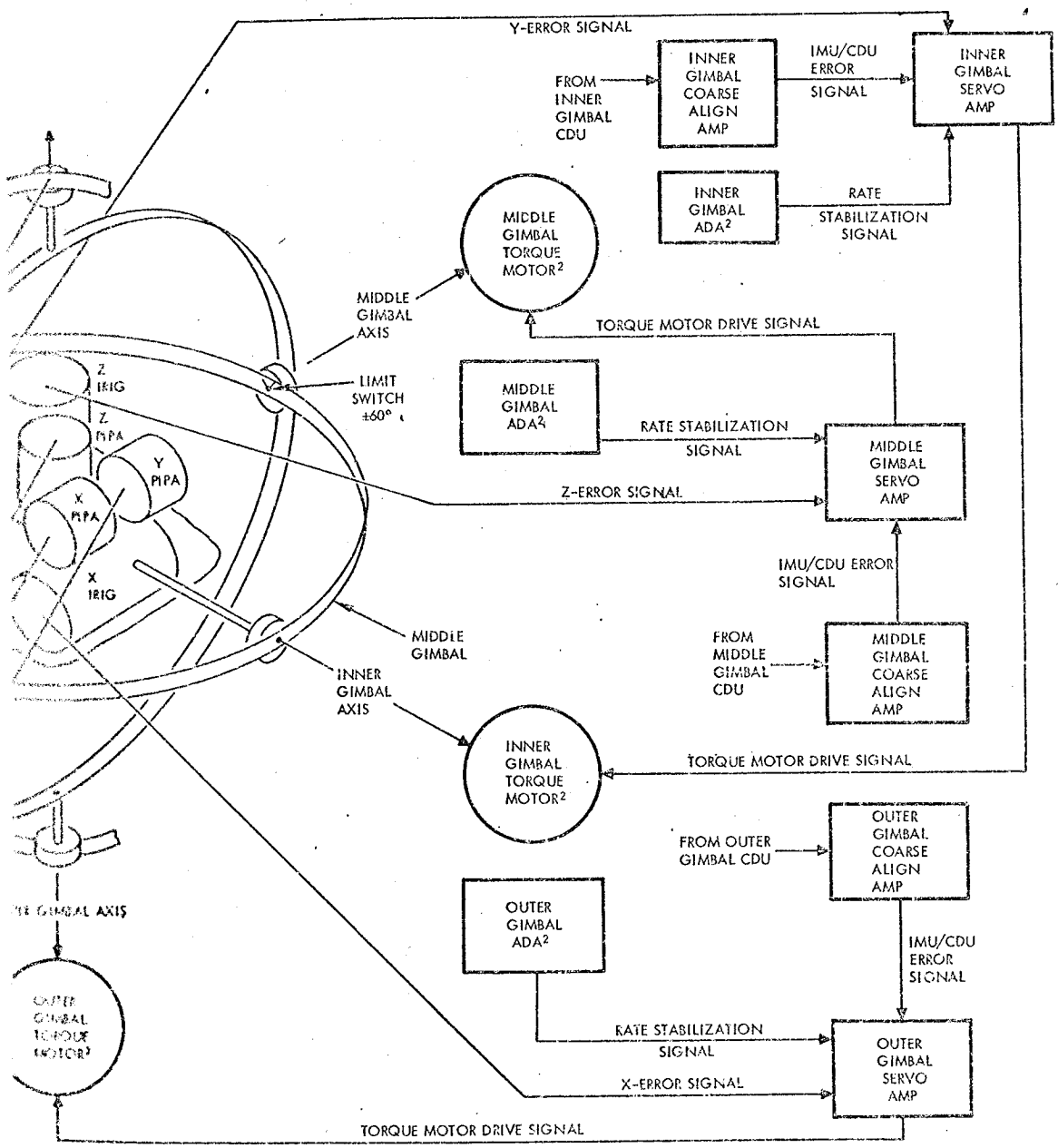

SM-2A-750A

Figure 2.2-2. G&N System Functional Block Diagram

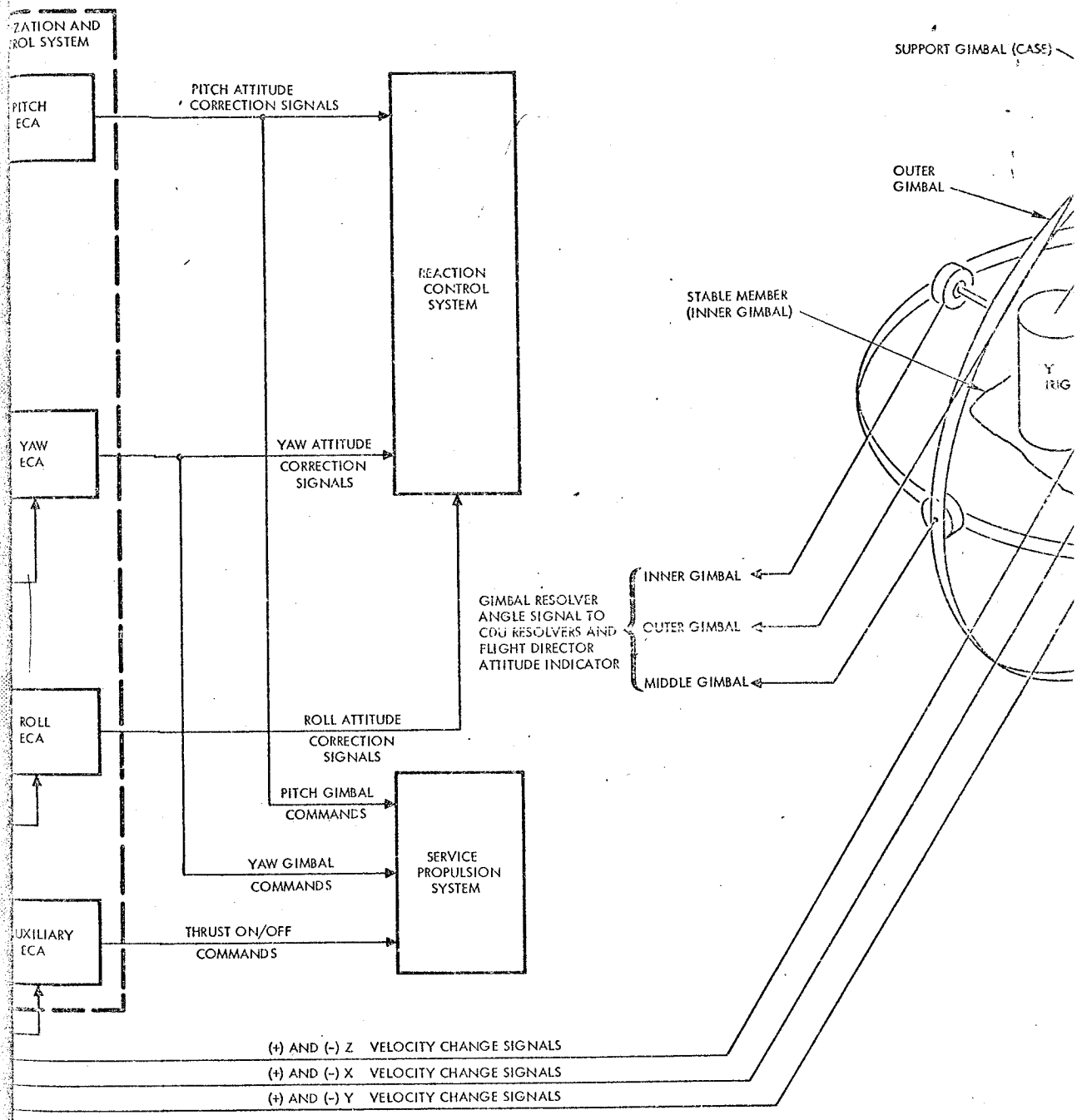
ZATION AND
ROL SYSTEM
PITCH
ECA
PITCH ATTITUDE
CORRECTION SIGNALS
REACTION
CONTROL
SYSTEM
YAW
ECA
YAW ATTITUDE
CORRECTION
SIGNALS
ROLL
ECA
ROLL ATTITUDE
CORRECTION
SIGNALS
PITCH GIMBAL
COMMANDS
YAW GIMBAL
COMMANDS
SERVICE
PROPULSION
SYSTEM
UXILIARY
ECA
THRUST ON/OFF
COMMANDS
SUPPORT GIMBAL (CASE)
OUTER
GIMBAL
STABLE MEMBER
(INNER GIMBAL)
Y
RIG
GIMBAL RESOLVER
ANGLE SIGNAL TO
CDU RESOLVERS AND
FLIGHT DIRECTOR
ATTITUDE INDICATOR
INNER GIMBAL
OUTER GIMBAL
MIDDLE GIMBAL
(+) AND (-) Z VELOCITY CHANGE SIGNALS
(+) AND (-) X VELOCITY CHANGE SIGNALS
(+) AND (-) Y VELOCITY CHANGE SIGNALS

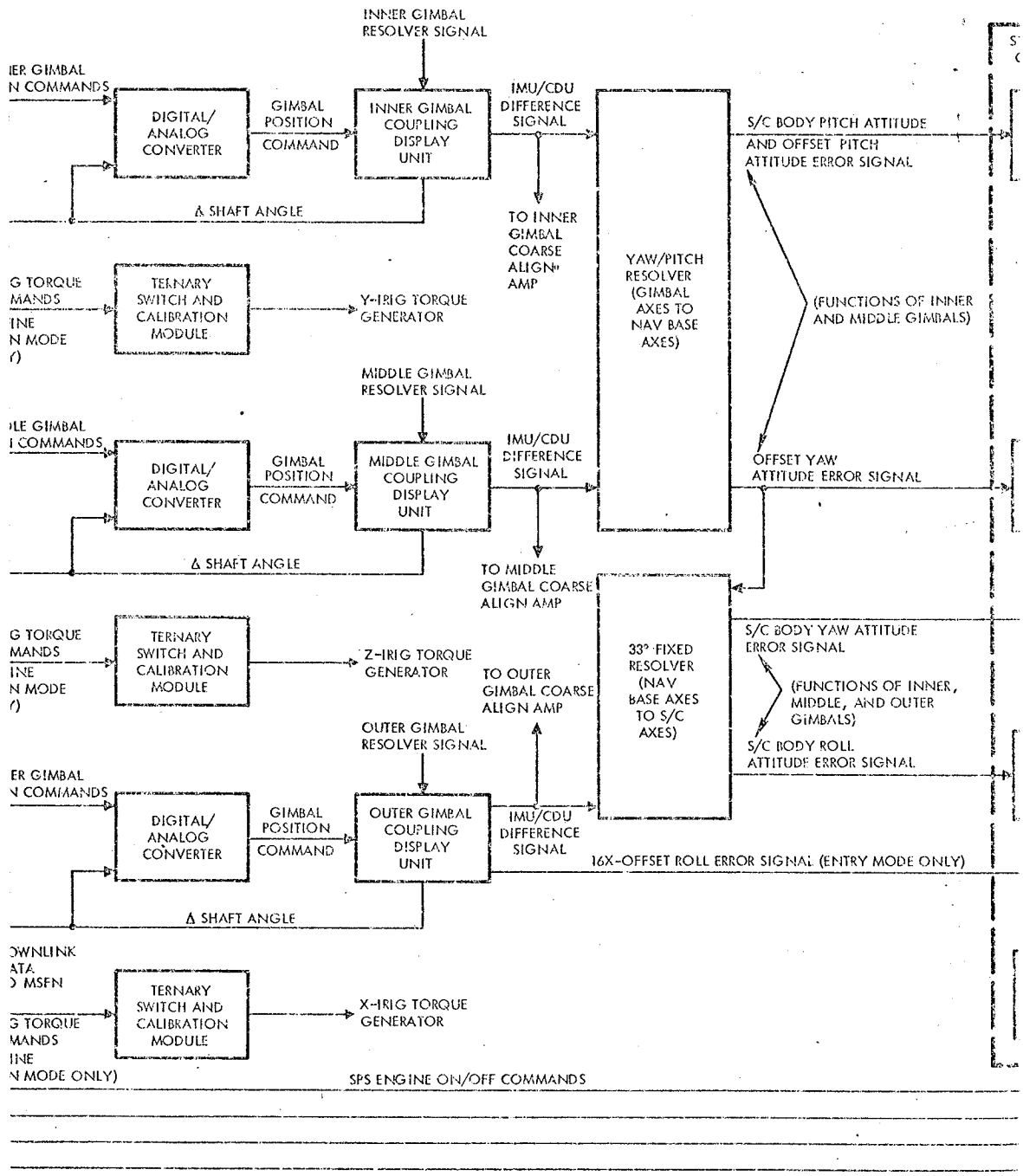
INNER GIMBAL RESOLVER SIGNAL
IER GIMBAL
N COMMANDS
DIGITAL/ ANALOG CONVERTER
GIMBAL POSITION COMMAND
INNER GIMBAL COUPLING DISPLAY UNIT
IMU/CDU DIFFERENCE SIGNAL
S/C BODY PITCH ATTITUDE AND OFFSET PITCH ATTITUDE ERROR SIGNAL
Δ SHAFT ANGLE
TO INNER GIMBAL COARSE ALIGN AMP
YAW/PITCH RESOLVER (GIMBAL AXES TO NAV BASE AXES)
G TORQUE
MANDS
TNE
N MODE
TERNARY SWITCH AND CALIBRATION MODULE
Y-IRIG TORQUE GENERATOR
(FUNCTIONS OF INNER AND MIDDLE GIMBALS)
MIDDLE GIMBAL RESOLVER SIGNAL
LE GIMBAL
COMMANDS
DIGITAL/ ANALOG CONVERTER
GIMBAL POSITION COMMAND
MIDDLE GIMBAL COUPLING DISPLAY UNIT
IMU/CDU DIFFERENCE SIGNAL
OFFSET YAW ATTITUDE ERROR SIGNAL
Δ SHAFT ANGLE
TO MIDDLE GIMBAL COARSE ALIGN AMP
G TORQUE
MANDS
TNE
N MODE
TERNARY SWITCH AND CALIBRATION MODULE
Z-IRIG TORQUE GENERATOR
TO OUTER GIMBAL COARSE ALIGN AMP
33° FIXED RESOLVER (NAV BASE AXES TO S/C AXES)
S/C BODY YAW ATTITUDE ERROR SIGNAL
(FUNCTIONS OF INNER, MIDDLE, AND OUTER GIMBALS)
S/C BODY ROLL ATTITUDE ERROR SIGNAL
OUTER GIMBAL RESOLVER SIGNAL
ER GIMBAL
N COMMANDS
DIGITAL/ ANALOG CONVERTER
GIMBAL POSITION COMMAND
OUTER GIMBAL COUPLING DISPLAY UNIT
IMU/CDU DIFFERENCE SIGNAL
16X-OFFSET ROLL ERROR SIGNAL (ENTRY MODE ONLY)
Δ SHAFT ANGLE
OWNLINK
ATA
MSFN
G TORQUE
MANDS
INE
N MODE ONLY)
TERNARY SWITCH AND CALIBRATION MODULE
X-IRIG TORQUE GENERATOR
SPS ENGINE ON/OFF COMMANDS

NOTES: 1. AGC inputs and outputs shown are present at various times, depending upon mode of operation, but not concurrently.

2. These components are physically mounted on the IMU but illustrated as shown for clarity.

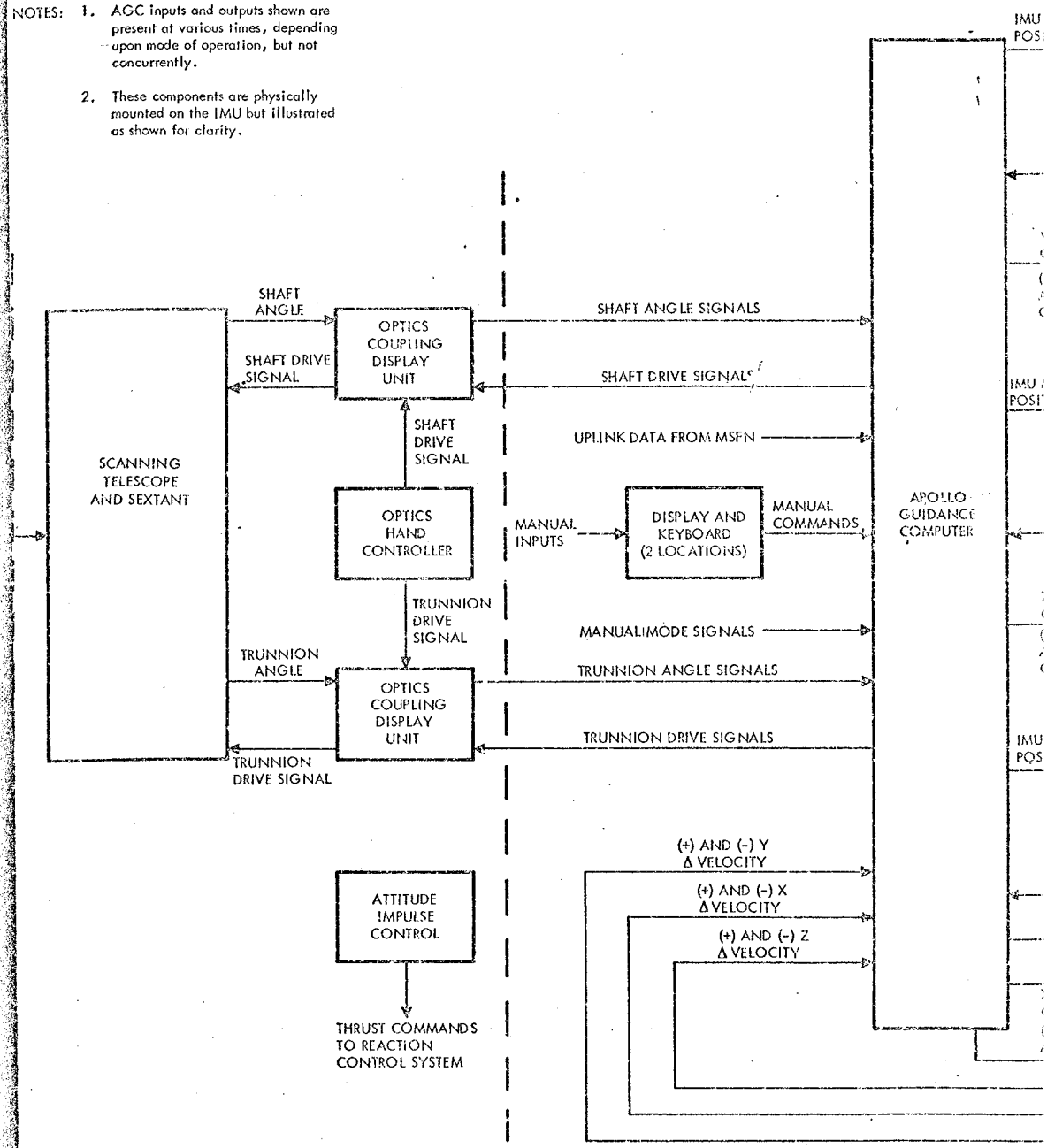

VISUAL
SIGHTINGS
OF STARS,
LANDMARKS
AND HORIZON

The optics provide accurate star and landmark angular measurements. Sightings are accomplished by the navigator using the SXT and SCT. The optics are positioned by drive motors commanded by the optics hand controller or manually using a universal tool, as desired. The shaft axes are parallel. Trunnion axes may be operated in parallel or offset, as desired. The SCT is a unity power instrument providing an approximate 60-degree field of view. It is used to make landmark sightings and to acquire and center stars or landmarks prior to SXT use. The SXT provides 28-power magnification with a 1.8-degree field of view. The SXT has two lines of sight, enabling it to measure the included angle between two objects. This requires two lines of sight which enable the two viewed objects to be superimposed. For a star-landmark sighting, the landmark line of sight is centered along the SXT shaft axis. The star image is moved toward the landmark by rotating the shaft and trunnion axes until the two viewed objects are superimposed. The shaft and trunnion angles are repeated by the optic CDUs. When the navigator is satisfied with image positions, he issues a mark command to the AGC. The AGC reads the optics CDU angles, IMU CDU angles, and time, and computes the position of the spacecraft. The AGC bases the computation on stored star and landmark data which may also be used by the AGC to request specific stars or landmarks for navigational sightings. Two or more sightings, on two or more different stars, must be taken to perform a complete position determination.

2.2.2.1 Operational Modes.

The G&N system is operated in six basic operational modes. Selection of any one mode is accomplished manually by the flight crew or automatically by the AGC. The basic modes are as follows:

- Monitor (initiated by SCS mode selection)
- Zero encode
- Coarse align
- Fine align
- Attitude control
- Entry

The system configuration necessary to operate in any of the modes is established by relay switching.

The monitor mode is used at launch, ascent, and during orbit until CSM/S-IVB separation, to provide flight path data for crew displays. The coarse align, fine align, and zero encode modes are used to align the IMU after standby periods or to acquire a new stable platform orientation. The attitude control mode provides for spacecraft attitude control and navigation computations to measure position and velocity. The entry mode provides control of the spacecraft lift vector during entry phase.

The ISS and CSS will be operated in on-standby cycles to conserve electrical power. During standby operation, the ISS maintains IMU temperature, and the CSS maintains AGC timing functions. The OSS is shut off when not in use. Since standby operation time varies for each of the subsystems, standby is not considered as basic mode.

2.2.2.1.1 Monitor Mode.

During prelaunch operations, the G&N system is aligned to the desired launch reference attitude and gyro compasses to maintain this attitude. Approximately 3 minutes prior to launch, the gyro compassing is stopped and the system becomes inertially referenced. Upon lift-off the AGC begins monitoring the flight path angles by driving the Inertial Coupling Display Units (ICDUs) through programmed attitude changes. The ICDU angles are compared with the IMU gimbal angles to produce flight path error signals which are displayed by the FDAI error needles. Total spacecraft attitude, with respect to the IMU orientation, is displayed by the FDAI ball. (Prelaunch FDAI readings are 164.76-degree roll, 58.30-degree pitch, and 9.69-degree yaw, with respect to the navigation axis symbol. Display at orbit insertion is 0-degree roll, 310.5-degree pitch, and 0-degree yaw, assuming a 180-degree roll has been performed and launch pad 37 is used.) During boost prior to launch escape tower (LET) jettison, the AGC displays the following:

REGISTER 1 - Inertial flight path angle; inertial velocity with respect to local horizontal in degrees.

REGISTER 2 - Inertial velocity in ft per sec.

REGISTER 3 - Altitude above launch pad in nautical miles (NMs).

Upon receipt of LET jettison signals the displays change to the following:

REGISTER 1 - Predicted Gs for free-fall and entry at 60-degree bank angle.

REGISTER 2 - Altitude of perigee above the mean equatorial radius in NMs.

REGISTER 3 - Time of free-fall to 300,000 ft above mean equatorial radius in minutes and seconds.

This displayed data provides the flight crew with sufficient information to make abort or continue decisions; however, if time is not critical, the decision is made by the flight crew and MSFN jointly.

2.2.2.1.2 Zero Encode Mode.

The zero encode mode enables correction of the CDU data stored in AGC. This mode is used to ensure that the reference angles contained in the CDU registers of the AGC correspond with the actual CDU angles. This is accomplished by driving the CDUs to zero, then clearing the AGC CDU registers. This starts the AGC CDU registers at zero and enables the registers to maintain correct CDU angles by counting pulses from the CDU digital encoders.

2.2.2.1.3 Coarse Align Mode.

The coarse align mode enables stable platform alignment to within approximately 2 degrees of a desired platform orientation. Prerequisite information to accomplish coarse alignment consists of the desired platform orientation and present spacecraft attitude.

The desired platform orientation angles are computed by an alignment program executed by the AGC. The navigator determines the spacecraft attitude immediately prior to coarse alignment by making two or more sightings on stars or landmarks. Upon completion of the sightings, the AGC reads the optic angles and computes the gimbal angles necessary to attain the desired platform orientation. The AGC generates drive signals to position the CDU resolvers to the required gimbal angles. The IMU-CDU resolver error signals, generated by repositioning the CDUs, are applied to the gimbal torque servo amps which drive the gimbal torque motors to position the platform to the desired orientation.

The stable platform orientation will normally be such that the X-axis lies along the spacecraft thrust vector during all powered phases, except ascent, and along the spacecraft stability axis during entry.

2.2.2.1.4 Fine Align Mode

The fine align mode completes stable platform orientation to the required degree of accuracy. The navigator makes two or more star sightings, using on-board data and the optics to acquire the desired stars. Upon receipt of the optic angles the AGC computes the IMU angles necessary to complete the alignment. In the fine align mode, the IMU angles are repeated by the inertial CDUs which are monitored by the AGC to determine the actual IMU orientation. The AGC generates torquing signals to cancel any error between the actual IMU orientation and the desired orientation. These torquing pulses are applied to the IRIG torquing coils. The IRIGs in conjunction with the stabilization loops, reposition the stable platform until the desired orientation is attained. Upon completion of fine alignment, the IMU/CDU resolver signals and the stabilization loop signals are at null.

The system configuration required for fine align mode also applies IMU resolver signals to the SCS as apparent attitude error signals. To prevent these signals from appearing as actual spacecraft attitude errors, the SCS must be operated in an SCS mode which rejects G&N derived signals.

2.2.2.1.5 Attitude Control Mode.

The attitude control mode provides spacecraft attitude change sensing, generates error signals for spacecraft attitude control, velocity change signals for updating AGC velocity information, and signals for timing SPS engine thrust termination commands.

During spacecraft attitude control, the IMU gimbal resolvers sense any displacement of the spacecraft with respect to the stable platform orientation and produce corresponding error signals. The error signals are applied directly to the SCS-FDAI ball for error display and to the inertial CDU resolvers. The IMU-CDU error signals are displayed on the IMU control panel, resolved into spacecraft axes, and applied to the SCS. If the error signals indicate an attitude error larger than the selected deadband, appropriate RCS engines are fired and the desired spacecraft attitude is restored.

For delta V maneuvers, the G&N system provides attitude control, velocity change sensing, and total velocity change control by generating thrust termination commands. Prior to thrusting, the IMU is aligned so that the stable platform X-axis is parallel to the thrust vector. The AGC determines time-to-ignition and total velocity change desired, and performs mode verification routines. At ignition time the AGC flashes the DSKY displays to the crew for initiation of ignition (manual DSKY entry is required). During thrusting, the CDU applies attitude error signals to the SCS. Roll error signals are applied to the RCS engines; however, pitch and yaw error signals are applied to the SPS engine gimbals rather than RCS engines. This ensures alignment of the thrust vector through the spacecraft center-of-gravity and along the correct trajectory. The PIPAs on the stable platform sense the velocity changes and apply proportional output signals to the AGC. The AGC computes and updates spacecraft velocity, and counts down a preset counter with the PIPA signals. When the counter reaches zero, a thrust termination signal is generated and applied through the SCS electronics to the SPS engine.

2.2.2.1.6 Entry.

The entry mode provides for generation of attitude error and steering signals, sensing of deceleration, and computation of velocity changes during the entry phase of the mission. The steering signals provide for control of the spacecraft lift vector through the SCS, to inhibit excessive G-loadings and heat buildup, and to control the flight path to enable landing at a preselected site. Attitude error signals are applied to the FDAI attitude error needles.

Entry configuration is similar to attitude control with the exceptions that the roll response time is reduced, one step of axis resolution is not needed, and the AGC will produce steering signals to the SCS by driving the roll CDU. From initiation of entry mode until 0.05G switching, roll, pitch,

and yaw error signals provide attitude control. Upon 0.05G switching, the pitch and yaw error signals provide display only. Prior to entry, the IMU X-axis is aligned along the spacecraft entry velocity vector. This alignment eliminates the need for navigation base-to-spacecraft body axis resolution. Deceleration is sensed primarily by the IMU X-axis PIPA, although changes in lift vector orientation cause some lateral movement which is sensed by the Y and/or Z PIPAs. The outer gimbal, or roll, 1X resolver is connected to the 16X resolver in the ROLL CDU, giving a 16:1 increase in attitude error signal and reducing the response time of the roll channel. The AGC will produce steering signals by executing a programmed lift vector down entry (to ensure capture), 180-degree roll to lift vector up, then generate further steering signals with respect to G forces, heat buildup, and range needed. These steering signals are routed to the roll CDU where an IMU-CDU resolver error is generated and routed to the SCS for FDAI display and/or RCS engine control. The entry may be performed manually with the pilot flying to the steering signals as displayed on the FDAI, or automatically with the AGC steering signals routed to the roll RCS engines for spacecraft control.

2.2.3 MAJOR COMPONENT/SUBSYSTEM DESCRIPTION.

2.2.3.1 Inertial Subsystem.

The function of the inertial subsystem is to provide a space-stabilized inertial reference from which velocity changes and attitude changes can be sensed. It is composed of the inertial measurement unit (IMU), the navigation base (NB), parts of the power and servo assembly (PSA), parts of the control and display panels, and three coupling display units (CDUs).

2.2.3.1.1 Navigation Base.

The navigation base (NB) is the rigid, supporting structure which mounts the IMU and optical instruments. The NB is manufactured and installed to close tolerances to provide accurate alignment of the equipment mounted on it. It also provides shock mounting for the IMU and optics.

2.2.3.1.2 Inertial Measurement Unit.

The inertial measurement unit (IMU) is the main unit of the inertial subsystem. It is a three-degree-of-freedom stabilized platform assembly, containing three inertial reference integrating gyros (IRIGs), three pulsed integrating pendulous accelerometers (PIPAs), and three angular differentiating accelerometers (ADAs). The stable member itself is machined from a solid block of beryllium with holes bored for mounting the PIPAs, IRIGs, and one of the three ADAs. Three gimbal and six intergimbal assemblies, which house torque motors and resolvers, are also part of the IMU assembly, together with preamplifiers and gimbal-mounted electronics. Figure 2.1-2 shows how the IRIGs and the PIPAs are mounted relative to each other on the stable member (or inner gimbal). The three gimbal axes, about which each of the gimbals rotate, are also shown.

The stable platform attitude is maintained by the IRIGs, ADAs, stabilization loop electronics, and gimbal torque motors. Any displacement of the stable platform or gimbal angles is sensed by the IRIGs and ADAs, which generate error signals. IRIG error signals are resolved and amplified at the IMU and applied to stabilization loop electronics. ADA-produced error signals are summed with the IRIG error signals. The resultant signal is conditioned and applied to the gimbal torque motors, which restore the desired attitude.

The stable platform provides a space-referenced mount for three PIPAs, which sense velocity changes. The PIPAs are mounted orthogonally to sense the velocity changes along all three axes. Any translational force experienced by the spacecraft causes an acceleration or deceleration which is sensed by one or more PIPAs. Each PIPA generates an output signal proportional to the magnitude and direction of velocity change. This signal, in the form of a pulse train, is applied to the AGC. The AGC will use the signal to update the velocity information and also generate signals to torque each PIPA ducosyn back to null.

The temperature of the IRIGs and PIPAs is maintained within required limits during both standby and operating modes of the IMU. The IMU temperature control system contains circuits to supply normal proportional temperature control with the capability of backup or emergency control in case of a proportional control malfunction. The proportional temperature control circuit is the primary means of maintaining the IRIG and PIPA temperature and provides the most accurate control. This type of control is available when either the proportional or auto-override mode is selected with the IMU TEMP MODE selector switch. The purpose of the auto-override mode is to provide automatic switching from that mode to emergency control if there is a malfunction in the proportional control circuit. If a malfunction occurs in the proportional mode, the switching to emergency control must be performed manually. In the proportional mode, the temperature is controlled by the proportional temperature control bridge and is maintained at 135±0.5°F. While in the emergency mode, it is controlled by the mercury thermostat and is held within ±5°F.

The backup temperature control and indicator circuit is intended for use in the event the proportional control fails. The control sensing elements for this system are three PIPA indicating sensors (connected in series) and six IRIG sensing elements (connected in series) in two separate bridges. This system can maintain the temperature to within ±1°F. In this mode of operation, an alarm indication is not available to the astronaut because of modifications to the temperature alarm amplifier circuit.

2.2.3.1.3 Coupling and Display Units.

There are five CDUs mounted below the IMU control panel at the lower equipment bay. Three CDUs function as part of the ISS, while the two remaining CDUs function with the OSS. The optic CDUs (OCDUs) are described in paragraph 2.2.3.2. The three inertial CDUs (ICDUs) are identical and may be interchanged. Display dials on the front panel of each provide a 6-digit readout. Positioning of the ICDUs is accomplished by the AGC. Each ICDU contains a 1/4-speed, 1/2-speed, 1-speed, and 16-speed resolver, the functions of which depend upon the ISS mode of operation. The angular movements of the resolvers are converted into digital signals by a digital encoder, processed by encoder electronics, and routed to AGC registers which maintain current ICDU angles for use as desired. The AGC

commands CDU movements by applying digital drive commands to digital-to-analog converters. The drive signals are converted from digital to analog and applied to CDU motor drive amplifiers which position the CDUs. The 1-speed and 16-speed resolvers function as receivers of signals produced by 1-speed and 16-speed resolvers mounted on the IMU. The 1/2-speed resolvers are used to zero the CDUs and the 1/4-speed resolvers are not used. The resolvers provide input signals to selector circuits which provide motor drive signals or spacecraft attitude error signals, depending upon ISS mode of operation. The IMU outer gimbal 1-speed resolver signals are applied to the roll CDU 16-speed resolver to increase roll control rates during entry.

2.2.3.1.4 Power and Servo Assembly.

The power and servo assembly (PSA), located just below the display and control panel in the lower equipment bay, serves as a central mounting point for most of the G&N electronic units such as power supplies and amplifiers. It also contains the backup electronics used to supply timing pulses to the IMU in case of an AGC timing malfunction. It consists of 10 removable trays mounted adjacent to each other and connected to a junction box. The PSA trays utilize three wiring harnesses to provide electrical connection: one for module-to-module connection, another for module-to-junction box connection, and a third for module connection to a 38-pin female test plug on the front of the PSA tray.

2.2.3.2 Optical Subsystem.

The optical subsystem is used for taking precise optical sightings on celestial bodies and for taking fixes on landmarks. These sightings are used for aligning the IMU and for determining the position of the spacecraft. The system includes the navigational base, two of the five CDUs, parts of the power and servo assembly, controls and displays, and the optics, which include the scanning telescope (SCT) and the sextant (SXT).

2.2.3.2.1 Optics.

The optics consist of the SCT and the SXT mounted in two protruding tubular sections of the optical base assembly. The SCT and SXT shaft axes are aligned parallel to each other and afford a common line-of-sight (LOS) to selected targets. The trunnion axes may be parallel or the SCT axis may be offset depending upon mode of operation.

The sextant is a highly accurate optical instrument capable of measuring the included angle between two targets. Angular sightings of two targets are made through a fixed beam splitter and a movable mirror located in the sextant head. The sextant lens provides 1.8-degree true field of view with 28X magnification. The movable mirror is capable of sighting a target to 57 degrees LOS from the shaft axis. The mechanical accuracy of the trunnion axis is twice that of the LOS requirement due to mirror reflection which doubles any angular displacement in trunnion axis.

The scanning telescope is similar to a theodolite in its ability to accurately measure elevation and azimuth angles of a single target using an established reference. The lenses provide 60-degree true field of view at 1X magnification. The telescope allowable LOS errors are 1 minute of arc rms in elevation with maximum repeatability of 15 arc/seconds and approximately 40 arc/seconds in shaft axis.

2.2.3.2.2 Coupling Display Units.

The function of the OCDUs is to position and repeat angles of the SCT and SXT shaft and trunnion axes. The OCDUs are similar to the ICDUs, but may not be interchanged due to internal mechanical differences allowing higher OCDU rates. Each OCDU has a 6-digit display readout and can be positioned automatically by AGC command. CDU angles are converted to a digital signal by a digital encoder, processed by encoder electronics, and routed to an AGC register. AGC positioning commands are applied to a digital-to-analog converter, converted to a representative analog signal, and applied to a motor drive amplifier in the SXT. Resolvers in the SXT function as transmitters to CDU resolvers which receive the position signals and apply the commanded angles to the CDU motor drive amplifiers to position the CDU motor.

Trunnion CDU 1/4-speed and 16-speed resolvers function as receivers and provide drive signals to the trunnion CDU motor. The SXT trunnion resolvers which drive the CDU resolvers are 1-speed and 64-speed respectively, providing a 1:4 SXT trunnion to CDU trunnion ratio. Visual readouts on the trunnion display dials are thus four times the trunnion angle and two times the star line-of-sight angle from zero position. The 1/2-speed resolver, in conjunction with the cosecant amplifier, provides a variable gain computing resolver which is used in the RESOLVED mode of operation. The 1-speed resolver is not used in the trunnion CDU.

Shaft CDU 1/2-speed and 16-speed resolvers function as receivers and produce drive signals to the shaft CDU motor. SXT resolvers used as transmitters are also 1/2-speed and 16-speed resolvers, affording a 1:1 ratio; thus, the display dials provide direct readouts of the shaft angles. The 1-speed resolver resolves polar coordinates into rectangular coordinates for the RESOLVED mode of operation. The 1/4-speed resolver is not used in the shaft CDU.

2.2.3.2.3 Operational Modes.

Optics positioning is accomplished automatically by the AGC or manually by the crew. Overall mode control is established by crew selection of the ZERO OPTICS, MANUAL, or COMPUTER modes on the OPTICS panel.

ZERO OPTICS mode enables automatic drive of the SXT shaft and trunnion motors to zero. This is accomplished by applying the SXT resolver output signals to the input of the SXT motor drive amplifiers. The drive signals are applied to the CDU and SCT resolvers which follow the SXT shaft and trunnion axes to zero. After 60 seconds, the AGC optics position registers are cleared. This mode may be selected by AGC program or manually.

MANUAL mode enables positioning control of the optics by manual manipulation of the optics hand controller. The hand controller is mechanized such that, right-left movement generates shaft commands, and up-down movement generates trunnion commands. Hand controller drive rates are selected by the position of the CONTROLLER SPEED switch.

Positions HI, MED, and LO control the amplitude of the drive signal to the hand controller. Hand controller drive signals are applied to the SXT shaft and trunnion drive amplifiers through the CONTROLLER MODE switch for selection of DIRECT or RESOLVED mode. In DIRECT mode, the image motion is presented in a polar coordinate reference frame; in RESOLVED mode, the image motion is presented in a rectangular coordinate reference frame.

In DIRECT mode, shaft commands move the image in a circular path around the center of the field of view. Trunnion commands drive the image in a straight line across the center of the field of view. The angular orientation of the trunnion commanded straight line movement is a function of the shaft angle; therefore, direction of image movement with respect to the direction of hand controller movement is also a function of shaft angle. The rate of image movement, for shaft commands, is a function of trunnion angle, wherein increasing trunnion angles result in increasing image movement rates.

In RESOLVED mode, shaft commands move the image left-right in a straight line. Trunnion commands move the image up-down in a straight line. Image movement is in the same direction as hand controller movement and the rate of movement is constant for varying angles.

In COMPUTER mode, the AGC positions the optics to a star or landmark determined by AGC programming. This mode is performed by an AGC routine which is called up automatically by various alignment programs. The target star or landmark may be defined by AGC programming or by the crew. If the target star or landmark is not selected by AGC programming, the crew makes a DSKY entry defining either the latitude, longitude, and altitude for a landmark or the star code for a star. The AGC determines the spacecraft attitude by monitoring the ICDUs, and computes the angles necessary to drive the optics to the desired target. (If the angles necessary to acquire the target are beyond the capabilities of the optics, the AGC flashes the DSKY displays.) When the necessary angles are computed, the AGC displays the desired shaft and trunnion angles on the DSKY and initiates OCDU drive to these angles. When the AGC has completed driving the CDUs, the crew checks the DSKY-displayed angles against the 6-digit CDU displays and the SCT counters. The crew then locates and identifies the target in the SCT, enables manual control, and completes the sighting. The AGC can also perform zero optics functions, if desired, by the AGC program.

The SCT trunnion may be operated in three alternate modes, with respect to the SXT trunnion, as desired. The SLAVE TELESCOPE switch enables crew selection of STAR LOS, LANDMARK LOS 0°, or OFFSET 25°. The STAR LOS position is normally used. In this position, the SCT trunnion is slaved to the SXT trunnion. The LANDMARK LOS 0° position, applies a fixed voltage to the SCT trunnion position loop causing it to null at zero. This holds center of the SCT 60° field of view parallel to the

SXT landmark line of sight. The OFFSET 25° position applies a fixed voltage to the SCT trunnion position loop, causing it to null at 25 degrees off-center. This holds the SCT field of view so that the SXT landmark line of sight remains visible while sweeping the SCT shaft through 360 degrees of rotation, providing an approximate 110-degree total field of view.

2.2.3.3 Computer Subsystem.

The computer subsystem (CSS) consists of the Apollo guidance computer (AGC) and two display and keyboard panels (DSKYs). The AGC and one DSKY are located at the lower equipment bay. The other DSKY is located on the main display console. The AGC mounts one switch on the front panel which applies partial or full power to the computer to enable standby or full operation of the CSS. All other AGC controls and displays are located on the DSKYs. The keyboards on the DSKYs are smiliar; however, the displays on the DSKY in the lower equipment bay are more extensive.

2.2.3.3.1 Apollo Guidance Computer.

The Apollo guidance computer (AGC) is a digital computer using a two-part rope core memory. (See figure 2.2-3.) The AGC processes various data to provide control and computation functions. Input data is received from the crew, ISS, OSS, MSFN, and other spacecraft systems. This data is processed by various programs to provide outputs to the crew, ISS, OSS, MSFN, and other spacecraft systems in the form of commands and displays. The control functions performed by the AGC consist of the following:

- Align the IMU stable platform.
- Position the optics for navigation sightings.
- Command reaction control system engine firings to maintain specific attitude.
- Request initiation and command termination of service propulsion engine firings.
- Provide synchronization pulses to the central timing equipment.
- Command telemetry transmission to MSFN.
- Command ISS moding.
- Command OSS moding.

The reference data used to generate controls may be acquired externally or generated within the AGC. Initiation of the controls may be accomplished by the crew using the DSKYs, by MSFN via telemetry, or by an AGC program.

- Central processor
- Memory
- Timing

Power Supply. The power supply consists of two parts. Input to the power supply is +28 vdc from the spacecraft main d-c bus. The two sections provide +13 vdc and +3 vdc. The +13-vdc output provides power to the DSKYs and, in conjunction with the +3-vdc power, to the logic circuits. The +3-vdc supply provides power to the timing section as well as to the logic circuits. During standby mode of operation, the +3-vdc section only is operated; thus, power consumption is reduced by approximately 100 watts.

Input. The input section consists of four registers which enable intercommunication between the AGC and the other G&N subsystems, the stabilization and control system, the mission sequencer, the S-IVB guidance, and MSFN. The utilization of the registers is such that each bit position in each register is assigned a specific task. For example, bit positions 1, 2, 3, 4, and 5 of input register 0 are assigned to receiving the five bit code generated when a DSKY key is pressed. Data received from the various sources are conditioned by the input registers such that, when it is transferred into the logic circuits, the signal levels and timing are correct. The data received by the four input registers are as follows:

Input 0 Register	Receives 5-bit code from the DSKYs, block uplink signal from the UPTEL switch, control signals from the SCS mode control panel, and mark commands from the MARK pushbutton. Also monitors the signal from the telemetry bit rate detecting circuits.
Input 1 Register	This register is formed by the Scaler A register of the timing section which maintains real time during standby operation, and provides update information to the real time counters when full operation is resumed.
Input 2 Register	Receives 200, 400, 800, and 1600 pps signals from the Scaler A section of the timing section forming an extension of the real time counters for use by other spacecraft systems which require timing of this order. Also receives discrete event signals from the S-IVB instrument unit, CM/SM separation signals from the master events sequence controller, failure signals from the ISS, mode signals from the SCS, and parity fail signals.

Input 3 Register	Receives ISS mode signals from the ISS mode relays and mode signals from the OSS, monitors the position of the TRANSFER switch, and provides a logic OR gate for 33 DSKY relays.

Output. The output section consists of four registers which enable the AGC to communicate with the flight crew, ISS, OSS, and other spacecraft systems. The utilization of the registers is similar to that used for the input section (i.e., each bit position, or group of bit positions is assigned a specific task). The tasks assigned to the various registers and bit positions are as follows:

Output 0 Register	Provides the transmission link from the AGC to the DSKYs by control of 14 banks of relays which provide display of data and routing of control signals to the ISS, OSS, and SCS.
Output 1 Register	Receives internal AGC alarm signals and causes alarm indicators on the DSKYs to illuminate. Receives KEY RLSE request from an AGC program and causes the KEY RLSE indicator to illuminate and flash until the DSKY is released. Receives AGC signal indicating improper DSKY operation and causes the CHECK FAIL indicator to illuminate. Receives SPS engine firing signal from an AGC program, causing the DSKY to flash a request for crew initiation of engine firing. Receives SPS engine off command from an AGC program, removing the engine on signal. Also provides signal to reset the error interrupt trap circuits, identifies the type of word being transmitted by downlink telemetry, and inhibits further loading of telemetry words when the telemetry word rate exceeds 50 words per second.
Output 2 Register	Controls application of 3200 pps control pulses to the ISS and OSS.
Output 3 Register	Serves as a spare register for the central processor when needed.
Output 4 Register	Contains the next word to be transmitted by downlink telemetry.

Central Processor. The central processor contains the logic circuits and registers which perform the programs. Programs are executed by performing instructions in a sequence controlled by the sequence generator. There are two basic types of instructions. The first is the machine instruction which consists of regular, involuntary, and miscellaneous instructions. Regular instructions are contained within the program and are part of the data words being processed. Involuntary instructions are performed as interrupts to the program and are generated externally to the AGC. Miscellaneous instructions are used in the computer test only. The second basic type of instruction is the interpretive instructions and are a programmer convenience which are converted under program control to machine instructions. The execution of the instructions is a function of the sequence generator. The sequence generator combines basic timing pulses with the instruction portion of a data word and performs the program in the necessary sequence. Regular machine instructions are processed by the sequence generator initiation of the instruction. The instruction will perform one or more subinstruction, the last of which will be a subinstruction to proceed to the next instruction. Involuntary instructions are initiated by an interrupt from an external source, after which the instruction is performed in the same manner as a regular instruction. After completion of the involuntary instruction, a "resume" command is executed and the sequence generator returns to the program which was interrupted. The central processor performs the data manipulation by adding, subtracting, shifting, etc., within a group of central registers, adder, and parity block. The functions of the registers are as follows:

A Register	Accumulator. Stores the results of arithmetic processing.
LP Register	Stores the least significant portions of the product of a multiply instruction.
B Register	Used to complement (by reading the reset side of the register), as temporary storage, and as a buffer.
Z Register	Program counter. Contains address of next instruction. Incremented by one as each instruction is performed. (Instructions are usually stored in memory sequentially.)
Q Register	If transfer control occurs the contents of Z are read into and stored in Q until interrupt is completed. Enables interrupted program to restart at the proper instruction. Also used in division. Stores remainder in complemented form.
Input 0, 1, 2, 3	Refer to Input section description.
Output 0, 1, 2, 3	Refer to Output section description.

G Register	Provides access to and from memory. Shifting, under program control, takes place in this register. Parity bit is removed and restored in this register.
S Register	Contains address of word to be called from memory. If word is in fixed memory, this selects word in conjunction with BANK register.
BANK Register	Selects bank in fixed memory. Operates in conjunction with S register.
SQ Register	Stores 4 bit order code of instruction word.
X, Y, U Registers	These registers form the adder. Two numbers to be added are placed in X and Y. The result is stored in U.
Parity Circuit	The parity circuit checks the parity of words coming from memory to be odd. If parity is not correct, this circuit generates a parity alarm. Words being returned to memory are given the proper parity bit by this circuit.

Data flow within the central processor is initiated by an instruction. A data word is brought from memory to the G register. The G register provides temporary storage of the word until it is needed. If the word came from erasable memory, it will usually be written back into the same location during the same memory cycle time it is transferred to the G register. (This is not necessary for words from fixed memory, as readout is not destructive.) The word is then routed to the parity circuits for a parity check and to have the parity bit removed. The sequence generator next controls the transfer of the data word to the other registers for processing. If the result of the processing is to be written back into memory, the word is transferred back into the G register, the parity bit is added, and the word transferred back to memory. If the processing consists of arithmetic functions, it is performed in the adder (X, Y, and U registers). The AGC has the capability to add only; therefore, subtraction, multiplication, and division are performed by complementing and/or shifting, then adding.

Memory. The AGC memory consists of two sections. The largest section is the fixed memory. This is a rope core type having a capability of 24,576 sixteen bit words. Readout is non-destructive and the data contained cannot be changed. All permanent, pre-determined data, such as programs, tables, constants, star and landmark angles, etc., are contained in this section. Addressing the data contained in the fixed

section is accomplished by the S and BANK registers. A smaller erasable section provides temporary storage for transient data. Erasable memory is a coincident-current core array with a capacity of 1024 sixteen bit words. Readout is destructive, so if data is to be retained, it is necessary to write the data back into the location when it is read out. Addressing the data contained in erasable memory is done by the S register.

Timing. The timing section generates the synchronization pulses for AGC operations and timing pulses for other spacecraft systems. The timing section is divided into the following functional groups:

Clock Divider	This group contains the basic clock oscillator which has a 2.048 mc frequency divided to time various AGC logic functions and certain outputs, clock the time pulse generator, and drive Scaler A.
Scalers A and B	Scaler A contains 17 binary dividers producing signals of various frequencies used within the AGC logic, as reference to the PSA, and to drive Scaler B. Scaler B contains 16 binary dividers producing timing signals to the Input 1 register for maintaining real time when the AGC is in standby. Scalers A and B are used in conjunction with the Input 0 register, TIME 1, and TIME 2 counters to provide real time.
Time Pulse Generator	Produces 12 basic timing pulses which define action times. These pulses are used to control internal sequencing of data processing.
Memory Pulse Generator	This group provides timing pulses to fixed and erasable memory to synchronize read and write operations.
Start-Stop Logic	The start-stop logic generates three commands. A monitor stop command inhibits the time pulse generator and stops AGC data word flow. A monitor start command generates the third signal which is a clear command to the sequence generator.

2.2.3.3.2 Display and Keyboard.

The DSKYs facilitate intercommunication between the flight crew and the AGC. (See figure 2.2-4).) The DSKYs operate in parallel, with the main display console DSKY providing AGC display and control while the crew are in their couches. The two condition lights provided at the main display console DSKY are COMPUTER FAIL, which is a gross AGC failure indicator, and KEY RLSE, which is a request to the crew to release the DSKY circuits to internal AGC program use. The main display console DSKY also has an UPTEL switch which enables the AGC to accept or block telemetered data from MSFN. The DSKY at the lower equipment bay contains the remainder of the condition lights: PROG ALM, RUPT LOCK, PARITY FAIL, TC TRAP, TM FAIL, COUNTER FAIL, SCALER FAIL, CHECK FAIL and KEY RLSE. All the condition lights except KEY RLSE are failure indicators. (KEY RLSE is a request for the crew to release the DSKY circuits to internal AGC program use.) This DSKY also has a TEST ALARM push-button which is wired to the alarm relays to provide a check of the warning lights. The electroluminescent displays are identical on each DSKY and always display identical data. The intensity of these displays is controlled by the BRIGHTNESS thumbwheels.

The exchange of data between the flight crew and the AGC is usually initiated by crew action; however, it can also be initiated by internal computer programs. The exchanged information is processed by the DSKY program. This program allows the following four different modes of operation:

- Display of Internal Data—Both a one-shot display and a periodically updating display (called monitor) are provided.
- Loading External Data—As each numerical character is entered, it is displayed in the appropriate display panel location.
- Program Calling and Control—The DSKY is used to initiate a class of routines which are concerned with neither loading nor display. Certain routines required instructions from the operator to determine whether to stop or continue at a given point.
- Changing Major Mode—The initiation of large scale mission phases can be commanded by the operator.

The data involved in both loading and display can be presented in either octal or decimal form as the operator indicates. If decimal form is chosen, the appropriate scale factors are supplied by the program. Decimal entries are indicated by entering a sign (+, -).

Keyboard Operation. The basic language of communication between the operator and the AGC is a pair of words known as verb and noun. Verb and noun codes are defined in figures 2.2-5 and 2.2-6, respectively. Each

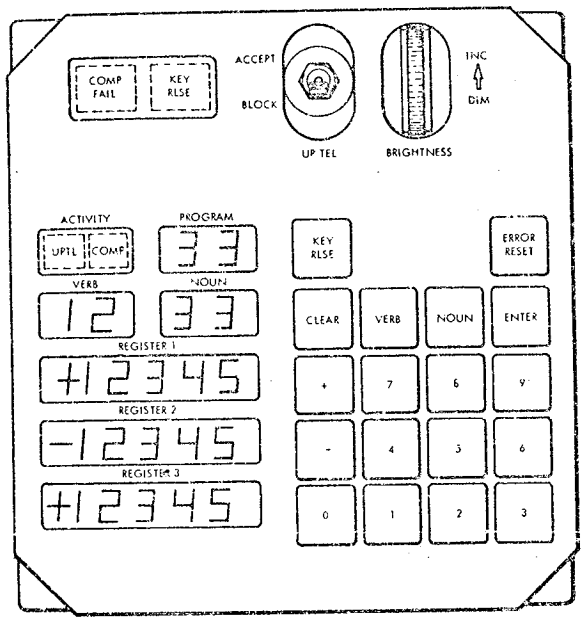

MAIN DISPLAY CONSOLE
DSKY

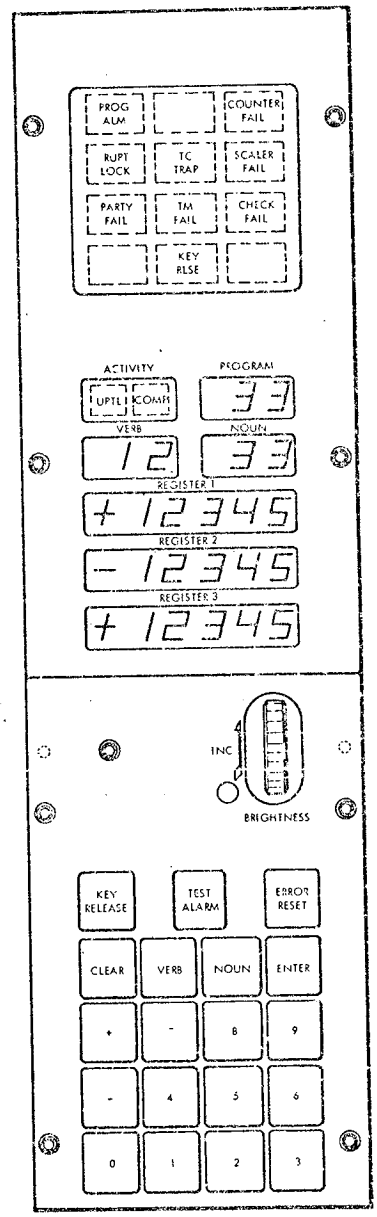

LOWER EQUIPMENT BAY
DSKY

SM-2A-894

Figure 2.2-4. Display and Keyboard Panels

of these is represented by a two-character octal number. The verb code indicates what action is to be taken (operation); the noun code indicates to what action is applied (operand). Typical verbs are those for displaying and loading. Nouns usually refer to a group of erasable registers within the computer memory. The PROGRAM, VERB, and NOUN displays provide two digit numbers which are coded octal numbers describing the action being performed. The REGISTER 1, 2, and 3 displays provide display of the contents of registers or memory locations. These displays are numbers which are read as decimal numbers if a sign (+, -) is present and octal numbers if no sign is used. The REGISTER displays operate under program control unless the contents of a specific register or memory location is desired. The crew may request display of the contents of a specific register or memory location by commanding the display from the keyboard. The only other displays are the ACTIVITY lights which indicate whether the computer is computing or accepting telemetry from MSFN.

The keyboard provides 18 keys which, when pressed, generate a five bit signal representative of the key pressed. The +, -, and 0-9 keys are used for numerical entries, while the CLEAR, ENTER, VERB, NOUN, KEY RELEASE, and ERROR RESET keys provide instructions. The TEST ALARM key is wired to the alarm relays and provides a check of the warning indicator lights with the exception of SCALER FAIL. The main display console DSKY UPTEL switch enables or inhibits the acceptance of telemetry from MSFN. The function of each of the keys is as follows:

0-9	Enter numerical data, addresses, and action codes.
VERB	Commands AGC to accept the next two numbers as verb code data. Verb display is blanked until numbers are entered.
NOUN	Commands AGC to accept the next two numbers as noun code data. Noun display is blanked until numbers are entered.
ENTER	Instructs AGC to accept keyed-in data as completed and initiate operation specified by data word.
CLEAR	Enters all zeros in data register being loaded. Each successive pressing of this key clears the next higher register.
KEY RLSE	Release the DSKY circuits and displays for use by the AGC program being executed.
ERROR RESET	Momentarily resets AGC failure lights.

(+) and (-)	Denotes sign of data to follow. Denotes that following data is decimal.
TEST ALARM	Sets relays to illuminate LEB DSKY condition lights (except SCALER FAIL) to ensure proper operation. (LEB DSKY only.)
UPTEL	Sets AGC input registers to accept or inhibit telemetered data from MSFN. (MDC DSKY only.)
BRIGHTNESS	Provides control of intensity of electroluminescent displays.

The lower equipment bay DSKY provides nine condition lights of which eight are failure indicators and the remaining light a request for action. The function of each is as follows:

PROG ALM	The AGC program being executed has detected an error.
COUNTER FAIL	Detected failure in input timing pulses. Either interrupt or circuitry failed. Interrupt failure is denoted by RUPT LOCK failure indicator illumination.
RUPT LOCK	Interrupt failed to occur or was not completed within specified time.
TC TRAP	Transfer control instruction has not occurred, or has occurred but was not completed within a specified time.
SCALER FAIL	Failure detected in AGC timing section.
PARITY FAIL	Parity failure detected in data read from memory.
TM FAIL	Telemetry word rate to MSFN either too high or too low. Telemetry word rate from MSFN too high or incorrect transmission of data.
CHECK FAIL	Attempted illegal DSKY operation. Normally operator error.
KEY RLSE	Flashes to indicate AGC program in operation requires DSKY circuitry to continue.

The standard procedure for the execution of keyboard operations consists of a sequence of seven key depressions:

VERB V_2 V_1 NOUN N_2 N_1 ENTER

Pressing the VERB key blanks the two verb lights on the DSKY and clears the verb code register in the AGC. The next two numerical inputs are interpreted as the verb code, in octal form. Each of these characters is displayed by the verb lights as it is inserted. The NOUN key operates similarly with the DSKY noun lights and AGC noun code register. Pressing the ENTER key initiates the program indicated by the verb-noun combination displayed on the DSKY. Thus, it is not necessary to follow a standard procedure in keying verb-noun codes into the DSKY. It can be done in reverse order, if desired, or a previously inserted verb or noun can be used without rekeying it. No action is taken by the AGC in initiating the verb-noun-defined program until the ENTER key is actuated. If an error is noticed in either the verb code or noun code prior to actuation of the ENTER key, it can be corrected simply by pressing the corresponding VERB or NOUN key and inserting the proper code. The ENTER key should not be actuated until it has been verified that the correct verb and noun codes are displayed.

If the selected verb-noun combination requires data to be loaded by the operator, the VERB and NOUN lights start flashing on and off (about once per second) after the ENTER key is pressed. Data is loaded in five-character words and, as it is keyed in, it is displayed character-by-character in one of the five-position data display registers, REGISTER 1, REGISTER 2, or REGISTER 3. Numerical data is assumed to be octal unless the five-character data word is preceded by a plus or minus sign, in which case it is considered to be decimal. Decimal data must be loaded in full five-numeral character words (no zeros may be left out); octal data may be loaded with high order zeros left out. If decimal is used for any component of a multicomponent load verb, it must be used for all components of that verb. In other words, no mixing of octal and decimal data is permitted for different components of the same load verb. The ENTER key must be pressed after each data word. This tells the program that the numerical word being keyed in is complete. The on-off flashing of the VERB-NOUN lights terminates after the last ENTER key actuation of a loading sequence.

The CLEAR key is used to remove errors in loading data as it is displayed in REGISTER 1, REGISTER 2, or REGISTER 3. It does nothing to the PROGRAM, NOUN, or VERB lights. (The NOUN lights are blanked by the NOUN key, the VERB lights by the VERB key.) For single-component load verbs or "machine address to be specified" nouns, the CLEAR key depression performs the clearing function on the particular register being loaded, provided that the CLEAR key is depressed before the ENTER key. Once the ENTER key is depressed, the CLEAR key does nothing. The only way to correct an error after the data is entered for

a single-component load verb is to begin the load verb again. For two- or three-component load verbs, there is a CLEAR backing-up feature. The first depression of the CLEAR key clears whichever register is being loaded. (The CLEAR key may be pressed after any character, but before its entry.) Consecutive CLEAR key actuations clear the data display register above the current one until REGISTER 1 is cleared. Any attempt to back up (clear) beyond REGISTER 1 is simply ignored. The CLEAR backing up function operates only on data pertinent to the load verb which initiated the loading sequence. For example, if the initiating load verb were a "write second component into" type only, no backing up action would be possible.

The numerical keys, the CLEAR key, and the sign keys are rejected if depressed after completion (final entry) of a data display or data load verb. At such time, only the VERB, NOUN, ENTER, ERROR RESET, or KEY RELEASE inputs are accepted. Thus, the data keys are accepted only after the control keys have instructed the program to accept them. Similarly, the + and - keys are accepted only before the first numerical character of REGISTER 1, REGISTER 2, or REGISTER 3 is keyed in and at no other time. The 8 or 9 key is accepted only while loading a data word which is preceded by a + or - sign.

The DSKY can also be used by internal computer programs for subroutines. However, any operator keyboard action (except ERROR RESET) inhibits DSKY use by internal routines. The operator retains control of the DSKY until he wishes to release it. Thus, he is assured that the data he wishes to observe will not be replaced by internally initiated data displays. In general, it is recommended that the operator release the DSKY for internal use when he has temporarily finished with it. This is done by pressing the KEY RELEASE key.

Verb-Noun Formats. The verb-noun codes are defined in figures 2.2-5 and 2.2-6. A noun code may refer to a device, a group of computer registers, or a group of counter registers, or it may simply serve to convey information without referring to any particular computer register. The noun is made up of 1, 2, or 3 components, each component being entered separately as requested by the verb code. As each component is keyed, it is displayed on the display panel with component 1 displayed in REGISTER 1, component 2 in REGISTER 2, and component 3 in REGISTER 3. There are two classes of nouns: normal and mixed. Normal nouns (codes 01 through 54) are those whose component members refer to computer registers which have consecutive addresses and use the same scale factor when converted to decimal. Mixed nouns (codes 55 through 77) are those whose component members refer to nonconsecutive addresses or whose component members require different scale factors when converted to decimal, or both.

A verb code indicates what action is to be taken. It also determines which component member of the noun group is to be acted upon. For

example, there are five different load verbs. Verb 21 is required for loading the first component of the selected noun; verb 22 loads the second component; verb 23 loads the third component; verb 24 loads the first and second component; and verb 25 loads all three components. A similar component format is used in the display and monitor verbs. There are two general classes of verbs: standard and extended. The standard verbs (codes 01 through 37) deal mainly with loading, displaying, and monitoring data. The extended verbs (codes 40 through 77) are principally concerned with calling up internal programs whose function is system testing and operation.

Whenever data is to be loaded by the operator, the VERB and NOUN lights flash, the appropriate data display register is blanked, and the internal computer storage register is cleared in anticipation of data loading. As each numerical character is keyed in, it is displayed in the proper display register. Each data display register can handle only five numerical characters at a time (not including sign). If an attempt is made to key in more than five numerical characters at a time, the sixth and subsequent characters are simply rejected but they do appear in the display register.

The + and - keys are accepted prior to inserting the first numerical character of REGISTER 1, REGISTER 2, or REGISTER 3; if keyed in at any other time, the signs are rejected. If the 8 or 9 key is actuated at any time other than while loading a data word preceded by a + or - sign, it is rejected and the CHECK FAIL light goes on.

The normal use of the flash is with a load verb. However, there are two special cases when the flash is used with verbs other than load verbs.

- Machine Address to be Specified—There is a class of nouns available to allow any machine address to be used; these are called "machine address to be specified" nouns. When the "ENTER", which causes the verb-noun combination to be executed, senses a noun of this type the flash is immediately turned on. The verb code is left unchanged. The operator should load the complete machine address of interest (five-character octal). This is displayed in REGISTER 3 as it is keyed in. If an error is made in loading the address, the CLEAR key may be used to remove it. Pressing the ENTER key causes execution of the verb to continue.

- Change Major Mode—To change major mode, the sequence is VERB 37 ENTER. This causes the noun display register to be blanked and the verb code to be flashed. The two-character octal major mode code should then be loaded. For verification purposes, it is displayed as it is loaded in the noun display register. The entry causes the flash to be turned off, a request for the new major mode to be entered, and a new major mode code to be displayed in the PROGRAM display register.

Verb Code	Description	Remarks
		NOTE Verb codes 01 through 37 denote standard verbs.
01	Display 1st component of	Performs octal display of data on REGISTER 1.
02	Display 2nd component of	Performs octal display of data on REGISTER 1.
03	Display 3rd component of	Performs octal display of data on REGISTER 1.
04	Display 1st and 2nd components of	Performs octal display of data on REGISTER 1 and REGISTER 2.
05	Display 1st, 2nd, and 3rd component of	Performs octal display of data on REGISTER 1, REGISTER 2, AND REGISTER 3.
06	Display all component(s) of	Performs decimal display of data on appropriate registers. The scale factors, types of scale factor routines, and component information are stored within the machine for each noun which it is required to display in decimal.
07	DP decimal display	Performs a double precision decimal display of data on REGISTER 1 and REGISTER 2. It does no scale factoring. It merely performs a 10-character, fractional decimal conversion of two consecutive, erasable registers, using REGISTER 1 and REGISTER 2. The sign is placed in the REGISTER 1 sign position with the REGISTER 2 sign position remaining blank. It cannot be used with mixed nouns. Its intended use is primarily with "machine address to be specified" nouns.
10	Enter request to waitlist (Used only during ground checkout.)	Enters request to "waitlist routine" for any machine address with delay involved. This verb assumes that the desired number of 10-millisecond units of delay has been loaded into the low order bits of the prio/delay register (noun 26). This verb is used with the "machine address to be specified" noun. The complete address of the desired location is then keyed in. (Refer to "Machine address to be specified" in paragraph on Verb/Noun Formats.)
11	Monitor 1st component	Performs octal display of updated data every 1/2 second on REGISTER 1.
12	Monitor 2nd component of	Performs octal display of updated data every 1/2 second on REGISTER 1.
13	Monitor 3rd component of	Performs octal display of updated data every 1/2 second on REGISTER 1.
14	Monitor 1st and 2nd component of	Performs octal display of updated data every 1/2 second on REGISTER 1 and RECISTER 2.
15	Monitor 1st, 2nd, and 3rd component of	Performs octal display of updated data every 1/2 second on REGISTER 1, REGISTER 2, and REGISTER 3.
16	Monitor all components(s) of	Performs decimal display of updated data every 1/2 second on appropriate registers.
17	Monitor DP decimal	Performs double precision display of decimal data on REGISTER 1 and REGISTER 2. No scale factoring is performed. Provides 10-character, fractional decimal conversion of two consecutive erasable registers. The sign is placed in the sign-bit position of REGISTER 1. REGISTER 2 sign bit is blank.
20	Enter request to executive (Used only during ground checkout.)	Enters request to executive routine for any machine address with priority involved. This verb assumes that the desired priority has been loaded into bits 10-14 of the prio/delay register (noun 26). This verb is used with the noun, "machine address to be specified". The complete address of the desired location is then keyed in. (Refer to "Machine address to be specified" in paragraph on Verb/Noun Formats.)
21	Write 1st component into	Performs data loading. Octal quantities are unsigned. Decimal quantities are preceded by + or - sign. Data is displayed on REGISTER 1.

Figure 2.2-5. Verb List (Sheet 1 of 3)

Verb Code	Description	Remarks
22	Write 2nd component into	Performs data loading. Octal quantities are unsigned. Decimal quantities are preceded by + or - sign. Data is displayed on REGISTER 2.
23	Write 3rd component into	Performs data loading. Octal quantities are unsigned. Decimal quantities are preceded by + or - sign. Data is displayed on REGISTER 3.
24	Write 1st and 2nd component into	Performs data loading. Octal quantities are unsigned. Decimal quantities are preceded by + or - sign. Data is displayed on REGISTER 1 and REGISTER 2.
25	Write 1st, 2nd, and 3rd component into	Performs data loading. Octal quantities are unsigned. Decimal quantities are preceded by + or - sign. Data is displayed on REGISTER 1, REGISTER 2, and REGISTER 3.
26	(Spare)	
27	(Spare)	
30	(Spare)	
31	Bank Display	This verb is included to permit displaying the contents of fixed memory in any bank. Its intended use is for checking program ropes and the BANK position of program ropes.
32	(Spare)	
33	Proceed without data	Informs routine requesting data to be loaded that the operator chooses not to load fresh data, but wishes the routine to contine as best it can with old data. Final decision for what action should be taken is left to requesting routine.
34	Terminate	Informs routine requesting data to be loaded that the operator chooses not to load fresh data and wishes the routine to terminate. Final decision for what action should be taken is left to requesting routine. If monitor is on, it is turned off.
35	(Spare)	
36	Fresh start	Initializes the program control software and the keyboard and display system program.
37	Change major mode to	Change to new major mode. (Refer to "Change major mode" in paragraph on Verb-Noun Formats.)
		NOTE Verb codes 40 through 77 denote extended verbs.
40	Zero	Must be used with noun 20 (ICDU) or noun 55 (OCDU) only. Sets the CDU registers to zero.
41	Coarse align IMU	Must be used with noun 20 (ICDU) or noun 55 (OCDU) only.
42	Fine align IMU	Calls up programs that perform the indicated G&N system procedures.
43	Lock IMU	Calls up programs that perform the indicated G&N system procedures.
44	Set IMU to ATTITUDE CONTROL	Calls up programs that perform the indicated G&N system procedures.
45	Set IMU ENTRY	Calls up programs that perform the indicated G&N system procedures.
46	Return IMU to coarse align	Calls up programs that perform the indicated G&N system procedures.

Figure 2.2-5. Verb List (Sheet 2 of 3)

Verb Code	Description	Remarks
47	(Spare)	
50	Please perform	This verb is used only by internal rountines that wish the operator to perform a certain task. It should never be keyed in by the operator. It is usually used with noun 25, "checklist." The coded number for the checklist item to be performed is displayed in REGISTER 1 by the requesting routine.
51	Please mark	This verb is used only by internal routines that request the operator to "mark". It should never be keyed in by the operator. It is usually used with noun 30, "star numbers". The numbers of the stars to be marked are displayed in REGISTER 1, REGISTER 2, and REGISTER 3 by the requesting routine. The operator should indicate completion of each valid mark by pressing the MARK button. He should never press ENTER with verb 51.
52	Mark reject	Rejects "mark" and returns to verb 51. Must be entered within 20 seconds of pressing MARK button.
53	Free	Calls up programs that perform the indicated G&N system procedures. Used only with noun 20 (ICDU) or noun 55 (OCDU).
54	Pulse torque gyros	Calls up programs that perform the indicated G&N system procedures.
55	Align time	
56	Perform BANK sum	
57	System test (Used only during ground checkout.)	
60	Prepare for standby	
61	Recover from standby	
62	(Spare)	
63	(Spare)	
64	Calculate orbital parameters	
65	Calculate time of arrival at longitude	
66	Calculate latitude and longitude at specified time	
67	Calculate maximum declination and time of arrival	
70	(Spare)	
71	(Spare)	
72	(Spare)	
73	Return to Earth aim point update	
74	Orbit change aim point update	
75	Manual lift-off for flights	
76	R.V.T. update (state vector)	R.V.T. denotes position, velocity, and time.
77	(Spare)	

Figure 2.2-5. Verb List (Sheet 3 of 3)

SYSTEMS DATA

Noun Code	Description	Scale/Units
	NOTE	**NOTE**
	Noun codes 01 through 54 denote normal nouns.	In Scale/Units column: X = significant digit; 0 = zero (always); B = blank.
01	Specify machine address	XXXXX
02	Specify machine address	XXXXX.
03	(Spare)	
04	(Spare)	
05	Angular error	XXX.XX degrees
06	Pitch angle	XXX.XX degrees
	Heads up-down	±00001
07	Change of program or major mode (Used only with verb 50, "Please perform".)	
10	(Spare)	
11	Engine on enable (Used only with verb 50, "Please perform".)	
12	Delta V allowable	XXXXX. ft/sec
	Delta V tailoff	XXXXX. ft/sec
13	Delta V measured (Vector magnitude.)	XXXXX. ft/sec
14	Delta V counter setting.	XXXXX. ft/sec
15	Increment address (Used only during ground checkout.)	Octal only
16	AGC clock time:	
	REGISTER 1	00XXX. hours
	REGISTER 2	000XX. minutes
	REGISTER 3	0XX.XX seconds
17	(Spare)	
20	ICDUs:	
	X-REGISTER 1	XXX.XX degrees
	Y-REGISTER 2	XXX.XX degrees
	Z-REGISTER 3	XXX.XX degrees
21	PIPA counters:	
	X-REGISTER 1	XXXXX. pulses
	Y-REGISTER 2	XXXXX. pulses
	Z-REGISTER 3	XXXXX. pulses
22	New angles I:	
	X-REGISTER 1	XXX.XX degrees
	Y-REGISTER 2	XXX.XX degrees
	Z-REGISTER 3	XXX.XX degrees
23	Delta angles I:	
	X-REGISTER 1	XXX.XX degrees
	Y-REGISTER 2	XXX.XX degrees
	Z-REGISTER 3	XXX.XX degrees
24	Delta time for AGC clock:	
	REGISTER 1	00XXX. hours
	REGISTER 2	000XX. minutes
	REGISTER 3	0XX.XX. seconds
25	Checklist (Used only with verb 50, "Please perform".)	XXXXX.
	Checklist code numbers (Appear in REGISTER 1.)	
	00001 SCS mode to G&N attitude control	
	00002 SCS mode to G&N Delta V	
	00003 SCS mode to G&N entry	
	00004 SCS mode to monitor	
	00007 Manual attitude maneuver	
	00011 Automatic optics positioning	
	00012 Target data entry	
	00013 Switch OSS to computer control	
	00014 Fine align check	
	00015 Perform star acquisition	
	00031 Engine on	
	00035 Prepare AGC for thrusting	
	00036 Thrust terminate	
	00041 C/M-S/M separation	
26	Prio/delay (Used only during ground checkout.)	XXXXX.
27	Self test ON-OFF switch	XXXXX.
30	Star number	XXXXX.

Figure 2.2-6. Noun List (Sheet 1 of 3)

SYSTEMS DATA

Noun Code	Description	Scale/Units
31	Failure register code	
	NOTE	
	Error codes are defined in paragraph 2.2.2.3.3.	Octal only
	Self-test diagnosis REGISTER 2	Octal only
	Self-test diagnosis REGISTER 3	Octal only
32	Decision time (Used only during ground checkout.)	
33	Ephemeris time (Used only during ground checkout.)	
34	Event time:	
	REGISTER 1	00XXX. hours
	REGISTER 2	000XX. minutes
	REGISTER 3	0XX.XX seconds
35	Delta event time:	
	REGISTER 1	00XXX. hours
	REGISTER 2	000XX. minutes
	REGISTER 3	0XX.XX seconds
36	Delta event time (Display only.)	XXBXX. minutes, seconds
37	(Spare)	
40	Gamma (Inertial flight path angle.) REGISTER 1	XXX.XX degrees
	Inertial velocity REGISTER 2	XXXXX. ft/sec
	Altitude above launch pad REGISTER 3	XXXX.X nautical miles
41	Maximum acceleration REGISTER 1	XXXX.X g's
	Perigee altitude REGISTER 2	XXXX.X nautical miles
	Free-fall time REGISTER 3	XXBXX. minutes, seconds
42	Miss distance REGISTER 1	XXXX.X nautical miles
	Perigee altitude REGISTER 2	XXXX.X nautical miles
	Free-fall time REGISTER 3	XXBXX. minutes, seconds
43	Perigee altitude REGISTER 1	XXXX.X nautical miles
	Apogee altitude REGISTER 2	XXXX.X nautical miles
	Free-fall time REGISTER 3	XXBXX. minutes, seconds
44	Latitude REGISTER 1	XXX.XX degrees
	Longitude REGISTER 2	XXX.XX degrees
	Altitude (Above mean equatorial radius.) REGISTER 3	XXXX.X nautical miles
45	Perigee altitude REGISTER 1	XXXX.X degrees
	Apogee altitude REGISTER 2	XXXX.X degrees
	Delta velocity required REGISTER 3	XXXXX. ft/sec
46	Time to event REGISTER 1	XXBXX. minutes, seconds
	Velocity to be gained REGISTER 2	XXXXX. ft/sec
	Perigee altitude REGISTER 3	XXXX.X nautical miles
47	Flight path angle REGISTER 1	XXX.XX degrees
	Miss distance REGISTER 2	XXXX.X nautical miles
50	Time to event REGISTER 1	XXBXX. minutes, seconds
	Delta time of burn REGISTER 2	XXBXX. minutes, seconds
51	Time to event REGISTER 1	XXBXX. minutes, seconds
	Velocity to be gained REGISTER 2	XXXXX. ft/sec
	Measured velocity change along spacecraft X-axis REGISTER 3	XXXXX. ft/sec

Figure 2.2-6. Noun List (Sheet 2 of 3)

SYSTEMS DATA

Noun Code	Description	Scale/Units
52	Time to event REGISTER 1	XXBXX. minutes, seconds
	Velocity to be gained REGISTER 2	XXXXX. ft/sec
	Free-fall time REGISTER 3	XXBXX. minutes, seconds
53	Maximum acceleration REGISTER 1	XXXX.X g's
	Free-fall time REGISTER 2	XXBXX. minutes seconds
54	Commanded roll angle REGISTER 1	XXX.XX degrees
	Present acceleration REGISTER 2	XXXX.X g's
	NOTE Noun codes 55 through 77 denote mixed nouns.	
55	OCDUs: X (Shaft angles) REGISTER 1	XXX.XX degrees
	Y (Trunnion angles) REGISTER 2	XX.XXX degrees
56	Uncalled mark data: X (Shaft angles) REGISTER 1	XXX.XX degrees
	Y (Trunnion angles) REGISTER 2	XX.XXX degrees
57	New angles-OCDUs: X (Shaft angles) REGISTER 1	XXX.XX degrees
	Y (Trunnion angles) REGISTER 2	XX.XXX degrees
60	IMU mode status (Used only during ground checkout.)	Octal only
61	Target: (Used only during ground checkout.)	
	Azimuth REGISTER 1	XXX.XX degrees
	[illegible] REGISTER 2	XX.XXX degrees
62	Delta velocity insertion REGISTER 1	XXXXX. ft/sec
	Miss distance REGISTER 2	XXXX.X nautical miles
	Free-fall time REGISTER 3	XXBXX. minutes, seconds
63	Latitude REGISTER 1	XX.XXX degrees
	Longitude/2 REGISTER 2	XX.XXX degrees
	Altitude REGISTER 3	XXX.XX nautical miles
64	(Spare)	
65	Sampled time (Fetched in interrupt.) REGISTER 1	00XXX. hours
	REGISTER 2	000XX. minutes
	REGISTER 3	0XX.XX seconds
66	System test results (Used only during ground checkout.)	
67	Delta gyro angles: (Used only during ground checkout.)	
	X-IRIG REGISTER 1	XX.XXX degrees
	Y-IRIG REGISTER 2	XX.XXX degrees
	Z-IRIG REGISTER 3	XX.XXX degrees
70	Pitch trim REGISTER 1	XXX.XX degrees
	Yaw trim REGISTER 2	XXX.XX degrees
	Delta velocity tailoff REGISTER 3	XXXXX. ft/sec
71	(Spare)	
72	Delta position (Used only during ground checkout.)	
73	Delta velocity (Used only during ground checkout.)	
74	(Spare)	
75	Delta position magnitude REGISTER 1	XXXX.X nautical miles
	Delta velocity magnitude REGISTER 2	XXXXX. ft/sec
	Measurement angle deviation REGISTER 3	XXX.XX degrees
76	R-position (Used only during ground checkout.)	
77	V-velocity (Used only during ground checkout.)	

Figure 2.2-6. Noun List (Sheet 3 of 3)

The flash is turned off by any of the following events:

- Final entry of a load sequence
- Entry of verb "proceed without data" (33)
- Entry of verb "terminate" (34).

It is important to conclude every load verb by one of the aforementioned three, especially if the load was initiated by program action within the computer. If an internally initiated load is not concluded validly, the program that initiated it may never be recalled. The "proceed without data" verb is used to indicate that the operator is unable to, or does not wish to, supply the data requested, but wants the initiating program to continue as best it can with old data. The "terminate" verb is used to indicate that the operator chooses not to load the requested data and also wants to terminate the requesting routine.

2.2.3.3.3 Error Codes.

Error code numbers appear in REGISTER 1 with noun 31.

OSS Errors

00101	Optics mode control switched from ZERO OPTICS before end of 30 seconds.
00102	AGC unable to achieve desired optics mode.
00103	Function not valid for SC 012.
00104	No vacant area available for marks.
00105	Internal mark request while mark system is busy.
00106	Function not valid for SC 012.
00107	Mark reject while mark system is not in use.
00110	Mark reject with all requested marks accepted or no marks since initiating last mark reject.
00120	Too many marks.

ISS Errors

00201	Zero encode ended before end of 30 second wait.
00202	AGC unable to achieve desired ISS mode.
00203	No ISS mode indicated to AGC.
00204	ISS mode changed while TRANSFER switch is in COMPUTER position, but AGC did not command mode change.

Procedural Difficulties

00401	Desired gimbal angles will produce gimbal lock. (Middle gimbal angle greater than 60°.)
00402	Star out of field of view.
00403	Same as 00402.
00404	IMU orientation unknown.
00405	SCS mode monitor failure.

00406	Navigation program busy.
00407	Navigation program needed internally.
00410	AGC update not allowed.
	AGC Hardware Malfunctions
01101	Unused interrupt (RUPT 2) occurred
01102	AGC self-test error.
01103	Unused count, compare, and skip (CCS) branch executed.
01104	C-relay failed during C-relay test.
01105	Star search failure.
01106	IMU orientation no good for entry.
	List Overflows
01201	Executive overflow-no vacant areas.*
01202	Executive overflow-no core sets.*
01203	Waitlist overflow-too many tasks.*
01204	Same as 01203.*
01205	Master control overflow-too many jobs waiting.*
01206	DSKY waiting line overflow.*
01207	No vacant area for marks.*
01210	Something already waiting in IMU stall.*
	Interpreter Errors
01301	Arccos-arcsin input angle too large.*
01302	Square root called for with a negative argument.*
	Display Alarms
01401	VG increasing-loss of control.
01402	Delta V too low-engine not on.
	DSKY Program Errors
01501	Check fail alarm during internal use.*

*These alarms are "aborts" and define alarms which initiate a restart of the AGC program which was in progress when the alarm appeared.

2.2.3.3.4 AGC Programs.

The following list of AGC programs defines the programs and routines applicable to SC-012. The AGC programs provide the major modes of G&N system operation. The routines consist of a specific sequence of operations which are performed by more than one program and/or other routine.

Program Number	Title	Contains Routines
00	AGC Idling	
01	Prelaunch Initialization	
02	Gyro Compassing	
03	Optical Azimuth Verification	
04	Inertial Reference	
05	G&N Startup	
06	G&N Power Down	
07	Systems Test (Limited in-flight use.)	
11	Pre-LET Jettison	
12	Post-LET Jettison	R 24, R 34
17	LET Abort	
22	Landmark Tracking	R 27, R 28
23	Star/Landmark Navigation Measurement	
24	Ground Track Determination	
27	AGC Update	
31	Orbit Change (Prethrust)	R 1, R 21, R 35
32	Return to Earth (Prethrust)	R 1, R 21, R 36
33	SPS Minimum Impulse (Prethrust)	R 1, R 21, R 31, R 33
41	Orbit Change	R 2, R 22, R 24, R 31, R 34, R 37

SYSTEMS DATA

Program Number	Title	Contains Routines
42	Return to Earth	R 2, R 22, R 24, R 31, R 34, R 37
43	SPS Minimum Impulse	R 2, R 31, R 34, R 37
51	IMU Orientation Determination	R 27, R 29
52	S-IVB/IMU Align	R 4, R 25, R 27, R 28, R 29, R 30
53	CSM/IMU Align	R 1, R 4, R 21, R 25, R 27, R 28, R 29, R 30
54	IMU Realignment	R 27, R 29, R 30
61	Maneuver To CM/SM Separation Attitude	R 1, R 21
62	CM/SM Separation And Pre-Entry Maneuver	R 3, R 21
63	Initialization	
64	Post 0.05G	
67	Final Phase	
71	First Abort Burn	R 24

Routine Number	Title	Contains Routines
1	Attitude Control Mode Check	R 22
2	Thrust Control Mode Check	R 1, R 21, R 22
3	Entry Control Mode Check	R 22
4	Fine Alignment	R 25, R 27, R 28, R 29, R 30
21	Attitude Maneuver	
22	SCS Discrete Monitor	
24	Delta V Monitor	R 38

Routine Number	Title	Contains Routines
25	Coarse Alignment	
27	Sighting Mark	
28	Auto Optics Positioning	
29	Star Data Test	
30	Gyro Torquing	
31	Backup Delta V Counter	
33	Prethrust SPS Minimum Impulse Data Load	
34	Orbit Parameter Display	
35	Prethrust Orbit Change Data Load	
36	Prethrust Return to Earth Data Load	
37	SPS Engine Ignition	R 38
38	SPS Engine Thrust Fail	

2.2.4 PERFORMANCE AND DESIGN DATA.

(TBD)

2.2.5 OPERATIONAL LIMITATIONS AND RESTRICTIONS.

2.2.5.1 S/C Attitude.

The S/C should not be maneuvered to an attitude which will align the inner circle of either red area on the FDAI ball under the navigation axis marker. Failure to avoid this condition can result in IMU gimbal lock. Specifically, the following maneuvers should be avoided:

- Yaw maneuver greater than ±75 degrees when roll angle is 0 degree or 180 degrees.
- Pitch maneuver greater than +42 degrees or -108 degrees when roll angle is ±90 degrees.

2.2.5.2 IMU Operation.

- The AGC must be ON before the IMU is placed in operation by engaging the IMU circuit breakers.
- The AGC must be ON or in STANDBY before the IMU is placed in standby mode.
- Allow 15 seconds for the stabilization loops to completely stabilize the platform after applying operating power, i.e., after engaging the IMU circuit breakers.
- The IMU must be in full operation for at least 1 hour before valid operation of the inertial components can be assumed.
- The inertial components will suffer a loss of calibration if the temperature falls below 120°F or exceeds 140°F. Damage will occur if the temperature falls below 40°F or exceeds 160°F.
- Do not operate the IMU such that the middle gimbal angle reaches or exceeds 70 degrees.

2.2.5.3 Optics Operation.

- Do not slew the SXT or SCT into the mechanical stops.
- Do not drive the 2X TRUNNION CDU in excess of 180 degrees as read on the CDU display dials. Insure that this display dial indicates less than 180 degrees before engaging the ZERO OPTICS mode of operation.

2.2.6 TELEMETRY MEASUREMENTS.

The following is a complete list of all G&N system telemetry data that is monitored by flight controllers and ground support personnel. The last column contains the name and type of S/C crew display. The display utilizes the same pickoff or signal source as telemetry, unless a separate measurement number is included in the display column.

An asterisk (*) by the measurement number denotes information which is not available for recording or telemetry transmission during PCM low bit rate operation.

Measurement Number	Description	Sensor Range	Nominal Operating Range	Crew Display
CG 0001 V	Computer digital data 40 bits	+4/+132 vdc		None
CG 1101 V	-28 VDC supply	-30/0 vdc	-28 vdc	None

SYSTEMS DATA

Measurement Number	Description	Sensor Range	Nominal Operating Range	Crew Display
CG 1110 V	2.5 VDC TM bias	TBD	-28 vdc	None
CG 1503 X	IMU +28 vdc operate	Event		None
CG 1513 X	IMU +28 vdc standby	Event		None
CG 1523 X	AGC +28 vdc	Event		None
CG 1533 X	Optics +28 vdc	Event		None
CG 2110 V	IGA torque motor input	TBD		None
*CG 2112 V	IGA 1X res output sine in phase	TBD		None
*CG 2113 V	IGA 1X res output cos in phase	TBD		None
*CG 2117 V	IGA servo error in phase	0/0.5 vrms		None
CG 2140 V	MGA torque motor input	TBD		None
*CG 2142 V	MGA 1X res output sine in phase	TBD		None
CG 2143 V	MGA 1X res output cos in phase	TBD		None
*CG 2147 V	MGA servo error in phase	0/0.5 vrms		None
CG 2170 V	OGA torque motor input	TBD		None
*CG 2172 V	OGA 1X res output sine in phase	TBD		None
*CG 2173 V	OGA 1X res output cos in phase	TBD		None
*CG 2177 V	OGA servo error in phase	0/0.5 vrms		None

SYSTEMS DATA

Measurement Number	Description	Sensor Range	Nominal Operating Range	Crew Display
*CG 2206 V	IGA CDU 1X res error in phase	0/0.2 vrms		None
*CG 2236 V	MGA CDU 1X res error in phase	0/0.2 vrms		None
*CG 2266 V	OGA CDU 1X res error in phase	0/0.2 vrms		None
CG 2300 T	PIPA temp	TBD	+126.0°F/ +134.0°F	None
CG 2301 T	IRIG temp	TBD	+129.5°F/ +137.5°F	None
CG 2302 C	IMU heater current	0/+5 amps	0/+2 amps	None
CG 2303 C	IMU blower current	0/+5 amps	0/+1 amp	None
*CG 3102 V	SXT trun motor drive in phase	TBD		None
*CG 3112 V	SXT shaft motor drive in phase	TBD		None
*CG 3133 V	SCT trun motor drive	TBD		None
*CG 3141 V	Trun CDU 16X res error in phase	TBD		None
*CG 3200 V	Trun CDU motor drive in phase	TBD		None
*CG 3220 V	CDU motor drive RMS	TBD		None
*CG 4300 T	AGC temp monitor	TBD		None
CG 5000 X	PIPA fail	Event		ACCEL FAIL, G&N ACCEL FAIL C&W lights (2).
CG 5001 X	IMU fail	Event		IMU FAIL C&W lights (2).

SYSTEMS DATA

Measurement Number	Description	Sensor Range	Nominal Operating Range	Crew Display
CG 5002 X	CDU fail	Event		CDU FAIL C&W lights (2)
CG 5003 X	Gimbal lock warning	Event		GIMBAL LOCK, GMBL LOCK C&W lights (2).
CG 5005 X	Error detect	Event		PGNS, G&N ERROR C&W lights (2).
CG 5006 X	IMU temp light	Event		IMU TEMP C&W lights (2).
CG 5007 X	Zero encode light	Event		ZERO ENCODER, ZERO ENC. C&W lights (2).
CG 5008 X	IMU delay light	Event		IMU DELAY. C&W light.
CG 5020 X	AGC alarm 1 (Program)	Event		PROG ALM, COMP FAIL (DSKY lights).
CB 5021 X	AGC alarm 2 (AGC activity)	Event		COMP DSKY lights (2).
CG 5022 X	AGC alarm 3 (TM)	Event		TM FAIL, COMP FAIL. (DSKY lights).
CG 5023 X	AGC alarm 4 (prog ck fail)	Event		CHECK FAIL, COMP FAIL. (DSKY lights).
CG 5024 X	AGC alarm 5 (scaler fail)	Event		SCALER FAIL, COMP FAIL. (DSKY lights).
CG 5025 X	AGC alarm 6 (parity fail)	Event		PARITY FAIL, COMP FAIL. (DSKY lights).
CG 5026 X	AGC alarm 7 (counter fail)	Event		COUNTER FAIL, COMP FAIL. (DSKY lights).
CG 5027 X	AGC alarm 8 (key release)	Event		KEY RLSE (DSKY lights) (2).
CG 5028 X	AGC alarm 9 (rupt lock)	Event		RUPT LOCK, COMP FAIL. (DSKY lights).

SYSTEMS DATA

Measurement Number	Description	Sensor Range	Nominal Operating Range	Crew Display
CG 5029 X	AGC alarm 10 (TC trap)	Event		TC TRAP, COMP, FAIL. (DSKY lights).
CG 5030 X	Computer power fail light	Event		AGC PWR FAIL (DSKY lights) (2).
*CG 6000 P	IMU pressure	TBD		None
*CG 6020 T	PSA temp 1 tray 3	TBD		None
*CG 6021 T	PSA temp 2 tray 2	TBD		None
*CG 6022 T	PSA temp 3 tray 4	TBD		None

2.2.7 G&N POWER CONSUMPTION.

The optics are only powered up when a star or landmark sighting is required. The subsystems power levels are as follows:

Description	Control	Power Reqmt's
IMU—operate standby	CB 59 and58 CB 61 and 60	325.0 watts (dc) 61-7 watts (dc)
AGC—operate standby	CB 57 and 56 AGC Mode Switch	115.0 watts (dc) 15.0 watts (dc)
Optics—operate	CB 55 and 54	124.4 watts (dc) 14.4 watts (dc)
Controls and displays	CB 93 and 62 and Switch No. 7	
AGC only AGC and IMU Full G&N operation		10.0 watts (dc) 10-7 watts (dc) 18-7 watts (dc) 7-0 watts (dc)

Minimum power consumption is 76.7 watts (dc) when AGC and IMU are in the standby mode.

2.2.8 INTERFACE SIGNALS.

The following list provides the signal, source, and description of the interface signals.

Signal Name	Source	Description
Stabilization and Control System (SCS) and G&N System Interface		
Engine on-off	AGC (Apollo guidance computer)	Provides pulse train that lasts as long as the engine is required to fire. The time at which the signal terminates takes into account electronic delays within the SCS and tail-off characteristics of the engines.
Discrete signal carrier	AGC	Provides continuous pulse train to the SCS to be switched back to the AGC.
G&N system attitude control (or SCS attitude control)	SCS	Provides power to an attitude control switch on the G&N system.
Minimum impulse enable	G&N system	Disables all three attitude channels simultaneously and supplies voltages to an attitude control switch on the G&N system.
Minimum impulse + and - pitch, yaw, and roll	SCS	Provides six signals to the G&N system for hand controller operation.
Minimum impulse pitch, yaw, and roll	G&N system	Provides the capability to initiate spacecraft attitude changes in the G&N system attitude control mode or the SCS attitude control mode. These changes will be initiated by discrete minimum impulses.
Pitch error body offset and body axis	G&N system	Provides pitch attitude error signal to the SCS.
Yaw error body offset axis	G&N system	Provides yaw attitude error signal to the SCS during G&N system entry mode.
Yaw error body axis	G&N system	Provides yaw attitude error signal to the SCS during normal G&N system operating modes.
Roll error body offset axis	G&N system	Provides roll attitude error signal to the SCS during G&N system entry mode.
Roll error body axis	G&N system	Provides roll attitude error signal to the SCS during normal G&N system operating modes.

SYSTEMS DATA

Signal Name	Source	Description
IMU 28V 800 cps (demodulator reference)	G&N system	Provides an 800 cps, synchronous, in-phase voltage from the G&N system.
IMU sin A_{IG} 1X, IMU cos A_{IG} 1X, IMU sin A_{MG} 1X, IMU cos A_{MG} 1X, IMU sin A_{OG} 1X, and IMU cos A_{OG} 1X	G&N system	Provides total attitude signals to the SCS.
Electrical Power System (EPS) and G&N System Interface		
+28 vdc AGC bus A and bus B	EPS	Provides power to the AGC.
+28 vdc optics bus A and bus B	EPS	Provides power to the optics subsystem.
+28 vdc IMU bus A and bus B	EPS	Provides power to the IMU.
+28 vdc standby bus A and bus B	EPS	Provides IMU temperature control power.
115v 400 cps	EPS	Provides power for all G&N system 6-volt lamps
Communication and Instrumentation System and G&N System Interface		
DLNK sync	AGC	Synchronizes data transferred from the AGC to the communications and instrumentation system.
DLNK end	AGC	Permits two AGC words to be transferred from the AGC to the communications and instrumentation system. Stops the AGC and the transmission of data from the AGC to the communications and instrumentation system.
DLNK start	AGC	Provides pulse signal that occurs at the beginning of every data transmission to the communications and instrumentation system. Sets flip-flop in AGC that enables 5-stage downlink counter.
DLNK data	AGC	Initiates by DLNK start, stopped by DLNK end, and consists of a 40 bit telemetry word (two AGC words and an 8 bit telemetry word order code).
ULNK 1	AGC	Transmitted to the uplink counter in the AGC. Adds one to uplink counter and shifts the counter one increment.

SYSTEMS DATA

Signal Name	Source	Description
ULNK 0	AGC	Transmitted to the uplink counter in the AGC. Shifts uplink counter one increment.

SECTION 2

SUBSECTION 2.3

STABILIZATION AND CONTROL SYSTEM (SCS)

2.3.1 INTRODUCTION.

The stabilization and control system (SCS) provides a capability for controlling rotation, translation, and thrust vector forces with additional capability of rate stabilization.

The SCS is divided into three basic subsystems: attitude reference, attitude control, and thrust vector control. These subsystems contain the elements which provide for manual attitude control, automatic attitude control, and thrust vector control, plus manual backup provisions for all automatic functions.

The subsystem/control capability allows the free selection of several modes of operation which fall within the boundaries of three entirely different flight control profiles. These include coasting flight (earth orbital environment), powered flight (atmospheric - ascent, and earth orbital environment), and atmospheric flight (entry - unpowered).

Spacecraft displays provide a capability for monitoring S/C attitude, S/C rates, attitude errors, cautions, and warnings. Controls provide switch arrangements for commanding modes, commanding inputs to change operating status and to permit manual override to all automatic functions.

The SCS interfaces with the following S/C systems (See figure 2.3-1).

- Telecommunications System (T/C)

  Provides clock reference frequency for measurement of changes in S/C velocity

  Receives all down-link telemetry from SCS

  Provides up-data position information via AGC or voice

- Electrical Power System (EPS)

  Provides primary power for SCS operation

- Environmental Control System (ECS)

  Transfers heat from SCS electronics

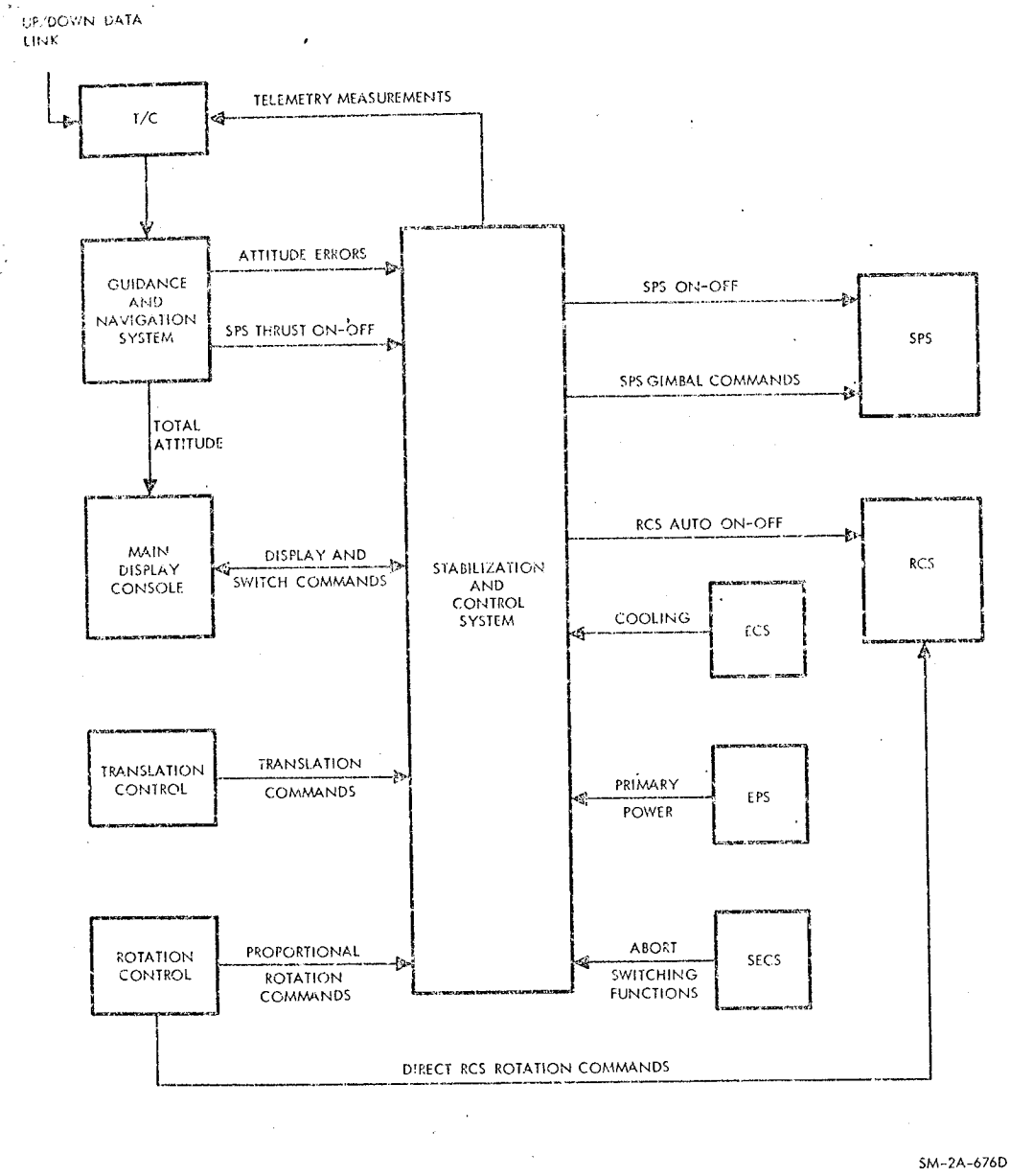

Figure 2.3-1. SCS Functional Interface

- Sequential Events Control System (SECS)

  Provides abort switching function

  By switch control in SCS, initiates abort and enables control functions in SCS

- Guidance and Navigation System (G&N)

  Provides roll, pitch, and yaw total attitude inputs to SCS

  Provides attitude error signals

  Provides thrust on/off command for SPS engine

  Provides steering commands to TVC during G&N ΔV

- Propulsion Systems (SPS, RCS).

  The service propulsion system generates internal forces for large velocity changes

  The reaction control system generates the internal forces required for rotation, and translation.

A detailed description and function of the SCS controls and displays referred to is provided in section 3.

2.3.2 FUNCTIONAL DESCRIPTION.

The functional description of the SCS covers the major areas of control capabilities, Apollo reference axes, and subsystem description.

2.3.2.1 Control Capabilities.

Control capability exists for the manual attitude control, automatic attitude control, and thrust vector control functions. The following paragraphs provide a brief discussion of each control function.

2.3.2.1.1 Manual Attitude Control.

Manually commanded inputs converted to electrical signals, directly or indirectly, cause the propulsion systems to maneuver the spacecraft to a desired attitude and/or change the flight path (trajectory) of the spacecraft. Manual controls include two independent rotation controllers (figure 2.3-8), two translation controllers (figure 2.3-8), and an arrangement of panel-mounted controls and displays.

The rotation controllers command discrete on-off signals for the reaction control system to initiate angular rotations about the S/C X-, Y-, and Z- axes or combinations of these axes. The X-, Y-, and Z-axes are synonomous with the S/C geometric coordinate system of roll (ϕ), pitch (θ), and yaw (ψ), respectively. (See figure 2.3-2.) These commands are primarily used for S/C attitude (orientation) control. The translation controllers, when operated, command signals for the reaction control system to initiate translations (acceleration) along the S/C X-, Y-, and Z-axes or combinations of these axes. These commands for the AS204A mission are primarily initiated to perform ullage maneuvers prior to SPS thrusting. Panel-mounted switches are used for attitude set control functions, application of electrical power, evaluating system status, and selection of operating modes.

The displays provide indications of total attitude, attitude errors, angular rates, and caution and warnings.

2.3.2.1.2 Automatic Attitude Control.

Automatic attitude control is a capability whereby attitude errors and rotational rates are sensed by gyroscopic devices which, in association

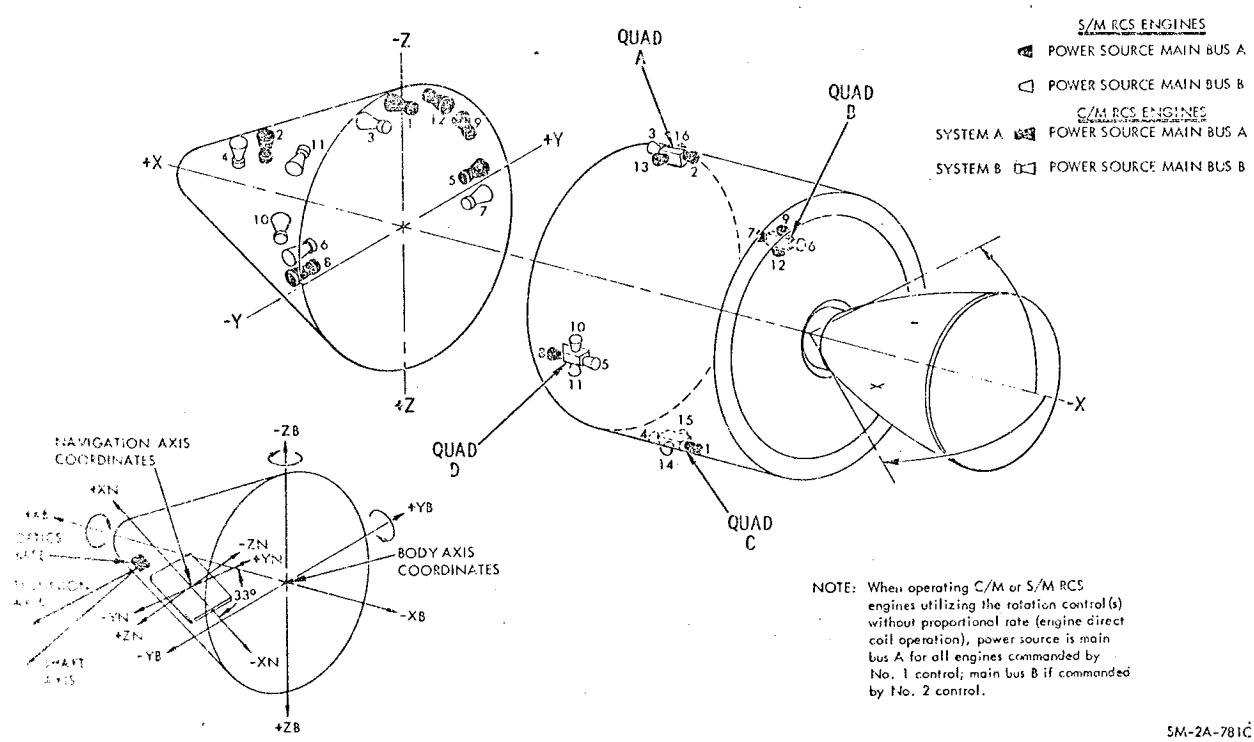

Figure 2.3-2. C/M-S/M-RCS Engine Location/Apollo Reference Axes

with electronic and logic circuits, automatically induce the propulsion systems to maintain a desired inertially fixed attitude. Translation capability is not an automatic control function.

Two methods of automatic attitude control are available. One method requires the use of components of the SCS to establish desired attitude references, and for sensing attitude changes and rates of change. Three orthagonally mounted rate gyros sense angular rates about the S/C X-, Y-, and Z-axes. Body-mounted attitude gyros (BMAGS) and attitude gyro coupling unit (AGCU) establish attitude reference and determines attitude error. The attitude error signals and rate gyro signals are electronically conditioned and subsequently provide a rate-damped automatic attitude hold with respect to an inertially fixed attitude. The attitude is held with drift rates kept within acceptable limits (deadband) for the three axes. A maximum or minimum deadband may be selected by the ATT DEADBAND switch on the SCS control panel (MDC-8). Maximum electrical deadband allows drift limits of ±4.2 degrees from reference attitude. Minimum electrical deadband is ±0.2 degree from reference attitude.

When a manual maneuver is initiated, the automatic attitude control function is interrupted. When the manual maneuver ceases, the automatic attitude control function is reinstated and the new attitude will be the new inertial attitude.

The other method of automatic attitude control incorporates components of the G&N system; whereby, the combined G&N/SCS systems establish attitude references, and sense attitude change and rate of change. In addition, the Apollo guidance computer (AGC) can be commanded through the computer keyboard to automatically establish new attitude references and maintain attitude hold at the new reference. When this is done, attitude change data is taken from on-board charts or received via the manned space flight network (MSFN).

The inertial measurement unit (IMU) in the G&N system provides the inertial reference and senses attitude errors. The rate gyros in the SCS determine the rates of change. The attitude error signals sensed by the IMU and SCS rate gyro signals are electronically conditioned and subsequently provide a rate-damped automatic attitude control with respect to the IMU inertially fixed reference. Again, drift rates about the three S/C axes are held within acceptable limits.

Manual maneuvers can also be performed when using G&N attitude control, providing proper switch configuration is established. The automatic hold function is interrupted until the manual maneuver ceases, at which time the automatic function continues to hold at the new inertial attitude. Inputs to the AGC via the computer keyboard can command the AGC to realign the IMU to a selected inertial reference. The S/C can then be automatically maneuvered to and be maintained at the new attitude.

When automatic attitude control functions are in process, displays are required only for monitoring and comparing attitude with external or known references, and for indications of systems failures.

2.3.2.1.3 Thrust Vector Control.

Thrust vector control (TVC), primarily, accomplishes three main objectives. The first objective is to either manually or automatically initiate thrusting of the SPS engine when large velocity changes are required. The second is to control the thrust vector of the SPS engine such that the vector force is essentially maintained through the S/C center of gravity (c.g.) in the direction of the velocity correction. The third objective requires the automatic, with manual backup, termination of SPS thrusting when a required velocity change has been attained.

When SPS thrusting occurs, thrust vector control uses the same basic commands that are used for the attitude control function, plus additional commands to control the SPS pitch and yaw gimbal actuators. This combination establishes the three-axes attitude control and stability while thrusting. The commands to the pitch and yaw gimbal actuators will hold the SPS thrust vector through the S/C c.g. in the direction of velocity correction, and roll attitude is maintained by the roll attitude control circuits and the RCS roll engines.

There are three methods, or modes, of thrust vector control: G&N delta V, SCS delta V, and manual thrust vector control (MTVC). G&N delta V is the primary mode of control for velocity changes. The G&N system inserts commands into the SPS gimbal servo circuits to control the thrust vector and to automatically initiate SPS thrusting. The G&N/SCS attitude control sensors and electronics perform the remainder of the control functions.

The SCS delta V is normally used as a backup system in the event of G&N failure. When in G&N mode of operation, the SCS BMAG/AGCU loop is aligned to the IMU reference attitude and, therefore, follows the attitude changes sensed by the IMU prior to selecting the ΔV mode. After selecting a ΔV mode, the BMAG/AGCU loop is opened. In the event of G&N failure or IMU failure, a transfer to SCS delta V will allow continuation of the velocity change using attitude error signal inputs originating from the BMAGS. For SCS delta V, there are no major differences in operation of the gimbal servo loop and the rate loops.

Manual thrust vector control is a control function utilizing panel-mounted controls, translation controls, and rotation controls. MTVC is primarily used to limit excessive rate changes that may be created by malfunctions in the SCS or G&N systems. Manipulation of the controls allows velocity changes by the selection of redundant electronics and redundant actuator motors to control gimbal action.

Displays allow monitoring the character of a delta V, monitoring system performance, and detecting system malfunctions.

2.3.2.2 Apollo Reference Axes.

In Apollo, there are two sets of axes, or coordinates, which are used for measuring changes in S/C attitude. (See figure 2.3-2.) One set of coordinates represent the geometric axes of the S/C and are the body axes X_B, Y_B, and Z_B. The other set of coordinates represent the geometric axes of the IMU-optic base or navigations base. They are the navigations axes X_N, Y_N, and Z_N. The inertial sensors are mounted and aligned relative to these two sets of coordinates. The BMAG roll, pitch, and yaw gyros are aligned to the S/C body axes and the IMU is aligned to the navigations axis.

2.3.2.2.1 Body Axes.

As shown in figure 2.3-2, the longitudinal (X_B) axis passes through the geometric center of the S/C. The $+X_B$ is toward the apex of the command module; $-X_B$ is the opposite. Looking in the direction of the apex, the $+Y_B$-axis is to the right; $-Y_B$ is to the left. The $+Z_B$ is in the direction of the footrest of the center couch and $-Z_B$ is toward the headrest of the center couch. The S/C c.g. is included in the plane formed by the X_B- and Z_B-axes.

A + roll rotation is a clockwise rotation about the X-axis, looking from -X to +X; a + pitch rotation is a clockwise rotation about the Y-axis, looking from -Y to +Y; and a + yaw rotation is a clockwise rotation about the Z-axis, looking from -Z to +Z.

2.3.2.2.2 Navigations Axes.

The navigations axes are rotated +33 degrees in pitch about the Y_B-axis. The X_N-axis is parallel to the side of the S/C; the Y_N-axis is parallel to the Y_B-axis; and the Z_N-axis is normal to the side of the S/C and is rotated +33 degrees in pitch about the Y_N-axis. The Z_B-axis lies in the same plane as the X_N-axis. The $\pm X_N$-, $\pm Y_N$-, and $\pm Z_N$-axes point in the same relative directions as the body axes. The IMU +X-, +Y-, and +Z-axes are aligned to the $+X_N$- and $+Z_N$-axes.

2.3.2.2.3 Optics Base Axes.

A line-of-sight telescope and sextant, mounted on the optics base, are used in conjunction with the G&N system to determine S/C inertial attitude and position. The optics base axes are measured in terms of the shaft and trunnion angles of the telescope and sextant. The shaft axes of the two are parallel to the Z_N-axis and trunnion axes are parallel to the Y_N-axis.

2.3.2.3 Subsystems.

The attitude reference, attitude control, and thrust vector control subsystems are described in the following paragraphs. The description covers the purpose and functions of each subsystem, and the integrated association with other systems. Figures 2.3-3 and 2.3-4, provide simplified block, and flow diagrams of the three subsystems and figure 2.3-5 shows the switching logic and functions which affect the three subsystems.

2.3.2.3.1 Attitude Reference Subsystem.

The purpose of the attitude reference subsystem (figures 2.3-4 and 2.3-5) is to relate the S/C attitude in terms of its geometric X, Y, and Z coordinate system to an arbitrarily chosen coordinate system with a fixed reference frame. The relation between the two coordinate systems represents inertial attitude and is presented to the astronauts by visual display.

Visual observation of inertial attitude is necessary to perform manual maneuvers or for monitoring automatic operations. The flight director attitude indicator (FDAI), located on the S/C main display console, displays the information required for the manual and automatic operations. The information displayed includes S/C total attitude, attitude error in three axes, and rotational rates in three axes. The information displayed by the FDAI is obtained from either the G&N system or the SCS.

There are two attitude references associated with the attitude reference subsystem: primary and backup. The primary reference is obtained through the mechanization of subsystems within the G&N system. The backup reference is mechanized within the SCS. Each of the attitude reference loops contain three basic elements: a computer, an inertial reference device, and a visual display.

Attitude Reference/G&N. To obtain an inertial reference using the G&N system, the astronauts, the G&N optics subsystem, the inertial and computer subsystems, and the MSFN are integrated to form a closed loop system.

The G&N system is used to determine inertial attitude and position and initiates alignment of the stable element of the IMU to the desired inertial reference initially established by optical sightings.

After IMU alignment, the IMU in conjunction with the AGC can provide inertial-referenced attitude hold and, if required, inertial-referenced velocity changes. Translational velocities are sensed by accelerometers mounted on the IMU stable element. The AGC processes the accelerometer signals to update velocity and change information for TVC functions.

In addition to the optical alignment of the IMU, the astronauts can use the computer subsystem to establish IMU alignment.

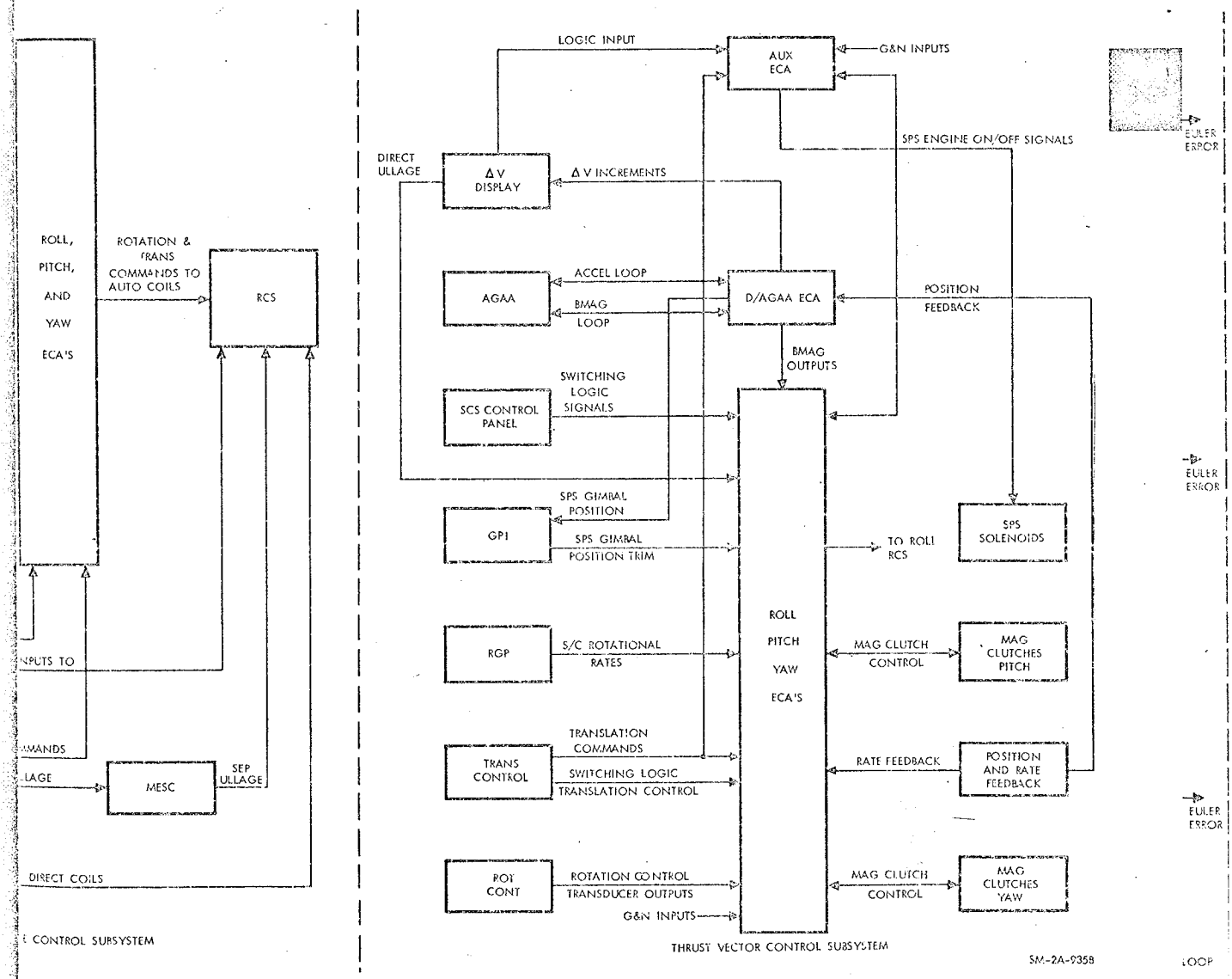

Figure 2.3-3. SCS Functional Block Diagram

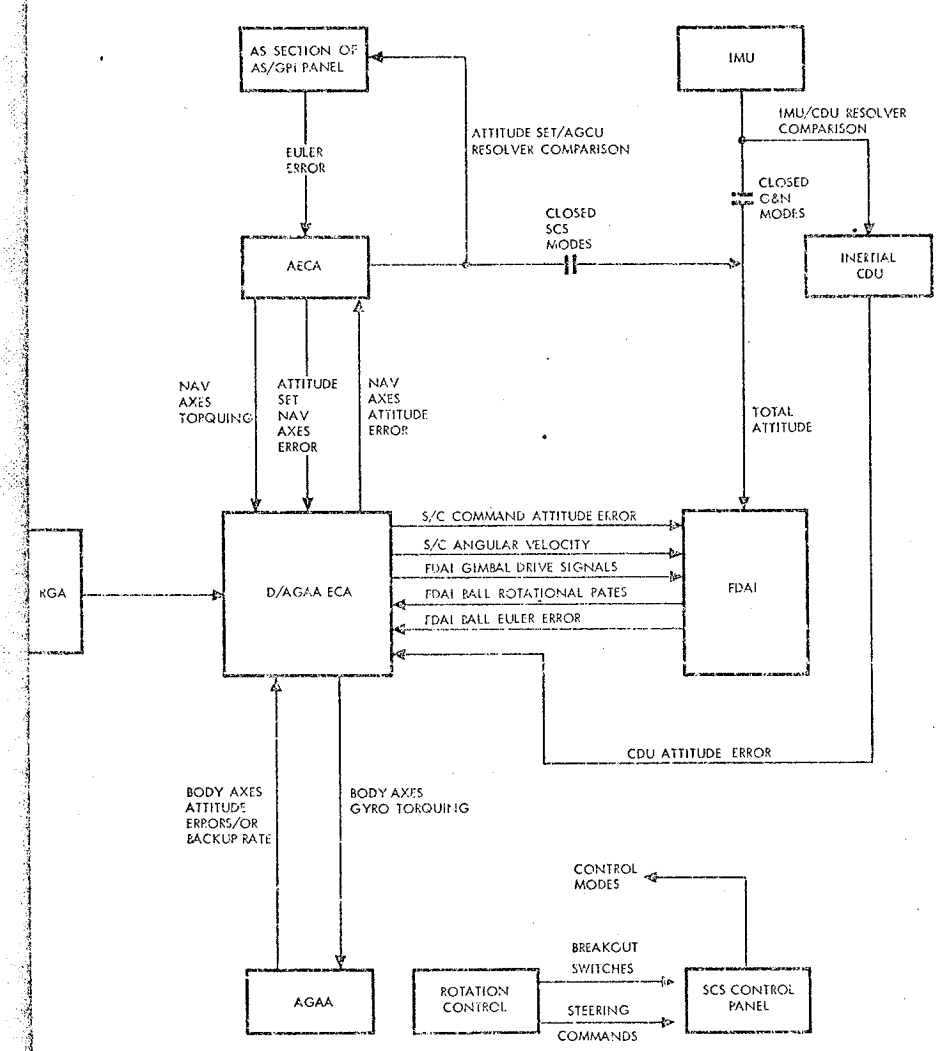

ATTITUDE REFERENCE SUBSYSTEM

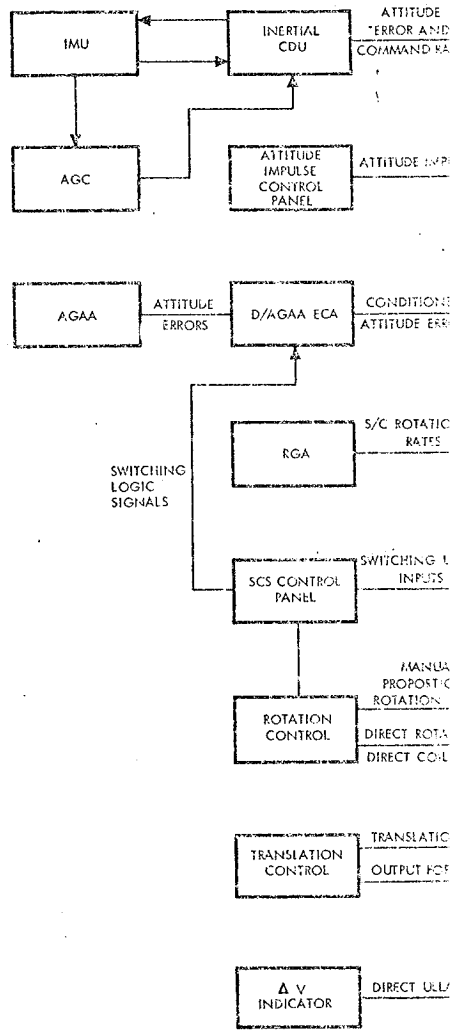

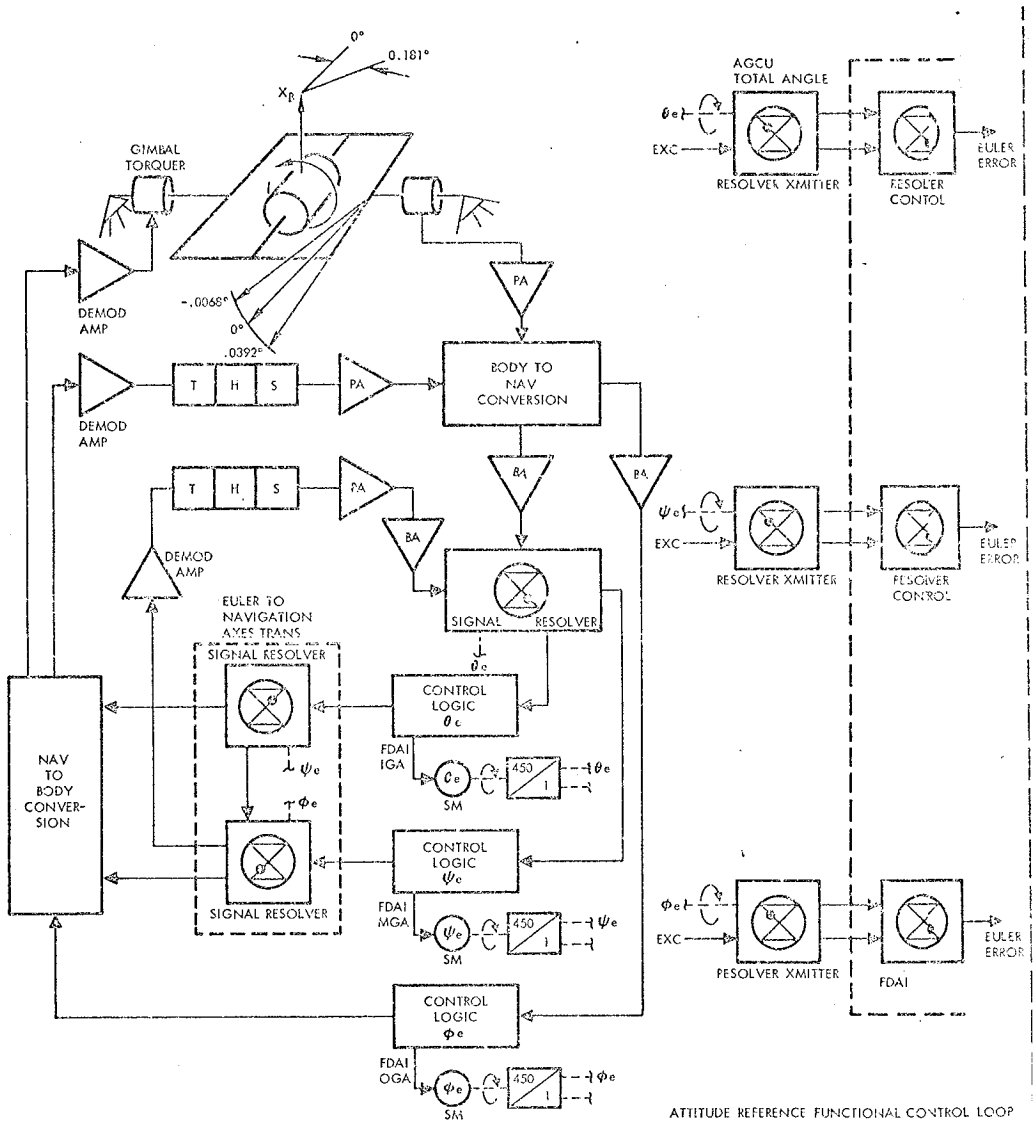

ATTITUDE REFERENCE FUNCTIONAL CONTROL LOOP

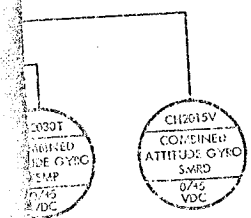

MAJOR MODE	K1 ORBIT RATE	K2 FDAI ALIGN	K3 G&N R, P, Y ATT SINE COS	K4 AGCU CAGED	K5 AGCU ALIGN	K6 AGCU P/V ERROR	K7 R G&N ERR/AGCU VIH G&N P ERROR Y ERR G&N BODY	K8 G&N P, Y ERR S.F.	K9 R, P, Y ERROR AGAA	K10 R, P, Y B/U RATE	K11 MTVC RT OUT	K12 R, P, Y RATE	K13 R & Y/P S.F.
MONITOR			•	•	•		•	•	•	•			
G&N ATTITUDE CONTROL			•	•	•		•		•				
SCS ATTITUDE CONTROL													
SCS LOCAL VERTICAL	•			•									
G&N ΔV			•				•		•				
SCS ΔV	•												
G&N ENTRY			•	•	•		•		•				
SCS ENTRY													•
INTEGRATED MODE FUNCTIONS													
CSS				•	•								
MINIMUM IMPULSE CONTROL				•	•								
TRANSLATION CONTROL "CW" SWITCH				•	•								
MTVC										•	•	•	
B/U RATE - R, P, & Y									•	•		•	
.05G MANUAL (SCS ENTRY)				•	•				•				
CHANNEL DISABLE (SCS ATT CONT)				•	•								
ATT SET SW ON (SCS MODES)							•		•				
FDAI ALIGN		•											•
SELF TEST													•

A RATES TO ACS (YAW) → (A)
E ERRORS TO ACE (YAW) → (B)
U RATES TO ACS (YAW) → (C)
} FIGURE 2.3-4, SHEET 2
C RATES TO TVC (YAW) → (D) - FIGURE 2.3-4, SHEET 3
THRUST ON/OFF LOGIC → (E) - FIGURE 2.3-4, SHEET 4

NOTE: For Switching Logic Details, See Figure 2.3-5, Sheet 2

SM-2A-10350

Figure 2.3-4. SCS Functional Flow Diagram (Sheet 1 of 4)

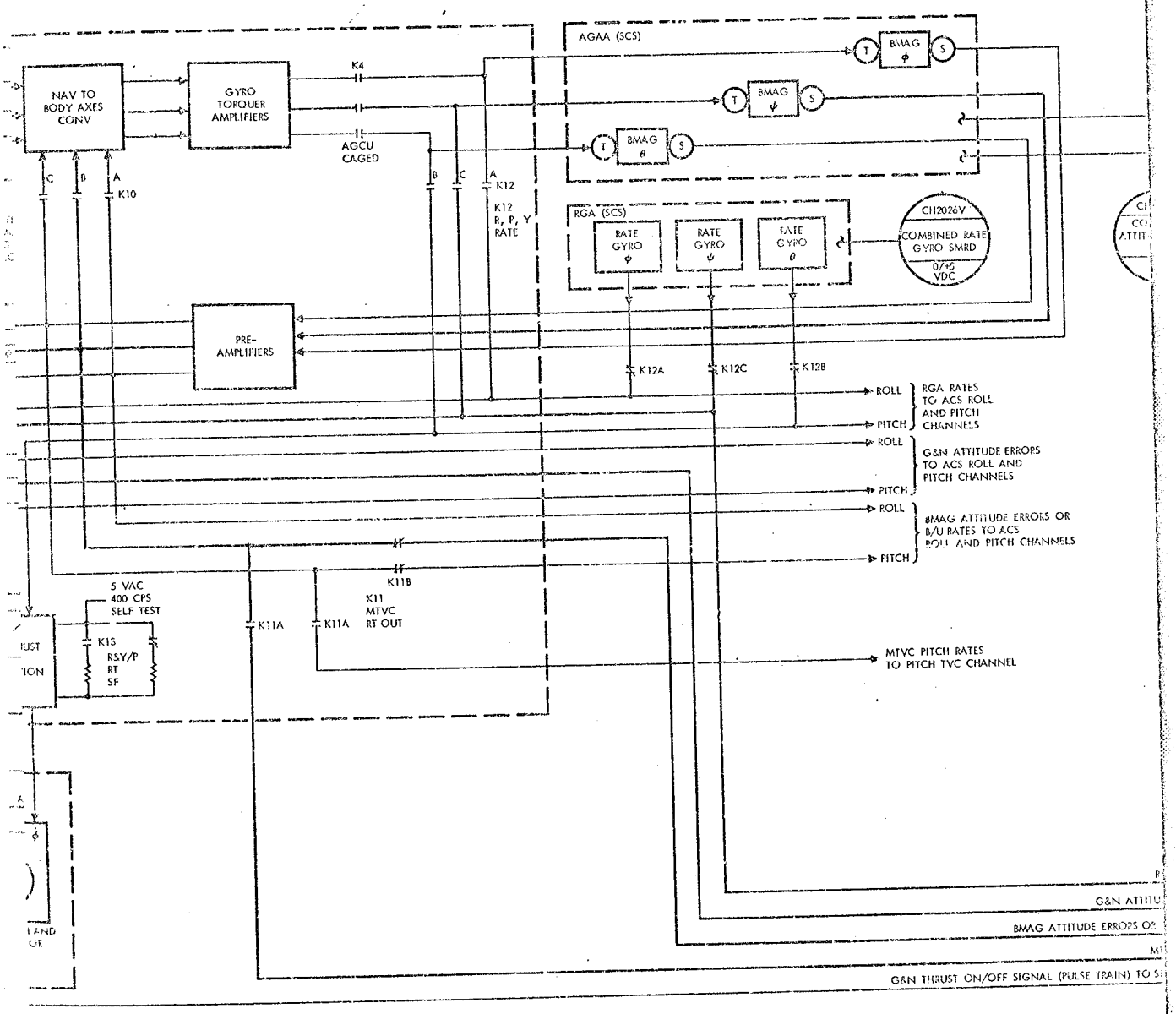
NAV TO BODY AXES CONV
GYRO TORQUER AMPLIFIERS
K4
AGCU CAGED
C
B
A
K10
B
C
A
K12
K12 R, P, Y RATE
AGAA (SCS)
T
BMAG φ
S
T
BMAG ψ
S
T
BMAG θ
S
RGA (SCS)
RATE GYRO φ
RATE GYRO ψ
RATE GYRO θ
CH2026V
COMBINED RATE GYRO SMRD
0/+5 VDC
PRE-AMPLIFIERS
K12A
K12C
K12B
ROLL
PITCH
RGA RATES TO ACS ROLL AND PITCH CHANNELS
ROLL
PITCH
G&N ATTITUDE ERRORS TO ACS ROLL AND PITCH CHANNELS
ROLL
PITCH
BMAG ATTITUDE ERRORS OR B/U RATES TO ACS ROLL AND PITCH CHANNELS
K11B
5 VAC 400 CPS SELF TEST
K11 MTVC RT OUT
K11A
K11A
K13
RSY/P RT SF
MTVC PITCH RATES TO PITCH TVC CHANNEL
G&N ATTITU
BMAG ATTITUDE ERRORS O
G&N THRUST ON/OFF SIGNAL (PULSE TRAIN) TO S

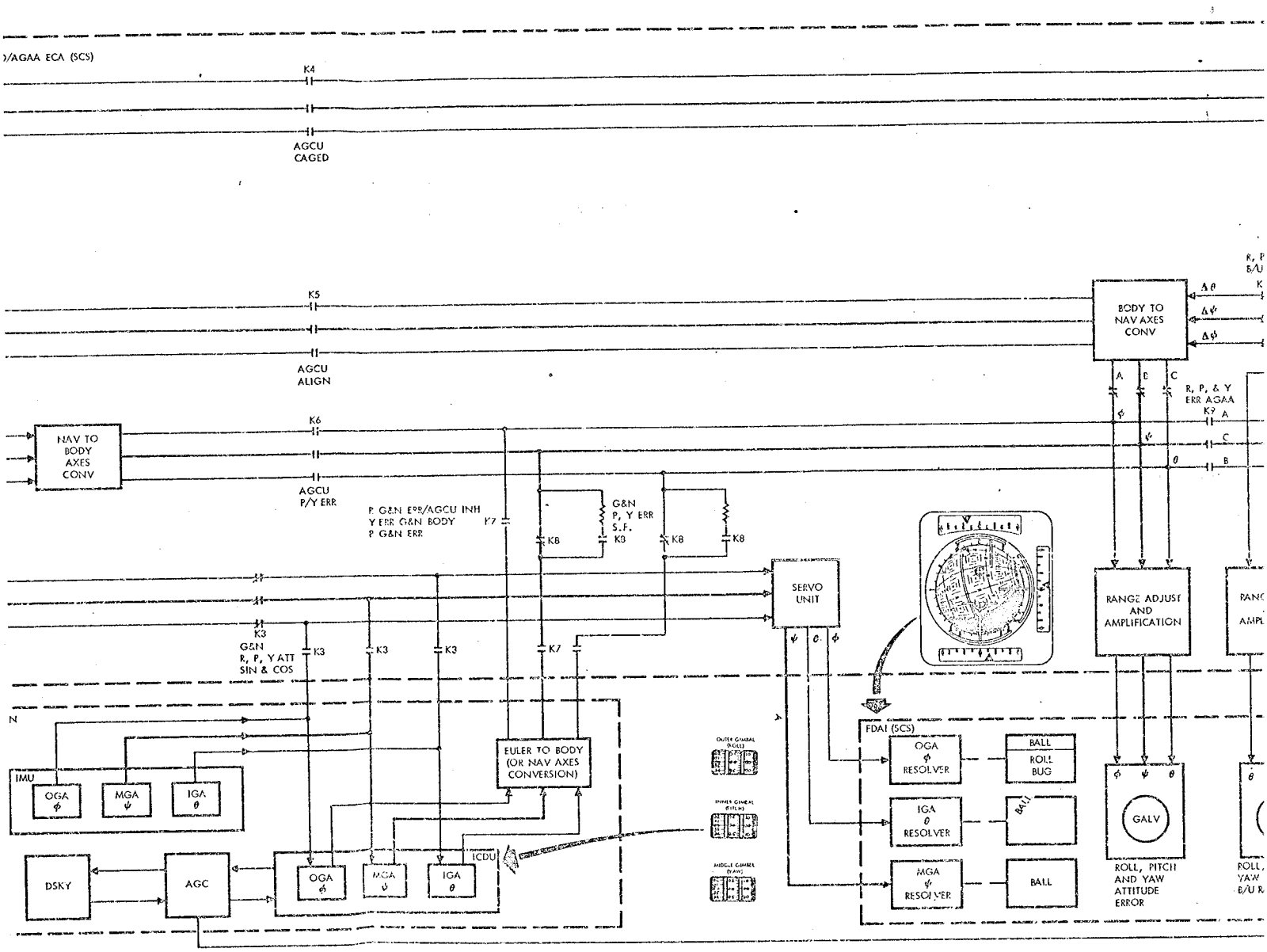
)/AGAA ECA (SCS)
K4
AGCU CAGED
K5
AGCU ALIGN
BODY TO NAV AXES CONV
Δθ
Δψ
Δφ
A
B
C
R, P, & Y ERR AGAA
K9
K6
NAV TO BODY AXES CONV
AGCU P/Y ERR
P G&N ERR/AGCU INH
Y ERR G&N BODY
P G&N ERR
K7
K8
G&N P, Y ERR S.F.
K9
SERVO UNIT
RANGE ADJUST AND AMPLIFICATION
K3
G&N R, P, Y ATT SIN & COS
IMU
OGA φ
MGA ψ
IGA θ
EULER TO BODY (OR NAV AXES CONVERSION)
ICDU
DSKY
AGC
OUTER GIMBAL (ROLL)
INNER GIMBAL (PITCH)
MIDDLE GIMBAL (YAW)
FDAI (SCS)
OGA φ RESOLVER
IGA θ RESOLVER
MGA ψ RESOLVER
BALL
ROLL BUG
GALV
ROLL, PITCH AND YAW ATTITUDE ERROR

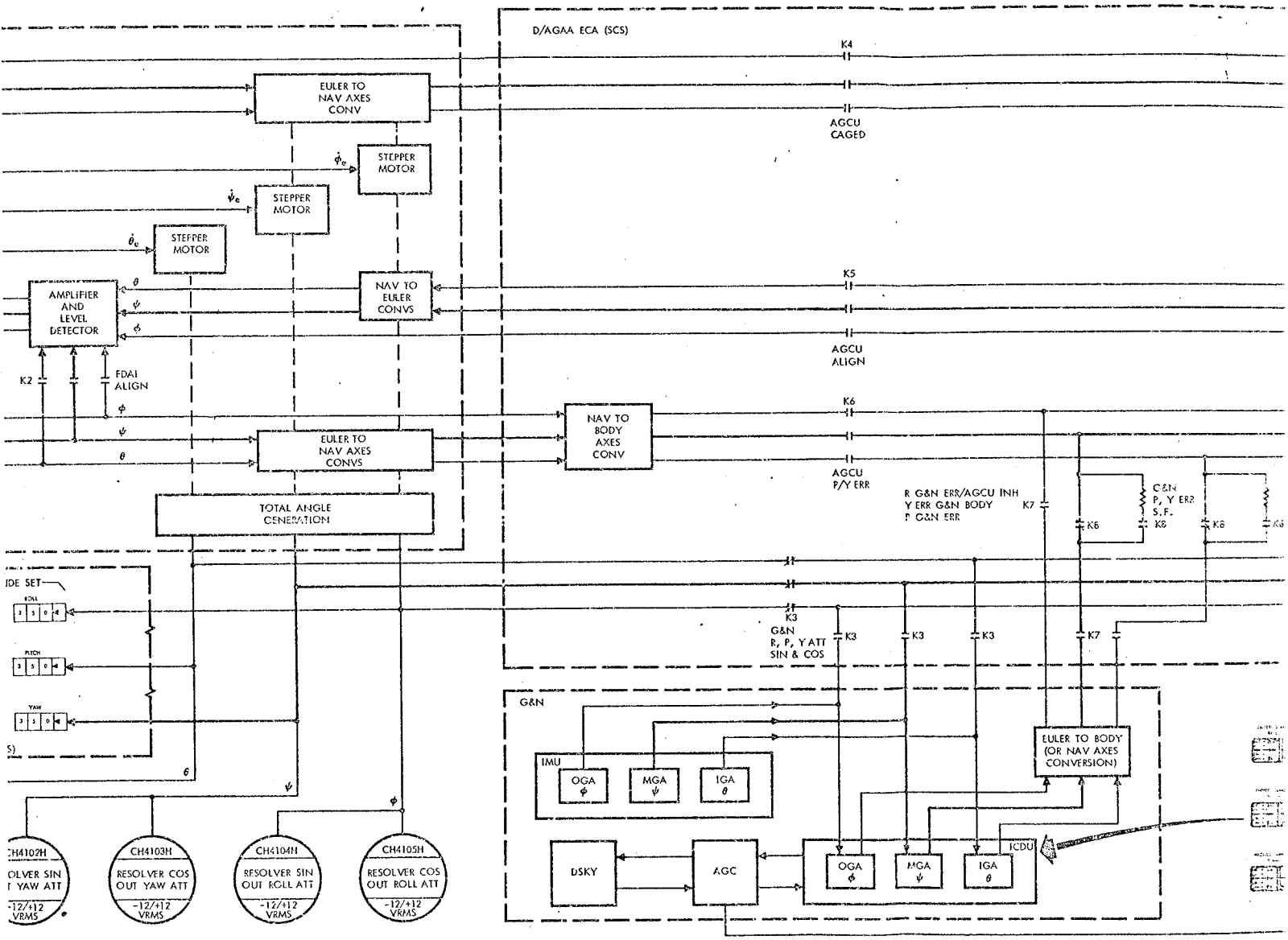
D/AGAA ECA (SCS)
EULER TO NAV AXES CONV
STEPPER MOTOR
STEPPER MOTOR
STEPPER MOTOR
AMPLIFIER AND LEVEL DETECTOR
NAV TO EULER CONVS
K4
AGCU CAGED
K5
AGCU ALIGN
K2
FDAI ALIGN
EULER TO NAV AXES CONVS
NAV TO BODY AXES CONV
K6
AGCU P/Y ERR
TOTAL ANGLE GENERATION
R G&N ERR/AGCU INH
Y ERR G&N BODY
P G&N ERR
K7
C&N P, Y ERR S.F.
K8
K3
G&N R, P, Y ATT SIN & COS
G&N
IMU
OGA
MGA
IGA
EULER TO BODY (OR NAV AXES CONVERSION)
DSKY
AGC
ICDU
CH4102H
RESOLVER SIN OUT YAW ATT
-12/+12 VRMS
CH4103H
RESOLVER COS OUT YAW ATT
-12/+12 VRMS
CH4104H
RESOLVER SIN OUT ROLL ATT
-12/+12 VRMS
CH4105H
RESOLVER COS OUT ROLL ATT
-12/+12 VRMS

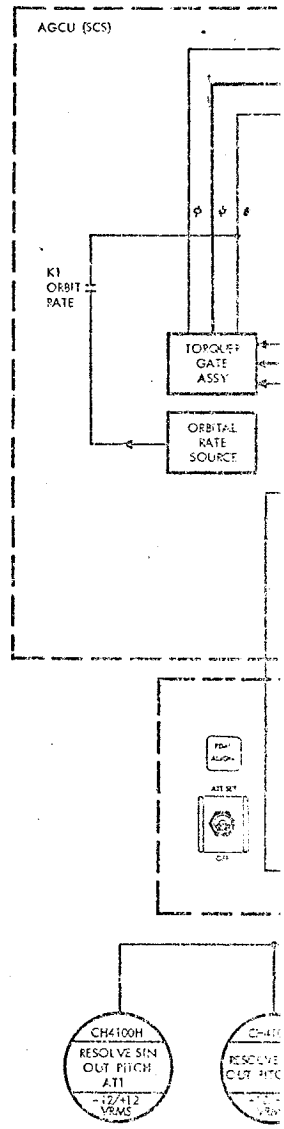
AGCU (SCS)
K1
ORBIT
RATE
TORQUER
GATE
ASSY
ORBITAL
RATE
SOURCE
CH4100H
RESOLVE SIN
OUT PITCH
AT1
-12/+12
VRMS

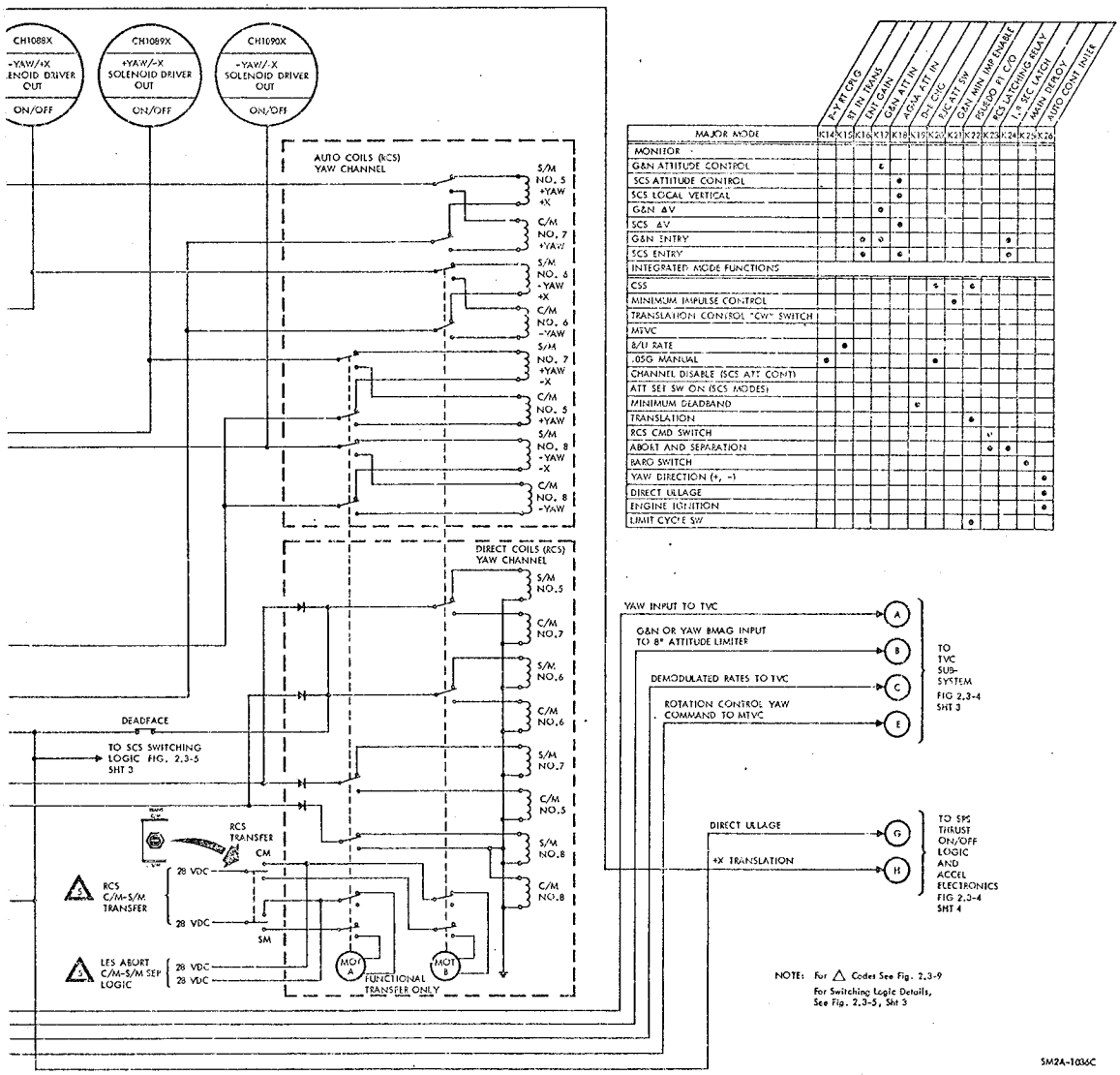

MAJOR MODE	K14	K15	K16	K17	K18	K19	K20	K21	K22	K23	K24	K25	K26
MONITOR													
G&N ATTITUDE CONTROL				•									
SCS ATTITUDE CONTROL					•								
SCS LOCAL VERTICAL					•								
G&N ΔV			•										
SCS ΔV					•								
G&N ENTRY		•	•								•		
SCS ENTRY		•			•						•		
INTEGRATED MODE FUNCTIONS													
CSS							•		•				
MINIMUM IMPULSE CONTROL								•					
TRANSLATION CONTROL "CW" SWITCH													
MTVC													
B/U RATE		•											
.05G MANUAL	•						•						
CHANNEL DISABLE (SCS ATT CONT)													
ATT SET SW ON (SCS MODES)													
MINIMUM DEADBAND						•							
TRANSLATION									•				
RCS CMD SWITCH										•			
ABORT AND SEPARATION										•	•		
BARO SWITCH												•	
YAW DIRECTION (+, -)													•
DIRECT ULLAGE													•
ENGINE IGNITION													•
LIMIT CYCLE SW									•				

Figure 2.3-4. SCS Functional Flow Diagram (Sheet 2 of 4)

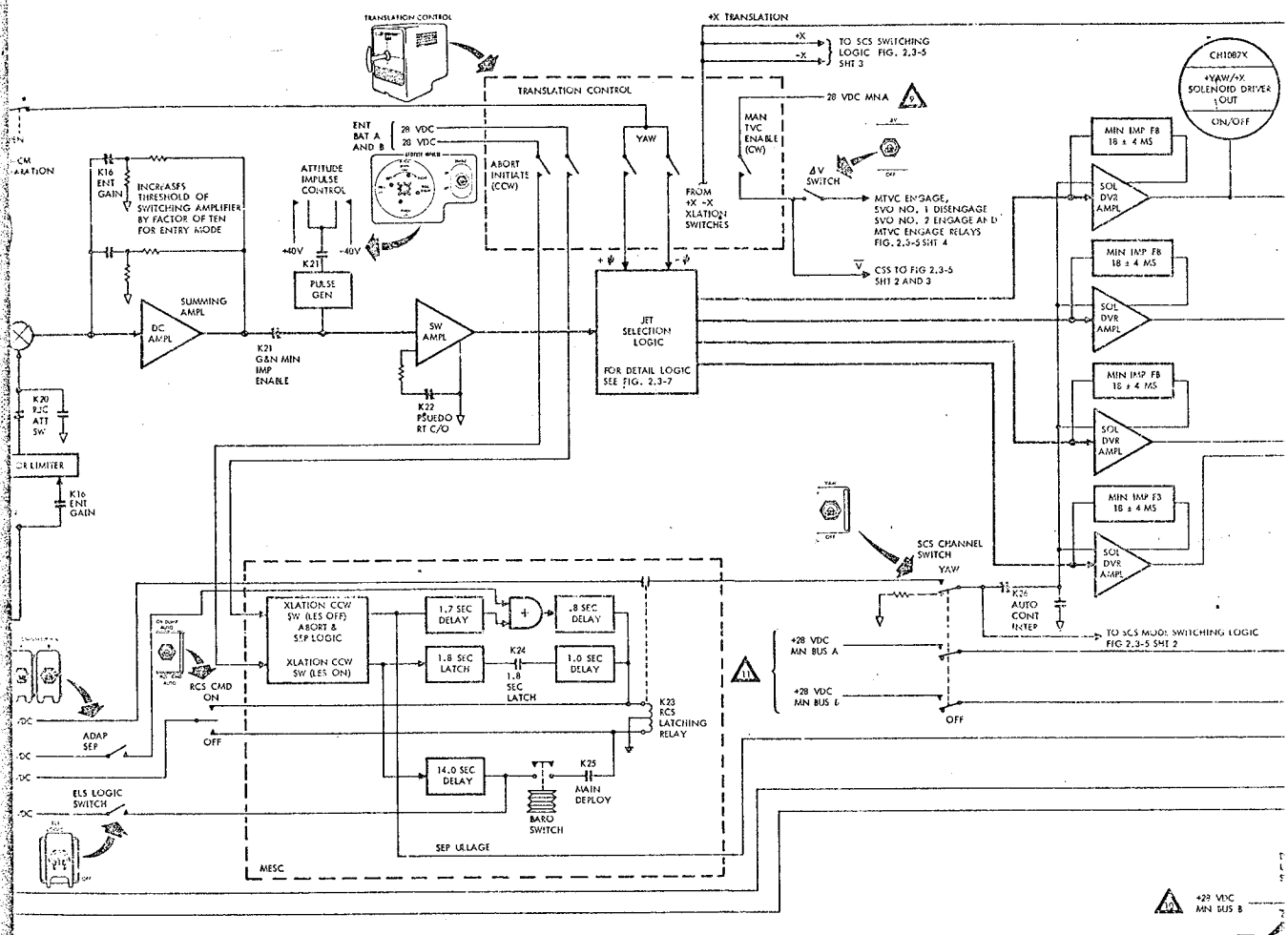

ATTITUDE CONTROL SUBSYSTEM

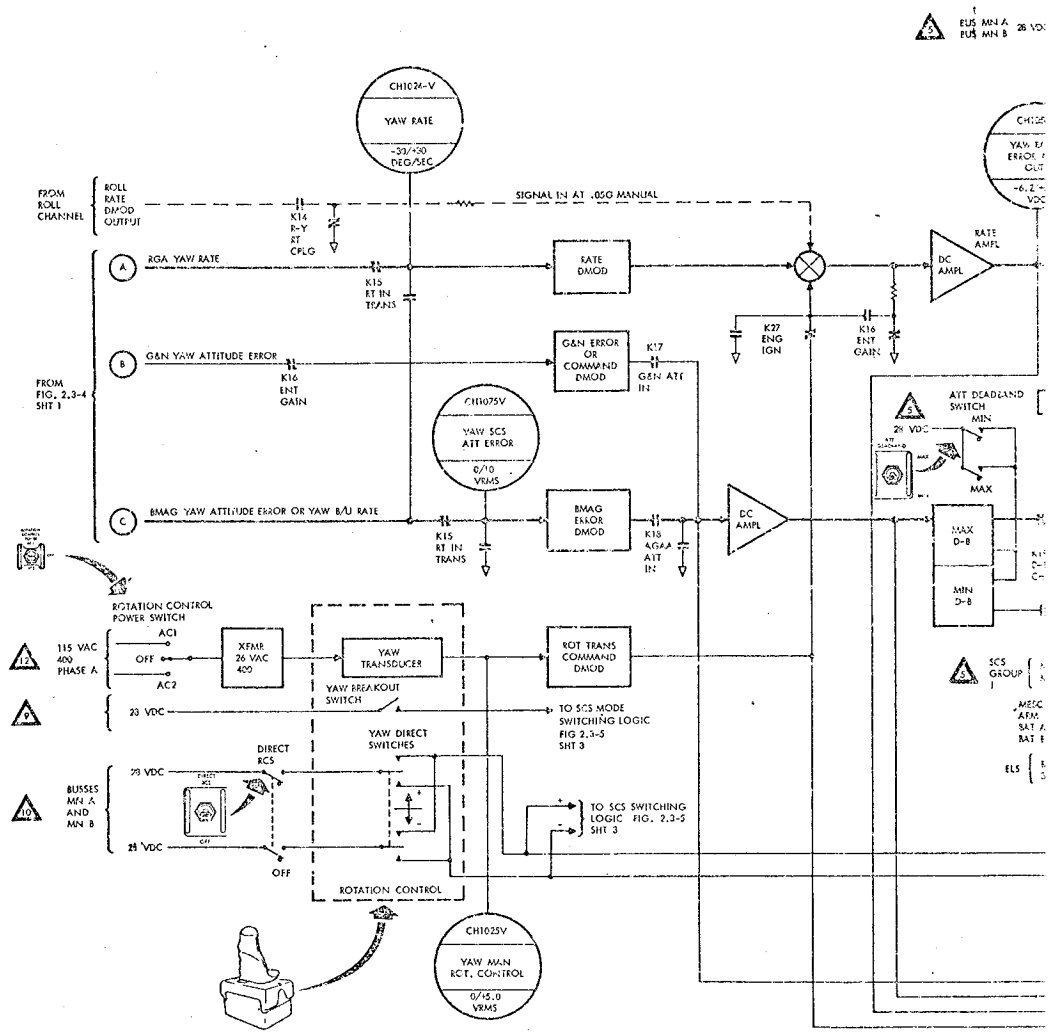
CH1024-V
YAW RATE
-30/+30 DEG/SEC
FROM ROLL CHANNEL
ROLL RATE DMOD OUTPUT
K14 R-Y RT CPLG
SIGNAL IN AT .050 MANUAL
A
RGA YAW RATE
K15 RT IN TRANS
RATE DMOD
RATE AMPL
DC AMPL
K27 ENG IGN
K16 ENT GAIN
B
G&N YAW ATTITUDE ERROR
K16 ENT GAIN
G&N ERROR OR COMMAND DMOD
K17 G&N ATT IN
FROM FIG. 2.3-4 SHT 1
CH1075V
YAW SCS ATT ERROR
0/10 VRMS
AYT DEADBAND SWITCH
MIN
MAX
C
BMAG YAW ATTITUDE ERROR OR YAW B/U RATE
K15 RT IN TRANS
BMAG ERROR DMOD
K18 AGAA ATT IN
DC AMPL
MAX D-8
MIN D-8
ROTATION CONTROL POWER SWITCH
AC1
115 VAC 400 PHASE A
OFF
AC2
XFMR 26 VAC 400
YAW TRANSDUCER
ROT TRANS COMMAND DMOD
SCS GROUP 1
YAW BREAKOUT SWITCH
28 VDC
TO SCS MODE SWITCHING LOGIC FIG 2.3-5 SHT 3
YAW DIRECT SWITCHES
DIRECT RCS
BUSSES MN A AND MN B
TO SCS SWITCHING LOGIC FIG. 2.3-5 SHT 3
OFF
ROTATION CONTROL
CH1025V
YAW MAN RCT. CONTROL
0/15.0 VRMS

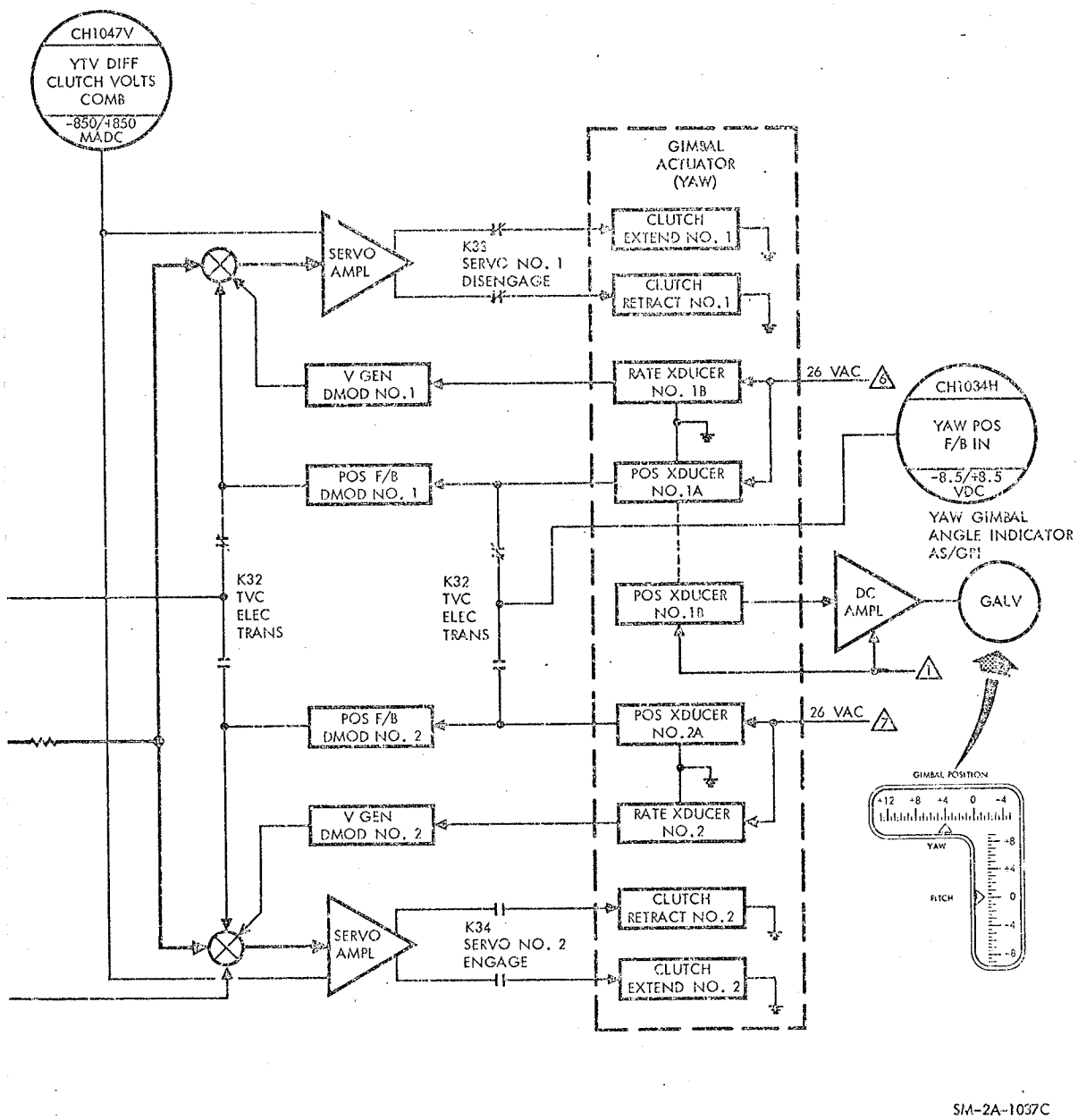

Figure 2.3-4. SCS Functional Flow Diagram (Sheet 3 of 4)

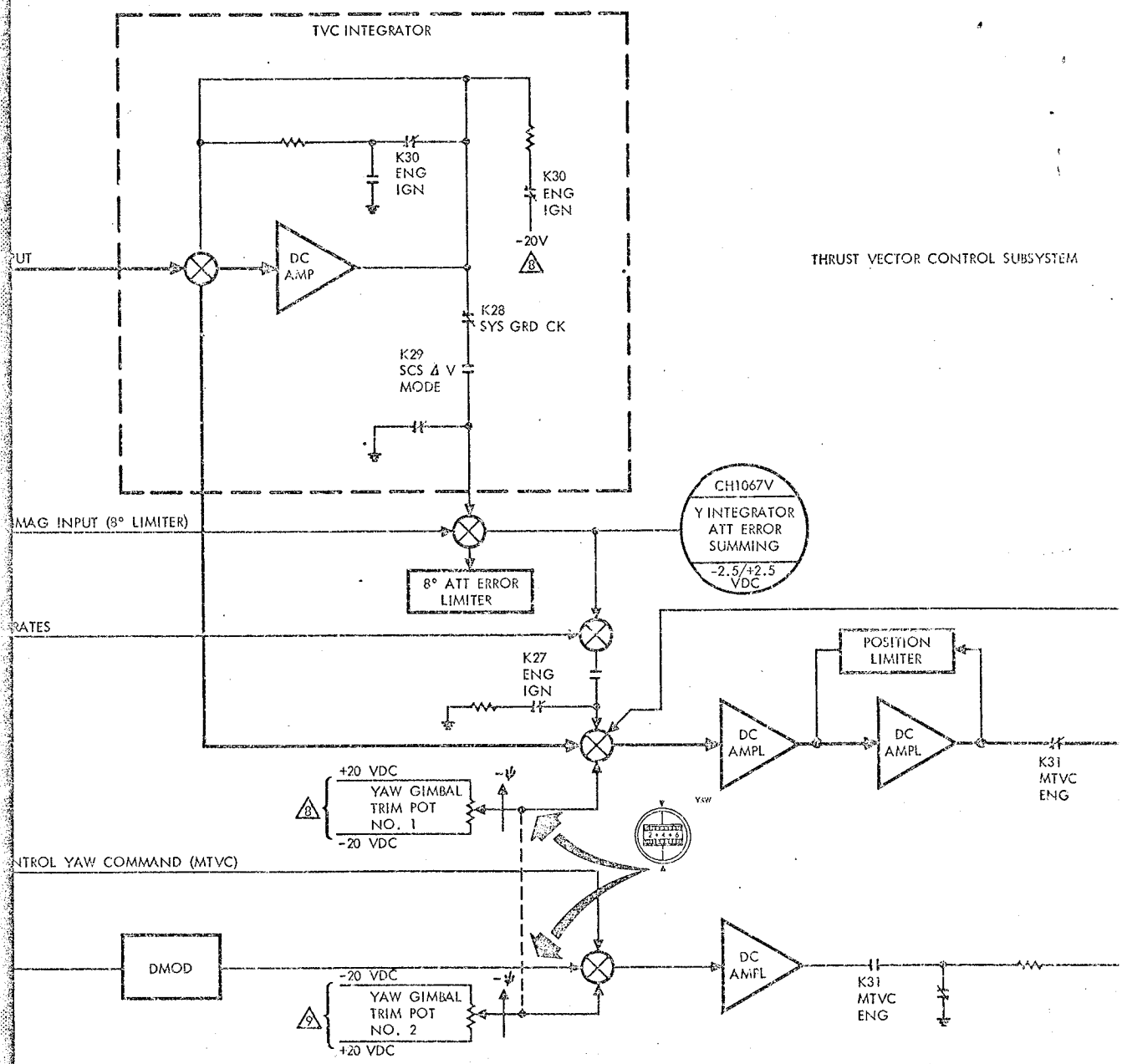
TVC INTEGRATOR
K30
ENG
IGN
K30
ENG
IGN
-20V
8
DC
AMP
K28
SYS GRD CK
K29
SCS Δ V
MODE
UT
THRUST VECTOR CONTROL SUBSYSTEM
CH1067V
Y INTEGRATOR
ATT ERROR
SUMMING
-2.5/+2.5
VDC
MAG INPUT (8° LIMITER)
8° ATT ERROR
LIMITER
RATES
K27
ENG
IGN
POSITION
LIMITER
DC
AMPL
DC
AMPL
K31
MTVC
ENG
+20 VDC
YAW GIMBAL
TRIM POT
NO. 1
-20 VDC
8
-ψ
YAW
NTROL YAW COMMAND (MTVC)
DMOD
-20 VDC
YAW GIMBAL
TRIM POT
NO. 2
+20 VDC
9
-ψ
DC
AMPL
K31
MTVC
ENG

MAJOR MODE	K27 ENG IGN	K28 SYS GRD CK	K29 SCS ΔV MODE	K30 ENGINE IGN	K31 MTVC ENGAGE	K32 TVC ELEC TRANS	K33 SERVO NO. 1 DISENGAGE	K34 SERVO NO. 2 ENGAGE
SCS ΔV			●					
INTEGRATED MODE FUNCTIONS								
ENGINE IGNITION	●			●				
SYSTEM GRD CHECK		●						
MTVC ENGAGE					●		●	●
TVC MONITOR						●	●	●
TVC NO. 1 OFF						●	○	●

NOTE:

1. For Switching Logic Details, See Figure 2.3-5, Shts 3 & 4
2. For Δ Codes, See Figure 2.3-9

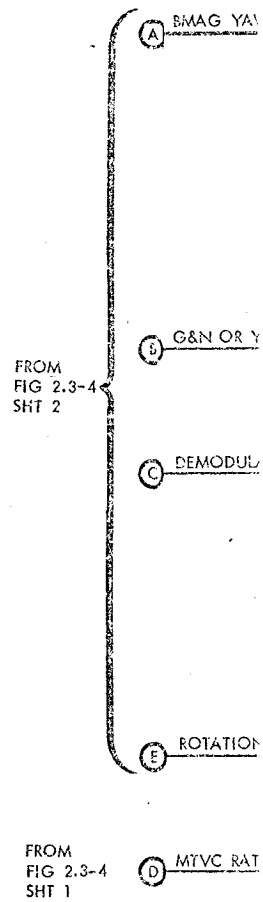

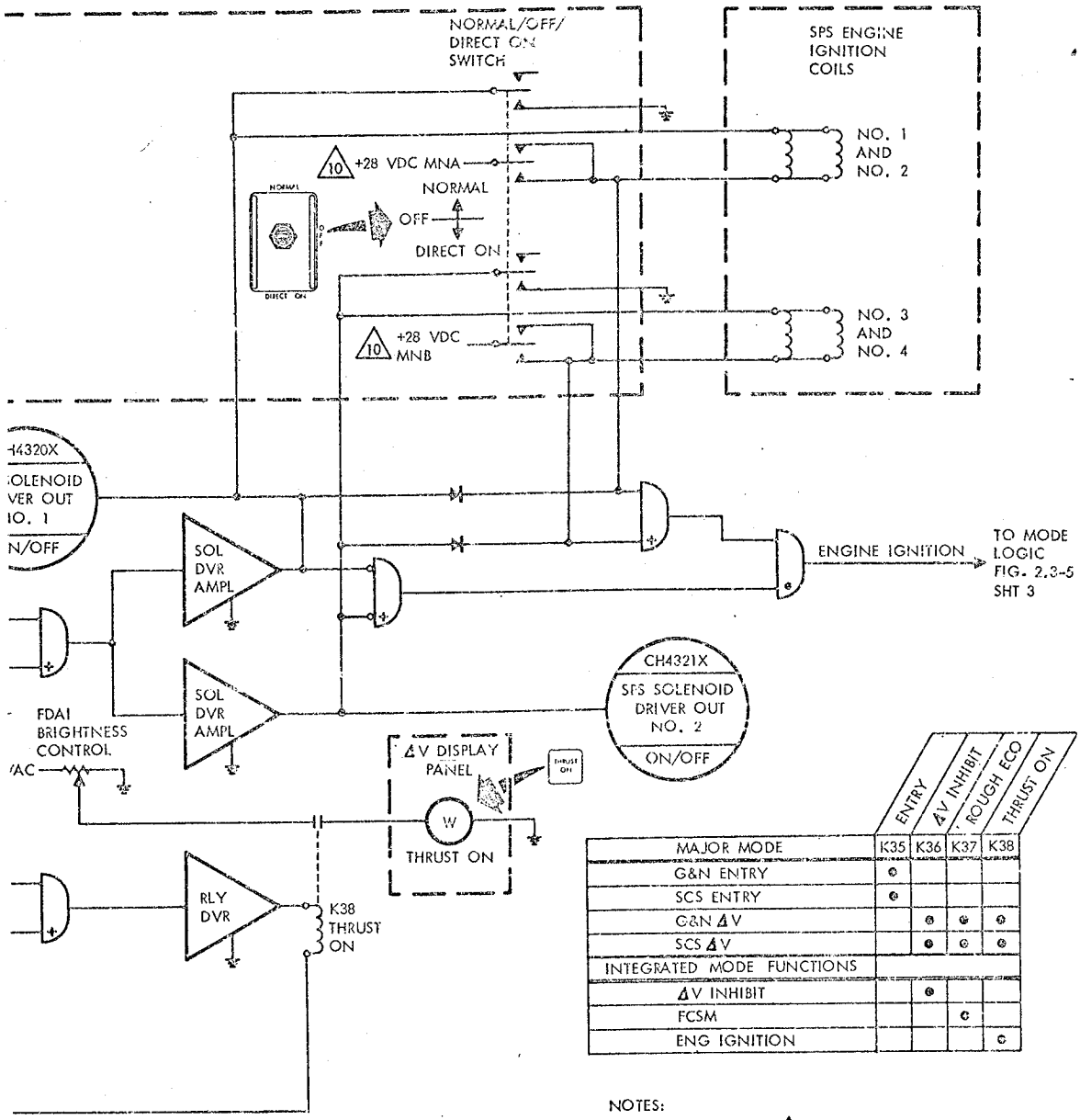

MAJOR MODE	K35 (ENTRY)	K36 (ΔV INHIBIT)	K37 (ROUGH ECO)	K38 (THRUST ON)
G&N ENTRY	●			
SCS ENTRY	●			
G&N ΔV		●	●	●
SCS ΔV		●	●	●
INTEGRATED MODE FUNCTIONS				
ΔV INHIBIT		●		
FCSM			●	
ENG IGNITION				●

NOTES:

1. For Delta Codes △ See Fig. 2.3-9.
2. For Switching Logic Details, See Fig. 2.3-5, Sht 4.

SPS THRUST ON/OFF LOGIC AND ACCELEROMETER ELECTRONICS

SM-2A-1038C

Figure 2.3-4. SCS Functional Flow Diagram (Sheet 4 of 4)

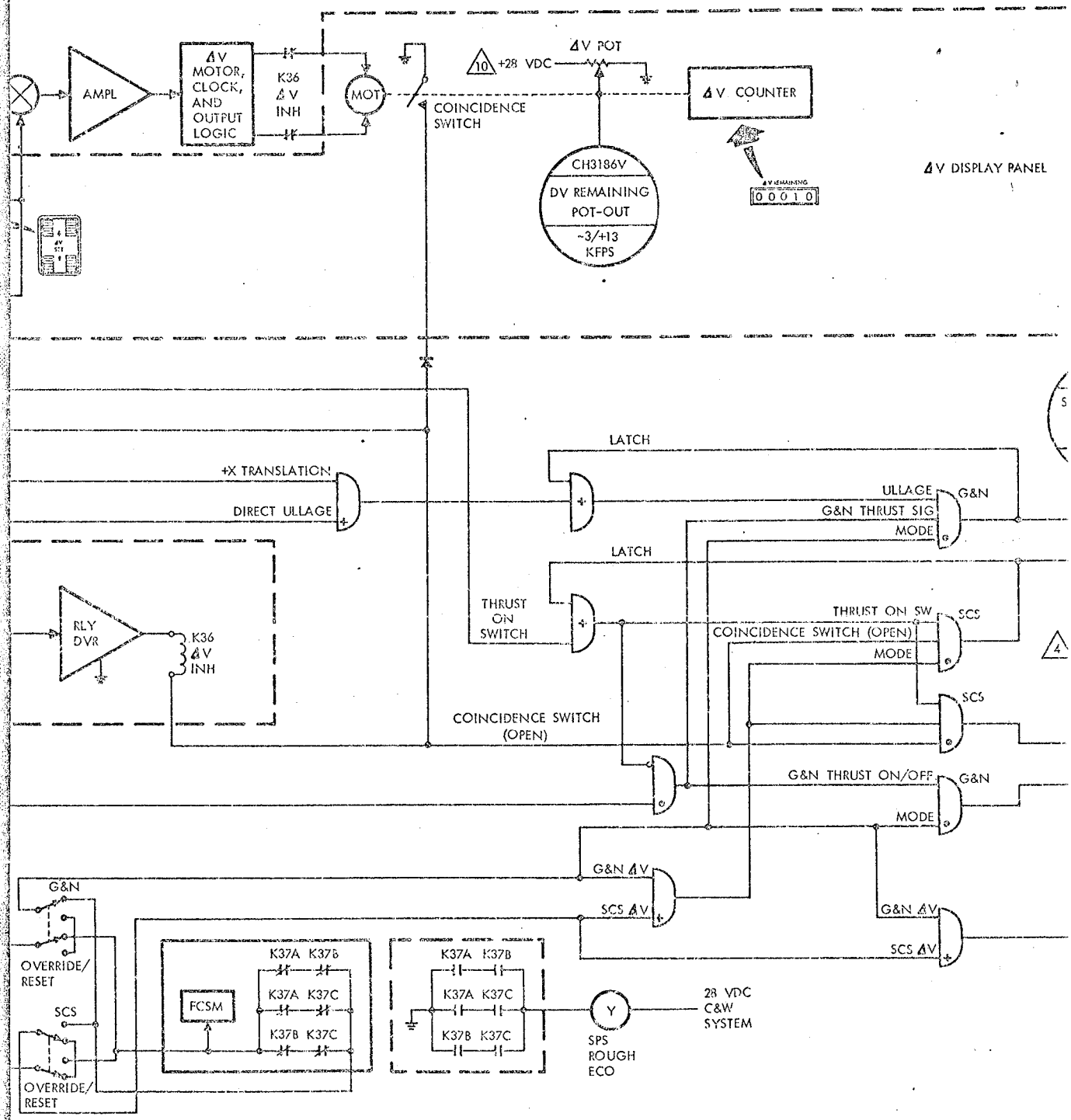
AMPL
ΔV MOTOR, CLOCK, AND OUTPUT LOGIC
K36 ΔV INH
MOT
COINCIDENCE SWITCH
10 +28 VDC
ΔV POT
ΔV COUNTER
CH3186V
DV REMAINING POT-OUT
~3/+13 KFPS
ΔV REMAINING
00010
ΔV DISPLAY PANEL
LATCH
+X TRANSLATION
DIRECT ULLAGE
ULLAGE
G&N
G&N THRUST SIG
MODE
LATCH
THRUST ON SWITCH
THRUST ON SW
SCS
COINCIDENCE SWITCH (OPEN)
MODE
RLY DVR
K36 ΔV INH
SCS
COINCIDENCE SWITCH (OPEN)
G&N THRUST ON/OFF
G&N
MODE
G&N ΔV
SCS ΔV
G&N ΔV
SCS ΔV
G&N
OVERRIDE/ RESET
SCS
OVERRIDE/ RESET
FCSM
K37A K37B
K37A K37C
K37B K37C
K37A K37B
K37A K37C
K37B K37C
Y
SPS ROUGH ECO
28 VDC C&W SYSTEM

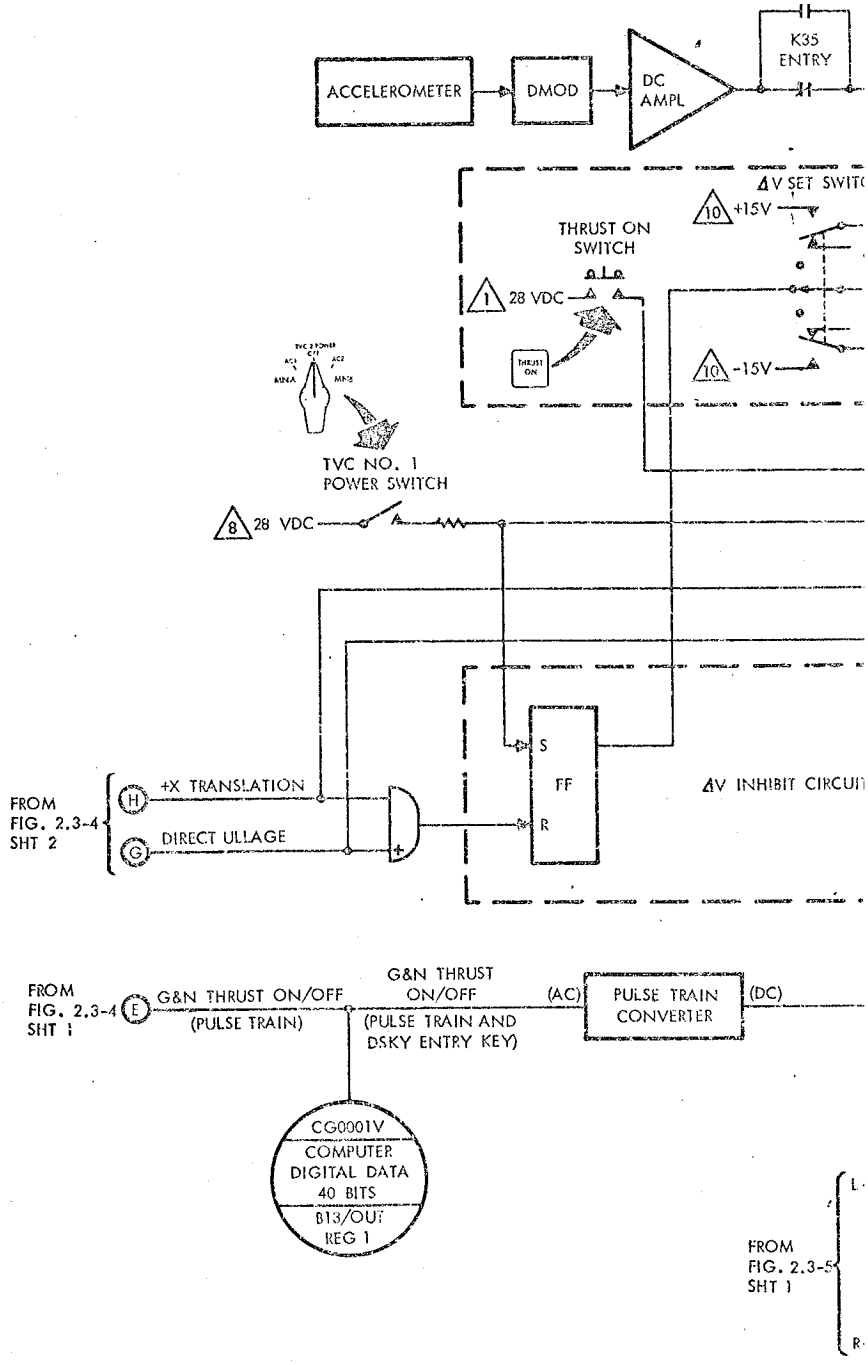
ACCELEROMETER
DMOD
DC AMPL
K35 ENTRY
ΔV SET SWITC
10 +15V
THRUST ON SWITCH
1 28 VDC
THRUST ON
10 -15V
TVC NO. 1 POWER SWITCH
8 28 VDC
S
FF
R
ΔV INHIBIT CIRCUIT
FROM FIG. 2.3-4 SHT 2
H +X TRANSLATION
G DIRECT ULLAGE
FROM FIG. 2.3-4 SHT 1
E G&N THRUST ON/OFF (PULSE TRAIN)
G&N THRUST ON/OFF (PULSE TRAIN AND DSKY ENTRY KEY)
(AC)
PULSE TRAIN CONVERTER
(DC)
CG0001V
COMPUTER DIGITAL DATA 40 BITS
B13/OUT REG 1
FROM FIG. 2.3-5 SHT 1

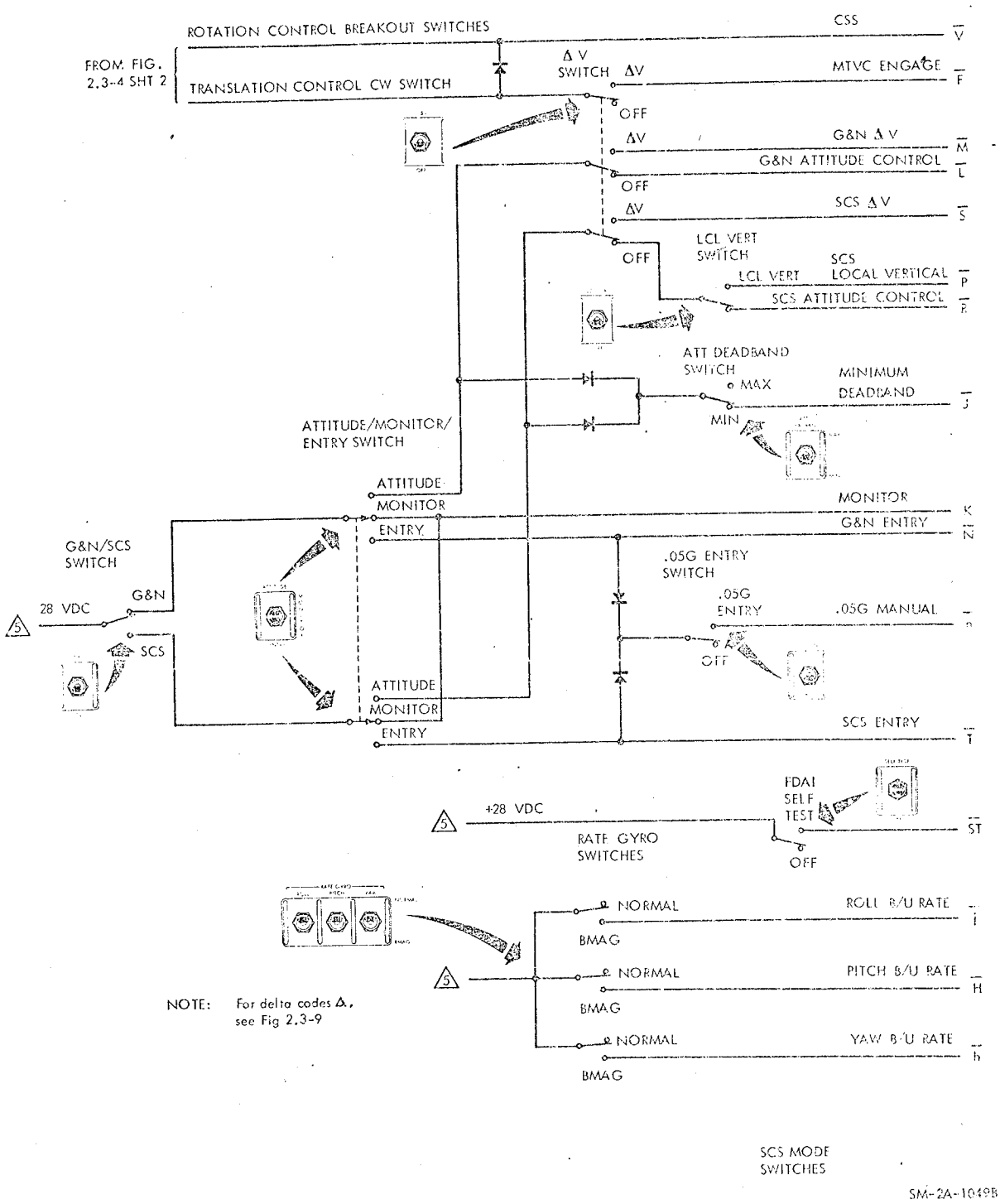

Figure 2.3-5. SCS Switching Logic (Sheet 1 of 4)

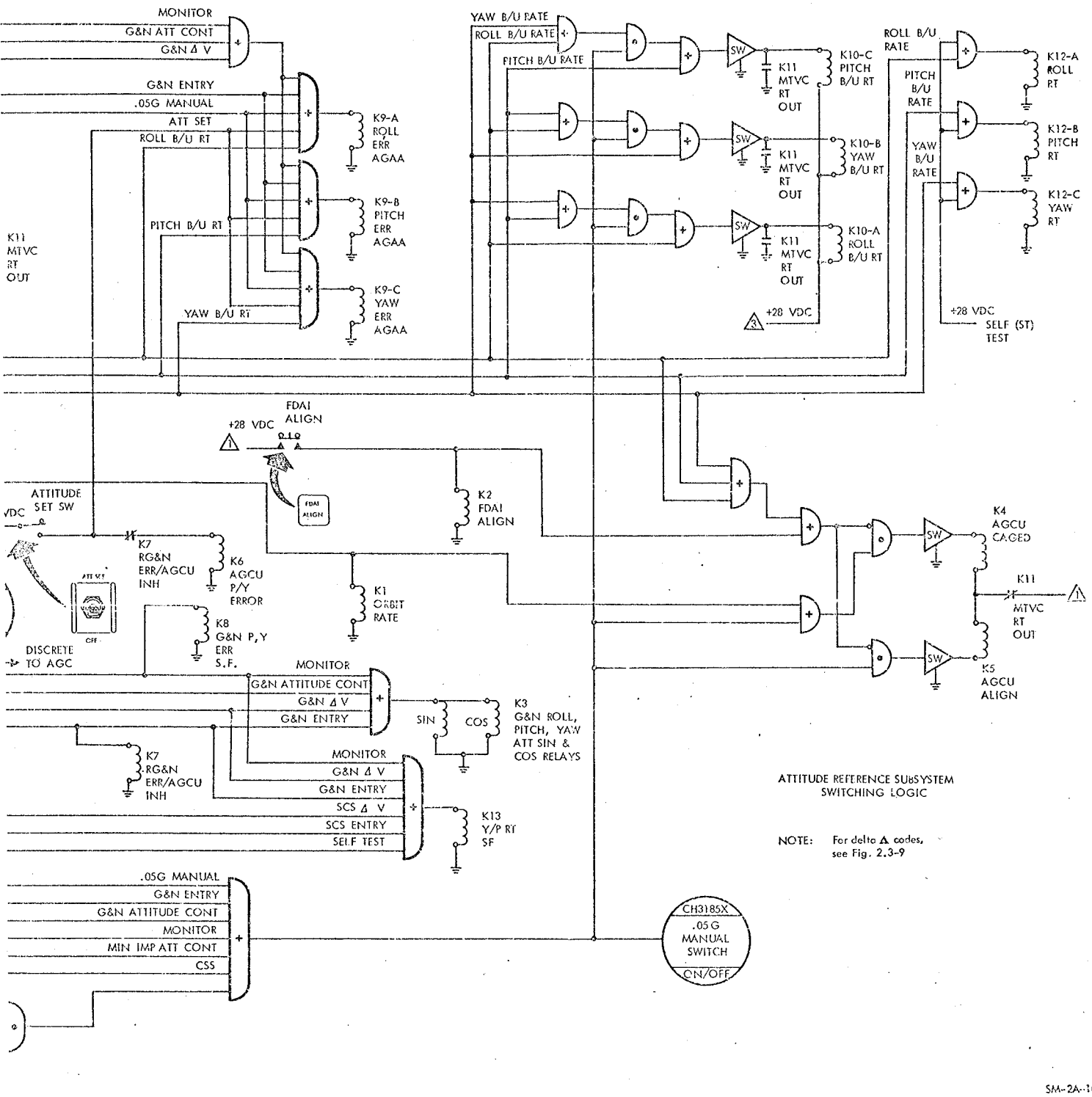

Figure 2.3-5. SCS Switching Logic (Sheet 2 of 4)

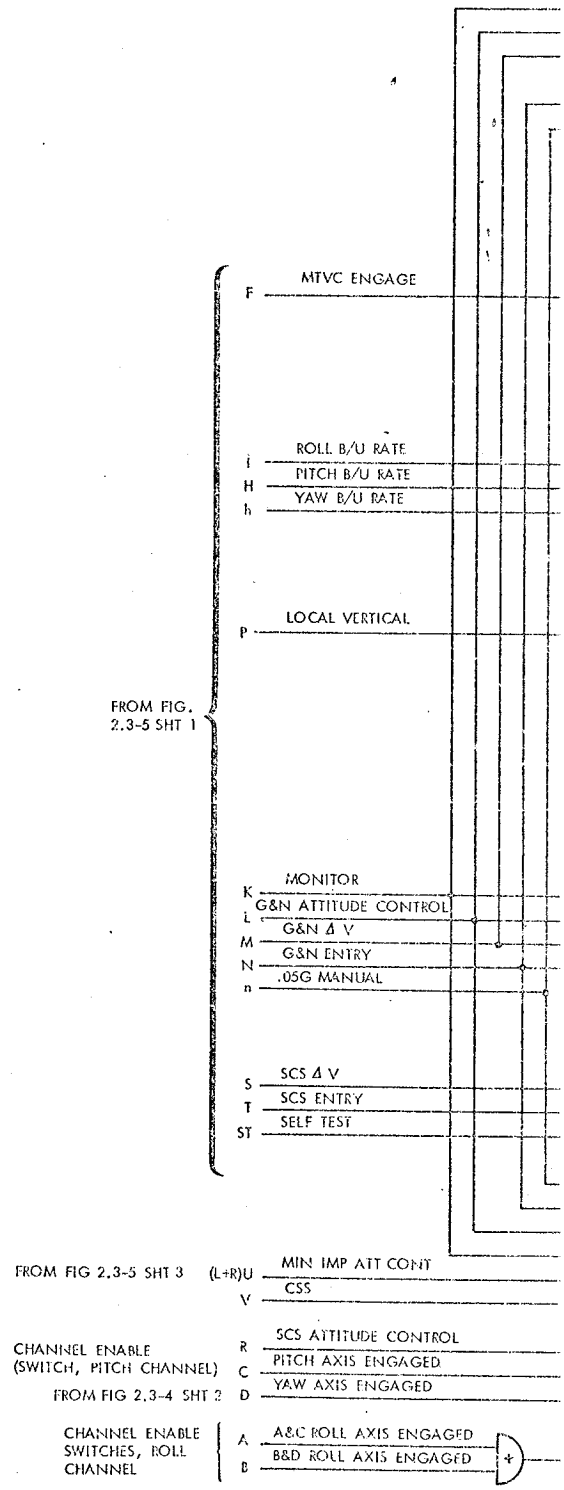
MTVC ENGAGE
F
ROLL B/U RATE
i
PITCH B/U RATE
H
YAW B/U RATE
h
LOCAL VERTICAL
P
FROM FIG. 2.3-5 SHT 1
MONITOR
K
G&N ATTITUDE CONTROL
L
G&N Δ V
M
G&N ENTRY
N
.05G MANUAL
n
SCS Δ V
S
SCS ENTRY
T
SELF TEST
ST
FROM FIG 2.3-5 SHT 3
(L+R)U
MIN IMP ATT CONT
V
CSS
CHANNEL ENABLE (SWITCH, PITCH CHANNEL)
R
SCS ATTITUDE CONTROL
C
PITCH AXIS ENGAGED
FROM FIG 2.3-4 SHT 2
D
YAW AXIS ENGAGED
CHANNEL ENABLE SWITCHES, ROLL CHANNEL
A
A&C ROLL AXIS ENGAGED
B
B&D ROLL AXIS ENGAGED
+

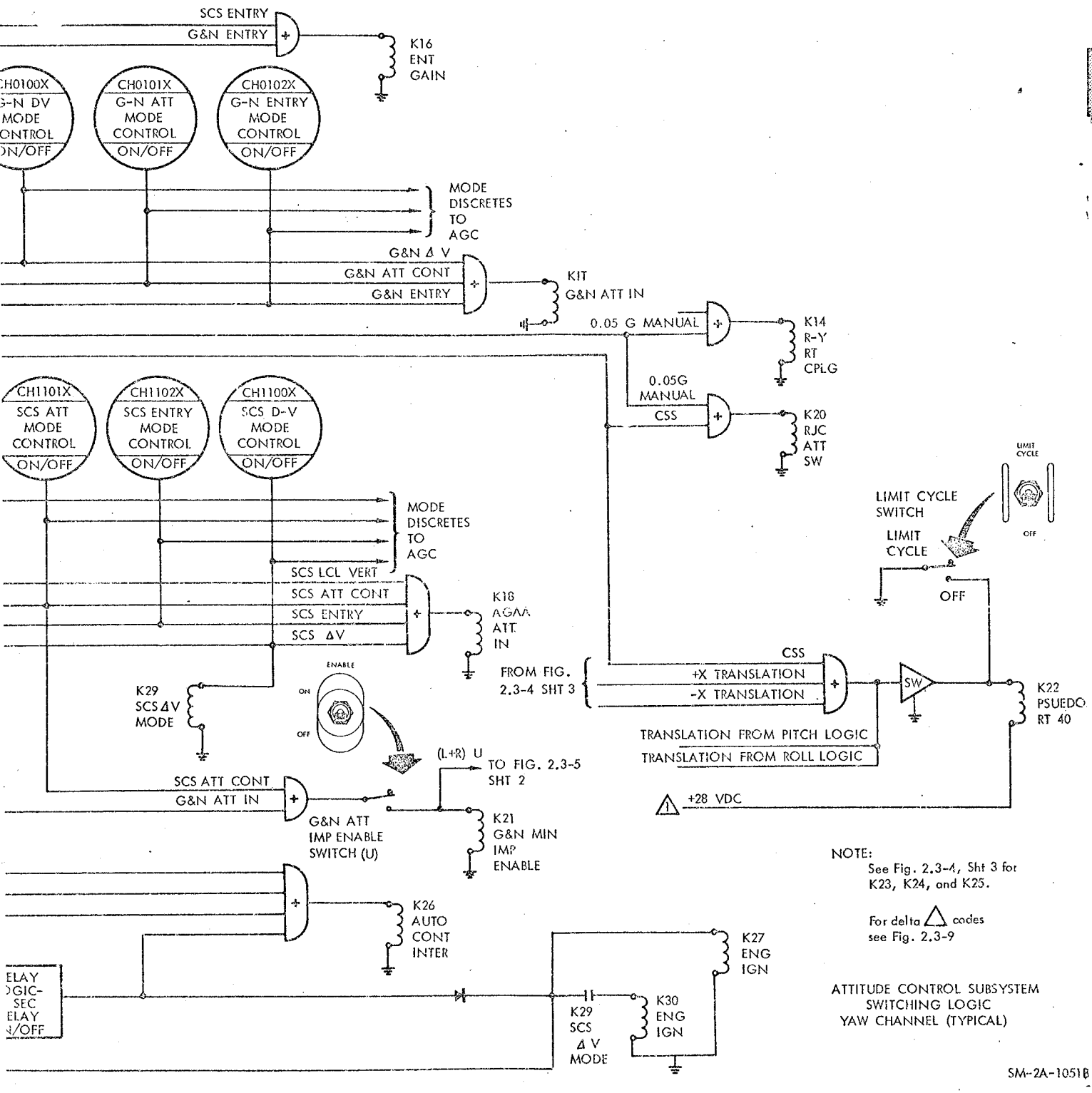

Figure 2.3-5. SCS Switching Logic (Sheet 3 of 4)

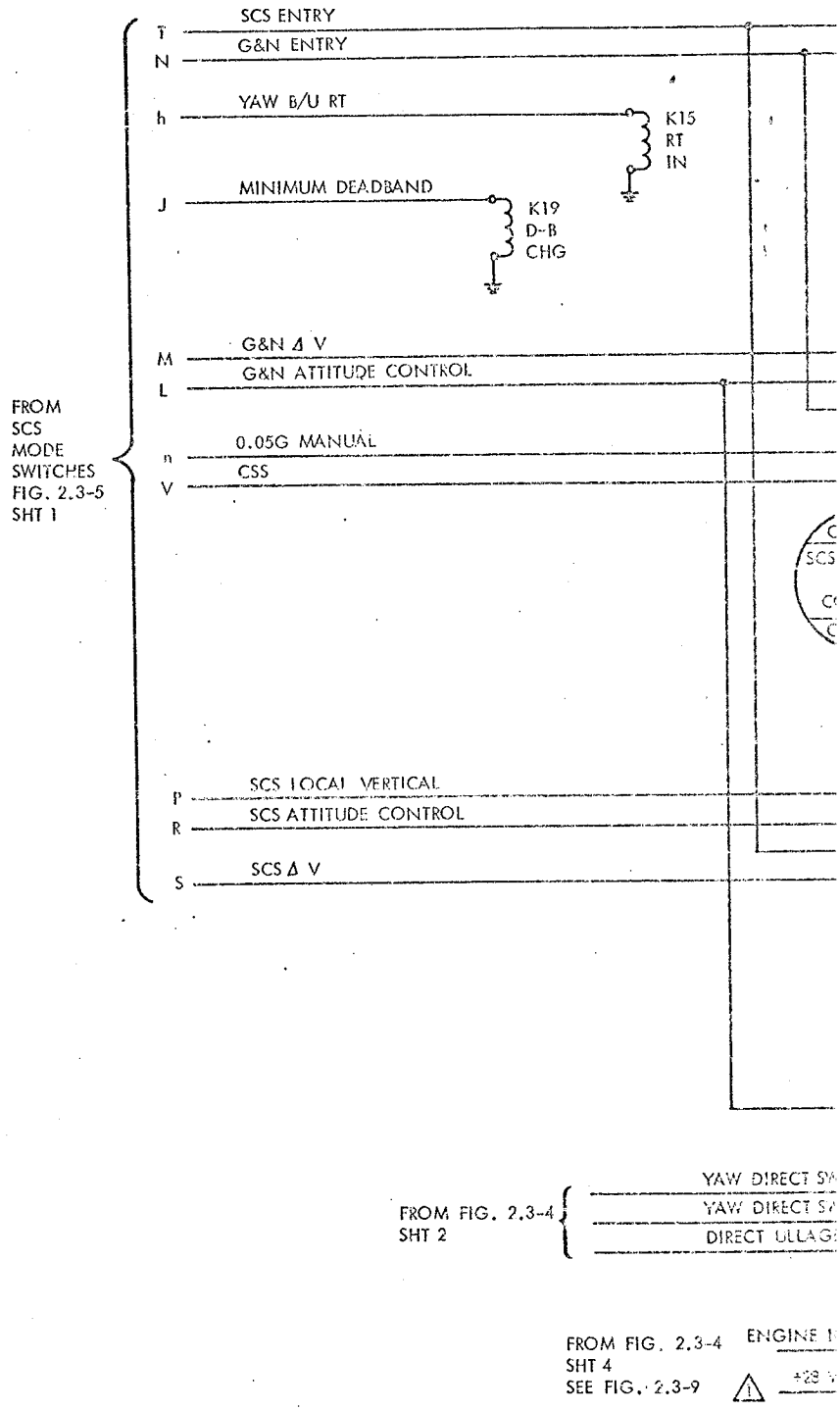
FROM
SCS
MODE
SWITCHES
FIG. 2.3-5
SHT 1
T
SCS ENTRY
N
G&N ENTRY
h
YAW B/U RT
K15
RT
IN
J
MINIMUM DEADBAND
K19
D-B
CHG
M
G&N Δ V
L
G&N ATTITUDE CONTROL
n
0.05G MANUAL
V
CSS
P
SCS LOCAL VERTICAL
R
SCS ATTITUDE CONTROL
S
SCS Δ V
FROM FIG. 2.3-4
SHT 2
YAW DIRECT SW
YAW DIRECT SW
DIRECT ULLAGE
FROM FIG. 2.3-4
SHT 4
SEE FIG. 2.3-9
ENGINE 1
+28 V

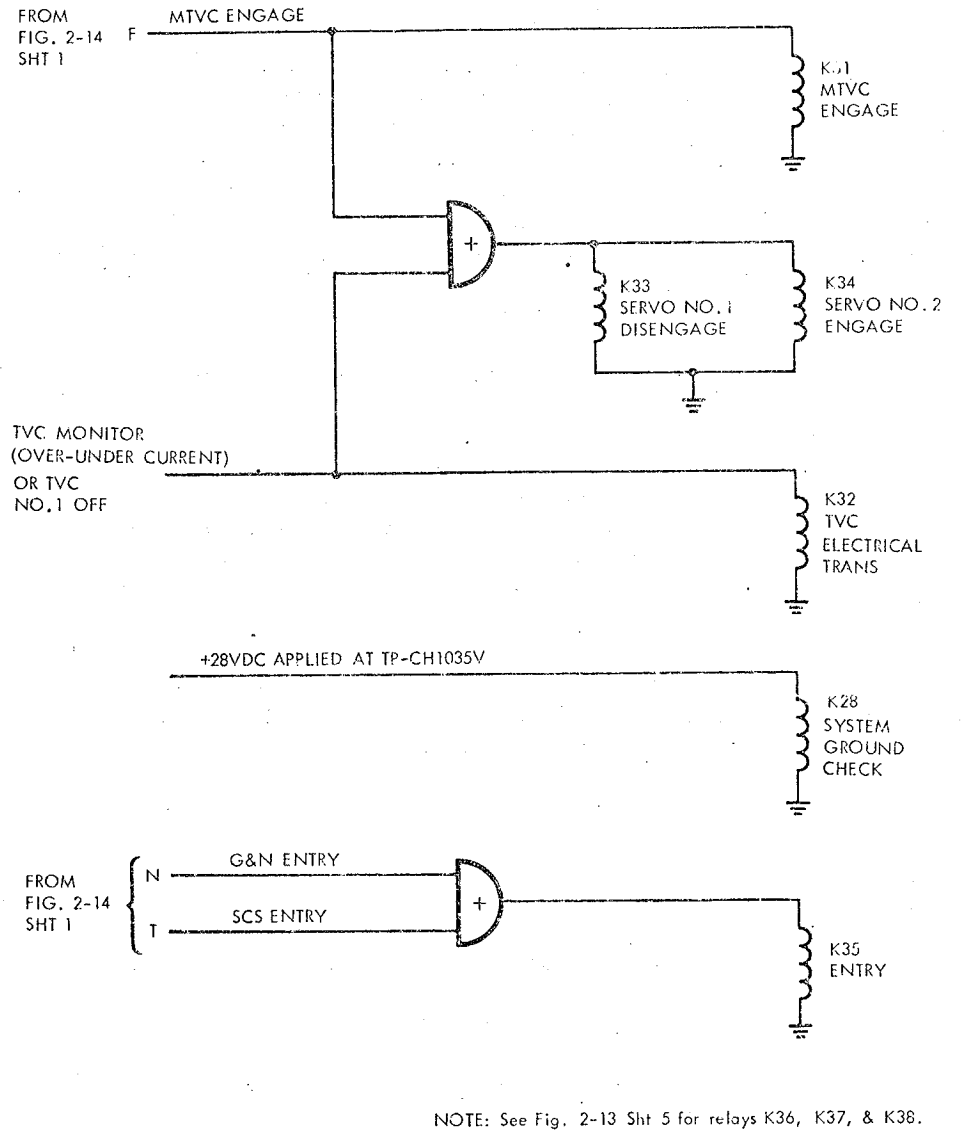

NOTE: See Fig. 2-13 Sht 5 for relays K36, K37, & K38.

SM-2A-1052

Figure 2.3-5. SCS Switching Logic (Sheet 4 of 4)

Inertial reference data may also be received by the astronauts via the MSFN voice link for AGC updating and/or for IMU alignment. With the computer subsystem in the G&N loop, automatic maneuvers and/or G&N-controlled velocity changes are possible.

The FDAI receives total attitude and attitude error information from the G&N system. The FDAI indicates S/C total attitude (S/C reference attitude) and attitude error. Total attitude represents the gimbal angles of the IMU; and attitude error is the difference between the IMU gimbal angles and the desired attitude. The desired attitude is obtained by maneuvering the S/C either manually or automatically in the directions that null out the indicated errors. This establishes S/C attitude to the desired inertial reference. The FDAI also displays rotational rates obtained from the SCS rate gyros. The SCS rate gyros supply rate information for all G&N and SCS control and display functions.

In G&N modes, the FDAI ball is continuously controlled by signals from the IMU gimbal angle resolvers. In SCS modes, the ball is controlled by the AGCU total angle resolvers. AGCU signals are applied to the ball only during manually initiated attitude changes (assuming none of the BMAGs are rate caged) and in the SCS entry mode after 0.05 G switching. At all other times, the ball remains stationary. The ball is always driven with reference to the IMU axes with the AGCU providing the conversion for the BMAGS from body axes to IMU axes.

Attitude Reference/SCS. If the IMU cannot be used for attitude reference, a backup or strapdown attitude reference comprised of assemblies contained within the SCS will provide inertial attitude reference. The strapdown reference is mechanized within the following:

- Attitude Gyro Accelerometer Assembly (AGAA)

Contains the body-mounted attitude gyros (BMAGS), X-axis accelerometer, and self-contained electronics. Provides attitude error signals for the attitude control subsystem, AGCU, and FDAI. The BMAGS are also a source for backup rate signals, if required.

- Rate Gyro Assembly (RGA)

Provides angular rate signals to the attitude control (ACS) subsystems and to the FDAI.

- Attitude Set/Gimbal Position Indicator (AS/GPI)

The AS section provides a capability to set in desired reference attitudes and align the ARS to those attitudes. The GPI section allows the astronauts to manually position the SPS engine gimbals to a trim position prior to a delta V maneuver.

- Display/Attitude Gyro Accelerometer Assembly Electronic Control Assembly (D/AGAAECA)

  AGAA section: Contains electronics required to operate the BMAGS and to interface with the AGCU

  DECA section: Provides the interface electronics between all sensors and corresponding displays

- Auxiliary Electronic Control Assembly (AECA)

  AGCU section: Performs the mathematical computations and contains the transformation matrices required to display attitude and attitude errors of the S/C. The AGCU is the primary control device for the SCS ARS.

  The remainder of the AECA contains circuitry for the SPS engine thrust ON/OFF control function.

- Flight Director Attitude Indicator (FDAI)

The FDAI (figure 2.3-12) provides the visual displays for S/C attitude; included is total attitude readout (FDAI ball) gimbaled in three axes: roll, pitch, and yaw.

Pitch and yaw total attitude is read from either the body axes index (ν) or the navigation axes index (⊕). The indices are fixed to the instrument faceplate. Roll is indicated by a roll bug (indicator needle driven by the roll gimbal through a gear mechanism). Roll attitude is read by comparing the roll bug position with reference to a scaled bezel ring about the instrument periphery.

Attitude errors are indicated by three fly-to needles.

Angular rates are indicated by three fly-to needles.

A + roll rate or + roll error will cause those needles to deflect left. A - roll rate or - roll error will cause the needles to deflect right.

A + pitch rate or + pitch error will cause those needles to deflect down. A - pitch rate or - pitch error will cause the needles to deflect up.

The yaw rate and error needles deflect in the same directions as the roll needles.

To correct the error, the S/C is automatically or manually rotated in the direction of needle deflection.

The SCS attitude reference subsystem is mechanized such that it is used primarily for monitoring S/C attitude. Consequently, automatic maneuvering is not possible when SCS modes of operation are selected. However, by using the FDAI as a monitor and by proper selection of controls, precision manual maneuvers can be performed.

The subsystem, acting as a strapdown reference, will supply all of the attitude data normally available from the IMU. These data are subsequently applied to the FDAI for presentation of S/C attitude. The IMU is a three-gimbal platform and therefore will achieve a gimbal lock condition. The middle and outer gimbals become parallel and the output is not predictable. The AGCU has a similar function which creates an effective gimbal lock. This occurs in both systems for a 90-degree yaw displacement with respect to the navigation base. The FDAI and yaw attitude set control provides markings that will serve as a warning prior to achieving a gimbal-lock condition.

Basically, the body-mounted attitude gyros (BMACS), attitude gyro coupling unit (AGCU), and the FDAI are the primary inertial sensing, computing, and display elements of the strapdown system. Attitude errors in roll, pitch, and yaw body axes are sensed by the body-mounted attitude gyros. The error signals are conditioned and subsequently directed to the FDAI for display of total attitude and attitude error. The major part of the conditioning takes place in the AGCU which provides signal inputs to the FDAI comparable to that of the IMU.

The AGCU section of the auxiliary electronic control assembly is the primary control or computing device for the SCS attitude reference subsystem. It performs most of the inertial reference computations and performs the mathematical conversions and transformations required to display total attitude and attitude error. The attitude gyro torquing loop, that the AGCU electromechanical elements are a part of, perform the following:

- Generate a pulse train that is equivalent to the total change in S/C attitude
- Provide two-directional control of resolver shaft angles
- Provide torquing current for the attitude gyros
- Provide forward and reverse conversion of gyro and attitude set error signals to appropriate axes representation for FDAI display, and for gyro torquing.

The SCS rate gyros sense vehicle angular velocity, and supply angular rate signals to the system for rate stabilization and to the FDAI rate indicators. The proper selection of switches will place the BMAGS in a backup-rate condition, and provide rate signals to the FDAI rate indicators. Whenever manual thrust vector control is selected, the BMAGS will automatically be placed in the backup-rate condition.

Attitude Reference Control. After a maneuver or a series of maneuvers, the S/C attitude (body axes) is, each time, different with respect to the inertial reference frame. Therefore, the requirement exists for a method of resolving the rotations about the different body axes, and

establish a relationship between the body axes and the axes of the fixed reference frame. This relationship is established through an Euler angle transformation process obtained from either the IMU (stable element) or the strapdown attitude reference subsystem. The Euler angle, then, is the resolved difference between the S/C body axes coordinates and the coordinate's of the fixed inertial reference. The Euler angle attitude of the S/C, as displayed on the FDAI, is with respect to the coordinates of the fixed reference frame.

The conversion from body axes to Euler angle readout on the FDAI, basically, consists of a forward transformation and a reverse transformation. (See figure 2.3-3.) The forward transformation is essentially body-to-navigation axes conversion, then navigation axes-to-Euler angle transformation by resolvers in the AGCU. The resolvers and gimbal servos in the FDAI position the total attitude displays, resulting from the Euler errors. The reverse transformation is essentially Euler angle-to-navigation axes transformation by resolvers in the AGCU, then navigation-to-body axes conversion for signal application to the attitude gyro torquing amplifiers. After amplification, the signals are demodulated and applied to the gyro torquing coils which torque the gyros to null the original error.

After initial alignment to the IMU reference, the BMAG/AGCU loop is opened by relay action and further positioning of the FDAI ball is prevented. However, if the rotation control, for example, is displaced, the loop will be closed and the FDAI ball will follow S/C motion until the control is neutralized. The BMAG/AGCU loop will open and the ball will again be stationary. If in G&N mode, the FDAI ball is always coupled to represent and follow IMU gimbal angles.

Attitude Errors. The FDAI attitude error indicators represent the difference between actual S/C attitude and the inertial reference. The error is referenced to the S/C body axes in all modes of operation, except for G&N entry mode.

Signals that position the attitude error indicator of the FDAI come from three possible sources. (See figures 2.3-3 and 2.3-4.) In SCS modes, either the BMAGS or the AGCU provide body axes error signals to the error indicator meter movements. AGCU signals are applied when ATT SET is selected on the attitude set section of the AS/GPI. This applies the body axes equivalent of the difference between the attitude set resolver shaft and the AGCU resolver shaft.

When ATT SET is not selected, the outputs of the three BMAGS are applied to the attitude error meter movements of the FDAI. Whether from the BMAGS or the AGCU, the error signals are directed to the meter

movements through scaling, range adjust, demodulator, and amplifier circuits. The following chart provides mode versus full-scale error indications as read on the FDAI.

Mode	Roll	Pitch	Yaw
Monitor	±25°	±15°	±15°
SCS and G&N Entry	±25°	±5°	±5°
All other modes	±5°	±5°	±5°

When G&N modes are selected, the error signals are directed to the FDAI via the inertial coupling display units (CDUs) and the attitude reference conversion circuitry. The roll and yaw channel signals are referenced to either the navigation base axes or the S/C body axes. Conversion in the pitch channel is not required. The capability to reference the roll and yaw channel signals to either the navigation base of S/C body axes is required to facilitate roll and yaw channel cross-coupling control. This is required when G&N entry maneuvers are performed; in which case, reference is to the navigation base axes.

Rates. The following chart provides mode versus full-scale rate indications as read on the FDAI.

Modes	Roll	Pitch	Yaw
Monitor SCS Entry G&N Entry	±25°/sec	±5°/sec	±5°/sec
SCS LCL Vert or SCS ATT Cont or G&N ATT Cont	±1°/sec	±1°/sec	±1°/sec
SCS and G&N V	±5°/sec	±5°/sec	±5°/sec

SCS Attitude Reference Alignment. Alignment of the attitude reference subsystem is performed by comparing the outputs of the total attitude set resolvers in the AGCU with the attitude set resolvers of the AS/GPI. The attitude set resolver shaft can be positioned by using the attitude set dials (thumbwheels) on the front of the AS/GPI. The dials indicate Euler angle of the attitude set resolver shaft, and the output of the resolver is the Euler angle difference between the attitude set resolvers and the total attitude resolvers in the AGCU.

When the FDAI ALIGN switch on the AS/GPI panel is pressed, the AGCU resolvers will align to the attitude set resolvers. Euler-to-navigation axes transformation, and navigation axes-to-body axes conversion takes place for the FDAI attitude error display functions. In SCS control modes, the attitudes indicated on the attitude set dials will be indicated on the FDAI with respect to the navigation axes symbol and the roll index.

2.3.2.3.2 Attitude Control Subsystem.

The attitude control subsystem (ACS) (figures 2.3-4 and 2.3-5), essentially, provides the means for controlling spacecraft motion. Control is either manual or automatic when using controlled inputs from the G&N system. Spacecraft motion, other than drift, is initiated through the use of the S/M RCS jets prior to C/M-S/M separation. After separation (entry), the C/M RCS jets are used. An attitude control logic chart is presented in figure 2.3-6.

There are four types of controls that the ACS contends with which to satisfy mission requirements. (See figures 2.3-4 and 2.3-7.) These are rotation, translation, attitude hold, and rate damping only. Rotational motion is required to establish navigational sightings with the G&N optics subsystem telescope and sextant for S/C alignment prior to a velocity change for TVC functions, for antenna orientation, for T/C transmission and reception, and for lift vector control (roll control plus pitch and yaw rate stabilization) during entry.

Translation control for the AS204A mission is required for the ullage function prior to SPS engine ignition.

Holding attitude (attitude hold) to a fixed reference (established by the ARS) is necessary for navigational sightings, preparing for a velocity change and ullage maneuvers. After establishing attitude hold, the S/C motion involved is the amount of drift that the S/C is allowed to rotate about its axes. The drift is limited to a selectable minimum or maximum deadband about all three axes.

Rate damping only provides rate stabilization during entry or in the event of an abort prior to launch escape system (LES) jettison. The motions involved here are the finite firings of the RCS jets when rotational rates exceed certain limits. The RCS jet firings will decrease the rates to within predetermined limits. The rates are limited to 0.2 degree/sec for all modes, except SCS and G&N entry modes when the rates are increased to 2 degrees/second.

The ACS includes the roll, pitch, and yaw electronic control assemblies (ECAs), the delta V indicator, attitude impulse section of the G&N optics control panel and, in addition, utilizes all of the physical elements and functions of the attitude reference subsystem.

	S/M RCS ENGINES																C/M RCS ENGINES											
ROLL QUAD & C/M SYSTEM	QUAD A				QUAD B				QUAD C				QUAD D				SYSTEM A						SYSTEM B					
ENGINE NO.	2	3	13	16	7	6	9	12	1	4	14	15	8	5	10	11	1	2	5	8	9	12	3	4	6	7	10	11
ROTATION: PITCH UP		●							●								●						●					
ROTATION: PITCH DOWN	●									●								●						●				
ROTATION: YAW RIGHT					●									●					●							●		
ROTATION: YAW LEFT						●							●							●					●			
ROTATION: ROLL RIGHT			●				●					●				●					●							●
ROTATION: ROLL LEFT				●				●			●				●							●					●	
TRANSLATION: +X	●					●			●					●														
TRANSLATION: -X		●			●					●			●															
TRANSLATION: +Y			●								●																	
TRANSLATION: -Y				●								●																
TRANSLATION: +Z							●								●													
TRANSLATION: -Z								●								●												
																	TRANSLATION MANEUVERS NOT APPLICABLE TO C/M RCS											
SCS CIRCUIT BREAKERS *	MN A	MN B	M A N		MN A	MN B	M A N		MN A	MN B	M B N		MN A	MN B	M B N		M A N		M A N		M A N		M B N		M B N		M B N	
	PITCH		A&C ROLL		YAW		B&D ROLL		PITCH		A&C ROLL		YAW		B&D ROLL		PITCH		YAW		B&D ROLL		PITCH		YAW		B&D ROLL	
SCS CHANNEL PITCH AND YAW SWITCHES	PITCH		A&C ROLL		YAW		B&D ROLL		PITCH		A&C ROLL		YAW		B&D ROLL		PITCH		YAW		B&D ROLL		PITCH		YAW		B&D ROLL	

* CIRCUIT BREAKER TABULATION IS APPLICABLE TO RCS ENGINES AUTOMATIC COIL OPERATION ONLY. FOR MANUAL DIRECT COIL OPERATION, POWER IS APPLIED FROM SCS DIRECT CONT CIRCUIT BREAKERS MN A OR MN B BY ACTUATION OF THE PILOTS OR CO-PILOTS HAND CONTROLLER, RESPECTIVELY.

NOTES:

1. Combinations of translation and rotation maneuvers requiring the simultaneous firing of identical S/M RCS engines is prohibited by jet selection logic circuit design.
2. Minimum impulse operation is accomplished in the roll axis by two engines only. Remaining engines are disabled by setting the A&C ROLL CHANNEL switch to OFF and pulling one B&D ROLL circuit breaker; or setting the B&D ROLL CHANNEL switch to OFF and pulling one A&C ROLL circuit breaker.
3. Fuel conservation and/or consumption balance between quads may be accomplished by using applicable SCS CHANNEL switches and circuit breakers to select single-engine operation in each direction.

SM-2A-782D

Figure 2.3-6. SCS Attitude Control Logic Chart

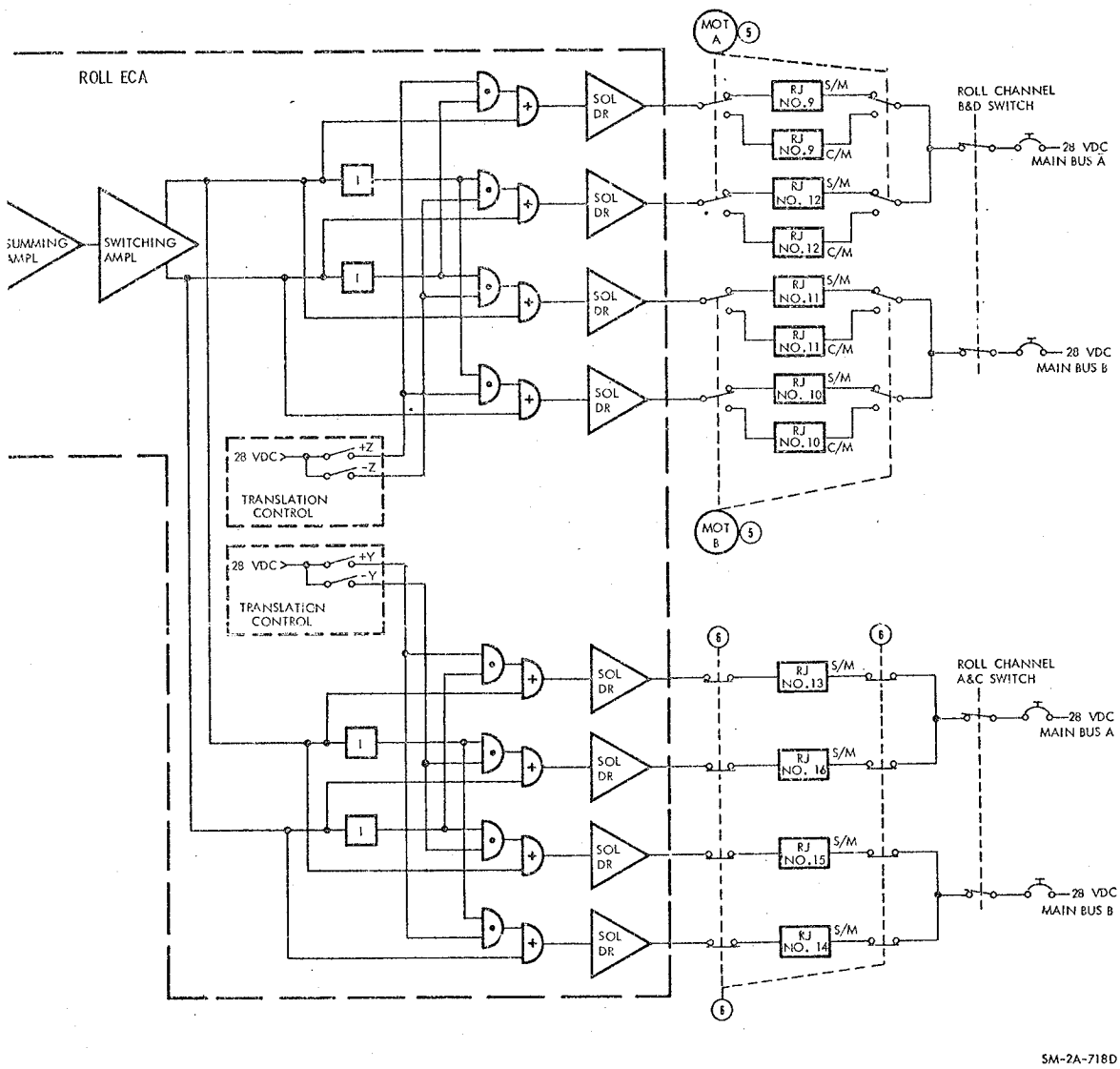

Figure 2.3-7. Jet Selection Logic Functional Flow Diagram

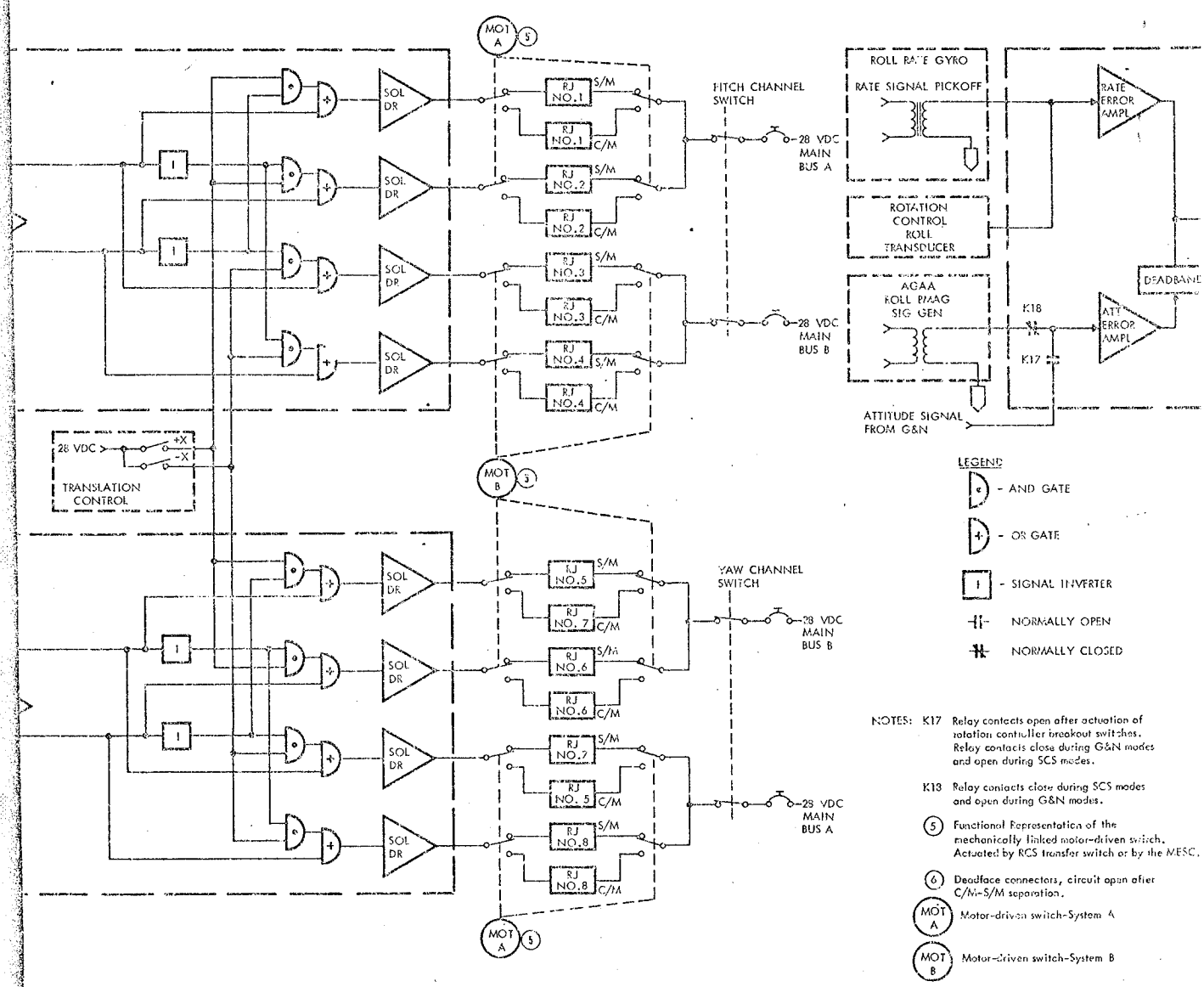
MOT A
5
SOL DR
RJ NO.1
S/M
C/M
RJ NO.2
RJ NO.3
RJ NO.4
PITCH CHANNEL SWITCH
28 VDC MAIN BUS A
28 VDC MAIN BUS B
ROLL RATE GYRO
RATE SIGNAL PICKOFF
ROTATION CONTROL ROLL TRANSDUCER
AGAA ROLL RMAG SIG GEN
ATTITUDE SIGNAL FROM G&N
RATE ERROR AMPL
ATT ERROR AMPL
DEADBAND
K18
K17
28 VDC
+X
-X
TRANSLATION CONTROL
MOT B
3
RJ NO.5
RJ NO.6
RJ NO.7
RJ NO.8
YAW CHANNEL SWITCH
LEGEND
- AND GATE
- OR GATE
- SIGNAL INVERTER
NORMALLY OPEN
NORMALLY CLOSED
NOTES: K17 Relay contacts open after actuation of rotation controller breakout switches. Relay contacts close during G&N modes and open during SCS modes.
K18 Relay contacts close during SCS modes and open during G&N modes.
5 Functional Representation of the mechanically linked motor-driven switch. Actuated by RCS transfer switch or by the MESC.
6 Deadface connectors, circuit open after C/M-S/M separation.
MOT A Motor-driven switch-System A
MOT B Motor-driven switch-System B

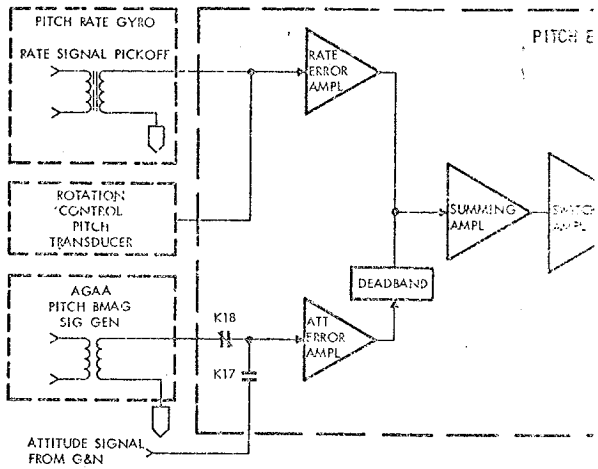
PITCH RATE GYRO
RATE SIGNAL PICKOFF
ROTATION CONTROL PITCH TRANSDUCER
AGAA PITCH BMAG SIG GEN
ATTITUDE SIGNAL FROM G&N
K18
K17
RATE ERROR AMPL
ATT ERROR AMPL
DEADBAND
SUMMING AMPL

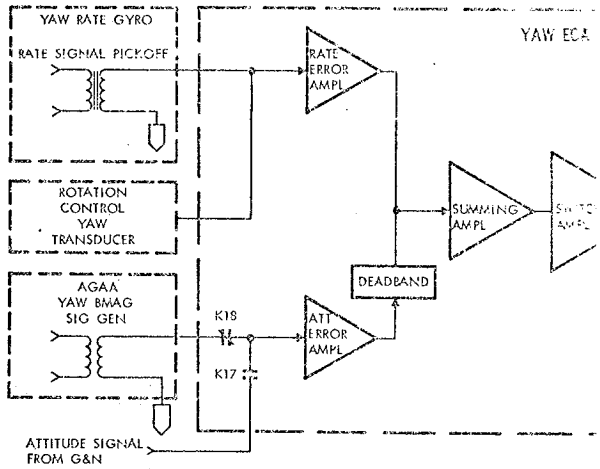
YAW RATE GYRO
RATE SIGNAL PICKOFF
ROTATION CONTROL YAW TRANSDUCER
AGAA YAW BMAG SIG GEN
ATTITUDE SIGNAL FROM G&N
K18
K17
RATE ERROR AMPL
ATT ERROR AMPL
DEADBAND
SUMMING AMPL

The attitude control subsystem electronics is contained within the roll, pitch, and yaw ECAs. The ECAs accept the manual and automatic inputs, conditions them, and directs on-off electrical command signals through jet selection logic to appropriate automatic (normal) coils of the RCS jets. The output of the jet selection logic will be either a time-modulated signal or a steady-state +20-vdc signal.

There are basically two types of inputs to the attitude control subsystem: manual and inertial sensor (AGAA, RGA, IMU). Manual inputs are provided by the rotation and translation controls, switches on the SCS control panel, attitude impulse switch on the attitude impulse section of the G&N optics control panel, and the direct ullage switch on the delta V display panel. These controls can be used for manual ullage maneuvers or as a backup during automatic delta V functions. The attitude impulse switch commands inputs to the ACS and subsequently to the RCS jets for small angular accelerations.

The inertial sensor inputs are provided by the AGAA, RGA, and the IMU via the G&N system. The AGAA (BMAG) and rate gyros (RGA) inputs are used for attitude hold, rate stabilization, and manual rotation control. The IMU inputs provide G&N attitude hold and command rate signals for manual or automatic rotational maneuvers.

Rotation Maneuvers. Rotation maneuvers can be performed by using four different types of manual controls or automatically by using the G&N computer subsystem. Manual rotation maneuvers are accomplished by using the rotation control, commonly called control stick steering (CSS), direct or emergency control which is a function of the rotation control, attitude impulse control, and positioning of the inertial CDUs. Automatic maneuvers result from astronaut inputs to the AGC via the DSKY. The AGC, according to computer program, automatically positions the CDUs and will command S/C motion to the programmed attitude.

Normal CSS is a proportional manual function and is available at any time in all operational modes. The maximum CSS proportional rates that can be commanded are as follows:

- 19 degrees per second (roll axis) entry mode
- 5 degrees per second (pitch and yaw axes) entry mode
- 0.79 degree per second (all axes) all other modes.

Even though CSS commands greater rates, the SCS electronics will limit the rates to those values given. Proportional control is obtained by using the rate gyro output to cancel the output of a transducer within the rotation control. CSS proportional commands are always directed to the automatic solenoid coils of the RCS engines.

When the rotation control (stick) is displaced, a transducer within the stick will command a rotation proportional to the amount of stick displacement. The rotational rates are limited to predetermined values, depending on the operational mode.

When in SCS attitude control mode and as the stick is displaced approximately 2.5 degrees from neutral, breakout switches within the stick close causing the BMAG and the AGCU to become closed loop. It also inhibits BMAG error signals to the SCS electronics. As the S/C rotates, the AGCU applies torquing current to the BMAG torquer coils. The gyros, then, are torqued at a rate proportional to the magnitude of BMAG error, keeping attitude error at approximately zero. Thus, the AGCU will follow S/C motion and establish a new attitude reference when the stick is returned to neutral.

When in G&N attitude control mode, a G&N SYNC switch must be energized to enable the attitude hold function when the control stick is returned to neutral. The G&N sync function provides IMU/CDU closed loop operation which keeps attitude errors at approximately zero during the maneuver. Consequently, the S/C will hold the new attitude when the stick is returned to neutral. If G&N sync is not enabled, the S/C will return to the attitude established before stick displacement.

NOTE For the AS204A mission the G&N SYNC switch will remain OFF for the entire mission.

The computer program will control the actual maneuver rate, but the SCS will limit the maximum. The maximum non-entry maneuver rate is 10°/second and entry maneuver rate is 17°/second in all axes.

Direct rotation control is a nonproportional function whereby initiated commands are applied directly to the RCS direct coils. To accomplish direct rotation, the DIRECT RCS/OFF switch (MDC-8) is set to DIRECT RCS; the SCS-CHANNEL switches (MDC-8) are set to OFF; if high rates are to be maintained, and the control stick is rotated about the desired axis or axes to hardstops. Just prior to engaging the hardstops, a switch closes and applies a direct command to the RCS direct coils. Rate feedback is not used to cancel stick movement. The breakout switches, however, close the BMAG/AGCU loop, and attitude error output to the SCS electronics is inhibited. With proper control and switch configuration, direct control is available at any time.

The attitude impulse control (G&N optics control panel) provides the capability for commanding low-rotational rates about all three axes. Attitude impulse control is available only in SCS or G&N attitude control modes and is used primarily for precise attitude maneuvers during navigational or star sighting periods. After the control is enabled and displaced, a switch closure in the control and an RC network combination generate one

pulse, which is applied to the RCS jet selection logic. One pulse is generated for each attitude impulse switch closure (control displacement). It is not a proportional control and attitude hold is not available when the control is returned to neutral. When the control is enabled, relay action removes all rate, attitude error, and rotation control inputs to the SCS electronics.

Automatic positioning of the CDUs is accomplished by using the DSKY. This method of control is primarily used during G&N entry.

Translation Maneuvers. There are three methods of initiating translation maneuvers: normal translations, using the translation control; direct ullage, using the direct ullage button on the delta V control panel; and separation ullage, using the translation control.

Translation commands are not proportional; operation is through switch closure only and is available during all modes of operation prior to C/M-S/M separation. During normal translation, switch closures within the translation control provide commands to the jet selection logic which fire the appropriate jets for the desired direction of translation. The commands are directed to the automatic RCS engine coils. A primary function of normal translation is the ullage maneuver, which is necessary in preparation for a velocity change. Ullage maneuvers require translation along the +X-axis.

Direct ullage is accomplished by using the DIRECT ULLAGE pushbutton on the delta V control panel. When pressed, switch closures command the appropriate direct RCS coils to initiate translation along the +X-axis. Direct ullage is available at any time prior to C/M-S/M separation. Upon C/M-S/M separation, the direct ullage function to the C/M pitch and yaw direct coils is inhibited by deadfacing. It is primarily a backup operation in the event of normal translation failure. Ullage will continue as long as the DIRECT ULLAGE pushbutton is pressed.

The separation ullage function requires a CCW rotation of the translation control into a detent position. Ullage commands are directed to the direct RCS coils. The separation ullage maneuver is performed when SPS aborts are necessary or when S-IVB separation is required. If the LES has been jettisoned, the signal from the translation control in CCW detent will command the sequential events control system (SECS) to sequence the separation ullage and consequent separation from the S-IVB. If the LES is attached to the S/C, the same command will initiate a LES abort.

In G&N and SCS modes, a clockwise rotation of the translation control into a detent generates a CSS logic signal that inhibits attitude gyro signals from the SCS electronics, and provides BMAG/AGCU closed loop operation. It also initiates manual thrust vector control (MTVC).

The CW rotation enables capability for manual roll control by the rotation controller during G&N entry. This is normally an automatic function of the G&N system and entry program.

Attitude Hold. Attitude hold is a capability of the ACS to hold S/C attitude within selected deadband limits of a fixed reference attitude. The deadband (amount S/C is allowed to drift either side of reference attitude) is selected by setting the ATT DEADBAND switch on MDC8 to either MAX or MIN. In the G&N or SCS entry modes, however, the deadband will be maximum regardless of deadband switch position.

The ACS accomplishes attitude hold by inputting summed attitude error and rate gyro signals to the jet selection logic, which will turn on appropriate jets to keep the S/C within the selected deadband. The attitude error signal is conditioned by a deadband circuit and rate limiter before it is summed at the input of a summing amplifier with the rate gyro signal. When the summed input to the amplifier is greater than its threshold, the amplifier will cause a switching amplifier to pulse the jet selection logic. The lower the angular rates, the closer the S/C is allowed to drift to the deadband limits. As angular rates increase, the summed error/rate signal increases in magnitude proportionate to time. Therefore, the sooner the threshold of the summing amplifier is reached, the sooner the jets will fire, damping the oscillation.

A limit cycle switch on MDC8 can be used to provide time modulated pulses to the jet selection logic. Limit cycle is primarily used for fuel conservation purposes. The limit cycle switch enables a psuedo rate feedback circuit at the output of the switching amplifier previously discussed. The psuedo rate, and consequently the time-modulated pulses, is a function of signal magnitude at the switching amplifier input. For large signal inputs, the output pulses will cause the RCS jets to pulse at a higher frequency and for longer periods. As the error decreases, the pulse widths and frequency decrease proportionately until the error is nulled.

The psuedo rate loop is normally used at all times (limit cycle on) when an inertial attitude is being maintained.

Attitude hold is available at all times in three axes, except during monitor mode and SCS entry mode after the 0.05 G switching. During G&N entry after 0.05 G switching, roll attitude hold is still enabled. Yaw and pitch attitude hold is inhibited.

Rate Damping Only. In addition to attitude control and maneuvering capabilities, the ACS provides a rate damping only capability. Although rate damping is a normal function during attitude control modes, rate damping can be used to limit S/C rotational rates (rate stabilization) when attitude hold is not being used. Normally, when S/C rotational rates exceed 0.2 degree per second in any axis, the rate gyros or the BMAG in

backup rate sense the angular accelerations. The signals, conditioned via the roll, pitch, and yaw ECAs and through jet selection logic, are applied to applicable RCS engines to keep the S/C rates within the 0.2-degree-per-second rate deadband. If in SCS or G&N entry mode, the rate deadband is increased to 2 degrees per second. Rate stabilization, in addition to the attitude control functions, is available when any of the following conditions exist:

- Selection of monitor mode after S-IVB separation
- Selection of monitor mode for LES aborts
- Clockwise rotation of translation control after S-IVB separation
- SCS entry mode after 0.05 G switching
- G&N entry mode after 0.05 G switching (pitch and yaw axes only).

2.3.2.3.3 Thrust Vector Control Subsystem.

The purpose of the thrust vector control (TVC) subsystem (figures 2.3-4 and 2.3-5) is to align or position the gimbaled SPS engine to a trim position prior to SPS thrusting and maintain this trim during the acceleration period. The S/C experiences a changing center of gravity (c.g.) caused by the consumption of fuel and oxidizer during acceleration. The TVC subsystem maintains the SPS engine thrust vector through the c.g. and holds S/C attitude so that the thrust vector will remain in the desired direction. This compensates for undesirable forces that affect S/C stability because of the shifting c.g. Thrust vector control, in addition to the TVC subsystem, utilizes the functions of the G&N system, the propulsion systems, and the SCS attitude reference and attitude control subsystems.

The TVC subsystem essentially controls the SPS engine gimbals, and consequently the thrust vector, by energizing the gimbal actuators; one for pitch and one for yaw.

The normal method for controlling thrust is through the G&N delta V mode. This provides the most accurate control. The accelerometers on the IMU stable element and the AGC provide steering commands to the SPS engine gimbals and continuous trajectory corrections to compensate for undesired accelerations. The AGC also compensates for the near-body orbital and gravity affects on the S/C. So, the actual versus required velocity change will result in a curved trajectory.

Normally, both G&N delta V and SCS delta V modes operate by driving No. 1 and No. 2 servo electronics. If a failure occurs in No. 1, an automatic switchover to drive No. 2 servo electronics and No. 2 gimbal motor will occur. Or, No. 2 will drive if No. 1 is switched off or if manual thrust vector control is initiated.

A manual method of thrust vector control is provided to control the position of the SPS engine gimbal. When operating manually, inputs from the rotation control, translation control, and the BMAGs are directed to redundant servo electronics No. 2 and the No. 2 gimbal actuator motor. The nominal authority from either rotation controller is ±6 degrees of SPS gimbal engine deflection.

The gimbal position display section of the AS/GPI panel, the delta V display, SCS control panel, rotation control, translation control, and the SPS switches on MDC-3 are the principle controls and displays associated with TVC. They provide the capability for control and monitoring of system performance.

Thrust Vector Control. When G&N delta V mode is selected, automatic thrust on-off, attitude, and steering commands initiate in the G&N system. However, before the ullage maneuver and thrust-on, the gimbal position trim control thumbwheels on the AS/GPI are used to position the engine gimbals. The engine position is verified on the AS/GPI visual display. The gimbals are aligned such that, at the moment of thrust-on, the thrust vector will be through the S/C c. g. This is necessary before any delta V to prevent undesirable rotational movements about the c. g. when thrusting begins.

In addition to initial positioning of the gimbals, the amount of acceleration required for the velocity change less tailoff is set into the delta V remaining counter on the delta V display. This allows the crew a method of monitoring delta V remaining and, when in SCS ΔV mode, provides automatic thrust-off capability. A coincidence switch in the delta V display will, by inhibiting the thrust on logic, automatically terminate thrust when the ΔV remaining counter indicates zero. The accelerometer in the AGAA senses +X acceleration, and supplies acceleration signals to timing and output logic which subsequently drives the delta V remaining potentiometer to zero. The accelerometer thrushold is 1×10^{-4} g, but the ΔV counter will only step once for each 0.25 +t/sec velocity change.

NOTE It is possible, but not recommended, to have SPS engine ignition without ullaging when in SCS ΔV mode.

Prior to SPS ignition, the G&N system inputs attitude error information to the ACS to hold the S/C at a constant attitude in all three axes. Attitude errors from the G&N system and rate information from the SCS rate gyros are also applied to the SPS gimbal servo loops. Upon engine ignition, the combined attitude error and rate gyro inputs, conditioned by the servo electronics, reposition the gimbals as necessary to rotate the S/C to compensate for c. g. shift. The gimbal position is also modified by steering commands from the AGC so that the thrust vector will point in the right direction for the curved trajectory.

The BMAG/AGCU loop remains open and follows IMU changes so that the SCS will have the same inertial reference in the event a switchover to SCS delta V mode is necessary.

Normally, G&N delta V mode utilizes the primary gimbal servo and actuator motor No. 1. If the gimbal motor switches on MDC-3 are activated, a TVC monitor signal generator (over-undercurrent sensor) in the actuator will sense a failure of motor No. 1. If motor No. 1 fails, the sensor will automatically cause a switchover to motor No. 2 in the actuator. Since the No. 2 servo electronics are driven simultaneously with No. 1, an interruption during the velocity change will not occur. Motor No. 2 also contains a TVC monitor signal generator, but is not used. In the event of motor No. 2 failure, causing an excessive current drain on the d-c bus, a 70-ampere circuit breaker in the line will disconnect the motor from the d-c supply bus. Motor No. 2 has no switchover or warning light capability.

In SCS delta V mode, the gimbal servo loops function the same as in G&N delta V mode. Attitude error information, however, is derived from the BMAGS. The rate loop is identical, unless in backup rate condition. SCS delta V will not function if the BMAGS are required for backup rate because of the loss of attitude error information.

SCS delta V keeps the thrust vector through the c. g. by first comparing the trim position commands set by the gimbal position thumbwheels and the position transducer feedback signals. The difference, combined with attitude error information from the BMAGs, conditions the servo electronics to energize the actuator clutches.

Except for mode selection and thrust-on requirements, the same prerequisites for thrust-on, and the control and display functions are the same as for G&N delta V. The SCS system does not provide automatic thrust-on. A thrust-on switch on the delta V display provides the thrust-on command for SCS delta V mode. Thrust-off, however, is automatic by closing of the coincidence switch. A NORMAL-OFF-DIRECT-ON switch on the delta V display is also provided for manual thrust-on and serves as a manual backup for all automatic thrust-off commands.

If the translation controller cannot be used for the ullage maneuver prior to thrust-on, a DIRECT ULLAGE switch on the delta V display provides a manual backup to initiate ullage.

A manual delta V can be performed, providing a delta V mode has been selected and the translation control is rotated CW into detent. This removes all normal inputs into the TVC servo loops, allows commanded inputs from the rotation control, and rate data from the BMAGs in backup-rate condition, into the redundant No. 2 servo electronics and motor No. 2 of the gimbal actuators. This provides rate-stabilized manual control of the thrust vector. Thrust-on is initiated by the momentary thrust-on switch located on the delta V display.

The rotation control must be held to a given displacement to control the gimbals about the initial trim position established by the settings of the AS/GPI. The GPI provides the only indication of the position of the gimbal angles with respect to the S/C body axes.

2.3.3 FLIGHT CONTROL PROFILES.

There are three basic flight control profiles associated with mission AS204A. These include powered flight, coasting flight, and entry. Within these profiles, various modes of operation are established either within the atmosphere or in earth orbital environment. Because of the division of powered flight, i.e., ascent and earth orbital environment, the description is divided as follows:

- Ascent (including aborts)
- Coasting flight (earth orbital)
- Powered flight (earth orbital)
- Entry (nonpowered atmospheric flight).

As the various operational modes are discussed, reference will be made to figures 2.3-4, 2.3-5, and 2.3-6. A typical control channel yaw is shown in figure 2.3-4, sheet 2; therefore, differences not typical to the yaw channel will be clarified.

It should be noted that relays in figures 2.3-4, 2.3-5, and 2.3-7 are not relays of the actual system by number. However, the relay nomenclature is system oriented and may be cross-referenced by using the following chart.

Fig. 2.3-4, 2.3-5, 2.3-7 Relays	Function	SCS System Relay
K1	ORBIT RATE	24A14K3
K2	FDAI ALIGN	24A14K1
		24A14K2
K3	G&N ROLL, PITCH, YAW ATT SIN AND COS	22A16A3K4
		22A16A3K6
		22A17A3K4
		22A17A3K6
		22A18A3K4
		22A18A3K6
K4	AGCU CAGED	22A8K1
		22A8K2
		22A8K4
		22A8K5
K5	AGCU ALIGN	22A8K6
		22A8K7

Fig. 2.3-4, 2.3-5, 2.3-7 Relays	Function	SCS System Relay
K6	AGCU P/Y ERROR	21A3K2
K7	R G&N ERR/AGCU INH	22A3K3
	G&N P ERR	20A3K3
	Y ERR G&N BODY	21A3K3
K8	G&N P, Y, ERR S.F.	22A20A3K1
		22A21A3K1
K9	ROLL, PITCH, YAW ERR	22A20A3K4
	AGAA	22A21A3K4
	MONITOR + G&N ΔV + G&N ATT CONTR + G&N ENTRY +.05G MANUAL + AS + YAW B/U RATE	22A23A3K2
K10	ROLL, PITCH, YAW, B/U RATE	22A9K1
		22A9K2
		22A13K1
		22A13K2
		22A11K1
		22A11K2
K11	MTVC RT OUT	22A9K3
		22A11K3
		22A12K3
K12	ROLL, PITCH, YAW RATE	22A23A3
		22A20A3
		22A21A3K
K13	Y/P RT SF	22A22A3
K14	R-Y RT CPLG	23A11K2
K15	RT IN TRANS	23A19K1
		23A19K1
		19A26K1
K16	ENT GAIN	23A15K1
		23A15K2
		23A17K2
K17	G&N ATT IN	23A19K2
K18	AGAA ATT IN	23A19K3
K19	D-B CHG	23A15K3
K20	RJC ATT SW	23A11K1
K21	G&N MIN IMP ENABLE	23A13K
K22	PSUEDO RT CO	23A13K
K23	RCS LATCHING RELAY ARMED (JET DVRS ENABLED) SAFE (JET DVRS DISABLED)	MESC Z19
K24	1.8 SEC LATCH	MESC Z8

Fig. 2.3-4, 2.3-5, 2.3-7 Relays	Function	SCS System Relay
K25	MAIN DEPLOY	MESC Z12
K26	AUTO CONT INTER	23A11K3
K27	ENG IGN	23A21K2
K28	SYS GRD CK	23A21K3
K29	SCS ΔV MODE	23A21K1
K30	ENG IGN	23A27K1
K31	MTVC ENGAGE	23A18K2
K32	TVC ELEC TRANS	23A25K1
K33	SERVO NO. 1 DISENGAGE	23A14K1
K34	SERVO NO. 2 ENGAGE	23A18K1
K35	ENTRY	22A8K8
K36	ΔV INH	22A21A3K6
K38	THRUST ON LAMP	22A20A3K6

2.3.3.1 Ascent.

During the ascent phase, capability exists for monitoring boost vehicle stability. The SCS is in a monitor mode with all subsystems active, but supplies no active commands for control purposes for the first 61 seconds of flight. After 61 seconds, if aborts are required, the SCS will be used to supply signals for S/C stabilization and control.

2.3.3.1.1 Monitor Mode.

The monitor mode provides the capability of monitoring deviations from programmed launch vehicle attitude prior to S-IB separation and CSM attitude after S-IVB separation. The S-IVB utilizes a different guidance technique and monitoring C/M instruments relative to S-IVB operation provides no useful purpose. Monitor mode also provides rate stabilization, when required, any time during the mission.

Normal Ascent. At time of launch, RCS latching relays in the SECS system will be open to inhibit commands to the RCS jets. Relays K4 and K5 will be closed, providing BMAG/AGCU closed loop. The FDAI will be following IMU gimbal angle changes. The motor-driven switch 5 (figure 2.3-7) is set to the S/M position when the REACTON CONTROL SYS—TRANS C/M-S/M switch on MDC - 16 is set to S/M.

Total attitude and attitude error signals from the IMU and inertial CDU (figure 2.3-4, sheet 1) are applied to the FDAI through relays K3, K7, and K8, respectively. Attitude error signals represent deviations from the trajectory for the first stage booster only. The SCS rate gyros apply attitude rates to the SCS electronics directly and to the FDAI via relay K12.

The X-axis accelerometer will be active, but its output will be used only if an abort delta V is required. The TVC subsystem is activated to hold the SPS engine thrust vector through the c.g. in the event of an SPS abort, and to keep the nozzle centered and stationary within the adapter. The SPS engine gimbals are aligned to null offset (pitch +0.4 degrees and yaw +3.6 degrees) prior to launch. Quiecsent current on the gimbal motor clutches maintains these angles during ascent.

LES Abort. If an LES abort is initiated (61 seconds or more after lift-off) requiring SCS operation, the SCS is enabled one second after LES ignition. The SCS is enabled by the arming of the RCS latching relays in the SECS, and the S/M-C/M transfer switch will be driven to the C/M position. The RCS latching relay will open by the operation of a barometric switch at approximately 24,000 feet during descent and will disable active commands to the C/M RCS. Besides rate stabilization, specific command inputs to the SCS above 24,000 feet will depend on altitude and other factors.

SPS Abort. An SPS abort would be initiated after the LES jettison. The translation control is rotated CCW into detent and the switch closure will cause the MESC to command a +X translation (separation ullage) via the direct coils of the S/M RCS. The direct coils are activated through the RCS transfer switch.

Before separation from the S-IVB, a delta V mode must be selected. For an SPS abort, alignment of the SPS engine gimbals is not required since they were preset prior to launch and no propellant has been consumed. At separation, an abort can be made into earth orbit or to a downrange landing site.

2.3.3.2 Coasting Flight (Earth Orbital).

The coasting flight profile ranges from a free-drift configuration (no control) to monitor mode (passive) to attitude hold (active control). The following paragraphs describe the various modes relative to the earth orbital environment.

2.3.3.2.1 G&N Attitude Control.

G&N attitude control will provide inertially stabilized attitude by utilizing the attitude reference and attitude control subsystems. Attitude data is obtained from the inertially referenced IMU. Relays K4 and K5 provide BMAG/AGCU closed loop so that if SCS attitude control is selected, the AGCU will have the same reference as the IMU for control and display purposes.

Attitude errors from the inertial CDU through relays K7 and K8 are applied to the FDAI and SCS electronics for attitude error display, and to provide attitude corrections. The errors from the CDU are the difference between the IMU gimbal angles and the commanded output of the AGC. Total attitude from the IMU is applied to the FDAI via relay K3. The

attitude rates from the SCS rate gyro and relay K12 will drive the FDAI rate indicator at a scale range of ±1 degree/second.

The maximum deadband limit is normally set for G&N attitude control. If navigation sightings are required, the minimum deadband may be selected. The G&N system and SCS attitude control subsystem will maintain attitude within the selected deadband limits.

Maneuvering. Automatic maneuvers may be executed by inserting commands into the AGC via the DSKY. The S/C will automatically maneuver to the computer-commanded attitude. The SCS will follow the attitude error signal inputs from the CDU in response to AGC inputs for maneuvering to the commanded attitude. Manual maneuvers can be commanded with or without attitude hold.

In G&N mode, relay K18 (figure 2.3-7) is open. Relay K17 is closed. Relay K18 inhibits BMAG inputs and allows G&N attitude error signals into the jet selection logic for the attitude hold function. When the rotation control is displaced, the breakout switches open K17, inhibiting G&N signals and allowing proportional command (rotation control plus rate gyro) signals into the jet selection logic. When the control is returned to neutral, relay K17 closes and the G&N attitude hold function is restored, provided G&N sync is active.

Translation in all axes can be commanded by the translation control. As shown in figure 2.3-5, switch closures within the control apply command signals directly to the jet selection logic and, subsequently, to the auto RCS coils. Attitude hold is a normal function when translations are initiated, using the translation control.

The direct ullage switch on the delta V display is a backup for +X translations. When this switch is activated, the signal is applied directly to the RCS direct coils. Attitude hold is not a function of direct ullage.

Attitude impulse control (panel 105, LEB) is a manual control capability for G&N and SCS attitude control modes only. Each displacement of the attitude impulse control (figure 2.13-4, sheet 3) provides an output attitude impulse command to two RCS engines for a duration of 18±4 ms. The pulses command body angular rates of approximately 3 arc min/sec.

2.3.3.2.2 G&N Local Vertical.

The G&N local vertical mode is an extension of G&N attitude control. The purpose of this mode of operation is to accurately maintain the S/C X-axis at a fixed angle with respect to the local vertical (relative to the earth surface) while maintaining the S/C Y-axis normal to the orbital plane. The G&N local vertical mode is an AGC-commanded function. A computer program (not available for AS204A mission) is called by the astronaut by DSKY entry. After IMU alignment, with the S/C X-axis in the direction of the desired orbital path, the computer program provides an orbit rate

source to command torquing of the IMU at a rate that will maintain the local vertical attitude. This mode may be used to make navigational sightings of earth landmarks by keeping the G&N optics within the area of the earth surface.

2.3.3.2.3 SCS Attitude Control.

SCS attitude control mode will hold the S/C at an inertial-referenced attitude and will limit S/C drift to the selected deadband limits, normally, ±5 degrees in earth orbit. If SCS attitude control is selected after a G&N attitude control function, the attitude reference subsystem is aligned to the IMU (BMAG/AGCU closed loop). If not, an FDAI/AGCU align function is required.

When SCS attitude control is selected, G&N inputs are removed from the FDAI and SCS electronics. The following relay contacts (figure 2.3-4, sheet 2) are activated to supply SCS-generated commands for display and control purposes.

- Relay K4 open—FDAI ball stationary
- Relay K12—Applies body rates to FDAI
- Relay K3 closed to AGCU—Applies attitude errors to FDAI
- Relay K11B—Applies attitude errors to SCS electronics

FDAI/AGCU Align. If the AGCU has not been aligned to the IMU or if a new attitude reference is desired while in SCS attitude control mode, the astronaut will determine S/C attitude from star sightings or from the MSFN. Inertial angles are dialed into the AS/GPI with the ATTITUDE SET dials and the FDAI ALIGN pushbutton is pressed. Relay K2 closes and the AGCU and FDAI ball will drive to the selected attitude.

Manual Maneuvers. After AGCU reference has been established, the S/C can be maneuvered to the desired attitude reference by flying out the errors, using CSS. The ATT SET/OFF switch is activated, relay K23 is activated, the RCS latching relays are closed to the S/M RCS, relays K6 and K9 close, and K20 will open. Attitude error, equal to the difference between ATTITUDE SET dial position and AGCU resolver shaft position, is then applied to the FDAI from the AGCU through K6. Attitude error from the BMAG is removed from the FDAI when K9 activates. When the rotation control is moved out of detent, CSS commands are applied through the ACS to the jet selection logic and auto coils of the RCS engines. At the same time, relays K4 and K5 close providing BMAG/AGCU closed loop. The BMAGs follow S/C rotation and repositions the FDAI ball. When the rotation control is returned to neutral, the BMAG/AGCU loop is opened, relays K4 and K5 open, and the new attitude will hold within the selected deadband.

When the ATT SET/OFF switch is OFF, relays K6 and K9 de-energize and attitude error signals from the BMAGs are now applied to the FDAI and ACS. If further attitude changes are desired, they can be accomplished by using CSS. The BMAG/AGCU loop will be closed, and opened when the rotation control is returned to neutral. The attitude error needles will indicate the difference between the AGCU and the S/C attitude. The error needles are fly-to needles and will be at full scale if the error is greater than 5 degrees. To fly out the error, the astronaut must fly-to the needles or use the FDAI ball markings until the needles come off full scale, and then fly-to the needle to null the remaining error.

Free Drift. Free drift is normally used during extended periods of time when power and RCS propellant conservation is desired. Free drift can be established in either attitude control mode by placing the SCS CHANNEL switches to OFF, inhibiting all command signals to the RCS auto coils. With an SCS attitude mode selected and an SCS CHANNEL switch to OFF (PITCH or YAW or A&C ROLL and B&D ROLL), relay action closes the BMAG/AGCU loop and updates the ARS while drifting. However, if one BMAG is placed in backup rate and a channel switch is off, relay action rate cages the remaining BMAGs and opens the BMAG/AGCU loop, thus, preventing the ARS from being updated.

2.3.3.2.4 SCS Local Vertical.

SCS local vertical mode is an extension of SCS attitude control. Its purpose is to maintain S/C attitude with respect to the local vertical. When the LCL VERT/OFF switch on MDC-8 is set to LCL VERT, relay K1 energizes and an orbit rate source with a preset level is applied to the BMAG/AGCU servo loop. At present, the preset level established for the orbit rate source is most accurate for a 100-n mi circular orbit and will maintain the attitude reference system at the local vertical with torque rates of 246 degrees/hour, or 4.1 degrees/minute. It will maintain an approximate attitude when the AGCU is aligned to represent S/C attitude when the S/C XZ plane is parallel to the orbital plane at the time LCL VERT is selected. All three RCS channels must be enabled for the local vertical mode. Modifications of the local vertical attitude can be made using CSS. The translation control is also active and available during this mode of operation

2.3.3.3 Powered Flight (Earth Orbital).

Powered flight includes those modes that provide the capability for velocity changes using the SPS engine. Included in the following discussion are the G&N delta V, SCS delta V, and the manual delta V modes.

2.3.3.3.1 G&N Delta V.

G&N delta V mode is the normal method for velocity changes. Prior to engine ignition, however, G&N attitude control mode must be established.

System relays apply the following (G&N/SCS switch on MDC-8 set to G&N and ATTITUDE/MONITOR/ENTRY switch set to ATTITUDE (figure 2.3-5, sheet 1)):

- Relay K7 and K8—Attitude error from CDUs to FDAI
- Relay K9—Attitude error from CDUs to SCS electronics
- Relay K3—Total attitude from IMU to FDAI ball
- Body rates to FDAI and SCS electronics
- RCS latching relay in MESC closed to RCS system

The FCSM-SCS-RESET/OVERRIDE and G&N-RESET/OVERRIDE switches on MDC-2 may be set to SCS and G&N positions. These switches provide an automatic monitoring of SPS engine combustion performance. If rough combustion occurs, the SPS ROUGH ECO warning light on MDC-10 will light and engine thrust will terminate. A restart can be made by resetting the FCSM switches and then setting them back to SCS and G&N. Or, the monitor can be bypassed by setting the FCSM switches to RESET/OVERRIDE.

Attitude information from the IMU is displayed on the FDAI ball. Attitude errors from the CDUs are also applied to the FDAI (±5-degree scale) and are used by the SCS to control attitude in response to AGC commands. Rotational rates are displayed by the FDAI rate indicators with a scale range of ±5 degrees/second. The computer-controlled velocity change will be monitored on the delta V display. The required velocity less tailoff will be set into the delta V display by the ΔV SET switch, using velocity information obtained from the G&N system or MSFN. Minimum deadband is set on MDC-8, the gimbal motor switches, and the inject pre-valve switches on MDC-3 are activated. The SPS gimbal trim angles are determined, set into the AS/GPI by the gimbal position thumbwheels, and gimbal position verified on the GPI. The NORMAL/OFF/DIRECT switch on the delta V display is set to normal.

Approximately 15 seconds prior to ignition, after the digital event timer (MDC-5 and 8) has been set for countdown, the astronaut will command a +X ullage using the translation control. At T = 0, the AGC will command a signal through the thrust on-off logic and enable the solenoid drivers of the TVC subsystem. The solenoid drivers will then activate the SPS engine ignition coils and SPS thrusting will occur. The lamp portion of the THRUST ON switch on the delta V display will light, verifying the automatic computer command.

System delay (AUTO CONT INTER) logic will terminate the RCS ullage approximately one second after SPS ignition. The computer will command pitch and yaw attitude of the SPS gimbals via the TVC to control the thrust vector. Roll commands will be applied to the roll RCS during the maneuver.

When the delta V remaining counter indicates zero, thrusting will terminate and the THRUST ON light will go out. The NORMAL/OFF/DIRECT ON switch will be set to OFF and the SPS motor switches, inject pre-valves, and the TVC electronics will be de-activated. Approximately one second after thrust terminates, pitch and yaw control is transferred back to the SCS for the attitude control function.

If a malfunction occurs during the maneuver, a switchover to SCS delta V will allow continuation of the velocity change. If there is no response from the translation control at ullage initiation, the DIRECT ULLAGE pushbutton on the delta V display may be used for the ullage maneuver prior to ignition of the SPS engine. Also, if automatic thrust-on does not occur at T = 0, the THRUST ON pushbutton on the delta V display will provide engine ignition.

2.3.3.3.2 SCS Delta V.

SCS delta V mode is a primary backup for the G&N delta V. Preliminary to engine ignition, SCS attitude control is established by setting the G&N/SCS switch on MDC-8 to SCS. After SPS engine ignition, the SCS uses S/M RCS roll jets to maintain roll attitude and applies commands to the SPS engine gimbals to control the thrust vector. Relays in figure 2.3-4 apply the following (RCS latching relay in the SECS is closed to the S/M RCS throughout the maneuver):

- Relays K9 and K10—Attitude errors from BMAGs to FDAI
- Relay K11B—Attitude errors from BMAGs to SCS electronics
- Relays K4 and K5 open—FDAI ball stationary
- Body rates to FDAI and SCS electronics (RGA).

The control and display activation process that was performed for the G&N delta V will be performed for SCS delta V. The major differences are as follows:

- Control of attitude and the thrust vector is through the SCS.
- At T = 0, ignition is initiated manually by pressing the THRUST ON pushbutton on the delta V display.
- Thrust is terminated automatically when the ΔV remaining counter (delta V pot.) indicates zero.

As in the G&N delta V mode, if the required command responses to not occur, the same backup controls can be used to perform the delta V.

In SCS delta V mode, if engine ignition does not occur when the THRUST ON switch is pressed, the NORMAL/OFF/DIRECT ON switch can be set to DIRECT ON. This applies a command signal directly to the SPS engine ignition coils and will initiate thrusting. The NORMAL/OFF/DIRECT ON switch must be set to OFF to terminate engine thrust.

2.3.3.3.3 Manual Delta V (MTVC).

A manual delta V will be performed only as a backup to a G&N or SCS delta V. Manual thrust vector control is initiated by a CW rotation of the translation control into detent. At this time, relays K4 and K5 will close, providing rate caging of all three BMAGs; and relays K10 and K11B will open removing rate gyro outputs from the FDAI and SCS electronics. The rate-caged BMAGs through relay and K12 will switch BMAG backup-rate signals into the SCS electronics.

In the G&N and SCS delta V modes, TVC servo electronics No. 1 and SPS gimbal drive motor No. 1 was used. When MTVC is initiated, relays K32, K33, and K34 activate. This closes the servo loop for commanding SPS gimbal drive motor No. 2.

Gimbal trim commands are applied through relay K31. When the rotation control is moved out of detent, pitch and yaw commands are applied to motor No. 2 through relay K31 and gimbal position feedback is through relay K32.

The summation of backup rate and proportional CSS commands into the TVC provides a rate-damped manual control of the engine gimbals. The astronaut must keep the rotation control at a given displacement to keep the thrust vector through the c.g. and to fly the correct trajectory.

If CW switches of the translation control are engaged while in G&N delta V, G&N attitude control, or G&N entry mode, attitude errors are not removed from the FDAI. This allows the astronaut to monitor and, if necessary, fly a G&N programmed maneuver using CSS.

2.3.3.4 Entry.

The entry profile consists of the various methods of controlling the S/C for the entry phase of the mission. The entry mode is normally selected after S/M-C/M separation. At separation, the motor-driven RCS transfer switches are closed to the C/M RCS.

2.3.3.4.1 G&N Entry.

G&N manual mode is the primary method of control for entry into the atmosphere for the AS204A mission. Automatic entry may be used in lieu of G&N manual mode.

G&N Manual. This is normally a backup for the G&N entry automatic mode. The translation control is rotated CW into detent. This removes inertial CDU attitude errors from the SCS electronics. Normally, the astronauts will call up the entry program via the DSKY shortly after S/M-C/M separation.

The entry angle, required pullout angle, and other required entry data is presented on the computer displays. The astronaut can manually perform a controlled g-level entry by using CSS to fly out the commanded attitude errors displayed on the FDAI. The BMAG/AGCU has been closed loop for backup reference in case switchover is necessary.

After .05 g, aerodynamic forces build up sufficiently to stabilize the S/C in the pitch and yaw axes. At this time, CSS will be effective in the roll channel only. The SCS will rate-damp the pitch and yaw channels, and the astronauts will have steering capability by using roll CSS to control the lift vector.

Automatic Entry. The FDAI rate display scale range changes to ±25 degrees/second in roll, and ±5 degrees/second in pitch and yaw. Deadband is maximum. The rate deadband is ±2 degrees/sec.

Prior to .05 G switching, attitude error from the inertial CDUs is applied to the FDAI error indicator through relays K7 and K8, and to the SCS electronics through relay K9. The RGA applies rate gyro body rates to the FDAI and SCS electronics. Relay K3 applies total attitude to the FDAI ball.

At .05 g, the .05 G ENTRY/OFF switch on MDC-8 is set to .05 G ENTRY. The SCS pitch and yaw channels perform rate stabilization only. The roll channel is still subject to computer-controlled roll commands. The AGC will fly the S/C according to a pre-established entry program.

2.3.3.4.2 SCS Entry.

The SCS entry mode is a primary backup to G&N entry mode. When selected, total attitude information to the FDAI is supplied throughout the entry. Prior to .05 g, the BMAGs apply attitude errors to the FDAI and SCS electronics through relays K3 and K9. After .05 g, relays K3 and K9 remove attitude errors from the FDAI and SCS electronics. Relays K4 and K5 close, providing BMAG/AGCU closed loop. For the remainder of entry, attitude errors are not displayed. There is no attitude hold capability. The rate gyros, however, provide rate signals for rate stabilization. The SCS electronics increase rates to a 2-degree/second rate deadband. The FDAI displays total attitude. The astronauts will initiate the necessary commands using CSS to fly a controlled g-level entry. After aerodynamics stability in pitch and yaw, steering capability will be in the roll channel only.

If, after .05 g, it is necessary to place a BMAG in backup rate, only the BMAG selected by the rate gyro select switch will have its inputs in the SCS for rate stabilization. When backup rate is selected, relays K9, K10, K12, and K15 activate, providing backup rate to the FDAI and SCS electronics. Loss of FDAI ball reference will occur. Relay K12 removes rate gyro output from the FDAI and SCS electronics. The astronauts will control the lift vector with the CSS roll channel. If they wish to decrease the g level, they will roll the S/C to keep the lift vector up. If they wish to increase the g level, they will roll the S/C so that the lift vector is down.

2.3.4 MAJOR COMPONENT/SUBSYSTEM DESCRIPTION.

The SCS consists of the following major components:

- Rate gyro assembly (RGA)
- Attitude gyro accelerometer assembly (AGAA)
- Pitch electronic control assembly (pitch ECA)
- Roll electronic control assembly (roll ECA)
- Yaw electronic control assembly (yaw ECA)
- Auxiliary electronic control assembly (aux ECA)
- Display and attitude gyro accelerometer assembly electronic control assembly (DISPLAY-AGAA ECA)
- Rotation control
- Translation control
- Flight director attitude indicator (FDAI)
- Attitude set/gimbal position indicator (AS/GPI)
- Velocity change indicator (ΔV display).

2.3.4.1 Rate Gyro Assembly.

The rate gyro assembly contains three identical rate gyros, mounted orthogonally along the spacecraft body axes, and associated gyro electronics. No provision is made for heaters or temperature control of the gyros. Each gyro is a single-axis unit, with the input axis determined by the gyro mounting fixture. Self-test capabilities are provided by torquing coils which enable the gyro to be displaced at a known rate and by spin motor rotation detection circuits which allow monitoring of the gyro spin motor speed. All self-test circuits are completely isolated from operational circuits to prevent a failure in the former from affecting gyro

operation. The gyro outputs are used by the SCS as primary damping or stabilization signals and, in addition, as negative feedback to null rotational control commands and provide a proportional maneuver rate capability. The rate gyros also provide an indication on the FDAI of the rate-of-attitude change in pitch, roll, and yaw axes. An attitude change about any of the axes results in an output signal which is representative of the rate of displacement.

Each miniature rate gyro assembly consists of a spin motor, damping system, gimbal assembly, quadrilever spring, and self-check circuitry. The gyro spin motor is a 400-cps 3-phase synchronous hysteresis motor powered by 26 volts ac. The maximum time allowed for the gyro to come up to operating speed is 17 seconds. Damping is accomplished by positive displacement of the damping fluid through temperature-controlled orifices. The quadrilever spring provides the torsional restraint required by the gyro, together with radial support for the gimbal assembly. Some important rate gyro characteristics are as follows:

Full-scale range	30°/sec
Input range (to limit stop)	30°/sec
Maximum rate without damage	600°/sec

2.3.4.2 Attitude Gyro Accelerometer Assembly.

The attitude gyro accelerometer assembly contains three body-mounted attitude gyros (BMAGs) and an accelerometer. Electronic control circuits for the gyros and accelerometer are contained in the display and attitude gyro accelerometer assembly electronic control assembly.

2.3.4.2.1 Body-Mounted Attitude Gyros.

The three BMAGs are identical units, mounted orthogonally along the spacecraft body axes, to sense attitude displacement along the pitch, roll, and yaw axes. Each gyro is a single-axis unit, with the input axis determined by the physical mounting in the S/C. A spin motor detection circuit is included in each gyro to allow monitoring of gyro spin motor speed. This will be telemetered data only.

The BMAGs provide information denoting the angular displacement of the spacecraft from a preset attitude. They are initially set to a specific space-stabilized orientation; thereafter, any displacement from this initial setting results in output signals which are representative of the amount of angular displacement. The output signals are used to produce attitude error signals for an attitude-hold mode or for display on the flight director attitude indicator. The outputs may also be applied to the attitude gyro coupler unit (AGCU) for attitude change storage and for conversion to inertial measurement unit (IMU) axes. IMU axes differ from the spacecraft body axes. The AGCU and BMAGs are used as a substitute or backup inertial reference unit for the IMU during the periods when the IMU is

turned off or has malfunctioned. The BMAGs can also be used to produce attitude rate-of-change information, as backup for the rate gyros.

The BMAGs are single-degree-of-freedom, miniature integrating gyros contained in electrically heated individual packages. The heater will maintain individual BMAG temperature at 170±2°F. Degraded gyro operation will result if this temperature is not maintained. The gyro spin motors are 3-phase 24,000-rpm synchronous devices, powered by 13.6 volts 400 cps from a supply in the attitude gyro accelerometer package electronic control assembly. With C/M temperature at 80°F and the mounting plate temperature at 55°F, the maximum time allowed for the BMAG to reach operating limits is 40 minutes. A few gyro characteristics are listed as follows.

Acceleration sensitive drift	4 deg/hr
Maximum self-torquing rate	25 deg/sec
Maximum attitude range	±20 deg
AGCU coupled torquing limits	20° sec roll, 5° sec pitch and yaw

2.3.4.2.2 Accelerometer.

The accelerometer is mounted along the spacecraft X-axis to sense velocity changes along this axis. It is a pendulous-type accelerometer with electronic null and balance. The temperature is maintained at 170±2°F under normal operating conditions. A signal output is generated by a velocity change along the X-axis. This velocity change causes the pendulous mass to move, resulting in a change of coupling between the primary and secondary windings of a signal generator. This results in an output signal which is demodulated and amplified to provide acceleration information in the form of digital signals to a counter in the delta V display (paragraph 2.3.4.10). The pendulous mass is returned to null by the balancing action of the electronic caging signal when the velocity change ceases.

2.3.4.3 Pitch, Roll, and Yaw Electronic Control Assemblies.

The pitch, yaw, and roll electronic control assemblies (ECAs) are nearly identical, with slight differences due to different requirements for each axis. The ECAs provide the circuitry for input control signal processing and SCS mode control and configuration. Input control signals consist of attitude error signals from the SCS BMAGs and from the G&N system, minimum impulse commands, rate gyro angular signals, translation and rotation control commands, service propulsion engine gimbal position commands, and SPS engine gimbal rate and position feedback signals. Mode control inputs are received from switches on panel 8 of the main display console (MDC). These input signals are applied to logic-controlled relays which enable circuit configurations corresponding to the desired mode. ECA output signals consist of reaction jet firing commands and SPS gimbal position commands. The reaction jet commands are generated in the jet selection logic portions of the ECAs. Preignition SPS engine gimbal position commands are generated manually at the AS/GPI by thumbwheels which provide input signals to the gimbal control circuits. Post-ignition

gimbal control is provided by automatic thrust vector control (TVC) circuitry in the pitch and yaw ECAs.

2.3.4.4 Auxiliary Electronic Control Assembly.

The auxiliary electronic control assembly contains the attitude gyro coupling unit and service propulsion system thrust on-off command circuitry. The AGCU portion of the auxiliary ECA receives BMAG signals from the DISPLAY-AGAA ECA and processes the data for display on the FDAI. It also transforms attitude set dial signals to body axes. The SPS engine on-off control circuitry in the AUX ECA receives engine on-off commands from the G&N system or the SCS. These commands are conditioned and applied to the SPS engine solenoid valves.

2.3.4.5 Display and Attitude Gyro Accelerometer Assembly Electronic Control Assembly.

The display and attitude gyro accelerometer assembly electronic control assembly provides the electronic circuitry required to control and power the displays, BMAGs, and accelerometer. The DISPLAY ECA portion consists of the circuitry necessary to receive and condition the following:

- Attitude error signals from the G&N system or the BMAGs to the FDAI attitude error indicators
- Attitude rate-of-change signals from the rate gyros or BMAGs to the FDAI attitude rate indicators
- Feedback signals from the SPS engine gimbals to the gimbal position indicators
- Accelerometer signals from the AGAA to the delta V display integrator.

The AGAA ECA portion consists of circuitry necessary to accomplish the following:

- Accept and condition BMAG inputs for the AGCU
- Accept and condition AGCU torquing commands to the BMAGs
- Control BMAG and accelerometer temperature controls
- Control and condition the accelerometer rebalance loop and inputs to the integrator
- Supply reference voltages to the BMAGs and accelerometer
- Condition the BMAG and accelerometer outputs to telemetry.

2.3.4.6 Rotation Controls.

Two identical rotation controls are provided to enable manual command of the spacecraft attitude (figure 2.3-8). Each control is a control stick containing breakout switches and transducers (figure 2.3-9) which apply control signals to the reaction jet selection logic circuitry in the pitch, yaw, and roll ECAs. When the stick is moved, the breakout switches close the loop between the BMAGs and AGCU, and control signals from the pitch, yaw, and roll transducers are applied to the appropriate control ECAs. Proportional response to the control stick movement is provided by rate gyro feedback to the ECA electronics (figure 2.3-10). The reaction jet solenoids can also be controlled via the direct application of control voltages from switches in the controller. The latter method, requiring use of the DIRECT MODE switch on MDC-8, does not provide proportional response. With the direct mode enabled and the stick commanding a rotation about one axis, the rate damping circuits in the other axes are active.

Provision is made to mount the controls at four different locations in the C/M: the right armrest of the left crew couch, both armrests of the right crew couch, and at the navigation station in the lower equipment bay. Normally, one control is attached to the left crew couch mount and the other is used at any of the other three locations. Simultaneous operation of both controls is possible but not advised; however, each control has a locking device to prevent inadvertent operation.

2.3.4.7 Translation Controls.

Two identical translation controls are provided to enable manual command of spacecraft translational maneuvers. (See figure 2.3-8.) Each control is a T-handle type control stick containing switches, which apply control signals to the reaction jet selection logic circuitry in the pitch, yaw, and roll ECSs (figure 2.3-11). The reaction jets are activated in groups of two or four, depending upon the direction of desired translation. Left-right and up-down translations are accomplished by firing two reaction control jets with the same direction of thrust. Forward and reverse translations are accomplished by firing the four forward thrusting or four rearward thrusting reaction control jets. The translation maneuver commanded is in direct response to the direction in which the T-handle is moved.

The primary control has switches which initiate a spacecraft abort if the T-handle is rotated counterclockwise. Both controls have switches which enable manual thrust vector control and disable automatic attitude control if the T-handle is rotated clockwise. Each control has a locking device to prevent inadvertent operation of the translation control.

Both controls are mounted in the C/M on the left armrest of the crew couch. The primary control is identified with yellow stripes and is the only one provided with abort switching capability.

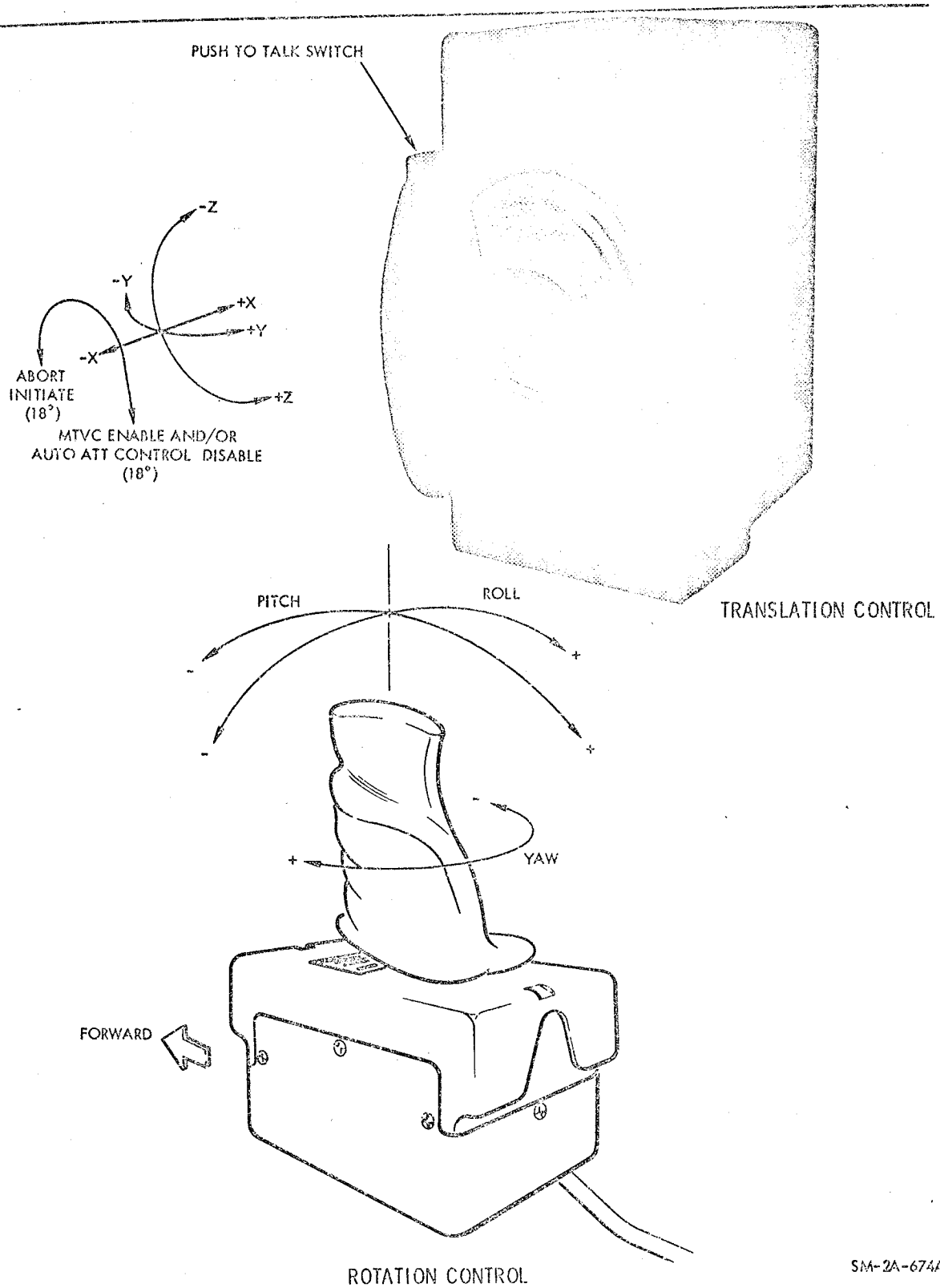

Figure 2.3-8. Rotation and Translation Controls

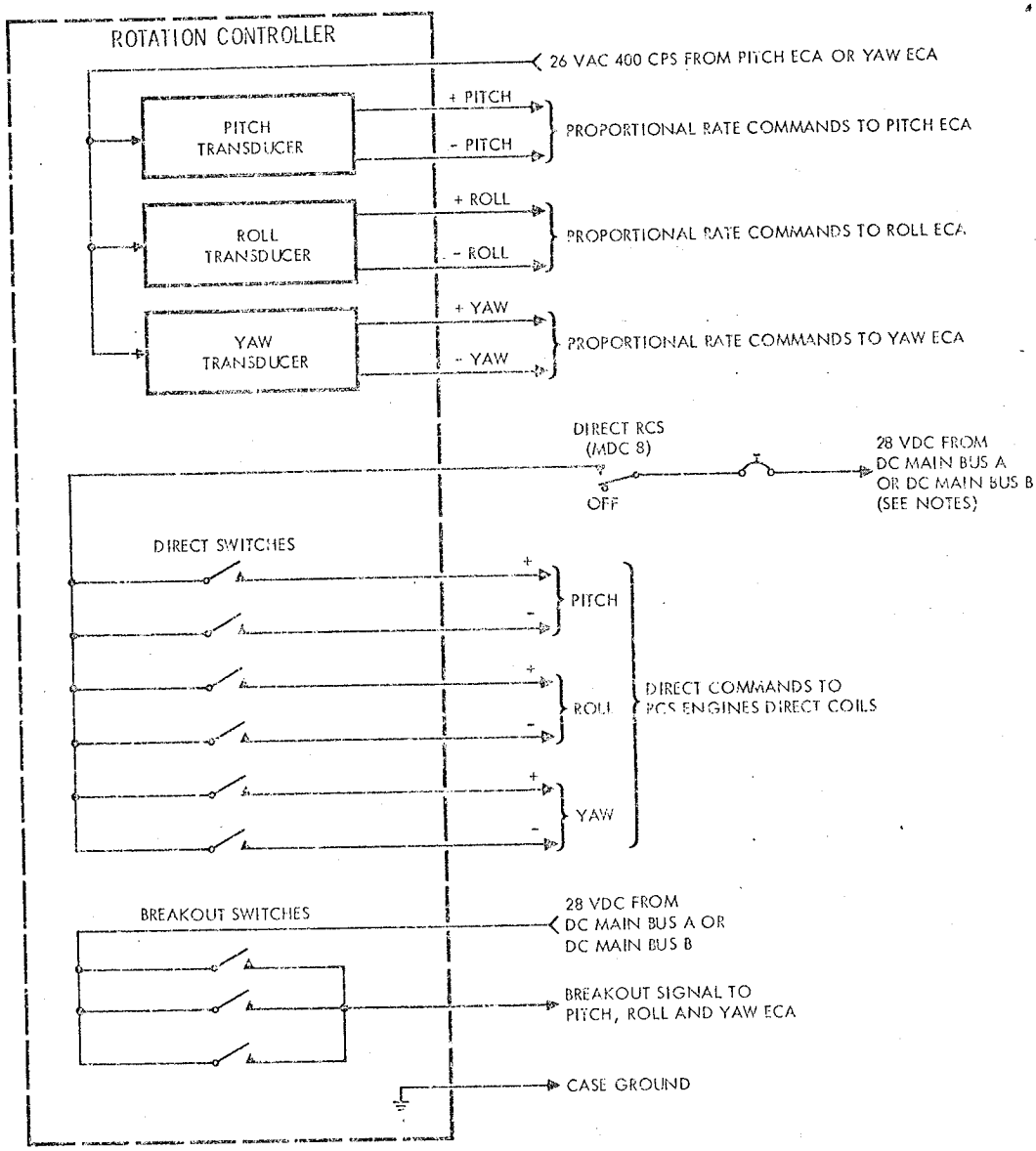

NOTES: 1. DC main bus A supplies power to direct switches in rotation control No. 1.
2. DC main bus B supplies power to direct switches in rotation control No. 2.

SM-2A-711B

Figure 2.3-9. Rotation Control Schematic

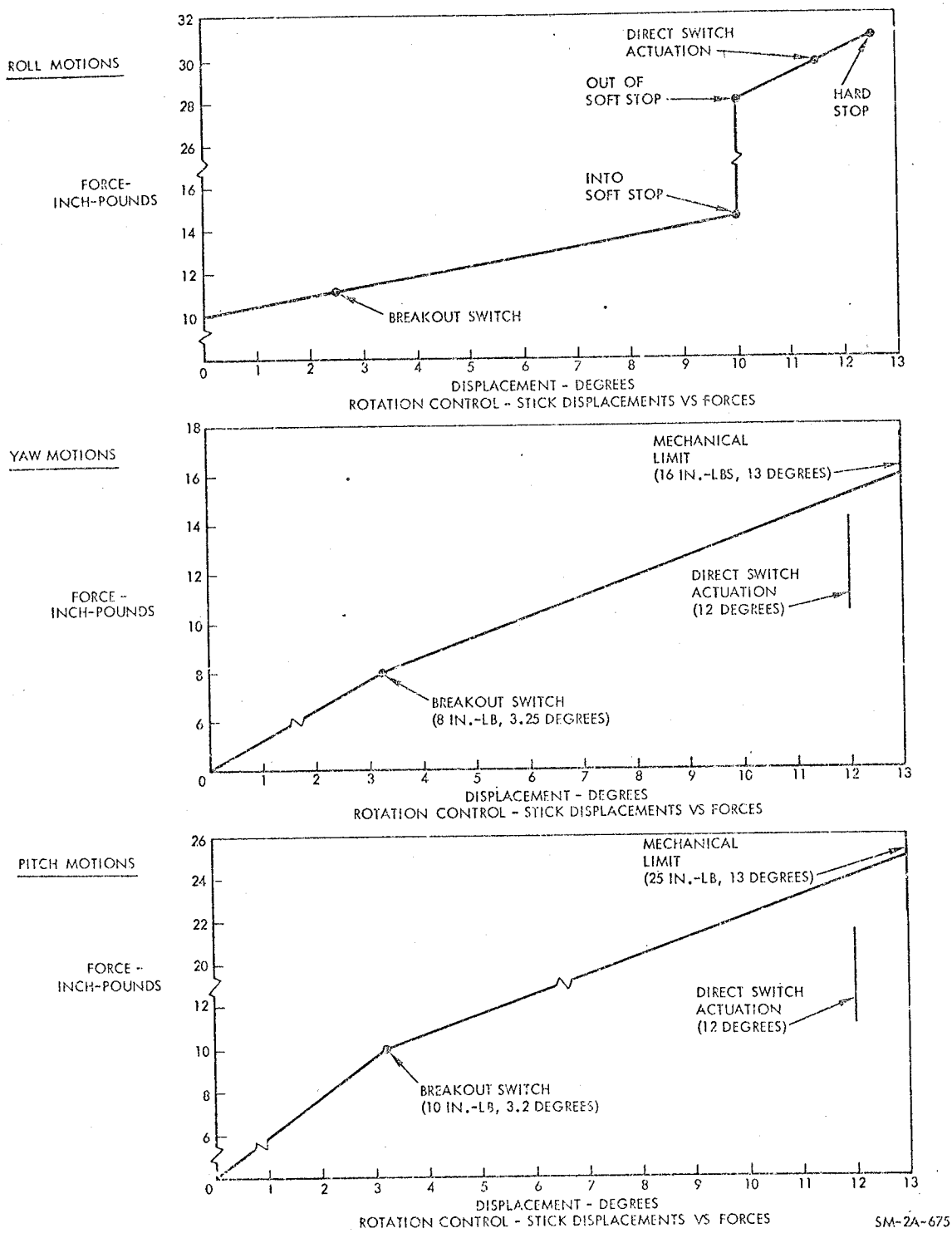

Figure 2.3-10. Rotation Control Charts

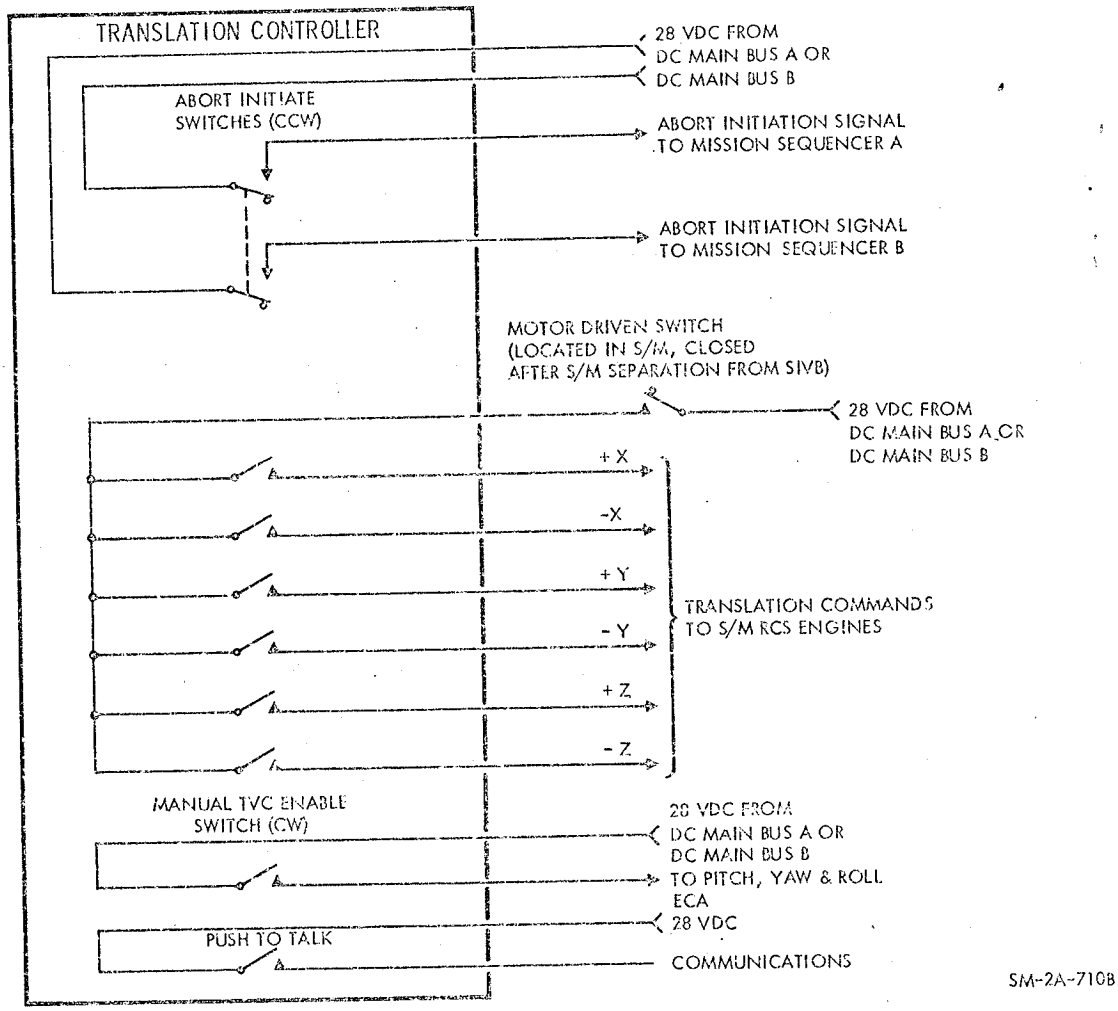

Figure 2.3-11. Translation Control Schematic

2.3.4.8 Flight Director Attitude Indicator.

The flight director attitude indicator, located on MDC-4, provides attitude, attitude error, and attitude rate-of-change display information. (See figure 2.3-12.) The FDAI indicates attitude rate of change and attitude error on indicators and spacecraft attitude on a 3 degree-of-freedom, inertially referenced ball and roll indicator. The roll rate display is located across the top of the FDAI. The pitch rate display is located along the right side of the FDAI. The yaw rate display is located across the bottom of the FDAI. The attitude error displays are pointers which move across the face of the ball. The rate and error displays are fly-to displays. The roll attitude pointer is located at the top and points down towards the center of the ball. The pitch attitude pointer is located at the right and points left toward the center of the ball. The yaw pointer is located at the

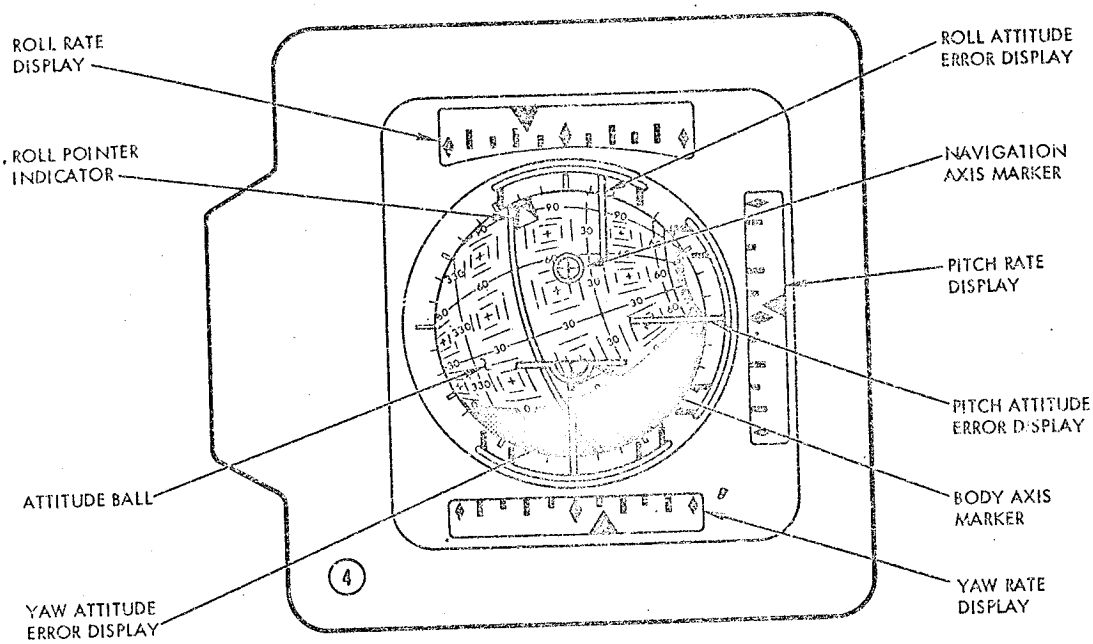

DISPLAY	AXIS		
	Pitch (θ)	Yaw (ψ)	Roll (ϕ)
Attitude Ball	+55°	+21°	
Roll "Bug"			+21°
Attitude Error Indicators	0°	0°	-2.5°
Angular Rate Indicators	-.1°/Sec	-.2°/Sec	+.3°/Sec

NOTE: On this illustration, the attitude ball display is read with reference to the navigation axis marker.

SM-2A-726C

Figure 2.3-12. Flight Director Attitude Indicator

bottom and points up toward the center of the ball. The FDAI is located in the center of the display. The ball face is marked in degrees of pitch and yaw and is referenced to the IMU axes. Two reference markers are located on the face of the display to indicate attitude in reference to either spacecraft body axes or IMU (navigation) axes The body axes marker is on the lower face of the display. The IMU or navigation axes marker is located on the upper face of the display. Roll attitude is the IMU reference and is indicated by the roll indicator (bug) which travels around the circumference of the ball. Roll attitude zero reference is located at the top of the ball.

FDAI display operation will vary, depending upon mode. The rate display is operative at all times. Each rate indicator has a calibrated display scale, with the range of the scale dependent upon the mode selected. Maximum full-scale deflection will be as indicated in the following tabulation.

Mode	Full-Scale Deflection		
	Pitch	Roll	Yaw
Delta V modes	±5°/sec	±5°/sec	±5°/sec
Entry modes and monitor mode	±5°/sec	±25°/sec	±5°/sec
All other modes	±1°/sec	±1°/sec	±1°/sec

The attitude error display function depends upon mode. During attitude hold modes, the attitude error pointers display attitude changes within the selected deadband. The maximum deadband will allow approximately ±5 degrees of spacecraft movement in any axis, which is equivalent to full-scale deflection for the attitude error pointers. This results in easily discernible pointer movement. The minimum deadband allows approximately ±0.5 degrees of spacecraft movement in any axis, which results in very little pointer movement. In SCS control modes, the attitude error signals are derived from the BMAGs or AGCU. The AGCU alone provides the driving signals only when used in conjunction with the ATT SET switch for a dialed attitude change. In G&N modes, the attitude error signals are derived from the G&N coupling display units (CDUs). Full-scale deflection varies depending upon the mode selected, as indicated by the following tabulation.

Mode	Full-Scale Deflection		
	Pitch	Roll	Yaw
Entry modes	±5°	±25°	±5°
Monitor mode	±15°	±25°	±15°
All other modes	±5°	±5°	±5°

The gimbaled attitude ball is colored half gray and half black, with the line of separation at the 0-degree to 180-degree pitch angle. This two-color scheme permits rapid recognition of the specific pitch hemisphere being displayed. There are two concentric circles located at 90-degree yaw/0-degree pitch and 270-degree yaw/0-degree pitch. The inner circles are solid red 30-degree circles which represent the base of a cone with the apex at the center of the ball. This area denotes possible IMU gimbal lock. The outer circles enclose a red 40-degree circle which also represents the base of a cone with the apex at the center of the ball. This area denotes attitudes which result in AGCU inaccuracy. The ball is read against one of two reference marks, depending upon the mode of operation. The IMU axes reference mark is the upper marker (⊕) which indicates spacecraft attitude in pitch and yaw axes with reference to the IMU gimbals or stability axes. The body axes marker is the lower marker (⌒) which indicates spacecraft attitude with reference to the body axes. The included angle between the markers is 32 degrees. The roll indicator is referenced to the zero mark on the periphery of the ball display face in all operational modes. In SCS modes, the ball is driven only during manual maneuvers, during FDAI alignment, and after 0.05 g is sensed during entry. During these functions, the ball is driven by signals received from the AGCU. In G&N modes, the ball displays IMU gimbal angles. Figure 2.3-13 provides a tabular listing of the various FDAI display configurations.

SCS

FLIGHT CONTROL MODES	SCS Entry	SCS ΔV	SCS Local Vertical	SCS Attitude Control
Total Attitude (Ball)	Before 0.05 Gs, ball driven only during manual maneuver or FDAI alignment; after 0.05 Gs driven continuously.	Ball driven only during manual maneuver or FDAI alignment.	Ball driven only during manual maneuver or FDAI alignment.	Ball driven only during manual maneuver or FDAI alignment.
Attitude Errors	BMAGs P & Y±5° max deflection; R±25° max deflection.	BMAGs P, Y, & R±5° max deflection.	BMAGs P, Y, & R±5° max deflection.	BMAGs P, Y, & R±5° max deflection.
Attitude Rate Errors	Rate gyros (BMAGs when backup rate switch actuated). P & Y 5°/sec deflection. R 25°/sec deflection.	Rate gyros (BMAGs when backup rate switch actuated). P, Y, & R±5°/sec deflection.	Rate gyros (BMAGs when backup switch actuated). P, Y, & R±1°/sec deflection.	Rate gyros (BMAGs when backup rate switch activated). P, Y, & R±1°/sec deflection.
Roll Bug	AGCU roll angle	AGCU roll angle	AGCU roll angle	AGCU roll angle

G&N

FLIGHT CONTROL MODES	G&N Entry	G&N ΔV	G&N Attitude Control	Monitor
Total Attitude (Ball)	Ball repeats IMU position.	Ball repeats IMU position.	Ball repeats IMU position.	Ball repeats IMU position
Attitude Errors	CDU P, Y, ±5° max deflection. R±25° max deflection.	CDU P, Y, & R±5° max deflection.	CDU P, Y, & R ±5° max deflection.	CDU P, Y±15°, & R±25° max deflection.
Attitude Rate Errors	Rate gyros (BMAGs when backup rate switch actuated). P & Y±5°/sec deflection. R±25°/sec deflection.	Rate gyros (BMAGs when backup rate switch actuated). P, Y, & R 5°/sec deflection.	Rate gyros (BMAGs when backup rate switch actuated). P, Y, & R 1°/sec deflection.	Rate gyros (BMAGs when backup rate switch actuated). P, Y, & R 5°/sec deflection.
Roll Bug	IMU roll angle	IMU roll angle	IMU roll angle	IMU roll angle

Figure 2.3-13. FDAI Display Configuration

2.3.4.9 Attitude Set/Gimbal Position Indicator.

The attitude set/gimbal position indicator (AS-GPI) provides two separate functions. The attitude set portion enables FDAI-AGCU alignment and provides a reference for acquiring new attitudes. The gimbal position display portion provides positioning control of the SPS engine gimbal angles and displays gimbal position. The attitude set portion provides a comparison of the angle between the attitude displayed on the ATTITUDE SET indicators and the position of the AGCU resolver shaft. It also provides control of the inputs to the FDAI attitude error pointers and aligns the FDAI to the attitude indicated on the ATTITUDE SET indicators. The attitude set function is controlled by manual operation of the thumbwheels. The desired position is dialed by a thumbwheel, with the display providing visual indication of the position selected by the thumbwheel. The attitude display may be used to align the FDAI-AGCU or to indicate a new attitude for the spacecraft. To accomplish FDAI-AGCU alignment, the desired position is set on the attitude set display. The FDAI ALIGN pushbutton is then pressed. This provides a signal which drives the AGCU stepper motor and control logic to position the AGCU resolver shaft. The stepper motor drives the shaft to the commanded position, resulting in an output from an angle generator to the FDAI ball, driving the ball to the commanded position. To manually maneuver the spacecraft to a predetermined attitude, the display is set to the desired attitude and the ATT SET switch is placed to ATT SET. The output signal is applied to the attitude error display pointers on the FDAI, providing a manual maneuver indication to the space crew. The display configuration is a fly-to type, with the crew manually maneuvering the spacecraft toward the pointers. (The pointers will peg if the new attitude is in excess of 5 degrees from the original attitude.)

The SPS engine gimbal position display allows positioning of the gimbals and provides indication of gimbal position. Two thumbwheels enable the pitch and yaw engine gimbals to be positioned prior to SPS engine firing. The gimbals position the engine to an attitude which ensures that the SPS engine thrust vector is through the spacecraft center of gravity. Movement of the thumbwheels results in the generation of control signals which engage the SPS gimbal ring torque motor magnetic clutches. Clutch engagement connects the gimbal torque motor and gear train to move the gimbal ring. Position transducers send a signal to the gimbal position displays to indicate the angle of the gimbal. The yaw gimbal position scale is graduated in increments of one-half degree from -5 degrees to +13 degrees. Center is located at the +4-degree position due to an inherent offset in the yaw center of gravity. The pitch gimbal position scale is graduated in increments of one-half degree from -9 degrees to +9 degrees, with the center position at 0 degrees.

2.3.4.10 Velocity Change Indicator.

The delta V display provides control and display of spacecraft velocity changes. The display portion of the panel consists of the ΔV REMAINING indicator, which is a five-digit display. The digital display is set by the variable speed ΔV SET switch. Three panel switches control the SPS and RCS engine firing commands. The DIRECT ULLAGE switch is a pushbutton, momentary-contact switch which, when depressed energizes the direct coils of the +X reaction jet solenoids. It serves as a backup for the translation control, which is used under normal conditions for +X translations for SPS fuel settling (ullage). The THRUST ON switch is an illuminated pushbutton, momentary-contact switch which is used to fire the SPS engine in the SCS delta V mode. The switch is enabled when the SPS THRUST switch is in the NORMAL position. The pitch and yaw RCS control and firing circuits are inhibited during SPS engine firing. After ignition, the SPS engine continues to fire until the ΔV REMAINING display counts down to zero. The THRUST ON switch is also used to back up the Apollo guidance computer firing commands in the G&N delta V mode in the event of an AGC failure. The SPS THRUST switch provides overall control of SPS engine firing. The NORMAL position enables normal engine firing sequences. The OFF position provides a positive off command as backup in case of a malfunction. The DIRECT ON position provides a positive firing command to the SPS engine.

The ΔV SET switch sets up the ΔV REMAINING display and logic circuits prior to delta V maneuvers. Pressing the upper section of the ΔV switch sets up logic circuitry which causes a slew motor to drive the ΔV REMAINING display in the positive direction (increasing velocity). Pressing the lower section of the switch drives the display in the negative direction (decreasing velocity). The switch has two sets of contacts in both the upper and lower positions. Pressing the switch lightly engages the first set of contacts, which results in a signal that will drive the display at a rate of two feet per second. Pressing the switch harder (past an easily felt hard/soft point) engages the second set of contacts, which results in the display being driven at a rate of 64 feet per second. As the display is driven to the desired velocity, the integrator and logic circuit is set to a logical value equal to the desired change. The translation command signal energizes a relay which applies the output of the AGAA accelerometer to the integrator and logic circuit, which compares the desired velocity increment with the actual velocity change received from the accelerometer. When the actual velocity change equals the value set, the ΔV REMAINING counter sends a signal to a coincidence detector logic circuit which, in turn, transmits a stop firing command to the thrust control logic. Although this causes the SPS engine to stop firing, some thrusting continues as a result of the tail-off inherent to the engine. The ΔV REMAINING display continues to count past zero (i.e., 99999, 99998, 99997, etc.) until no further acceleration is felt. Tail-off effects will be calculated prior to flight and compensated for by the crew when the display is being set up for delta V maneuvers.

2.3.4.11 Electrical Power Distribution.

See figures 2.3-14 and 2.3-15.

2.3.5 PERFORMANCE AND DESIGN DATA.

Figure 2.3-16 contains the latest available power consumption data for the Block I SCS. The translation controls were not included in the SCS component breakdown because they do not dissipate a significant amount of power within themselves.

The X-axis accelerometer is a servo-rebalanced pendulous accelerometer. Some of the accelerometer design characteristics are as follows.

Operating range	0.001 g to 2 g
Threshold	1×10^{-4} g (max)
Null torque	1×10^{-4} g (max)
Signal generator sensitivity	50 millivolts/millirad
Signal generator null	1 mr (max)

The body-mounted attitude gyros are single-degree-of-freedom gyros. Some of the gyro design characteristics are as follows.

Acceleration sensitive drift	4 deg/hr/g
Random drift	0.05 deg/hr
Maximum torquing rate	25 deg/sec
Maximum input attitude	±20 deg
Gyro threshold	0.02 deg/hr
Gyro transfer function	1.15 millivolts/millirad
Signal generator null	3.5 millivolts
Excitation frequency	400±0.01% cps

The rate gyros are single-axis miniature gyros. Some of the gyro design characteristics are as follows.

Full-scale range	30°/sec
Input range (to limit stop)	30°/sec
Maximum rate without damage	600°/sec
Excitation frequency	400±0.01% cps
Threshold	0.02°/sec

2.3.6 OPERATIONAL LIMITATIONS AND RESTRICTIONS.

2.3.6.1 S/C Attitude Change.

It is recommended that vehicle attitude change be held to maximum rates of less than 20 degrees per second roll and 5 degrees per second in pitch and yaw to prevent possible loss of attitude reference. Because of the AGCU digital logic, the stepping motor can be stepped at a maximum

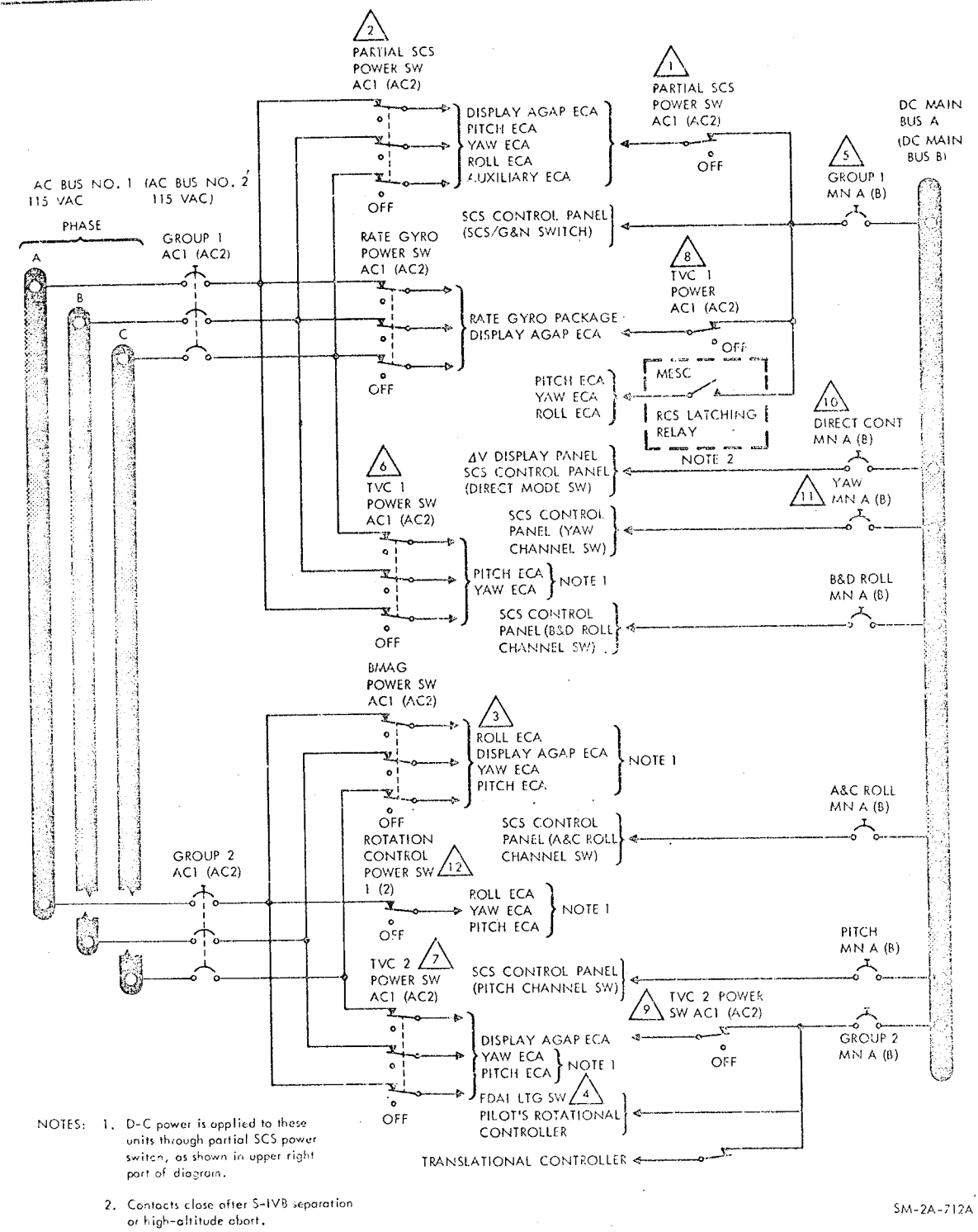

Figure 2.3-14. SCS Power Distribution

SYSTEM CAPABILITIES	REQUIRED SCS POWER SWITCHES					
	PARTIAL SCS POWER	RATE GYRO POWER	BMAG POWER	ROTATION CONTROL POWER	TVC 1 POWER	TVC 2 POWER
BACKUP RATE	●		●			
CHANNEL ENABLE						
DIRECT ROTATION CONTROL						
PROPORTIONAL ROTATION CONTROL	●	●	● (1)	●		
ATTITUDE IMPULSE	●					
G&N SYNC						
TRANSLATION	●					
ΔV SET					●	
SPS ENGINE IGNITION	● (2)					
MANUAL SPS GIMBAL TRIM	●				●	● (3)
DIRECT ULLAGE						
THRUST VECTOR CONTROL	●	●	● (4)		●	● (3)
MANUAL THRUST VECTOR CONTROL			●	●		●
ATTITUDE HOLD	●	● (7)	● (5)			
RATE DAMPING	●	●	● (1)			
FDAI ALIGN	●					
RATE INDICATORS VALID	●	●	● (1)			
BALL & ROLL BUG DRIVEN	●					
ATTITUDE ERROR INDICATORS VALID	● (8)		● (6)			

NOTES:
1. If backup rate has been selected in any axis. If backup rate has been selected in all 3 axes, RATE GYRO POWER need not be on.
2. PARTIAL SCS POWER must be on if ΔV switch is at NORMAL. However, SPS engine can be turned on when all power switches are off, by placing ΔV switch to DIRECT ON.
3. TVC 2 POWER switch must be on if manual TVC is engaged.
4. SCS ΔV mode only. However, in G&N ΔV mode, BMAG POWER must be on if backup rate has been selected in any axis. If backup rate has been selected in all three axes, RATE GYRO POWER switch is set to OFF.
5. SCS modes only; also G&N modes if backup rate has been selected in any axis.
6. SCS modes only, if backup rate has not been selected.
7. RATE GYRO POWER switch may be set to OFF for extended periods of attitude hold.
8. FDAI ALIGN and G&N modes only.

SM-2A-900A

Figure 2.3-15. SCS Power vs System Capability

SYSTEM STEADY-STATE POWER CONSUMPTION-WATTS (SQ-1)

MODE / SWITCH	MONITOR 115 VAC 400 CPS				G&N ATTITUDE 115 VAC 400 CPS				SCS ATTITUDE 115 VAC 400 CPS				G&N ENTRY 115 VAC 400 CPS			
	ϕA	ϕB	ϕC	DC	ϕA	ϕB	ϕC	DC	ϕA	ϕB	ϕC	DC	ϕA	ϕB	ϕC	DC
PARTIAL SCS PWR (1)	25.2	24.1	17.6	16.7	26.0	24.2	18.3	9.0	27.6	24.3	18.5	11.8	25.1	24.5	18.0	19.8
POWER FACTOR	0.94	0.89	0.91		0.95	0.89	0.88		0.94	0.89	0.88		0.94	0.89	0.88	
FDAI	3.4				3.4				*3.4				3.4			
POWER FACTOR	1.0				1.0				1.0				1.0			
RGA POWER	5.2	3.4	11.8		5.2	3.4	11.8		*5.2	*3.4	*11.8		5.2	3.4	11.8	
POWER FACTOR	0.98	0.85	0.99		0.98	0.85	0.99		*0.98	*0.85	*0.99		0.98	0.85	0.99	
ROT. CONT POWER	5.6				5.6				*5.6				5.6			
POWER FACTOR	0.92				0.92				*0.92				0.92			
TVC SW NO. 1	16.4	8.7	8.7	16.3	16.4	8.7	8.7	16.3	16.4	8.7	8.7	16.3	16.4	8.7	8.7	16.3
POWER FACTOR	0.96	0.86	0.86		0.96	0.86	0.86		0.96	0.86	0.86		0.96	0.86	0.86	
TVC SW NO. 2	11.5	4.3	4.2		11.5	4.3	4.2		11.5	4.3	4.2		11.5	4.3	4.2	
POWER FACTOR	0.75	0.57	0.63		0.75	0.57	0.63		0.75	0.57	0.63		0.75	0.57	0.63	
BMAG POWER	6.1	3.4	7.0	62.3	6.1	3.4	7.0	62.3	*6.1	*3.4	*7.0	*62.3	6.1	3.4	7.0	62.3
POWER FACTOR	0.99	0.78	0.80		0.99	0.78	0.80		*0.99	*0.78	*0.80		0.99	0.78	0.80	
CONT PANEL INPUT (1)				11.82				5.13				4.22				28.13

SYSTEM STEADY-STATE POWER CONSUMPTION-WATTS (SQ-1) (CONTINUED)

MODE / SWITCH	SCS ENTRY 115 VAC 400 CPS				G&N ΔV 115 VAC 400 CPS				SCS ΔV 115 VAC 400 CPS				LOCAL VERTICAL 115 VAC 400 CPS			
	ϕA	ϕB	ϕC	DC	ϕA	ϕB	ϕC	DC	ϕA	ϕB	ϕC	DC	ϕA	ϕB	ϕC	DC
PARTIAL SCS PWR (1)	27.5	24.5	18.3	22.9	25.7	24.0	18.6	59.4	28.3	23.3	19.0	61.3	26.1	22.6	17.6	12.4
POWER FACTOR	0.94	0.89	0.88		0.94	0.88	0.91		0.93	0.88	0.91		0.94	0.88	0.90	
FDAI	3.4				3.4				3.4				3.4			
POWER FACTOR	1.0				1.0				1.0				1.0			
RGA POWER	5.2	3.4	11.8		5.2	3.4	11.8		5.2	3.4	11.8		5.2	3.4	11.8	
POWER FACTOR	0.98	0.85	0.99		0.98	0.85	0.99		0.98	0.85	0.99		0.98	0.85	0.99	
ROT. CONT POWER	5.6				5.6				5.6				5.6			
POWER FACTOR	0.92				0.92				0.92				0.92			
TVC SW NO. 1	16.4	8.7	8.7	16.3	16.4	8.7	8.7	16.3	*16.4	*8.7	*8.7	*16.3	16.4	8.7	8.7	16.3
POWER FACTOR	0.96	0.86	0.86		0.96	0.86	0.86		*0.96	*0.86	*0.86		0.96	0.86	0.86	
TVC SW NO. 2	11.5	4.3	4.2		*11.5	*4.3	*4.2		11.5	4.3	4.2		11.5	4.3	4.2	
POWER FACTOR	0.75	0.57	0.63		*0.75	*0.57	*0.63		0.75	0.57	0.63		0.75	0.57	0.63	
BMAG POWER	6.1	3.4	7.0	62.3	6.1	3.4	7.0	62.3	6.1	3.4	7.0	62.3	6.1	3.4	7.0	62.3
POWER FACTOR	0.99	0.78	0.80		0.99	0.78	0.80		0.99	0.78	0.80		0.99	0.78	0.80	
CONT PANEL INPUT (1)				23.07				13.33				6.95				5.65

NOTES:
1. Power measurements made in each mode.
*2. Power consumption assumed same in each mode. Asterisk indicates mode in which measurement was made.
3. Measurements made with SPS engine off. (Two solenoids and 2 relays.)
4. Line losses and inverter efficiencies not considered.
5. All values indicated are in watts.
6. Figure does not include energizing RCS engines for maneuvers.

SM-2A-754D

Figure 2.3-16. SCS Steady-State Power Consumption Data

rate of 100 steps per second in roll and 25 steps per second in pitch and yaw. This is equivalent to gyro torquing rates of 20 degrees per second in roll and 5 degrees per second in pitch and yaw. Therefore, if vehicle rates exceed the gyro torquing rates, the stepping motor will lag behind the vehicle rates. Under this condition, the BMAG-AGCU loop may not be able to maintain the SCS attitude reference.

2.3.7 TELEMETRY MEASUREMENTS.

The following is a complete listing of all SCS telemetry data that is monitored by flight controllers and ground support personnel. The last column contains the name and type of S/C crew display. The display utilizes the same pickup or signal source as telemetry, unless a separate measurement number is included in the display column.

An asterisk (*) by the measurement number denotes information which is not available for recording or telemetry transmission during PCM low-bit rate operation.

Figure 2.3-4, sheet 2, identifies telemetry measurements for the SCS yaw channel. Identical measurements in the following list, relative to the roll and pitch channels, are taken from the same circuit junctions as for the yaw channel.

Measurement Number	Description	Sensor Range	Crew Display
* CH 0024 V	Pitch rate		FDAI
* CH 0025 V	Pitch rate manual rotation control	Zero/+5 VRMS	FDAI
* CH 0034 V	Pitch pos feedback in	-6/+6 vdc	None
* CH 0047 V	PTV diff clutch volts comb	TBD	None
CH 0050 V	Pitch rate error amp out	-6.2 to +6 2 vdc	FDAI
CH 0067 V	Pitch integrator/att error summing	TBD	None
* CH 0074 V	MTVC pitch rate	TBD	None
CH 0075 V	Pitch SCS att error	Zero/+10 VRMS	FDAI
* CH 0087 X	+ Pitch/+X solenoid driver out	Off/on event	None
* CH 0088 X	- Pitch/+X solenoid driver out	Off/on event	None
* CH 0089 X	+ Pitch/-X solenoid driver out	Off/on event	None
* CH 0090 X	- Pitch/-X solenoid driver out	Off/on event	None
CH 0100 X	G-N DV mode control	Event	None
CH 0101 X	G-N DV att mode control	Off/on event	None
CH 0102 X	G-N entry mode control	Off/on event	None
CH 0103 X	Monitor mode control	Off/on event	None
* CH 1024 V	Yaw rate	-30 to +30°/sec	FDAI
* CH 1025 V	Yaw manual rotation control	Zero/+5 VRMS	FDAI
* CH 1034 H	Yaw pos feedback in	-8.5/+8.5 vdc	None
* CH 1047 V	YTV diff clutch volts comb	-85 to +85 MADC	None
CH 1050 V	Yaw rate error amp out	-6.2 to +6.2 vdc	FDAI
CH 1067 V	Y integrator/att error summing	-2.5 to +2.5 vdc	None
* CH 1074 V	MTVC yaw rate	TBD	None

SYSTEMS DATA

Measurement Number	Description	Sensor Range	Crew Display
CH 1075 V	V yaw SCS att error	Zero/+10 VRMS	FDAI
* CH 1087 X	+ Yaw/+X solenoid driver out	Off/on event	None
* CH 1088 X	- Yaw/+X solenoid driver out	Off/on event	None
* CH 1089 X	+ Yaw/-X solenoid driver out	Off/on event	None
* CH 1090 X	- Yaw/-X solenoid driver out	Off/on event	None
CH 1100 X	SCS DV mode control	Event	None
CH 1101 X	SCS att mode control	Event	None
CH 1102 X	SCS entry mode control	Event	None
CH 1103 X	SCS local vertical mode control	Event	None
CH 1104 X	MTVC mode control	Event	None
* CH 2015 V	Combined AG SMRD	0 to 5 vdc	None
* CH 2024 V	Roll rate	TBD	FDAI
* CH 2025 V	Roll man rotation control out	Zero/+5 VRMS	FDAI
* CH 2026 V	Combined RG SMRD	-0 to +5 vdc	None
* CH 2030 T	Combined attitude gyro temp	0 to +5 vdc	AGAP TEMP LIGHT
CH 2050 V	Roll rate error amp out	-6.2 to +6.2 vdc	FDAI
* CH 2070 V	Roll attitude error amp out	-25/+25 vdc	None
CH 2075 V	Roll SCS att error	Zero/10 VRMS	FDAI
* CH 2087 X	+ Roll/+Z solenoid driver out	Event	None
* Ch 2088 X	- Roll/-Z solenoid driver out	Event	None
* Ch 2089 X	+ Roll/-Z solenoid driver out	Event	None
* CH 2090 X	- Roll/-Z solenoid driver out	Event	None
* CH 2091 X	+ Roll/+Y solenoid driver out	Event	None
* CH 2092 X	- Roll/+Y solenoid driver out	Event	None
* CH 2093 X	+ Roll/-Y solenoid driver out	Event	None
* CH 2094 X	- Roll/-Y solenoid driver out	Event	None
CH 3185 X	.05 g Manual switch	Event	None
* CH 3186 V	DV remaining pot out	-3 to +13 KFPS	ΔV Counter
CH 4100 H	Resolver sin out pitch att	-12 to +12 VRMS	None
CH 4101 H	Resolver cos out pitch att	-12 to +12 VRMS	None
CH 4102 H	Resolver sin out yaw att	-12 to +12 VRMS	None
CH 4103 H	Resolver cos out yaw att	-12 to +12 VRMS	None
CH 4104 H	Resolver sin out roll att	-12 to +12 VRMS	None
CH 4105 H	Resolver cos out roll att	-12 to +12 VRMS	None
* CH 4320 X	SPS solenoid driver out 1	Event	None
* CH 4321 X	SPS solenoid driver out 2	Event	None
CG 0001 V	Computer digital data 40 bits	Event	Delta V Display

SECTION 2

SUBSECTION 2.4

SERVICE PROPULSION SYSTEM (SPS)

2.4.1 FUNCTIONAL DESCRIPTION.

The service propulsion subsystem provides the major impulse for all major velocity changes (AV's) throughout a mission, plus the S/M abort after the launch escape tower is jettisoned. To perform this function, the susbystem incorporates a helium pressurization system, a propellant feed system, a propellant gauging and utilization system, and a rocket engine. The oxidizer is nitrogen tetroxide, and the fuel is a blended hydrazine (approximately 50% unsymmetrical dimethyl hydrazine and 50% anhydrous hydrazine). The pressurizing gas is helium. The subsystem incorporates displays and sensing devices to permit ground-based stations and the crew to monitor its operation.

A functional flow diagram is contained in figure 2.4-1.

The helium pressure is directed to the helium pressurizing valves which isolate the helium during nonthrusting periods, or allows the helium to pressurize the fuel and oxidizer tanks during thrusting periods. The helium pressure is reduced at the pressure regulators to a desired working pressure. The regulated helium pressure is directed through check valves that permit helium flow in the downstream direction when the pressurizing valves are open, and prevent a reverse flow of propellants during non-thrusting periods. The heat exchangers transfer heat from the propellants to the helium gas to reduce any pressure excursions that may result from a temperature differential between the helium gas and propellants in the tanks. The relief valves maintain the structural integrity of the propellant tank systems if an excessive pressure rise occurs.

The total propellant supply is contained within four similar tanks: an oxidizer storage tank, oxidizer sump tank, fuel storage tank, and fuel sump tanks. The storage and sump tanks for each propellant system are connected in series by a single transfer line. The regulated helium enters into the fuel and oxidizer storage tank, pressurizing the storage tank propellants, and forces the propellant to an outlet in the storage tank which is directed through a transfer line into the respective sump tank standpipe, pressurizing the propellants in the sump tank. The propellant in the sump tank is directed to the exit end into a propellant retention reservoir, retaining sufficient propellants at the tank outlets to permit engine restart capability in a zero g condition. The propellants exit from the respective sump tanks into a single line to the heat exchanger.

A propellant utilization valve is installed in the oxidizer line, and is powered only during SPS thrusting periods. The propellant utilization valve aids in maintaining the center of mass in a relatively confined area in the Y - Z plane, in addition to simultaneous propellant depletion. The oxidizer supply and fuel supply are connected from the sump tank to the engine interface flange.

The propellants flow from the propellant sump tank feed through their respective plumbing to the main propellant orifices and filters to the bipropellant valve. The bipropellant valve assembly contains the main propellant valves that are pneumatically controlled and allows the propellant valves to distribute the propellants to the engine injector during thrusting periods, or isolates the propellants from the injector during nonthrusting periods.

The engine injector distributes the propellants through orifices in the face of the injector where the fuel and oxidizer impinge upon each other, atomize, and ignite due to hypergolic ignition.

The ablative combustion chamber absorbs the heat generated within the chamber. The nozzle extension is attached to the ablative chamber and radiates to space.

The engine assembly is mounted to the structure of the service module and is gimbaled to permit thrust vector alignment through the center of mass, prior to thrust initiation and thrust vector control during a thrusting period. A flight combustion stability monitor system is employed to monitor the engine for instability during thrusting periods.

Propellant quantity is measured by two separate sensing systems: primary and auxiliary. The sensing systems are powered only during thrust-on periods due to the capacitance and point sensor measuring techniques. The linearity would not provide accurate indications during the zero g SPS nonthrusting periods.

The control of the subsystem is automatic with provisions for manual override.

2.4.2 MAJOR COMPONENT/SUBSYSTEM DESCRIPTION.

2.4.2.1 Pressurization Subsystem.

The pressurization subsystem consists of two helium tanks, two helium pressurizing valves, two dual pressure regulator assemblies, two dual check valve assemblies, two pressure relief valves, and two heat exchangers. The critical components are redundant to increase reliability.

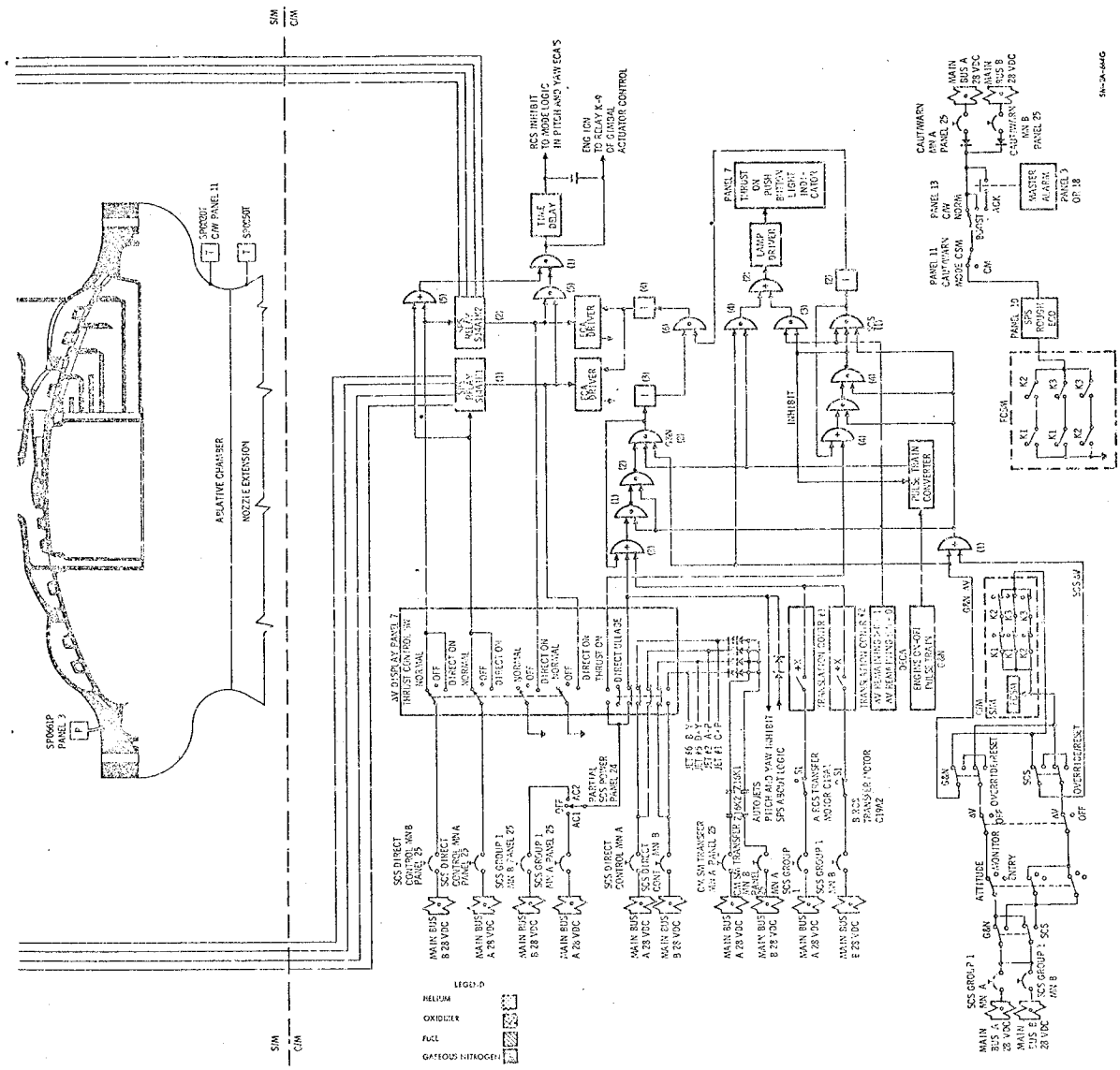

Figure 2.4-1. SPS Functional Flow Diagram

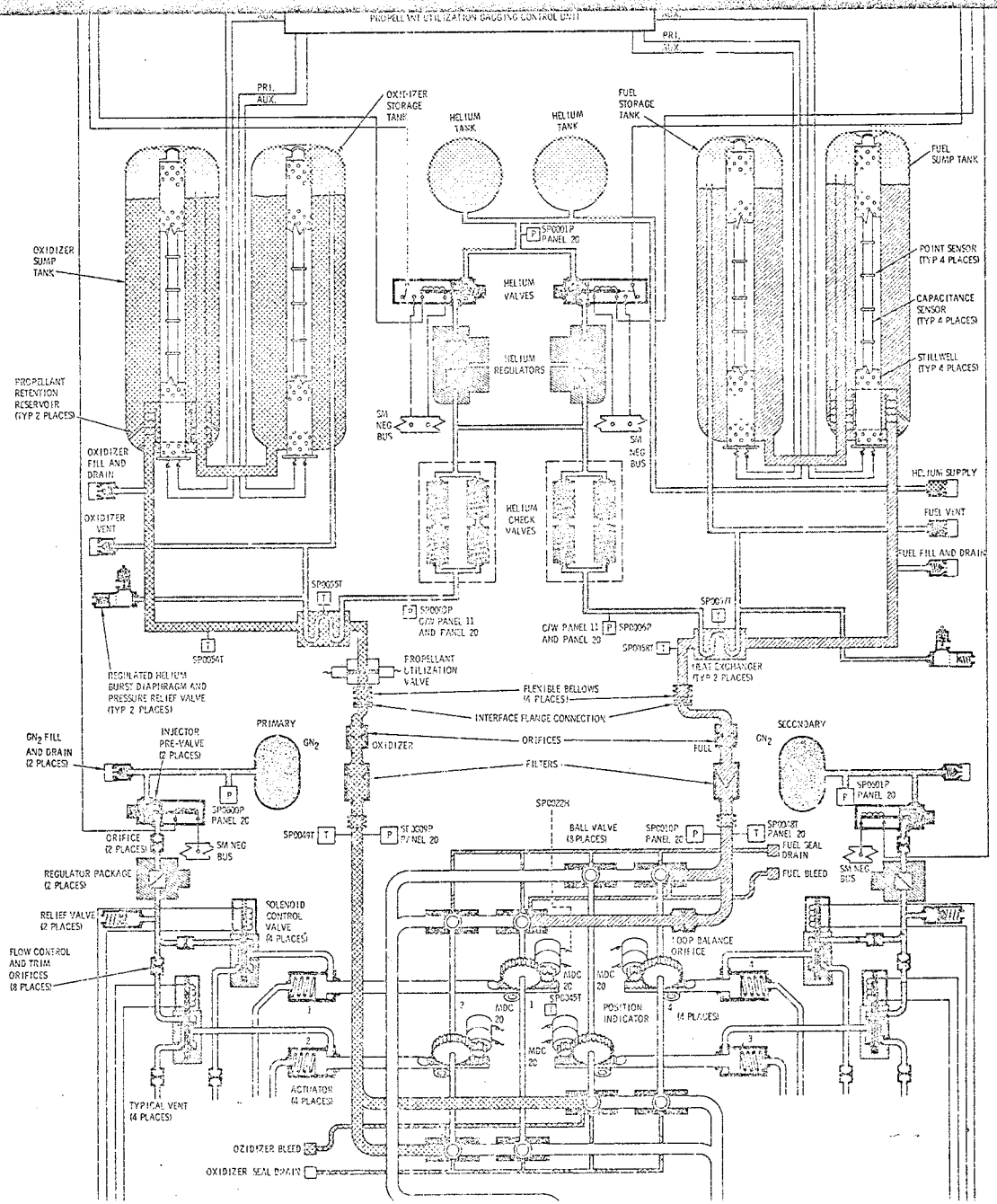
PROPELLANT UTILIZATION GAGING CONTROL UNIT
PRI.
AUX.
OXIDIZER STORAGE TANK
HELIUM TANK
HELIUM TANK
FUEL STORAGE TANK
FUEL SUMP TANK
SP0001P PANEL 20
OXIDIZER SUMP TANK
HELIUM VALVES
POINT SENSOR (TYP 4 PLACES)
CAPACITANCE SENSOR (TYP 4 PLACES)
HELIUM REGULATORS
STILLWELL (TYP 4 PLACES)
PROPELLANT RETENTION RESERVOIR (TYP 2 PLACES)
SM NEG BUS
OXIDIZER FILL AND DRAIN
HELIUM SUPPLY
OXIDIZER VENT
HELIUM CHECK VALVES
FUEL VENT
FUEL FILL AND DRAIN
SP0005T
SP0003P G/W PANEL 11 AND PANEL 20
G/W PANEL 11 AND PANEL 20
SP0006P
SP0007T
SP0054T
SP0058T
HEAT EXCHANGER (TYP 2 PLACES)
REGULATED HELIUM BURST DIAPHRAGM AND PRESSURE RELIEF VALVE (TYP 2 PLACES)
PROPELLANT UTILIZATION VALVE
FLEXIBLE BELLOWS (4 PLACES)
INTERFACE FLANGE CONNECTION
PRIMARY
SECONDARY
GN_2 FILL AND DRAIN (2 PLACES)
INJECTOR PRE-VALVE (2 PLACES)
GN_2
OXIDIZER
ORIFICES
FUEL
GN_2
FILTERS
SP0001P PANEL 20
SP0000P PANEL 20
SP0022H
SP0049T
SP0009P PANEL 20
BALL VALVE (3 PLACES)
SP0010P PANEL 20
SP0038T PANEL 20
ORIFICE (2 PLACES)
SM NEG BUS
FUEL SEAL DRAIN
FUEL BLEED
SM NEG BUS
REGULATOR PACKAGE (2 PLACES)
RELIEF VALVE (2 PLACES)
SOLENOID CONTROL VALVE (4 PLACES)
LOOP BALANCE ORIFICE
FLOW CONTROL AND TRIM ORIFICES (8 PLACES)
MDC 20
MDC 20
SP0045T
MDC 20
MDC 20
POSITION INDICATOR (4 PLACES)
ACTUATOR (4 PLACES)
TYPICAL VENT (4 PLACES)
OXIDIZER BLEED
OXIDIZER SEAL DRAIN

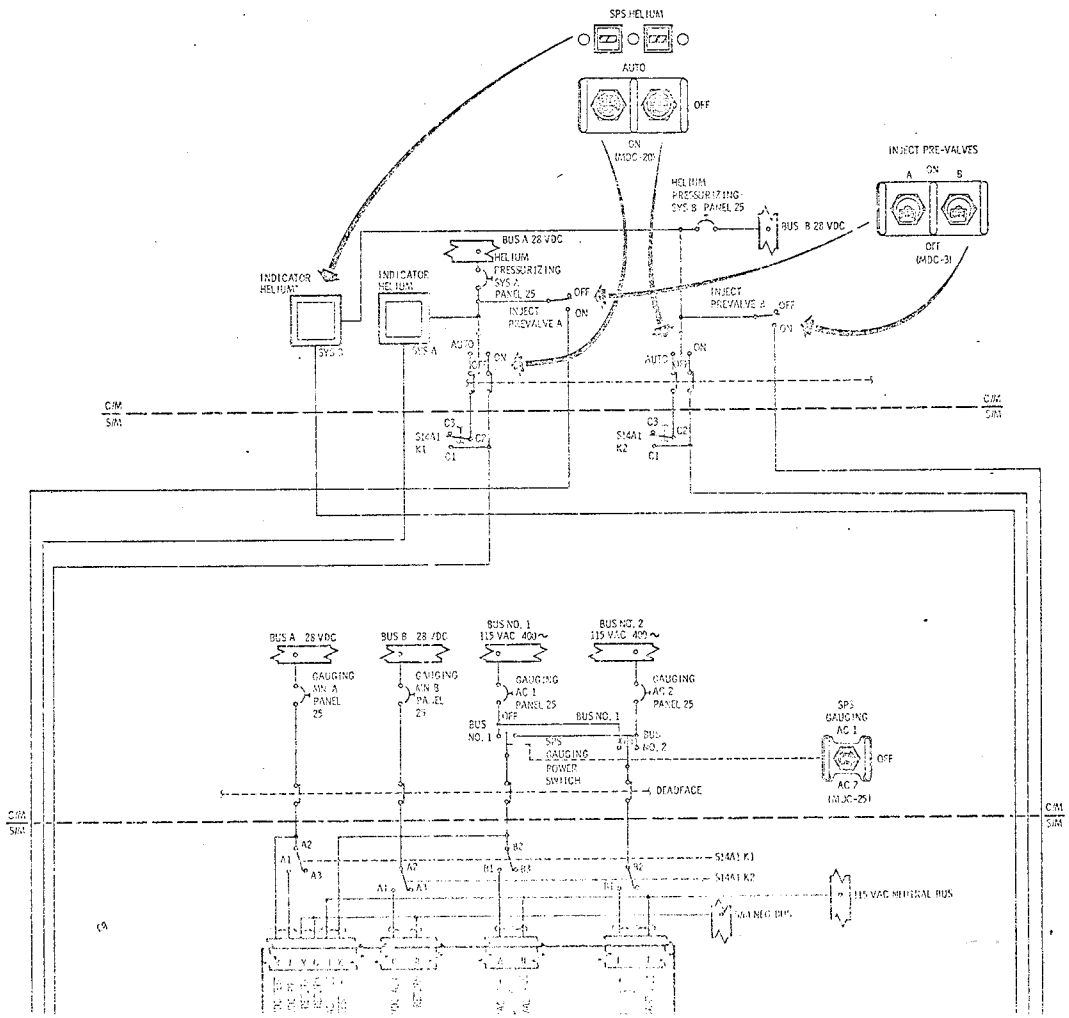
SPS HELIUM
AUTO
OFF
ON
(MDC-20)
INJECT PRE-VALVES
A
ON
B
OFF
(MDC-3)
HELIUM PRESSURIZING SYS B PANEL 25
BUS B 28 VDC
BUS A 28 VDC
HELIUM PRESSURIZING SYS A PANEL 25
INDICATOR HELIUM
INDICATOR HELIUM
SYS B
SYS A
OFF
ON
INJECT PREVALVE A
INJECT PREVALVE B
AUTO
OFF
ON
C/M
S/M
S14A1 K1
S14A1 K2
C3
C2
C1
BUS A 28 VDC
BUS B 28 VDC
BUS NO. 1 115 VAC 400~
BUS NO. 2 115 VAC 400~
GAUGING MN A PANEL 25
GAUGING MN B PANEL 25
GAUGING AC 1 PANEL 25
GAUGING AC 2 PANEL 25
BUS NO. 1
BUS NO. 2
SPS GAUGING POWER SWITCH
DEADFACE
SPS GAUGING AC 1
AC 2
(MDC-25)
OFF
A1
A2
A3
B1
B2
B3
S14A1 K1
S14A1 K2
115 VAC NEUTRAL BUS
28 VDC NEG BUS

2.4.2.1.1 Helium Tanks.

The two helium supply spherical pressure vessels are located in the center section of the service module.

2.4.2.1.2 Helium Pressurizing Valves.

These two continuous duty solenoid-operated valves are normally closed to the helium supply pressure. The valves are energized open and spring-loaded closed. When the helium switches on panel 20 are in the AUTO position, the valves are energized and de-energized by the thrust ON-OFF signal. The valves may be manually controlled by the crew, utilizing the ON and OFF position of the helium switches. Each valve is controlled individually by a separate switch on panel 20.

Each valve contains a position switch which controls a position indicator above each switch on panel 20. When a valve is closed, the position switch is open and the indicator is gray (same color as the panel). When a valve is open, the position switch is closed and the indicator has diagonal lines, indicating the valve is open.

In the event of a failure in the automatic mode of operation, the crew manually enables the pressurizing valve or valves on panel 20. In the event of a problem with one of the regulating units, the crew manually isolates the required pressurizing valve.

2.4.2.1.3 Pressure Regulator Assemblies.

Pressure regulation is accomplished by two pressure regulating units in parallel, downstream of each helium pressurizing valve. Each regulator unit contains a primary and secondary regulator in series, and a pressure surge damper installed on the inlet to each regulating unit.

The primary regulator is normally the controlling regulator, while the secondary is normally open during a dynamic flow condition. The secondary regulator will not become a controlling regulator until the primary, due to a problem, allows a higher pressure than normal, and allows the secondary regulator to function and become the controlling regulator. All regulator pressures are in reference to a bellows assembly that is vented to ambient.

One of the regulating units incorporated in one of the parallel paths is considered the working regulator. The regulating unit in the remaining parallel path is normally locked up when the system is dynamic. The regulator that is normally locked up would not function until the normal regulator allowed the regulated helium pressure to decrease, due to a problem, and allow the normally locked-up regulator to become the functioning regulator.

2.4.2.1.4 Check Valve Assemblies.

Each assembly contains four independent check valves connected in a series-parallel configuration which provides added redundancy. The check valves will not open until there is a 4-psi pressure differential between the check valve assembly inlet and outlet lines.

2.4.2.1.5 Helium Pressure Relief Valves.

The pressure relief valves consist of a relief valve, a burst diaphragm, and a filter.

In this event, excessive helium and/or propellant vapor ruptures the burst diaphragm and the filter (filter is to be a nonfragmentation type) filters any fragmentation. The relief valve opens and vents the applicable system to space, and will close and reseal after the excessive pressure has returned to the operating level. The burst diaphragm provides a more positive seal of helium than a relief valve. The filter prevents any fragments from the diaphragm from entering the relief valve seat.

A pressure bleed device is incorporated between the burst diaphragm and relief valve. The bleed valve vents the cavity between the burst diaphragm and relief valve in the event of any leakage from the diaphragm. The bleed device is normally open and will close when the pressure increases up to a predetermined pressure.

2.4.2.1.6 Heat Exchangers.

Each unit is a line-mounted, counterflow heat exchanger consisting of a portion of the helium pressurization line, coiled helically within an enlarged section of the propellant supply line. This arrangement causes the helium gas, flowing through the coiled line, to approach the temperature of the propellant.

2.4.2.2 Propellant Subsystem.

This subsystem consists of two fuel tanks (storage and sump), two oxidizer tanks (storage and sump), propellant feed lines, and bipropellant valve assembly.

2.4.2.2.1 Propellant Tanks.

The total propellant supply is contained within four hemispherical-domed cylindrical tanks within the service module. The storage tanks are pressurized from the helium supply, and an outlet transfers the propellant and/or helium gas from the storage tanks through their respective transfer lines to the sump tanks. A standpipe, in the sump tanks, allows the propellant and/or helium gas from the storage tanks to pressurize the sump tanks. Thus, the propellants in the sump tanks are directed in the retention reservoirs, to the outlet, and then to the engine.

The retention reservoirs are installed in the exit end of the sump tanks only. The umbrella propellant retention screens retain a quantity of propellant in the exit end of the sump tanks, in addition to retaining propellant within the retention reservoir can and in the plumbing from the sump tank outlet to the bipropellant valve of the SPS engine during zero g conditions. An ullage maneuver must be performed prior to a thrust-on signal to the SPS engine by the S/M RCS. The ullage maneuver is performed to ensure that no gases are retained below or aft of the retention screens, in addition to settling the propellants and ensuring that the retention screens are not damaged.

2.4.2.2.2 Tank Propellant Feed Lines.

The propellant feed lines have flexible bellows assemblies installed to permit alignment of the tank feed plumbing to the engine interface plumbing.

2.4.2.3 Bipropellant Valve Assembly.

The bipropellant valve assembly consists of two gaseous nitrogen (GN_2) pressure vessels, two injector prevalves, two GN_2 regulators, two GN_2 relief valves, four solenoid control valves, four actuators, and eight propellant ball valves.

2.4.2.3.1 Gaseous Nitrogen (GN_2) Pressure Vessels.

Two GN_2 tanks are mounted on the bipropellant valve assembly that supply pressure to the injector prevalves. One GN_2 tank is in the primary pneumatic control system A and the remaining GN_2 tank is in the secondary pneumatic control system B.

2.4.2.3.2 Injector Prevalves.

The injector prevalves are two-position solenoid-operated valves, one for each pneumatic control system and identified as A and B. The valve is energized open and spring-loaded closed. The injector prevalve is opened upon command from the crew, panel 3, prior to an engine thrusting period. The injector prevalves energized open allows GN_2 supply tank pressure to flow to an orifice and on into the regulator.

2.4.2.3.3 GN_2 Pressure Regulators.

A single-stage regulator is installed in each pneumatic control system between the injector prevalves and the solenoid control valves. The regulator reduces the supply GN_2 pressure to a desired working pressure.

2.4.2.3.4 GN_2 Relief Valves.

A pressure relief valve is installed in each pneumatic control system, downstream of the GN_2 pressure regulators, to limit the pressure applied to the solenoid control valves in the event a GN_2 pressure regulator malfunctioned open. The orifice, between the injector prevalve and regulator, is installed to restrict the flow and allow the relief valve to relieve the pressure in event the regulator fails to open, preventing any damage to the solenoid control valves and/or actuators.

2.4.2.3.5 GN_2 Solenoid Control Valves.

Four solenoid-operated, three-way, two-position control valves are utilized for actuator control. Two solenoid control valves are located downstream of the GN_2 regulators in each pneumatic control system. The two solenoid control valves in the primary system are identified in 1 and 2, and the two in the secondary system are identified as 3 and 4. The two solenoid control valves in the primary system control the actuator and ball valves 1 and 2. The two solenoid control valves in the secondary system control the actuator and ball valves 3 and 4. The SPS thrust ON-OFF command controls the energizing or de-energizing of all four solenoid control valves.

2.4.2.3.6 GN_2 Ball Valve Actuators.

Four piston-type, pneumatically operated actuators are utilized to control the eight propellant ball valves. Each actuator piston is mechanically connected to a pair of propellant ball valves; one fuel and one oxidizer. When the solenoid control valves are opened, pneumatic pressure is applied to the opening side of the actuators. The spring pressure, on the closing side, is overcome and the actuator piston moves. Utilizing a rack and pinion gear, linear motion of the actuator connecting arm is converted into rotary motion, which opens the propellant ball valves. When the engine firing signal is removed from the solenoid control valves, the solenoid control valves close removing pneumatic pressure source from the opening side of the actuators. The actuator closing side spring pressure now forces the actuator piston to move in the opposite direction, causing the propellant ball valves to close. The piston movement forces the remaining GN_2, on the opening side of the actuator, back through the solenoid control valves where they are vented overboard.

2.4.2.3.7 Bipropellant Valves.

The eight propellant ball valves are used to distribute fuel and oxidizer to the engine injector assembly. Four linked pairs, each pair consisting of one fuel and one oxidizer ball valve controlled by a single actuator, are arranged in a series-parallel configuration. The parallel arrangement provides redundancy to ensure engine ignition, and the series arrangement to ensure thrust termination. When the actuators

are opened, each propellant ball valve is rotated, thereby aligning the ball to a position that allows propellants to flow to the engine injector assembly. The mechanical arrangement is such that the oxidizer ball valves maintain an 8-degree lead over the fuel ball valves upon opening, which results in smoother engine starting transients. Each pair of propellant valves incorporates a potentiometer drive gear and housing. Each housing contains two potentiometers that are mechanically driven: one provides an electrical signal converted into a visual indication of valve position of panel 20, and the remaining provides a signal to telemetry.

2.4.2.3.8 Engine Propellant Lines.

Integral propellant lines are utilized, on the engine, to route each propellant from the interface points in the gimbal plane area to the propellant engine gimbaling, orifices for adjustment of oxidizer/fuel ratio, and screens for keeping particle contaminants from entering the engine.

2.4.2.4 Engine Injector.

The injector is bolted to the ablative thrust chamber attach pad. Propellant distribution to the injector orifices, on the combustion face of the injector, is accomplished through concentric annuli machined in the face of the injector assembly and covered by concentric closeout rings. Propellant distribution to the annuli is accomplished through alternate radial manifolds welded to the backside of the injector body. The injector is regeneratively cooled and baffled to provide combustion stability. The fuel and oxidizer orifices impinge upon each other, atomize, and ignite due to hypergolic reaction.

2.4.2.5 Ablative Combustion Chamber.

The ablative combustion chamber material extends from the injector attach pad to the nozzle extension attach pad. The ablative material consists of a liner, a layer of insulation, integral metal attach flanges for mounting the injector and nozzle extension, and structural outer reinforcement. The only restriction on a restart is dependent upon the SPS WALL TEMP HI caution and warning light, on panel 11, monitoring the outside wall temperature at the throat.

2.4.2.6 Nozzle Extension.

The bell-contoured, nozzle extension is bolted to the ablative thrust chamber exit area. The nozzle extension is radiant-cooled and contains an external stiffener to provide additional strength.

2.4.2.7 Flight Combustion Stability Monitor (FCSM).

The FCSM ia an accelerometer package, mounted to the SPS engine injector, to monitor the engine for vibration buildup characteristic of combustion instability.

The three accelerometers provide signals into an FCSM box assembly which amplifies it and, when the vibration g-level exceeds 180 g's peak to peak for 70±20 milliseconds, a level detector triggers a power switch gating power to the summing logic. The stability monitor will monitor only in a frequency range where instability would occur (approximately 600 to 5000 cycles per second).

The summing logic, if there are two or more rough combustion signals received from the normally closed contacts, will open removing power from the G&N and SCS driver logic; and will close the normally open contacts providing a ground to the SPS ROUGH ECO caution and warning light, on panel 10, informing the crew the SPS engine was shut down due to combustion instability.

The FCSM trigger circuits will provide power to the voting logic relays continuously once unstable combustion is sensed; and power remains applied to the voting logic relays even though the engine is shut down, unstable combustion is no longer sensed, and the SPS ROUGH ECO remains illuminated.

When the engine is shut down to unstable combustion and to remove power from the voting logic relays, the crew would place any one of the following switches to the position indicated to reset the FCSM voting logic:

a. AUTO-OVERRIDE switches to OVERRIDE.
b. ΔV switch to OFF.
c. ATTITUDE-MONITOR-ENTRY switch to either MONITOR or ENTRY.
d. FCSM SCS and G&N switches to RESET/OVERRIDE.

When the FCSM is reset, the SPS ROUGH ECO light on panel 10 will not be illuminated.

The RESET/OVERRIDE switches, on panel 2, provide a bypass capability of the FCSM system. With the FCSM RESET/OVERRIDE switches, on panel 2, in the RESET/OVERRIDE position, power is not provided to the FCSM box and summing logic assemblies rendering the FCSM inoperative as well as the SPS ROUGH ECO caution and warning light on panel 10. If unstable combustion occurs, the engine continues to thrust.

The FCSM box assembly and summing logic assembly receives power from the SCS through the following switches:

a. Mode select switch to G&N or SCS mode, panel 8.
b. ATTITUDE-MONITOR-ENTRY switch to ATTITUDE, panel 8.
c. ΔV switch to ΔV position, panel 8.
d. FCSM G&N, RESET/OVERRIDE switch to G&N position, panel 2.
e. FCSM SCS, RESET/OVERRIDE switch to SCS position, panel 2

2.4.2.8 SPS Electrical Heaters.

Twenty-six electrical strip heaters are employed on the propellant line brackets, fuel and oxidizer heat exchangers, propellant utilization valve, bipropellant valve assembly, and the injector tubes. These electircal strip heaters are employed to control the temperature of the entire aft bulkhead and engine areas, thus the propellants.

The strip heaters are controlled as a normal manual function of the crew, on panel 19 (figure 2.4-2), utilizing the SPS HEATER switch. The crew will place the switch to position A or B when the propellant temperature indicator, on panel 20, reads - 40°F (lower red line indication) which is equivalent to a propellant temperature of +40°F. The propellant temperature readout is derived from the engine fuel-feed line measurement (figure 2.4-1). The crew will place the SPS HEATER switch to OFF when the propellant temperature indicator, on panel 20, reads +80°F (upper red line indication) which is equivalent to a propellant temperature of +120°F.

Propellant Temperature Comparison

Propellant Temperature Indicator Reading °F															
-100	-80	-60	-40	-20	0	+20	+40	+60	+80	+100	+120	+140	+160	+180	+200
Equivalent Temperature °F															
+0	+13.33	+26.67	+40	+53.34	+66.67	+80	+93.34	+106.67	+120	+133.34	+146.67	+160	+173.34	+186.67	+200

When the SPS HEATER switch is placed to position A, all 26 heating elements (A) will receive 28 vdc. When the SPS HEATER switch is placed to position B, all 26 heating elements (B) will receive 28 vdc. The OFF position of the SPS HEATER switch removes all electrical power from the SPS heating elements.

2.4.2.9 Thrust Mount Assemblies.

The thrust mount assembly consists of a gimbal ring, engine-to-vehicle mounting pads, and gimbal ring-to-combustion chamber assembly supports. The thrust structure is capable of providing ±8.5 degrees inclination about the Z-axis and ±7.5 degrees about the Y-axis.

2.4.2.9.1 Gimbal Actuator.

Thrust vector control of the service propulsion engine is achieved by dual-, servo-, electro-mechanical actuators. The gimbal actuators are capable of providing control around the Z-Z axis (yaw) of 7 (+1/2, -0) degrees in either direction from a +4-degree null offset, and around the Y-Y axis (pitch) of 6(+1/2, -0) degrees in either direction from a zero-degree null offset. The reason for the 4-degree offset to the +Y axis is due to the offset center of mass in the spacecraft.

Each actuator assembly (figure 2.4-3) consists of four electromagnetic particle clutches, two d-c motors, a bull gear, jackscrew and ram, ball nut, four linear position transducers, and two velocity generators. The actuator assembly is a sealed unit and enclose those portions protruding from the main housing.

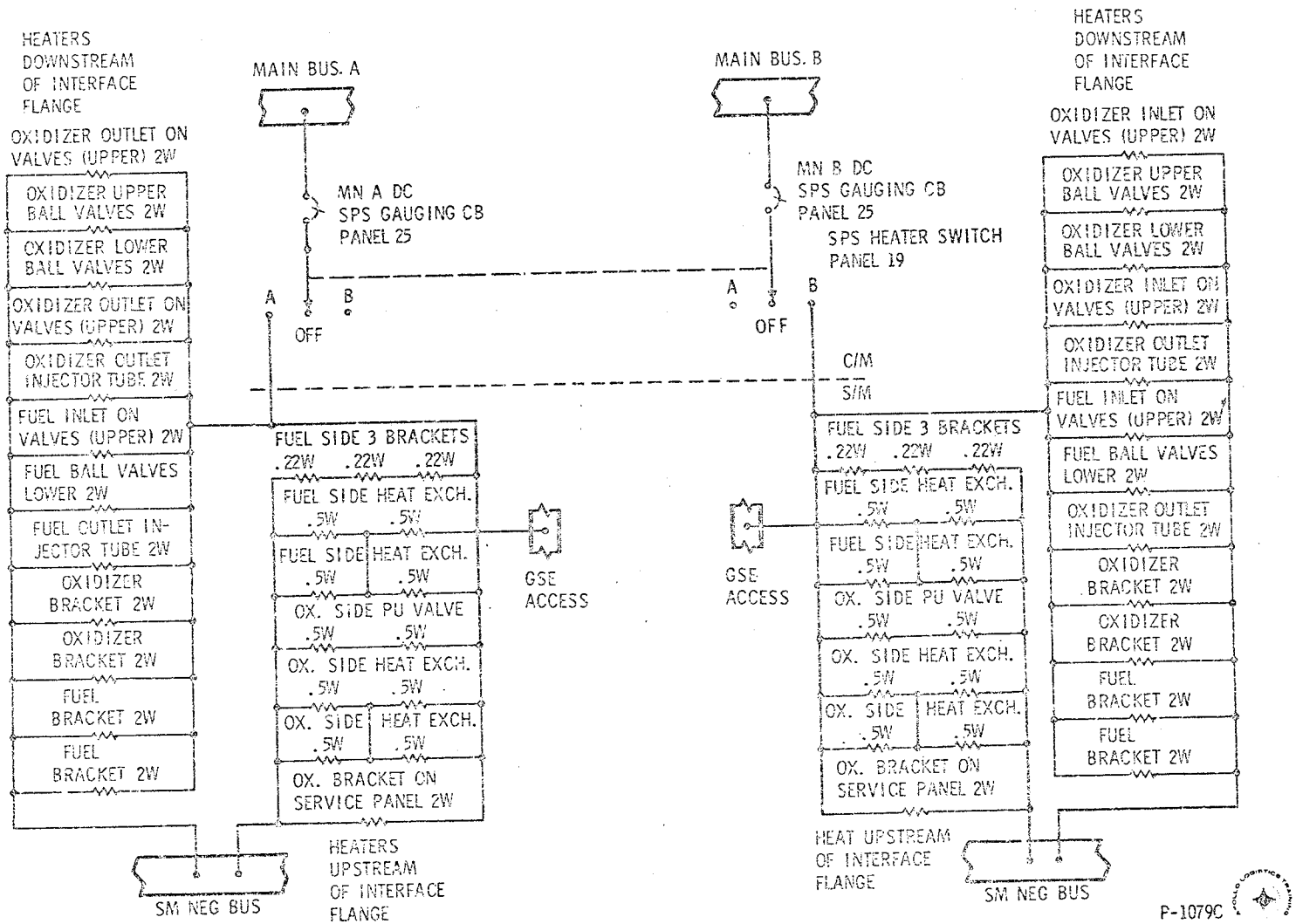

Figure 2.4-2. SPS Electrical Heaters

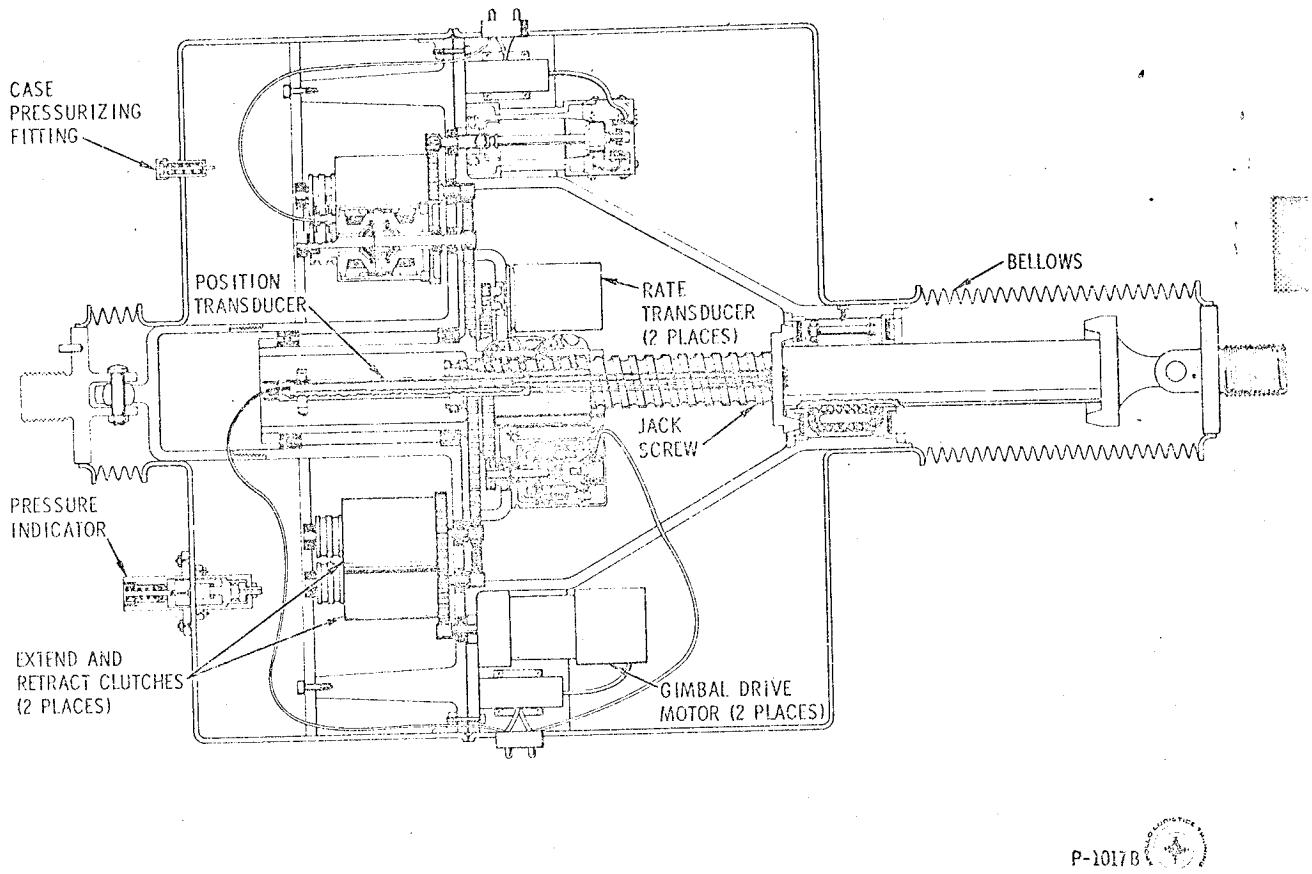

Figure 2.4-3. SPS Electro-Mechanical Gimbal Actuator

One motor and a pair of clutches (extend and retract) are identified as system No. 1, and the remaining motor and pair of clutches (extend and retract) are identified as system No. 2 within the specific actuator.

An over and undercurrent relay is employed for each primary gimbal motor (figure 2.4-4), and is controlled individually by a switch on panel 3. When the primary GIMBAL MOTORS switches are placed to the START position, power is applied to the motor-driven switch within the over and undercurrent relay of the primaries. The motor switch then supplies power from the main bus A to the gimbal motor. When the switch is released, it spring-loads to the ON position which activates the over and undercurrent sensing circuitry of the primary relay which monitors the current to the gimbal motor.

The over and under current relay of the primaries are utilized to monitor the current to the gimbal motor due to the variable current flow to the gimbal motor that is dependent upon the gimbal angle change required.

Using No. 1 yaw system as an example, and identifying the upper motor and clutches in figure 2.4-3 as system No. 1, the operation of the current monitoring system is as follows:

a. If the relay senses an over or undercurrent to gimbal motor No. 1, the monitor circuitry within the relay will drive the motor-driven switch, removing power from gimbal motor No. 1.

b. Simultaneously, a fail sense signal is sent from the relay, the SCS, which opens relay K13 removing inputs from the No. 1 clutches and closes relay K14 applying inputs to the No. 2 clutches within the same actuator; and the top contact of K12 opens and the bottom contact of K12 closes for TVC monitor.

c. Simultaneously a signal is sent to illuminate a caution and warning light on panel 11, to indicate the primary gimbal motor has failed.

The primary switches on panel 3 are then placed in the OFF position. Normally the OFF position is used to shut down the gimbal motors upon the completion of a thrusting period.

The No. 2 systems employ a 70-amp circuit breaker that is located in the service module near the SPS power distribution box.

Using No. 2 yaw system as an example (figure 2.4-4), the operation of the current monitoring system is as follows:

a. When the secondary GIMBAL MOTORS switches are placed to the START position, power is applied to the motor-driven switch within the over and undercurrent relay of the secondaries. The motor switch then supplies power from the main bus B through the 70-amp circuit breaker, and through the motor-driven switch to the secondary gimbal motor.

b. When the secondary switch is released, it spring-loads to the ON position which performs no functions on the secondaries.

c. The 70-amp circuit breaker will monitor the current to the secondary gimbal motor; and if a current of 70 amps is sensed, the circuit breaker in the service module will remove power from the secondary gimbal motor.

d. There is no fail sense signal sent to the stabilization and control system, and no illumination of the caution and warning light on panel 11 from the secondary system.

e. If the No. 2 system has failed due to an overcurrent, the circuit breaker removes power from gimbal motor No. 2 only, and that specific actuator is inoperative if the No. 1 system has previously failed.

The secondary switches on panel 3 are then placed to OFF position. Normally, the OFF position is used to shut down the gimbal motors upon the completion of a thrusting period.

The clutches are of a magnetic particle type. The gimbal motor drive gear meshes with the gear on the clutch housing. The gears on each clutch housing mesh and as a result, the clutch housings counterrotate. The current input is applied to the electro-magnet mounted to the rotating clutch housing from the stabilization control system or in the guidance and navigation system through the stabilization control system. A quiescent

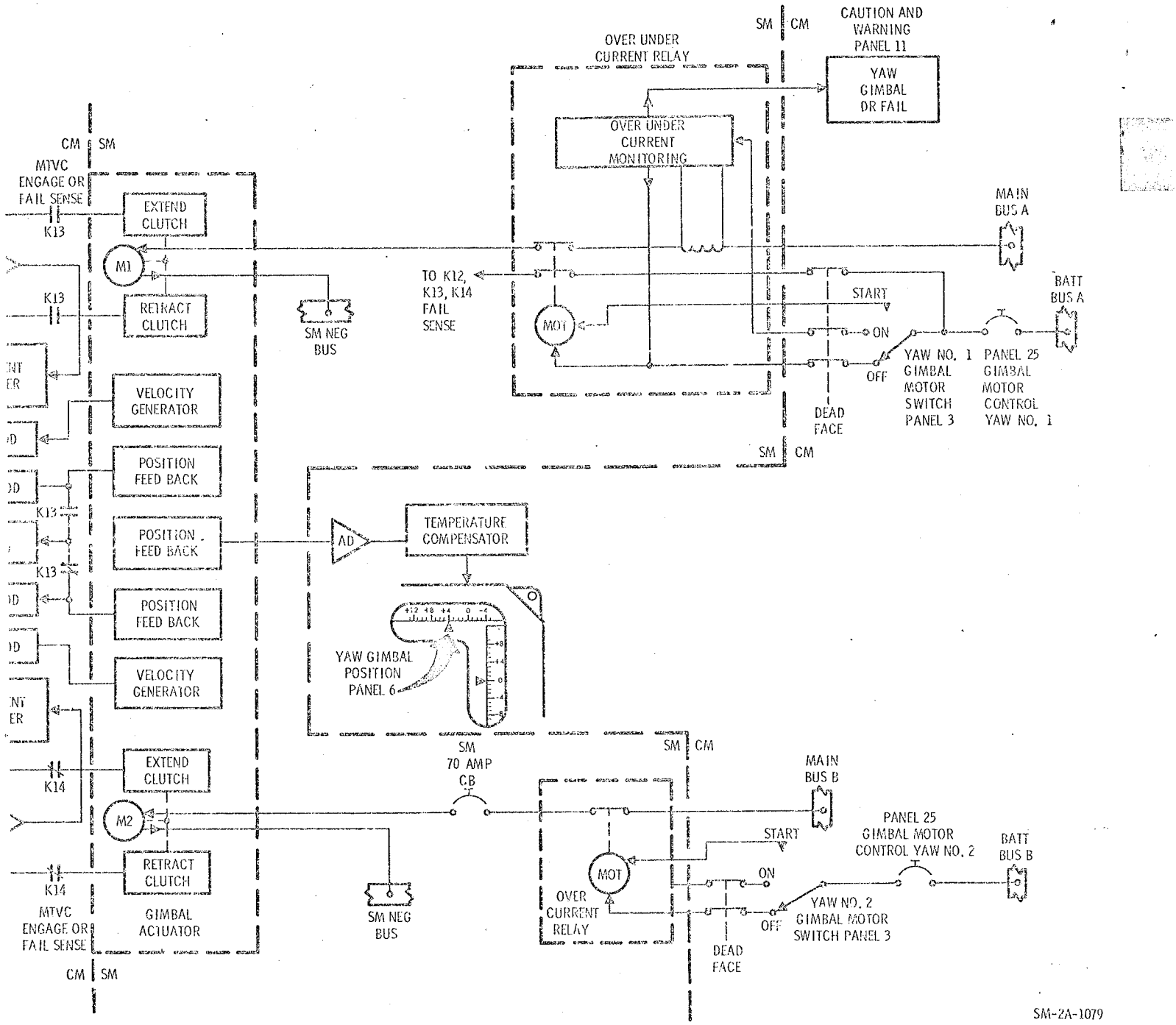

Figure 2.4-4. SPS Yaw Gimbal Actuator Motor and Clutch Control

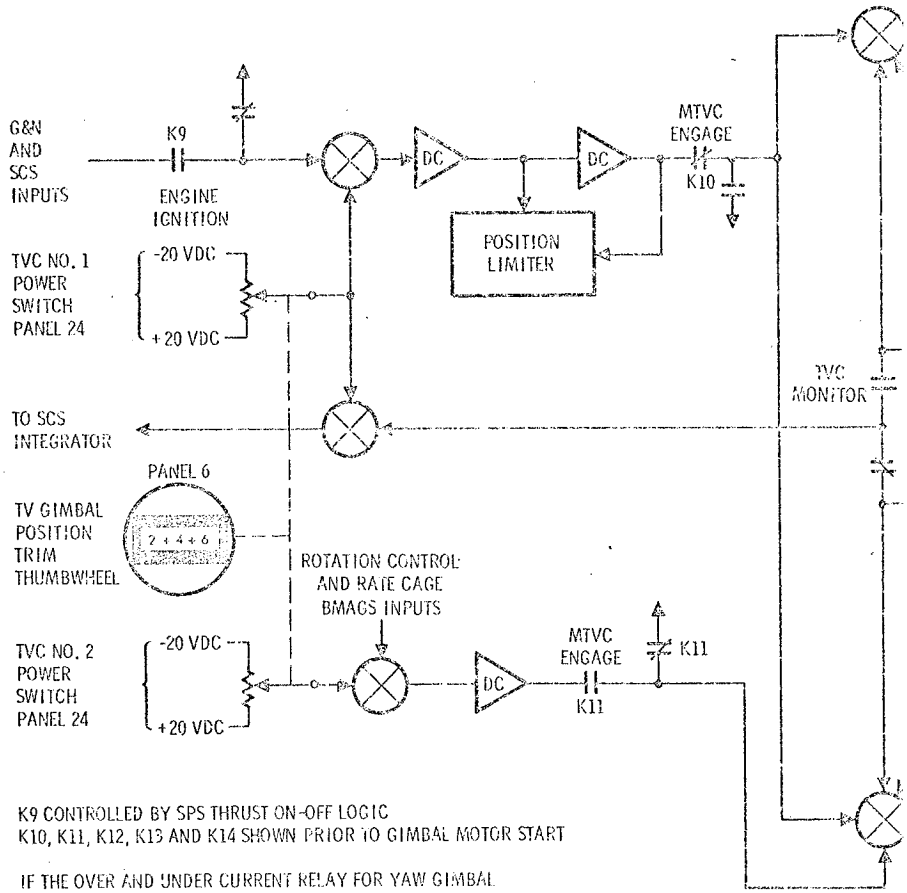

K9 CONTROLLED BY SPS THRUST ON-OFF LOGIC
K10, K11, K12, K13 AND K14 SHOWN PRIOR TO GIMBAL MOTOR START

IF THE OVER AND UNDER CURRENT RELAY FOR YAW GIMBAL MOTOR NO. 1 SENSES AN OVER OR UNDER CURRENT, THE RELAY SIGNAL OPENS K13 TO CLUTCHES, K13 TOP CONTACT OPENS LOWER CLOSES FOR TLM, K13 CLOSES TO CLUTCHES, K12 TOP CONTACT OPENS, LOWER CLOSES.

K10, K11, K13 and K14 ARE ALSO CONTROLLED BY CLOCKWISE ROTATION OF TRANSLATION CONTROL WITH DELTA V MODE SELECTED REFERRED TO AS MANUAL THRUST VECTOR CONTROL

current is applied to the electro-magnet of the extend and retract clutches when the thrust vector POWER switches, on panel 24, are on, which prevents the engine from moving during the boost phase of the mission with the gimbal motors OFF. A 246 foot-pound force would be required on the engine to overcome the quiescent current (equivalent to 1.53 g) in the clutches. The gimbal motors will be turned on, prior to jettisoning the launch escape tower, to support the SPS abort criteria after the launch escape tower has been jettisoned, and will be turned OFF as soon as possible to reduce the heat problem that occurs due to the gimbal motors driving the clutch housings. With quiescent current applied, it creates a friction force in the clutch housing that creates heat, which if allowed to rise to a high temperature the electro-magnet would loose its magnetism capability; thus rendering that set of clutches inoperative. This problem occurs only during boost, not during the normal SPS burns.

Prior to any thrusting periods the thumbwheels on panel 6 can be used to position the engine. The thrust-on signal may be provided by the G&N through the SCS, or by SCS only. In either mode the current input required (to maintain the engine thrust vector through the center of mass) to the clutches will increase above the quiescent current which increases the current in the electro-magnets that are rotating with the clutch housings. The dry powder magnetic particles have the ability to become magnetized very readily as well as becoming demagnetized as readily. The magnetic particles increase the friction force between the rotating housing and the flywheel, causing the flywheel to rotate. The flywheel arrangement is attached to the clutch output shaft allowing the clutch shaft to drive the bull gear. The bull gear drives a ball nut which drives the actuator jack-shaft to an extend or retract position, depending upon which clutch housing electro-magnet the current input is supplied to. The larger the excitation current, the higher the clutch shaft rotation rate.

Meshed with the ball nut pinion gear are two rate transducers of the tachometer type. When the ball nut is rotated, the rate transducer supplies a feedback into the summing network of the thrust vector control logic to control the driving rates of the jackscrew (acting as a dynamic brake to prevent over or undercorrecting), one transducer for each system.

The jackscrew contains four position transducers, all arranged for linear motion and all connected to a single yoke. One of the position transducers is used to provide a feedback to the summing network of transducer feedback. The two feedbacks to the summing network reduce the output current to the clutch, resulting in a proportional rate change to the desired gimbal angle position and returns to a quiescent current.

One position transducer provides a signal to the visual display on panel 6. One of the position transducers provides a feedback to the redundant summing network of the thrust vector logic for the redundant clutches. The remaining position transducer is not presently utilized.

The spacecraft desired motion, thumbwheel positioning, engine nozzle position, thrust vector position, gimbal position display indicator and actuator ram movement is identified in figure 2.4-5.

A snubbing device provides a hard stop for an additional 1-degree travel beyond the normal gimbal limits.

Manual thrust vector control may be obtained by the crew placing the translation control clockwise. This will open contacts K10 and K13 and close contacts K11 and K14, allowing the rotation control to provide the crew with manual thrust vector control.

2.4.2.10 Propellant Utilization and Gauging Subsystem (PUGS).

The subsystem consists of eight propellant quantity sensors, a propellant utilization valve, a control unit, and a display unit (figures 2.4-6 and 2.4-7).

2.4.2.10.1 Quantity Sensing, Computing, and Indicating System.

Propellant quantity is measured by two separate sensing systems: primary and auxiliary. The primary quantity sensors are cylindrical capacitance probes, mounted axially in each tank. In the oxidizer tanks, the probes consist of a pair of concentric electrodes with oxidizer used as the dielectric. In the fuel tanks, a pyrex glass probe, coated with silver on the inside, is used as one conductor of the capacitor. Fuel on the outside of the probe is the other conductor. The pyrex glass itself forms the dielectric. The auxiliary system utilizes point sensors mounted at intervals along the primary probes to provide a step function impedance change when the liquid level passes their location centerline.

Primary propellant measurement is accomplished by the probes capacitance being a linear function of propellant height.

Auxiliary propellant measurement is accomplished by locating the propellant level with point sensors. Each point sensor consists of concentric metal rings, seven in the storage tanks and eight in the sump tanks. The rings present a variable impedance, depending on whether they are covered or uncovered by the propellants. When the propellants are between point sensors, the propellants remaining are integrated by a rate flow generator which integrates the servos at a rate proportional to the normal flow rate of the fuel and oxidizer. A mode selector senses when the propellant crosses a sensor and changes the auxiliary servos from the flow rate generator mode to the position mode, the system moves to the location specified by the digital-to-analog converter for 3/4 second to correct for any difference. The system then returns to the flow rate generator mode until the next point sensor is reached. Figures 2.4-8 and 2.4-9 illustrate point sensor locations that are covered by propellants. The nonsequential pattern detector functions to detect false or faulty sensor signals. If a sensor has failed, the information from that sensor is blocked from the system, preventing disruption of system computation.

S/C MOTION DESIRED BY THE CREW	THUMB WHEEL POSITIONED ON PANEL ASSEMBLY 6 TO A	ENGINE NOZZLE MOVES TOWARDS THE	THE THRUST VECTOR OF THE ENGINE MOVES TOWARDS THE	GIMBAL POSITION INDICATOR ON PANEL ASSEMBLY 6 MOVES TO A	ACTUATOR RAM
S/C NOSE DOWN (PITCH)	+ NUMERAL (UP)	+ Z AXIS OF THE S/C	- Z AXIS OF THE S/C	+ NUMERAL	PITCH EXTENDS
S/C NOSE UP (PITCH)	- NUMERAL (DOWN)	- Z AXIS OF THE S/C	+ Z AXIS OF THE S/C	- NUMERAL	PITCH RETRACTS
S/C RIGHT (YAW)	- NUMERAL (RIGHT)	+ Y AXIS OF THE S/C	- Y AXIS OF THE S/C	- NUMERAL	YAW RETRACTS
S/C LEFT (YAW)	+ NUMERAL (LEFT)	- Y AXIS OF THE S/C	+ Y AXIS OF THE S/C	+ NUMERAL	YAW EXTENDS

THE ACTUATOR NULL POSITION IN YAW IS 4° OFFSET FROM THE S/C X AXIS DUE TO THE ENGINE MOUNTING PADS IN THE SERVICE MODULE BEING CANTED (BLOCK I VEHICLES)

THE THRUST VECTOR IS 4° TO THE +Y AXIS OF THE S/C AND THE ENGINE NOZZLE IS 4° TO THE -Y AXIS OF THE S/C.

AS A RESULT THE GIMBAL POSITION INDICATOR ON PANEL ASSEMBLY 6 WILL INDICATE A +4° WHEN THE ACTUATORS ARE IN THE NULL POSITION.

TO PARALLEL THE THRUST VECTOR AND THE ENGINE NOZZLE WITH THE X AXIS OF THE S/C, THE YAW THUMB WHEEL ON PANEL ASSEMBLY 6 MUST BE POSITIONED TO 0° AND AS A RESULT THE YAW POSITION INDICATOR ON PANEL ASSEMBLY 6 WILL INDICATE 0°.

IN THIS CASE, THE YAW ACTUATOR IS NO LONGER IN ITS NULL POSITION IN RESPECT TO THE GIMBAL RING.

THE THRUST VECTOR AND THE ENGINE NOZZLE ARE NOW PARALLEL TO THE X AXIS OF THE S/C

THE ACTUATOR NULL POSITION IN PITCH IS 0° (BLOCK I VEHICLES).

P-1073 A

Figure 2.4-5. Gimbaling of the Service Propulsion Engine

When a THRUST-ON signal is provided with the SENSOR select switch in the PRIMARY or NORMAL position, the crew display digital readouts, and unbalance display will not change for 4.5±1.0 seconds to allow for propellant settling. However, TLM will receive the same signal as upon completion of the last firing after approximately one second of SPS THRUST-ON.

When the THRUST-ON signal is provided with the SENSOR select switch in AUXILIARY position, the crew display digital readouts and TLM will receive a change in information immediately which is generated from a flow rate integrator that simulates the nominal flow rate and transmits this as quantity information to the crew displays and TLM. The crew digital readouts, unbalance display, and TLM will not be updated to the propellant from a point sensor for 4.5±1.0 seconds after THRUST-ON. When the THRUST-ON signal is provided plus 4.5±1.0 seconds, if a point sensor is uncovered the crew digital readouts, unbalance display, and TLM will be updated to the propellant remaining at that point sensor. The time delay of 4.5±1.0 seconds is to the point sensor system and not to the auxiliary fuel and oxidizer servos, and is to allow for propellant settling.

Any deviation from the nominal oxidizer to fuel ratio (2:1 by mass) is displayed in pounds by the UNBALANCE indicator. The upper half of the indicator is marked INC, and the lower half is marked DEC to identify the required change in oxidizer flow rate to correct any unbalance condition.

When the SENSOR select switch is in the NORMAL position, the outputs of both sensor systems are continually compared in the comparator network. If a discrepancy occurs between total primary and total auxiliary fuel of 300 pounds, or a discrepancy between total primary oxidizer and auxiliary oxidizer of 300 pounds, the caution and warning indicator on panel 11 is illuminated. The output of the oxidizer sump tank servo amplifier and the primary potentiometer of the unbalance indicator are compared in the comparator network, and if 300 pounds or 90 percent of the critical unbalance indicated versus time remaining is reached (figure 2.4-10), the caution and warning light on panel 11 is illuminated.

With the SENSOR select switch in the PRIMARY position, the output of the oxidizer sump tank servo amplifier and the output of the primary potentiometer in the unbalance meter are compared in the comparator network and if 300 pounds or 90 percent of the critical unbalance indicated versus time remaining is reached, the caution and warning light on panel 11 is illuminated.

With the SENSOR select switch in the AUXILIARY position, the output of the auxiliary oxidizer servo amplifier and the output of the auxiliary potentiometer are compared in the comparator network, and if 300 pounds or 90 percent of the critical unbalance indicated versus time remaining is reached (figure 2.4-10), the caution and warning light on panel 11 is illuminated.

G AND INDICATING SYSTEM

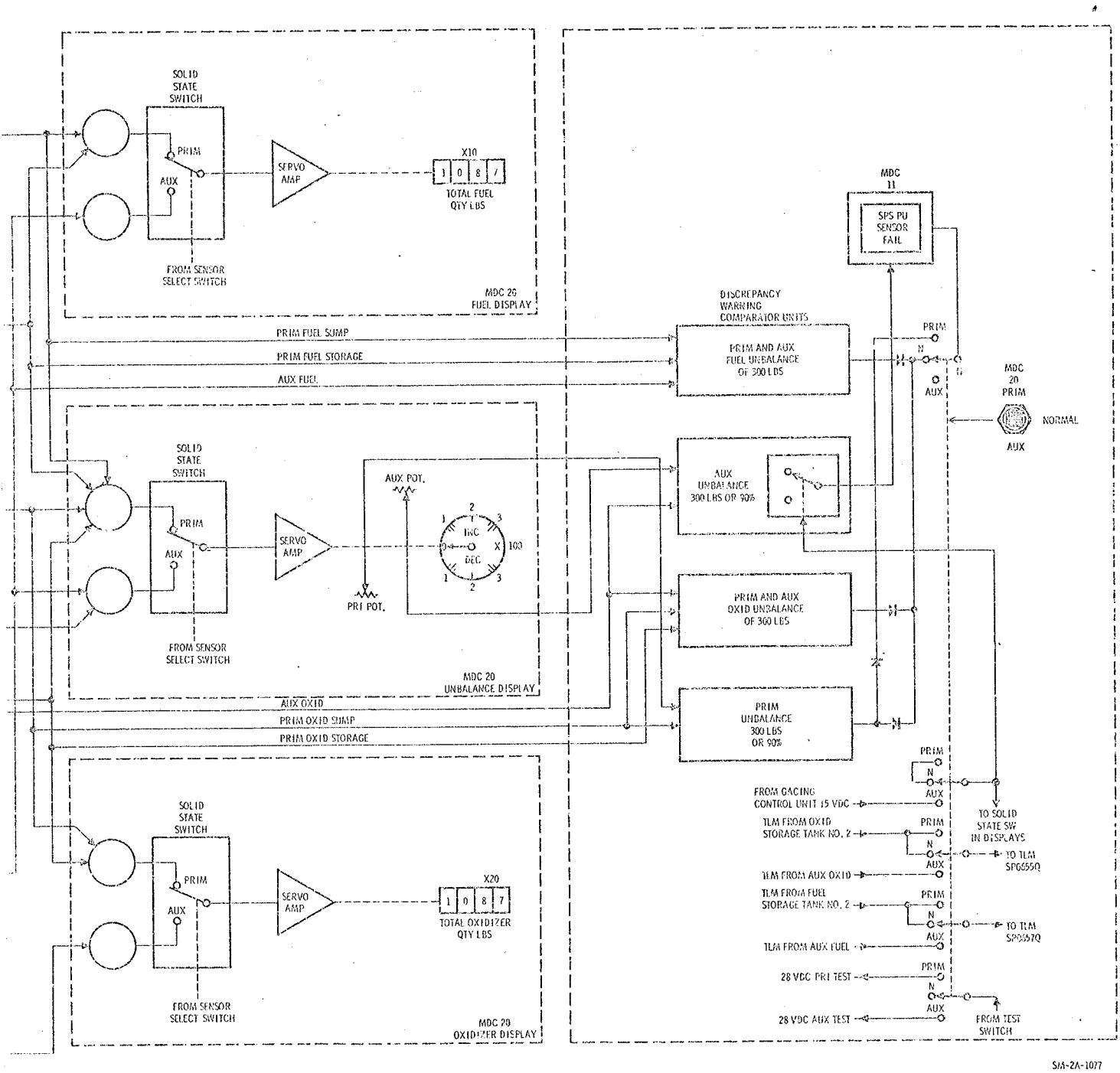

Figure 2.4-6. SPS Quantity Sensing, Computing and Indicating System

SPS QUANTITY SENSING, COMP

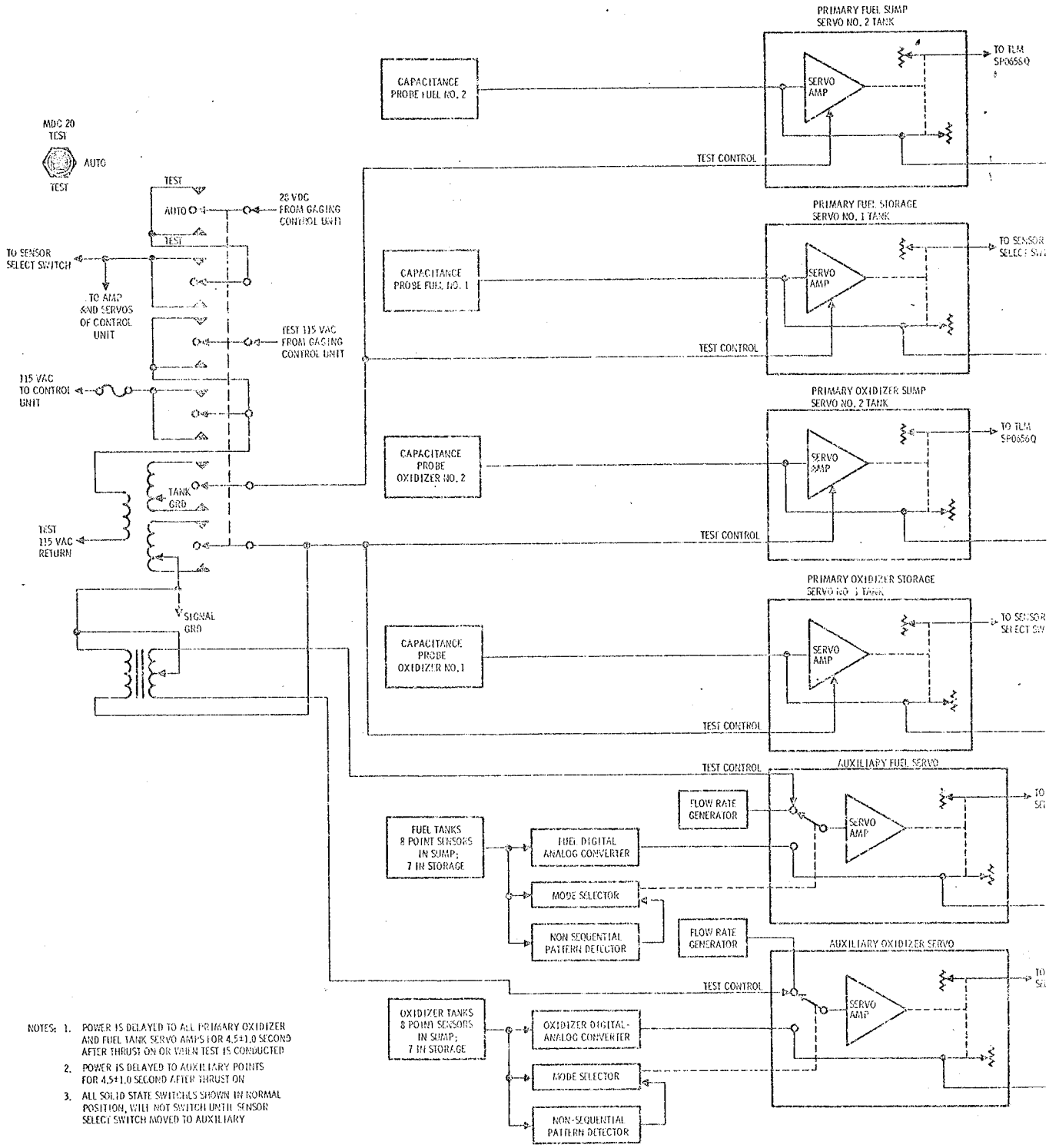

NOTES:
1. POWER IS DELAYED TO ALL PRIMARY OXIDIZER AND FUEL TANK SERVO AMPS FOR 4.5±1.0 SECOND AFTER THRUST ON OR WHEN TEST IS CONDUCTED
2. POWER IS DELAYED TO AUXILIARY POINTS FOR 4.5±1.0 SECOND AFTER THRUST ON
3. ALL SOLID STATE SWITCHES SHOWN IN NORMAL POSITION, WILL NOT SWITCH UNTIL SENSOR SELECT SWITCH MOVED TO AUXILIARY

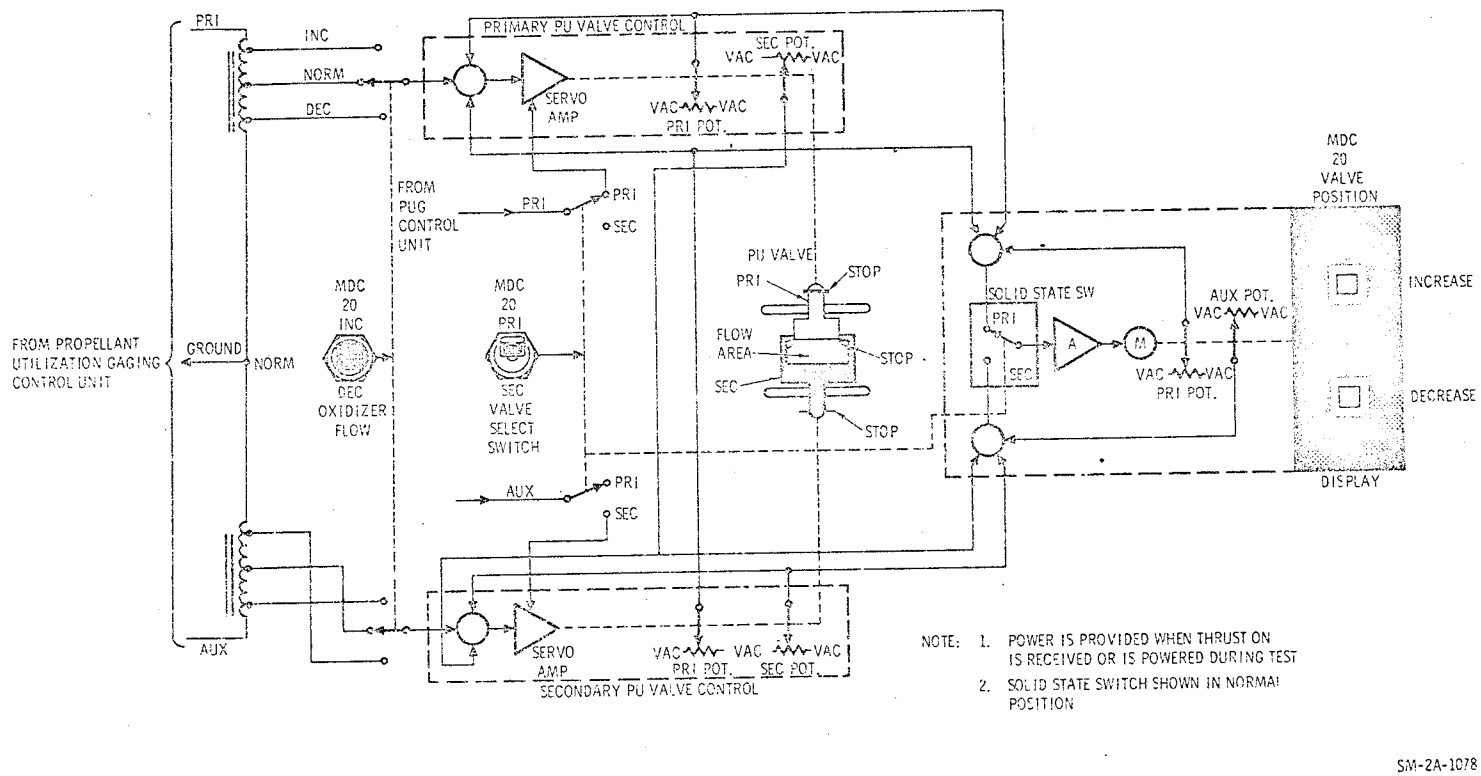

Figure 2.4-7. Propellant Utilization Valve Control and Flag Display.

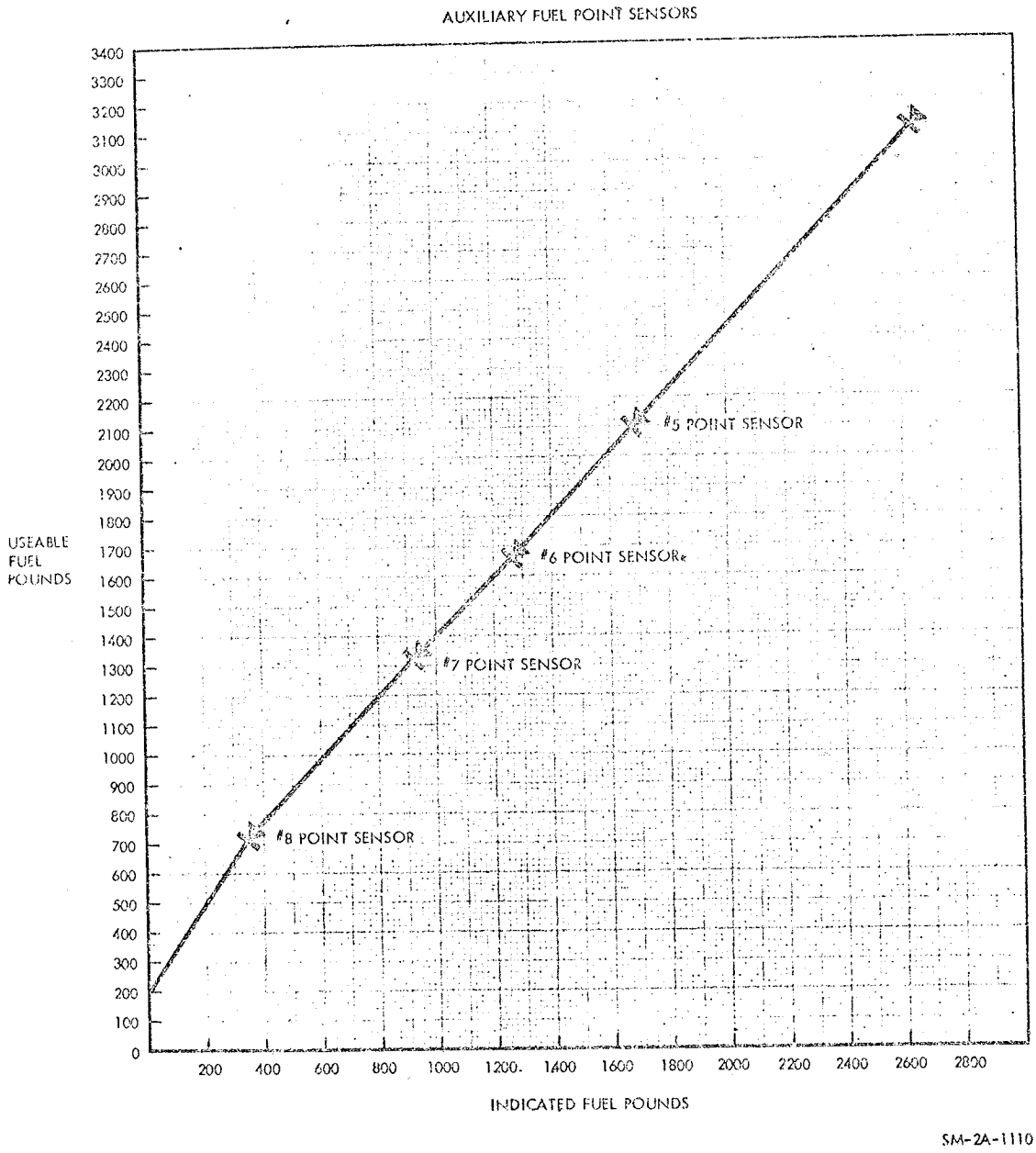

Figure 2.4-8. Auxiliary Fuel Point Sensors

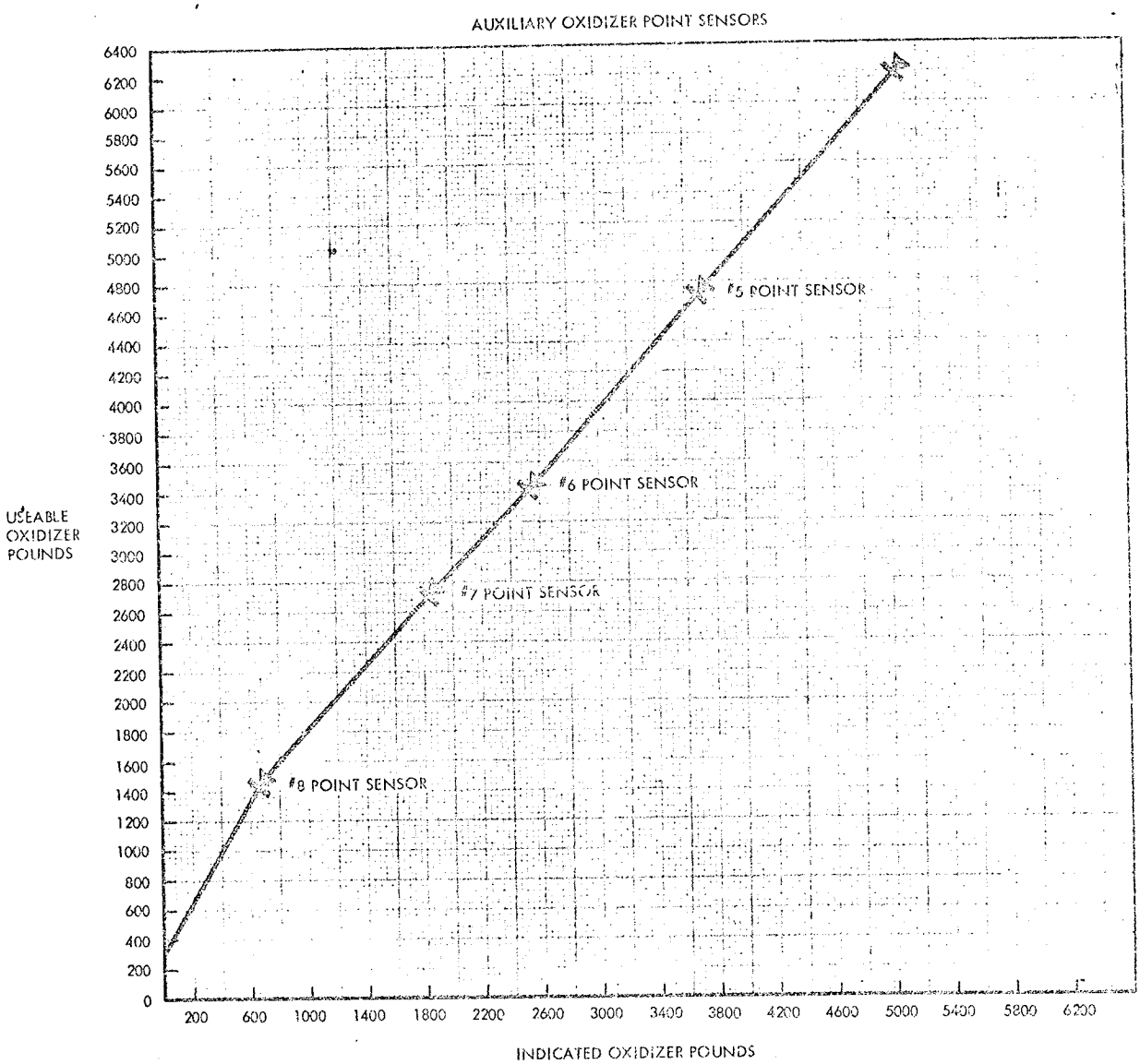

Figure 2.4-9. Auxiliary Oxidizer Point Sensors

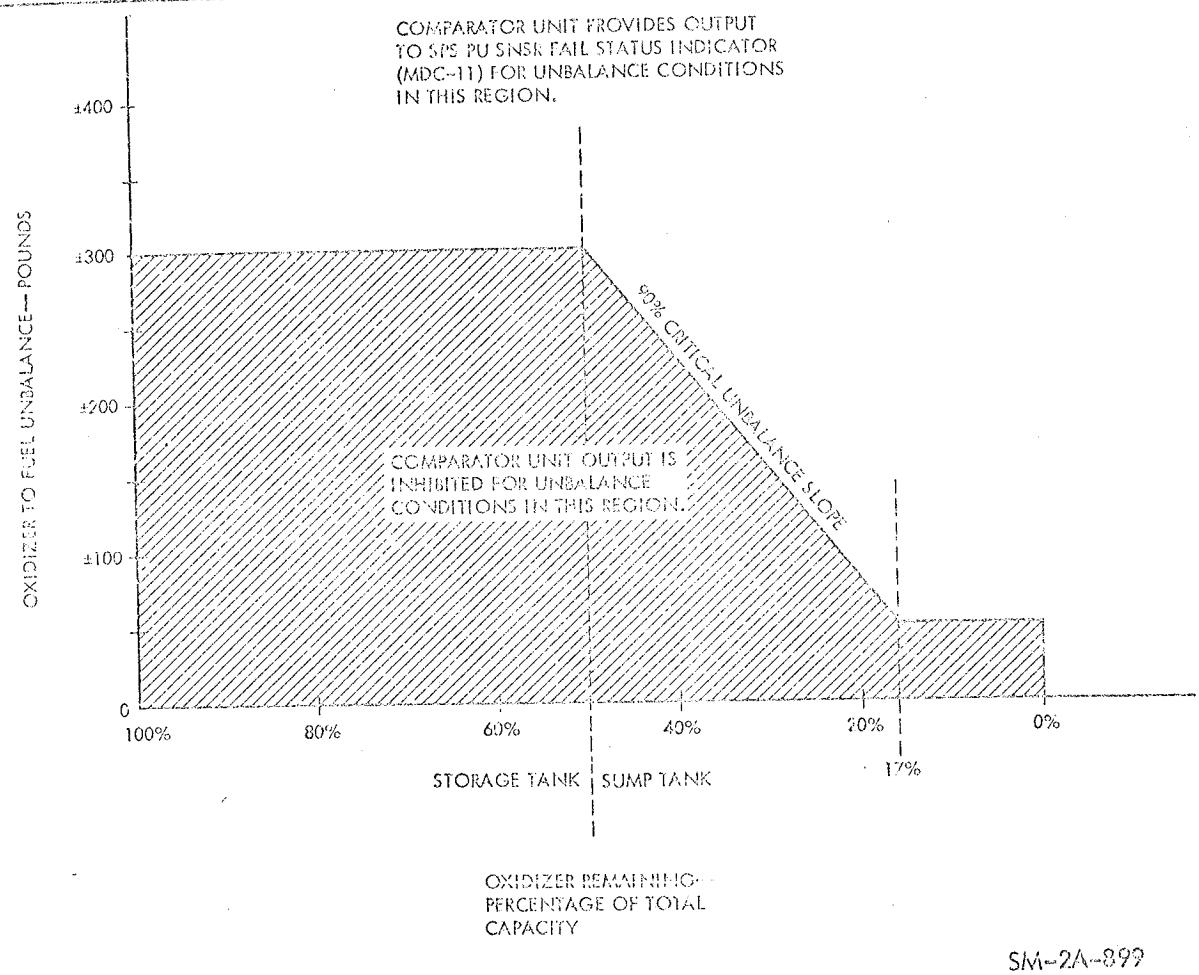

Figure 2.4-10. Propellant Unbalance Warning System Output Chart

Once the warning light is illuminated, the crew can determine whether there is a malfunction within the quantity and indicating systems or if there is a true unbalance condition existing by use of the self-test portion of the system. By observing the response of each system in conjunction with the TEST switch on panel 20, the crew can recognize the malfunction or determine if there is a true unbalance existing.

2.4.2.10.2 Quantity Computing and Indicating System Test.

A test of the sensing systems excluding the point sensors and probes can be implemented during THRUST-ON or -OFF periods.

With the SENSOR select switch in PRIMARY and the TEST switch in the TEST UP position, the test stimuli is applied to the primary system tank servo amplifiers after a 4.5±1.0 second delay. At this time, the test stimuli will drive the fuel and oxidizer displays to an increase reading at

different rates (oxidizer at a rate of approximately 3 digits per second and fuel at a rate of approximately 1.5 digits per second), resulting in an unbalance and indicated on the unbalance display as an INC (clockwise rotation). TLM would receive an increase in propellant quantity from the primary system simultaneously.

Placing the TEST switch in the TEST DOWN position, and after a 4.5±1.0-second delay, will provide test stimuli to the tank servo amplifiers which will drive the fuel and oxidizer displays to a decrease reading, returning the crew displays close to the reading displayed prior to TEST UP, simultaneously TLM would receive a decrease in propellant quantity. If the TEST switch was again placed to TEST DOWN, after a 4.5±1.0-second delay, the fuel and oxidizer crew display readouts would drive to a decrease reading at different rates resulting in an unbalance and indicated on the unbalance display as a DEC (counterclockwise rotation). TLM would receive a decrease in propellant quantity simultaneously. To return to the reading displayed prior to the second TEST DOWN, place the TEST switch to TEST UP and after a 4.5±1.0-second delay, the crew displays would return close to the original displayed readings, simultaneously TLM receives an increase in propellant quantity.

To test the auxiliary system, place the SENSOR select switch to AUXILIARY and utilize the TEST switch up and down positions. There is no time delay involved with the auxiliary system.

The AUTO position removes the electrical test stimuli inputs.

2.4.2.10.3 Propellant Utilization Valve.

If an unbalance condition exists, the crew will use the propellant utilization valve to return the propellants to a balanced condition. The propellant utilization valve housing contains two sliding gate valves within the housing. One of the sliding gate valves is the primary and the remaining is the secondary (figure 2.4-7).

Stops are provided within the valve housing for the full increase or decrease positions of the primary and secondary sliding gate valves.

The secondary propellant utilization valve has twice the travel of the primary propellant utilization valve to compensate for primary propellant utilization valve failure in any position. The secondary valve is selected by the VALVE switch and is controlled by the OXIDIZER FLOW switch in the same manner as the primary.

The propellant utilization valve controls are on panel 20. The VALVE switch selects the primary or secondary propellant utilization valve. Normal position of the VALVE switch is PRIMARY. The OXIDIZER FLOW switch is utilized to position the primary or secondary propellant utilization

sliding gate valve. When the OXIDIZER FLOW switch is in NORMAL, the sliding gate valve is in the nominal flow position and the upper and lower OXID flow position indicator is gray. When the OXIDIZER FLOW switch is placed to the INCREASE position, the sliding gate valve is in the increase flow position and the upper OXID flow position indicator is striped. When the OXIDIZER FLOW switch is placed to DECREASE position, the sliding gate valve is in the decrease flow position, but does not block the oxidizer flow completely and the lower OXID flow indicator is striped.

2.4.2.10.4 Engine THRUST ON-OFF Control.

Figure 2.4-1 illustrates the THRUST ON-OFF logic in the guidance and navigation delta V mode, the stabilization control system delta V mode and the manual direct mode.

The guidance and navigation is the primary delta V mode which provides the most accurate trajectory corrections. The G&N ΔV mode of operation will require G&N gate 2 to be completely enabled. Its required inputs will be an ullage maneuver input which could be supplied by the SPS abort logic or the direct ullage pushbutton or by translation control 1 or 2 placed to the +X, which would satisfy the OR gate 3 function and the holding input after the G&N AND gate 2 is enabled which is processed through NAND gates 1 and 2, with the G&N ΔV mode selected from the SCS control panel and the pulse train converter output of logic one commanded from the G&N computer by the crew. These inputs will enable AND gate 2 and provide the logic one input to inverter 3 which disables AND gate 6. Inverter 4 will provide a logic one signal to the solenoid drivers that provide the ground for the two sets of SPS relays. The two sets of SPS relays provide power to the following:

a. The four solenoid control valves, which allow gaseous nitrogen pressure to be directed to four actuators that position eight of the ball valves in the injector valve assembly of the engine. This is due to INJECTOR PRE VALVE A and B being enabled.

b. The quantity sensing and indicating system and the propellant utilization valve.

c. The systems A and B helium pressurizing valves.

d. When the output of the pulse converter is a logic zero, G&N AND gate 2 is disabled, which terminates a G&N ΔV maneuver and removes ground from the two sets of SPS relays. (Manual backup of the THRUST CONTROL switch to OFF.)

The backup delta V mode, is the stabilization control system delta V mode which has limitations and restrictions that require individual consideration. The SCS ΔV mode of operation will require enabling SCS AND gate 1 to initiate thrusting of the engine. SCS AND gate 1 has three enabling inputs: the input from OR gate 1 indicating a ΔV mode is selected; the output from the DECA indicating a value greater than zero on the ΔV REMAINING display; and the input from the THRUST ON pushbutton light indicator after it is processed through NAND gates 3 and 4. The one logic output from SCS AND gate 1 is inverted by INVERTER 2 to a zero logic which disables AND gate 6 and is inverted by INVERTER 4 to a logic one,

and enables the solenoid drivers that provide ground to the two sets of SPS relays. The two sets of SPS relays provide power to the same functions as in the G&N ΔV mode.

a. When the output of the DECA ΔV REMAINING counter reaches zero velocity, SCS AND gate 1 is disabled. The logic output from AND gate 1 goes to zero and INVERTER 2 goes to a one logic output which enables AND gate 6 to a one logic output and the signal is inverted by INVERTER 4 to a zero logic output, and the solenoid drivers remove ground from the two sets of SPS relays terminating thrust. (Manual backup of the THRUST CONTROL switch to OFF.)

The DIRECT operating mode bypasses all electronics. The DIRECT ON position of the THRUST CONTROL switch provides power to the two sets of SPS relays, the same as in the G&N ΔV mode of SCS ΔV mode.

Thrust would be terminated by placing the THRUST CONTROL switch in the OFF position.

The SPS thrust control logic provides illumination of the talk-back light in the THRUST ON switch. To illuminate the light in a G&N ΔV mode, AND gate 4 must be enabled. It has two inputs which are G&N ΔV mode selected and the presence of a logic one output from the pulse train converter. With AND gate 4 enabled, OR gate 2 will trigger the lamp driver and illuminate the THRUST ON light. To illuminate the light in the SCS ΔV mode, AND gate 3 must be enabled, it will also satisfy OR gate 2 and trigger the lamp driver. The SPS thrust control logic is interlocked so that AND gates 3 and 4 will never be enabled simultaneously because of the THRUST ON switch inhibited to the pulse train converter. Therefore, the THRUST ON light will be illuminated at all times when the thrust is on for normal operation. If the direct function is used to initiate thrusting, it will bypass all electronics and not illuminate the THRUST ON light.

The output from the SPS thrust control logic performs a function other than energize the fuel and oxidizer solenoid valves. It provides the logic switches required to reconfigure the SCS relays for proper thrust vector control. The thrust control switch provides both inputs to OR gate 4 if both dc buses are operational. Either dc bus will enable OR gate 5 to provide the upper input to INHIBIT AND gate 1. AND gate 5 provides the controlling input to the INHIBIT AND gate 1. When the solenoid drivers are not energized and the thrust control switch is in NORMAL, both inputs to AND gate 5 are true. The true input will maintain a logic false output from the INHIBIT AND gate 1 because of the inversion on the input of the gate. When either SPS relay set is activated by a solenoid driver or by the ground contacts of the DIRECT ON switch, AND gate 5 will be disabled by the ground or false input. The input will be inverted by the INHIBIT AND gate 1 input to enable an output to the time delay. The time delay is required to permit thrust buildup from the SPS engine before the ullage maneuver is terminated; however, the pitch and yaw attitude error inputs are inserted into the TVC electronics immediately. This action assures positive g forces

throughout thrust initiation of the SPS engine and gimbaling control of the SPS engine for the entire thrust buildup. The time delay is also active after INHIBIT AND gate 1 is disabled by enabling AND gate 5. AND gate 5 is enabled when both sets of SPS relays are de-energized. The time delay is active for both outputs when the signal is removed to permit continued SPS engine gimbal control, while the residual thrust is present and inhibits RCS operation in pitch and yaw until residual thrust is reduced. This reduces the tumbling induced at thrust termination. The time delay is approximately one second for application and removal of the engine ignition signal.

2.4.3 PERFORMANCE AND DESIGN DATA.

2.4.3.1 Design Data.

The following list contains specific data for the components in the SPS:

HELIUM TANKS (2)	4000±50 psia fill pressure, 4400 maximum operating pressure 70°±10°F, capacity 19.4 cubic feet, inside diameter 40 in. and a wall thickness of 0.46 in.
REGULATOR UNITS (2)	Working regulator - Primary 186±4 psig, secondary 191±4 psig, primary lockup 200 psig, secondary lockup 205 psig. Normally locked by working regulator; primary 181±4 psig, secondary 191±4 psig, primary lockup 195 psig, secondary lockup 205 psig.
PRESSURE TRANSDUCERS (2) ULLAGE PRESSURE (REGULATED HELIUM)	Fuel and oxidizer underpressure setting (SPS PRESS light, panel 11) 160 psia. Fuel and oxidizer overpressure setting (SPS PRESS light, panel 11) 200 psia.
PROPELLANT UTILIZATION	Increase position - 46.65 lbs/second
VALVE CONTROL (2)	Normal position - 45.27 lbs/second at 70°F and 168±4 psig Decrease position - 43.87 lbs/second Response time - Normal to increase or vice-versa, or normal to decrease or vice-versa is 3 to 4 seconds
QUANTITY SENSING SYSTEM ACCURACY	±0.35% of full tank plus ±0.35% of propellant remaining primary system ±0.35% of full tank plus ±0.35% of propellant remaining plus 2.3% of storage tank quantity remaining, auxiliary system.

HELIUM RELIEF VALVE (2)	Diaphragm ruptures at 220±7 psig Filter - 10 microns normal, 25 microns absolute Relief valve relieves at 232±8 psig Relief valve reseats at 212 psig minimum Flow capacity 3 lbs/second minimum at 60 F and 250 psig Bleed device closes at ambient to 100 psi and is manually reset open
OXIDIZER STORAGE AND SUMP TANK	Total tank capacity 30,600 lbs, usable 27,333 lbs. Each tank has a volume of 175 cubic ft. Fill pressure 110 psia. Ullage after filling 2.4 cubic ft in storage and 8.0 cubic ft in sump tank. Ullage after pressurized to 175 psia, 6.8 cubic ft in storage and 5.0 cubic ft in sump tank. Inside diameter 51 in., length 165.4 in., and will elongate to 0.125 in. when pressurized to 240 psi and 120°F for 336 hours. Wall thickness 0.060 in. in continuous areas, 0.069 in. weld buildup areas and 0.031 in. on domes. Fill tolerance of 1/4 of 1% of full tank plus 1/4% of propellant remaining.
FUEL STORAGE AND SUMP TANK	Total tank capacity 15,300 lbs, usable 13,677 lbs. Each tank has a volume of 139.7 cubic ft. Fill pressure 90 psia. Ullage after filling 1.8 cubic ft in storage and 5.8 cubic ft in sump tank. Ullage after pressurized to 175 psia, 6 cubic ft in storage and 3.0 cubic ft in sump tank. Inside diameter 45 in., length 166.8 in., and will elongate to 0.125 in. when pressurized to 240 psi and 120°F for 336 hours. Wall thickness 0.053 in. in continuous areas, 0.061 in. in weld buildup areas, and 0.031 in. on domes. Fill tolerance of 1/4 of 1% full tank plus 1/4% of propellant remaining.

NOMINAL PROPELLANT TANK WORKING PRESSURE	175±4 psia
INTERFACE FLANGE FILTER	500 microns absolute
GASEOUS NITROGEN PROPELLANT VALVE CONTROL SYSTEMS (2)	Storage vessel pressure 2500±50 psi at 68°F, 2900 psi at 130°F. Support 36 valve actuations.
	Regulator, single stage, 130±7 psi at all flow up to 0.035 lbs/second.
	145 psi maximum lockup pressure.
	Relief valve - relieves at 350±10 psi, reseats at not less than 250 psi
	Ball valves 1 and 4 dry opening travel time of 0.6 (+0.2, - 0.05) second
	Ball valves 2 and 3 dry opening travel time of 0.325±0.1 second.
	Ball valves 1 and 4 dry closing travel time of 0.375±0.05 second
	Ball valves 2 and 3 dry closing travel time of 0.575±0.1 second
ENGINE	500-second service lift on S/C 014
	Capable of 36 restarts
	Expansion ratio, 6 to 1 at ablative chamber exit area, 62.5 to 1 at nozzle extension exit area.
	Cooling chamber, ablation and film extension, radiation
	Injector type, baffled regeneratively, cooled, unlike impingement
	Oxidizer lead, 8 deg.
	Length, 152.82 inches

	Nozzle extension exit diameter, 94.4 inches
	Weight, approximately 650 lbs
	Ablative chamber throat temperature sensor, illuminates SPS WALL TEMP HI caution and warning light on panel 11 at 380°F, one sensor per harness.
	SPS P_c transducer, P_c displayed on panel 3 through L/V AOA, SPS P_c switch to L/V AOA, SPS P_c indicator, green range on indicator is 65 to 125%, normal P_c 85 to 125 psia.
GIMBAL LIMITS	About Z-Z axis ±7 (+1/2, -0) deg with additional 1 deg for snubbing yaw
	About Y-Y axis ±6 (+1/2, - 0) deg with additional 1 deg for snubbing pitch
GIMBAL MOTOR UNDER AND OVERCURRENT RELAYS	Undercurrent (primary only) below 6 amperes detected for a duration of 250±50 milliseconds or more shall interrupt the flow to the load in less than 100 milliseconds.
	Overcurrent dependent upon temperature during start transient and steady state of gimbal motor on primary. Secondary controlled by 70-amp circuit breaker.
ACTUATOR CLUTCHES	Quiescent current of 60 (+10, -5) milliamps (Motors off, a 246 ft-lb force required to move engine equivalent to 1.53 g.)
ACTUATOR PRESSURIZED S/C 012 and 014 SERVO ACTUATOR DEFLECTION RATE	3.5±1.0 psi dry air at -160°F at vendor 0.23 radians per second (13.09° per second)
FLIGHT COMBUSTION	180 g's peak to peak for 70±20 milliseconds
STABILITY MONITOR SYSTEM	600 to 5000 cycles per second

2.4.3.2 Performance Data.

Refer to mission modular data book, SID 66-1177.

2.4.3.3 Power Consumption Data.

Subsystem and Component	Control	No. of Units	Watts per Unit AC	Watts per Unit DC	Total Watts AC	Total Watts DC
Service propulsion						
Propellant utilization valve	VALVE sw and OXIDIZER FLOW sw (Ref. gauging sys)				62.6	16.8
Propellant utilization gauging system	Gauging CB(4) SPS GAUGING AC sw SENSOR sw					
Injector prevalves	He valve CB(2) INJECTOR PREVALVE sw (2)	2		21.0		42.0
He solenoid valves	He PRESSURIZING sw (2) SPS relay	2		28.0		56.0
Feedline heaters	SPS HEATER sw	26		(See figure 2.4-2)		33.0
Pilot valves (SCS)	ECA drivers (2)	4		10.5		42.0
Gimbal actuator motors	Gimbal CB (6) GIMBAL MOTOR sw (4)	Channel I				
		Idle				
		pitch		450*		900
		yaw		450*		
		Boost				
		pitch		511*		1022
		yaw		511*		
		Thrust ON				
		pitch		775*		1550
		yaw		775*		
		Maximum				
		pitch		1800*		3600
		yaw		1800*		
		Channel II				
		Idle				
		pitch		335**		670
		yaw		335**		
		Boost				
		pitch		335**		670
		yaw		335**		
		Thrust ON				
		pitch		335**		670
		yaw		335**		
		Maximum				
		pitch		335**		670
		yaw		335**		

*With quiescent current
**Without quiescent current

Above statements assume channel I is the operating channel and channel II is standby. Channel I operating values applicable to channel II when channel II is commanded. 28-vdc supply values, current draw values not a direct function of an applied voltage.

2.4.3.4 SPS Electrical Power Distribution.

See figure 2.4-11 for electrical power distribution.

2.4.4 OPERATION LIMITATIONS AND RESTRICTIONS.

The operational limitations and restrictions of the SPS are as follows:

a. Propellant quantity gauging subsystem is operational only during engine firing. A 4.5-second firing period is required before propellant quantity information is updated, when SENSOR switch is in the NORM or PRI position. Delay is built-in to allow propellants to settle and stabilize before updating the displays.

b. A one-second time delay between actuation of GIMBAL MOTOR switches (MDC-3) is required, as simultaneous actuation may result in an excessive power drain.

c. Engine design minimum impulse control limit is 0.4 second; however, mission minimum impulse may be longer.

d. Due to adversive temperature effects, engine gimbal drive motors should not be continuously energized for periods in excess of 12 minutes.

e. Single bank mode of operation by the bipropellant valve assembly will result in a 3 percent reduction in thrust.

2.4.5 TELEMETRY MEASUREMENTS.

The following subsequent list is of all SPS telemetry data monitored by flight controllers and ground support personnel.

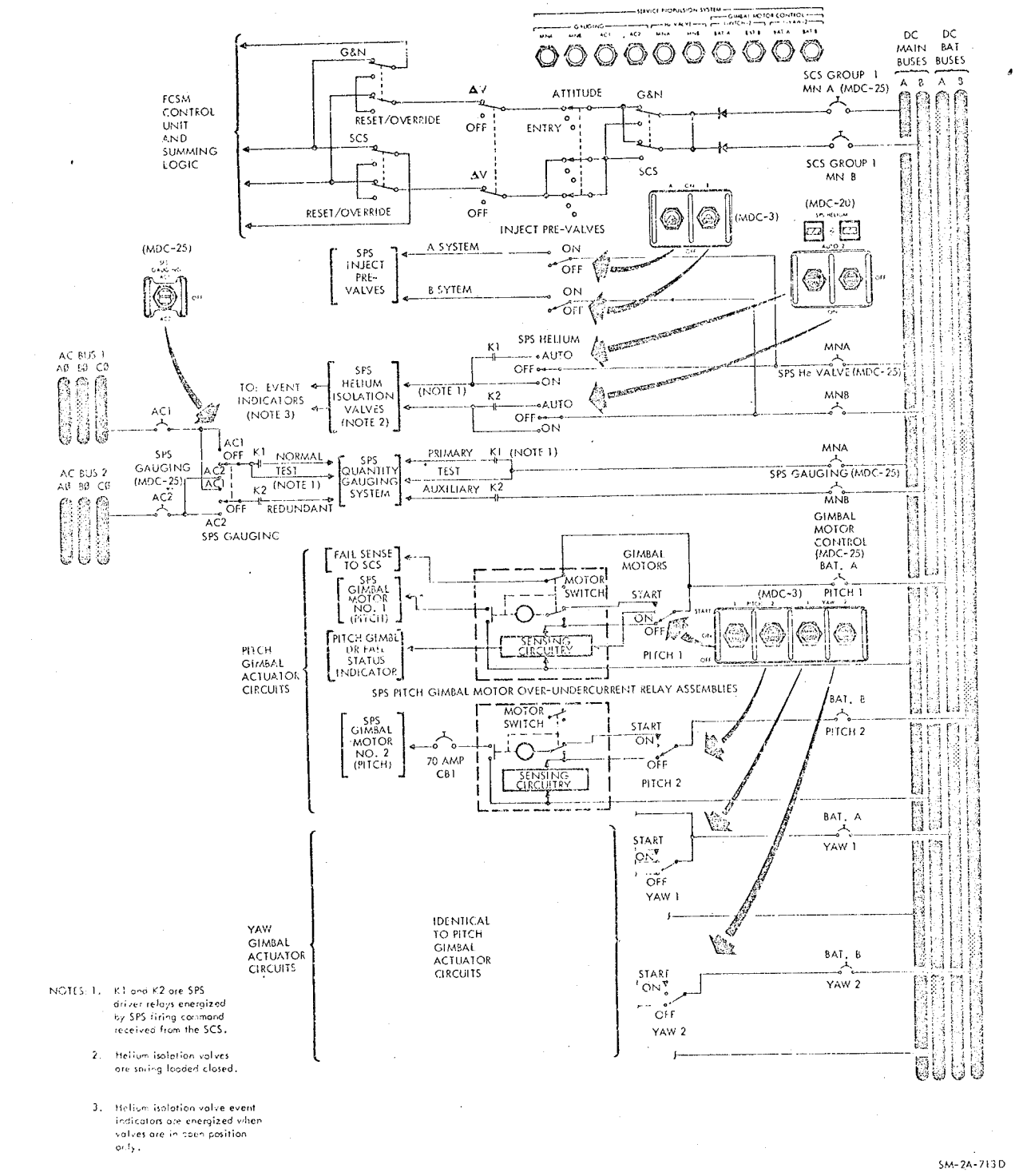

NOTES: 1. K1 and K2 are SPS driver relays energized by SPS firing command received from the SCS.

2. Helium isolation valves are spring loaded closed.

3. Helium isolation valve event indicators are energized when valves are in open position only.

Figure 2.4-11. SPS Electrical Power Distribution Diagram

Crew Display	Figure	Measurement	Measurement Number	Range	Signal Conditioner	Channel Code*	Bit Rate*	*	Operating Range
Panel 20	2.4-1	Helium Tank Supply Pressure	SP0001P	+0 +5K psia	S28AR3	11A66	H2	PCM	4000±50 psia and decrease with firings
Panels 20 & 11	2.4-1	Regulated Helium Pressure to Fuel Tank	SP0006P	+0 +300 psia	S28AR6	11A70	H2	PCM	170 to 195 psia
Panels 20 & 11	2.4-1	Regulated Helium Pressure to Oxidizer Tank	SP0003P	+0 +300 psia	S28AR5	11A68	H2	PCM	170 to 195 psia
Panels 20 & 11	2.4-1 and 2.4-6	Quantity Sensing System							
		Sensor Select Switch in Normal							
		Primary Fuel Sump 2	SP0658Q	+0 +8K lbs		10A94	H1	PCM	Variable
		Primary Fuel Storage 1	SP0657Q	+0 +8K lbs		10A92	H1	PCM	
		Primary Oxidizer Sump 2	SP0656Q	+0 +16K lbs		10A90	H1	PCM	
		Primary Oxidizer Storage 1	SP0655Q	+0 +16K lbs		10A88	H1	PCM	
		Sensor Select Switch in Primary							
		Primary Fuel Sump 2	SP0658Q	+0 +8K lbs		10A94	H1	PCM	
		Primary Fuel Storage 1	SP0657Q	+0 +8K lbs		10A92	H1	PCM	
		Primary Oxidizer Sump 2	SP0656Q	+0 +16K lbs		10A90	H1	PCM	
		Primary Oxidizer Storage 1	SP0655Q	+0 +16K lbs		10A88	H1	PCM	
		Sensor Select Switch in Auxiliary							
		Primary Fuel Sump 2	SP0658Q	+0 +8K lbs		10A94	H1	PCM	
		Primary Oxidizer Sump 2	SP0656Q	+0 +16K lbs		10A90	H1	PCM	
		Auxiliary Fuel	SP0657Q	+0 +8K lbs		10A92	H1	PCM	
		Auxiliary Oxidizer	SP0655Q	+0 +16K lbs		10A88	H1	PCM	
	2.4-1	Temperature 1 Oxidizer Distribution Line	SP0054T	+0 +200°F					Variable
	2.4-1	Temperature 2 Oxidizer Distribution Line	SP0055T	+0 +200°F					
	2.4-1	Temperature 1 Fuel Distribution Line	SP0057T	+0 +200°F					
	2.4-1	Temperature 2 Fuel Distribution Line	SP0058T	+0 +200°F					
Panel 20	2.4-1	Fuel Inlet Pressure to Fuel Valve	SP0010P	+0 +300 psia	S28AR8	11A77	H2	PCM	135 to 195 psia
Panel 20	2.4-1	Oxidizer Inlet Pressure to Oxidizer Valve	SP0009P	+0 +300 psia	S28AR7	11A76	H2	PCM	135 to 195 psia
Panel 3	2.4-1	Chamber Pressure	SP0061P	+0 +150 psia	S28AR9	12A11	H1	PCM	65 to 125 psia
	2.4-1	Injector Temperature	SP0060T	+0 +200°F		11A109	H1	FQ	Variable
Panel 20	2.4-1	Primary Gaseous Nitrogen Tank Supply Pressure	SP0600P	+0 +5000 psia	S28AR41	10A78	H1	PCM	2500±50 psia and decrease with firings
Panel 20	2.4-1	Secondary Gaseous Nitrogen Tank Supply Pressure	SP0601P	+0 +5000 psia	S28AR42	11A125	H1	PCM	2500±50 psia and decrease with firings
Panel 20	2.4-1	Ball Valve Position 1	SP0022H	+0 +90 deg		11A103	H1	PCM	Open or closed
Panel 20	2.4-1	Ball Valve Position 2	SP0023H	+0 +90 deg		11A105	H1	PCM	Open or closed
Panel 20	2.4-1	Ball Valve Position 3	SP0024H	+0 +90 deg		11A110	H1	PCM	Open or closed

Crew Display	Figure	Measurement	Measurement Number	Range	Signal Conditioner	Channel Code*	Bit Rate*	*	Operating Range
Panel 20	2.4-1	Ball Valve Position 4	SP0025H	+0 +90 deg		11A11	H1	PCM	Open or closed
	2.4-1	Temperature Oxidizer Engine Feed Line	SP0049T	+0 +200°F					Variable
Panel 20	2.4-1	Temperature Fuel Engine Feed Line	SP0048T	+0 +200°F					+40 to +120°F
	2.4-1	Temperature Engine Valve Body	SP0045T	+0 +200°F					Variable
Panel 11	2.4-1	Temperature Combustion Chamber Outer Skin 1	SP0020T	+0 +500°F	Collins C28-1A5-S28AR60	10A84	H1	PCM	Illuminates C&W light at 380°F
	2.4-1	Temperature Nozzle Outer Skin 1	SP0050T	-260 +2500°F		10A85	H1	PCM	Variable
		Pitch Actuator Case Temperature	SP2055T	+0 +200°F		10A68	H1	FQ	Variable
		Yaw Actuator Case Temperature	SP2054T	+0 +200°F		11A119	H1	FQ	Variable
		SPS Solenoid Driver Out 1	CH4320X			51E-09	E1	PCME	Event
		SPS Solenoid Driver Out 2	CH4321X			51E-10	E1	PCME	Event
		Yaw Position Feedback	CH1034H	-8.5 +8.5 vdc		51A7	H1	PCM	Variable
		Pitch Position Feedback	CH0034H	-6 +6 vdc		51A3	H1	PCM	Variable

*Analog measurements digitally coded into 8 bit words
Analog measurements - 0 to 5 vdc
FQ - Flight qualification measurements
H1 - High bit rate
H2 - High and low bit rate
E1 - High bit rate

Channel code example: 10A68
Significant number - 1
How many zeros after most significant number is amount of samples per second. } 0 } 1 sample per second

Analog - A
Event - E
Channel Code - 68

SECTION 2

SUBSECTION 2.5

REACTION CONTROL SYSTEM (RCS)

2.5.1 INTRODUCTION.

The Apollo command service module consists of two separate reaction control systems, completely independent, designated S/M RCS and C/M RCS. The S/M RCS is utilized to control S/C rotation in all three axes, in addition to any minor translation requirements including S-IVB separation, SPS ullage, and C/M-S/M separation maneuvers. The C/M RCS is utilized to control C/M rotation in all three axes after C/M-S/M separation and during entry maneuvers. The C/M RCS does not have translation capabilities.

Both the S/M and C/M RCS are controlled either automatically or manually from the command module. Physical location of the RCS engines is shown in figure 2.5-1. Engine firing sequence for specific maneuvers and individual engine circuit breaker power control are shown in figure 2.5-2.

2.5.2 S/M RCS FUNCTIONAL DESCRIPTION.

The S/M RCS consists of four individual, functionally identical packages, located 90 degrees apart around the forward portion (+X-axis) of the S/M periphery and offset from the S/C Y- and Z-axes by 7 degrees 15 minutes. Each package configuration, called a quad, is such that the reaction engines are mounted on the outer surface of the panel and the remaining components are inside. Propellant distribution lines are routed through the panel skin to facilitate propellant transfer to the reaction engine combustion chambers. The engine combustion chambers are canted approximately 10 degrees away from the panel structure to reduce the effects of exhaust gas on the service module skin. The two roll engines on each quad are offset-mounted to accommodate plumbing in the engine mounting structure.

Each RCS package incorporates a pressure-fed, positive-expulsion, pulse-modulated, bipropellant system to produce the reaction thrust required to perform the various S/M RCS control functions. Acceptable package operating temperature is maintained by internally mounted, thermostatically controlled electric heaters. The S/M RCS propellants consist of nitrogen tetroxide (N_2O_4), used as the oxidizer; monomethylhydrazine (MMH) used as the fuel. Pressurized helium gas is the propellant transferring agent.

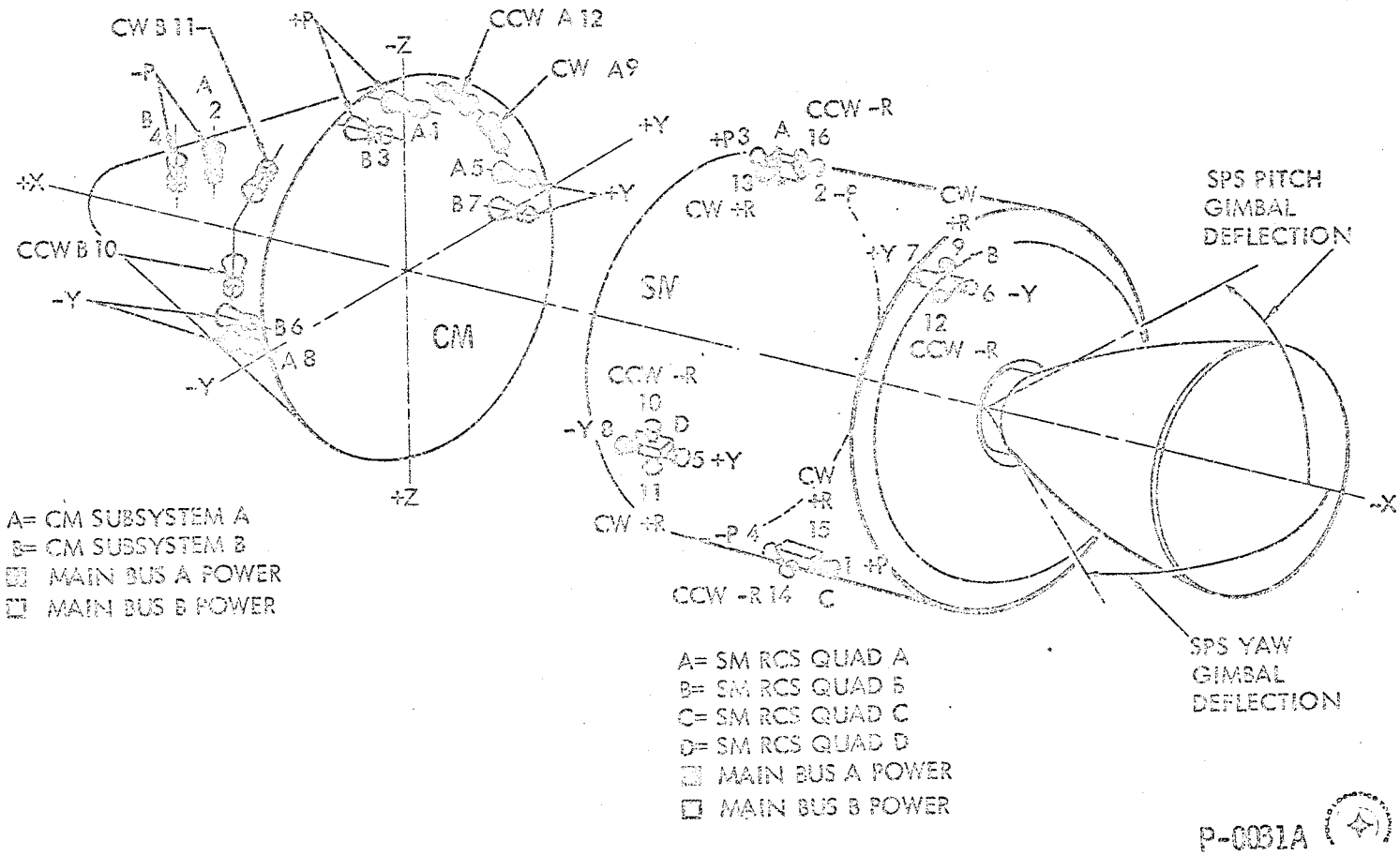

Figure 2.5-1. C/M-S/M Engine Locations

BUS POWER	CIRCUIT BREAKER	SM ENGINE				CM ENGINE				SM ENGINE UTILIZATION FOR TRANSLATION MANUEVERS						CHANNEL SWITCHES PANEL 8
		QUAD	MANUEVER	SCS NO.	PROP NO.	SYSTEM	MANUEVER	SCS NO.	PROP NO.	-X	+X	-Y	+Y	-Z	+Z	
MN A	SCS MN A 1 PITCH C15A6CB40 PANEL 25	C A	+P -P	1 2	S19A3B3 S19A1B3	A A	+P -P	1 2	C19B7 C19B11		1 2					PITCH
MN A	SCS MN A 1 YAW C15A6CB32 PANEL 25	B D	+Y -Y	7 8	S19A2B3 S19A4B3	A A	+Y -Y	5 8	C19B9 C19B1	7 8						YAW
MN A	SCS MN A B&D ROLL C15A6CB34 PANEL 25	B B	CW+R CCW-R	9 12	S19A2B2 S19A2B4	A A	CW+R CCW-R	9 12	C19B5 C19B3					12	9	B&D ROLL
MN A	SCS MN A A&C ROLL C15A6CB36 PANEL 25	A A	CCW-R CW+R	16 13	S19A1B2 S19A1B4	DEADFACED AT CM SM SEPARATION OR LES ABORT						16	13			A&C ROLL
MN B	SCS MN B 2 PITCH C15A6CB39 PANEL 25	C A	-P +P	4 3	S19A3B1 S19A1B1	B B	-P +P	4 3	C19B12 C19B8	4 3						PITCH
MN B	SCS MNB 2 YAW C15A6CB31 PANEL 25	B D	-Y +Y	6 5	S19A2B1 S19A4B1	B B	-Y +Y	6 7	C19B2 C19B10		6 5					YAW
MN B	SCS MN B B&D ROLL C15A6CB33 PANEL 25	D D	CCW-R CW+R	10 11	S19A4B4 S19A4B2	B B	CCW-R CW+R	10 11	C19B4 C19B6					11	10	B&D ROLL
MN B	SCS MN B A&C ROLL C15A6CB35 PANEL 25	C C	CCW-R CW+R	14 15	S19A3B2 S19A3B4	DEADFACED AT CM SM SEPARATION OR LES ABORT						15	14			A&C ROLL
MN A	SCS MN A DIRECT CONTROL C15A6CB42 PANEL 25	C D B	+P -Y +Y	1 8 7	S19A3B3 S19A4B3 S19A2B3	A A A	+P -Y +Y	1 8 5	C19B7 C19B1 C19B9	8 7	1					DIRECT RCS SWITCH PANEL 8
		A	CCW-R	16	S19A1B2	DEADFACED AT CM SM SEPARATION AND LES ABORTS										
		B B	CCW-R CW+R	12 9	S19A2B4 S19A2B2	A A	CCW-R CW+R	12 9	C19B3 C19B5							
		A C	CW+R CW+R	13 15	S19A1B4 S19A3B4	DEADFACED AT CM SM SEPARATION AND LES ABORTS										
		A	-P	2	S19A1B3	A	-P	2	C19B11		2					
MN B	SCS MN B DIRECT CONTROL C15A6CB41 PANEL 25	C A B D D	-P +P -Y +Y CCW-R	4 3 6 5 10	S19A3B1 S19A1B1 S19A2B1 S19A4B1 S19A4B4	B B B B B	-P +P -Y +Y CCW-R	4 3 6 7 10	C19B12 C19B8 C19B2 C19B10 C19B4	4 3	6 5					
		C	CCW-R	14	S19A3B2	DEADFACED AT CM SM SEPARATION AND LES ABORTS										
		D	CW+R	11	S19A4B2	B	CW+R	11	C19B6							

P-2058

Figure 2.5-2. S/M-C/M RCS Engine Power Supplies

The reaction engines may be pulse-fired, producing short-thrust impulses or continuously fired, producing a steady-state thrust level. The short-pulse firing permits attitude-hold modes of operation and extremely accurate attitude alignment maneuvers during navigational sightings. CSM attitude control is normally maintained by utilizing the applicable pitch, yaw, and roll engines on all four quads. However, in the event of a malfunction, complete attitude control can be maintained with only two adjacent quads operating. This two-quad capability does not include the execution of translation and ullage maneuvers.

A functional flow diagram of one S/M RCS quad is shown in figure 2.5-3. The helium storage vessel supplies pressure to two solenoid-operated helium isolation valves that are normally open throughout the mission. This allows helium pressure to the pressure regulators downstream of each helium isolation valve reducing the high-pressure helium to a desired working pressure.

Regulated helium pressure is directed through a series parallel combination of four independent check valves. The check valves permit helium pressure to the fuel and oxidizer tanks and prevent reverse flow of propellant vapors or liquid. A pressure-relief valve is installed in the pressure lines between the check valves and propellant tanks to protect the propellant tanks from any excessive pressure increase.

Helium entering the propellant tanks creates a pressure buildup around the propellant positive expulsion bladders forcing the propellants to be expelled into the propellant distribution lines. Propellants then flow through the normally open propellant isolation valves.

Oxidizer and fuel is distributed to the eight fuel and oxidizer injector valves by a parallel feed system. The fuel valve on each engine opens 2 milliseconds prior to the oxidizer valve to obtain proper engine operation. Each valve assembly contains orifices which meter the propellant flow to obtain a nominal 2:1 oxidizer/fuel ratio by weight. The oxidizer and fuel impinge, atomize, and ignition due to the hypergolic propellants. The injector valves are controlled automatically by the G&N system or the SCS. Manual override direct control is provided for rotational maneuvers and direct ullage only. The injector valves are spring-loaded closed. This system configuration maintains propellants under constant pressure at the engine injector valves providing rapid consistent response rates to thrust on-off commands.

2.5.3 S/M RCS MAJOR COMPONENT/SUBSYSTEM DESCRIPTION.

The S/M RCS is composed of four separate, individual packages; each package containing the following five major subsystems:

- Pressurization
- Propellant
- Rocket engine

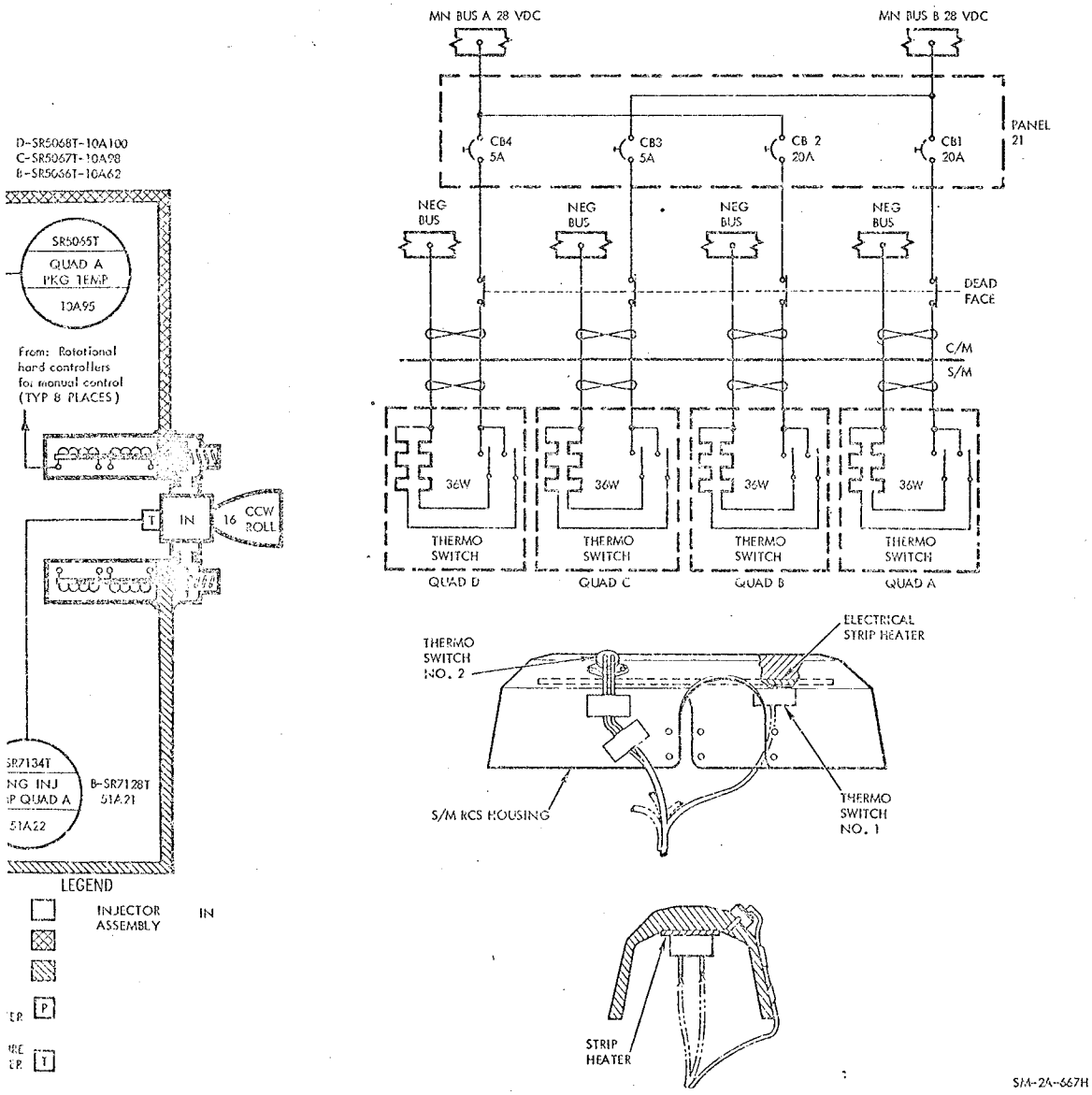

Figure 2.5-3. S/M RCS Functional Flow Diagram (Quad A)

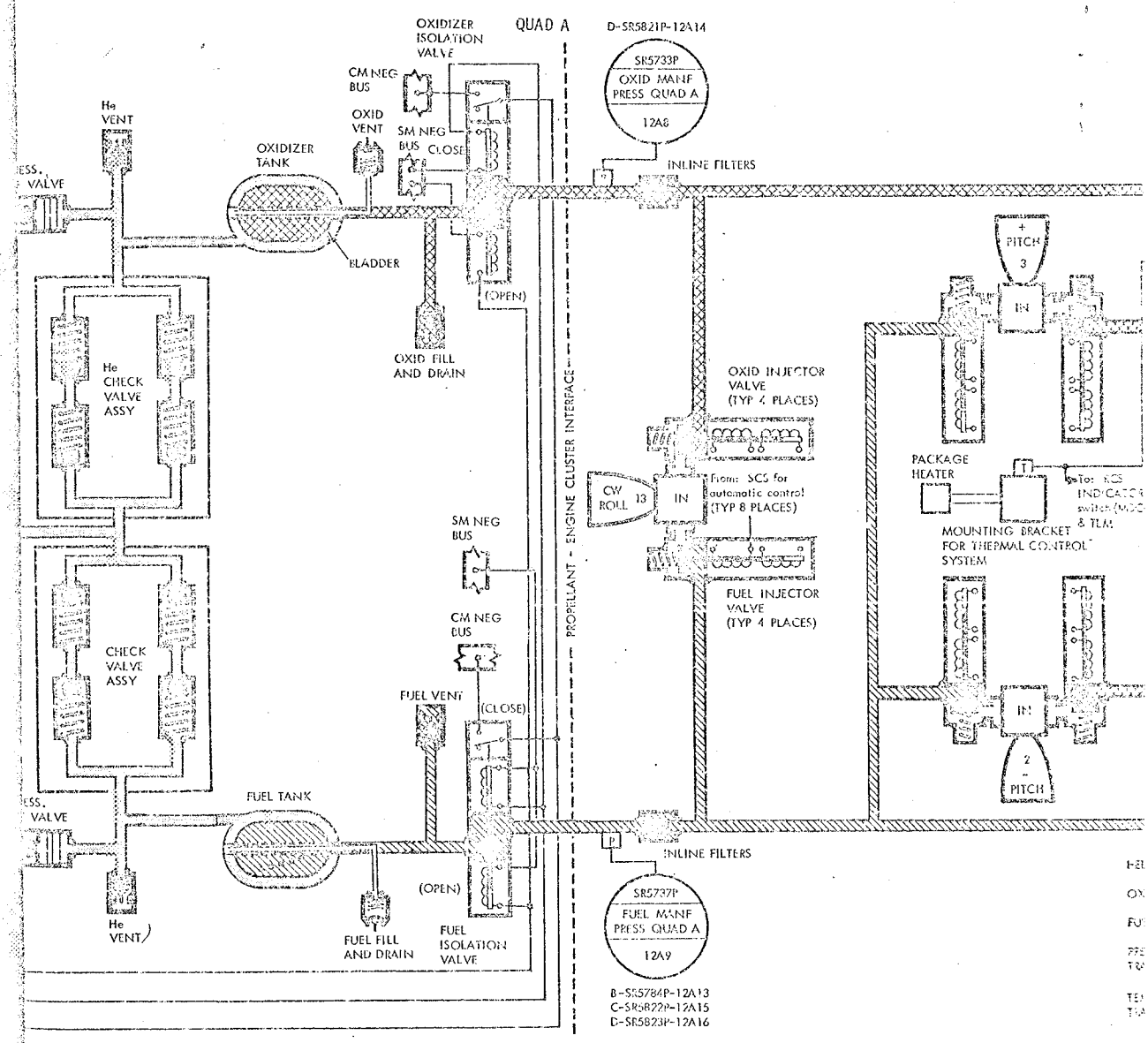
QUAD A
D-SR5821P-12A14
OXIDIZER ISOLATION VALVE
CM NEG BUS
OXID VENT
SM NEG BUS
CLOSE
SR5733P
OXID MANF PRESS QUAD A
12A8
He VENT
OXIDIZER TANK
INLINE FILTERS
BLADDER
(OPEN)
OXID FILL AND DRAIN
He CHECK VALVE ASSY
OXID INJECTOR VALVE (TYP 4 PLACES)
PROPELLANT - ENGINE CLUSTER INTERFACE
CW ROLL 13
IN
From: SCS for automatic control (TYP 8 PLACES)
SM NEG BUS
FUEL INJECTOR VALVE (TYP 4 PLACES)
CM NEG BUS
CHECK VALVE ASSY
FUEL VENT
(CLOSE)
FUEL TANK
INLINE FILTERS
(OPEN)
He VENT
FUEL FILL AND DRAIN
FUEL ISOLATION VALVE
SR5737P
FUEL MANF PRESS QUAD A
12A9
B-SR5784P-12A13
C-SR5822P-12A15
D-SR5823P-12A16
+ PITCH 3
PACKAGE HEATER
MOUNTING BRACKET FOR THEPMAL CONTROL SYSTEM
2 - PITCH

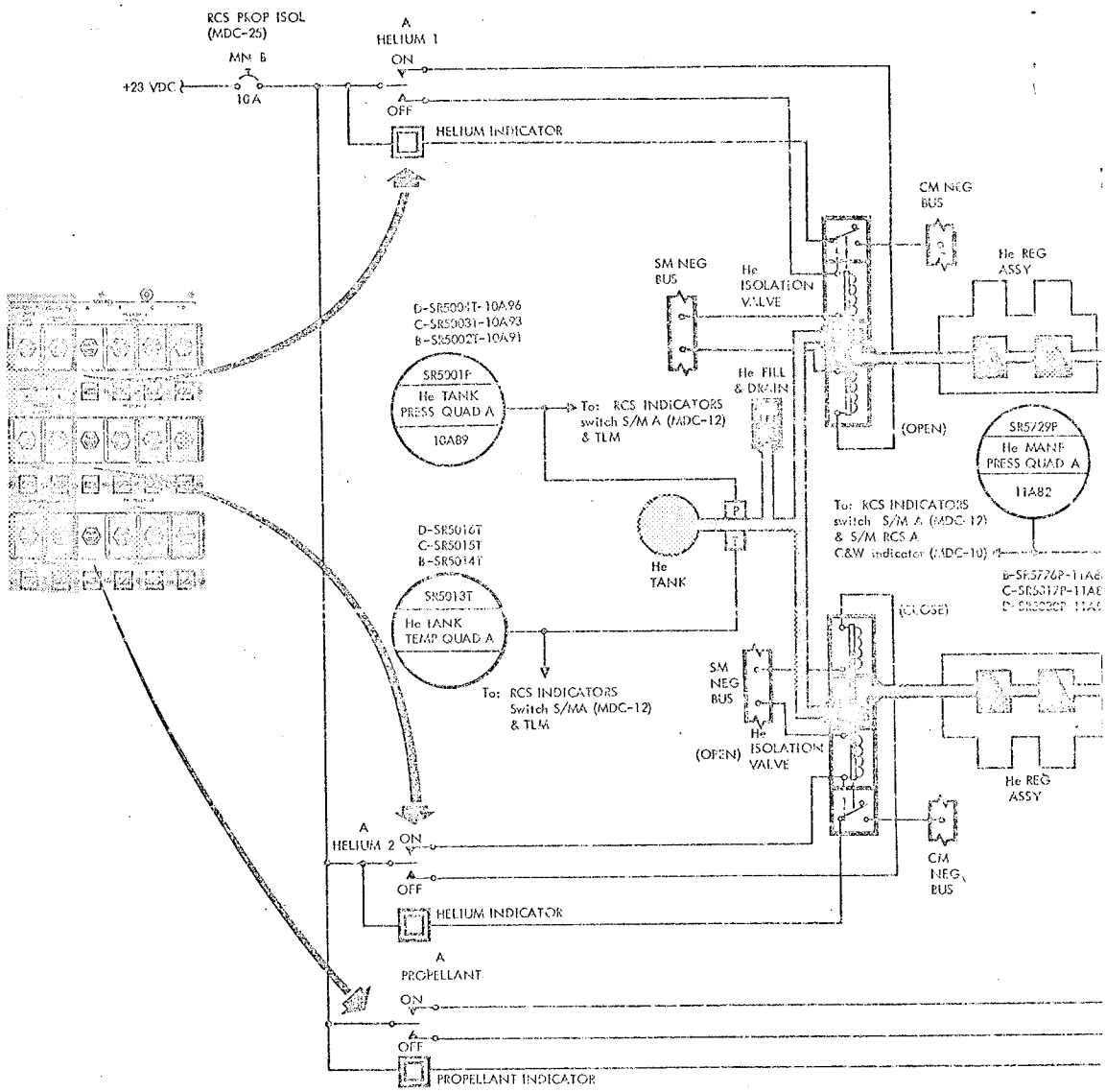
RCS PROP ISOL
(MDC-25)
MN B
+23 VDC
10A
A
HELIUM 1
ON
OFF
HELIUM INDICATOR
CM NEG
BUS
He REG
ASSY
SM NEG
BUS
He
ISOLATION
VALVE
D-SR5004T-10A96
C-SR5003T-10A93
B-SR5002T-10A91
SR5001P
He TANK
PRESS QUAD A
10A89
To: RCS INDICATORS
switch S/M A (MDC-12)
& TLM
He FILL
& DRAIN
(OPEN)
SR5729P
He MANF
PRESS QUAD A
11A82
To: RCS INDICATORS
switch S/M A (MDC-12)
& S/M RCS A
C&W indicator (MDC-10)
He
TANK
D-SR5016T
C-SR5015T
B-SR5014T
SR5013T
He TANK
TEMP QUAD A
To: RCS INDICATORS
Switch S/MA (MDC-12)
& TLM
(CLOSE)
SM
NEG
BUS
He
ISOLATION
VALVE
(OPEN)
He REG
ASSY
CM
NEG
BUS
A
HELIUM 2
ON
OFF
HELIUM INDICATOR
A
PROPELLANT
ON
OFF
PROPELLANT INDICATOR

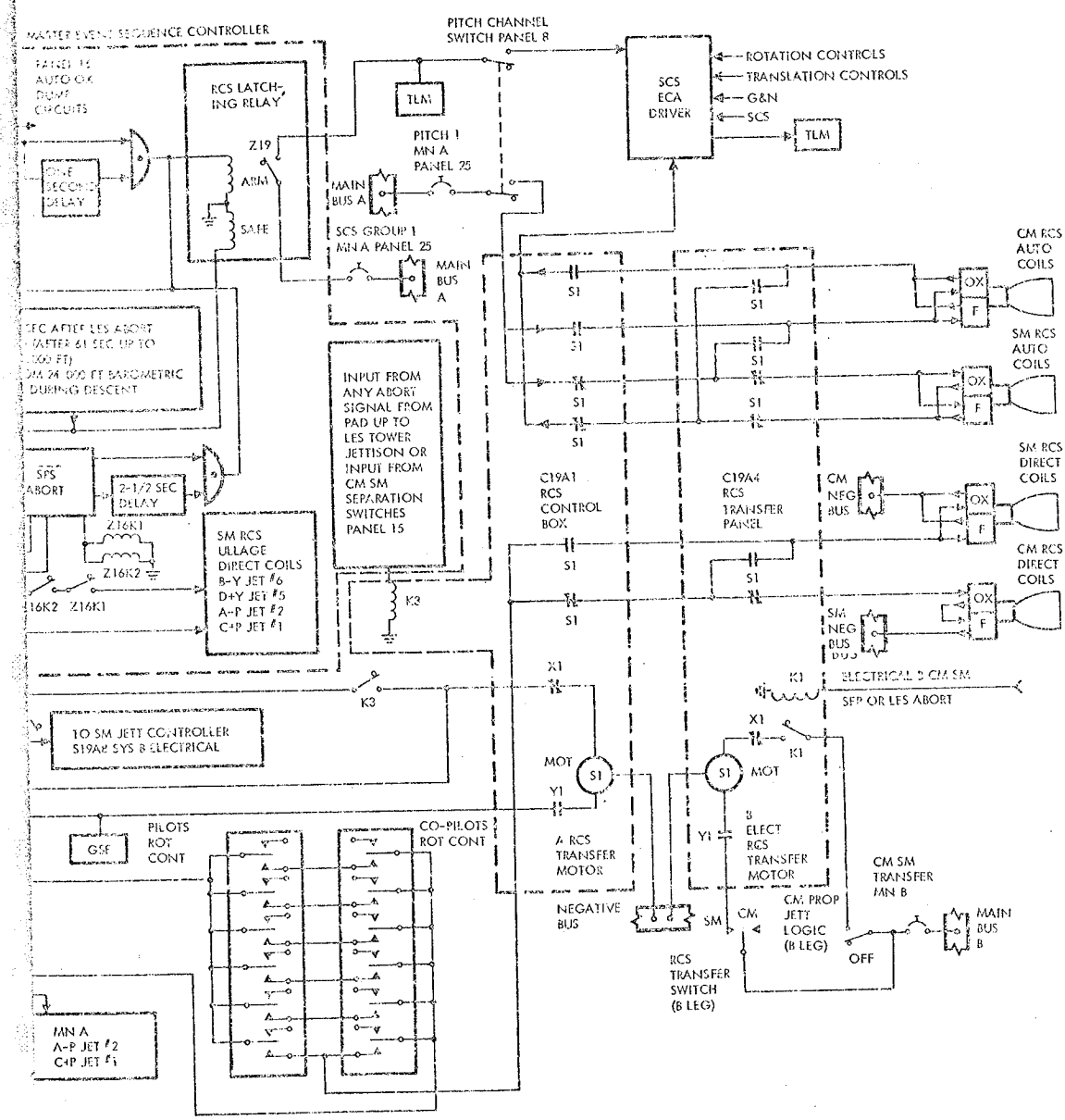
MASTER EVENT SEQUENCE CONTROLLER
PANEL 15
AUTO OX DUMP CIRCUITS
RCS LATCHING RELAY
Z19
ARM
SAFE
TLM
PITCH CHANNEL SWITCH PANEL 8
PITCH 1 MN A PANEL 25
MAIN BUS A
SCS GROUP 1 MN A PANEL 25
MAIN BUS A
SCS ECA DRIVER
ROTATION CONTROLS
TRANSLATION CONTROLS
G&N
SCS
TLM
CM RCS AUTO COILS
SM RCS AUTO COILS
SM RCS DIRECT COILS
CM RCS DIRECT COILS
OX
F
S1
INPUT FROM ANY ABORT SIGNAL FROM PAD UP TO LES TOWER JETTISON OR INPUT FROM CM SM SEPARATION SWITCHES PANEL 15
SPS ABORT
2-1/2 SEC DELAY
Z16K1
Z16K2
SM RCS ULLAGE DIRECT COILS
B-Y JET #6
D+Y JET #5
A-P JET #2
C+P JET #1
K2
K3
C19A1 RCS CONTROL BOX
C19A4 RCS TRANSFER PANEL
CM NEG BUS
SM NEG BUS
X1
K1
ELECTRICAL 2 CM SM
SEP OR LES ABORT
TO SM JETT CONTROLLER S19A2 SYS B ELECTRICAL
MOT
Y1
A RCS TRANSFER MOTOR
B ELECT RCS TRANSFER MOTOR
GSE
PILOTS ROT CONT
CO-PILOTS ROT CONT
NEGATIVE BUS
SM
CM
CM PROP JETT LOGIC (B LEG)
RCS TRANSFER SWITCH (B LEG)
CM SM TRANSFER MN B
OFF
MAIN BUS B
MN A
A-P JET #2
C+P JET #1

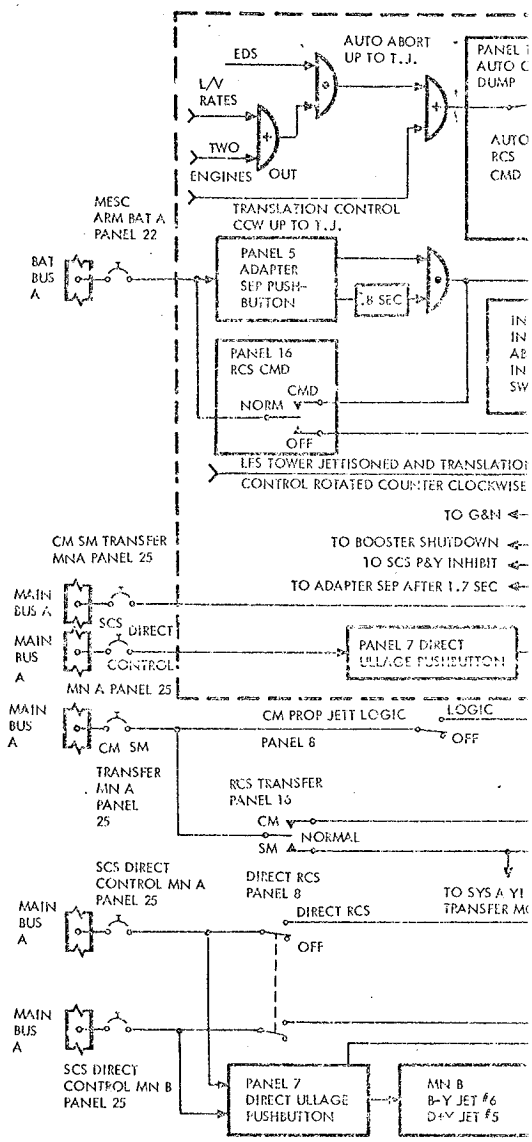
EDS
AUTO ABORT UP TO T.J.
L/V RATES
TWO ENGINES OUT
TRANSLATION CONTROL CCW UP TO T.J.
MESC ARM BAT A PANEL 22
BAT BUS A
PANEL 5 ADAPTER SEP PUSH-BUTTON
.8 SEC
PANEL 16 RCS CMD
CMD
NORM
OFF
LES TOWER JETTISONED AND TRANSLATION CONTROL ROTATED COUNTER CLOCKWISE
TO G&N
TO BOOSTER SHUTDOWN
TO SCS P&Y INHIBIT
TO ADAPTER SEP AFTER 1.7 SEC
CM SM TRANSFER MNA PANEL 25
MAIN BUS A
SCS DIRECT CONTROL
PANEL 7 DIRECT ULLAGE PUSHBUTTON
MN A PANEL 25
CM PROP JETT LOGIC
LOGIC
OFF
PANEL 8
CM SM TRANSFER MN A PANEL 25
RCS TRANSFER PANEL 16
CM
NORMAL
SM
SCS DIRECT CONTROL MN A PANEL 25
DIRECT RCS PANEL 8
DIRECT RCS
OFF
SCS DIRECT CONTROL MN B PANEL 25
PANEL 7 DIRECT ULLAGE PUSHBUTTON
MN B B-Y JET #6 D+Y JET #5

- Propellant quantity gauging
- Temperature control system

2.5.3.1 Pressurization Subsystem.

The pressurization and propellant feed stores, regulates, and distributes helium to the propellant tanks, and stores and distributes propellant to the engine assemblies (figure 2.5-3). It consists of storage tanks, isolation valves, pressure regulators, and the lines and valves necessary for filling, draining and distributing the fluids.

2.5.3.1.1 Helium Supply Tank.

The total high-pressure helium supply is contained within a single spherical storage tank. Initial fill pressure is 4150±50 psig at 70°F. The limit working pressure is 5000 psig to accommodate pressure transients during filling. Proof pressure is 6667 psig and the burst pressure is 7500 psig.

2.5.3.1.2 Helium Isolation Valve.

The helium isolation valves are a two-solenoid valves and are mechanically latched open and spring-loaded closed. The helium isolation valves are individually controlled by their own helium switch on panel 15. The valves are normally open in respect to system pressure substantiating the mechanical latching feature for power conservation purposes during the mission, in addition to preventing overheating of the valve coils.

A position switch contained within each valve controls a position indicator below each switch on panel 15. When the valve is open, the position switch is open; and the indicator on panel 15 is grey (same color as the panel) indicating the valve is in its normal position. When the valve is closed, the position switch is closed; and the indicator on panel 15 is diagonal lines indicating the valve is in its abnormal position. The valve is closed in the event of a pressure regulator unit problem and during ground servicing.

2.5.3.1.3 Pressure Regulator Assemblies.

Helium pressure regulation is accomplished by two regulator assemblies connected in parallel, with one assembly located downstream of each helium isolation valve. Each assembly incorporates two (primary and secondary) separate regulators connected in series. The secondary regulator remains open as long as the primary regulator functions properly. In the event of the primary regulator failing open, the secondary regulator will maintain slightly higher, but acceptable pressures.

2.5.3.1.4 Check Valve Assemblies.

Two check valve assemblies, one assembly located downstream of each regulator assembly, permit helium flow in the downstream direction

only. This prevents propellant and/or propellant vapor backflow into the pressurization system if seepage or failure occurs in the propellant tank bladders.

2.5.3.1.5 Pressure Relief Valves.

The helium relief valve contains a burst diaphragm, filter, a bleed device, and the relief valve. The burst diaphragm is installed to provide a more positive seal against helium than that of the actual relief valve. The burst diaphragm ruptures at a predetermined pressure. The burst diaphram is of the nonfragmentation type, but in the event of any fragmentation, the filter filters out any fragmentation and prevents any particles from flowing onto the relief valve seat. The relief valve will relieve at a pressure slightly higher than that of the burst diaphragm rupture pressure and relieve the excessive pressure overboard, protecting the fuel and oxidizer tank. The relief valve will reseat at a predetermined pressure.

A pressure bleed device is incorporated between the burst diaphragm and relief valve. The bleed valve vents the cavity between the burst diaphragm and relief valve in the event of any leakage from the diaphragm, or vents the cavity upon completion of performing a checkout of the relief valve from the test port on the relief valve. The bleed device is normally open and will close when the pressure increases up to a predetermined pressure. The bleed device automatically opens when the pressure decreases to the bleed valve opening pressure.

2.5.3.1.6 Distribution Plumbing.

Brazed joint tubing is used to distribute regulated helium in each RCS quad from the helium storage vessels to the propellant tanks.

2.5.3.2 Propellant Subsystem.

This subsystem consists of one oxidizer tank, one fuel tank, one oxidizer and fuel isolation valve, and associated distribution plumbing.

2.5.3.2.1 Oxidizer Tank.

The oxidizer supply is contained in a single titanium alloy hemispherically domed cyclindrical tank. The tank is cradle-mounted to the RCS panel. The tank contains a diffuser tube assembly and a teflon bladder for positive expulsion of the oxidizer. The bladder is attached to the diffuser tube at each end of the tank. The diffuser tube acts as the propellant outlet.

When the tank is pressurized, the helium gas surrounds the entire bladder, exerting a force which causes the bladder to collapse about the propellant forcing the oxidizer into the diffuser tube assembly and out of the tank outlet into the manifold, providing expulsion during zero g's. Tank has a working pressure of 248 psig; proof pressure of 331 psig.

2.5.3.2.2 Fuel Tank.

The fuel supply is contained in a single tank that is similar in material, construction, and operation to that of the oxidizer tank.

2.5.3.2.3 Propellant Isolation Shutoff Valve.

The isolation valves in the fuel and oxidizer lines are both controlled by a single switch on panel 15. The valves are two-solenoid valves and are magnetically latch opened and spring-loaded closed. The valves are normally open in respect to fluid flow. This, again, establishes a power conservation.

Each valve contains a position switch which is in parallel to one position indicator below the switch on panel 15 that controls both valves. When the position switch in each valve is open, the indicator on panel 15 is grey (same color as the panel) indicating to the crew that the valves are in the normal position. When the position switch in each valve or one valve is closed, the indicator on panel 15 is diagonal lines indicating to the crew that the valve or valves are closed. The valves are closed in the event of a failure downstream of the valves, line rupture, runaway thruster, etc.

2.5.3.2.4 Distribution Plumbing.

Propellant distribution plumbing within each quad is functionally identical. Each quad contains separate similar oxidizer and fuel plumbing networks. Propellants within their respective networks are directed from the supply tanks, through manifolds for distribution to the four engines in the cluster.

2.5.3.2.5 Propellant, In-Line Filters.

In-line filters are installed in the fuel and oxidizer manifolds downstream of the propellant shutoff valves and prior to the engine manifold contained within the engine housing. The in-line filters are installed to prevent any particles from flowing into the engine injector valves and engine injector.

2.5.3.3 Engine Assemblies.

The service module reaction control system engines are radiation-cooled, pressure-fed, bipropellant thrust generators which can be operated in either the pulse modulated or the steady state mode. (These modes are defined as a firing of less than one-second duration, and one-second duration or more, respectively.)

Each engine consists of a fuel and oxidizer control valve, which controls the flow of propellants by responding to electrical commands (automatic or manual) generated by the guidance and navigation subsystem and/or stabilization and control subsystem or by the crew; and an injector

head assembly, which directs the flow of each propellant from the propellant control valves to the combustion chamber where the propellants atomize and ignite (hypergolic) to produce thrust.

2.5.3.3.1 Propellant Solenoid Injector Control Valves (Fuel and Oxidizer).

The propellant solenoid injector valves utilize two coaxially wound coils: one for automatic and one for direct manual operation. The automatic coil is used when the thrust command originates from the jet selection logic, which is the electronic circuitry that selects the required automatic coils to be energized for a given maneuver. The manual coils are used when the thrust command originates at the rotation control (direct mode), direct ullage pushbutton, SPS abort, or the C/M S/M SEP switch (figure 2.5-3).

The solenoid valves are spring-loaded closed and energized open. The reaction time of the valves are illustrated in figures 2.5-4 and 2.5-5.

Figure 2.5-4 illustrates a thrusting duration of 15 seconds (steady state). The electrical on signal is received within either the automatic (normal) or manual (backup) coils of the engine injector valves. The solenoid injector valves are energized open allowing fuel and oxidizer to

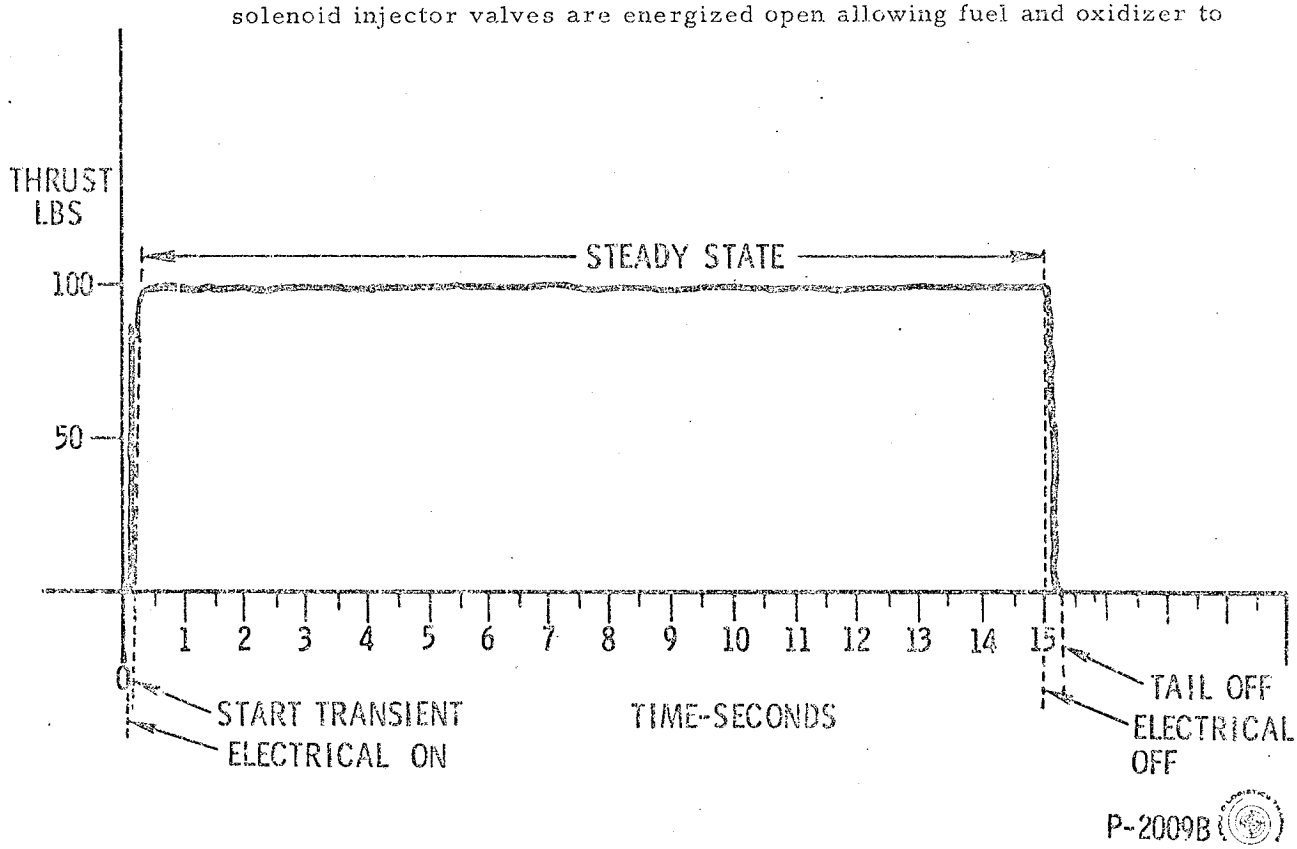

Figure 2.5-4. S/M RCS Steady-State Operation (Typical 15 Seconds)

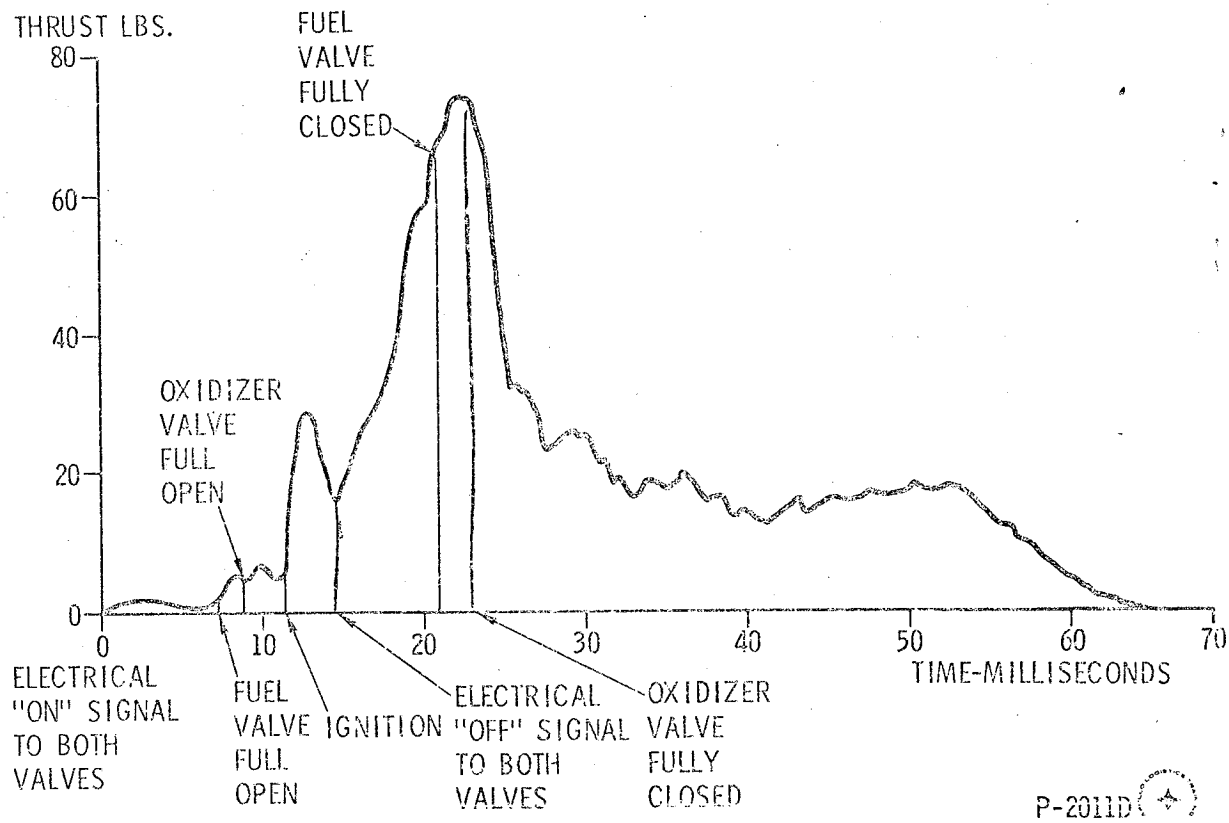

Figure 2.5-5. S/M RCS Engine Minimum Total Impulse (Typical)

flow through the injector into the combustion chamber. The propellants, being hypergolic, ignite, providing the start transient. The engine, as a result of propellant ignition, produces chamber pressure, gas velocity, and thrust. At 15 seconds after the receipt of the thrust-on signal, the automatic or manual coils are de-energized and the injector valves spring-load closed. However, due to the closing time and residual propellant flow downstream of the injector valves into the combustion chamber, thrust output continues until the propellants have burned completely allowing the chamber pressure, gas velocity, and thrust to decay to 0 pounds, establishing the cutoff transient.

Figure 2.5-5 illustrates the minimum electrical signal that can be provided to the automatic coils of the injector valves from the stabilization control subsystem jet selection logic. The following describes the sequence of operation and reasons why.

a. A time of 18±4 milliseconds (14 milliseconds minimum) will elapse before the stabilization control subsystem (SCS) can electrically provide a command-off signal to the automatic coils of the injector valves on the engine.

b. When the automatic coils of the injector valves receive the electrical on signal from the SCS, the injector valves are energized to the open position.

c. The fuel injector automatic coil energizes to the fully open position in 4.5±1.5 milliseconds, and the oxidizer injector automatic coil energizes to the fully open position in 6.0±1.5 milliseconds establishing an approximate 2 millisecond fuel lead. This is accomplished by varying the resistance of the automatic coils in the fuel and oxidizer injector valve.

d. The propellants flow from the injector valves as soon as they both start to open to the premix igniter. However, the fuel will lead the oxidizer by two milliseconds.

e. The propellants start to flow, as soon as the injector valves start to open, into the premix igniter and into the combustion chamber which creates some pressure, gas velocity and thrust, and even though it is very small, the engine is operating in a space environment.

f. The pressure, gas velocity, and thrust continues to increase slightly until the valves reach the fully open position.

g. At approximately 12-1/2 milliseconds, the propellants ignite (hypergolic), producing a spike of thrust upwards into the area of 70 to 80 pounds. At 14 milliseconds minimum, the SCS removes the electrical signal from the automatic coils of the injector valves.

h. The thrust of the engine continues very erratically, while the valves become de-energized and spring-load closed.

i. At approximately 21 milliseconds (closing time of 7.5 milliseconds) on the fuel valve and 23 milliseconds (closing time of 8.0 milliseconds) on the oxidizer valve, the injector valves are fully closed.

j. The residual propellants downstream of the injector valves continue to flow into the combustion chamber, decreasing until complete thrust decay of 0 pounds occurs at approximately 65 milliseconds.

k. In order to determine the total impulse for this time span of operation (figure 2.5-5), everything under the entire thrust curve must be integrated.

The automatic coils are electrically connected in parallel from the SCS. The manual coils in the fuel and oxidizer injector valves provide a manual direct backup to the SCS mode of operation. The manual coils of the injector valves are electrically connected in series. The reasons for the series connection of the manual coils are as follows:

a. Prevent a mismatch between the opening and closing of the valves due to any heat soak-back into the manual coils, which would change the resistance of the manual coils and result in a mismatch if the coils were connected in parallel. The direct manual opening time for fuel is 13 milliseconds and oxidizer is 23 milliseconds. The closing time for fuel and oxidizer is 55±25 milliseconds.

b. The series connection from the fuel manual coil (positive to negative) to the oxidizer manual coil (negative to positive), then to ground, is to increase the arc suppression, reducing the arc at rotation control in the direct RCS mode of operation.

2.5.3.3.2 Injector.

The injector contains a premix igniter. The premix igniter chamber contains a fuel and an oxidizer passage that impinge upon each other (unlike impingement) within the premix igniter chamber. The premix igniter chamber, along with the 2-millisecond fuel lead, provides a smoother start transient primarily in the pulse mode of operation and especially in the area of minimum impulse.

The main chamber portion of the injector will allow eight fuel streams to impinge upon eight oxidizer streams (unlike impingement) for main chamber ignition. There are also eight fuel holes around the outer periphery of the injector, which provides film cooling to the combustion chamber.

2.5.3.3.3 Combustion Chamber.

The combustion chamber is constructed of unalloyed molybdenum, which is coated with a thin layer of molybdenum disilicide to prevent oxidation of the base metal. Cooling of the chamber is by radiation and film cooling.

Nozzle Extension. The nozzle extension is attached to the engine by a Waspolloy nut. The nozzle extension is machined from a cobalt base alloy. The stiffener rings are machined.

2.5.3.3.4 RCS Electrical Heaters.

Each of the RCS engine housings contain an electrical strip heater (figure 2.5-3). The electrical strip heaters provide propellant temperature control by conductance to the engine housing and engine injector valves; thus the propellants. Each heater has two thermo switches that maintain the temperature at a given range.

2.5.3.4 Pressure Versus Temperature Measuring System.

The helium tank supply temperature measurement and helium tank supply pressure measurement (figure 2.5-3) for each quad are utilized by the crew and TLM to determine the quantity of propellants remaining in the respective quad.

The nomogram (figure 2.5-6) depicts how to determine the propellant quantity remaining in percentage. The helium supply pressure is determined in psia on panel 12 by the crew, also the helium supply temperature

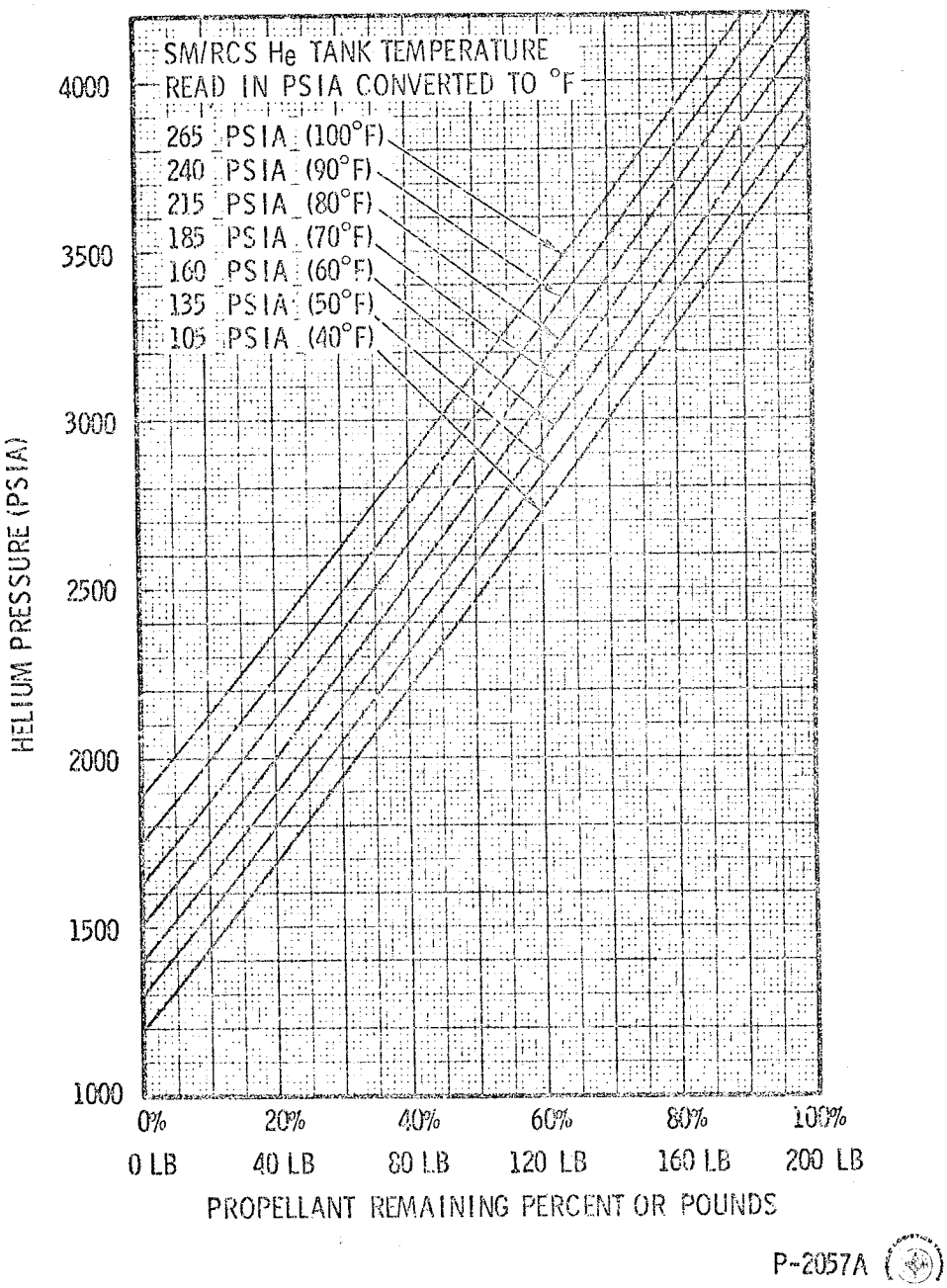

Figure 2.5-6. S/M RCS Nomogram Typical Propellant Remaining

reads in psia. The helium supply temperature readout of 0 psia is equivalent to 0°F and 400 psia is equivalent to 150°F.

As an example, if the crew readout on panel 12 for a given quad reads 3400 psia helium supply pressure and 265 psia helium supply temperature (which is equivalent to 100°F), the quantity of propellants remaining is approximately 60 percent or 120 pounds. The crew would utilize the RCS indicator select switch on panel 12 to select the quad desired in order to obtain the helium tank supply pressure and temperature, and determine the propellant quantity remaining in percent.

2.5.3.5 Engine Thrusting Logic.

In the S/M RCS, the commands from the stabilization and control system cannot be supplied to the SCS channel switches until the contacts of the RCS latching relay are closed. Closing of these contacts for S/M RCS control may be initiated by the following signals (figure 2.5-3):

a. With the launch escape tower jettisoned and the translation control rotated counterclockwise, an S/M abort or a normal S-IVB separation is initiated and the following sequence of events occurs.

1. Inform the G&N system of an abort initiation.
2. Initiate applicable booster shutdown.
3. Inhibit the pitch and yaw automatic jets of the SCS.
4. Initiates an ullage maneuver signal to the required manual coils of the S/M RCS engines (as long as the translation control is in counterclockwise, ullage is terminated when the translation control is returned to the neutral detent).
5. Adapter separation occurs at 1.7 seconds after the abort was initiated.
6. Energizes the RCS latching relay 2-1/2 seconds after the abort was initiated allowing the SCS to provide electrical commands to the automatic coils of the S/M RCS engines. In the event the logic fails to energize the RCS latching relay, the RCS CMD switch on panel 16 is placed to the ON position, providing a manual backup to the automatic function. In addition, if the ADAPTER SEPARATION pushbutton on panel 5 is pressed and held for approximately 1 to 2 seconds, the RCS latching relay is energized.

b. In a backup to the normal S-IVB separation sequence, the RCS CMD switch is momentarily placed to the ON position, energizing the RCS latching relay; the translation control is positioned forward, providing a translation through the SCS to the required automatic coils of the S/M RCS engine for a +X translation; and the ADAPTER SEPARATION pushbutton on panel 5 is held for 2 seconds to initiate adapter separation. (ADAPTER SEPARATION pushbutton pressed and held for approximately 1 to 2 seconds will also energize the RCS latching relay.)

In the event the translation controls are unable to provide an ullage maneuver, the DIRECT ULLAGE pushbutton on panel 7, when depressed

and held, provides the direct ullage signal to the manual coils of the RCS engines, to be energized to provide a +X translation. This provides a manual direct backup to the two translation controls for the ullage maneuver to be performed by the S/M RCS. The ullage maneuver is terminated upon release of the DIRECT ULLAGE pushbutton.

In the event the SCS and/or jet selection logic is unable to provide commands to the automatic coils of the S/M RCS engines, placing the DIRECT RCS switch on panel 8 to the ON position provides power to the rotation controls only. When the rotation control is positioned fully to its stops in any direction, the rotation control will energize the required manual coils for the desired maneuver.

If the SCS and/or the jet selection logic is unable to provide commands to the automatic coils of the S/M RCS engines, it is noted that translation control of the spacecraft is disabled.

2.5.4 S/M RCS PERFORMANCE AND DESIGN DATA.

2.5.4.1 Design Data.

The following list is the design data of the S/M RCS components.

HELIUM TANKS (4)	4150±50 psig at 70±5°F during servicing; after servicing sitting on launch pad 70±10°F. Capacity 0.57 lb, inside diameter 8.84 in., wall thickness 0.105 in., and internal volume 0.205 cu ft.
REGULATOR UNITS (8)	Primary - 181±4 psig with a normal lockup of 183±5 psig. From lockup pressure, not drop below 177 psig or rise above 185 psig and stabilize to 181±2 psig within 2 sec. Secondary - Lockup of 187±5 psig. From lockup pressure, not drop below 177 psig or rise above 194 psig and stabilize at 185±3 psig within 2 sec.
PRESSURE TRANSDUCERS (4) COMMON MANIFOLD	Illuminate CAUTION and WARNING light on panel 10 (S/M RCS A, B, C, or D). Underpressure 155 psia. Overpressure 215 psia.
HELIUM RELIEF VALVES (8)	Diaphragm rupture at 228±8 psig. Filter - 10 micron nominal, 25 micron absolute.

	Relief valve relieves at 236.5±11.5 psig.
	Relief valve reseats at not less than 220 psig in the cavity and a helium flow of less than 20 standard cubic centimeters per hour across the bleed device and relief valve assembly combined. The bleed device shall reopen when decreasing pressure has reached no less than 20 psig.
FUEL TANK (4)	Combined propellant and ullage volume of 69.0 lbs, initially at 60°F at 30±2 psig, resulting in a tank pressure of no more than 215 psia when heated to 85°F. Outside diameter maximum 12.62 in., length 23.717 (+0.060, -0.000) in. Wall thickness 0.017 in. to 0.022 in.
	Helium inlet port 1/4 in., fill and drain port 1/2 in.
OXIDIZER TANK (4)	Combined propellant and ullage volume of 137.0 lbs, initially at 65°F at 30±2 psig, resulting in a tank pressure of no more than 215 psia when heated to 85°F. Outside diameter maximum 12.62 in., length 28.55 (+0.060, -0.000) in.
	Wall thickness 0.017 in. to 0.022 in.
INLINE FILTERS	5-micron nominal; 15-micron absolute -
ENGINES (16)	1000-sec service life, capable of 10,000 operational cycles.
	Thrust 100 lbs ±5 percent.
	Expansion ratio 40:1 at nozzle exit.
	Cooling Film and radiation
	Injector type.
	Premix igniter one on one unlike impingement. Eight fuel annulus for film cooling of premix igniter, main chamber eight on eight unlike impingement, eight fuel for film cooling of combustion chamber wall.

	Nozzle extension	L-605 material
	Nozzle exit diameter 5.6 in.	
	Fuel lead.	
	Automatic coils - Connected in parallel.	
	Manual coils - Connected in series.	
	Weight - 4.99 lbs.	
	Length - 13.375 in.	
PACKAGE TEMPERATURE TRANSDUCER (4)	Illuminate CAUTION and WARNING light on panel 10 (S/M RCS A, B, C, or D)	
	Under temperature 63°F.	
	Over temperature 175°F.	
	One in Each Quad	One in Each Quad
HEATERS THERMO-SWITCH	Close at 77 (+10, -7)°F	Close at 115°F
	Open at 104±14°F	Open at 134°F
	36±3.6 watts per heater	36±3.6 watts per heater

2.5.4.2 Performance Data.

Refer to Mission Modular Data Book, SID 66-1177.

2.5.4.3 Power Consumption Data S/M RCS and C/M RCS.

Subsystem and Component	Control	No. of Units	Watts per Unit		Total Watts	
			AC	DC	AC	DC
Reaction control Service module RCS						
Engine heaters	RCS HEATER CB (4)	8		*36.0		288.0
RCS engine coils	SCS JET SELECTION LOGIC or DIRECT	32		*AUTO = 3.687		118.0
				*DIRECT = 1.062		34.0

SYSTEMS DATA

Subsystem and Component	Control	No. of Units	Watts per Unit		Total Watts	
			AC	DC	AC	DC
He isolation valves	He VALVE CB (2) He sw (8)	8		6.750		54.0
Propellant isolation valves	PROP. ISOL. CB (2) PROP. ISOL. sw (4)	8		6.125		49.0
Command module RCS						
Isolation valves	(Ref. S/M/RCS ISOL. CB) PROP. ISOL. sw (2)	4		12.250		49.0
RCS engine coils	SCS JET SELECTION LOGIC OR DIRECT	24		*AUTO = 4.208		105.0
				*DIRECT = 2.187		52.5

*Intermittent operating components.

2.5.4.4 S/M RCS Electrical Power Distribution.

See figure 2.5-7 for electrical power distribution.

2.5.5 S/M RCS OPERATIONAL LIMITATIONS AND RESTRICTIONS.

Operational limitations and restrictions on the testing of system valves in a dry unserviced propulsion system are as follows:

a. Helium isolation valves and propellant isolation valves minimum energization time of 0.2 second and not to exceed 5 seconds.

b. Engine injector valve automatic coil energization not to exceed 2 minutes on time during any 15-minute period with voltage not exceeding 32 vdc.

c. Engine injector valve direct coil energization on time not exceed 45 minutes during any 60-minute period and voltage not exceed 16 vdc to either coil separately or 32 vdc to two coils in series.

2.5.6 S/M RCS TELEMETRY MEASUREMENTS.

The subsequent list is of all S/M RCS telemetry data that is monitored by flight controllers and ground support personnel.

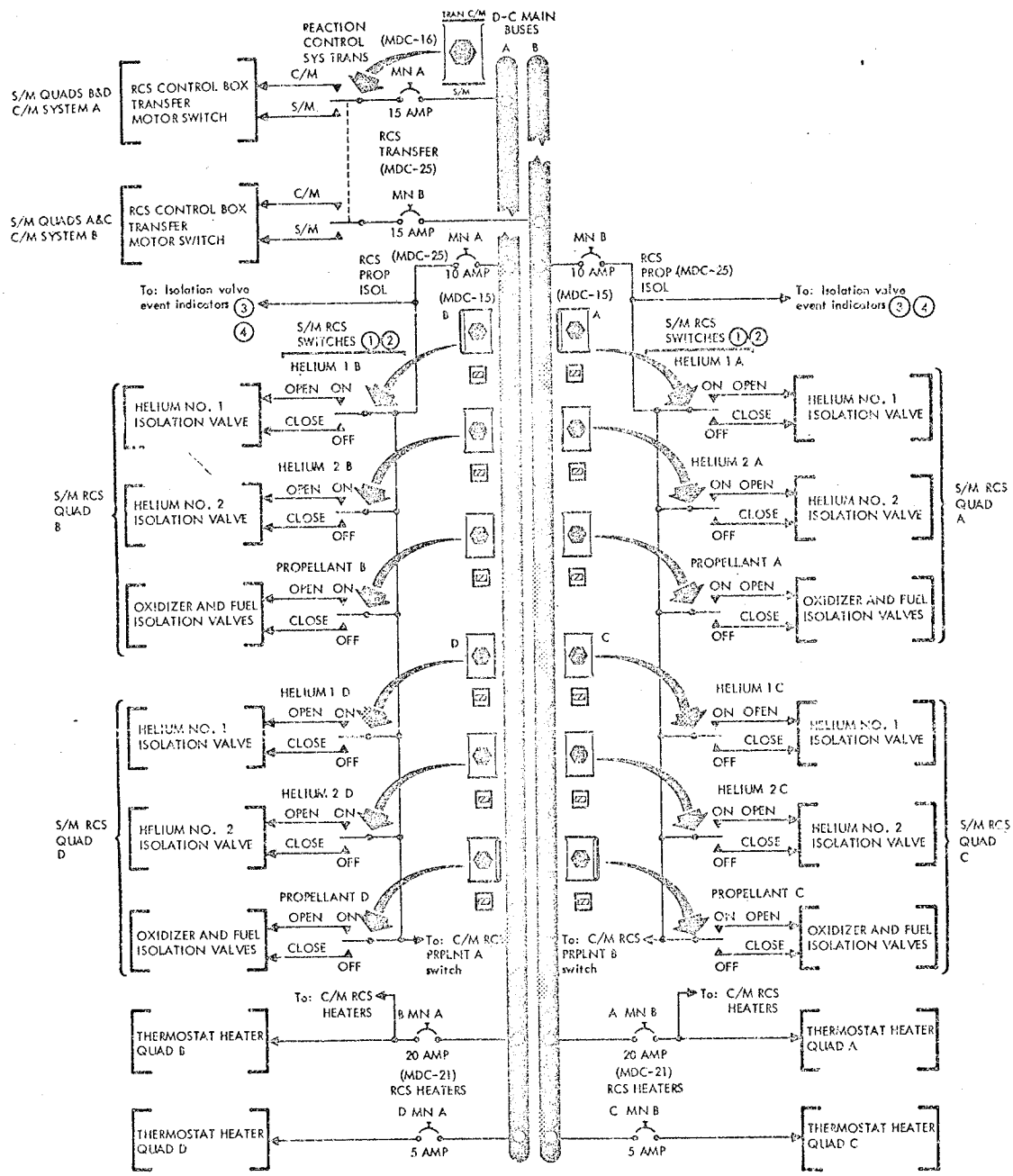

NOTES: 1. Helium isolation valves are mechanically latched open and spring-loaded closed.

2. Propellant isolation valves are magnetically latched open and spring-loaded closed.

3. Each helium isolation valve event indicator is energized when corresponding valve is in closed position only.

4. The propellant isolation valve event indicator is energized if either fuel or oxidizer valve is in the closed position.

SM-2A-715D

Figure 2.5-7. S/M RCS Electrical Power Distribution Diagram

Crew Display	Figure	Measurements	Measurement Number	Range	Signal Conditioner	Channel Code*	Bit Rate*	*	Operating Range
Panel 12	2.5-3	Helium Tank Temperature A	SR5013T	0 +150°F	S28AR164(S19A1)				70±10°F on launch pad, variable during mission.
Panel 12	2.5-3	Helium Tank Temperature B	SR5014T	0 +150°F	S28AR164(S19A2)				
Panel 12	2.5-3	Helium Tank Temperature C	SR5015T	0 +150°F	S28AR164(S19A3)				
Panel 12	2.5-3	Helium Tank Temperature D	SR5016T	0 +150°F	S28AR164(S19A4)				
Panel 12	2.5-3	Helium Tank Supply Pressure A	SR5001P	+0 +5K psia	S28AR36(S19A1)	10A89	H2	PCM	4150±5°F psia and decreases with engine firings.
Panel 12	2.5-3	Helium Tank Supply Pressure B	SR5002P	+0 +5K psia	S28AR36(S19A2)	10A91	H2	PCM	
Panel 12	2.5-3	Helium Tank Supply Pressure C	SR5003P	+0 +5K psia	S28AR36(S19A3)	10A93	H2	PCM	
Panel 12	2.5-3	Helium Tank Supply Pressure D	SR5004P	+0 +5K psia	S28AR36(S19A4)	10A96	H2	PCM	
Panel 10 and 12	2.5-3	Regulated Helium Manifold Pressure A	SR5729P	+0 +400 psia	S28AR44(S19A1)	11A82	H2	PCM	Launch pad 193 to 207 psia decreasing to 178 to 192 psia in a space environment.
Panel 10 and 12	2.5-3	Regulated Helium Manifold Pressure B	SR5776P	+0 +400 psia	S28AR44(S19A2)	11A88	H2	PCM	
Panel 10 and 12	2.5-3	Regulated Helium Manifold Pressure C	SR5817P	+0 +400 psia	S28AR44(S19A3)	11A89	H2	PCM	
Panel 10 and 12	2.5-3	Regulated Helium Manifold Pressure D	SR5830P	+0 +400 psia	S28AR44(S19A4)	11A91	H2	PCM	
	2.5-3	Oxidizer Feed Line Pressure A	SR5733P	+0 +300 psia		12A8	H1	FQ	Launch pad 193 to 207 psia decreasing to 178 to 192 psia in a space environment.
	2.5-3	Fuel Feed Line Pressure A	SR5737P	+0 +300 psia		12A9	H1	FQ	
	2.5-3	Fuel Feed Line Pressure B	SR5784P	+0 +300 psia		12A13	H1	FQ	
	2.5-3	Oxidizer Manifold Pressure D	SR5821P	+0 +300 psia		12A14	H1	FQ	
	2.5-3	Fuel Feed Line Pressure C	SR5822P	+0 +300 psia		12A15	H1	FQ	
	2.5-3	Fuel Feed Line Pressure D	SR5823P	+0 +300 psia		12A16	H1	FQ	
Panel 10 and 12	2.5-3	Temperature Package A + P Engine 3	SR5065T	+0 +300°F	S28AR40(S19A1)	10A95	H1	PCM	Pad 115 to 134°F Flight 115°F to 175°F
Panel 10 and 12	2.5-3	Temperature Package B - Y Engine 6	SR5066T	+0 +300°F	S28AR40(S19A2)	10A62	H1	PCM	

Crew Display	Figure	Measurements	Measurement Number	Range	Signal Conditioner	Channel Code*	Bit Rate*	*	Operating Range
Panel 10 and 12	2.5-3	Temperature Package C - P Engine 4	SR5067T	+0 +300°F	S28AR40(S19A3)	10A98	H1	PCM	Pad 115 to 134°F Flight 115°F to 175°F
Panel 10 and 12	2.5-3	Temperature Package D + Y Engine 5	SR5068T	+0 +300°F	S28AR40(S19A4)	10A100	H1	PCM	
	2.5-3	Temperature Injector Head B + Y Engine	SR7128T	+0 +500°F		51A21	H1	FQ	Variable
	2.5-3	Temperature Injector Head A CCW R Engine	SR7134T	+0 +500°F		51A22	H1	FQ	Variable
	2.5-3	Direct Ullage On A (Z16 Relay)	CD0140X	OFF ON event		11E12-06	E2	PCME	Event
	2.5-3	Direct Ullage On B (Z16 Relay)	CD0141X	OFF ON event		11E12-08	E2	PCME	Event
	2.5-3	RCS Activate Signal A (Z19 Relay)	CD0170X	OFF ON event		11E13-06	E2	PCME	Event
	2.5-3	RCS Activate Signal B (Z19 Relay)	CD0171X	OFF ON event		11E13-07	E2	PCME	Event
		Tower Jettison A	CD0105X			11E28-02	E2	PCME	Event
		Tower Jettison B	CD0106X			11E28-03	E2	PCME	Event

*Analog measurements digitally coded into 8 bit words.
Analog measurements - 0 to 5 vdc
FQ - Flight qualification measure
H1 - High bit rate
H2 - High and low bit rate
E2 - High and low bit rate

Channel Code Example: 10A89

Significant number - 1
How many zeros after significant number is amount of samples per second } 0 } 1 sample per second
Analog - A
Event - E
Channel code - 89

2.5.7 C/M RCS FUNCTIONAL DESCRIPTION.

The command module reaction control subsystem provides the impulse required for controlling spacecraft attitude during the terminal phases of a mission.

The subsystems are activated normally by the crew placing the C/M-S/M SEPARATION switches to C/M-S/M SEPARATION position or by placing the C/M RCS PRESSURIZE switch to the ON position prior to initiating C/M-S/M separation (C/M RCS PRESSURIZE switch may also be utilized as a manual backup to the C/M-S/M SEPARATION switches). The subsystems are activated automatically in the event of an abort from the pad up to launch escape tower jettison. Separation of the two modules occurs prior to entry (normal mode) or during an abort from the pad up to launch escape tower jettison.

The C/M-S/M consists of two identical and independent subsystems, identified as subsystem A and subsystem B. Both subsystems are operated simultaneously. In the event a malfunction develops in one subsystem, the remaining subsystem has the capability of providing the impulse required to perform necessary pre-entry and entry maneuvers. The C/M RCS is contained entirely within the C/M and each reaction engine nozzle is ported through the C/M skin. The propellants consist of nitrogen tetroxide (N_2O_4) used as oxidizer and monomethylhydrazine (MMH) used as fuel. Pressurized helium gas is the propellant transferring agent.

The reaction jets may be pulse-fired, producing short-thrust impulses or continuously fired, producing a steady-state thrust level. The short firing permits attitude modes of operation. C/M attitude control is normally maintained by utilizing the applicable pitch, yaw, and roll engines of subsystems A and B. However, complete attitude control can be maintained with only one subsystem.

A functional flow diagram of C/M RCS subsystems A and B is shown in figure 2.5-8. The helium storage vessel of each subsystem supplies pressure to two helium isolation squib valves that are normally closed throughout the mission until C/M-S/M separation or C/M RCS pressurize is activated. The helium isolation squib valves in a subsystem are initiated open, allowing pressure to the pressure regulators downstream of each helium isolation squib valve, reducing the high-pressure helium to a desired working pressure.

Regulated helium pressure is directed through a series-parallel combination of four independent check valves. The check valves permit helium pressure to the fuel and oxidizer tanks, and prevent reverse flow of propellant vapors or liquids. A pressure-relief is installed in the pressure lines between the check valves and propellant tanks to protect the propellant tanks from any excessive pressure increase.

Helium entering the propellant tanks creates a pressure buildup around the propellant positive expulsion bladders, forcing the propellants to be expelled into the propellant distribution lines. Propellants then flow to valve isolation burst diaphragms, which rupture, and through the propellant isolation valves. Each subsystem supplies fuel and oxidizer to six engines.

Oxidizer and fuel is distributed to the 12 fuel and oxidizer injector valves by a parallel feed system. The fuel and oxidizer injector valves on each engine contain orifices which meter the propellant flow to obtain a nominal 2:1 oxidizer/fuel ratio by weight. The oxidizer and fuel impinge, atomize, and ignite due to the hypergolic propellants. The injector valves are controlled automatically by the G&N system or the SCS. Manual override direct control is provided for rotational maneuvers and direct ullage only. The injector valves are spring-loaded closed.

Extremely cold temperature of the C/M exterior is anticipated prior to entry operations; therefore, C/M RCS engine preheating may be necessary before initiating pressurization due to possible freezing of the oxidizer (+11.8°F) upon contact with the engine injector valves. This is accomplished by the crew monitoring the engine temperatures and energizing the injector valve solenoids until acceptable engine temperatures are obtained. The C/M RCS HTRS switch on panel 200 will apply power to the injector valve solenoids for engine preheating.

Since the presence of hypergolic propellants can be hazardous upon C/M impact, the remaining propellants are burned off and the RCS purged with helium prior to C/M landing.

In the event of an abort from the pad up to T + 61 seconds after liftoff, provisions have been incorporated to automatically dump the oxidizer supply overboard, followed by a helium purge of the oxidizer tanks and dumping of the remaining helium supply. The fuel is retained on board due to insufficient time for dumping and the C/M impacts with fuel tanks full, but depressurized.

2.5.8 C/M RCS MAJOR COMPONENTS/SUBSYSTEM DESCRIPTION.

The C/M RCS is composed of two separate, normally independent systems, designated system A and system B. The systems are identical to operation, each containing the following four major subsystems:

- Pressurization
- Propellant
- Rocket engine
- Temperature control system

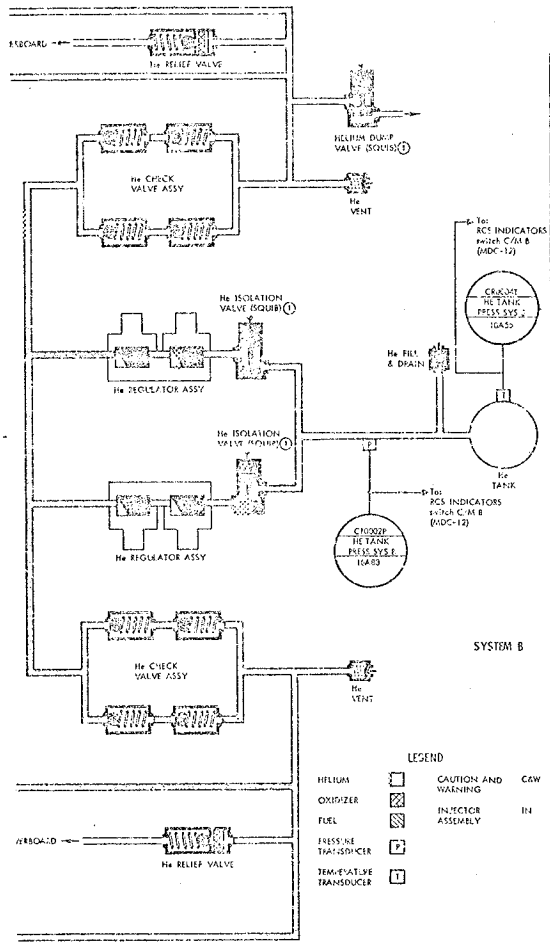

C/M RCS SQUIB VALVE ACTIVATION CONTROL MATRIX

Phase	Sequence	He Isolation (4)	Fuel Side He Interconnect (1)	Oxidizer Side He Interconnect (1)	Fuel Interconnect (1)	Oxidizer Interconnect (1)	Fuel Tank Bypass (2)	Oxidizer Tank Bypass (2)	Oxidizer Dump (2)	He Dump (1)
		SQUIB VALVE IDENTIFICATION (TOTAL 15 VALVES)								
Normal Entry	1. Prior to C/M-S/M separation	1 (NORMAL) / 1 (BACKUP)								
	2. Main parachute line stretch		2	2	2	2				
	3. After propellant depletion						1 (NORMAL) / 1 (BACKUP)	1 (NORMAL) / 1 (BACKUP)		
Abort (Pad to lift-off plus 61 seconds)	1. Simultaneous with EDS or manual abort initiation	1 (NORMAL) / 1 (BACKUP)		2		2			2	
	2. Abort initiation plus 10 seconds		2					2		2
Abort (Lift-off plus 61 seconds to tower jettison)	1. Simultaneous with EDS or manual abort initiation	1 (NORMAL) / 1 (BACKUP)								
	2. Main parachute line stretch		2	2	2	2				
	3. After propellant depletion						1 (NORMAL) / 1 (BACKUP)	1 (NORMAL) / 1 (BACKUP)		
All SPS Aborts	Same as normal entry									

LEGEND FOR SQUIB VALVE ACTIVATION METHODS

1. C/M RCS PRESS. switch (MDC-16)
2. C/M PROP. JETT DUMP switch (MDC-8)
3. C/M PROP. JETT PURGE switch (MDC-8)
4. Automatic (MESC at C/M-S/M separation)
5. Automatic (RCS control box time delay relay)
6. C/M RCS He DUMP switch (MDC-26)

NOTES: 1. See matrix for squib valve activation sequence.
2. Relay is controlled by MESC and provides for automatic valve closure during pad up to 61 second abort

SM-2A-0630

Figure 2.5-8. C/M RCS Functional Flow Diagram

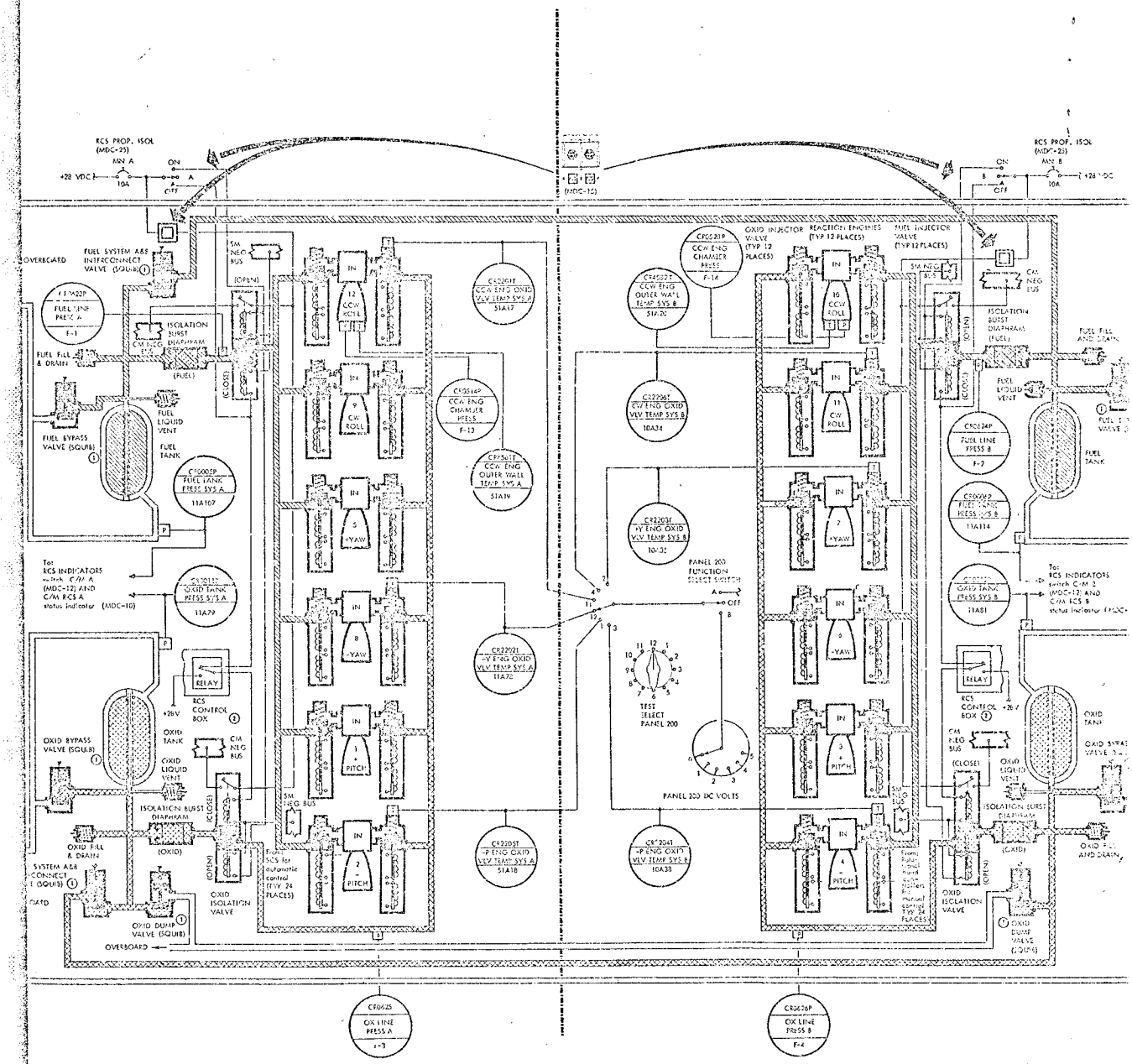
RCS PROP. ISOL (MDC-25)
MN A
+28 VDC
10A
ON
A
OFF
(MDC-10)
RCS PROP. ISOL (MDC-23)
MN B
10A
+28 VDC
OVERBOARD
FUEL SYSTEM A&B INTERCONNECT VALVE (SQUIB)
FUEL LINE PRESS A
F-1
ISOLATION BURST DIAPHRAM
CM NEG BUS
SM NEG BUS
(OPEN)
(CLOSE)
(FUEL)
FUEL FILL & DRAIN
FUEL LIQUID VENT
FUEL BYPASS VALVE (SQUIB)
FUEL TANK
FUEL TANK PRESS SYS A
11A107
To: RCS INDICATORS switch C/M A (MDC-12) AND C/M RCS A status indicator (MDC-10)
OXID TANK PRESS SYS A
11A79
RELAY
RCS CONTROL BOX
+28V
OXID TANK
OXID LIQUID VENT
OXID BYPASS VALVE (SQUIB)
ISOLATION BURST DIAPHRAM
(OXID)
OXID FILL & DRAIN
SYSTEM A&B CONNECT (SQUIB)
OXID ISOLATION VALVE
OXID DUMP VALVE (SQUIB)
OVERBOARD
IN
12 CCW ROLL
9 CW ROLL
5 +YAW
8 -YAW
1 + PITCH
2 - PITCH
Fuel SCS for automatic control (TYP 24 PLACES)
CCW ENG OXID VLV TEMP SYS A
51A17
CCW ENG CHAMBER PRESS
F-13
CCW ENG OUTER WALL TEMP SYS A
51A19
+Y ENG OXID VLV TEMP SYS A
11A72
-Y ENG OXID VLV TEMP SYS A
51A18
OXID INJECTOR VALVE (TYP 12 PLACES)
REACTION ENGINES (TYP 12 PLACES)
FUEL INJECTOR VALVE (TYP 12 PLACES)
CCW ENG CHAMBER PRESS
F-14
CCW ENG OUTER WALL TEMP SYS B
51A20
CW ENG OXID VLV TEMP SYS B
10A34
+Y ENG OXID VLV TEMP SYS B
10A35
PANEL 200 FUNCTION SELECT SWITCH
TEST SELECT PANEL 200
PANEL 200 DC VOLTS
-Y ENG OXID VLV TEMP SYS B
10A38
16 CCW ROLL
11 CW ROLL
7 +YAW
6 -YAW
3 + PITCH
4 - PITCH
CM NEG BUS
ISOLATION BURST DIAPHRAM (FUEL)
FUEL LIQUID VENT
FUEL LINE PRESS B
F-2
FUEL LINE PRESS B
11A114
OXID TANK PRESS SYS B
11A81
To: RCS INDICATORS switch C/M 2 (MDC-12) AND C/M RCS B status indicator (MDC-10)
RELAY
RCS CONTROL BOX
+28 V
OXID TANK
OXID LIQUID VENT
ISOLATION BURST DIAPHRAM
(OXID)
OXID ISOLATION VALVE
OXID DUMP VALVE (SQUIB)
OXID LINE PRESS A
F-3
OXID LINE PRESS B
F-4

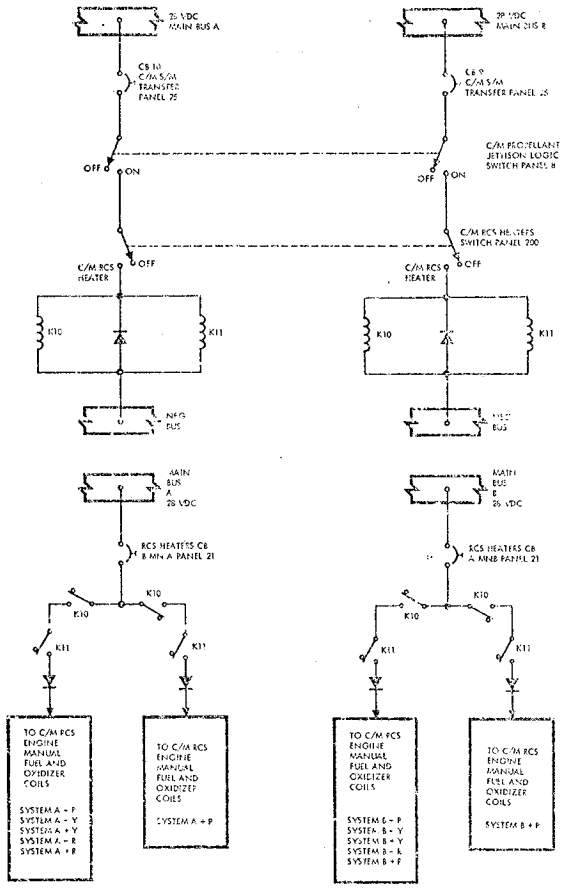

28 VDC MAIN BUS A
28 VDC MAIN BUS B
CB 10 C/M S/M TRANSFER PANEL 25
CB 9 C/M S/M TRANSFER PANEL 25
C/M PROPELLANT JETTISON LOGIC SWITCH PANEL 8
OFF
ON
C/M RCS HEATERS SWITCH PANEL 200
C/M RCS HEATER
K10
K11
NEG BUS
MAIN BUS A 28 VDC
MAIN BUS B 28 VDC
RCS HEATERS CB 8 MIN A PANEL 21
RCS HEATERS CB A MIN B PANEL 21
TO C/M RCS ENGINE MANUAL FUEL AND OXIDIZER COILS
SYSTEM A + P
SYSTEM A - Y
SYSTEM A + Y
SYSTEM A - R
SYSTEM A + R
TO C/M RCS ENGINE MANUAL FUEL AND OXIDIZER COILS
SYSTEM A + P
TO C/M RCS ENGINE MANUAL FUEL AND OXIDIZER COILS
SYSTEM B - P
SYSTEM B - Y
SYSTEM B + Y
SYSTEM B - R
SYSTEM B + P
TO C/M RCS ENGINE MANUAL FUEL AND OXIDIZER COILS
SYSTEM B + P

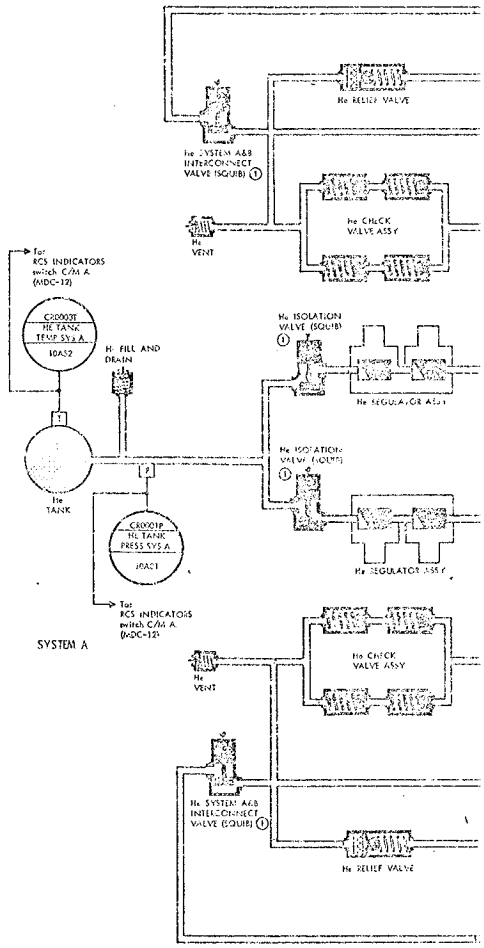

He RELIEF VALVE
He SYSTEM A&B INTERCONNECT VALVE (SQUIB) 1
He CHECK VALVE ASSY
He VENT
To: RCS INDICATORS switch C/M A (MDC-12)
CR0003T HE TANK TEMP SYS A
10A52
He FILL AND DRAIN
He ISOLATION VALVE (SQUIB) 1
He REGULATOR ASSY
He TANK
CR0001P HE TANK PRESS SYS A
10A01
To: RCS INDICATORS switch C/M A (MDC-12)
SYSTEM A
He CHECK VALVE ASSY
He VENT
He SYSTEM A&B INTERCONNECT VALVE (SQUIB) 1
He RELIEF VALVE

2.5.8.1 Pressurization Subsystem.

This subsystem consists of a helium supply tank, two dual-pressure regulator assemblies, two check valve assemblies, two pressure-relief valve assemblies, and associated distribution plumbing.

2.5.8.1.1 Helium Supply Tank.

The total high-pressure helium is contained within a single spherical storage tank. Initial fill pressure is 4150±50 psig. The limit working pressure is 5000 psig to accommodate pressure transients during filling. The proof pressure is 6667 psig and burst pressure is 7500 psig.

2.5.8.1.2 Helium Isolation (Squib-Operated) Valve.

The two squib-operated helium isolation valves are installed in the plumbing from each helium tank to confine the helium to as small an area as possible to reduce helium leakage during the period the system is not in use. Two squib valves are employed in each system to assure pressurization. The valves are opened by closure of the CM PRESS switch on panel 16, the C/M-S/M SEP switches on panel 15, or upon the receipt of an abort signal from the pad up to launch escape tower jettison.

2.5.8.1.3 Helium Pressure Regulator Assembly.

The pressure regulators used in the C/M RCS subsystems A and B are similar in type, operation, and function to those used in the S/M RCS. The differences are that the regulators in the C/M RCS are set at a higher pressure than those of the S/M RCS.

2.5.8.1.4 Helium Check Valve Assembly.

The check valve assemblies used in C/M RCS subsystems A and B are similar in type, operation, and function to those used in the S/M RCS.

2.5.8.1.5 Helium Relief Valve.

The helium relief valves used in the C/M RCS subsystems A and B are similar in type, operation, and function to those used in the S/M RCS. The differences are that the rupture pressure of the burst diaphragm in the C/M RCS is higher than that of the S/M RCS, and the relief valve relieves at a higher pressure in the C/M RCS than that of the S/M RCS.

2.5.8.1.6 Distribution Plumbing.

Brazed joint tubing is used to distribute regulated helium in each subsystem from the helium storage vessels to the propellant tanks.

2.5.8.2 Propellant Subsystem.

Each subsystem consists of one oxidizer tank, one fuel tank, one oxidizer and fuel isolation valve, and associated distribution plumbing.

2.5.8.2.1 Oxidizer Tank.

The oxidizer supply is contained in a single, titanium alloy, hemispherical-domed, cylindrical tank to each system. Each tank contains a diffuser tube assembly and a teflon bladder for positive expulsion of the oxidizer similar to that of the S/M RCS tank assemblies. The difference is the C/M RCS tank assemblies are smaller in size. The bladder is attached to the diffuser tube at each end of the tank. The diffuser tube acts as the propellant outlet.

When the tank is pressurized, the helium gas surrounds the entire bladder, exerting a force which causes the bladder to collapse about the propellant, thus forcing the oxidizer into the diffuser tube assembly and out of the tank outlet into the manifold. Working pressure is 360 psig; proof pressure is 480 psig; and the burst pressure is 540 psig.

Fuel Tank. The fuel supply is contained in a single, titanium alloy, hemispherical-domed, cylindrical tank for each system that is similar in material, construction, and operation to that of the oxidizer tank.

2.5.8.2.2 Diaphragm Burst Isolation Valve.

The burst diaphragms, downstream from each tank are installed to confine the propellants into as small an area as possible throughout the mission. This is to prevent loss of propellants in the event of line rupture downstream of the burst diaphragm or injector valve leakage.

When the helium isolation squib valves are initiated open, regulated helium pressure pressurizes the propellant tanks, creating the positive expulsion of propellants into the respective manifolds to the burst diaphragms, which rupture, allowing the propellants to flow through the propellant isolation valves, to the injector valves on each engine. The diaphragm is of the nonfragmentation type; but, in the event of any fragmentation, a filter is incorporated to prevent any fragments from entering the engine injector valves.

2.5.8.2.3 Propellant Isolation Shutoff Valves.

When the burst diaphragm isolation valves are ruptured, the propellants flow to the propellant isolation valves.

The isolation valves in the fuel and oxidizer lines are both controlled by a single switch on panel 15. The valves are two-solenoid valves and are

magnetically latched open and spring-loaded closed. The valves are normally open in respect to fluid flow. The C/M propellant switches A and B on panel 15 will be placed to ON after T + 61 seconds and will remain in that position until orbit insertion to ensure that the propellant isolation valves remain open when systems A and B are pressurized upon abort initiation. The switches will also be placed to ON prior to C/M-S/M separation and remain in that position until completion of propellant jettison to again ensure that the valves remain in the open position. The switches are placed to center-neutral position after tower jettison until prior to C/M-S/M separation, removing electrical power from the valves.

Each valve contains a position switch which is in parallel to one position indicator below the switch on panel 15 that controls both valves. When the position switch in each valve is open, the indicator on panel 15 is grey (same color as the panel), indicating to the crew the valves are in the normal position. When the position switch in each valve or one valve is closed, the indicator on panel 15 is diagonal lines, indicating to the crew the valve or valves are closed. The valves are closed in the event of a failure downstream of the valves, line rupture, or runaway thruster, etc. The valve will operate at 0 to 360 psig at both the inlet and outlet ports.

The proof pressure is 540 psig and the burst pressure is 720 psig. The solenoid is a 28-vdc type with a pull-in voltage of not more than 15 volts dc, and the current not to exceed 2 amperes at 30 volts dc. The valve assembly response is 200 milliseconds maximum for one-cycle operation (open-to-closed or closed-to-open).

2.5.8.2.4 Distribution Plumbing.

Brazed joint tubing is used to distribute pressurized helium gas to the propellant positive expulsion tanks in system A and system B. The distribution lines contain 11 explosive-operated (squib) valves which permit changing the helium distribution configuration to accomplish various functions within the C/M RCS. Each squib valve is actuated by an explosive charge detonated by an electrical hotwire igniter. After ignition of the explosive device, the valve remains open permanently. Two squib valves are utilized in each system to isolate the high-pressure helium gas supply to the storage tanks until RCS pressurization is commanded. Two squib valves are utilized to interconnect system A and system B regulated helium supply, which ensures pressurization of both systems during dump-burn and helium purge operations. Two squib valves in each system permit helium gas to bypass the propellant tanks, allowing helium purging of the propellant subsystem. One squib valve is installed in system B regulated helium line to permit helium depressurization in the event of a low-altitude abort (pad to T + 61 second abort).

2.5.8.3 Engine Assembly.

The command module reaction control subsystem engines are ablation cooled, bipropellant thrust generators which can be operated in either the pulse-mode or the steady-state mode.

Each engine consists of a fuel and oxidizer control valve, which controls the flow of propellants by responding to electrical commands (automatic) generated by the guidance and navigation subsystem and/or stabilization control subsystem or by the crew (manually) and an injector head assembly which directs the flow of each propellant from the propellant control valves to the combustion chamber and the combustion chamber in which the propellants are burned to produce thrust. Estimated engine thrust rise and decay is shown in figure 2.5-9.

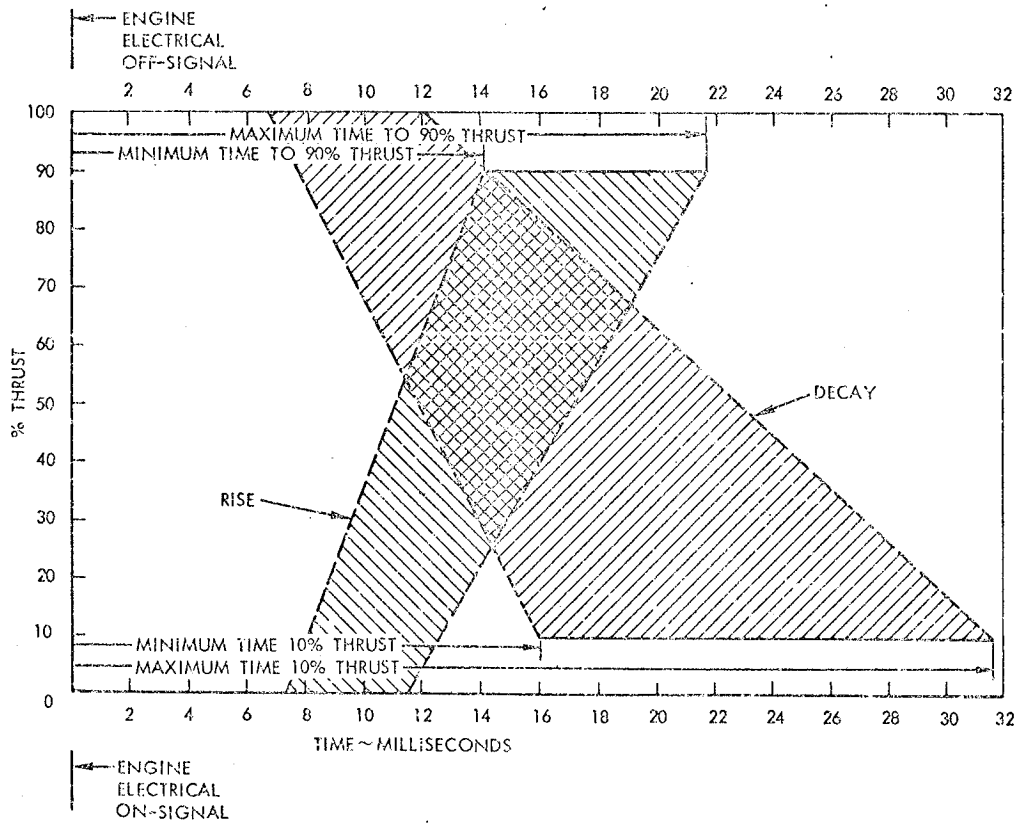

Figure 2.5-9. C/M RCS Engine Thrust Rise and Decay Time (Typical)

2.5.8.3.1 Propellant Solenoid Injector Control Valves (Fuel and Oxidizer).

The injector valves utilize two coaxially wound coils: one for automatic and one for direct manual control. The automatic coil is used when the thrust command originates from the jet selection logic. The manual coils are used when the thrust command originates at the rotation control (direct mode).

The solenoid valves are spring-loaded closed and energized open. The reaction time of the valves, pulse mode of operation, reason for pulse mode, and thrust curve generated by the engine is similar to the S/M RCS engines.

The automatic coils in the fuel and oxidizer injector valves are connected in parallel from the SCS. The manual coils in the fuel and oxidizer injector valves provide a manual direct backup to the automatic system. The manual coils are connected in parallel from the rotation controls.

Engine injector valve opening time of 5±2 milliseconds and closing of 6±2 milliseconds for the automatic coils and opening time of 7 milliseconds and closing of 16 to 18 milliseconds for the direct manual coils. The actuation time shall not vary by more than +50 or -25 percent operating time between +40 to +200°F.

2.5.8.3.2 Injector.

The injector, contains a fuel and oxidizer passage that impinge (unlike impingement) upon a splash plate within the combustion chamber. Therefore, the injector pattern is referred to as an unlike impingement splash-plate injector. There are 16 fuel and 16 oxidizer passages in the injector face.

2.5.8.3.3 Thrust Chamber Assembly.

The thrust chamber assembly is fabricated in four segments: the combustion chamber ablative sleeve, the throat insert, the ablative material, and the asbestos and the fiberglass wrap. The engine is ablative cooled.

2.5.8.3.4 Nozzle Extension.

The C/M RCS engines are mounted within the structure of the C/M. The nozzle extensions are required to transmit the gases from the engine out through the structure of the C/M. The nozzle extensions are fabricated of ablative material.

2.5.8.3.5 Engine Solenoid Injector Valve Temperature Control System.

A temperature control system of the C/M RCS engine valves is employed by energizing the manual direct coils on each engine.

Temperature transducers are mounted on the engine injector valve oxidizer solenoids. A temperature transducer is installed on the subsystem. A counterclockwise roll oxidizer valve, negative yaw oxidizer valve, negative pitch oxidizer valve and on subsystem B positive yaw oxidizer valve, negative pitch oxidizer valve, and clockwise roll oxidizer valve. These engine injector solenoid oxidizer valves were selected as the coldest engines.

The temperature transducers have a range from -50°F to +250°F. The temperature transducers from the three subsystem A and B engine oxidizer injector valves provide inputs the the TEST SELECT switch on panel 200, which is located in the lower equipment bay of the command module. With the FUNCTION SELECT switch on panel 200 placed to position B and the TEST SELECT rotary switch on panel 200 placed to positions 1, 2, 3, 4, 11, and 12, respectively, the specific engine oxidizer valve temperature is monitored as a d-c voltage on the 0- to 5-vdc voltmeter. Zero vdc is equivalent to -50°F and 5 vdc is equivalent to +250°F.

A C/M RCS HEATER switch is located on panel 200. The C/M RCS HEATER switch is placed to the ON position when any one of the instrumented engines are below +64°F, approximately 1.80 vdc. This must be accomplished within 26 minutes prior to C/M-S/M separation, providing the C/M propellant jettison LOGIC switch is ON. The fuel and oxidizer injector valve manual coils of all C/M RCS engines are energized open (prior to pressurization of C/M RCS subsystems A and B). A 13-minute heatup time maximum or 100°F, which is monitored on the d-c voltmeter on panel 200 as 2.50 vdc, assures engine injector valve temperature is at +20°F minimum. If +100°F, 2.50 vdc on the d-c voltmeter is reached from the coldest instrumented engine before 13 minutes, the C/M RCS HEATER switch is placed to OFF, which de-energizes the engine injector valves and the injector valves spring-load closed. If a time of 13 minutes is reached before +100°F, 2.50 vdc on the d-c voltmeter, the C/M RCS HEATER switch is placed to OFF. This will prevent the oxidizer from freezing at the engine injector valves upon pressurization of subsystems A and B.

The C/M RCS HEATER switch must be placed to OFF prior to C/M RCS pressurization. The operation of the C/M RCS HEATER switch in conjunction with the d-c voltmeter and/or heating time ensures all other engine valves reach the acceptable temperature levels. The +100°F, 2.50 vdc, or thirteen-minute time limit assures that the warmest engine valve will be less than +200°F.

2.5.8.3.6 Engine Thrust ON-OFF Logic.

All thrust commands for C/M attitude pass through the stabilization and control subsystem and the jet selection logic. These commands may originate at the following:

a. The rotation controls
b. The stabilization and control subsystem
c. The guidance and navigation subsystem.

In the event the SCS and/or jet selection logic is unable to provide commands to the automatic coils of the C/M RCS engines, placing the DIRECT RCS switch on panel 8 to the ON position provides power to the rotation control. When the rotation control is positioned fully to its stops in any direction, the rotation control energizes the required manual coils for the desired maneuver.

When the CM SM SEP switches on panel 15 are placed to CM SM SEP position, the switches automatically energize relays in the RCS transfer panels (C19A4) and in the RCS control boxes (C19A1) (figure 2.5-10) (providing the CM PROP JETT LOGIC switch on panel 8 is ON) that transfers the SCS and direct manual inputs from the S/M RCS engine th the C/M RCS engines automatically. (These same functions occur on any LES ABORT.)

The transfer motors in the RCS transfer panels (C19A4) and in the RCS control boxes (C19A1) are redundant to each other in that they ensure the SCS and direct manual inputs are transferred from the S/M RCS engines to the C/M RCS engines. The transfer motors in the RCS control boxes (C19A1) are automatically activated by the CM SM SEP switches (providing the CM PROP JETT LOGIC switch is ON); in addition, they may also be activated by the manual backup of the RCS TRANSFER switch on panel 16. The transfer motors in the RCS transfer panels (C19A4) are activated automatically only by the CM SM SEP switches (providing the CM PROP JETT LOGIC switch is ON).

As an example, if the RCS transfer motor in C19A1 failed to transfer automatically at CM SM SEP, the RCS transfer motor in C19A4 would still automatically transfer the SCS and direct manual inputs from the S/M RCS engines to the C/M RCS engines (providing the CM PROP JETT LOGIC switch is ON). In addition, the RCS TRANSFER switch on panel 16 provides a manual backup to the C19A1 RCS transfer motors only.

Another example, the C/M RCS subsystems could be checked out prior to CM SM SEP by placing the RCS TRANSFER switch on panel 16 to CM position, and only the RCS transfer motors (C19A1) in the RCS control boxes would transfer the SCS and direct manual inputs from the S/M RCS engines to the C/M RCS engines. The transfer motors in the RCS transfer panels (C19A4) would not transfer until C/M S/M SEP (providing the C/M PROP JETT LOGIC switch is ON) and then start the SM jettison controllers.

2.5.8.4 Propellant Jettison.

There are two sequences of propellant jettison. One sequence is employed in the event of an abort while the vehicle is on the launch pad and through the first 61 seconds of flight. The second sequence is employed for all other conditions, whether it be a normal or an abort mode of operation. The sequence of events before and during a normal re-entry is as follows:

a. The crew will place the C/M S/M SEPARATION switches to the C/M S/M SEPARATION position on panel 15 or place the C/M RCS PRESS switch on panel 16 to the ON position, prior to initiating C/M S/M separation. The C/M RCS PRESS switch or the C/M S/M SEP switches initiates the helium isolation squib valves in C/M RCS subsystems A and B, thus pressurizing both subsystems (figures 2.5-8 and 2.5-10). The C/M RCS PRESS switch provides a backup to the C/M S/M SEP switches and the RCS LOGIC switch on panel 8 must be ON, prior to initiating C/M-S/M separation to provide an automatic RCS transfer.

b. The C/M continues to descend after re-entry into the earth atmosphere. At 24,000 feet, barometric switch is activated which unlatches the RCS latching relay, inhibiting any commands from the SCS to the jet selection logic (figure 2.5-3) (manual backup of RCS CMD switch panel 16).

c. At main parachute line stretch, the RCS propellant jettison DUMP switch on panel 8 is placed to the DUMP position as a normal manual function by the crew, initiating the following functions, simultaneously. The RCS LOGIC switch on panel 18 must be ON prior to placing DUMP switch to DUMP position.

1. Initiates the two helium interconnect squib valves
2. Initiates the fuel interconnect squib valve
3. Initiates the oxidizer interconnect squib valve
4. The fuel and oxidizer injector valve manual coils are energized on all of the C/M RCS engines, excluding the + pitch engines. The + pitch engines are not energized due to their location being adjacent to the steam vent. The propellants are jettisoned by burning the propellants remaining in 10 of the 12 engines. The length of time to burn the remaining propellants will vary, depending upon the amount of propellants remaining in the fuel and oxidizer tanks at 24,000 feet. If an entire propellant load remained, as an example, a nominal burn time would be 88 seconds through 10 of the 12 engines. In the worst case of only 5 of the 12 engines (manual coils energized), a nominal burn time would be 155 seconds.

d. Upon completion of propellant burn, the C/M propellant jettison PURGE switch on panel 8 is placed to the PURGE position as a normal manual function by the crew. When the PURGE switch is on, the switch initiates the four helium bypass squib valves, allowing the regulated helium pressure to bypass around each fuel and oxidizer tank, thus purging the manifolds through 10 of the 12 engines. Purging requires approximately 15 seconds or until helium depletion.

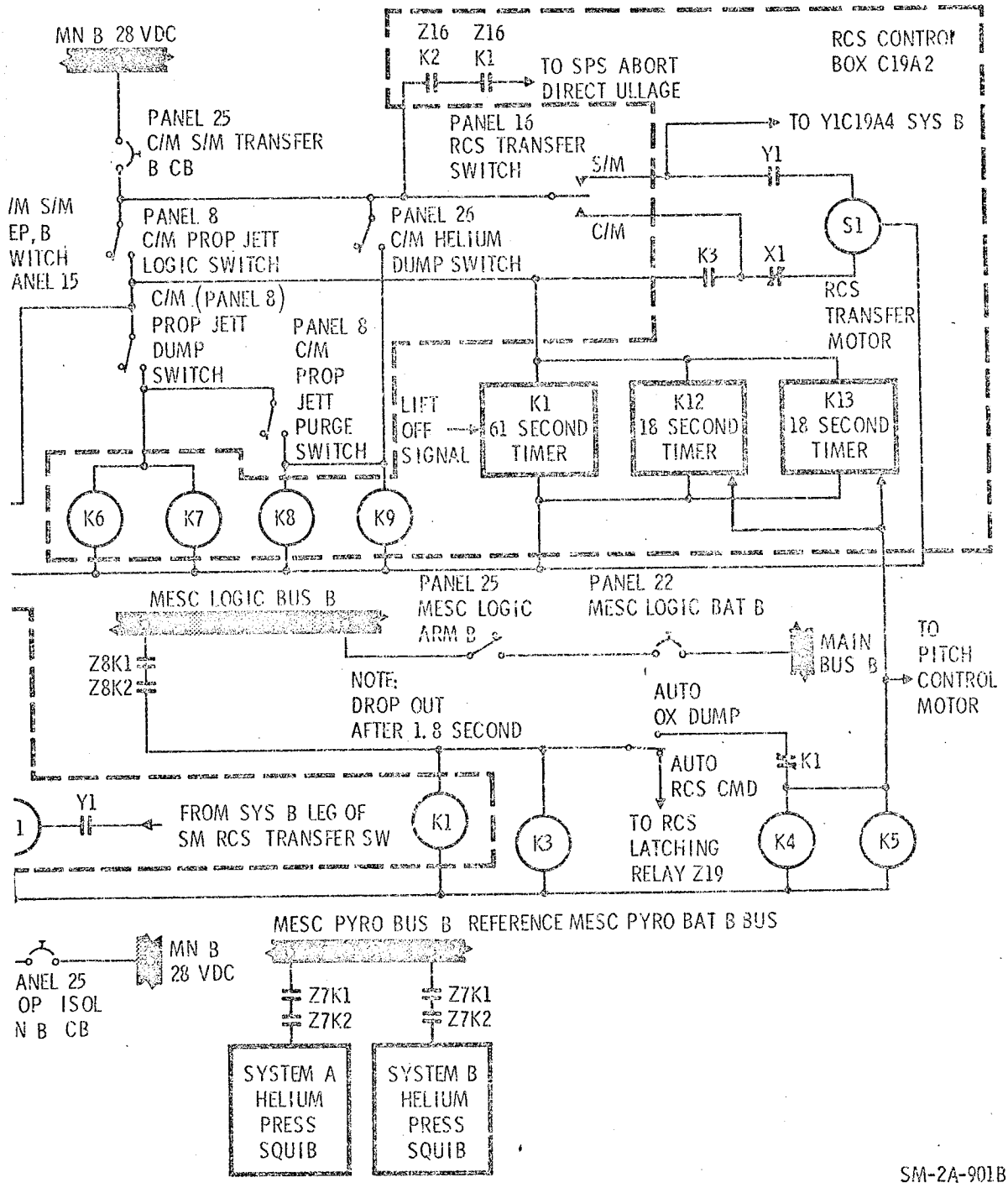

Figure 2.5-10. C/M RCS Squib Valve Power Control Diagram

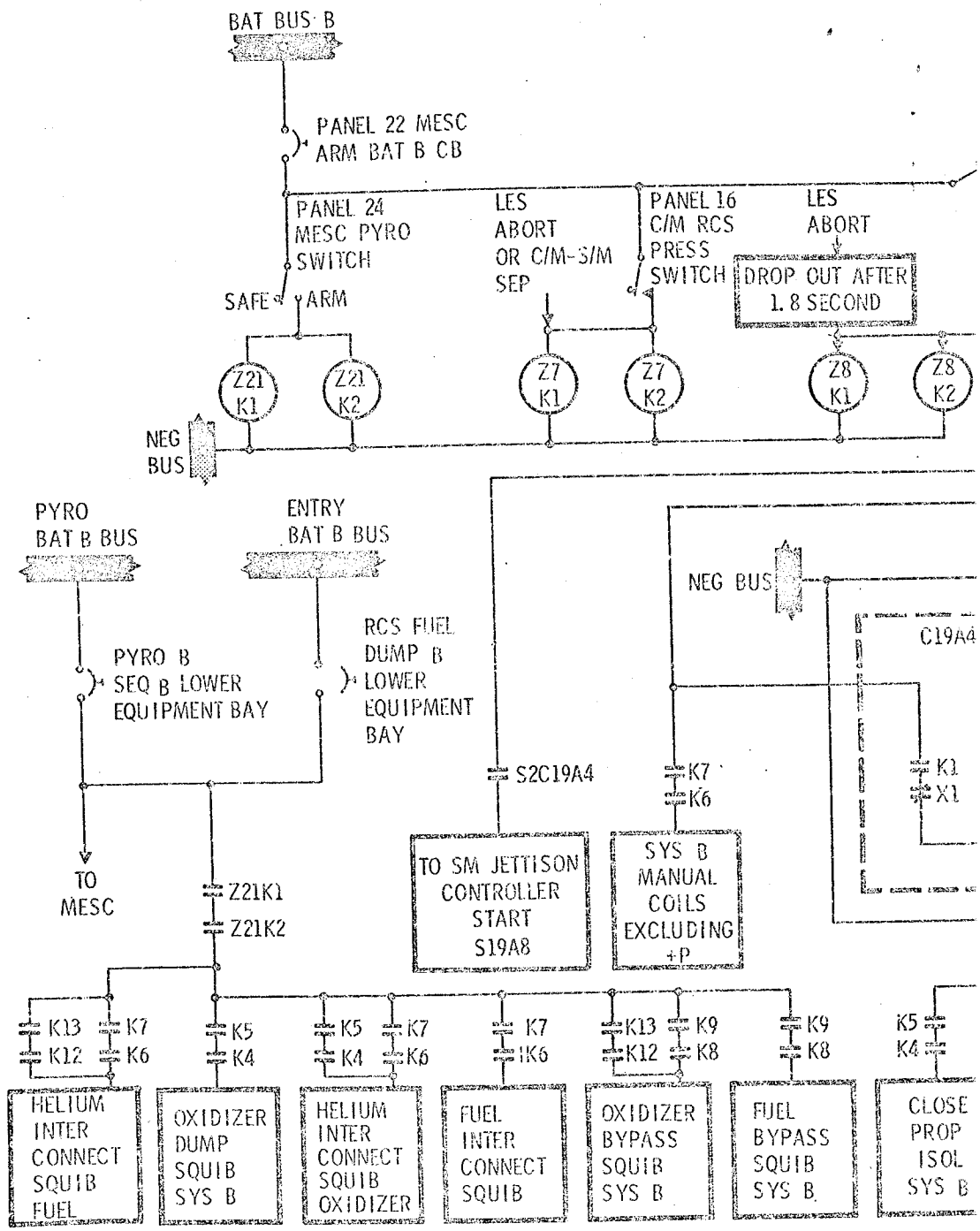
BAT BUS B
PANEL 22 MESC ARM BAT B CB
PANEL 24 MESC PYRO SWITCH
SAFE
ARM
LES ABORT OR C/M-S/M SEP
PANEL 16 C/M RCS PRESS SWITCH
LES ABORT
DROP OUT AFTER 1.8 SECOND
Z21 K1
Z21 K2
Z7 K1
Z7 K2
Z8 K1
Z8 K2
NEG BUS
PYRO BAT B BUS
ENTRY BAT B BUS
PYRO B SEQ B LOWER EQUIPMENT BAY
RCS FUEL DUMP B LOWER EQUIPMENT BAY
TO MESC
Z21K1
Z21K2
S2C19A4
TO SM JETTISON CONTROLLER START S19A8
K7
K6
SYS B MANUAL COILS EXCLUDING +P
NEG BUS
C19A4
K1
X1
K13
K12
K7
K6
K5
K4
K5
K4
K7
K6
K7
K6
K13
K12
K9
K8
K9
K8
K5
K4
HELIUM INTER CONNECT SQUIB FUEL
OXIDIZER DUMP SQUIB SYS B
HELIUM INTER CONNECT SQUIB OXIDIZER
FUEL INTER CONNECT SQUIB
OXIDIZER BYPASS SQUIB SYS B
FUEL BYPASS SQUIB SYS B
CLOSE PROP ISOL SYS B

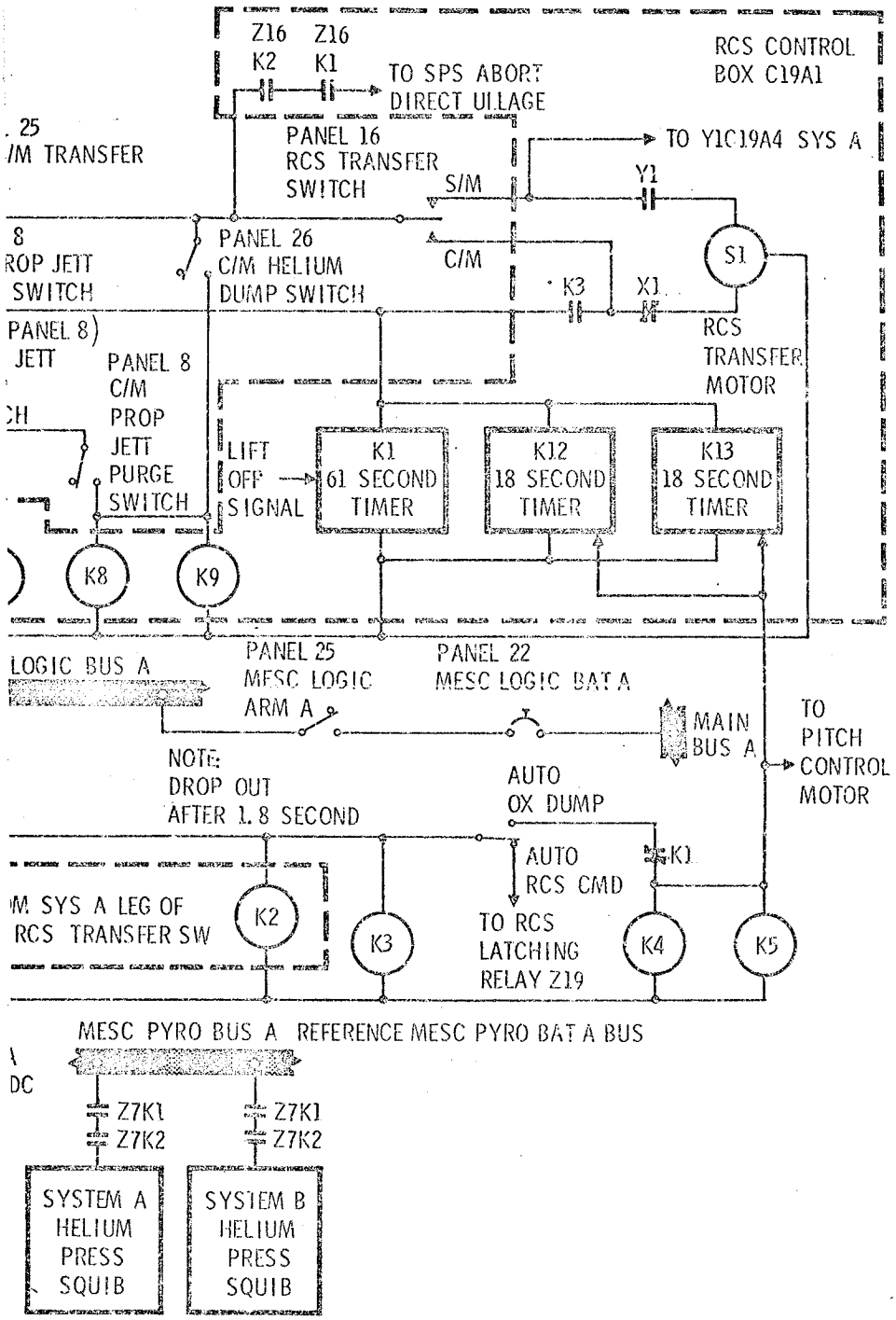
Z16 K2
Z16 K1
TO SPS ABORT DIRECT ULLAGE
RCS CONTROL BOX C19A1
. 25
/M TRANSFER
PANEL 16 RCS TRANSFER SWITCH
TO Y1C19A4 SYS A
S/M
Y1
8
ROP JETT SWITCH
PANEL 26 C/M HELIUM DUMP SWITCH
C/M
S1
K3
X1
PANEL 8)
JETT
PANEL 8 C/M PROP JETT PURGE SWITCH
RCS TRANSFER MOTOR
LIFT OFF SIGNAL
K1 61 SECOND TIMER
K12 18 SECOND TIMER
K13 18 SECOND TIMER
K8
K9
LOGIC BUS A
PANEL 25 MESC LOGIC ARM A
PANEL 22 MESC LOGIC BAT A
MAIN BUS A
TO PITCH CONTROL MOTOR
NOTE: DROP OUT AFTER 1.8 SECOND
AUTO OX DUMP
AUTO RCS CMD
K1
M SYS A LEG OF RCS TRANSFER SW
K2
K3
TO RCS LATCHING RELAY Z19
K4
K5
MESC PYRO BUS A
REFERENCE MESC PYRO BAT A BUS
DC
Z7K1
Z7K2
Z7K1
Z7K2
SYSTEM A HELIUM PRESS SQUIB
SYSTEM B HELIUM PRESS SQUIB

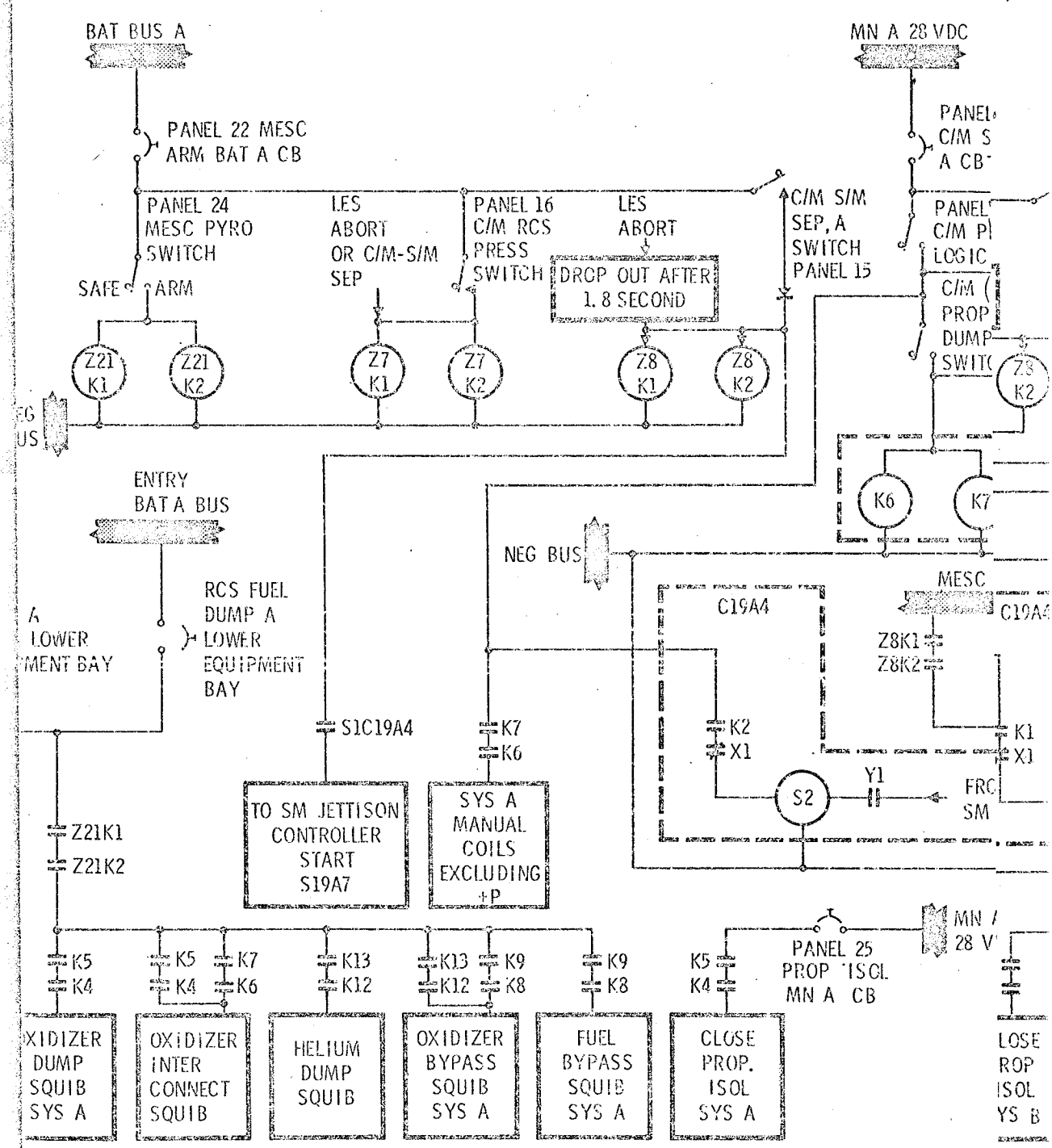
BAT BUS A
MN A 28 VDC
PANEL 22 MESC ARM BAT A CB
PANEL 24 MESC PYRO SWITCH
SAFE
ARM
LES ABORT OR C/M-S/M SEP
PANEL 16 C/M RCS PRESS SWITCH
LES ABORT
DROP OUT AFTER 1.8 SECOND
C/M S/M SEP, A SWITCH PANEL 15
Z21 K1
Z21 K2
Z7 K1
Z7 K2
Z8 K1
Z8 K2
K6
K7
ENTRY BAT A BUS
NEG BUS
RCS FUEL DUMP A LOWER EQUIPMENT BAY
S1C19A4
K7
K6
C19A4
MESC
Z8K1
Z8K2
K2
X1
K1
X1
S2
Y1
Z21K1
Z21K2
TO SM JETTISON CONTROLLER START S19A7
SYS A MANUAL COILS EXCLUDING +P
K5
K4
K7
K6
K13
K12
K9
K8
PANEL 25 PROP ISOL MN A CB
OXIDIZER DUMP SQUIB SYS A
OXIDIZER INTER CONNECT SQUIB
HELIUM DUMP SQUIB
OXIDIZER BYPASS SQUIB SYS A
FUEL BYPASS SQUIB SYS A
CLOSE PROP. ISOL SYS A

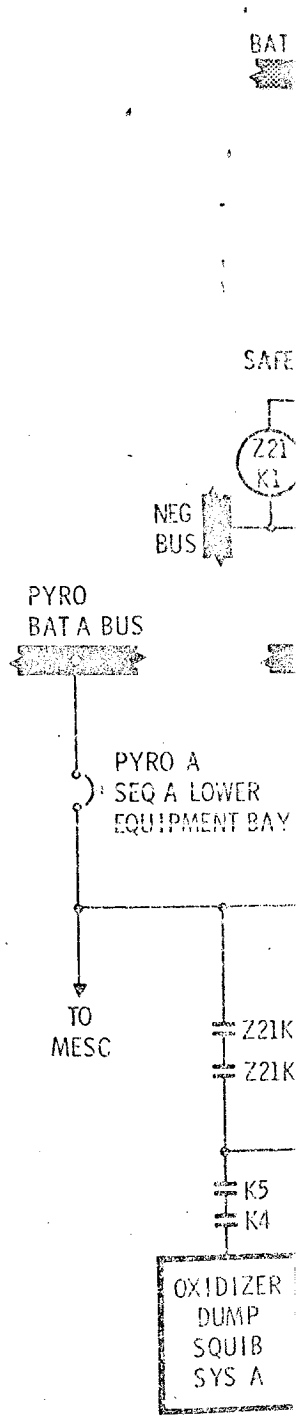
BAT
SAFE
Z21
K1
NEG
BUS
PYRO
BAT A BUS
PYRO A
SEQ A LOWER
EQUIPMENT BAY
TO
MESC
Z21K
Z21K
K5
K4
OXIDIZER
DUMP
SQUIB
SYS A

e. In the event of the C/M propellant jettison LOGIC switch and/or DUMP switch failure, the remaining propellants may be burned by placing the DIRECT RCS switch on panel 8 to ON and positioning the two rotation controllers to CCW, CW, -Y, +Y and -P (excluding +P) position, energizing the manual fuel and oxidizer injector valve solenoid coils of 10 of the 12 C/M RCS engines burned. At the completion of propellant burn, the C/M RCS HELIUM DUMP switch on panel 26 would be placed ON initiating the four bypass squib valves, allowing the regulation helium pressure to bypass around each fuel and oxidizer tank, and purging the manifolds through 10 of the 12 engines providing the two rotation controllers are positioned to CCW, CW, -Y, +Y and -P (excluding +P).

f. In the event the C/M propellant jettison LOGIC switch and DUMP switch on panel 8 function correctly and the PURGE switch fails, the C/M HELIUM DUMP switch on panel 26 would be placed to ON; thus initiating the four helium bypass squib valves, allowing the regulated helium pressure to bypass around each fuel and oxidizer tank, and purging the manifolds through 10 of the 12 engines.

g. Prior to water impact the LOGIC switch on panel 8 may be placed to the OFF position, which would de-energize the manual coils of the engine injector valves allowing the engine injector valves to spring-load closed, preventing sea water from entering the manifolds through the engine. The DUMP switch placed to the OFF position will accomplish the same function.

The sequence of events involving an abort from the pad up to 61 seconds is as follows:

a. The OXIDIZER DUMP switch on panel 16 is placed in the AUTO OX DUMP position, and the RCS LOGIC switch on panel 8 is placed in the ON position at some time in the countdown prior to T=0.

b. The following events occur simultaneously upon the receipt of the abort signal. The command may be generated automatically by the sequence events controller subsystem or by manually rotating the translation control counterclockwise.

1. When the abort signal is received, the two squib-operated helium isolation valves in each system are initiated open, pressurizing subsystems A and B. Manual backup of the C/M PRESS switch, panel 16.

2. The squib-operated helium interconnect valve for the oxidizer tanks is initiated open. If only one of the two squib helium isolation valves was initiated open, both systems are pressurized as a result of the helium interconnect squib valve interconnect.

3. The solenoid-operated fuel and oxidizer isolation shutoff valves are closed to prevent fuel and oxidizer from flowing to the thrust chamber assemblies.

4. The squib-operated oxidizer interconnect valve is initiated open. If only one of the two oxidizer overboard dump squib valves was initiated open, the oxidizer manifolds of each system are common as a result of the oxidizer interconnect squib valve.

5. The squib-operated oxidizer overboard dump valves route the oxidizer to a blow-out plug in the aft heat shield of the C/M which shears a pin due to the pressure buildup and blows the plug out, dumping the oxidizer overboard. The entire oxidizer supply is dumped in approximately 13 to 15 seconds.

6. The RCS latching relay will not energize in the event of an abort from 0 to +61 seconds due to the position of the AUTO OX DUMP switch (figures 2.5-3 and 2.5-10). Thus, no commands are allowed into the jet selection logic from the SCS.

7. The C/M-S/M RCS transfer motor-driven switches are automatically driven upon the receipt of the abort signal, allowing electrical signals to be supplied to the C/M RCS engine injector valves. Manual backup of RCS transfer switch, panel 16.

c. Eighteen seconds after the abort signal is initiated, the following events automatically occur simultaneously:

1. The helium interconnect squib valve between the fuel tanks is initiated open.

2. The helium overboard dump squib valve is initiated open, dumping the helium pressure overboard into the aft equipment compartment, releasing the helium pressure from both fuel tanks.

3. The bypass squib valve to the subsystems A and B oxidizer tank is initiated open, purging both oxidizer systems out through the overboard dump in the aft heatshield.

4. Fuel remains onboard at impact with no pressure on the fuel tanks.

The sequence of events of an abort, initiated after 61 seconds up to launch escape tower jettison, are as follows:

a. At 61 seconds after lift-off, the crew as a normal manual function will place the AUTO OX DUMP switch on panel 16 to the AUTO RCS CMD position.

b. The RCS LOGIC switch was placed to the ON position prior to T+0.

1. Initiate both helium isolation squib valves in C/M RCS, subsystems A and B. Manual backup of C/M RCS PRESS switch on panel 16; thus, pressurizing C/M RCS subsystems A and B.

2. Drives the C/M S/M RCS transfer motors to the C/M RCS position. Manual backup of RCS TRANSFER switch on panel 16 for C19A1 RCS transfer motors only.

3. RCS latching relay energized one second after receipt of the abort signal.

d. At main parachute line stretch, as a normal manual function, the RCS propellant and jettison DUMP switch on panel 8 is placed to the DUMP position initiating functions the same as a normal entry.

2.5.9 C/M RCS PERFORMANCE AND DESIGN DATA.

2.5.9.1 Design Data.

The following list contains data of the CM/RCS components:

HELIUM TANKS (2)	4150±50 psig at 70°±5°F during servicing, setting on launch pad 70°±10°F. Capacity 0.57 lbs, inside diameter 8.84 in., wall thickness 0.105 in. and internal volume of 365±5 cubic in. at 4150±50 psig.
HELIUM ISOLATION SQUIB VALVE FILTER	Remove 98 percent of all particles whose two smallest dimensions are greater than 40 microns. Remove 100 percent of all particles whose two smallest dimensions are greater than 74 microns.
REGULATOR UNITS (4)	Primary - Initial of 291±6 psig and stabilize within 2 seconds to 291±4 psig. Lockup pressure minimum of 284 psig and not exceed 302 psig. Secondary - Lockup 287 to 308 psig and stabilize at 294.5±7.5 psig within 2 seconds.
HELIUM RELIEF VALVES (4)	Diaphragm rupture at 340±8 psi Filter - 10 microns nominal, 25 microns absolute Relief valves relieves at 346±14 psig Relief valve reseats at no less than 327 psig Flow capacity 0.3 lb/min at 60°F and 346±14 psig Bleed device closes when increasing pressure has reached no more than 179 psig in the cavity and a helium flow of less than 20 standard cubic centimeters per hour across the bleed and relief valve assemblies combined. The bleed device shall reopen when decreasing pressure has reached no less than 20 psig.

PRESSURE TRANSDUCERS FUEL AND OXIDIZER	Illuminates caution and warning light on panel 10 (C/M RCS A or B) After helium isolation, underpressure 265 psia Squib valve actuation, overpressure 325 psia
FUEL TANKS (2)	Combined propellant and ullage volume of 45.2 lbs, initially at 65°F at 30±2 psig, resulting in a tank pressure of no more than 205 psia when heated to 105°F. Length 17.329 (+0.040, -0.000) in., outside diameter maximum 12.62 in., wall thickness 0.022 in. to 0.027 in.
OXIDIZER TANK (2)	Combined propellant and ullage volume of 89.2 pounds initially at 65°F at 30±2 psig, resulting in a tank pressure of no more than 205 psia when heated to 85°F. Length 19.907 (+0.040, -0.000) in., maximum outside diameter 12.62 in., wall thickness 0.022 to 0.027 in.
VALVE ISOLATION BURST DIAPHRAGM (4)	Rupture at 241±14 psig, within 2 seconds after rupture pressure is reached at any temperature between 40° to 105°F. Filter 75 microns nominal, 100 microns absolute.
ENGINE	200-second service life, 3000 operational cycles Nominal thrust, 93 pounds Expansion ratio, 9 to 1 Cooling, ablation Injector type, 16 on 16 splash plate Combustion chamber refrasil ablative sleeve and graphite base throat insert.

	Automatic and manual coils - connected in parallel
	Weight, 8.3 lbs
	Length, 11.65 in. maximum
	Nozzle exit diameter, 2.13 inches
	Nozzle extensions, ablative refrasil
OXIDIZER DUMP BLOWOUT PLUG	Pin shears at 100 psig

2.5.9.2 Performance Data.

Refer to Mission Modular Data Book, SID 66-1177.

2.5.9.3 Power Consumption Data.

Refer to paragraph 2.5.4.3.

2.5.10 C/M RCS OPERATIONAL LIMITATIONS AND RESTRICTIONS.

A propellant isolation valve switch must be placed to ON momentarily prior to lift-off and returned to neutral. At T+61 seconds after lift-off the switches must be placed to ON until orbit insertion to ensure that the valves will remain open if an LES abort is initiated; then at orbit insertion, the switches may be placed to neutral. The switches must be placed to ON prior to C/M RCS pressurization to ensure valves remain open throughout entry.

2.5.10.1 C/M RCS Electrical Power Distribution.

See figure 2.5-11 for electrical power distribution.

2.5.11 C/M RCS TELEMETRY MEASUREMENTS.

The following is a complete list of the C/M RCS telemetry data that is monitored by the flight controllers and ground support personnel.

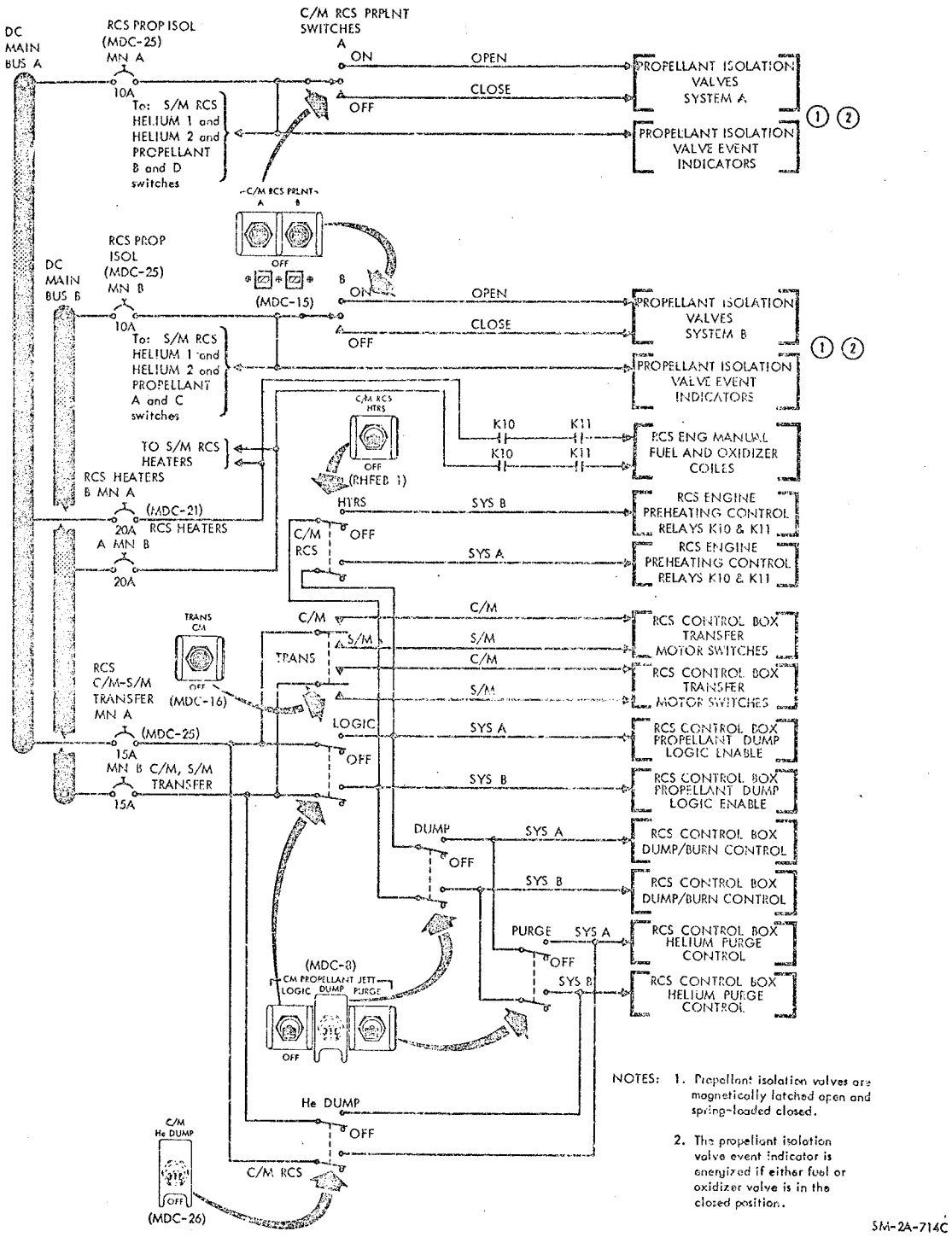

Figure 2.5-11. C/M RCS Electrical Power Distribution Diagram

Crew Display	Figure	Measurement	Measurement Number	Range	Signal Conditioner	Channel	Bit Rate*	*	Operating Range
Panel 12	2.5-7	Helium Tank Supply Pressure A	CR0001P	+0 +5K psia	C28AR31	10A81	H2	PCM	4150±50 psia and decrease during mission.
Panel 12	2.5-7	Helium Tank Supply Pressure B	CR0002P	+0 +5K psia	C28AR32	10A83	H2	PCM	
Panel 12	2.5-7	Helium Tank Supply Temperature A	CR0003T	+0 +300°F	C28AR33	10A52	H1	PCM	70±10°F on launch pad variable during mission.
Panel 12	2.5-7	Helium Tank Supply Temperature B	CR0004T	+0 +300°F	C28AR34	10A55	H1	PCM	
Panels 10 and 12	2.5-7	Fuel Tank A Pressure	CR0005P	+0 +400 psia	C28AR35	11A107	H2	PCM	After pressurization 287 to 308 psia until propellant purge
Panels 10 and 12	2.5-7	Fuel Tank B Pressure	CR0006P	+0 +400 psia	C28AR36	11A114	H2	PCM	
Panels 10 and 12	2.5-7	Oxidizer Tank A Pressure	CR0011P	+0 +400 psia	C28AR38	11A79	H2	PCM	
Panels 10 and 12	2.5-7	Oxidizer Tank B Pressure	CR0012P	+0 +400 psia	C28AR39	11A81	H2	PCM	
	2.5-7	Fuel Line Pressure A	CR0623P	+0 +400 psia		F-1		FQ	Flight recorder.
	2.5-7	Fuel Line Pressure B	CR0624P	+0 +400 psia		F-2		FQ	
	2.5-7	Oxidizer Line Pressure A	CR0625P	+0 +400 psia		F-3		FQ	
	2.5-7	Oxidizer Line Pressure B	CR0626P	+0 +400 psia		F-4		FQ	
Panel 97	2.5-7	Temperature Oxidizer Valve CCW R Engine A	CR2201T	-50 +250°F	C28AR295	51A17	H1	PCM	Variable during mission, prior to separation turn heaters on if below +64°F, turn off in 13 minutes time or 100°F, whichever is reached first.
Panel 97	2.5-7	Temperature Oxidizer Valve -Y Engine A	CR2202T	-50 +250°F	C28AR296	11A78	H1	PCM	
Panel 97	2.5-7	Temperature Oxidizer Valve -P Engine A	CR2205T	-50 +250°F	C28AR299	51A18	H1	PCM	
Panel 97	2.5-7	Temperature Oxidizer Valve +Y Engine B	CR2203T	-50 +250°F	C28AR297	10A35	H1	PCM	
Panel 97	2.5-7	Temperature Oxidizer Valve -P Engine B	CR2204T	-50 +250°F	C28AR298	10A38	H1	PCM	
Panel 97	2.5-7	Temperature Oxidizer Valve CWR Engine B	CR2206T	-50 +250°F	C28AR300	10A34	H1	PCM	
	2.5-7	CCW Roll Engine Chamber Pressure A	CR0614P	+0 +250 psia		F-13		FQ	Flight recorder.
	2.5-7	CCW Roll Engine Chamber Pressure B	CR0620P	+0 +250 psia		F-14		FQ	
	2.5-7	CCW Roll Engine Wall Temperature A	CR4561T	+0 +1000°F		51A19	H1	FQ	Variable

Crew Display	Figure	Measurement	Measurement Number	Range	Signal Conditioner	Channel Code*	Bit Rate*	*	Operating Range
	2.5-7	CCW Roll Engine Wall Temperature B	CR4582T	+0 +1000°F		51A20	H1	FQ	Variable
	2.5-9	C/M-S/M SEP Relay Close A (Z9 to Z7)	CD0023X	OFF ON event		11E12-03	E2	PCME	Event
	2.5-9	C/M-S/M SEP Relay Close B (Z9 to Z7)	CD0024X	OFF ON event		11E12-04	E2	PCME	Event
	2.5-9	LES Abort Initiate Signal A (Z9 to Z7)	CD0002X	OFF ON event		11E12-01	E2	PCME	Event
	2.5-9	LES Abort Initiate Signal B (Z9 to Z7)	CD0062X	OFF ON event		11E12-07	E2	PCME	Event
	2.5-9	RCS Actuate Signal A (Z19)	CD0170X	OFF ON event		11E13-06	E2	PCME	Event
	2.5-9	RCS Activate Signal B (Z19)	CD0171X	OFF ON event		11E13-07	E2	PCME	Event
	2.5-9	C/M Pressurize Signal A (Z9 to Z7)	CD0173X	OFF ON event		11E13-08	E2	PCME	Event
	2.5-9	C/M Pressurize Signal B (Z9 to Z7)	CD0174X	OFF ON event		11E14-01	E2	PCME	Event
	2.5-9	Barometric Switch Lock In Close Relay A	CE0007X	CLOSE OPEN event		11E14-08	E2	PCME	Event
	2.5-9	Barometric Switch Relay Lock In Close Relay B	CE0008X	CLOSE OPEN event		11E15-01	E2	PCME	Event
	2.5-9	Lift-Off Signal A	BS0060X			11E25-03	E2	PCME	Event
	2.5-9	Lift-Off Signal B	BS0061X			11E25-04	E2	PCME	Event

*Analog measurements digitally coded into 8 bit words.
Analog measurements -0 (+0.15 -0) vdc to 5 (+0, -0.15) vdc
FQ - Flight qualification measurements
H1 - High bit rate
H2 - High and low bit rate
E2 - High and low bit rate

Channel Example: 10A81

Significant number - 1
How many zeros after significant number is amount of samples per second } 0
} 1 sample per second

SECTION 2

SUBSECTION 2.6

ELECTRICAL POWER SYSTEM (EPS)

2.6.1 INTRODUCTION.

The electrical power system (figure 2.6-1) supplies all electrical power required by the spacecraft to complete its scheduled mission. D-C electrical power is provided by three fuel cell power plants, two S/M jettison controller batteries located in the service module, and five batteries (2 pyro and 3 entry) located in the command module. A-C electrical power is provided by one, or two, of the three inverters located in the lower equipment bay of the command module. Controls and displays for the EPS are positioned in the command module near the astronaut responsible for controlling and monitoring the system. The EPS can be divided into four subsystems as follows:

- Energy storage: cryogenic storage; pyrotechnic, entry, and S/M jettison controller batteries
- Power generation: fuel cell power plants
- Power conversion: solid state inverters, battery charger
- Power distribution: d-c power distribution, a-c power distribution, sensing circuits, controls and displays.

2.6.2 FUNCTIONAL DESCRIPTION.

2.6.2.1 Energy Stowage.

The primary source of energy for the EPS is provided by the cryogenic storage system. There are two hydrogen (fuel) and two oxygen (oxidizer) cryogenic storage tanks. Each tank has its associated controls, heaters, and fans designed to give, in an automatic mode, a single-phase reactant to its load throughout the tank-density range, when operating at normal pressures.

A secondary source of energy storage is provided by batteries. The batteries supply sequencer logic and pyro power at all times, supplemental d-c power for high-peak loads, and all electrical power required during the entry and postlanding phases after CSM separation.

2.6.2.2 Power Generation.

Three Bacon-type fuel cell power plants in the service module generate the d-c power required for spacecraft systems. The fuel cell power plants are activated prior to launch and operate continuously throughout the mission until CSM separation. Normally, fuel cell power plant 1 is connected to main d-c bus A, power plant 3 to main d-c bus B, and power plant 2 to both main d-c buses A and B. However, the capability is provided to also connect fuel cell power plant 1 to main d-c bus B and fuel cell power plant 3 to main d-c bus A.

Each fuel cell is rated to produce 29±2 volts dc between 563 and 1420 watts of power. Two fuel cell power plants are capable of providing the normal power requirements of all spacecraft systems. If two fuel cell power plants malfunction, some of the electrical components must be shut down to conserve power, and the remaining power plant with battery backup will supply sufficient power to carry the load and insure successful mission termination. One fuel cell with complete battery backup can provide maximum power required by mission burns, if the cryogenics are available and fuel cell temperature is above 425°F.

2.6.2.3 Power Conversion.

Primary d-c power is converted into a-c power by solid-state inverters. The inverters provide 115-volt 400-cps 3-phase a-c power up to 1250 volt-amperes each. The a-c power is connected to the two a-c buses which supply power to a-c loads. During normal operation, one inverter will power both a-c buses while the two remaining inverters act as redundant sources. For peak loads, each a-c bus will be powered by a separate inverter. In case of an a-c or d-c bus failure, the inverters and remaining buses can be isolated. Inverter switching circuits prevent connecting two inverters on one bus, but simultaneous operation of two inverters is possible if each is connected to a separate bus. A phase synchronizing unit provides in-phase power when a separate inverter is powering each bus.

The battery charger is a secondary power conversion unit, which is used to keep entry batteries charged. The charger is a solid-state device converting a-c power from the inverters and using d-c power from the fuel cells to provide charging voltage.

2.6.2.4 Power Distribution.

Distribution of primary d-c power is accomplished by two redundant d-c buses in the command module. Additional buses consist of two separate nonessential buses for servicing nonessential loads, a battery relay bus for power distribution switching, two battery buses, and a flight and postlanding bus to service certain communications and the postlanding circuits. A-C power is distributed by two redundant a-c buses.

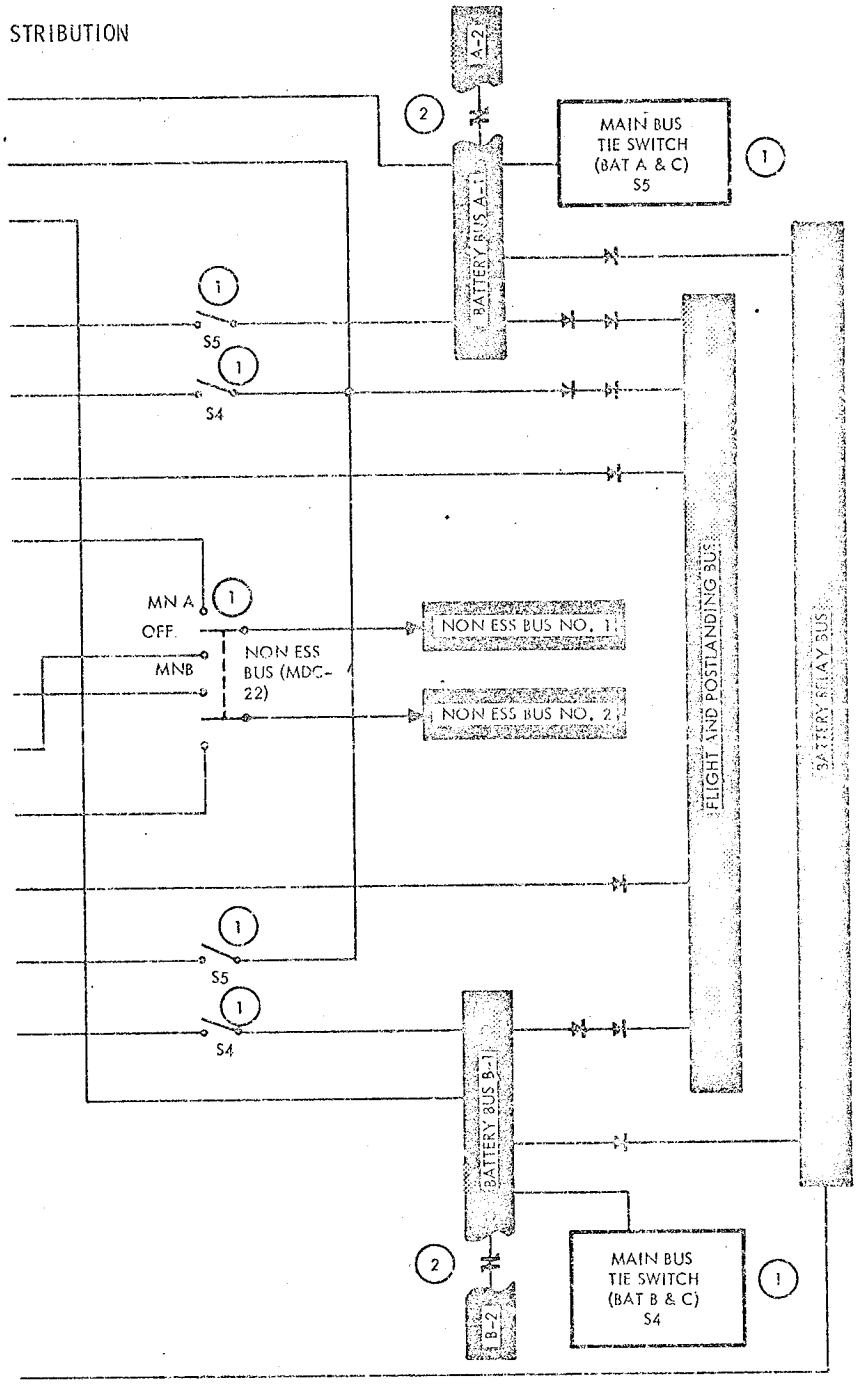

NOTES:

1. Motor switch contacts close when main bus tie switches are set to bat A&C and bat B&C
2. Battery bus contacts remain closed on manned S/C.
3. F/C 1 can be connected to SM Bus B & F/C 3 to SM Bus A.
4. DC Bus control circuit breakers are illustrated in Figure 2.6-11.

SM-2A-633K

Figure 2.6-1. Electrical Power System Block Diagram

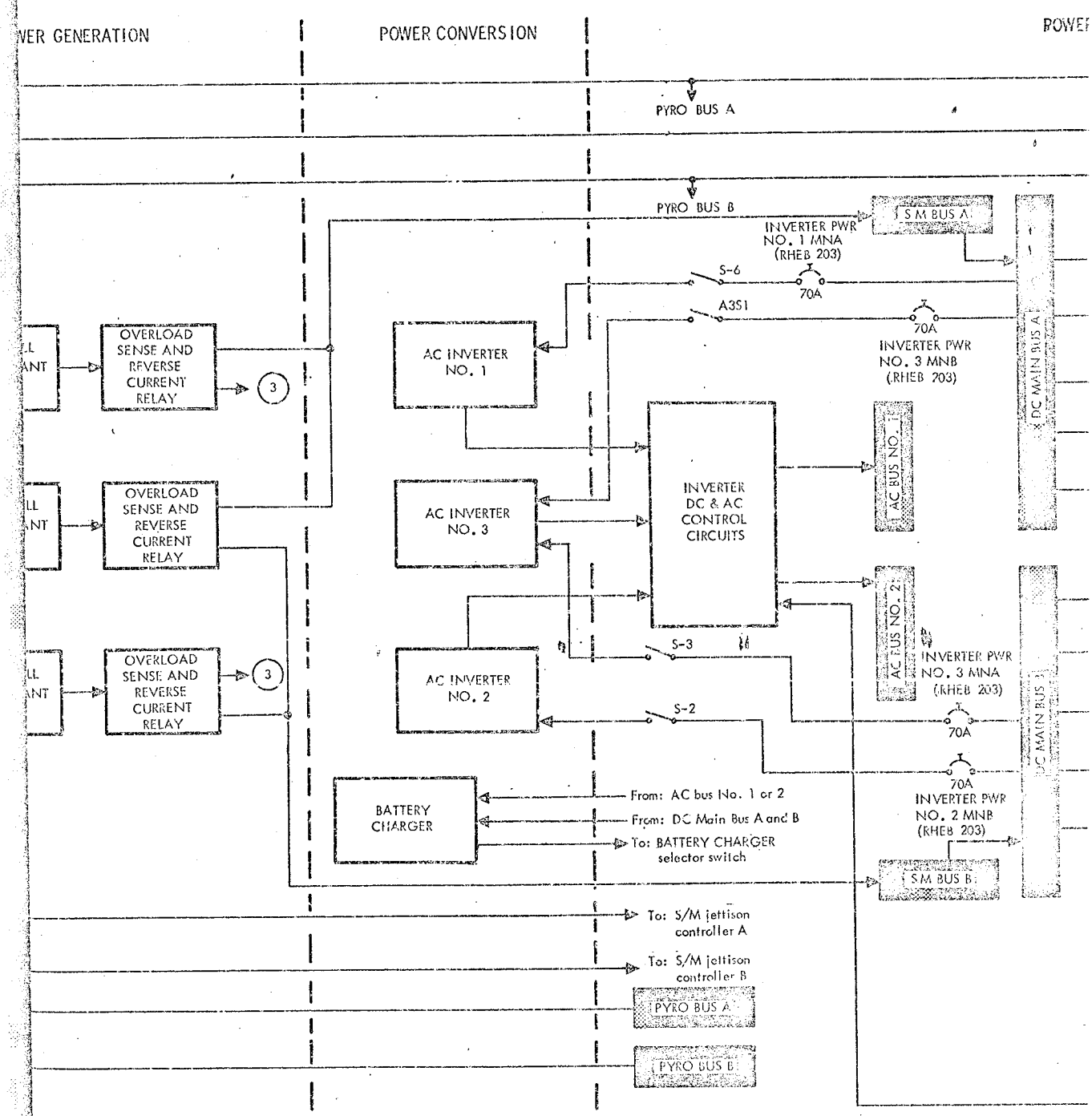
WER GENERATION
POWER CONVERSION
POWER
PYRO BUS A
PYRO BUS B
S M BUS A
INVERTER PWR
NO. 1 MNA
(RHEB 203)
S-6
70A
A351
70A
INVERTER PWR
NO. 3 MNB
(RHEB 203)
OVERLOAD
SENSE AND
REVERSE
CURRENT
RELAY
3
AC INVERTER
NO. 1
AC INVERTER
NO. 3
AC INVERTER
NO. 2
INVERTER
DC & AC
CONTROL
CIRCUITS
AC BUS NO. 1
AC BUS NO. 2
DC MAIN BUS A
DC MAIN BUS B
S-3
S-2
INVERTER PWR
NO. 3 MNA
(RHEB 203)
70A
70A
INVERTER PWR
NO. 2 MNB
(RHEB 203)
BATTERY
CHARGER
From: AC bus No. 1 or 2
From: DC Main Bus A and B
To: BATTERY CHARGER
selector switch
S M BUS B
To: S/M jettison
controller A
To: S/M jettison
controller B
PYRO BUS A
PYRO BUS B

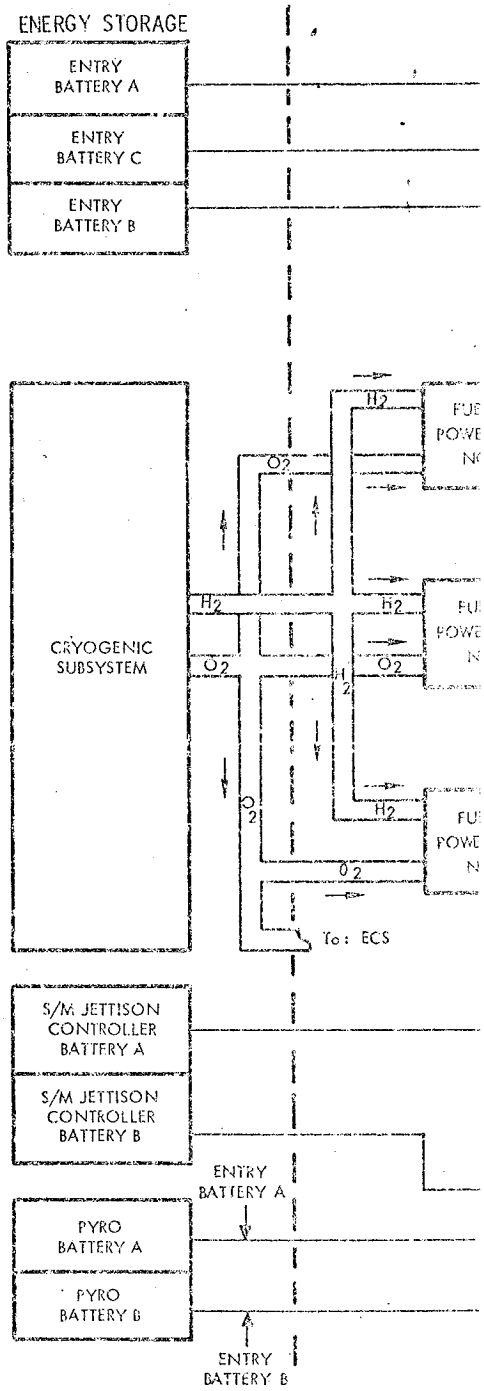
ENERGY STORAGE
ENTRY BATTERY A
ENTRY BATTERY C
ENTRY BATTERY B
CRYOGENIC SUBSYSTEM
H2
O2
To: ECS
S/M JETTISON CONTROLLER BATTERY A
S/M JETTISON CONTROLLER BATTERY B
ENTRY BATTERY A
PYRO BATTERY A
PYRO BATTERY B
ENTRY BATTERY B

reactant temperature. With design pressures in the tanks, single-phase reactant is available independent of downstream system transfer.

The manual mode of operation simply bypasses the pressure switches. It can be used in case of control failure or when operating with quantity unbalanced depletion. To avoid excessive temperatures, a thermal sensitive interlock device is in series with each heater element in the O_2 and H_2 tanks. These open the heater circuits when internal temperatures reach 80°F and close when temperatures decrease to 70°F. Tank pressures and quantities are monitored on meters located on MDC-13. O_2 tank relief valves initially vent at 983 psig and reseat at 970 psig. H_2 relief valves vent at 273 psig and reseat at 268 psig. The C&W system will alarm when oxygen pressure in either tank exceeds 950 psia, or goes below 800 psia. The hydrogen system alarms the C&W system when pressure in either tank exceeds 270 psia, or goes below 220 psia.

Individual tank pressures, quantities, and reactant temperatures are telemetered to MSFN.

2.6.3.2 Batteries.

A total of seven silver oxide-zinc storage batteries are incorporated in the EPS. Five of these batteries are located in the C/M lower equipment bay, the other two in sector IV of the S/M.

Three entry batteries (A, B, and C) provide the primary source of power after CSM separation and during postlanding operations. Prior to CSM separation, the entry batteries provide a secondary source of power while the fuel cells provide the primary source. The entry batteries are used for the following purposes:

- Provide C/M power after CSM separation
- Supplement fuel cell power during peak load periods (SPS gimbal motor operation)
- Provide power during emergency operations (failure of two fuel cells)
- Provide power for EPS control circuitry (relays, indicators, etc.)
- Provide sequential logic power
- Provide power for recovery aids during postlanding phase
- Batteries A and B can power pyro circuits upon selection.

The entry batteries can be recharged in flight.

2.6.3 MAJOR COMPONENT/SUBSYSTEM DESCRIPTION.

2.6.3.1 Cryogenic Storage.

The cryogenic storage system (figure 2.6-2) supplies oxygen and hydrogen reactants to the spacecraft. Hydrogen is supplied to the EPS and oxygen is supplied to both EPS and ECS. The design functions of the two storage systems are identical. The physical data for the cryogenic storage system is given in the following list.

Tank Number	Wt of Usable Cryogenics	Flow Rate at Min dq/dm	Design Storage Press. (Psia)	Min Allowable Operating Pressure	Approx Tank Qtys at Min Heater & Fan Cycling
LO 12	320 lb	0.676 lb/hr	900±35	150 psia	131 to 82 lbs
XTA 0006	320 lb	0.713 lb/hr	900±35	150 psia	131 to 82 lbs
LH 23	28 lb	0.070 lb/hr	245 (+15, -20)	100 psia	14.5 to 7.3 lbs
LH 25	28 lb	0.066 lb/hr	245 (+15, -20)	100 psia	14.5 to 7.3 lbs

The automatic control mode is designed to give a single-phase reactant flow into the F/C and ECS feedlines at design pressures. This control is achieved in effect by controlling the heat transfer within the system. The heat required to maintain constant pressure varies with density. Fill density for oxygen is a little above 70 lbs/ft^3. As depletion proceeds from 70 lbs/ft^3, or 100 percent quantity, to approximately 28 lbs/ft^3, or 40 percent quantity, the cycling of the fans and heaters for repressurization will extend until they cycle least at quantities between 131 and 82 lbs. In the hydrogen system, least amount of heater and fan cycling will occur at quantities between approximately 14.5 and 7.3 lbs. With the system in automatic operation, tank quantities should remain within 15 pounds of each other for oxygen and within one pound difference for hydrogen. The pressure switches activating the heaters and fans are in series. The oxygen switches activate when pressure drops to 865 psia in both tanks. They deactivate when pressure reaches 935 psia in one of the tanks. Keeping the design pressure permits depletion to follow predictable tank densities and respective heat requirements.

When the systems reach the point where the heater and fan cycling is at a minimum, the heat leak of the tank becomes sufficient to maintain design pressures, provided flow is within min dq/dm values as shown in the preceding list. This realm of operation is referred to as being in the minimum dq/dm region. The minimum dq/dm point for oxygen is 23.5 lbs/ft^3 at the nominal operating pressure of 900 psia. The value for hydrogen is 1.87 lbs/ft^3 at 250 psia. The heat required for densities less than the above rises abruptly for both oxygen and hydrogen. The intrinsic flow output of the systems is a maximum at the point where minimum heat is required to maintain pressure. The time-rate of arriving at the minimum dq/dm point is dependent on load demands, tank pressure, and

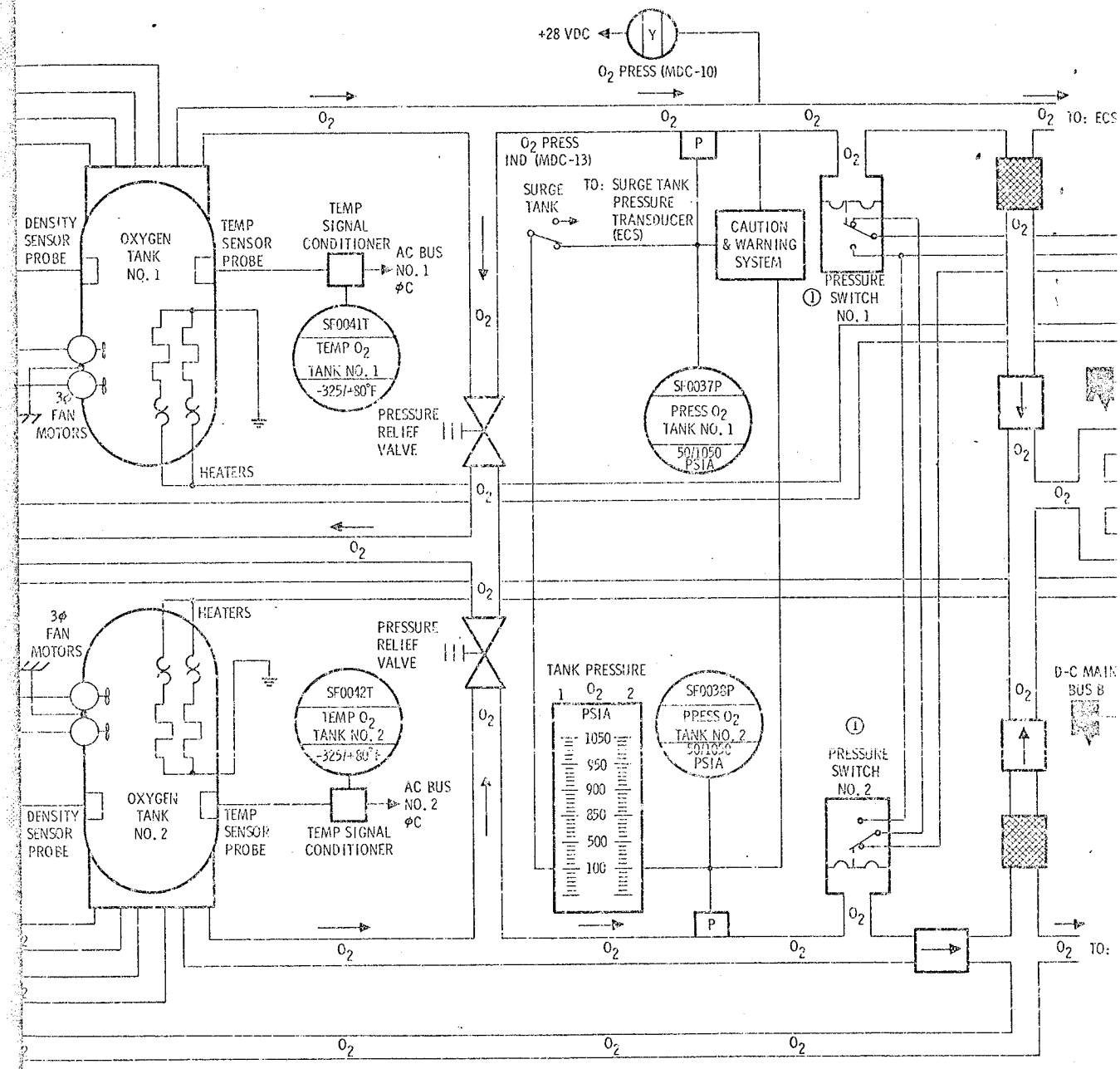
+28 VDC
Y
O_2 PRESS (MDC-10)
O_2
TO: ECS
O_2 PRESS IND (MDC-13)
P
SURGE TANK
TO: SURGE TANK PRESSURE TRANSDUCER (ECS)
CAUTION & WARNING SYSTEM
PRESSURE SWITCH NO. 1
DENSITY SENSOR PROBE
OXYGEN TANK NO. 1
TEMP SENSOR PROBE
TEMP SIGNAL CONDITIONER
AC BUS NO. 1 ϕC
SF0041T
TEMP O_2 TANK NO. 1
-325/+80°F
SF0037P
PRESS O_2 TANK NO. 1
50/1050 PSIA
3ϕ FAN MOTORS
PRESSURE RELIEF VALVE
HEATERS
3ϕ FAN MOTORS
HEATERS
PRESSURE RELIEF VALVE
SF0042T
TEMP O_2 TANK NO. 2
-325/+80°F
TANK PRESSURE
1 O_2 2
PSIA
1050
950
900
850
500
100
SF0038P
PRESS O_2 TANK NO. 2
50/1050 PSIA
PRESSURE SWITCH NO. 2
D-C MAIN BUS B
DENSITY SENSOR PROBE
OXYGEN TANK NO. 2
TEMP SENSOR PROBE
TEMP SIGNAL CONDITIONER
AC BUS NO. 2 ϕC
TO:

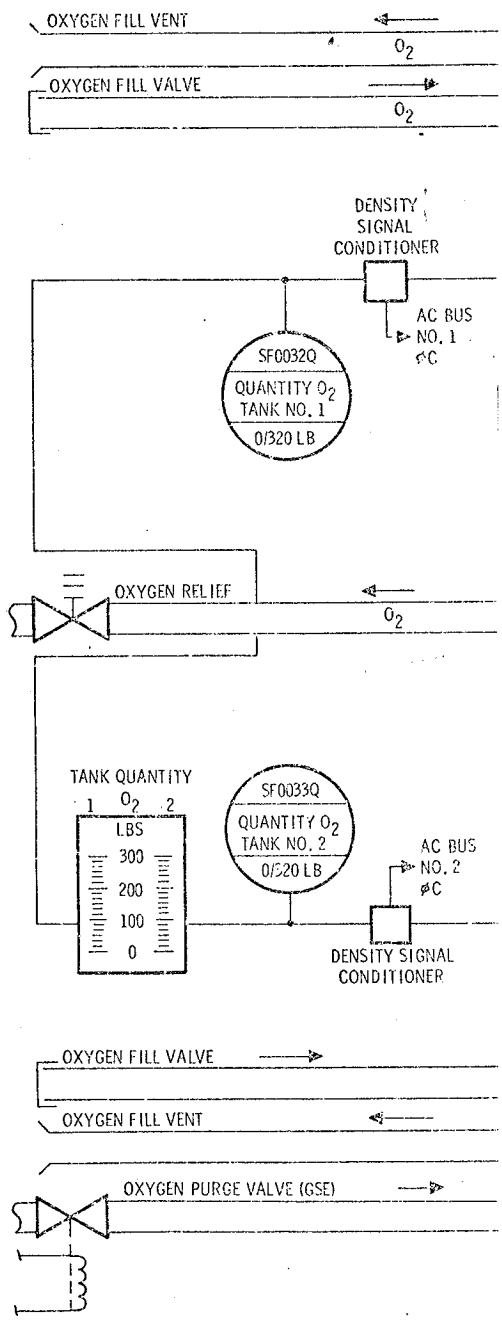
OXYGEN FILL VENT
O_2
OXYGEN FILL VALVE
O_2
DENSITY SIGNAL CONDITIONER
AC BUS NO. 1 ØC
SF0032Q
QUANTITY O_2 TANK NO. 1
0/320 LB
OXYGEN RELIEF
O_2
TANK QUANTITY
1 O_2 2
LBS
300
200
100
0
SF0033Q
QUANTITY O_2 TANK NO. 2
0/320 LB
AC BUS NO. 2 ØC
DENSITY SIGNAL CONDITIONER
OXYGEN FILL VALVE
OXYGEN FILL VENT
OXYGEN PURGE VALVE (GSE)

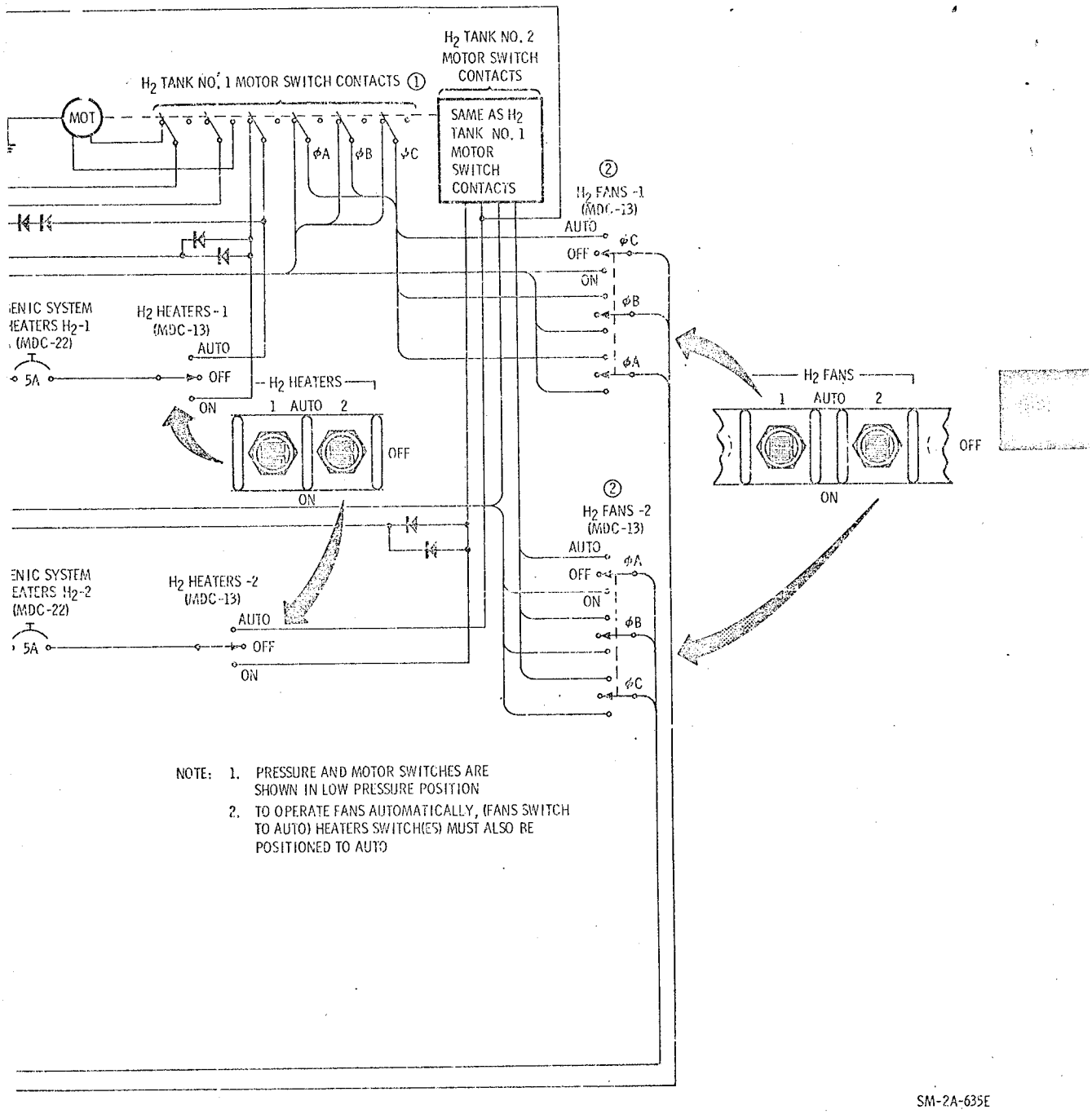

Figure 2.6-2. Cryogenic Storage System (Sheet 2 of 2)

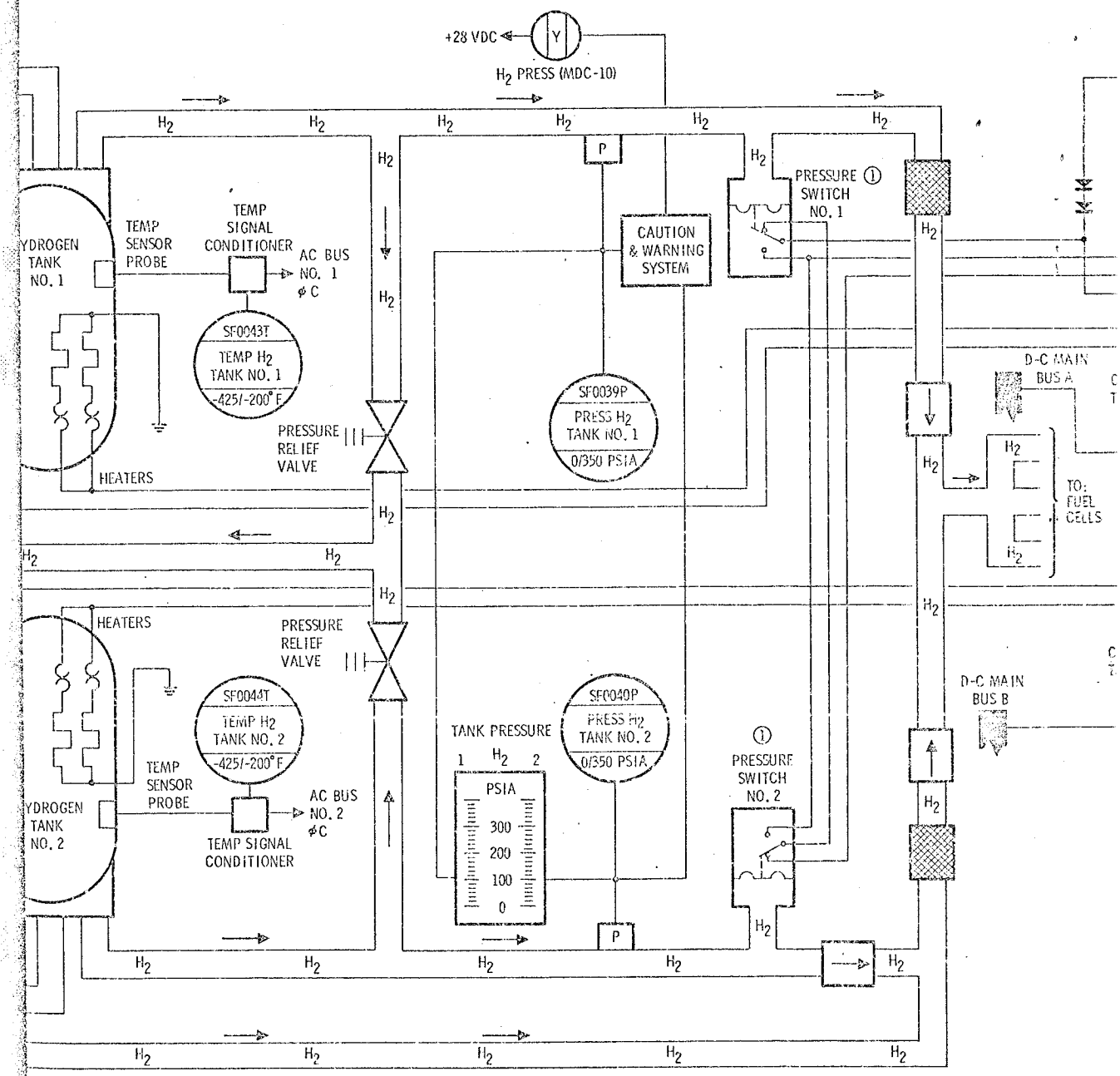
+28 VDC
Y
H2 PRESS (MDC-10)
H2
P
PRESSURE ①
SWITCH
NO. 1
CAUTION
& WARNING
SYSTEM
YDROGEN
TANK
NO. 1
TEMP
SENSOR
PROBE
TEMP
SIGNAL
CONDITIONER
AC BUS
NO. 1
ϕC
SF0043T
TEMP H2
TANK NO. 1
-425/-200°F
PRESSURE
RELIEF
VALVE
HEATERS
SF0039P
PRESS H2
TANK NO. 1
0/350 PSIA
D-C MAIN
BUS A
TO:
FUEL
CELLS
HEATERS
PRESSURE
RELIEF
VALVE
SF0044T
TEMP H2
TANK NO. 2
-425/-200°F
TEMP
SENSOR
PROBE
YDROGEN
TANK
NO. 2
AC BUS
NO. 2
ϕC
TEMP SIGNAL
CONDITIONER
TANK PRESSURE
1
2
PSIA
300
200
100
0
SF0040P
PRESS H2
TANK NO. 2
0/350 PSIA
①
PRESSURE
SWITCH
NO. 2
D-C MAIN
BUS B

- 22)
- 22)

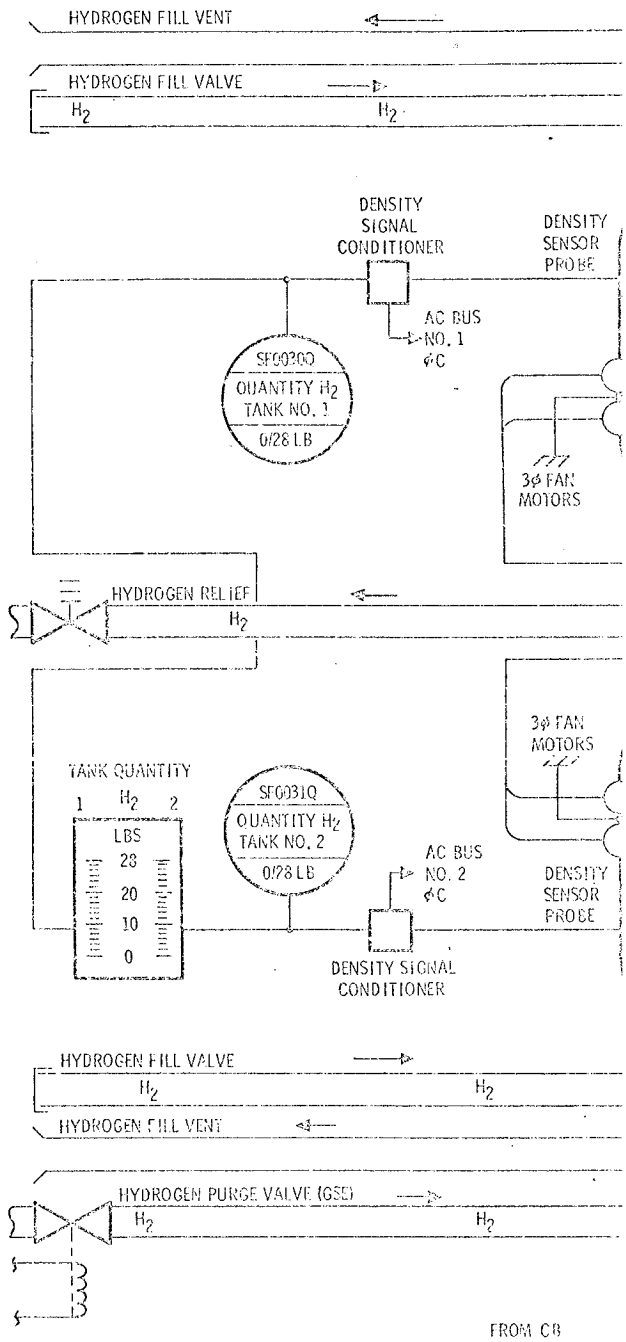

FROM CB
2 - CRYOGENIC TANK FAN MOTORS A
1 - CRYOGENIC TANK FAN MOTORS A

Each entry battery is mounted within a vented plastic case. The battery cells are individually encased in plastic containers which contain relief valves that open at 40±10 psig, venting pressure and hydrogen gas into the battery case. Each battery case is vented overboard through a manifold leading to a manually operated valve (BATTERY VENT VALVE), which is connected to the ECS dump line. With the valve at its normal position of VENT, the battery cases are vented overboard through the ECS urine/water dump line. In a failure mode, this would prevent hydrogen gas from entering the crew compartment. With the battery vent valve closed, which would be the position after fracture of a battery case, the possibility exists for pressure buildup in the battery manifold due to outgassing of the batteries. The vent valve will be opened at pressures slightly below CM pressure and allow the built-up pressure to vent overboard. Battery manifold pressure can be monitored using the auxiliary DC VOLTS meter, located on panel 200 in the RHFEB, and is telemetered.

The two pyrotechnic batteries supply power to initiate ordnance devices in the S/C. The pyrotechnic batteries are isolated from the rest of the EPS to prevent the high power surges in the pyrotechnic system from affecting the EPS and to ensure source power when required. These batteries shall not be recharged in flight. Entry battery A or B can be used as a redundant source of power for initiating pyro circuits in the respective A or B pyro system, if either pyro battery fails.

The two S/M jettison controller batteries, located in the S/M, supply power to two jettison sequencers to sustain the S/M RCS retrofire, as well as firing the S/M positive roll RCS engines two seconds after CSM separation. These batteries are isolated from the rest of the EPS and cannot be recharged or monitored in flight.

Performance characteristics of each S/C battery are as follows:

Battery	Capacity per Battery	No. of Cells per Battery	Open Circuit Voltage (Max.)	Nominal Voltage	Minimum Voltage	Ambient Battery Temperature
Entry A, B, and C (3)	40-amp-hrs (25 ampere rate)	20	37.8 vdc (37.2 vdc in flight)	29.0 vdc (35 amps load)	27.0 vdc (35 amps load)	50° to 110°F
Pyro A and B (2)	75 amps for 36 seconds	20	37.8 vdc (37.2 vdc in flight)	23.0 vdc (75 amps load)	20.0 vdc (75 amps load) (35.0 vdc open circuit)	60° to 110°F

SYSTEMS DATA

Battery	Capacity per Battery	No. of Cells per Battery	Open Circuit Voltage (Max.)	Nominal Voltage	Minimum Voltage	Ambient Battery Temperature
S/M jettison controller A and B (2)	75 amps for 36 seconds	20	37.8 vdc (not measurable in S/C or by telemetry)	23.0 vdc (75 amps load)	20.0 vdc (75 amps load)	60° to 110°F

NOTE Pyro battery load voltage is not measurable due to the extremely short time they power pyro-loads.

2.6.3.3 Fuel Cell Power Plants.

Each fuel cell power plant consists of 31 single cells, connected in series, and an accessory section. Each single cell generates approximately 1 volt. The accessory section consists of a nitrogen pressurization system, an oxygen feed, a hydrogen feed, a primary (hydrogen) loop, and a secondary (glycol) loop (figure 2.6-3). The primary and secondary loops control the temperature within the fuel cell power plant. The primary loop also extracts potable water from the power plant for use by the crew. The secondary loop radiates heat from the power plant into space through radiators located on the exterior of the S/M.

The nitrogen system establishes a reference pressure in the fuel cell. There is approximately 0.44 lbs of N_2 contained in the nitrogen tank under a pressure of 1500 psia. The nitrogen regulator reduces this pressure to 52 psia, which is used to pressurize the glycol accumulator, the electrolyte (KOH) in the cells, and as a reference pressure for the oxygen and hydrogen regulators.

Oxygen, stored in a cryogenic state at a pressure of 900±35 psia, is supplied to the fuel cell power plants. Due to the low-flow rate, the oxygen absorbs heat while flowing through the lines, absorbs additional heat in the preheater, flows to the oxygen regulator, and reaches the fuel cell power plants in a gaseous form at temperatures above +100°F. The regulator is designed to maintain a pressure differential of 10.5 psia above the nitrogen pressure, supplying the oxygen to the fuel cell at a nominal 62.5 psia. The oxygen in the system is approximately 99.99 percent pure. Over a period of time, the impurities accumulate in the reactant compartment and decrease fuel cell efficiency. This is noted by a drop in fuel cell performance. To eliminate the impurities, the fuel cell is purged. Normally a fuel cell will be purged every 24 hours; however, the actual purge cycle will be determined by the predicted mission power profile and the purity of the reactant as it is calculated to be after

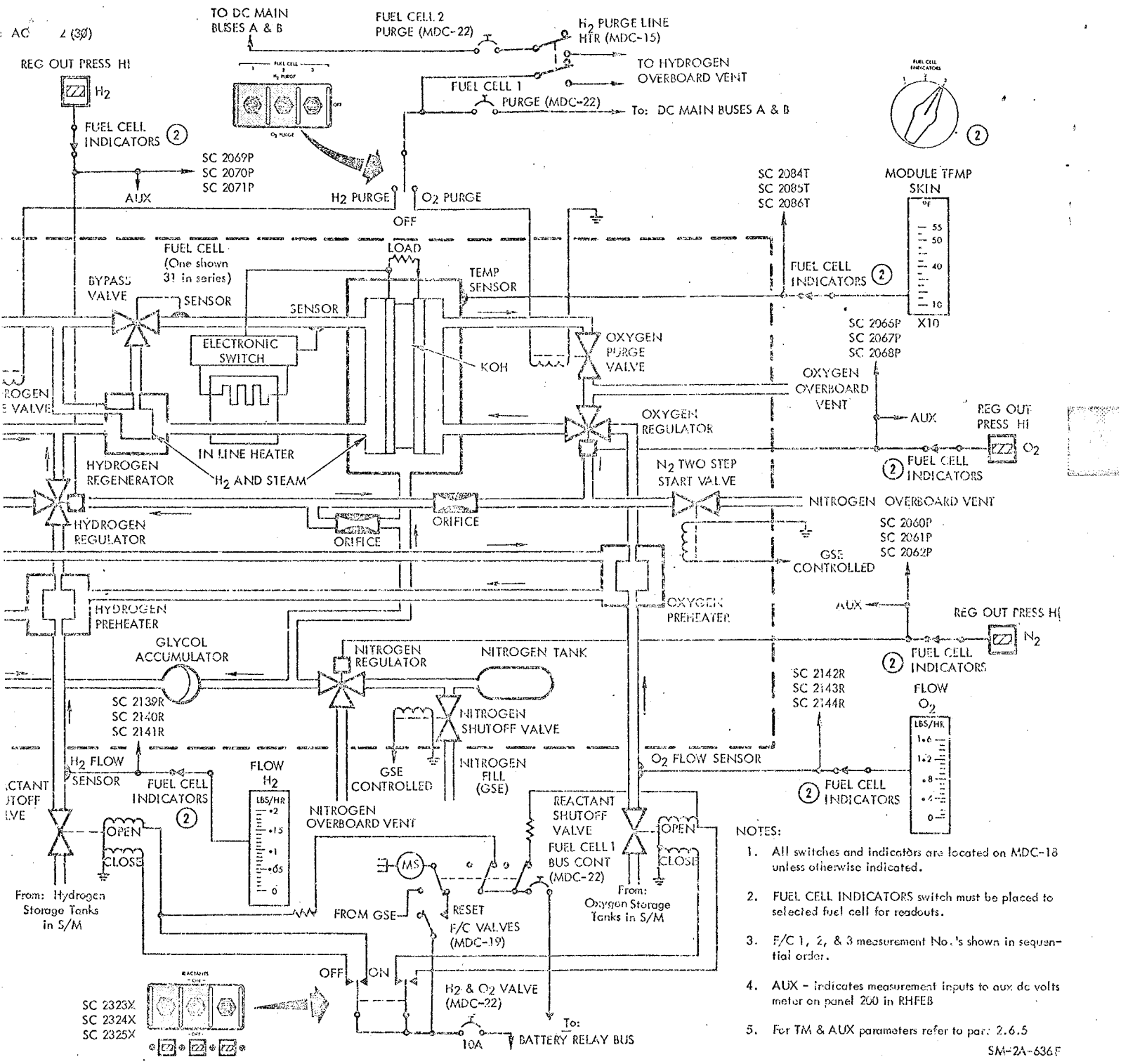

Figure 2.6-3. Fuel Cell Power Plant Flow Diagram

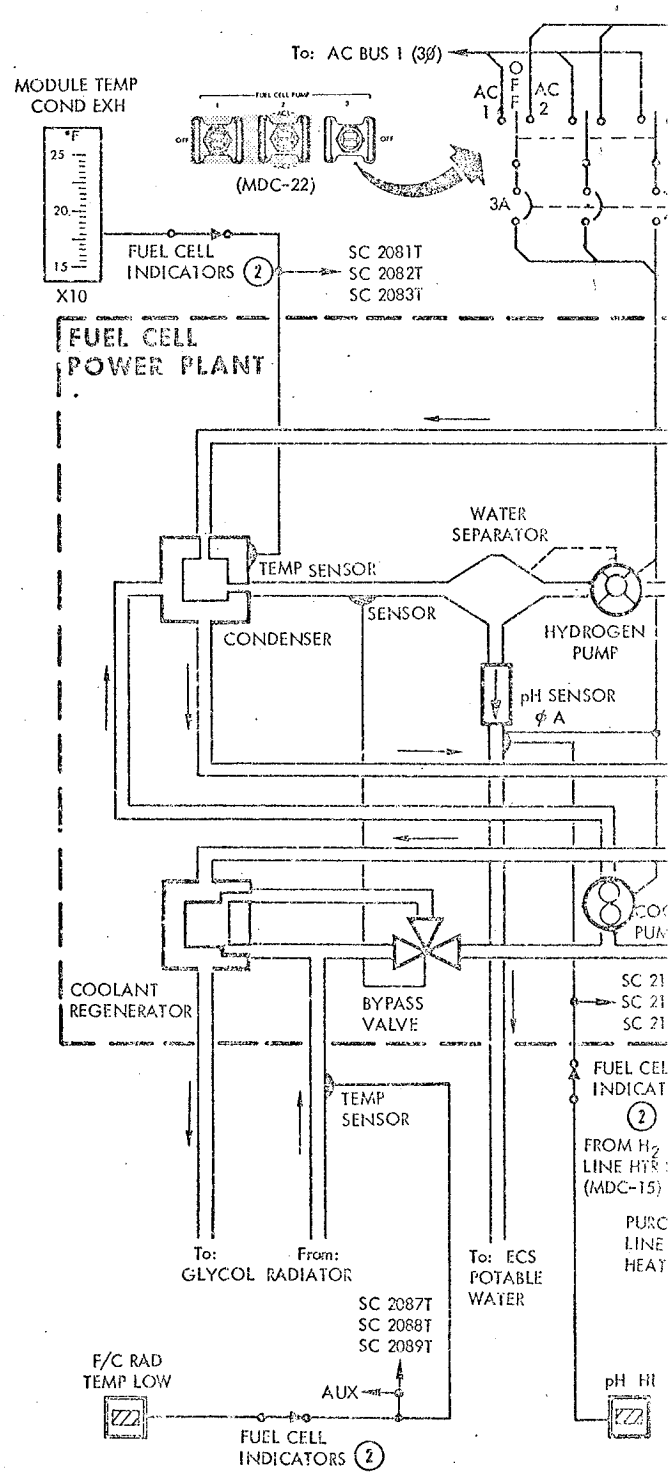
To: AC BUS 1 (3Ø)
MODULE TEMP
COND EXH
°F
25
20
15
X10
(MDC-22)
AC 1
OFF
AC 2
3A
FUEL CELL
INDICATORS 2
SC 2081T
SC 2082T
SC 2083T
FUEL CELL
POWER PLANT
WATER
SEPARATOR
TEMP SENSOR
SENSOR
CONDENSER
HYDROGEN
PUMP
pH SENSOR
ϕ A
COOLANT
REGENERATOR
BYPASS
VALVE
TEMP
SENSOR
To:
GLYCOL
From:
RADIATOR
To: ECS
POTABLE
WATER
SC 2087T
SC 2088T
SC 2089T
F/C RAD
TEMP LOW
AUX
FUEL CELL
INDICATORS 2
FROM H2
LINE HTR
(MDC-15)

completion of S/C cryogenic tank fill. Time required for oxygen purge is 2 minutes for each power plant. Activating the O_2 purge valve allows an additional flow of up to 0.6 lb per hr. An emergency purge can be performed if steady state current output of a power plant decreases by approximately 3 amps. Power plant parameters (primarily voltage, current, and skin temperature) must be considered to determine if an emergency purge is required.

Hydrogen, stored in a cryogenic state at a pressure of 245 (+15, -20), psia and regulated down to a pressure of 60.5 psia, flows into the hydrogen regenerator loop, passing through an in-line heater and into the fuel cell. The in-line heater is an automatic device which aids the fuel cell power plant in sustaining operating temperature at low-power operating levels. The hydrogen, or primary regenerator loop, is used for fuel cell thermal control and permits water removal from the fuel cell. The heat generated by the reaction is transferred to the saturated H_2 fluid. The hot, saturated hydrogen is drawn into the hydrogen exhaust line by the H_2 pump. A sensor in this line provides an input to an electronic switch which controls activation of the H_2 in-line heater. Activation of this heater is accomplished automatically at a hydrogen exhaust temperature of 385±5°F, supplying additional heat to hydrogen gas flowing to the fuel cell power plant. The in-line heater is automatically deactivated at a temperature of 390±5°F. After passing the in-line heater sensor, the saturated hydrogen flows to a sensor-controlled bypass valve. This valve controls the amount of exhaust gas flowing through the H_2 regenerator. The sensor closes the bypass valve at 425°F, allowing all exhaust gas to flow through the regenerator. This heats the returning hydrogen and sustains operating temperature of the fuel cell. With the bypass valve in a full regenerative position (temperatures 425° or lower), if fuel cell power plant temperature continues to decrease, the in-line heater will be activated to supply additional heat. If power plant temperature is above 425°F, the sensor causes the bypass valve to open proportionately (fully open at 495°F) allowing exhaust gas to flow directly to the condenser. A transfer of heat from the hydrogen and steam to the glycol takes place in the condenser. The temperature of the hydrogen and steam is lowered to between 155° and 175°F, thus liquifying some of the water vapor. A sensor in the condenser exhaust, controls a glycol regenerator bypass valve in the glycol radiator return line which regulates the temperature of the glycol. This, in turn, helps control fuel cell temperature and maintains the temperature of the condenser exhaust within the desired range of 155° to 175°F. The liquid water and hydrogen then flows through a centrifugal water separator pump which extracts the water and delivers it to the ECS potable water storage tank in the C/M. The amount of water produced by each fuel cell is in direct relation to the reactants consumed which is related to power output. (See figure 2.6-4.)

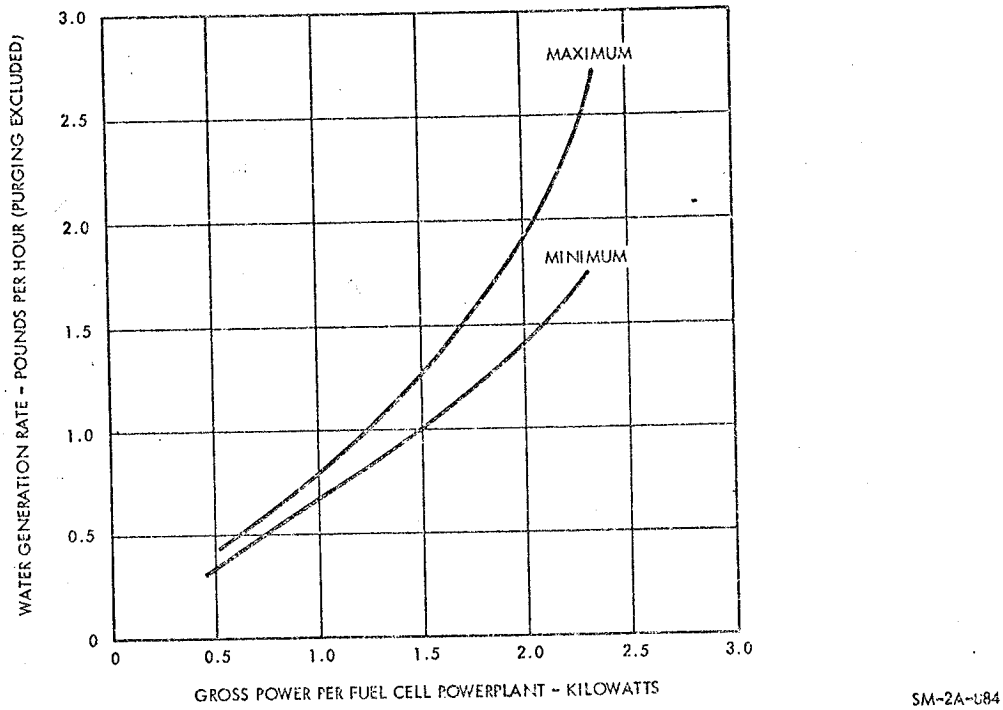

Figure 2.6-4. Water Production Rate vs Power Output

The hydrogen pump circulates the remaining slightly moist fluid through the regenerator and back to the fuel cell. In order to maintain the desired ratio of water to KOH in the fuel cell, the condenser exhaust temperature is regulated at a level so that some moisture is left in the returning hydrogen as it flows back into the cell. The hydrogen in the cryogenic system is approximately 99.94 percent pure. H_2 purge valve activation allows an additional flow of up to 0.75 lbs per hour, and will normally be performed for a period of 80 seconds per power plant every 24 hours. The actual H_2 purge cycle will also depend on the predicted power profile and reactant purity as calculated after cryogenic tank fill. The performance degradation participation by the H_2 electrode is negligible and cannot be seen with on-board instrumentation (with normal degradation). If degradation is suspected to remain after an emergency O_2 purge, an H_2 purge may be warranted. There is some indication that periodic H_2 purging may be eliminated altogether, thereby only performing the degradation purge whenever it may be required. Thirty minutes prior to H_2 purging, the H_2 PURGE LINE HTR switch (MDC-15) is placed in the up position to energize the H_2 fuel cell vent line heater and preclude any freezing of the moist exhaust gas in the vent line.

The secondary loop contains a 62.5 to 37.5 mixture of ethylene glycol and water, respectively. This loop serves to preheat the reactants and to transport waste heat to the space radiators. An accumulator, pressurized by the nitrogen, pressurizes the glycol loop and also acts as a buffer for the expansion and contraction of the coolant as it varies in temperature. Glycol flow through the regenerator is controlled by a bypass valve which operates in conjunction with the condenser exhaust sensor. When the condenser exhaust is at 155°F, the glycol is routed through the regenerator to increase glycol temperature and effect minimum heat transfer in the condenser. The glycol bypass valve is completely open at a condenser exhaust temperature of 175°F, routing the glycol through the pump to the condenser and on to the oxygen and hydrogen preheaters. Since the glycol temperature is lower, a maximum transfer of heat in the condenser lowers the condenser exhaust temperature. The condenser exhaust temperature sensor regulates coolant temperature which affects the amount of water removed from the power plant. The 155° to 175°F operating range will best maintain the desired ratio of water to KOH in the fuel cell.

A 400-cps 3-phase a-c gear pump maintains glycol flow at the rate of 35 to 80 lbs per hour, raising the pressure 6 psi. After the oxygen and hydrogen preheaters, the glycol is routed through the glycol regenerator and to the space radiators, where heat is radiated into the space environment.

Each fuel cell contains electrolyte (KOH) which consists by weight of 83 percent potassium hydroxide and 17 percent water on initial fill, and has a critical temperature of 300°F (figure 2.6-5). The electrolyte remains a solid to an approximate temperature of 220°F; with a temperature increase to 300°F, the electrolyte becomes a liquid and the fuel cell electrochemical reaction becomes effective. Bringing the fuel cell to critical temperature is accomplished using GSE, and cannot be performed from S/C power sources. Placing a load on the power plant will maintain it above this critical temperature.

2.6.3.4 Inverters.

Each inverter (figure 2.6-6) is composed of a clock oscillator, an eight-stage digital countdown section, a d-c line filter, two silicon-controlled rectifiers, a magnetic amplifier, a buck-boost amplifier, a demodulator, two d-c filters, an eight-stage power inversion section, a harmonic neutralization transformer, an a-c output filter, current sensing transformers, a Zener diode reference bridge, a low-voltage control, and an overcurrent trip circuit. The inverter normally uses a 6.4-kc square wave synchronizing signal from the central timing equipment (CTE) which maintains inverter output at 400±2 cps. If this external signal is completely lost, the oscillator within the inverter will provide pulses that will maintain inverter output within ±7 cps. The internal

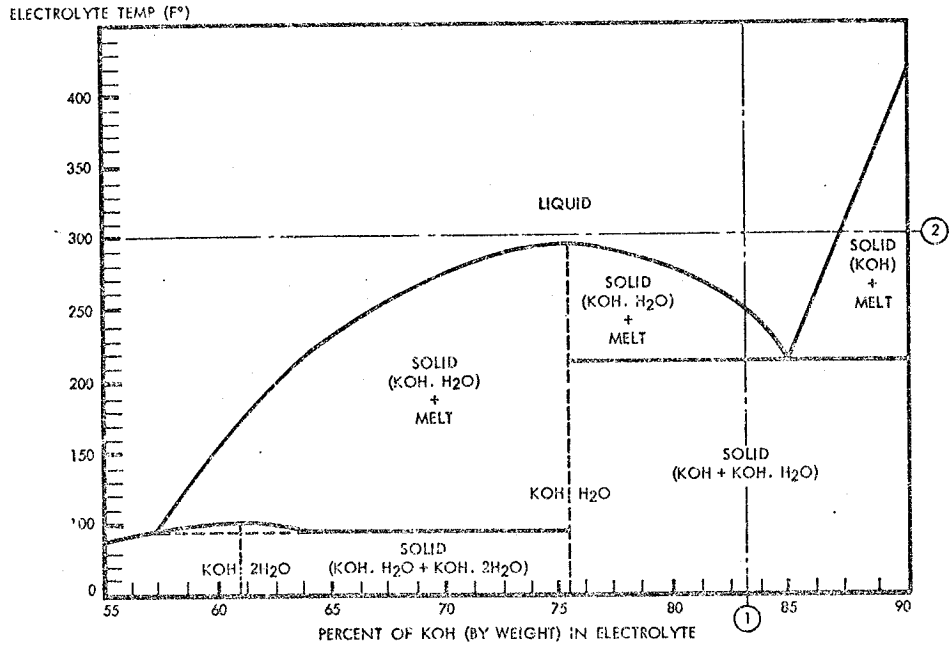

NOTES: 1. Percent (83) of KOH in electrolyte at initial fill.
2. Critical temperature (300°F) of electrolyte at which electrochemical reaction begins, on initial start-up of fuel cell.

SM-2A-803A

Figure 2.6-5. KOH H_2O Phase Diagram

oscillator is normally synchronized by the external pulse which is provided through the phase synchronizing unit. The phase synchronizer will provide these pulses to the inverter after a maximum of two seconds. The following paragraphs describe the function of the various stages of the inverter.

The 6.4-kc negative square wave provided by the central timing equipment is applied through the phase synchronizer and the oscillator to the eight-stage digital countdown section. The oscillator has two divider circuits which provide a 1600-pps signal to the magnetic amplifier and two silicon-controlled rectifiers.

The eight-stage digital countdown section uses the 6.4-kc square wave signal to produce a series of eight 400-cycle square waves, each mutually displaced one pulse time from the preceding and following wave. Once pulse time is 156 microseconds and represents 22.5 electrical degrees. This series of square waves is applied to the eight-stage power inversion section.

The eight-stage power inversion section, using a controlled voltage from the buck-boost amplifier, amplifies the series of 400-cycle square waves produced by the eight-stage digital countdown section. The amplified square waves, still mutually displaced 22.5 electrical degrees, are applied to the harmonic neutralization transformer, which is described in a subsequent paragraph.

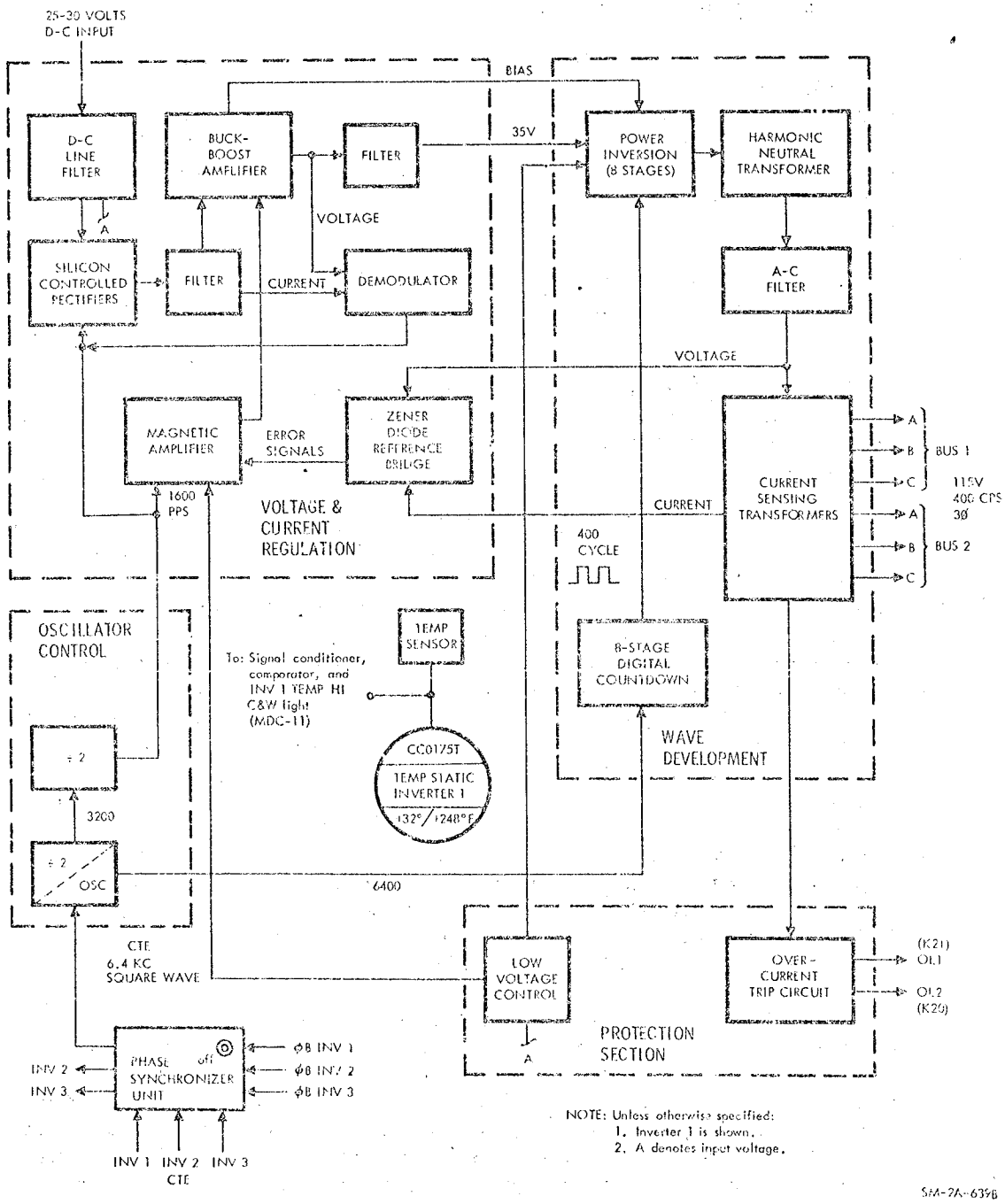

Figure 2.6-6. Inverter Block Diagram

D-C power to the inverter is supplied from the main d-c buses through the d-c line filter. This filter reduces the high frequency ripple in the input, and the 25 to 30 vdc is applied to the silicon-controller rectifiers and buck-boost amplifier.

The silicon-controlled rectifiers, using the filtered d-c power and the 1600-pps signal from the clock oscillator, produce a d-c square wave with an on-time of greater than 90 degrees from each rectifier. This is filtered and supplied to the buck-boost amplifier where it is coupled with the amplified 1600-pps output of the magnetic amplifier to develop a filtered 35 volts dc which is used for amplification in the power inversion stages.

The buck-boost amplifier, using the 1600-pps signal from the magnetic amplifier, the filtered d-c power from the main duc buses, and an error signal feedback from the Zener diode reference bridge, provides a variable bias voltage to the eight-stage power inversion section. The amplitude of this voltage is controlled by the amplitude and phase of the feedback signal from the Zener diode reference bridge. This bias signal is varied by the error signal to regulate inverter voltage and current output.

The demodulator compensates for any low-frequency ripple in the d-c input to the inverter. The high-frequency ripple is attenuated by the filters. The demodulator senses the 35-volt d-c output of the buck-boost amplifier and the current input to the buck-boost amplifier. It compensates for ripple in the 10- to 1000-cps range. An input voltage drop or increase will be reflected in a drop or increase in the 35-volt d-c output of the buck-boost amplifier as well as a drop or increase in current input to the buck-boost amplifier. A sensed decrease in the buck-boost amplifier voltage output would be compensated for a demodulator output, transformer coupled, to the silicon-controlled rectifiers, causing them to conduct for a longer time, thus increasing their filtered output. A sensed increase in buck-boost amplifier voltage output, caused by an increase in the d-c input to the inverter, would cause the demodulator to produce a signal causing the silicon-controlled rectifiers to conduct for shorter periods, producing a lower filtered output to the buck-boost amplifier. In this fashion, the 35-volt d-c input to the power inversion section is maintained at a relatively constant level.

The low-voltage control samples the input voltage to the inverter and can terminate inverter operation. Since the buck-boost amplifier provides a boost action during a decrease in input voltage to the inverter, in an attempt to maintain a constant 35 volts dc to the power inversion section, the high boost required during a low-voltage input would tend to overheat the buck-boost amplifier. As a precautionary measure, the low-voltage control will terminate inverter operation by disconnecting operating voltage to the magnetic amplifier and a power inversion stage when input voltage decreases to between 16 and 19 volts dc.

The harmonic neutralization section, using the 400-cycle, square-wave output of the eight-stage power inversion section, transforms it into a 3-phase 400-cycle 115-volt sine wave signal. The manner in which these transformers are wound produces flux cancellation which eliminates all harmonics up to and including the fifteenth of the fundamental frequency. The 22.5 electrical degree displacement of the square wave provides a means of electrically rotating the square wave excited primary windings around the 3-phase, wye-connected, secondary windings, thus producing the 3-phase 400-cycle sine wave output. This 115-volt signal is then applied to the a-c output filter.

The a-c output filter eliminates the remaining higher harmonics. Since the lower harmonics were eliminated by the harmonic neutralization section, the size and weight of this output filter was reduced. Circuitry in this filter also produces a rectified signal which is applied to the Zener diode reference bridge. The amplitude of this signal is a function of the amplitude of a-c output voltage. After filtering, the 3-phase 115-volt a-c 400-cycle sine wave is applied to the a-c buses through current-sensing transformers.

The current-sensing transformer section produces a rectified signal, the amplitude of which is in direct function of inverter output current magnitude. This d-c signal is applied to the Zener diode reference bridge to regulate inverter current output. It is also applied to an overcurrent trip circuit.

The Zener diode reference bridge receives a rectified d-c signal, representing voltage output, from the circuitry in the a-c output filter. A variance in voltage output unbalances the bridge providing an error signal of proper polarity and magnitude to the buck-boost amplifier via the magnetic amplifier. When inverter current output reaches 200 to 250 percent of rated current, the rectified signal applied to the bridge from the current sensing transformers is of sufficient magnitude to provide an error signal and cause the buck-boost amplifier to operate in the same manner as during an overvoltage condition. The bias output of the buck-boost amplifier, being controlled by the error signal, will be varied to correct for any variation in inverter voltage or current output. When inverter current output reaches 250 percent of rated current, the overcurrent trip circuit is activated.

The overcurrent trip circuit monitors a rectified d-c signal representing current output. When total inverter current output exceeds 250 percent of rated current, this circuit will effect an inverter disconnect in 15±5 seconds. If current output of any single phase exceeds 300 percent of rated current, this circuit will effect an inverter disconnect in 5±1 second.

A phase synchronizer unit (PSU), located in the RHEB (panel 208), establishes inverter outputs so they are in phase when using a separate inverter on each of the two a-c buses. The two inverter configuration is prevelant during delta V's as a safety precaution in case of a single failure in thrust vector control.

The use of two inverters during delta V's retains redundancy in the stabilization and control subsystem, since power through a-c bus 1 is used for automatic thrust vector control and power through a-c bus 2 is used for manual thrust vector control.

Central timing equipment (CTE) trigger pulses, used for inverter operation, are supplied to the inverters through the PSU. The PSU samples ØB from each inverter output, and when an in-phase relationship is established, supplies the 6400-cps CTE trigger pulse to the inverters being used. The ØB input also supplies power for PSU circuitry.

The in-phase relationship is acquired by initially providing out-of-phase trigger pulses (6080 to 6400 cps) until the two inverters are synchronized, at which time the CTE signal is coupled to the inverters. Phase lock, with a maximum displacement of ±10 degrees, is acquired in a maximum of two seconds.

The synchronizer provides this function for any combination of pairs of the three available inverters. A two-position toggle switch on the PSU, when positioned to OFF, allows for direct input of CTE signals to the inverters in the event of failure of the synchronizer unit. However, in this situation, the in-phase relationship would not be realized.

A temperature sensor with a range of +32° to +248°F is installed in each inverter to provide MSFN the capability of monitoring inverter temperature. It also provides an input to the C&WS which will illumine a light at an inverter overtemperature of 226°F.

2.6.3.5 Battery Charger.

A constant voltage, solid-state battery charger (figure 2.6-7), located in the C/M lower equipment bay, is incorporated into the EPS. The battery charger selector switch (MDC-18) controls power input to the charger, as well as connecting the charger output to the selected battery (figure 2.6-11). When the BATTERY CHARGER selector switch is positioned to entry battery A, B, or C, a relay (K4) is activated, completing circuits from a-c and d-c power sources to the battery charger. Also, the battery charger output is connected to the selected battery to be charged through the MAIN BUS TIE switches (MDC-22). Positioning the MAIN BUS TIE switch (A&C or B&C) to OFF, for the selected batteries, will disconnect main bus loads from the batteries and also complete the circuit from the charger to the battery. Only one battery can be charged at a time.

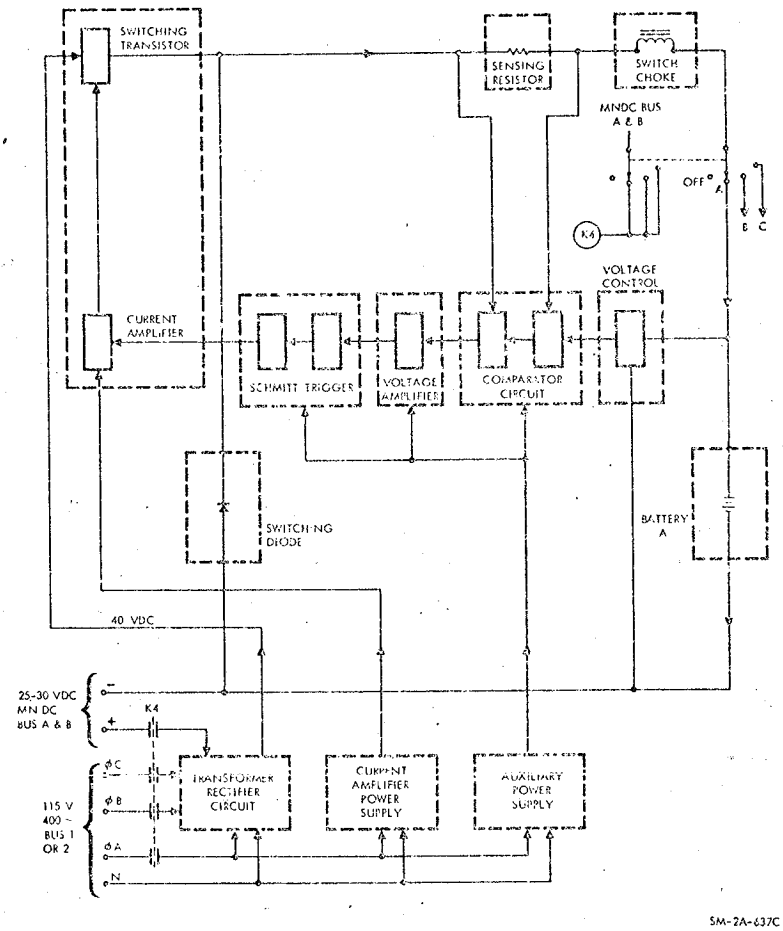

Figure 2.6-7. Battery Charger Block Diagram

The battery charger uses 25 to 30 volts dc from the main d-c buses and 115 volts 400-cps, 3-phase ac from either of the a-c buses. All three phases of ac are used to boost the 25 to 30-volt d-c input to produce 40 volts dc for charging. In addition, phase A of the ac is used to supply power for the rest of the charger circuitry. The logic network in the charger, which consists of a two-stage differential amplifier (comparator), a two-stage Schmitt trigger, a current sensing resistor, and a voltage amplifier will set up the initial condition for operation. The first stage of the comparator is in the on mode, with the second stage in the off mode, placing the Schmitt trigger first stage in the on mode with the second stage off. This condition provides maximum base drive to the current amplifier which turns the switching transistor to the on mode. With the switching transistor on, current flows from the transformer rectifier through the switching transistor, current sensing resistor, and switch

choke to the battery being charged. As current flow increases, the voltage drop across the sensing resistor increases. The voltage across the sensing resistor builds to a level which turns the first stage of the comparator to the off mode and the second stage to the on mode. This condition turns off the voltage amplifier which reverses the operation of the Schmitt trigger to first stage off and second stage on. This places the current amplifier off, which turns off the switching transistor. The switching transistor in the off mode will stop current flow from the power source, causing the field in the choke to continue collapsing and discharging into the battery through the switching diode and the current sensing resistor. As the EMF in the choke decreases, the current through the sensing resistor decreases, reducing the voltage drop across the resistor. At some point, the decrease in voltage drop across the sensing resistor, reverses the operation of the comparator circuit, setting up the initial condition and completing one cycle of operation. The output load current, due to the action of the choke, remains relatively constant except for the small variation through the sensing resistor. This variation is required to switch the switching transistor and Schmitt trigger through the action of the comparator.

Battery charger output is regulated by the sensing resistor until the battery voltage reaches approximately 36 volts. At this time, the voltage control network is activated and, in conjunction with the sensing resistor, provides a signal for cycling the battery charger. As the battery voltage increases, the internal impedance of the battery increases, decreasing current flow from the charger. At 39 volts, the battery is fully charged and current flow becomes negligible. (See figure 2.6-8.) Battery charger disconnect will be effected at a current output of approximately 0.6 amps.

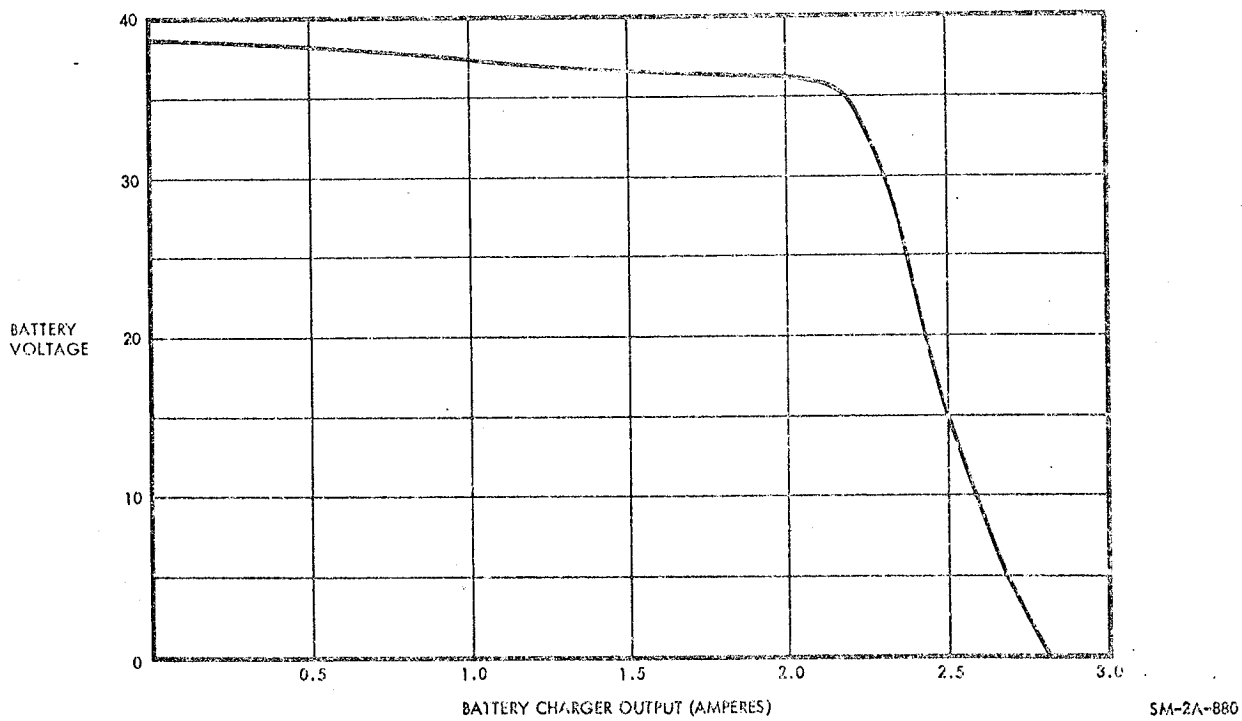

Figure 2.6-8. Battery Charging Rate Chart

Battery input will be monitored by MSFN through the normal battery telemetry measurements.

2.6.3.6 Power Distribution.

D-C and a-c power distribution to components of the EPS is provided by two redundant buses in each system. A single-point ground on the spacecraft structure is used to eliminate ground loop effects. Sensing and control circuits are provided for monitoring and protection of each bus system.

Distribution of d-c power (figure 2.6-9) is accomplished with a two-wire system and a series of interconnected buses, individual switches, circuit breakers, and isolation diodes. The buses consist of the following:

- Two redundant main d-c buses (A and B) powered by the three fuel cells and/or entry batteries A, B, and C.
- Two battery buses (A and B) each powered by its respective entry battery A and B.
- Flight and postlanding bus, powered through the main d-c buses, and/or the three entry batteries, A, B, and C.
- Two nonessential buses, powered through either d-c main bus A or B.
- Battery relay bus, powered by entry batteries A and B through individual battery buses.
- Pyro buses, which are isolated from the main electrical power system when powered by the pyro batteries. A capability is provided to connect entry battery A or B to the respective A or B pyro system in case of loss of a pyro battery.
- S/M jettison controllers, powered by S/M jettison controller batteries, which are completely isolated from the main electrical power system.

Power from the fuel cell power plants is connected to the main d-c buses through six motor switches (part of overload/reverse current circuits in the S/M which are controlled by switches in the C/M located on MDC-18. Fuel cell power can be connected to either or both of the main d-c buses. Six event indicators show when fuel cell output is connected. When an overload condition occurs, the overload-reverse current sensing circuits automatically disconnect the fuel cell power plants from the overloaded bus and provide visual displays for isolation of the trouble. A reverse current condition will disconnect the malfunctioning power plant from the d-c system. D-C undervoltage sensing circuits (figure 2.6-10) are also provided to indicate bus low voltage conditions. If voltage drops

below 26.25 volts dc, an applicable d-c undervoltage light on the caution and warning panel (MDC-11) will illuminate. Since each bus is capable of handling all EPS loads, an undervoltage condition should not occur except in an isolated instance, if too many electrical units are placed on the bus simultaneously or if a malfunction exists in the EPS. A voltmeter, on MDC-18, is provided to monitor bus voltage. An ammeter is provided on MDC-18 to monitor current output of fuel cells 1, 2, 3, batteries A, B, C, and the battery charger. During extreme power loads or emergencies, power to the main d-c buses can be supplied from entry batteries A and B by way of battery buses and directly from battery C (figure 2.6-11). Each battery bus is separated physically into two parts (e.g., battery bus A is A-1 and A-2), but remain connected electrically by motor switch contacts which are not opened on manned S/C. A switch to two nonessential buses permits isolating nonessential equipment during a shortage of power (two fuel cell power plants out). The postlanding bus supplies power to some of the telecommunications equipment, float bag No. 1 and No. 3 controls, and the ECS postlanding vent control. In flight and up to CSM separation, the postlanding bus receives power from the fuel cells and/or entry batteries through the main d-c buses. After CSM separation, the entry batteries supply power to the postlanding bus through the main d-c buses or directly through individual circuit breakers. Motor switch contacts which close when the MAIN BUS TIE switches are positioned ON, complete the circuit between the entry batteries and the main d-c buses and open the connection from the battery charger. The battery relay bus provides d-c power to the d-c and a-c sensing units, and the fuel cell and inverter control circuits. The pyrotechnic batteries supply power to initiate ordnance devices for separation of the LES, forward heat shield, S/M from C/M, and for deployment of the drogue and main parachutes during a pad abort, high-altitude abort, or normal mission progression. The S/M jettison controller batteries, supply power through the S/M jettison controllers for the CSM separation maneuver. To operate recovery communications and other aids after landing, power is provided by the entry batteries through three circuit breakers (figure 2.6-11) which are normally open until just prior to CSM separation.

Distribution of a-c power (figure 2.6-12) is accomplished with a four-wire system via two redundant buses, a-c bus No. 1 and a-c bus No. 2. The a-c neutral bus is connected to the single-point ground. A-C power is provided by the solid-state 115/200-volt 400-cps 3-phase inverters. D-C power is routed to the inverters through the main d-c buses. Inverter No. 1 can be powered through d-c main bus A, inverter No. 2 through d-c main bus B, and inverter No. 3 through either d-c main bus A or B by switch selection. Each of these circuits has a separate circuit breaker and a power control motor switch. Switches for applying power to the motor switches are located on MDC-18. All three inverters are identical and are provided with overtemperature circuitry. A light indicator, in the caution/warning group on MDC-11, illuminates to indicate an overtemperature situation. Inverter operating temperature is telemetered

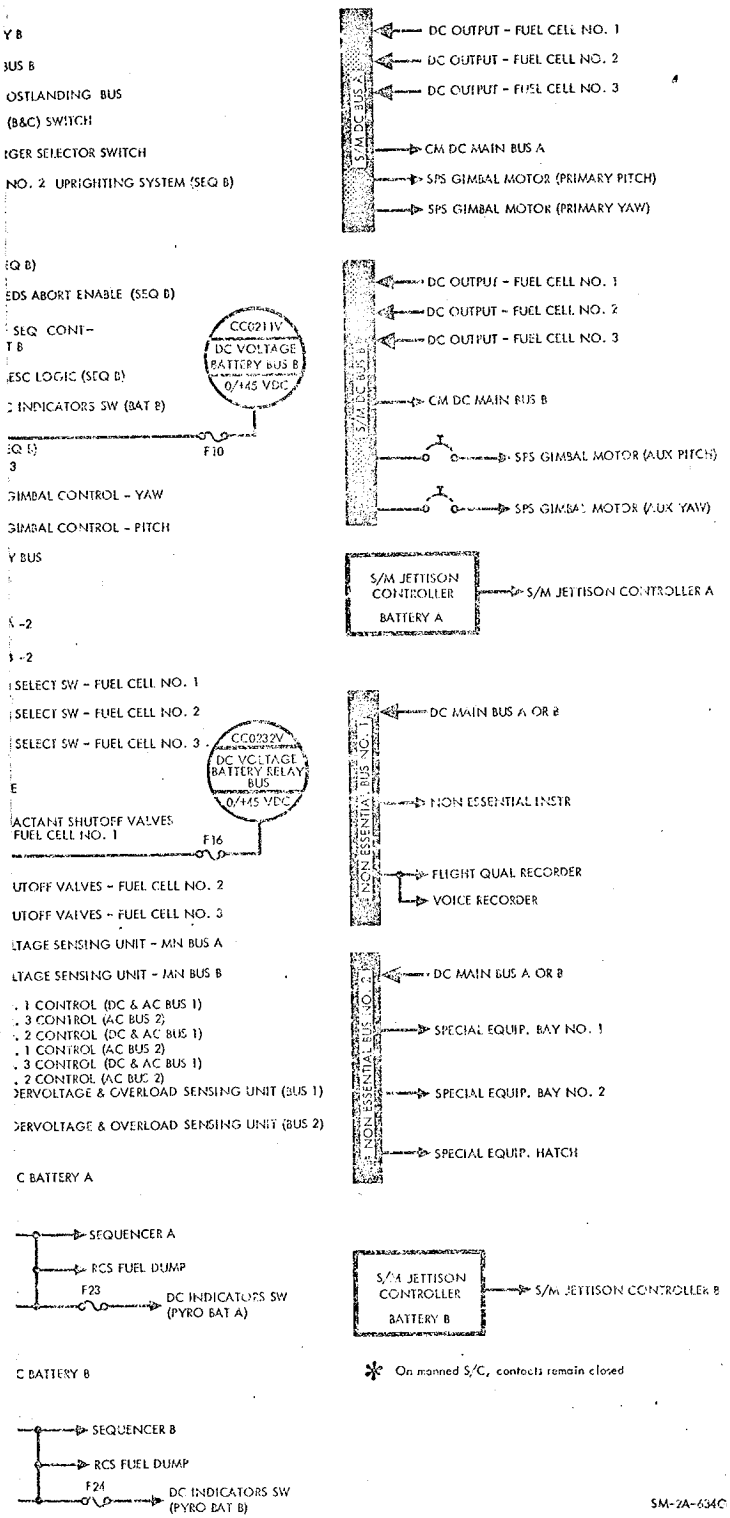

D-C Power Distribution

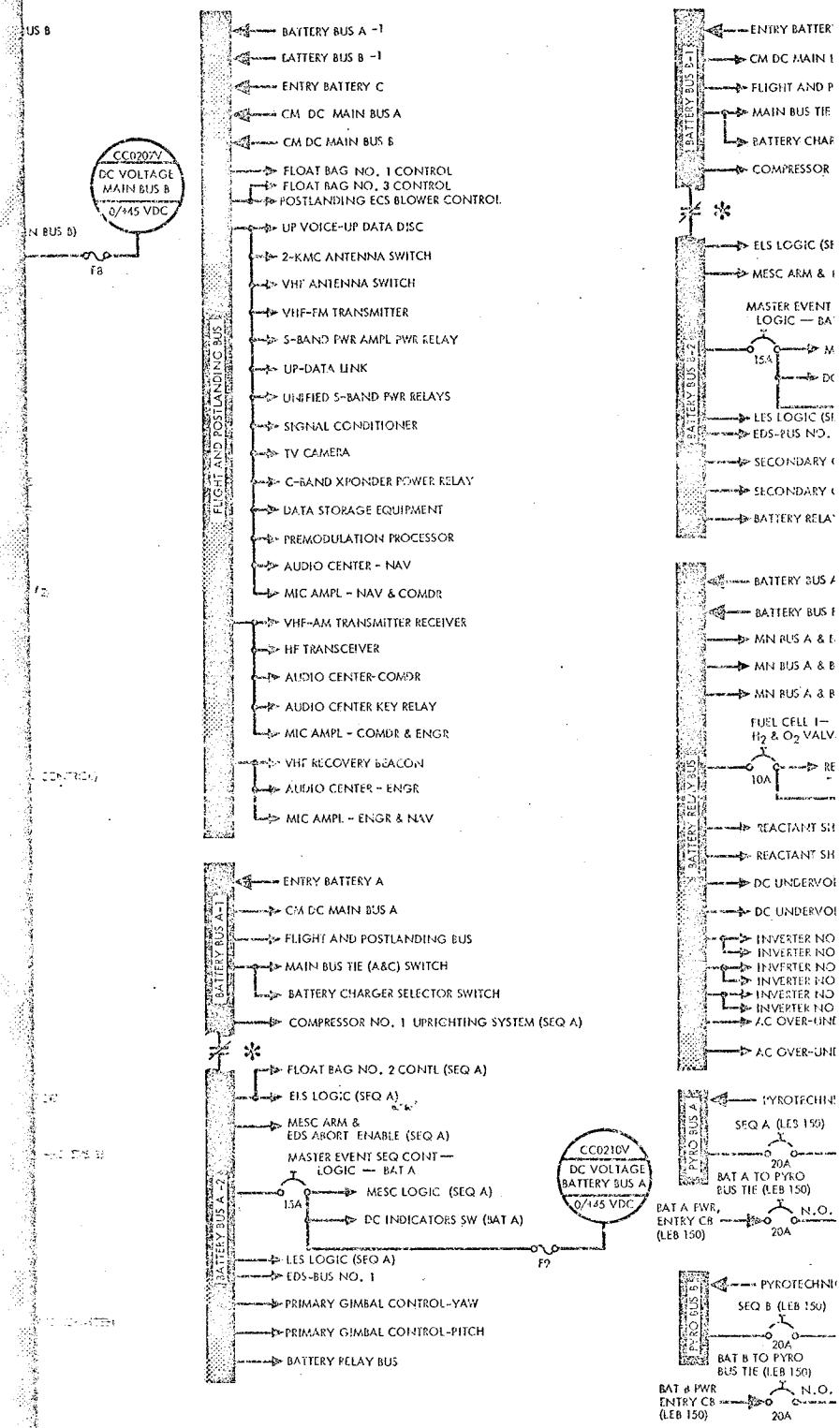
CC0207V
DC VOLTAGE
MAIN BUS B
0/145 VDC
F8
FLIGHT AND POSTLANDING BUS
BATTERY BUS A -1
BATTERY BUS B -1
ENTRY BATTERY C
CM DC MAIN BUS A
CM DC MAIN BUS B
FLOAT BAG NO. 1 CONTROL
FLOAT BAG NO. 3 CONTROL
POSTLANDING ECS BLOWER CONTROL
UP VOICE-UP DATA DISC
2-KMC ANTENNA SWITCH
VHF ANTENNA SWITCH
VHF-FM TRANSMITTER
S-BAND PWR AMPL PWR RELAY
UP-DATA LINK
UNIFIED S-BAND PWR RELAYS
SIGNAL CONDITIONER
TV CAMERA
C-BAND XPONDER POWER RELAY
DATA STORAGE EQUIPMENT
PREMODULATION PROCESSOR
AUDIO CENTER - NAV
MIC AMPL - NAV & COMDR
VHF-AM TRANSMITTER RECEIVER
HF TRANSCEIVER
AUDIO CENTER-COMDR
AUDIO CENTER KEY RELAY
MIC AMPL - COMDR & ENGR
VHF RECOVERY BEACON
AUDIO CENTER - ENGR
MIC AMPL - ENGR & NAV
BATTERY BUS A-1
ENTRY BATTERY A
CM DC MAIN BUS A
FLIGHT AND POSTLANDING BUS
MAIN BUS TIE (A&C) SWITCH
BATTERY CHARGER SELECTOR SWITCH
COMPRESSOR NO. 1 UPRIGHTING SYSTEM (SEQ A)
BATTERY BUS A-2
FLOAT BAG NO. 2 CONTL (SEQ A)
ELS LOGIC (SEQ A)
MESC ARM &
EDS ABORT ENABLE (SEQ A)
MASTER EVENT SEQ CONT —
LOGIC — BAT A
15A
MESC LOGIC (SEQ A)
DC INDICATORS SW (BAT A)
CC0210V
DC VOLTAGE
BATTERY BUS A
0/145 VDC
F9
LES LOGIC (SEQ A)
EDS-BUS NO. 1
PRIMARY GIMBAL CONTROL-YAW
PRIMARY GIMBAL CONTROL-PITCH
BATTERY RELAY BUS
BATTERY BUS B-1
CM DC MAIN
FLIGHT AND P
MAIN BUS TIE
BATTERY CHAR
COMPRESSOR
BATTERY BUS B-2
ELS LOGIC (SE
MESC ARM &
MASTER EVENT
LOGIC — BA
15A
LES LOGIC (SE
EDS-BUS NO.
SECONDARY
SECONDARY
BATTERY RELA
BATTERY RELAY BUS
BATTERY BUS A
BATTERY BUS B
MN BUS A & B
MN BUS A & B
MN BUS A & B
FUEL CELL 1—
H2 & O2 VALV.
10A
REACTANT SH
REACTANT SH
DC UNDERVOL
DC UNDERVOL
INVERTER NO
INVERTER NO
INVERTER NO
INVERTER NO
INVERTER NO
INVERTER NO
AC OVER-UNI
AC OVER-UNI
PYRO BUS A
PYROTECHNI
SEQ A (LEB 150)
20A
BAT A TO PYRO
BUS TIE (LEB 150)
BAT A PWR,
ENTRY CB
(LEB 150)
N.O.
20A
PYRO BUS B
PYROTECHNI
SEQ B (LEB 150)
20A
BAT B TO PYRO
BUS TIE (LEB 150)
BAT B PWR
ENTRY CB
(LEB 150)
N.O.
20A

Figure 2.6-9.

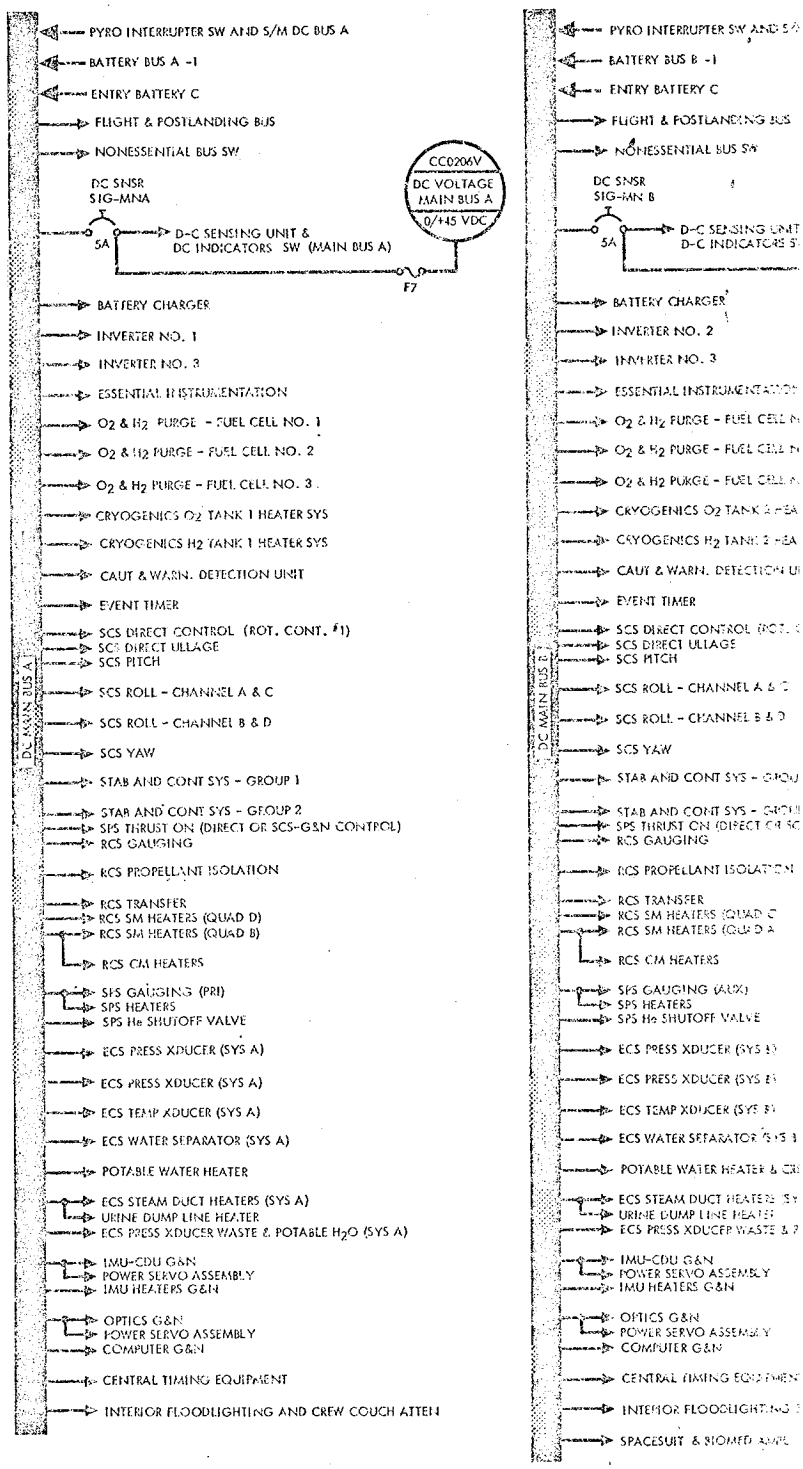
DC MAIN BUS A
PYRO INTERRUPTER SW AND S/M DC BUS A
BATTERY BUS A -1
ENTRY BATTERY C
FLIGHT & POSTLANDING BUS
NONESSENTIAL BUS SW
DC SNSR SIG-MNA
5A
D-C SENSING UNIT & DC INDICATORS SW (MAIN BUS A)
CC0206V
DC VOLTAGE MAIN BUS A
0/+45 VDC
F7
BATTERY CHARGER
INVERTER NO. 1
INVERTER NO. 3
ESSENTIAL INSTRUMENTATION
O2 & H2 PURGE - FUEL CELL NO. 1
O2 & H2 PURGE - FUEL CELL NO. 2
O2 & H2 PURGE - FUEL CELL NO. 3
CRYOGENICS O2 TANK 1 HEATER SYS
CRYOGENICS H2 TANK 1 HEATER SYS
CAUT & WARN. DETECTION UNIT
EVENT TIMER
SCS DIRECT CONTROL (ROT. CONT. #1)
SCS DIRECT ULLAGE
SCS PITCH
SCS ROLL - CHANNEL A & C
SCS ROLL - CHANNEL B & D
SCS YAW
STAB AND CONT SYS - GROUP 1
STAB AND CONT SYS - GROUP 2
SPS THRUST ON (DIRECT OR SCS-G&N CONTROL)
RCS GAUGING
RCS PROPELLANT ISOLATION
RCS TRANSFER
RCS SM HEATERS (QUAD D)
RCS SM HEATERS (QUAD B)
RCS CM HEATERS
SPS GAUGING (PRI)
SPS HEATERS
SPS He SHUTOFF VALVE
ECS PRESS XDUCER (SYS A)
ECS PRESS XDUCER (SYS A)
ECS TEMP XDUCER (SYS A)
ECS WATER SEPARATOR (SYS A)
POTABLE WATER HEATER
ECS STEAM DUCT HEATERS (SYS A)
URINE DUMP LINE HEATER
ECS PRESS XDUCER WASTE & POTABLE H2O (SYS A)
IMU-CDU G&N
POWER SERVO ASSEMBLY
IMU HEATERS G&N
OPTICS G&N
POWER SERVO ASSEMBLY
COMPUTER G&N
CENTRAL TIMING EQUIPMENT
INTERIOR FLOODLIGHTING AND CREW COUCH ATTEN
DC MAIN BUS B
PYRO INTERRUPTER SW AND S/
BATTERY BUS B -1
ENTRY BATTERY C
FLIGHT & POSTLANDING BUS
NONESSENTIAL BUS SW
DC SNSR SIG-MN B
5A
D-C SENSING UNIT
D-C INDICATORS S
BATTERY CHARGER
INVERTER NO. 2
INVERTER NO. 3
ESSENTIAL INSTRUMENTATION
O2 & H2 PURGE - FUEL CELL N
O2 & H2 PURGE - FUEL CELL N
O2 & H2 PURGE - FUEL CELL N
CRYOGENICS O2 TANK 2 HEA
CRYOGENICS H2 TANK 2 HEA
CAUT & WARN. DETECTION U
EVENT TIMER
SCS DIRECT CONTROL (ROT.
SCS DIRECT ULLAGE
SCS PITCH
SCS ROLL - CHANNEL A & C
SCS ROLL - CHANNEL B & D
SCS YAW
STAB AND CONT SYS - GROU
STAB AND CONT SYS - GROU
SPS THRUST ON (DIRECT OR SC
RCS GAUGING
RCS PROPELLANT ISOLATION
RCS TRANSFER
RCS SM HEATERS (QUAD C
RCS SM HEATERS (QUAD A
RCS CM HEATERS
SPS GAUGING (AUX)
SPS HEATERS
SPS He SHUTOFF VALVE
ECS PRESS XDUCER (SYS B)
ECS PRESS XDUCER (SYS B)
ECS TEMP XDUCER (SYS B)
ECS WATER SEPARATOR (SYS B
POTABLE WATER HEATER & CR
ECS STEAM DUCT HEATERS (SY
URINE DUMP LINE HEATER
ECS PRESS XDUCER WASTE & P
IMU-CDU G&N
POWER SERVO ASSEMBLY
IMU HEATERS G&N
OPTICS G&N
POWER SERVO ASSEMBLY
COMPUTER G&N
CENTRAL TIMING EQUIPMEN
INTERIOR FLOODLIGHTING
SPACESUIT & BIOMED AMPL

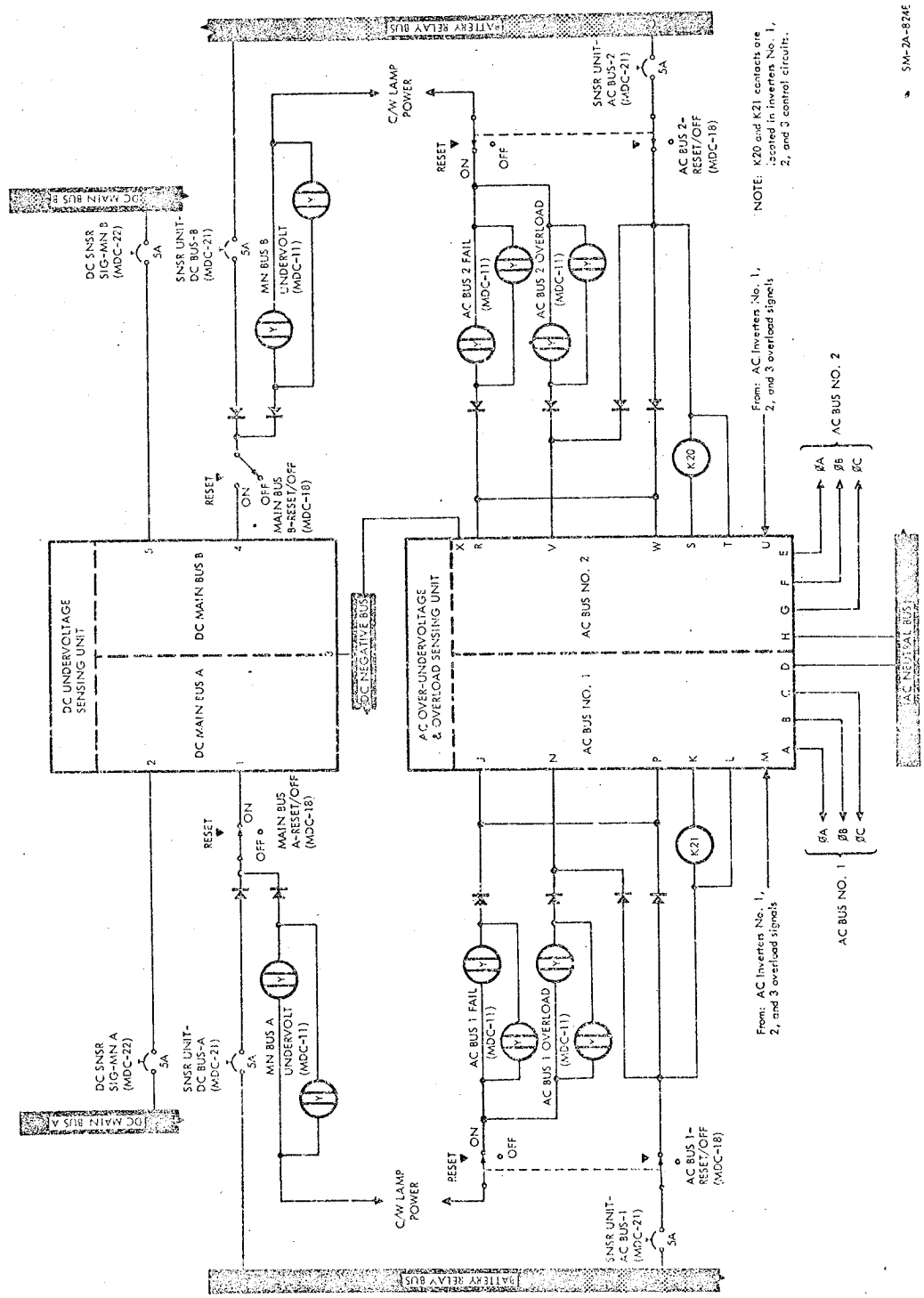

Figure 2.6-10. DC and AC Sensing Circuits

to the MSFN. Inverter output is routed through a series of control motor switches to the a-c buses. Six switches on MDC-18 control motor switches which operate contacts to connect or disconnect the inverters from the a-c buses. The motor switches are designed to prevent connecting two inverters to the same a-c bus at the same time. AC loads are powered through the redundant a-c buses. In some instances, one phase is used for operation of equipment; in others two, and in others all three. Over-undervoltage and overload sensing circuits (figure 2.6-11) are provided for each bus. A-C bus voltage fail and overload lights in the caution/warning group on MDC-11 provide a visual indication of these malfunctions. Monitoring of voltage and frequency of each phase on each bus is accomplished by selection with the AC INDICATORS switch. Readings are displayed on separate AC VOLTS and FREQUENCY meters located on MDC-18. Each phase voltage and ØA frequency is telemetered to MSFN stations.

2.6.4 PERFORMANCE AND DESIGN DATA.

2.6.4.1 AC and DC Data.

AC and DC performance and design data for the EPS is as follows:

AC

Phases	3
Displacement	120± 2 degrees
Steady-state voltage	115±2 vac (average of 3 phases)
Transient voltage	115 (+35, -65) vac
Recovery	To 115±10v within 15 ms, steady state within 50 ms
Unbalance	2 vac (worst phase from average)
Frequency limits	
Normal (synchronized to central timing equipment)	400±2 cps
Emergency (loss of central timing equipment)	400±7 cps
Wave characteristics (sine wave)	
Maximum distortion	5 percent
Highest harmonic	4 percent
Crest factor	1.414±10 percent
Rating	1250 va

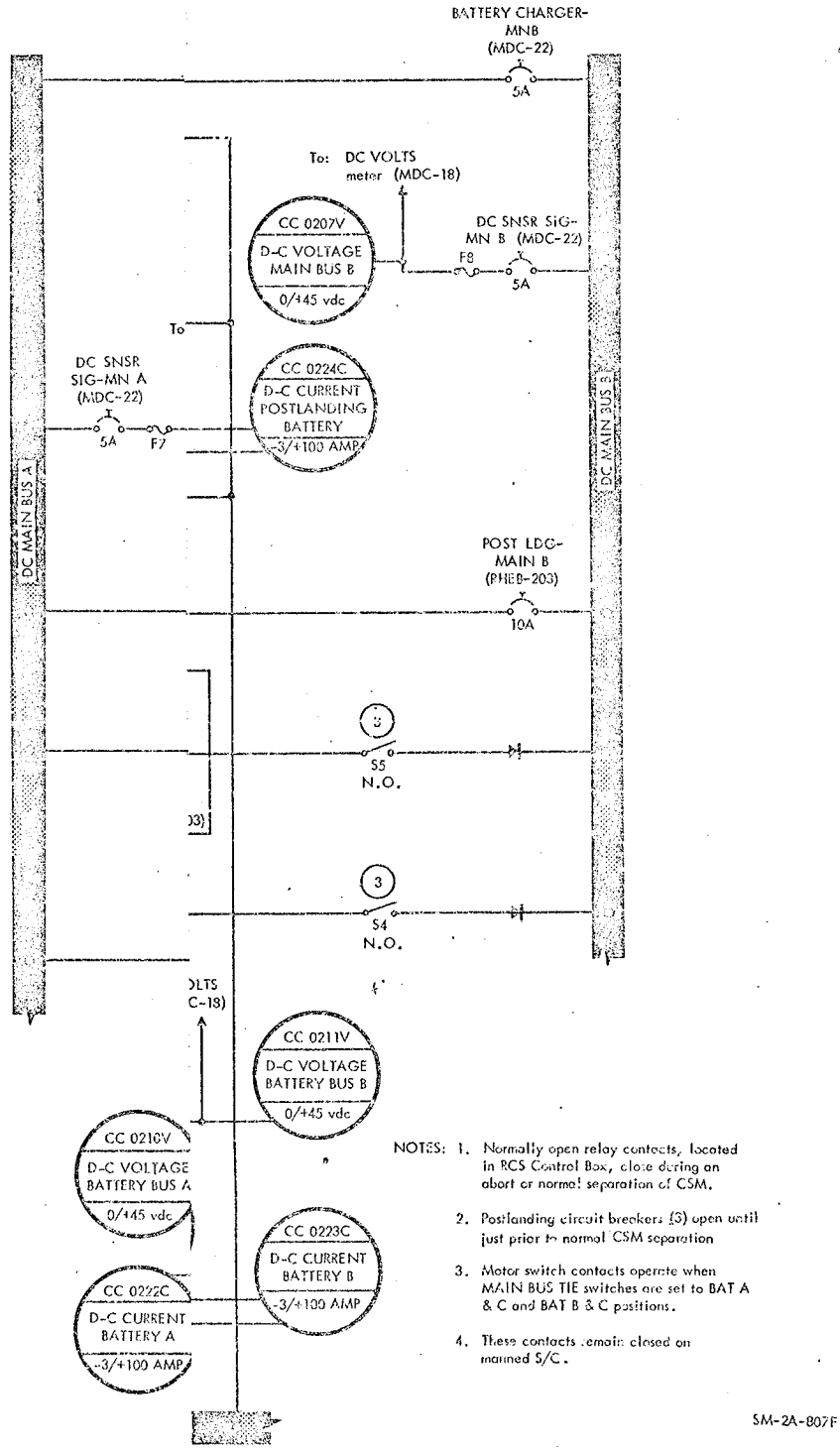

'ger and CM D-C Bus Control Circuits

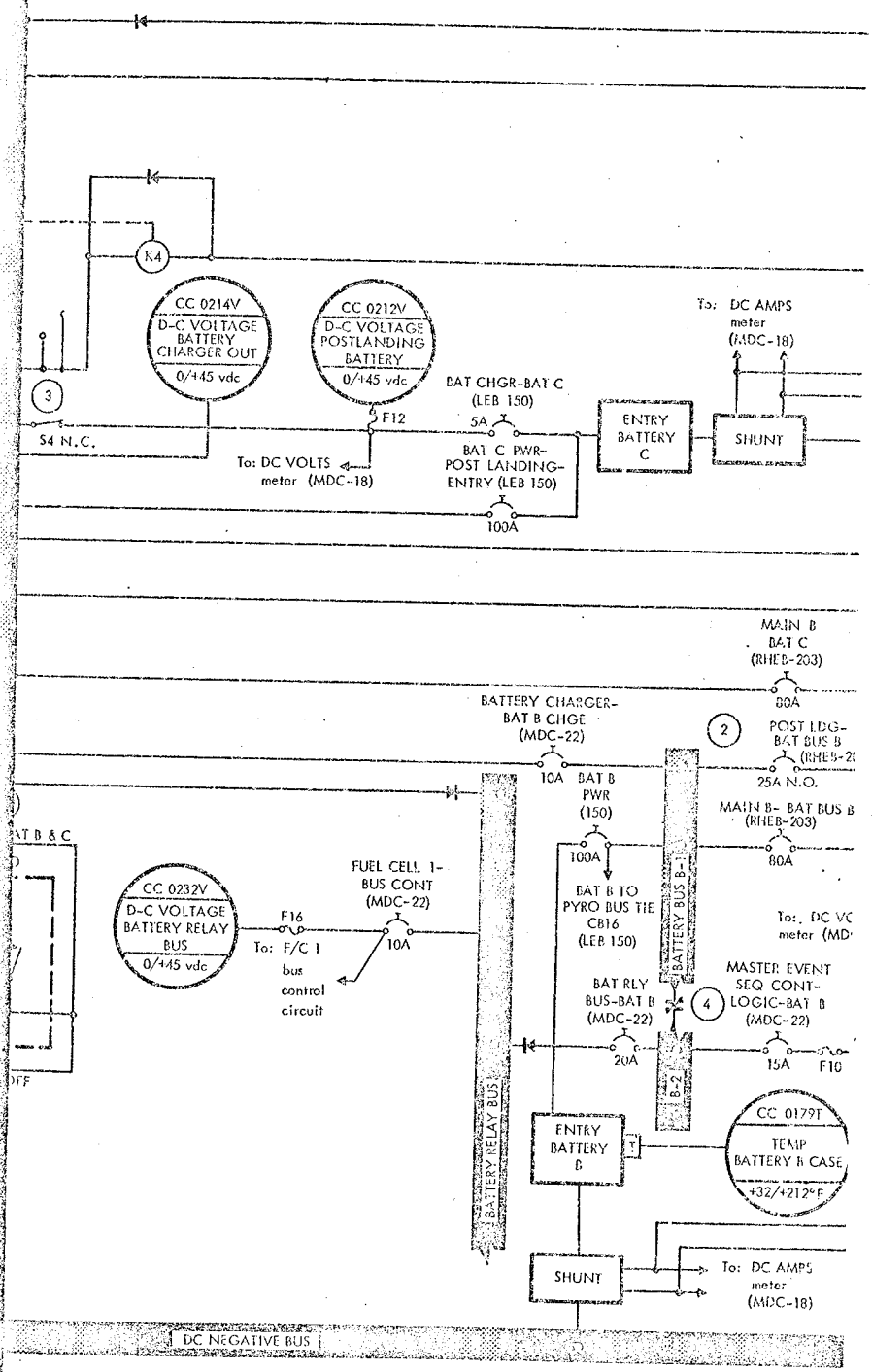

Figure 2.6-11: Battery Char

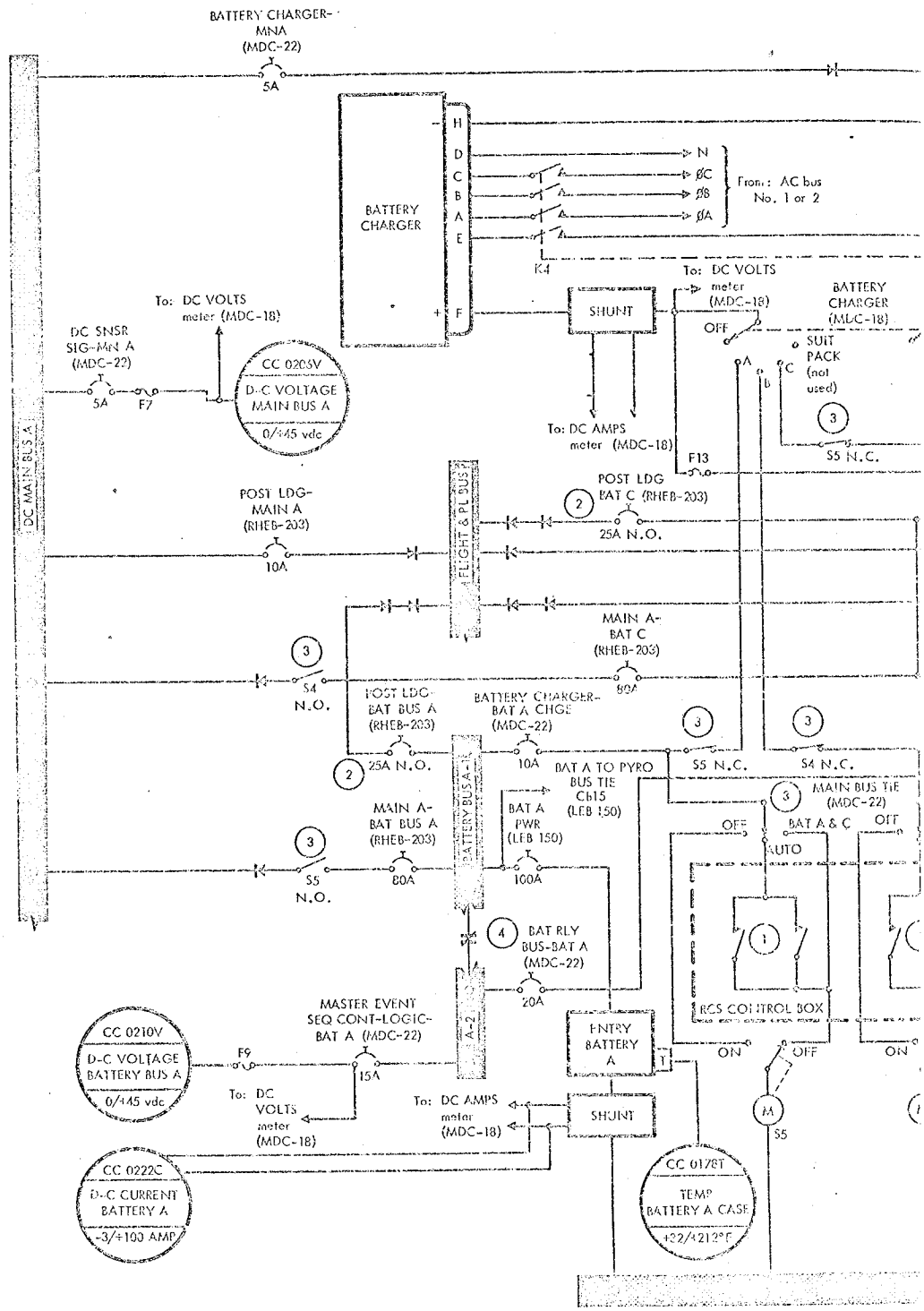
BATTERY CHARGER-MNA (MDC-22)
5A
DC MAIN BUS A
BATTERY CHARGER
H
D
C
B
A
E
F
N
ØC
ØB
ØA
From: AC bus No. 1 or 2
K4
To: DC VOLTS meter (MDC-18)
SHUNT
BATTERY CHARGER (MDC-18)
OFF
SUIT PACK (not used)
To: DC VOLTS meter (MDC-18)
DC SNSR SIG-MN A (MDC-22)
5A
F7
CC 0205V
D-C VOLTAGE MAIN BUS A
0/145 vdc
To: DC AMPS meter (MDC-18)
F13
S5 N.C.
POST LDG-MAIN A (RHEB-203)
10A
FLIGHT & PL BUS
POST LDG BAT C (RHEB-203)
25A N.O.
MAIN A-BAT C (RHEB-203)
80A
S4 N.O.
POST LDG-BAT BUS A (RHEB-203)
25A N.O.
BATTERY CHARGER-BAT A CHGE (MDC-22)
10A
BAT A TO PYRO BUS TIE Cb15 (LEB 150)
S5 N.C.
S4 N.C.
MAIN BUS TIE (MDC-22)
BAT A & C
OFF
AUTO
OFF
MAIN A-BAT BUS A (RHEB-203)
80A
S5 N.O.
BATTERY BUS A-1
BAT A PWR (LEB 150)
100A
BAT RLY BUS-BAT A (MDC-22)
20A
RCS CONTROL BOX
ON
OFF
ON
MASTER EVENT SEQ CONT-LOGIC-BAT A (MDC-22)
15A
A-2
ENTRY BATTERY A
CC 0210V
D-C VOLTAGE BATTERY BUS A
0/145 vdc
F9
To: DC VOLTS meter (MDC-18)
To: DC AMPS meter (MDC-18)
SHUNT
S5
CC 0222C
D-C CURRENT BATTERY A
-3/+100 AMP
CC 0178T
TEMP BATTERY A CASE
+32/+212°F

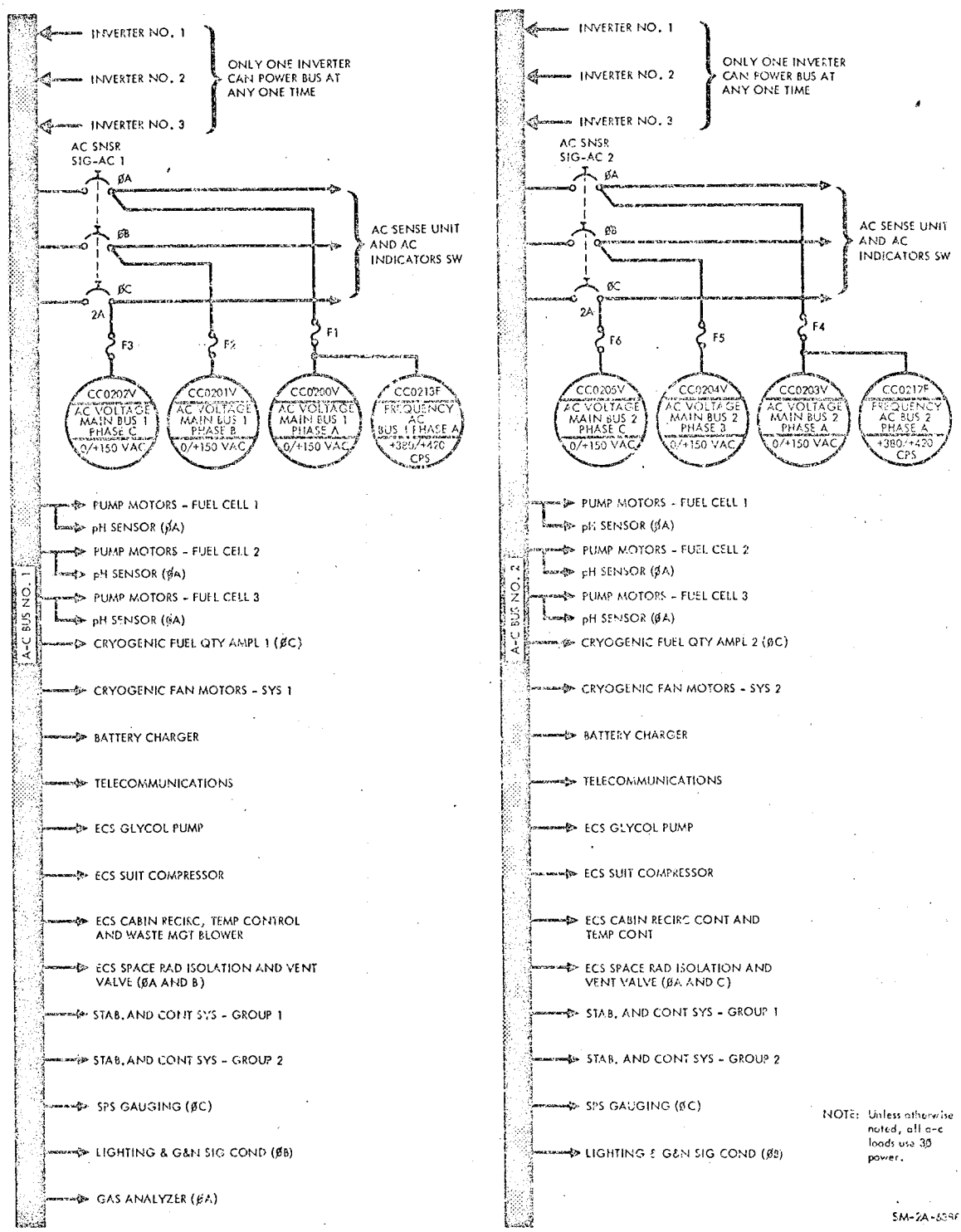

Figure 2.6-12. A-C Power Distribution

DC

Steady-state voltage limits Normal	29±2.0 vdc
During postlanding and preflight checkout periods	27 to 30 vdc
Ripple voltage	1v p-p

2.6.4.2 Power Requirements.

Power requirements for the EPS are as follows:

Unit	Control	Unit Quantity	Unit Input Power (Watts)		Total Input Power (Watts)	
			AC	DC	AC	DC
FUEL CELLS						
Hydrogen pump	FUEL CELL PUMP-1, -2, and -3 sw (MDC-22)	3	100.0		300.0	
Glycol pump	FUEL CELL PUMP-1, -2, and -3 sw (MDC-22)	3	20.0		60.0	
pH indicator	FUEL CELL PUMP-1, -2, and -3 sw (MDC-22) and FUEL CELL INDICATORS sw (MDC-18)	3	2.0		6.0	
Power factor correction for above items		3	2.5		7.5	
Total including pf correction					373.5	
Pressure transducers	FUEL CELL INDICATORS sw (MDC-18)	9		2.0		18.0
H_2 flowmeter circuits	FUEL CELL INDICATORS sw (MDC-18)	3		1.0		3.0

SYSTEMS DATA

Unit	Control	Unit Quantity	Unit Input Power (Watts)		Total Input Power (Watts)	
			AC	DC	AC	DC
O_2 flowmeter circuits	FUEL CELL INDICATORS sw (MDC-18)	3		1.0		3.0
H_2 purge line heater	H_2 PURGE LINE HEATER (MDC-15)	2		2.0		4.0
Purge solenoid	FUEL CELL-1, -2, -3, and H_2 PURGE/O_2 PURGE sw (MDC-18)	6		17.5		105.0
Fuel cell inline heater	None (Automatic on at +385±5°F) (Automatic off at +390±5°F)	3		160.0		480.0
CRYOGENICS						
H_2 tank heater	H_2 HEATERS-1 and -2 sw (MDC-13)	2		20.0		40.0
O_2 tank heater	O_2 HEATERS-1 and -2 sw (MDC-13)	2		155.0		310.0
H_2 tank fan	H_2 FANS-1 and -2 sw (MDC-13)	4	5.0		20.0	
O_2 tank fan	O_2 FANS -1 and -2 sw (MDC-13)	4	14.5		58.0	
Pressure transducer	ESSENTIAL-3 (153) C/B	4		1.5		6.0
Signal conditioner	CRYOGENIC SYSTEM-QTY AMPL-1 and -2-ØC C/B (MDC-22)	4	4.0		16.0	
BATTERY CHARGER	BATTERY CHARGER selector sw (MDC-18)	1			55.0 max	84.0 max

SYSTEMS DATA

Unit	Control	Unit Quantity	Unit Input Power (Watts)		Total Input Power (Watts)	
			AC	DC	AC	DC
SENSING UNITS						
D-C under-voltage sensing unit (2 circuits)	MAIN BUS A and B-RESET/OFF sw (MDC-18)	1				0.5
A-C under and overvoltage and overload sensing unit (2 circuits)	AC BUS 1 and 2-RESET/OFF sw (MDC-18)	1				1.0
PHASE SYNCHRONIZER UNIT	INV PHASE LOCK (panel 208)	1	7.5		7.5	
INVERTERS (See note)	AC INVERTER-1, -2, and -3 sw (MDC-18)					

NOTE With a 28-volt d-c input, each inverter will operate at air efficiency of 76 percent minimum with a 1250 volt-ampere load, 0.9 power factor, and 74 percent minimum with a 625 volt-ampere load, 0.9 power factor.

2.6.5 OPERATIONAL LIMITATIONS AND RESTRICTIONS.

2.6.5.1 Fuel Cell Power Plants.

Fuel cell power plants are designed to function under atmospheric and high vacuum conditions. Each must be able to maintain itself at sustaining temperatures and minimum electrical loads at both environment extremes. To function properly, fuel cells must operate under the following limitations and restrictions:

- External nonoperating temperature -20° to +140°F
- Operating temperature inside S/M +30° to +130°F
- External nonoperating pressure Atmospheric
- Normal voltage 27 to 31 vdc

• Minimum operating voltage Emergency operation	20.5 vdc at 2295 watts (gross power level)
Normal operation	27 vdc
• Maximum operating voltage	31 vdc
• Fuel cell disconnect (overload and reverse current relay)	75 amperes for over 15 minutes, 112 amperes for 25 to 300 seconds
Maximum reverse current	1 second minimum
• Minimum sustaining power/fuel cell power plant (with in-line heater off)	563 watts
In-line heater	160 watts
• H_2 purge line heater	4 watts
• Maximum gross power under emergency conditions	2295 watts
• Nitrogen pressure	52 to 70 psia
• Reactant pressure Oxygen Hydrogen	 62 to 75 psia 60.5 to 75 psia

• Reactant consumption/fuel cell power plant

Power Level	563W	2295W
Hydrogen	0.0476	0.262 lb/hr
Oxygen	0.378	2.08 lb/hr

• Electrolyte water concentration	24.3 to 28.2 percent
• Minimum stack temperature for self-sustaining operation	+385°F
• Approximate external environment temperature range outside S/C (for radiation)	-260° to +400°F
• Fuel cell power plant operating skin temperature	+385° to +500°F
• Condenser exhaust operating temperature	+155° to +175°F

• Purging frequency	Nominally every 24 hrs. (dependent on reactant purity after tank fill)
O_2 switch ON time	2 minutes
H_2 switch ON time	80 seconds
• Additional flow rate while purging	
O_2	Up to 0.6 lb/hr
H_2	Up to 0.75 lb/hr

2.6.5.2 Cryogenic Storage Subsystem.

The cryogenic storage subsystem must be able to meet the following requirements for proper operation of the fuel cell power plants and the ECS:

• Minimum usable quantity	
Oxygen	320 lb each tank
Hydrogen	28 lb each tank
• Temperature at time of fill	
Oxygen	-297°F (approx)
Hydrogen	-423°F (approx)
• Operating pressure range	
Oxygen	865 to 935 psia
Hydrogen	225 to 260 psia
• Temperature probe range	
Oxygen	-325° to +80°F
Hydrogen	-425° to -200°F
• Maximum allowable difference in quantity balance between tanks	
Oxygen tanks No. 1 and 2	15 lb
Hydrogen tanks No. 1 and 2	1 lb
• Pressure relief valve operation	
Crack pressure	
Oxygen	998 psia
Hydrogen	288 psia
Reseat pressure	
Oxygen	980 psia
Hydrogen	283 psia
Full flow, maximum relief	
Oxygen	1025 psia
Hydrogen	300 psia

2.6.6 TELEMETRY MEASUREMENTS.

The following is a complete list of all EPS telemetry data that is monitored by flight controllers and ground support personnel. The last column contains the name and type of S/C crew display. The display utilizes the same pickoff or signal source as telemetry, unless a separate measurement number is included in the display column.

An asterisk (*) by the measurement number denotes information which is not available for recording or telemetry transmission during PCM low bit rate operation.

Measurement Number	Description	Sensor Range	Normal Operating Range	Crew Display
CC 0175 T	Temp static inverter 1	+32/+248°F	+40° to +140°F	INV 1 TEMP HI C&W light
CC 0176 T	Temp static inverter 2	+32/+248°F	+40° to +140°F	INV 2 TEMP HI C&W light
CC 0177 T	Temp static inverter 3	+32/+248°F	+40° to +140°F	INV 3 TEMP HI C&W light
*CC 0178 T	Temp battery A case	+32/+212°F	+50° to 110°F (200°F entry)	None
*CC 0179 T	Temp battery B case	+32/+212°F	+50° to 110°F (200°F entry)	None
*CC 0188 P	Press bat compartment (Manif)	Zero/+18 psia	Zero	Auxiliary DC VOLTS meter
CC 0200 V	AC voltage main bus 1 phase A	Zero/+150 vac	113 to 117 vac	AC VOLTS meter
*CC 0201 V	AC voltage main bus 1 phase B	Zero/+150 vac	113 to 117 vac	AC VOLTS meter
*CC 0202 V	AC voltage main bus 1 phase C	Zero/+150 vac	113 to 117 vac	AC VOLTS meter
CC 0203 V	AC voltage main bus 2 phase A	Zero/+150 vac	113 to 117 vac	AC VOLTS meter
*CC 0204 V	AC voltage main bus 2 phase B	Zero/+150 vac	113 to 117 vac	AC VOLTS meter
*CC 0205 V	AC voltage main bus 2 phase C	Zero/+150 vac	113 to 117 vac	AC VOLTS meter
CC 0206 V	DC voltage main bus A	Zero/+45 vdc	27 to 31 vdc	DC VOLTS meter
CC 0207 V	DC voltage main bus B	Zero/+45 vdc	27 to 31 vdc	DC VOLTS meter
*CC 0210 V	DC voltage battery bus A	Zero/+45 vdc	35 to 37 vdc open circuit	DC VOLTS meter
*CC 0211 V	DC voltage battery bus B	Zero/+45 vdc	27 to 29 vdc on load	DC VOLTS meter

SYSTEMS DATA

Measurement Number	Description	Sensor Range	Normal Operating Range	Crew Display
*CC 0212 V	DC voltage post landing battery	Zero/+45 vdc	35 to 37.2 vdc open circuit 27 to 29 vdc on load	DC VOLTS meter
*CC 0213 F	Frequency ac bus 1 phase A	+380/+420 cps	393 to 407 cps	FREQUENCY meter
*CC 0214 V	DC voltage bat charger out	Zero/+45 vdc	37 to 39 vdc	DC VOLTS meter
*CC 0217 F	Frequency ac bus 2 phase A	+380/+420 cps	393 to 407 cps	FREQUENCY meter
*CC 0222 C	DC current battery A	-3/+100 amp	-3 to 30 amps	DC AMPS meter
*CC 0223 C	DC current battery B	-3/+100 amp	-3 to 30 amps	DC AMPS meter
*CC 0224 C	DC current post landing battery	-3/+100 amp	-3 to 30 amps	DC AMPS meter
CC 0232 V	DC voltage battery relay bus	Zero/+45 vdc	25 to 36.5 vdc	None
*SC 2060 P	N_2 pressure F/C 1 regulated	Zero/+75 psia	50 to 54 psia	F/C 1 C&W light, REG OUT PRESS HI-N_2 event indicator, and auxiliary DC VOLTS meter.
*SC 2061 P	N_2 pressure F/C 2 regulated	Zero/+75 psia	50 to 54 psia	F/C 2 C&W light, REG OUT PRESS HI-N_2 event indicator, and auxiliary DC VOLTS meter
*SC 2062 P	N_2 pressure F/C 3 regulated	Zero/+75 psia	50 to 54 psia	F/C 3 C&W light, REG OUT PRESS HI-N_2 event indicator, and auxiliary DC VOLTS meter
*SC 2066 P	O_2 pressure F/C 1 regulated	Zero/+75 psia	59 to 65 psia	F/C 1 C&W light, REG OUT PRESS HI-O_2 event indicator, and auxiliary DC VOLTS meter
*SC 2067 P	O_2 pressure F/C 2 regulated	Zero/+75 psia	59 to 65 psia	F/C 2 C&W light, REG OUT PRESS HI-O_2 event indicator, and auxiliary DC VOLTS meter

SYSTEMS DATA

Measurement Number	Description	Sensor Range	Normal Operating Range	Crew Display
*SC 2068 P	O_2 pressure F/C 3 regulated	Zero/+75 psia	59 to 65 psia	F/C 3 C&W light, REG OUT PRESS HI-O_2 event indicator, and auxiliary DC VOLTS meter
*SC 2069 P	H_2 pressure F/C 1 regulated	Zero/+75 psia	57.5 to 63.5 psia	F/C 1 C&W light, REG OUT PRESS HI-H_2 event indicator, and auxiliary DC VOLTS meter
*SC 2070 P	H_2 pressure F/C 2 regulated	Zero/+75 psia	57.5 to 63.5 psia	F/C 2 C&W light, REG OUT PRESS HI-H_2 event indicator, and auxiliary DC VOLTS meter
*SC 2071 P	H_2 pressure F/C 3 regulated	Zero/+75 psia	57.5 to 63.5 psia	F/C 3 C&W light, REG OUT PRESS HI-H_2 event indicator, and auxiliary DC VOLTS meter
SC 2081 T	Temp F/C 1 cond exhaust	+150/+250°F	+157° to +172°F	F/C 1 C&W light, and MODULE TEMP COND-EXH indicator
SC 2082 T	Temp F/C 2 cond exhaust	+150/+250°F	+157° to +172°F	F/C 2 C&W light, and MODULE TEMP COND-EXH indicator
SC 2083 T	Temp F/C 3 cond exhaust	+150/+250°F	+157° to +172°F	F/C 3 C&W light, and MODULE TEMP COND-EXH indicator
SC 2084 T	Temp F/C 1 skin	+80/+550°F	+385° to +460°F	F/C 1 C&W light and MODULE TEMP-SKIN indicator
SC 2085 T	Temp F/C 2 skin	+80/+550°F	+385° to +460°F	F/C 2 C&W light and MODULE TEMP-SKIN indicator

SYSTEMS DATA

Measurement Number	Description	Sensor Range	Normal Operating Range	Crew Display
SC 2086 T	Temp F/C 3 skin	+80/+550°F	+385° to +460°F	F/C 3 C&W light and MODULE TEMP-SKIN indicator
SC 2087 T	Temp F/C 1 radiator outlet	-50/+300°F	-30° to +300°F	F/C 1 C&W light, F/C RAD TEMP LOW event indicator and auxiliary DC VOLTS meter
SC 2088 T	Temp F/C 2 radiator outlet	-50/+300°F	-30° to +300°F	F/C 2 C&W light, F/C RAD TEMP LOW event indicator and auxiliary DC VOLTS meter
SC 2089 T	Temp F/C 3 radiator outlet	-50/+300°F	-30° to +300°F	F/C 3 C&W light, F/C RAD TEMP LOW event indicator and auxiliary DC VOLTS meter
SC 2113 C	DC current F/C 1 output	Zero/+100 amps	18 to 22 amps	DC AMPS meter
SC 2114 C	DC current F/C 2 output	Zero/+100 amps	18 to 22 amps	DC AMPS meter
SC 2115 C	DC current F/C 3 output	Zero/+100 amps	18 to 22 amps	DC AMPS meter
SC 2120 X	Fuel cell 1 bus A disconnect	Off/on event	Connected	F/C BUS DISCONNECT C&W light and FUEL CELL-1-MAIN BUS A switch event indicator
SC 2121 X	Fuel cell 2 bus A disconnect	Off/on event	Connected	F/C BUS DISCONNECT C&W light and FUEL CELL-2-MAIN BUS A switch event indicator
SC 2122 X	Fuel cell 3 bus A disconnect	Off/on event	Disconnected	F/C BUS DISCONNECT C&W light and FUEL CELL-3-MAIN BUS A switch event indicator

SYSTEMS DATA

Measurement Number	Description	Sensor Range	Normal Operating Range	Crew Display
SC 2125 X	Fuel cell 1 bus B disconnect	Off/on event	Disconnected	F/C BUS DISCONNECT C&W light and FUEL CELL-1-MAIN BUS B switch event indicator
SC 2126 X	Fuel cell 2 bus B disconnect	Off/on event	Connected	F/C BUS DISCONNECT C&W light and FUEL CELL-2-MAIN BUS B switch event indicator
SC 2127 X	Fuel cell 3 bus B disconnect	Off/on event	Connected	F/C BUS DISCONNECT C&W light and FUEL CELL-3-MAIN BUS B switch event indicator
*SC 2139 R	Flow rate H_2 F/C 1	Zero/+0.2 lb/hr	0.046 to 0.056 lbs/hr	F/C 1 C&W light and FLOW-H_2 indicator
*SC 2140 R	Flow rate H_2 F/C 2	Zero/+0.2 lb/hr	0.046 to 0.056 lbs/hr	F/C 2 C&W light and FLOW-H_2 indicator
*SC 2141 R	Flow rate H_2 F/C 3	Zero/+0.2 lb/hr	0.046 to 0.056 lbs/hr	F/C 3 C&W light and FLOW-H_2 indicator
*SC 2142 R	Flow rate O_2 F/C 1	Zero/+1.6 lb/hr	0.370 to 0.450 lbs/hr	F/C 1 C&W light and FLOW-O_2 indicator
*SC 2143 R	Flow rate O_2 F/C 2	Zero/+1.6 lb/hr	0.370 to 0.450 lbs/hr	F/C 2 C&W light and FLOW-O_2 indicator
*SC 2144 R	Flow rate O_2 F/C 3	Zero/+1.6 lb/hr	0.370 to 0.450 lbs/hr	F/C 3 C&W light and FLOW-O_2 indicator
*SC 2160 X	pH factor water condition F/C 1	Normal/high event	Normal	F/C 1 C&W light and pH HI event indicator
*SC 2161 X	pH factor water condition F/C 2	Normal/high event	Normal	F/C 2 C&W light and pH HI event indicator
*SC 2162 X	pH factor water condition F/C 3	Normal/high event	Normal	F/C 3 C&W light and pH HI event indicator

SYSTEMS DATA

Measurement Number	Description	Sensor Range	Normal Operating Range	Crew Display
SC 2323 X	Fuel cell 1 shut off mon	Close/open event	Open	FUEL CELL REACTANTS event indicator
SC 2324 X	Fuel cell 2 shut off mon	Close/open event	Open	FUEL CELL REACTANTS event indicator
SC 2325 X	Fuel cell 3 shut off mon	Close/open event	Open	FUEL CELL REACTANTS event indicator
SF 0030 Q	Quantity H_2 tank 1	Zero/+28 lb	+28 lbs to zero	TANK QUANTITY-H_2-1 indicator
SF 0031 Q	Quantity H_2 tank 2	Zero/+28 lb	+28 lbs to zero	TANK QUANTITY-H_2-2 indicator
SF 0032 Q	Quantity O_2 tank 1	Zero/+320 lb	+320 lbs to zero	TANK QUANTITY-O_2-1 indicator
SF 0033 Q	Quantity O_2 tank 2	Zero/+320 lb	+320 lbs to zero	TANK QUANTITY-O_2-2 indicator
SF 0037 P	Press O_2 tank 1	+50/+1050 psia	865 to 935 psia	O_2 PRESS C&W light and TANK PRESSURE-O_2-1 indicator
SF 0038 P	Press O_2 tank 2	+50/+1050 psia	865 to 935 psia	O_2 PRESS C&W light and TANK PRESSURE-O_2-2 indicator
SF 0039 P	Press H_2 tank 1	Zero/+350 psia	225 to 260 psia	H_2 PRESS C&W light and TANK PRESSURE-H_2-1 indicator
SF 0040 P	Press H_2 tank 2	Zero/+350 psia	225 to 260 psia	H_2 PRESS C&W light and TANK PRESSURE-H_2-2 indicator
SF 0041 T	Temp O_2 tank 1	-325/+80°F	-284° to -140°F	None
SF 0042 T	Temp O_2 tank 2	-325/+80°F	-284° to -140°F	None
SF 0043 T	Temp H_2 tank 1	-425/-200°F	-417° to -340°F	None
SF 0044 T	Temp H_2 tank 2	-425/-200°F	-417° to -340°F	None

The auxiliary DC VOLTS meter, FUNCTION SELECT and TEST SELECT switches, located on panel 200 in the C/M RHFEB, provide a means of monitoring various telemetered measurements within the S/C and verifying certain parameters displayed only by event indicators. The following list presents the measurements test can be monitored using the auxiliary DC VOLTS meter, their respective switch positions, and the range of each sensor. Normal operating parameters of measurable items are covered in the telemetry listing.

Auxiliary DC VOLTS Meter Indication (Telemetry Identity) and Code No.)	Switch Positions		Sensor Range
	Function Select	Test Select	
N_2 pressure, psia F/C 1 SC 2060 P F/C 2 SC 2061 P F/C 3 SC 2062 P	A	1 2 3	0 to 75 psia
O_2 pressure, psia F/C 1 SC 2066 P F/C 2 SC 2067 P F/C 3 SC 2068 P		4 5 6	0 to 75 psia
H_2 pressure, psia F/C 1 SC 2069 P F/C 2 SC 2070 P F/C 3 SC 2071 P		7 8 9	0 to 75 psia
EPS radiator outlet temp F/C 1 SC 2087 T F/C 2 SC 2088 T F/C 3 SC 2089 T		10 11 12	-50° to +300°F
C/M-RCS oxidizer valve temp -P engine, sys A CR 2205 T +Y engine, sys B CR 2203 T -P engine, sys B CR 2204 T CW engine, sys B CR 2206 T CCW engine, sys A CR 2201 T -Y engine, sys A CR 2202 T	B	1 2 3 4 11 12	-50° to +250°F
PIPA temp CG 2300 T		5	+125° to +135°F
IRIG temp CG 2301 T		6	+128.5° to +138.5°F

SYSTEMS DATA

Auxiliary DC VOLTS Meter Indication (Telemetry Identity) and Code No.)	Switch Positions		Sensor Range
	Function Select	Test Select	
IMU current Heater CG 2302 C Blower CG 2303 C		7 8	0 to 5 amps
Battery manifold Pressure, psia CC 0188 P		9	0 to 18 psia
ECS radiator inlet Temp SF 0665 T		10	+60° to +150°F

The conversion of the previously listed telemetry measurements to the auxiliary DC VOLTSmeter indication is presented as follows:

Auxiliary DC VOLTS Meter Display	N_2, O_2, H_2 Pressure (PSIA)	EPS Radiator Outlet Temp (°F)	C/M-RCS Oxidizer Valve Temp (°F)	PIPA Temp (°F)	IRIG Temp (°F)	IMU Heater and Blower Current (Amps)	Battery Manifold Pressure (PSIA)	ECS Radiator Inlet Temp (°F)
0.0	0	-50	-50	+125.0	+128.5	0.0	0.00	+60.0
0.2	3	-36	-38	+125.4	+128.9	0.2	0.72	+63.6
0.4	6	-22	-26	+125.8	+129.3	0.4	1.44	+67.2
0.6	9	-8	-14	+126.2	+129.7	0.6	2.16	+70.8
0.8	12	+6	-2	+126.6	+130.1	0.8	2.88	+74.4
1.0	15	+20	+10	+127.0	+130.5	1.0	3.60	+78.0
1.2	18	+34	+22	+127.4	+130.9	1.2	4.32	+81.6
1.4	21	+48	+34	+127.8	+131.3	1.4	5.04	+85.2
1.6	24	+62	+46	+128.2	+131.7	1.6	5.76	+88.8
1.8	27	+76	+58	+128.6	+132.1	1.8	6.48	+92.4
2.0	30	+90	+70	+129.0	+132.5	2.0	7.20	+96.0
2.2	33	+104	+82	+129.4	+132.9	2.2	7.92	+99.6
2.4	36	+118	+94	+129.8	+133.3	2.4	8.64	+103.2
2.6	39	+132	+106	+130.2	+133.7	2.6	9.36	+106.8
2.8	42	+146	+118	+130.6	+134.1	2.8	10.08	+110.4
3.0	45	+160	+130	+131.0	+134.5	3.0	10.80	+114.0
3.2	48	+174	+142	+131.4	+134.9	3.2	11.52	+117.6
3.4	51	+188	+154	+131.8	+135.3	3.4	12.24	+121.2
3.6	54	+202	+166	+132.2	+135.7	3.6	12.96	+124.8
3.8	57	+216	+178	+132.6	+136.1	3.8	13.68	+128.4
4.0	60	+230	+190	+133.0	+136.5	4.0	14.40	+132.0

SYSTEMS DATA

Auxiliary DC VOLTS Meter Display	N_2, O_2, H_2 Pressure (PSIA)	EPS Radiator Outlet Temp (°F)	C/M-RCS Oxidizer Valve Temp (°F)	PIPA Temp (°F)	IRIG Temp (°F)	IMU Heater and Blower Current (Amps)	Battery Manifold Pressure (PSIA)	ECS Radiator Inlet Temp (°F)
4.2	63	+244	+202	+133.4	+136.9	4.2	15.12	+135.6
4.4	66	+258	+214	+133.8	+137.3	4.4	15.84	+139.2
4.6	69	+272	+226	+134.2	+137.7	4.6	16.56	+142.8
4.8	72	+286	+238	+134.6	+138.1	4.8	17.28	+146.4
5.0	75	+300	+250	+135.0	+138.5	5.0	18.00	+150.0

SECTION 2

SUBSECTION 2.7

ENVIRONMENTAL CONTROL SYSTEM (ECS)

2.7.1 INTRODUCTION.

The environmental control system (ECS) is designed to provide a controlled environment for three crewmen within the Apollo C/M for missions up to 14 days. The system also supplies several of the metabolic requirements, as well as functioning in the removal of by-products resulting from the normal metabolic process. The controlled environment consists of a pressure suit circuit for use during normal or emergency conditions, and a shirtsleeve atmosphere within the C/M cabin, for use when normal conditions prevail. Oxygen and thermally controlled water are supplied for crew consumption; whereas, carbon dioxide and odors, water-production, and heat output are removed. In addition, the ECS disperses equipment heat loads and provides for venting the waste storage compartment. Controls and displays are located in several areas within the C/M cabin; these, in conjunction with automatically functioning components, and sensing and protective devices, aid the crew in the operation of the system. The five subsystems composing the ECS are the oxygen supply, pressure suit circuit, cabin pressure and temperature control, water-glycol coolant, and water supply.

The oxygen supply subsystem controls the inflow of oxygen for the entire Apollo mission. This function is accomplished by pressure regulator, demand regulators, storage tanks, check valves, and manual shutoff valves. The pressure suit subsystem automatically controls the flow, pressure, temperature, and composition of the pressure suit gas. In conjunction with the C/M pressure and temperature control subsystem, it also controls the environment conditions in the cabin when one, or all of the crew are out of their pressure suits. These functions are provided by water separators, temperature controls, a suit heat exchanger, a debris trap, gas compressor, CO_2-odor absorbers, and a water glycol-to-gas heat exchanger.

The cabin pressure and temperature control subsystem automatically maintains the pressure and temperature of the cabin within specified limits. This function is accomplished in conjunction with the pressure suit subsystem by means of regulated oxygen inflow, recirculation blowers, a heat exchanger, a temperature control and sensors, vent valves, and other valves and controls required. The water-glycol subsystem is an intermediate heat transfer loop which permits excess heat to be transferred from the C/M interior to the space radiators where it is rejected to the cosmic sink. This function is accomplished by pumps, heat exchangers,

cold plate networks, valves, and controls. The water supply subsystem collects, stores, and provides water for supplemental heat transfer operation, and collects and stores potable water for consumption by the crew. These functions are accomplished by utilizing water tanks, pressure controls, cyclic accumulators, and valves.

Other than the circuitry required for controls and displays or electrical power, three points of interface exist between the ECS and other S/C systems. All oxygen supplied to the ECS flows from the cryogenic storage tanks, which are considered a part of the EPS. The fuel cells, also a part of the EPS, furnish the onboard supply of potable water that is stored by the ECS. The third interface point is with the waste management system, which connects into the ECS overboard dump line.

2.7.2 FUNCTIONAL DESCRIPTION.

The ECS requires a minimum amount of crew time be spent for normal system operation. In addition to periodically monitoring system indicators, the crew is responsible for the accomplishment of several normal tasks on an infrequent basis. For conditions other than normal, the duties of the crew will increase. Electrical and manual override and backup capabilities exist throughout the ECS to maintain the required reliability level of the system.

The oxygen supplied to the ECS from the storage tanks in the S/M is used to carry out a variety of system functions. Upon reaching the ECS, oxygen is automatically regulated and manually routed to various subsystem components by a system of valves and lines. Also incorporated are automatically functioning components to maintain suit and/or cabin pressure in the event of cabin decompression of equipment malfunction.

The atmosphere of the pressurized cabin, as well as that of the pressure garment assemblies (PGA), is routed through the suit circuit for contaminant removal and humidity control. The flow, pressure, and temperature control within the suit circuit, are maintained by other components of the subsystem. This is accomplished automatically by using transducers, sensors, and control units to regulate these functions. Mechanical-type oxygen pressure regulators automatically maintain cabin pressure within prescribed limits. The temperature of the cabin is controlled by an automatic unit that regulates the output of the cabin heat exchanger with the aid of sensors and anticipators.

Carbon dioxide and odors are removed from the suit circuit and cabin gases by routing the gas flow through two filters in the CO_2-odor absorber canisters. Each filter contains sufficient lithium hydroxide (CO_2 removal) and activated charcoal (odor removal) for a 12-hour duty period for a crew of three. The suit circuit and cabin atmospheres are also sampled by a gas chromatograph that will identify up to 28 gas components that may be present.

Heat, generated by the crew and the many items of electrical equipment located in the cabin, is absorbed by recirculating water-glycol. The heat is transferred to the water-glycol as it flows through the suit heat exchanger, the cabin heat exchanger, and the cold plate network for the electrical equipment. The warm water-glycol is then routed through space radiators in the S/M, where the heat is radiated to space. Supplementing the radiators and/or as a backup mode, water evaporators are employed for any additional temperature control of suit gases or insufficiently cooled water-glycol.

Potable and waste water are generated on-board the S/C. The potable water is a by-product of the EPS fuel cells and flows to the ECS where it is stored. Cold potable water is available to the crew for drinking, and hot or cold potable water is available for food reconstitution. Waste water is derived from the moisture that condenses in the water separator of the suit exchanger. It is collected and stored by the ECS and used for evaporative cooling in the suit heat exchanger evaporator and the water-glycol evaporator.

2.7.3 MAJOR COMPONENT/SUBSYSTEM DESCRIPTION.

Pertinent design data in regard to components, their function within each subsystem, and how they interface is contained under major component/subsystem description. The description follows the logical flow, component by component, through each subsystem of the ECS.

2.7.3.1 Oxygen Supply Subsystem.

Two cryogenic oxygen storage tanks (part of the electrical power system) supply 900±35 psia oxygen flow to the ECS. Each tank contains 320 pounds of oxygen, and of the total supply, approximately one-third is consumed by the ECS. Oxygen flows unrestricted in parallel lines from the S/M supply tanks into the C/M. In the C/M, oxygen flows in each supply line through a filter, a capillary restrictor, and a check valve upstream to their connection to a common distribution line. To assure uniform flow, the capillary restrictors are coiled around a warm water-glycol line to increase the oxygen temperature. Each restrictor allows a maximum flow of 4.5 pounds per hour into the ECS to limit the demands placed on the cryogenic oxygen storage tanks and enable the tank heaters to maintain the prescribed tank pressures. The minimum flow rate will not decrease below 3.4 pounds per hour as the oxygen density decreases due to usage. Illustrated in the ECS integrated schematic (figure 2.7-13) the manual S/M supply shutoff valve, located on the LHEB panel 307, is normally in the ON position and placed to OFF prior to SCM separation for the entry phase of the mission. Downstream of the S/M shutoff valve 900±35 psia oxygen is distributed to a surge tank, an entry O_2 tank, a PLSS fill valve, and the main pressure regulator assembly. Oxygen flows to the surge tank through a manual surge tank isolation valve, located on the LHEB panel 307. The surge tank provides a reservoir of O_2 for the entry mission modes, and during flow requirements above the 0.9 pound per hour maximum

allowable by the capillary restrictors. Approximately 3.7 pounds of oxygen is available at nominal inlet pressure of 900±35 psia. A surge tank pressure transducer output is displayed by the TANK PRESS O_2 1 indicator, located on MDC panel 13. The indicator input must be selected by the switch position, SURGE TANK, located below the indicator. To reduce the demand loads on the cryogenic storage system, high flow rates from the surge tank will maintain cabin pressure from 5 to 3.5 psia for 5 minutes, with a 0.5-inch-diameter puncture in the cabin. The flow rate into the cabin is a function of regulator valves downstream of the surge tank. The 5-minute period allows unsuited crewmembers to don PGAs. When isolated by the surge tank manual shutoff valve, the tank is protected by a pressure relief and manual shutoff valve assembly. The relief portion is set between 1020 and 1070 psig. Should the relief valve fail or not reseat properly, the manual shutoff valve will isolate the relief valve function from the system.

Downstream O_2 supply is also stored in a one-pound entry O_2 tank, through a manual three-way selector valve, a check valve, and a check valve bypass. When the manual selector valve is in the FILL position, the entry O_2 supply tank receives high pressure O_2 through the check valve bypass. When the tank is charged, the selector valve may be positioned to OFF to isolate the tank supply, or to ON whereby the O_2 tank supply may augment the surge tank function. The check valve prevents a reverse flow in case of entry O_2 tank damage. An isolation check valve between the two tanks prevents reverse flow and a manual valve permits charging PLSS oxygen tanks from the ECS.

The 900±35-psig oxygen supply, from the cryogenic tanks, is regulated to 100±10 psig by the main pressure regulator assembly illustrated in figure 2.7-1. The main pressure regulator assembly consists of a manual selector valve, two regulators, and two relief and check valves. NORMAL position of the manual selector valve parallels the regulators. Position No. 1 or No. 2 selects its regulator respectively. The OFF position isolates all O_2 supply for the crew and cabin. Should a regulator fail open, the relief valve for that regulator will limit the pressure to 140 psig downstream and vent a maximum flow of 0.75 pounds per minute into the cabin. This fault should be corrected by selecting the alternate regulator only.

An oxygen flow transducer, downstream of the main regulator, provides a signal to the flow indicator, located on the main display console panel 13, and the O_2 FLOW HI light. Although short periods of flow in excess of 0.45 pounds per hour are considered normal, a continuous flow rate between 0.45 and 1.0 pound per hour should not be tolerated. Flow rates above 1.0 pounds per hour and for a period of 15 seconds and above activate the red O_2 FLOW HI warning light located on the caution and warning (C&W) panel 11. The 15-second time delay prevents the O_2 FLOW HI light from lighting during O_2 flow requirements of the cyclic accumulators that remove water from the suit heat exchanger, and during transient conditions. Continued flow rates in this range are indicative of cabin leakage, O_2 supplied subsystem leakage, or subsystem mismanagement.

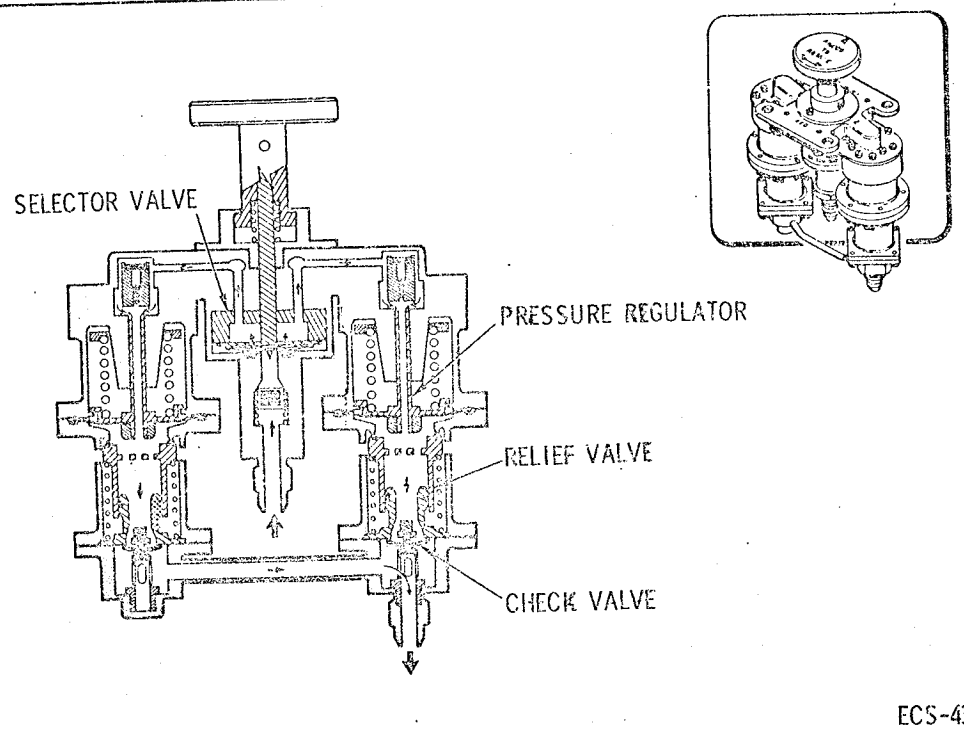

Figure 2.7-1. Main Oxygen Pressure Regulator

Connected to the 100±10-psig regulated pressure line is a fluid tank pressure regulator and relief valve assembly, located on the OXYGEN CONTROL PANEL No. 314. It consists of redundant pressure regulators and relief valves which provide oxygen at regulated pressure to the expulsion bladders installed in the potable water tank, waste water tank, and the water-glycol (W/G) reservoir. Two four-position selector valves are employed at the inlet and outlet, and enable isolation of malfunctioning elements or complete shutoff as desired. The pressure regulator is a normally opened, diaphragm-operated poppet metering valve which functions to reduce 100±10-psig supply pressure to 20±2-psig O_2 pressure to the fluid tanks, in relation to cabin pressure. The relief valve incorporated in the assembly outlet chamber functions to relieve O_2 pressure in excess of 25±2 psig into the cabin.

Should a regulator diaphragm rupture, and is isolated by the inlet manual selector valve, the manual outlet selector valve must also be positioned to isolate the relief portion of the failed regulator. This prevents a feedback from the alternate regulator flowing oxygen through the ruptured diaphragm of the failed regulator into the cabin.

Should the selector inlet valve of the assembly be placed to position 1, the selector outlet valve must also be placed to position 1 (or NORMAL). If instead, the selector outlet valve were placed to position 2, the valve port to pressurize the tanks would be closed, and the port to the relief

valve would remain open. This permits the pressure relief function of the valve to remain operative but prohibits subsequent tank pressurization. Conversely, when the selector outlet valve is set to position 2, the selector inlet valve must also be set to position 2 (or NORMAL). The OFF position of the inlet and outlet selector valves is normally for ground checkout; however, if both pressure regulators malfunction during flight, the selector inlet valve must be set to the OFF position. This eliminates the tank pressurization function, but does not affect the pressure relief function. In response to the possibility of both relief valves malfunctioning, the selector outlet valve must be set to the OFF position. This action will eliminate both the pressurization and pressure relief functions.

The 100±10-psig oxygen supply is controlled by the emergency cabin pressure regulator, located on panel 314, to provide increased oxygen flow to the cabin, and prevent rapid decompression. The emergency cabin pressure regulator consists of dual aneroid-operated, normally closed valves to prevent overpressurization of the aneroids, and a manual four-position selector valve with positions designated No. 1, No. 2, NORMAL, and OFF. A PRESS-TO-TEST button, which closes the cabin pressure sense port allows a fix bleed of 100 cc per min to pressurize an aneroid chamber and drive the valve open. Normally the 100±10-psig oxygen supply to the cabin is controlled by the cabin pressure regulator assembly. It consists of dual, aneroid-absolute type normally closed valves, and each will deliver a minimum of 0.2 pound per hour oxygen flow at a cabin pressure of 5.0±0.2 psia. Failure mode of the valve is normally closed. A manual control valve may be opened and allow a minimum 6 pounds per hour flow of O_2 directly into the cabin for repressurization from 0.0 to 5.0 psia within one hour. The cabin pressure regulator and the emergency cabin pressure regulator are associated with the cabin pressure and temperature control subsystem (paragraph 2.7.3.3). Oxygen distribution at 100±10 psig is routed to a manually operated metering valve, for direct flow into the suit inlet duct. In the full open position, oxygen will flow from 0.6 to 0.7 pound per minute.

Downstream the dual suit demand pressure regulator and relief valve, located on LHEB panel 310, compares suit compressor inlet pressure to cabin ambient pressure. When the compressor inlet pressure is 2.5 to 3.5 inches of water pressure below cabin pressure, the demand regulator controls O_2 flow into the suit circuit at flow rates up to 0.007 pound per minute. When the compressor inlet pressure is above 2 to 9 inches of water pressure above cabin pressure, the relief valve vents the suit circuit gases to the cabin at a maximum flow rate of 0.66 pound per minute. Normally the compressor inlet manifold is regulated to an average of 6.10 inches of water above cabin ambient pressure. When cabin ambient pressure is less than 4 psia, a 100 ccm bleed within the demand regulator is used to maintain the suit circuit pressure at 3.75±0.25 psia. With cabin ambient pressure below 3.5 psia and a 0.66 pound per minute suit leakage, the demand regulator should sustain suit circuit pressure at 3.75±0.25 psia. A four-position manual selector valve with control positions designated as No. 1, No. 2, both, and OFF provides isolation of a fault. The demand pressure regulator and relief valve are described in paragraph 2.7.3.3.

Oxygen regulated at 100±10-psig pressure is used as a motive force in the removal of waste water from the suit circuit and then expelled into the suit heat exchanger.

2.7.3.2 Pressure Suit Circuit Subsystem.

The pressure suit subsystem is a loop or circuit designed to supply a conditioned atmosphere for a crew of three, whether they be in or out of their PGAs. The circuit provides for ventilation and cooling for the crew, the removal of carbon dioxide and odors, and the control of relative humidity. Suit circuit pressure is maintained by controlling the amount of oxygen entering the subsystem.

A supply-return hose assembly is connected between each crewman's PGA and a suit hose connector assembly. This assembly consists of a combined supply-return connection. A three-position suit flow control valve, which diverts oxygen into the cabin when a crewmember is unsuited, and a check valve prevents return flow from the cabin. Normal operation is to disconnect the hose at the suit. There is also a venturi-type flow limiter, located upstream in each supply line, to limit flow to any one suit to a maximum of 0.7 pound per minute. During the time a crewmember is in the shirtsleeve mode, the flow control valve is positioned to permit suit circuit flow into the C/M cabin, through the suit hose, which is removed at the PGA connection. The return section of the suit hose is capped to prevent cabin gas flowing into the suit circuit when crewmen remove their suits.

Cabin gases are returned to the suit circuit for removal of carbon dioxide, odors, heat, and moisture. These gases enter at the suit circuit return air valve assembly, which consists of two check valves in series, and a manual shutoff valve for isolating the suit circuit if the cabin becomes contaminated. The combined cabin and suit circuit atmosphere first flows through the debris trap, where small particles of solid matter are removed. The trap contains a bypass valve in the event the filter screen becomes clogged.

Two suit compressors, connected in parallel, maintain circulation within the suit circuit. Normally only one compressor is operated at a time; however, both may be operated for a small advantage in sensible heat removal with a large increase in power consumption in all cases except prelaunch, or when the three crewmembers are unsuited in a 5-psia pressurized cabin. A differential pressure transducer between the inlet and outlet manifolds of the compressor supplies signals for indication on the main display console (panel 13). Compressor output is dependent on the mode of operation. In normal space operation, the operating compressor delivers approximately 35 cubic feet per minute of suit gas at a pressure rise of 10 inches of water within the condition of 4.93 psia and 88°F. When the cabin is unpressurized, the operating compressor delivers approximately 34.5 cubic feet per minute suit gas at a pressure rise of 6.9 inches of water when inlet conditions are 3.51 psia at 85°F.

The suit demand pressure regulator (figure 2.7-2) controls suit circuit pressure in normal and emergency modes. It supplies oxygen to the suits whenever the suit circuit is isolated from the cabin, and during depressurized operations. It also relieves excess gas to prevent overpressurizing the suits.

The regulator consists essentially of two redundant demand regulators, and a relief valve. A selector valve is provided for selecting either or both regulators. Normally both are in operation.

Each regulator section consists of an aneroid control, and a differential diaphragm housed in a reference chamber. The diaphragm is connected by a rod to the demand valve. The demand valve will be opened whenever a pressure differential is sensed across the diaphragm. In operation there is a constant bleed flow of oxygen from the supply into the reference chamber,

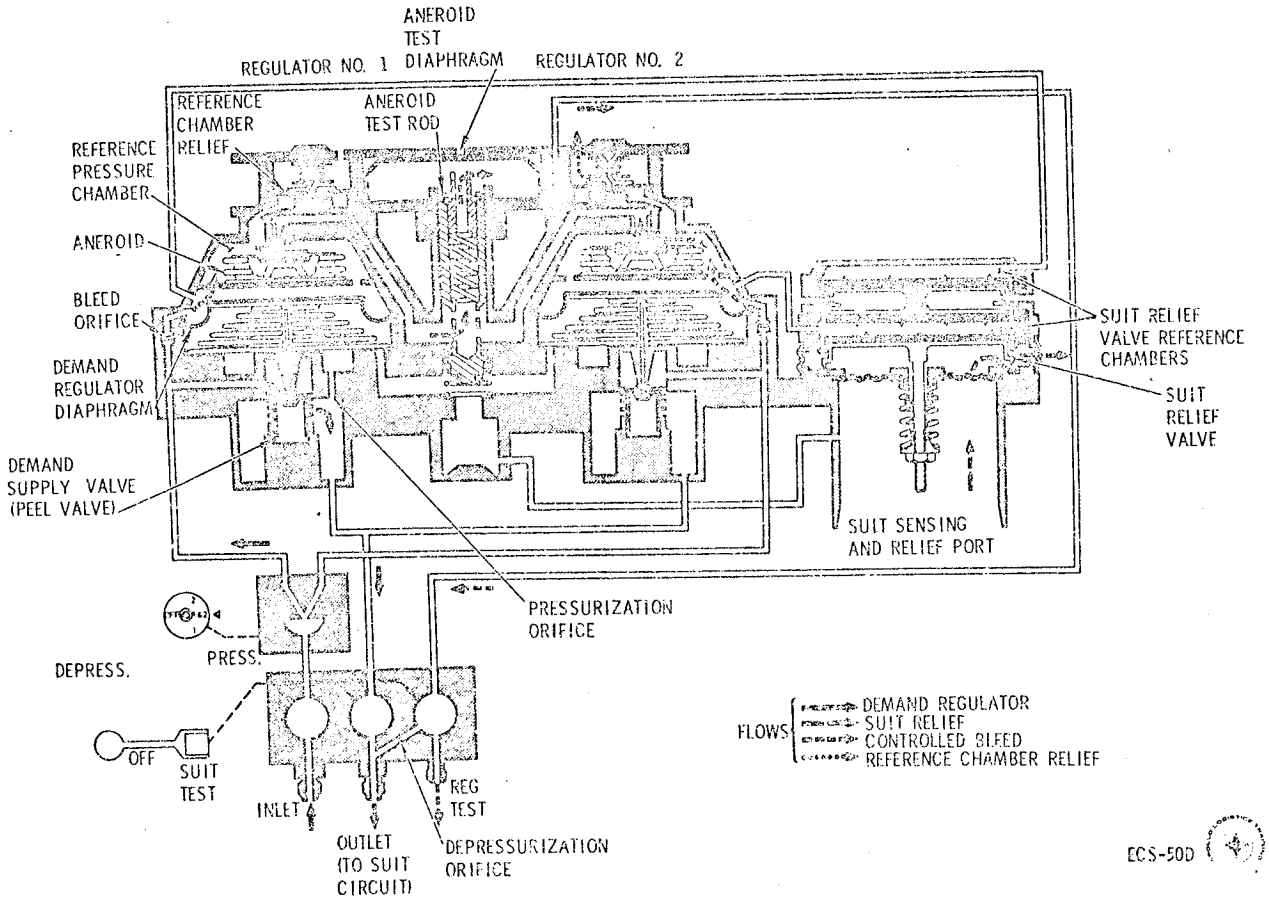

Figure 2.7-2. Oxygen Demand Pressure Regulator and Relief Valve

around the aneroid, and out through the control port into the cabin. As long as the cabin pressure is greater than 3.75 psia, the flow of oxygen through the control port is virtually unrestricted, so that the pressure within the reference chamber is essentially that of the cabin. This pressure acts on the upper side of the diaphragm, while suit pressure is applied to the underside. The diaphragm can be made to open the demand valve by either increasing the reference chamber pressure, or by decreasing the sensed suit pressure.

The increased pressure mode occurs during depressurized operations. As the cabin pressure decreases the aneroid expands. At 3.75 psia the aneroid will have expanded sufficiently to restrict the outflow of oxygen through the control port, thus increasing the reference chamber pressure.

Decreased suit pressure mode occurs whenever the suit circuit is isolated from the cabin, and cabin pressure is above 5 psia. In the process of respiration the crew will exhale carbon dioxide and water vapor. In circulating the suit gases through the CO_2-odor absorber and the suit heat exchanger, the CO_2 and water are removed. The removal reduces the pressure in the suit circuit, which is sensed by the regulator on the underside of the diaphragm. When the pressure drops approximately 2 inches H_2O below cabin pressure, the diaphragm will open the demand valve.

The regulator assembly contains a poppet-type relief valve which is integral with the suit pressure sense port. During operations when the cabin pressure is above 3.75 psia, the relief valve is loaded by a coil spring which allows excess suit gas to be vented whenever suit pressure rises 2 to 9 inches H_2O above cabin pressure. When the cabin pressure decreases to 3.75 psia, the reference chamber pressure is increased by the throttling effect of the expanding aneroid. The reference chamber pressure is applied through ducts to two relief-valve loading chambers which are arranged in tandem above the relief valve poppet. The pressure in the loading chambers acts on tandem diaphragms which are forced against the relief valve poppet. The relief portion of the valve is thus increased to 3.75 psia plus 2 to 9 inches H_2O.

Two parallel CO_2-odor absorber canisters, downstream of the suit compressors, function in the removal of carbon dioxide and odors. A removable filter within each canister contains sufficient lithium hydroxide (for CO_2 removal) and activated charcoal (for odor removal) to last 1.5 man-days of operation. This operational limit requires each filter be changed, on an alternating basis, every 12 hours. An internal bypass is incorporated within each filter to furnish the required flow during the ECS emergency mode (cabin depressurized), but will also increase the flow under normal conditions. Although 50 percent of the flow is permitted to bypass the lithium hydroxide, the total flow must pass through the charcoal filter.

The CO_2-odor absorber filter change sequence involves numerically identified filters and alphabetically identified filter stowage containers. Although the filters are replaced in numerical sequence, the stowage containers are not opened in alphabetical sequence relative to filter replacement. Odd-numbered filters will always be installed in suit circuit canister A (upper) and even-numbered filters installed in canister B (lower). After the proper filter stowage container is located by the crewman, the correct filter is obtained and the filter change accomplished. The used filter is then stowed in the container from which the unused replacement came. Where two filters are stowed one above the other, the used filter will always be placed below the remaining unused filter. This provides a more readily accessible unused filter at the next 12-hour replacement period. Filter replacement data, such as filter number and mission time, is recorded by the crew in the flight log.

A diverter valve located at the canisters inlet is normally positioned to direct gas flow through both filters. In conjunction with check valves, located at each canister outlet, repositioning the diverter valve isolates an expended filter. A manually operated vent valve for each canister allows equalization to cabin pressure prior to the removal of a filter.

Suit circuit gases, upon leaving the CO_2-odor absorber canister assembly, are at a higher temperature and humidity level than at any other point in the suit circuit. Heat has been generated in flowing through the compressors and the canister assembly. Also, the already humid gases have picked up additional moisture due to chemical reaction between the carbon dioxide and lithium hydroxide. The suit heat exchanger removes this heat and humidity from the suit gases.

Normally the heat transfer fluid, water-glycol, flowing through the suit heat exchanger removes the suit circuit heat loads to space through space radiators. A water-glycol evaporator supplements heat transfer when the space radiators are inadequate. A suit evaporator (part of the suit heat exchanger) is provided and <u>used only in the event of an emergency</u>. Under <u>all</u> other conditions the suit evaporator controls are to remain in the OFF position. The control switch (SUIT EVAP, AUTO - MAN, located on panel 13) controls electrical power to the system. This operational change will not impose added constraints on the mission; however, if the water-glycol evaporator should fail when it is required for cooling of electronics, etc., this would be sufficient cause to terminate the mission.

Should the ability of the suit evaporator system demonstrate proper operation, the control switch would be placed to the AUTO position. When water-glycol inlet temperatures to the suit heat exchanger exceed 52°F or the outlet temperatures of the suit circuit gases from the heat exchanger exceed 60°F, the suit heat exchanger is bypassed by the water-glycol flow through a diverter valve. When the automatic-controlled diverter valve is in the full bypass position, an integral switch in the diverter valve assembly is activated. The diverter valve switch activates the suit evaporator steam pressure control unit. The correct steam duct pressure is automatically

established for a given temperature error by the steam pressure control unit, pressure transducer, and the steam pressure control valve. Initial opening of the steam pressure control valve causes a switch in that valve assembly to activate the wetness control unit. Water inlet through a solenoid valve to the suit evaporator is automatically controlled by sensing the suit evaporator wetness and the temperature of the suit gases at the heat exchanger outlet. When suit gas temperatures return to normal, the evaporator mode is sequencially deactivated and water-glycol flow is re-established. By overriding the suit gases temperature sensor at the outlet of the heat exchanger the system may also be activated, providing the SUIT EVAP control switch is in the AUTO position. Simulated high heat load is initiated by the SUIT HT EXCH switch (LHEB-310).

As the moisture-laden suit gases are cooled, condensation takes place within the heat exchanger. This moisture is absorbed by a wick-like material, removed by capillary action and the suction of the H_2O accumulator, and pumped into the waste water system.

The two accumulators are automatically controlled, self-cycling, reciprocating pumps. Oxygen at 100±10 psig periodically activates the pumps on the expulsion stroke, while a return spring is utilized for the suction stroke. Only one accumulator can be operated at a time with the second for standby use in the event of a malfunction. A manual backup mode of accumulator operation is also incorporated. Following the discharge of suit circuit gases from the suit heat exchanger, the normal flow is to the three suit hose connector assemblies. A suit flow relief valve is incorporated in the bypass line between the outlet of the suit heat exchanger and the inlet to the suit compressor. The valve opens at a ΔP of 5.0±0.2 in. H_2O and automatically maintains a nearly constant flow in the event of suit circuit flow resistance fluctuations.

2.7.3.2.1 CO_2 Sensor.

The CO_2 sensor, situated between the inlet and outlet manifolds of the suit circuit, is a compact unit that operates on the infrared absorption principle. The unit measures the amount of infrared energy absorbed by the CO_2 in the atmospheric sample passing through the sensor. This is accomplished by comparing two different wavelengths in the infrared spectrum. One wavelength is absorbed by CO_2, while the other acts as a reference. This establishes a ratio signal which is amplified and reads out as a d-c voltage proportional to the partial pressure of CO_2 in the sample gas.

The sensor is divided into the optics section and the electronics section. The optics section includes an infrared energy source (a small tungsten filament lamp), and optical lenses and mirror for focusing the beam through two wavelength filters and the atmospheric sample onto a detector. Both wavelength filters (4.3 microns for sampling and 4.0 microns for reference) are attached to a tuning fork which vibrates at

600 cycles per second. The filters move back and forth across the focused light beam, alternately transmitting energy at the sample and reference wavelengths.

The basic purpose of the electronics section is to detect and transform signal information. Miniaturized components are mounted on seven printed circuit boards, which accomplish all the electrical functions. These functions include supplying the power for the infrared source lamp and the operation of the tuning fork, the detector, and the various preamplifiers and amplifiers. The output signal activates the CO_2 PP HI systems status light (MDC-11) and the CO_2 PART PRESS indicator (MDC-13).

2.7.3.2.2 Gas Chromatograph.

The gas chromatograph is an item of GFE that is installed in several of the Apollo Block I spacecraft for flight qualification purposes. The unit is capable of identifying and measuring the concentrations of 28 gas components, and the resulting data is then telemetered to MSFN. This compact item of equipment is installed in the LEB, and it interfaces the inlet and outlet manifolds of the suit circuit in the LHEB.

The gas chromatograph operates on the basic principle of routing samples of the suit circuit and/or cabin atmosphere through three separate capillary columns and detectors. Low-pressure helium is used as the carrier gas for the sample streams. The helium supply, even under continuous demand, will last the length of any proposed mission. The helium is stored in a reservoir at 6000 psig and is regulated to its normal working pressure of 42 psia. In the event of regulator malfunction, pressure relief is provided by a 200-psig rupture disc. Each capillary column and detector identifies a specific number of gas components. One column-detector will identify five of the permanent gases; namely, hydrogen, nitrogen, oxygen, methane, and carbon monoxide. Another is concerned only with the separation and detection of ammonia, carbon dioxide, and water. The third column-detector identifies 20 trace contaminants listed as follows: Freon II, methyl alcohol, methylene chloride, ethyl alcohol, benzene, P-dioxane, acetone, hydrochloric acid, hydrogen sulfide, ethylene oxide, isoprene, diethyl sulphide, nitrogen dioxide, ethylene glycol, vinylidene chloride, methyl chloroform, acetylene, dimethyl sulfide, Freon 114, and 1, 1 trichloroethane.

Cross-section ionization-type detectors are used in conjunction with the three columns for gas component identification. The output current of the detectors produces a minimum-strength signal that must be greatly amplified, then conditioned for telemetry. The capillary columns, the detectors, and the electrometer amplifiers are housed in an oven, the temperature of which is maintained within a very close tolerance. The balance of the electronics, installed in a separate package, consist of a transformer, a programmer, and a regulated power supply. Solid-state circuitry is used exclusively throughout the electronics of the unit.

The gas chromatograph will complete one identification cycle in approximately 80 minutes, regardless of the sampling mode selected. Samples are taken from the suit circuit atmosphere, the cabin atmosphere, or from each atmosphere on alternating cycles depending on the positioning of a selector switch located on the LEB panel 120. The selector switch may be positioned to CABIN AIR/AUTO/SUIT AIR by command.

The gas chromatograph is serviced and installed by ground support personnel prior to flight crew ingress.

A three-position START/OFF/PREHEAT switch, controls power for operation, and must be placed to the PREHEAT position for a minimum of 80 minutes before switch is set to START. A push-type switch, AMPL-CAL, for bench calibration only and the START/OFF/PREHEAT switch, are located on panel 120.

During the mission, the flight crew will not be required to make control adjustments to the unit unless directed to do so by MSFN. During descent, the remaining helium in the reservoir is dumped into the cabin by the action of a pyro valve inside the unit. A full tank (abort condition) can be emptied in a maximum of 3 minutes. Pyro valve initiation is simultaneous with the C/M-RCS propellant purge operation.

2.7.3.3 Cabin Pressure and Temperature Control Subsystem.

The pressurization and temperature control of the C/M cabin are primarily automatic functions with manual backup and override modes provided. Cabin pressurization is maintained by the cabin pressure regulator assembly (figure 2.7-3). This unit consists of dual regulators and a manual repressurization valve operated by a knurled knob. Both regulators operate simultaneously as there is no selector valve incorporated and no off position. The regulators automatically maintain the cabin at 5±0.2 psia during normal conditions and at a maximum oxygen flow rate of 1.3 pounds per hour. If the cabin should become depressurized for any reason, the regulators close at a pressure of 3.5 psia to conserve oxygen. The manual valve, with a maximum flow rate of 7.2 pounds per hour, may be adjusted to maintain cabin pressure in event of regulator malfunction. However, it is primarily used to repressurize the cabin following decompression, requiring approximately 1 hour to raise the cabin pressure back to 5.0±0.2 psia.

An emergency cabin pressure regulator assembly (figure 2.7-4) will flood the cabin with oxygen to prevent rapid decompression in the event of cabin wall puncture. As cabin decompression is hazardous to life only when a crewman is in the shirtsleeve mode, the regulators are not selected for use until just prior to a crewman removing his PGA. The regulator

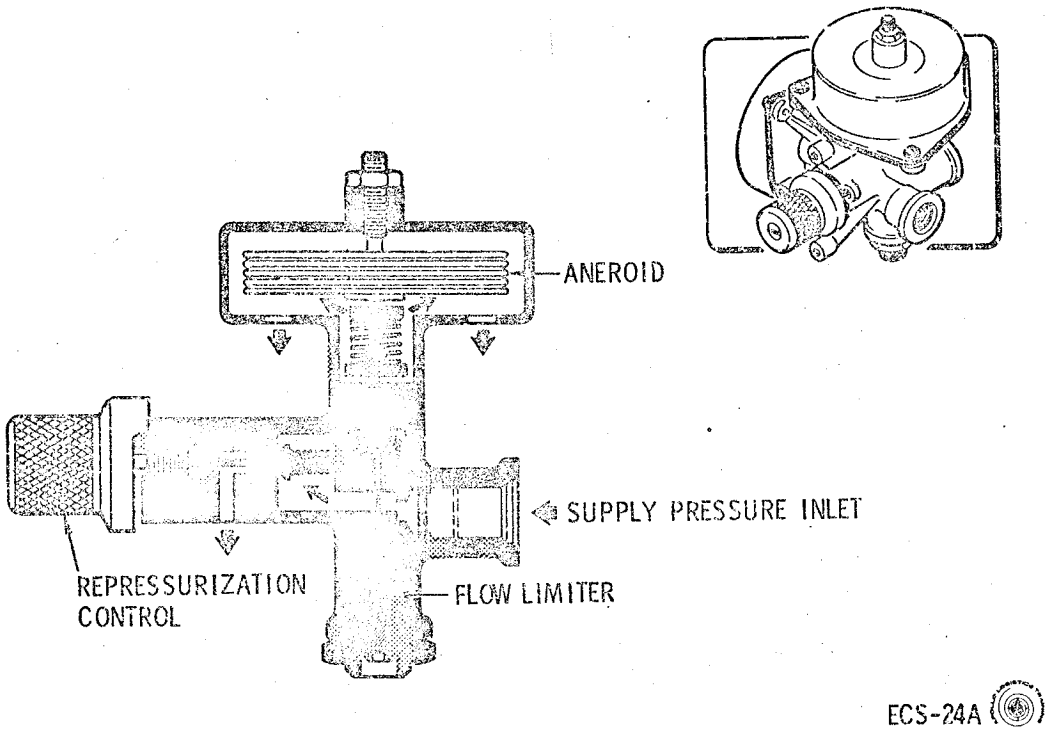

Figure 2.7-3. Cabin Pressure Regulator

assembly consists of a four-position manual selector valve and two redundant regulators which, when selected for use, automatically open when the cabin pressure drops to 4.5±0.1 psia. The emergency cabin pressure mode of 3.5 psia is contingent upon Apollo design limits and meteorite tests and allows unsuited crewmen time to don their PGAs. This minimum pressure can be maintained for 5 minutes, providing that meteorite holes do not exceed the total equivalent area of a hole 0.5 inch in diameter. At the end of this time, the pressure will drop more rapidly, going to 2.0 psia in 10 minutes and to 1.0 psia in 15 minutes.

The dual cabin pressure relief valve (figure 2.7-5) provides positive and negative pressure relief for the cabin throughout the entire mission. Although they function automatically, cable-operated manual override controls, located on panel 307, are provided for adjustments during flight to close relief valves for a malfunction, or to prevent sea water inflow during postlanding phase and ground checkout procedures. When the cabin pressure becomes higher than the external ambient pressure, the relief valves limit the differential pressure to 6 (+0.2, -0.4) psi. During the ascent phase, this differential pressure may go as high as 7.0 psi for a short period of time. Conversely, when the cabin pressure becomes lower than the external ambient pressure (as during descent), the relief valves limit the differential pressure to a maximum of 25 inches of water. The assembly is located in the steam duct overboard line which provides the means of venting the positive and negative cabin pressures.

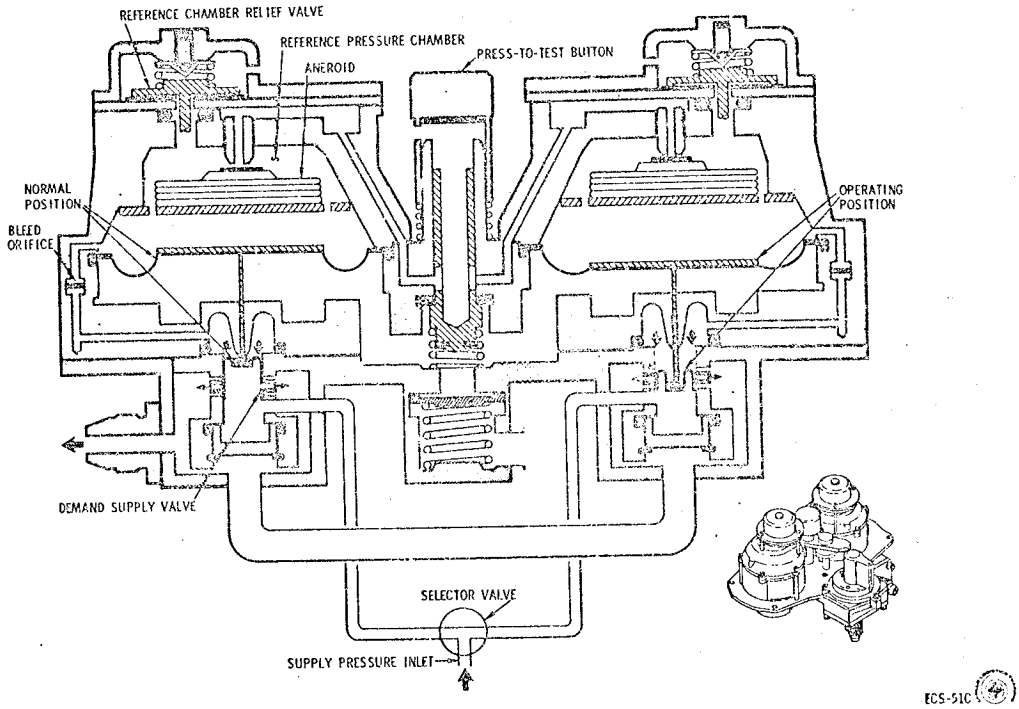

Figure 2.7-4. Emergency Inflow Regulator

Ventilation within the C/M is provided by dual fans, which circulate cabin gases through the cabin heat exchanger. Normally, both cabin air fans are selected by the crew for simultaneous operation. If either fan malfunctions or is shut down for any reason, a closure (cover) is manually installed over the inlet of the inoperative fan to prevent backflow. A cabin air control louver, located at the outlet of the cabin heat exchanger, is manually adjusted for directional flow of gases within the cabin.

Although cabin temperature control is normally an automatic function, resort to manual backup and override modes of operation may be utilized. Cabin gases are heated or cooled by their circulation through the cabin heat exchanger, which uses water-glycol as the heat transfer medium. A cabin temperature control unit compares a desired temperature, selected by the crew, to the temperature that is sensed at the inlet to the cabin air fans. Any difference results in a signal that repositions the motor-operated cabin temperature control valve. This valve regulates the amount of hot or cold water-glycol flowing into the cabin heat exchanger. At each end of valve full travel, the total hot or cold flow is routed through the heat exchanger; whereas, at intermediate valve positions, the water-glycol flow through the heat exchanger varies. A cabin temperature anticipator, located at the cabin air control louver discharge, senses the temperature rate of change and signals the cabin temperature control unit, preventing overcorrection by the control valve.

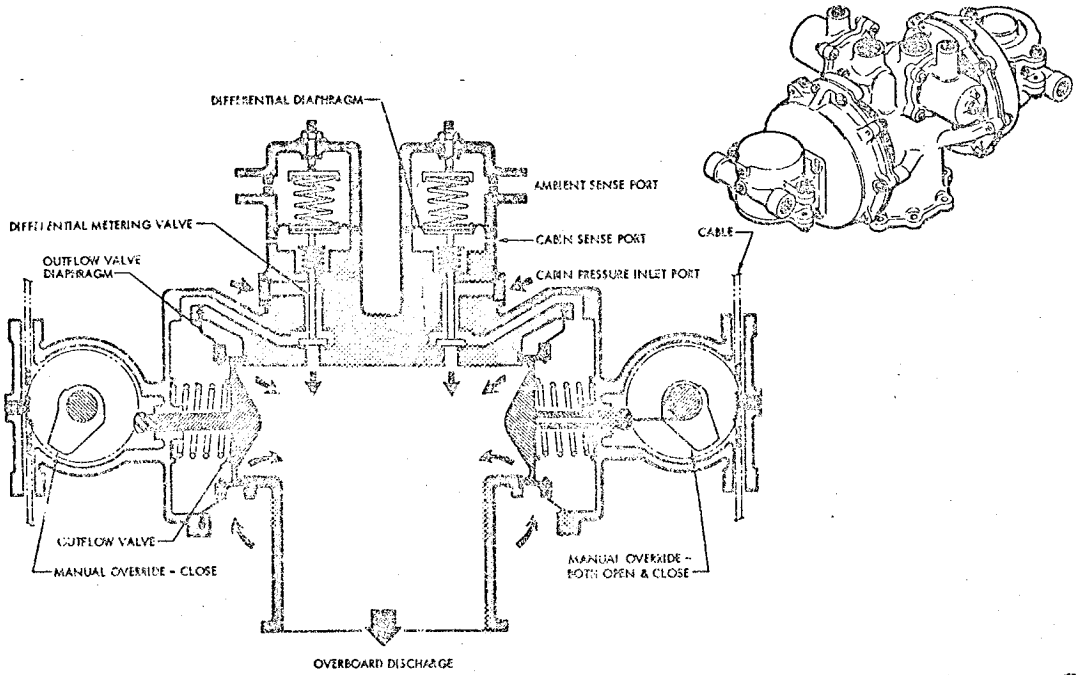

ECS-33-B

Figure 2.7-5. Cabin Pressure Relief Valve

Ventilation during the postlanding phase is accomplished by circulating outside ambient air through the cabin. All of the equipment necessary to carry out this function (other than controls) is located on the C/M forward tunnel cover. Outside air is drawn into the cabin through an inlet duct containing a shutoff valve and fan. The inlet duct includes a flexible extension for promoting more efficient ventilation. After circulating within the cabin, the air is expelled overboard through an adjacent outlet duct and shutoff valve. Both motor-operated shutoff (vent) valves and the vent fan are controlled by the VENT FAN switch on MDC-25. High- or low-speed fan operation is available, and either switch position will simultaneously activate the fan and open the cabin vent valves. An assembly consisting of a pendulum-type attitude sensing switch and an adjacent override control switch (PLVC) are installed in the LHEB. The pendulum is free to move only in the Z-axis. Should the C/M roll beyond a specified limit or become inverted (stable II condition), the attitude sensing switch activates the cabin vent valves to the closed position to prevent water ingestion. If all efforts to return the C/M to the upright (stable I) condition should fail, the PLVC switch (LHEB-141) is set to OPEN. This overrides the closing action of the attitude sensing switch by opening both cabin vent valves and flooding the forward portion of the C/M. The pressure on the tunnel hatch then becomes equalized, thus allowing its removal for the escape of the crew. The PLVC switch may also be used to open the cabin vent valves if the attitude sensing switch should fail after having closed the valves. In order to prevent the inadvertent opening of the vent valves in flight, two precautions are taken. A lockpin is installed in each vent valve, and the circuit

breaker applying power to the PLV system is not engaged during flight. Therefore, before the PLV system can be operated, the lockpins must be removed (pulled out approximately 0.5 in.) prior to CSM separation and the applicable circuit breaker engaged after landing.

2.7.3.4 Water-Glycol Coolant Subsystem.

The water-glycol coolant subsystem is a closed loop through which an aqueous ethylene-glycol mixture (water-glycol) is continuously circulated. The mixture ratio by weight consists of 62.5 parts of glycol to 37.5 parts of water. Basically, the subsystem provides a heat transport fluid loop for the cabin atmosphere, the suit circuit atmosphere, the electronic equipment, and a portion of the potable water. It also serves as a source of heat for the cabin atmosphere when required. All of the unwanted heat absorbed by the water-glycol is transported either to the space radiators, where it is radiated to space, or to the water-glycol evaporator, where it is rejected by the evaporation of water.

The water-glycol (W/G) evaporator outlet temperature must be maintained between 40° and 43°F (nominal 41.5°F). Sensed at the W/G evaporator inlet from the space radiators W/G temperatures between 42.9° and 45.9°F (nominal 45°F) activates the automatic mixing valve control system (figure 2.7-6). High-temperature W/G from the water-glycol pump is mixed with the lower W/G temperature from the space radiators to maintain the evaporator outlet nominal temperature of 41.5°F. The manual override for the mixing valve is located on the coolant control panel 311 (GLYCOL EVAP TEMP IN) and a switch located on panel 13 allows selection of AUTO or MAN operation.

Three lines from the water-glycol pump assembly are paralleled to the water-glycol evaporator inlet. The aforementioned oxygen supply capillary restrictors are wound around the line routed to the space radiators and relief valves. The other line is routed to the mixing valve. To insure proper operation of the oxygen supply restrictors, in the line between the cryogenic O_2 storage in the S/M to the surge tanks in the C/M during cabin repressurization, full water-glycol flow through the line to the space radiators is required. Sufficient heat must be available to prevent cryogenic oxygen entering the C/M oxygen system and preclude the possibility of freezing the water-glycol. To achieve this, the mixing valve must be manually placed to the full closed position 15 to 30 minutes before repressurization and remain closed until the surge tank returns to maximum pressure after repressurization of the C/M.

High-temperature water-glycol between 48° and 50.5°F from the space radiators and sensed at the evaporator inlet initiates the water-glycol evaporator temperature control system. Once the evaporator mode is initiated by the evaporator inlet sensor, an evaporator outlet sensor supplies the controlled variable signals to the controller. If a heating temperature error is sensed by the evaporator outlet sensor, the steam pressure valve begins to open and repositions at a velocity proportional to

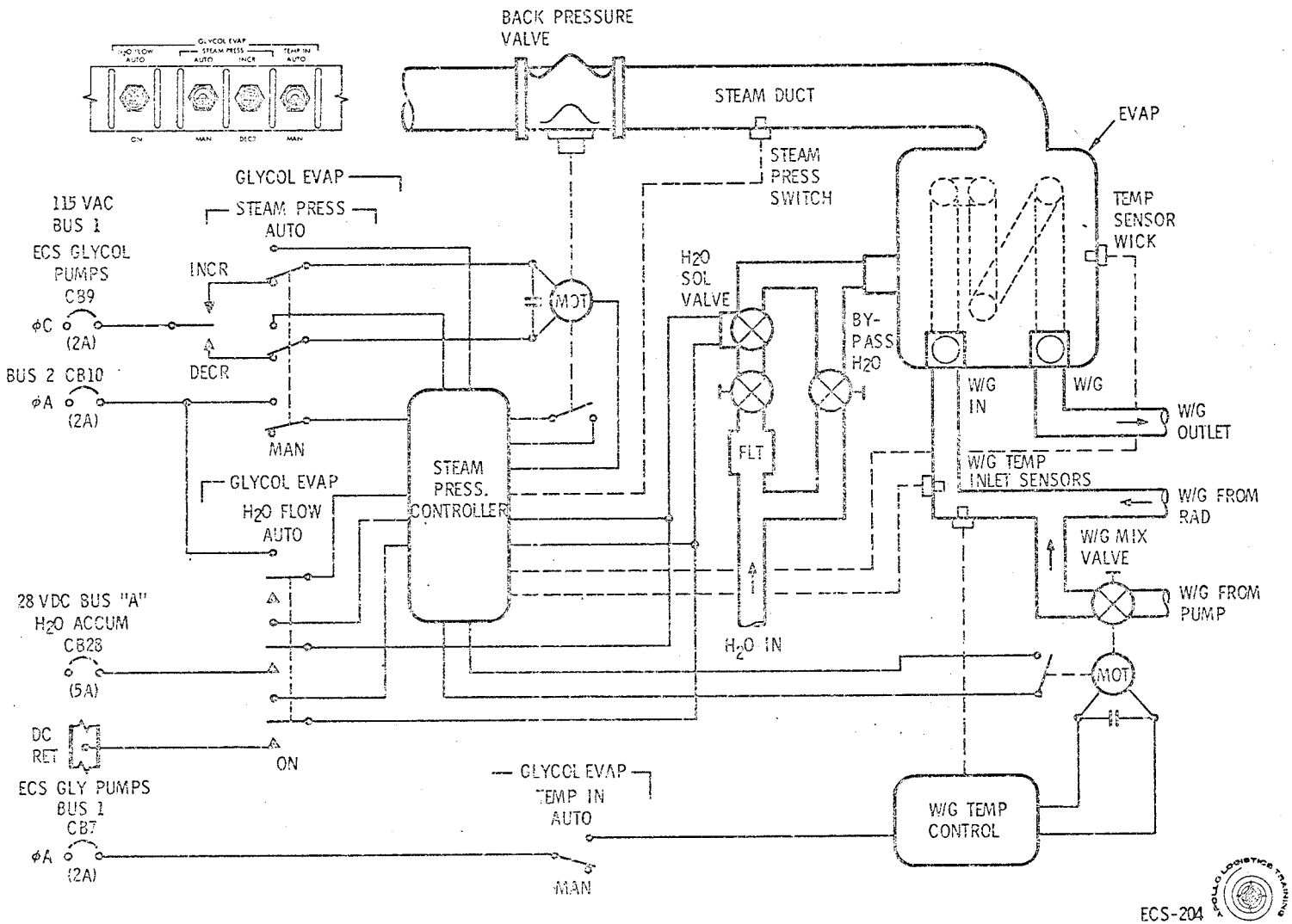

Figure 2.7-6. Water-Glycol Evaporator Temperature Control

the temperature error. Evaporator wicks are maintained in a wet condition to provide immediate boiling when the steam pressure valve is opened. Should the steam pressure drop below 5.0±0.2 mm Hg abs, a pressure switch overrides the temperature signal and closes the steam pressure valve. The override pressure switch provides adequate pressure margin above the freezing pressure of 4.58 mm Hg abs. A switch in the steam pressure valve assembly is activated when the valve is initially cracked open. The switch activates the wetness control for replenishing water to the evaporator through a water-solenoid control valve. Signals from the wick temperature sensor are indicative of the relative wetness of the evaporator wicks. As water evaporates, the wick sensor temperature increases and exceeds an evaporator inlet reference sensor signal and cycles the water control valve open. The reference input sensor varies the control as a function of heat load to maintain the desired wick temperature with no water carryover into the steam duct. When the evaporator wicks become replenished with water, the wick sensor temperature decreases and approaches the saturation temperature corresponding to the steam pressure and cycles the water control valve closed. The water control valve continues to cycle as long as water-glycol cooling by water evaporation is required.

The steam pressure control valve can be electrically repositioned to control the steam pressure for 40° to 43°F outlet glycol temperature using the pressure monitor indicator (panel 13, GLY EVAP-OUTLET TEMP). The control switches (GLYCOL EVAP - STEAM PRESS) must be placed to the MAN position, and then to INCR for open and DECR for closing the steam pressure valve. The H_2O FLOW switch (panel 13) should be in the AUTO position for the automatic wetness control to be effective. Should the wetness control fail, the water inlet control valve can be energized open by placing the H_2O FLOW switch to ON. When operating in this mode, a portable indicating unit should be used to prevent water carryover into the steam duct. The portable indicating unit consists of a four-position selector switch for selecting OFF, WICK TEMP., EVAP INLET TEMP. AND NUL. The unit has its own 175-hour battery-operated power supply. WICK TEMPERATURE indicator markings are 40° to 70°F, WATER-GLYCOL INLET TEMPERATURE indicator markings are 40° to 100°F, and the NUL indicator markings are a red line across the midlength section of the dial face and is marked above the red line on the dial WATER ON, and below on dial WATER OFF. A water control tabulation chart (figure 2.7-7) for operation of W/G evaporator in the manual mode, is provided showing wick temperature versus inlet glycol temperature. The portable indication unit should also be used when manual water bypass control valve (GLY EVAP WATER CONTROL BYPASS panel 317) is used. The portable indicator unit will connect to J39 (panel 311). The main water-glycol flow next enters the cabin temperature control valve, where it is routed either to the cabin heat exchanger or to the remaining thermal coldplates. The action is dependent upon the temperature control unit, which automatically controls the movements of the motor-operated cabin temperature control valve. The valve is so constructed that in the cabin full cooling mode, the total flow of cool water-glycol (167 pounds per hour) is routed first through the cabin

Evaporator Inlet Temperature Sensor (°F)	Wick Temperature Sensor (°F)	Evaporator Inlet Temperature Sensor (°F)	Wick Temperature Sensor (°F)
40	41.62	71	54.63
41	42.13	72	54.96
42	42.65	73	55.28
43	43.15	74	55.60
44	43.65	75	55.91
45	44.14	76	56.21
46	44.63	77	56.51
47	45.11	78	56.80
48	45.58	79	57.08
49	46.04	80	57.37
50	46.50	81	57.66
51	46.95	82	57.93
52	47.39	83	58.19
53	47.82	84	58.46
54	48.25	85	58.71
55	48.67	86	58.96
56	49.08	87	59.21
57	49.49	88	59.46
58	49.89	89	59.71
59	50.30	90	59.94
60	50.39	91	60.17
61	51.07	92	60.40
62	51.45	93	60.63
63	51.83	94	60.85
64	52.20	95	61.06
65	52.56	96	61.28
66	52.92	97	61.49
67	53.27	98	61.69
68	53.62	99	61.90
69	53.96	100	62.10
70	54.30		

Figure 2.7-7. Water Flow Control Chart

heat exchanger and then through the thermal coldplates. In the cabin full heating mode, the total flow is routed through the thermal coldplates first, where the water-glycol absorbs heat, and from there flows through the cabin heat exchanger. The intermediate valve positions are for the partial cooling or partial heating modes. In the intermediate positions, the quantity of cool or warm water-glycol flowing through the heat exchanger is reduced in proportion to the demand for cooling or heating. Although the amount of water-glycol flowing through the cabin heat exchanger will vary, the total flow through the thermal coldplates will always be 200 pounds per hour. (See figure 2.7-8.) An orifice restrictor is installed between the cabin temperature control valve and the inlet to the coldplates. Its purpose is to maintain a constant flow rate through the coldplates by reducing the

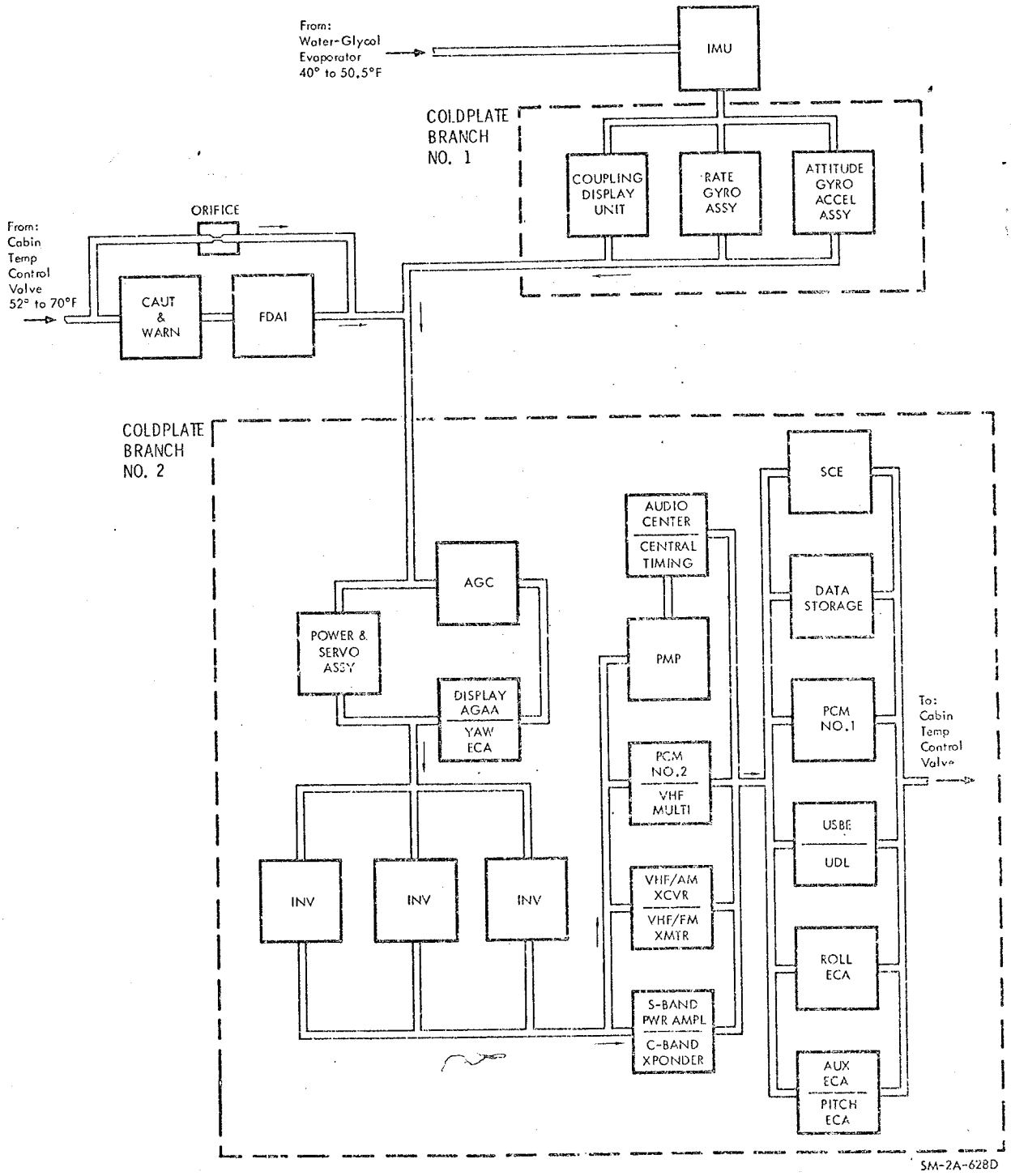

Figure 2.7-8. Equipment Coldplate Flow Diagram

heating mode flow rate to that of the cooling mode flow rate. Another orifice restrictor, located in the coolant line from the IMU, maintains a constant flow rate through this component regardless of system flow fluctuations.

The total flow leaving the cabin temperature control valve enters the water-glycol pump assembly which provides the continuous coolant circulation within the subsystem. The assembly consists of two water-glycol pumps, two pump outlet check valves, a full-flow filter, an accumulator, and an accumulator isolation shutoff valve. The two pumps, mounted in parallel, can only be operated one at a time with the second pump for standby redundancy. Each pump outlet check valve prevents coolant backflow through the nonoperating pump. Water-glycol entering the assembly first passes through the full-flow filter before reaching the pumps. There is also a side passage that leads to the accumulator.

The purpose of the accumulator is to maintain correct pump inlet pressure and to compensate for small amounts of leakage and/or thermal expansion/contraction. The manual shutoff valve in the side passage is closed to isolate the accumulator in case of a punctured bellows, which would permit the coolant to leak into the cabin, causing contamination. If the water-glycol accumulator quantity indicator on the main display console shows a steady decay to zero, a leak in the water-glycol system is the probable cause. However, an indication showing a slow steady decrease, which stops at a point above zero, is probably due to thermal contraction indicating the water-glycol temperature is below the nominal range. Located downstream of the pump assembly is the water-glycol pump outlet pressure transducer which measures the static pressure of the water-glycol at the pump outlet, thus giving an indication of pump performance.

At this point in the subsystem, the temperature of the water-glycol has greatly increased due to the absorption of the various heat loads. The total flow of hot water-glycol is routed through a passage in the steam pressure control valve to prevent ice from forming within the valve opening. Icing at this location could result in valve malfunction and/or blocking of the steam duct. To prevent ice from forming at the outlet of the steam duct, two redundant electric heaters are used. The two 3-watt heater elements inside the duct extend approximately 8 inches upstream from the outlet.

The water-glycol next flows to the water-glycol evaporator inlet temperature control valve (previously described). The hot water-glycol that is not used for mixing by this valve is routed to the space radiators for cooling. Any pressure losses in the space radiator circuit, regardless of the number of radiators in operation, will be limited by the action of the dual water-glycol pressure relief valves. These two valves are in parallel and are located between the inlet and outlet lines of the radiator circuit. Just upstream of each pressure relief valve is a manual shutoff valve. By controlling the shutoff valves, one relief valve at a time is normally selected for use with the second for standby redundancy. When a ΔP of

11 psi is reached, the relief valves open to bypass coolant to the radiator return line, closing at a ΔP of 8.5 psi. In order to preserve the water-glycol closed loop, the relief valves function as a bypass when all space radiator isolation valves are closed or when the water-glycol radiator shut-off valve is closed. This is a manual shutoff valve that controls the flow of water-glycol from the C/M to the S/M. It is placed to the closed position shortly before CSM separation to prevent the coolant in the C/M from flowing overboard after separation.

Two space radiators with an area of 30 square feet each are located on opposite sides of the S/M in sectors II and V. Each radiator panel contains two separate sets of tubes. The flow of water-glycol through the four tube circuits is individually regulated by a motor-operated radiator isolation valve located on the inlet side of each tube circuit. The four valves are remotely controlled from the C/M and give the crew some degree of latitude in their selection of cooling area. However, the primary purpose of the valves is to isolate tube circuits should they develop leaks. A check valve in each tube circuit outlet line prevents the backflow of coolant from entering any radiator tube circuit that is leaking. Freezing within the radiators is the point at which flow ceases, and may be prevented by maintaining the inlet temperature above 75°F. This temperature is obtained on the AUX DC VOLTS meter (RHFEB-200) or from MSFN if the crew is unable to leave the couches.

The water-glycol, after leaving the space radiators and re-entering the C/M, flows through a capillary restrictor. This is placed in the line to make the pressure drop through the radiators compatible with that through the water-glycol temperature control valve during the mixing mode. Upon leaving the restrictor, the water-glycol flows through two check valves in series. These valves prevent coolant from flowing overboard following CSM separation. A temperature sensor, located between these check valves, gives an indication on the main display console of the temperature of the coolant leaving the radiators. The indicator is located on MDC-13.

Under normal space flight conditions the water-glycol reservoir is isolated from the coolant subsystem by the proper positioning of three glycol reservoir manual shutoff valves. The water-glycol reservoir inlet and outlet valves are closed, and the reservoir bypass valve between the inlet and outlet lines is opened. During the prelaunch and ascent phases, however, the position of these three valves is reversed to permit coolant flow through the reservoir. The one gallon of water-glycol contained in the reservoir is then utilized as a heat sink, which becomes necessary during the ascent phase. The space radiators are not effective during ascent and evaporative cooling takes place only after the ambient pressure reaches 0.05 psia, which is approximately 150,000 feet altitude (T + 2 minutes and 10 seconds).

If a water-glycol leak should occur, the coolant subsystem may be refilled from the limited supply in the water-glycol reservoir after the leak is isolated. The glycol reserve shutoff valve, located in the line from

the reservoir to the inlet side of the pump, is used for this purpose. As the reservoir contains a bladder that is under 20±2 psig oxygen pressure, positive expulsion of the coolant is assured. The pressurized reservoir may also serve as an accumulator for the coolant subsystem, if the regular water-glycol accumulator becomes inoperative and is isolated. The flow of water-glycol, either through the reservoir or bypassing it, next enters the water-glycol evaporator (previously described), thus completing the coolant loop.

During prelaunch operations, the flow of temperature-controlled water-glycol is furnished by GSE through lines connected to the fill and vent couplings in the S/M. The solenoid-operated water-glycol shutoff valve, upstream of the outlet coupling, is controlled at the GSE and is opened to permit coolant flow through the spacecraft loop and back to the GSE.

2.7.3.5 Water Supply Subsystem.

The primary function of the water supply subsystem is the storage and collection of potable and waste water. Potable water produced by the fuel cells and waste water recovered from the suit heat exchanger water separator are stored in separate tanks in the C/M. Supplementing this supply are two water tanks in the S/M that contain potable water for refilling the C/M potable water storage tank. The water supply subsystem also supplies hot and cold potable water to the crew and waste water to the water-glycol evaporator and suit heat exchanger for evaporative cooling.

The water produced by the fuel cells in the S/M is a steady source of potable water and is stored in a 36-pound capacity tank located in the aft compartment of the C/M. The tank, which contains a bladder, is pressurized with oxygen at 20±2 psig by the tank pressure regulator and relief valve assembly, thus assuring positive expulsion of fluid. Fuel cell water flows into the tank at a potential pressure of approximately 61.5 psia, which is high enough to overcome the tank pressure. The potable water tank may be serviced before flight by the manually operated servicing valve, which is also in the aft compartment and not accessible to the crew. A quantity indicator on the main display console gives the measurements obtained by the tank quantity transducer. Located in a water line between the fuel cells and the potable water tank is a check valve and the potable tank inlet shutoff valve. The check valve prevents any reverse flow of potable water. The shutoff valve, when closed, prevents fuel cell water that has become contaminated from entering the C/M potable water network.

Temperature-controlled potable water is available to the crew from two components within the C/M. Cold water, which is maintained to 50°F (at the water chiller), is available at both the food preparation water supply unit and the water delivery unit. Hot water, however, is available only at the food preparation water supply unit. This component utilizes a small tank with an electric heater to raise the water temperature to 154°±4°F. By selecting the proper valve, hot or cold water is metered out for food reconstitution or other crew needs. The water delivery unit is used by the

crew exclusively for drinking purposes. It consists of a housing containing a coiled flexible tube and a water delivery valve for use with the individual mouthpieces of the three crewmen. Upstream of this unit is the drinking water supply shutoff valve that is closed if the water delivery valve should leak.

Waste water collected from moisture condensate within the suit heat exchanger is drawn into one of the cyclic accumulators and from there pumped into the waste water network. If, however, there is a water demand by either the water-glycol evaporator or the suit heat exchanger evaporator, the waste water flows directly to the water control valve of the appropriate evaporator. The 56-pound capacity waste water tank contains the pressurization and quantity measuring features of the potable water tank. A servicing valve is located on the water control panel in the C/M cabin and, therefore, is accessible to the crew, if necessary.

Although waste water never enters the potable water network, potable water may enter the waste water network under certain conditions. If the potable tank becomes full, the differential pressure between the networks will eventually overcome the 6.0±0.5 psi at the waste tank inlet valve, thus permitting water flow. Potable water also enters the waste water network if the waste tank is empty and there is a water demand by either evaporator. The low pressure created by this water demand is responsible for waste tank inlet valve activation. The valve also incorporates a manual shutoff feature for use if the relief valve portion malfunctions. Closing the valve thus prevents the premature dumping of potable water into the waste water network. A check valve, located downstream of the relief valve, separates the potable and waste water networks by permitting flow in one direction only.

To prevent overpressurizing the water supply subsystem, a pressure relief assembly is installed downstream of the check valves that separate the potable and waste water networks. The assembly consists of a selector valve and two redundant pressure relief valves in parallel. When the potable and waste water tanks are full, the continued supply of water produced by the fuel cells will be dumped overboard by these relief valves. Normally, both valves are selected for simultaneous use, and dumping occurs when the water pressure reaches approximately 32 psi above the outside ambient pressure. Another line, with two check valves in series, bypasses fuel cell water output directly to the pressure relief assembly. However, this action will take place only in event the waste tank inlet valve fails closed. The bypass prevents fuel cell water flow from being blocked, thereby preventing total fuel cell failure due to flooding within the cells.

To provide sufficient water for a maximum duration earth orbital mission, two 56-pound water tanks are installed in the S/M. These tanks are similar to the C/M waste water tank but lack the quantity measuring capability. A separate tank pressurizing system is used for positive expulsion of the water. Nitrogen at 900 psig is stored in a small tank that is protected against overpressure by a relief valve set at 1045±25 psig. In

addition to a nitrogen fill valve, there is a pressure regulator and relief valve to reduce and regulate nitrogen pressure in the water tanks. These tanks are pressurized at 40±2 psig, and the relief valve will function at 44 to 48 psig.

At the water outlet of each tank, there is a manual fill valve and a solenoid shutoff valve. The shutoff valves are controlled by the WASTE H_2O TK REFILL switch in the C/M. These valves control the flow of water from the tanks to a common line in the S/M that subsequently connects into the potable water line from the fuel cells. When the C/M potable water tank quantity is low, it will be refilled from these S/M water tanks at a flow rate of 2.92 pounds per minute.

2.7.3.6 ECS-Waste Management System Interface.

Although the waste management system (WMS) and C/M battery venting network are not subsystems of the ECS, they will be covered as such in the AOH because of system interface. The interface mentioned is in reference to the ECS water overflow line. All of the urine and the fecal odors of the WMS, as well as gas pressure from the C/M batteries, are also routed overboard through this single ECS water dump line. Incorporated at the outlet of the dump line (urine/water) is a 0.055 inch orifice nozzle that restricts gas flow to a maximum of 1 cfm and liquid flow to less than 1 cfm. The gas flow is limited to prevent excessive loss of cabin atmosphere during fecal canister usage. The restriction on liquid flow, in conjunction with a 5.7-watt, continuously operating dump nozzle heater, prevents the formation of ice at the nozzle, which could block all flow.

The function of controlling and/or disposing of waste solids, liquids, and gases is accomplished by the WMS. Except for the fecal canister and other items of stowed equipment, the major portion of the system is located in the RHEB. The WMS is basically divided into the urine/fecal and the vacuum cleaner subsystems. Several components that are no longer functional have not been removed from the WMS, as shown in figure 2.7-9. This is due to recent modifications that would not permit their removal because of schedule impact.

The components for the urine portion of the urine/fecal subsystem consist of a separate urine sample volume measuring system unit (USVMS) for each crewmember. (Refer to section 5.) The unit is used for each urination in order to provide a urine sample, with the remainder of the contents being dumped overboard in the following manner. The USVMS is first attached by quick-disconnect to an inline filter, which remains attached (by quick-disconnect) to the waste management dump line. The USVMS valve is set to the DUMP position, followed by setting the WASTE MANAGEMENT-SELECTOR valve on RHEB-201 to URINE FECES and the adjacent OVBD DRAIN valve to DUMP. A 5-psi differential pressure, provided by the valve settings, will empty the contents of the collection bag overboard through the urine/water dump line. Should a USVMS unit fail, direct overboard urination may be accomplished by using the urine

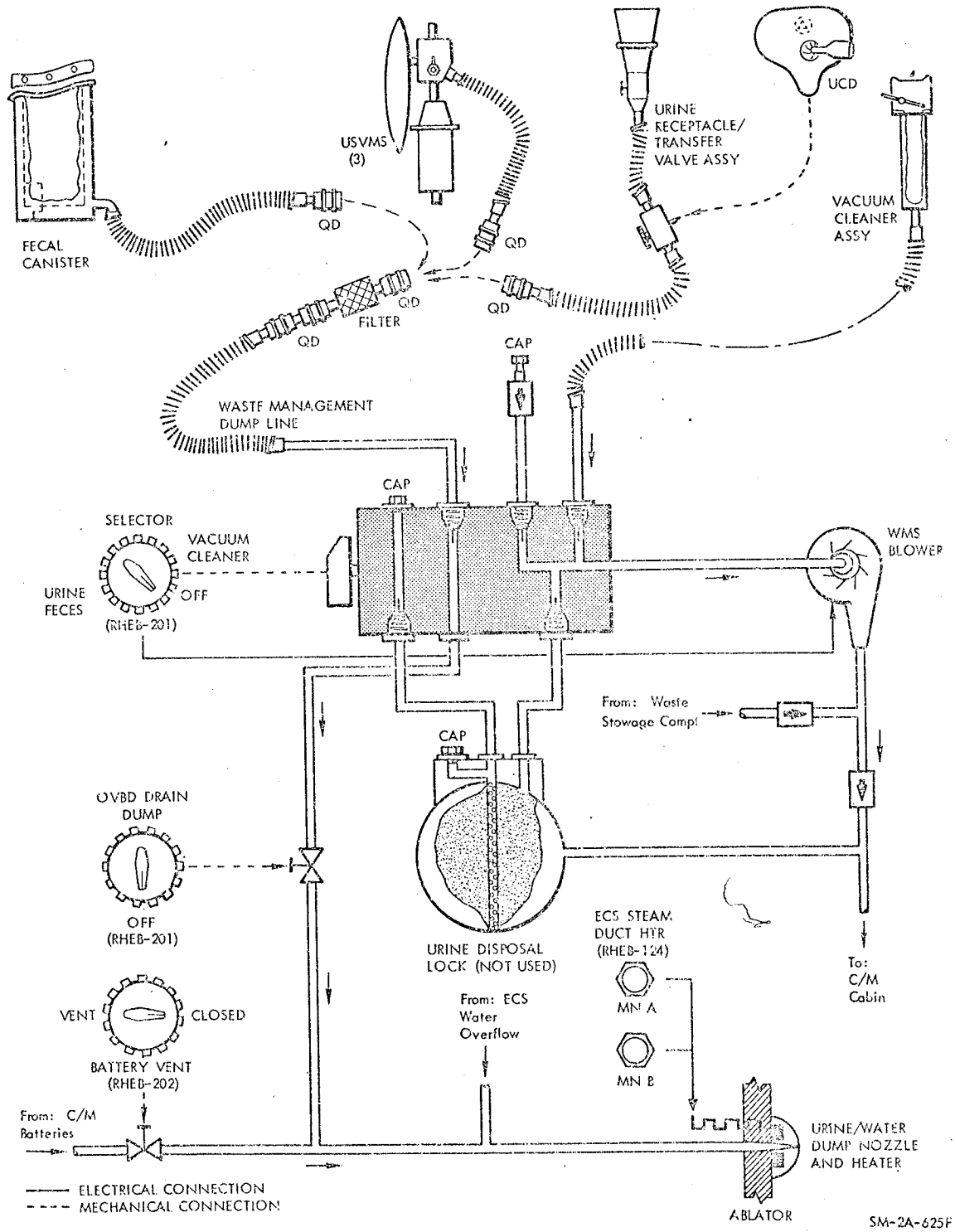

Figure 2.7-9. WMS Functional Flow Diagram

receptacle, which is a backup component. The PHA urine collection device (UCD) may be used during prelaunch, and if so, is emptied in much the same way. The transfer valve (of the urine receptacle/transfer valve assembly) is inserted into the UCD after it is removed from the PGA. The urine receptacle is then attached by quick-disconnect to the filter on the waste management dump line. The WASTE MANAGEMENT-SELECTOR and OVBD DRAIN valves are set to the URINE FECES and DUMP positions respectively, emptying the contents overboard. Upon completion, the PGA UCD is stowed in the PGA stowage bag. Although the WMS blower will operate whenever the SELECTOR valve is set to the URINE FECES position, functional operation of the blower is for vacuum cleaning only.

For the fecal portion of the urine/fecal subsystem, components consist only of the fecal canister and hose assembly. Normally stowed out of the way, the canister is secured to the center CO_2-odor absorber filter storage container at the LEB. The hose is then attached by quick-disconnect to the filter on the waste management dump line. The WASTE MANAGEMENT-SELECTOR valve is set to URINE FECES and the OVBD DRAIN valve is set to DUMP. Differential pressure of 5 psi is thus created, routing the odors overboard through the urine/water dump line.

The vacuum cleaner subsystem is made up of the vacuum assembly and an 8-foot flex hose, which are stowed in the vacuum stowage compartment. After removing the vacuum cleaner from the storage compartment, it is placed in operation by setting the WASTE MANAGEMENT-SELECTOR valve to VACUUM CLEANER. This single action activates the WMS blower and opens the valve port that connects the vacuum cleaner line to the blower. The WMS blower provides a gas flow of 5 cfm at a ΔP of -4.9 inches H_2O to effectively remove debris, either solid or liquid. A porous bag, inserted into the vacuum assembly, traps the debris while the gases are exhausted into the C/M cabin.

The C/M battery venting network consists of a manifold, a BATTERY VENT valve (RHEB-202), and lines that are routed to connect into the urine/water dump line. The vent valve is to remain in the VENT position during normal operation to provide unrestricted flow for intermittent battery relief valve operation. Only in event of a battery case rupture or vent manifold leakage will the vent valve be closed. This prevents loss of cabin atmosphere overboard, thereby, conserving oxygen.

2.7.3.7 Electrical Power Distribution.

The types of electrical power required for the operation of the ECS are 28 volts dc and 115/200-volts 400-cycles 3-phase ac. (See figure 2.7-10.) The larger motors of the system utilize 200-volt 3-phase power, whereas the smaller motors and control circuits operate from a single phase of the ac at 115 volts. Except for the postlanding ventilation system, those components using 28 volts dc will receive power from the fuel cells before CSM separation and from batteries after separation. The postlanding ventilation system will operate from batteries, exclusively.

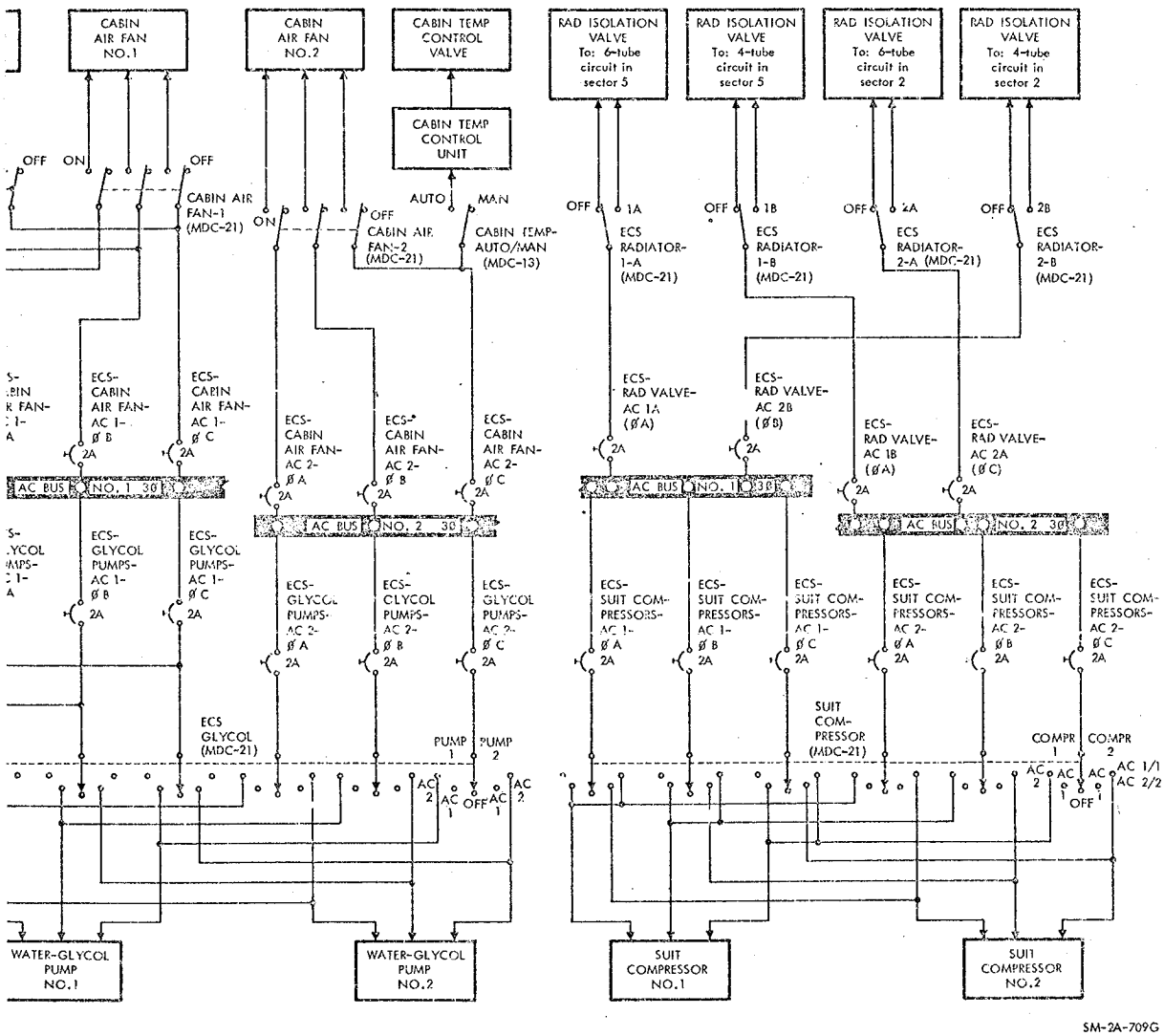

Figure 2.7-10. ECS Power Distribution Diagram

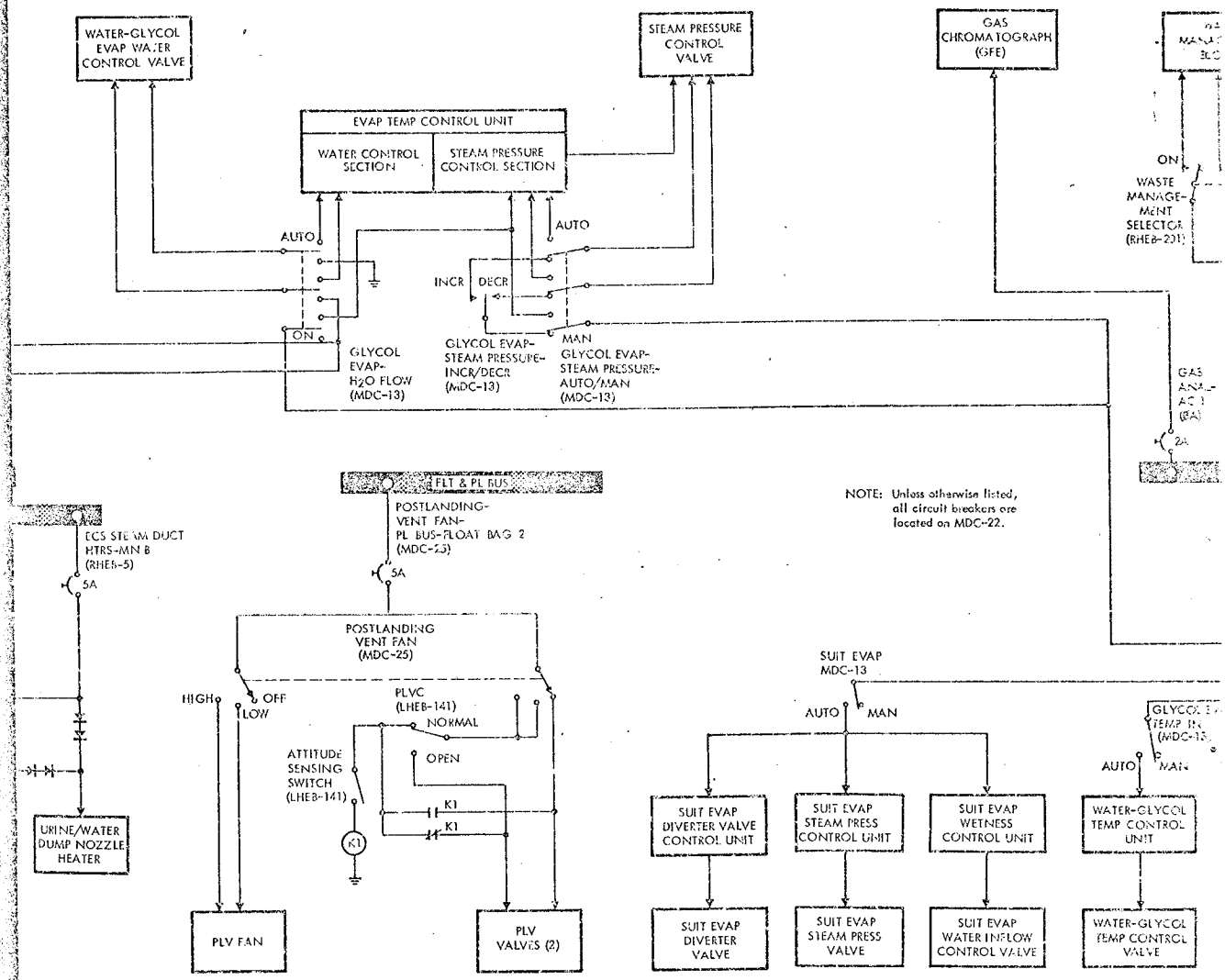
WATER-GLYCOL EVAP WATER CONTROL VALVE
STEAM PRESSURE CONTROL VALVE
GAS CHROMATOGRAPH (GFE)
EVAP TEMP CONTROL UNIT
WATER CONTROL SECTION
STEAM PRESSURE CONTROL SECTION
AUTO
AUTO
INCR
DECR
ON
MAN
GLYCOL EVAP-H2O FLOW (MDC-13)
GLYCOL EVAP-STEAM PRESSURE-INCR/DECR (MDC-13)
GLYCOL EVAP-STEAM PRESSURE-AUTO/MAN (MDC-13)
ON
WASTE MANAGEMENT SELECTOR (RHEB-201)
GAS ANALYZER (BA)
2A
FLT & PL BUS
POSTLANDING-VENT FAN-PL BUS-FLOAT BAG 2 (MDC-25)
5A
NOTE: Unless otherwise listed, all circuit breakers are located on MDC-22.
ECS STEAM DUCT HTRS-MN B (RHEB-5)
5A
POSTLANDING VENT FAN (MDC-25)
HIGH
OFF
LOW
PLVC (LHEB-141)
NORMAL
OPEN
ATTITUDE SENSING SWITCH (LHEB-141)
K1
K1
K1
URINE/WATER DUMP NOZZLE HEATER
PLV FAN
PLV VALVES (2)
SUIT EVAP MDC-13
AUTO
MAN
SUIT EVAP DIVERTER VALVE CONTROL UNIT
SUIT EVAP STEAM PRESS CONTROL UNIT
SUIT EVAP WETNESS CONTROL UNIT
WATER-GLYCOL TEMP CONTROL UNIT
SUIT EVAP DIVERTER VALVE
SUIT EVAP STEAM PRESS VALVE
SUIT EVAP WATER INFLOW CONTROL VALVE
WATER-GLYCOL TEMP CONTROL VALVE

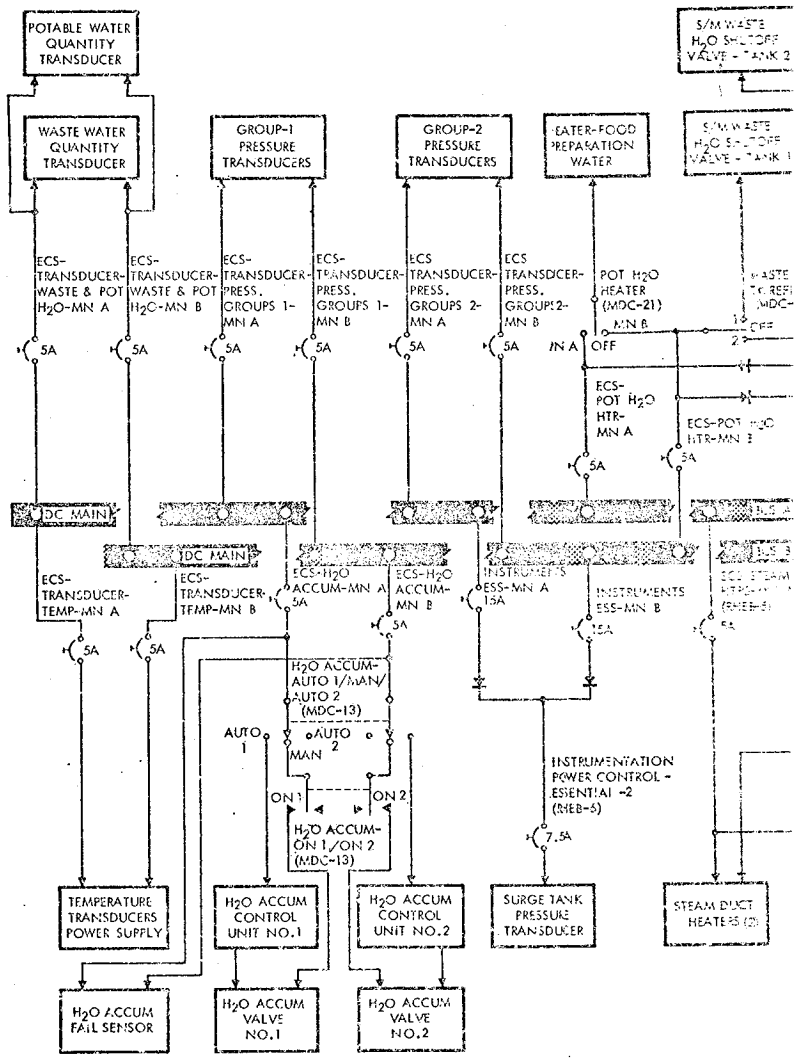
POTABLE WATER QUANTITY TRANSDUCER
WASTE WATER QUANTITY TRANSDUCER
GROUP-1 PRESSURE TRANSDUCERS
GROUP-2 PRESSURE TRANSDUCERS
ECS-TRANSDUCER-WASTE & POT H2O-MN A
ECS-TRANSDUCER-WASTE & POT H2O-MN B
ECS-TRANSDUCER-PRESS. GROUPS 1-MN A
ECS-TRANSDUCER-PRESS. GROUPS 1-MN B
ECS TRANSDUCER-PRESS. GROUPS 2-MN A
ECS TRANSDUCER-PRESS. GROUPS 2-MN B
POT H2O HEATER (MDC-21)
MN B
IN A
OFF
ECS-POT H2O HTR-MN A
5A
DC MAIN
ECS-TRANSDUCER-TEMP-MN A
ECS-TRANSDUCER-TEMP-MN B
ECS-H2O ACCUM-MN A
ECS-H2O ACCUM-MN B
INSTRUMENTS ESS-MN A
INSTRUMENTS ESS-MN B
15A
H2O ACCUM-AUTO 1/MAN/AUTO 2 (MDC-13)
AUTO 1
AUTO 2
MAN
ON 1
ON 2
H2O ACCUM-ON 1/ON 2 (MDC-13)
INSTRUMENTATION POWER CONTROL - ESSENTIAL -2 (RNEB-5)
7.5A
TEMPERATURE TRANSDUCERS POWER SUPPLY
H2O ACCUM CONTROL UNIT NO.1
H2O ACCUM CONTROL UNIT NO.2
SURGE TANK PRESSURE TRANSDUCER
H2O ACCUM FAIL SENSOR
H2O ACCUM VALVE NO.1
H2O ACCUM VALVE NO.2

2.7.4 PERFORMANCE AND DESIGN DATA.

2.7.4.1 Metabolic Data.

The following table contains the average metabolic rates, thermal balance, and water requirements for S/C crewmembers.

Parameter	Pressurized Cabin (Normal)	Depressurized Cabin (Emergency)
Total metabolic load BTU per man/day	11,200	12,000
Water production lb per man/day	4.0	9.8
CO_2 production lb per man/day	2.12	2.27
O_2 consumption lb per man/day	1.84	1.97
Water consumption lb per man/day	6.6	12.4
Urine production lb per man/day	2.6	2.6

2.7.4.2 Oxygen Supply Subsystem.

Performance and design data for the oxygen supply subsystem are as follows:

- Maximum oxygen flow rate to ECS from cryogenic storage tanks: 9.0 lb per hr
- Surge tank quantity: 3.7 lb (approx)
  Surge tank nominal pressure: 900±35 psig
  Surge tank pressure relief setting: 1045±25 psig
- Entry tank quantity: 1 lb (approx)
  Entry tank nominal pressure: 900±35 psig
  Entry tank pressure relief setting: None
- Regulated working oxygen pressure: 100±10 psig
  Pressure relief setting: 130±10 psig
  Flow rate: 0.7 lb per min max
- Regulated tank pressurization oxygen pressure: 20±2 psig
  Pressure relief setting: 25±2 psig
  Flow rate: 0.075 lb per min (one regulator) and 0.15 lb per min (two regulators)

2.7.4.3 Pressure Suit Circuit Subsystem.

Performance and design data for the pressure suit circuit subsystem are as follows:

- Heat exchanger cooling capacity: 2100 BTU per hr max (Gly or evap)
- Water evaporation rate: 1.97 lb per hr max
- Regulated demand pressure
  Normal: 2.5 to 3.5 in. H_2O below cabin pressure
  Emergency: 3.75 ±0.25 psia
  Flow rate: 0.67 lb per min max
- Suit compressor volumetric flow
  Normal flight: 35 cfm
  Emergency flight: 33.6 cfm
- Automatic temperature control: 45° to 55°F
- Max O_2 flow into suit circuit: 0.66 lb per min (regulator or manual valve)

2.7.4.4 Cabin Pressure and Temperature Control Subsystem.

Performance and design data for the cabin pressure and temperature control subsystem are as follows:

- Heat exchanger cooling capacity: 1250 BTU per hr max
- Regulated cabin pressure: 5.0±0.2 psig
  Flow rate: 0.65 lb per hr (one regulator) and 1.3 lb per hr (two regulators)
- Emergency inflow pressure (maximum of 0.5 in. diameter total leakage area): 3.5 psia for 5 minutes
  Flow rate: 0.67 lb per min max
- Cabin pressure relief
  Positive relief: 6.0 (+0.2, -0.4) psig
  Negative relief: 10 to 25 in. H_2O
- Differential pressure (C/M cabin-to-aft section)
  Normal ascent: 7.0 psig max.
  Abort ascent: 8.6 psig max.
- Automatic temperature control (flight): 70° to 80°F
- O_2 required for cabin repressurization, 0 to 5 psig at 70°F: 9.1 lb

2.7.4.5 Water-Glycol Coolant Subsystem.

Performance and design data for the water-glycol coolant subsystem are as follows:

- Reservoir quantity: 9 lb (approx)
- Total system quantity (less reservoir): 18 lb (approx)
- Evaporator cooling capacity: 7620 BTU per hr max

- Water evaporation rate: 7.5 lb per hr max
- Accumulator quantity: 1.36 lb (approx)
- Pump flow: 200 lb per hr
- Pump pressure
  Inlet: 7.5±1.5 psig
  Outlet (flight): 38(+8, -12) psia
- Automatic temperature control: 40° to 50.5°F

2.7.4.6 Water Supply Subsystem.

Performance and design data for the water supply subsystem are as follows:

- Potable tank quantity: 36 lb
- Waste tank quantity: 56 lb
- S/M water tank quantity: 112 lb (2 tanks)
- S/M nitrogen tank quantity (pressurant): capacity of 3.7 lb, filled to 1.5 lb (approx)
- Nitrogen tank fill pressure: 900 psig
- Nitrogen tank pressure relief setting: 1045±25 psig
- Nitrogen system regulated pressure: 40±2 psig
- Nitrogen system pressure relief setting: 44 to 48 psig
- Overboard dump pressure: approx 32 psi above outside ambient
  Flow rate: 2.5 lb per min max
- Food preparation water supply unit
  Capacity: 1.9 lb
  Hot water: 154°±4°F
  Cold water: 50°F (at water chiller)

2.7.4.7 Waste Management System.

Performance and design data for the waste management system is as follows:

- Urine/water dump nozzle orifice: 0.055 in.

2.7.4.8 ECS Power Consumption Data.

The following list contains the latest available data on electrical power consumed by components of the ECS. The wattage figures are for the earth orbit phase only, and apply to operations during the normal mode (pressurized cabin).

SYSTEMS DATA

Subsystem and Component	Control	No. of Units	Watts per Unit		Total Watts	
			AC	DC	AC	DC
OXYGEN SUPPLY						
O_2 flow transducer	ECS-TRANSDUCER-PRESS GROUPS-2 cb (2)	1		2.4		2.4
O_2 press transducer	ECS-TRANSDUCER-PRESS GROUPS-2 cb (2)	1		0.8		0.8
PRESSURE SUIT CIRCUIT						
Suit compressor	SUIT COMPRESSORS sw	2	85.0		†85.0 170.0	
ΔP sensor	ECS-TRANSDUCER-PRESS GROUPS-1 cb (2)	1		1.28		1.28
CO_2 sensor	ECS-TRANSDUCER-PRESS GROUPS-2 cb (2)	1		1.0		1.0
Diverter valve control unit	SUIT EVAP sw	1	2.5		2.5	
Diverter control valve	SUIT EVAP sw	1	*7.2		*7.2	
Steam press control unit	SUIT EVAP sw	1	2.5		2.5	
Steam press cont valve	SUIT EVAP sw	1	*7.2		*7.2	
Steam duct abs press sensor	SUIT EVAP sw	1		1.28		1.28
Wetness control unit	SUIT EVAP sw	1	5.0		5.0	
Water inflow control valve	SUIT EVAP sw	1		*3.0		*3.0
Wetness sensor	SUIT EVAP sw	1		0.2		0.2
Water-gly temp sensor	SUIT EVAP sw	1		0.001		0.001
Evap outlet air temp sensor	SUIT EVAP sw	1		0.001		0.001

*Intermittent operating components
†Only one component operates at a time

SYSTEMS DATA

Subsystem and Component	Control	No. of Units	Watts per Unit		Total Watts	
			AC	DC	AC	DC
Suit press transducer	ECS-TRANSDUCER-PRESS GROUPS-1 cb (2)	1		0.8		0.8
Suit temp sensor	ECS-TRANSDUCER-TEMP GROUP cb (2)	1	0.04		0.04	
CABIN PRESSURE & TEMP CONTROL						
Cabin air fan	CABIN AIR FAN-1&2 sw (2)	2	19.0		38.0	
Cabin temp control unit	CABIN TEMP-AUTO/MAN sw	1	2.5		2.5	
Cabin temp cont valve	CABIN TEMP-AUTO/MAN sw	1	*7.2		*7.2	
Cabin temp sensor	ECS-TRANSDUCER-TEMP GROUP cb (2)	1		0.001		0.001
Cabin temp anticipator	ECS-TRANSDUCER-TEMP GROUP cb (2)	1		0.001		0.001
Cabin press transducer	ECS-TRANSDUCER-PRESS GROUPS-2 cb (2)	1		0.8		0.8
WATER-GLYCOL COOLANT						
Water-glycol pump	ECS GLYCOL sw	2	36.0		†36.0	
Pump outlet press transducer	ECS-TRANSDUCER-PRESS GROUPS-1 cb (2)	1		0.8		0.8
Water-gly accum qty sensor	ECS-TRANSDUCER-PRESS GROUPS-1 cb (2)	1		0.8		0.8

*Intermittent operating components
†Only one component operates at a time

SYSTEMS DATA

Subsystem and Component	Control	No. of Units	Watts per Unit		Total Watts	
			AC	DC	AC	DC
Water-gly temp control unit	GLYCOL EVAP-TEMP IN sw	1	2.5		2.5	
Water-gly temp control valve	GLYCOL EVAP-TEMP IN sw	1	*7.2		*7.2	
Water-gly temp sensor	GLYCOL EVAP-TEMP IN sw; GLY EVAP-STEAM PRESS-AUTO/MAN sw; GLYCOL EVAP-H_2O FLOW sw	5		0.001		0.005
Steam press control unit	GLY EVAP-STEAM PRESS-AUTO/MAN sw	1	2.5		2.5	
Steam press cont valve	GLY EVAP-STEAM PRESS-INCR/DECR sw	1	*7.2		*7.2	
Steam duct press switch	ECS-TRANSDUCER-PRESS GROUPS-1 cb (2)	1	TBD	TBD	TBD	TBD
Water control unit	GLYCOL EVAP-H_2O FLOW sw	1	5.0		5.0	
Water control valve	GLYCOL EVAP-H_2O FLOW sw	1		*3.0		*3.0
Wick temp sensor	GLYCOL EVAP-H_2O FLOW sw	1		0.28		0.28
Rad outlet temp sensor	ECS-TRANSDUCER-TEMP GROUP cb (2)	1	0.04		0.04	
Rad isolation valve	ECS RADIATOR sw (4)	4	*14.4		*57.6	

*Intermittent operating components

SYSTEMS DATA

Subsystem and Component	Control	No. of Units	Watts per Unit		Total Watts	
			AC	DC	AC	DC
WATER SUPPLY						
Pot water qty transducer	ECS-TRANSDUCER-WASTE & POT H_2O-MN A&B cb (2)	1		1.28		1.28
Waste water qty transducer	ECS-TRANSDUCER-WASTE & POT H_2O MN A&B cb (2)	1		1.28		1.28
Food prep water supply unit	POT H_2O HEATER sw	1		*45.0		*45.0
H_2O accum control unit	H_2O ACCUM-AUTO/MAN sw	1		3.0		3.0
H_2O accum valve	H_2O ACCUM-ON/OFF sw	2		*3.0		*3.0
H_2O accum fail sensor	ECS-H_2O ACCUM-MN A&B cb (2)	1		1.5		1.5
S/M water tank shut-off valve	WASTE H_2O TK REFILL sw	2		*160.0		*160.0
MISCELLANEOUS						
WMS blower	WASTE MANAGEMENT SELECTOR valve	1	*20.0			*20.0
Urine/water dump nozzle heater	ECS-STEAM DUCT HTR-MN A&B cb (2)	1		5.7		5.7
Steam duct heater	ECS-STEAM DUCT HTR-MN A&B cb (2)	2		3.0		6.0
Temp xducer pwr supply	ECS-TRANSDUCER-TEMP GROUP cb (2)	1		10.5		10.5

*Intermittent operating components

SYSTEMS DATA

Subsystem and Component	Control	No. of Units	Watts per Unit		Total Watts	
			AC	DC	AC	DC
Temp sensor amplifier	ECS-TRANSDUCER-TEMP GROUP cb (2)	5	0.04		0.2	
Steam duct temp sensor signal conditioner	ECS-TRANSDUCER-TEMP GROUP cb (2)	1		1.5		1.5
Gas chromatograph	GAS ANAL—AC 1 cb	1	9		9	

*Intermittent operating components

2.7.5 OPERATIONAL LIMITATIONS AND RESTRICTIONS

2.7.5.1 ECS Caution Placards.

Caution notes bordered by yellow and black stripes appear adjacent to the postlanding vent valves in the forward tunnel area. The notes read, "POST LANDING VENT VALVE—PULL PIN BEFORE OPERATING VENT FAN." If the pins were not in place during flight, inadvertent opening of the cabin vent valves would immediately dump all cabin pressure, with possible catastrophic results.

A placard on each CO_2-odor absorber canister cover cautions the crewman to "PUSH BUTTON BEFORE OPENING," and includes an arrow to indicate direction button should be pushed. This instruction must be followed any time a canister cover is to be opened. By pressing the push-button, the differential pressure is equalized and the cover may then be removed.

The caution note on LHEB-314 pertains to filling the PLSS oxygen tanks and, therefore, is not applicable to earth orbital (Block 1) missions. It reads, "CAUTION 900 PSI CLOSE VALVE BEFORE REMOVING CAP."

2.7.5.2 ECS Caution Notes.

Design restrictions require that certain procedures be followed when positioning the inlet and outlet selector valves of the tank pressure regulator and relief valve assembly. If the inlet selector valve is placed to position 1 (or 2), the outlet selector valve must also be placed to position 1 (or 2) or to NORMAL position. This prevents shutting off the supply of oxygen for pressurizing the potable and waste water tanks and the water-glycol reservoir. Conversely, if the outlet selector valve is placed to position 1 (or 2), the inlet selector valve must be placed to position 1 (or 2) or to NORMAL position.

2.7.5.3 ECS General Data.

Several ECS controls are inaccessible during the mission. Those affected are located behind the two removable Y-axis attenuator panels in the LHEB. They include all controls mounted on LHEB-311, the suit circuit return air manual valve, and the diverter valve handle for the CO_2-odor absorber canisters. The attenuator panels are in place during the entire mission, but are removed to gain access to these ECS controls, and then immediately reinstalled. They provide an adequate bearing surface for the Y-axis attenuator shock strut pad for the landing impact.

The circuit breaker for the postlanding ventilation system is not engaged until after landing impact. This precaution, in conjunction with the lockpins previously inserted in the postlanding vent valves, assures that the cabin pressure will not be inadvertently dumped during flight.

High-oxygen flow during cabin repressurization, or when filling an empty (150 psia min) surge tank, may cause water-glycol freezing. This will occur when there is less than full flow through the warm water-glycol line upon which the flow restrictors are wound. Full coolant flow at this location, therefore, may be assured in the following manner. Between 15 and 30 minutes prior to anticipated high oxygen flow, set the GLYCOL EVAP-TEMP IN switch (MDC-13) to MAN, and override the GLYCOL EVAP TEMP IN valve (LHEB-311) to the full cool position.

Radiator heat rejection (as freezing) is a function of radiator inlet temperature and radiator orientation. Thus, if the radiator inlet temperature decreases to 75°F, the S/C must be placed in a 2 to 5 RPH (0.2 to 0.5 degree per second) roll rate. During this time radiator inlet temperature must not decrease below 70°F, or the individual radiator outlet temperature below 30°F.

2.7.5.4 Cabin Depressurization Rates.

The time required for the C/M cabin to become depressurized is contingent upon how pressure is released. If the cabin is intentionally dumped, the time it takes to reach zero pressure will be as shown in figure 2.7-11, sheet 1 of 2. However, if the pressure is lost as the result of meteoroid punctures, the time will vary according to the size and number of holes. Figure 2.7-11, sheet 2 of 2, only reflects flow rate data for meteoroid holes that do not exceed a total equivalent area of 0.5 in. in diameter. The same chart also applies to the flow rate of one cabin pressure relief valve that has failed open while in the NORMAL position.

2.7.5.5 Cabin Repressurization Rates.

The C/M cabin may be repressurized by using either of two flow rates. To return the cabin pressure to normal in the shortest possible time, the conditions as set forth in figure 2.7-12, sheet 1 of 2, must be complied with. The flow rate, however, is dependent upon a full supply of oxygen in the

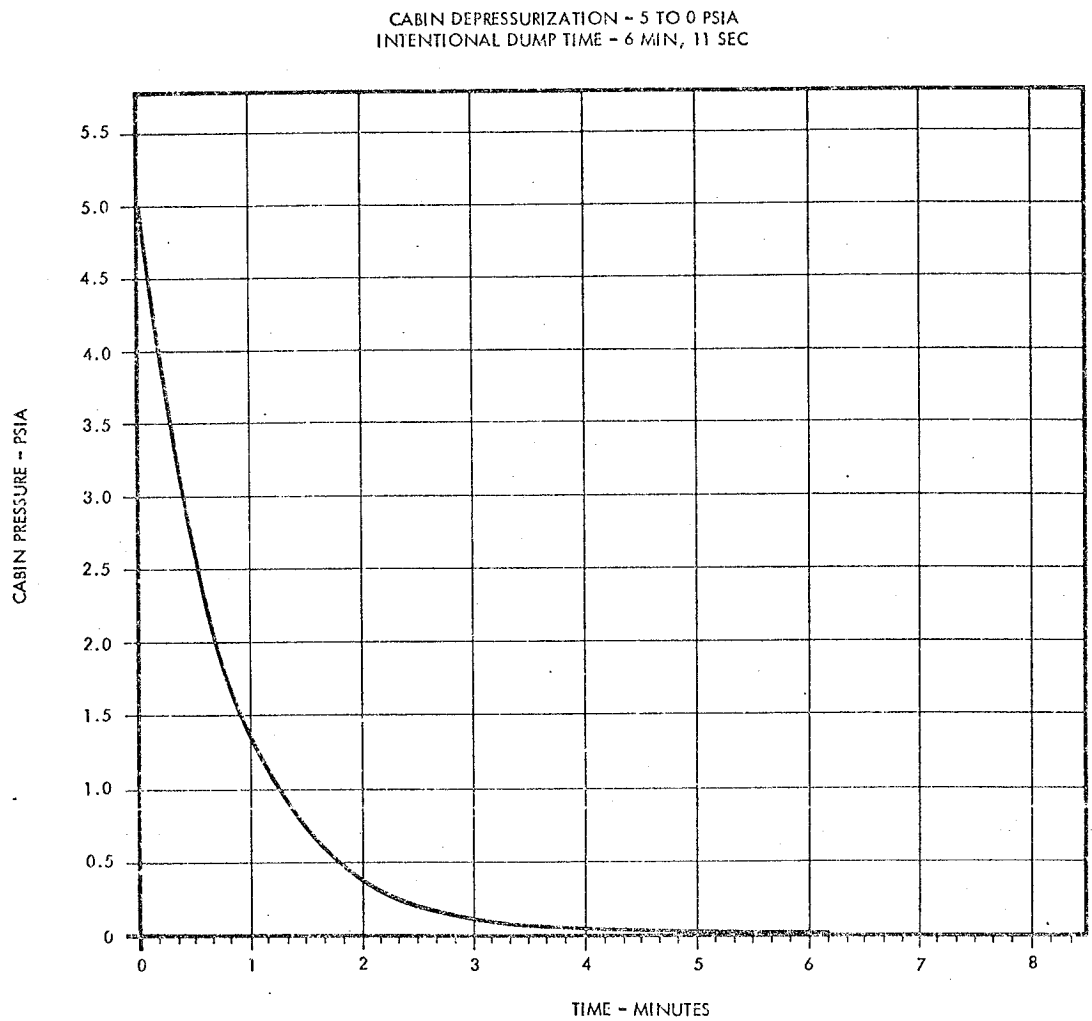

CONDITIONS:
1. EMERGENCY CABIN PRESSURE selector valve set to OFF.
2. CABIN REPRESS manual valve set to close.
3. CABIN PRESSURE RELIEF valve set to DUMP.
4. Normal cabin pressure regulators automatically close at 3.5 psia.

SM-2A-890

Figure 2.7-11. Cabin Depressurization Rates (Sheet 1 of 2)

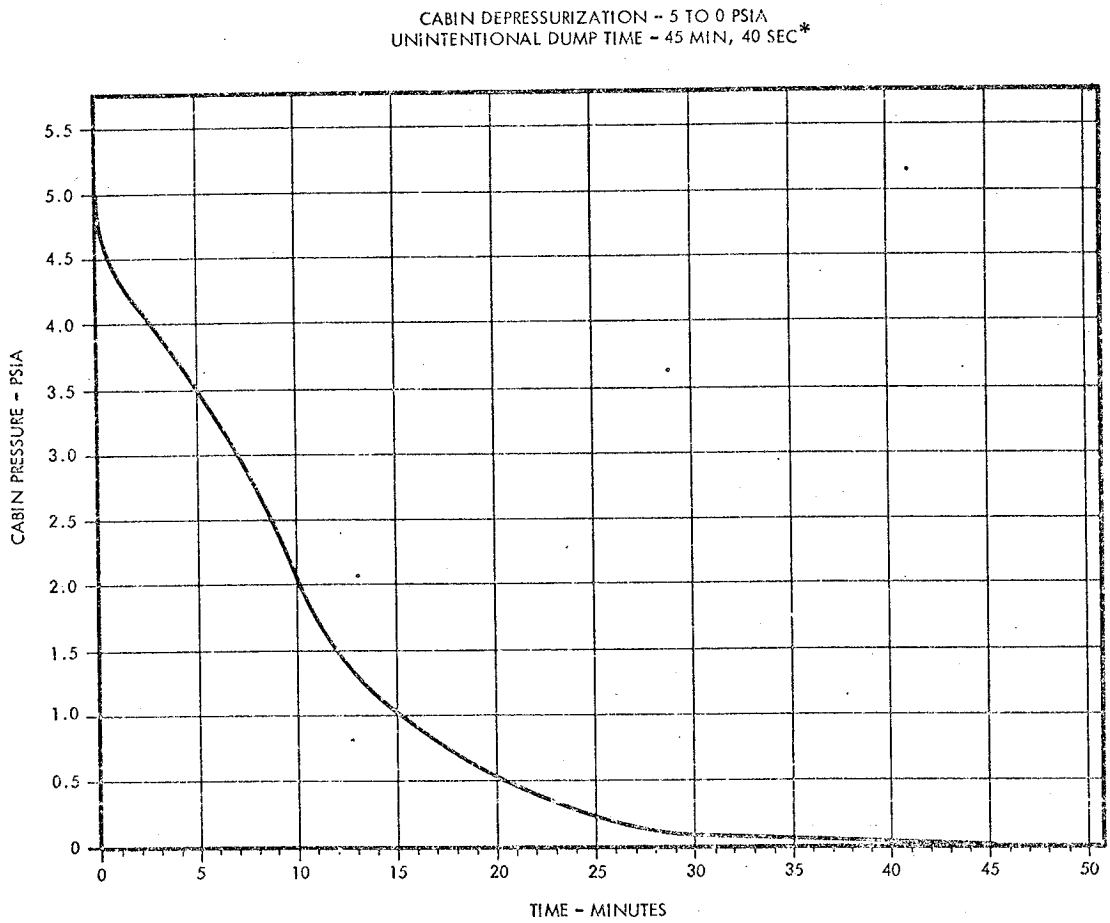

CONDITIONS:
1. EMERGENCY CABIN PRESSURE selector valve set to NORMAL.
2. CABIN REPRESS manual valve set to close
3. CABIN PRESSURE RELIEF valves set to NORMAL.
4. Normal cabin pressure regulators automatically closed at 3.5 psia.
5. EMERGENCY CABIN PRESSURE selector valve set to OFF position when pressure reaches 3.5 psia (5 minutes).

*Depressurization is through a 0.5-inch-diameter (or equivalent) meteoroid puncture, or the maximum flow through one CABIN PRESSURE RELIEF valve that fails open while in the NORMAL position.

SM-2A-083

Figure 2.7-11. Cabin Depressurization Rates (Sheet 2 of 2)

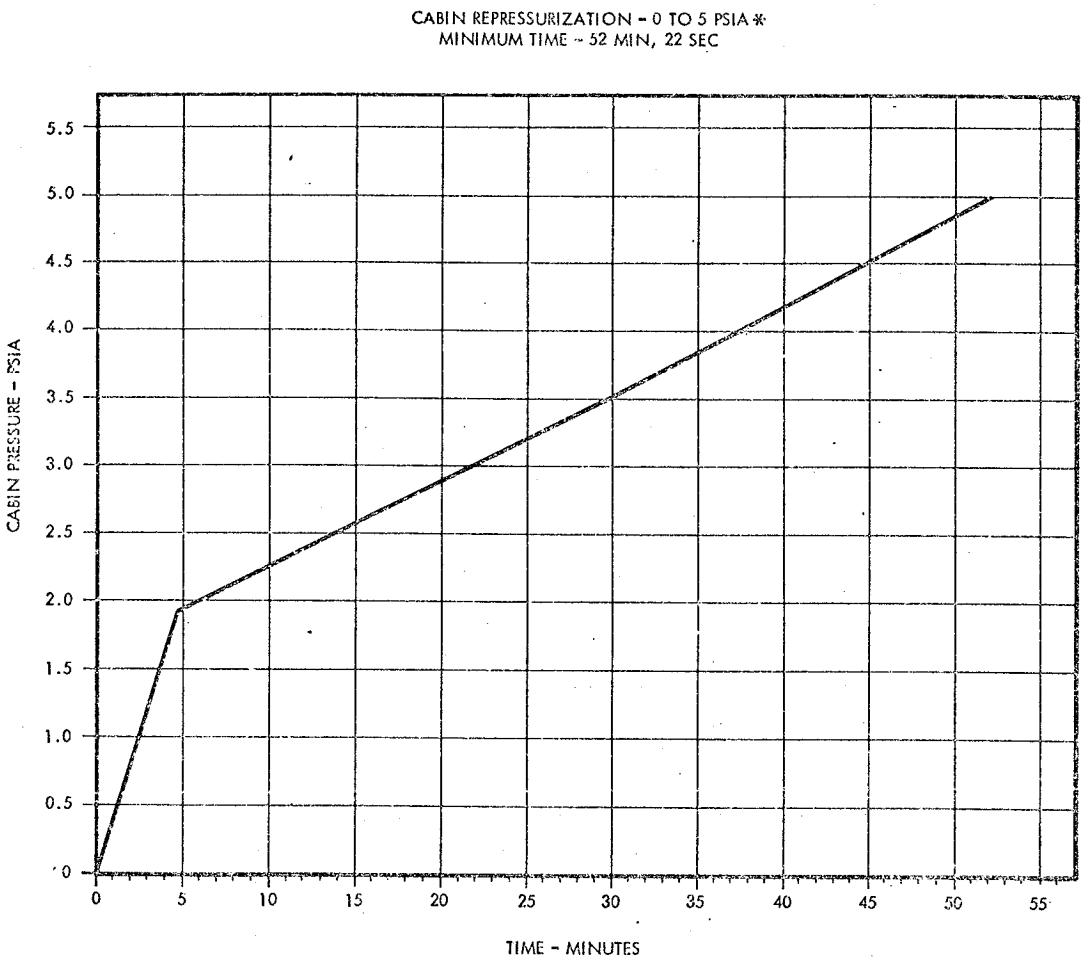

CONDITIONS:
1. EMERGENCY CABIN PRESSURE selector valve set to NORMAL.
2. CABIN REPRESS manual valve set to OPEN.
3. When surge tank pressure indicator decreases to 150 psia, EMERGENCY CABIN PRESSURE selector valve set to OFF; surge tank minimum pressure (150 psia) maintained by regulating CABIN REPRESS manual valve until valve is full open and surge tank pressure starts to increase.
4. Normal cabin pressure regulators automatically open at 3.5 psia.
5. When surge tank pressure again decreases to 150 psia, CABIN REPRESS manual valve regulated to maintain this minimum surge tank pressure.
6. When cabin pressure indicator reaches 5.0 psia, normal cabin pressure regulators automatically close and CABIN REPRESS manual valve set to close.

* Requires 9.1lb oxygen at 70°F cabin temperature

SM-2A-889A

Figure 2.7-12. Cabin Repressurization Rates (Sheet 1 of 2)

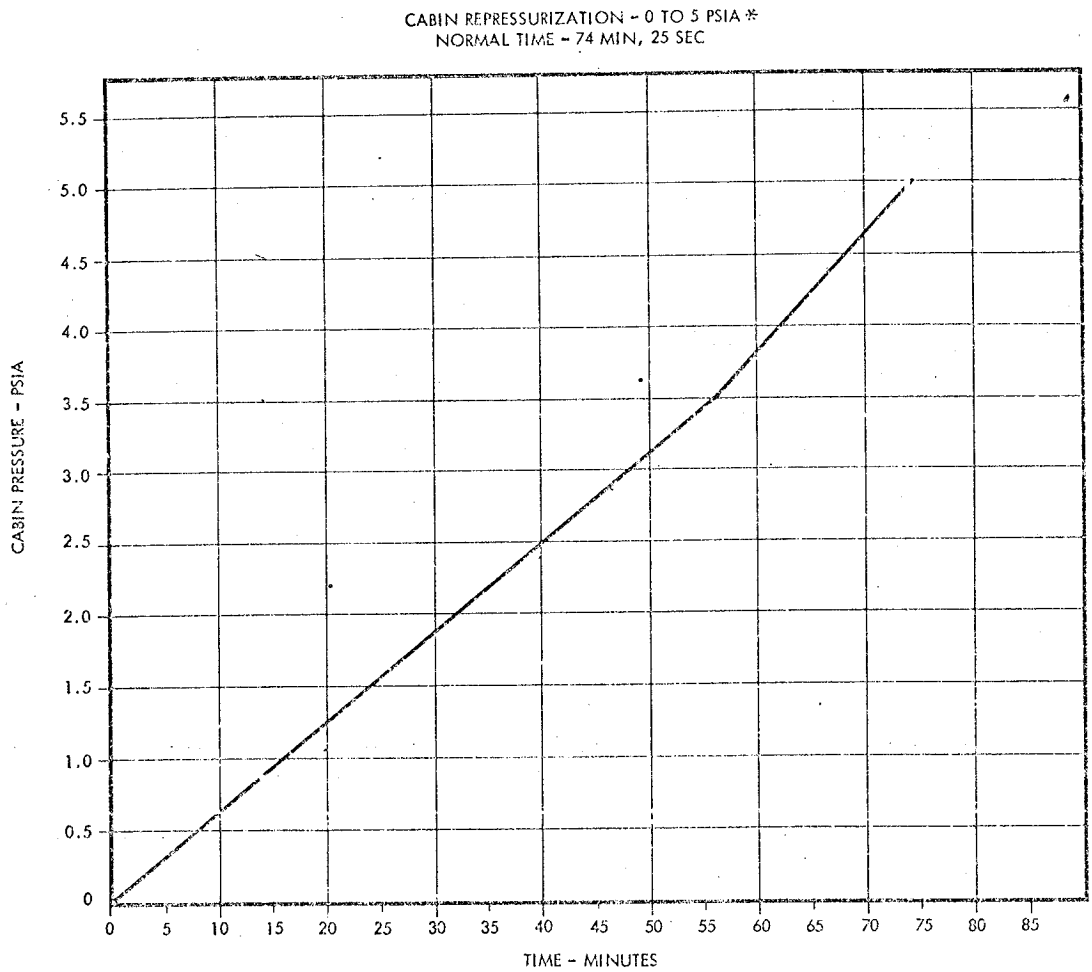

CONDITIONS:
1. EMERGENCY CABIN PRESSURE selector valve set to OFF.
2. CABIN REPRESS manual valve set to OPEN.
3. Normal cabin pressure regulators automatically open at 3.5 psia.
4. When cabin pressure indicator reaches 5.0 psia, normal cabin pressure regulators automatically close and CABIN REPRESS manual valve set to close.

* Requires 9.1lb oxygen at 70°F cabin temperature

SM-2A-887A

Figure 2.7-12. Cabin Repressurization Rates (Sheet 2 of 2)

surge tank. When the surge tank is not full, or the repressurization time is not critical, the conditions for the flow rate as shown in figure 2.7-12, sheet 2 of 2, are used.

2.7.6 TELEMETRY MEASUREMENTS.

The following is a complete list of all ECS telemetry data that is monitored by flight controllers and ground support personnel. The last column contains the name and type of S/C crew display. The display utilizes the same pickoff or signal source as telemetry, unless a separate measurement number is included in the display column.

An asterisk (*) by the measurement number denotes information which is not available for recording or telemetry transmission during PCM low-bit rate operation.

Measurement Number	Description	Sensor Range	Normal Operating Range	Crew Display
CF 0001 P	Pressure cabin	0/17 psia	5.0±0.2 psia	PRESS - CABIN indicator
CF 0002 T	Temp cabin	40/125°F	70° to 80°F	TEMP - CABIN indicator
CF 0005 P	Press CO_2 partial	0/30 mm Hg	<7.6 mm Hg	PART PRESS CO_2 indicator and CO_2 PP HI C&W light
*CF 0006 P	Press surge tank	50/1050 psia	900±35 psia	TANK PRESS - 1 - O_2 indicator
*CF 0008 T	Temp suit supply manf	20/95°F	55°F	TEMP - SUIT indicator
CF 0009 Q	Quantity waste water tank	0/100%	Variable	WATER - QUANTITY indicator
CF 0010 Q	Quantity potable H_2O tank	0/100%	Variable	WATER - QUANTITY indicator
CF 0012 P	Press suit demand reg sense	0/17 psia	3.75±0.25 psia	PRESS - SUIT indicator
CF 0015 P	Press suit compressor diff	0/1 psid	Min 0.3 to 0.4 psid	ΔP SUIT COMPR indicator
CF 0016 P	Press glycol pump outlet	0/60 psia	37 to 45 psia	PRESS GLY DISCH indicator

SYSTEMS DATA

Measurement Number	Description	Sensor Range	Normal Operating Range	Crew Display
*CF 0017 T	Temp glycol evap outlet steam	20/95°F	>45°F	None
CF 0018 T	Temp glycol evap outlet liquid	25/75°F	40° to 50.5°F	GLY EVAP - OUTLET TEMP indicator
CF 0019 Q	Quantity glycol accum	0/100%	40 to 60%	GLY ACCUM - QUANTITY indicator
CF 0020 T	Temp space radiator outlet	-50/+100°F	Variable	ECS RAD - OUTLET TEMP indicator and GLYCOL TEMP LOW C&W light
*CF 0025 P	Press pump package inlet	0/60 psia	7 psi min	None
CF 0034 P	Back press glycol evaporator	0.05/0.25 psia	0.098 to 0.154 psia	GLY EVAP STEAM PRESS indicator
CF 0035 R	Flow rate ECS O_2	0.2/1.0 lb/hr	0.425 lb/hr	FLOW O_2 indicator
*CF 0036 P	Press outlet O_2 reg supply	0/150 psia	100±10 psia	None
*CF 0120 P	Press H_2O and glycol tanks	0/50 psia	18 to 35 psid	None
*CF 0135 R	Flow rate manifold inlet to suit 1	0/0.2 lb/hr	TBD	None
*CF 0136 R	Flow rate manifold inlet to suit 2	0/0.2 lb/hr	TBD	None
*CF 0137 R	Flow rate manifold inlet to suit 3	0/0.2 lb/hr	TBD	None
*CF 0148 P	DP supply and return manifold	0/0.8 psid	0.25 to 0.5 psid	None
*CF 0153 T	Temp compressor inlet	50/125°F	TBD	None
*CF 0184 T	Temp CO_2 absorber outlet	90/200°F	TBD	None

SYSTEMS DATA

Measurement Number	Description	Sensor Range	Normal Operating Range	Crew Display
*CF 0245 T	Temp O_2 reg inlet	-50/+150°F	TBD	None
*CF 0326 P	Press potable H_2O tank drain	0/50 psia	18 to 35 psid	None
*CF 0327 P	Press waste H_2O tank drain	0/50 psia	18 to 35 psid	None
*CF 0481 T	Temp CP branch 1 inlet	40/150°F	TBD	None
*CF 0482 T	Temp CP branch 1 outlet	40/150°F	TBD	None
*CF 0483 T	Temp CP branch 2 inlet	40/150°F	TBD	None
*CF 0484 T	Temp CP branch 2 outlet	40/150°F	TBD	None
*CF 0549 P	Diff press coldplate branch 1	0/2.0 psid	TBD	None
*CF 0550 P	Diff press coldplate branch 2	0/10 psid	TBD	None
CT 0108 K	Gas analysis - suit and cabin	N/A	N/A	None
SF 0665 T	Temp space radiator inlet	60/150°F	Variable	None
SF 0671 T	Temp ECS radiator outlet 1	0/50°F	Variable	ECS RAD OUT TEMP-1 indicator
SF 0672 T	Temp ECS radiator outlet 2	0/50°F	Variable	ECS RAD OUT TEMP-2 indicator

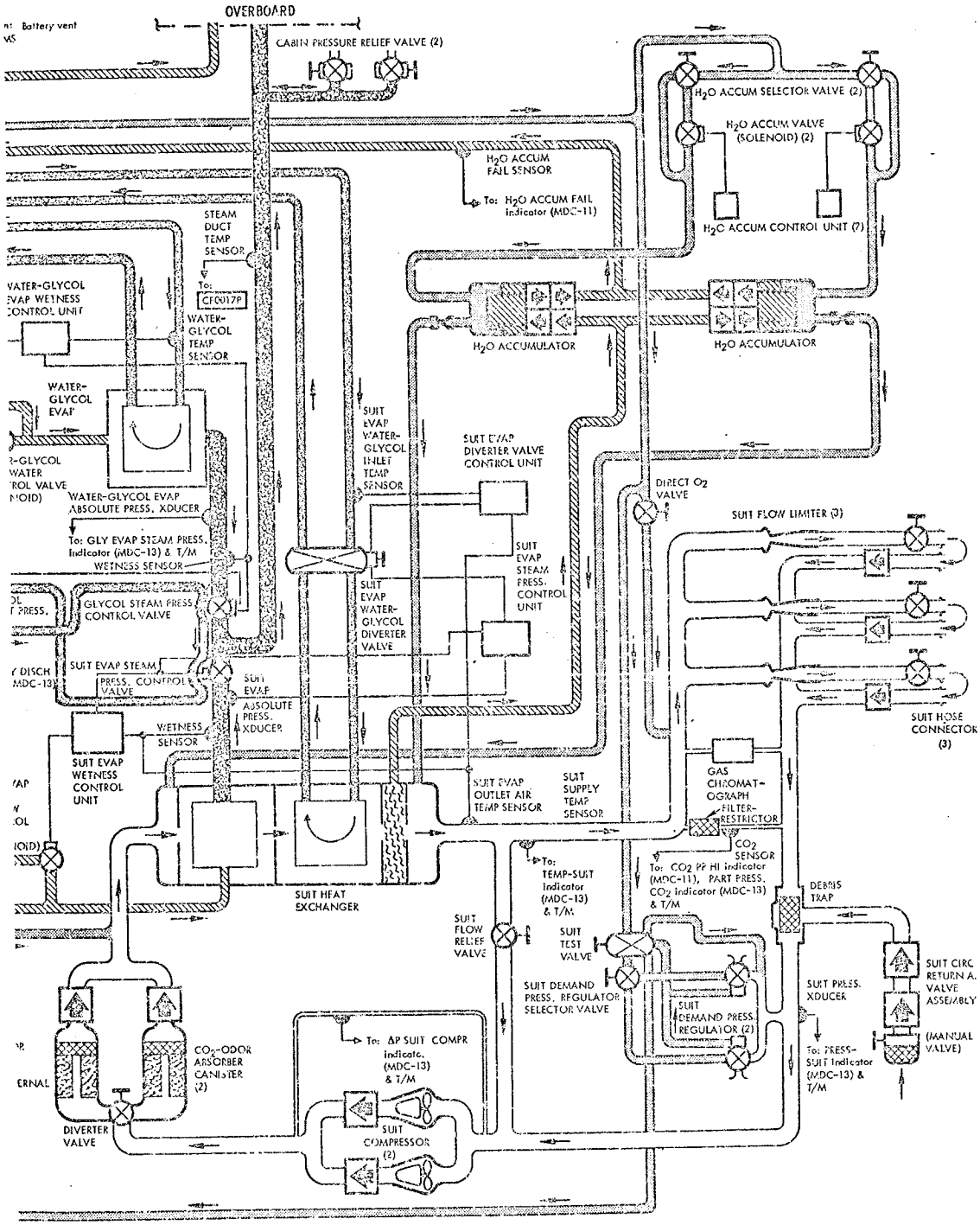

Figure 2.7-13. ECS Schematic Diagram

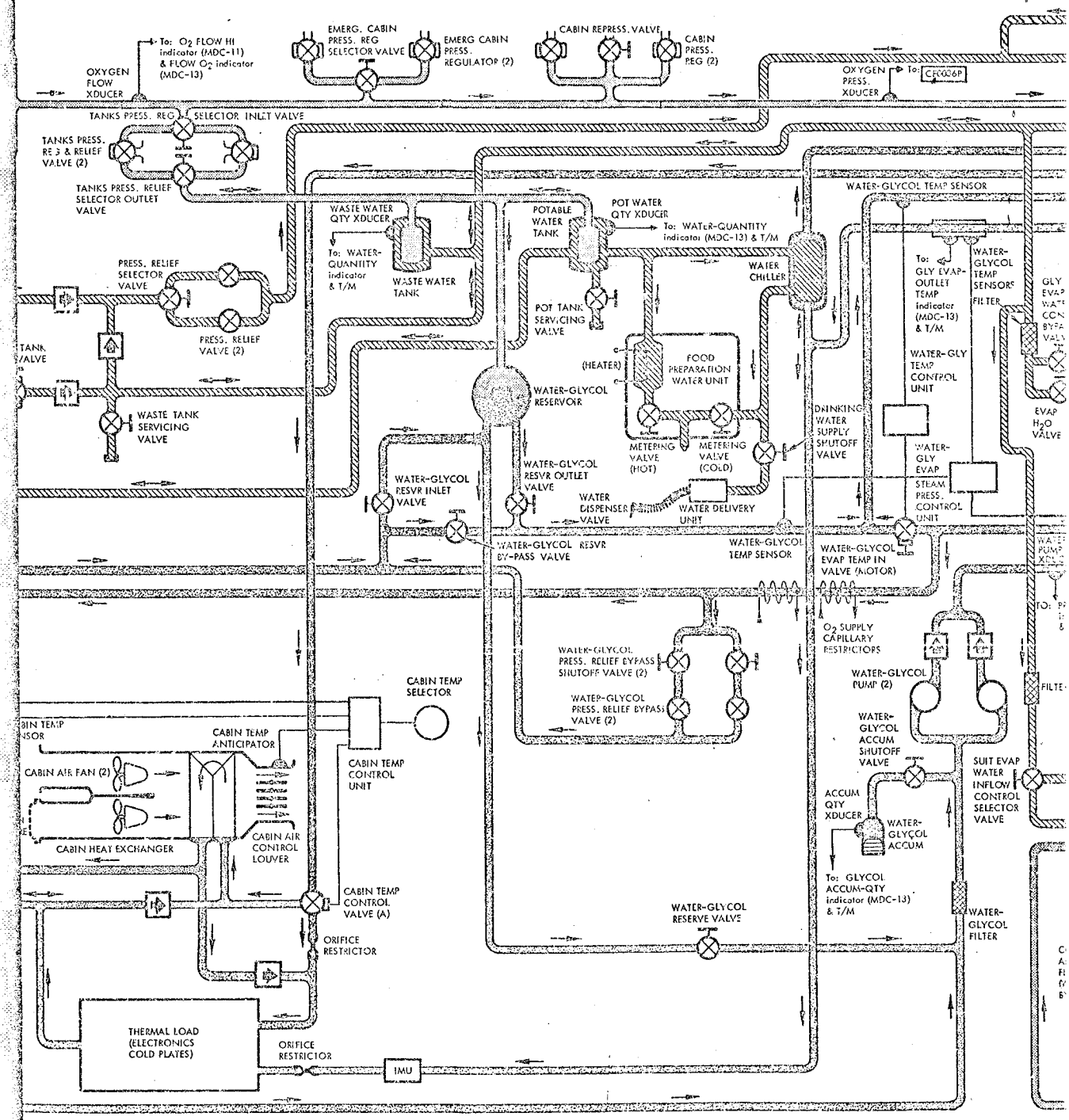
OXYGEN FLOW XDUCER
To: O2 FLOW HI indicator (MDC-11) & FLOW O2 indicator (MDC-13)
EMERG. CABIN PRESS. REG SELECTOR VALVE
EMERG CABIN PRESS. REGULATOR (2)
CABIN REPRESS. VALVE
CABIN PRESS. REG (2)
OXYGEN PRESS. XDUCER
To: CFC026P
TANKS PRESS. REG & SELECTOR INLET VALVE
TANKS PRESS. REG & RELIEF VALVE (2)
TANKS PRESS. RELIEF SELECTOR OUTLET VALVE
WASTE WATER QTY XDUCER
To: WATER-QUANTITY indicator & T/M
WASTE WATER TANK
POTABLE WATER TANK
POT WATER QTY XDUCER
To: WATER-QUANTITY indicator (MDC-13) & T/M
WATER-GLYCOL TEMP SENSOR
WATER CHILLER
To: GLY EVAP-OUTLET TEMP indicator (MDC-13) & T/M
WATER-GLYCOL TEMP SENSORS
FILTER
PRESS. RELIEF SELECTOR VALVE
PRESS. RELIEF VALVE (2)
POT TANK SERVICING VALVE
(HEATER)
FOOD PREPARATION WATER UNIT
WATER-GLY TEMP CONTROL UNIT
WASTE TANK SERVICING VALVE
WATER-GLYCOL RESERVOIR
DRINKING WATER SUPPLY SHUTOFF VALVE
EVAP H2O VALVE
METERING VALVE (HOT)
METERING VALVE (COLD)
WATER-GLY EVAP STEAM PRESS. CONTROL UNIT
WATER-GLYCOL RESVR INLET VALVE
WATER-GLYCOL RESVR OUTLET VALVE
WATER DISPENSER VALVE
WATER DELIVERY UNIT
WATER-GLYCOL RESVR BY-PASS VALVE
WATER-GLYCOL TEMP SENSOR
WATER-GLYCOL EVAP TEMP IN VALVE (MOTOR)
O2 SUPPLY CAPILLARY RESTRICTORS
WATER-GLYCOL PRESS. RELIEF BYPASS SHUTOFF VALVE (2)
WATER-GLYCOL PRESS. RELIEF BYPASS VALVE (2)
WATER-GLYCOL PUMP (2)
CABIN TEMP SELECTOR
CABIN TEMP ANTICIPATOR
CABIN AIR FAN (2)
CABIN TEMP CONTROL UNIT
WATER-GLYCOL ACCUM SHUTOFF VALVE
SUIT EVAP WATER INFLOW CONTROL SELECTOR VALVE
ACCUM QTY XDUCER
WATER-GLYCOL ACCUM
CABIN HEAT EXCHANGER
CABIN AIR CONTROL LOUVER
To: GLYCOL ACCUM-QTY indicator (MDC-13) & T/M
CABIN TEMP CONTROL VALVE (A)
WATER-GLYCOL RESERVE VALVE
WATER-GLYCOL FILTER
ORIFICE RESTRICTOR
THERMAL LOAD (ELECTRONICS COLD PLATES)
ORIFICE RESTRICTOR
IMU

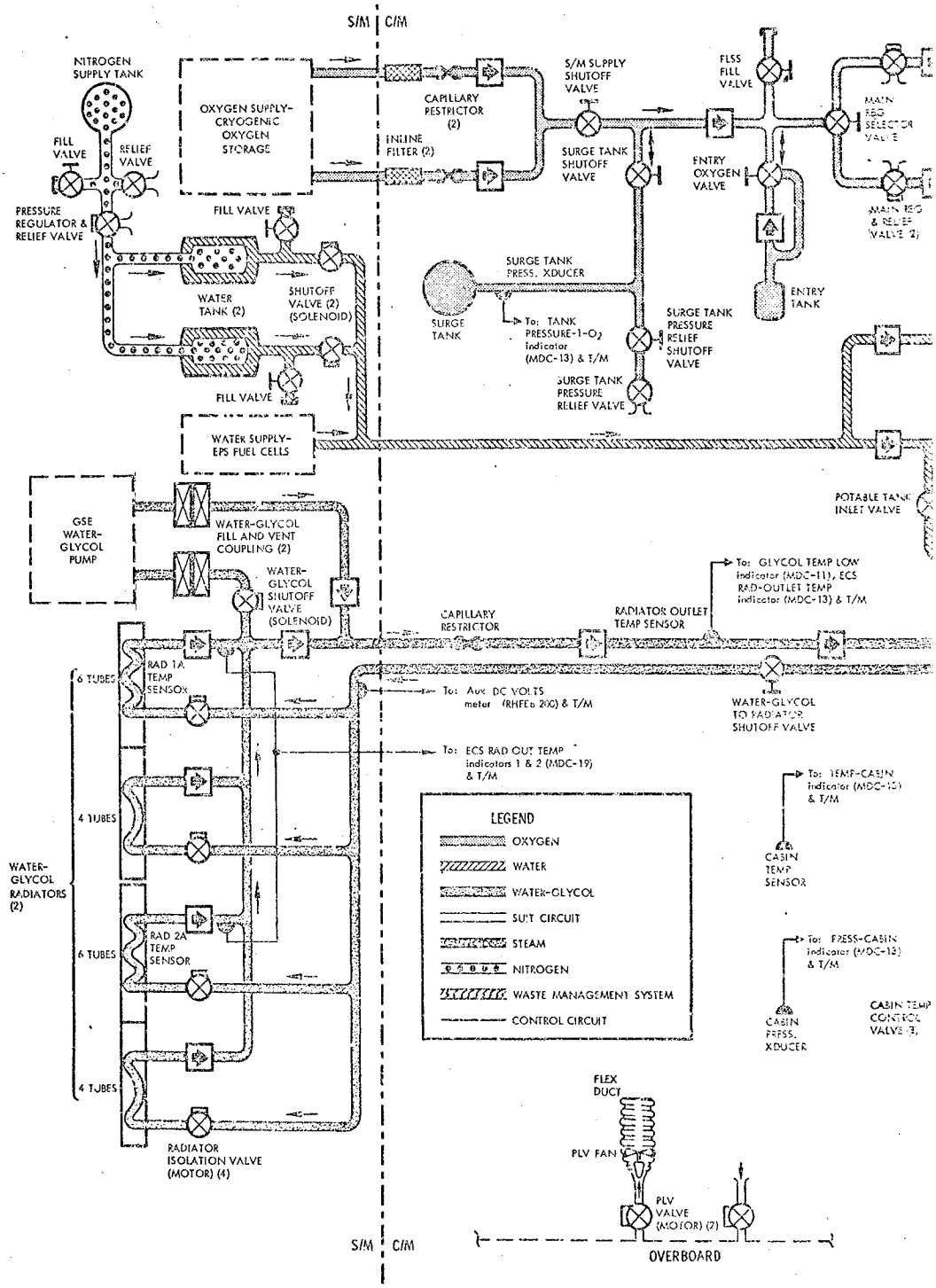
S/M
C/M
NITROGEN SUPPLY TANK
FILL VALVE
RELIEF VALVE
PRESSURE REGULATOR & RELIEF VALVE
OXYGEN SUPPLY-CRYOGENIC OXYGEN STORAGE
CAPILLARY RESTRICTOR (2)
INLINE FILTER (2)
S/M SUPPLY SHUTOFF VALVE
FLSS FILL VALVE
SURGE TANK SHUTOFF VALVE
ENTRY OXYGEN VALVE
ENTRY TANK
FILL VALVE
WATER TANK (2)
SHUTOFF VALVE (2) (SOLENOID)
FILL VALVE
SURGE TANK PRESS. XDUCER
SURGE TANK
To: TANK PRESSURE-1-O2 indicator (MDC-13) & T/M
SURGE TANK PRESSURE RELIEF SHUTOFF VALVE
SURGE TANK PRESSURE RELIEF VALVE
WATER SUPPLY-EPS FUEL CELLS
POTABLE TANK INLET VALVE
GSE WATER-GLYCOL PUMP
WATER-GLYCOL FILL AND VENT COUPLING (2)
WATER-GLYCOL SHUTOFF VALVE (SOLENOID)
To: GLYCOL TEMP LOW indicator (MDC-11), ECS RAD-OUTLET TEMP indicator (MDC-13) & T/M
CAPILLARY RESTRICTOR
RADIATOR OUTLET TEMP SENSOR
To: Aux DC VOLTS meter (RHFEb 20C) & T/M
WATER-GLYCOL TO RADIATOR SHUTOFF VALVE
6 TUBES
RAD 1A TEMP SENSOR
To: ECS RAD OUT TEMP indicators 1 & 2 (MDC-19) & T/M
4 TUBES
WATER-GLYCOL RADIATORS (2)
6 TUBES
RAD 2A TEMP SENSOR
4 TUBES
RADIATOR ISOLATION VALVE (MOTOR) (4)
LEGEND
OXYGEN
WATER
WATER-GLYCOL
SUIT CIRCUIT
STEAM
NITROGEN
WASTE MANAGEMENT SYSTEM
CONTROL CIRCUIT
To: TEMP-CABIN indicator (MDC-13) & T/M
CABIN TEMP SENSOR
To: PRESS-CABIN indicator (MDC-13) & T/M
CABIN PRESS. XDUCER
CABIN TEMP CONTROL VALVE (3)
FLEX DUCT
PLV FAN
PLV VALVE (MOTOR) (7)
OVERBOARD
S/M
C/M

SECTION 2

SUBSECTION 2.8

TELECOMMUNICATION SYSTEM

2.8.1 INTRODUCTION.

The telecommunication (T/C) system includes the spacecraft (S/C) communications and data equipment required for voice communications; acquisition, processing, storage and transmission of operational and flight qualification telemetry (TLM), television (TV), and biomedical data; reception of up-data; and transmission of appropriate tracking and ranging signals. At least part of the T/C system will be in operation during all phases of the mission—from prelaunch through recovery. The following list summarizes T/C capabilities as utilized on SC-012.

- S/C intercommunications between crewman
- Hardline voice communications and transmission of TV and TLM data to the Launch Control Center (LCC) via the service module umbilical (USM) during prelaunch
- In-flight voice communications with the manned spaceflight network (MSFN)
- Voice tape recording of comments, observations, opinions, etc., with time correlation
- Acquisition and processing of TLM, TV, and operational biomedical data from the S/C structure and systems, TV camera, and crewman biomedical sensors, respectively
- TLM data storage
- Transmission of real-time or stored TLM data
- Reception of up-data (guidance and navigation, and timing data and real-time commands) from the MSFN
- Transmission of C-band tracking pulses in response to received radar signals
- Limited capabilities for S-band operation, including transmission of voice and TLM data plus TV, stored analog, or pseudo-random noise (PRN), ranging codes, and reception of voice and up-data
- Postlanding recovery aids including voice communications and recovery beacon transmission

- Generation of timing signals for synchronization of the T/C and other S/C systems.

2.8.2 FUNCTIONAL DESCRIPTION.

The functional description of the T/C system is divided into four parts: voice communications, data operations, tracking and ranging, and S-band operations. The unified S-band subsystem (USBS), used for all S-band operations, provides back-up voice, data, tracking and ranging capabilities, and the sole means for transmission of TV or analog data.

2.8.2.1 Voice Communications.

2.8.2.1.1 General.

All S/C voice communications (figure 2.8-1) originate and terminate in the crewmen's personal communication assemblies (headsets). Each crewman has two headsets; one is located in the "bump-hat" for use while wearing the constant-wear garment; the other is located in the spacesuit helmet. Each headset is comprised of two independently operating earphones and two microphones with self-contained preamplifiers. The headsets are used for all voice transmission and reception.

Each crewman's headset is connected to the audio center (A/C) equipment by a separate electrical umbilical assembly, commonly referred to as a "cobra cable." In addition to the audio circuits, each of the three cobra cables contains wiring for the operational biomedical sensors in the constant wear garments and the push-to-talk (PTT) control circuitry. The PTT control circuitry consists of a pushbutton-type PTT key and a PTT/CW selector switch. With the PTT/CW selector switch in the PTT position, the PTT key permits manual control of voice transmission by the appropriate transmitter and mike amplifier circuit in the audio center module.

The PTT mode was designed to be used during the launch phase of the mission when high noise levels would preclude usage of the VOX circuitry. In this mode, the PTT key will enable the microphone amplifier, voice recorder, VHF-AM and S-Band transmitters if the latter three have their attendant control switches configured properly. The audio center power switch and the cobra cable mode switch would be in PTT position during this mode.

The CW mode was also designed to be used during the high-noise levels of the launch phase. In this mode, however, the VHF and S-band downvoice communications links are not enabled. This gives us a PTT controlled intercommunications. The voice recorder could also be enabled in this mode if needed. The audio center power switch would also be in the PTT position, but the mode switch on the cobra cable must be in the CW position. It should be noted that on older cobra cables, the CW position was used only for emergency key. Now, this position will be used for both

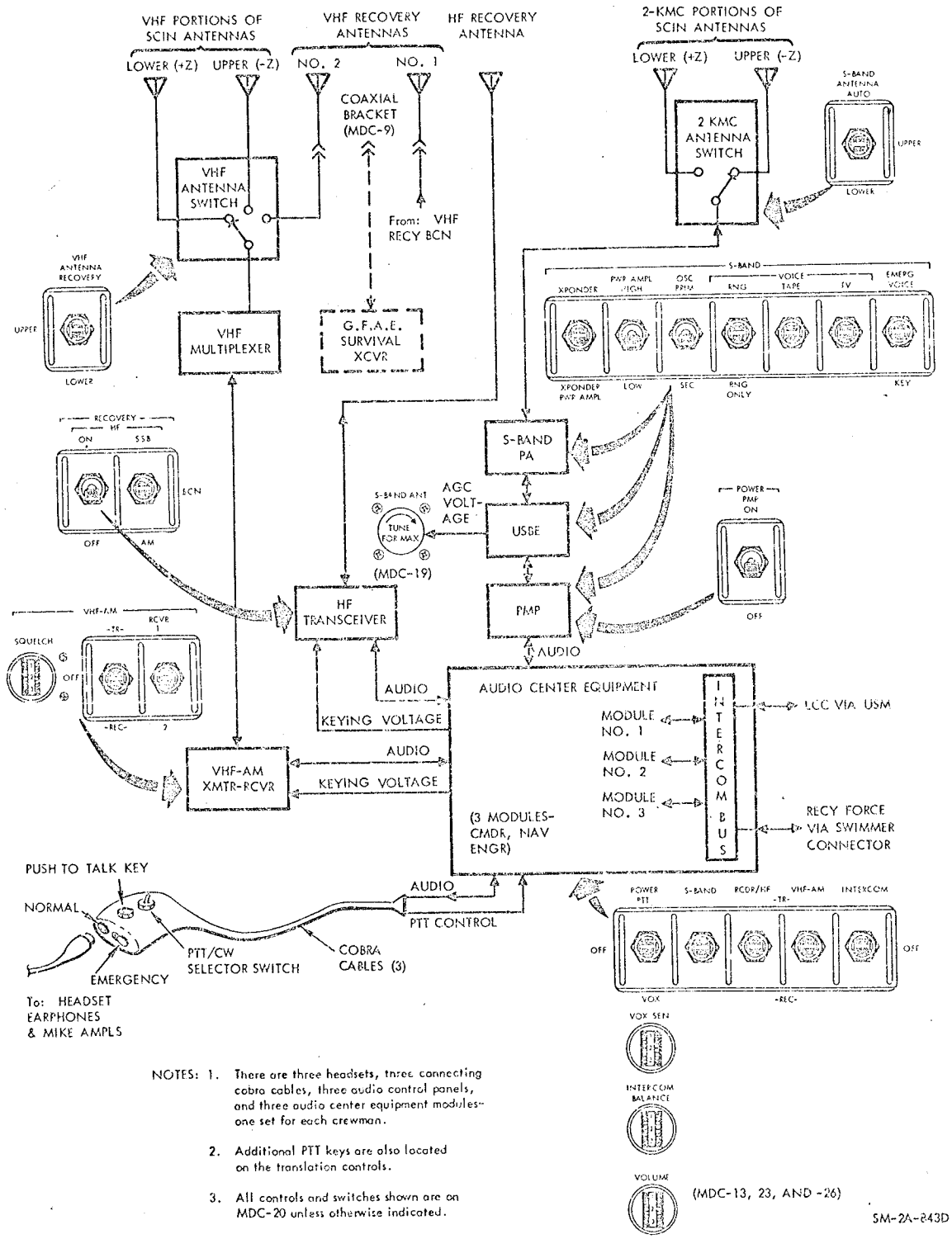

NOTES: 1. There are three headsets, three connecting cobra cables, three audio control panels, and three audio center equipment modules-one set for each crewman.

2. Additional PTT keys are also located on the translation controls.

3. All controls and switches shown are on MDC-20 unless otherwise indicated.

Figure 2.8-1. Voice Communications

emergency key and the PTT intercommunications functions. PTT keys are also located on the translation controls. Their function duplicates that of the PTT key with the PTT/CW selector in the PTT position on the cobra cable.

The head of each cobra cable has two electrical connectors, marked NORM and EMER. Normally, the connector marked NORM will be used; however, in the event of failure in one of the A/C modules, the affected crewman may connect the cable from his spacesuit to the connector marked EMER. This will connect his audio circuits to another A/C module and allow the same module to be shared by two crewmen.

A strap has been added to the cobra cable so the PTT button can be held in the ON position if desired. This would allow a continuous intercom if the Audio center POWER switch, (MDC 13, 23, 26) is in the PTT position.

The A/C equipment contains three separate but identical modules, one for each crewman, and a commonly connected intercom bus. This equipment serves as a control and distribution center for all S/C audio signals. Each of the three modules has a separate but identical set of controls located on MDC-26, -13, and -23 for the command pilot, senior pilot, and pilot, respectively. Thus each crewman is provided with independent control of all audio inputs and outputs to and from his own headset. A POWER switch on each panel controls application of power to its respective A/C module and selects the PTT or voice-operated relay (VOX mode) of operation. The PTT mode permits monitoring of incoming audio signals plus PTT activation of the microphone amplifier, voice recorder, and the enabling of any communications transmitters if their attendant control switches are properly configured.

The VOX mode permits the microphone amplifier to be activated by the voice-operated switching circuitry within the audio center. The audio output of the amplifier is then applied to isolation and switching diodes controlled in part by the audio center controls located on panels MDC-26, -13, and -23.

Voice transmission over, the activated unified S-band equipment is allowed by placing the S-BAND switch to REC (MDC-26, -13, -23), setting the cobra cable PTT/CW switch at PTT and closing the PTT pushbutton on either the cobra cable or the translation controls.

Voice transmission over, the HF transceiver is limited to the post-landing phase of the mission; however, the RCDR/HF switch (MDC-26, -13, -23) in the T/R position provides a ground for the power control relay in the voice recorder. The intercom switch (MDC-26, -13, -23) would also have to be in the T/R position so the audio signal would be available for recording.

Voice transmission over, the activated VHF-AM transmitter is allowed by placing the VHF-AM switch to T/R (MDC-26, -13, -23), setting the cobra cable PTT/CW switch to PTT, and closing the PTT pushbutton on either the cobra cable or the translation controls. Monitoring the VHF-AM is provided by placing the VHF-AM T/R/OFF/REC switch to REC.

Each audio control panel has three thumbwheel-type potentiometer controls: a VOX SENS control for adjusting the sensitivity of the VOX circuit, an INTERCOM BALANCE control for decreasing the level of the audio signals received from the RF equipment relative to that received from the intercom bus, and a VOLUME control for changing the overall level of all audio signals to the earphones. Each channel, in the A/C modules, also contains sidetone circuitry which enables a crewman to monitor his own transmission.

2.8.2.1.2 S/C Intercommunications.

S/C intercommunications and hardline voice communications are conducted via the intercom bus, which is commonly connected to each of the three A/C modules, to the LCC during prelaunch via the USM, and to recovery forces via the swimmer electrical connector during recovery operations. To communicate, a crewman must activate his A/C module by placing the POWER switch to VOX or PTT and setting the INTERCOM switch to T/R.

An A/C intercom transmission can only be initiated with the PTT key, if the PTT position of the power switch is selected. In the VOX position, either the VOX circuit or the PTT key will indicate an intercom transmission. If only an intercom transmission is desired, the PTT/CW switch on the cobra cable should be in the CW position. Normally, the A/C modules will remain activated throughout the entire mission.

2.8.2.1.3 In-Flight Voice Communications.

In-flight voice communications with the MSFN will be conducted over the USBS and the VHF-AM transmitter-receiver equipment. Controls for the S-band and the VHF-AM groups are located on MDC-20, and MDC-26, -13, and -23. The VHF-AM controls on MDC-20 consist of a T/R/OFF/REC switch that controls application of power, a RCVR switch to control which of two receiver modes 1 simplex, 2 duplex, are operational, a SQUELCH control to establish the level of RF signal required to pass audio signals to the audio center, and a VHF ANTENNA switch to manually select the upper (+Z), or lower (-Z), antenna. Voice transmission via VHF-AM is controlled by the placement of the VHF-AM switch (MDC-26, -13, or -23) to T/R, the cobra cable MODE switch to PTT, and depressing the PTT pushbutton on the cobra cable. Either T/R or REC permits voice reception from the MSFN.

Voice communication is possible in all operational modes of the USBS, with the exception of the emergency key mode, providing the S-BAND switch (MDC-26, -13, or -23) is placed at REC. Transmission is controlled by the PTT pushbutton on the cobra cable, providing the cobra cable MODE switch is in the PTT position. (Refer to paragraph 2.8.3.3.4 for additional information on the unified S-band operations.)

2.8.2.1.4 Recovery Voice Communications.

After touchdown, the HF transceiver equipment will be utilized for voice communications. It is controlled by the RECOVERY-HF switches on

MDC-20 which include an ON-OFF switch and a SSB/BCN/AM switch for selecting mode. Either the single sideband (SSB) or amplitude modulation (AM) modes may be used for voice communications. The beacon (BCN) mode is used to transmit a continuous wave beacon for tracking purposes.

Voice transmission in either the SSB or AM mode can be VOX- or PTT-controlled when the RCDR/HF switch (MDC-26, -13, -23) is placed to T/R.

The HF transceiver utilizes the HF recovery antenna. This antenna must be deployed after touchdown by setting the POSTLANDING—ANTENNA DEPLOY switches on MDC-25 to their upper positions, A and B, while the MASTER EVENT SEQ CONT switches 1 and 2 (MDC-24) are at arm and MASTER EVENT SEQ CONT ARM A and B circuit breakers (MDC-22) are closed.

The VHF/AM transmitter-receiver equipment can be used as backup by utilizing VHF recovery antenna No. 2 which can be selected by setting the VHF ANTENNA switch (MDC-20) to RECOVERY. Also, the GFAE survival transceiver can be used inside the S/C by connecting its coaxial cable to VHF recovery antenna No. 1 or No. 2 at the coaxial bracket, MDC-9. These coaxial connectors may be utilized, during the interval preceding the arrival of the recovery forces, in the most advantageous manner. Any combination of VHF recovery beacon, GFAE survival transceiver, and VHF-AM transmitter-receiver may be employed as warranted by the serviceability of the communications equipment.

2.8.2.2 Data Operations.

2.8.2.2.1 General.

T/C system data capabilities include the processing, storage, and transmission of TLM data to the MSFN; the reception and processing of up-telemetry data (up-data) received from the MSFN; and during USBE testing, the transmission of TV from the TV camera. In addition to transmitted data, verbal comments may be recorded on the voice recorder. (See figure 2.8-2.)

2.8.2.2.2 TLM Transmission and Storage.

TLM data may simultaneously be transmitted via VHF-FM and/or S-band and recorded in the DSE for delayed time transmission when requested by MSFN. The system configuration prohibits transmission or recording of real time data while transmitting stored data.

TLM data for transmission to the MSFN consists of analog and digital signals obtained from the guidance and navigation system, central timing equipment, instrumentation sensors and transducers located throughout the S/C structure and operational systems, and biomedical sensors worn by

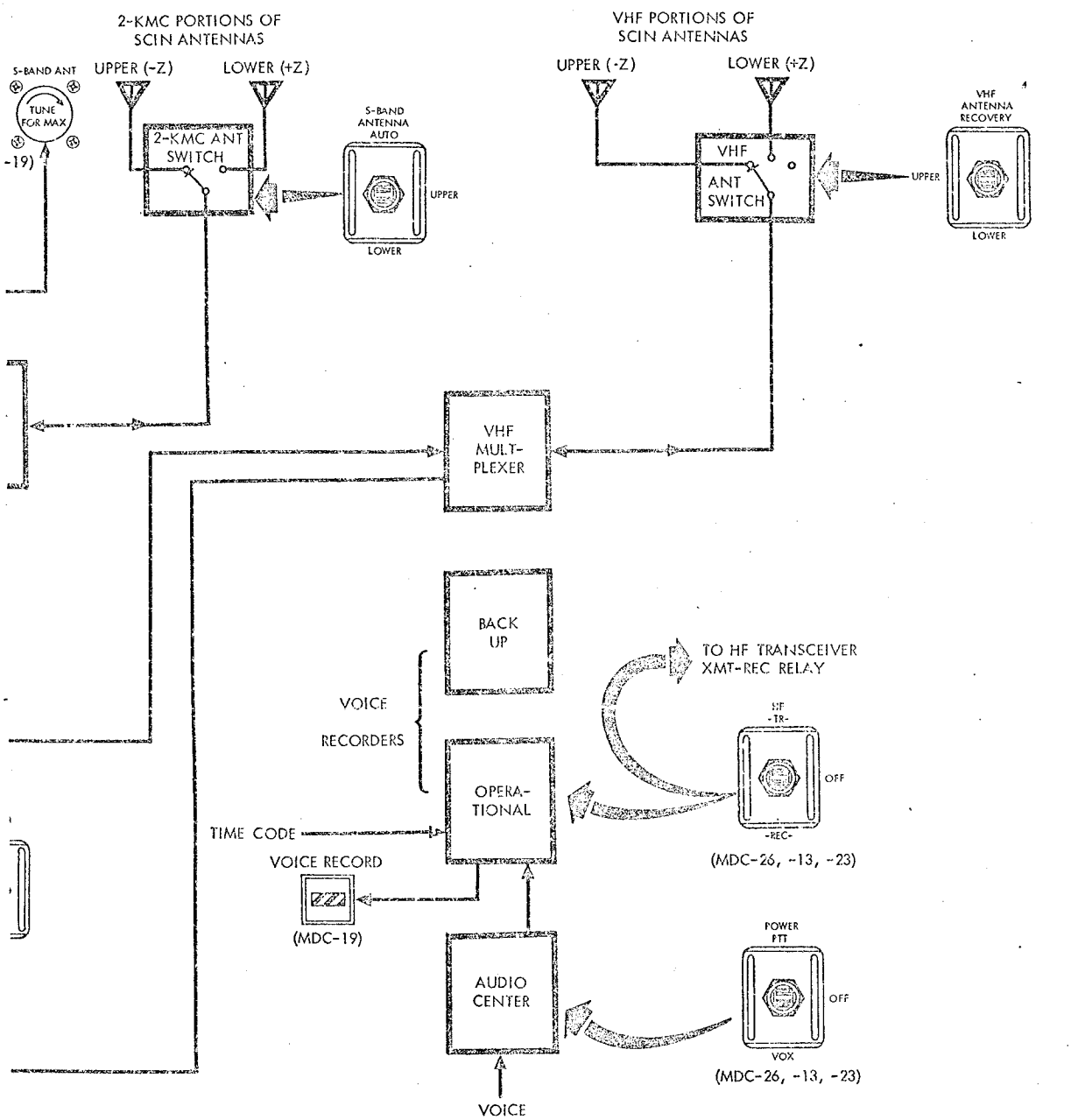

NOTES: 1. All switches shown are on MDC-20 unless otherwise indicated.

2. Not scheduled for use on SC 012 and SC 014.

SM-2A-844B

Figure 2.8-2. Data Operations

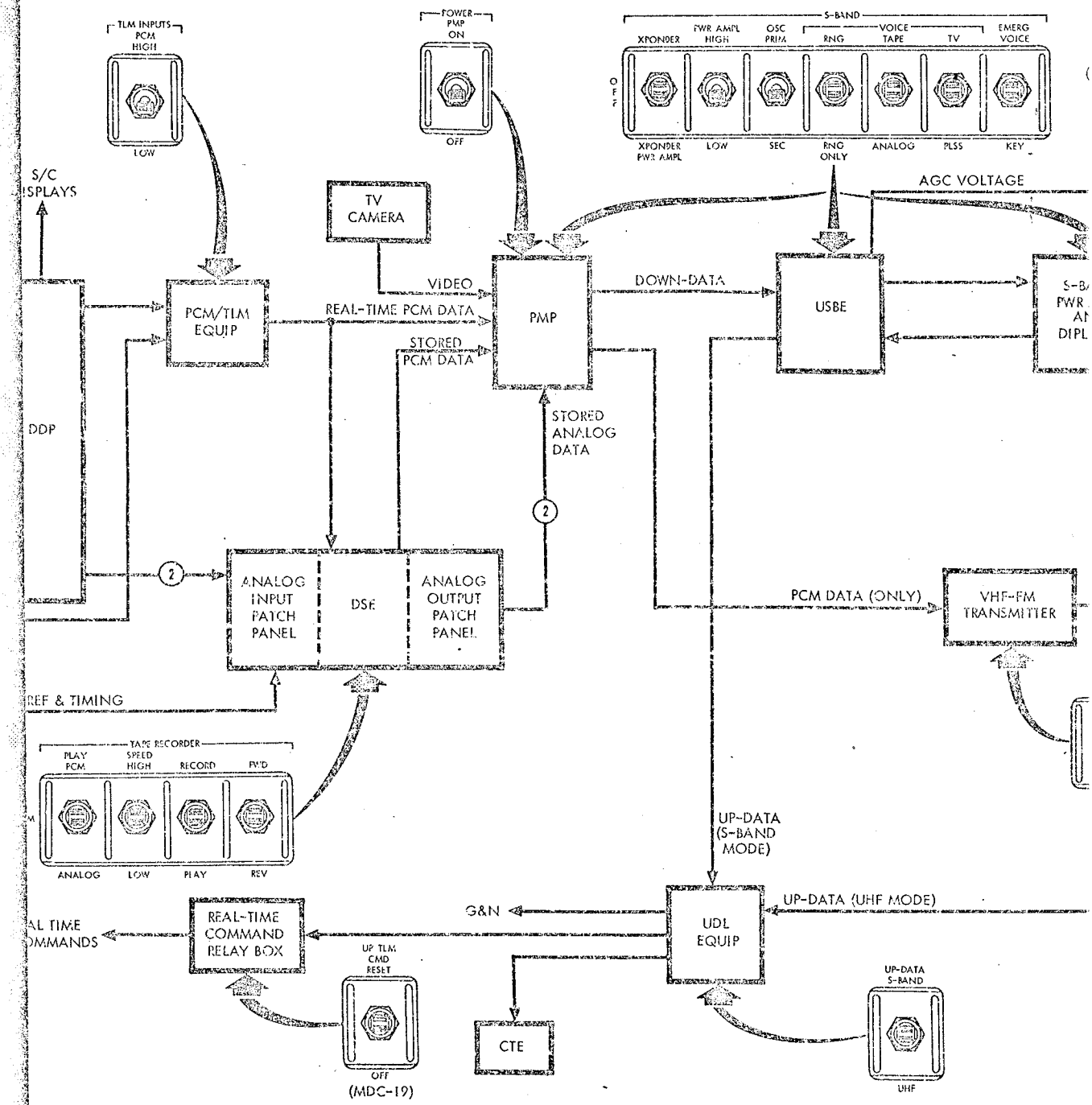
TLM INPUTS
PCM
HIGH
LOW
POWER
PMP
ON
OFF
S-BAND
XPONDER
PWR AMPL
HIGH
OSC
PRIM
VOICE
RNG
TAPE
TV
EMERG
VOICE
OFF
XPONDER
PWR AMPL
LOW
SEC
RNG
ONLY
ANALOG
PLSS
KEY
AGC VOLTAGE
S/C
SPLAYS
TV
CAMERA
VIDEO
PCM/TLM
EQUIP
REAL-TIME PCM DATA
PMP
DOWN-DATA
USBE
STORED
PCM DATA
DDP
STORED
ANALOG
DATA
2
2
ANALOG
INPUT
PATCH
PANEL
DSE
ANALOG
OUTPUT
PATCH
PANEL
PCM DATA (ONLY)
VHF-FM
TRANSMITTER
REF & TIMING
TAPE RECORDER
PLAY
PCM
SPEED
HIGH
RECORD
FWD
ANALOG
LOW
PLAY
REV
UP-DATA
(S-BAND
MODE)
UP-DATA (UHF MODE)
G&N
UDL
EQUIP
REAL-TIME
COMMAND
RELAY BOX
UP TLM
CMD
RESET
OFF
(MDC-19)
CTE
UP-DATA
S-BAND
UHF

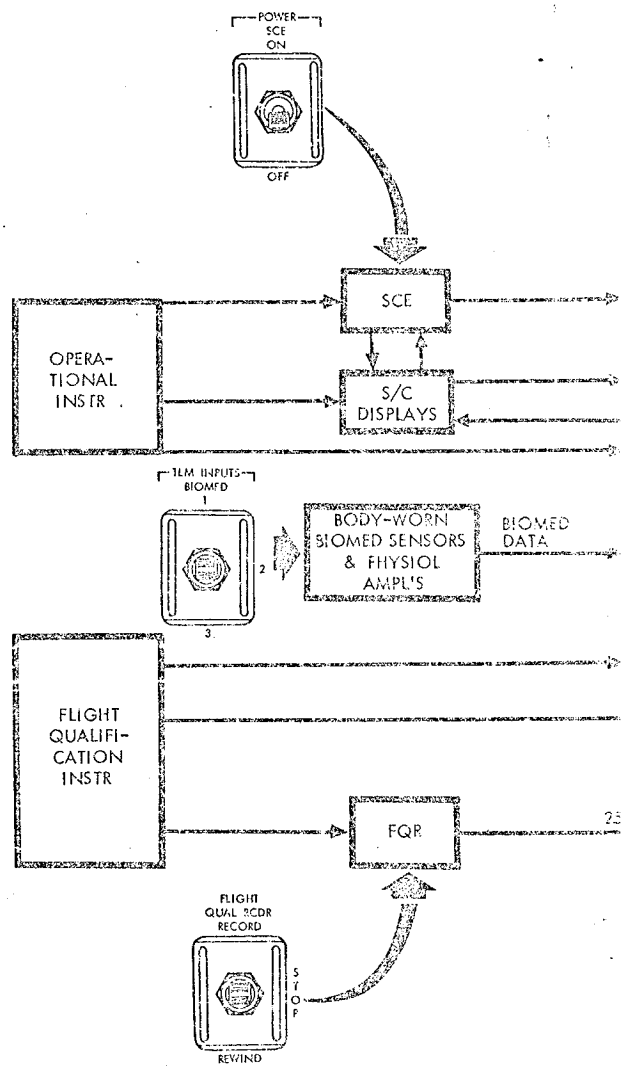
POWER
SCE
ON
OFF
SCE
OPERA-
TIONAL
INSTR
S/C
DISPLAYS
TLM INPUTS
BIOMED
1
2
3
BODY-WORN
BIOMED SENSORS
& PHYSIOL
AMPL'S
BIOMED
DATA
FLIGHT
QUALIFI-
CATION
INSTR
FQR
FLIGHT
QUAL RCDR
RECORD
STOP
REWIND

(MDC-19)

the crewman. Some of the instrumentation signals require conditioning before they can be utilized. This is accomplished by the signal conditioning equipment (SCE) activated by the POWER-SCE switch on MDC-20. The remaining TLM signals are either conditioned at their source by local signal conditioners, which requires no action on the part of crewmen, or do not need conditioning. The operational instrumentation signals are used for S/C displays and real time or delayed TLM transmission via VHF-FM and/or S-band. Those to be telemetered are routed to the pulse-code modulation-telemetry (PCM TLM) equipment. Most of the flight qualification signals are routed to the PCM TLM equipment along with the operational TLM signals. A few, however, are recorded as analog signals in the flight qualification recorder (FQR) for postflight analysis only. The FQR will be activated at brief intervals only during critical phases of the mission by the FLIGHT QUAL RCDR switch on MDC-19.

The PCM TLM equipment combines the signals to be telemetered and converts them to a single, digital, pulse train which is then fed to the premodulation processor equipment (PMP) and the data storage equipment (DSE). The PCM TLM equipment is activated at all times. Its only control is the TLM INPUTS – PCM switch on MDC-20. This switch is used to select the PCM bit-rate. In the HIGH (51.2 KBPS) position, all TLM inputs to the PCM TLM equipment are processed and combined into the output signal. The LOW (1.6 KBPS) position eliminates the less essential parameters and is used only when a PCM pulse train of reduced bandwidth is required. The reduced bandwidth allows PCM data to be recorded at a reduced (3.75 ips) speed when long periods of data recording are required.

The PCM signal is fed to the PMP and DSE simultaneously for real-time (R/T) transmission and/or storage. For R/T transmission, the signal is processed through the PMP to the VHF/FM and/or S-BAND transmitters. The PMP is controlled by the POWER – PMP switch, the S-BAND group of switches, and the TAPE RECORDER – PLAY switch. When R/T transmission is not possible, the PCM data can be stored in the DSE, which is controlled by the TAPE RECORDER group of switches and the TLM INPUTS – PCM switch discussed in the previous paragraph. When played back later, the stored PCM data is also processed through the PMP to the VHF/FM and/or S-BAND transmitters for transmission. The sole function of the VHF/FM transmitter is the transmission of R/T or stored PCM data. Its only control is the VHF-FM – ON/OFF switch on MDC-20. It utilizes the same antennas as the VHF/AM transmitter-receiver, namely, the upper or lower SCIN antenna as selected by the VHF antenna switch.

Backup capability for the transmission of PCM TLM data is provided by the USBS. (Refer to a subsequent discussion of unified S-band operations.)

2.8.2.2.3 Up-Data Reception.

Up-data which can be transmitted to the S/C by the MSFN consists of three types: G&N data for up-dating the Apollo guidance computer,

timing data for up-dating the central timing equipment (CTE), and realtime commands (RTCs) for providing the MSFN with limited control of certain on-board functions.

During normal operations, up-data is received by the UHF/FM receiver contained in the up-data link (UDL) equipment. Once received, the signal is processed and decoded, and the information is routed to the G&N system, the CTE, or UDL-RTC relay box. For backup, up-data can also be transmitted by MSFN stations to the S/C via the S-band carrier. When this occurs, the up-data is received by the USBE receiver which extracts the up-data subcarrier and routes it to the PMP where the intelligence is removed from the signal and sent to UDL equipment for processing, decoding, and distribution. In this S-band mode, the UHF/FM receiver is bypassed. Selection of the UHF or S-BAND mode is made with the UP-DATA switch on MDC-20. The UP TLM CMD – RESET/OFF switch (MDC-19) enables the crew to nullify previous RTCs and return control to the S/C. An UP TLM – ACCEPT/BLOCK switch (MDC-14) is also provided so that G&N up-data can be prevented from effecting the computer and the attendant validity signal being sent to the PCM format.

2.8.2.3 Tracking and Ranging.

2.8.2.3.1 In-Flight Tracking and Ranging.

The function of the in-flight tracking and ranging equipment (figure 2.8-3) is to assist the MSFN in determining S/C position and velocity. The primary method employed is C-band tracking. The C-band transponder on-board the S/C is used for this purpose. It operates in conjunction with conventional, earth-based, radar equipment by transmitting response pulses to the MSFN when radar pulses from the earth are received. It operates in a "1-pulse" or a "2-pulse" mode, depending on the type of radar equipment being used at the nearest MSFN station. A single control, the C-BAND switch on MDC-20, is used to activate the C-band transponder in either mode.

Backup tracking and ranging capabilities are provided by the USBS.

2.8.2.3.2 Recovery Tracking.

Line-of-sight and beyond-line-of-sight beacon transmission capabilities are provided to assist recovery personnel in locating the S/C during parachute descent and after touchdown. Line-of-sight beacon transmission is accomplished using the VHF recovery beacon equipment. The beyond-line-of-sight capability is furnished by operating the HF transceiver in a beacon mode.

During parachute descent the VHF recovery beacon is activated by setting the RECOVERY – VHF-BCN switch (MDC-20) to ON. This causes a 2-second, modulated VHF pulse to be transmitted every 5 seconds from VHF recovery antenna No. 1, which is deployed automatically with VHF recovery antenna No. 2 when the main parachutes are deployed.

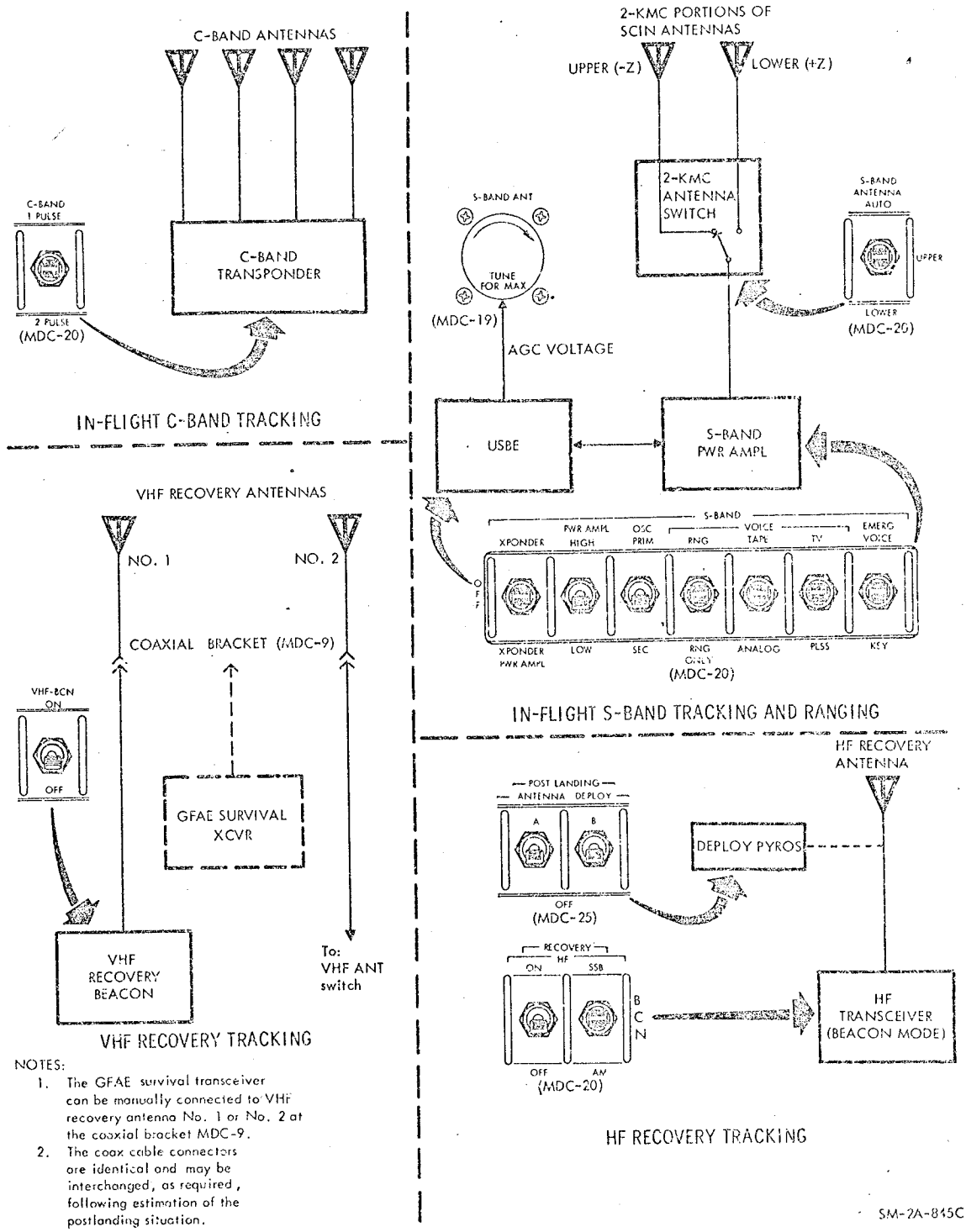

NOTES:

1. The GFAE survival transceiver can be manually connected to VHF recovery antenna No. 1 or No. 2 at the coaxial bracket MDC-9.
2. The coax cable connectors are identical and may be interchanged, as required, following estimation of the postlanding situation.

Figure 2.8-3. Tracking and Ranging

After touchdown, the HF recovery antenna must be deployed by setting the POSTLANDING – ANTENNA switches (MDC-25) to DEPLOY A and B while the MASTER EVENT SEQ CONT switches (MDC-24) are at PYRO ARM 1 and 2. HF beacon transmission at a preassigned frequency of 10.006 mc is accomplished by placing the RECOVERY – HF switch (MDC-20) to ON and the RECOVERY – HF-SSB/BCN/AM switch to BCN.

The GFAE survival transceiver (part of the crew's personal equipment) can also be operated in a beacon mode. If used inside the S/C, one of the VHF recovery antennas (No. 1 or No. 2) can be used by manually connecting it to the applicable coax connector on MDC-9.

The VHF antennas and communications equipment condition, as determined by the crew during the postlanding pre-recovery period, will decide the utilization of the coaxial cable connectors located on MDC-9. The connectors are identical and the recovery equipment coaxial cables may be interchanged to provide the most beneficial tracking configuration.

2.8.2.4 Unified S-Band Operations.

2.8.2.4.1 General.

The USBS is primarily designed to be used as a deep-space communications link between the S/C and the MSFN. Nevertheless, on mission 205 some of its capabilities will be tested and it may be called upon for use as backup equipment for voice communications, PCM data transmission, up-data reception, or S/C tracking and ranging when the S/C is within range of a MSFN station equipped for S-band operations. In addition, only the USBS is capable of transmitting TV.

The USBS consists of the S-band transmitter and receiver combined in a single electronic package called the unified S-band equipment (USBE) and the S-band power amplifier (PA). The function of the S-band PA is to provide additional power amplification of the USBE transmitter output. Two levels of amplification (high and low) are possible. A bypass mode is also possible wherein the S-band PA is turned off and the output of the USBE transmitter is sent to the S-band antenna equipment "as is." The 2-kmc portions of the upper and lower SCIN antennas are used for transmission and reception of S-band signals. Antenna selection is made by placing the S-BAND ANTENNA switch (MDC-20) to UPPER, LOWER, or AUTO. In the AUTO position, the antenna will be automatically switched if the signal falls below a minimum threshold.

The PMP is controlled in conjunction with the USBE by the S-BAND switches to provide the proper voice and data inputs to the USBE in accordance with the S-band mode selected.

When operating in a ranging mode, the MSFN can transmit a "coded" pseudo-random noise (PRN) pulse to the S/C via the S-band carrier. The S/C USBE will respond by transmitting an identical pulse to the MSFN. By

measuring the time lapse between transmission of the signal and reception of the response signal the MSFN can accurately determine the S/C range. Once established, this value can then be continually updated by measuring the doppler shift in the S-band carrier. A ranging mode can be selected again at later times, to verify or up-date the doppler data.

2.8.3 MAJOR COMPONENT/SUBSYSTEM DESCRIPTION.

To facilitate this presentation, the equipment comprising the T/C system (figure 2.8-4) has been divided into four groups designated as instrumentation equipment, voice and data equipment, RF electronics equipment, and antenna equipment. Specifically, these equipment groups contain the following:

Instrumentation equipment group

- Operational instrumentation
- Flight qualification instrumentation

Voice and data equipment group

- Audio center (A/C) equipment
- Signal conditioning equipment (SCE)
- Pulse-code modulation-telemetry (PCM TLM) equipment
- Television (TV) equipment
- Premodulation processor (PMP) equipment
- Data storage equipment (DSE)
- Flight qualification recorder (FQR) equipment
- Up-data link (UDL) equipment
- Central timing equipment (CTE)
- Voice recorder

RF electronics equipment group

- VHF/AM transmitter-receiver equipment
- HF transceiver equipment
- VHF/FM transmitter equipment
- Unified S-band equipment (USBE)
- S-band power amplifier equipment
- C-band transponder equipment
- VHF recovery beacon equipment

Antenna equipment group

- VHF/2-KMC omni-antenna equipment
- HF antenna equipment
- VHF recovery antenna equipment
- C-band beacon antenna equipment

2.8.3.1 Instrumentation Equipment Group.

The S/C instrumentation equipment consists of various types of sensors and transducers for providing environmental, operational status, and performance measurements of the S/C structure, operational systems, and experimental equipment. The outputs from these sensors and transducers are conditioned to signals suitable for utilization by the S/C displays, presentation to the PCM TLM equipment, or both. In addition, various digital signals are presented to the PCM TLM equipment, including event information, guidance and navigation data, and a time signal from the CTE.

Many of the signals emanating from the instrumentation sensors are of forms or levels which are unsuitable for use by the S/C displays or PCM TLM equipment. Signal conditioners are used to convert these signals to forms and levels which can be utilized. Some signals are conditioned at or near the sensor by individual conditioners located throughout the S/C. Other signals are fed to the signal conditioning equipment (SCE), a single electronics package located in the lower equipment bay. (Refer to signal conditioning equipment in the Voice and Data Equipment Group.) In addition to conditioning many of the signals, the SCE also supplies 5-vdc excitation power to some sensors. The SCE can be turned on or off with the POWER-SCE switch on MDC-20. This is the only control that the crew can exercise over instrumentation equipment for operational and flight qualification measurements. These two instrumentation groups are discussed in the following two paragraphs. Information on scientific and special instrumentation can be found in section 4 of this manual, Experiments and Scientific Equipment.

2.8.3.1.1 Operational Instrumentation.

Operational measurements are those which are normally required for a routine mission and include three categories: in-flight management of the S/C, mission evaluation and system performance, and preflight checkout of the S/C. The operational instrumentation sensors and transducers are capable of making the following types of measurements: pressure, temperature, flow attitude, rate, quantity, angular position, current, voltage, frequency, RF power, and "on-off" type events.

2.8.3.1.2 Flight Qualification Instrumentation.

Flight qualification measurements are those which will vary on different S/C, depending on mission objectives and state of hardware development. Most of them will be pulse-code modulated along with the operational measurements and transmitted to the MSFN. Other flight qualification measurements will be stored in the FQR for postflight analysis only.

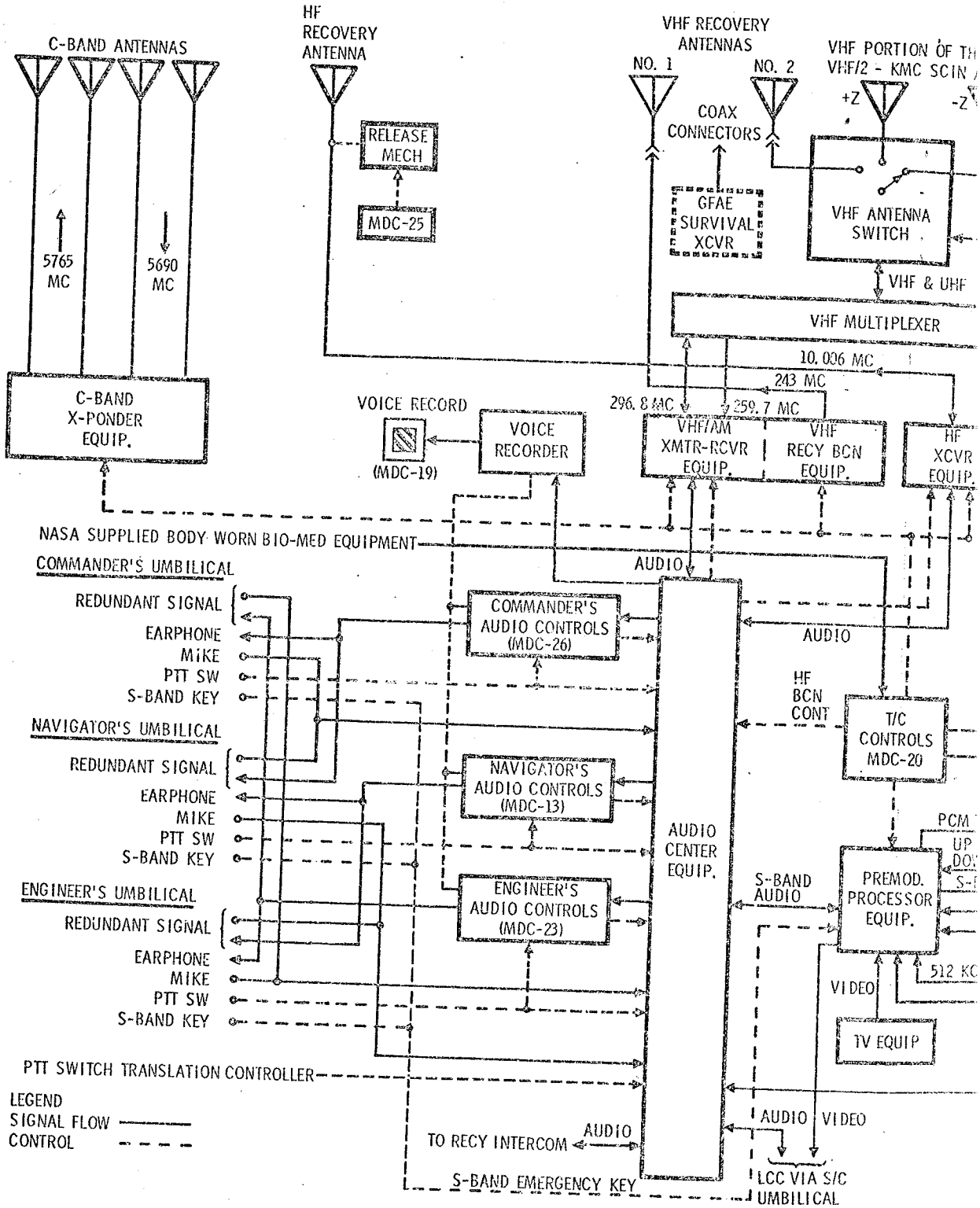
C-BAND ANTENNAS
HF RECOVERY ANTENNA
VHF RECOVERY ANTENNAS
NO. 1
NO. 2
VHF PORTION OF TH
VHF/2 - KMC SCIN
+Z
-Z
COAX CONNECTORS
RELEASE MECH
MDC-25
GFAE SURVIVAL XCVR
VHF ANTENNA SWITCH
5765 MC
5690 MC
VHF & UHF
VHF MULTIPLEXER
10.036 MC
243 MC
296.8 MC
259.7 MC
C-BAND X-PONDER EQUIP.
VOICE RECORD
(MDC-19)
VOICE RECORDER
VHF/AM XMTR-RCVR EQUIP.
VHF RECY BCN EQUIP.
HF XCVR EQUIP.
NASA SUPPLIED BODY WORN BIO-MED EQUIPMENT
COMMANDER'S UMBILICAL
REDUNDANT SIGNAL
EARPHONE
MIKE
PTT SW
S-BAND KEY
AUDIO
COMMANDER'S AUDIO CONTROLS (MDC-26)
AUDIO
HF BCN CONT
T/C CONTROLS MDC-20
NAVIGATOR'S UMBILICAL
REDUNDANT SIGNAL
EARPHONE
MIKE
PTT SW
S-BAND KEY
NAVIGATOR'S AUDIO CONTROLS (MDC-13)
AUDIO CENTER EQUIP.
PCM
ENGINEER'S UMBILICAL
REDUNDANT SIGNAL
EARPHONE
MIKE
PTT SW
S-BAND KEY
ENGINEER'S AUDIO CONTROLS (MDC-23)
S-BAND AUDIO
PREMOD. PROCESSOR EQUIP.
512 KC
VIDEO
TV EQUIP
PTT SWITCH TRANSLATION CONTROLLER
LEGEND
SIGNAL FLOW
CONTROL
TO RECY INTERCOM
AUDIO
AUDIO
VIDEO
S-BAND EMERGENCY KEY
LCC VIA S/C UMBILICAL

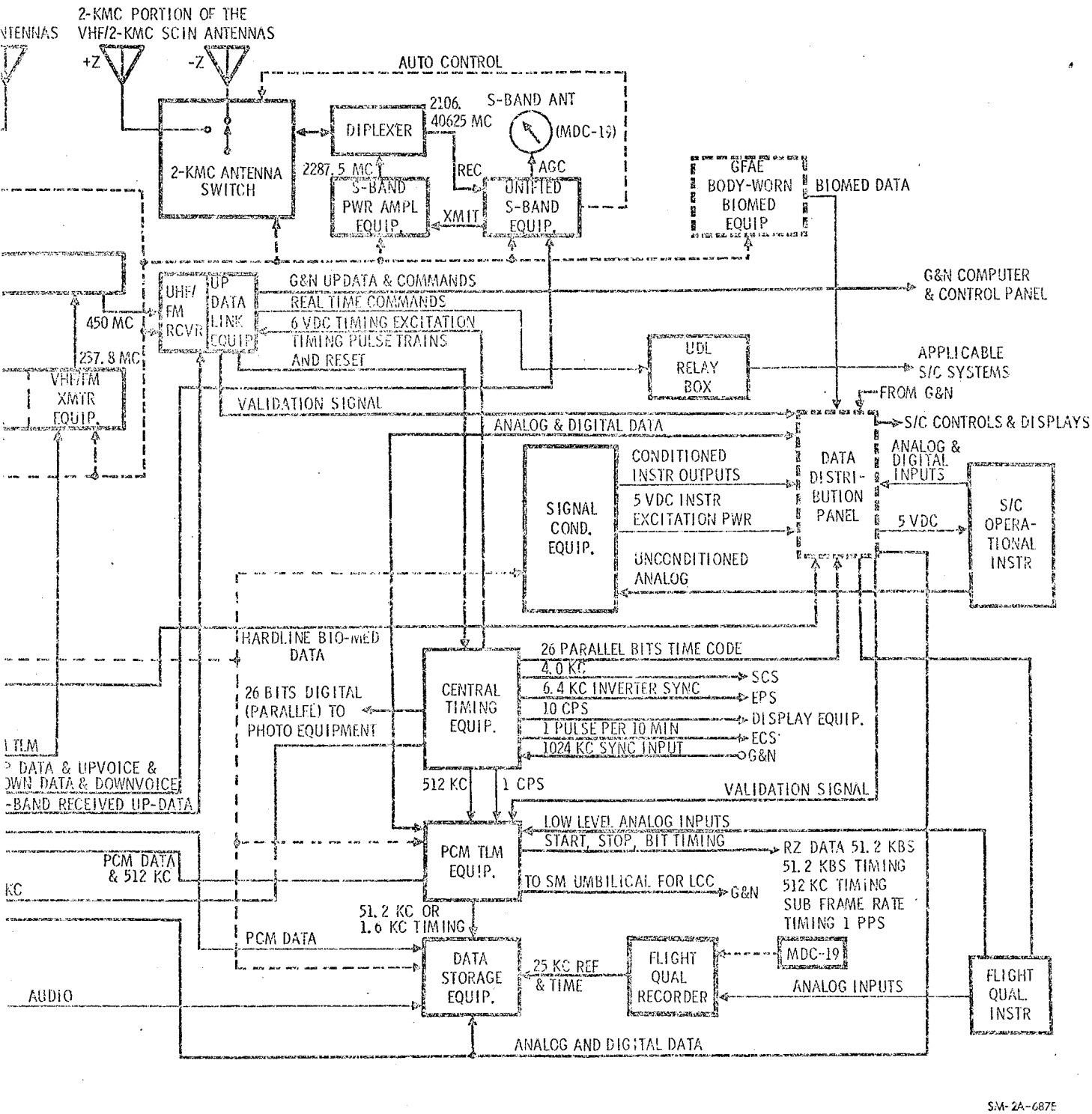

Figure 2.8-4. Telecommunications System

2.8.3.2 Voice and Data Equipment Group.

2.8.3.2.1 Audio Center (A/C) Equipment.

The A/C equipment (figure 2.8-5) consists of three separate identical modules located in a single electronics package in the lower equipment bay. Each module is controlled independently by its own control panel and supplied with 28-vdc power through separate circuit breakers. The three control panels, MDC-26, -13, and -23, are located in stations 1, 2, and 3, respectively. Each of the astronaut's headsets, containing two microphones and two microphone amplifiers, and two independently operating earphones, is connected to one of the A/C modules by a cobra cable. Thus each astronaut has a separate headset, audio center module, and audio control panel to provide him with individual control of voice transmission and reception.

Each A/C module contains a microphone amplifier, VOX circuitry, an earphone amplifier, and various signal attenuation, switching, and isolation circuits. The earphone and microphone amplifiers amplify the voice signals to and from the headset. The VOX circuitry is a voice-operated keying circuit that supplies a ground return path necessary for activating the microphone amplifier and the transmitter keying relays in the HF transceiver, intercommunication system, and the power control relay in the operating voice recorder.

Audio signals are provided to and from the HF transceiver equipment, VHF/AM transmitter-receiver equipment, USBE (via the PMP), and the intercom bus. The intercom bus is common to all three modules and provides for the hardline communications between crewmen and with the LCC and recovery forces.

Inputs and outputs are controlled by the RCDR/HF, VHF/AM, S-BAND, and INTERCOM switches on the audio control panels. Each of these switches has three positions: T/R, OFF, and REC. Setting any of the switches to T/R (except S-BAND) permits transmission and reception of voice signals over its respective equipment. REC permits reception only, and OFF disables the input and the output. The operation of the microphone amplifier in each module is controlled by the VOX keying circuit or the PTT pushbutton on the cobra cable or the translation controller. The VOX circuit is energized by the position of the POWER — PTT/OFF/VOX switch on each audio control panel. The PTT position permits monitoring and activation of the microphone amplifier, voice recorder HF, VHF/AM and S-band voice transmission circuits by the PTT key. The VOX position permits all the functions of the PTT position plus VOX activation of the microphone amplifier, voice recorder and HF transmitter.

Three potentiometer controls are also provided on each audio control panel: VOX SENS, INTERCOM BALANCE, and VOLUME. The VOX SENS control is used to adjust the sensitivity of the VOX circuitry, determining the amplitude of the voice signal necessary to trigger the VOX keying

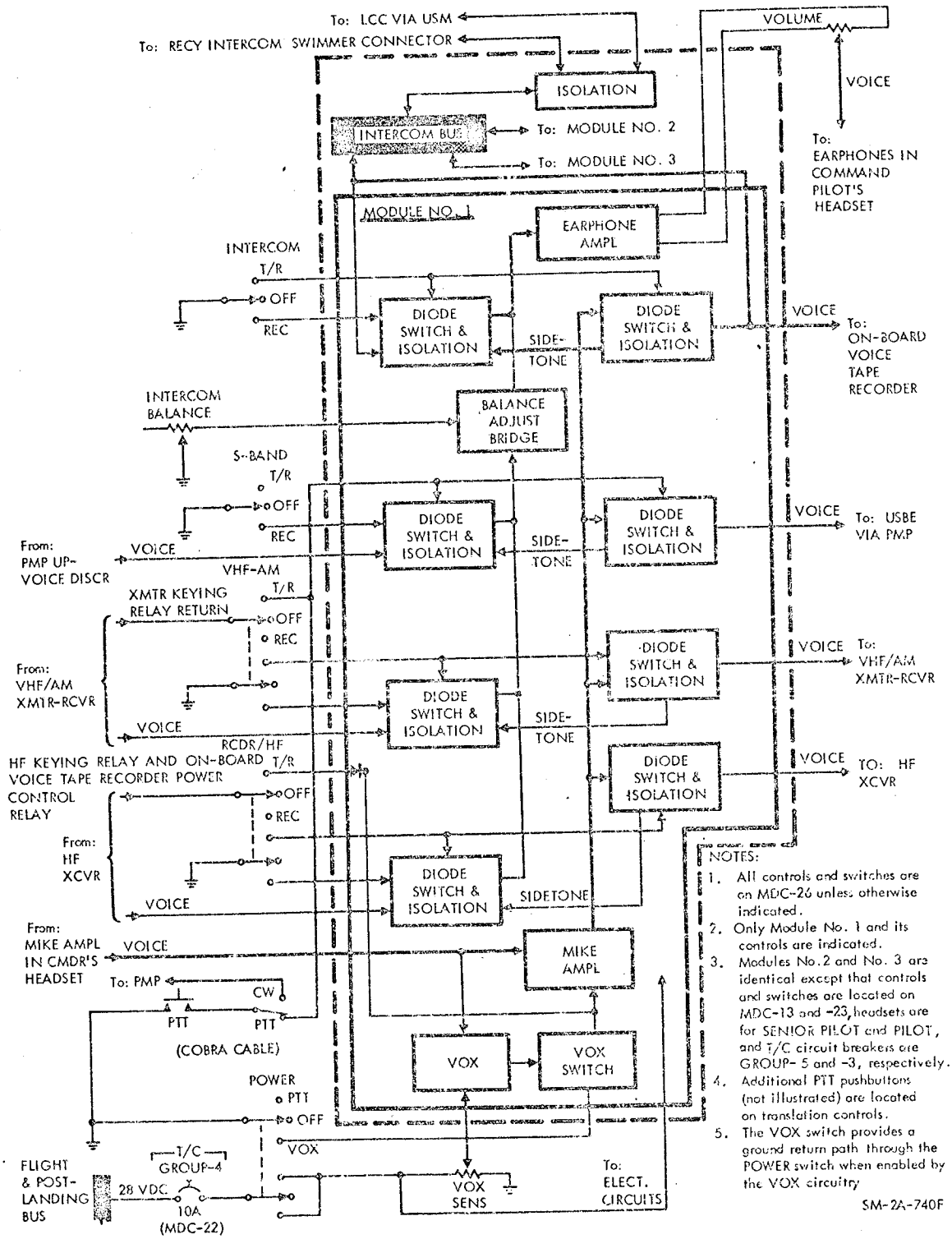

Figure 2.8-5. Audio Center Equipment

circuit. The INTERCOM BALANCE control adjusts the level of voice signal inputs from the RF equipment relative to the level of voice signal inputs from the intercom bus. The VOLUME control adjusts the output of the earphone amplifier.

2.8.3.2.2 Signal-Conditioning Equipment (SCE).

The signal-conditioning equipment (SCE) is contained in a single electronics package located in the LEB. (See figure 2.8-6.) Its functions are to convert various kinds of unconditioned signals from the instrumentation equipment into compatible, 0- to 5-volt d-c analog signals, and to provide excitation voltages to some of the instrumentation sensors and transducers.

The SCE uses the following module types: The active attenuator, to attenuate high-signal voltages; the ac-(am) to-dc converter, to detect the amplitude variations of an a-c signal; the dc differential amplifier, to amplify small signals; the dc differential bridge amplifier, to detect resistance changes; the bi-phase demodulator, to convert S/C position resolver outputs; the frequency demodulator, to detect frequency changes in an a-c signal; and the power supply, to provide +20 volts and -20 volts to the SCE circuitry, 10 volts as bridge excitation, and 5 volts to excite other S/C sensors.

The conditioned output signals from the SCE are routed to the data distribution panel (DDP). The DDP provides parallel outputs, where necessary, and routes the signals to the PCM telemetry equipment, S/C displays, and GSE connections.

The only external control for the SCE is the two-position POWER—SCE toggle switch on MDC-20. Placing this switch to ON applies 28 volts dc to the latch winding of the latching relay, which closes contacts applying 3-phase a-c power to the power supply module. In the OFF position, the relay is unlatched, removing a-c power from the power supply.

2.8.3.2.3 Pulse-Code Modulation Telemetry (PCM TLM) Equipment.

The function of the PCM TLM equipment (figure 2.8-7) is to convert TLM data inputs from various sources into one serial digital output signal. This single output signal is routed to the PMP for transmission to the MSFN or to the DSE for storage. The PCM TLM equipment is contained in two separate units located in the lower equipment bay: PCM unit 1 and PCM unit 2.

Input signals to the PCM TLM equipment are of four general types: low-level analog, high-level analog, parallel digital, and serial digital. Some of the low-level analog inputs are supplied directly from the instrumentation sensors; other data inputs are routed through the data distribution panel (DDP).

Two modes of operation are possible: the high- (normal) bit-rate mode of 51.2 kilobits per second (KBS) and the low- (reduced) bit-rate mode of 1.6 KBS. Operational mode is selected by placing the TLM INPUTS—PCM switch on MDC-20 to HIGH or LOW, as applicable. When the switch is in the LOW position, the high PCM bit-rate can be commanded by the MSFN via the UDL equipment.

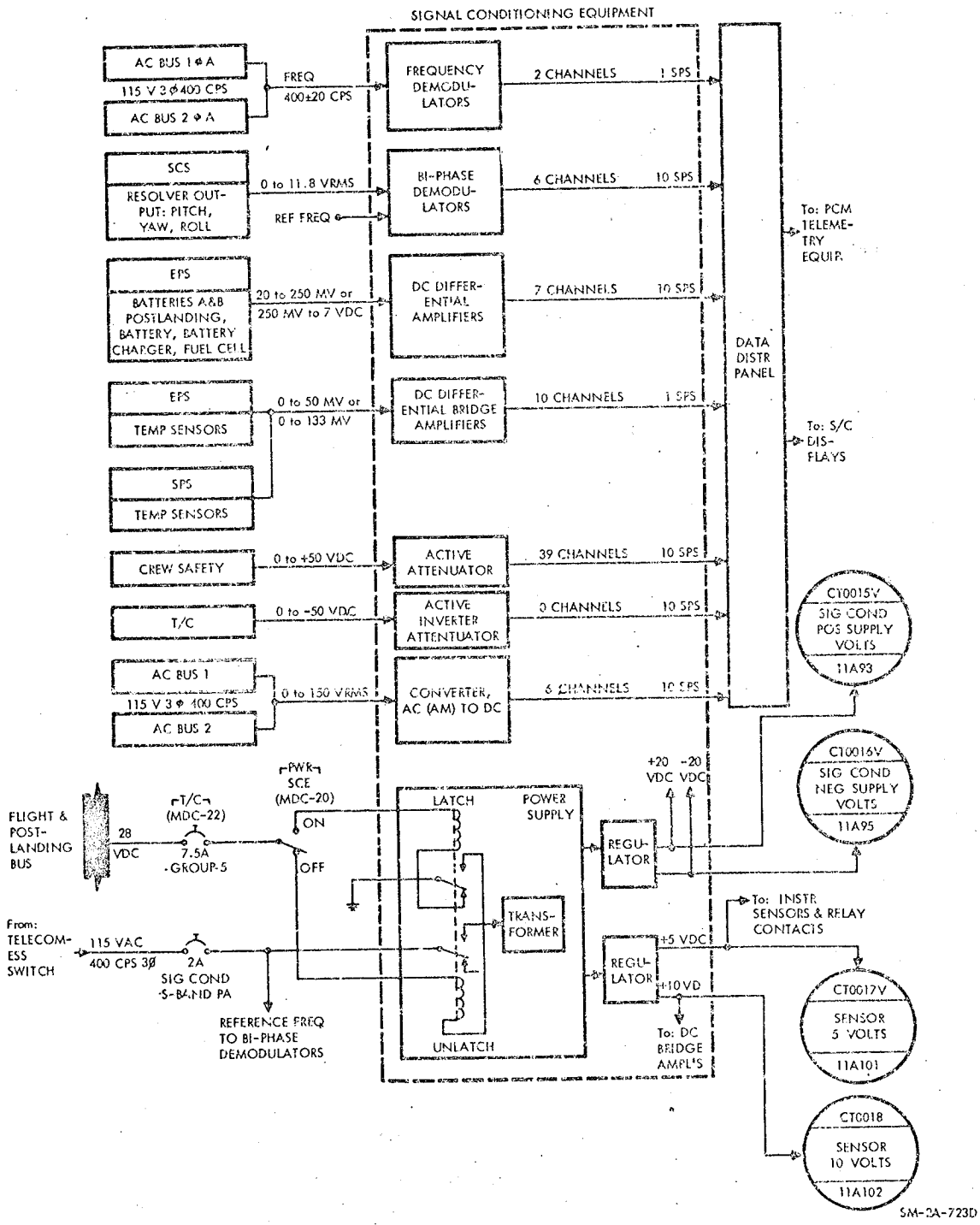

Figure 2.8-6. Signal Conditioning Equipment

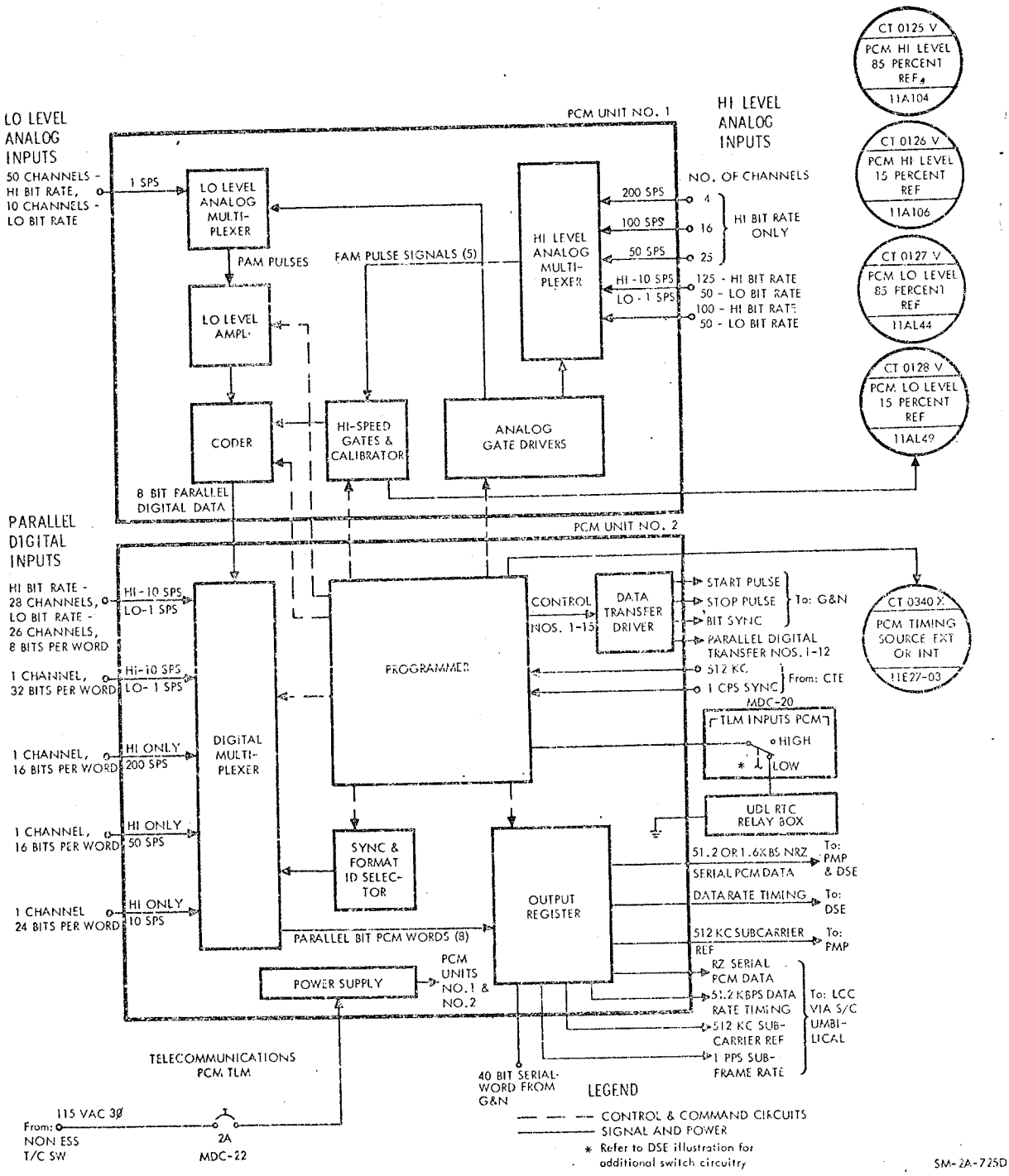

Figure 2.8-7. Pulse Code Modulation Telemetry

2.8.3.2.4 Television (TV) Equipment.

The TV equipment consists of a small, portable, TV camera (figure 2.8-8) that can be hand-held or mounted in one of four locations in the command module. Its function is to acquire real-time video information for transmission to the MSFN during S-band testing.

The first camera mounting position is located below the main display console, and will permit a front view of the crew lying in their couches. The second position is located behind the head of the center seat, and will permit viewing of crew activities in the middle of the command module. The second position is also provided with a five-foot stretch cable to permit hand-held use of the camera for coverage of any desirable target inside or outside the S/C. The third position is located in the right-hand equipment bay, and permits viewing of astronauts at work in that area. The final position utilizes a special bracket which allows the TV camera to look out the right-hand docking window.

The TV camera is connected directly to the PWR cable at the first mounting position. If the TV camera is to be used in the mounting position behind the center couch, the PWR cable must be connected to the connector marked "TV Cam to Hatch J107," and the camera, in turn, should be connected to the connector at that position (J191), by the stretch cable. If the TV camera is to be mounted by the right-hand equipment bay, the PWR cable must be connected to the connector marked "TV Cam to RHEB," and the TV camera connected to the connector at that location (J195) by the stretch cable.

The TV camera is constructed with a pistol-grip type of handle on the bottom, which can be extended to facilitate portable use. The TV camera is fitted with a fixed-focus wide-angle lens for picture taking within the command module. For taking pictures of the earth or moon through the C/M window, an interchangeable zoom lens is provided. The zoom lens has a look angle of from 9 degrees through 30 degrees. It is fitted with a through-the-lens type viewer that will enable the operator to see the change in field of view and relative size of the scene while the lens is adjusted. The electronic circuitry in the camera is equipped with an automatic gain control to allow for differences in target illumination.

The TV camera is activated by a slide switch in the pistol-grip handle, which applies 28 volts dc to the camera power supply when set to on. This energizes the entire camera and results in a video output signal that is fed to the PMP. In the PMP, the video signal is frequency multiplexed with the telemetry data and voice, which is transmitted to earth via the USBE. The USBE must be operating in a TV mode to permit this transmission. An AUTO LIGHT CONTROL switch has been added to the camera, permitting it to compensate for either peak or average scene illuminations from 0.1 to 30 foot candles.

2.8.3.2.5 Premodulation Processor (PMP) Equipment.

The PMP equipment (figure 2.8-9) functions as a data processing and distribution center providing necessary interface, where required, between the voice, data, and RF equipment. The PMP consists of ten modules mounted in a single electronics package located in the lower equipment bay. These modules contain filters, oscillators, modulators, demodulators, detectors, switching circuits, discriminators, mixing and keying networks, and a power supply.

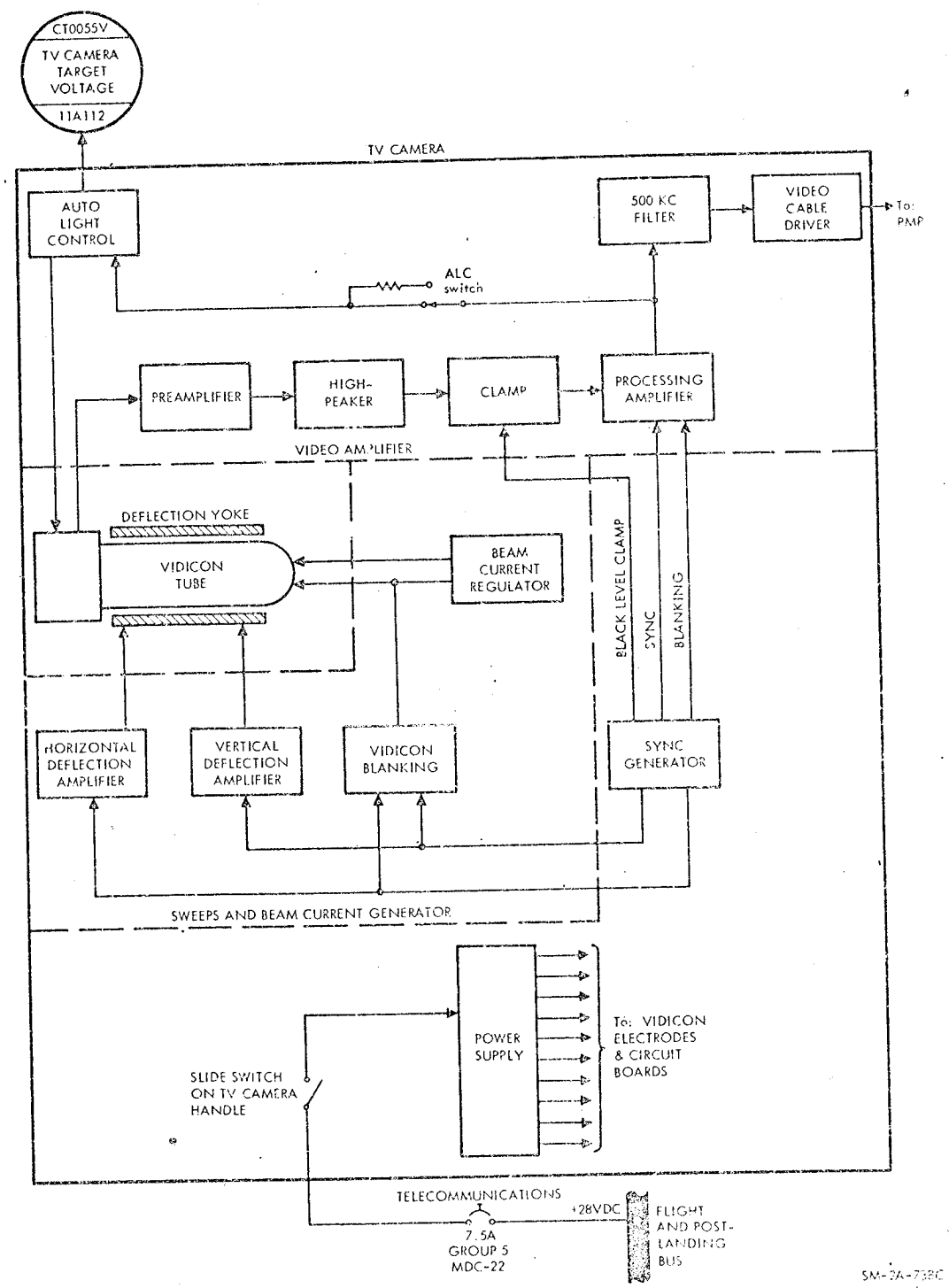

Figure 2.8-8. Television Equipment

The PMP can operate in many possible modes. All of the external controls for the PMP are switches located on MDC-20. The switches which affect the PMP consist of the POWER – PMP switch, the S-BAND – VOICE group of switches, the S-BAND – EMERG switch, and the TAPE RECORDER – PLAY and – RECORD/PLAY switches. Also, during emergency key operation, the PTT keys on the cobra cables and translation controls, control the PMP emergency key network. All of the signal inputs available to the PMP are listed in the PMP INPUTS table at the end of this paragraph. PMP outputs are dependent upon switch configuration. The PMP OUTPUTS table, also at the end of this paragraph, shows the various composite output signal possibilities along with their destinations and the switch positions required for any mode of operation. It should be noted that the S-BAND and TAPE RECORDER switches also affect the operational mode of the USBE and DSE.

One function of the PMP is to process the PCM TLM signal obtained from the PCM TLM equipment or DSE and route it to the VHF/FM transmitter equipment for transmission to the MSFN. This output will be provided whenever a PCM input is available, regardless of mode and simultaneously with other PMP outputs.

All remaining PMP functions involve interface with the USBE. Inputs to the PMP from the USBE are the 70-kc up-data and 30-kc up-voice subcarriers. These are fed into the up-data and up-voice discriminator circuits. These two circuits (as well as circuitry needed for emergency S-band modes) do not require the PWR-PMP switch to be on. They are supplied with power independently whenever the USBE is in operation. Outputs from the up-data and up-voice discriminators are fed to the UDL and A/C equipment, respectively.

The PMP supplies an output to one of the three USBE inputs, depending on S-band mode as selected by the S-BAND – VOICE group of switches and the S-BAND – EMERG switch. The USBE inputs are designated PM, FM-1, and FM-2. During normal S-band modes, the PMP supplies either a PM or FM-1 output to the USBE. The PM output supplies real-time PCM TLM and voice to the USBE when the USBE is operating in a normal voice or a ranging mode. If the USBE ranging only mode is selected, the PCM TLM portion of the output is eliminated, leaving only voice signals in the PM-1 output. When recorded data or TV data is to be transmitted along with PCM TLM and voice data, the FM-1 output is supplied to the USBE. This mode permits the greater bandwidth which is required for transmission of this data.

There are two emergency modes; emergency voice and emergency key, selected by the S-BAND – EMERG switch and used to permit emergency transmission of voice or code over the USBE with the PMP shutdown. With the S-BAND – EMERG switch in the center (OFF) position, the PWR – PMP switch controls the application of power to the PMP. However, with the S-BAND – EMERG switch set to either VOICE or KEY, a-c power is removed from the PMP. In the KEY position, a separate 28-volt d-c

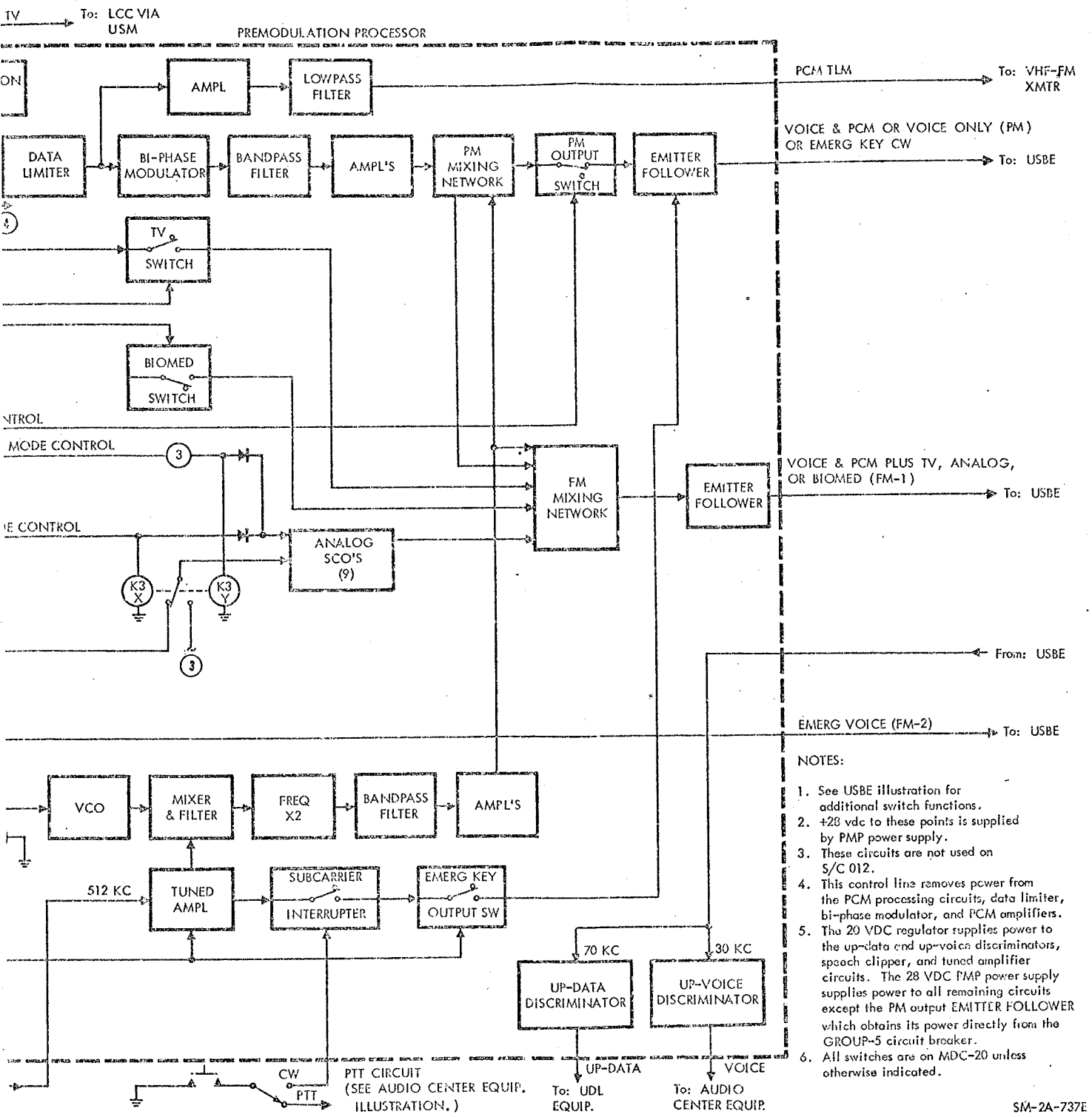

NOTES:

1. See USBE illustration for additional switch functions.
2. +28 vdc to these points is supplied by PMP power supply.
3. These circuits are not used on S/C 012.
4. This control line removes power from the PCM processing circuits, data limiter, bi-phase modulator, and PCM amplifiers.
5. The 20 VDC regulator supplies power to the up-data and up-voice discriminators, speech clipper, and tuned amplifier circuits. The 28 VDC PMP power supply supplies power to all remaining circuits except the PM output EMITTER FOLLOWER which obtains its power directly from the GROUP-5 circuit breaker.
6. All switches are on MDC-20 unless otherwise indicated.

Figure 2.8-9. Premodulation Processor Equipment

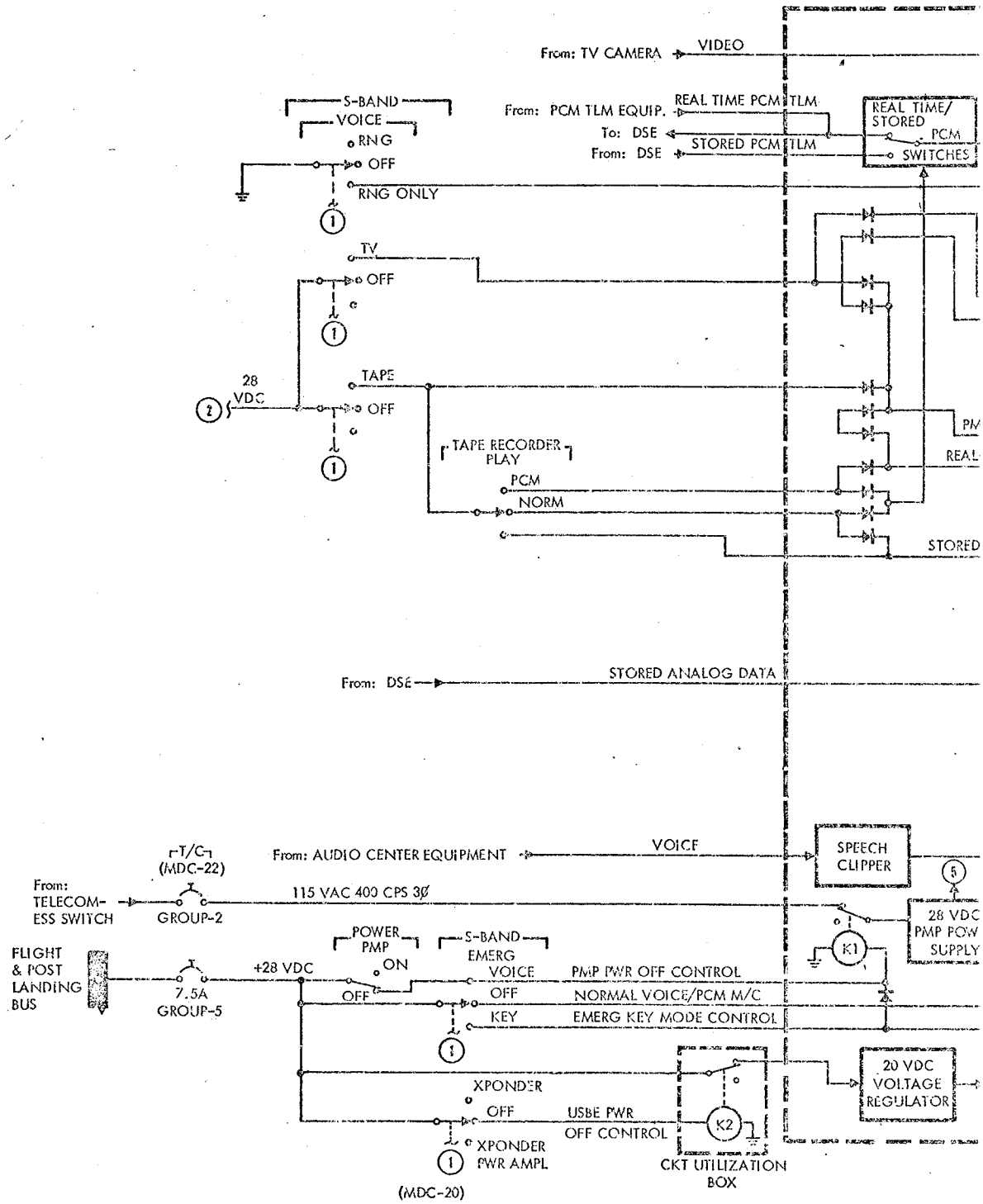
From: TV CAMERA
VIDEO
S-BAND
VOICE
RNG
OFF
RNG ONLY
From: PCM TLM EQUIP.
REAL TIME PCM TLM
To: DSE
From: DSE
STORED PCM TLM
REAL TIME/ STORED
PCM
SWITCHES
TV
OFF
28 VDC
TAPE
OFF
TAPE RECORDER PLAY
PCM
NORM
STORED
From: DSE
STORED ANALOG DATA
T/C (MDC-22)
From: AUDIO CENTER EQUIPMENT
VOICE
SPEECH CLIPPER
From: TELECOM-ESS SWITCH
GROUP-2
115 VAC 400 CPS 3Ø
28 VDC PMP POW SUPPLY
K1
FLIGHT & POST LANDING BUS
7.5A GROUP-5
+28 VDC
POWER PMP
ON
OFF
S-BAND EMERG
VOICE
PMP PWR OFF CONTROL
OFF
NORMAL VOICE/PCM M/C
KEY
EMERG KEY MODE CONTROL
XPONDER
OFF
USBE PWR OFF CONTROL
K2
20 VDC VOLTAGE REGULATOR
XPONDER PWR AMPL
(MDC-20)
CKT UTILIZATION BOX

source is used to enable the emergency key network only, which permits a 512-kc signal from the CTE to be keyed by the PTT key in the cobra cable. This signal is applied to the PM input of the USBE. In the VOICE position, voice signals from the audio center equipment are routed directly through the PMP and supplied to the FM-2 (emergency voice) input of the USBE.

The following matrix shows the switching configurations of the S-band system in several operational modes.

PMP Inputs

Signal Type	Source	Application
Real-time PCM TLM	PCM TLM equipment	Transmission to MSFN via USBE or VHF/FM transmitter
Video	TV equipment	Transmission to MSFN via USBE
Voice	Audio center equipment	Transmission to MSFN via USBE
Recorded PCM TLM	DSE	Transmission to MSFN via USBE or VHF/FM transmitter
512-kc square wave	CTE	CW transmission to MSFN during emergency key mode
512-kc square wave	PCM TLM equipment	Subcarrier for transmission of PCM TLM to MSFN via USBE
70-kc up-data subcarrier	USBE	Detection of up-data received from MSFN via USBE
30-kc up-voice subcarrier	USBE	Detection of up-voice received from MSFN via USBE

PMP Outputs

Output		Switch Positions (MDC-20)						
		PWR	S-BAND – VOICE Group			S-BAND	TAPE RECORDER	
Types of Data	Destination	PMP	RNG-Off-RNG ONLY	TAPE-Off	TV-Off	EMERG	PLAY	RECORD-Off-PLAY
Real-time voice	USBE (FM-2)	*	*	*	*	VOICE	*	*
Interrupted 512-kc carrier (keyed by PTT switch)	USBE (PM)					KEY		
Real-time PCM TLM	VHF/FM Transmitter	ON		Off (center)		Off (center)		
Recorded PCM TLM				TAPE			PCM or NORM	PLAY
Real-time PCM TLM and voice	USBE (PM)		RING or Off (center)	Off (center)	Off (center)		*	RECORD or OFF (center)
Real-time voice			RNG ONLY					
Recorded PCM and real-time voice	USBE (FM-1)		*	TAPE			NORM	PLAY

*This switch does not affect this output mode.

PMP Outputs								
Output		Switch Positions (MDC-20)						
		PWR	S-BAND – VOICE Group			S-BAND	TAPE RECORDER	
Types of Data	Destination	PMP	RNG-Off-RNG ONLY	TAPE-Off	TV-Off	EMERG	PLAY	RECORD-Off-PLAY
Recorded PCM TLM and real-time voice	USBE (FM-1)	ON	*	TAPE	Off (center)	Off (center)	PCM	Play
Real-time PCM TLM and voice								
Real-time PCM TLM, voice, and TV				Off (center)	TV		*	*
Real-time PCM TLM and voice								
Up-data commands	UDL			*	*			
Up-voice	Audio Center Equipment							

*This switch does affect this output mode.

2.8.3.2.6 Data Storage Equipment (DSE).

The DSE (figure 2.8-10)is a three-speed, 14-track magnetic tape recorder and reproducer located in the LEB. It is used to store data during phases of the mission which inhibit or prevent the successful transmission of this data to the MSFN. Data can be recorded in parallel on five digital channels, and played back during a later phase of the mission for transmission to the MSFN. Each reel contains 2250 feet of one-inch-wide, magnetic, Mylar tape.

The PCM TLM data is obtained from the PCM TLM equipment as a single serial pulse train at a high bit-rate of 51.2 KBPS or a low bit-rate of 1.6 KBPS, depending on the PCM TLM mode. In the DSE, a serial-to-parallel converter circuit converts this signal into four parallel digital channels, each of which as a resulting pulse repetition rate (PRR) of only 12.8 KBPS or 0.4 KBPS (one-fourth of the original PRR). The PCM TLM equipment also furnishes a 51.2-kc or 1.6-kc square wave timing signal to the DSE, which is also divided by four. These five signals, the four channels of PCM TLM and the clock signal, are amplified by the five digital record amplifiers and fed to the digital record heads. Only one analog channel, the 25-kc reference and timing signal from the FQR, is scheduled for use on SC012.

During playback, the playback heads pick up the recorded data and present it to the digital playback amplifiers. The four parallel channels of recorded digital data and the clock signal divided by four are picked up by the five digital playback heads and presented to the five digital playback amplifiers. The amplified signals are then routed to the parallel-to-serial converter and the reproduce module. The four digital signals are converted back to a single serial pulse train which is fed to the PMP equipment. The bit-rate of this output will always be 51.2 KBPS, even if the recorded data was originally 1.6 KBPS. This is due to different speeds used in recording and reproducing. The 51.2 KBPS high bit-rate PCM signal is recorded at 15 inches per second (ips) and played back at the same speed. The low bit-rate signal of 1.6 KBPS is recorded at 3.75 ips, however, and played back at 120 ips, an increase of 32 times. This increases the 1.6 KBPS PRR to 51.2 KBPS.

The DSE is a bidirectional machine with a tape transport mechanism capable of forward or reverse operation at any of three speeds: 3.75 ips (low speed), 15 ips (normal speed), and 120 ips (high speed). The low speed of 3.75 ips is used only to record low bit-rate PCM TLM data. The DSE playback electronics is automatically disabled whenever this speed is selected. The normal speed of 15 ips is used to record and play back high bit-rate PCM TLM data. The high speed of 120 ips is used for fast dump of the low bit-rate PCM TLM data which was recorded at 3.75 ips. The high speed is also used for fast forward or reverse rewinding. Maximum operating times, to record or play back the entire 2250 feet of tape, are as follows: 2 hours at the low speed of 3.75 ips, 30 minutes at the normal speed of 15 ips, and 3.75 minutes at the high speed of 120 ips.

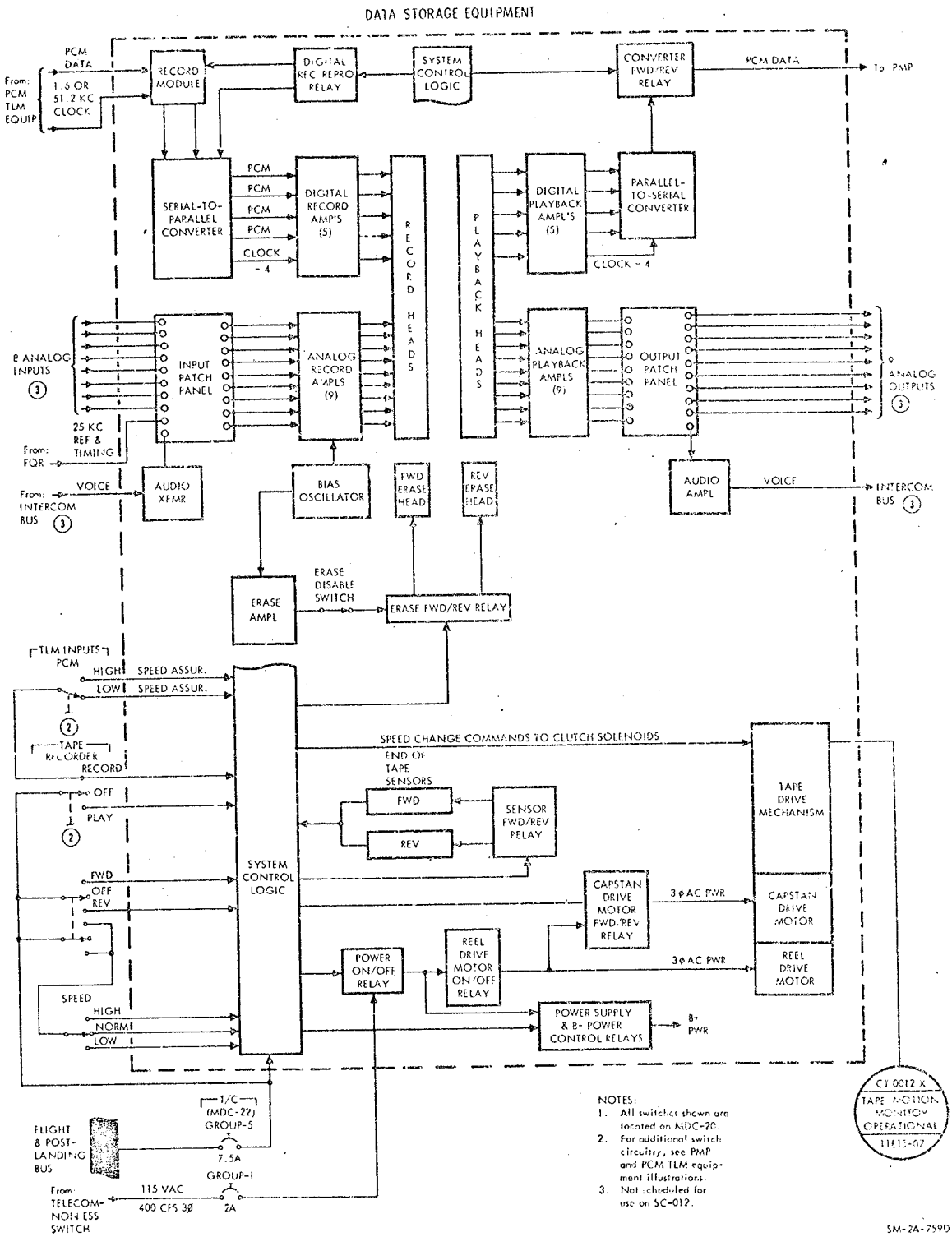

Figure 2.8-10. Data Storage Equipment

Tape speed and direction are controlled by the TAPE RECORDER – SPEED and – FWD/OFF/REV switches on MDC-20. Other TAPE RECORDER switches are the RECORD/PLAY switch which selects the record or playback mode, and the PLAY switch which selects the type of data to be reproduced. The PLAY switch has two positions: PCM and NORM. In either position, only PCM TLM data is reproduced and routed to the PMP equipment. The S-BAND – VOICE – TAPE switch must be set to TAPE before the TAPE RECORDER – PLAY switch becomes effective. The TLM INPUTS – PCM switch also affects tape recorder operation when recording. The interlock circuit in the DSE system control logic, which prevents selection of conflicting operational modes, locks the tape speed at 15 ips (normal) when the TLM INPUTS – PCM switch is set to HIGH. When set to LOW, the tape speed is locked at 3.75 ips. The proper control switch configuration for all DSE modes is shown in the table at the end of this paragraph.

An end-of-tape sensing circuit in the DSE automatically removes power from the tape drive mechanism and electronic circuits when the end of the tape is reached.

DSE Functions	Switch Positions					
	S-BAND–VOICE	TAPE RECORDER				TLM INPUTS
	TAPE-Off-ANALOG	PLAY PCM-NORM-ANALOG	SPEED HIGH-NORM-LOW	RECORD-Off-PLAY	FWD Off-REV	PCM HIGH-LOW
Record high bit rate	OFF	Any	NORM	RECORD	FWD* or REV	HIGH
Record low bit rate	OFF	Any	LOW	RECORD	FWD* or REV	LOW
Playback recorded high bit rate	TAPE	PCM or NORM	NORM	PLAY	FWD or REV	Any
Playback recorded low bit rate	TAPE	PCM or NORM	HIGH	PLAY	FWD or REV	Any
Playback recorded** mixed bit rate	TAPE	PCM or NORM	NORM	PLAY	FWD or REV	Any
Reposition tape to end of reel (rewind)	OFF	Any	HIGH	PLAY	FWD or REV	Any

*Since the DSE is a bidirectional machine, it can record, play back, or rewind in either direction.
**Under present mission procedures, this mode should not be necessary.

Illegal Modes:

1. High bit rate must be recorded at normal speed or tape motion will stop.
2. Low bit rate must be recorded at low speed or tape motion will stop.
3. If tape is played back at low speed, the tape will move, but there will be no playback data available to the transmitters.
4. If tape is played back at high speed and contained high bit rate data, the playback data will be garbled.
5. If a FWD or REV command only is given to initiate a rewind, there will be no tape motion. A mode must also be selected (preferably PLAY) before tape will move.

2.8.3.2.7 Flight Qualification Recorder (FQR).

The FQR is a 14-track magnetic tape recorder which is used to record certain flight qualification measurements during critical phases of the mission. (See figure 2.8-11.) This data will be used for postflight analysis only; the FQR has no in-flight playback or transmission capability. It will be activated in a record mode during the ascent and entry phases of the mission and during SPS burns.

Flight qualification data is recorded in analog form. (Digital data cannot be recorded on the FQR.) Two recording tracks (one record head in each of two record-head stacks) are used for reference and time code recording. To accomplish this, an elapsed time code generator is used to modulate a narrow-band VCO. The output of the VCO is then mixed with the output of a 50 kc reference oscillator. This composite signal is presented to each of the two record heads through two direct record amplifiers.

The FQR operates at a record speed of 15 ips and a rewind speed of 120 ips. The 15 ips record speed allows a total of 30 minutes recording time per reel of tape. Because there are no provisions for crewmembers to change tape reels during the mission, the FQR must be used conservatively. Normally, the rewind function will not be used unless it is required to back the tape up to the beginning during prelaunch activities. End-of-tape sensing is provided, which will automatically halt the tape motion and remove power from the electronic circuits when the end of the tape is reached in either direction.

Crewman control of the FQR is provided by the FLIGHT QUAL RCDR, 3-position toggle switch on MDC-19. In the STOP position, all a-c and d-c power is removed. Placing the switch to RECORD activates all electronic circuitry and the tape transport mechanism, which moves the tape forward at 15 ips. The REWIND position activates the tape transport mechanism to move the tape backward at 120 ips.

The measurement numbers and names of the parameters stored in the FQR are presented in the following list. This does not include the two FQR channels utilized for storage of reference and timing code storage.

Measurement Number	Identity
CG 2010 V	X PIPA output, in phase
CG 2030 V	Y PIPA output, in phase
CG 2050 V	Z PIPA output, in phase
CK 0004 A	Linear acceleration structure X axis A
CK 0005 A	Linear acceleration structure Y axis A

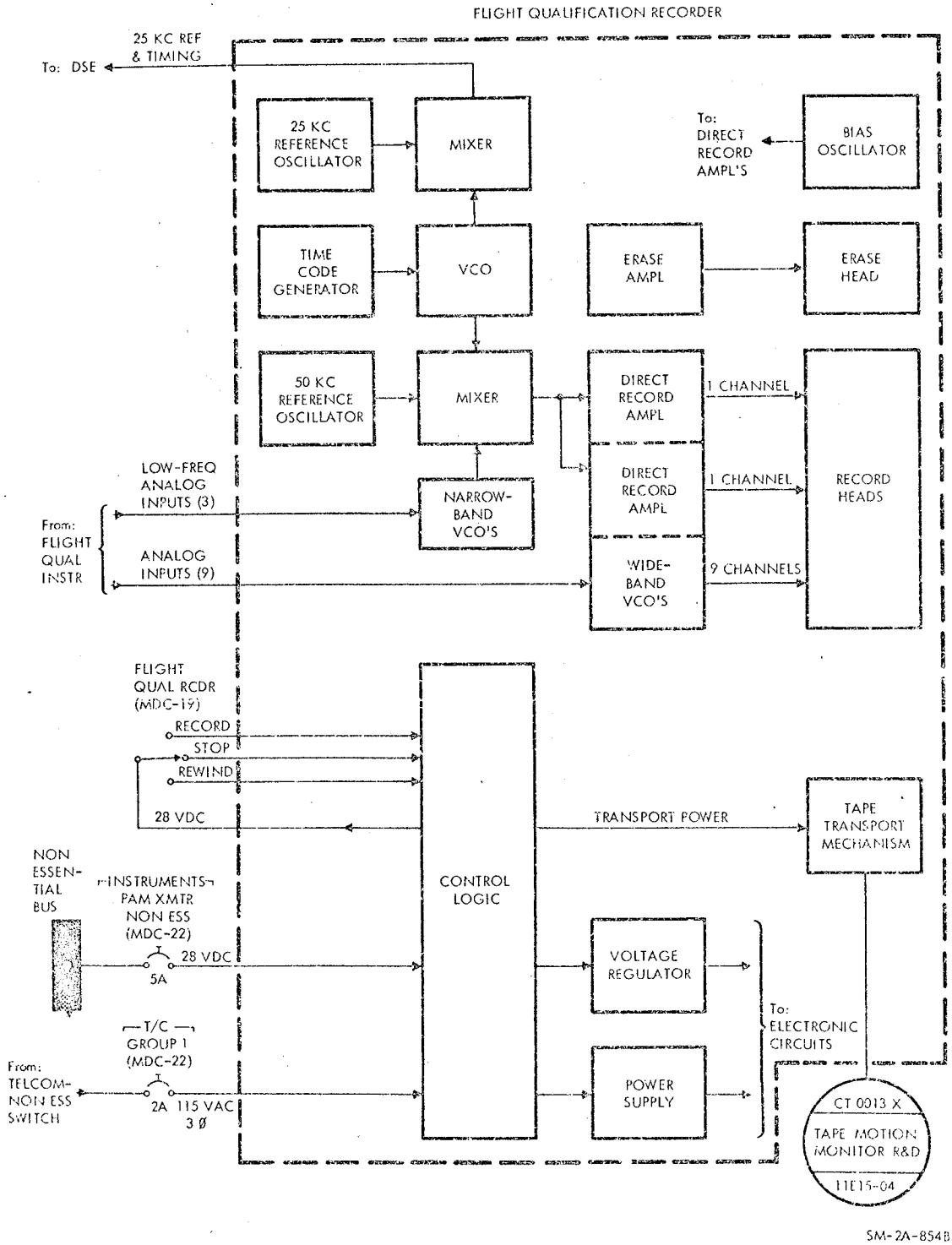

Figure 2.8-11. Flight Qualification Recorder Equipment

Measurement Number	Identity
CK 0006 A	Linear acceleration structure Z axis A
CR 0514 P	CCW roll engine pressure, system A
CR 0520 P	CCW roll engine pressure, system B
CR 0623 P	Fuel line pressure, system A
CR 0624 P	Fuel line pressure, system B
CR 0625 P	Oxidizer line pressure, system A
CR 0626 P	Oxidizer line pressure, system B

2.8.3.2.8 Up-Data Link (UDL) Equipment.

The function of the UDL equipment is to receive, verify, and distribute digital up-dating information sent to the S/C by the MSFN at various times throughout the mission to up-date or change the status of operational systems. The UDL (figure 2.8-12) consists of a UHF-FM receiver, a transistor mode switch, detecting and decoding circuitry, a buffer storage unit, output relay drivers, and a power supply. The UDL provides the means for MSFN to update the AGC, the CTE, and to select certain vehicle functions.

Two operational modes are possible: UHF and S-band. The mode normally used is UHF. In this mode, the incoming 450-mc up-data carrier is received by the VHF omni-antenna equipment and fed to the UHF receiver in the UDL. The intelligence is detected from the carrier and routed through the mode switch to the sub-bit detector, which converts it to a serial digital signal. The digital output from the sub-bit detector is fed to the remaining UDL circuitry, which stores and checks the digital data, determines the proper destination of the data, and processes it to the appropriate S/C system or equipment.

Real-time commands from the real-time command (RTC) drivers are supplied to the UDL RTC relay box which contains four, RTC, 2-position, latching relays. Thus eight real-time commands are possible: four "set" commands and four "reset" commands. The chart on the following page lists the eight commands by number and function.

The S-band up-data mode can be selected when the USBE is in operation. In this mode, the UHF receiver in the UDL is deactivated and its function is replaced by the USBE receiver and the PMP. Up-data information can be transmitted to the S/C within the 2-kmc S-band signal. When this signal is received by the USBE receiver, the 70-kc subcarrier containing the up-data information is extracted and sent to the up-data discriminator in the PMP. The resulting composite audio frequency signal is routed to the sub-bit detector in the UDL.

There are three external controls for the UDL equipment. One is the three-position, center-off, UP-DATA switch on MDC-20. When set to the

UDL Real-Time Commands				
Command	Action	UDL Relay	MDC-20 SW Position	Results
00	Deactivates system A abort request light	K1 (RESET)		MDC-3
01	Activates system A abort request light	K1 (SET)		MDC-3 turns on abort light.
02	Effect on C-band equipment operation determined by position of C-band switch on MDC-20	K3 (RESET)	C-BAND 1 PULSE	C-band equipment continues to operate in 1-pulse mode.
			OFF	C-band equipment remains off.
			2 PULSE	C-band equipment continues to operate in 2-pulse mode.
03	Turns C-band equipment on in 2-pulse mode	K3 (SET)	C-BAND 1 PULSE	C-band equipment continues to operate but switches to 2-pulse mode.
			OFF	Energizes C-band equipment which operates in 2-pulse mode.
			2 PULSE	No effect on C-band operation.
04	Effect on VHF-FM transmission of PCM data determined by position of VHF-FM-ON/OFF and TLM INPUTS-HIGH/LOW switches on MDC-20	K4 (RESET)	VHF-FM ON	No effect on VHF-FM transmitter.
			OFF	No effect on VHF-FM transmitter.
			TLM INPUTS PCM HIGH	PCM TLM remains in 51.2 KBS.
			LOW	PCM TLM output is 1.6 KBS.
05	Turns VHF-FM transmitter on and changes bit rate from low to high	K4 (SET)	VHF-FM ON	No effect on VHF-FM transmitter.
			OFF	Energizes VHF-FM transmitter.
			TLM INPUTS PCM HIGH	No effect on bit rate.
			LOW	Switches from 1.6 KBS to 51.2 KBS. NOTE: If data is being recorded, DSE will automatically stop if TAPE RECORD-SPEED switch is not positioned to HIGH.
06	Deactivates system B abort request light	K2 (RESET)		MDC-3
	Activates system B abort request light	K2 (SET)		MDC-3 turns on abort light.

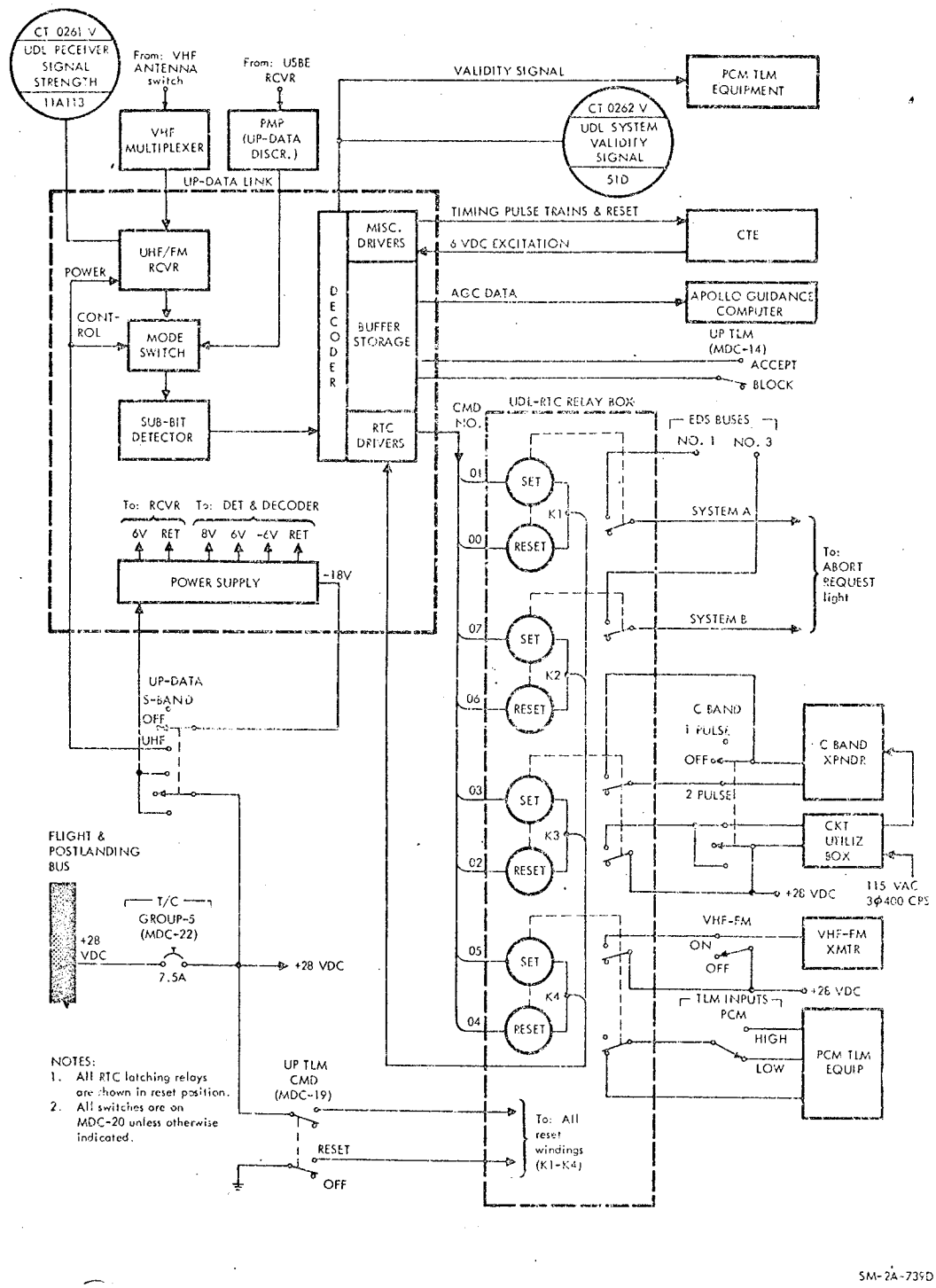

Figure 2.8-12. Up-Data Link Equipment

UHF position, the UHF up-data mode is selected and 28-volt d-c power is applied to the UDL power supply. The S-BAND position also applies 28-volt d-c power, but selects the S-band up-data mode and deactivates the UHF/FM receiver. Another control, located on MDC-19, is the two-position spring-loaded UP TLM CMD switch. When set momentarily to the RESET position, all "reset" commands listed in the UDL real time commands chart are commanded. This nullifies all "set" commands which have been received from the MSFN. An UP TLM – ACCEPT/BLOCK switch (MDC-14) is also provided which enables the crew to permit or prevent G&N up-data from affecting the guidance computer.

2.8.3.2.9 Central Timing Equipment (CTE).

The CTE provides precision square wave timing pulses of several frequencies to time-correlate all S/C time-sensitive functions. It also generates and stores the real-time day, hour, minute, and second time-from-launch (TFL) in binary-coded decimal (BCD) format for display and transmission to the MSFN. (See figure 2.8-13.)

In the primary or normal mode of operation, the Apollo guidance computer (AGC) provides a 1024-kc sync pulse to the CTE. This automatically synchronizes the CTE with the AGC and provides a stability of $\pm 2 \times 10^{-6}$ parts in 14 days. In the event of sync pulse failure, the CTE automatically switches to the secondary mode of operation with no time lapse and operates using its own crystal oscillator at a stability reduced to $\pm 2.2 \times 10^{-6}$ parts in 5 days.

The CTE contains two power supplies for redundancy. Each one is supplied from a different power source and through separate circuit breakers. These circuit breakers, CENTRAL TIMING SYS – MN A and – MN B on MDC-22, provide the only external means of control for the CTE. The two power supplies provide parallel 6-volt d-c outputs, either one of which is sufficient to power the CTE.

The timing signals generated by the CTE, and their applications, are listed in the CTE Outputs chart.

CTE Outputs

Signal	Destination	Purpose
512-kc square wave	PCM TLM equipment	Synchronization of internal clock
	PMP equipment	Modulating signal for S-band emergency key transmission
6.4-kc square wave	EPS inverters (three)	Synchronization of 400-cycle a-c power

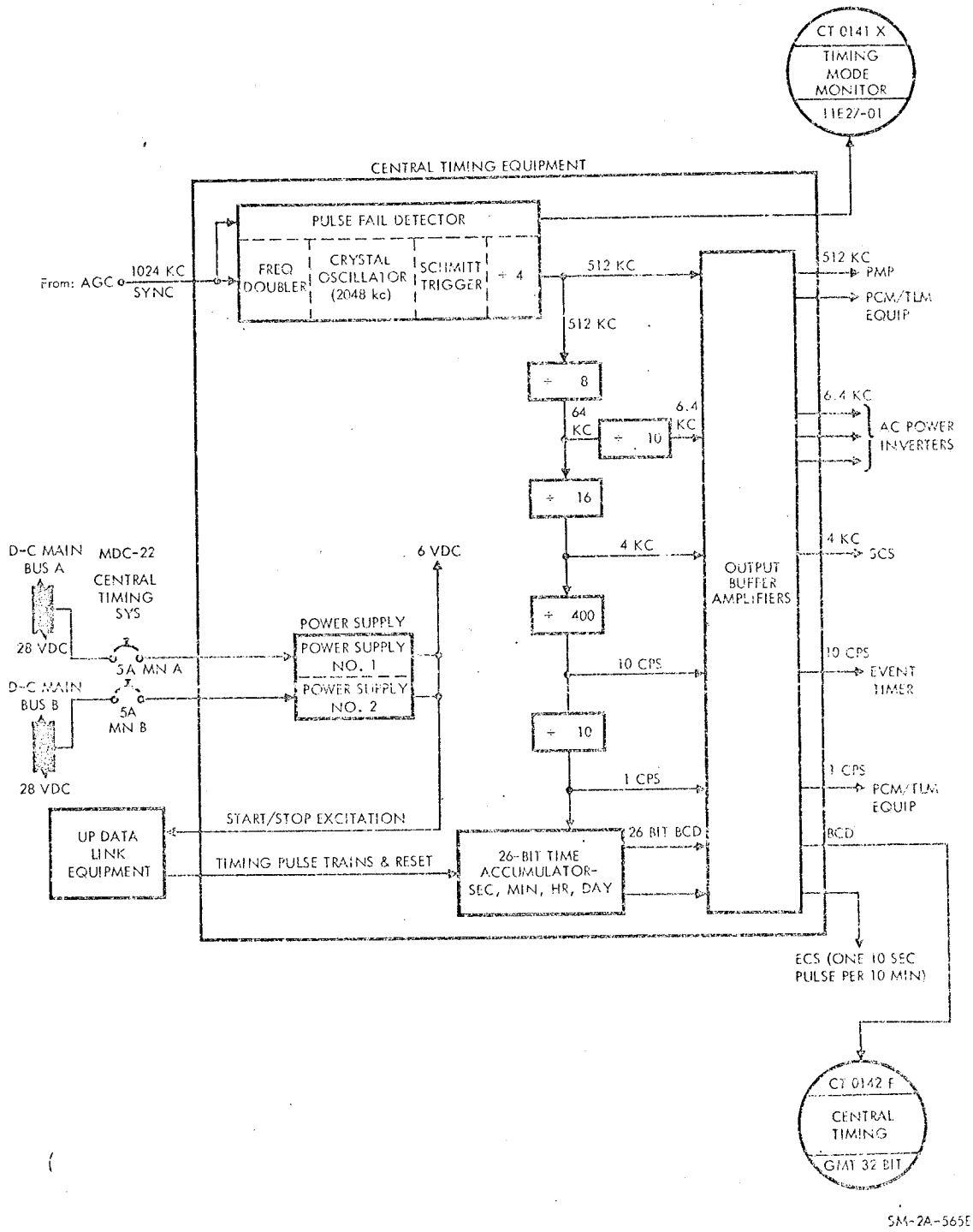

Figure 2.8-13. Central Timing Equipment

SYSTEMS DATA

Signal	Destination	Purpose
4-kc square wave	SCS	Synchronization of X-axis accelerometer integrator
10-cps square wave	Displays	Digital event timer
1 cps	PCM TLM equipment	Synchronization of subframe of PCM data, Displays, and T-Timer
DC	PCM TLM equipment	Pulse-fail detection and indication. (Sampling rate equals 10 samples/sec, 5μ sec pulse duration.)
Binary coded decimal time code	PCM TLM equipment	Provides time code data to TLM in BCD format (TLM measurement No. CT0142F, C T-GM5 32 bit).
1 pulse per 10 minutes	ECS	Supplies pulse every 10 minutes to ECS circuitry which opens a solenoid for 10 seconds in every 10 minutes to remove water from space suits.

2.8.3.2.10 Voice Recorders

Two voice recorders have been provided to enable the crewmembers to keep a voice log of mission activites. Both units are mounted in the right-hand equipment bay, one in an operating condition and the other stowed. Changeover to the inoperative recorder is made by changing the electrical power connector.

Each tape recorder provides 450 feet of 1/4-inch tape which operates at a speed of 0.6 inches per second. The use of tape reversal, automatic head switching, and four individual recording heads provide ten hours of usable recording time per tape recorder. The information contained on the tape cannot be dumped during flight but must be played back utilizing suitable GSE.

To ready the connected voice recorder for operation, the following switch positions must be selected: the RCDR/HF switch to T/R (MDC-13, -23, -26), the intercom switch to T/R, the HF power switch to OFF (MDC-20), and the mode selector to SSB or AM. (See figure 2.8-14.) Actual activation of the voice recorder is possible three ways: two correct; one wrong. The first correct activation path has the POWER switch at PTT (MDC-13, -23, -26) and the PTT pushbutton on the cobra cable depressed. The other correct method of activation requires the POWER switch to be at VOX and the VOX circuit enabled or the PTT pushbutton

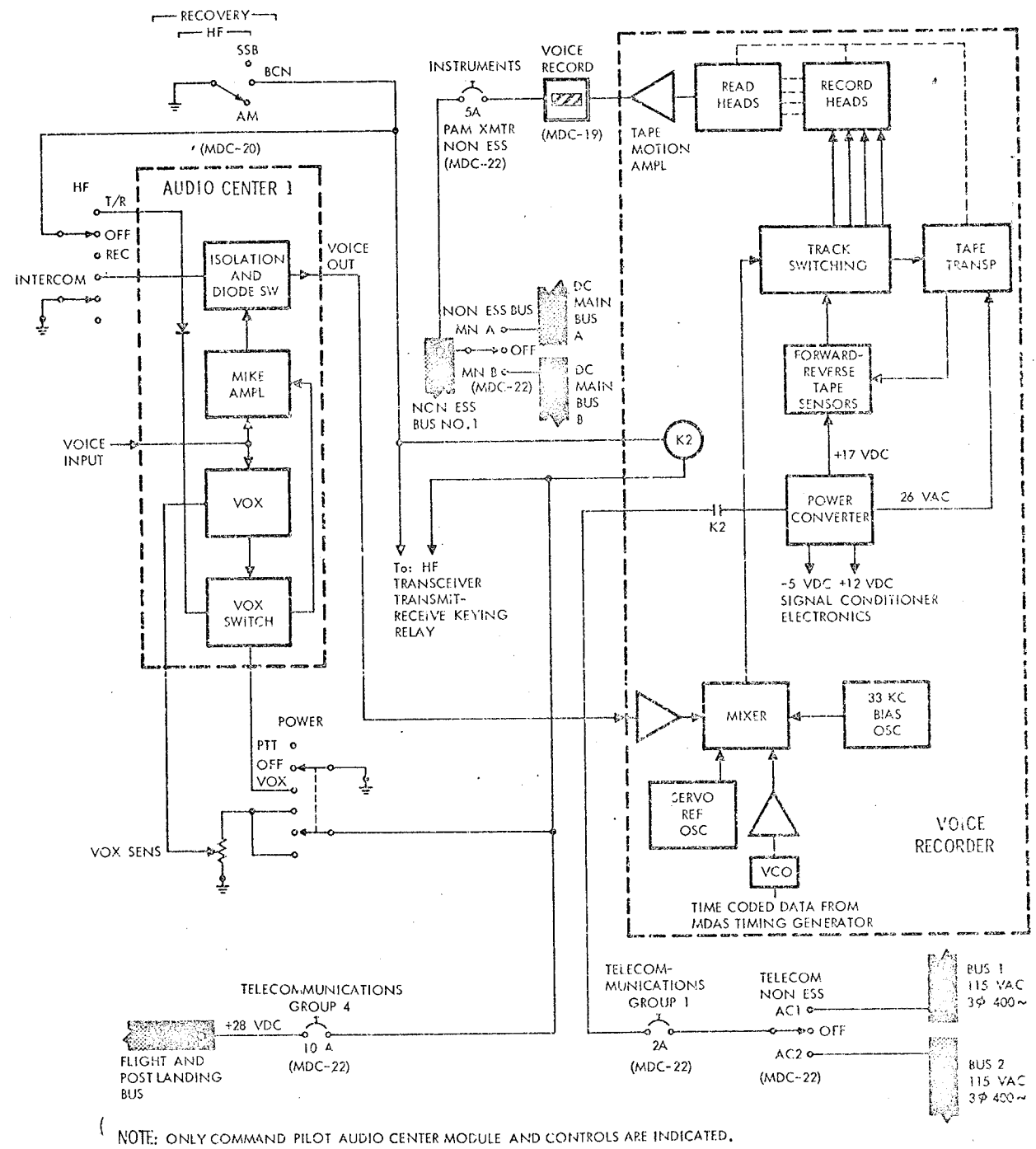

NOTE: ONLY COMMAND PILOT AUDIO CENTER MODULE AND CONTROLS ARE INDICATED.

SM-2A-955C

Figure 2.8-14. Voice Tape Recorder

depressed. The connected voice tape recorder can be inadvertently activated by positioning the HF mode switch to BCN (MDC-20). This would continuously run the connected voice tape recorder until it used up its tape. A VOICE RECORD flag indicator (MDC-19) will display the striped area when recording is in progress. The indicator grey area will be displayed when voice recording is not in progress or the tape supply has been exhausted during recording.

The stowed voice recorder may be placed in operating condition by moving the RCDR/HF switch to OFF (MDC-13, -23, and -26), removing the electrical connector from the exhausted recorder, and installing it to the connector on the stowed recorder. Operation is resumed by moving the RCDR/HF switch to T/R (MDC-13, -23, or -26).

NOTE To include the timing reference while recording on the voice tape recorder, the MDAS MAIN POWER switch must be ON (LEB compartment C) and the TIMER switch must be at "NORMAL."

2.8.3.3 RF Electronics Equipment Group.

The RF electronics equipment group includes all T/C equipment which functions as RF transmitters or receivers. The antenna used by this equipment are mentioned only briefly in this paragraph. More information on the antennas can be found in the paragraph on antenna equipment.

2.8.3.3.1 VHF/AM Transmitter-Receiver Equipment.

The VHF/AM transmitter-receiver equipment (figure 2.8-15) provides the primary means for in-flight voice communications with the MSFN. It is contained in the same electronics package as the VHF recovery beacon equipment, in the LEB.

Two modes of operation are possible: simplex and duplex. The simplex mode will normally be utilized. The duplex mode will be used on future missions for EVA and LEM communications. During recovery, the transmitter can be utilized as a backup VHF recovery beacon by holding down the PTT key.

The transmitter operates at 296.8 mc in both operational modes. The receiver contains two "front ends." The receive 1 front end operates at 296.8 mc and is used for simplex operations. For duplex operations, the receive 2 front end, which operates at 259.7 mc, is selected.

The VHF/AM transmitter-receiver is controlled by the VHF-AM controls on MDC-20. The T/R/OFF/REC switch activates the transmitter and receiver when in the T/R position; the REC position activates the receiver alone; the OFF position removes power from both. Simplex or duplex operation is selected by placing the RCVR switch to 1 or 2, respectively. The remaining, thumbwheel-type SQUELCH control can be rotated up or down to increase or decrease the sensitivity of the squelch gate.

Audio to and from the VHF-AM is controlled by the VHF-AM-T/R/OFF/REC switch on MDC-13, -23, -26. Voice transmission is possible when this switch is at T/R, the POWER switch is at PTT, the cobra cable PTT/CW switch is at PTT and the PTT key is pressed.

NOTE The POWER switch can also be at VOX, but actual keying of the VHF/AM must be via the PTT circuit.

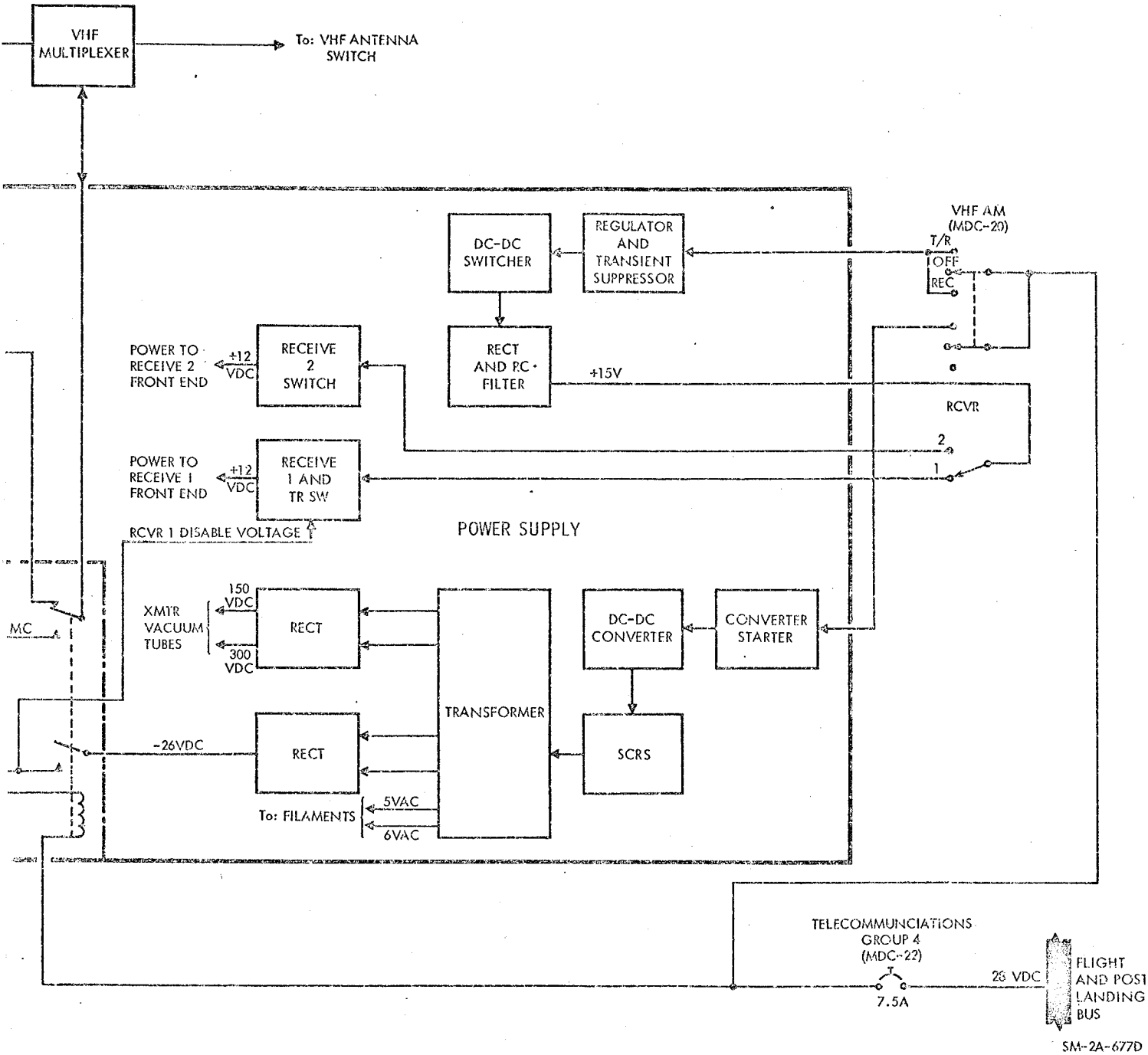

Figure 2.8-15. VHF/AM Transmitter-Receiver Equipment

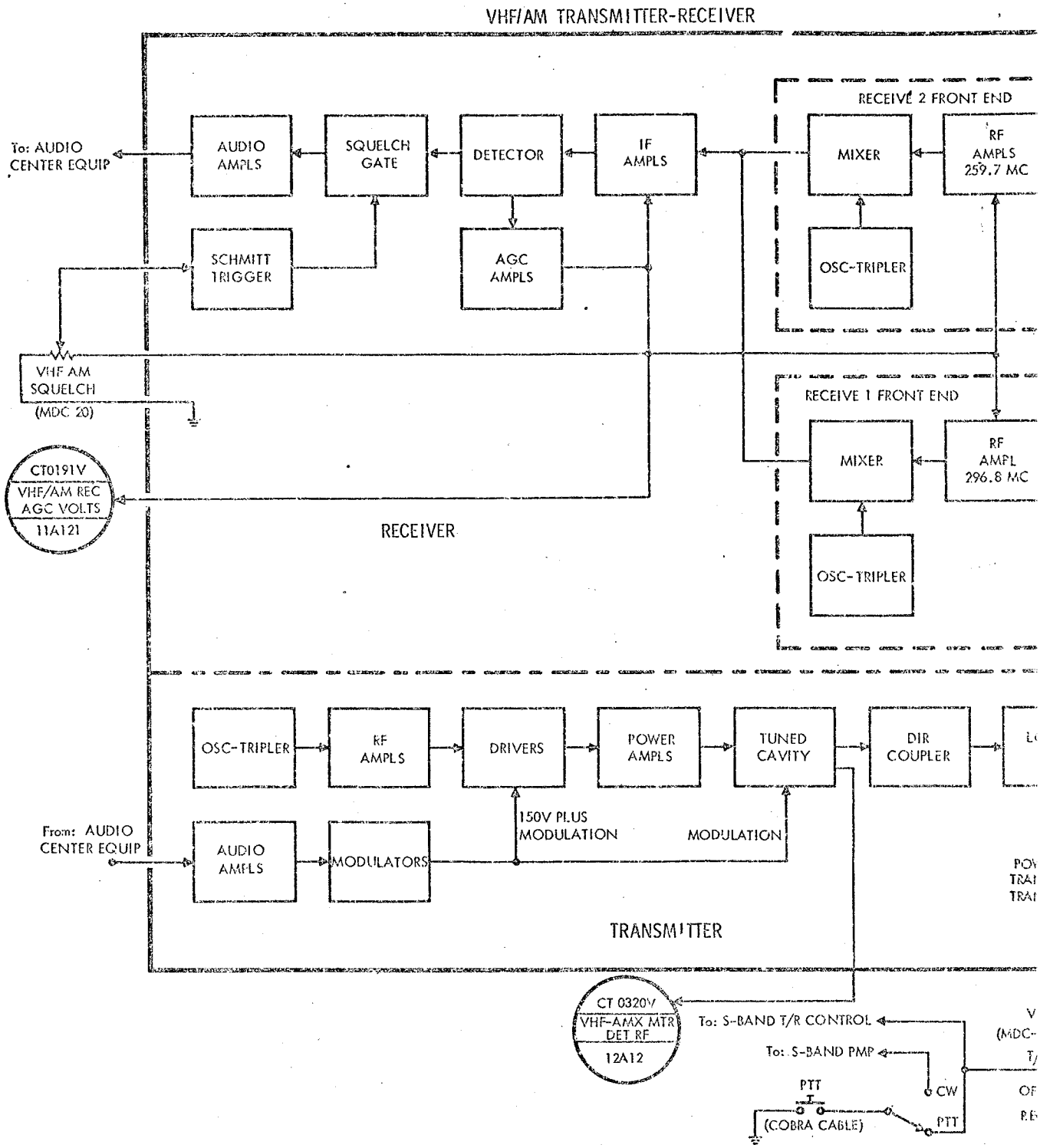
VHF/AM TRANSMITTER-RECEIVER
RECEIVE 2 FRONT END
To: AUDIO CENTER EQUIP
AUDIO AMPLS
SQUELCH GATE
DETECTOR
IF AMPLS
MIXER
RF AMPLS 259.7 MC
SCHMITT TRIGGER
AGC AMPLS
OSC-TRIPLER
VHF AM SQUELCH (MDC 20)
RECEIVE 1 FRONT END
CT0191V
VHF/AM REC AGC VOLTS
11A121
MIXER
RF AMPL 296.8 MC
RECEIVER
OSC-TRIPLER
OSC-TRIPLER
RF AMPLS
DRIVERS
POWER AMPLS
TUNED CAVITY
DIR COUPLER
150V PLUS MODULATION
MODULATION
From: AUDIO CENTER EQUIP
AUDIO AMPLS
MODULATORS
TRANSMITTER
CT 0320V
VHF-AMX MTR DET RF
12A12
To: S-BAND T/R CONTROL
To: S-BAND PMP
PTT
CW
(COBRA CABLE)
PTT

The VHF portion of the upper or lower SCIN antenna is used during flight. VHF recovery antenna No. 2 is used during recovery. Antenna selection is made with the VHF ANTENNA switch on MDC-20.

2.8.3.3.2 HF Transceiver Equipment.

The HF transceiver equipment (figure 2.8-16) is the primary means to aid recovery operations during the postlanding phase of the mission by providing long-range, simplex, voice communications and beyond line-of-sight direction finding capabilities. It is contained in the same electronics package as the VHF-FM transmitter equipment in the LEB.

The HF transceiver equipment is controlled by the RECOVERY-HF switches on MDC-20. The ON/OFF switch, when placed to ON, connects d-c power to the transceiver. The SSB/BCN/AM switch is used to select the operational mode. Three modes of operation are available; single sideband (SSB), beacon (BCN), and amplitude modulation (AM). The BCN mode is used to transmit an unmodulated, continuous wave, direction finding beacon. The SSB and AM modes are used for long-range, simplex, voice communications. The operating frequency is 10.006 mc for the transmitter and receiver in all modes.

The audio center equipment supplies the audio input to the modulator in the translator module and accepts the detected audio signal from the receiver module of the transceiver. The HF transmitter is keyed by VOX or PTT.

The HF recovery antenna is used for transmission and reception and will be deployed after touchdown as part of the postlanding sequence of operations. The transceiver must not be operated prior to antenna deployment or damage may occur.

2.8.3.3.3 VHF/FM Transmitter Equipment.

The sole function of the VHF/FM transmitter equipment (figure 2.8-17) is to transmit PCM TLM data to the MSFN. These data are supplied to the VHF/FM transmitter by the PMP in the form of a 3-volt p-p pulsating d-c, modulating signal at a rate of 51,200 bits per second (bps) or 1600 bps. The bit rate depends on the PCM rate selected.

The nominal (center) frequency of the emitted RF carrier is 237.8 mc. Because the transmitter is frequency modulated, the 3-volt p-p modulating signal causes a frequency deviation of ±125 kc. The resulting 10-watt RF output is fed to the VHF portion of the VHF/2-KMC SCIN antennas.

The only external control for the VHF/FM transmitter equipment is the VHF-FM — ON/OFF switch on MDC-20 which energizes a relay in the transmitter, applying a-c power to the equipment. If the switch is set to OFF, the VHF/FM transmitter can be activated from the MSFN by a real-time command via the UDL equipment.

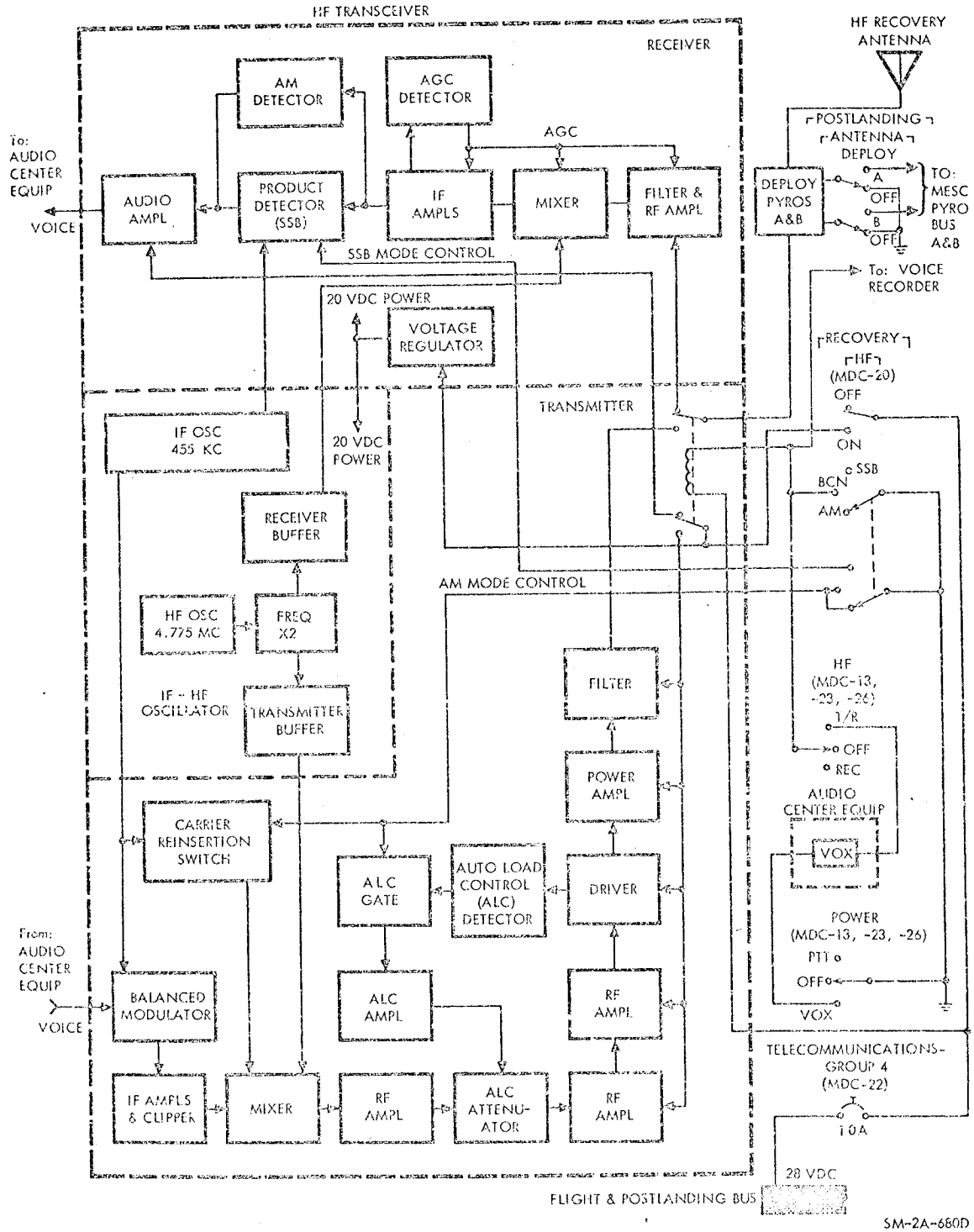

Figure 2.8-16. HF Transceiver Equipment

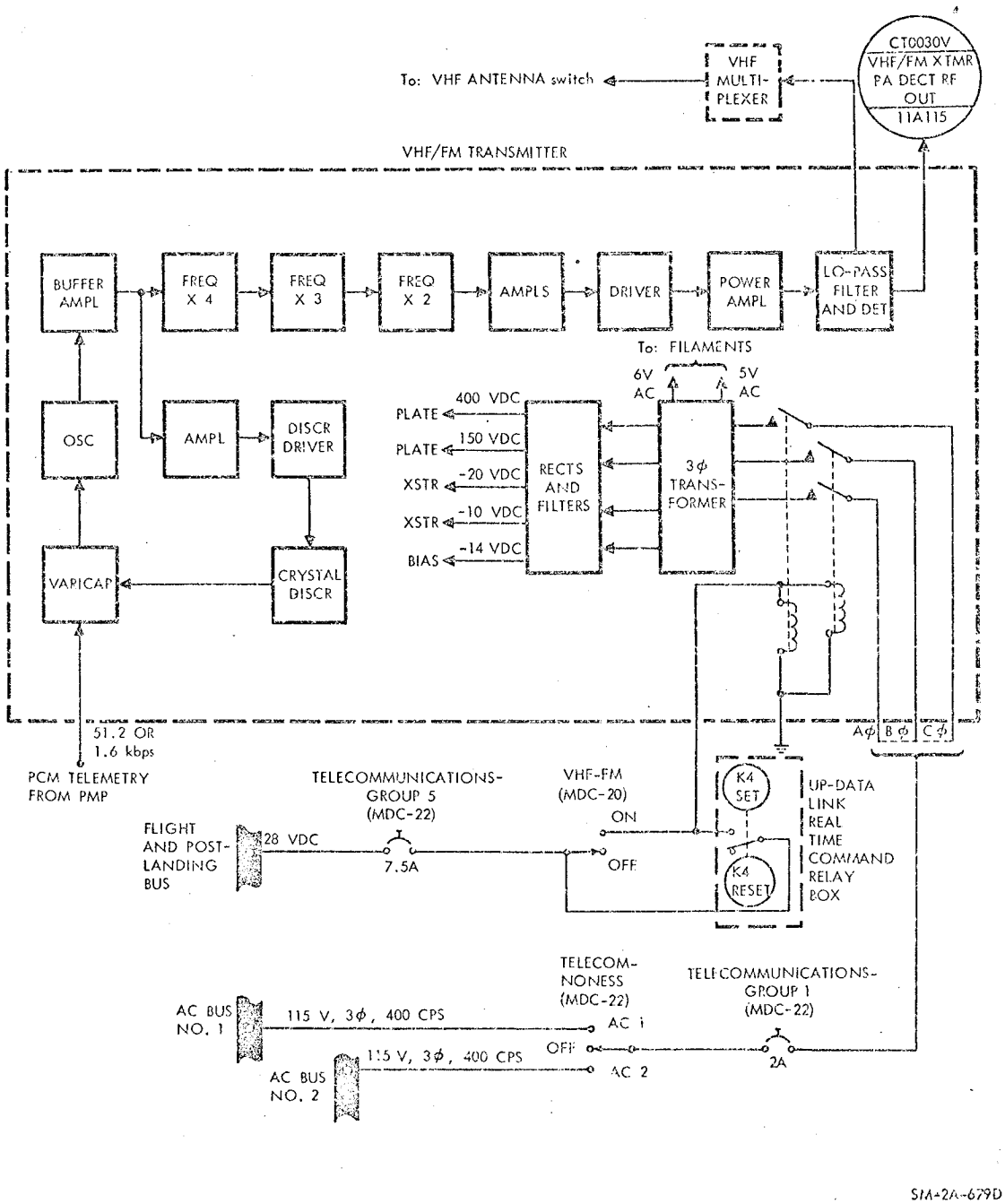

Figure 2.8-17. VHF/FM Transmitter Equipment

2.8.3.3.4 Unified S-Band Equipment (USBE).

The USBE (figure 2.8-18) consists of a receiver, transmitter, and power supply contained in a single electronics package in the lower equipment bay. Although primarily designed for deep-space communications, the USBE will be tested on this mission and used as backup for in-flight voice communications, tracking and ranging, transmission of PCM data, and reception of up-data. The USBE also provides the sole means for transmission of TV

The USBE tracking method employed is the two-way or double-doppler method. In this technique, a stable carrier of known frequency is transmitted to the S/C where it is received by the phase-locked receiver, multiplied by a known ratio, and then retransmitted to the MSFN for comparison. Because of this capability, the USBE is also referred to as the S-band transponder. From the double-doppler tracking method, S/C velocity, acceleration, and range can be determined.

For determining S/C range, the MSFN phase-modulates the transmitted carrier with a pseudo-random noise (PRN) binary ranging code. This code is detected by the S/C USBE receiver and used to phase-modulate the carrier transmitted to the MSFN. The MSFN receives the carrier and measures the amount of time dealy between transmission of the code and reception of the same code, thereby obtaining an accurate measurement of range. Once established, this range can be continually up-dated by the double-doppler measurements discussed earlier. The MSFN can also transmit up-data commands and voice signals to the S/C USBE by means of two subcarriers: 70 kc for up-data and 30 kc for up-voice.

The USBE receiver is a phase-tracking receiver that accepts a 2106.4-mc, phase-modulated RF signal containing the up-data and up-voice subcarriers and a pseudo-random noice (PRN) code when ranging is desired. This signal is supplied to the receiver via the diplexer in the S-band power amplifier equipment and presented to two separate detectors: the loop phase detector and the ranging phase detector. In the ranging phase detector, the 9.531-mc IF is detected; and the 70-kc up-data and 30-kc up-voice subcarriers are extracted, amplified, and routed to the up-data and up-voice discriminators in the PMP equipment. Also, when operating in a ranging mode, the PRN ranging signal is derived, filtered, and routed to the USBE transmitter as a modulating signal input to the phase modulator. In the loop phase detector, the 9.531-mc IF signal is detected by comparing it with the loop reference frequency. The resulting d-c output is used to control the frequency of the 19.0625-mc voltage-controlled oscillator (VCO). The output of the VCO is used as the reference frequency for receiver circuits as well as for the transmitter. The receiver is also provided with automatic gain control (AGC) and antenna selector circuitry which automatically selects the proper SCIN antenna when the S-BAND ANTENNA switch is in the AUTO position. The AGC circuitry also supplies a signal to the S-BAND ANT S-meter located on MDC-19. By observing this meter and rotating the S/C, the optimum S/C attitude for S-band communications can be attained.

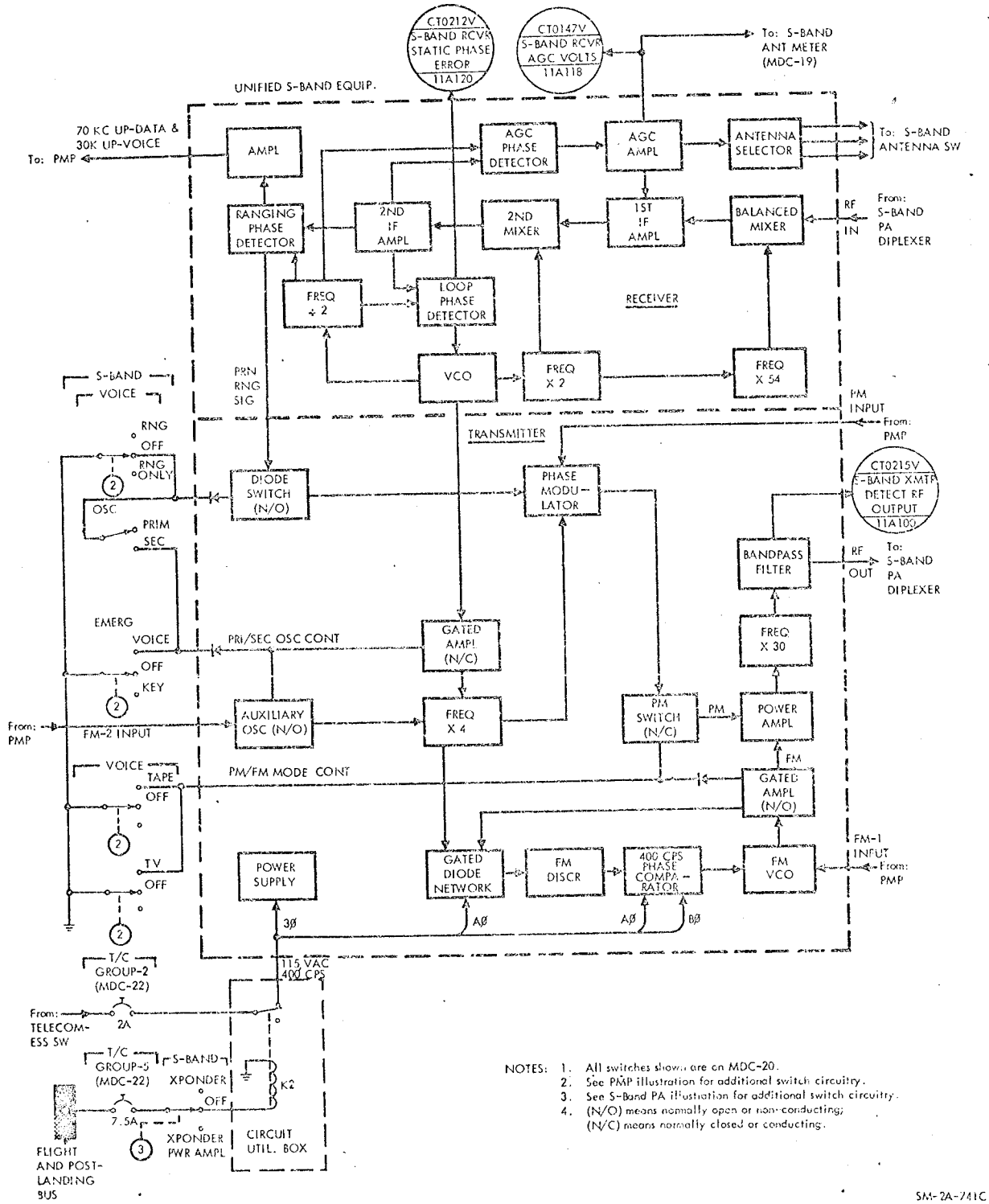

Figure 2.8-18. Unified S-Band Equipment

The USBE transmitter is capable of transmitting a 2287.5-mc signal, either phase-modulated or frequency-modulated. In the PM mode, the initial transmitter frequency is obtained from one of two sources: the VCO in the phase-locked USBE receiver or the auxiliary oscillator in the transmitter. When operating in the FM mode, the VCO or auxiliary oscillator initial frequency is not multiplied and used directly, but is used to control the frequency of a third oscillator, the FM VCO. The FM VCO is the source for the frequency-modulated 2287.5-mc signal.

Output mode and frequency source are controlled by the S-BAND group of switches on MDC-20. The VOICE and EMERG switches, contained in this group, also have an effect on PMP operation, thus ensuring compatibility between USBE and PMP modes. All data to be transmitted by the USBE is supplied by the PMP. Normally, the initial transmitter frequency is obtained from the receiver VCO. In case of failure of the VCO or S-band PA equipment, the auxiliary oscillator can be selected. This is done by moving the OSC switch from PRIM to SEC (with the RNG/RNG ONLY switch at the normal, center position) or by placing the EMERG switch to VOICE. If the latter is done, the PMP will provide a voice modulating signal directly to the auxiliary oscillator.

With all three S-BAND – VOICE switches and the S-BAND – EMERG switch set at their center positions, the USBE transmits a phase-modulated signal containing PCM TLM and voice data from the PMP. Setting the RNG/RNG ONLY switch to RNG, enables the PRN ranging code to be transmitted also. Setting this switch to RNG ONLY, adds the PRN ranging code but eliminates the PCM TLM portion of the PM input from the PMP. This mode is used to increase the strength of the PRN ranging code received by the MSFN. The other two S-BAND – VOICE switches are the TAPE and the TV switches. For PM operation, both of these switches must be at their center, off position. Setting either of them to any other position changes the USBE mode to FM for increased band-width and selects the FM-1 output of the PMP. Thus, these four switches (the three VOICE switches and the EMERG switch) are used to establish the operational mode. Only one switch at a time may be placed to any position other than center for proper operation of the USBE and PMP. For further description of PMP outputs, refer to the discussion of the PMP equipment.

The USBE is activated by the S-BAND – XPONDER/XPONDER PWR AMPL switch. Setting this switch to XPONDER or XPONDER PWR AMPL energizes a relay that applies 115 volts ac to the USBE power supply, which provides +15 volts dc and -15 volts dc outputs to the USBE transmitter and receiver. The RF output of the USBE transmitter is fed to the S-band power amplifier equipment. Here, the signal is either bypassed directly to the S-BAND ANTENNA switch or amplified and then fed to the S-BAND ANTENNA switch.

2.8.3.3.5 S-Band Power Amplifier Equipment.

The S-band power amplifier (PA) equipment (figure 2.8-19) is used to amplify the RF output from the USBE transmitter when additional signal

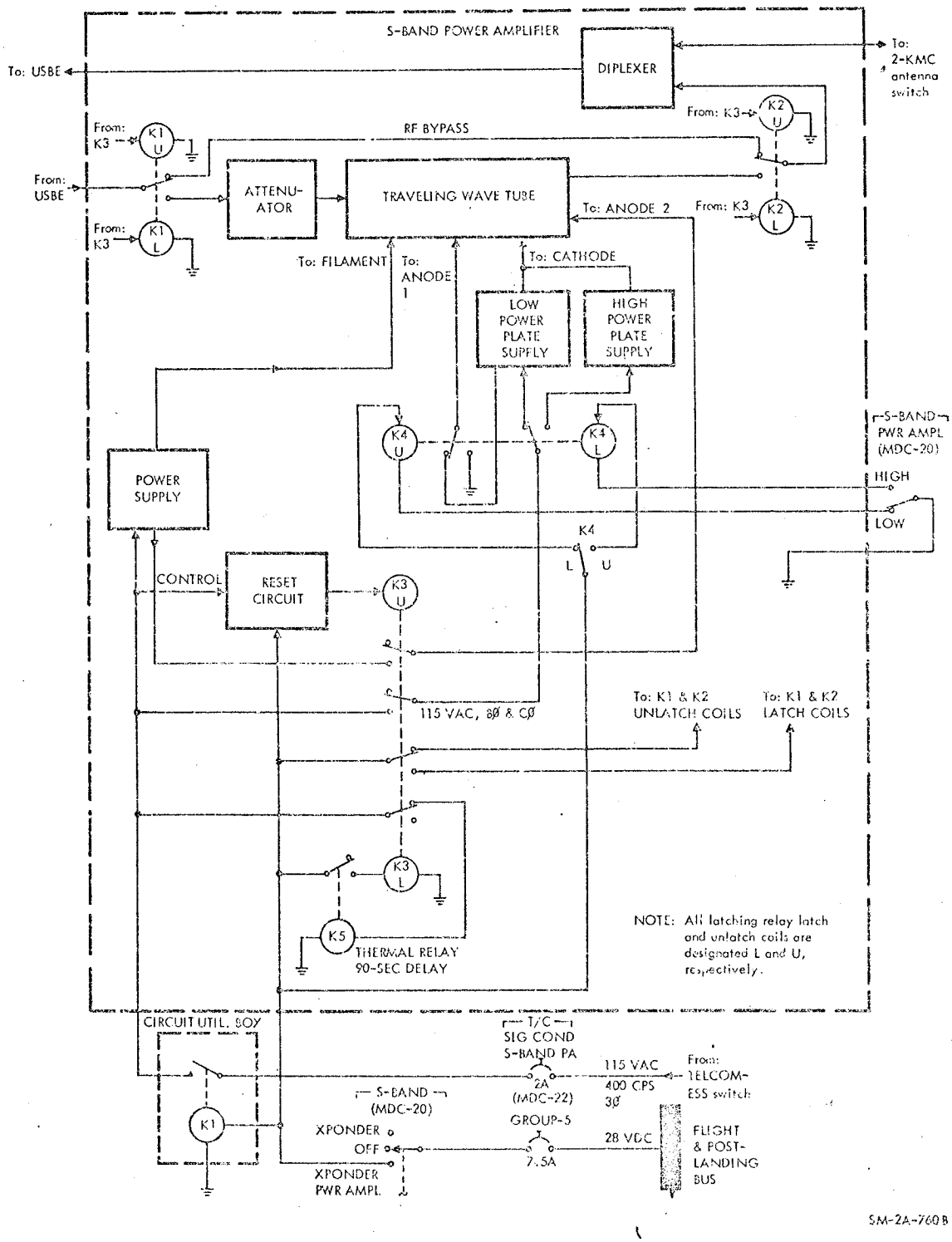

Figure 2.8-19. S-Band Power Amplifier Equipment

strength is required for adequate reception of the S-band signal by the MSFN. It consists of a diplexer, a traveling-wave tube for amplification, power supplies, and the necessary switching relays and control circuitry. The S-band PA is contained in a single electronics package located in the lower equipment bay.

All received and transmitted S-band signals pass through the S-band PA diplexer. The 2106.4-mc S-band carrier received by the S/C enters the S-band PA diplexer from the S-band antenna equipment. The diplexer passes the signal straight through to the USBE receiver. The 2287.5-mc output signal from the USBE transmitter enters the S-band PA where it is either bypassed directly to the diplexer and out to the S-band antenna equipment, or amplified first and then fed to the diplexer. There are three power amplifier modes of operation: bypass, low power, and high power.

Two of the S-BAND switches on MDC-20 are used to control the S-band power amplifier. Setting the XPONDER/XPONDER PWR AMPL switch to the XPONDER PWR AMPL position energizes the USBE power supply and applies 3-phase 115-volt a-c power to the S-band PA through relay K1 in the circuit utilization box. This also activates the 90-second time-delay relay in the S-band PA. Upon initial application of power, only the low-voltage power supply is energized, which applies power to the traveling wave tube heater. After 90 seconds, the RF signal from the USBE transmitter is switched from the bypass circuit to the amplifier circuit and 3-phase 115-volt a-c power is applied to either the low power or high power section of the high-voltage power supply, which supplies the correct operating voltages to the remaining elements of the traveling-wave tube. Selection of the low power (LOW) or high power (HIGH) mode is controlled by the S-BAND – PWR AMPL – HIGH/LOW switch.

2.8.3.3.6 C-Band Transponder Equipment

An earth-based C-band tracking and ranging system is used to provide S/C position data to the MSFN during the launch, near-earth, and entry phases of the mission. The function of the S/C C-band transponder equipment (figure 2.8-20) is to effectively extend the range of the system beyond that which would be possible using skin-tracking techniques only. Upon reception of a properly coded pulsed interrogation from the earth-based equipment at 5690 mc, the C-band transponder transmits a response pulse to the earth after a 3-microsecond delay at 5765 mc.

The C-band transponder contains four receivers, a transmitter, a power supply, and associated circuitry for comparing and decoding received signals and switching antennas. There are four C-band antennas, one for each receiver, located around the perimeter of the command module. The interrogation may be received by any one or more of the four antennas and routed through circulators to the associated receivers. If the pulses are properly coded the comparator determines which antenna received the strongest signal and activates the switch driver, which drives the RF

Function \ Switch Name	S-Band Power	Pwr Ampl	OSC	Ranging	Tape	TV	Emergency UP Data S-Band Ant			Remarks
	XPONDER-OFF-XPONDER PWR AMPL	HIGH LOW	PRIM SEC	RNG-Off-RNG ONLY	TAPE-Off	TV-Off	Voice-Off-Key	S-Band-Off-UHF	AUTO-UPPER-LOWER	
S-band PM mode real time voice, telemetering and ranging	XPONDER PWR AMPL	LOW	PRIM	RNG	Off	Off	Off	As reqd	UPPER or LOWER as reqd	
S-band PM mode real time voice and data	XPONDER PWR AMPL	LOW	PRIM or SEC	Off	Off	Off	Off	As reqd	UPPER or LOWER as reqd	
S-band FM mode real time voice, data and TV	XPONDER PWR AMPL	LOW or HIGH	PRIM or SEC	Off	Off	TV	Off	As reqd	UPPER or LOWER as reqd	TV camera power switch must be on.
S-band FM mode real time voice, play back data	XPONDER PWR AMPL	LOW	PRIM or SEC	Off	TAPE	Off	Off	As reqd	UPPER or LOWER	DSE switches must be properly configured for play back.
S-band emergency voice	XPONDER PWR AMPL	LOW or HIGH	PRIM or SEC	Off	Off	Off	VOICE	As reqd	UPPER or LOWER	
S-band emergency key	XPONDER PWR AMPL	LOW or HIGH	PRIM or SEC	Off	Off	Off	KEY	As reqd	UPPER or LOWER	Cobra cable mode switch at CW and PTT button used as key.
S-band reception of up-data	XPONDER or XPONDER PWR AMPL	LOW or HIGH	PRIM or SEC	RNG Off RNG ONLY	Off	Off	Off	S-band	UPPER or LOWER	

Notes: 1. TAPE and TV switches are 3-position switches with the down position no longer performing a valid function. The down position of these switches should not be selected.

2. The TAPE and TV switches should never be in the UP position together.

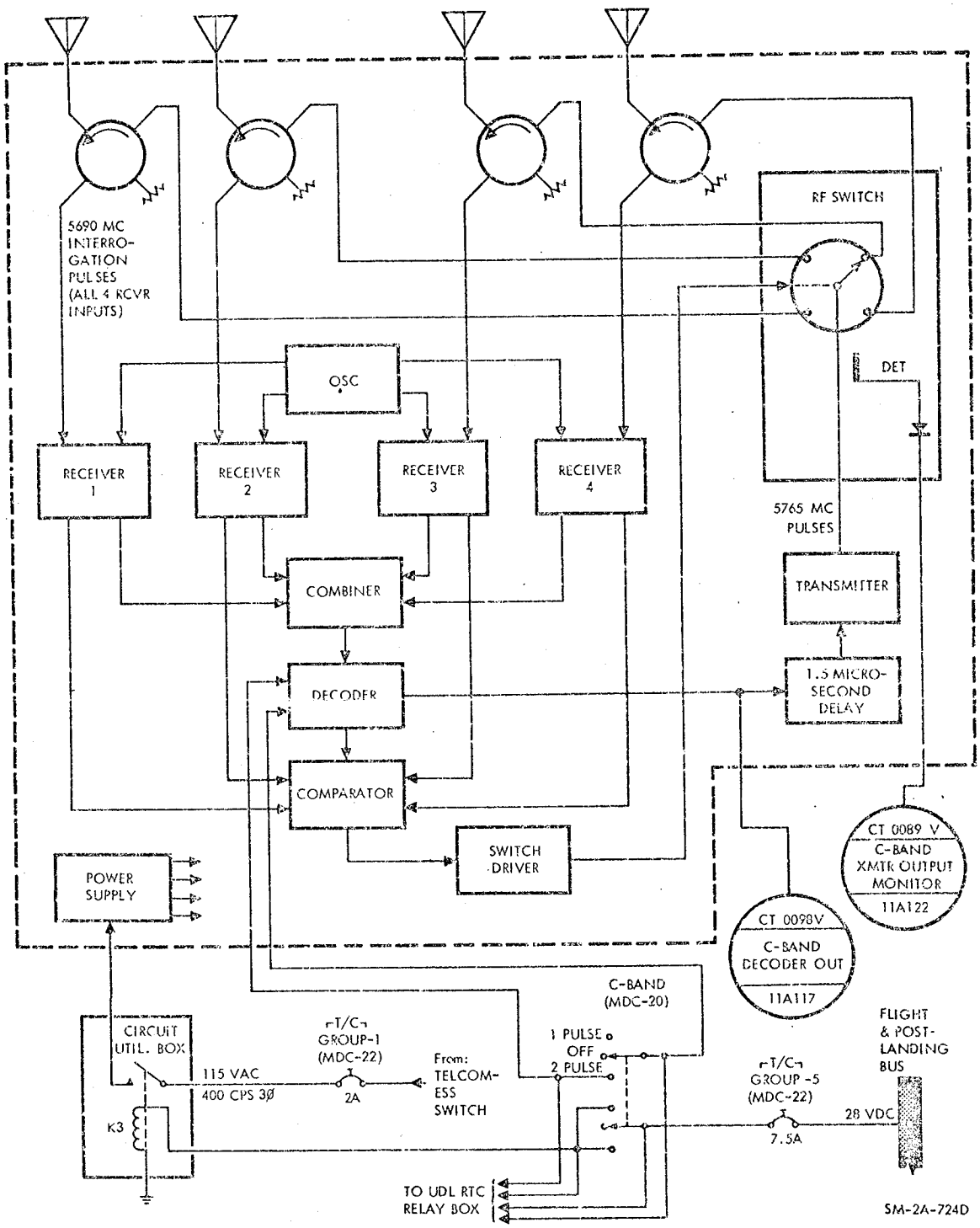

Figure 2.8-20. C-Band Transponder Equipment

switch to the proper antenna position. Three microseconds after interrogation, the transmitter sends a response pulse to the selected antenna. This 3-microsecond delay gives the RF switch time to operate. It also enables MSFN personnel to simultaneously observe the transponder reply and the skin track reply on the same visual display device (cathode ray tube), for comparison.

Two modes of operation can be selected: 1 pulse or 2 pulse. Mode selection will depend on the type of earth-based radar equipment that is being used at a particular area in the orbital path. During the launch and ascent phases of the mission, the 2-pulse mode will be used.

The only external control for the C-band transponder equipment is the C-BAND three-position toggle switch on MDC-20. The OFF position removes a-c power from the equipment; the 1 PULSE and 2 PULSE positions apply a-c power to the equipment and select the mode of operation. Activation and mode selection can also be commanded from the MSFN by a real-time command via the UDL equipment.

2.8.3.3.7 VHF Recovery Beacon Equipment.

The VHF recovery beacon equipment (figure 2.8-21) provides a line-of-sight direction finding capabilities to aid in locating the S/C during the recovery phase of the mission. It is located in the same electronics package as the VHF/AM transmitter-receiver equipment in the LEB. The beacon signal emitted is an interrupted 243-mc carrier, modulated by a 1000-cps square wave. The signal is transmitted for 2 seconds, then interrupted for 3 seconds.

Manual control of the equipment is provided by the RECOVERY — VHF-BCN, two-position ON/OFF switch on MDC-20.

The output of the VHF recovery beacon equipment is fed to VHF recovery antenna No. 1, which is deployed automatically when the main chutes are deployed.

2.8.3.3.8 GFE VHF Survival Beacon/Transceiver.

The VHF beacon/transceiver is a hand-held GFE item to be used in the recovery phase of the Apollo mission. The unit, plus an extra battery, is stored with the survival equipment.

Figure 2.8-22 shows the three major parts of the unit, the transmitter-receiver assembly, the battery pack assembly, and the quarter wave antenna.

The receiver-transmitter assembly and battery pack assembly mate to form a water-tight unit measuring 8 by 4-1/2 by 3 inches. The antenna is an 11-1/2-inch-long tapered flexible steel tape, terminated in a coaxial RF connector, and is normally stored in a retaining spool and clip on top of the radio unit.

The radio is capable of line-of-sight operation in either of two modes (beacon or voice) through use of either its own antenna or a suitable connected remote antenna. The transmitter output is protected against damage while operating due to accidental shorting of the antenna or submergence of the unit in salt water. In the beacon mode, the transmitter operates unattended, for periods up to 24 hours, to transmit an interrupted 1000-cps tone, amplitude modulated 25 percent on the 243-mc RF carrier. In the

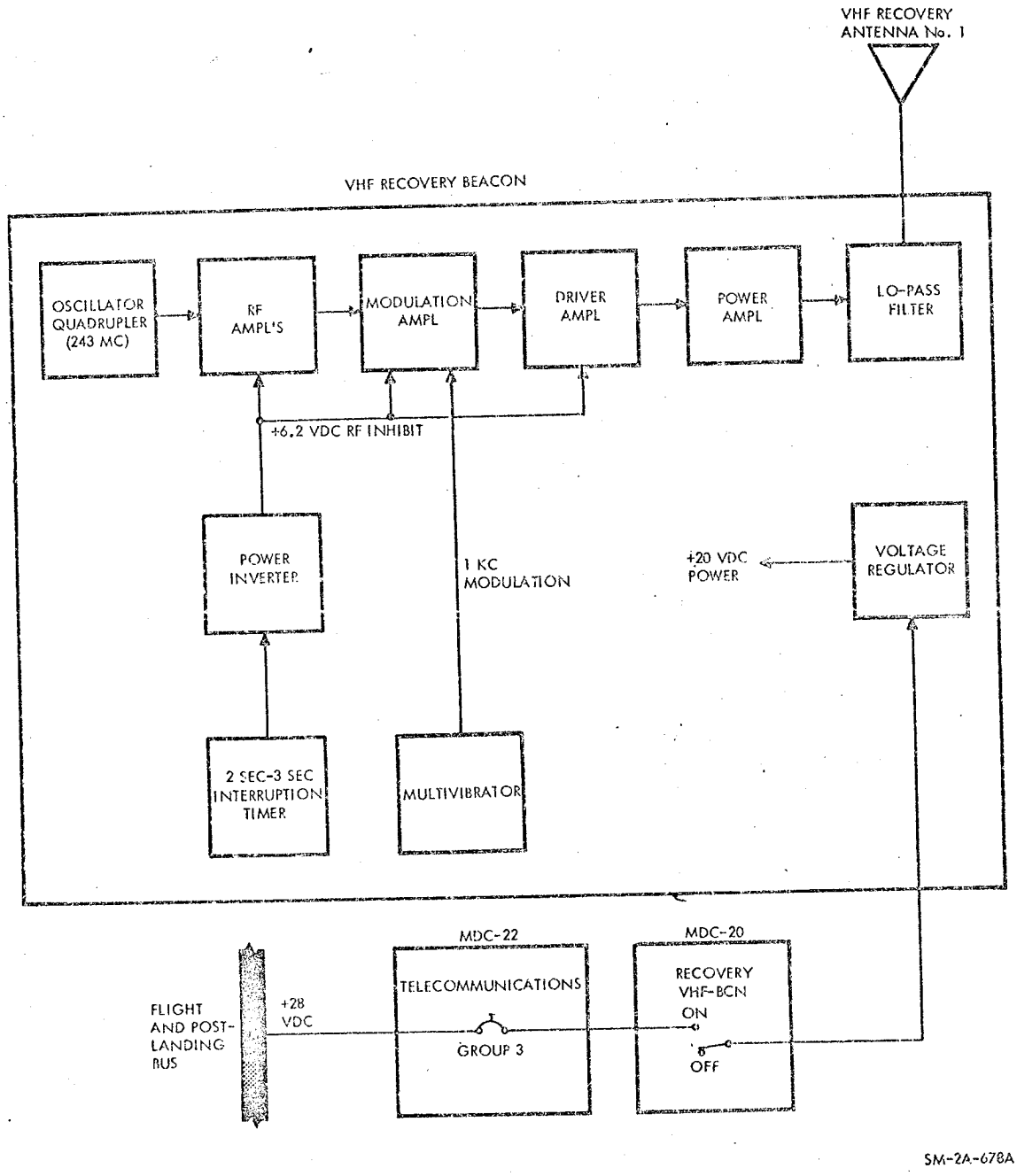

Figure 2.8-21. VHF Recovery Beacon Equipment

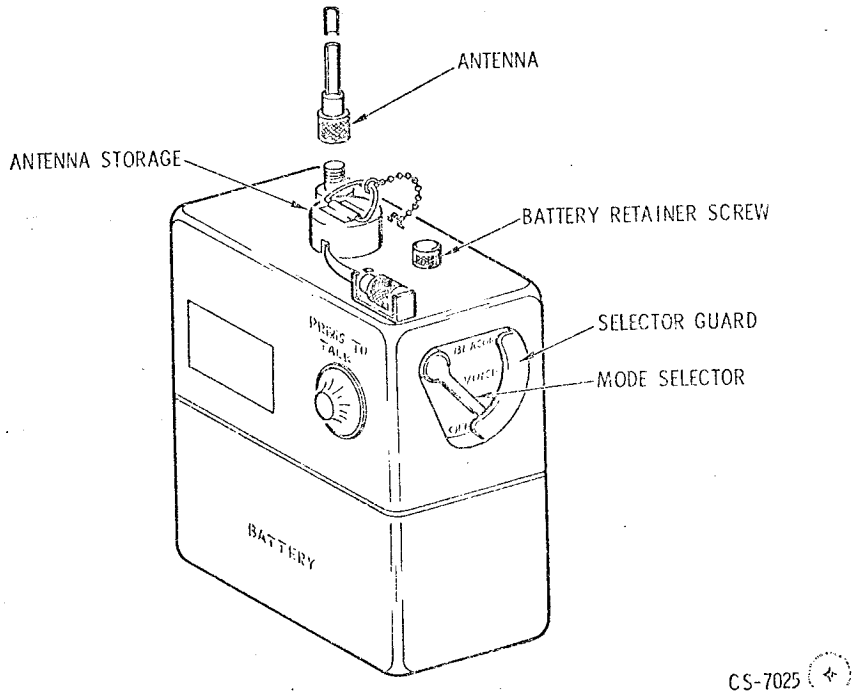

Figure 2.8-22. Survival Beacon/Transceiver Radio

voice mode, the radio provides two-way AM voice communication through use of an integral speaker-microphone and PUSH-TO-TALK switch.

2.8.3.4 Antenna Equipment Group.

The antenna equipment group contains all of the S/C antennas and ancillary equipment used in the T/C system. (See figures 2.8-23 and 2.8-24.)

2.8.3.4.1 VHF/2-KMC Omni-Antenna Equipment.

The VHF/2-kmc omni-antennas and corresponding ancillary equipment consists of two VHF/2-kmc SCIN antennas, a VHF multiplexer, a VHF antenna switch, a 2-kmc antenna switch, and the necessary signal and control circuits. The function of this equipment is to provide capabilities for radiation and pickup of RF signals in the VHF and S-band spectrums. The VHF portion of this equipment is used in conjunction with the up-data link (UDL) receiver, the VHF/FM transmitter, and the VHF/AM transmitter-receiver on two frequencies. The 2-kmc portion of this equipment is used with the USBE.

The VHF multiplexer is a passive, six-channel, filtering device which enables six items of VHF transmitting or receiving equipment to utilize one VHF antenna simultaneously. The six channel filters are composed of two or three tuned cavities, each of which function as bandpass filters. No power is required by the device and there are no external controls.

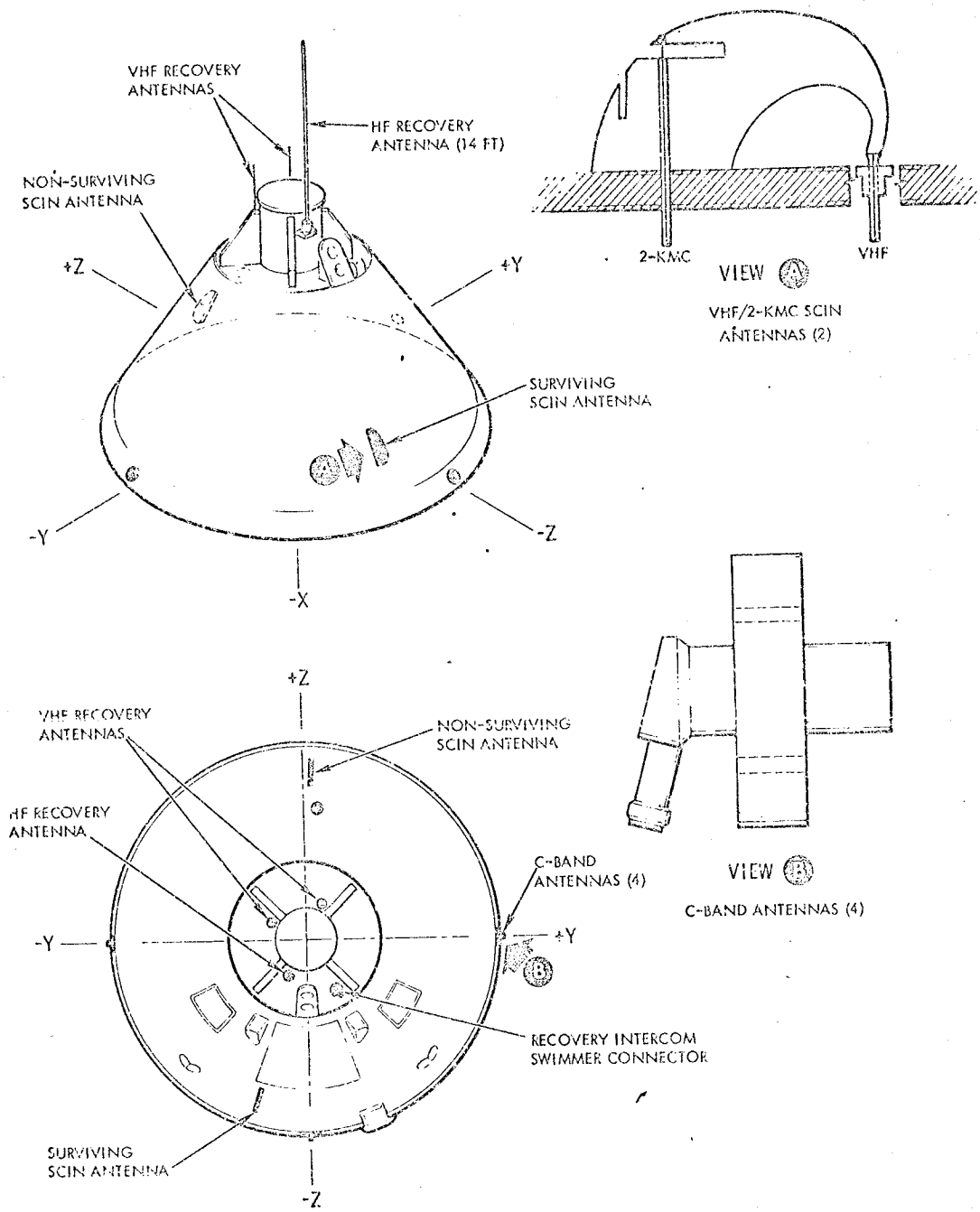

Figure 2.8-23. Antenna Locations

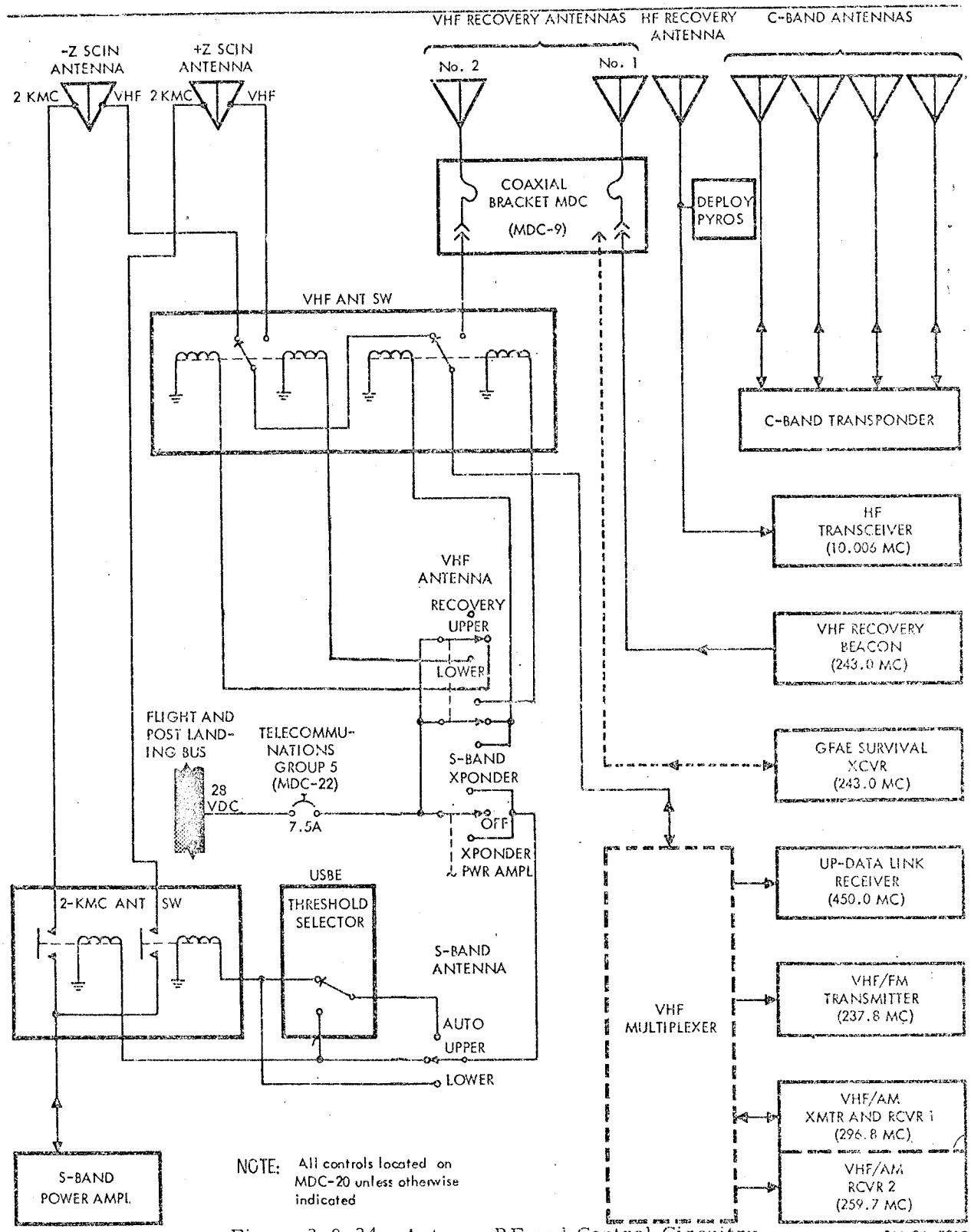

Figure 2.8-24. Antenna RF and Control Circuitry

SM-2A-721C

The VHF/2-kmc SCIN antennas are dual-purpose antennas with approximately hemispherical radiation patterns. Figures 2.8-25 and 2.8-26 show the propagation patterns of the VHF-UHF and S-band portions of the antenna, respectively. The word "SCIN" is an acronym for "SCImitar" and "Notch." Because of its characteristic shape, that portion of the antenna used for VHF is called a scimitar. In the broad end of the scimitar is a notch which functions independently and is used for S-band frequencies.

There are two VHF/2-kmc SCIN antennas; they are located on opposite sides of the S/C. One is located near the +Z axis and is called the +Z or lower SCIN antenna; the other is located near the -Z axis and is called the -Z or upper SCIN antenna. Because of their approximate hemispherical radiation patterns, fully omnidirectional capabilities can be obtained only by switching from one antenna to the other. This is accomplished with the VHF ANTENNA remote control switch on MDC-20 for VHF communications, or with the S-BAND ANTENNA remote control switch, also on MDC-20, for S-band communications.

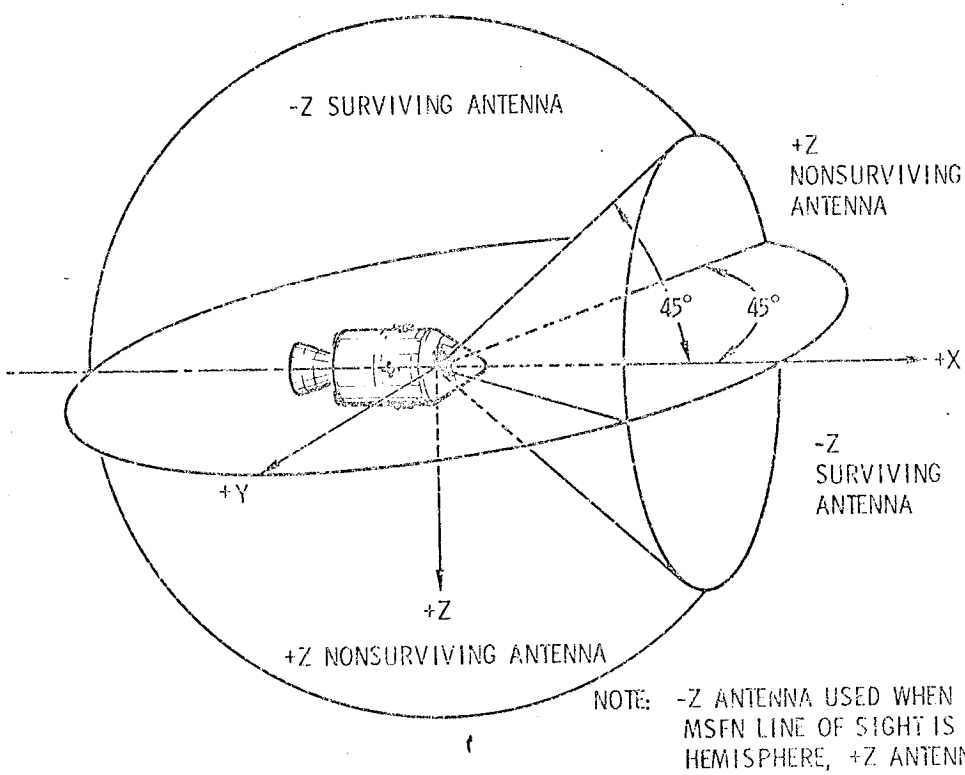

NOTE: -Z ANTENNA USED WHEN VEHICLE/MSFN LINE OF SIGHT IS IN -Z HEMISPHERE, +Z ANTENNA USED WHEN VEHICLE/MSFN LINE OF SIGHT IS IN +Z HEMISPHERE; EXCEPT WHEN LINE OF SIGHT IS WITHIN 45 DEGREES OF +X AXIS; THEN USE OPPOSITE ANTENNA.

CD-272

Figure 2.8-25. Antenna Switching Regions, VHF-UHF

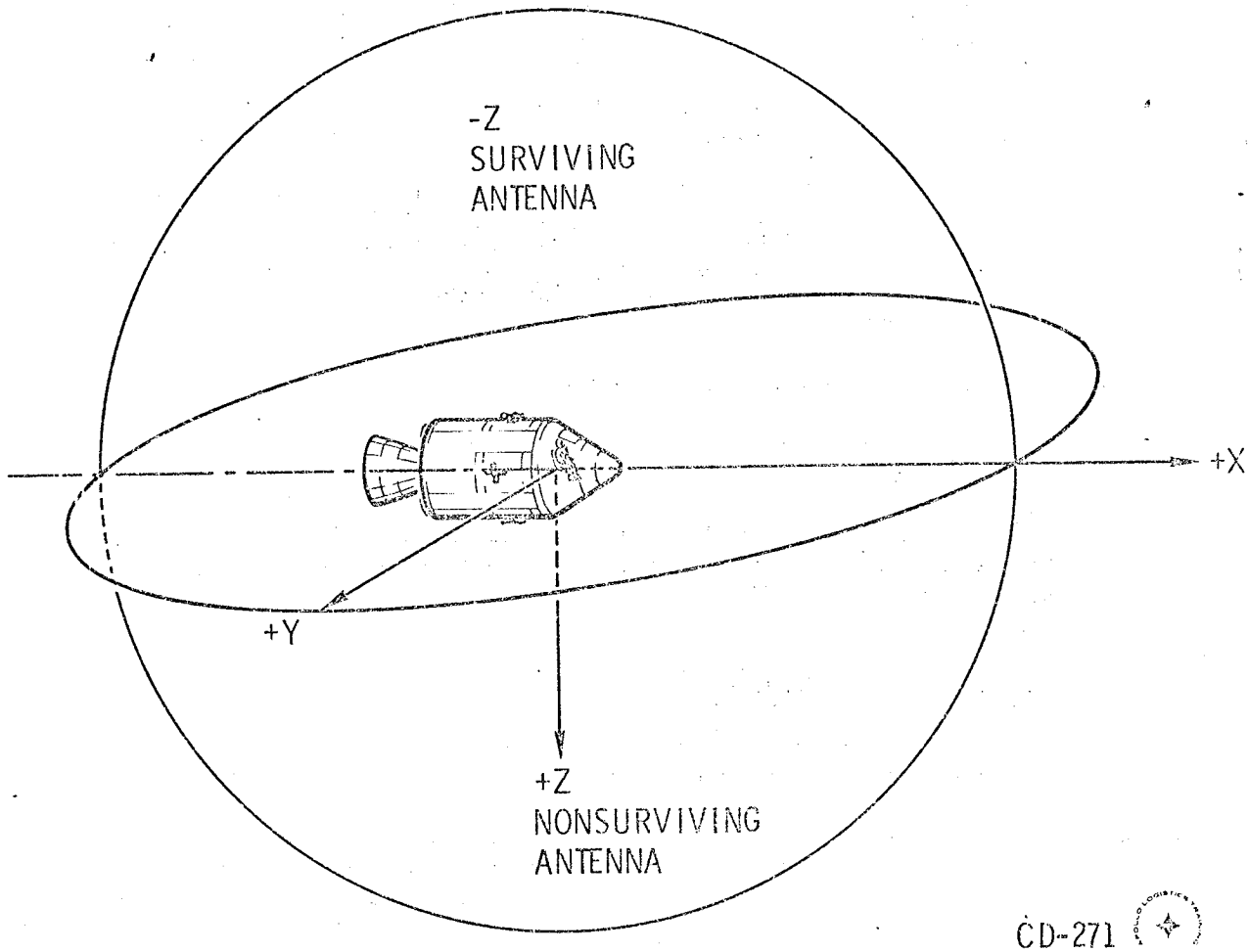

Figure 2.8-26. Antenna Switching Regions, S-Band

The lower (+Z) SCIN antenna may be burned off during entry. The upper (-Z) SCIN antenna is located at a minimum heat point and is covered with ablative material to provide thermal protection for entry survival.

2.8.3.4.2 HF Recovery Antenna Equipment

The HF recovery antenna is provided solely for use with the HF transceiver to provide for voice communication with recovery forces after touchdown. It is stowed inside a canister, located in the forward compartment of the S/C, until deployed by manual activation of a pyrotechnic device. The pyrotechnic device is activated by setting the POST LANDING — ANTENNA DEPLOY switches to their upper positions (A and B), while the MASTER EVENT SEQ CONT switches (2) are at PYRO ARM (MDC-24) position.

2.8.3.4.3 VHF Recovery Antenna Equipment.

There are two VHF recovery antennas, No. 1 and No. 2, stowed in the forward compartment of the S/C. Each antenna consists of a quarterwave

stub, 11 inches long, and a ground plane. They are automatically deployed 8 seconds after main parachute deployment during the descent phase of the mission.

VHF recovery antenna No. 1 is connected to the VHF recover beacon equipment through a coaxial connector on the coaxial bracket, MDC-9. VHF recovery antenna No. 2 is to be used with the VHF/AM transmitter-receiver equipment, thus it is connected to the VHF antenna switch, also through a connector on the coaxial bracket. The purpose of the coaxial bracket is to allow either of the VHF recovery antennas to be used with the GFAE survival transceiver. This requires that the coaxial cable from one of the antennas be manually disconnected at the coaxial bracket and reconnected to the survival transceiver.

2.8.3.4.4 C-Band Beacon Antenna Equipment.

There are four, flush-mounted, C-band beacon antennas located around the perimeter of the S/C near the four S/C axes: +Z, -Z, +Y, and -Y. All four antennas are connected at all times to the C-band transponder equipment with reception by all four antennas. Circuitry in the C-band transponder equipment determines which antenna received the strongest signal and automatically selects that antenna for transmission of response pulses.

2.8.3.5 Electrical Power Distribution.

Electrical power distribution for the voice and data, and the RF equipment groups is shown on sheet 1 of figure 2.8-27. Instrumentation equipment power distribution is shown on sheet 2. Electrical power to most of the equipment on sheet 1 is controlled by the T/C switches on MDC-20. These switches and control circuits can be found on the illustrations for the individual components in paragraphs 2.8.3.3 and 2.8.3.4.

2.8.4 PERFORMANCE AND DESIGN DATA

The following chart contains the a-c and d-c power consumption values for the T/C voice, data, and RF equipment.

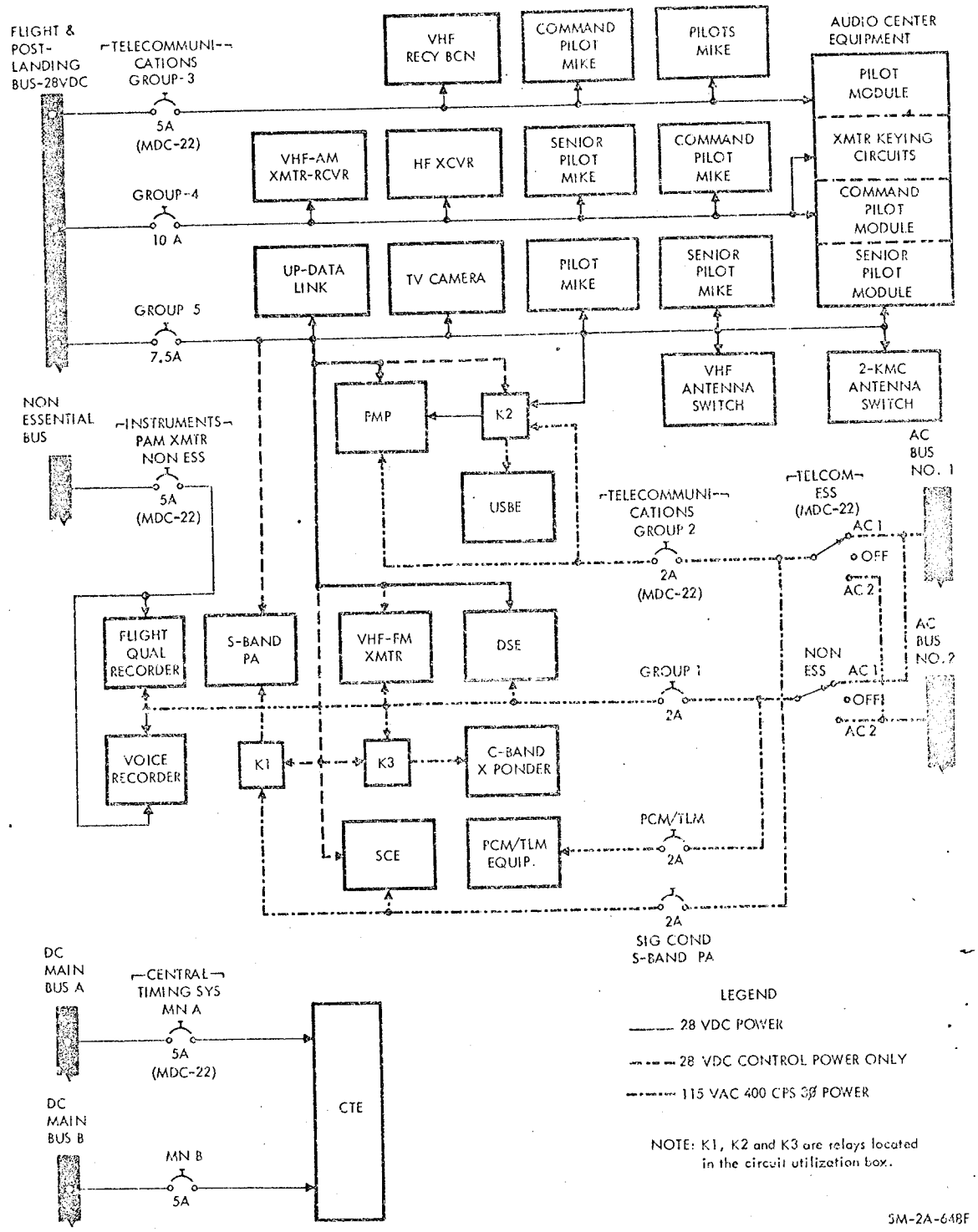

Figure 2.8-27. Telecommunications Power Distribution (Sheet 1 of 2)

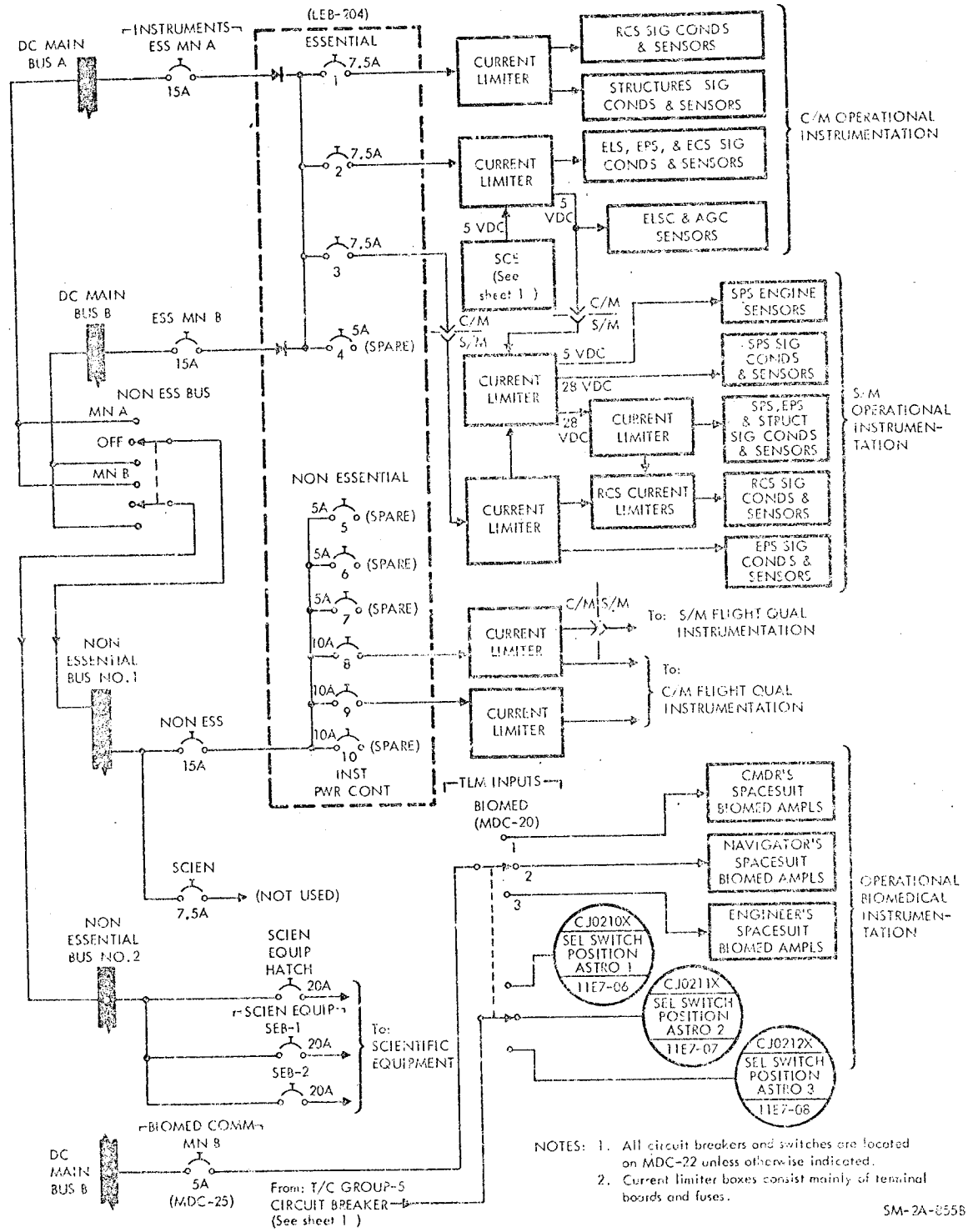

Figure 2.8-27. Telecommunication Power Distribution (Sheet 2 of 2)

T/C Equipment Power Consumption

Equipment	Quantity	Control	D-C Watts	A-C Watts	Total D-C Watts	Total A-C Watts
A-C equipment	3	PWR switch to VOX, MDC (13, 23, 26)	4.3		12.8	
SCE	1	SCE PWR switch ON, MDC 20		45.0		45.0
PCM TLM equipment	1	PCM control button ON, MDC 22		10.5		10.5
TV camera	1	PWR switch ON, TV camera handle	6.0		6.0	
PMP	1	PMP PWR switch ON, MDC 20	2.6	4.0	2.6	6.4
		+ TAPE SWITCH ON, MDC 20	2.6	6.4	2.6	6.4
		EMER VOICE switch ON, MDC 20	3.2		3.2	
		EMER KEY ON, MDC 20	3.6		3.6	
DSE	1	RECORD/PLAYBACK switch other than OFF, MDC 20	0.5	32.5	0.5	32.5
FQR	1	RECORD switch to RECORD MDC 19	34.0	15.0	34.0	15.0
UDL	1	UDL switch to VHF, MDC 20	9.6		9.6	
CTE	1	2-CTE control buttons ON, MDC 22	21.0		21.0	
VHF/AM transmitter-receiver		VHF/AM switch to REC, MDC 20	1.5		1.5	
		VHF/AM switch to T/R, MDC 20	15.5		15.5	
		VHF/AM switch to T/R, PTT button ON, cobra cable MODE switch to PTT	61.5		61.5	
HF transceiver	1	HF POWER switch ON, MDC 20	0.6		0.6	
		HF PWR switch ON, MODE switch to BCN or AM, MDC 20, cobra cable PTT button ON	29.0		29.0	
		HF PWR switch ON, MODE switch to SSB, PTT button on cobra cable ON	40.0		40.0	
VHF/FM transmitter	1	VHF FM switch ON, MDC 20	1.5	50.0	1.5	50.0

SYSTEMS DATA

Equipment	Quantity	Control	D-C Watts	A-C Watts	Total D-C Watts	Total A-C Watts
USBE	1	S-BAND XPONDER switch to XPONDER MDC 20		13.5		13.5
S-band PA	1	S-BAND XPONDER switch to XPONDER PWR AMP, PWR AMP switch LOW, MDC 20	3.0	27.4	3.0	27.4
		S-BAND XPONDER switch to XPONDER PWR AMP, PWR AMP switch HIGH	3.0	80.0	3.0	80.0
C-band transponder	1	C-BAND PWR switch 1 pulse or 2 pulse, MDC 20	3.0	75.0	3.0	75.0
VHF recovery beacon	1	VHF BCN switch ON, MDC 20	8.0		8.0	
2-KMC antenna switch	1	S-BAND XPONDER switch ON S-BAND switch changed, MDC 20	15.0		15.0	
Voice recorder	1	HF switch and INTER-COM switch to TR, MDC 20; PTT button ON on cobra cable	0.025	1.99	.025	1.99

2.8.5 OPERATIONAL LIMITATIONS AND RESTRICTIONS.

2.8.5.1 Antennas.

For S-band transmission and reception, the SCIN antenna on the side of the S/C nearest to the MSFN station must be utilized. For VHF transmission and reception, the SCIN antenna indicated in figure 2.8-25 should be utilized. This may require switching between the upper (-Z) and lower (+Z) SCIN antennas while making a single station pass. For VHF operations this must be done manually with the VHF ANTENNA switch. For S-band operations, this can be accomplished either manually or automatically with the S-BAND ANTENNA switch.

At greater slant ranges, null points may exist in the SCIN and C-band beacon overall antenna patterns along the centerline of the S/C, forward and aft of the C/M. Pointing either of these null points at the MSFN station may cause communications to be interrupted.

The lower (+Z) SCIN antenna will be burned off during entry. Thus after entry, the upper (-Z) SCIN antenna or VHF recovery antenna No. 2 must be utilized for communications via the VHF/AM transmitter-receiver.

2.8.5.2 Data Storage Equipment.

a. Maximum DSE running times for the entire reel of tape at the three operating speeds are as follows: 3.75 ips (LOW – 120 minutes, 15 ips (NORM) – 30 minutes, 120 ips (HIGH, for rewind and LBR PCM dump only) – 3.75 minutes.

b. Stored HBR and LBR PCM data, if intermixed on the tape, cannot be dumped within one station pass, due to the different playback speeds required. LBR PCM must be recorded at 3.75 ips and may be played back at 15 ips or 120 ips; HBR PCM must be recorded at 15 ips and played back at 15 ips.

c. Stored PCM TLM need not be played back in the same direction in which it was recorded. Playback in the direction of recording requires rewinding of the tape between recording and dumping.

d. There is no provision for recording TV data.

e. High-bit rate PCM must be recorded at normal speed or tape motion will stop.

f. Low-bit rate PCM must be recorded at low speed or tape motion will stop.

g. If tape is played back at low speed, the tape will move but there will be no playback data available to the transmitters.

h. If high-bit rate data is played back at high speed, the transmitter data will be garbled.

i. If only a FWD or REV command is given to initiate a rewind, there will be no tape motion. A mode (preferably PLAY), must also be selected before tape will move.

j. Refer to paragraph 2.8.3.2.6 for proper DSE operating functions.

2.8.5.3 Unified S-Band System.

a. S-band operations will be limited due to the limited number of MSFN stations that will have operational S-band capabilities.

b. If one of the S-band mode switches (TAPE - OFF - ANALOG or TV - OFF - PLSS) is moved from the OFF position, the FM selection of the S-band transmitter will be selected, reducing the circuit margins and disabling the S-band tracking.

c. TV can only be transmitted via the USBE.

d. The secondary oscillator can only be selected in normal operation with the RNG-RNG only switch in the off position and the OSC switch is SEC.

e. The TAPE and TV switches are 3-position switches with the down position no longer performing valid functions. The down position of these switches should not be selected.

f. The TAPE and TV switches should never be positioned up simultaneously.

g. Refer to paragraph 2.8.3.2.5 for valid unified S-band equipment operational modes and their attendant switching configuration.

2.8.5.4 General.

a. The maximum slant range for reliable VHF-FM TLM communications should not exceed 1500 nautical miles. Also, the maximum elevation angle from the earth to the S/C should not be less than 5 degrees.

b. Real-time and recorded PCM TLM cannot be transmitted simultaneously. One or the other, however, can be transmitted via the VHF/FM transmitter and the USBS at the same time, and real-time PCM data may be recorded while it is being transmitted.

c. The FQR has a maximum recording time of approximately 30 minutes. To maintain sufficient time for all scheduled recordings of flight qualification analog data, the FQR must be used conservatively.