December 1981

DMS-DR-2413 - Vol-2
NAS-CR 160,859

VOLUME 2 OF 2

RESULTS OF TESTS USING A 0.03 SCALE MODEL (47-OTS) OF THE SPACE SHUTTLE INTEGRATED VEHICLE IN THE NASA/ARC 9X7 FOOT SUPERSONIC WIND TUNNEL (IA105B)

by

R. H. Spangler
Rockwell International
Space Transportation System Development and Production Division

Prepared under NASA Contract Number NAS9-16283

by

Data Management Services
Chrysler Huntsville Electronics Division
Slidell Engineering Office
New Orleans, Louisiana 70189

for

Engineering Analysis Division

Johnson Space Center
National Aeronautics and Space Administration

WIND TUNNEL TEST SPECIFICS:

Test Number:	ARC 242-1-97
NASA Series Number:	IA105B
Model Number:	47-OTS
Test Dates:	January 24 through February 2, 1978
Occupancy Hours:	75

FACILITY COORDINATOR:

Jack J. Brownson
Mail Stop 227-5
Ames Research Center
Moffett Field, CA 94035

Phone: (415) 965-5647

PROJECT ENGINEER:

R. H. Spangler
Mail Code AC07
Rockwell International
STS D&P Division
12214 Lakewood Blvd.
Downey, CA 90241

Phone: (213) 922-1463

AERODYNAMIC ANALYSIS:

L. P. Leblanc
Mail Code AC07
Rockwell International
STS D&P Division
12214 Lakewood Blvd.
Downey, CA 90241

Phone: (213) 922-5369

DATA MANAGEMENT SERVICES:

Prepared by: Liaison - S. R. Houlihan
Operations - G. W. Klug

Approved: J. L. Glynn, Manager
Data Operations

Concurrence: N. D. Kemp, Manager
Data Management Services

Chrysler Huntsville Electronics Division/Slidell Engineering Office assumes no responsibility for the data presented other than display characteristics.

RESULTS OF TESTS USING A 0.03 SCALE MODEL (47-OTS) OF THE SPACE SHUTTLE INTEGRATED VEHICLE IN THE NASA/ARC 9X7 FOOT SUPERSONIC WIND TUNNEL (IA105B)

by

R. H. Spangler
Rockwell International STS D&P Division

ABSTRACT

An experimental investigation (test IA105B) was conducted in the Ames Research Center 9x7-foot Supersonic Wind Tunnel from January 24, 1978 through February 2, 1978.

The objective of these tests was to obtain aerodynamic loads on all vehicle elements (orbiter, external tank and solid rocket boosters) by pressure integration and to measure loads directly by load indicators on the wing, vertical tail and elevons.

Data were obtained in the Mach number range from 1.55 to 2.50 with Reynolds number per foot of 2.5×10^6. The test was conducted using angle of attack sweeps at fixed sideslip angles.

Angles of attack and sideslip were both within a range consistent with the trajectory dispersions with the maximum angle being dependent upon the requirements at a particular Mach number.

Configuration variations consisted of a series of differential inboard/outboard elevon angle settings at zero aileron angle.

(THIS PAGE INTENTIONALLY LEFT BLANK)

TABLE OF CONTENTS

	Page
ABSTRACT	iii
INDEX OF MODEL FIGURES	3
INDEX OF DATA FIGURES	5
INTRODUCTION	7
NOMENCLATURE	9
REMARKS	15
CONFIGURATIONS INVESTIGATED	17
TEST FACILITY DESCRIPTION	28
TEST PROCEDURE AND INSTRUMENTATION	29
DATA REDUCTION	33
REFERENCES	41
TABLES	
I. TEST CONDITIONS	42
II. DATA SET/RUN NUMBER COLLATION SUMMARY	43
III. ELEVON DEFLECTION ANGLES	46
IV. BALANCES UTILIZED	47
V. BAD PRESSURE DATA LIST	48
VI. ORBITER FUSELAGE SURFACE PRESSURE TAP LOCATIONS	64
VII. WING PRESSURE TAP NUMBERS/LOCATIONS	68
VIII. EXTERNAL TANK SURFACE PRESSURE TAP LOCATIONS	71
IX. EXTERNAL TANK BASE PRESSURE TAP LOCATIONS	75
X. SOLID ROCKET BOOSTER SURFACE PRESSURE TAP LOCATIONS	82
FIGURES	
MODEL	49
DATA (TYPICAL PRESSURE PLOT)	95

TABLE OF CONTENTS (Concluded)

APPENDIX

FORCE DATA TABULATIONS (VOLUME I)

PRESSURE DATA TABULATIONS VOLUME II (MICROFICHE ONLY)

INDEX OF MODEL FIGURES

Figure	Title	Page
1.	Model Axis Systems, Sign Conventions and Reference Dimensions	
	a. Axis Systems	49
	b. Main Balance Transfer	50
	c. Vertical Tail Balance Transfer	51
	d. Wing Balance Transfer	52
	e. Elevon Deflection Sign Convention	53
	f. Wing Load Sign Convention	54
	g. Vertical Tail Load Sign Convention	55
2.	Launch Vehicle 6 Configuration	
	a. Launch Vehicle	56
	b. Orbiter 102	57
	c. External Tank - T_{39}	58
	d. Solid Rocket Booster - S_{27}	59
3.	Scanivalve Locations	
	a. Orbiter	60
	b. External Tank	61
	c. Solid Rocket Booster	62
4.	Orbiter Pressure Tap Locations	
	a. Orbiter Base	63
	b. Body Flap	65
	c. Vertical Tail	66
	d. Vertical Tail Balance Cavity	67
5.	Wing Pressure Tap Locations	
	a. Lower Surface	69
	b. Upper Surface	70
6.	External Tank Pressure Tap Locations	
	a. ET Station Numbers	73
	b. External Tank Base	74

INDEX OF MODEL FIGURES (Concluded)

Figure	Title	Page
7.	External Tank Protuberance Pressure Tap Locations	
	a. Taps 1601 → 1724	76
	b. Taps 1732 → 1759	77
	c. Taps 1760 → 1769	78
	d. Taps 1770 → 1827	79
	e. Taps 1828 → 1857	80
	f. External Tank Protuberance Pressures - Summary	81
8.	Solid Rocket Booster Pressure Tap Locations	
	a. SRB Station Numbers	83
	b. SRB Base	84
9.	SRB Protuberance Pressure Tap Locations	
	a. Systems Tunnel Ends	85
	b. Systems Tunnel and Attach Ring	86
	c. Separation Motors and Turbine Exhaust	87
	d. SRB Protuberance Pressures - Summary	88
10.	Model Installation in the ARC 9x7 ft. W.T.	89
11.	Model Photographs	
	a. Installation	90
	b. Model 47-OTS - Front Quarter View	91
	c. Model 47-OTS - Rear Quarter View	92
	d. Articulating Sting Detail, Aft View	93
	e. Articulating Sting Detail, Forward View	94

INDEX OF DATA FIGURES

FIGURE NUMBER	TITLE	CONDITIONS VARYING	SCHEDULE	PAGES
1	TYPICAL PRESSURE DISTRIBUTION - ORBITER FUSELAGE	PHI	A	1-4
2	TYPICAL PRESSURE DISTRIBUTION - ORBITER BASE	-	B	5-5
3	TYPICAL PRESSURE DISTRIBUTION - BODY FLAP - LOWER SURFACE	Y/BBF	C	6-6
4	TYPICAL PRESSURE DISTRIBUTION - BODY FLAP - UPPER SURFACE	Y/BBF	C	7-7
5	TYPICAL PRESSURE DISTRIBUTION - MISCELLANEOUS TAPS	TAP NO	A	8-8
6	TYPICAL PRESSURE DISTRIBUTION - WING - LOWER SURFACE	Y/BW	D	9-11
7	TYPICAL PRESSURE DISTRIBUTION - ET PROTUBERANCES	-	B	12-12
8	TYPICAL PRESSURE DISTRIBUTION - SRB PROTUBERANCES	-	B	13-13
9	TYPICAL PRESSURE DISTRIBUTION - SRB SURFACE	PHI	E	14-16
10	TYPICAL PRESSURE DISTRIBUTION - ET SURFACE	PHI	F	17-21
11	TYPICAL PRESSURE DISTRIBUTION - WING - UPPER SURFACE	Y/BW	D	22-23
12	TYPICAL PRESSURE DISTRIBUTION - VERTICAL TAIL	ZV/BV	G	24-25

INDEX OF DATA FIGURES (Concluded)

SCHEDULE	COEFFICIENTS PLOTTED
A	C_p VS x/l_B
B	C_p VS TAP NO
C	C_p VS X/CBF
D	C_p VS XW/CW
E	C_p VS XS/LS
F	C_p VS XT/LT
G	C_p VS XV/CV

INTRODUCTION

Test IA105B was conducted in the NASA/Ames Research Center 9x7 foot Supersonic Leg of the Unitary Plan Wind Tunnels. The test was conducted during the test period from January 24 through February 2, 1978. The tunnel occupancy hours for the test was 75 hours. The test article was a 3% replica (Model 47-OTS) of the Space Shuttle Launch Vehicle, Configuration 6, as shown in figure 2.

Pressure and force data were obtained at Mach numbers from 1.55 to 2.50 for angles of attack and sideslip within a $\pm 6^{\circ}$ matrix. A six-component balance was used to determine orbiter force and moment data in the presence of the external tank and solid rocket boosters. Forces and moments on the wing, vertical tail and elevons were measured using appropriate strain gage balances. The model was instrumented with 1586 pressure taps distributed over the orbiter, external tank and the left solid rocket booster to measure pressure distributions over the launch vehicle elements, and localized loads on various protuberances on the external tank (ET) and solid rocket booster (SRB) (see figures 4 thru 9 and Tables VI thru X).

The test was terminated, due to a tunnel compressor bearing failure, prior to completing the planned run schedule.

This test was conducted in conjunction with the following other tests:

IA105A (DMS-DR-2398) was conducted in the AEDC 16T using model 47-OTS. This was the baseline subsonic and transonic data for this test series.

IA184 (DMS-DR-2456) was conducted at the NASA/Ames Research Center 9x7 foot supersonic wind tunnel using the same 3% model (47-OTS) to complete the original test plan for IA105B.

IA156A (DMS-DR-2403) and IA156B (DMS-DR-2408) were conducted using a 2% model (89-OTS) in the AEDC 16T and the NASA/Ames 9x7 respectively to determine individual component loads and attach structure loads.

IA182 (DMS-DR-2439) and IA183 (DMS-DR-2444) were conducted in the AEDC 16T using the 3% and 2% models, respectively, to investigate flow angularity corrections to apply to the IA105A and IA156A data.

This report provides documentation of test IA105B consisting of remarks on the conduct of the test, descriptions of the model and test procedure, information on data reduction and plotted and tabulated test conditions and results.

NOMENCLATURE

SYMBOL	MNEMONIC	DEFINITION
	AADS	Ascent Air Data System.
A_i		Area over which P_i acts, ft^2.
	AEDC	Arnold Engineering Development Center
AFA	AFA	flow angularity in the tunnel pitch plane, positive up, degrees
	ALFC	model angle-of-attack corrected for sting imbalance deflections
α_O	ALPHAO	orbiter angle-of-attack, degrees
ALFASU	ALFASU	SRB angle-of-attack (uncorrected for flow angularity), degrees
α_T	ALPHAT	external tank angle-of-attack, degrees
ALPHAI	ALPHAI	tunnel instrumentation indicated pitch attitude, degrees
β_T	BETAT	external tank sideslip angle, degrees
β_O	BETAO	orbiter sideslip angle, degrees
BFA	BFA	flow angularity in the tunnel cross flow plane, positive from right to left looking upstream, degrees
B_{vt}		vertical tail bending moment, in-lbs.
B_w		wing bending moment, in-lbs.
C_A	CA	axial force coefficient
C_{A_b}	CAB	orbiter base axial force coefficient
$C_{A_{BV_t}}$	CABV	vertical tail base axial force coefficient
C_{A_f}	CAF	orbiter forebody axial force coefficient

NOMENCLATURE (Continued)

SYMBOL	MNEMONIC	DEFINITION
C_{A_u}	CAU	orbiter axial force coefficient, uncorrected
C_{A_v}	CAV	vertical tail axial force coefficient
C_{B_v}	CBV	vertical tail bending moment coefficient
C_{B_W}	CBW	wing bending moment coefficient
$C_{h_{ei}}$	CHEI	inner elevon hinge moment coefficient, about hinge line X = 1387.0
$C_{h_{eo}}$	CHEO	outer elevon hinge moment coefficient, about hinge line X = 1387.0
℄	CL	centerline
C_ℓ	CBL	orbiter rolling moment coefficient, body axis system
C_m	CLM	pitching moment coefficient
C_{m_B}	CLMB	orbiter base pitching moment coefficient
C_{m_f}	CLMF	orbiter forebody pitching moment coefficient
C_{m_u}	CLMU	orbiter pitching moment coefficient, uncorrected
C_{m_v}	CMV	vertical tail pitching moment coefficient
C_N	CN	normal force coefficient
C_n	CYN	orbiter yawing moment coefficient
C_{N_B}	CNB	orbiter base normal force coefficient
C_{N_f}	CNF	orbiter forebody normal force coefficient
C_{N_u}	CNU	orbiter normal force coefficient, uncorrected
C_{n_v}	CTV	vertical tail yawing moment coefficient, using vertical tail reference
C_{N_W}	CNW	wing normal force (shear) coefficient

NOMENCLATURE (Continued)

SYMBOL	MNEMONIC	DEFINITION
	CNSTNG	normal force coefficient of the sting (used for sting deflection calculations only)
C_{P_i}	CP(i)	surface tap pressure coefficient, port i
C_{T_W}	CTW	wing torsional coefficient
C_{T_v}	CTV	vertical tail torsional coefficient
C_{S_v}	CSV	vertical tail shear force coefficient
C_Y	CY	orbiter side force coefficient
C_{Z_v}	CZV	vertical tail normal force coefficient
DI	DI	incremental inboard elevon deflection due to air load, degrees
DO	DO	incremental outboard elevon deflection due to air load, degrees
$\delta eI/_{LOAD}^{NO}$	ERI/ELI	inboard elevon deflection (no load), degrees preset (Right/Left)
	GAPS	parametric value of 1.0 indicates wing gaps sealed
$\delta eI/_{LOAD}^{NO}$	ERO/ELO	outboard elevon deflection (no load), degrees preset (Right/Left)
Δ		Incremental
ET	ET	External Tank
H_{e_i}	HEI	inboard elevon hinge moment, in-lbs.
H_{e_o}	HEO	outboard elevon hinge moment, in-lbs.
HL	HL	Hingeline
δe_i	ELVRI	right inboard elevon deflection angle under air load, degrees

NOMENCLATURE (Continued)

SYMBOL	MNEMONIC	DEFINITION
IB-ELV	IB-ELV	nominal inboard elevon setting, degrees
OB-ELV	OB-ELV	nominal outboard elevon setting, degrees
	I.D.	inside diameter
LH_2	LH2	liquid hydrogen
LO_2	LO2	liquid oxygen
M	MACH	Mach number
MRC	MRC	moment reference center
δe_o	ELVRO	right outboard elevon deflection angle under air load, degrees
N_{vt}	NVT	vertical tail normal (shear) force, lbs.
N_w	NW	wing normal (shear) force, lbs.
OMS	OMS	orbital maneuvering system
OTS	OTS	integrated vehicle (orbiter, external tank, SRB)
OV	OV	orbiter vehicle
	O.D.	outside diameter
PHII	PHII	tunnel instrumentation indicated roll attitude, degrees
ϕ	PHI	angular cylindrical coordinate position around body, degrees
P_i		pressure at surface tap i, psf
P_o	P	freestream static pressure, psf
P_t	PT	freestream total pressure, psf
q	Q(PSF)	freestream dynamic pressure, psf
	RN/L	unit Reynolds number, million per ft.

NOMENCLATURE (Continued)

SYMBOL	MNEMONIC	DEFINITION
SRB	SRB	Solid Rocket Booster
	SSME	Space Shuttle Main Engine
	SILTS	Shuttle Infrared Leeside Temperature Sensor. Parametric value 1.0 indicates SILTS on and 0.0 indicates SILTS off.
	SOFI	Spray on foam insulation
T_t, T_o	TTF	freestream total temperature, ^oF
T_{vt}	TVT	vertical tail torsion moment, in-lbs
T_w	TW	wing torsion moment, in-lbs
X_T	XT	body station on the external tank
X_{CP_v}	XCPV	vertical tail center-of-pressure, longitudinal location, in.
X_{CP_w}	XCPW	wing center-of-pressure, longitudinal location, in.
X_o/L_o	X/LB	longitudinal location on orbiter body surface, fraction of body length
X/C_{BF}	X/CBF	chordwise location on body flap, fraction of local chord
X_T/L_T	XT/LT	longitudinal location on external tank body surface, fraction of body length
X_v/C_v	XV/CV	chordwise location on vertical tail, fraction of local chord
X_S/L_S	XS/LS	longitudinal location on solid rocket booster surface, fraction of body length
X_W/C_W	XW/CW	chordwise location on wing surface, fraction of local chord
Y_o	YO	orbiter base lateral centerline

NOMENCLATURE (Concluded)

SYMBOL	MNEMONIC	DEFINITION
η_w	Y/BW	spanwise location on wing, fraction of semi-span
η_{BF}	Y/BBF	spanwise location on body flap, fraction of body flap span
Y_{CP_V}	YCPV	vertical tail center-of-pressure, lateral location, in.
Y_{CP_W}	YCPW	wing center-of-pressure, lateral location, in.
Z_o	ZO	orbiter water line
η_v	ZV/BV	spanwise location on vertical tail, fraction of vertical tail span
Z_{CP_V}	ZCPV	vertical tail spanwise location of the center-of-pressure, in.
Z		distance from tunnel floor to sting centerline, in.
	SUBSCRIPTS	
	B,b	base
	f	forebody
	l,L	left, local
	O	orbiter
	R, r	right
	S	SRB
	T	External Tank
	t	total
	u	uncorrected
	V, V_t, v	Vertical Tail
	W, w	wing
	∞	freestream

REMARKS

Test IA105B was conducted basically as planned in Reference 1. Variations in the run schedule were made just before the test period and as the test progressed. A facility compressor failure forced the early termination of the test after approximately 60% of the data were obtained. The balance of the data were obtained during test IA184 (DMS-DR-2456).

Several problems occurred during the test that may have affected the quality of the data.

a. At various times during the test, leaks developed in either or both of the reference and calibration pressure systems. These leaks were corrected when discovered and did not exceed 0.005 inches of Hg per minute. The resultant error in Cp would be less than 0.005.

b. Zero shifts in the readings from the elevon, wing and vertical tail balances were common. These shifts were due to both thermal effects and friction of the gap seals. The initial zeros were used to reduce the data.

c. Zero shifts occurred in one pressure transducer (Scanivalve C-18) which was measuring pressures at ET stations 380, and 1000 thru 1060. These shifts had a minimal effect on the data as zero readings were taken at the start of each data point. This transducer was changed after Run 123.

REMARKS (Concluded)

d. Prior to Run 104 several tubes in the ET were damaged by overheated Scanivalve drives. These were repaired after Run 123. The data for the associated pressure taps were deleted from the final data tabulation. These taps were:

23	1619	1633	706
24	1625	1635	1782
37	1629	1637	
42	1631	1639	

e. At various times during the test, different tubes were found to be pinched, plugged, leaking or otherwise inoperative. These were repaired as time was available. A "running" list was furnished to the facility personnel who deleted the adversely effected data from the files.

f. The pressure taps on the AADS probe simulation (P1901, 1902) were generally inoperative throughout the test. The data presented was affected by severe lag times and its use is not recommended.

Actual pressure tap locations were measured over a year after the testing was completed. This information is contained in Reference 5 and can be obtained from the author. The instrumentation locations used in the tabulated data presented in this report are the "should be" locations and are very close to the "as measured" locations.

CONFIGURATIONS INVESTIGATED

The model was a 0.03-scale replica of the Rockwell International Space Shuttle Vehicle in launch configuration. The launch configuration consists of the assembly of a payload carrying orbiter, an expendable external oxygen/hydrogen tank (ET) (which provides fuel for the orbiter main engines), and two recoverable solid rocket boosters (SRB's). The general layout of the model is shown in Figure 2a.

The orbiter is of blended wing body design with a double delta planform ($81^{o}/45^{o}$ leading edge) 12% thick wing with full span elevons incorporating a six-inch interpanel gap between the independently deflectable inboard and outboard panels. A single swept (45° leading edge) vertical tail with rudder and/or speed brake capability is mounted between two orbital maneuvering system (OMS) pods. A single body flap is fitted on the lower trailing edge of the fuselage.

The orbiter fuselage is in accord with Rockwell International control drawing VL70-000140A, with the vertical tail as defined by drawing VL70-000146A. The OMS pods are of the later VL70-000140C configuration, these being a combination of the VL70-08401 and VL70-08410 drawings. Fitted to this is a new orbiter vehicle 102 wing as defined in the MD-V70 data book(s). For the purposes of this test and report, this combination shall be referred to as a "102 orbiter". The orbiter is shown in Figure 2b.

The ET is of cylindrical cross section with a nominal diameter of 333.0 inches full-scale and a maximum diameter of 336.2 inches full-scale. The forward portion of the ET has a tangent ogive nose which terminates in a biconic nose cap over the LOX vent valve. The biconic nose has a pitot and four static pressure taps as a sensing part of the ascent air data system (AADS). Only two of the four static taps were simulated. The forward third of the tank is filled with LOX, and the aft two thirds is a vessel for liquid hydrogen. The aft end of the tank is basically an ellipsoid of revolution. Between the two vessels is a structure of stiffeners which is slightly larger than the nominal tank diameter. Covering the entire tank is a spray-on foam insulation (SOFI) of varying thickness as dictated by the relative heat load, i.e., approximately 2.5 inches thick on the tangent ogive, 1.0 inch thick on the cylindrical portion of the tank and 2.0 inch thick on the rear ellipsoid. The diameters given above include this SOFI. External to the ET surface are a number of protuberances which fall into three major categories: electrical trays, fluid lines, and attach hardware. Electrical trays which run parallel to the centerline of the tank are simulated, those which run up next to the aft orbiter/ET attach hardware are not. Fluid lines modeled are the LOX and LH_2 feed and vent plumbing. The attach hardware that is considered as part of the tank is the front and rear ET/orbiter attach structure, which is discarded with the ET at the end of the main engine burn.

The external tank is built to the geometry described above and more specifically to Rockwell International Interface Control Drawing ICD 2-00001, Rev. C, plus Interface Revision Notices B and C. The external tank is shown in Figure 2c.

The two solid rocket boosters (SRB's) are 146-inch nominal diameter cylinders, each with an 18-degree semi-angle nose with a 13.27-inch spherical tip. An 18-degree flared skirt, 208.20-inch diameter, protects the gimbaled rocket nozzle. A flexible, donut-shaped seal and thermal shield is provided between skirt and nozzle. Major protrusions from the basic envelope include a forward attach lug, separation thrusters front and rear, aft attach ring, various stiffeners and a full length electrical systems tunnel.

In common with the external tank, the SRB is built in accord with the Rockwell International Interface Control Document ICD 2-00001C, with the supplement of Interface Revision Notices B and C. An SRB is shown in Figure 2d.

The entire model was therefore basically in accord with the Configuration 6 Launch Vehicle, comprised of the 102 orbiter and T_{39} tank and S_{27} booster.

The orbiter provided for this test series is constructed utilizing existing orbiter fuselage, vertical tail, OMS pods, new wing, and body flap

components. An internal beam/bridge/balance block has been constructed to allow mounting the orbiter from the attach hardware of the ET and to measure six component airloads on the orbiter. Safety factors of three (3) on yield and five (5) on ultimate have been observed. The complete orbiter weighs approximately 140 pounds. The model has been principally fabricated of 17-4 stainless steel and aluminum alloy with some contouring with Renite. The orbiter is fabricated around a balance block of 17-4, bored and sleeved to accept the Task 2.5-inch MK XXII balance. This block is located in the rear half of the fuselage and the 7076 aluminum pieces which form the outer mold line of the fuselage are bolted to it. These pieces consist of a fuselage cover, two fuselage fairings and two wing fairings at the rear of the body, two side covers, and a forward nose and top cover. The two OMS pods are fabricated of 7076-T6 aluminum alloy. The OMS nozzles are simulated in aluminum as are the RCS thrusters. The fuselage and OMS pods are heavily pressure instrumented.

The wing is a two piece aluminum article screwed to a central steel wing beam. This beam of cross shaped planform supports one wing on a tang on each side of the central plate. The right hand tang is instrumented with strain gauges to form the three component wing load indicator balance. While the center of this beam forms the outer mold line of the bottom of the orbiter, the tangs are out of the airstream. The wings are made integral with the glove and a labyrinth seal is provided on the

metric side to improve the data quality. The wings are extensively hollowed to reduce the model weight. The left hand wing is instrumented with pressure taps. Each of the wings is fitted with deflectable inboard and outboard elevons which are supported in torsion only by a beam mounted on the hinge line, and in all other degrees of freedom by plain bearing hinges, also on the scale hinge line. Identical R.H. and L.H. elevon supports insure similar aeroelastic deflections. The opposite end of the elevon support beam is fitted with a ball bearing to minimize hysteresis effects. The right hand wing panels are supported on beams which are strain gauged. Available nominal deflections and actual unloaded measured deflections are listed in Table III. Simulated flipper doors are fitted to the upper wing surface.

An aluminum body flap with hinge moment capability and 40 pressure taps is provided. The hinge moment capability was not used, nor was the body flap deflection changed during this test entry.

Two vertical tails are provided for this test, the first being of 17-4PH Armco with a single plain hinged rudder/speed brake on each side. This is a pressure instrumented surface with 76 pressures (including one of the base group, #301). The hardline tubulations terminate at the front of the base of the tail, from whence the tubes are of flexible plastic to the Scanivalves. The tail itself is hard mounted to the balance block. The second vertical is of aluminum and mounts through this same

cavity, but is supported on a six component balance to measure vertical tail airloads directly. No rudder or speed brake deflections were used for this test.

Simulated SSME nozzles are provided in the base of the orbiter, since no sting interferes. The nozzles are set at the nominal angles of 16 degrees up, no yaw upper, and 10 degrees up, ±3 1/2 degrees yaw outboard for the lower two. The material used is aluminum alloy. The nozzles are mounted to a base plate which closes off the balance cavity at the back of the orbiter.

The entire orbiter is mounted on the 6 component balance, with the taper fitting into a block in the cavity at the rear of the fuselage. This block is screwed to a beam running under the balance block and also to a stiffener rod that runs forward above the right corner of the balance block to a "flying wedge" piece attached to the right front of the longitudinal beam. The ET attach hardware mounts to the bottom beam through holes in the bottom of the orbiter.

The external tank is principally fabricated of aluminum alloy to reduce weight and fabrication costs. The approximate weight of the external tank with instrumentation is 190 pounds. Safety factors of three (3) on yield and five (5) on ultimate have been observed in the design and construction of the tank.

The 333-inch full-scale diameter tank is built up out of five principal shell-like pieces that conform to the outer mold line of the tank including the spray on foam insulation. These pieces are a biconic forward tip which includes the entire tangent ogive (and is actually made up of two non-separable pieces because of a late lines change), a cylindrical mid-body, a short cylindrical aft body, and an aft cap. Slipped around the back of the aft body to fair into the cap is a ring designated a recontouring block, and an .030-inch shim is placed beneath the cap. These last two items are also the result of a late lines change. There are two holes aft and one hole forward on each side which are spotfaced inside and out to accept the SRB ring mounting studs and screws.

Slipped into the front of the nose of the tank is a biconic vent valve housing with an integral 10-degree half-angle conical yaw probe at the front. This yaw probe (The Ascent Air Data System or AADS) is instrumented to scale with two .010-inch OD hypodermic tubing taps at the scale location, .075-inch aft of the tip of the spike (taps 1901 and 1902).

The orbiter/ET attach hardware is scaled to as great a degree as possible and is load bearing. The orbiter/ET front attach was originally fabricated from a single piece of 17-4 stainless steel with two end plates, but prior to testing was modified to prevent orbiter rolling moment from being transmitted to the structure by use of a pin joint at the orbiter.

The lower end plate fits into a milled recess in the ET mid-body; the upper one fitting into an analogous recess in the orbiter, and fastened to the orbiter balance beam.

The aft load is carried through the vertical runs of the LO_2 and LH_2 feed lines, which are bushed, hollow bolts securing the ET to the orbiter balance block. The simulated aft ET/SRB attach hardware does not carry load.

Detailed external tank protuberances are provided. The pressure and feed lines are as previously used on model 47-T on the 331-inch tank, the ellipsoid fairings and cable trays are new construction.

Scanivalve and balance cables and pressures are routed into the tank from the orbiter through the hollow rear attach bolts. These and the cables from the tank Scanivalves are led out to the SRB's just behind the SRB front attach. The entire tank and its protrusions are pressure instrumented.

The two aluminum SRB's are reworked from a previous usage with the principal alterations being to the protuberances, the number of pressure taps (added to reflect the requests of the customer), and the mode of attaching the SRB to the ET. The SRB to ET attachments were modified to bear the expected loads and to carry the electrical leads through from the tank.

The SRB's are fabricated of 2024-T4 aluminum alloy to reduce weight. The weight of the right hand SRB is approximately 40 pounds and the weight of the thinner, left hand SRB with the Scanivalves is approximately 21 pounds. Safety factors of three (3) for yield and five (5) for ultimate have been observed in this design.

Both SRB's are built around a 2.00-inch I.D. x 3.38-inch O.D. aluminum sleeve. This sleeve is pinned to the eccentric adapter and to the body of the SRB with pull pins on each side. The SRB itself consists of four main parts, a nose cone, a forebody, an aft attach ring and an aft body and nozzle assembly.

The SRB's are built up around the forebody with all instrumentation installed and are then slipped into the mounting holes in the tank. The aft body, spacer skirt, nozzle and thermal protecting shield of 2024 aluminum alloy are assembled as a unit on the forebody, sandwiching the aft attach ring between them. This ring is carved of a single piece of stock with integral mounting studs that simulate the aft attach struts.

A 7/16 AHCS passes through the simulated SRB/ET front attach to secure the front of the SRB to the ET. The nose cone slips over the forebody of the SRB after the booster is secured to the external tank.

Nozzle actuator struts are simulated on each of the SRB aft skirts. The SRB aft separation thrusters and skirt stiffeners are also attached to

the skirt. The cable tunnel is simulated on both SRB's. The SRB stiffener rings are split to fit over the skirt and snap into a locating groove.

The left hand SRB is instrumented with pressure taps and a multiple Scanivalve unit. To provide access to the valves, a cover is fit to the LH forebody. All reference pressures, and instrumentation leads from the SRB are run internal to the LH fork of the sting.

The following nomenclature, illustrated in Figures 2b through 2d, was used to designate the model components:

Symbol	Description
B_{62}	-140 A/B Body
C_9	-140 A/B Canopy
E_{64}	OV 102 Elevon
W_{131}	OV 102 Wing
M_{16}	Short OMS pods, -140 C w/nozzles
N_{28}	OMS Nozzles
N_{112}	SSME nozzles, OV102 complete
R_5	146 A Rudder
V_8	146 A Vertical Tail
FD_3	Flipper Doors
F_9	Body Flap

CONFIGURATIONS INVESTIGATED (Concluded)

Symbol	Description
A configuration code has not been assigned for the SILTS pod.	
T_{39}	External Tank complete 330-inch O.D. with protuberances
S_{27}	Solid Rocket Booster complete 146-inch O.D. with protuberances

TEST FACILITY DESCRIPTION

This tunnel is one of the supersonic legs of the Ames Unitary facility. It is a closed circuit, variable density, continuous flow tunnel. The test section is 9 feet by 7 feet by 18 feet and the nozzle is of the asymmetric, sliding-block type in which the variation of the test section Mach number is achieved by translating, in the streamwise direction, the fixed contour block that forms the floor of the nozzle. The temperature in all three circuits is controlled by after-cooling. Dry air for use in the circuit is supplied from four 30,000 cubic-foot spherical tanks. The tunnel drive motors and compressor also serve the 8 by 7-foot tunnel. The motors have a combined output of 180,000 horsepower for continuous operations or 216,000 horsepower for one hour.

TEST PROCEDURE AND INSTRUMENTATION

The model was instrumented so that pressure and force data could be obtained simultaneously, except on the vertical tail where both pressure instrumented and force (strain gauge) instrumented vertical tails were used.

The model was heavily instrumented to measure surface pressures. A total of 1586 pressures were measured by thirty-eight 48-port pneumatic commutators (Scanivalves®) located in the model components as shown in Fig. 3. The location of the 1586 pressures are shown in Figs. 4 through 9 and are categorized as follows:

Major Model Component	Model Component	No. of Orifices
Orbiter	Fuselage	206
	Flap	40
	Base	24
	Vertical Stabilizer	75
	Wing	283
	Total	628
External Tank	Body	424
	Base	74
	Protuberances	232
	AADS	2
	Total	732
Solid Rocket Boosters	Body	175
	Base	10
	Protuberances	41
	Total	226

Not all pressures were measured during every run. The Scanivalves® were tubed to allow for abbreviated scans in the interest of reducing test time.

In addition to the model pressures, forces and moments were measured by strain gage balances as follows:

Balance Location	Type	Model Forces & Moments Measured or Calculated
Orbiter	6-component	Orbiter normal force, side force, axial force, pitching-moment, rolling moment, yawing moment
Wing	3-component	Wing normal force, bending moment and torsional moment
Vertical Stabilizer	6-component	Vertical stabilizer normal force, side force, axial force, pitching moment, bending moment, and torsional moment
Inboard Elevon	1-component	Inboard elevon hinge moment
Outboard Elevon	1-component	Outboard elevon hinge moment

An ARC supplied angular position indicator (dangleometer) was mounted in the external tank, and was used to position the model in pitch during the test.

The pressure transducers were calibrated prior to the test and were again calibrated after the model was installed in the tunnel using the "reference" and "calibrate" ports on the Scanivalves in accordance with normal ARC procedures.

After installation all pressures were either leak checked using a hand-held vacuum pump or continuity checked with compressed air when the orifice was located in a position where it could not be leak checked. This checking continued throughout the test whenever there was any evidence of a problem and after model changes to check all pressures which had been disconnected during the change.

The 2 1/2-inch MK XXII balance, the wing balance, the vertical tail balance and the elevon moment gages were calibrated in the ARC calibration laboratory prior to the test. The elevon hinge moment cauges were calibrated in the tunnel after the model was installed, and were check calibrated after each change in elevon angle. All balances were check-loaded after installation in the tunnel.

After installation in the model the dangleometer was calibrated over the angle-of-attack range required for the test.

The general test procedure was as follows: After starting the tunnel the desired test conditions for a particular Mach number (the lowest required for the subject configuration) were established as given in Table 1. Data were obtained during a pause at each required angle-of-attack and sideslip. After data were obtained for the required angle matrix, the test conditions were changed to the next higher Mach number and the process was repeated. After all data on a particular configuration had been obtained, the tunnel was shut down for a model change to the next scheduled

elevon setting. The change from the "pressure" to the "force" vertical tail was made during the non-running shift to provide sufficient time to check out the balance.

DATA REDUCTION

Standard ARC methods for computing tunnel parameters, balance forces and moments, and model attitudes were used. Pressure coefficients were calculated for all model pressures. Force and moment coefficients (body axis system only) were computed for each balance using the axis system defined in Figure 1a. Orbiter force and moment data were adjusted to account for the difference between measured base pressure and freestream pressure. Elevon hinge moments, and wing and vertical tail forces and moments were calculated in coefficient form about reference locations specified for each component.

The moment reference locations, in full-scale dimensions, are as follows:

Total vehicle (Used for orbiter data):	X_T 976, Y_T0, Z_T 400
Right wing:	X_o 1307, Y_o 105
Right elevons:	Hingeline at X_o 1387
Vertical tail:	X_o 1414.3, Z_o 503

The attitude of the external tank/SRB's was calculated from the sector reading and the output of the dangleometer. Balance deflections were accounted for in determining the attitude of the orbiter. The deflection of the elevons and the vertical tail due to applied loads were also calculated. The deflection of the wing under load was found to be insignificant and therefore was not accounted for in data reduction.

Pressure coefficients were computed as follows:

$$C_{p_i} = (P_i - P_o)/q$$

where "i" represents the model orifice number.

Standard six component body axis force coefficients were computed for the balance mounted orbiter. The reference area used was the orbiter wing area, and the reference length for moment coefficients was the orbiter reference length. Moments were computed at the integrated vehicle reference center which is at the orbiter nose on the tank centerline. This is located at $X_T = 976$, $Y_T = 0$, $Z_T = 400$ in tank coordinates, and $X_o = 235$, $Y_o = 0$, $Z_o = 63.5$ in orbiter coordinates. The balance transfer dimensions are depicted in Figures 1b through 1d.

The normal force, axial force, and pitching moment coefficients for the orbiter were adjusted for base pressure as follows:

$$C_{N_B} = \frac{-1}{S_w} \tan 14.75^o \sum_{301}^{324} C_{p_i} A_i + \frac{-1}{S_w} \sum_{401}^{440} C_{p_i} A_i$$

$$C_{A_B} = \frac{-1}{S_w} \sum_{301}^{324} C_{p_i} A_i$$

$$C_{m_B} = \frac{-1}{S_w \ell_b}\left[-X_1 \tan 14.75^o \sum_{301}^{324} C_{p_i} A_i - X_2 \sum_{401}^{440} C_{p_i} A_i + Z_1 \sum_{301}^{324} C_{p_i} A_i\right]$$

where X_1, X_2 and Z_1 are the distances to the centroid of the area from the moment reference center.

The resulting coefficients are applied as follows to obtain the forebody coefficients:

$$C_{A_f} = C_{A_u} - C_{A_B}$$

$$C_{N_f} = C_{N_u} - C_{N_B}$$

$$C_{m_f} = C_{m_u} - C_{m_B}$$

The model component loads were reduced to force and moment coefficients in the following manner:

For wing bending and torsion:

$$C_{N_w} = N_w / \left[(q)(S_w)\right]$$

$$C_{B_w} = B_w / \left[(q)(S_w)(b_w)\right]$$

$$C_{T_w} = T_w / \left[(q)(S_w)(\bar{c})\right]$$

For vertical tail bending and torsion:

$$C_{S_v} = N_{vt} / \left[(q)(S_{vt})\right]$$

$$C_{B_v} = B_{vt} / \left[(q)(S_{vt})(C_{vt})\right]$$

$$C_{n_v} = T_{vt} / \left[(q)(S_{vt})(C_{vt})\right]$$

(Data from the vertical tail pitching moment gauge were not reduced.)

For elevon hinge moments:

$$C_{h_{e_i}} = H_{e_i} / \left[(q)(S_e)(C_e)\right]$$

$$C_{h_{e_o}} = H_{e_o} / \left[(q)(S_e)(C_e)\right]$$

A schedule of completed runs is given in Table II which is the Data Set/Run Number Collation Summary for the test.

Reference dimensions and constants used were:

SYMBOL	VALUE MODEL SCALE	VALUE FULL SCALE	DESCRIPTION	
A_{301}	- 0 -		Orbiter base area for pressure tap	301
A_{302}	0.022146 ft.^{2}			302
A_{303}	0.122387			303
A_{304}	0.005970			304
A_{305}	0.004909			305
A_{306}	0.009287			306
A_{307}	0.007960			307
A_{308}	0.010613			308
A_{309}	0.022554			309
A_{310}	0.003980			310
A_{311}	0.023217			311
A_{312}	0.016584			312
A_{313}	0.001327			313
A_{314}	0.011940			314
A_{315}	0.013798			315
A_{316}	0.007297			316
A_{317}	0.012603			317
A_{318}	0.017247			318
A_{319}	0.021758			319

DATA REDUCTION (Continued)

SYMBOL	VALUE MODEL SCALE	VALUE FULL SCALE	DESCRIPTION	
A_{320}	0.015920		Orbiter base area for pressure tap	320
A_{321}	0.017247			321
A_{322}	0.014328			322
A_{323}	0.006103			323
A_{324}	0.026003			324
A_{401}	- 0 -		Body flap base area for pressure tap	401
A_{402}	- 0 -			402
A_{403}	- 0 -			403
A_{404}	- 0 -			404
A_{405}	0.01151 ft.^{2}			405
A_{406}	0.010267 ft.^{2}			406
A_{407}	0.0089838 ft.^{2}			407
A_{408}	0.0077004 ft.^{2}			408
A_{409}	- 0 -			409
A_{410}	- 0 -			410
A_{411}	- 0 -			411
A_{412}	- 0 -			412
A_{413}	0.012834 ft.^{2}			413
A_{414}	0.012834 ft.^{2}			414
A_{415}	0.012834 ft.^{2}			415

DATA REDUCTION (Continued)

SYMBOL	VALUE MODEL SCALE	VALUE FULL SCALE	DESCRIPTION	
A_{416}	0.012834 ft.^{2}		Body flap base area for pressure tap	416
A_{417}	- 0 -			417
A_{418}	- 0 -			418
A_{419}	- 0 -			419
A_{420}	- 0 -			420
A_{421}	- 0 -			421
A_{422}	- 0 -			422
A_{423}	- 0 -			423
A_{424}	- 0 -			424
A_{425}	- 0 -			425
A_{426}	- 0 -			426
A_{427}	- 0 -			427
A_{428}	- 0 -			428
A_{429}	- 0 -			429
A_{430}	- 0 -			430
A_{431}	- 0 -			431
A_{432}	- 0 -			432
A_{433}	- 0 -			433
A_{434}	- 0 -			434
A_{435}	- 0 -			435
A_{436}	- 0 -			436

DATA REDUCTION (Continued)

SYMBOL	VALUE MODEL SCALE	VALUE FULL SCALE	DESCRIPTION
A_{437}	.011551 ft.^{2}		Body flap base area for pressure tap 437
A_{438}	.010267 ft.^{2}		438
A_{439}	.0089838 ft.^{2}		439
A_{440}	.0077004 ft.^{2}		440
b	38.709 in.	1290.3 in.	Orbiter reference length
b_w	28.101 in.	936.7 in.	Wing bending reference length
$\bar{c}$	14.244 in.	474.8 in.	Mean aerodynamic chord
C_e	2.721 in.	90.7 in.	Elevon reference chord length
C_{vt}	5.994 in.	199.8 in.	Vertical tail reference chord length
S_w	2.421 ft.^{2}	2690. ft.^{2}	Wing reference area
S_{vt}	0.3719 ft.^{2}	413.25 ft.^{2}	Vertical tail reference area
X_1	37.890 in.		Base pressure transfer distance
X_2	39.890 in.		Base pressure transfer distance
X_T	- 25.570 in.	-852.33 in.	Longitudinal transfer distance from orbiter balance reference point to integrated vehicle MRC
X_{TV}	2.341 in.	78.03 in.	Longitudinal transfer distance from vertical tail balance reference center to vertical tail MRC
Z_1	9.795 in.	-326.5 in.	Base pressure transfer distance

DATA REDUCTION (Concluded)

SYMBOL	VALUE MODEL SCALE	VALUE FULL SCALE	DESCRIPTION
Z_T	-9.795 in.	-326.5 in.	Vertical transfer distance from orbiter balance centerline to integrated vehicle MRC
Z_{TV}	0.632 in.	21.07 in.	Vertical transfer distance from vertical tail balance centerline to vertical tail MRC
S_e	0.189 ft.^{2}	210.0 ft.^{2}	Elevon reference area.

REFERENCES

1. SD77-SH-0227, "Pretest Information for Test IA105B of the 0.03-Scale Pressure Loads Model 47-OTS of the Space Shuttle Integrated Vehicle in the 9-Foot by 7-Foot Supersonic Test Section of the Unitary Plan Wind Tunnel at NASA/Ames Research Center," dated October 12, 1977.

2. SD77-SH-0194, "Pretest Information for test IA105A of the 0.03-Scale Pressure Loads Model 47-OTS of the Space Shuttle Integrated Vehicle in the 16-Foot Transonic Test Section of the Propulsion Wind Tunnel at AEDC," dated Sept. 2, 1977.

3. STS-79-0016, "Pretest Information fot Test IA184 of the 0.03-Scale Pressure Loads Model 47-OTS of the Space Shuttle Integrated Vehicle in the 9 x 7-Foot Supersonic Test Section of the Unitary Plan Wind Tunnel at Ames Research Center," dated March 5, 1979.

4. "Research Facilities Summary, Volume II - Wind Tunnels: Subsonic, Transonic, Supersonic," NASA/Ames Research Center, dated December, 1965.

5. STS/WTO/79-049," 'As Measured' Pressure Tap Locations for Model 47-OTS," 2 May 1979.

6. SAS/AERO/SL/78-017, "IA105B Pressure Data Corrections," dated April 21, 1978.

TABLE I

TEST : IA105B

DATE : 2-2-78

TEST CONDITIONS

MACH NUMBER	REYNOLDS NUMBER (per unit length)	DYNAMIC PRESSURE (pounds/sq.ft.)	STAGNATION TEMPERATURE (degrees Fahrenheit)
1.55	3.5×10^6	736	
1.80	3.5×10^6	746	
2.20	3.5×10^6	706	
2.50	3.5×10^6	670	

BALANCE UTILIZED: see table IV

	CAPACITY:	ACCURACY:	COEFFICIENT TOLERANCE:
NF			
SF			
AF			
PM			
RM			
YM			

COMMENTS:

TABLE II

ARC 242-1-97

TEST: IA105 B

DATA SET/RUN NUMBER COLLATION SUMMARY

DATE: POST TEST

DATA SET IDENTIFIER	CONFIGURATION	α	δ_{eI}	δ_{eo}	Mach	ANGLE OF SIDESLIP ~ β -6	-4	0	4	6
R2U*01	ΦTS - PRESS VERT	B	12	-7	1.55	8	9	10	11	12
02				-7	1.80	13	14	15	16	17
03				-5	1.80	1	20	21	22	23
04			10		1.80	24	25	26	27	28
05		A	10		2.20	29	30	31	32	33
06		B	4		1.80	34	35	36	37	38
07		A			2.20	39	40	41	42	43
08		A			2.50	44	45	46	47	48
09		B		-2	1.80	49	50	51	52	53
10		A			2.20	54	55	56	57	58
11					2.50	59	60	61	62	63
12	ΦTS - FORCE VERT		-2		2.50	*64	*65	*66	*67	*68
13			0		2.20	*69	*70	*71	*72	*73
14					2.50	*74	*75	*76	*77	*78
15				2	2.50	*79	*80	*81	*82	*83
16				-5	2.20	84	85	86	87	88
17					2.50	89	90	91	92	93
18		B	8		1.80	94	95	96	97	*98

TEST RUN NUMBERS

1 7 13 19 25 31 37 43 49 55 61 67 75 76

α OR β SCHEDULES

A) $\alpha = -4°, -2°, 0°, 2°, 4°, 6°$

B) $\alpha = -6°, -4°, -2°, 0°, 2°, 4°$

COEFFICIENTS

IDVAR (1) IDVAR (2) NDV

* Force data bad for these runs for the vertical tail coefficients.

TABLE II (Continued)

ARC 242-1-97

TEST: IA105 B

DATA SET/RUN NUMBER COLLATION SUMMARY

DATE: POST TEST

DATA SET IDENTIFIER	CONFIGURATION	α		δ_{eI}	δ_{eo}	Mach	ANGLE OF SIDESLIP ~ β -6	-4	0	4	6
R2U *19	OTS - FORCE VERT	A		8	-5	2.50	100	99	101	102	103
20		B			-2	1.80	104	105	106	107	*108
21		A				2.50	109	110	111	112	113
22		B		10		1.80	114	115	116	117	*118
23		A		10		2.20	119	120	121	122	123
24				-2	-7	2.50	124	125	126	127	128
25					-5	2.50	129	130	131	132	133
26					2	2.50	134	135	136	137	138
27				8	2	2.50	139	140	141	142	143

TEST RUN NUMBERS

1 7 13 19 25 31 37 43 49 55 61 67 75 76

COEFFICIENTS

IDVAR (1) IDVAR (2) NDV

α OR β SCHEDULES

A) $\alpha = -4^\circ, -2^\circ, 0^\circ, 2^\circ, 4^\circ, 6^\circ$

B) $\alpha = -6^\circ, -4^\circ, -2^\circ, 0^\circ, 2^\circ, 4^\circ$

TABLE II (Concluded)

COEFFICIENT SCHEDULES:

FORCE DATA SET 1ST CHARACTER	INDEPENDENT VARIABLE	DEPENDENT VARIABLES									
R	BETAO/ALPHAO	MACH	CNU	CNF	CAU	CAF	CLMU	CLMF	CY	CYN	CBL
S	BETAO/ALPHAO	ALPHAT	BETAT	CNB	CAB	CLMB	CNW	CTW	CBW	XCPW	YCPW
T	BETAO/ALPHAO	CAV	CABV	CSV	CZV	CMV	CTV	CBV	XCPV	ZCPV	
U	BETAO/ALPHAO	CHEI	CHEO	ELVRI	ELVRO	ELO	ELI	ERO	ERI	DO	DI

APPENDIX:

R datasets pages 1-41
S datasets pages 42-81
T datasets pages 82-105
U datasets pages 106-146

PRESSURE DATA SET 4TH CHARACTER	COMPONENT
B	Orbiter Fuselage
E	Orbiter Base
F	Body Flap - Lower Surface
G	Body Flap - Upper Surface
J	Miscellaneous
L	L.H. Wing - Lower Surface
M	E.T. Protuberances
N	SRB Protuberances
S	SRB (Left)
T	External Tank
U	L.H. Wing - Upper Surface
V	Vertical tail

TABLE III. ELEVON DEFLECTION ANGLES

INBOARD ELEVON ANGLES, DEGREES		
NOMINAL	LEFT HAND MEASURED	RIGHT HAND MEASURED
12	12.53	12.68
10	10.37	10.25
8	8.52	8.53
4	4.00	4.00
0	0	0
-2	-2.0	-2.0

OUTBOARD ELEVON ANGLES, DEGREES		
NOMINAL	LEFT HAND MEASURED	RIGHT HAND MEASURED
+2	1.88	2.00
0	0	0
-2	-1.72	-1.83
-5	-5.05	-5.05
-7	-7.00	-7.00

TABLE IV. BALANCES UTILIZED

ORBITER BALANCE - 2ND ENTRY

Task 2.5" MK XXII

COMP	RATED LOAD
N_1	2500 lbs
N_2	2500 lbs
A	800 lbs
Y_1	1000 lbs
Y_2	1000 lbs
ℓ	4000 in-lbs

VERTICAL TAIL BALANCE

Lockheed 1" 10033

COMP	RATED LOAD
Normal	700 lbs
Side	500 lbs
Axial	125 lbs
Roll	1200 in-lbs

WING LOAD INDICATOR

COMP	RATED LOAD
Normal	378 lbs
Bending	1850 in-lbs
Torsion	938 in-lbs

ELEVON HINGE MOMENTS

COMP	RATED LOAD
Inboard	110 in-lbs
Outboard	110 in-lbs

TABLE V

BAD PRESSURE DATA LIST

COMPONENT	DATA SET IDENTIFIER	β	α	TAP NUMBER
Orbiter Fuselage	None			
Orbiter Base	R2UE01→R2UE27	ALL	ALL	317
	R2UE12→R2UE27	ALL	ALL	302, 308
Body Flap - Upper Surface	None			
Body Flap - Lower Surface	None			
Vertical Tail	None			
LH Wing - Upper Surface	R2UU24	ALL	ALL	859
	R2UU25	ALL	ALL	859
	R2UU26	ALL	ALL	859
	R2UU27	ALL	ALL	859
LH Wing - Lower Surface	NONE			
	NONE			
External Tank	NONE			
LH SRB	NONE			
ET Protuberances	NONE			
SRB Protuberances	NONE			
Miscellaneous	NONE			

Notes:

1. Positive directions of force coefficients, moment coefficients, and angles are indicated by arrows
2. For clarity, origins of wind and stability axes have been displaced from the center of gravity

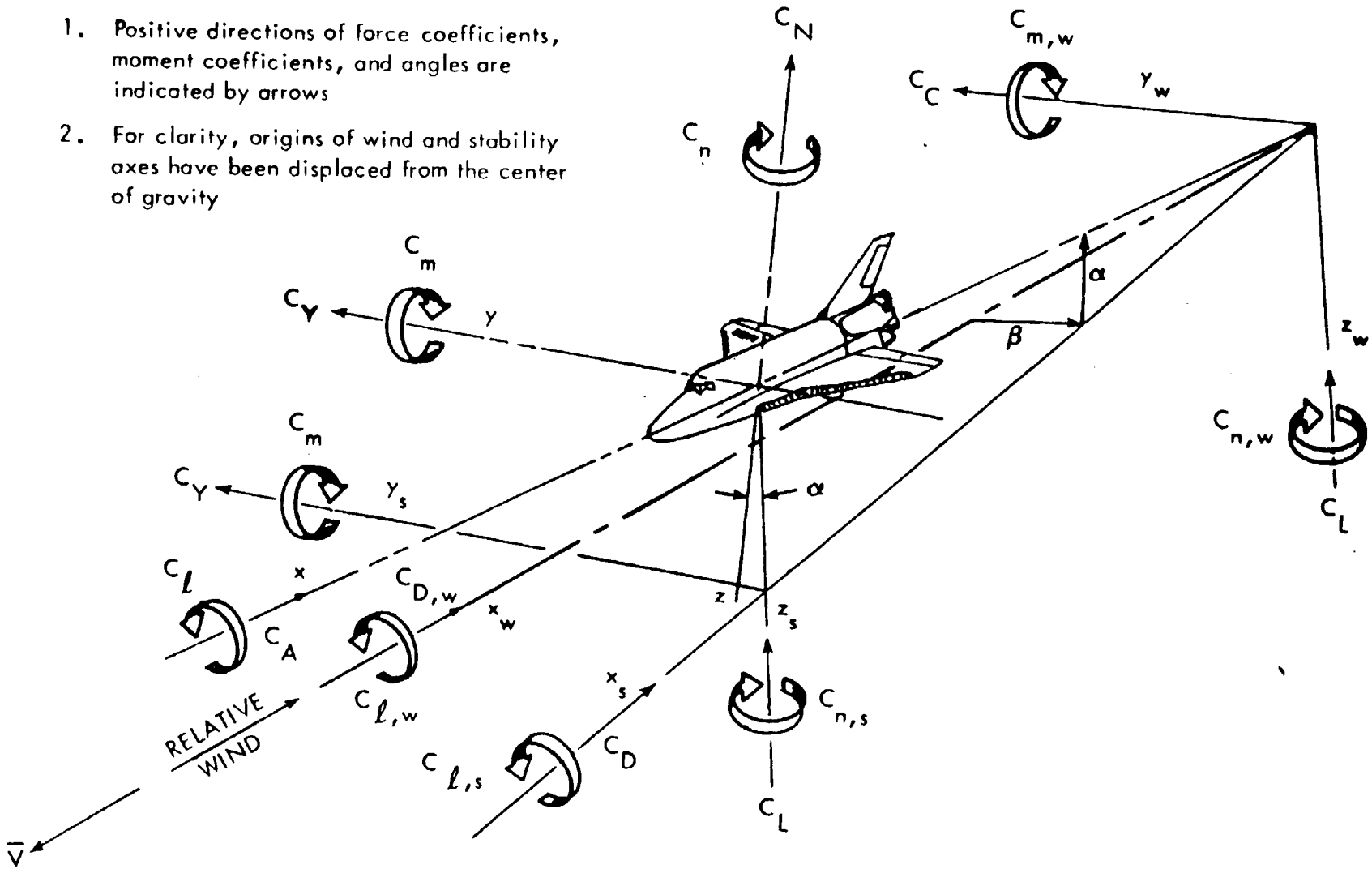

a. Axis Systems

Figure 1. Model Axis Systems, Sign Conventions and Reference Dimensions

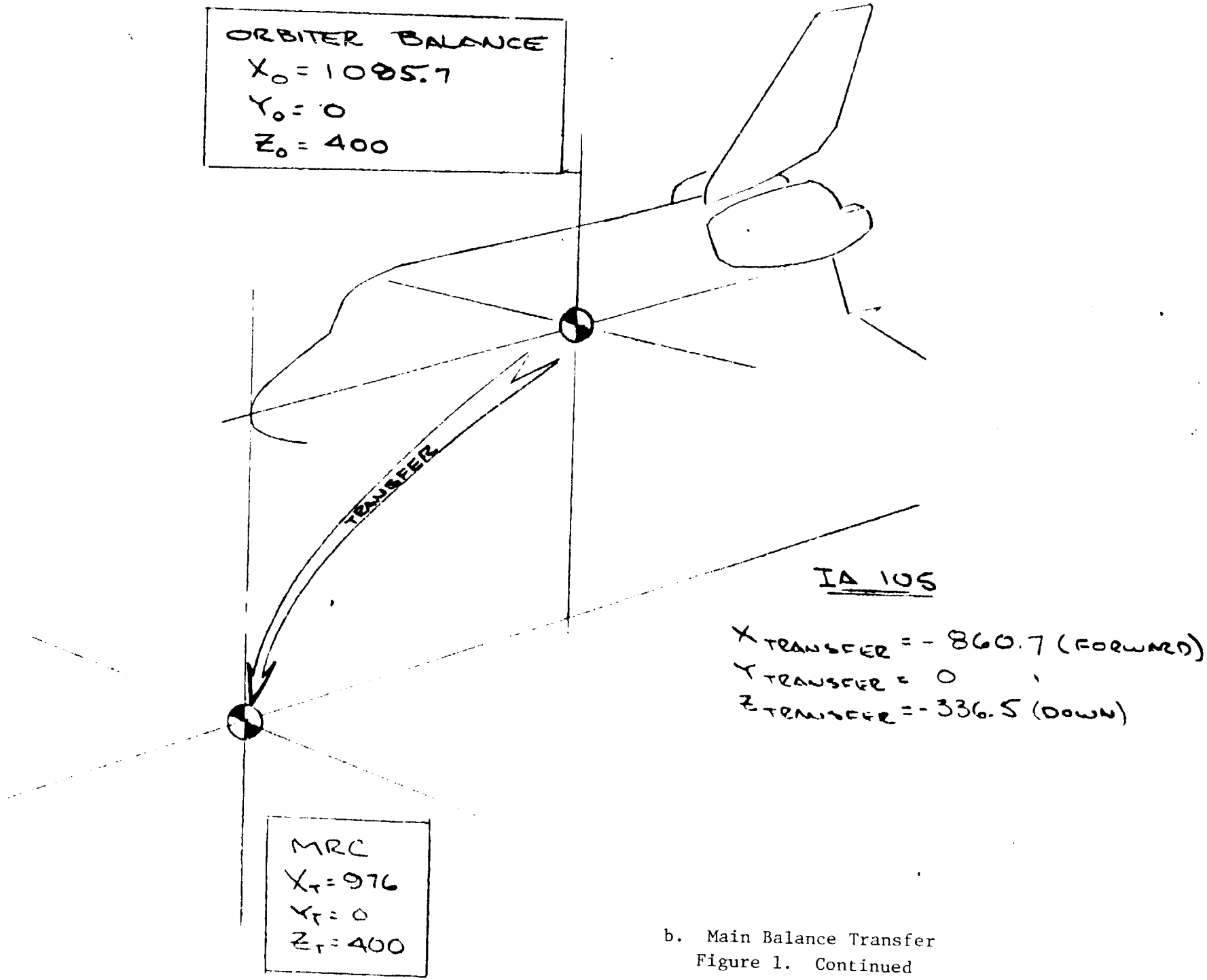

b. Main Balance Transfer
Figure 1. Continued

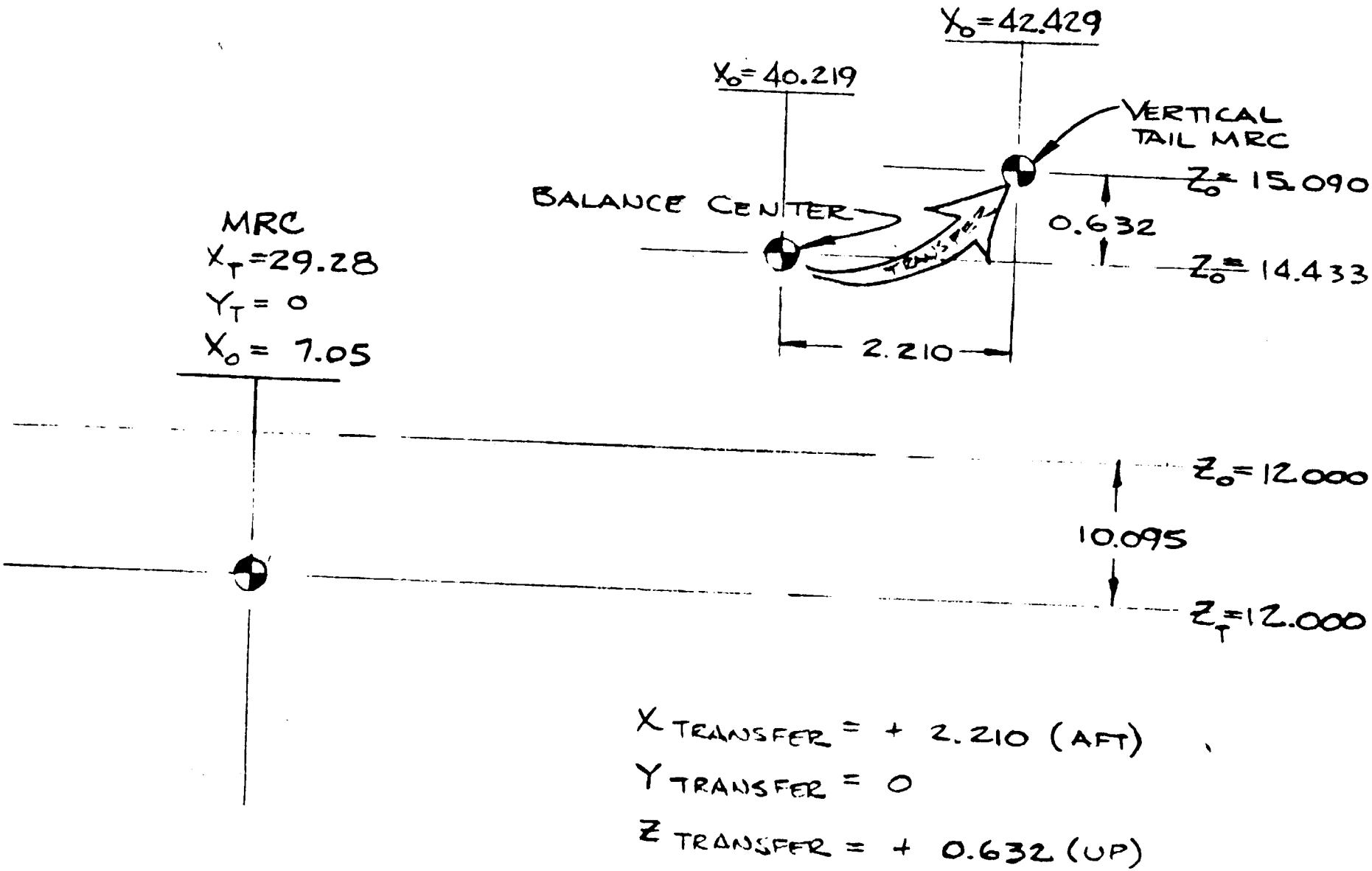

c. Vertical Tail Balance Transfer
Figure 1. (Continued)

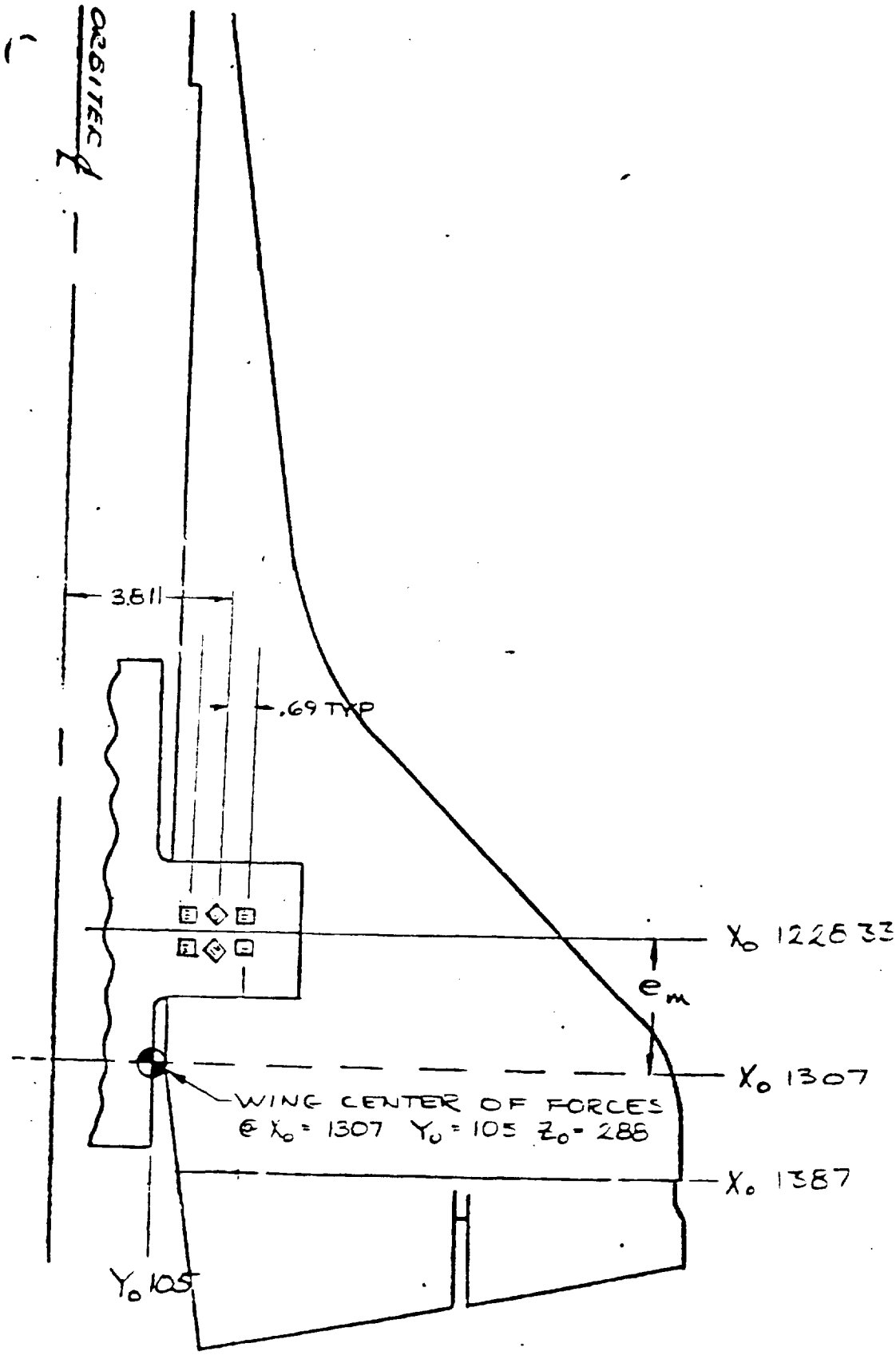

d. Wing Balance Transfer
Figure 1. (Continued)

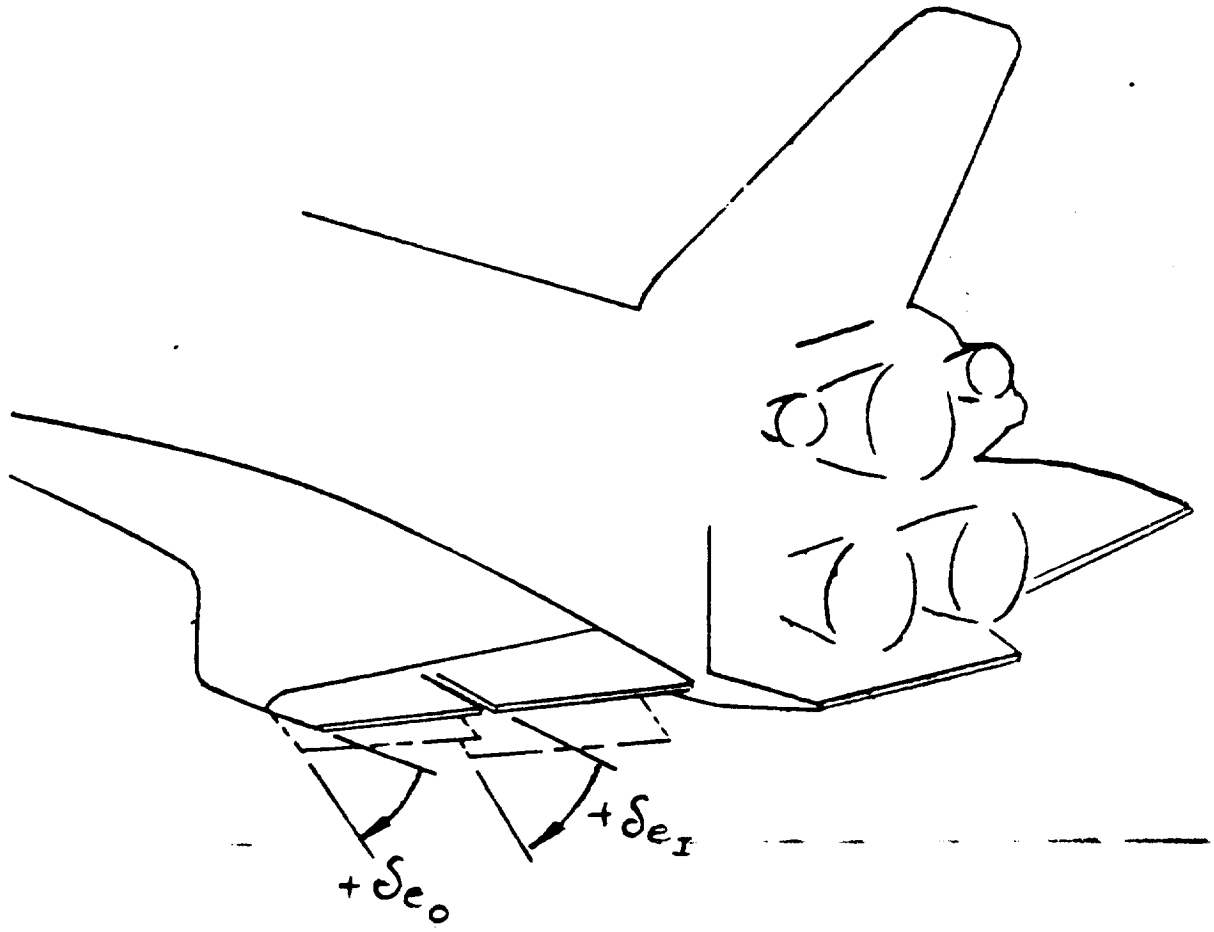

e. Elevon Deflection Sign Convention
Figure 1. (Continued)

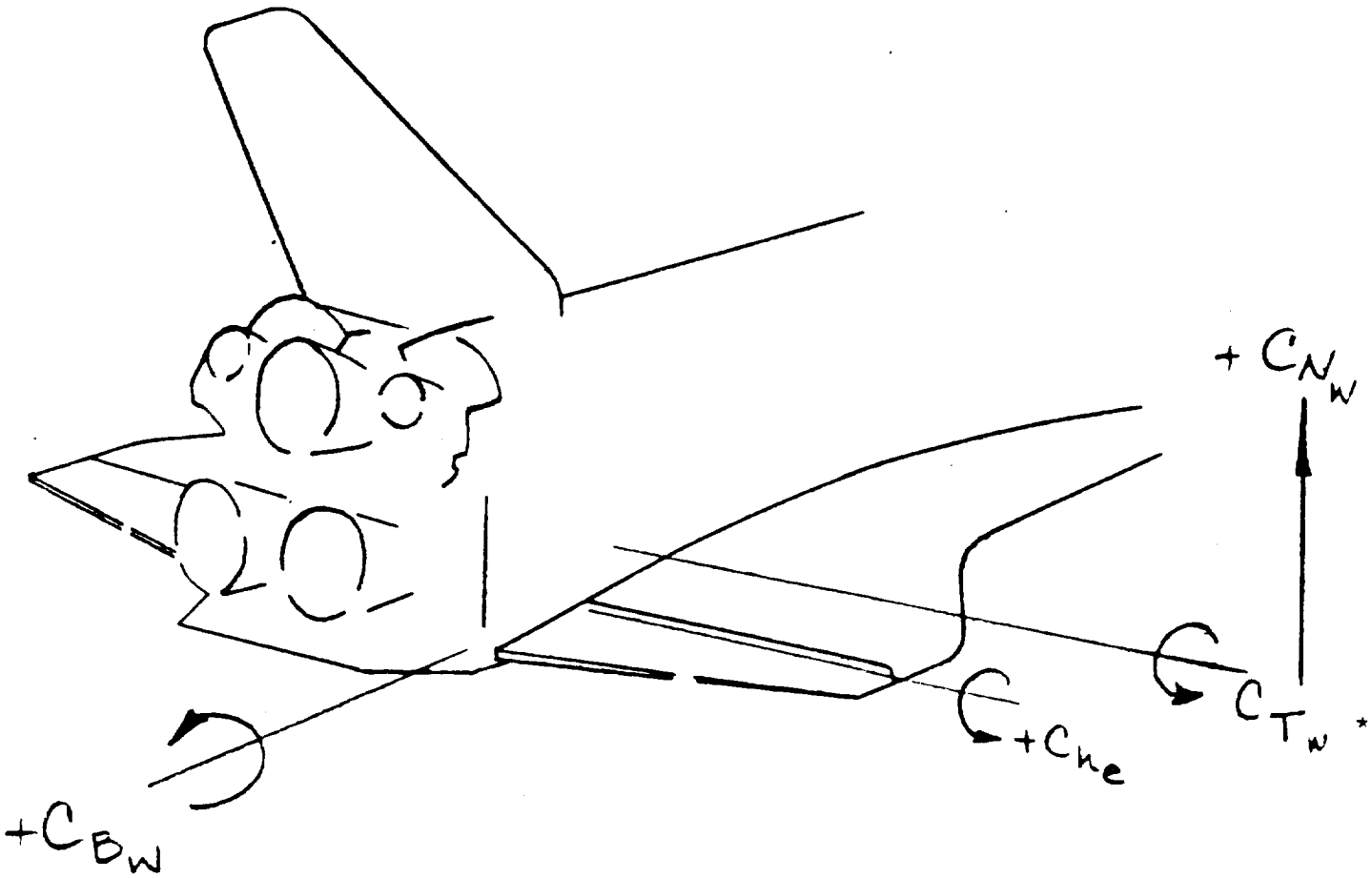

f. Wing Load Sign Convention
Figure 1. (Continued)

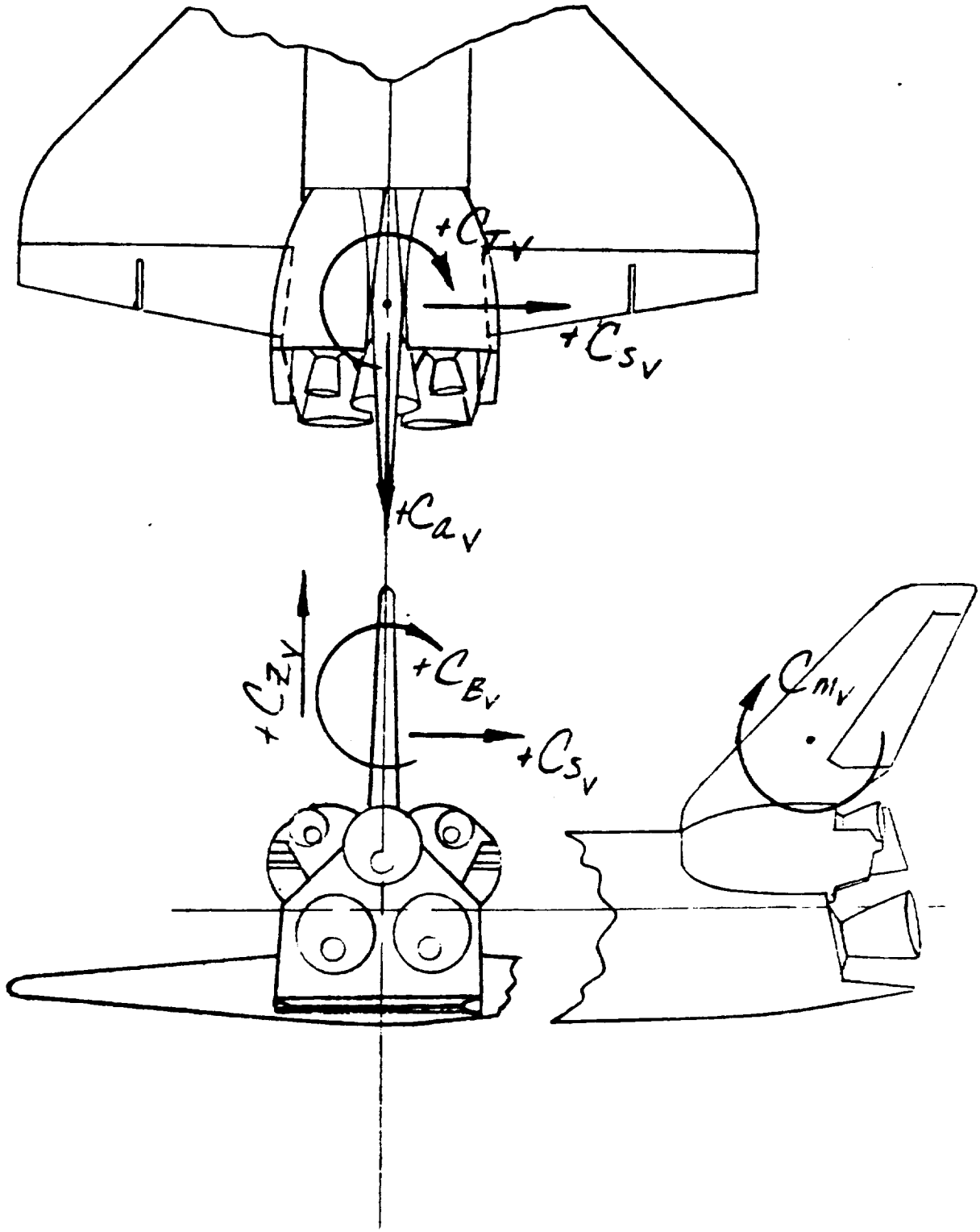

g. Vertical Tail Load Sign Convention
Figure 1. (Concluded)

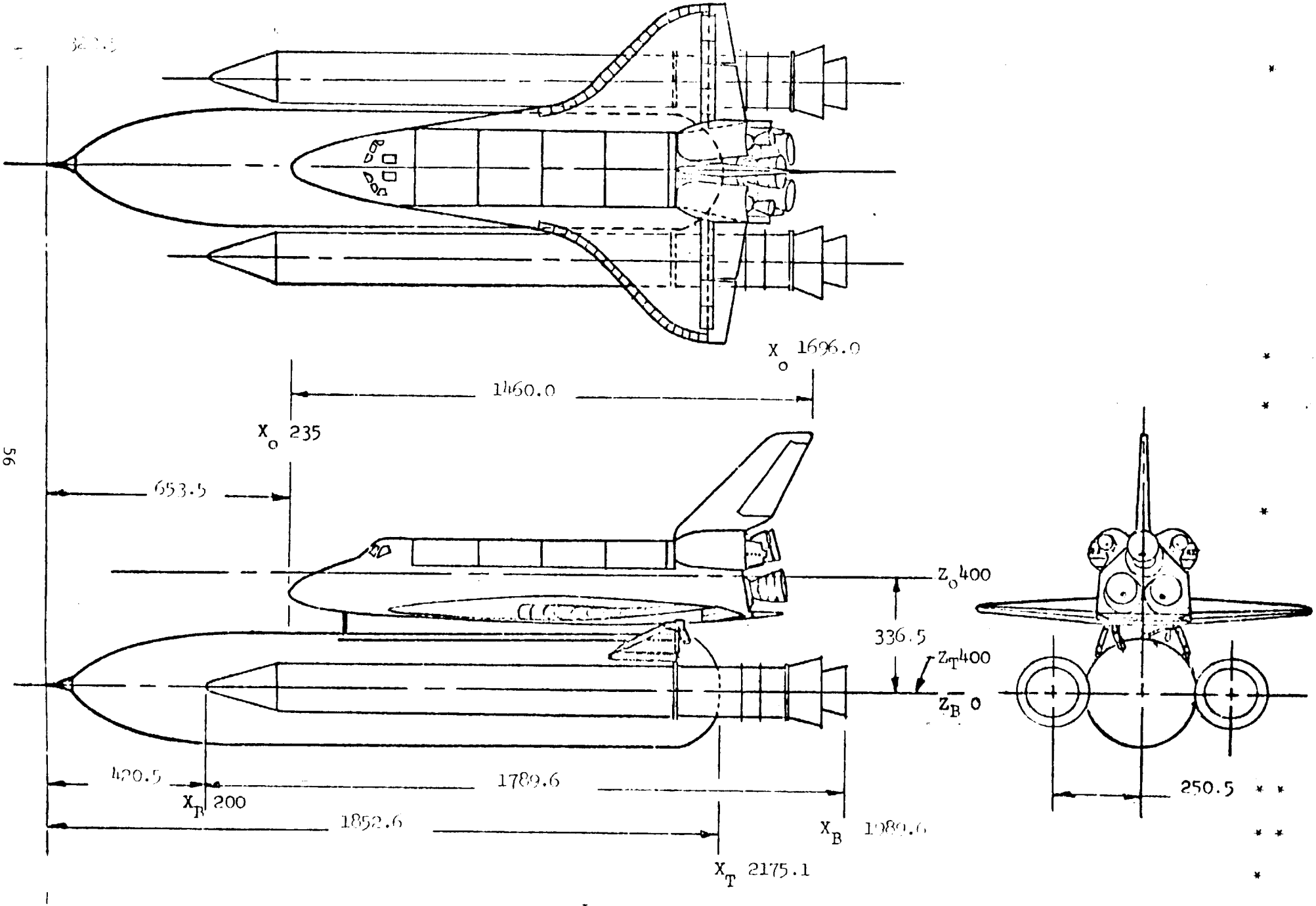

a. Launch Vehicle

Figure 2. Launch Vehicle 6 Configuration

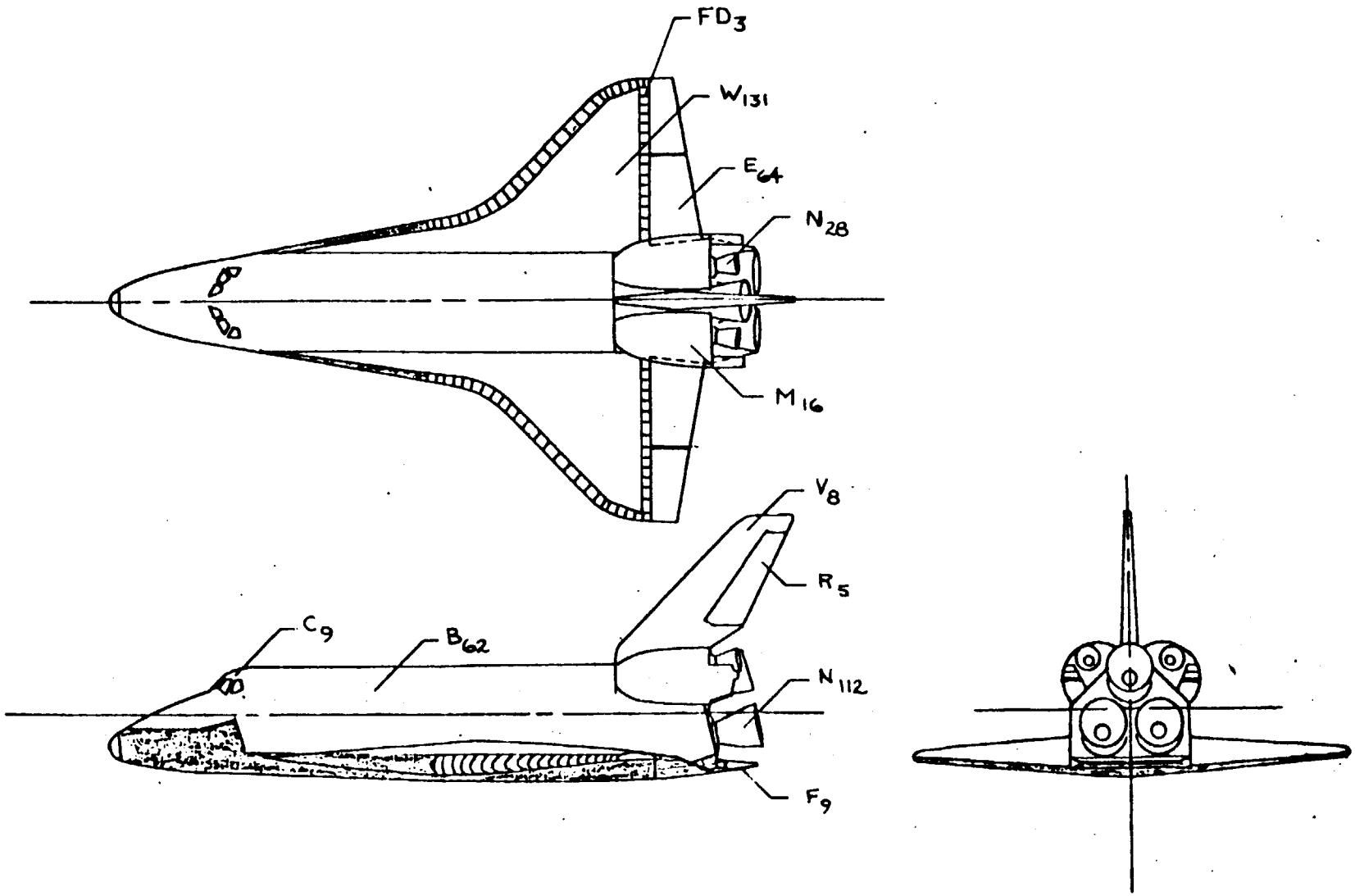

b. Orbiter 102
Figure 2. (Continued)

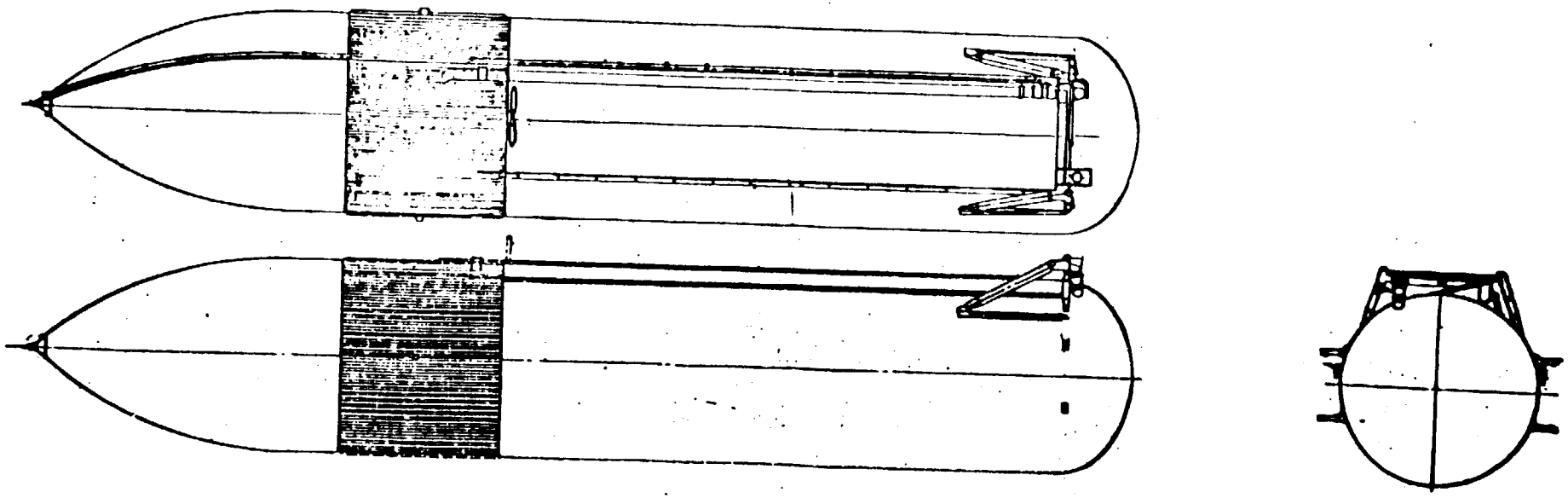

c. External Tank - T39
Figure 2. (Continued)

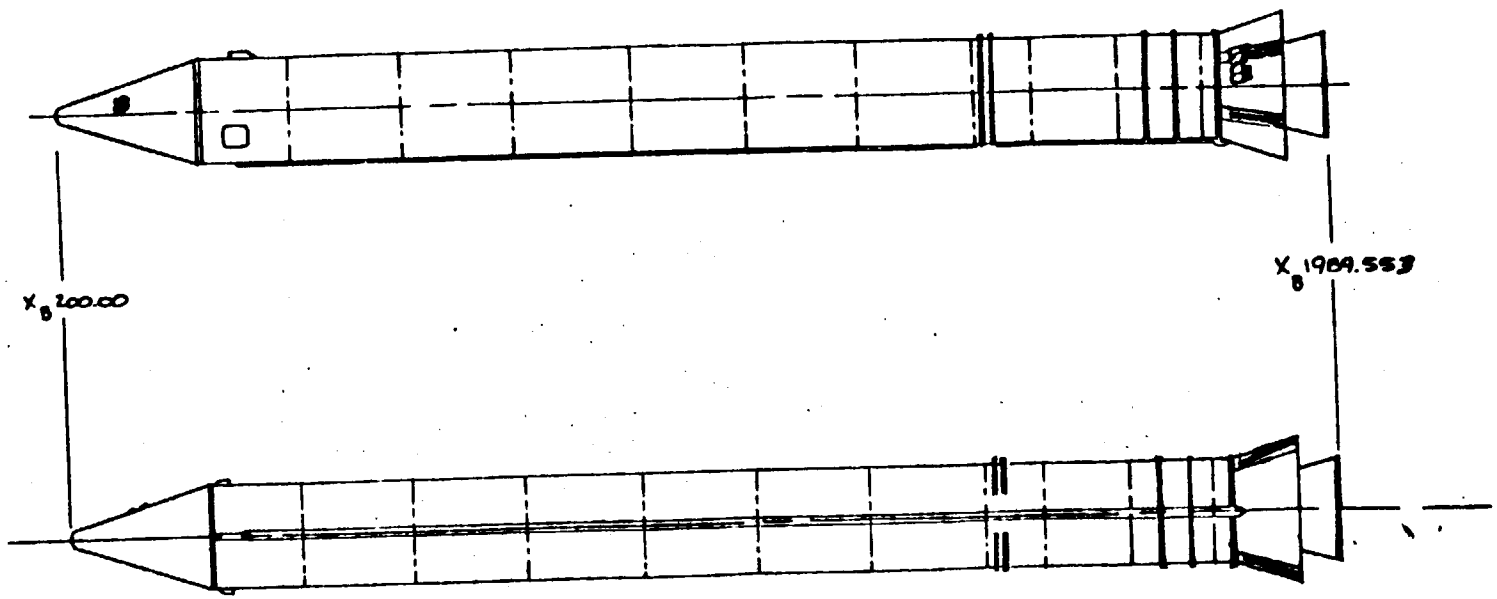

d. Solid Rocket Booster - S_{27}
Figure 2. (Concluded)

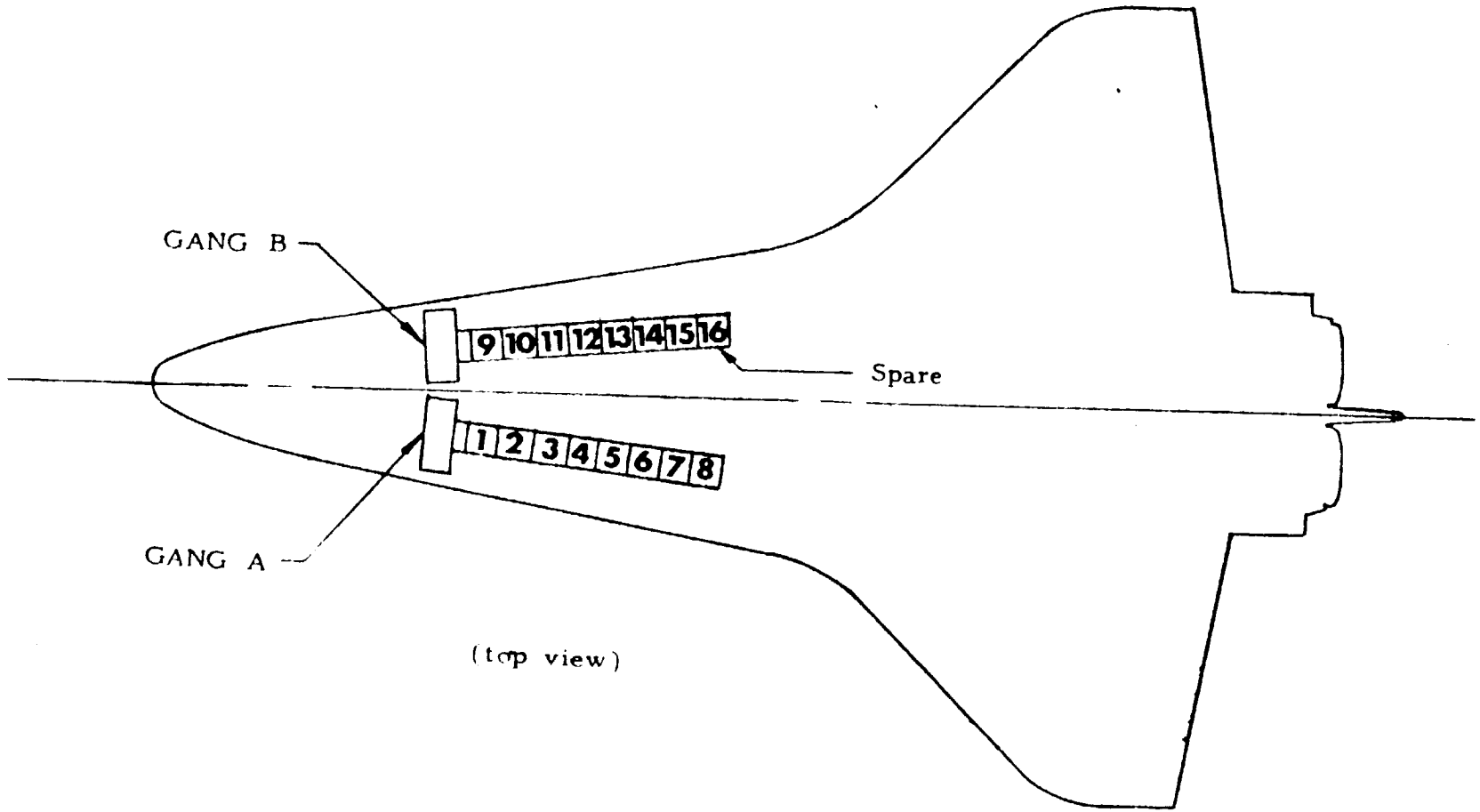

a. Orbiter
Figure 3. Scanivalve Locations

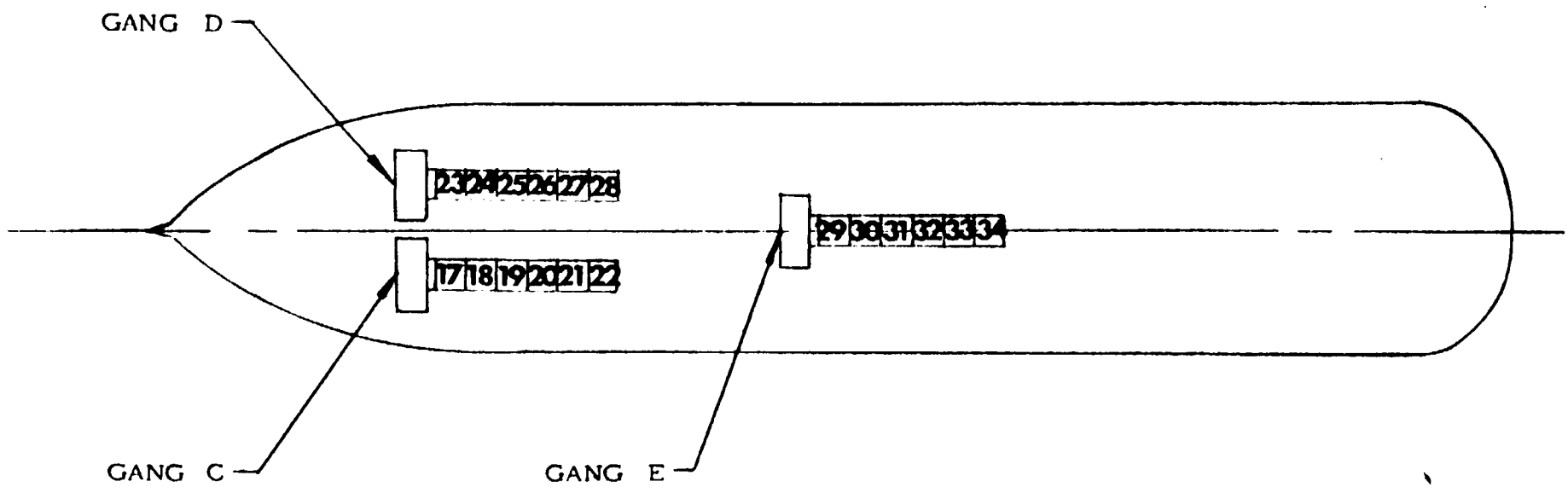

b. External Tank
Figure 3. (Continued)

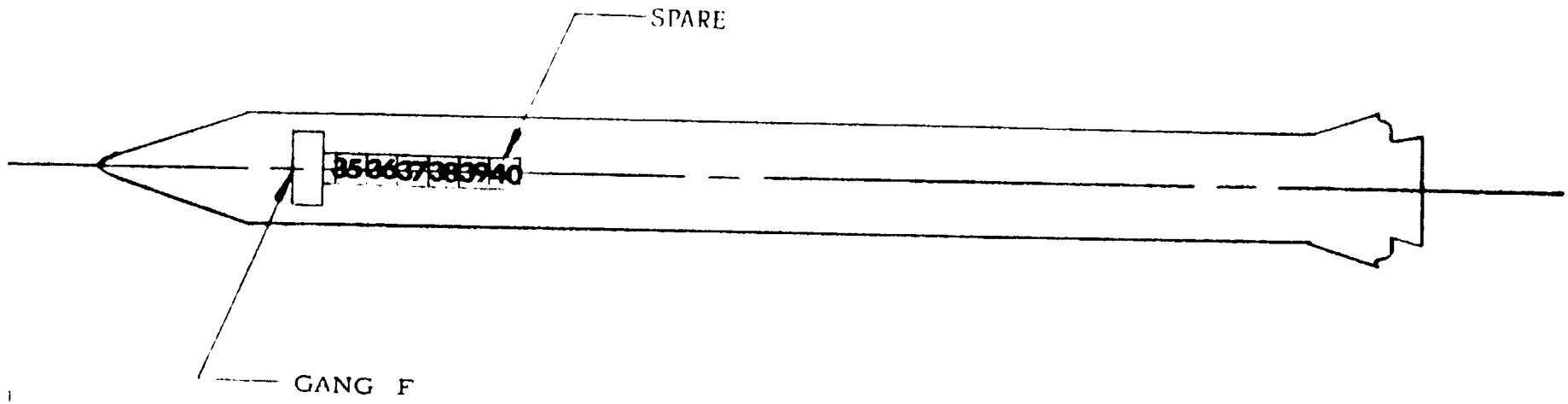

c. Solid Rocket Booster
Figure 3. (Concluded)

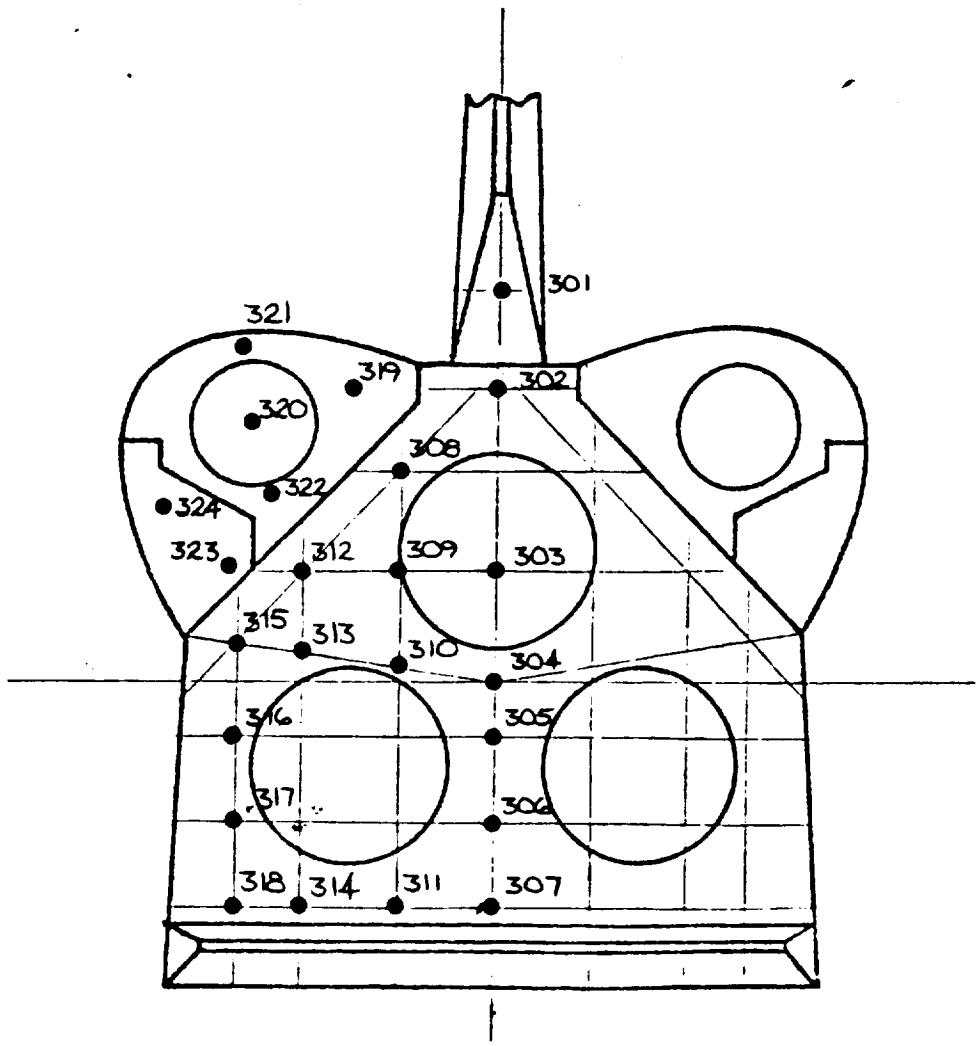

TAP	Z_o	Y_o
301	532	0
302	505	0
303	443	0
304	400	0
305	376	0
306	340	0
307	302	0
308	478	-38

TAP	Z_o	Y_o
309	439	-38
310	405	-38
311	302	-38
312	439	-78
313	410	-78
314	302	-78
315	414	-103
316	376	-103

TAP	Z_o	Y_o
317	340	-103
318	302	-103
319	514	-55
320	492	-88
321	522	-103
322	470	-96
323	439	-107
324	465	-130

a. Orbiter Base

Figure 4. Orbiter Pressure Tap Locations

TABLE VI. ORBITER FUSELAGE SURFACE PRESSURE TAP LOCATIONS

X_o/L_o	0	20	40	55	67.5	70	82	90	105	110	120	135	140	150	151	156	162	165	169	174	180	-55	-40	-20
0	1																							
.0078	2							3													4			
.0233	5	6	7	8		9		10			11			12							13	14	15	16
.0465	17	18	19	20		21		22			23			24							25	26	27	28
.0697	29	30	31	32		33		34			35			36							37	38	39	40
.1124	41	42	43	44		45		46			47			48							49	50	51	52
.1163								53																
.1271								54																
.1589																				55				
.1666	56	57	58	59		60		61			62					63			64		65	66	67	68
.1783															69		70							
.2054	71	72	73	74		75		76			77		78	79				80			81	82	83	84
.2364	85		86			87		88			89			90				91			92		93	
.2558	94		95			96		97			98			99				100			101		102	
.2751	103		104			105		106			107			108				109			110		111	
.3023	112		113			114		115			116			117				118			119		120	
.3526	121		122			123		124			125			126				127			128		129	
.4100							130																	
.4223	131		132			133		134			135			136				137			138		139	
.5192							140																	
.5348	141		142			143		144			145			146				147			148		149	
.5441					150																			
.5882							151																	
.6471	152		153			154		155			156			157				158			159		160	
.6929							161																	
.7595	162		163			164		165	166		167	168		169				170			171		172	
.8254	173		174			175		176	177		178	179		180							181		182	
.8835	183		184			185		186	187		188	189		190				191					192	
.8951						193																		
.9261	194		195			196		197	198		199	200		201				202					203	
.9649	204		205			206		207	208		209	210		211				212					213	
1.0036										214	215													
1.0036										216	217													

~ ϕ ~ DEGREES

η	X/C_{BF} (Bottom)				X/C_{BF} (Top)			
	-.10	.20	.60	.95	-.10	.20	.60	.95
.10	401	402	403	404	405	406	407	408
.50	409	410	411	412	413	414	415	416
.65	417	418	419	420	421	422	423	424
.80	425	426	427	428	429	430	431	432
.90	433	434	435	436	437	438	439	440

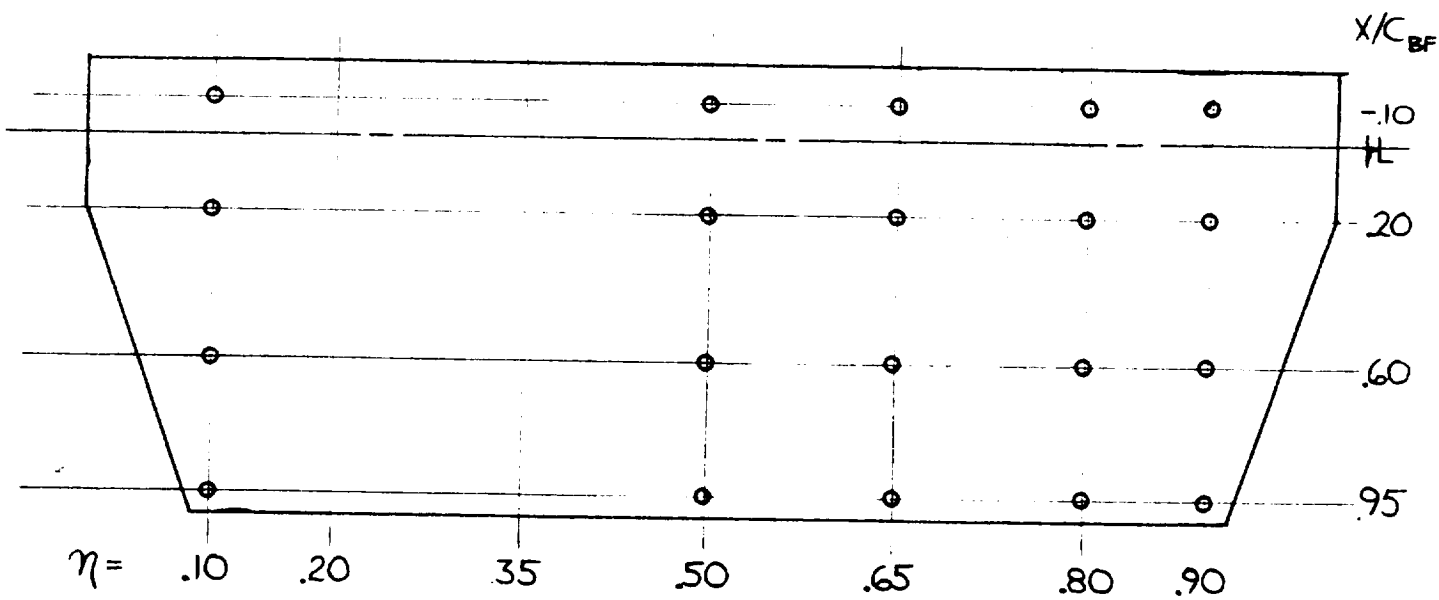

b. Body Flap
Figure 4. (Continued)

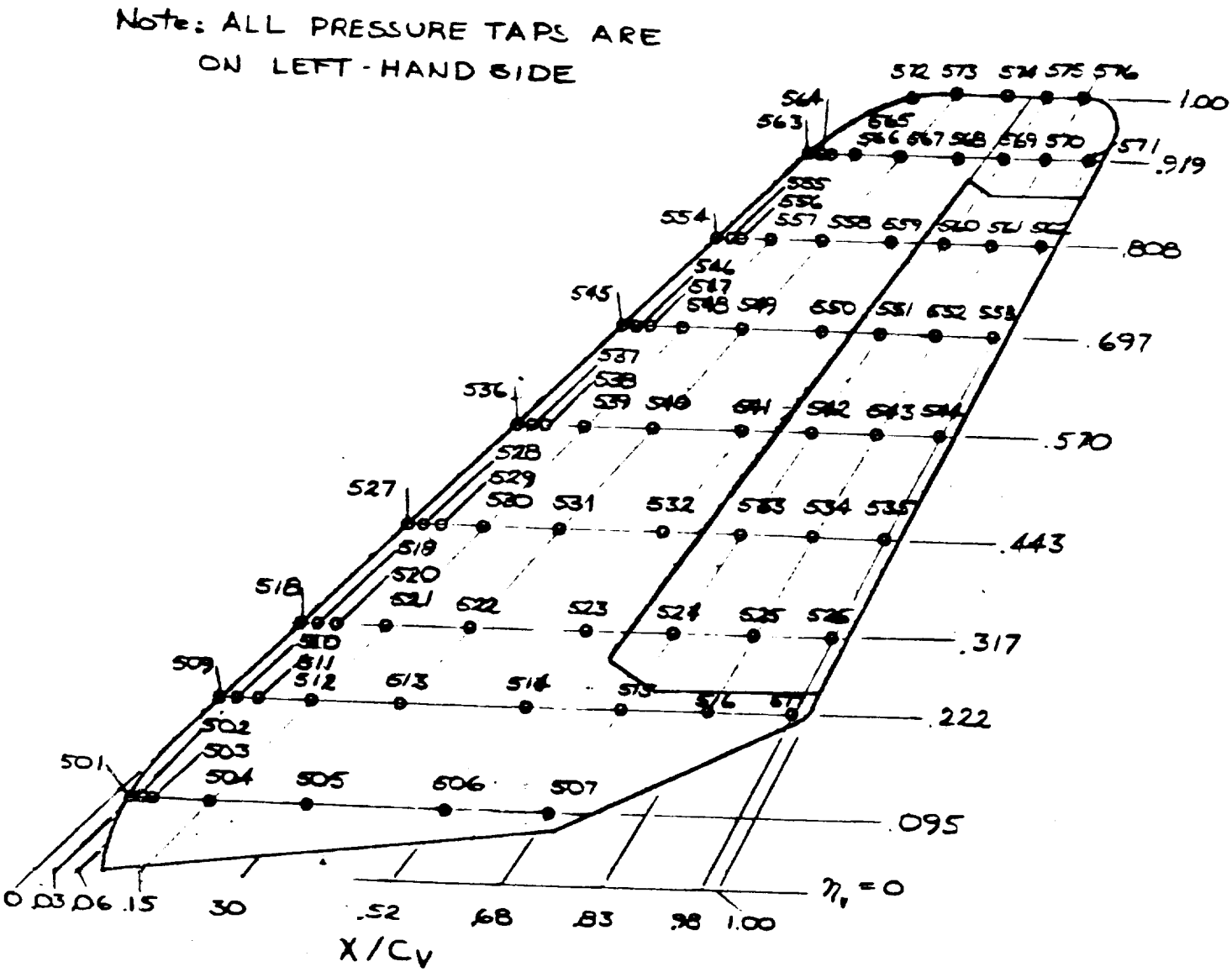

c. Vertical Tail
Figure 4. (Continued)

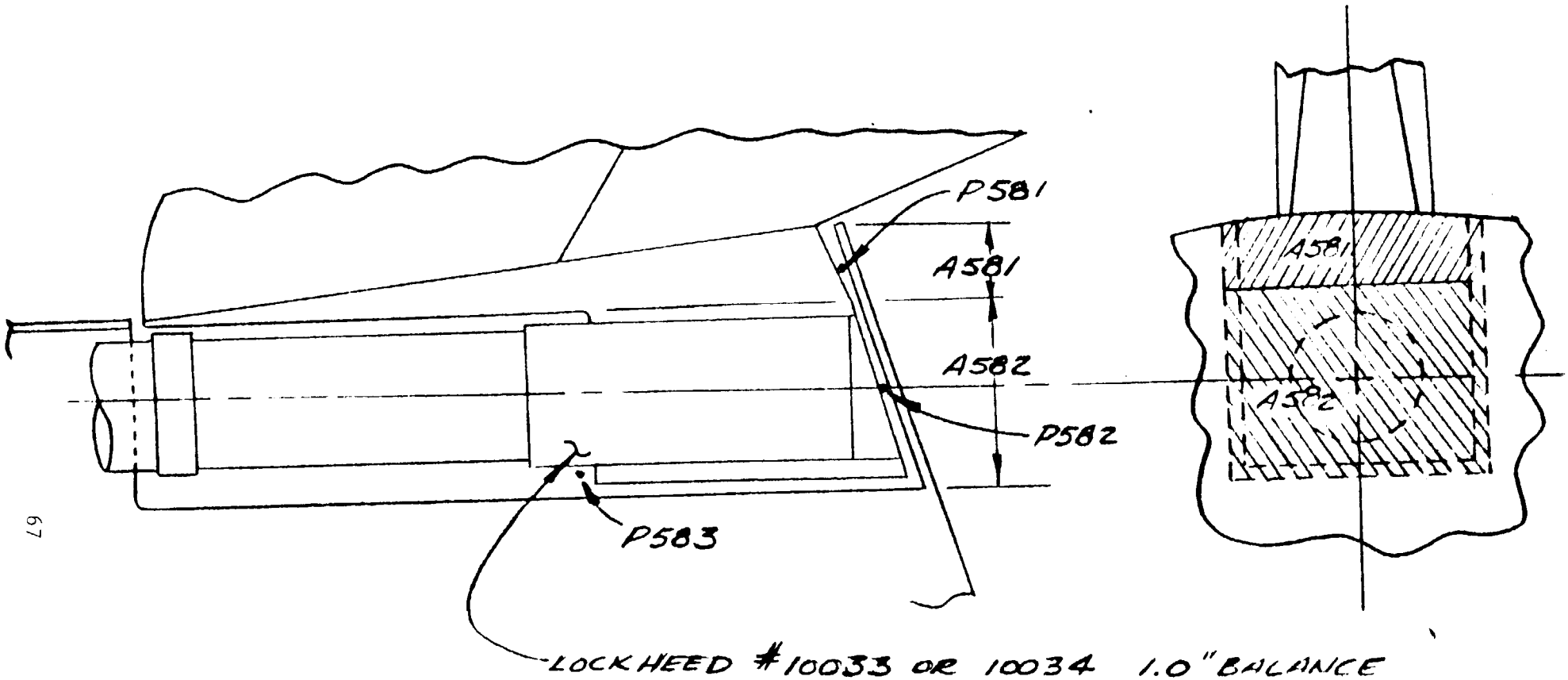

d. Vertical Tail Balance Cavity
Figure 4. (Concluded)

VII

TABLE VII. WING PRESSURE TAP NUMBERS/LOCATIONS

2Y/B	Y₀																			
.235		X/Cw	0.00	0.01	0.02	0.05	0.08	0.15	0.25	0.40	0.55	0.70	0.80							
		TOP	601	602	603	604	605	606	607	608	609	610	611							
		BOTT		612	613	614	615	616	617	618	619	620	621							
.299	140	X/Cw	0.00	0.01	0.02	0.05	0.08	0.15	0.25	0.40	0.55	0.70	.816	0.836	0.866	0.881	0.911	0.941	0.971	1.00
		TOP	622	623	624	625	626	627	628	629	630	631	632	633	634	635	636	637	638	
		BOTT		640	641	642	643	644	645	646	647	648	649	650	651	652	653	654	655	639
.342	160	X/Cw	0.00	0.01	0.02	0.05	0.08	0.15	0.25	0.40	0.55	0.70	.784	0.803	0.843	0.861	0.895	0.930	0.964	1.00
		TOP	656	657	658	659	660	661	662	663	664	665	666	667	668	669	670	671	672	
		BOTT		674	675	676	677	678	679	680	681	682	683	684	685	686	687	688	689	673
.427	200	X/Cw	0.00	0.01	0.02	0.05	0.08	0.15	0.25	0.40	0.55	.723	0.753	0.802	0.824	0.868	0.912	0.956	1.00	
		TOP	690	691	692	693	694	695	696	697	698	699	700	701	702	703	704	705	706	
		BOTT		707	708	709	710	711	712	713	714	715	716	717	718	719	720	721		
.534	250	X/Cw	0.00	0.01	0.02	0.05	0.08	0.15	0.25	0.40	0.55	.694	0.738	0.786	0.810	0.858	0.906	0.954	1.00	
		TOP	722	723	724	725	726	727	728	729	730	731	732	733	734	735	736	737	738	
		BOTT		739	740	741	742	743	744	745	746	747	748	749	750	751	752	753		
.619	290	X/Cw	0.00	0.01	0.02	0.05	0.08	0.15	0.25	0.40	0.55	.673	0.725	0.776	0.801	0.852	0.902	0.953	1.00	
		TOP	754	755	756	757	758	759	760	761	762	763	764	765	766	767	768	769	770	
		BOTT		771	772	773	774	775	776	777	778	779	780	781	782	783	784	785		
.726	340	X/Cw	0.00	0.01	0.02	0.05	0.08	0.15	0.25	0.40	0.55	.638	0.704	0.753	0.786	0.841	0.896	0.950	1.00	
		TOP	786	787	788	789	790	791	792	793	794	795	796	797	798	799	800	801	802	
		BOTT		803	804	805	806	807	808	809	810	811	812	813	814	815	816	817		
.811	380	X/Cw	0.00	0.01	0.02	0.05	0.08	0.15	0.25	0.40	.597	0.679	0.737	0.769	0.829	0.888	0.948	1.00		
		TOP	818	819	820	821	822	823	824	825	826	827	828	829	830	831	832	833		
		BOTT		834	835	836	837	838	839	840	841	842	843	844	845	846	847			
.897	420	X/Cw	0.00	0.01	0.02	0.05	0.08	0.15	0.25	0.40	.536	0.642	0.709	0.742	0.809	0.876	0.942	1.00		
		TOP	848	849	850	851	852	853	854	855	856	857	858	859	860	861	862	863		
		BOTT		864	865	866	867	868	869	870	871	872	873	874	875	876	877			
.961	450	X/Cw	0.00	0.01	0.02	0.05	0.08	0.15	0.25	.411	0.558	0.641	0.682	0.765	0.848	0.932	1.00			
		TOP	878	879	880	881	882	883	884	885	886	887	888	889	890	891	892			
		BOTT		893	894	895	896	897	898	899	900	901	902	903	904	905				
1.00	TIP	X/Cw						0.15	0.25	.423	0.579	0.779	0.939	1.00						
		TOP						906	907	908	909	910	911	912						
		BOTT																		

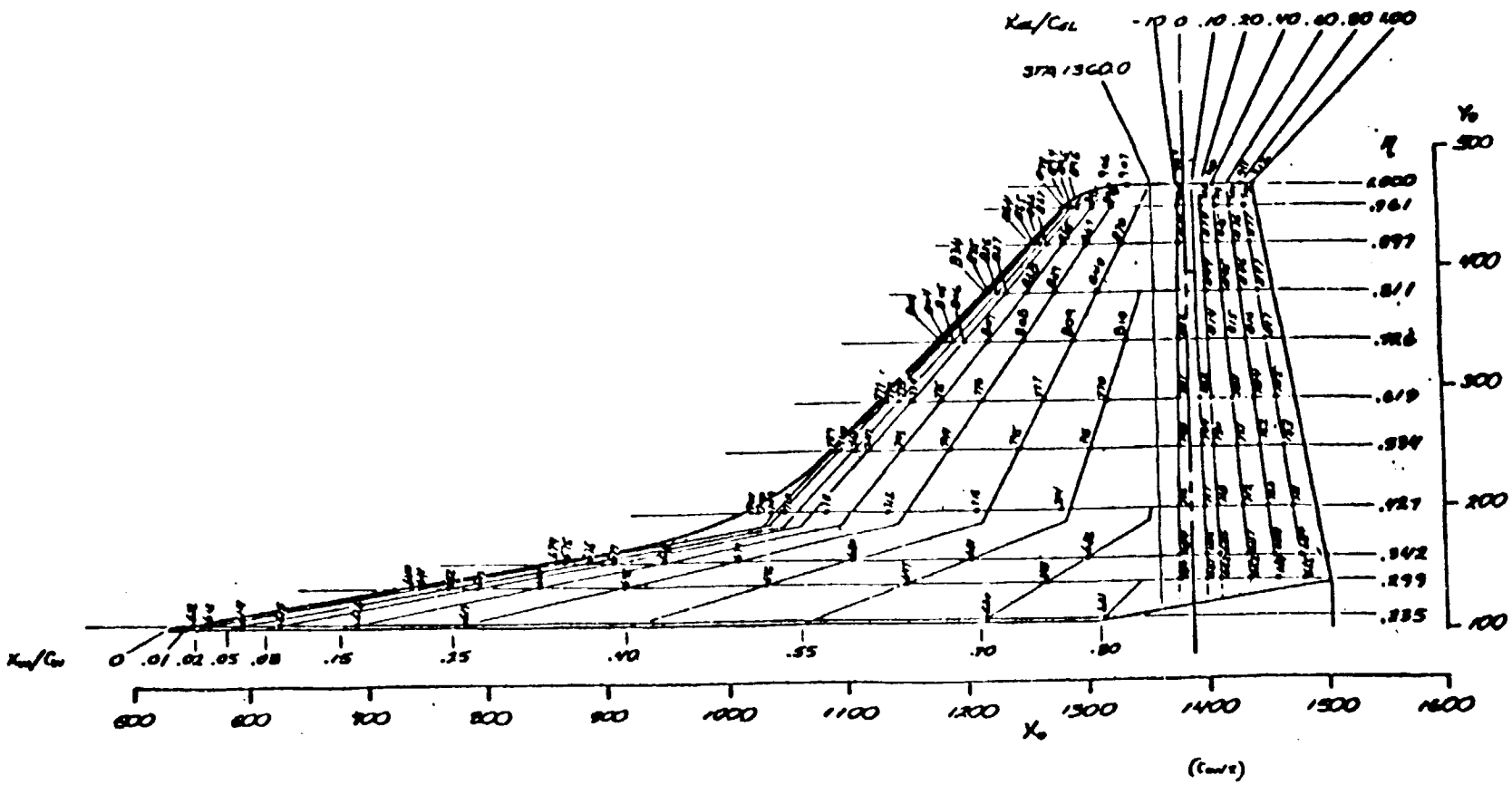

a. Lower Surface

Figure 5. Wing Pressure Tap Locations

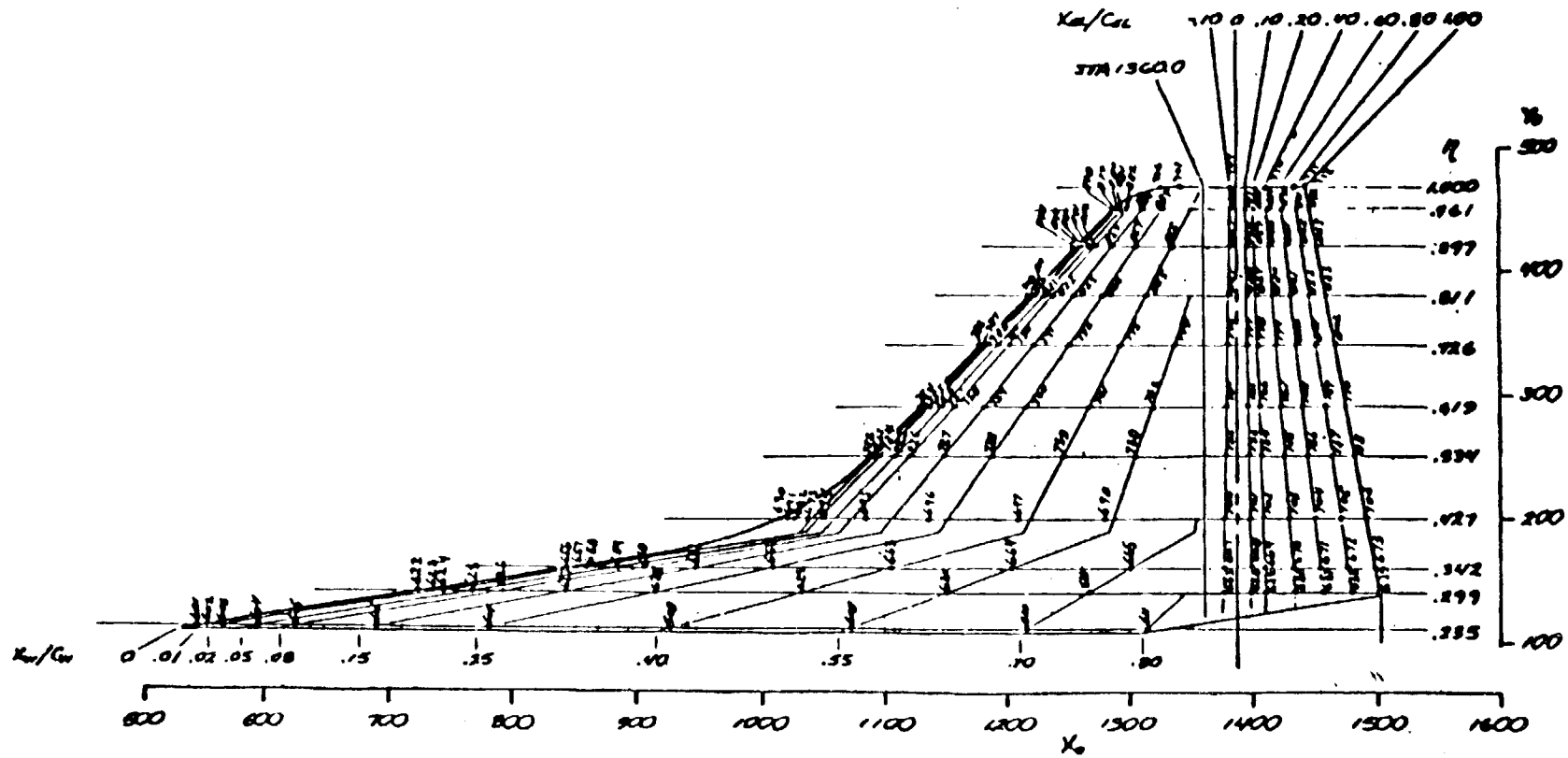

b. Upper Surface
Figure 5. (Concluded)

TABLE VIII.

EXTERNAL TANK SURFACE PRESSURE TAP LOCATIONS

X_T	E.T. PRESSURE TAP LOCATION ~ ϕ ~ DEG												
	0	25	30	60	85	87	90	93	95	1125	135	157.5	165
322.5	1001												
350.	1002			1003			1004				1005		
360	1010			1011			1012				1013		
380	1018		1019	1020			1021			1022	1023	1024	
430	1032		1033	1034			1035			1036	1037	1038	
530	1046		1047	1048			1049			1050	1051	1052	
630	1060		1061	1062			1063			1064	1065	1066	
670	1074		1075	1076			1077			1078	1079	1080	
730	1088		1089	1090			1091			1092	1093	1094	
760	1102		1103	1104			1105			1106	1107	1108	
800	1116		1117	1118			1119			1120	1121	1122	
847	1130		1131	1132			1133			1134	1135	1136	
880	1144			1145			1146			1147	1148	1149	
890		1155											
910	1157			1158			1159			1160	1161	1162	
940	1168		1169	1170			1171			1172	1173	1174	
955					1182	1183	1184	1185	1186				
970	1192			1193	1194				1195	1196	1197	1198	
986					1207				1208				
1000	1214			1215	1216				1217	1218	1219	1220	
1010													
1030	1228		1229	1230			1231			1232	1233	1234	
1034													
1060	1244			1245			1246			1247	1248	1249	
1082													
1090	1258			1259			1260			1261	1262	1263	
1123.2	1269		1270	1271			1272			1273	1274		1275
1129												1281	
1134.8													1284
1160	1285			1286			1287			1288	1289	1290	
1220	1296		1297	1298			1299			1300	1301	1302	
1300	1309		1310	1311			1312			1313	1314	1315	
1400	1322		1323	1324			1325			1326	1327	1328	
1500	1335		1336	1337			1338			1339	1340	1341	
1700	1348		1349	1350			1351			1352	1353	1354	
1780	1361		1362	1363			1364			1365	1366	1367	
1860	1374		1375	1376			1377			1378	1379	1380	
1920	1387		1388	1389			1390			1391	1392	1393	
1980	1400		1401	1402			1403			1404	1405	1406	
2045	1413		1414	1415			1416			1417	1418	1419	

TABLE VIII. (Concluded)

EXTERNAL TANK SURFACE PRESSURE TAP LOCATIONS

X_T	ET PRESSURE TAP LOCATION ~ ϕ ~ DEG												
	172.5	180	182.5	195	202.5	210	214	220	225	247.5	270	300	330
322.5		1001											
350.		1006							1007		1008	1009	
360		1014							1015		1016	1017	
380		1025			1026				1027	1028	1029	1030	1031
430		1039			1040				1041	1042	1043	1044	1045
530		1053			1054				1055	1056	1057	1058	1059
630		1067			1068				1069	1070	1071	1072	1073
670		1081			1082				1083	1084	1085	1086	1087
730		1095			1096				1097	1098	1099	1100	1101
760		1109			1110				1111	1112	1113	1114	1115
800		1123			1124				1125	1126	1127	1128	1129
847		1137			1138				1139	1140	1141	1142	1143
880		1150			1151				1152	1153	1154		
890			1156										
910		1163			1164				1165	1166	1167		
940		1175			1176				1177	1178	1179	1180	1181
955				1187	1188	1189	1190	1191					
970		1199		1200	1201	1202	1203	1204	1205	1206			
986				1209	1210	—	1212	1213					
1000		1221							1222	1223		1224	
1010				1225		1226		1227					
1030		123							1236	1237	1238	1239	1240
1034				1241		1242		1243					
1060		1250							1251	1252	1253	1254	
1082		1255		1256		1257							
1090		1264							1265	1266	1267	1268	
1123.2									1276	1277	1278	1279	1280
1129	1282	1283											
1134.8													
1160		1291							1292	1293	1294	1295	
1220		1303							1304	1305	1306	1307	1308
1300		1316							1317	1318	1319	1320	1321
1400		1329							1330	1331	1332	1333	1334
1500		1342							1343	1344	1345	1346	1347
1700		1355							1356	1357	1358	1359	1360
1780		1368							1369	1370	1371	1372	1373
1860		1381							1382	1383	1384	1385	1386
1920		1394							1395	1396	1397	1398	1399
1980		1407							1408	1409	1410	1411	1412
2045		1420							1421	1422	1423	1424	1425

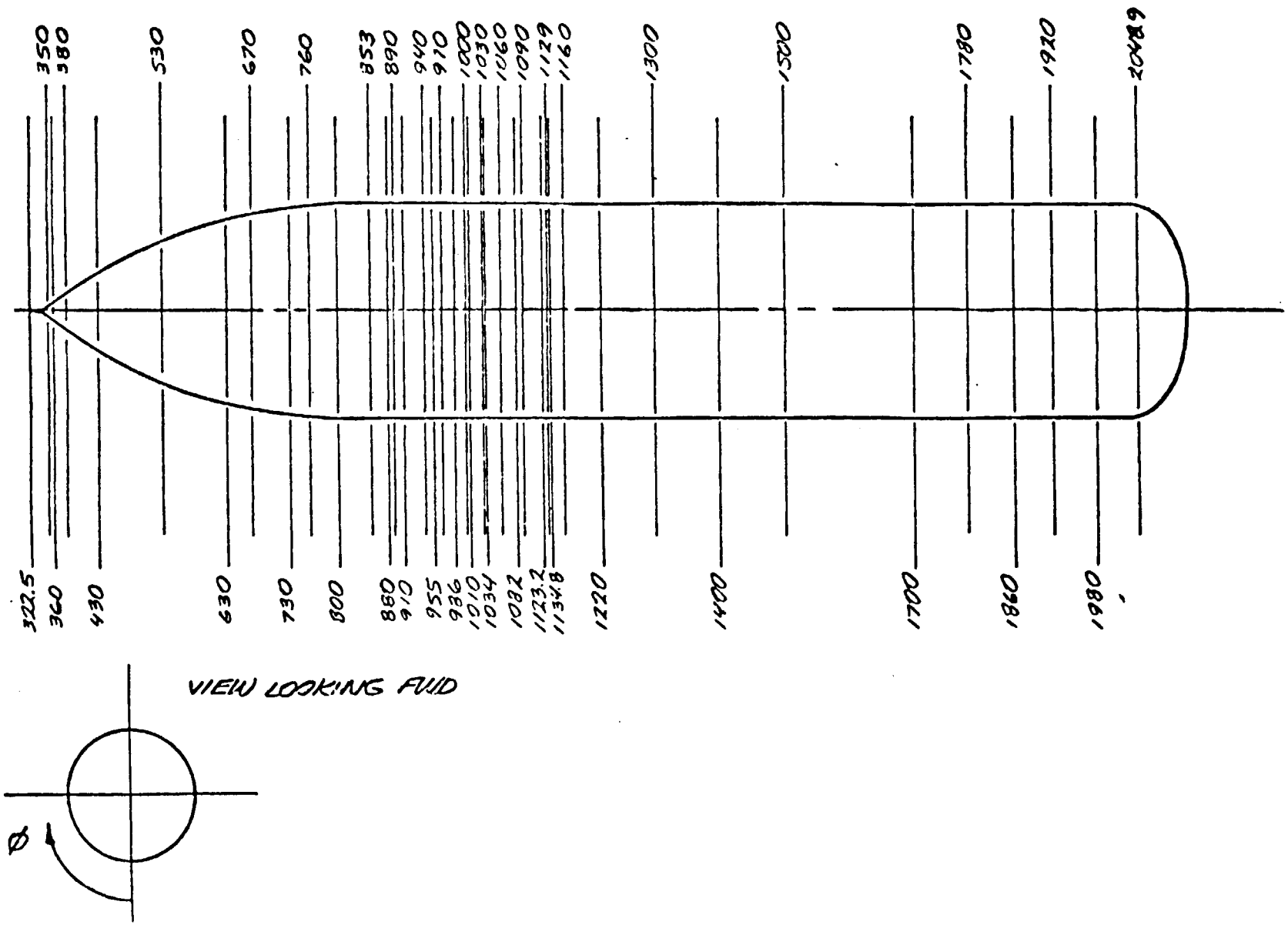

a. ET Station Numbers

Figure 6. External Tank Pressure Tap Locations

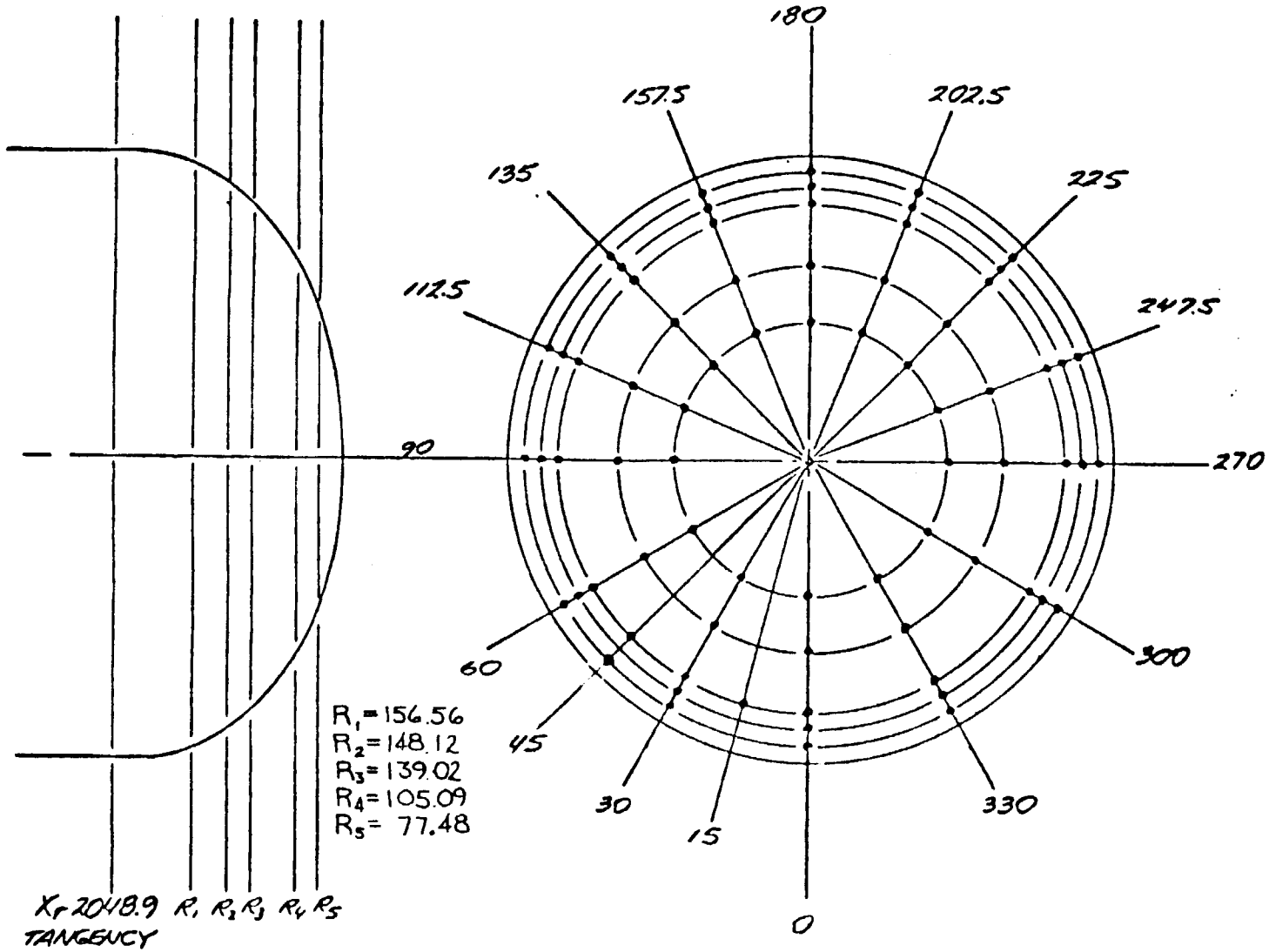

b. External Tank Base
Figure 6. (Concluded)

TABLE IX. EXTERNAL TANK BASE PRESSURE TAP LOCATIONS

RADIUS FULL SC.	ET BASE PRESSURE TAP LOCATIONS ~ ϕ ~ DEGREES															
	0	15	30	45	60	90	112.5	135	157.5	180	202.5	225	247.5	270	300	330
156.56	1502		1503	1501	1504	1505	1506	1507	1508	1509	1510	1511	1512	1513	1514	1515
148.12	1516		1517		1518	1519	1520	1521	1522	1523	1524	1525	1526	1527	1528	1529
139.02	1530	1531	1532	1533	1534	1535	1536	1537	1538	1539	1540	1541	1542	1543	1544	1545
105.09	1546		1547		1548	1549	1550	1551	1552	1553	1554	1555	1556	1557	1558	1559
77.48	1560		1561		1562	1563	1564	1565	1566	1567	1568	1569	1570	1571	1572	1573
0	1574															

• LO_2 TANK CABLE TRAY (44 TAPS)

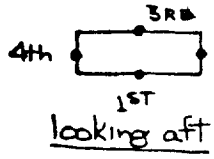

TAPS # 1601 → 1644

4 TAPS AS SHOWN FOR THE FOLLOWING

STATIONS:	458	573	697	811
	495	614	739	845
	534	655	777	

• LH_2 TANK CABLE TRAY (52 TAPS)

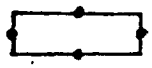

TAPS # 1645 → 1696

4 TAPS AS SHOWN FOR THE FOLLOWING

STATIONS:	1238	1496	1754	2008
	1302	1561	1820	
	1367	1625	1884	
	1431	1690	1948	

• GO_2 PRESSURE LINE (28 TAPS)

TAPS # 1697 → 1724

1 TAP AS SHOWN FOR THE FOLLOWING

STATIONS:	461	736	1180	1625
	495	777	1238	1690
	534	818	1302	1754
	573	840	1367	1820
	602	880	1431	1884
	655	980	1496	1948
	697	1080	1561	2008

• GO_2 PRESSURE LINE & CABLE TRAY FAIRING ON THE NOSE CAP (7 TAPS)

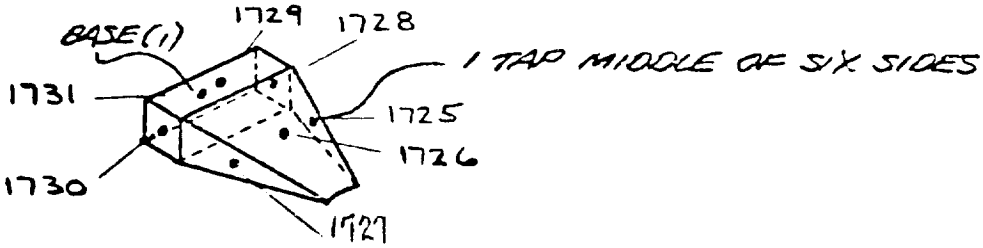

a. Taps 1601 → 1724

Figure 7. External Tank Protuberance Pressure Tap Locations

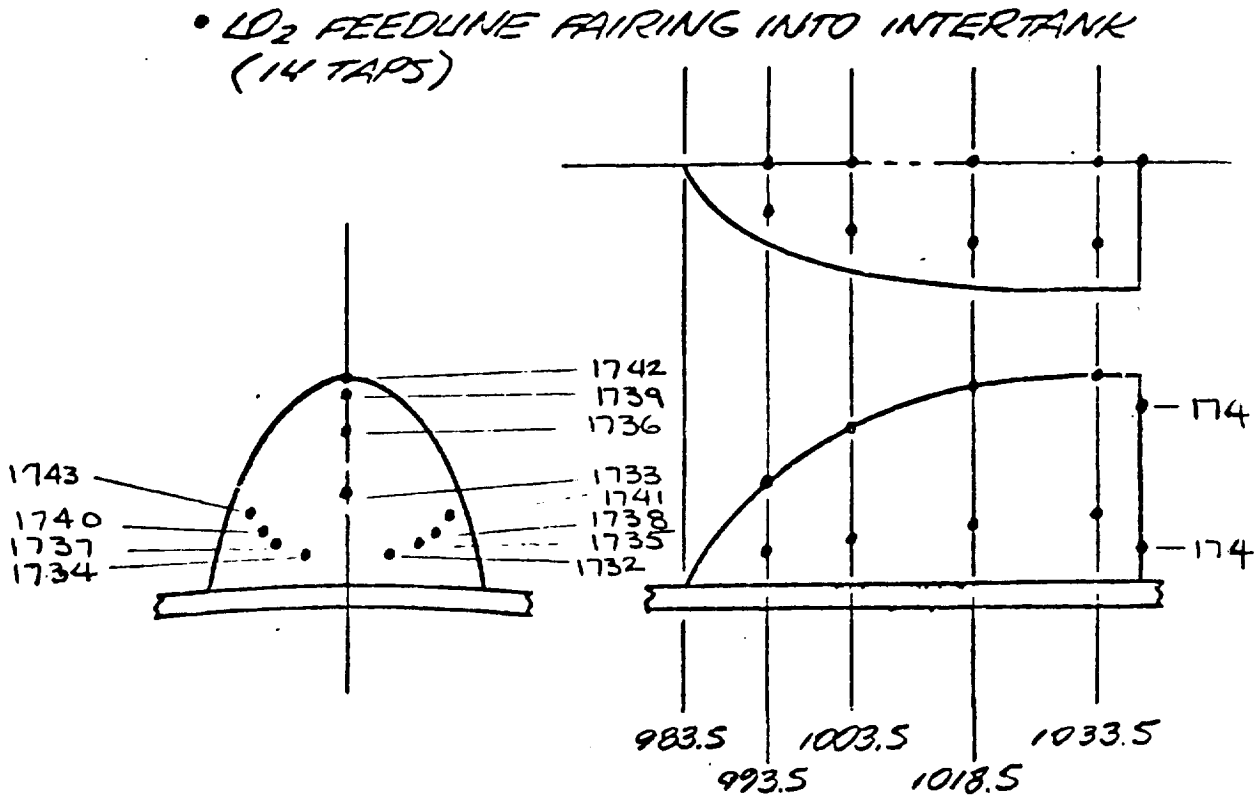

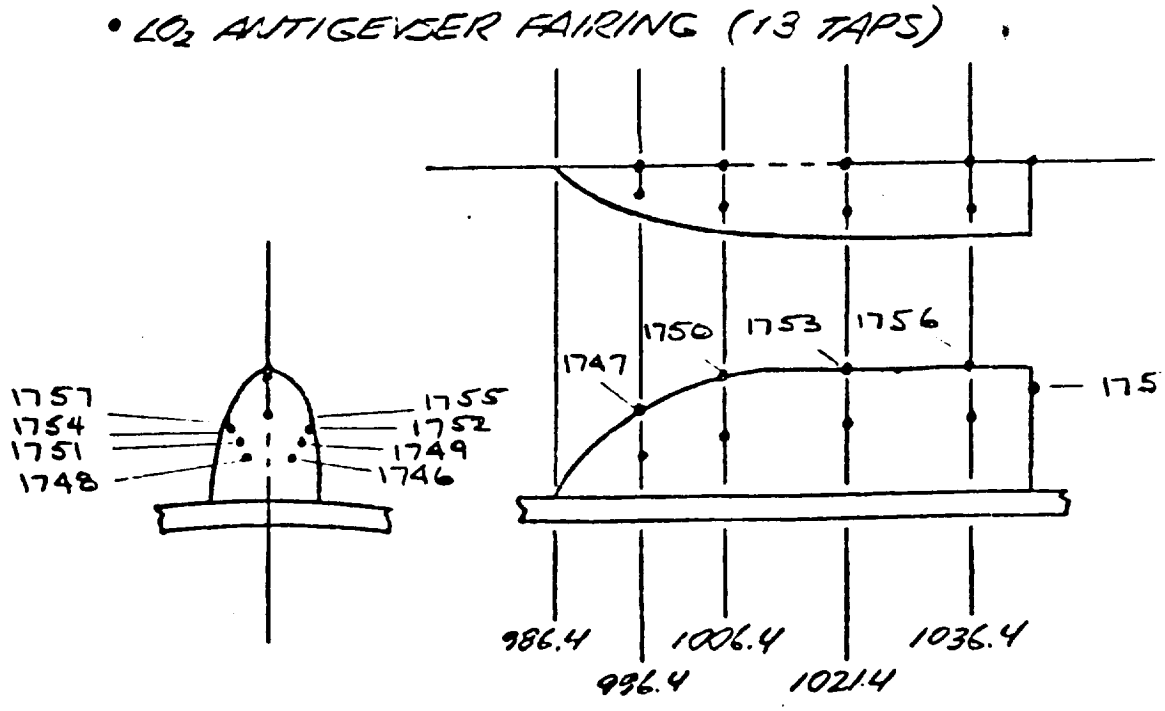

b. Taps 1732 → 1759
Figure 7. (Continued)

• OGIVE CABLE TRAY INTERTANK PENETRATION FAIRING (3 TAPS)

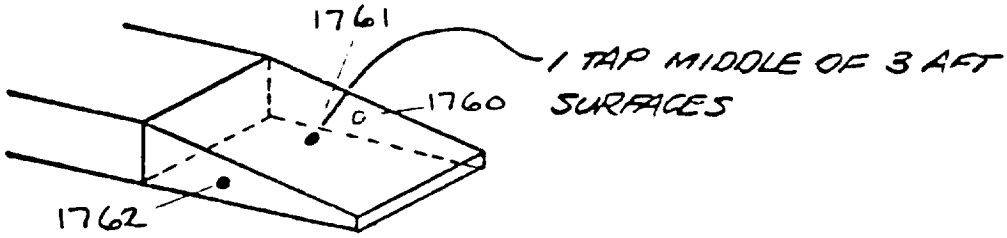

• INTERTANK CABLE TRAY FAIRING FOR LH_2 TANK (3 TAPS)

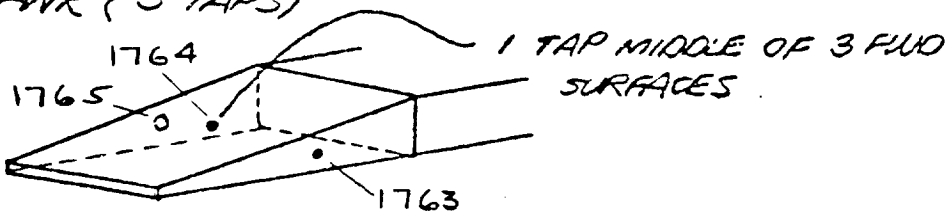

• AFT ET ATTACHMENT CABLE TRAYS (4 TAPS)

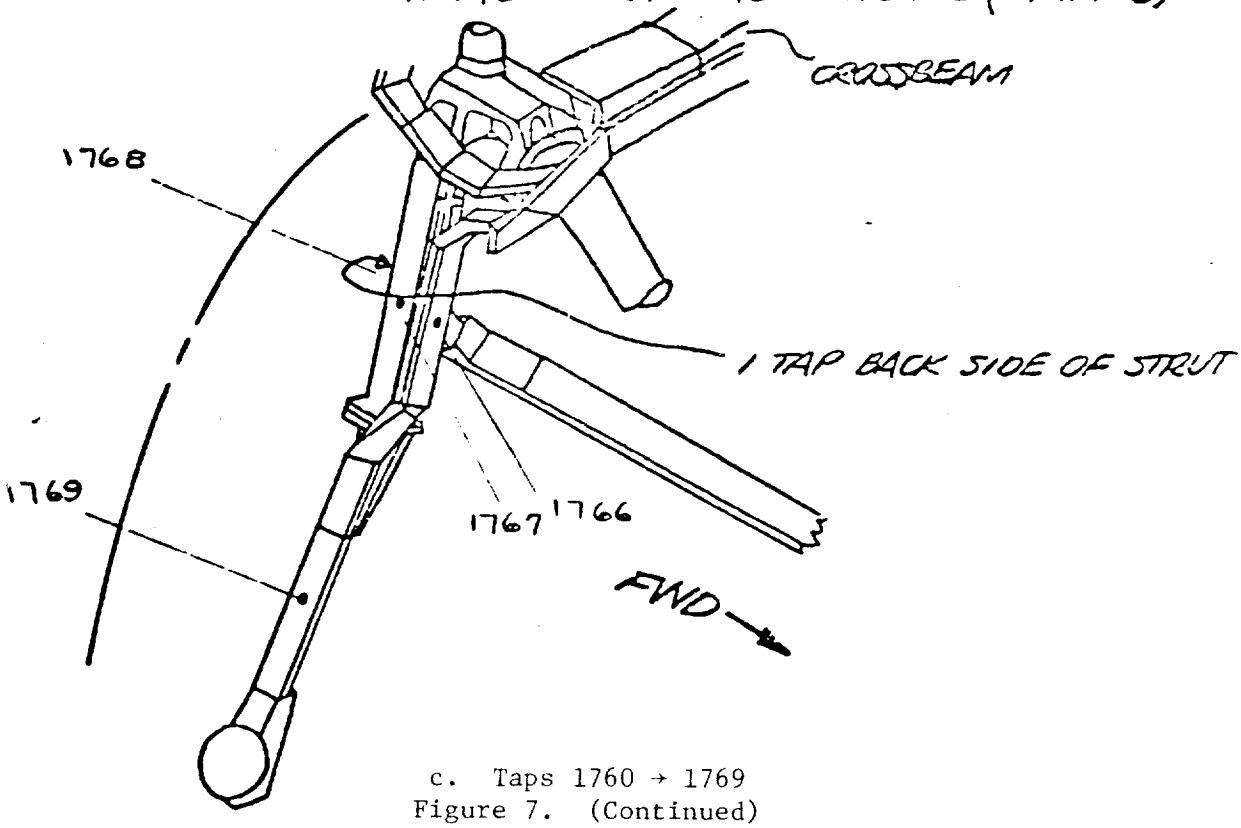

c. Taps 1760 → 1769
Figure 7. (Continued)

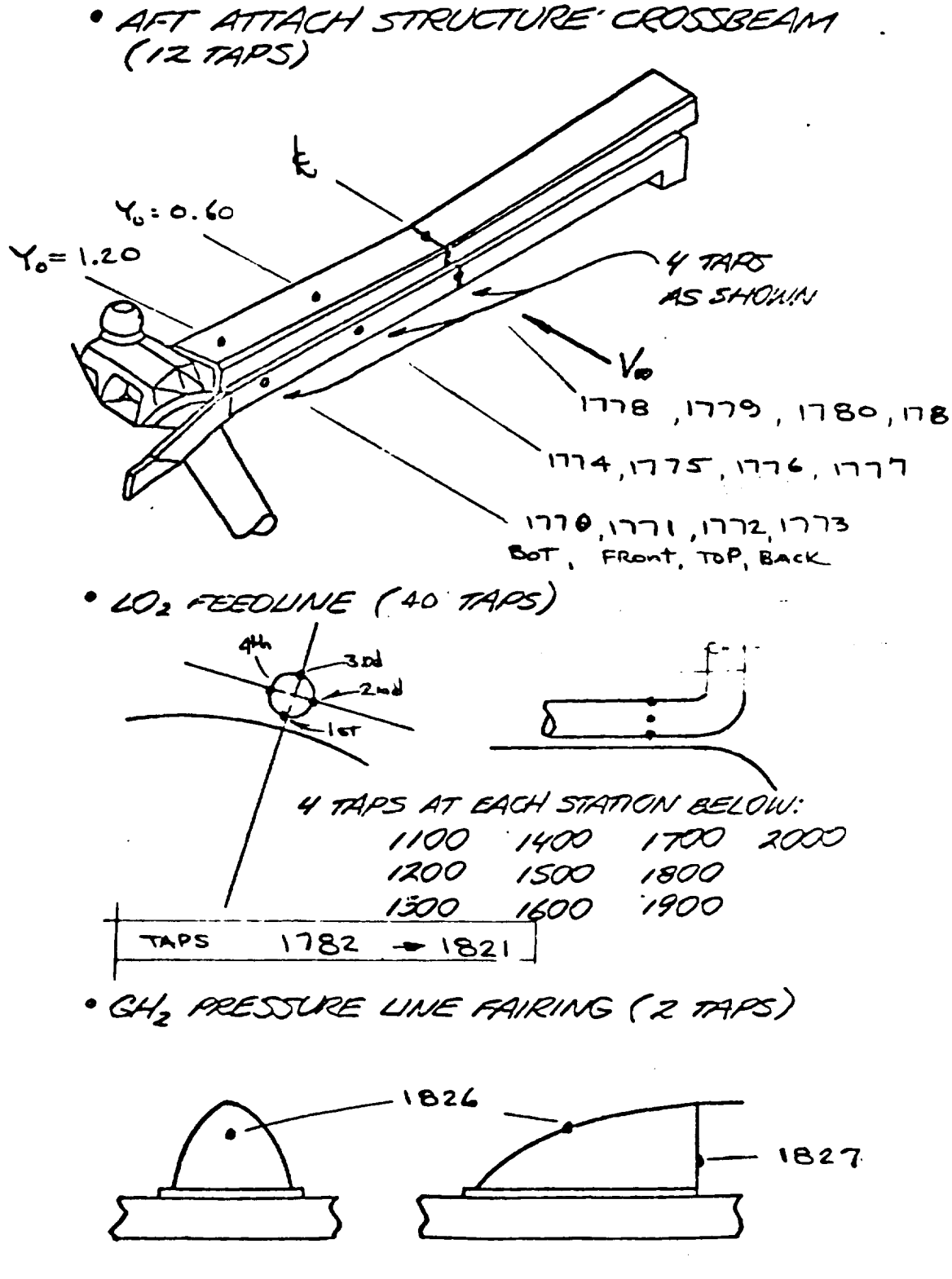

d. Taps 1770 → 1827
Figure 7. (Continued)

• GH_2 PRESSURE LINE (12 TAPS)

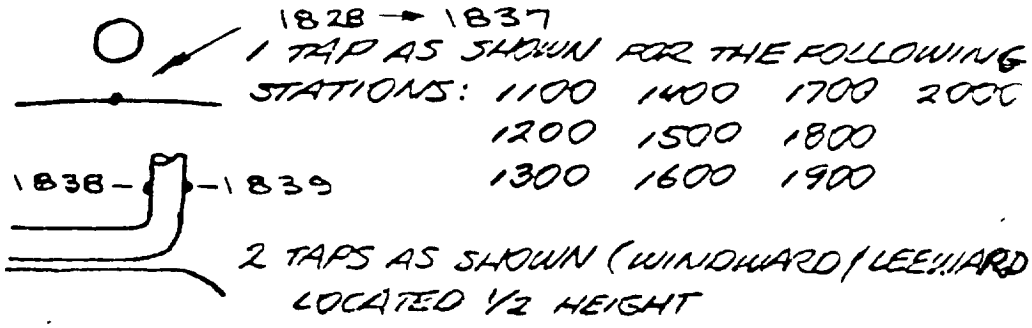

• LO_2 ANTIGEYSER LINE (10 TAPS)

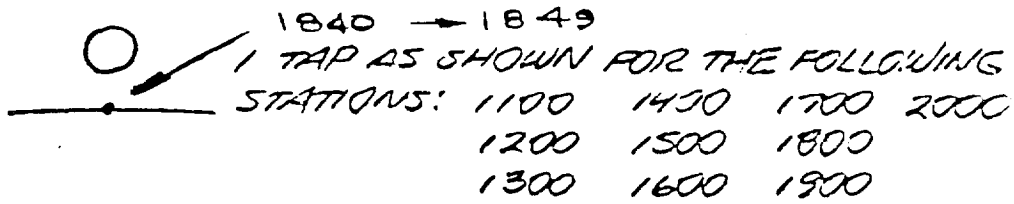

• LH_2 RECIRCULATION LINE (4 TAPS)

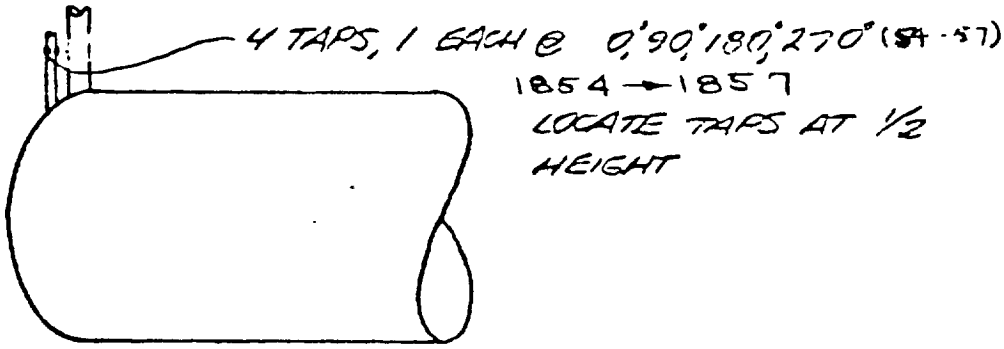

e. Taps 1828 → 1857
Figure 7. (Continued)

DESCRIPTION	# TRIPS	FROM #	TO #
LO_2 TANK CABLE TRAY	44	1601	1644
LH_2 TANK CABLE TRAY	52	1645	1696
GO_2 PRESSURE LINE	28	1697	1724
GO_2 PRESSURE LINE & CABLE TRAY NOSE FAIRING	7	1725	1731
LO_2 FEEDLINE FAIRING	14	1732	1745
LO_2 ANTIHYSTE FAIRING	13	1746	1759
OGIVE CABLE TRAY FAIRING	3	1760	1762
INTERTANK CABLE TRAY FAIRING	3	1763	1765
AFT ET ATTACH CABLE TRAY	4	1766	1769
AFT ET ATTACH CROSSBEAM	12	1770	1781
LO_2 FEEDLINE	40	1782	1821
GH_2 PRESSURE LINE FAIRING	2	1826	1827
GH_2 PRESSURE LINE	12	1828	1839
LO_2 ANTIHYSTE LINE	10	1840	1849
LH_2 FEED & RECIRCULATION LINE	4	1854	1857

$\Sigma = 248$

f. External Tank Protuberance Pressures Summary
Figure 7. (Concluded)

TABLE X. SOLID ROCKET BOOSTER SURFACE PRESSURE TAP LOCATIONS

STA \ Ø	0	45	86	90	94	135	180	225	247.5	270	292.5	315
200	2001	—	—	—	—	—	2001	—	—	—	—	—
260	2002	2003	—	2004	—	2005	2006	2007	—	2008	—	2009
370	2010	2011	—	2012	—	2013	2014	2015	—	2016	—	2017
400	2018	2019	—	2020	—	2021	2022	2023	—	2024	—	2025
450	2026	2027	—	—	—	2028	2029	2030	—	[illegible]	—	2032
511	—	—	2033	—	2034	—	—	—	—	—	—	—
550	2035	2036	—	—	—	2037	2038	2039	—	2040	—	2041
671	—	—	2042	—	2043	—	—	—	—	—	—	—
700	2044	2045	—	—	—	2046	2047	2048	—	2049	—	2050
850	2051	2052	—	—	—	2053	2054	2055	—	2056	—	2057
926	—	—	2058	—	2059	—	—	—	—	—	—	—
1050	2060	2061	2062	—	2063	2064	2065	2066	—	2067	—	2068
1201	—	—	2069	—	2070	—	—	—	—	—	—	—
1250	2071	2072	—	—	—	2073	2074	2075	—	2076	—	2077
1341	—	—	2078	—	2079	—	—	—	—	—	—	—
1450	2080	2081	—	—	—	2082	2083	2084	—	2085	—	2086
1503	2087	2088	2089	—	2090	2091	2092	2093	—	2094	—	2095
1505	2096	2097	—	—	—	2098	2099		—	2101	—	
1517	2103	2104	—	—	—	2105	2106		—	2108	—	
1519	—	—	—	—	2110	—	—	—	—	—	—	—
1650	2111	2112	2113	—	2114	2115	2116	2117	—	2118	—	2119
1750	2120	2121	—	—	—	2122	2123	2124	—	2125	—	2126
1800	2127	2128	2129	—	2130	2131	2132	2133	—	2134	—	2135
1832	2136	2137	—	—	—	2138	2139	2140	—	2141	—	2142
1838	2143	2144	—	—	—	2145	2146	2147	—	2148	—	2149
1860	2150	2151	—	2152	—	2153	2154	2155	2156	2157	2158	2159
1890	2160	2161	—	2162	—	2163	2164	2165	2166	2167	2168	2169
1925	2170	2171	—	2172	—	2173	2174	2175	2176	2177	2178	2179

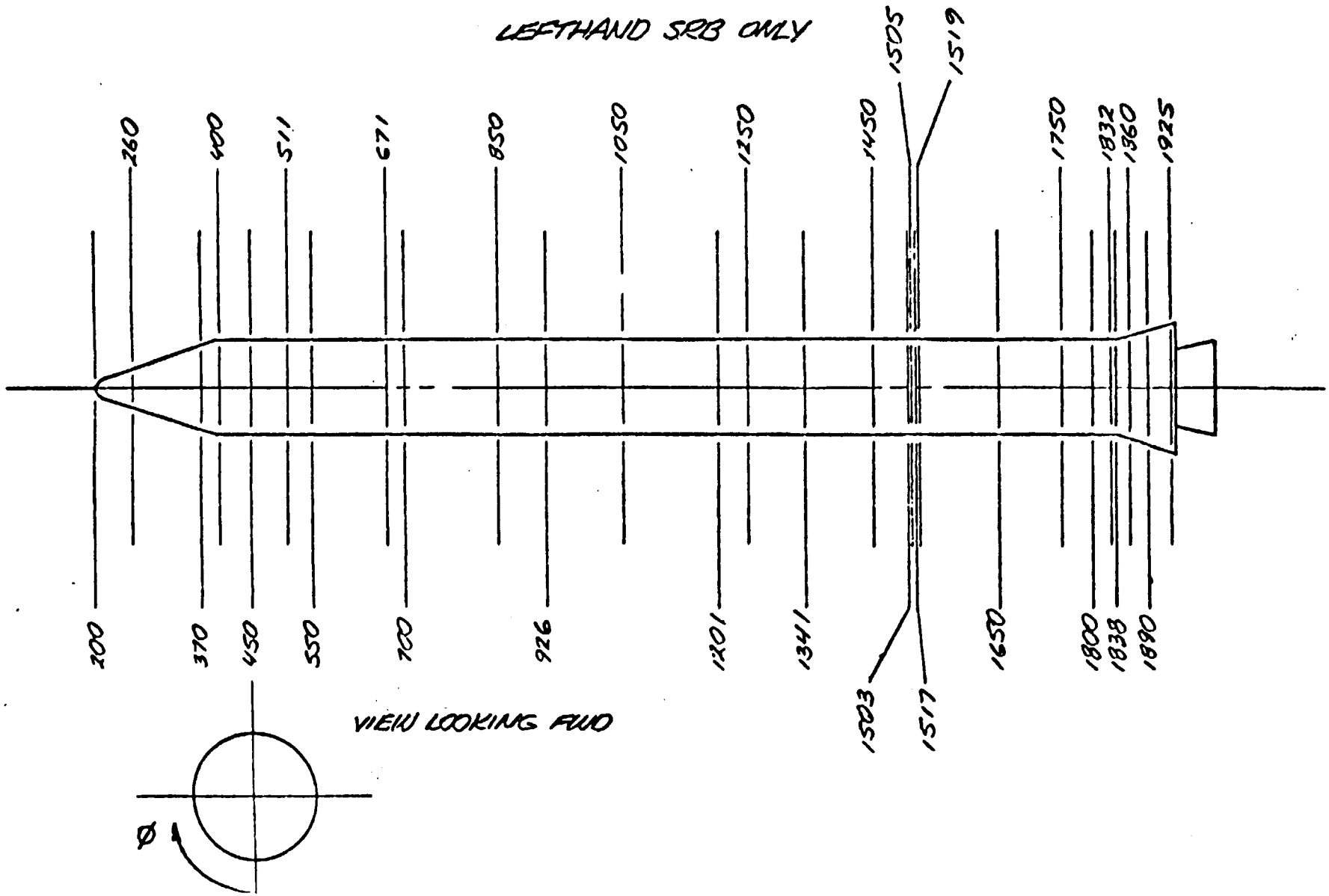

a. SRB Station Numbers

Figure 8. Solid Rocket Booster Pressure Tap Locations

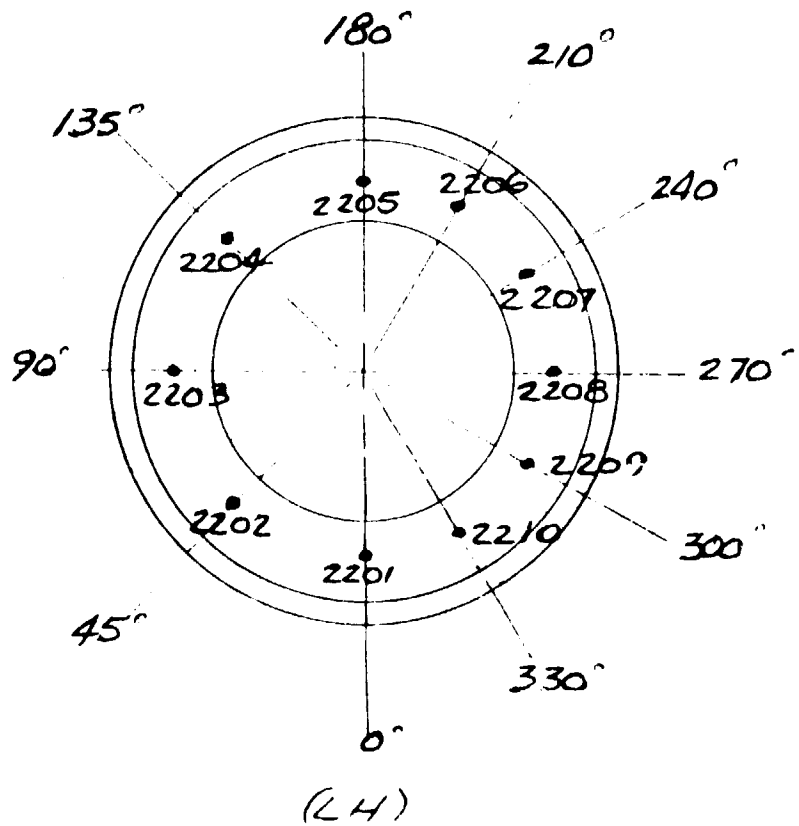

NOTE:
PRESSURE TAPS ARE ½ WAY BETWEEN NOZZLE AND SKIRT.

b. SRB Base
Figure 8. (Concluded)

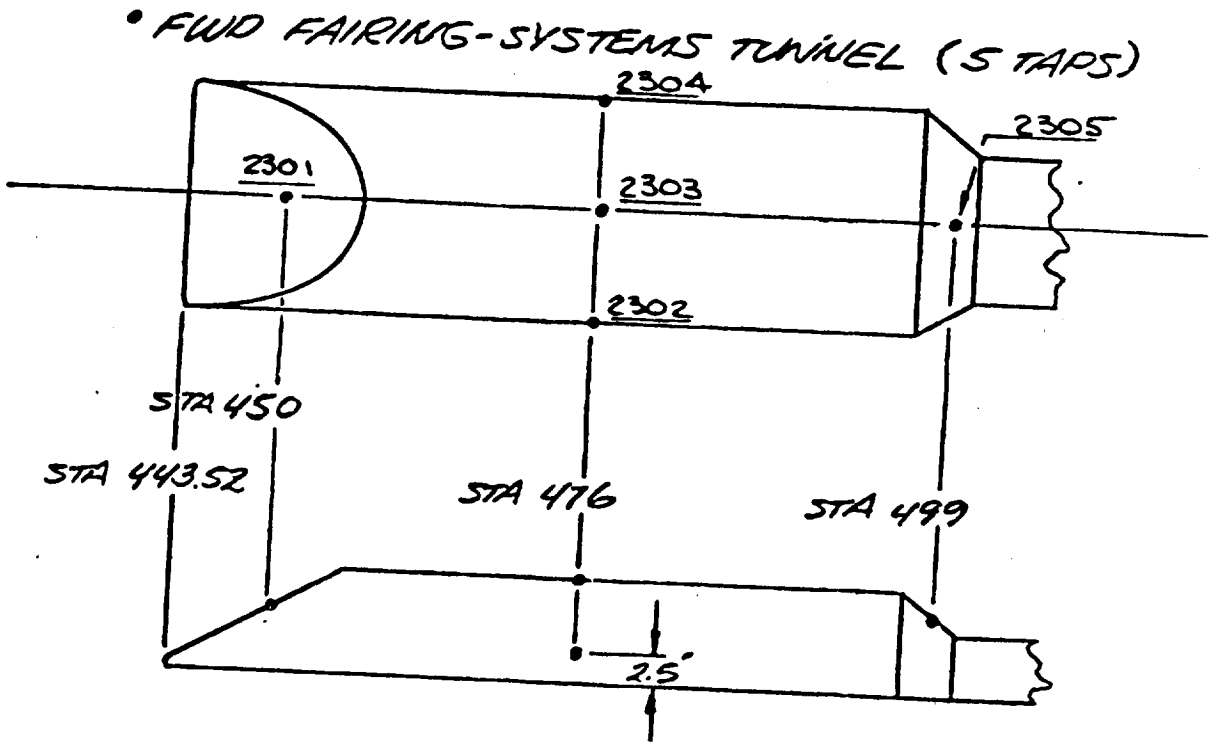

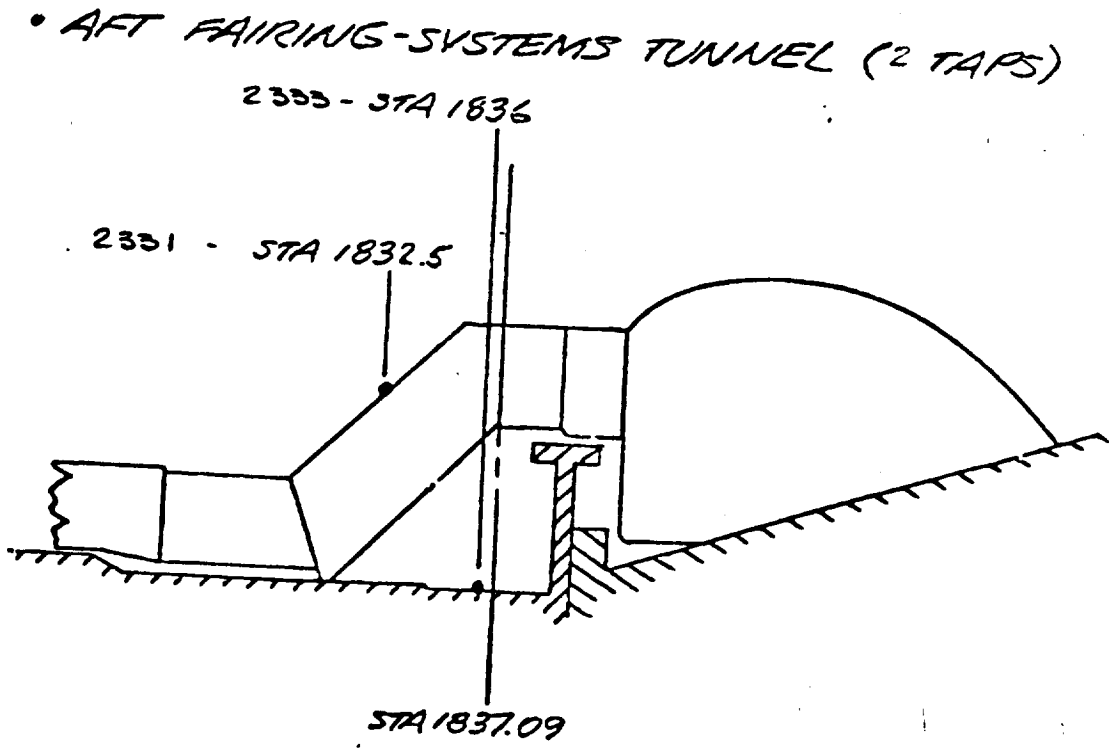

a. Systems Tunnel Ends

Figure 9. SRB Protuberance Pressure Tap Locations

• CENTER SECTION-SYSTEMS TUNNEL (13 TAPS)

• 1 TAP LOCATED TOP CENTERLINE OF FAIRING AT THE FOLLOWING SRB STATIONS:

No	X_B	TAP No	X_B	TAP No	X_B	TAP No	X_B	TAP No	X_B
2306	511	2309	811	2312	1201	2327	1591	2330	1800
2307	561	2310	926	2313	1341	2328	1650		
2308	671	2311	1051	2314	1503	2329	1726		

• ET ATTACH RING (.4 TAPS)

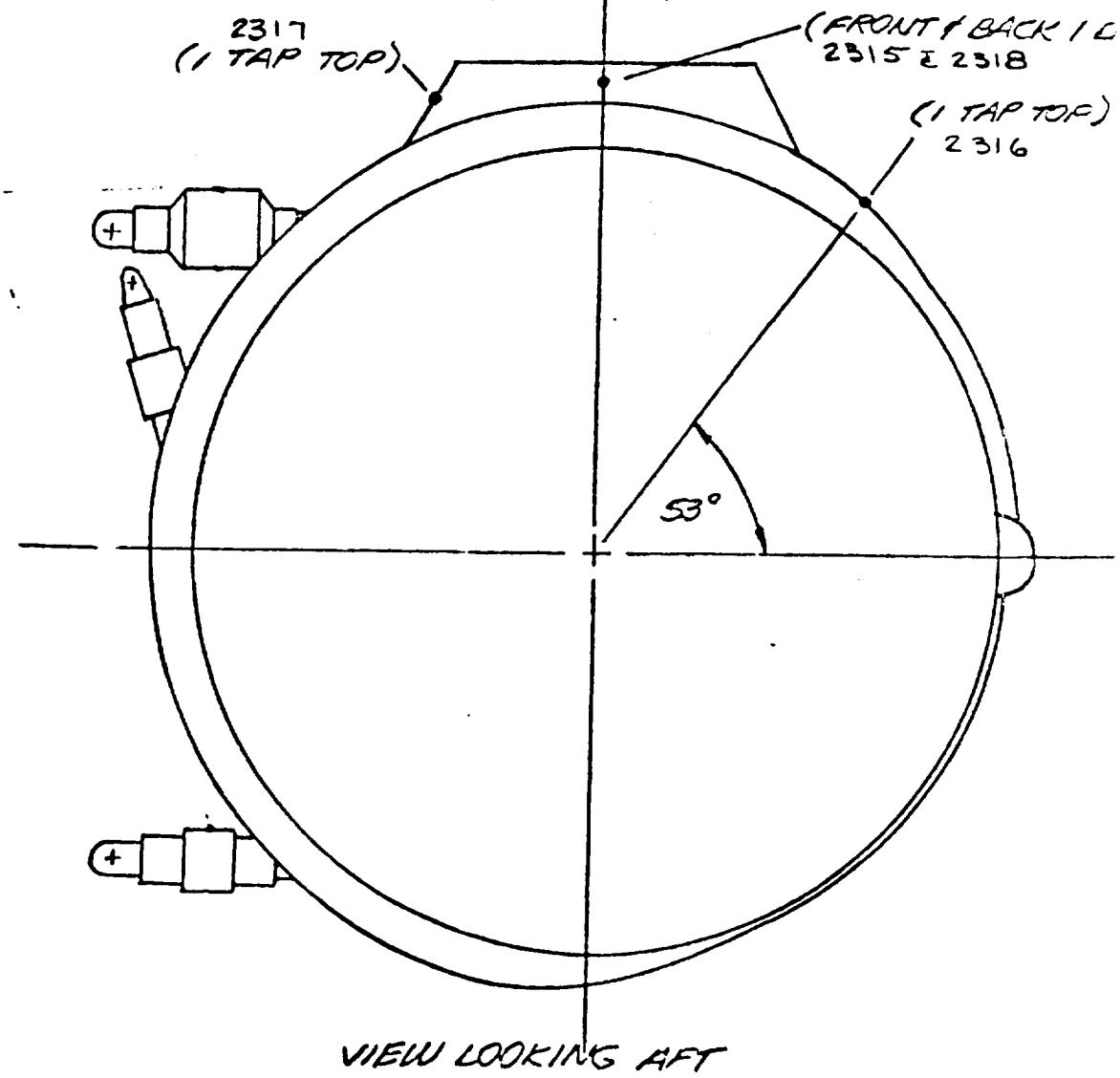

b. Systems Tunnel and Attach Ring
Figure 9. (Continued)

• SEPARATION MOTOR FAIRINGS (16 TAPS)

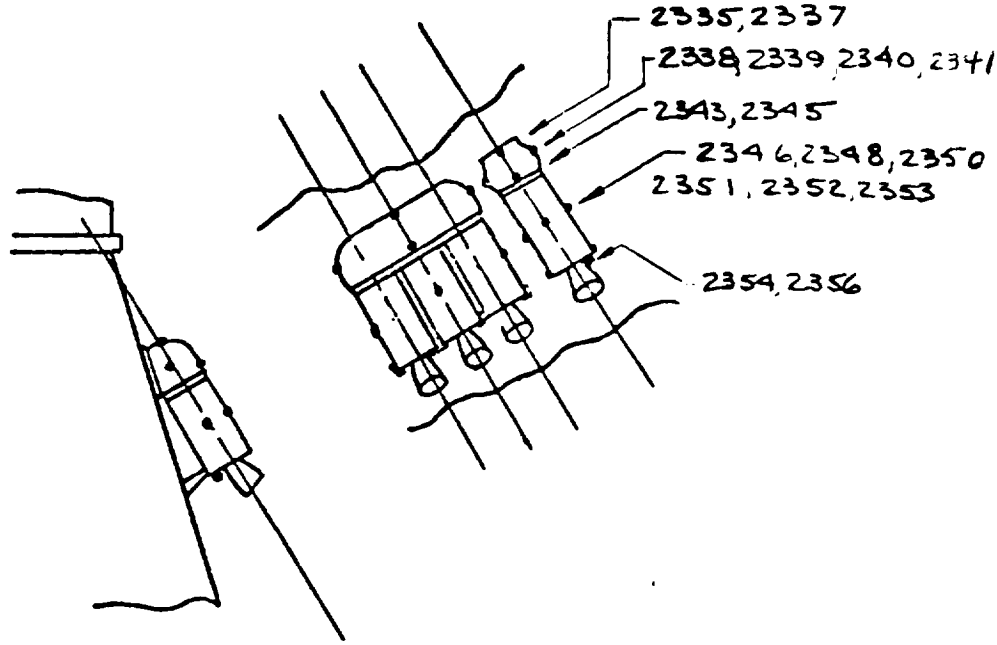

• TURBINE EXHAUST (4 TAPS).

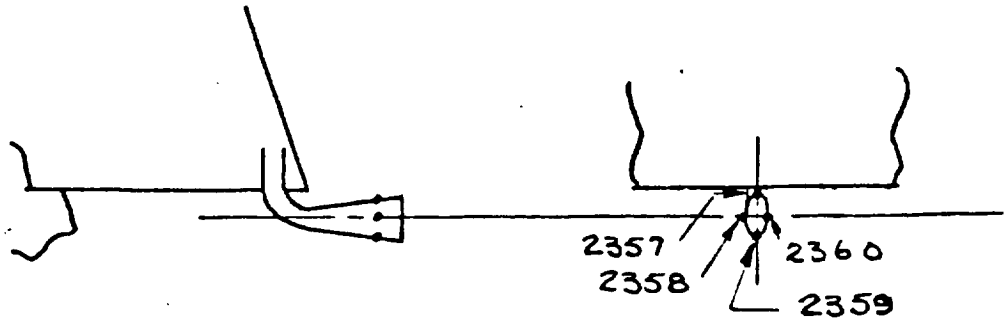

c. Separation Motors and Turbine Exhaust
Figure 9. (Continued)

DESCRIPTION	TAPS	FROM #	TO #
FWD FAIRING-SYSTEMS TUNNEL	5	2301	2305
CENTER SECTION - UP TO REAR ATTACH RING - OF SYSTEMS TUNNEL	9	2306	2314
AFT ATTACH RING	4	2315	2318
CENTER SECTION - AFT OF ATTACH RING - OF SYSTEMS TUNNEL	4	2327	2330
AFT FAIRING - SYSTEMS TUNNEL (TAP 2332 DELETED)	2	2331	2332
REAR SEPARATION THRUSTORS - (TAP 2334, 2336, 2342, 2344, 2347, 2349 2355 DELETED)	16	2335	2356
APU TURBINE EXHAUST	3	2357	2359

$\Sigma = 43$

d. SRB Protuberance Pressures Summary
Figure 9. (Concluded)

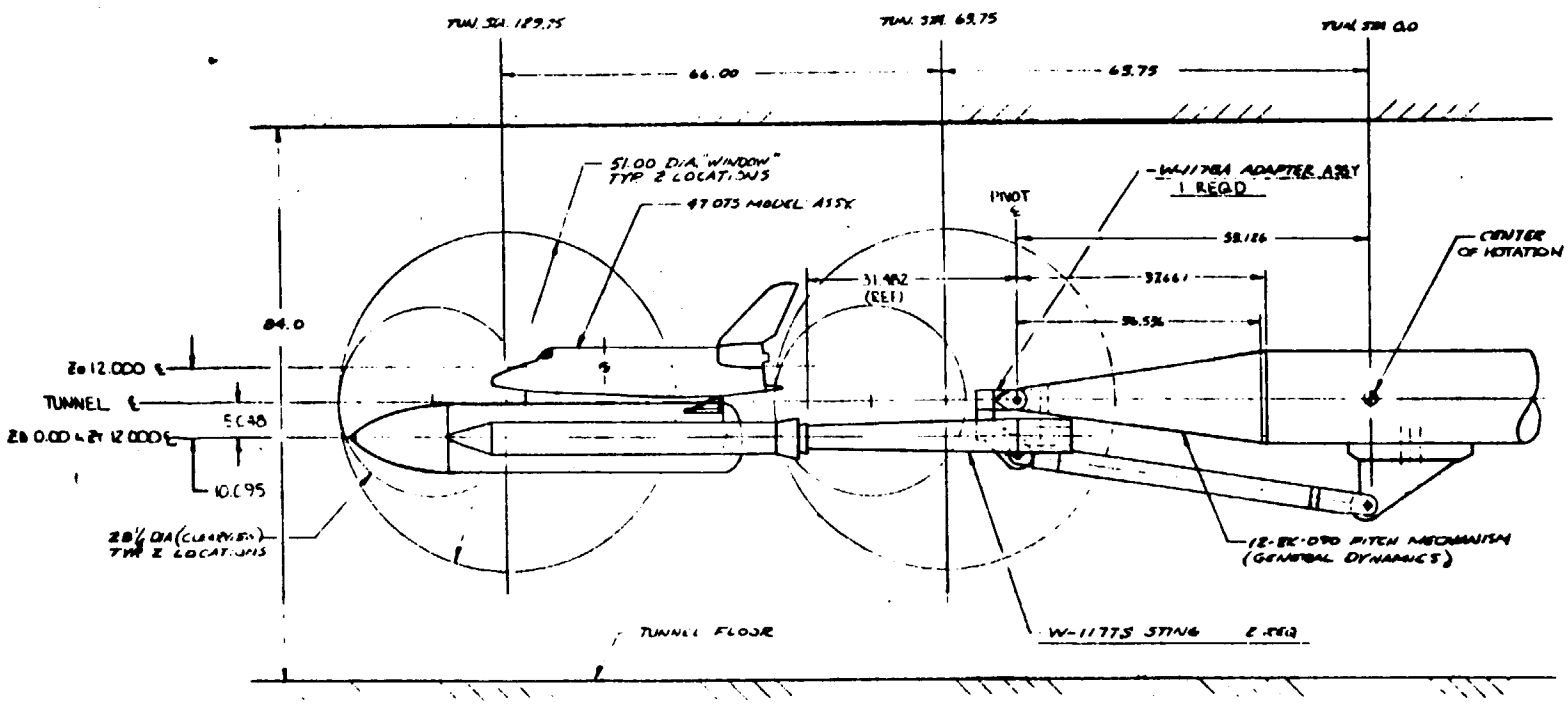

Figure 10. Model Installation in the
ARC 9x7-Foot Wind Tunnel

a. Installation
Figure 11. Model Photographs

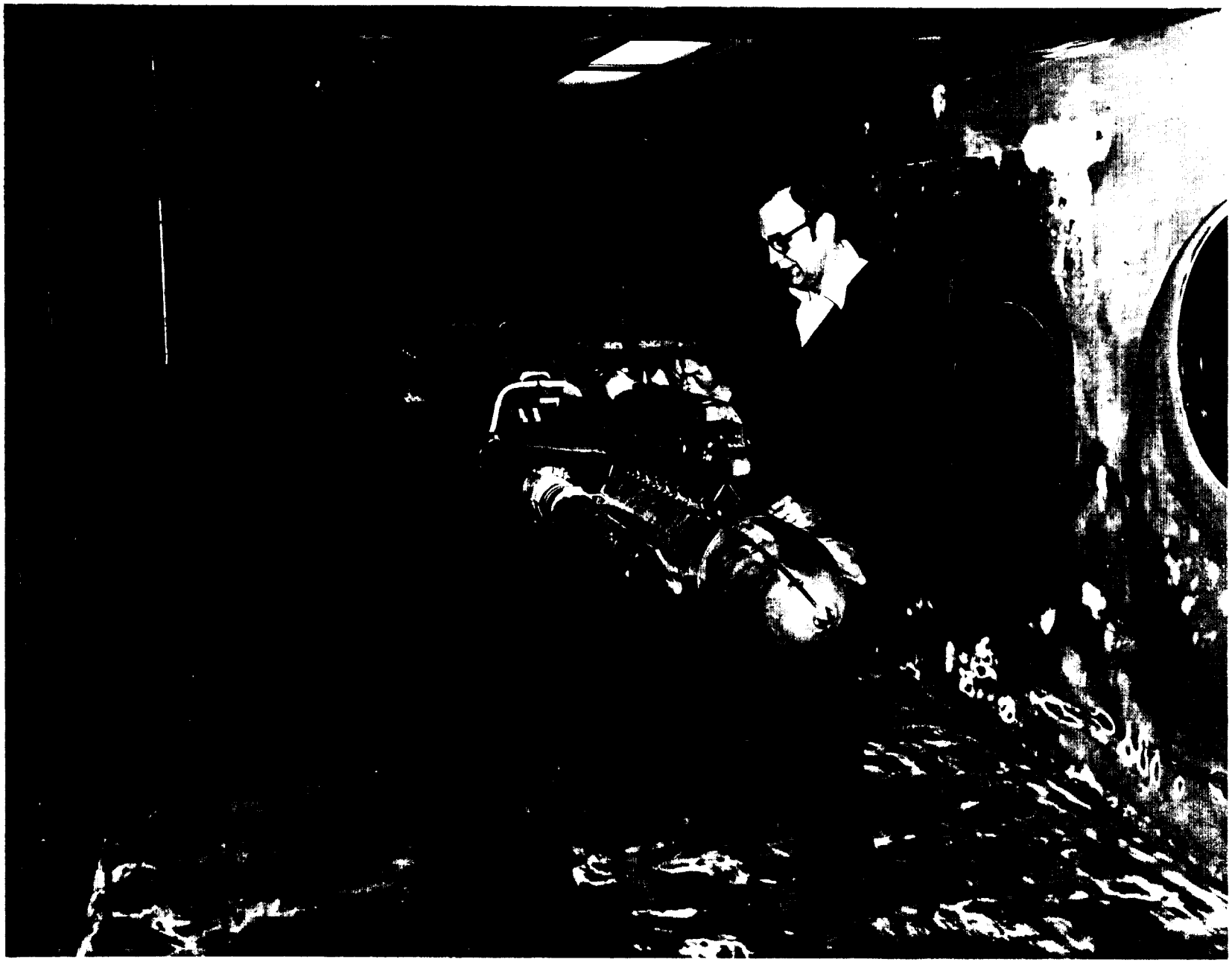

b. Model 47-OTS - Front Quarter View
Figure 11. Continued

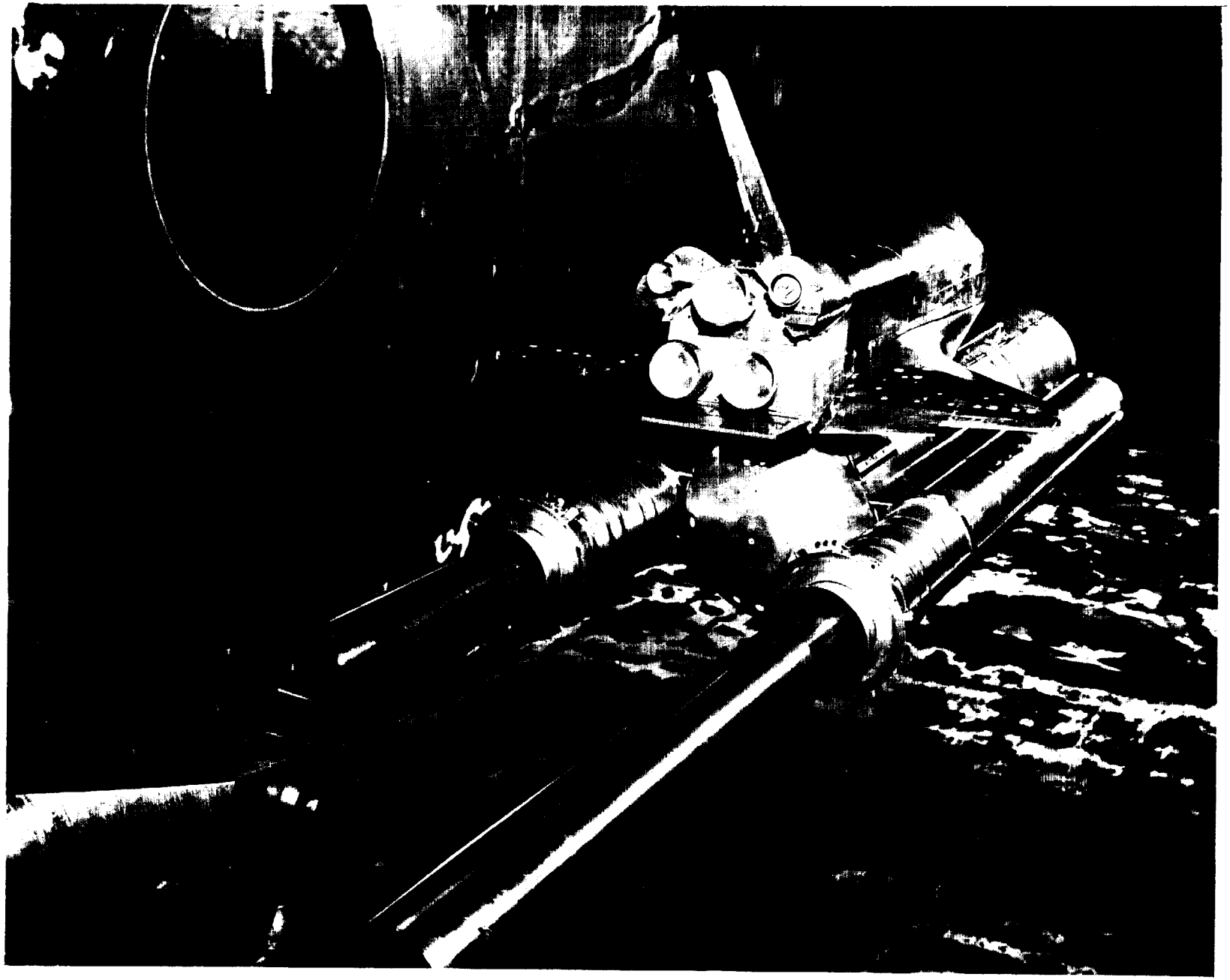

c. Model 47-OTS - Rear Quarter View
Figure 11. Continued

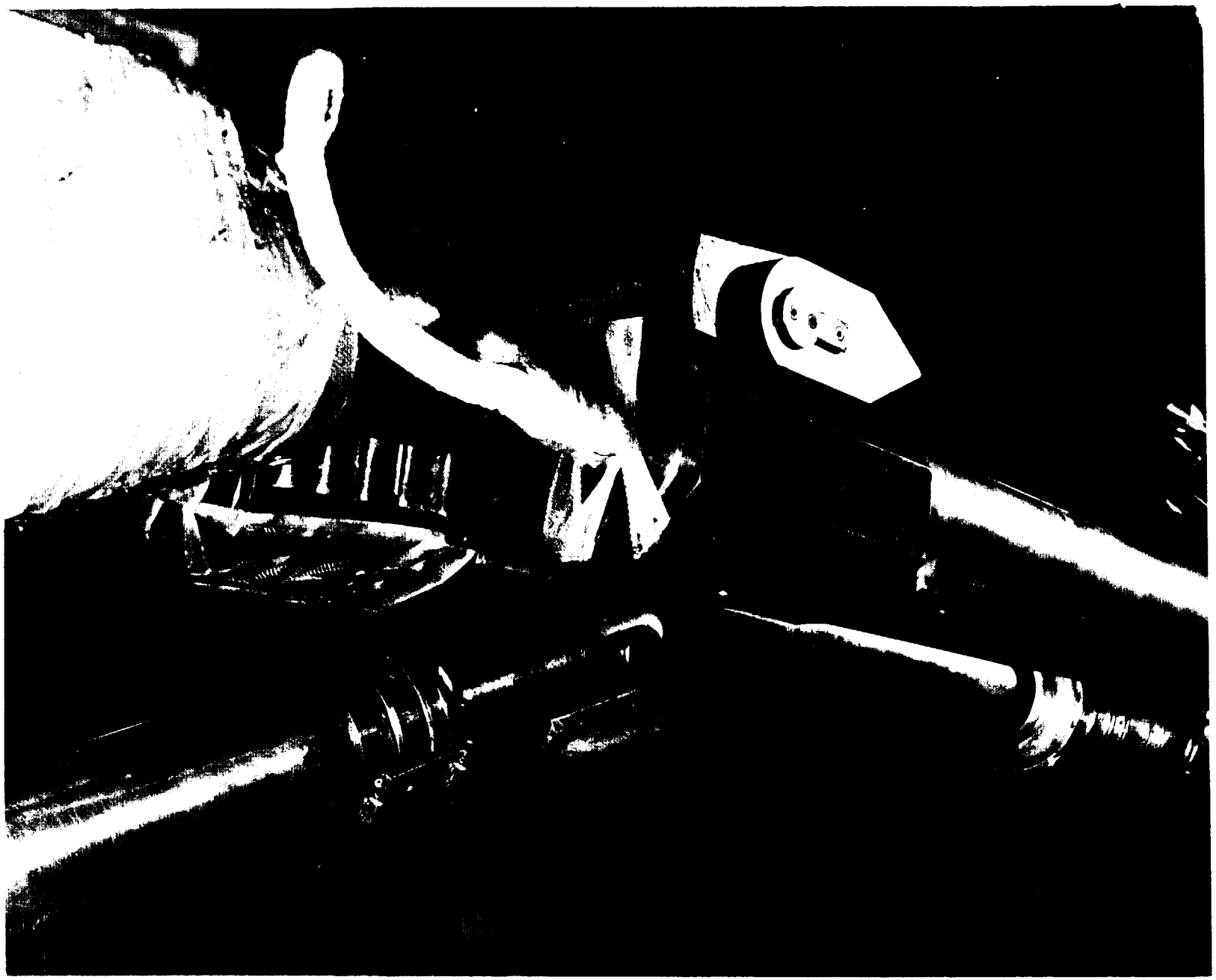

d. Articulating Sting Detail, Aft View
Figure 11. Continued

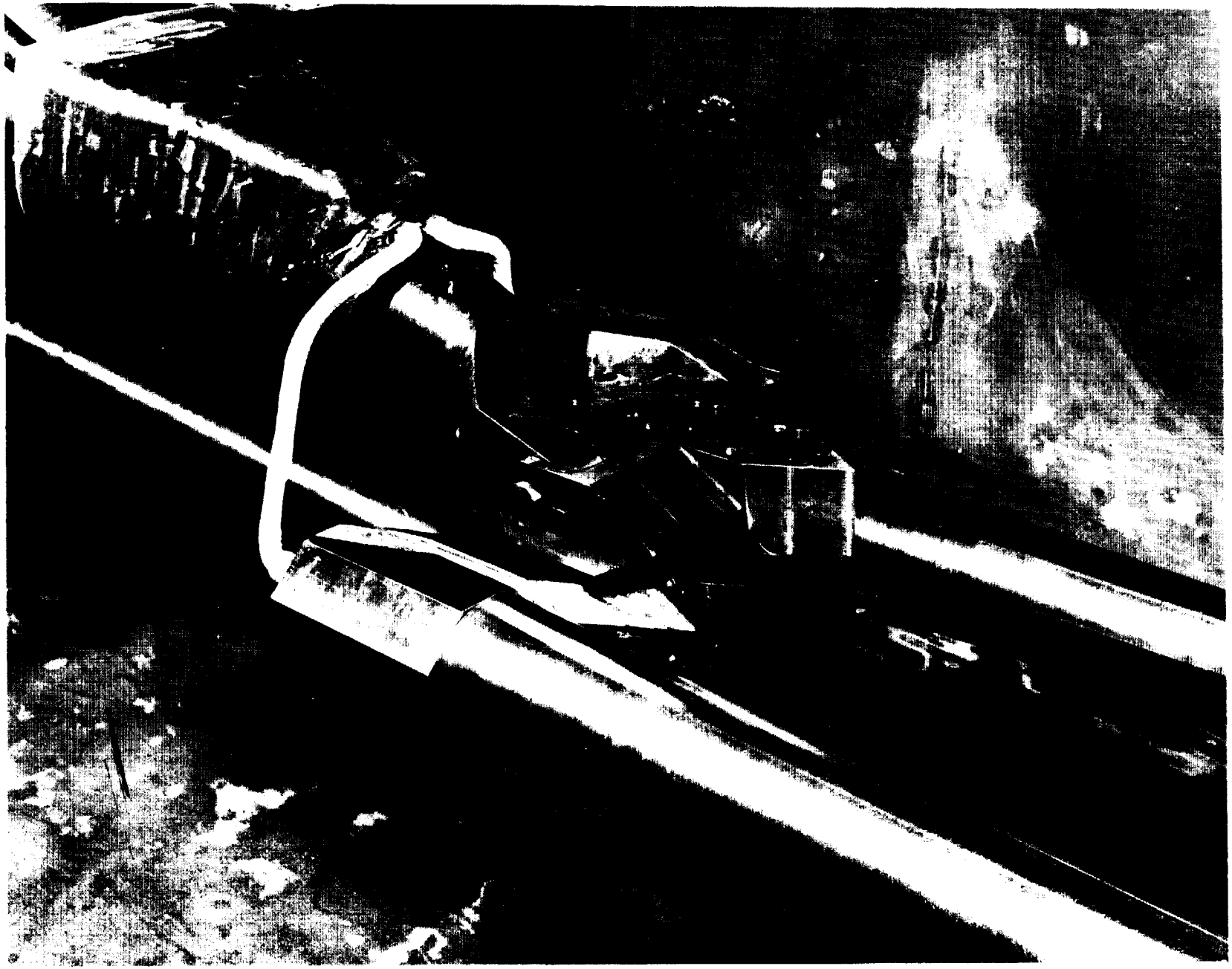

e. Articulating Sting Detail, Forward View
Figure 11. Concluded

DATA FIGURES

(SAMPLE PRESSURE PLOTS)

Tabulations of plotted data figures are published in Volume II (microfiche only) or are available from DMS on request.

(THIS PAGE INTENTIONALLY LEFT BLANK)

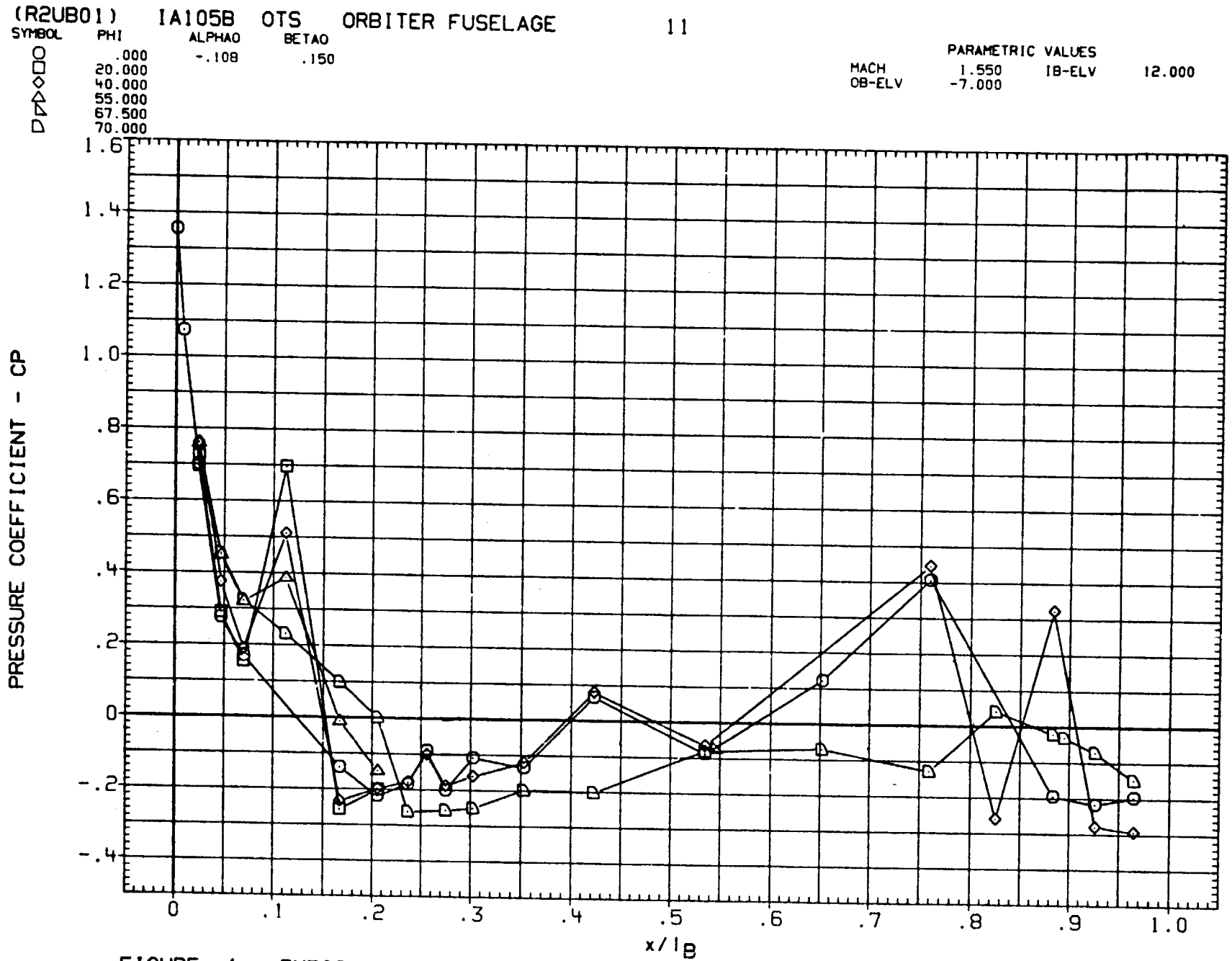

FIGURE 1. TYPICAL PRESSURE DISTRIBUTION - ORBITER FUSELAGE

(R2UB01) IA105B OTS ORBITER FUSELAGE 11

SYMBOL	PHI	ALPHAO	BETAO
○	82.000	-.108	.150
□	90.000		
◇	105.000		
△	110.000		
▷	120.000		
◁	135.000		

PARAMETRIC VALUES

MACH	1.550	IB-ELV	12.000
OB-ELV	-7.000		

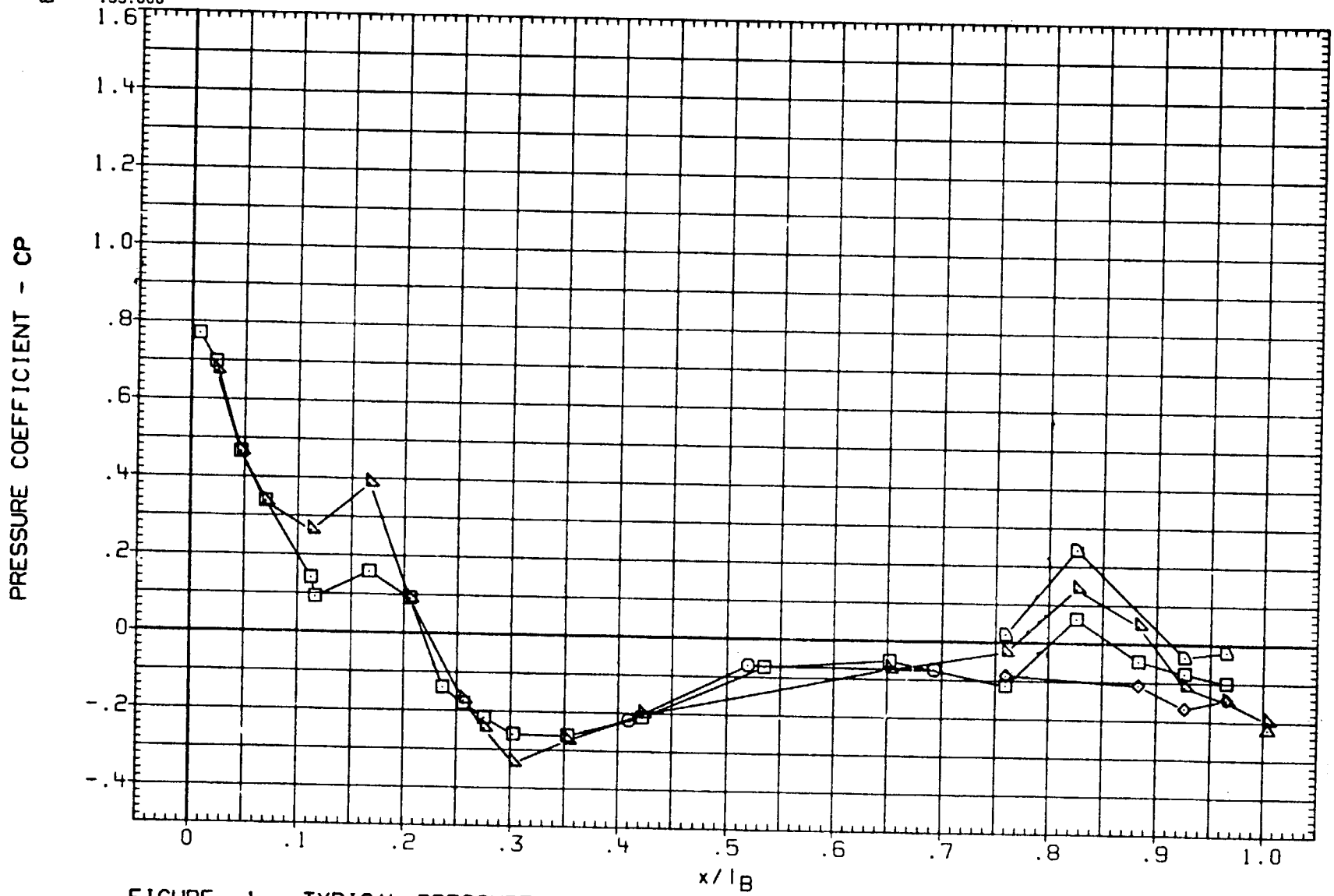

FIGURE 1. TYPICAL PRESSURE DISTRIBUTION - ORBITER FUSELAGE

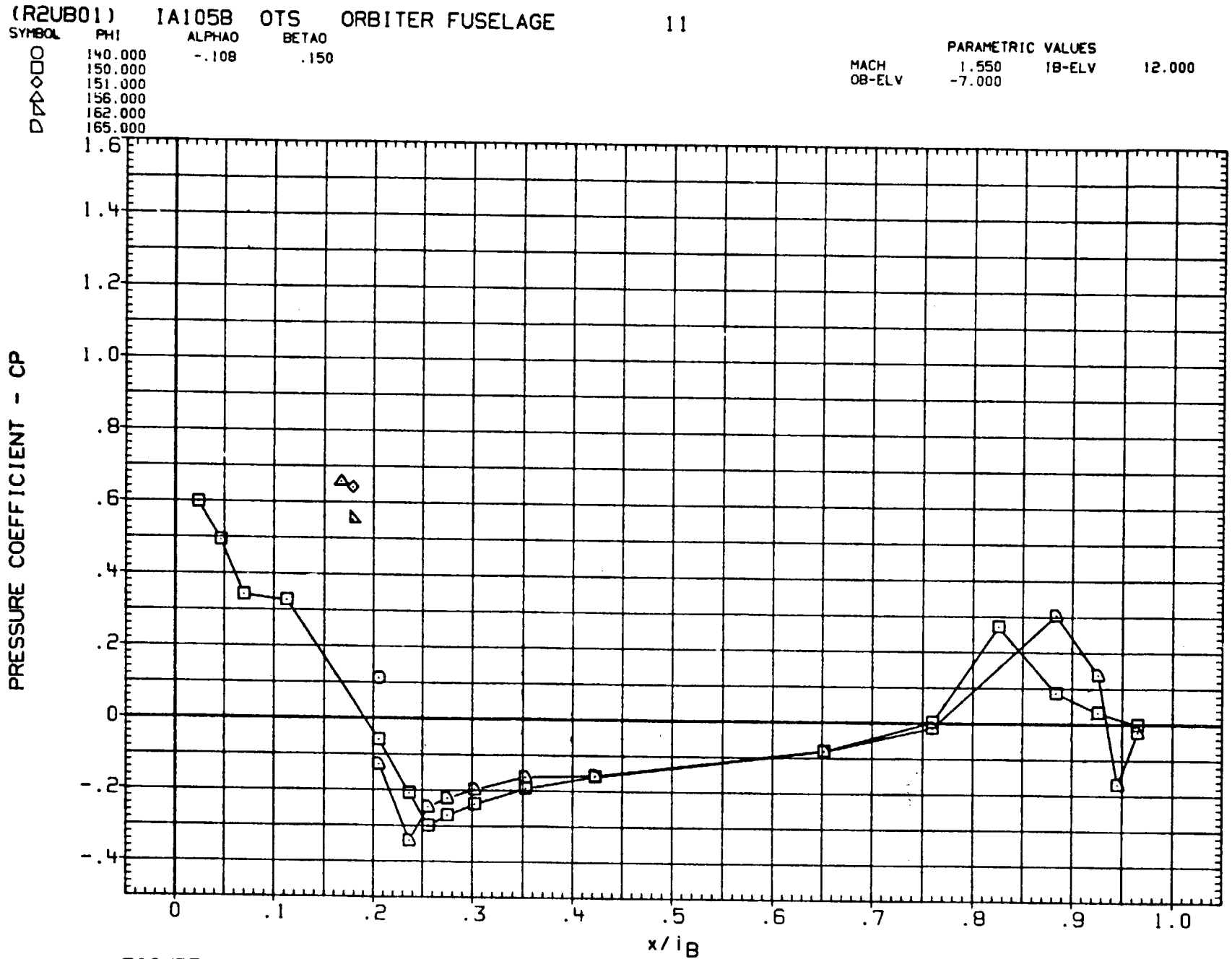

FIGURE 1. TYPICAL PRESSURE DISTRIBUTION - ORBITER FUSELAGE

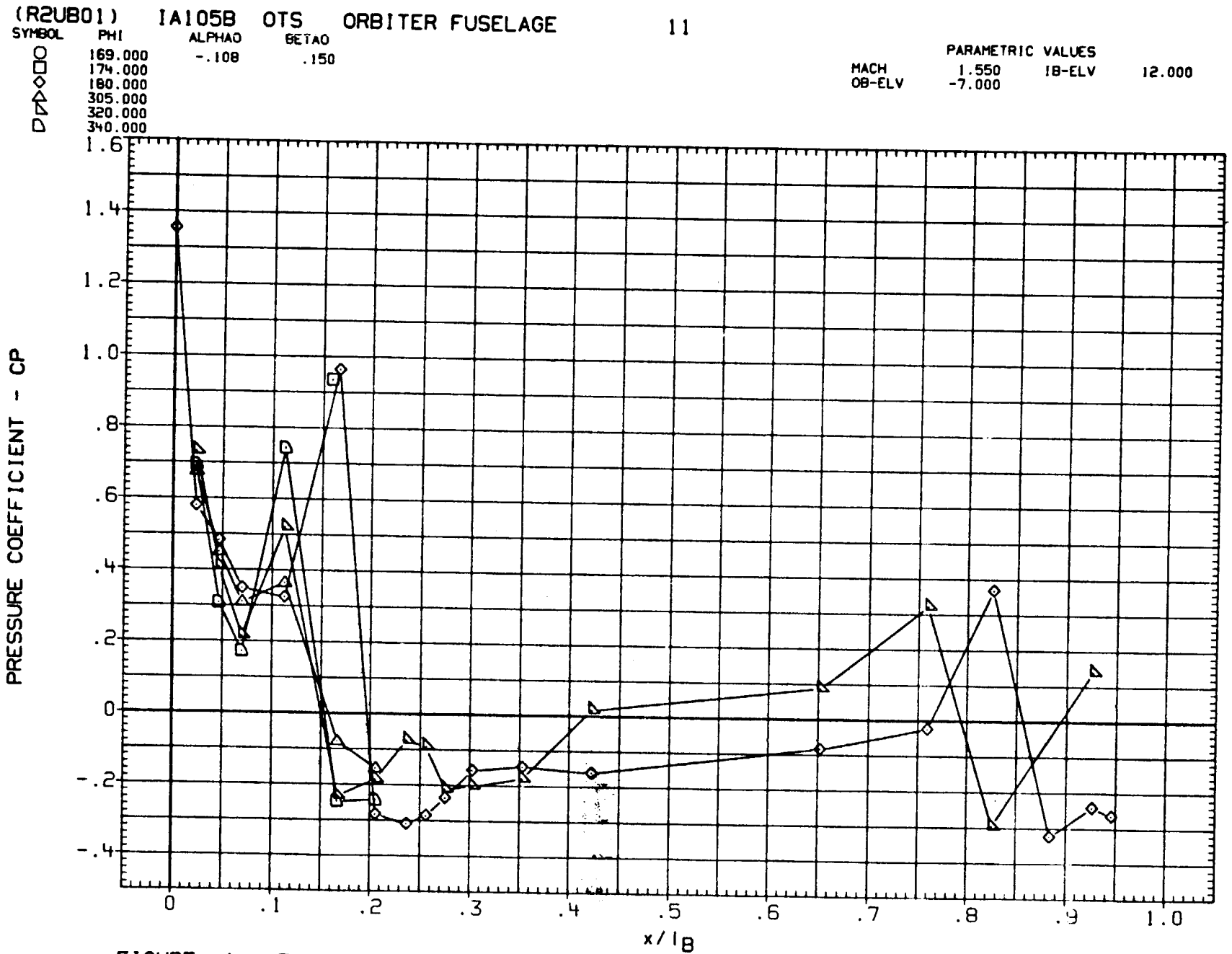

FIGURE 1. TYPICAL PRESSURE DISTRIBUTION - ORBITER FUSELAGE

(R2UE01) IA105B OTS ORBITER BASE 11

SYMBOL	YO	ALPHAO	BETAO
O	.000	-.108	.150

PARAMETRIC VALUES

MACH	1.550	IB-ELV	12.000
OB-ELV	-7.000		

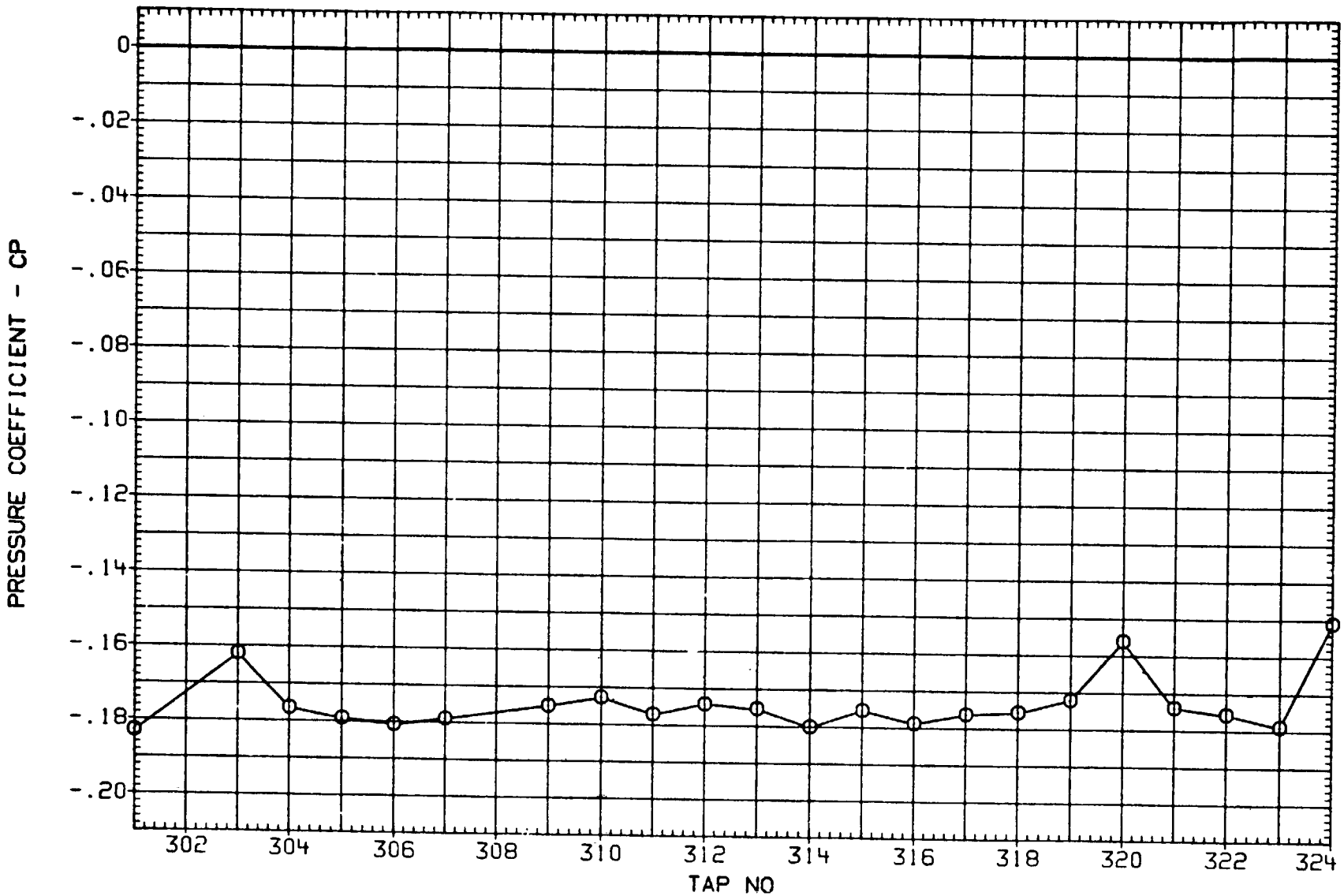

FIGURE 2. TYPICAL PRESSURE DISTRIBUTION - ORBITER BASE

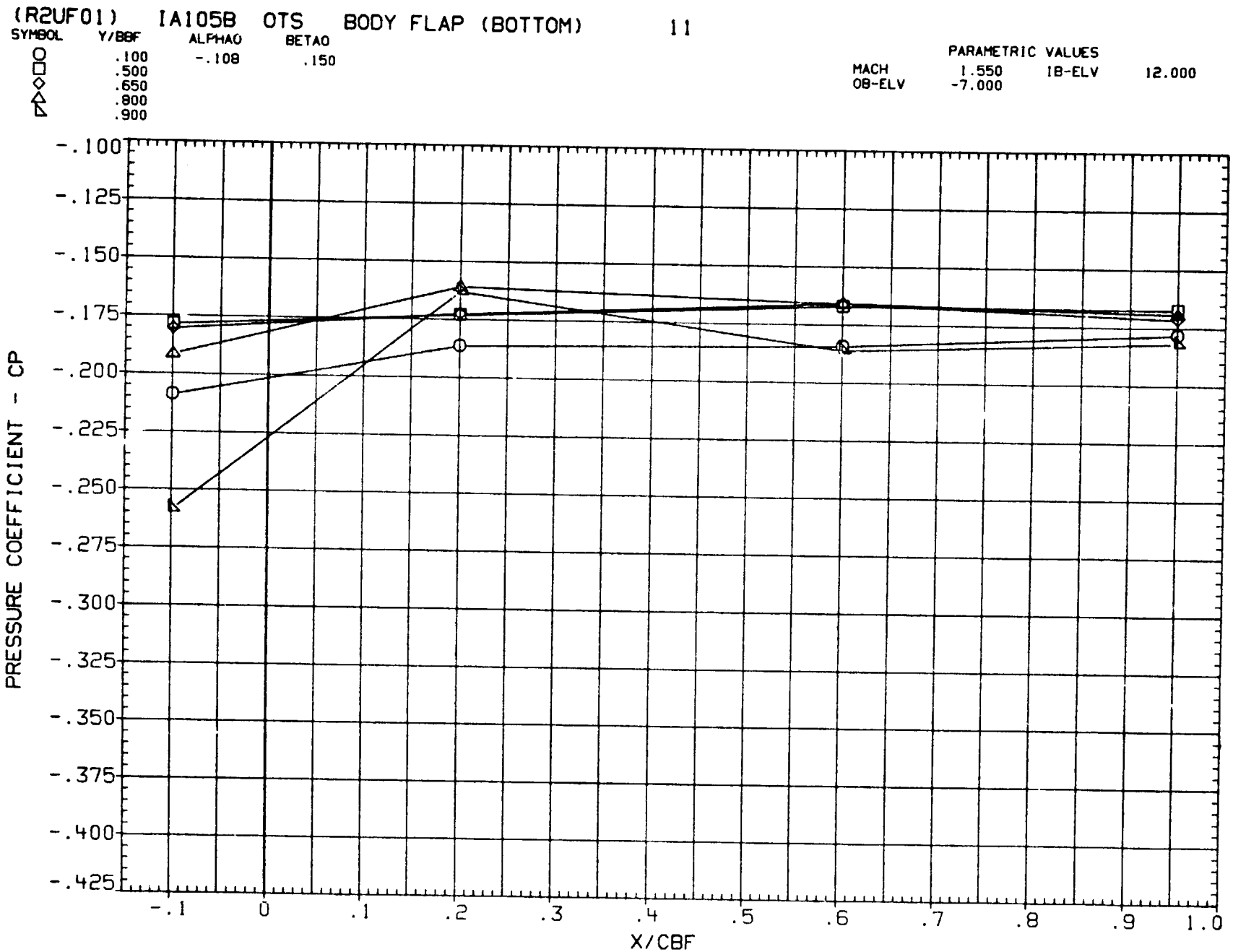

FIGURE 3. TYPICAL PRESSURE DISTRIBUTION - BODY FLAP - LOWER SURFACE

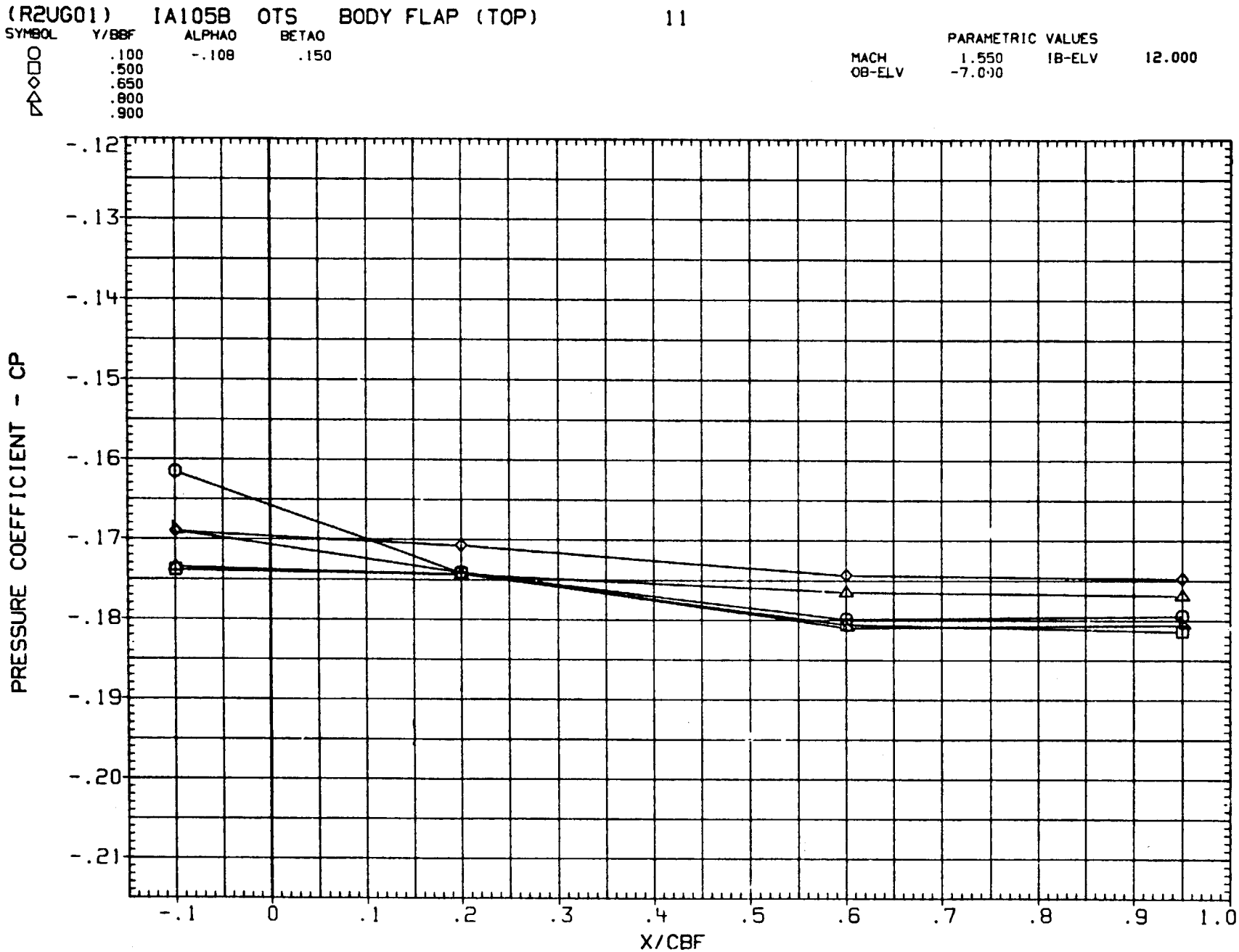

FIGURE 4. TYPICAL PRESSURE DISTRIBUTION - BODY FLAP - UPPER SURFACE

(R2UJ01) IA105B OTS MISCELLANEOUS 11

SYMBOL	TAP NO	ALPHAO	BETAO
○	214.000	-.108	.150
□	215.000		
◇	581.000		
△	582.000		
◁	583.000		

PARAMETRIC VALUES

MACH	1.550	IB-ELV	12.000
OB-ELV	-7.000		

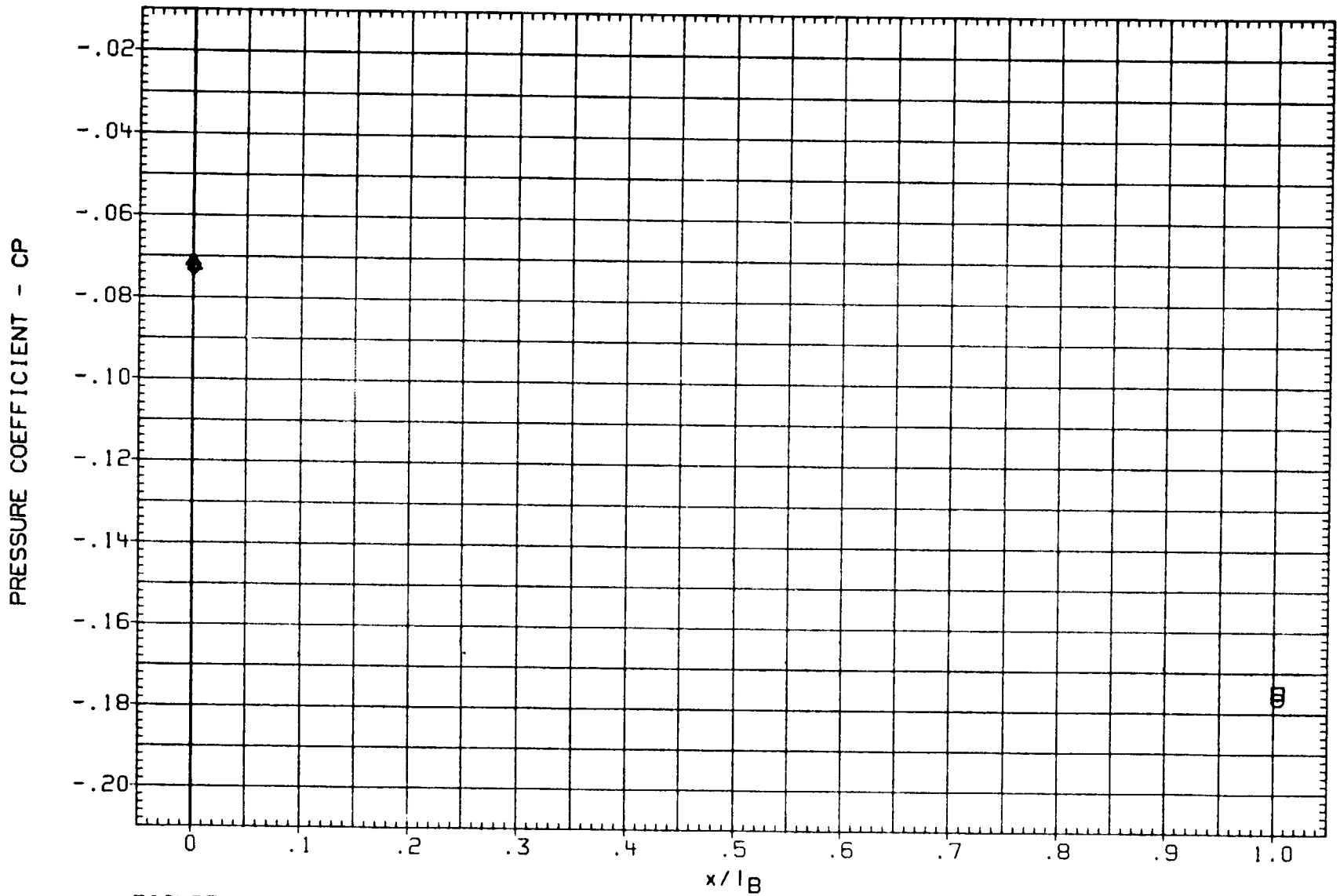

FIGURE 5. TYPICAL PRESSURE DISTRIBUTION - MISCELLANEOUS TAPS

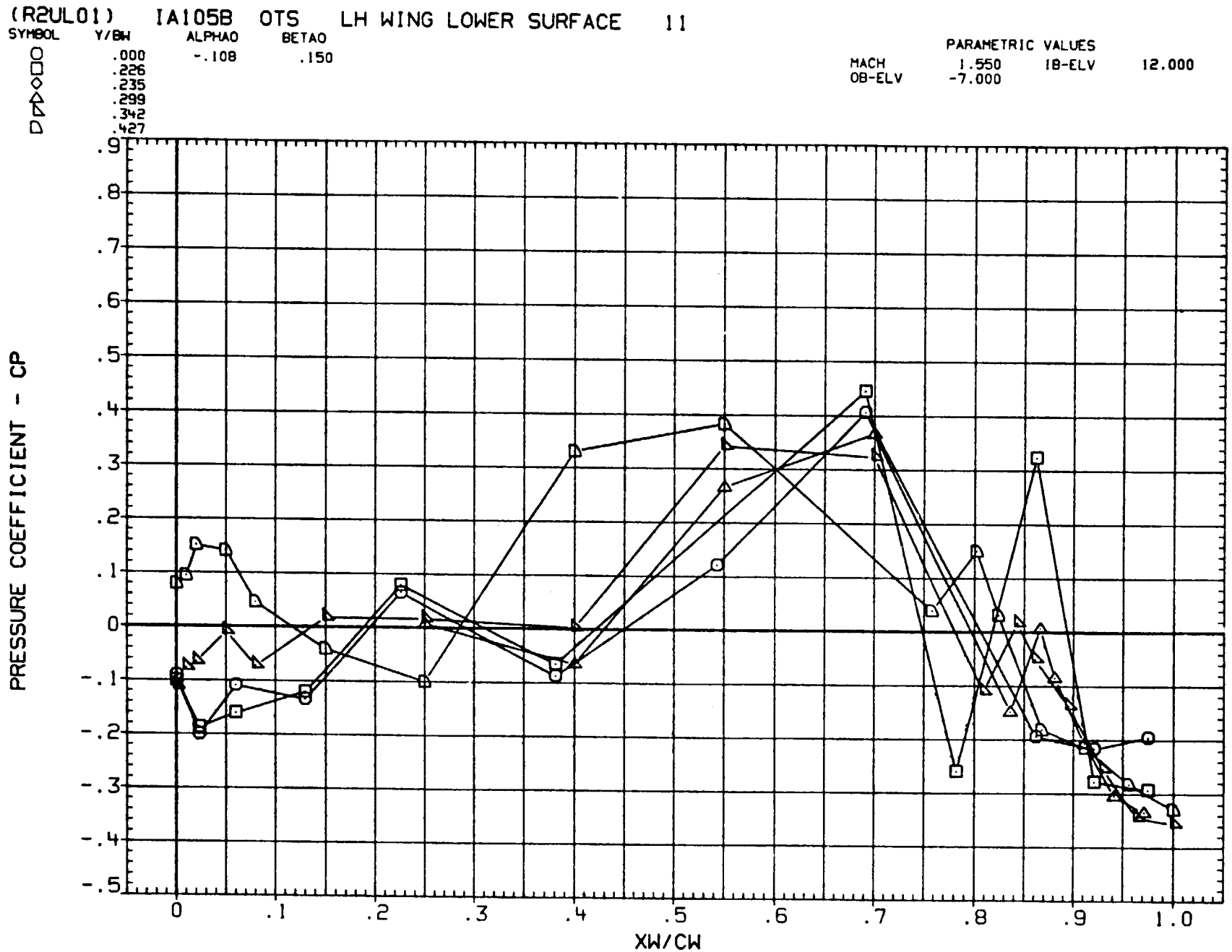

FIGURE 6. TYPICAL PRESSURE DISTRIBUTION - WING - LOWER SURFACE

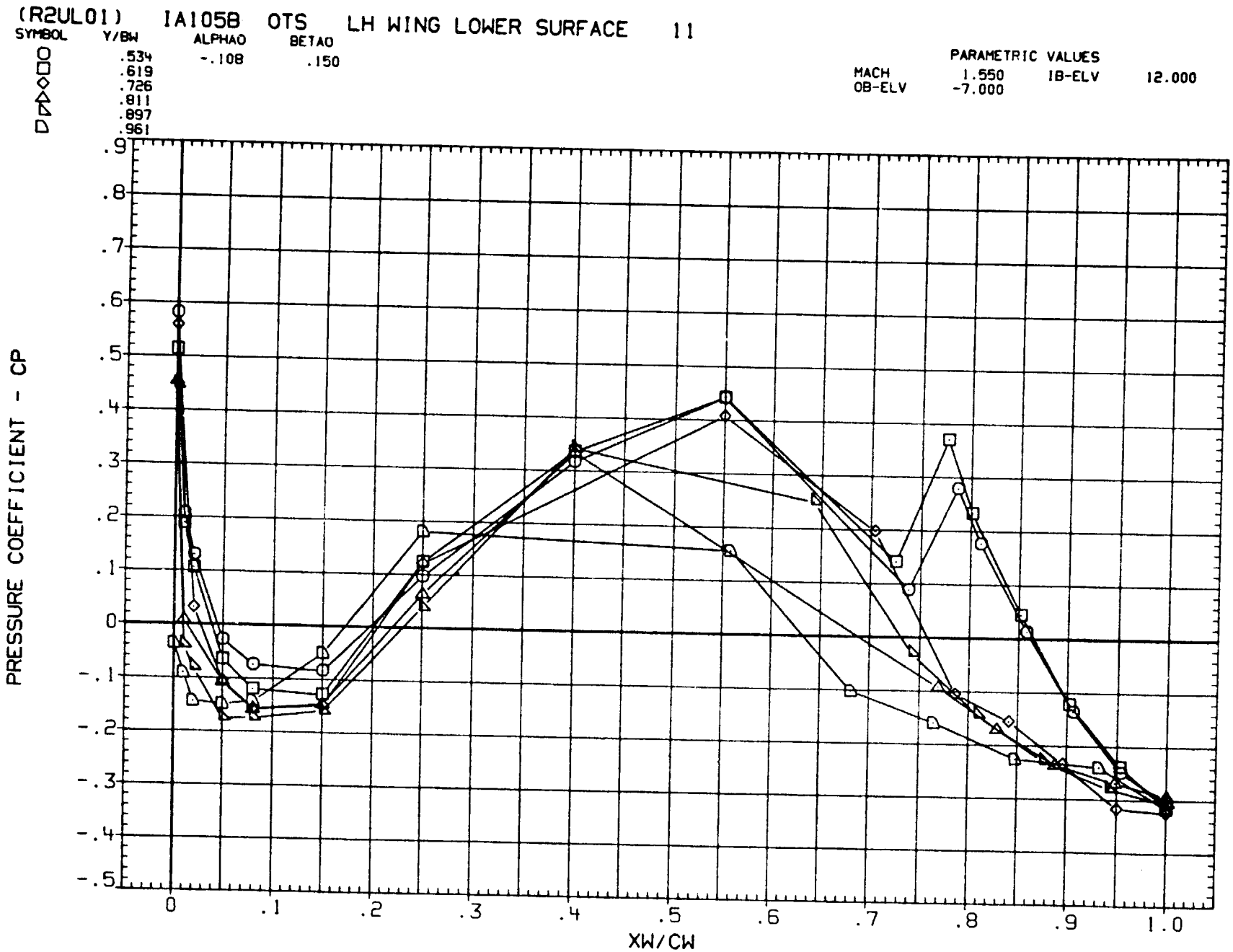

FIGURE 6. TYPICAL PRESSURE DISTRIBUTION - WING - LOWER SURFACE

(R2UL01) IA105B OTS LH WING LOWER SURFACE 11

SYMBOL	Y/BW	ALPHAO	BETAO
O	1.000	-.108	.150

PARAMETRIC VALUES

MACH	1.550	IB-ELV	12.000
OB-ELV	-7.000		

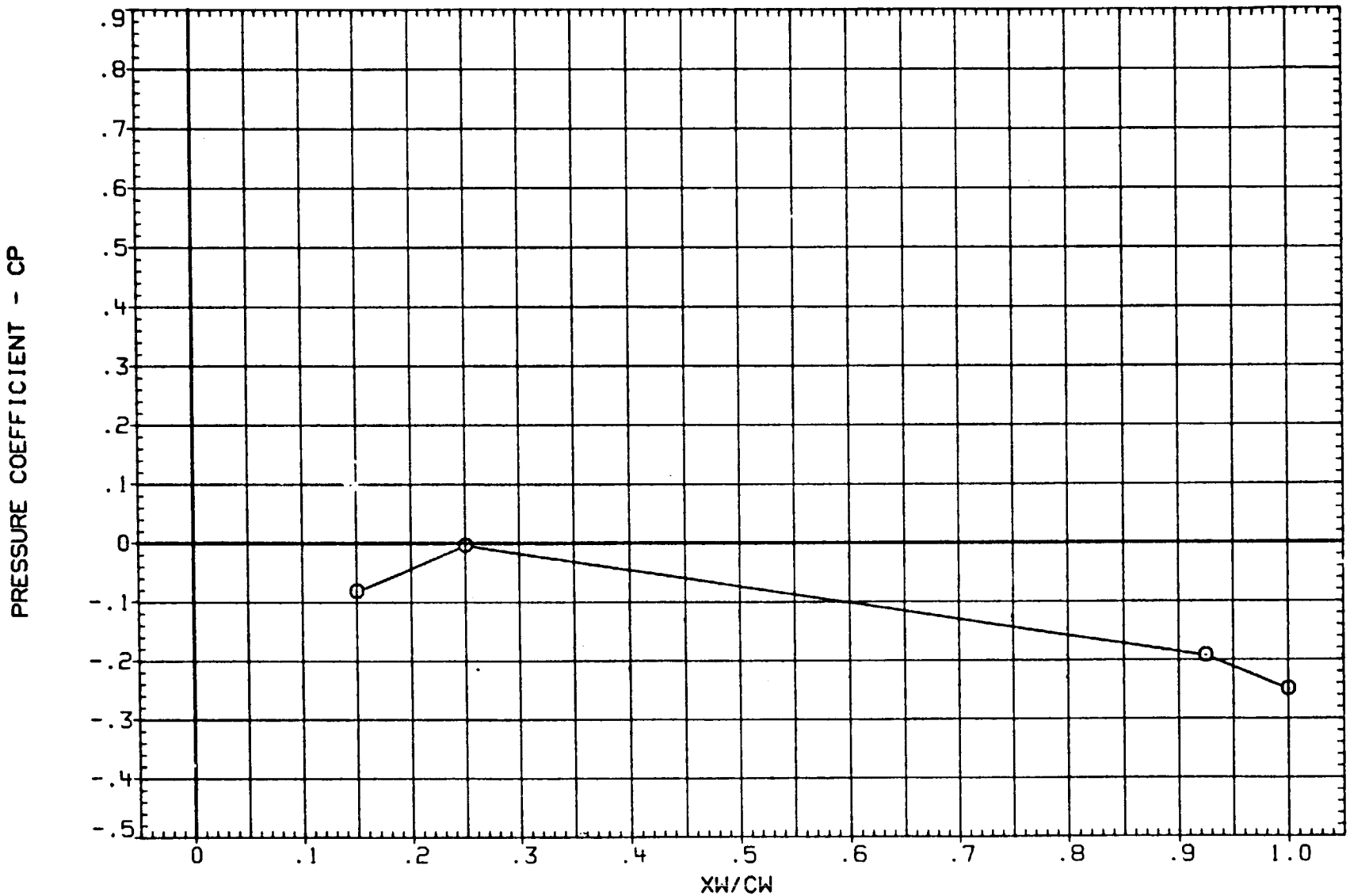

FIGURE 6. TYPICAL PRESSURE DISTRIBUTION - WING - LOWER SURFACE

(R2UM01) IA105B OTS ET PROTUBERANCES 11

SYMBOL	YO	ALPHAO	BETAO
O	.000	-.108	.150

PARAMETRIC VALUES

MACH	1.550	IB-ELV	12.000
OB-ELV	-7.000		

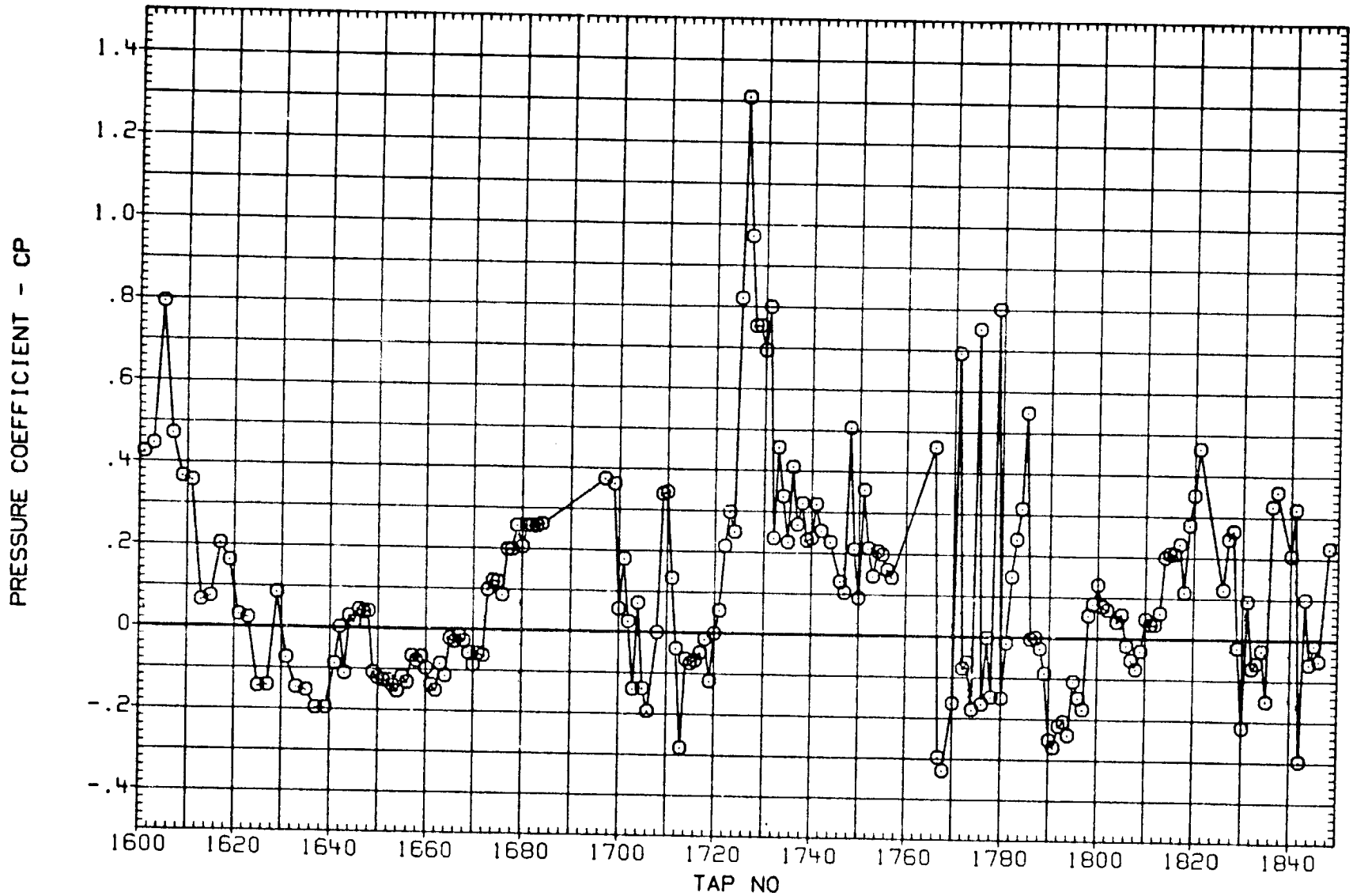

FIGURE 7. TYPICAL PRESSURE DISTRIBUTION - ET PROTUBERANCES

(R2UN01) IA105B OTS SRB PROTUBERANCES 11

SYMBOL	YO	ALPHAO	BETAO
O	.000	-.108	.150

PARAMETRIC VALUES

MACH	1.550	IB-ELV	12.000
OB-ELV	-7.000		

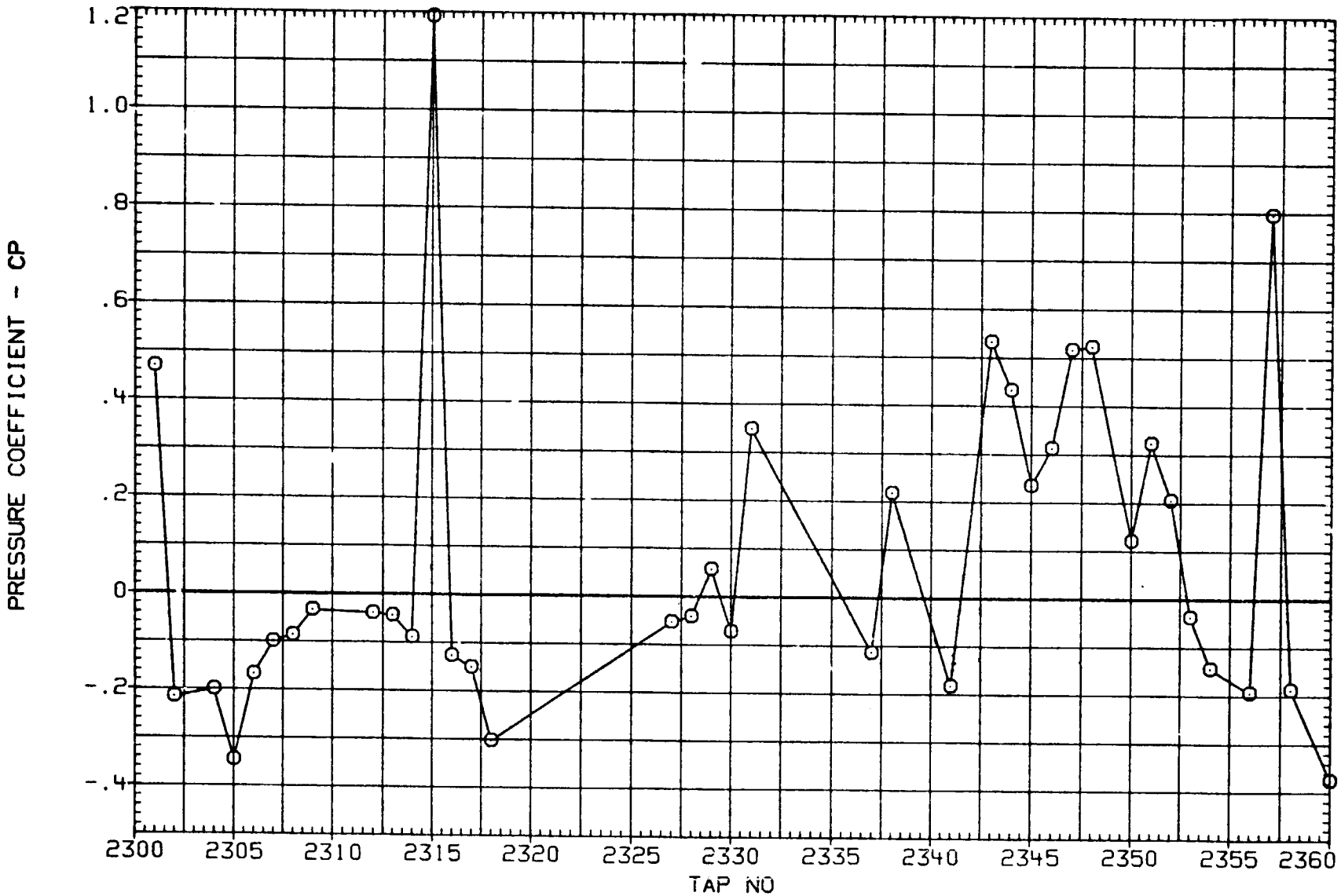

FIGURE 8. TYPICAL PRESSURE DISTRIBUTION - SRB PROTUBERANCES

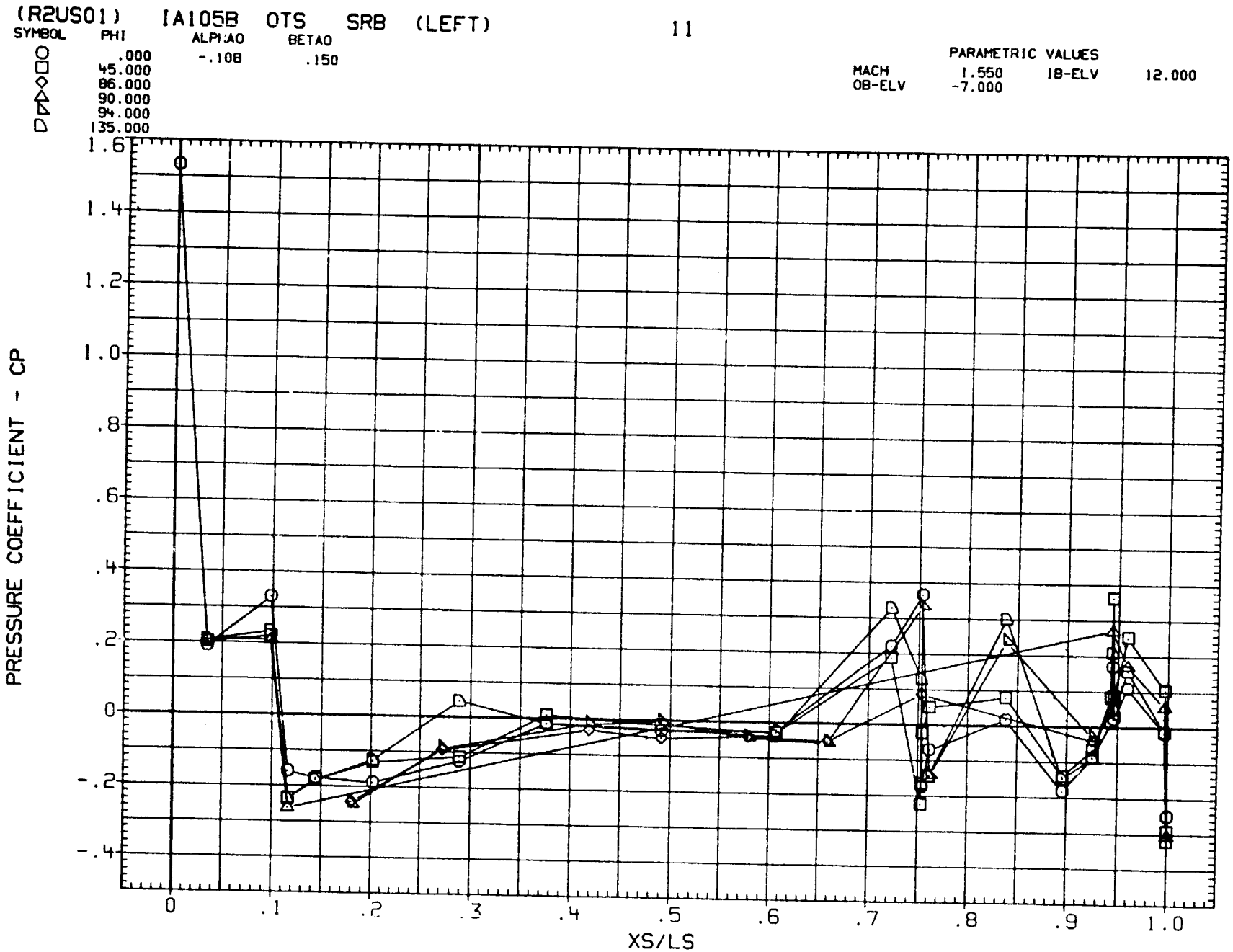

FIGURE 9. TYPICAL PRESSURE DISTRIBUTION - SRB SURFACE

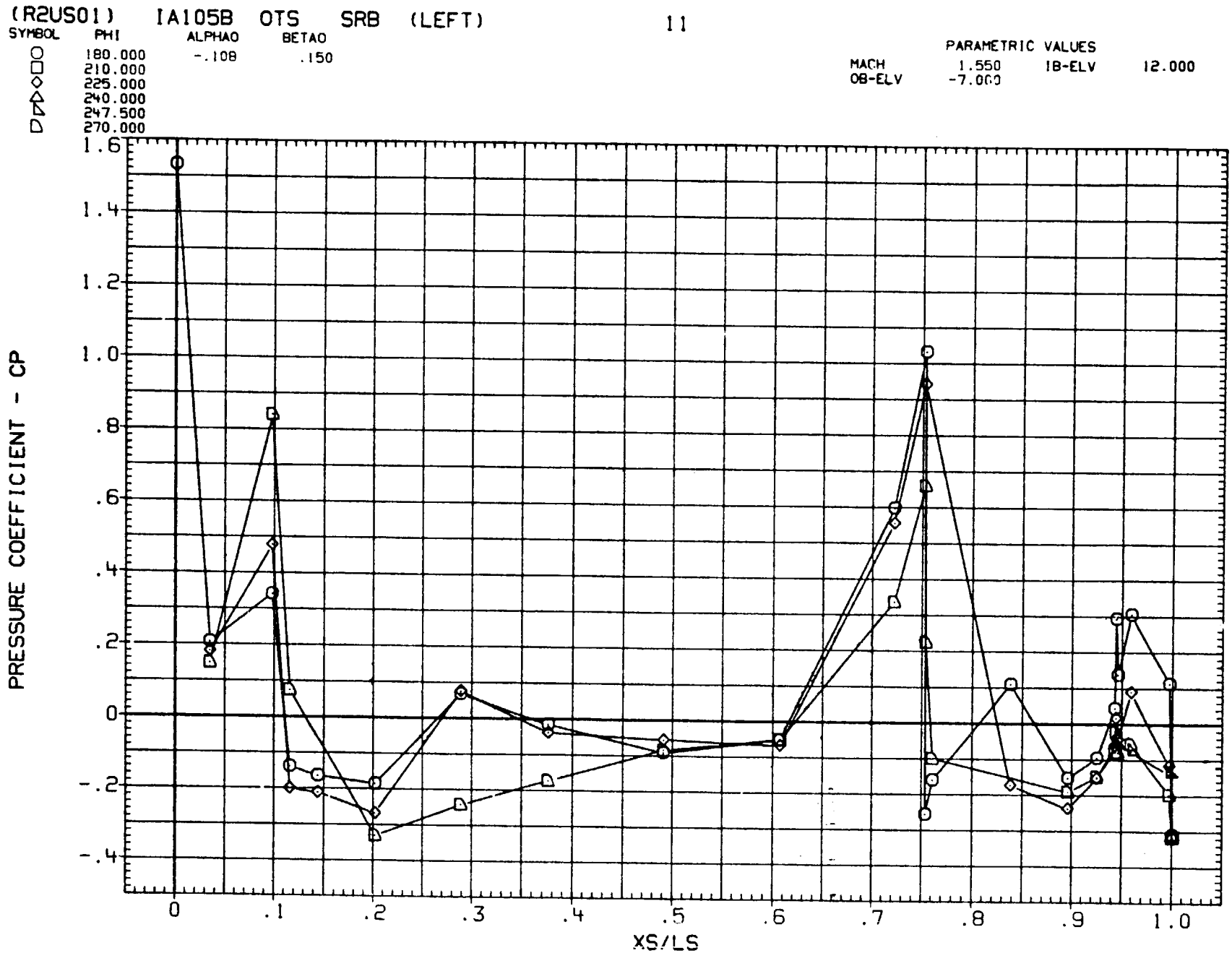

FIGURE 9. TYPICAL PRESSURE DISTRIBUTION - SRB SURFACE

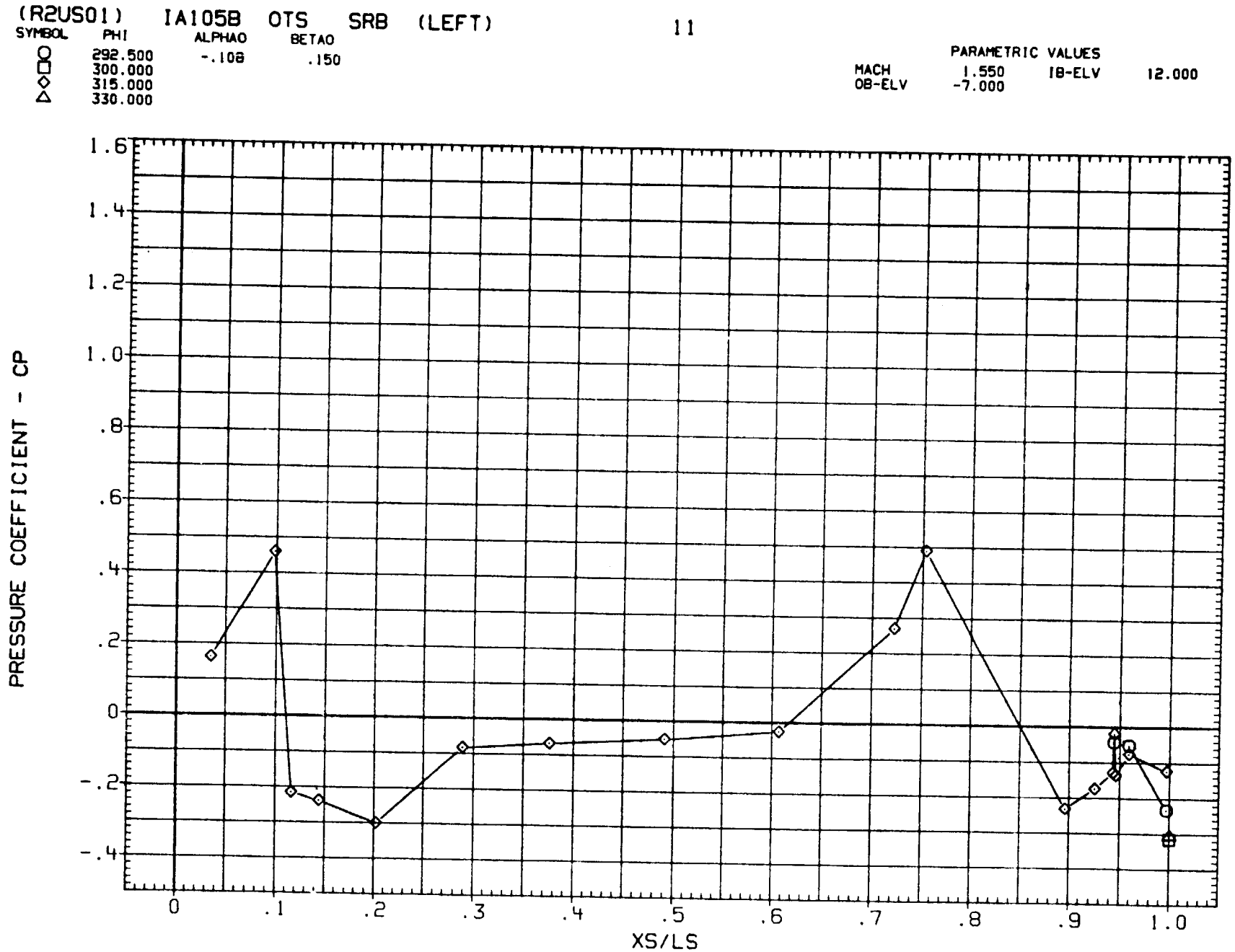

FIGURE 9. TYPICAL PRESSURE DISTRIBUTION - SRB SURFACE

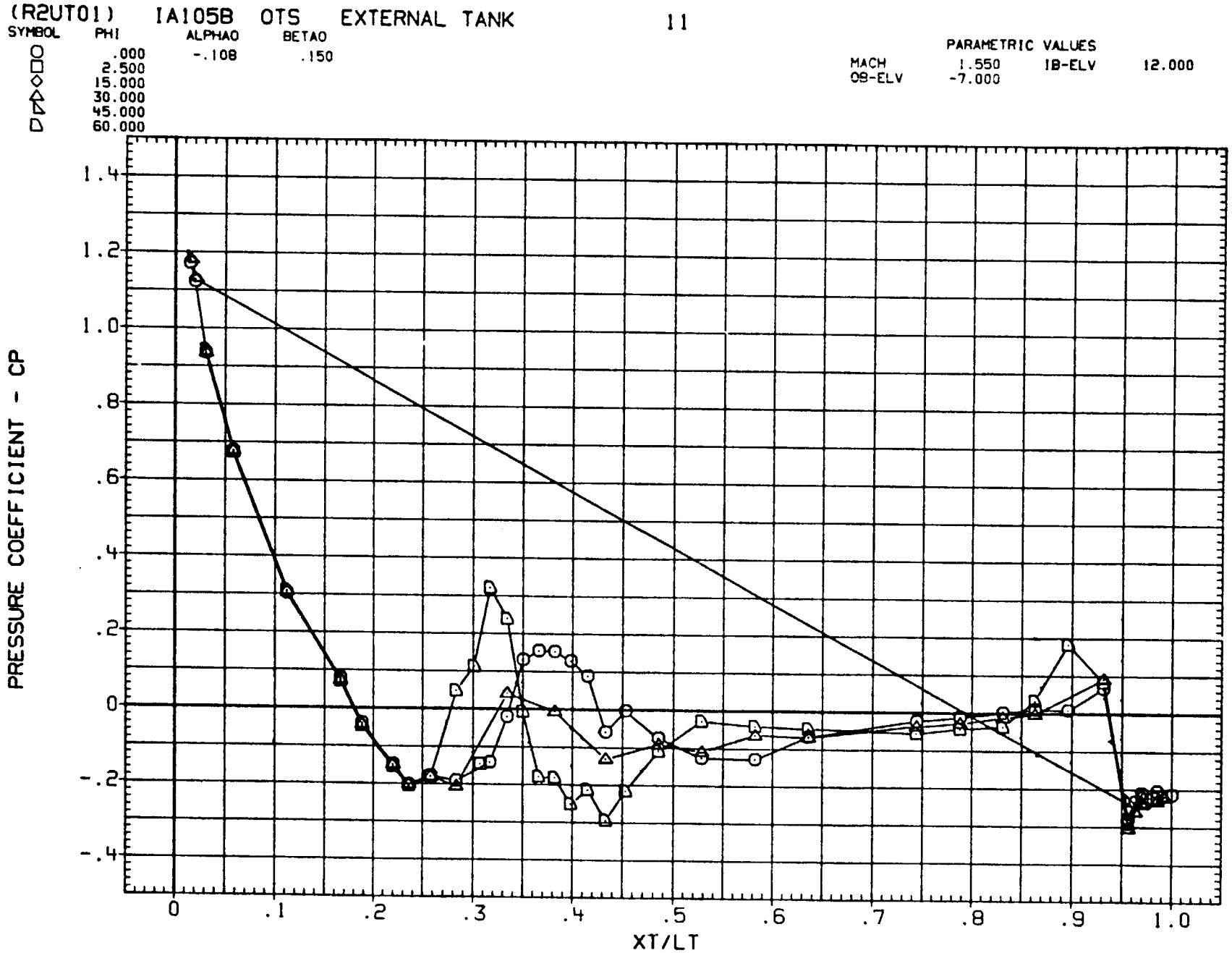

FIGURE 10. TYPICAL PRESSURE DISTRIBUTION - ET SURFACE

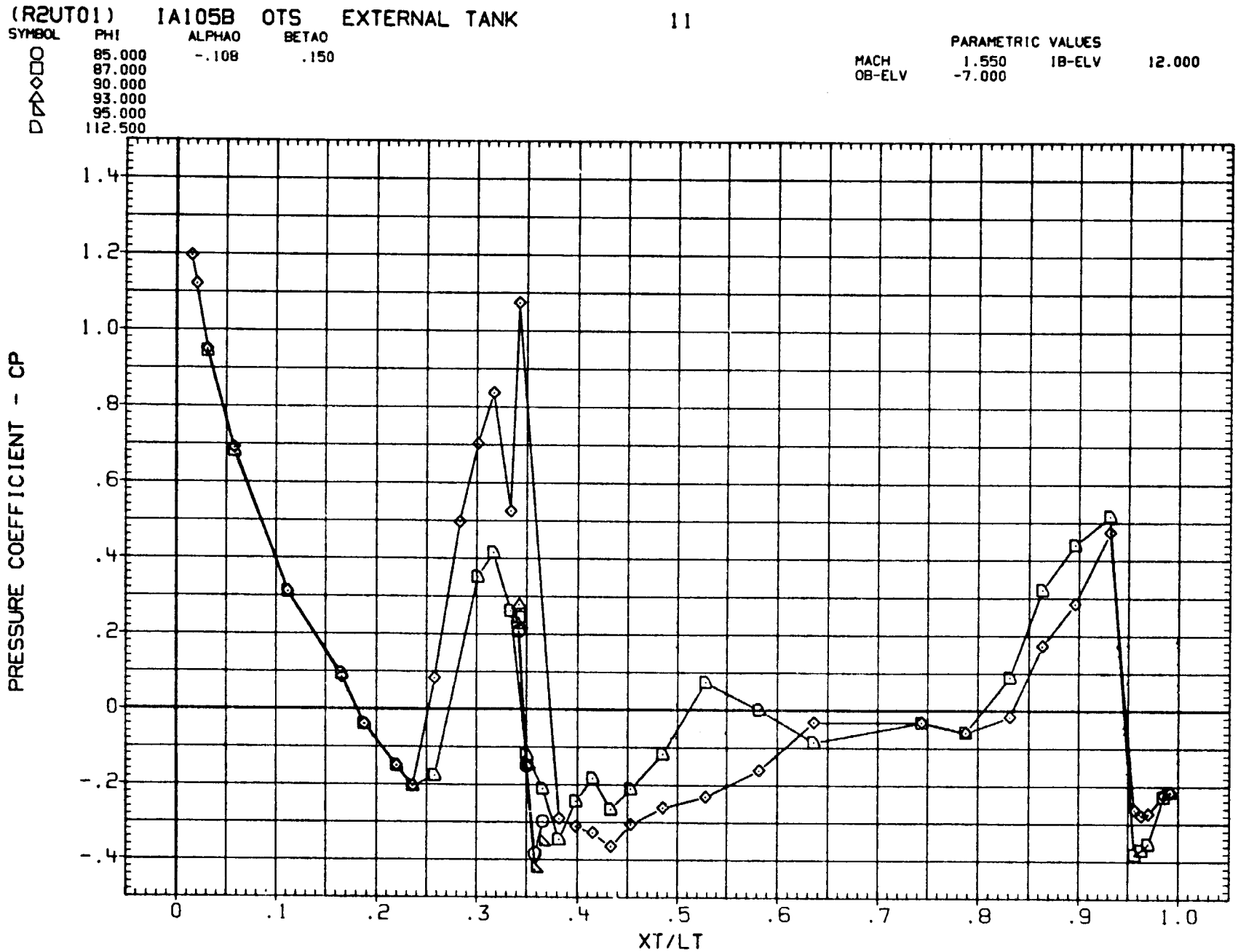

FIGURE 10. TYPICAL PRESSURE DISTRIBUTION - ET SURFACE

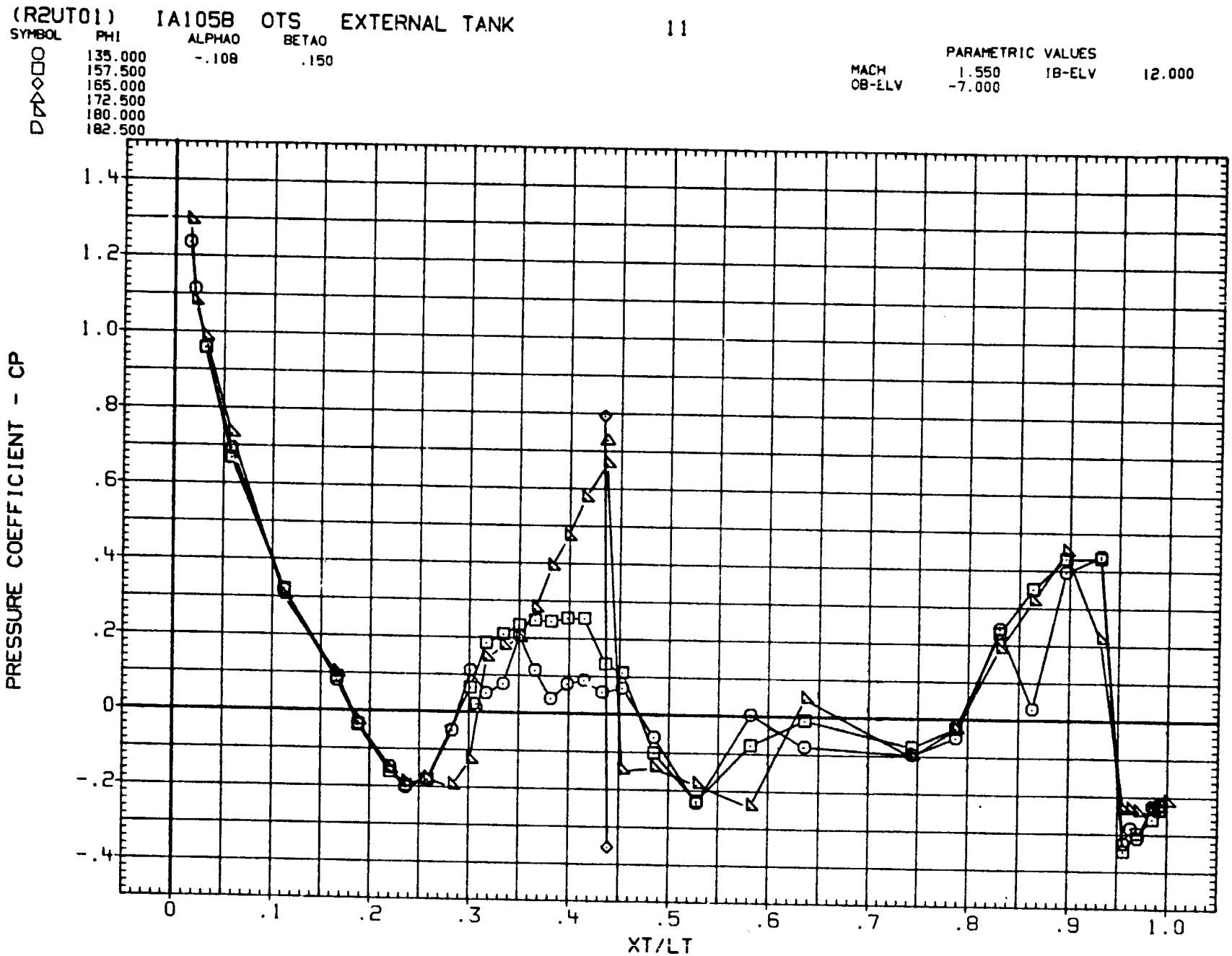

FIGURE 10. TYPICAL PRESSURE DISTRIBUTION - ET SURFACE

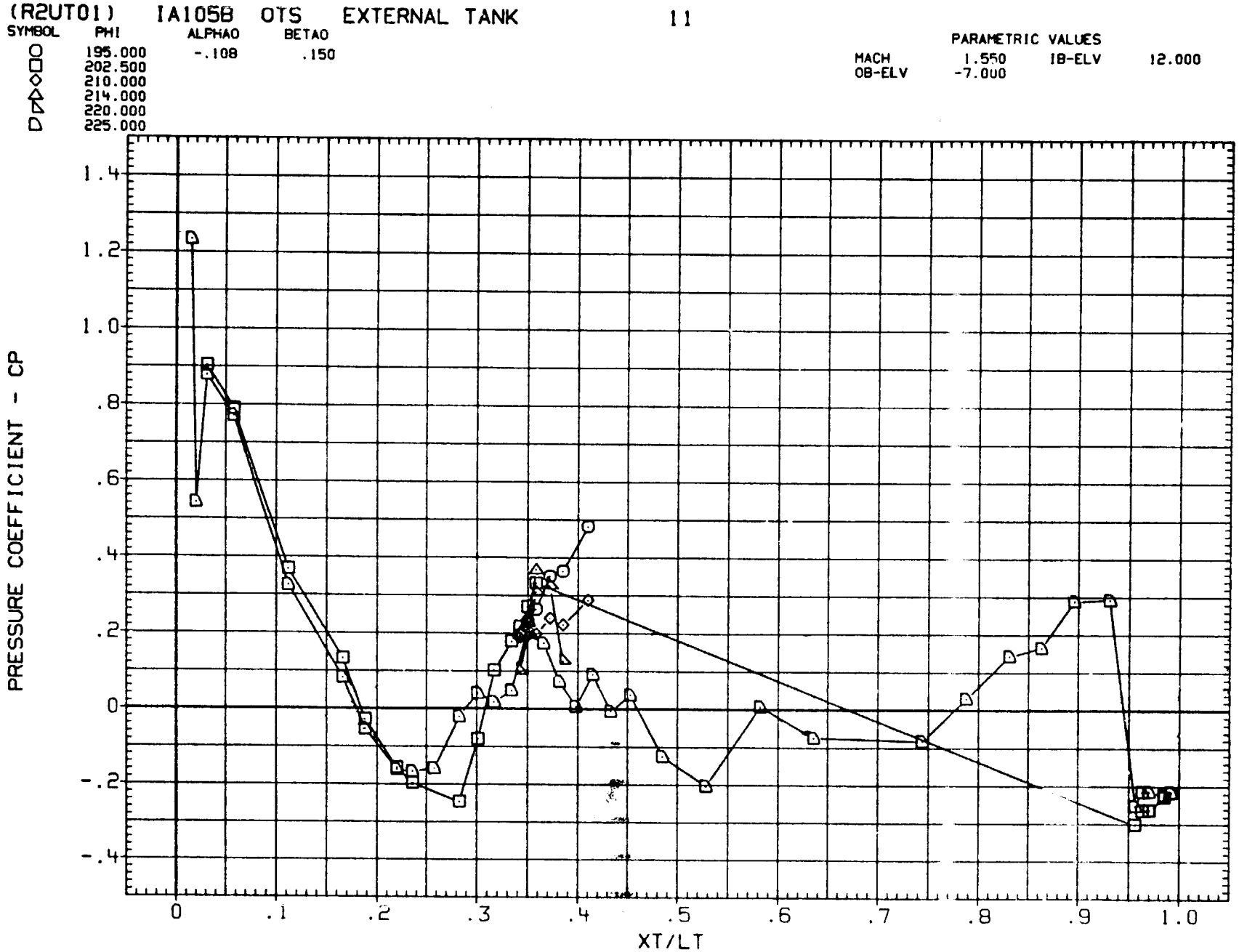

FIGURE 10. TYPICAL PRESSURE DISTRIBUTION - ET SURFACE

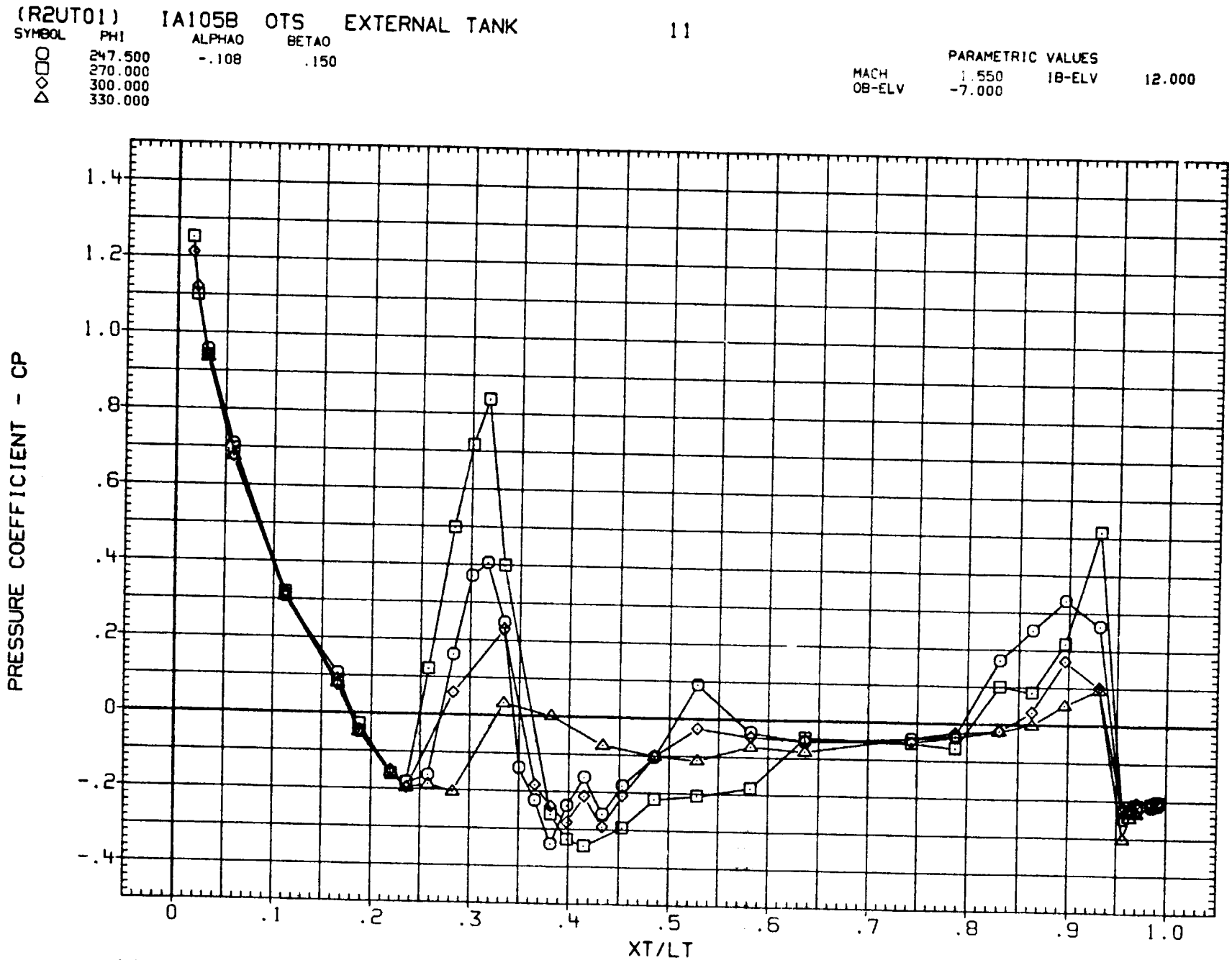

FIGURE 10. TYPICAL PRESSURE DISTRIBUTION - ET SURFACE

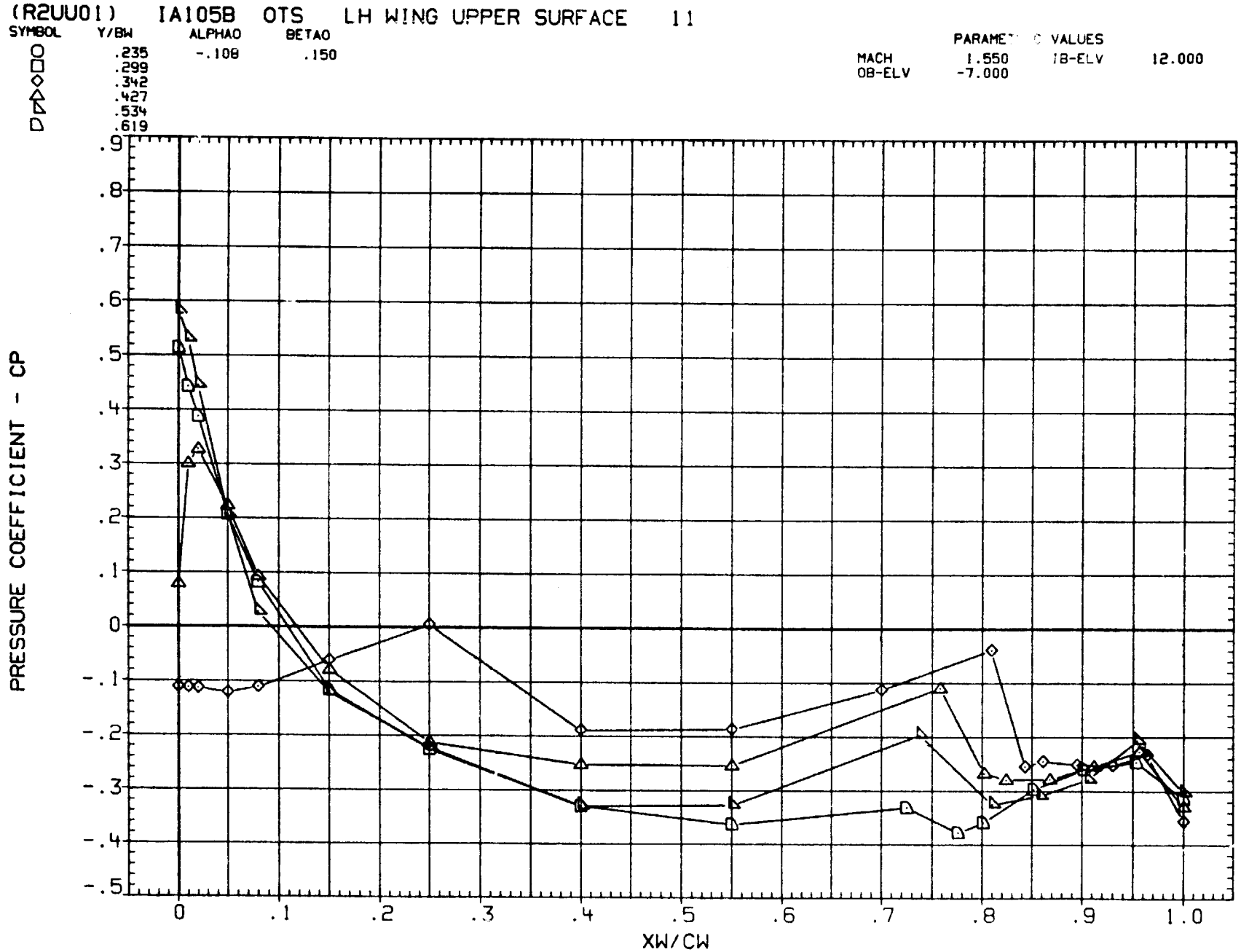

FIGURE 11. TYPICAL PRESSURE DISTRIBUTION - WING - UPPER SURFACE

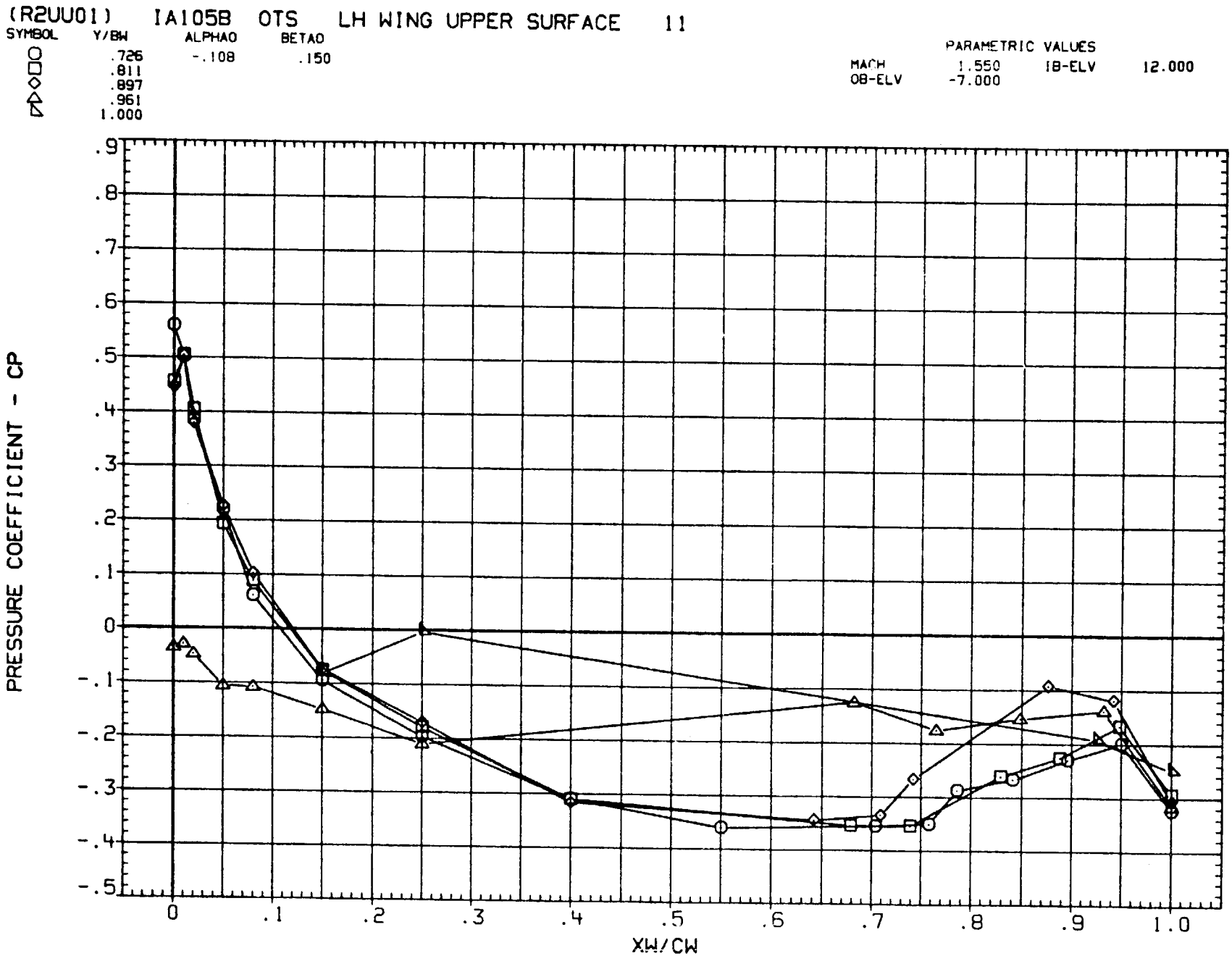

FIGURE 11. TYPICAL PRESSURE DISTRIBUTION - WING - UPPER SURFACE

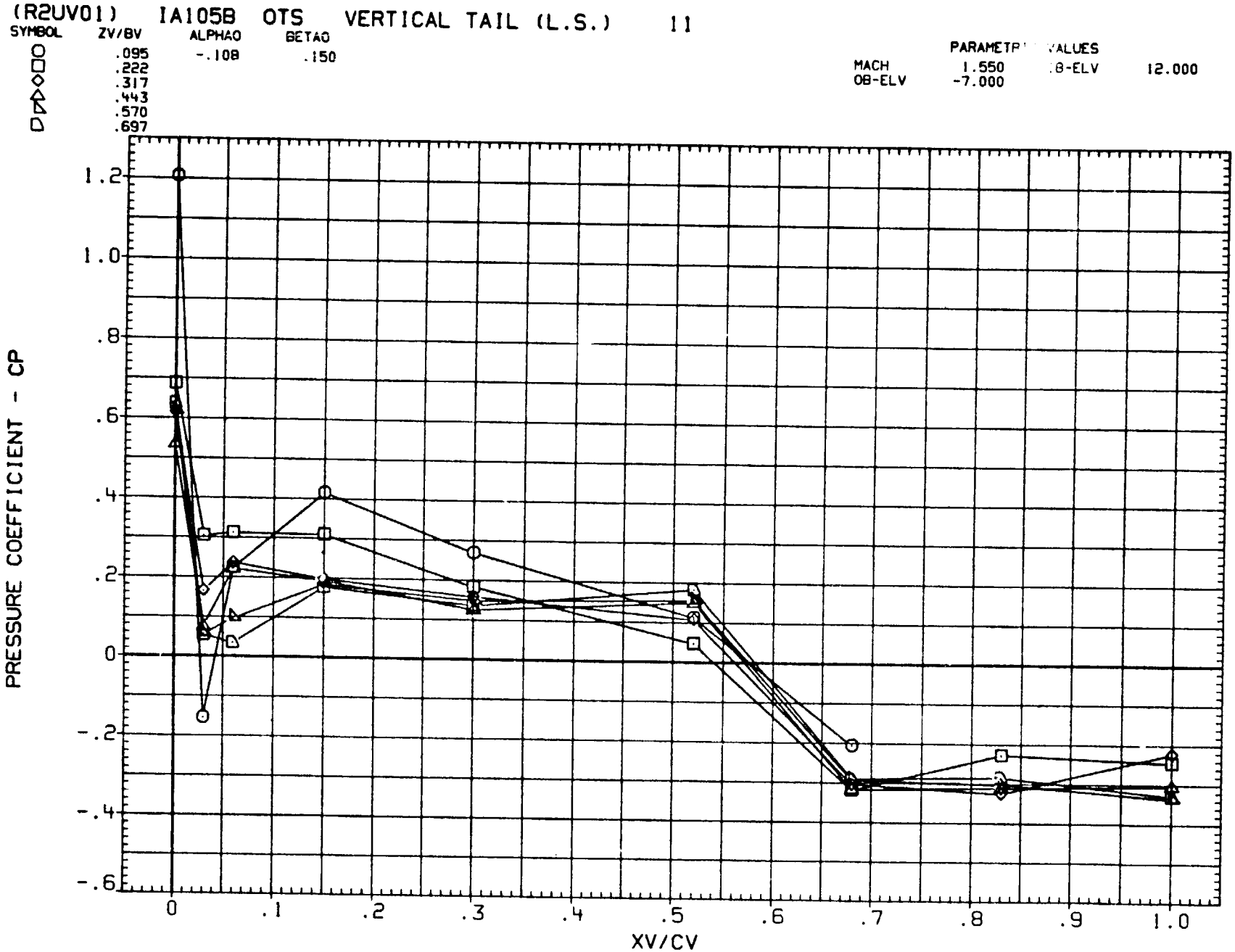

FIGURE 12. TYPICAL PRESSURE DISTRIBUTION - VERTICAL TAIL

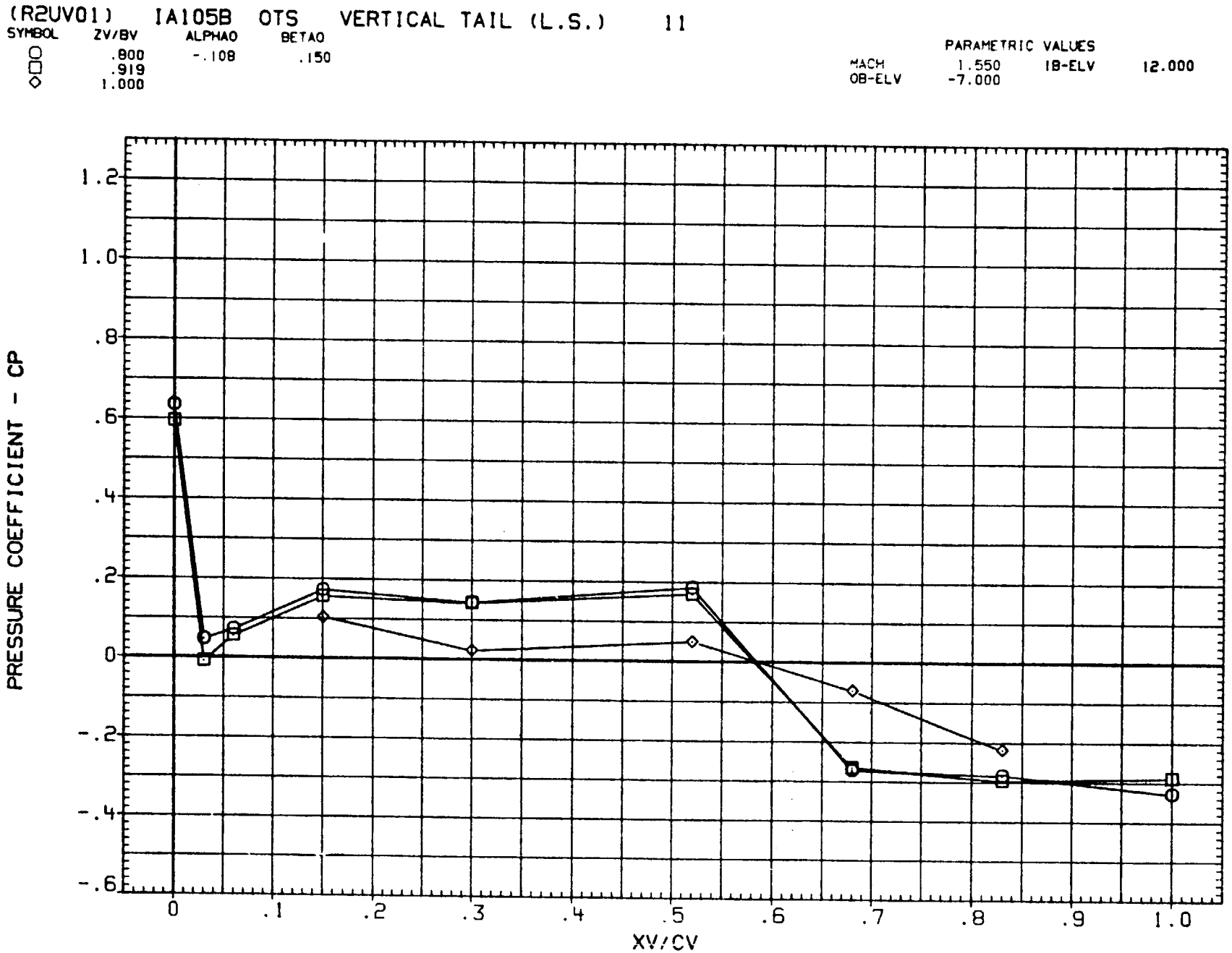

FIGURE 12. TYPICAL PRESSURE DISTRIBUTION - VERTICAL TAIL

APPENDIX

FORCE DATA TABULATIONS

DATA SET 1ST CHARACTER	PAGES
R	1-41
S	41-81
T	82-105
U	106-146

PRESSURE DATA TABULATIONS (VOLUME II - MICROFICHE ONLY)

DATA SET 4TH CHARACTER	DESCRIPTION	PRINT NORMAL PAGES	MICROFICHE PAGES
B	Orbiter Fuselage	1-1079	1-18
E	Orbiter Base	1080-1349	18-22
F	Body Flap - Lower Surface	1350-1565	22-25
G	Body Flap - Upper Surface	1566-1781	25-29
J	Miscellaneous	1782-1969	29-32
L	L.H. Wing - Lower Surface	1970-3614	32-58
M	E.T. Protuberances	3615-4908	58-79
N	SRB Protuberances	4909-5258	79-84
S	SRB (Left)	5259-5959	84-95
T	External Tank	5960-7334	95-117
U	L.H. Wing - Upper Surface	7335-8844	117-141
V	Vertical Tail	8845-8965	141-143