NASA
National Aeronautics and
Space Administration

Lyndon B. Johnson Space Center
Houston, Texas 77058

DMS-DR-2261
NASA-CR 167,364

VOLUME 1 OF 2

RESULTS OF TESTS USING A 0.36-SCALE MODEL (76-O)
OF THE SPACE SHUTTLE VEHICLE ORBITER IN THE
NASA/AMES RESEARCH CENTER 40 by 80-FOOT
SUBSONIC WIND TUNNEL (OA100)

SPACE SHUTTLE AEROTHERMODYNAMIC DATA REPORT

2559600004
D1706741
#42

Data Management SERVICES

HUNTSVILLE ELECTRONICS DIVISION CHRYSLER CORPORATION

May 1982

DMS-DR-2261
NASA-CR 167,364

VOLUME 1 OF 2

RESULTS OF TESTS USING A 0.36-SCALE MODEL (76-0) OF THE SPACE SHUTTLE VEHICLE ORBITER IN THE NASA/AMES RESEARCH CENTER 40 by 80-FOOT SUBSONIC WIND TUNNEL (OA100)

by

T. J. Dziubala, R. R. Burrows, and J. Marroquin
Rockwell International
Space Transportation System Development and Production Division

Prepared under NASA Contract Number NAS9-16283

by

Data Management Services
Chrysler Huntsville Electronics Division
Michoud Engineering Office
New Orleans, Louisiana 70189

for

Engineering Analysis Division

Johnson Space Center
National Aeronautics and Space Administration
Houston, Texas

WIND TUNNEL TEST SPECIFICS:

Test Number	ARC 40 x 80 T462
NASA Series Number:	0A100
Model Number	76-0
Test Dates:	June 2 through June 14, 1975
Occupancy:	272 hours

FACILITY COORDINATOR:

R.L. Maki
Mail Stop 247-1
Ames Research Center
Moffett Field, CA 94035

Phone: (415) 965-6677

AERODYNAMICS ANALYSIS ENGINEERS:

F. F. Fitzgerald
D. Duhnke
Mail Code AC07
Rockwell International
Space Division
12214 Lakewood Boulevard
Downey, CA 90241

Phone: (213) 922-1526

PROJECT ENGINEERS:

R.L. Maki
Mail Stop 247-1
Ames Research Center
Moffett Field, CA 94035

Phone (415) 965-6677

T. J. Dziubala
R. R. Burrows
Mail Code AC07
Rockwell International
Space Division
12214 Lakewood Boulevard
Downey, CA 90241

Phone: (213) 922-5353

DATA MANAGEMENT SERVICES:

Prepared by: **Liaison--** S. R. Houlihan
Operations-- C. R. Edwards

Reviewed by: G. W. Klug

Approved: J. L. Glynn, Manager
Data Operations

Concurrence: N.D. Kemp, Manager
Data Management Services

Chrysler Corporation Michoud Engineering Offices assumes no responsibility for the data presented other than display characteristics.

RESULTS OF TESTS USING A 0.36-SCALE MODEL (76-0) OF THE SPACE SHUTTLE VEHICLE ORBITER IN THE NASA/AMES RESEARCH CENTER 40 BY 80-FOOT SUBSONIC WIND TUNNEL (OA100)

by

T. J. Dziubala, R. R. Burrows, and J. Marroquin, Rockwell

ABSTRACT

A 0.36-scale model of the Space Shuttle Orbiter Vehicle 101, constructed to lines representing the 2689 trajectory, was tested in the NASA/Ames Research Center 40 x 80 foot subsonic wind tunnel. The test identification number was OA100 and the model was designated 76-0.

The objectives of the test were:

1.) To provide basic aerodynamic data in the TAEM flight region for vehicle 101 with simulated TPS.

2.) To obtain subsonic vehicle 5 aerodynamic characteristics.

3.) To obtain elevon, rudder/speedbrake, and body flap effectiveness with vehicle 101 seals and gaps.

4.) To obtain body flap and rudder/speedbrake hinge moments with seals.

5.) To obtain flight test and side air data probe calibration, and

6.) To evaluate Reynold's number effect.

The model was tested under conditions simulating free air at Mach numbers between .112 and .256 with Reynold's number between 11.8 x 10^6 and 26.0 x 10^6 based on mean aerodynamic chord. Runs were made in pitch

and yaw in the ranges $-5^{\circ} \leq \alpha \leq 25^{\circ}$ and $-13^{\circ} \leq \beta \leq 20^{\circ}$, respectively.

A total of 190 runs were made in 272 occupancy hours, starting on June 2, 1975 and ending June 14, 1975.

TABLE OF CONTENTS

	Page
ABSTRACT	iii
INDEX OF MODEL FIGURES	3
INTRODUCTION	5
NOMENCLATURE	7
REMARKS	17
CONFIGURATIONS INVESTIGATED	18
INSTRUMENTATION	21
TEST FACILITY DESCRIPTION	24
TEST PROCEDURE	26
DATA REDUCTION	28
REFERENCES	37
TABLES	
I. TEST CONDITIONS	38
II. DATA SET/RUN NUMBER COLLATION SUMMARY	39
III. MODEL DIMENSIONAL DATA	50
IV. BASE PRESSURE AREAS	73
V. STRUT TARE AND INTERFERENCE ADJUSTMENTS TO 40 X 80 COMPUTED DATA BASED ON TEST OA159 RESULTS	74
VI. CONTROL SURFACE CONSTANTS	75
VII. BLOCKING CORRECTIONS	76
FIGURES	
MODEL	77

TABLE OF CONTENTS (Concluded)

		Page
APPENDIX		
TABULATED SOURCE DATA		101
DATASET 1ST CHARACTER		
VOLUME 1	A	1-29
	B	30-126
	C	127-194
	D	195-291
	E	292-388
	F	389-417
	G	418-446
	H	447-543
	I	544-640
VOLUME II		
	J	641-737
	K	738-834
	L	835-902
	M	903-970
	P	971-1038
	Q	1039-1091
	R	1092-1203
	Z	1204-1300

INDEX OF MODEL FIGURES

Figure	Title	Page
1.	Axis systems	77
2.	Model figures	
	a. Orbiter Basic Dimensions	78
	b. Model Nomenclature	79
	c. 0.36-Scale 92AF System Flight Test Air Data Boom	80
	d. Pressure Hook-up For Flight Test Probe (FT)	81
	e. 0.36-Scale of 874AU Air Data Sensor (Left Side Mounted) 00856-1947	82
	f. 0.36-Scale of 874AU Air Data Sensor (Right Side Mounted) 00856-1948	83
	g. Pressure Hook-up for Air Data Sensors (ADS)	84
	h. Pressure Hook-up and Location of Cross-flow Taps	85
	i. Base Pressure Locations	86
	j. Alternate ADS System	87
	k. Vertical Tail/Speedbrake Pressure Tap Locations	88
	l. Model Control Console Layout	89
	m. Body Flap and Speedbrake Hinge Moment Design	90
	n. Body Flap Deflection and Hinge Moment Definition	91
	o. Definition of Rudder/Speedbrake Deflections and Hinge Moments	92
	p. Elevon and Body Flap Deflections	93
	q. Installation of Model 76-0 in the ARC 40 x 80 Foot Wind Tunnel (Side View)	94

INDEX OF MODEL FIGURES (Concluded)

Figure	Title	Page
2.	Model figures (Continued)	
	r. Installation of Model 76-0 in the ARC 40 x 80 Foot Wind Tunnel (Rear View)	95
	s. Schematic Representation of the Ames 40 x 80 Foot Wind Tunnel Balance System	96
3.	Model photographs	
	a. Front View of Model 76-0 in the ARC 40 x 80 Foot Test Section with Nose Gear and Doors Fully Deployed (All probes off)	97
	b. Aft View of Model 76-0 in the ARC 40 x 80 Test Section with all Control Surfaces Positively Deflected. (ADS probes and FT probe on)	98
	c. Front-side View of Model 76-0 in the ARC 40 x 80 Foot Test Section with all Air Data Probes On	99
	d. Aft View of Model 76-0 in the ARC 40 x 80 Foot Test Section with Fully Deployed Speed Brakes and Nose Landing Gear	100

INTRODUCTION

This report contains information pertaining to wind tunnel test OA100 using model 76-0 in the NASA/Ames Research Center 40 by 80 foot subsonic wind tunnel. The test was conducted on a two shift basis from June 2. 1975 through June 14, 1975, for a total of 272 occupancy hours.

The objectives of the tests were to:

1. Provide basic aerodynamic data in the TAEM flight region for vehicle 101 with simulated TPS.
2. Obtain subsonic vehicle 5 aerodynamic characteristics.
3. Obtain elevon, rudder/speedbrake, and body flap effectiveness with vehicle 101 seals and gaps.
4. Obtain body flap and rudder/speedbrake hinge moments with seals.
5. Obtain flight test and side air data probe calibrations, and
6. Evaluate Reynold's number effect.

The model number 76-0 was built to VL70-000140"C" inner mold lines with removable reinforced foam plastic skin representing the Thermal Protection System (TPS) of Orbiter Vehicle 101 (OV101) for the 2689 trajectory. The outer surface was grooved to simulate the recesses between adjacent refractory tiles.

Tests were conducted under conditions simulating free air at Mach numbers between .112 and .256 and Reynold's numbers between 11.8×10^6 and 26.0×10^6 based on mean aerodynamic chord. Runs were made in pitch and yaw in the ranges $-5^\circ \leq \alpha \leq 25^\circ$ and $-13^\circ \leq \beta \leq 20^\circ$.

Measured quantities during the tests included tunnel conditions, model attitude, control surface positions, the overall six-component

of forces and moments acting on the model, pressures related to the flight test and ADS probes, including flush mounted ADS pressures, fuselage base and speedbrake pressures, and hinge moments on the four individual speedbrake panels and body flap.

A total of 190 runs were made in 272 occupancy hours, starting on June 2, 1975 and ending on June 14, 1975.

NOMENCLATURE

Body-Axis System

SYMBOL	MNEMONIC	DEFINITION
C_N	CN	normal-force coefficient; $\frac{\text{normal force}}{qS}$
C_A	CA	axial-force coefficient; $\frac{\text{axial force}}{qS}$
C_Y	CY	side-force coefficient; $\frac{\text{side force}}{qS}$
C_{A_b}	CAB	base-force coefficient; $\frac{\text{base force}}{qS}$ $-A_b(p_b - p_\infty)/qS$
C_{A_f}	CAF	forebody axial force coefficient, $C_A - C_{A_b}$
C_m	CLM	pitching-moment coefficient; $\frac{\text{pitching moment}}{qS\ell_{REF}}$
C_n	CYN	yawing-moment coefficient; $\frac{\text{yawing moment}}{qSb}$
C_ℓ	CBL	rolling-moment coefficient; $\frac{\text{rolling moment}}{qSb}$
		Stability-Axis System
C_L	CL	lift coefficient; $\frac{\text{lift}}{qS}$
C_D	CD	drag coefficient; $\frac{\text{drag}}{qS}$
C_{D_b}	CDB	base-drag coefficient; $\frac{\text{base drag}}{qS}$
C_{D_f}	CDF	forebody drag coefficient; $C_D - C_{D_b}$
C_Y	CY	side-force coefficient; $\frac{\text{side force}}{qS}$
C_m	CLM	pitching-moment coefficient; $\frac{\text{pitching moment}}{qS\ell_{REF}}$
C_n	CLN	yawing-moment coefficient; $\frac{\text{yawing moment}}{qSb}$
C_ℓ	CSL	rolling-moment coefficient; $\frac{\text{rolling moment}}{qSb}$
L/D	L/D	lift-to-drag ratio; C_L/C_D
L/D_f	L/DF	lift to forebody drag ratio; C_L/C_{D_f}

NOMENCLATURE (Continued)

SYMBOL	MNEMONIC	DEFINITION
	BAR	atmospheric pressure, inches of mercury
C_{pi}	CPI	pressure coefficient at tap i, i = 1 to 31. 68 to 110
$E_{\alpha_{ADC}}$	EAADC	equivalent voltage output of α flow angle vane on full scale flight test probe to the Air Data Computer, volts
$E_{\alpha_{DISP}}$	EADISP	equivalent voltage output of α flow angle vane on full scale flight test probe to the cockpit display, volts
$E_{\beta_{ADC}}$	EBADC	equivalent voltage output of β flow angle vane on full scale flight test probe to the Air Data Computer, volts
$E_{\beta_{DISP}}$	EBDISP	equivalent voltage output of β flow angle vane on full scale flight test probe to the cockpit display, volts
$E_{o\alpha}$	AVOLT	output of FT probe α pot, volts
$E_{o\alpha ADC}$		value of $E_{\alpha ADC}$ for vane aligned with probe centerline (2.30 volts)
$E_{o\alpha DISP}$		value of $E_{\alpha DISP}$ for vane aligned with probe centerline (3.30 volts)
$E_{o\beta}$	BVOLT	output of FT probe β pot, volts
$E_{o\beta_{ADC}}$		value of $E_{\beta_{ADC}}$ for vane aligned with probe centerline (5.00 volts)
$E_{o\beta_{DISP}}$		value of $E_{\beta_{DISP}}$ for vane aligned with probe centerline (7.50 volts)
$f_{\alpha_{ADS}}$		Rosemount, Incorporated calibrations of 0.36-scale left and right side ADS probes for α flow angle
$f_{\alpha_{F}}$		Rosemount, Incorporated calibration of 0.36-scale flight test α flow angle probe, deg.

NOMENCLATURE (Continued)

SYMBOL	MNEMONIC	DEFINITION
$^{f}\beta_{F}$		Rosemount, Incorporated calibration of 0.36-scale flight test β flow angle probe, deg.
$^{i}F_{\alpha}$		incidence of flight test probe ℄ to model FRL - positive nose-up, deg.
$^{i}F_{\beta}$		incidence of flight test probe ℄ to model plane of symmetry - positive for nose of probe to left of model ℄, deg.
$K_{\alpha_{ADC}}$		electrical output of α flow angle pot on full scale flight test probe to Air Data Computer per degree of vane deflection (0.360 volts/deg.)
$K_{\alpha_{DISP}}$		electrical output of α flow angle pot on full scale flight test probe to cockpit display per degree of vane deflection (0.5560 volts/deg.)
$K_{\beta_{ADC}}$		electrical output of β flow angle pot on full scale flight test probe to Air Data Computer per degree of vane deflection (0.225 volts/deg.)
$K_{\beta_{DISP}}$		electrical output of β flow angle pot on full scale flight test probe to cockpit display per degree of vane deflection (0.350 volts/deg.)
$K_{p_{F,A}}$	KPF,A	tunnel static pressure correction factor at forward or aft end of model, respectively
$K_{pt_{F,A}}$	KPTF,A	tunnel total pressure correction factor at forward or aft end of model, respectively
$K_{q_{F,A}}$	KQF,A	tunnel dynamic pressure correction factor = $(K_p + K_{pt})_{F,A}$ at forward or aft end of model, respectively
$K_{\delta_{BF}}$		body flap deflection pot calibration factor, deg./mv
$K_{\delta_{EX}}$		elevon panel (X = 1, 2, 3, 4) deflection pot calibration factor, deg./mv
$K_{\delta_{SX}}$		speed brake panel (X = 1, 2, 3, 4) deflection pot calibration factor, deg./mv

NOMENCLATURE (Continued)

SYMBOL	MNEMONIC	DEFINITION
M	MACH	tunnel Mach number
p	P	tunnel freestream static pressure, lb/ft^2
pa_l	PAL	pressure measured at lower tap of ADS probe, lb/ft^2
patm	PATM	atmospheric pressure, lb/ft^2
pau	PAU	pressure measured at upper tap of ADS probe, lb/ft^2
pfa	PFA	pressure at α tap of FT probe, lb/ft^2
pfb	PFB	pressure at β tap of FT probe, lb/ft^2
pi	PI	pressure at tap i, lb/ft^2
	PSA/P	ratio of average R.H. and L.H. ADS probe static pressure to freestream static pressure
psf	PSF	pressure measured at static tap of FT probe, lb/ft^2
	PSFDEC	flight test probe static pressure decrement
psf/p	PSF/P	ratio of flight test probe static pressure to freestream static pressure
	PSL/P	ratio of L.H. ADS probe static pressure to freestream static pressure
	PSR/P	ratio of R.H. ADS probe static pressure to freestream static pressure
psp	PSP	pressure at tunnel test section static pressure ring, lb/ft^2
psx	PSX	pressure measured at static pressure tap of ADS probe lb/ft^2. L, R, A indicate left probe, right probe or average of left and right probe, respectively.

NOMENCLATURE (Continued)

SYMBOL	MNEMONIC	DEFINITION
	PSXDEC	ADS probe static pressure decrement. X = L, left probe; R, right probe: A, average of left and right probes
pt	PT	tunnel total pressure, lb/ft^2
ptf	PTF	pressure measured at total tap of FT probe, lb/ft^2
	PTFDEC	flight test probe total pressure decrement
	PTF/PT	ratio of FT probe total pressure to freestream total pressure
ptref	PTREF	pressure at tunnel total ring, lb/ft^2
	PTX	pressure measured at center tap of ADS probe, lb/ft^2. L, R, A indicates left probe, right probe or average of left and right probes, respectively.
	PTXDEC	ADS probe total pressure decrement. X = L, left probe; R, right probe; A, average of left and right probes.
	PTX/PT	ADS probe total pressure ratio to freestream total pressure. X = L, left probe; R, right probe; A, average of left and right probes.
	QA	tunnel incompressible dynamic pressure at aft end of model, lb/ft^2
q_c	QCOMP	tunnel freestream compressible dynamic pressure, lb/ft^2
	QCA/QC	average of L.H. and R.H. ADS probe compressible dynamic pressure ratioed to freestream compressible dynamic pressure
q_{cf}	QCF	compressible dynamic pressure measured by FT probe, lb/ft^2

NOMENCLATURE (Continued)

SYMBOL	MNEMONIC	DEFINITION
	QCF/QC	ratio of flight test probe compressible dynamic pressure to freestream compressible dynamic pressure
	QCL/QC	ratio of L.H. ADS probe to freestream compressible dynamic pressure
	QCR/QC	ratio of R.H. ADS probe to freestream compressible dynamic pressure
q_{cx}	QCX	compressible dynamic pressure measured by ADS probe, lb/ft^2, X = L, R, or A
q_{DI}	Q	tunnel freestream dynamic pressure from Datex I data, lb/ft^2
q_F	QF	tunnel incompressible dynamic pressure at front end of model, lb/ft^2
	Q*A/QC	average of L.H. and R.H. ADS probe total pressure - freestream static pressure ratioed to freestream compressible dynamic pressure
	Q*F/QC	flight test probe total pressure - freestream static pressure ratioed to freestream compressible dynamic pressure
	Q*L/QC	L.H. ADS probe total pressure - freestream static pressure ratioed to freestream compressible dynamic pressure
	Q*R/QC	R.H. ADS probe total pressure - freestream static pressure ratioed to freestream compressible dynamic pressure
$q_{SV1,2}$		incompressible dynamic pressure based on measurements of scanivalves 1 and 2, respectively, lb/ft^2
q'_u	UQ	approximate tunnel uncorrected dynamic pressure, lb/ft^2
	RAA	1/2 [RAL + RAR]

NOMENCLATURE (Continued)

SYMBOL	MNEMONIC	DEFINITION
	RAF	flight test probe angle-of-attack parameter
	RAL	L.H. ADS probe angle-of-attack parameter
	RAR	R.H. ADS probe angle-of-attack parameter
	RBF	flight test probe angle-of-sideslip parameter
R/ft.	RN/L	tunnel unit Reynolds number, million per foot
Run No.	RUN	run number
$R_{\delta_{BF}}$		reading of body flap deflection pot for any setting, mv
$R_{\delta_{BF_o}}$		reading of body flap deflection pot corresponding to zero setting, mv
$R_{\delta_{EX}}$		reading of deflection pot for elevon panel X = 1, 2, 3, 4 at any setting, mv
$R_{\delta_{SEX_o}}$		reading of deflection pot for elevon panel X = 1, 2, 3, 4 corresponding to zero deflections, mv
$R_{\delta_{SX}}$		reading of deflection pot for speed brake panel X = 1, 2, 3, 4 at any setting, mv
$R_{\delta_{SX_o}}$		reading of deflection pot for speed brake panel X = 1, 2, 3, 4 corresponding to zero deflection, mv
T_T		tunnel average total temperature, ^oF
X_{CG}		distance from orbiter nose (IML) to model moment reference center ($0.65\ell_B$, 25.160 ft.)
X_{CP}		model center of pressure location in normal force direction, relative to nose, ft.
X_{CP}/ℓ_B	XCP/L	normal force center of pressure
α	ALPHA	vehicle angle-of-attack WRT FRL, deg.

NOMENCLATURE (Continued)

SYMBOL	MNEMONIC	DEFINITION
α_{ADS_A}	AAP	average of α_{ADS_L} and α_{ADS_R}, deg.
α_{ADS_A}/α	AAP/A	average ADS probe α/α true
α_F	AF	flight test probe indicated angle-of-attack, WRT FRL, deg.
α_F/α	AF/A	flight test probe indicated α/α true
α_{FT}	AFP	FT probe local angle-of-attack WRT probe ℄, deg.
α_{ADS_L}	ALP	α measured by L.H. ADS probe WRT probe ℄, deg.
α_{ADS_L}/α	ALP/A	α of L.H. ADS probe $/\alpha$ true
α_{ADS_R}	ARP	α measured by R.H. ADS probe WRT probe ℄, deg.
α_{ADS_R}/α	ARP/A	α of R.H. ADS probe $/\alpha$ true
α_u	ALPHAU	uncorrected vehicle angle-of-attack, deg.
α_x	AX	ADS probe indicated angle-of-attack WRT FRL, deg, X = L, R, or A
β	BETA	vehicle angle-of-sideslip
β_F	BF	flight test probe indicated sideslip angle WRT FRL, deg.
β_F/β	BF/B	flight test probe indicated β/β true
δ_a	AILRON	average aileron deflection angle, deg.
δ_{BF}	BDFLAP	angular deflection of body flap, deg.
δ_{BF_o}		prerun angular deflection of body flap, deg.
δ_e	ELEVON	average angular deflection of elevon panels, deg.
δ_{E_1}	DELE1	angular deflection of L.H. outboard elevon, deg.
δ_{E_2}	DELE2	angular deflection of L.H. inboard elevon, deg.

NOMENCLATURE (Continued)

SYMBOL	MNEMONIC	DEFINITION
δ_{E_3}	DELE3	angular deflection of R.H. inboard elevon, deg.
δ_{E_4}	DELE4	angular deflection of R.H. outboard elevon, deg.
δ_R	RUDDER	rudder deflection angle, deg.
δ_{S1}	DELS1	angular deflection of speed brake panel No. 1, deg.
δ_{S2}	DELS2	angular deflection of speed brake panel No. 2, deg.
δ_{S3}	DELS3	angular deflection of speed brake panel No. 3, deg.
δ_{S4}	DELS4	angular deflection of speed brake panel No. 4, deg.
δ_{SB}	SPDBRK	total speed brake deflection angle, deg.
δ_{SX}		angular deflection of speed brake panel (X = 1, 2, 3, 4) as measured in a water plane, deg.
δ'_{SX}		angular deflection of speed brake panel (X = 1, 2, 3, 4) as measured in a plane normal to the hingeline, deg.
δ'_{SX_o}		prerun angular deflection of speed brake panel (X = 1, 2, 3, 4) as measured in a plane normal to the hingeline, deg.
ΔC_{D_B}		stability axes drag component of C_{A_B}
$\Delta C_{D_{\delta BF}}$		incremental drag coefficient blocking correction due to body flap deflection
$\Delta C_{D_{\delta E}}$		incremental drag coefficient blocking correction due to elevon deflection
$\Delta C_{D_{\delta SB}}$		incremental drag coefficient blocking correction due to speed brake deflection
ΔC_{D_T}	DCDTI	incremental drag coefficient strut tare and interference correction (Table V)
ΔC_{L_T}	DCLTI	incremental lift coefficient strut tare and interference correction (Table V)

NOMENCLATURE (Concluded)

SYMBOL	MNEMONIC	DEFINITION
ΔC_{M_T}	DCMTI	incremental pitching moment coefficient strut tare and interference correction (Table V)
$\frac{\Delta pi}{q}$	DP/QI	general differential pressure ratioed to q for pressure tap numbers i = 50 - 67; see Figures 2d, 2g and 2h
Λ		sweep angle of speed brake hingeline, deg.
C_{D_o}		minimum drag coefficient for blocking corrections (See Table VII)
C_{L_o}		lift coefficient at minimum drag for blocking corrections (See Table VII)
$C_{L(Final)}$	CLTI	orbiter longitudinal aerodynamic coefficients with OA159 strut tare and interference corrections applied
$C_{D(Final)}$	CDTI	
$C_{m(Final)}$	CMTI	
	Q1	scanivalve 1 reference dynamic pressure, psfa
	Q2	scanivalve 2 reference dynamic pressure, psfa
	Q6	Q_6 = QF ≡ tunnel incompressible dynamic pressure at front end of model, lb/ft^2
	QCOR	dynamic pressure corrected for wind tunnel blockage
	DQCQU	ratio of incremental dynamic pressure correction to uncorrected dynamic pressure

REMARKS

Speed brake and body flap hinge moment data have not been presented, due to extraneous loads introduced by friction in the bearing systems.

The limitation of the 0-999 count range of the Datex II data system on resolution of Air Data System probe pressure measurements was not appreciated until late in the test. The probe data of runs 2 - 175 is of marginal accuracy due to the combination of low gains and low dynamic pressure. Runs 176 - 190 were made specifically to obtain improved resolution of these data by means of increased gain settings made possible by reorganization of pressures on the Datex II Channels and by operating at the maximum possible dynamic pressure.

CONFIGURATIONS INVESTIGATED

The test article was a 0.36-scale replica of the Space Shuttle Orbiter Flight Test Vehicle 101 (OV101) and was designated model 76-0 (see Figure 2a).

Basic model construction is to the vehicle structural inner mold line (IML) in compliance with Rockwell International drawing VL70-000140 "C". Removable foam-plastic skins which simulate the TPS thickness distribution required for the 2689 re-entry trajectory provide the outer mold line (OML). Grooves were cut into the skins to represent the space between the refractory tiles under heated conditions.

The following nomenclature was used to designate the primary orbiter components tested during OA100:

OV101"B" = B_{69} C_{14} DT_1 E_{54} F_{14} FD_1 FD_2 HG_1 FR_{12} G_{18} HA_1 M_{18} N_{92} N_{94} N_{107} PR_1 PR_5 PR_6 R_{18} V_{23} VT_1 VT_2 W_{129}

Symbol	Component	Definition
B_{69}	Body	Same as body B_{64}, which includes the forebody, mid-fuselage and aft-fuselage; except the mid-body TPS has been removed from F.S. 562 to 1307 with a 5° ramp to blend with IML.
C_{14}	Canopy	Enclosure on forebody which includes windshields and observation windows
DT_1	Duct	Ram air duct for smoke removal system
E_{54}	Elevon	Four individual movable panels on the wing for pitch and roll control
F_{14}	Body Flap	Movable surface on the bottom, aft fuselage for pitch control

CONFIGURATIONS INVESTIGATED (Continued)

Symbol	Component	Definition
FD_1	Flapper Door	Doors which span the gap between the upper wing surface and the inboard elevons
FD_2	Flapper Door	Doors which span the gap between the upper wing surface and the outboard elevons
FR_{12}	Fairing	Hinge fairings for the escape hatch doors on upper forebody (total of four)
G_{18}	Landing Gear	Nose landing gear and gear doors with associated struts and retracting hardware
HA_1	Hatch	Main ngress/egress crew hatch on left side of forebody
HG_1	Hinges	Hinges for the cargo bay doors. Thirteen on each side of the mid-fuselage
M_{18}	OMS POD	Orbital maneuvering system pods on upper aft body
N_{92}	Nozzles	Laval-bell shaped nozzle on the aft end of each OMS pod
N_{94}	Nozzles	Three nozzles on aft-fuselage comprising the main propulsion system (MPS).
N_{107}	Nozzles	Cavities simulating the forward RCS nozzles on the sides and upper surfaces of the fuselage forebody
PR_1	Probe	Flight test nose boom and probe on forebody (FT)
PR_5	Probe	Air data system probe which is strut mounted on the right side of the orbiter forebody
PR_6	Probe	Air data system probe which is strut mounted on the left side of the orbiter forebody
R_{18}	Rudder/Speed Brake	Four individual movable panels which are located on the vertical tail and are used for yaw control and energy management

CONFIGURATIONS INVESTIGATED (Concluded)

Symbol	Component	Definition
V_{23}	Vertical Tail	Double wedge-shaped airfoil mounted in a dorsal position on the aft fuselage
VT_1	Vent	Oval-shaped RCS vent located on each side of the forebody
VT_2	Vent	Oval-shaped cabin vent located on each side of the forebody
W_{129}	Wing	"Double-Delta" shaped primary lifting surface

The above nomenclature is depicted in Figure 2b. Component dimensions are given in Table III.

INSTRUMENTATION

Six-component forces and moments acting on the model were measured by the external balance system of the facility which is described in the Test Facility Description section of this report.

On-board model instrumentation consisted of the following:

1. Air data pressures measured on individual differential pressure transducers,
2. Model pressures measured on scanivalves,
3. Speedbrake and body flap hinge moments, and
4. Control surface position indicators

The first group of measurements were FT, ADS and cross-flow pressures measured on Statham Model PM6±5.0 psid pressure transducers. These transducers were supplied by Rockwell. The flight test probe (FT) was designed and manufactured by Rosemount, Inc., with the capability of measuring the pitot and static pressures and pressures indicative of angles of attack and sideslip. Basic design is depicted in Figure 2c and the pressure hook-up is shown in Figure 2d. Two air data sensor (ADS) probes were installed on the left and right sides of the model. These measured pitot/static pressure and pressures relative to angle-of-attack. Figures 2e and 2f show the design of the probes, and Figure 2g shows the pressure hook-up schematic used for both probes.

The cross-flow taps were two flush static pressure orifices, located on either side of the fuselage forebody to check the model yaw alignment to the freestream. The locations and hook-up of these taps to the PM6 transducer is shown in Figure 2h.

All other model pressures were measured on two ARC-supplied, model S scanivalves located near the right-hand fuselage access door. ± 5.0 psid transducers, referenced to tunnel wall static pressure, were employed in the valves. Thirty-one flush static base pressure orifices were located on the left hand side of the model in the aft surfaces of the OMS/RCS pod and nozzle, fuselage heat shield, MPS nozzles, and the upper and lower surfaces of the body flap. Figure 2i depicts tap numbers and exact locations of all base pressures, and the four flush-mounted static pressures in vertical tail conical post. An alternate, flush-mounted Air Data System was also measured by scanivalve; the numbering system and locations of these taps are shown in Figure 2j. Toward the end of the test (runs 172-175) 14 static pressure "bugs" were installed on the inside surfaces of the two right-hand speedbrake panels. These pressures were also measured on the scanivalves and are shown in Figure 2k.

The third group of model measurements consisted of body flap and speedbrake hinge moments which were monitored on a digital voltmeter. A six-position channel selector was provided so that any of the four speedbrake panels or body flap hinge moment signals could be selected for visual display on the model control console. The control panel of this console is shown in Figure 2ℓ. The design of the hinge moment hardware is depicted in Figure 2m. Hinge moment sign conventions are given in Figures 2n and 2o.

INSTRUMENTATION (Concluded)

Model control surface actuation and position read-out was controlled and monitored by the model control console (Figure 2ℓ). The body flap and elevon panels were hydraulically controlled by a Moog feedback servo system, and the speedbrake panels were actuated by electric motors. All panels utilized rotary potentiometers with digital position read-out on the console. Panel deflection definitions are shown in Figures 2n, o and p.

TEST FACILITY DESCRIPTION

The 40 x 80 foot wind tunnel is located at Ames Research Center, Moffett Field, California. The facility is staffed and operated by the NASA. Although the efforts of the Large Scale Aerodynamics Branch (LSAB) are primarily devoted to research, development testing is done when it is considered to be in the national interest.

The wind tunnel has a closed 40-foot high by 80-foot wide test section with semicircular sides and a single-return, closed-circuit air passage. A 35-ton capacity crane lowers models into the test section through overhead clamshell doors which open to 80 ft. x 49 ft.

The air is driven by six 40-foot diameter fans, each powered by a 6000-horsepower electric motor. The fan section is vented to atmospheric pressure. Maximum clear-tunnel conditions include speeds up to 180 knots, dynamic pressures up to 115 psf and unit Reynold numbers up to about 2 million per foot.

The model was supported in the test section on two fixed struts and a telescoping pitch strut, as shown in Figures 2q and 2r. Windshields which rotated to maintain alignment with tunnel centerline, prevented airloads from acting on all but the tips of the struts. Angle-of-attack of the model is varied by extending or contracting the telescoping strut; sideslip angles in the range $-14^{\circ} < \beta < 276^{\circ}$ are attainable by rotation of the turntable which supports the struts from the balance system.

TEST FACILITY DESCRIPTION (Concluded)

Model loads are transmitted through the struts to the balance floating frame which is supported by seven scales. The readings of the various scales, when combined with the separation distances between scales, yield the six-components of forces and moments acting on the model. A schematic representation of the balance system is shown in Figure 2s.

TEST PROCEDURE

A reference surface, parallel to the fuselage reference line, was provided within the main fuselage cavity. Readings of the telescoping model support strut drive counter were made versus the angle measured with a clinometer on the reference surface. Model attitude (pitch angle) was set during the tests based upon the drive counter reading.

For the sideslip angle, a reference line was located along the lower surface of the model at B.P.Ø. Plumb bobs were dropped from the fore and aft ends of this line to a tunnel reference centerline scribed in the floor. Alignment of these two lines constituted a nominal zero-sideslip condition. Readings of the turntable drive counter were made against reference angles marked around the circumference of the turntable and model yaw settings were based on this calibration.

Pressure transducer calibrations were obtained by regulating the pressure source connected via a manifold to the high side of all the pressure transducers of this test, including the scanivalves. A calibrated dial-type pressure gauge was used to monitor the pressure at the transducers. Readings were set into the tunnel data system and the results were used in the data reduction process.

Strut tare runs were made prior to installation of the model in the tunnel. Runs were made at conditions representative of the test, to determine the airloads on the support struts. Significant results were used to correct the model test data initially, but these were later replaced by corrections obtained from the interference tests of OA159.

TEST PROCEDURE (Concluded)

The control surface deflections were obtained by a load simulating resistor shunted across the leads of the angle pots and the supply voltage adjusted to obtain prescribed outputs. The results of in-tunnel calibrations were employed in the data reduction process.

A shunt resistor was connected sequentially across each leg of the speed brake and body flap hinge moment bridge in the tunnel to set the input voltages and check the integrity of the bridges. The results of in-tunnel calibrations were also employed in the data reduction process.

DATA REDUCTION

The data reduction process was carried out in two steps: on line by the facility, and posttest, i.e., by Chrysler/Dataman after the conclusion of the test.

FACILITY DATA REDUCTION: DATEX I

Six-component data from the external balance system were transferred to the model moment reference center and resolved into body and stability axes forces and moments using existing Ames methods. Corrections applied to the data included model static weight tares, strut tare and interference (determined in Test OA159), test section static and total pressure calibrations and wall effects. Tabulation of this data, in addition to the tunnel conditions, was provided on a run-by-run basis. Plotted main balance data was also made available on a run-by-run basis during the test.

FACILITY DATA REDUCTION: DATEX II

All instrumentation, other than the main external balance outputs, were conditioned, amplified and digitized using the Datex II system and recorded on punched cards. These data were processed immediately after a series of runs to provide:

a) control surface angular settings (all runs)

b) hinge moment coefficients on body flap and speed brakes (these data are not presented herein due to excessive friction in the hinges)

c) pressure coefficients from flush taps on the orbiter nose and in the nose RCS cavities (runs 176 - 190)

d) pressure coefficients from flush taps on the orbiter base,

vertical tail seal post and in the MPS nozzles (runs 2 - 56)

e) pressure coefficients from the aft faces of the R.H. speed brake panels (runs 172 - 175)

f) measured pressure differentials from the flight test probe and air data system probes ratioed to freestream incompressible dynamic pressure ($\Delta p/q$) (runs 176 - 190)

TUNNEL LOCAL CONDITIONS

Based upon available tunnel calibration data, significant differences in static, total and dynamic pressures exist throughout the region of the test section occupied by the model. To adequately define the local conditions at the forward and aft ends of the model, where the bulk of the model measurements are made, separate corrections were applied at these points.

The corrections applied at the front end of the model are based on the results of a recent survey of that portion of the tunnel. The total pressure correction is as-measured; the static pressure correction has been adjusted to comply with the aft tap readings of a Rosemount standard static pressure probe obtained in Test 0A237.

The corrections applied at the aft end of the model are based on the original tunnel survey.

TUNNEL DYNAMIC PRESSURE

The tunnel dynamic pressure sensing system provided the basis for nondimensionalizing main balance data. Since no means existed to transfer that dynamic pressure into the Datex II system, an on-board transducer was rigged to measure that quantity. However, after the conclusion

of the test, it was determined that the accuracy of that measurement was inadequate to reduce the probe data to pressure ratios. Therefore, a table of representative values of Datex I measured dynamic pressure versus the nominal set value was employed for ADS probe data reduction, e.g.,

$q_{Nominal}$	10	20	50	55	100	(psf)
q'_u	10.0	19.9	50.0	54.8	99.7	(psf)

A standard compressibility correction and an adjustment for the differences between the reference dynamic pressure (q'_u) and the free-stream value at the front end of the model were then applied. For ADS measurements, the corrected dynamic pressure was:

$$q_F = q'_u \ (1 + Kq_F) - \Delta q_n$$

where: $Kq_F = Kp_F + Kp_{tF}$

Each scanivalve was plumbed to sense the reference dynamic pressure on one port and that reading from each valve was used to reduce the remaining pressures from that valve. Appropriate adjustments were made for local conditions depending on whether forebody flush taps or fuselage base taps were connected to the valve, e.g.,

$$q_{SV1} = (\text{cycle 2 value})_{SV1} \ (1 + Kq_F) - \Delta q_n$$
$$q_{SV2} = (\text{cycle 2 value})_{SV2} \ (1 + Kq_F) - \Delta q_n$$

} for forebody flush taps connected to valve

$$q_{SV1} = (\text{cycle 2 value})_{SV1} \ (1 + Kq_A) - \Delta q_n$$
$$q_{SV2} = (\text{cycle 2 value})_{SV2} \ (1 + Kq_A) - \Delta q_n$$

} for fuselage base taps connected to valve

where: $Kq_F = Kp_F + Kp_{tF}$ and $Kq_A = Kp_A + Kp_{tA}$

STATIC PRESSURE CORRECTION

The static pressure correction at the forward end of the model is expressed by:

$$K_p = (P_{SP} - P)/q'_u$$

$$Kp_F = -0.0000325\,\Delta P55 - 0.0495$$

Static pressure in the vicinity of the model base is expressed by:

$$Kp_A = -0.05$$

TOTAL PRESSURE CORRECTION

The total pressure correction at the forward and aft ends of the model, respectively, is defined by:

$$K_{P_T} = (PTREF - PT)/q'_u$$

$$K_{P_{T_F}} = 0.0144 \left[1 + \frac{(q'_u - 100)^2}{75{,}233}\right]^{1/2}$$

$$K_{P_{T_A}} = 0.006 + 0.11/q'_u$$

BODY FLAP DEFLECTION ANGLE (BDFLAP)

The deflection of the body flap was computed by:

$$\delta_{BF} = K\delta_{BF} \left(R_{\delta BF} - R_{\delta BF_o}\right) \qquad \text{(degrees)}$$

INDIVIDUAL ELEVON DEFLECTION ANGLES (DELEX)

The deflections of the individual elevon panels, as measured in a butt plane, were calculated by:

$$\delta_{EX} = K\delta_{EX} \left(R_{\delta EX} - R_{\delta EX_o}\right) \qquad \text{(Degrees)}$$

AVERAGE ELEVON AND AILERON DEFLECTION

$$\delta_e = 1/4 \quad \delta_{e_1} + \delta_{e_2} + \delta_{e_3} + \delta_{e_4}$$

$$\delta_a = 1/4 \quad \delta_{e_1} + \delta_{e_2} - \delta_{e_3} - \delta_{e_4}$$

INDIVIDUAL SPEED BRAKE PANEL DEFLECTION ANGLES IN HINGE LINE PLANE (DELSX)

The deflections of the individual speed brake panels, as measured about the hinge line, were computed by:

$$\delta'_{SX} = K_{\delta SX}\left(R_{\delta SX} - R_{\delta SX_o}\right)(\text{degrees}); \; X = 1, 2, 3, 4$$

TOTAL SPEED BRAKE DEFLECTION (SPDBRK)

Speed brake deflection was defined as the sum of the left and right panel displacements from the closed condition, as measured in a water plane.

$$\delta_{SB} = 2 \; \text{TAN}^{-1}\left[(\cos \Lambda)\text{TAN}\left(\frac{\delta'_{s_1} + \delta'_{s_2} + \delta'_{s_3} + \delta'_{s_4}}{4}\right)\right] (\text{degrees})$$

RUDDER DEFLECTION (RUDDER)

Rudder deflection was defined as the difference of the left and right speed brake panel deflections from the closed condition, as measured in a water plane.

$$\delta_R = \text{TAN}^{-1}\left[(\cos \Lambda)\text{TAN}\left(\frac{\delta'_{s_1} - \delta'_{s_2} + \delta'_{s_3} - \delta'_{s_4}}{4}\right)\right]; \; \Lambda = 34.83^\circ$$

POST TEST DATA PROCESSING BY DATAMAN:

Upon completion of the test and determination of the correctness of the data, a data tape was prepared by ARC in a format acceptable to Chrysler/Dataman. This tape contained all valid data gathered during the test as computed in the off-line processing.

STRUT TARE AND INTERFERENCE CORRECTIONS:

$$C_L \text{ (final)} = C_L(40 \times 80) - \Delta C_{LT}$$

$$C_D \text{ (final)} = C_D(40 \times 80) - \Delta C_{DT}$$

$$C_m \text{ (final)} = C_m(40 \times 80) - \Delta C_{mT}$$

where tare values are as given by Table V.

TUNNEL BLOCKAGE CORRECTION

Tunnel blockage corrections were applied to the force and moment coefficient data. This was done at the request of Rockwell International per instructions provided in Reference 5.

The following model reference dimensions and constants were used in the data reduction process:

DATA REDUCTION (Continued)

Item	Description	0.36-Scale	Full Scale
A_B	fuselage base area with MPS on, ft^2	See Table IV	441.543
b	wing reference span. ft.	28.100	78.057
$\bar{c}$	wing mean aerodynamic chord. ft.	14.242	39.56
$E_{o\,\alpha\,ADC}$	output of full scale FT probe α pot to Air Data Computer for vane aligned with probe centerline, volts	--	2.30
$E_{o\,\alpha\,DISP}$	output of full scale FT probe α pot to cockpit display for vane aligned with probe centerline, volts	--	3.30
$E_{o\,\beta'_{ADC}}$	output of full scale FT probe β pot to Air Data Computer for vane aligned with probe centerline, volts	--	5.00
$E_{o\,\beta\,DISP}$	output of full scale FT probe β pot to cockpit display for vane aligned with pot centerline, volts	--	7.50
f_{α_A}	ADS α probe calibration parameter	(See Ref. 4)	
f_{α_F}	flight test α probe calibration parameter	(See Ref. 3)	
f_{β_F}	flight test β probe calibration parameter	(See Ref. 3)	
$i_{F\alpha}$	incidence of FT probe to FRL, deg. positive nose up	-5	-5
$i_{F\beta}$	incidence of FT probe to model $\mathcal{L}$ positive nose left of centerline, deg.	0	0
$K_{\alpha\,ADC}$	electrical output of full scale flight test probe α pot to Air Data Computer per degree of vane deflection, volts/deg.	--	0.36
$K_{\alpha\,DISP}$	electrical output of full scale flight test probe α pot to cockpit display per degree of vane deflection, volts/deg.	--	0.56

DATA REDUCTION (Continued)

Item	Description	0.36-Scale	Full Scale
$K_{\beta_{ADC}}$	electrical output of full scale flight test probe β pot to Air Data Computer per degree of vane deflection, volts/deg.	--	0.225
$K_{\beta_{DISP}}$	electrical output of full scale flight test probe β pot to cockpit display per degree of vane deflection, volts/deg.	--	0.35
$K_{\delta\ BF}$	body flap deflection pot calibration factor, deg./mv.	(See Table VI)	
$K_{\delta\ EX}$	elevon panel deflection pot calibration factor, X = 1, 2, 3, 4, deg./mv.	(See Table VI)	
$K_{\delta\ SX}$	speed brake panel deflection pot calibration factor, X = 1, 2, 3, 4, deg./mv.	(See Table VI)	
ℓ_B	orbiter reference body length, ft.	38.709	107.525
	in.	464.508	1290.300
MRC	model moment reference center, ft.	32.300	89.723
	in.	387.605	1076.680
$R_{\delta'BF}$	body flap pot reading at zero deflection, mv.	0	--
$R_{\delta'EX}$	elevon panel X = 1, 2, 3, 4 pot reading at zero deflection, mv.	0	--
$R_{\delta'SX}$	speed brake panel X = 1, 2, 3, 4 reading at zero deflection, mv.	0	--
S	wing reference area, ft^2	348.624	2690.0
S_{BF}	body flap reference area, ft^2	17.593	135.75
S_s	speed brake reference area, ft^2	12.680	97.84

DATA REDUCTION (Concluded)

Item	Description	0.36-Scale	Full Scale
X_{CG}	distance from nose IML to MRC, ft.	25.160	69.890
	in.	301.925	838.680
Λ	sweep angle of speed brake hinge line, deg.	34.83	34.83

REFERENCES

1. SD75-SH-0100-1, -2, "Pretest Information for Investigations on a 0.36-Scale Model (76-0) of the Space Shuttle Orbiter Vehicle 101 in the NASA/Ames Research Center 40 x 80 Foot Subsonic Wind Tunnel - (Test 0A100)," dated April 3, 1975.

2. NA-74-810, "Structural Analysis of the 0.36-Scale SSV Model 76-0," dated November 1, 1974.

3. Rosemount Report 127410, "Aerodynamic Performance of a 0.36-Scale Model of the 92AF Flight Test Air Data Boom for use Ahead of a 0.36-Scale Model of the Space Shuttle Orbiter," dated December 10, 1974.

4. Rosemount Report 47515B, Rev. A, "Aerodynamic Performance of 0.36-Scale Model 874AU Air Data Sensors for Fuselage Mounting on a 0.36-Scale Model of the Space Shuttle Orbiter," dated May 16, 1975.

5. Rockwell International Internal Letter No. SAS/AERO/76-541, "Blocking Correction for 40 x 80 Force/Moment and Base Pressure Data," dated October 28, 1976.

TABLE I.

TEST # OA100 DATE : JUNE, 1975

TEST CONDITIONS

MACH NUMBER	REYNOLDS NUMBER Ref. (MAC) x 10^{-6}	DYNAMIC PRESSURE (pounds/sq.ft.)	STAGNATION TEMPERATURE (degrees Fahrenheit)
.11	11.8	20	70°F - 120°F
.19	18.5	50	↓ ↓
.26	26.0	100	

BALANCE UTILIZED: 40" x 80" BALANCE FRAME SYSTEM

	CAPACITY:	ACCURACY:	COEFFICIENT TOLERANCE: (Q=50 psf)
FRONT LIFT	102,000 LBS	L=±5 LBS	CL=±0.0003
REAR LIFT	102,000 LBS	D=±1 LB	CD=±0.00005
DRAG	32,400 LBS	SF=±1 LB	CY=±0.00005
FRONT SIDE FORCE	16,400 LBS	PM=±160 FT-LBS	CM=±0.00065
REAR SIDE FORCE	16,400 LBS	RM=±85 FT-LBS	Cℓ=±0.0002
FRONT ROLL	26,000 LBS	YM=±24 FT-LBS	Cn=±0.00005
REAR ROLL	26,000 LBS		

COMMENTS:

AMS 010

TABLE II

TEST: ΩA100 (ARC 40X80-T462) — DATA SET/RUN NUMBER COLLATION SUMMARY — DATE: JUNE 1975

DATA SET IDENTIFIER	CONFIGURATION ΩV101	SCHD. α	SCHD. β	δ_R	δ_e	δ_a	δ_{BF}	δ_{SB}	BASE PRESS	NOSE PRESS	SIDE PROBE	NOSE PROBE	NOSE GEAR	DYNAMIC PRESSURE – Q 20	50	100
RNA01A	BASIC LONGITUDINAL	A	0	0	0	0	0	25	✓		✓	✓		4'	5'	7[4]
B		A			0										6[3]	
C		A			10									2'	8'	14[2]
D		A	↓	↓	-10	↓	↓	↓			↓	↓		3'	9'	15
RNA01E	BASIC LATERAL	0	X	0	0	0	0	25	✓		✓	✓		16	21	45
F		0	X[0]												22	
G		5	X											17	23	
H		10												18	24	46
I		15												19[5]	25	
J		20	↓	↓	↓	↓	↓	↓	↓		↓	↓		20	26	
RNA01K	ELEVON EFFECTS	0	0	0	δ_e	0	0	25	✓		✓	✓			10	
L		5			δ_e										11	
M		10			δ_e										12	
N		10			δ_e[0]										13	
O		15			δ_e										27	
P		20	↓		δ_e	↓	↓	↓	↓		↓	↓			28	
RNA01Q	AILERON EFFECTS	0	0		0	δ_a	0	25	✓		✓	✓			29	
RNA01R	AILERON EFFECTS	5	↓	↓	0	δ_a	0	25	✓		✓	✓			30	

TEST RUN NUMBERS

[0] REPEAT RUN [1] MISSING α=17.5 [2] MISSING α=25 [3] MISSING α=17.5, 25 [4] MISSING α=20, 25 [5] MISSING β=5°

$\alpha(A) = -5, \ldots (\Delta 2.5) \ldots, 20, 25$

$\delta_e = -35, \ldots (\Delta 5) \ldots, 20$

$\beta(K) = -13., -10., -5., -2., 0., 2., 5., 10., 15., 20.$

$\delta_a = 0, 2.5, 5., 7.5, 10., 15.$

NASA-MSFC-MAF

TABLE II (Continued)

TEST: QA100 (ARC 40X80-T462)

DATA SET/RUN NUMBER COLLATION SUMMARY

DATE: JUNE 1975

DATA SET IDENTIFIER	CONFIGURATION QV101	SCHD. α	β	δ_R	δ_e	δ_a	δ_{BF}	δ_{SB}	BASE PRESS	NOSE PRESS	SIDE PRESS	NOSE PRESS	NOSE GEAR		DYNAMIC PRESSURE - Q		
RNA01S	AILERON EFFECTS	10	0	0	0	δ_a	0	25	✓		✓	✓			50		
T		10				δ_a^0									31		
U		15				δ_a									32		
V		20				δ_a									33		
W		0	0	0	10	δ_a'	0	25							34		
X		5													50		
Y		10													51		
Z		15													52		
RNA02A		20													53		
B		0	0	0	-10	δ_a	0	25							54		
C		5													55		
D		10								✓	✓	✓			56		
E		15													57		
F		20													58		
G		0	0	0	-20	δ_a	0	25							59		
H		5													70		
I		10													71		
J		15													72		
															73		

TEST RUN NUMBERS

°REPEAT RUN

δ_a = 0, 2.5, 5, 7.5, 10, 15.

δ_a' = 0, 2.5, 5, 7.5, 10, 13

NASA-MSFC-MAF

TABLE II (Continued)

TEST: QA100 (ARC 40X80-T462) — DATA SET/RUN NUMBER COLLATION SUMMARY — DATE: JUNE 1975

DATA SET IDENTIFIER	CONFIGURATION QV101	SCHD. α	SCHD. β	δ_R	δ_e	δ_a	δ_{BF}	δ_{SC}	BASE PRESS	NOSE PRESS	SIDE PROBE	NOSE PROBE	NOSE GEAR	DYNAMIC PRESSURE - Q (TEST RUN NUMBERS)
RNA02K	AILERON EFFECTS	20	0	0	-20	δ_a	0	25		✓	✓	✓		50
L		0	5	0	0	δ_a	0	25						74
M		5	↓	↓	↓	↓	↓	↓						60
N		10												61
Q		15												62
P		20												63
RNA02Q		0	5	0	10	δ_a'	0	25		✓	✓	✓		64
R		5	↓	↓	↓	↓	↓	↓						65
S		10												66
T		15												67
U		20												68
RNA02V		0	10	0	0	δ_a	0	25		✓	✓	✓		69
W		5	↓	↓	↓	↓	↓	↓						75
X		10												76
Y		15												77
Z		20												78
RNA03A		0	10	0	10	δ_a'	0	25		✓	✓	✓		79
RNA03B	↓	5	10	0	10	δ_a'	0	25		✓	✓	✓		80
														81

δ_a = 0, 2.5, 5, 7.5, 10, 15

δ_a' = 2.5, 5, 7.5, 10, 13

NASA-MSFC-MAF

TABLE II (Continued)

TEST: QA100 (ARC 40X80-T462) — DATA SET/RUN NUMBER COLLATION SUMMARY — DATE: JUNE 1975

DATA SET IDENTIFIER	CONFIGURATION QV101	SCHD. α	SCHD. β	δ_e	δ_a	δ_r	δ_{BF}	δ_{SB}	BASE PRESS	NOSE PRESS	SIDE PROBE	NOSE PROBE	NOSE GEAR	DYNAMIC PRESSURE - Q	TEST RUN NUMBERS
RNA03C	AILERON EFFECTS	10	10	0	10	δ_r'	0	25		✓	✓	✓		50	
D	↓	15	↓	↓	↓	↓	↓	↓		✓	✓	✓		82	
E	↓	20	↓	↓	↓	↓	↓	↓		✓	✓	✓		83	
RNA03F	BODY FLAP EFFECTS	0	0	0	0	0	δ_{BF}'	25	✓		✓	✓		84	
G	↓	5	↓	↓	↓	↓	δ_{BF}	↓	↓		↓	↓		35	
H	↓	10	↓	↓	↓	↓	δ_{BF}	↓	↓		↓	↓		36	
I	↓	10	↓	↓	↓	↓	δ_{BF}°	↓	↓		↓	↓		37	
J	↓	15	↓	↓	↓	↓	δ_{BF}	↓	↓		↓	↓		38	
K	↓	20	↓	↓	↓	↓	δ_{BF}	↓	↓		↓	↓		39	
RNA03L	SPEED BRAKE EFFECTS	0	0	0	0	0	0	δ_{SB}	✓		✓	✓		40	
M	↓	5	↓	↓	↓	↓	↓	δ_{SB}	↓		↓	↓		41	
N	↓	10	↓	↓	↓	↓	↓	δ_{SB}	↓		↓	↓		42	
O	↓	10	↓	↓	↓	↓	↓	δ_{SB}°	↓		↓	↓		43	
P	↓	15	↓	↓	↓	↓	↓	δ_{SB}	↓		↓	↓		44	
Q	↓	20	↓	↓	↓	↓	↓	δ_{SB}	↓		↓	↓		48	
														49	

°REPEAT RUN

δ_{BF} = -11.5, 0, 16.5, 22.7 (δ_{BF}' HAS 2 "D" PTS)

δ_{SB} = 0, 25, 55, 87.5

δ_{SB}' = 0, 2.5, 55

δ_a' = 0, 2.5, 5, 7.5, 10, 13

NASA-MSFC-MAF

TABLE II (Continued)

TEST : ΦA100 (ARC 40X80-T462) — DATA SET/RUN NUMBER COLLATION SUMMARY — DATE : JUNE 1975

DATA SET IDENTIFIER	CONFIGURATION ΦV101	Sc HD. α	Sc HD. β	δ_R	δ_e	δ_a	δ_{BF}	δ_{SB}	BASE PRESS	NOSE PRESS	SIDE PROBE	NOSE PROBE	NOSE GEAR	DYNAMIC PRESSURE – Q (TEST RUN NUMBERS)
RNA03R	RCS PORTS CLOSED	A	0	0	0	0	0	25		✓	✓	✓		50
S		0	X											101
T		5	X											102
U		10	X											103
V		15	X											104
W		20	X											105
RNA03X	RUDDER/SPEED BRAKE	B	0	–	0	0	0	–		✓	✓	✓		106
Y		B		-15				55						88[1]
Z		B		0										89[2]
RNA04A		B		5										90[3]
B				10										91
C				15										92
D				19.5				48.						93
E		B	5	0	0	0	0	55		✓	✓	✓		94
F				5										95
G				10										96[4]
H				15										97
I				19.5				48						98
														99

[1] Missing α = 5, 20 [2] Missing α = 5 [3] Missing α = 20 [4] Missing α = 15

α (B) = 0, 5, 10, 15, 20

δ_{SB} (3X) = 29, 40, 45 δ_R (3X) = -10, -20, -18

β (X) = -13, -10, -5, -2, 0, 2, 5, 10, 15, 20

α (A) = -5, ... (22.5) ... 20, 25

NASA-MSFC-MAF

TABLE II (Continued)

TEST : 0A100 (ARC 40X80-T462) — DATA SET/RUN NUMBER COLLATION SUMMARY — DATE : JUNE 1975

DATA SET IDENTIFIER	CONFIGURATION 0V101	Sc HD. α	Sc HD. β	δ_R	δ_e	δ_2	δ_{BF}	δ_{SB}	BASE PRESS	NOSE PRESS	SIDE PROBE	NOSE PROBE	NOSE GEAR	DYNAMIC PRESSURE - Q	TEST RUN NUMBERS
RNA04J	RUDDER/SPEEDBRAKE	B	0	-22.5	0	0	0	25		✓	✓	✓		50	86
K	RUDDER/SPEEDBRAKE	B	0	-15	0	0	0	25		✓	✓	✓			87
L	GEAR DOWN	B	0	3.0	0	0	0	20		✓	✓	✓	✓		108
M	↓	↓	5	3.0	↓	↓	↓	20		✓	✓	✓	✓		109
N	↓	↓	10	-5.5	↓	↓	↓	36.5		✓	✓	✓	✓		110
Q	GEAR DOWN FTP OFF	B	0	0	0	0	0	25		✓	✓		✓		111
P	↓	↓	5	↓	↓	↓	↓	↓		↓	↓		✓		112
Q	↓	↓	10	↓	↓	↓	↓	↓					✓		113
R	FTP OFF	B	0	0	0	0	0	25							115
S	↓	↓	↓	5	↓	↓	↓	↓							114
T	↓	↓	↓	10	↓	↓	↓	↓							116
U	↓	↓	↓	15	↓	↓	↓	↓							117
V	↓	↓	↓	22.5	↓	↓	↓	↓		↓	↓				118
W	↓	B	5	0	0	0	0	25		✓	✓				119
X	↓	↓	↓	5	↓	↓	↓	↓		↓	↓				120
Y	↓	↓	↓	10	↓	↓	↓	↓		↓	↓				121
Z	↓	↓	↓	15	↓	↓	↓	↓		↓	↓				122
RNA05A	↓	↓	↓	22.5	↓	↓	↓	↓		↓	↓				123

α (B) = 0, 5, 10, 15, 20

NASA-MSFC-MAF

TABLE II (Continued)

TEST : QA100 (ARC 40X80-T462) | DATA SET/RUN NUMBER COLLATION SUMMARY | DATE : JUNE 1975

DATA SET IDENTIFIER	CONFIGURATION QV101	Sc HD. α	Sc HD. β	δ_R	δ_e	δ_a	δ_{BF}	δ_{SB}	BASE PRESS	NOSE PRESS	SIDE PROBE	NOSE PROBE	NOSE BEAM	DYNAMIC PRESSURE - Q	TEST RUN NUMBERS
RNA058	FTP QFF	B	10	0	0	0	0	25		✓	✓			50	
C				5										124	
D				10										125	
E				15										126	
F				22.5										127	
G	FTP QN ADS QFF	B	0	0	0	0	0	87		✓		✓		128	
H				3.5				84.5						129	
I				5.5				80						130	
J				6.0				78						131	
K		B	5	0	0	0	0	87						132	
L				3.5				84.5						133	
M				5.5				80						134	
N				6.0				78						135	
Q		B	10	0	0	0	0	87						136	
P				3.5				84.5						137	
Q				5.5				80						138	
R				6.0				78						139	
S		10	0	δ_R	0	0	0	25						140	
														141	

δ_R = ± 22.5, ± 15., ± 10., ± 5, 0.

α (B) = 2, 5, 10, 15, 20

NASA-MSFC-MAF

TABLE II (Continued)

TEST: OA100 (ARC 40X80-T462) — DATA SET/RUN NUMBER COLLATION SUMMARY — DATE: JUNE 1975

DATA SET IDENTIFIER	CONFIGURATION OVIOL	Sc HD. α	Sc HD. β	δ_e	δ_c	δ_a	δ_{BF}	δ_{SE}	BASE PRESS	NOSE PRESS	SIDE PROBE	NOSE PROBE	NOSE GEAR	DYNAMIC PRESSURE - Q	TEST RUN NUMBERS
RNA05T	FTP ON ADS OFF	B	5	0	0	0	0	0		✓		✓		50	142
U			10					0							143
V			10					25							144
W	ADS OFF GEAR ON	B	0	0	0	0	0	87		✓			✓		145
X			5												146
Y			10												147
Z	FTP+ADS OFF GEAR ON	B	0	0	0	0	0	0		✓					148
RNA06A			5												149
B			10												150
C	FTP + ADS OFF	B	0	0	0	0	0	0		✓					151
D			5												152
E				10											153
F				15											154
G				20.5											155
H		B	5	0	0	0	0	0		✓					156
I				5											157
J				10											158
K				15											159

α(B) = 0, 5, 10, 15, 20

NASA-MSFC-MAF

TABLE II (Continued)

TEST : QA100 (ARC 40X80-T462) — DATA SET/RUN NUMBER COLLATION SUMMARY — DATE : JUNE 1975

DATA SET IDENTIFIER	CONFIGURATION QV101	SCHD. α	SCHD. β	δ_R	δ_e	δ_a	δ_{BF}	δ_{SB}	BASE PRESS	NOSE PRESS	SIDE PROBE	NOSE PROBE	NOSE GEAR	DYNAMIC PRESSURE – Q 10	20	50	100	TEST RUN NUMBERS
RNAQ6L	FTP + ADS QFF	B	5	22.5	0	0	0	0		✓						160		
M	FTP QN, ADS QFF	B	10	0	0	0	0	0		✓		✓				161		
N	↓	T	T	5	T	T	T	T		T		T				162		
P				10												163		
Q				15												164		
R		↓	↓	20.5	↓	↓	↓	↓								165		
S		C	0	0	0	0	0	25								167		
T		T	-5	T	T	T	T	T									47	
U			2													168		
V		↓	10	↓	↓	↓	↓	↓								169		
W		B	10	0	0	0	0	55								166		
X		A	0	0	0	10	0	25								170		
Y	SB PRESS ADS QFF	10	X	0	0	10	0	25		↓						171		
Z	↓ + TUFTS	B	0	0	0	0	0	55								172		
		A	5	0	0	0	0	55				↓		172	173	174*		
																175		

*SCHEDULE A FOR RUN 174 ONLY

α(C) = -5, ... (Δ2.5) ..., 10, ... (Δ1) ... 20

α(A) = -5 ... (Δ2.5) ..., 20, 25

NASA-MSFC-MAF

TEST: QA100 (ARC 40X80-T462) | DATA SET/RUN NUMBER COLLATION SUMMARY | DATE: JUNE 1975

DATA SET IDENTIFIER	CONFIGURATION QV101	SCHD. α	SCHD. β	δ_R	δ_e	δ_{B_1}	δ_{BF}	δ_{SB}	BASE PRESS	NOSE PRESS	SIDE PROBE	NOSE PROBE	NOSE GEAR	DYNAMIC PRESSURE - Q 50	DYNAMIC PRESSURE - Q 100	TEST RUN NUMBER
RNA01A	ADS ON	B	5	0	0	0	0	25		✓	✓	✓				176
B		A	0	—	—	—	—	—		—	—	—				177
C		A	-5													178
D		A	-10													179
E	NOSE GEAR ON	B	5										✓			180
F		A	0										✓			181
G		B	-5										✓			182
H		B	-10									↓	✓			183
I	FTP OFF	B	5													184
J		A	0													185
K		B	-5													186
L		B	-10	↓	↓	↓	↓	↓								187
M		B	0	0	0	0	0	55								188
N		10	X	0	10	0	22	25						189		
Q		10	X	0	10	0	-11.7	25						190		
P	FTP ON	10	X	0	0	0	0	0				✓		35		
Q		10	X	0	0	0	0	55				✓		100		
										↓	↓					

'MISSING α=20

α (A⁻) = -5, ... (Δ2.5) ..., 20

β (X) = -13, -10, -5, -3, 0, 2, 5, 10, 15, 20

α (A) = -5, ... (Δ2.5) ..., 20, 25

TABLE II (Concluded)

Data Set/Run Numbers Collation Summary

Dataset 1st Character	1st Indep. Variable	2nd Indep. Variable	Dependent Variables
A	Q	*	CP2 CP3 CP4 CP5 CP6 CP7 CP8 CP9 CP10 CP11
B			ALPHAU BETA/ALPHA Q1 DP/Q50 DP/Q51 DP/Q52
C			ALPHAU BETA/ALPHA Q1 CP68 CP69 CP70 CP71 CP72 CP73
D			DELS1 DELS2 DELS3 DELS4 SPDBRK/RUDDER
E			DELE1 DELE2 DELE3 DELE4 BDFLAP ELEVON/AILRON
F			CP12 CP13 CP14 CP15 CP16 CP17 CP18 CP19 CP20 CP21
G			CP22 CP23 CP24 CP25 CP26 CP27 CP28 CP29 CP30 CP31
H			BAR ALPHAU Q1 DP/Q55 DP/Q54 DP/Q52 DP/Q53 DP/Q56
I			BETA/ALPHA DP/Q61 DP/Q63 DP/Q62 DP/Q64 DP/Q67
J			BAR ALPHAU Q1 DP/Q55 DP/Q54 DP/Q57 DP/Q59 DP/Q65
K			BAR ALPHAU Q1 DP/Q55 DP/Q54 DP/Q58 DP/Q60 DP/Q66
L			ALPHAU BETA/ALPHA Q1 CP74 CP75 CP76 CP77 CP78 CP91
M			ALPHAU BETA/ALPHA Q1 CP80 CP81 CP82 CP83 CP84 CP85
P			ALPHAU BETA/ALPHA Q1 CP86 CP87 CP88 CP89 CP90 CP79
Q			ALPHAU BETA/ALPHA Q1 CP92
R			BETA/ALPHA CL CD CLM CY CLN CSL
Z			QCOR CL CD CLM CY CLN CSL DQCQU

*Various: ALPHA, BETA, ELEVON, AILRON, BDFLAP, SPDBRK, RUDDER

TABLE III. MODEL DIMENSIONAL DATA

MODEL COMPONENT: BODY - B_{69}

GENERAL DESCRIPTION: Identical to B_{64}, except the mid-body TPS has been removed from X_o 562 to X_o 1307. From these points, the TPS fairs into the IML on a 5 deg. angle.

MODEL SCALE: 0.360

DRAWING NUMBER: VC70-000002, MD-V70 BASELINE 7/19/74

DIMENSIONS: In.	FULL SCALE	MODEL SCALE
Ref. Length (IML) X_o 238 to 1528.3	1290.3	464.508
OML Max Width	262.718	94.579
IML Max Width	260.718	93.859
OML Max Depth	248.575	89.487
IML Max Depth	246.575	88.767
OML Fineness Ratio	5.1365	5.1365
IML Fineness Ratio	5.1525	5.1525
Area - Ft^2		
Max. Cross-Sectional (@ X_o 1463.316)	340.820	44.170

TABLE III. MODEL DIMENSIONAL DATA (Continued)

MODEL COMPONENT: CANOPY - C_{14}

GENERAL DESCRIPTION: The canopy is that part of the forward fuselage which covers the crew module. One inch TPS thickness on the canopy. C_{14} is to the Baseline Definition Vehicle Configuration 5. MCR 200 Rev. 7, 10/17/74

MODEL SCALE: 0.360

DRAWING NUMBER: VC70-000002, MD-V70 Baseline 7/19/74

DIMENSIONS:	FULL SCALE	MODEL SCALE
Length (X_o 435.196 to 670.0), in.	234.80	84.528
Max Width X = 594.0, in.	195.58	70.409

WINDSHIELD PLANES:

$$.7012\ X_o - 0.2552\ Y_o - 6.1789 = 0$$
$$.5710\ X_o - 0.5641\ Y_o + 32.7354 = 0$$
$$.2636\ X_o - 0.7564\ Y_o + 189.4094 = 0$$

TABLE III. MODEL DIMENSIONAL DATA (Continued)

MODEL COMPONENT: DUCT - DT_1

GENERAL DESCRIPTION: Simulated ram air duct in right-hand observation window. Duct is a 90° pipe elbow used in conjunction with the smoke removal system.

MODEL SCALE: 0.360

DRAWING NUMBER: V070-613840, V070-310147

DIMENSIONS:	FULL SCALE	MODEL SCALE
Inlet dia.,(O.D. at inlet), In.	4.000	1.440
Max height (Top of base to duct centerline at inlet), In.	6.750	2.430
Max Depth (Inlet plane to centerline of base), In.	6.000	2.160
Area $In.^2$		
Max. Cross-Sectional	33.283	4.313

Centerline of duct intersects top surface of flange on window pane at:

X_o	559.700	201.492
Y_o	- 11.754	- 4.231
Z_o	498.972	179.630

Centerline of duct canted 4.5° outboard from window pane and 11.27° outboard from orbiter XZ plane

TABLE III. MODEL DIMENSIONAL DATA (Continued)

MODEL COMPONENT: ELEVON $-E_{54}$

GENERAL DESCRIPTION: Elevon for Configuration 5, hingeline at X_o = 1387, elevon split line Y_o = 312.5, 6.0" gaps, beveled edges and centerbodies "OML" used on Wing W_{129}. Reference MCR 200, Rev. 7, 10/17/74.

MODEL SCALE: 0.360

DRAWING NUMBER: VC70-000002 and MD-V70 Baseline 7/19/74

DIMENSIONS:	FULL SCALE	MODEL SCALE
Ref. Area - Ft^2	210.00	27.216
Area - Ft^2	206.57	26.771
Span (equivalent) (Y_o = 121.73), In. elevon root	346.44	124.718
Inb'd equivalent chord (Y_o = 468.17) in., elevon tip	116.50	41.94
Outb'd equivalent chord	55.219	19.879
Ratio movable surface chord/ total surface chord		
At inb'd equiv. chord (Y_o=121.73)	0.2137	0.2137
At outb'd equiv. chord (Y =468.17)	0.3999	0.3999
Sweep Back Angles, degrees		
Leading Edge	0	0
Trailing Edge	- 10.056	- 10.056
Hingeline	0	0
Area Moment (Product of Area x $\bar{c}$), Ft^3	1540.668	71.881
Mean Aerodynamic Chord, In.	89.50	32.22

TABLE III. MODEL DIMENSIONAL DATA (Continued)

MODEL COMPONENT: BODY FLAP - F_{14}

GENERAL DESCRIPTION: Orbiter body flap configuration 5 (OML) to be used with B_{64}. HL X_o = 1532.0, Z_o = 287, baseline MCR 200 Rev. 7, 10/17/74.

MODEL SCALE: 0.360

DRAWING NUMBER: VC70-000002 and MD-V70, 7/19/74

DIMENSIONS:	FULL SCALE	MODEL SCALE
Total		
Area - Ft^2	135.75	17.59
Span (Equivalent), In.	238.000	85.68
Inb'd equivalent chord, In.	81.00	29.16
Outb'd equivalent chord, In.	81.00	29.16
Sweep Back Angles, degrees		
Leading Edge	0.0	0.0
Trailing Edge	0.0	0.0
Hingeline	0.0	0.0
Area Moment (MAC X Total Area), Ft^3	916.313	42.75
Mean Aerodynamic Chord, In.	81.00	29.16

TABLE III. MODEL DIMENSIONAL DATA (Continued)

MODEL COMPONENT: FLAPPER DOOR - FD_1

GENERAL DESCRIPTION: Inboard elevon flapper door which is simulated by a single trapezoidal-shaped flat plate. (Data for one of two sides.)

MODEL SCALE: 0.360

DRAWING NUMBER: SS-A01223

DIMENSIONS:	FULL SCALE	MODEL SCALE
Area - Ft^2	40.417	5.238
Span (equivalent), In.	185.083	66.630
Inb'd equivalent chord, In.	34.269	12.337
Outb'd equivalent chord, In.	31.047	11.177
Sweep Back Angles, degrees		
Leading Edge	0.0	0.0
Trailing Edge	- 0.997	- 0.997
Hingeline @ X_o 1369.625 INFS	0.0	0.0
Area Moment (Product of Area & $\bar{c}$), Ft^3	106.0	4.946
Mean Aerodynamic Chord, In.	31.472	11.33

TABLE III. MODEL DIMENSIONAL DATA (Continued)

MODEL COMPONENT: FLAPPER DOOR - FD_2

GENERAL DESCRIPTION: Outboard elevon flapper door, which is simulated by a single trapezoidal-shaped flat plate. (Data for one of two sides.)

MODEL SCALE: 0.360

DRAWING NUMBER: SS-A01223

DIMENSIONS:	FULL SCALE	MODEL SCALE
Area - Ft^2	26.528	3.438
Span (equivalent), In.	126.139	45.410
Inb'd equivalent chord, In.	31.047	11.177
Outb'd equivalent chord, In.	29.519	10.627
Sweep Back Angles, degrees		
Leading Edge	0.0	0.0
Trailing Edge	- 0.694	- 0.694
Hingeline @ X_o 1369.625 INFS	0.0	0.0
Area Moment (Product of Area x $\bar{c}$), Ft^3	66.958	3.124
Mean Aerodynamic chord	30.289	10.904

TABLE III. MODEL DIMENSIONAL DATA (Continued)

MODEL COMPONENT: FAIRING - FR_{12}

GENERAL DESCRIPTION: Escape hatch hinge fairing. Two fairings each, for both escape hatch doors, (total of four) located on upper orbiter forebody, in front of observation windows.

MODEL SCALE: 0.360

DRAWING NUMBER: SS-A01447

DIMENSIONS:	FULL SCALE	MODEL SCALE
Length, In.	10.000	3.600
Max Width, In.	2.500	0.900
Max Depth, In. (Occurs at X_o 538.FS)	2.125	0.765
Area - $In.^2$		
Planform	25.000	3.240
Frontal	5.313	0.689
Center of hinge fairings X_o	534.750	192.510
(Planform view) Y_o	$\pm$ 17.210	$\pm$ 6.196
(Total of four) Y_o	$\pm$ 30.989	$\pm$ 11.156

TABLE III. MODEL DIMENTIONAL DATA (Continued)

MODEL COMPONENT: LANDING GEAR - G_{18}

GENERAL DESCRIPTION: Simulation of nose landing gear with gear doors and associated struts and retracting hardware.

MODEL SCALE: 0.360

DRAWING NUMBER: SS-A01222, SS-A01241

DIMENSIONS:	FULL SCALE	MODEL SCALE
NOSE LANDING GEAR		
STRUT		
Number	1	1
Diameter, In.	6.944	2.500
Length, In.		
Pivot Point to Wheel Axis	76.408	27.507
Pivot Point Location, In.		
X_o	375.500	135.180
Z_o	298.000	107.280
WHEELS		
Number	2	2
Diameter, In.	32.000	11.520
Width, In.	10.000	3.600
Axis Location, In.		
X_o	374.2636	134.735
Y_o	0.0	0.0
Z_o	221.705	79.814
DOORS		
Side		
Number	2	2
Length, In.	110.786	39.883
Height, In.	17.750	6.390
Area, Ft^2	13.657	1.770

Hingeline Location (Hingepoints)

	FWD	AFT	FWD	AFT
X_o	281.828	357.172	101.458	128.582
Y_o		± 28.500		± 10.260
Z_o	313.717	293.531	112.938	105.671

TABLE III. MODEL DIMENSIONAL DATA (Continued)

MODEL COMPONENT: HATCH - HA_1

GENERAL DESCRIPTION: Main ingress/egress crew hatch located on left side of orbiter forebody. Hatch is simulated by cutting outlines in simulated TPS.

MODEL SCALE: 0.360

DRAWING NUMBER: SS-A01447

DIMENSIONS:	FULL SCALE	MODEL SCALE
Length (Dia.), In.	48.222	17.360
Window dia., In.	19.000	6.840
Gap Width, In.	1.000	0.360
Area - Ft^2		
Max. Cross-Sectional	13.306	1.724
Location of center of hatch		
X_o	510.611	183.820
Z_o	368.000	132.480

TABLE III. MODEL DIMENSIONAL DATA (Continued)

MODEL COMPONENT: HINGES - HG_1

GENERAL DESCRIPTION: Hinges for the Cargo Bay doors. Thirteen on each side of the mid-fuselage.

MODEL SCALE: 0.360

DRAWING NUMBER: SS-A01571

DIMENSIONS:	FULL SCALE	MODEL SCALE
Length (Streamwise), In.	7.333	2.64
Max Width	2.0833	0.75
Max Depth	2.5694	0.925
Area - $In.^2$		
Max. Cross-Sectional	2.997	1.079
Frontal	2.997	1.079
Centerline of all hinges is located at Z_o	420.000	151.200
Model stations of centerline of hinges (Left and Right) X_o	602.306	216.830
	669.806	241.130
	737.306	**265.430**
	783.556	282.080
	850.611	306.220
	917.639	330.350
	966.361	347.890
	1033.389	372.020
	1100.444	396.160
	1144.194	411.910
	1204.194	433.510
	1264.000	455.040
	1297.000	466.920

TABLE III. MODEL DIMENSIONAL DATA (Continued)

MODEL COMPONENT: OMS PODS (OML)-M_{18}

GENERAL DESCRIPTION: Configuration 5 updated orbiter OMS pods - short pod. Baseline definition MCR 200 Rev. 7, 10/17/74.

MODEL SCALE: 0.360

DRAWING NUMBER: VC70-000002, VL70-008410, MD-V70, 7/19/74

DIMENSIONS:	FULL SCALE	MODEL SCALE
Length, In. X_o 1311 - 1511	200.00	72.00
Max Width, In.(X_p 304, X_o 1511)	135.75	48.87
Max Depth, In. (X_p 304, X_o 1511)	74.50	26.82
Fineness Ratio	1.937	1.937
Area - Ft^2		
Max. Cross-Sectional @ X_p 304	58.169	7.539

TABLE III. MODEL DIMENSIONAL DATA (Continued)

MODEL COMPONENT: OMS NOZZLES - N_{92}

GENERAL DESCRIPTION: The two orbiter maneuvering system nozzles are laval-bell shaped and are located at the aft end of the OMS pod. OMS nozzles in stowed position are outboard 9° and down 7° from null position.

MODEL SCALE: 0.360

DRAWING NUMBER: VC70-000002, SS-A1240

DIMENSIONS:	FULL SCALE	MODEL SCALE
Length - In.		
Gimbal Point to Exit Plane	56.000	20.160
Diameter - In.		
Exit	50.000	18.000
Throat	27.778	10.000
Area - Ft^2		
Exit	13.634	1.767
Throat	4.205	0.545
Gimbal Point (Station) - In.		
Left Nozzle		
X_o	1518.00	546.480
Y_o	+ 88.00	+ 31.680
Z_o	492.00	177.120
Right Nozzle		
X_o	1518.00	546.480
Y_o	- 88.00	- 31.680
Z_o	492.00	177.120
Null Position - Deg.		
Left Nozzle		
Pitch (Up)	15°49'	15°49'
Yaw (Outboard)	6°30'	6°30'
Right Nozzle		
Pitch (Up)	15°49'	15°49'
Yaw (Outboard)	6°30'	6°30'

TABLE III. MODEL DIMENSIONAL DATA (Continued)

MODEL COMPONENT: MPS NOZZLES - N_{94}

GENERAL DESCRIPTION: The main propulsion nozzles are laval-bell shaped and are located on the aft planes of the orbiter. The dimensions are external and not to be scaled for plume tests.

MODEL SCALE: 0.360

DRAWING NUMBER: VC70-000002, VL70-008144, RS009169, SS-A01216

DIMENSIONS:	FULL SCALE	MODEL SCALE
Length, In.		
Gimbal Point to Exit Plane	156.69	56.408
Diameter, In.		
Exit (O.D.)	93.75	33.75
Gimbal Point (Station), In.		
Upper Nozzle		
X_o	1445.00	520.20
Y_o	0.00	0.00
Z_o	443.00	159.480
Lower Nozzle		
X_o	1468.170	528.541
Y_o	53.00	19.080
Z_o	342.64	123.350
Null Position, Deg.		
Upper Nozzle		
Pitch	16°0'Up	16°0'Up
Yaw	0.0	0.0
Lower Nozzle		
Pitch	10.0°Up	10.0°Up
Yaw	3.5 Outb'd	3.5 Outb'd

TABLE III. MODEL DIMENSIONAL DATA (Continued)

MODEL COMPONENT: FORWARD RCS NOZZLES - N_{107}

GENERAL DESCRIPTION: Three forward firing nozzles -X, 3 up firing nozzles +Z, 2 down firing nozzles on each side -Z, 2 side firing nozzles on each side ±Y, and one down vernier firing on each side -Z.

MODEL SCALE: 0.360

DRAWING NO.: VL70-008296, Up Firing Location +Z, VL70-008502, Forward Firing Location -X
VL70-008501, Down Firing Location -Z, VL70-008501, Side Firing Location, ± Y

I.D.	NOZZLE POSITION AND DRAWING NUMBER	FULL SCALE			MODEL SCALE		
		X_0	Y_0	Z_0	X_0	Y_0	Z_0
112	FWD FIRING LOCATION		+ 14.0	393.261		+ 5.04	141.574
122	-X	303.606	℄	394.661	109.298	℄	142.078
132	VL70-008502		- 14.0	393.261		- 5.04	141.574
115	UP FIRING LOCATION		+ 14.0	414.167		+ 5.04	149.100
125	+Z	350.611	℄	415.135	126.220	℄	149.449
135	VL70-008296		- 14.0	414.167		- 5.04	149.100
116/136	DOWN FIRING LOCATION -Z LEFT AND RIGHT SIDE	336.00	± 63.637	357.681	120.960	± 22.909	128.765
126/146	VL70-008501	350.00	± 68.089	358.300	126.000	± 24.512	128.988
113	UPPER SIDE FIRING LOCATION						
134	± Y VL70— 008501	363.00	± 70.719	370.388	130.680	± 25.459	133.340
123	LOWER SIDE FIRING LOCATION						
144	± Y VL70-008501	365.00	± 72.480	356.181	131.400	± 26.093	128.225
157	DOWN FIRING - LEFT & RIGHT						
158	-Z VL70-008501	325.20	± 60.355	353.250	117.072	± 21.728	127.170

TABLE III. MODEL DIMENSIONAL DATA (Continued)

MODEL COMPONENT: PROBE - PR_1

GENERAL DESCRIPTION: Flight test boom and probe. Instrumentation consists of pitot-static ports and side probes for alpha and beta calibration. Temperature probe is simulated in mockup only.

MODEL SCALE: 0.360

DRAWING NUMBER: VL70-327001A, SS-A10204, Rosemount 00855-1153

DIMENSIONS:		FULL SCALE	MODEL SCALE
Length (Centerline distance from probe tip to nose OML), In.		215.325	77.517
Max Width (Dia. at pierce point OML), In.		6.201	2.232
Length (Exposed probe), In.		31.485	11.335
Fineness Ratio		0.0288	0.0288
Area - $In.^2$ Max. Cross-Sectional		30.200	3.914
Centerline of boom intersects OML on orbiter nose at: (In.)	X_o	238.067	85.704
	Z_o	349.017	125.646
Centerline of probe at tip leading edge is located at (In.):	X_o	23.561	8.482
	Z_o	330.251	118.890

The centerline of the probe is at -5 deg. incidence with respect to the model fuselage reference plane, with positive being nose-up. The centerline of the boom and probe is coincident with the model plane of symmetry.

TABLE III. MODEL DIMENSIONAL DATA (Continued)

MODEL COMPONENT: PROBE - PR_5

GENERAL DESCRIPTION: Air data system probe which is strut-mounted on the right side of the orbiter forebody. Probe is instrumented as an angle-of-attack sensor, and pitot-static sensor.

MODEL SCALE: 0.360

DRAWING NUMBER: Rosemount 00856-1948

DIMENSIONS:		FULL SCALE	MODEL SCALE
Probe total length (Centerline of base to tip of probe), In.		11.347	4.085
Probe length (tip of probe to L.E. of strut), In.		6.500	2.340
Probe height (centerline of probe to base surface), In.		5.000	1.800
Strut Max.thickness, In.		0.650	0.234
Strut chord length, In.		4.500	1.620
Probe dia. (Max cross-sectional), In.		1.000	0.360
Strut sweep angles, deg.:	L.E.	- 30.0	- 30.0
	T.E.	- 30.0	- 30.0
Mounting base, dia., In.		4.500	1.620
Location of base center:	X_o	302.056	108.740
	Y_o	$\pm$ 52.994	$\pm$ 19.0078
	Z_o	323.364	116.411

The centerline of the probe is at -10 deg. incidence to the model fuselage reference plane, as measured in a butt plane with positive being nose-up. The probe centerline is positioned parallel to the forebody local OML.

TABLE III. MODEL DIMENSIONAL DATA (Continued)

MODEL COMPONENT: PROBE - PR_6

GENERAL DESCRIPTION: Air data system probe which is strut-mounted on the left side of the orbiter forebody. Probe is instrumented as a pitot-static sensor, and angle-of-attack sensor.

MODEL SCALE: 0.360

DRAWING NUMBER: Rosemount 00856-1947

DIMENSIONS:		FULL SCALE	MODEL SCALE
Probe total length (Centerline of base to tip of probe), In.		11.347	4.085
Probe height (Centerline of probe to base surface), In.		5.000	1.800
Probe length (tip of probe to L.E. of strut), In.		6.500	2.340
Strut max. thickness, In.		0.650	0.234
Strut chord length		4.500	1.620
Probe diameter (Max. cross-sectional), In.		1.000	0.360
Strut sweep angles, L.E., Deg.		- 30.0	- 30.0
T.E., Deg.		- 30.0	- 30.0
Dia. of mounting base, In.		4.500	1.620
Location of base center:	X_o	302.056	108.7
	Y_o	± 52.994	± 19.00
	Z_o	323.364	116.4

The centerline of the probe is at -10 deg. incidence to the model fuselage reference plane, as measured in a butt plane with positive being nose-up. The probe centerline is positioned parallel to the forebody local OML.

TABLE III. MODEL DIMENSIONAL DATA (Continued)

MODEL COMPONENT: RUDDER - R_{18}

GENERAL DESCRIPTION: The rudder is a secondary movable airfoil at the trailing edge of the vertical fin, V_{23}. Baseline definition configuration 5, reference MCR 200, Rev. 7, 10/17/74. (OML)

MODEL SCALE: 0.360

DRAWING NUMBER: VC70-000002, and MD-V70-7/19/74

DIMENSIONS:	FULL SCALE	MODEL SCALE
Area - Ft^2	97.84	12.680
Span (equivalent), In.	198.614	71.501
Inb'd equivalent chord, In.	91.07	32.785
Outb'd equivalent chord, In.	50.80	18.288
Ratio movable surface chord/total surface chord		
At inb'd equiv. chord Z_V=80.496	0.400	0.400
At outb'd equiv. chord Z_V=279.110	0.400	0.400
Sweep Back Angles, degrees		
Leading Edge	34.833	34.833
Trailing Edge	26.249	26.249
Hingeline	34.833	34.833
Area Moment (Product of Area and $\bar{c}$), Ft^3	593.889	27.708
Mean aerodynamic chord, In.	72.840	26.222

TABLE III. MODEL DIMENSIONAL DATA (Continued)

MODEL COMPONENT: VERTICAL - V_{23} (OML)

GENERAL DESCRIPTION: The vertical tail is double-wedge shaped and mounted dorsally on the aft fuselage. It is to the baseline vehicle configuration 5, Ref. MCR 200, Rev. 7, 10/17/74

MODEL SCALE: 0.360

DRAWING NUMBER: VC70-000002 and MD-V70, 7/19/74

DIMENSIONS: TOTAL DATA	FULL SCALE	MODEL SCALE
Area (Theo) - Ft^2		
Planform	413.253	53.558
Span (Theo) - In.	315.720	113.659
Aspect Ratio	1.675	1.675
Rate of Taper	0.507	0.507
Taper Ratio	0.404	0.404
Sweep-Back Angles, Degrees		
Leading Edge	45.000	45.000
Trailing Edge	26.25	26.25
0.25 Element Line	41.13	41.13
Chords:		
Root (Theo) WP	268.50	96.66
Tip (Theo) WP	108.47	39.049
MAC	199.81	71.932
Fus. Sta. of .25 MAC	1463.50	526.860
W.P. of .25 MAC	635.52	228.787
B.L. of .25 MAC	0.0	0.0
Airfoil Section		
Leading Wedge Angle - Deg.	10.00	10.00
Trailing Wedge Angle - Deg.	14.92	14.92
Leading Edge Radius	2.00	0.72
Void Area	13.17	1.707
Blanketed Area	0.0	0.0

TABLE III. MODEL DIMENSIONAL DATA (Continued)

MODEL COMPONENT: VENT - VT_1

GENERAL DESCRIPTION: Oval-shaped vent cut-out in TPS, which vents the RCS area. One on each side of the forward fuselage.

MODEL SCALE: 0.360

DRAWING NUMBER: VC70-000007, SS-A01447

DIMENSIONS:		FULL SCALE	MODEL SCALE
Length		4.86	1.75
Max Width		4.00	1.44
Max Depth		OML to IML	OML to IML
Area - $In.^2$			
Max. Cross-Sectional		16.006	2.074
Center of vent, in.	X_o	384.80	138.528
	Z_o	371.40	133.704

TABLE III. MODEL DIMENSIONAL DATA (Continued)

MODEL COMPONENT: VENT - VT_2

GENERAL DESCRIPTION: Oval-shaped vent cutout in simulated TPS which vents the cabin area. One vent located on each side of the forward fuselage.

MODEL SCALE: 0.360

DRAWING NUMBER: VC70-000007, SS-A01447

DIMENSION:		FULL SCALE	MODEL SCALE
Length		9.56	3.442
Max Width		4.00	1.440
Max Depth		OML to IML	OML to IML
Area			
Max. Cross-Sectional		34.806	4.571
Center of vent, In.	X_o	398.60	143.496
	Z_o	374.50	134.820

TABLE III. MODEL DIMENSIONAL DATA (Concluded)

MODEL COMPONENT: WING-W_{129}

GENERAL DESCRIPTION: The wing is the primary lifting device and is mounted horizontally and is symmetric about the plane $Y_o = 0$. A cuff from the fuselage to the wing leading edge @ $X_o = 940$ to $Y_o = 1084$. Baseline configuration 5, MCR 200 Rev.7, 10/17/74. MODEL SCALE: 0.360

DRAWING NUMBER: VC70-000002 and MD-V70

DIMENSIONS:	FULL SCALE	MODEL SCALE
TOTAL DATA		
Area (Theo.) Ft^2		
Planform	2690.00	348.624
Span (Theo) In.	936.68	337.205
Aspect Ratio	2.265	2.265
Rate of Taper	1.1773	1.1773
Taper Ratio	0.2000	0.2000
Dihedral Angle, degrees	3.500	3.500
Incidence Angle, degrees	0.500	0.500
Sweep Back Angles, degrees		
Leading Edge	45.00	45.00
Trailing Edge	- 10.056	- 10.056
0.25 Element Line	35.209	35.209
Chords:		
Root (Theo) B.P.0.0.	689.2429	248.127
Tip, (Theo) B.P.	137.8486	49.625
MAC	474.8117	170.932
Fus. Sta. of .25 MAC	1136.834	409.260
W.P. of .25 MAC	290.857	104.709
B.L. of .25 MAC	182.132	65.568
EXPOSED DATA		
Area (Theo) Ft^2	1751.50	226.994
Span, (Theo) In. BP108	720.68	259.445
Aspect Ratio	2.060	2.060
Taper Ratio	0.2452	0.2452
Chords		
Root BP108	562.090	202.352
Tip 1.00 b/2	137.8486	49.625
MAC	392.826	141.417
Fus. Sta. of .25 MAC	1186.50	427.140
W.P. of .25 MAC	293.683	105.726
B.L. of .25 MAC	251.769	90.637
Airfoil Section (Rockwell Mod NASA)XXXX-64		
Root b/2 =	0.1136	0.0408
Tip b/2 =	0.120	0.0432
Data for (1) of (2) Sides		
Planform Area Ft^2	145.4	18.844
Leading Edge Intersects Fus M.L. @ Sta	500.0	180.000
Leading Edge Intersects Wing @ Sta	1084.00	390.240

TABLE IV. BASE PRESSURE AREAS

TAP NUMBER	AREA, FT^2 MODEL SCALE (MPS NOZZLES ON)
1	0
2	2.094
3	1.728
4	2.572
5	BODY FLAP
6*	0
7	4.466
8	0
9	2.481
10	1.838
11	1.838
12	3.525
13	4.079
14	BODY FLAP
15	6.745
16	2.350
17	1.944
18	0.867
19	0.867
20	0.867
21	0.867
22	0.627
23	1.336
24	1.336
25	1.336
26	1.336
27	2.425
28	2.425
29	2.425
30	2.425
31	2.425
TOTAL AREA	57.224

*Tube 6 broken and area added to tubes 7 and 9

TABLE V. STRUT TARE AND INTERFERENCE ADJUSTMENTS TO 40 X 80 COMPUTED AERO DATA BASED ON TEST OA159 RESULTS

α	ΔC_{L_T}	ΔC_{D_T}	ΔC_{m_T}
-6	-.0187	.0087	.0195 + .000023 Q
-4	-.0182	.0063	.0190
-2	-.0177	.0041	.0185
0	-.0173	.0022	.0180
2	-.0169	0	.0172
4	-.0164	-.0014	.0167
6	-.0159	-.0024	.0162
8	-.0155	-.0031	.0157
10	-.0150	-.0036	.0152
12	-.0145	-.0039	.0147
14	-.0142	-.0040	.0140
16	-.0139	-.0041	.0136
18	-.0136	↓	.0132
20	-.0135		.0130
22	-.0134		.0129
24	-.0133		.0128
26	-.0132		.0128

where:

C_L (FINAL) = C_L(40x80) - ΔC_{L_T}

C_D (FINAL) = C_D(40x80) - ΔC_{D_T}

C_m (FINAL) = C_m(40x80) - ΔC_{m_T}

α = Datex I corrected α

q = Datex I dynamic pressure

TABLE VI. CONTROL SURFACE CONSTANTS

	K_δ(deg/volt)
ELEVON PANEL #1	$K_{\delta EX}$ = 2.47
#2	2.60
#3	2.59
#4	2.54
SPEEDBRAKE PANEL #1	$K_{\delta SX}$ = 9.282
#2	9.133
#3	9.151
#4	9.450
BODY FLAP	RUNS 21-188 = 9.542 RUNS 189-190 = 9.400

TABLE VII. BLOCKING CORRECTIONS

MINIMUM DRAG - C_{D_o}

EQUATION: $C_{D_o} = C_{D_{oBASIC}} + \Delta C_{D\delta_E} + \Delta C_{D\delta_{SB}} + \Delta C_{D\delta_{BF}}$

	CONTROL DEFLECTION	CONFIGURATION TAILCONE-OFF
$C_{D_{oBASIC}}$	$\delta_{SB} = 25^o$, $\delta_{BF} = 0^o$, $\delta_E = 0^o$	0.068
	$\delta_{SB} = 0^o$, $\delta_{BF} = -11.7^o$, $\delta_E = 0^o$	---
$\Delta C_{D\delta_E}$	$\delta_E = -30^o$	0.033
	$= -20^o$	0.005
	$= -10^o$	-0.005
	$= 0^o$	0.0
	$= 10^o$	0.010
	$= 20^o$	0.030
$\Delta C_{D\delta_{BF}}$	$\delta_{BF} = -11.7^o$	0.030
	$= 0^o$	0.0
	$= 16.3^o$	0.030
	$= 22.5^o$	0.060
$\Delta C_{D\delta_{SB}}$	$\delta_{SB} = 0^o$	-0.009
	$= 25^o$	0.0
	$= 55^o$	0.024
	$= 87.2^o$	0.049

LIFT AT MINIMUM DRAG - C_{L_o}

	CONTROL DEFLECTION	TAILCONE-OFF
C_{L_o}	$\delta_E = -30^o$	-0.10
	$= -20^o$	-0.10
	$= -10^o$	0.0
	*	

*NOTE: Use $C_{L_o} = 0$ for all other angles of δ_e

Notes:

1. Positive directions of force coefficients, moment coefficients, and angles are indicated by arrows
2. For clarity, origins of wind and stability axes have been displaced from the center of gravity

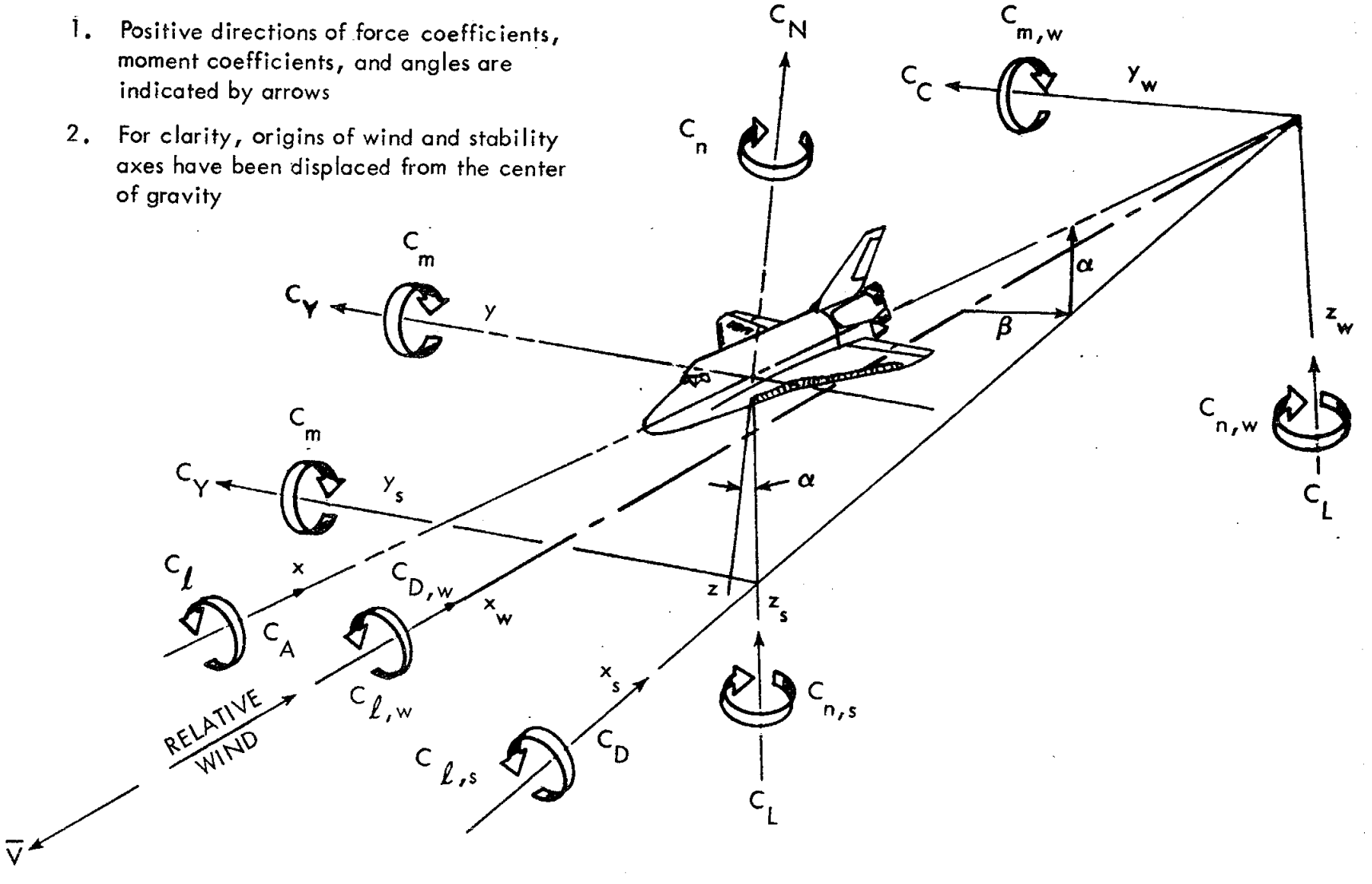

Figure 1. Axis systems.

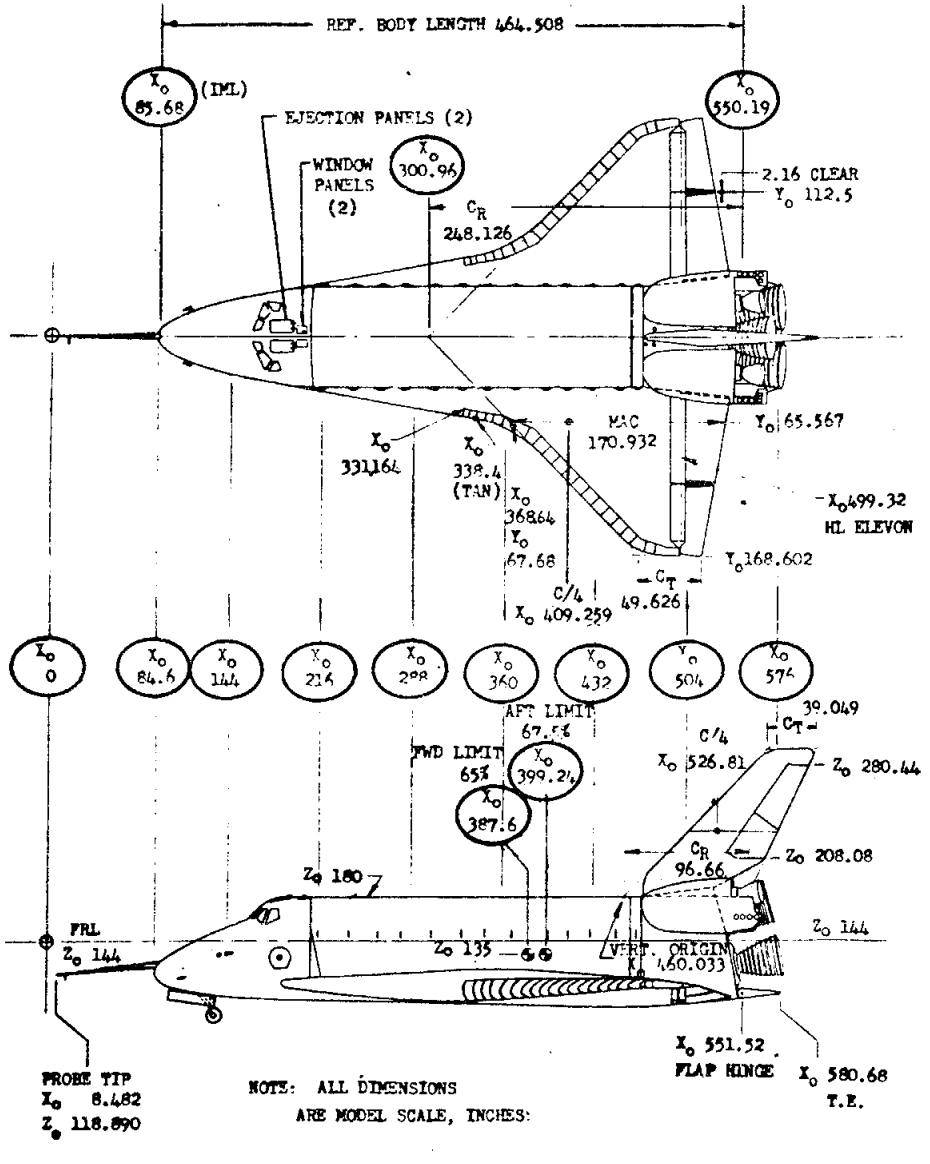

GEOMETRY			
	WING	VERTICAL	FLAP
S_w, FT^2	348.624	53.557	17.593
A R	2.265	1.675	
λ	0	0.404	
Λ L.E.	45	45°	
DIHEDRAL (@ CHORD PLANE & T.E.)	3°30'		
α BASIC WING	+ 0.5 DEG.		
t/c Y = 0 (@ BODY)	0.1137		
t/c Y_o = 71.64	0.113		
t/c Y_o = 168.602	0.12		
b, in.	337.205		
C_R, IN.	248.126		
C_T, IN.	49.626		
$\bar{C}$, IN.	170.932		
MAC	Y_o 65.567	Z_o 228.787	
AIRFOIL	TIP 0012-64	10° SYM.	
	Y_o 71.64, 0010	60-40 WEDGE	
V_T(TAIL VOLUME)		0.0537	
S_w EXPOSED, FT^2 (TOTAL)	260.807	47.835	
S_{GLOVE} EXPOSED, FT^2 (TOTAL)	37.688		
S_w WETTED, FT^2 (TOTAL)	518.556	95.751	
S_{ELEVON}, FT^2 (ONE SIDE)	26.771		
S_{RUDDER}, FT^2		12.590	

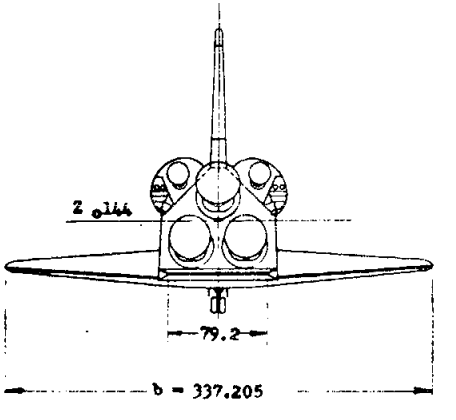

a. Orbiter Basic Dimensions

Figure 2. Model figures

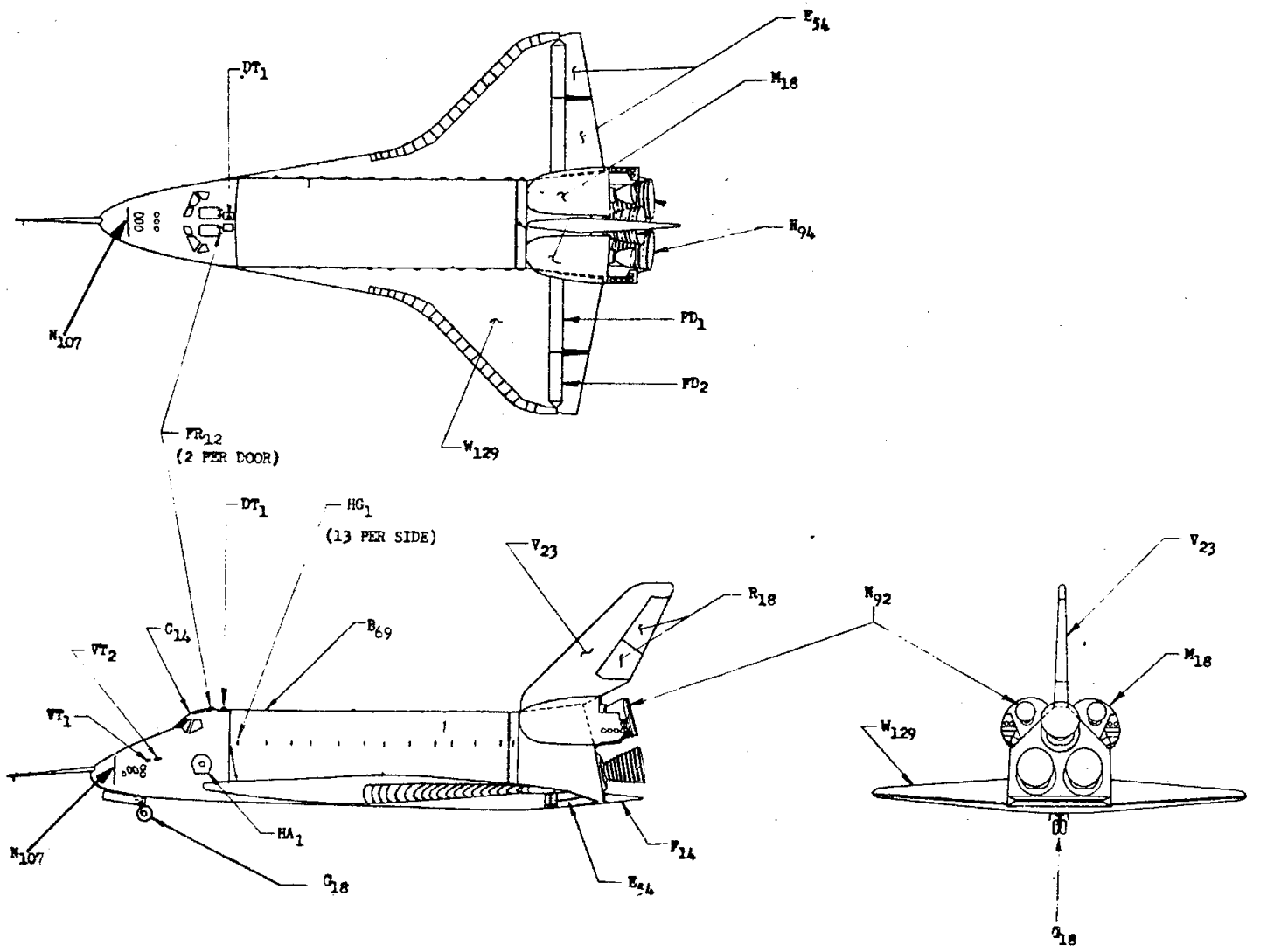

b. Model Nomenclature
Figure 2. Continued.

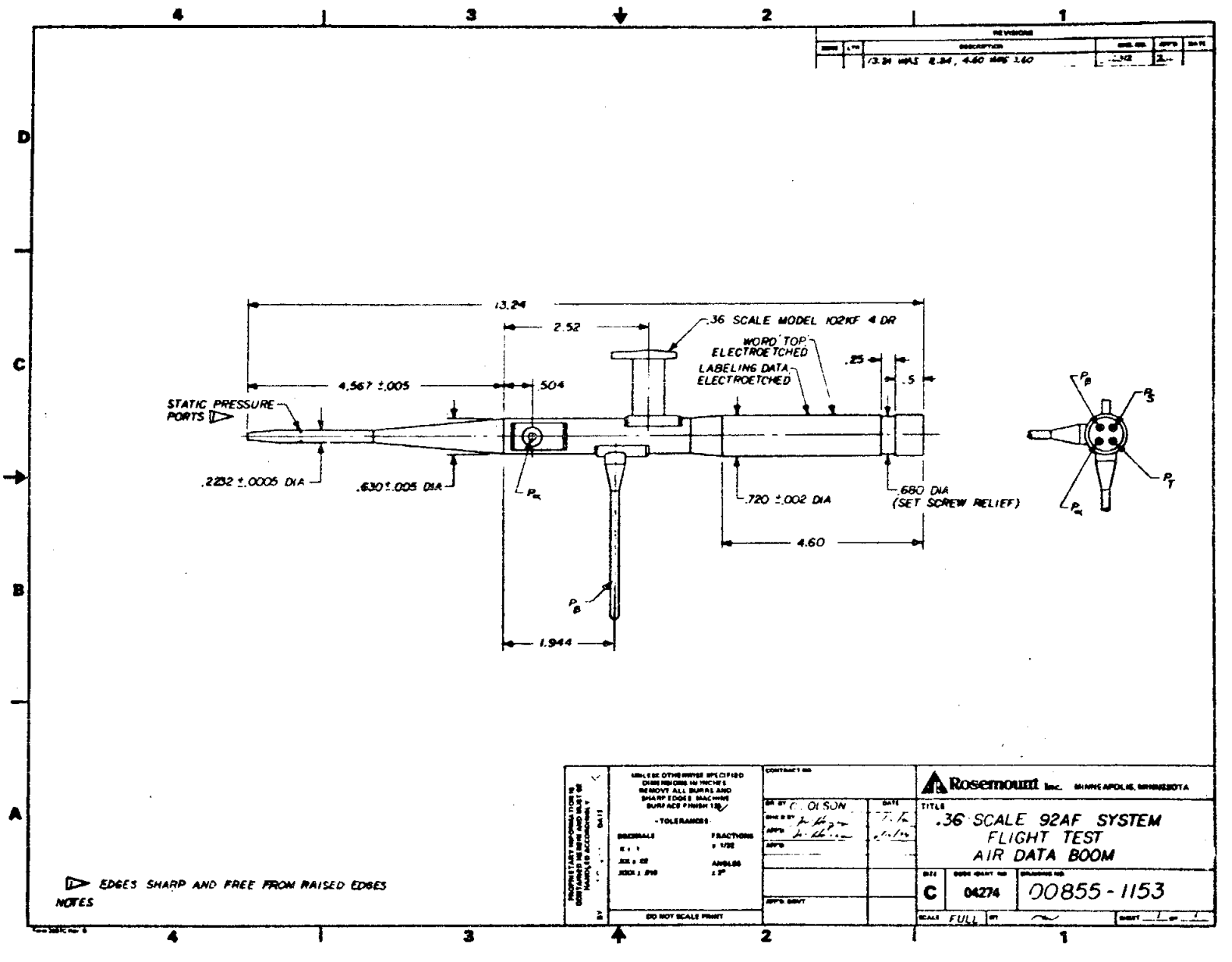

c. 0.36-Scale 92AF System Flight Test Air Data Boom
Figure 2. Continued.

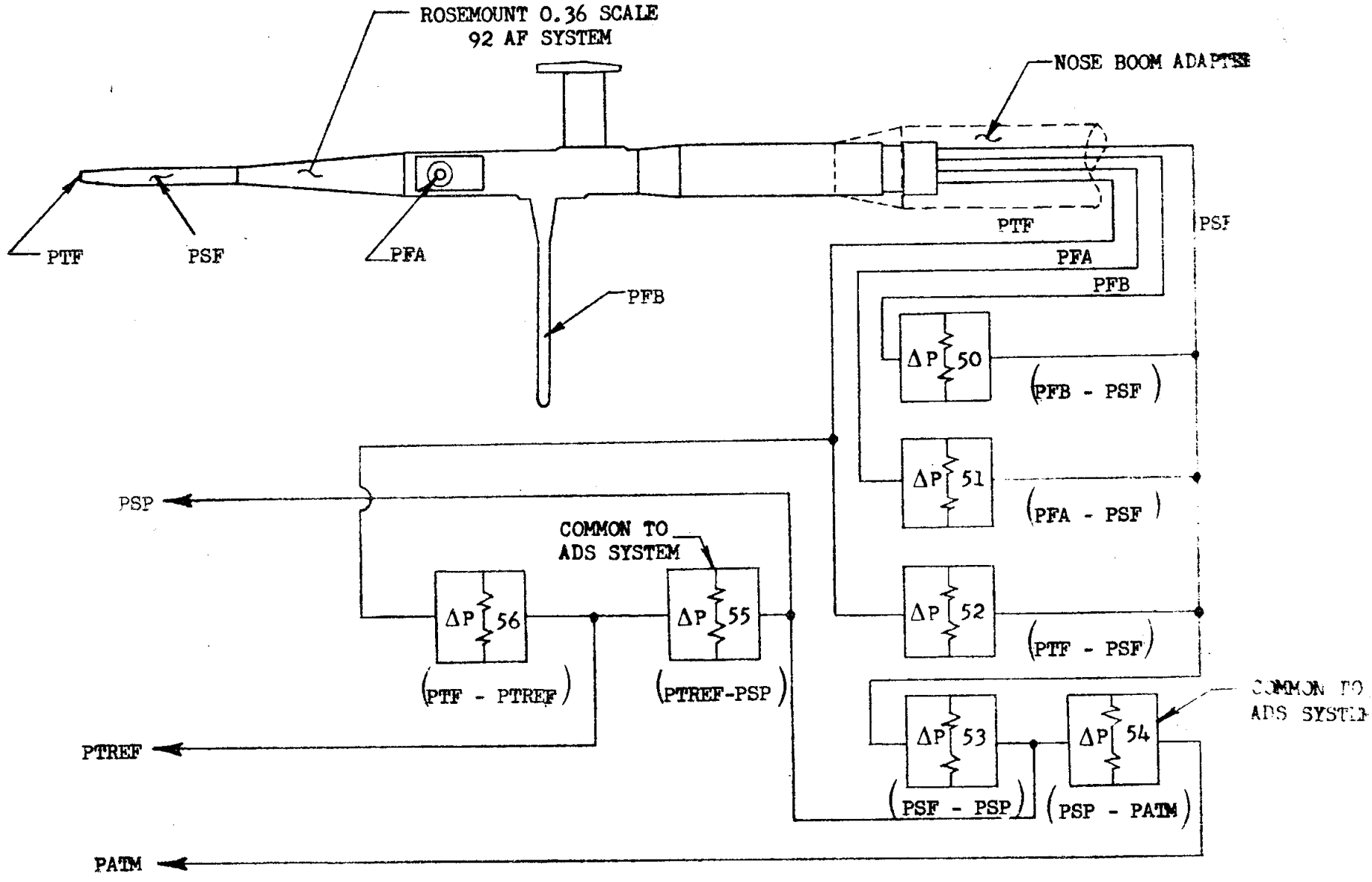

d. Pressure Hook-up for Flight Test Probe (FT)
Figure 2. Continued.

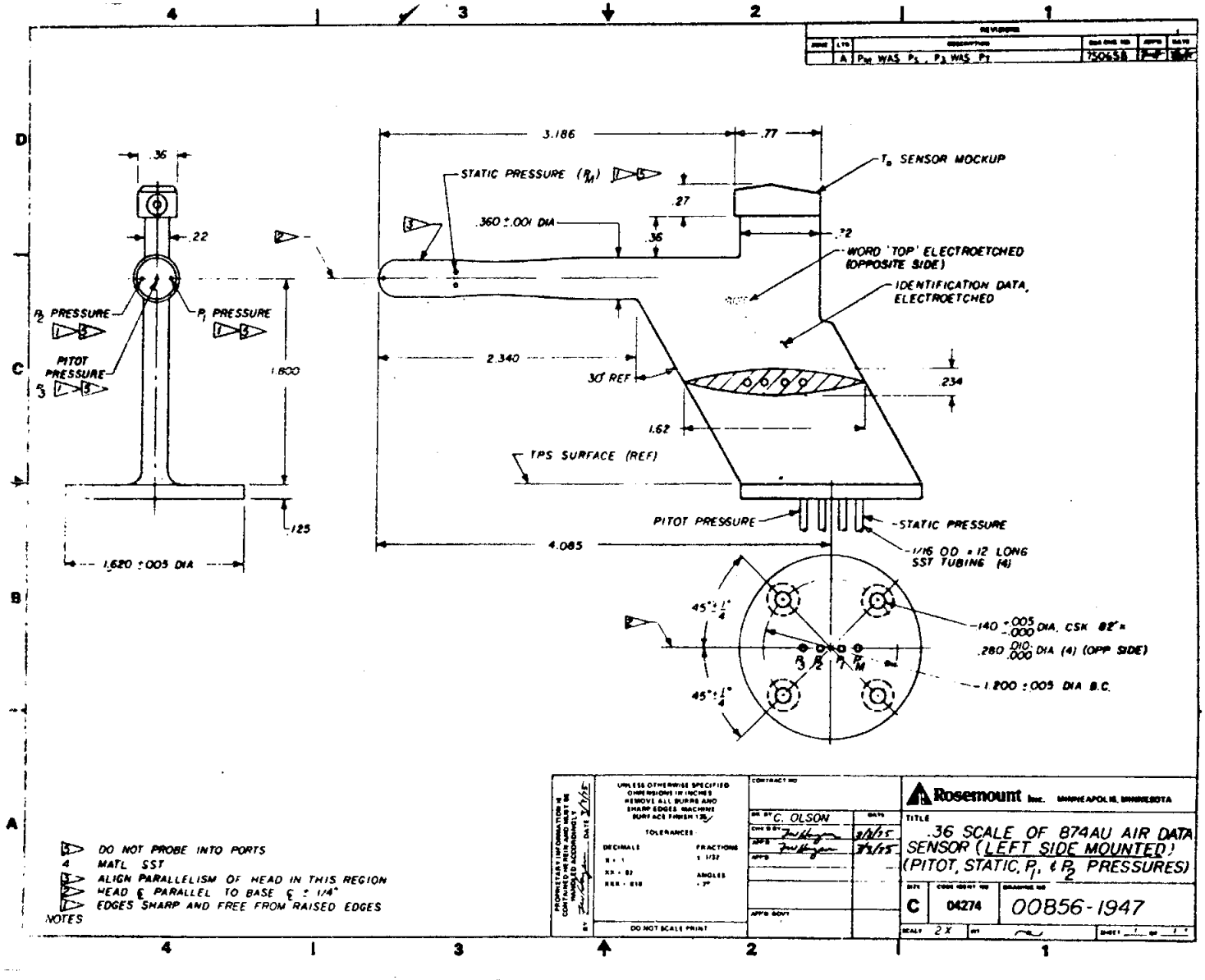

e. 0.36-Scale of 874AU Air Data Sensor (left side mounted) 00856-1947
Figure 2. Continued.

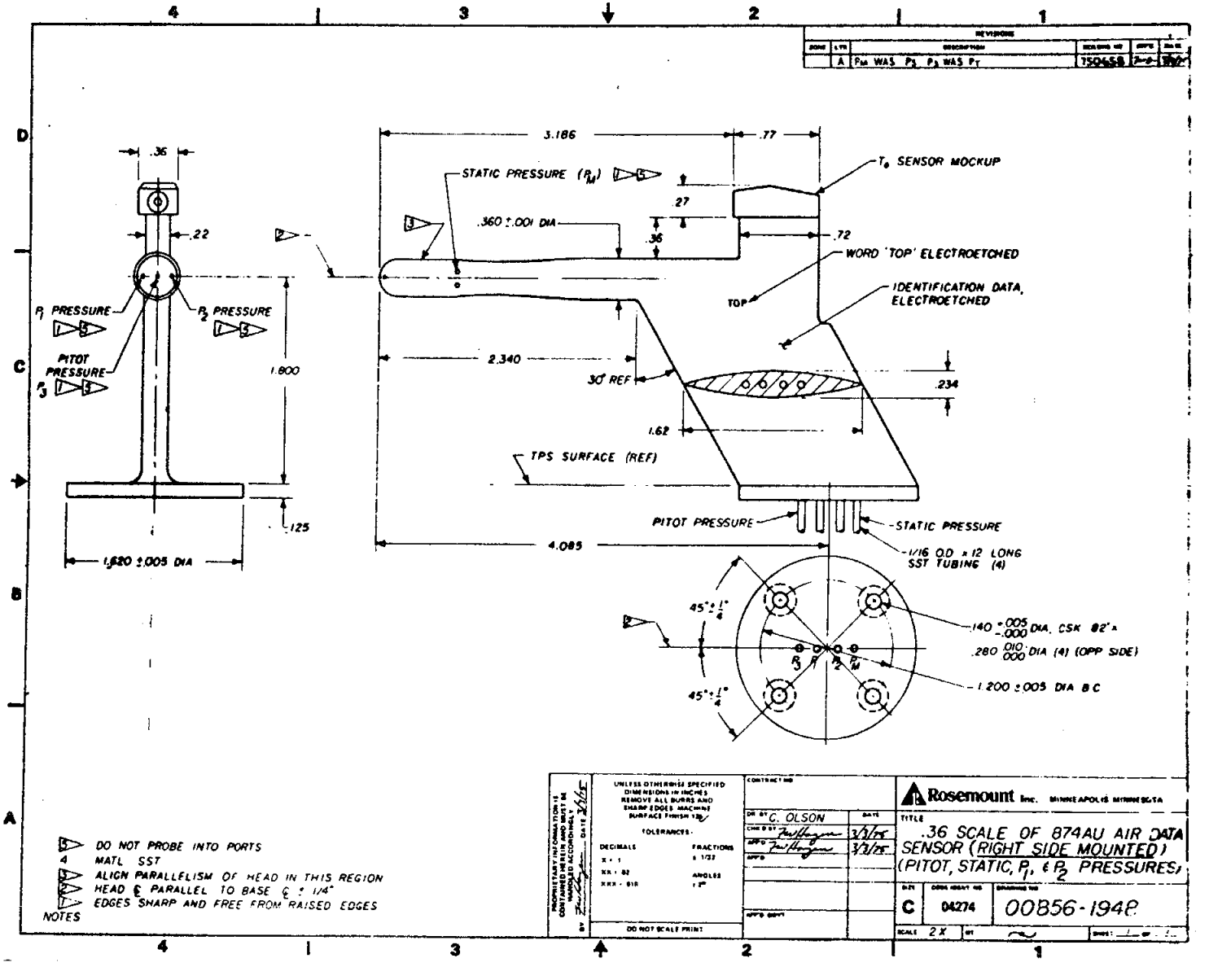

f. 0.36-Scale of 874AU Air Data Sensor (right side mounted) 00856-1948
Figure 2. Continued.

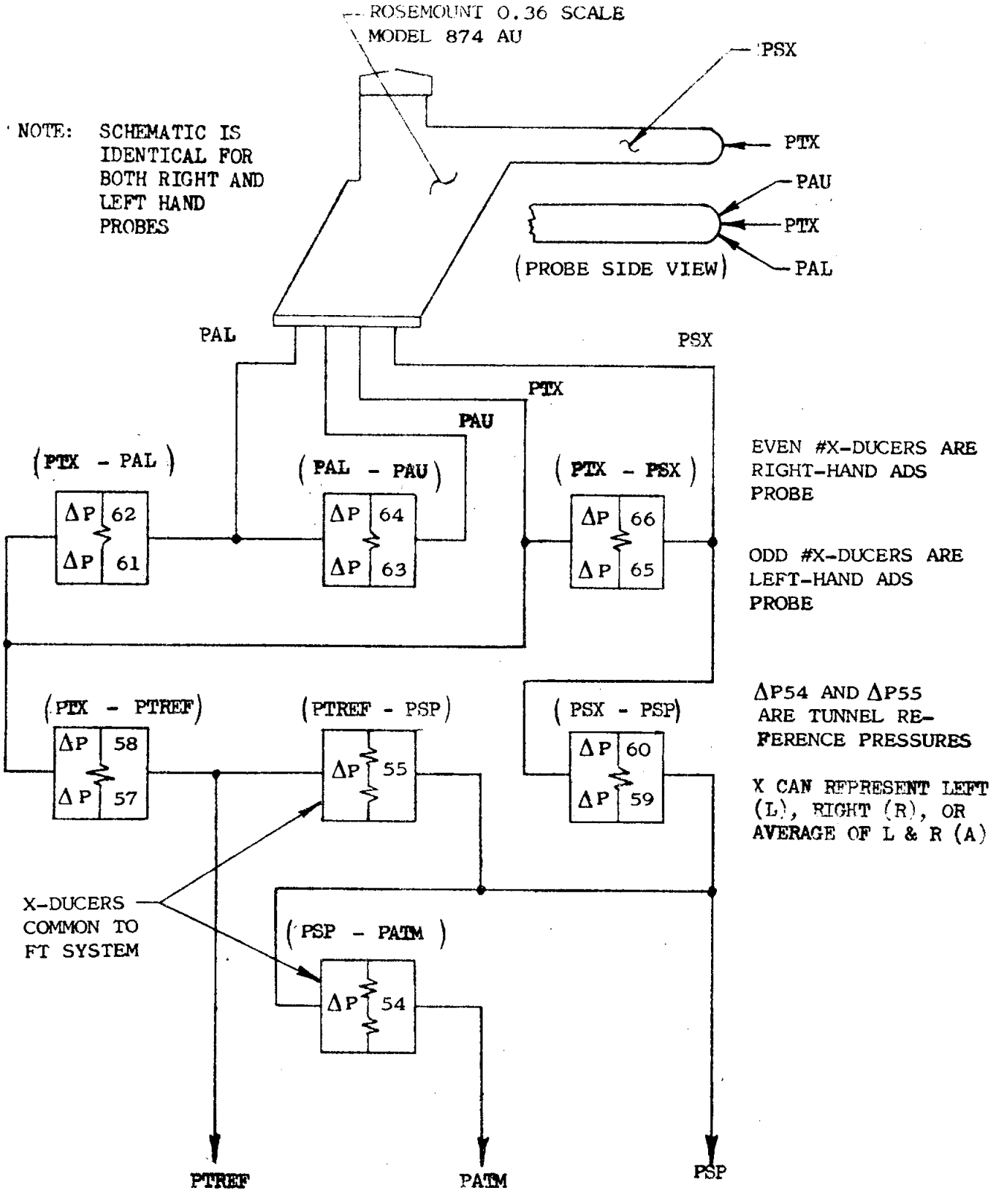

g. Pressure Hook-up for Air Data Sensors (ADS)
Figure 2. Continued.

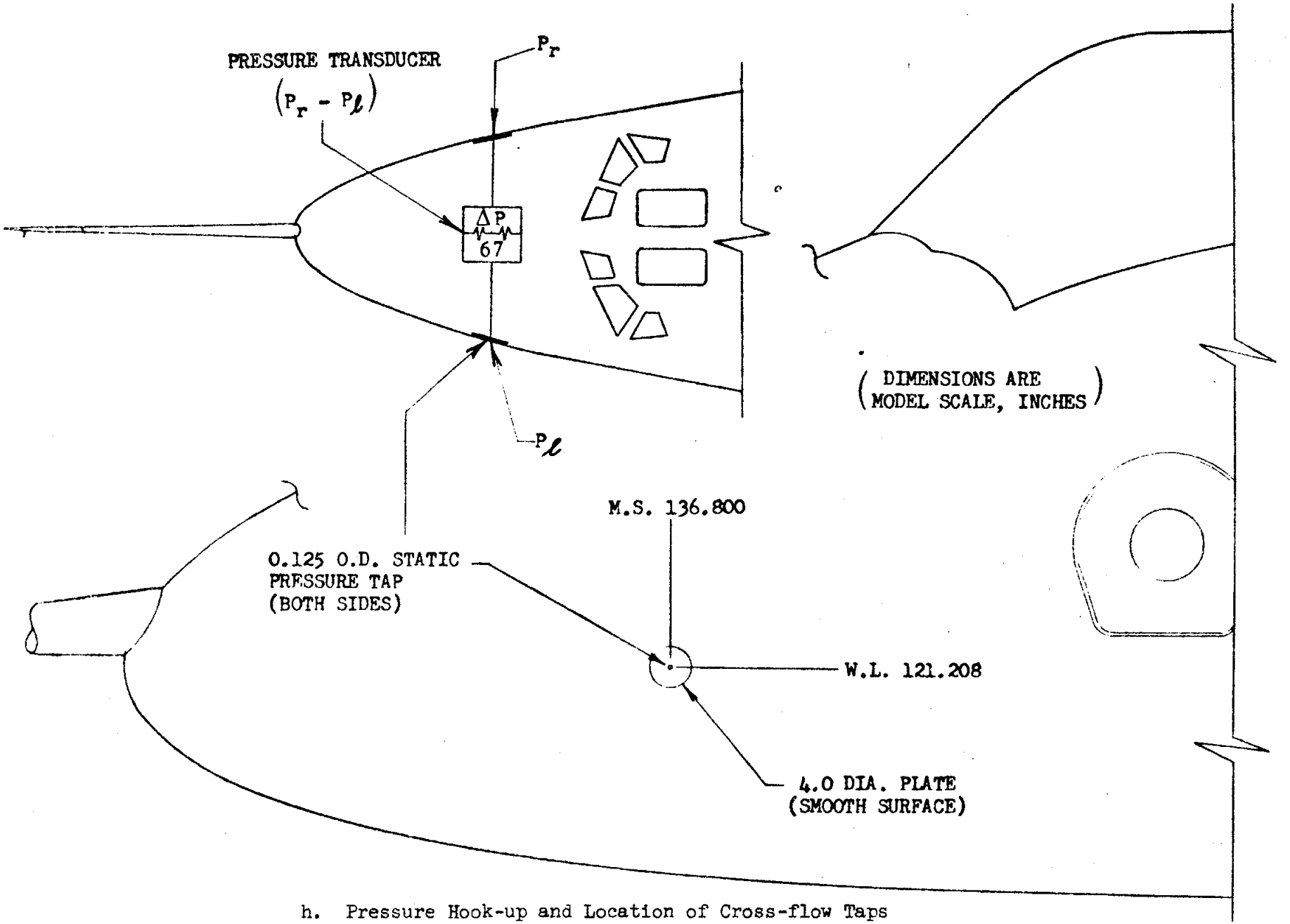

h. Pressure Hook-up and Location of Cross-flow Taps
Figure 2. Continued.

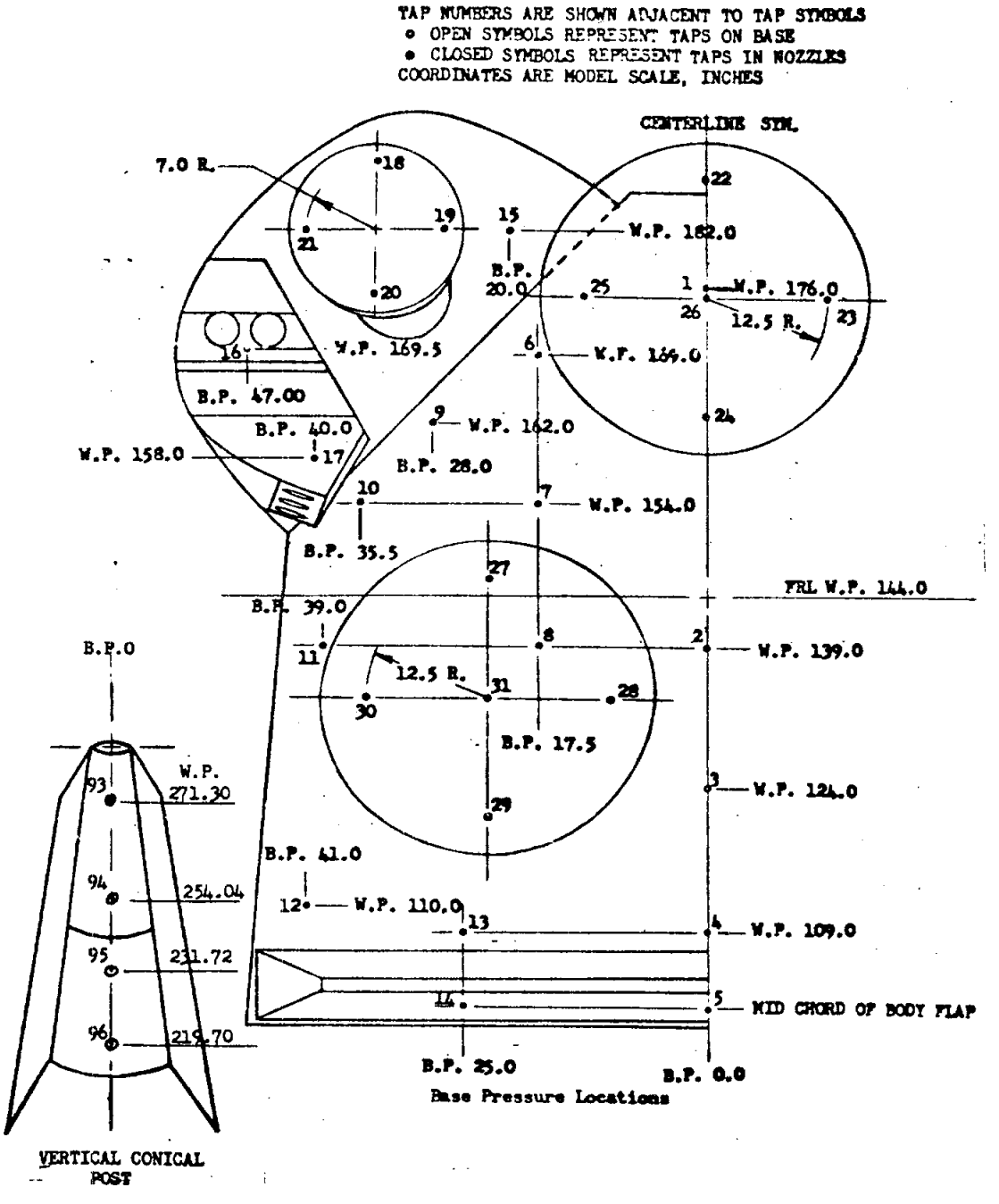

i. Base Pressure Locations
Figure 2. Continued.

TAP NUMBER	TAP LOCATION, IN. M.S.		
	X_O	Y_O*	Z_O
68	84.60	0	121.68
69, 79	99.36	±14.75	122.84
70, 80	99.36	±14.94	120.20
71, 81	99.36	±14.91	117.41
72, 82	106.56	±18.00	123.66
73, 83	106.56	±18.19	120.45
74, 84	106.56	±18.25	117.02
75, 85	120.96	±23.29	121.36
76, 86	135.00	±27.34	122.64
77, 87	149.76	±30.74	124.40
78, 88	164.16	±33.60	128.71
89	99.36	0	136.96
90	106.56	0	140.75
91	98.36	- 0.50	108.71
92	106.56	- 0.40	106.56

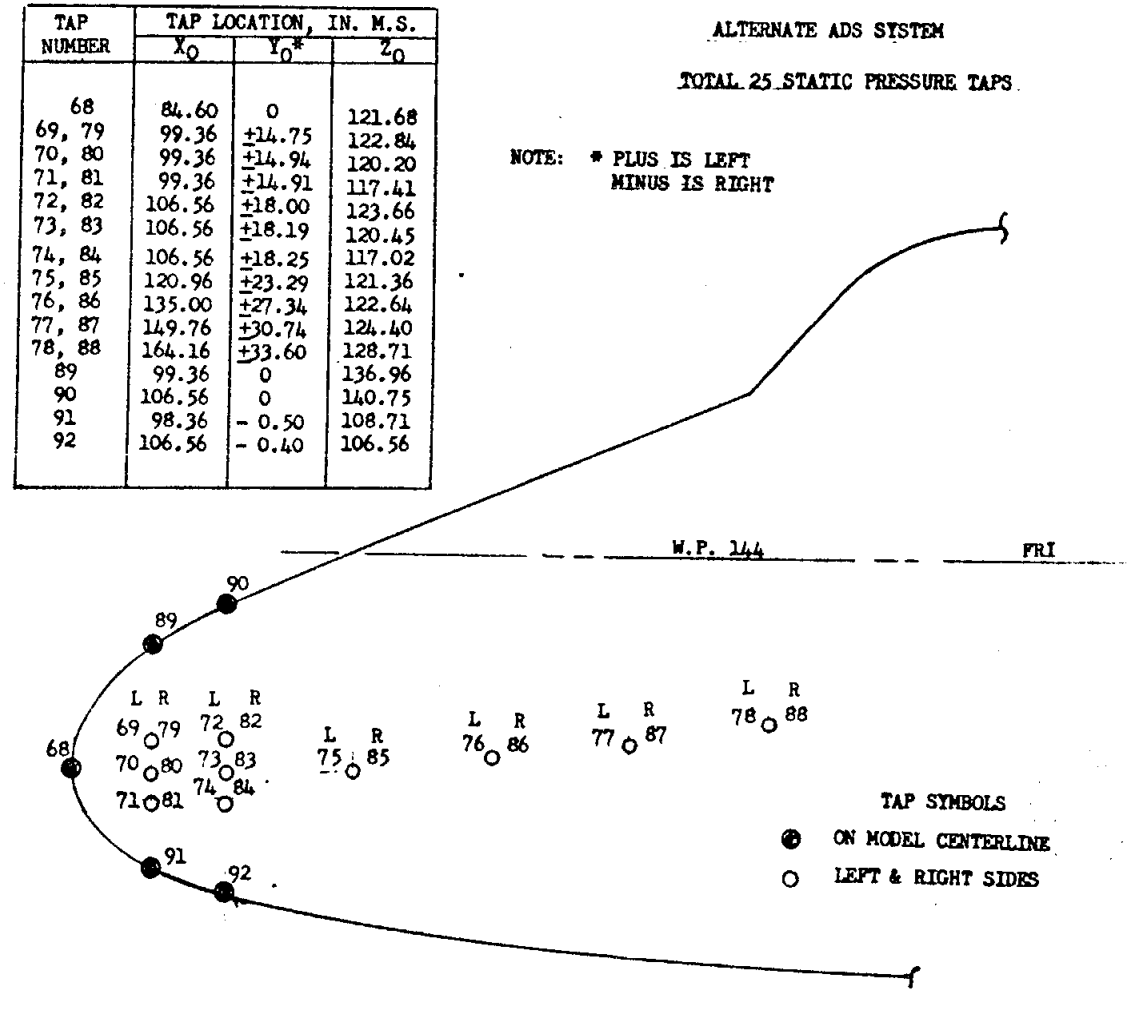

j. Alternate ADS System
Figure 2. Continued.

NOTE: TAP #'S 93-96 ARE LOCATED ON THE AFT ℄ OF THE VERTICAL CONICAL POST

NOTE: TAP #'S 97-110 ARE LOCATED ON THE INSIDE FACE OF THE UPPER AND LOWER RIGHT HAND SPEED BRAKE PANELS

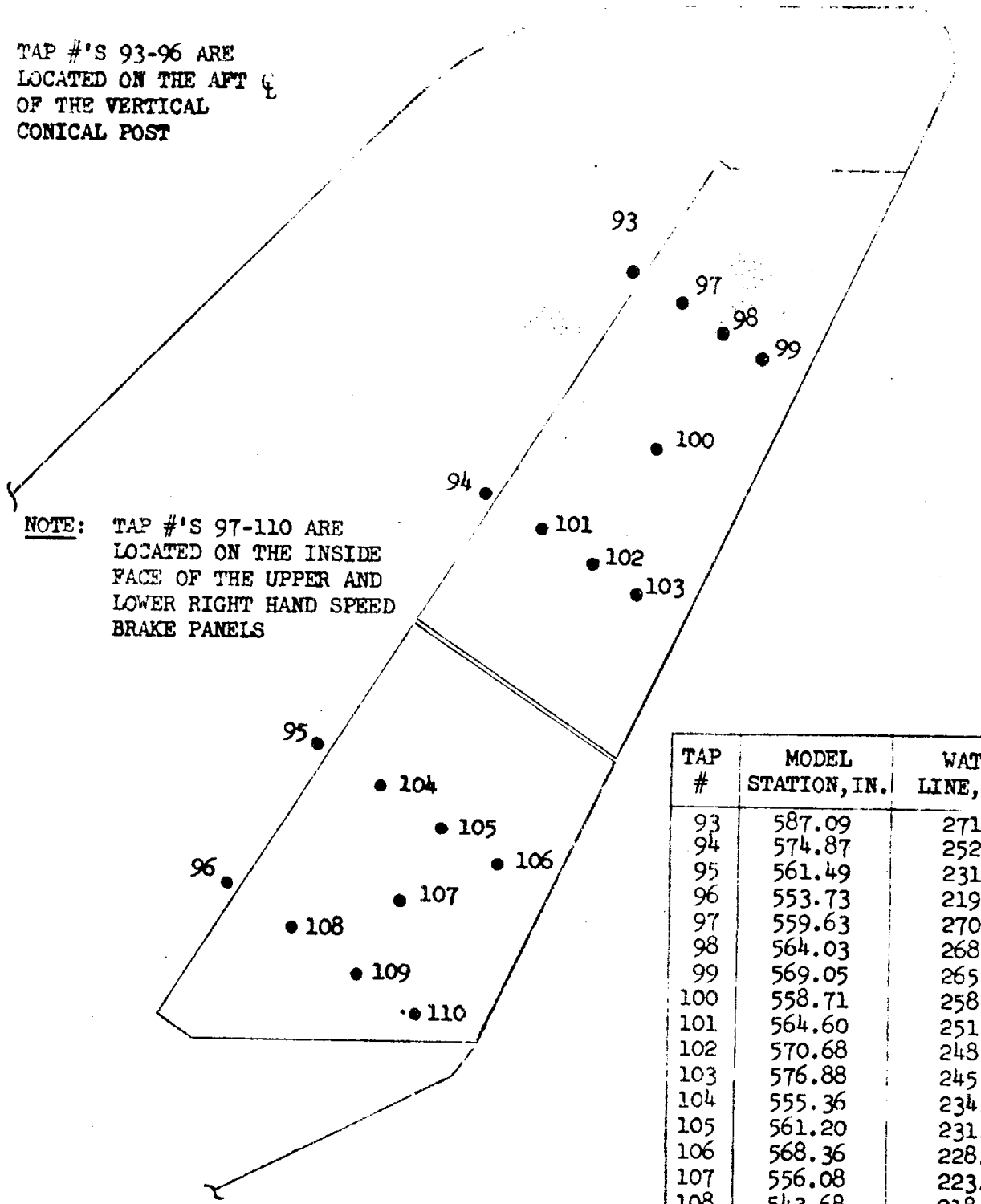

TAP #	MODEL STATION, IN.	WATER LINE, INMS
93	587.09	271.32
94	574.87	252.66
95	561.49	231.66
96	553.73	219.70
97	559.63	270.80
98	564.03	268.14
99	569.05	265.36
100	558.71	258.90
101	564.60	251.40
102	570.68	248.54
103	576.88	245.44
104	555.36	234.60
105	561.20	231.90
106	568.36	228.66
107	556.08	223.70
108	543.68	218.86
109	551.64	215.24
110	559.48	211.42

k. Vertical Tail/Speedbrake Pressure Tap Locations
Figure 2. Continued.

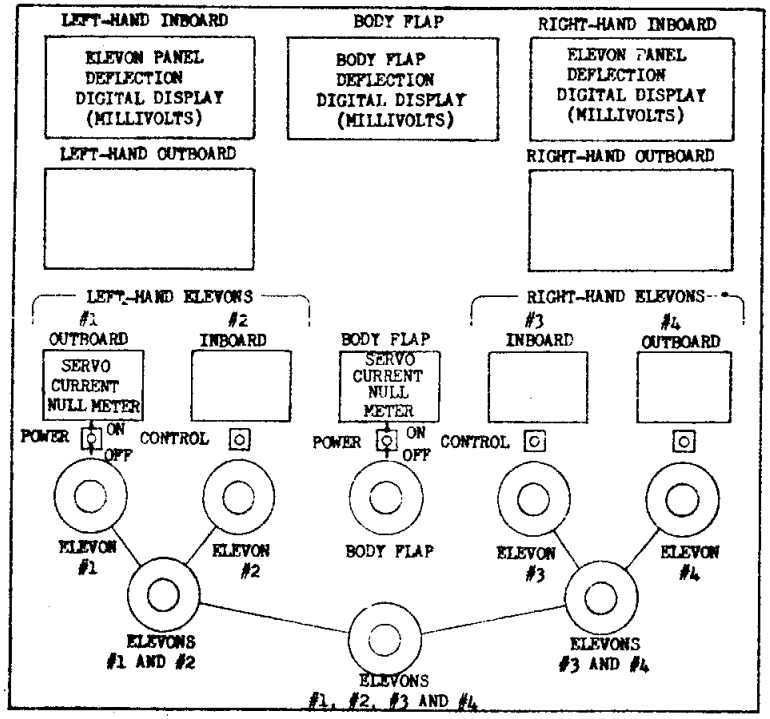

ELEVONS AND BODY FLAP
- ACTUATION CONTROL
- POSITION INDICATION

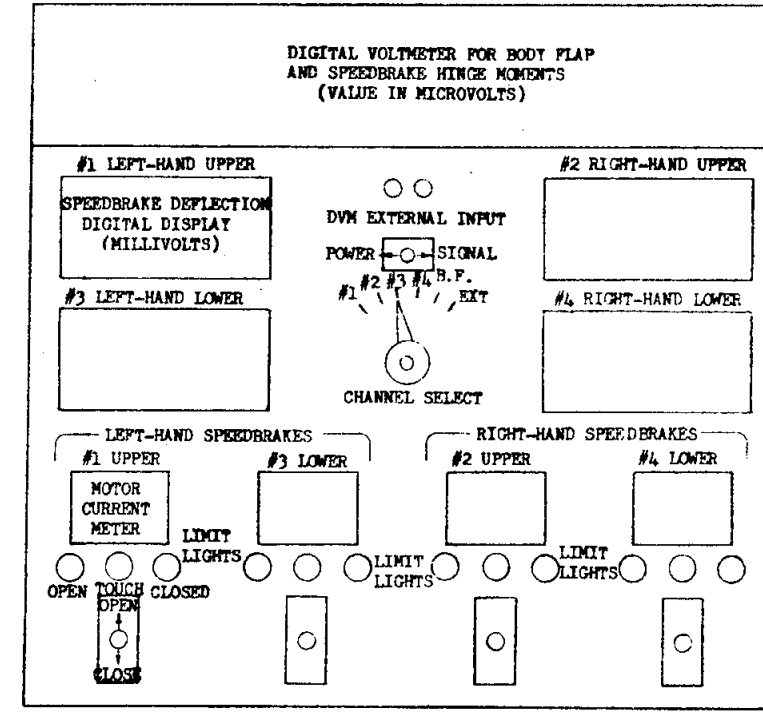

SPEEDBRAKE PANELS
- ACTUATION CONTROL
- POSITION INDICATION

SPEEDBRAKES AND BODY FLAP
- HINGE MOMENT READOUT

1. Model Control Console Layout
Figure 2. Continued.

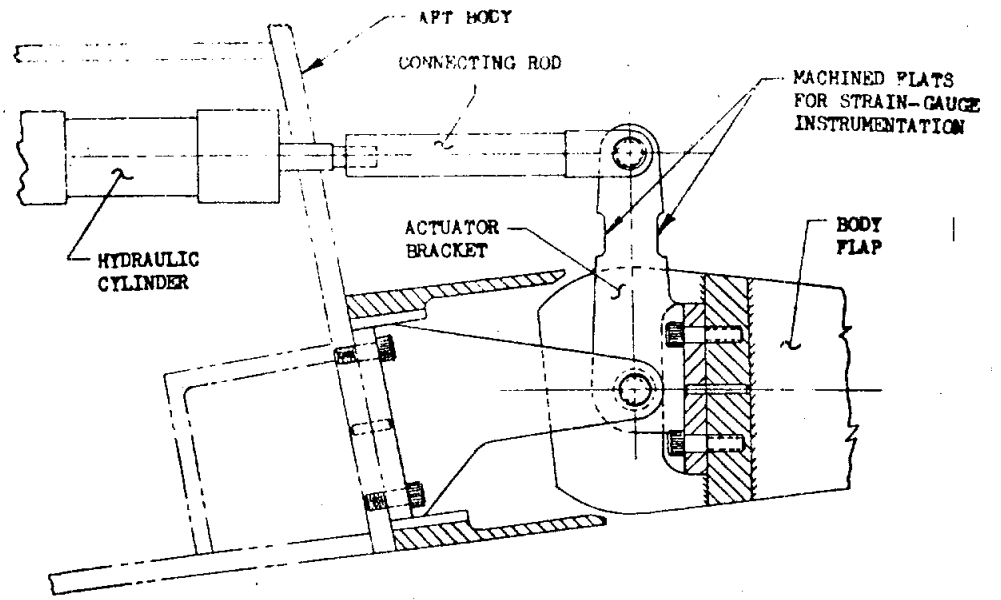

BODY FLAP HINGE MOMENT INSTRUMENTATION AND ACTUATION

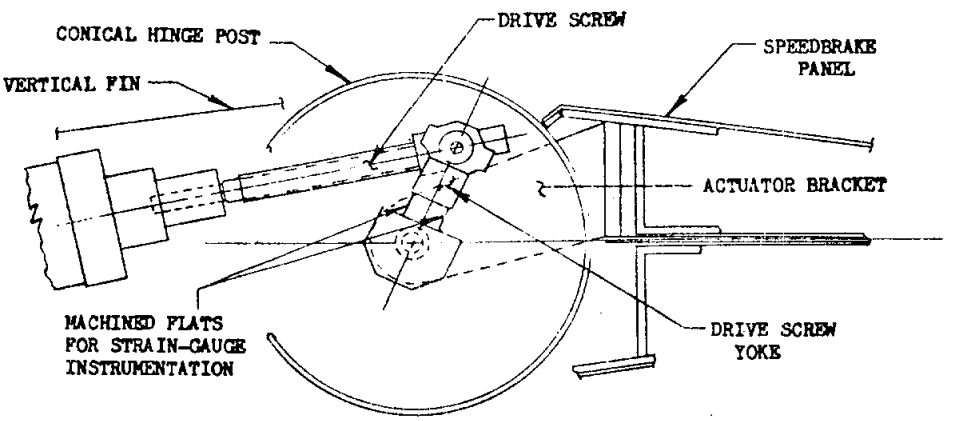

SPEEDBRAKE HINGE MOMENT INSTRUMENTATION AND ACTUATION

m. Body Flap and Speedbrake Hinge Moment Design
Figure 2. Continued.

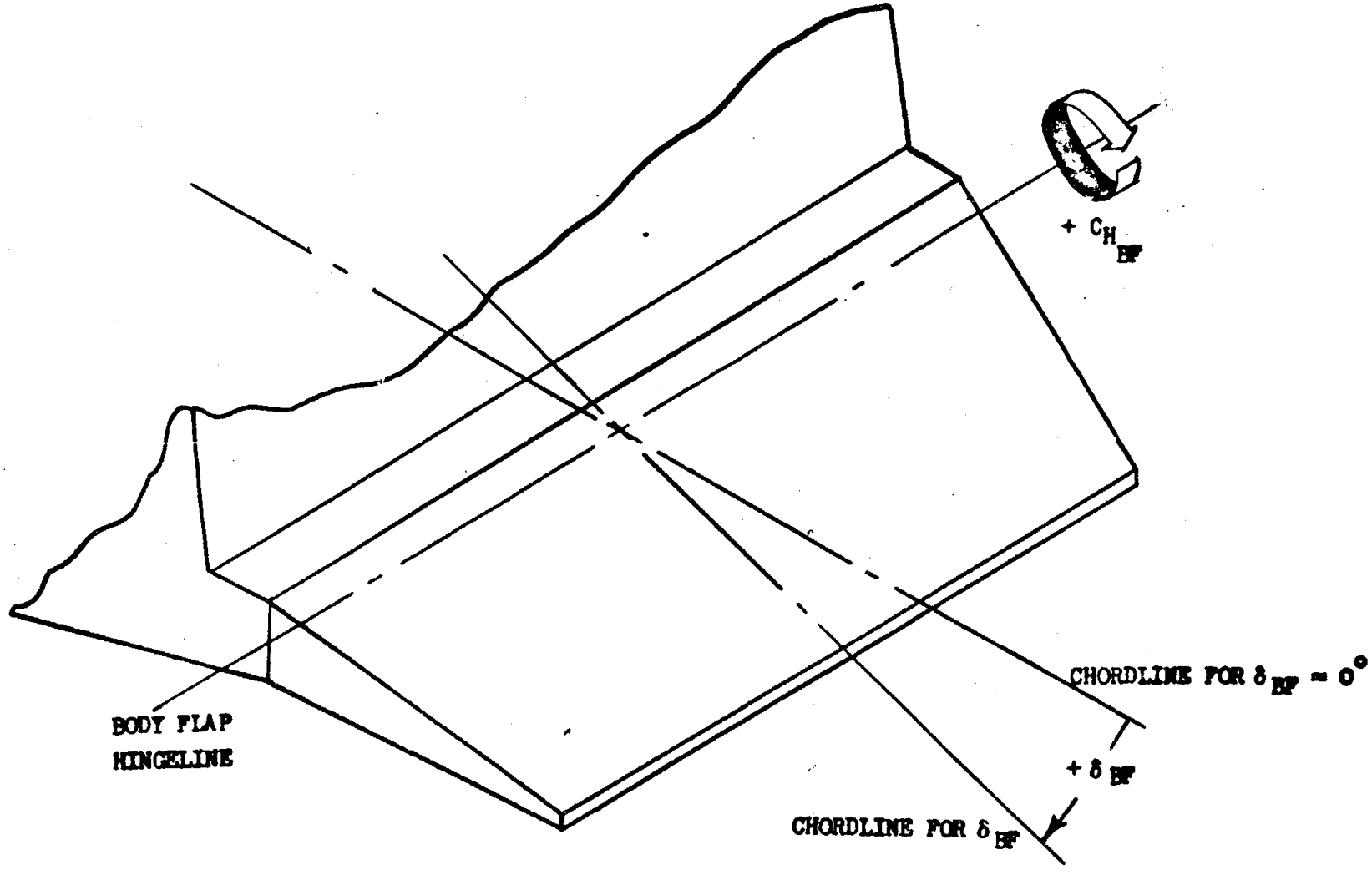

n. Body Flap Deflection and Hinge Moment Definition
Figure 2. Continued.

NOTE: DEFLECTIONS ARE MEASURED IN A WATER PLANE.
MOMENTS ARE MEASURED ABOUT THE HINGELINE.

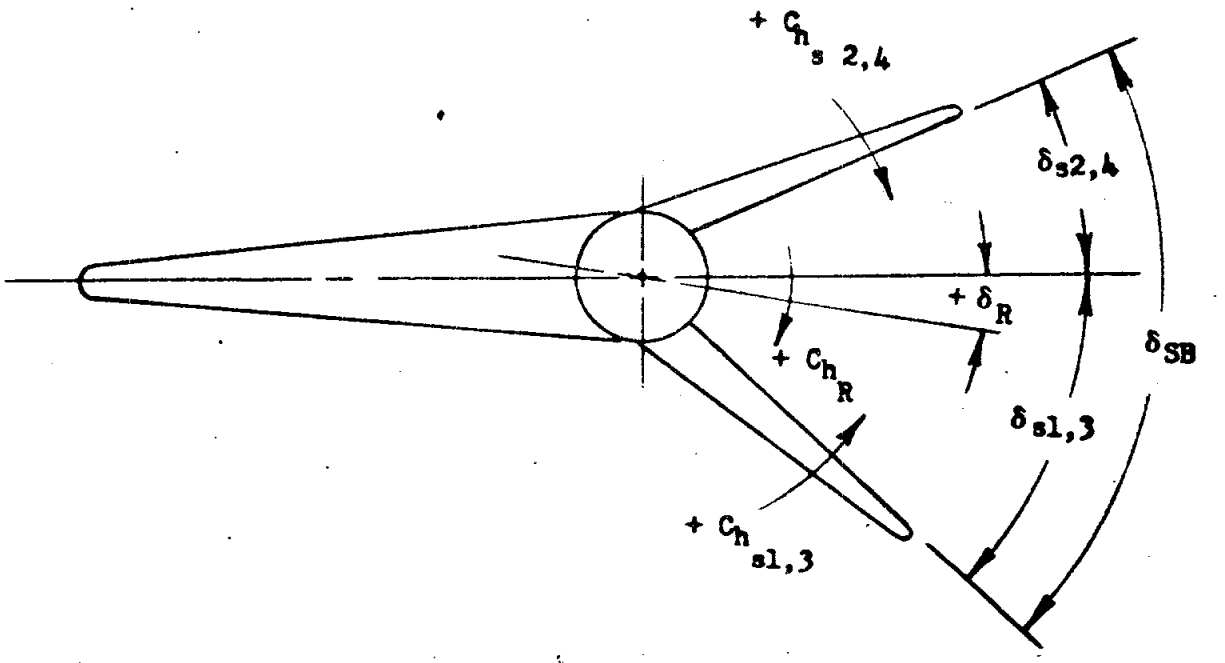

SPEED BRAKE PANEL NUMBER	SPEED BRAKE PANEL LOCATION
1	UPPER LEFT
2	UPPER RIGHT
3	LOWER LEFT
4	LOWER RIGHT

o. Definition of Rudder/Speedbrake Deflections and Hinge Moments
Figure 2. Continued.

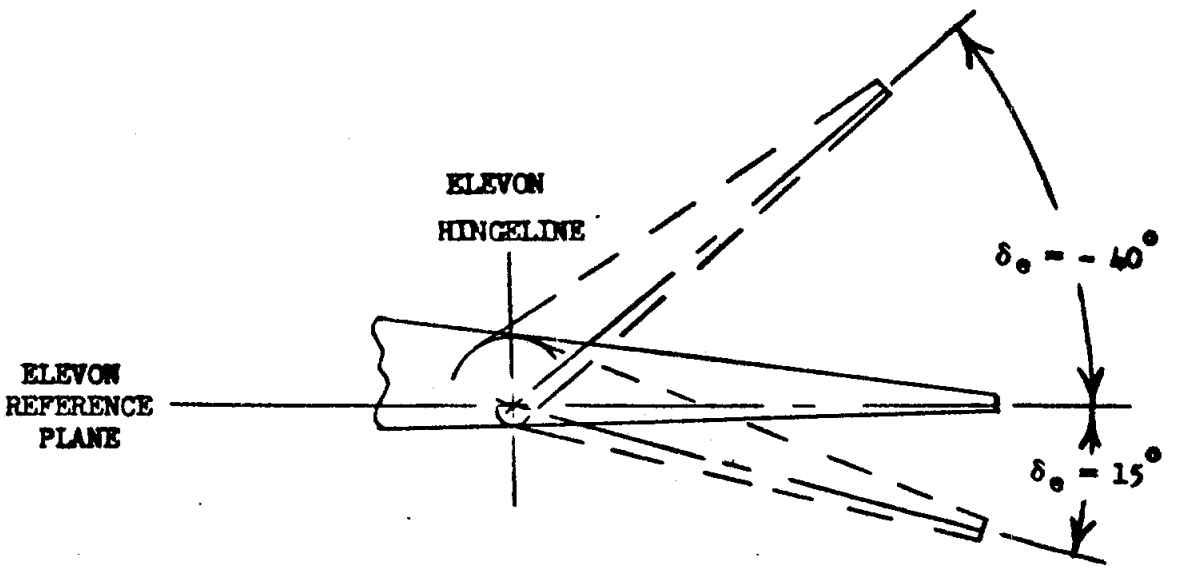

MAXIMUM ELEVON DEFLECTIONS

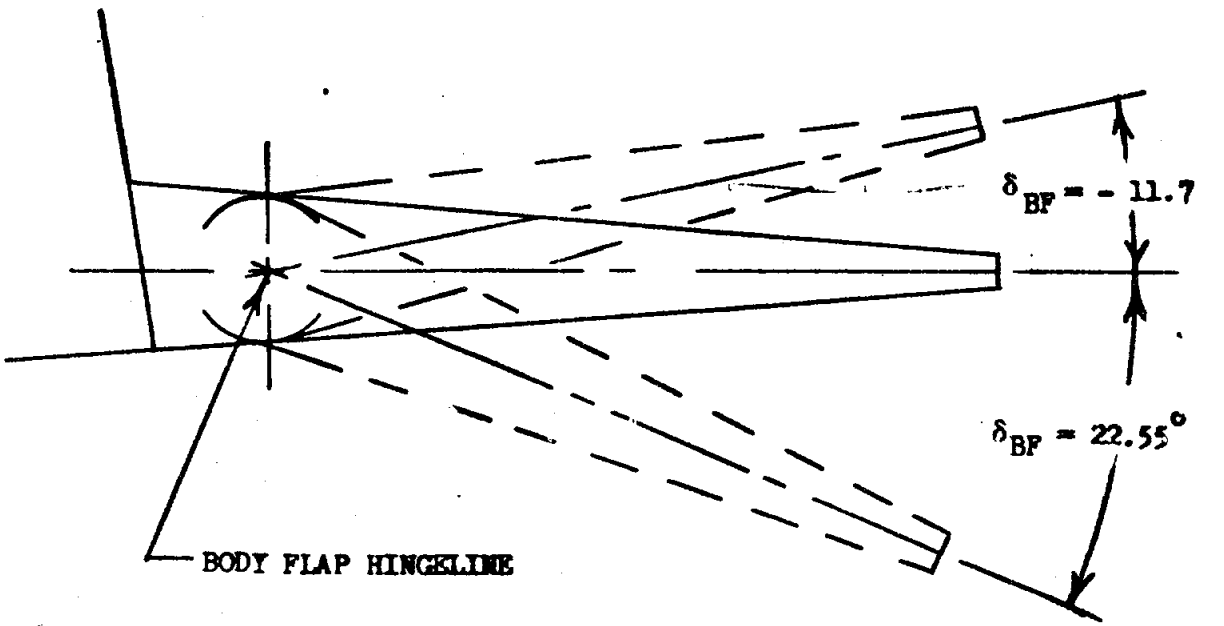

MAXIMUM BODY FLAP DEFLECTIONS

p. Elevon and Body Flap Deflections
Figure 2. Continued.

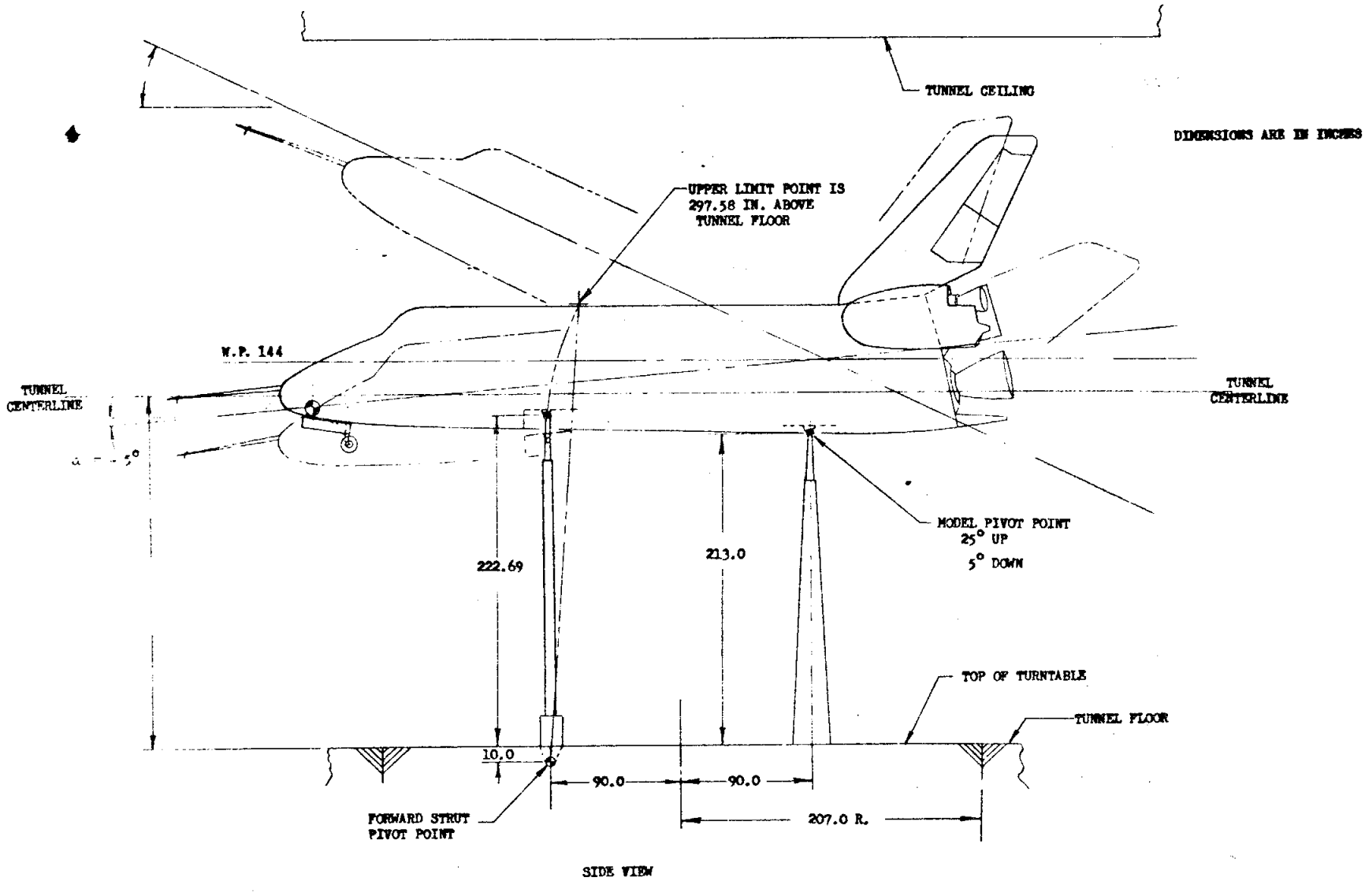

q. Installation of Model 76-0 in the ARC 40 x 80 Foot Wind Tunnel (side view)
Figure 2. Continued.

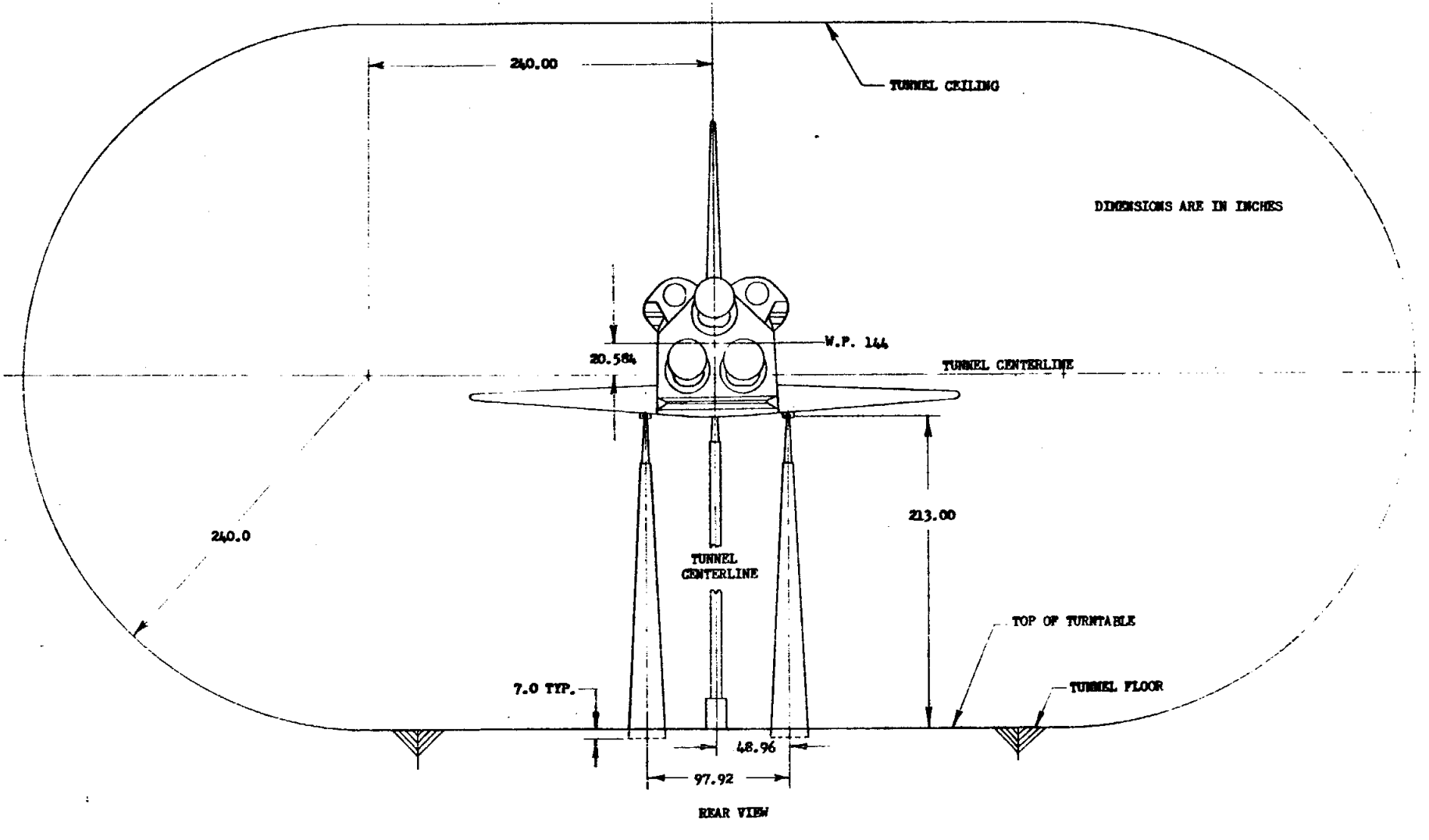

r. Installation of Model 76-0 in the ARC 40 x 80 Foot Wind Tunnel (Rear View)
Figure 2. Continued.

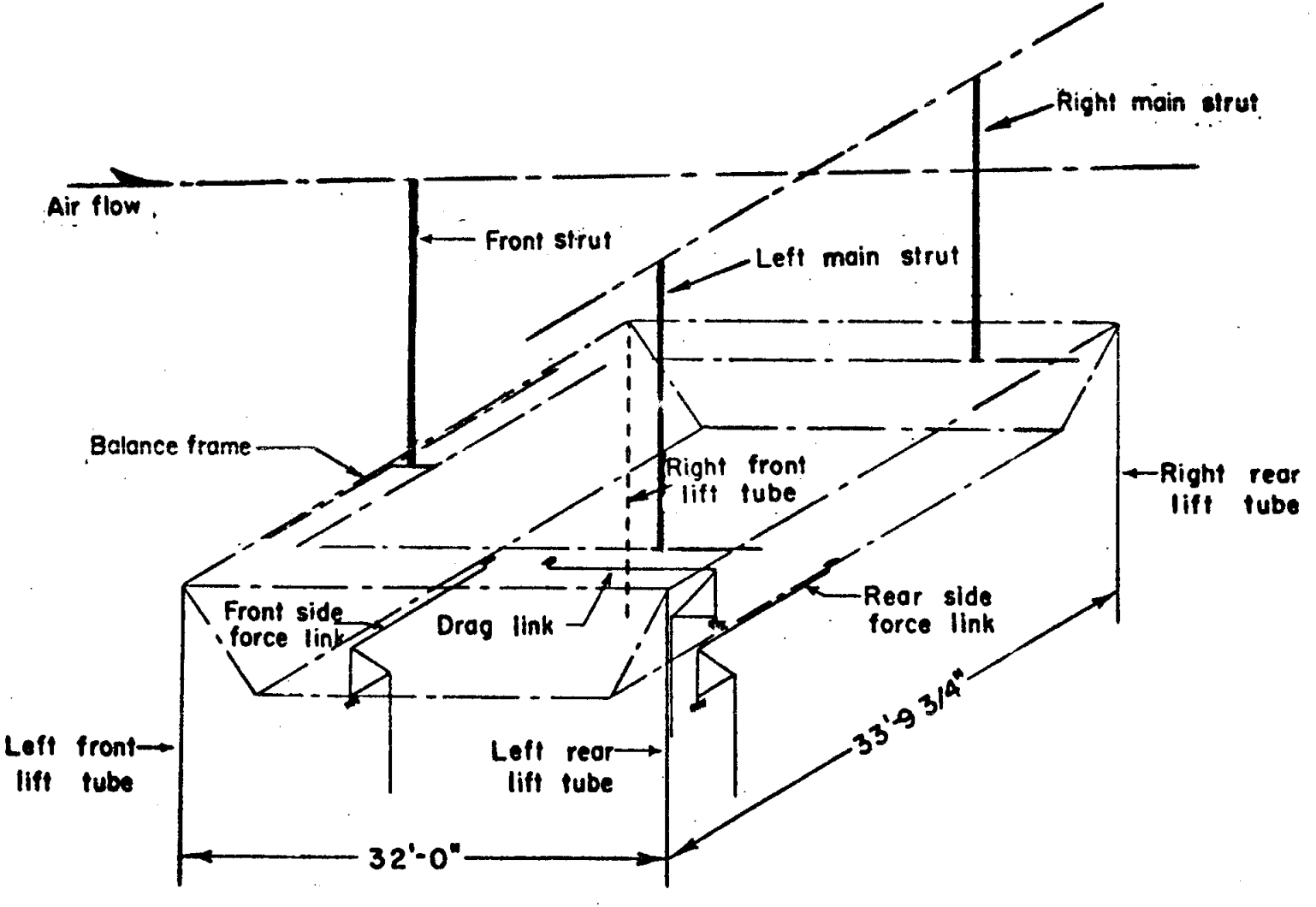

s. Schematic Representation of the Ames 40 x 80 Foot Wind Tunnel Balance System
Figure 2. Concluded.

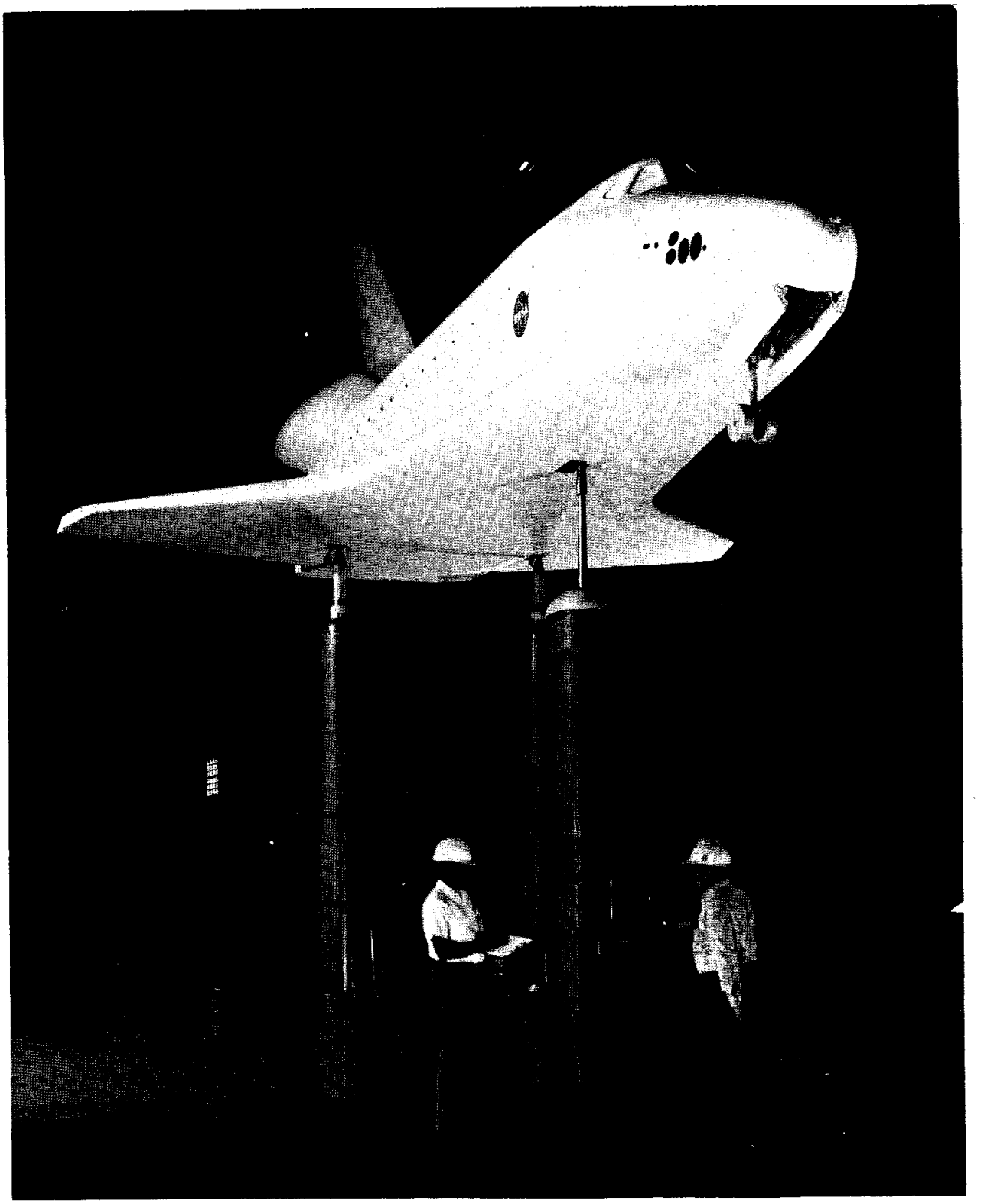

a. Front View of Model 76-0 in the ARC 40 x 80 Foot Test Section with Nose Gear and Doors Fully Deployed (All probes off)

Figure 3. Model photographs.

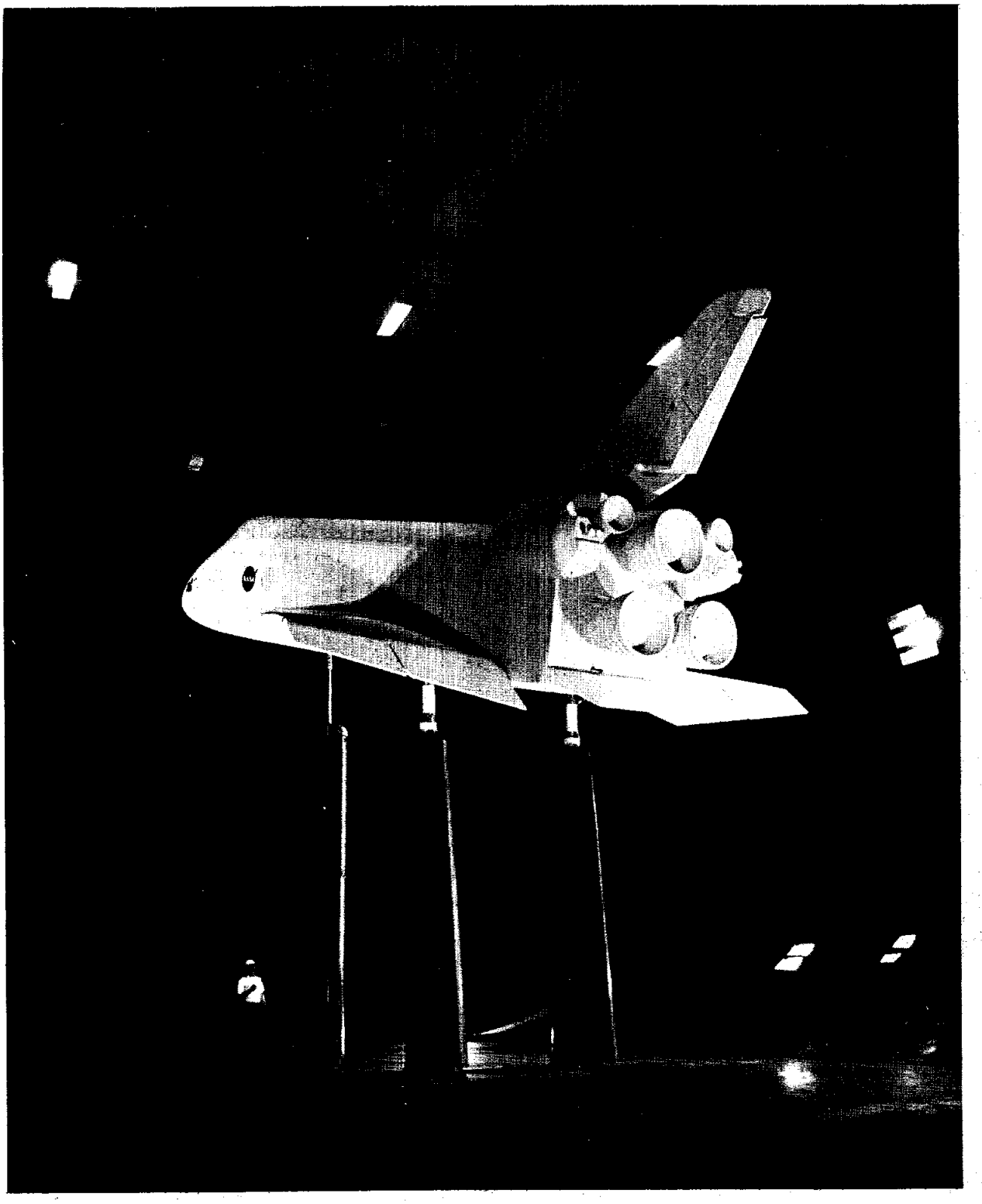

b. Aft View of Model 76-0 in the ARC 40 x 80 Foot Test Section with all Control Surfaces Positively Deflected. (ADS probes and FT probe on)

Figure 3. Continued.

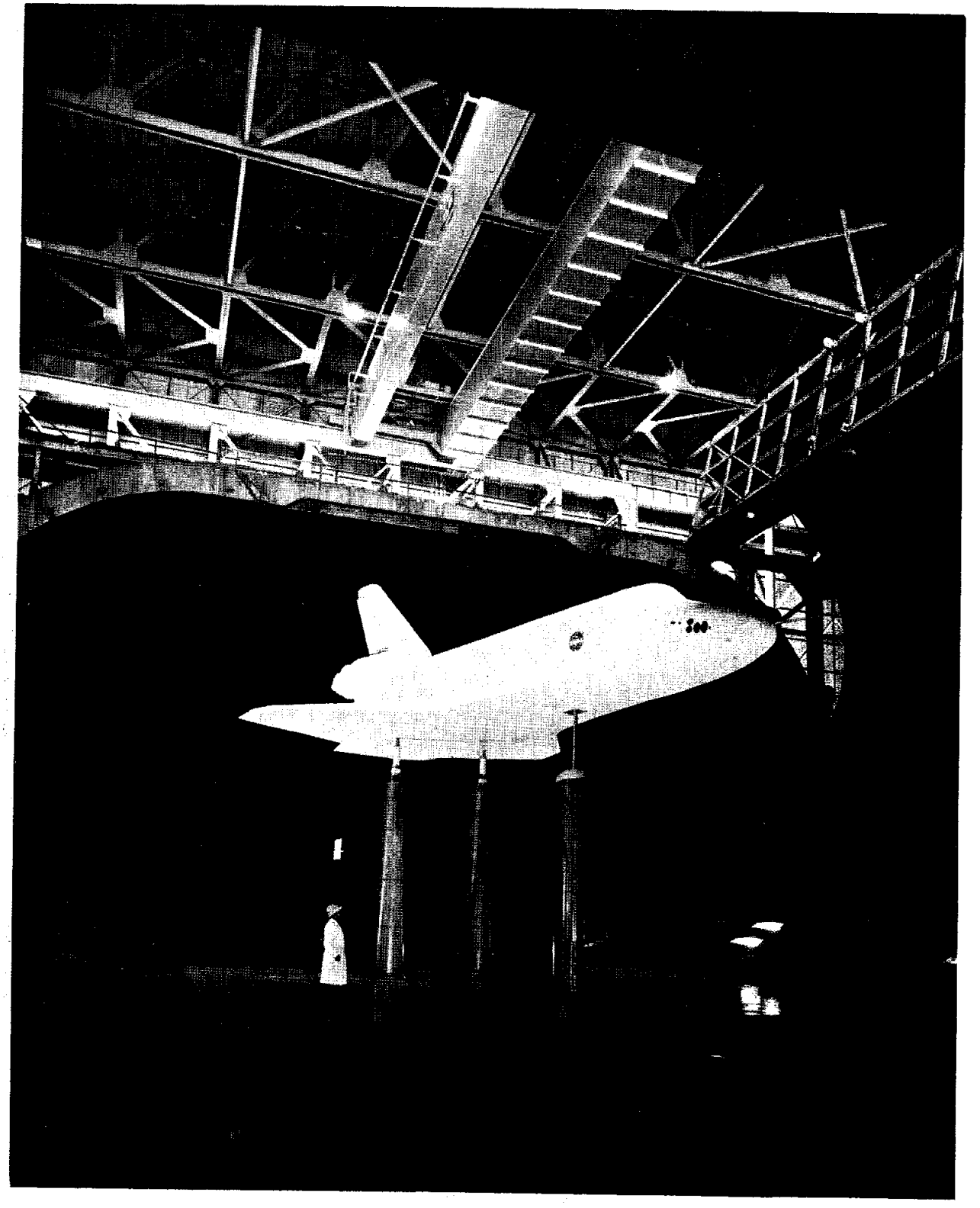

c. Front-side View of Model 76-0 in the ARC 40 x 80 Foot Test Section with all Air Data Probes On
Figure 3. Continued.

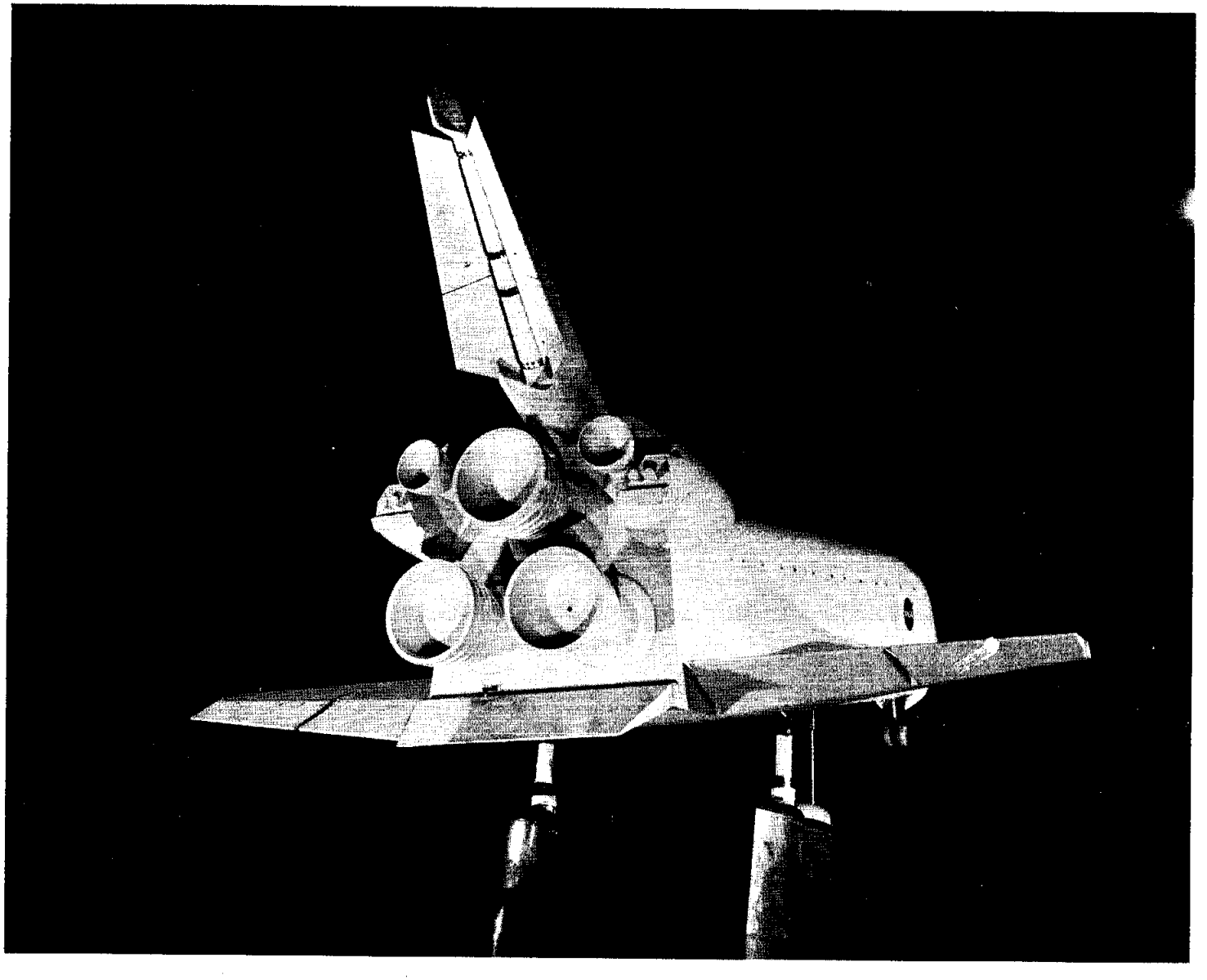

d. Aft View of Model 76-0 in the ARC 40 x 80 Foot Test Section with Fully Deployed Speed Brakes and Nose Landing Gear
Figure 3. Concluded.

APPENDIX

Tabulated Source Data

Dataset 1st Character	Pages
Volume I	
A	1-29
B	30-126
C	127-194
D	195-291
E	292-388
F	389-417
G	418-446
H	447-543
I	544-640
Volume II	
J	641-737
K	738-834
L	835-902
M	903-970
P	971-1038
Q	1039-1091
R	1092-1203
Data Corrected for Tunnel Blockage	
Volume II	
Z	1204-1300

(THIS PAGE INTENTIONALLY LEFT BLANK)

ARC40X80-462(OA100) OV101 (ANA01A) (16 MAR 82)

REFERENCE DATA

SREF =	2690.0000 SQ.FT.	XMRP =	1076.6800 IN. XO		
LREF =	474.8100 INCHES	YMRP =	.0000 IN. YO		
BREF =	936.6900 INCHES	ZMRP =	375.0000 IN. ZO		
SCALE =	.3600				

PARAMETRIC DATA

BETA =	.000	ELEVON =	.000
AILRON =	.000	BDFLAP =	.000
SPDBRK =	25.000	RUDDER =	.000

RUN NO. 4/ 0 GRADIENT INTERVAL = -5.00/ 5.00

Q	ALPHA	CP2	CP3	CP4	CP5	CP6	CP7	CP8	CP9	CP10	CP11
19.120	-5.245	-.41719	-.47877	-.47877	-.44799	-.44799	-.44799	-.47877	-.50957	-.50957	-.5095
19.020	-2.655	-.44799	-.44799	-.47877	-.44799	-.44799	-.44799	-.47877	-.50957	-.50957	-.5095
19.080	-.066	-.44799	-.47877	-.47877	-.44799	-.44799	-.47877	-.47877	-.50957	-.50957	-.50957
19.180	2.532	-.44799	-.47877	-.47877	-.44799	-.41719	-.47877	-.47877	-.47877	-.47877	-.50957
19.180	5.128	-.37672	-.46645	-.46645	-.40663	-.40663	-.46645	-.46645	-.46645	-.46645	-.49636
19.170	7.734	-.41719	-.47877	-.47877	-.44799	-.44799	-.44799	-.47877	-.47877	-.47877	-.47877
19.110	10.337	-.44494	-.48103	-.51712	-.48103	-.48103	-.48103	-.51712	-.51712	-.55321	-.55321
18.960	12.937	-.43570	-.51322	-.55198	-.51322	-.47446	-.51322	-.55198	-.55198	-.55198	-.59074
18.920	15.552	-.39569	-.46013	-.46013	-.39668	-.39668	-.46013	-.49185	-.49185	-.49185	-.49185
19.050	20.801	-.48390	-.54206	-.54206	-.36757	-.39665	-.48390	-.54206	-.54206	-.54206	-.54206
18.940	26.000	-.53530	-.64190	-.64190	-.33063	-.44382	-.61360	-.67019	-.61360	-.64190	-.64190
	GRADIENT	.00000	-.00593	-.00000	.00000	.00594	-.00000	-.00000	.00594	.00594	.00000

RUN NO. 5/ 0 GRADIENT INTERVAL = -5.00/ 5.00

Q	ALPHA	CP2	CP3	CP4	CP5	CP6	CP7	CP8	CP9	CP10	CP11
52.070	-5.245	-.34318	-.35412	-.35412	-.31037	-.31037	-.32131	-.34318	-.34318	-.34318	-.35412
52.240	-2.653	-.36944	-.36944	-.35872	-.31586	-.32657	-.34801	-.36944	-.36944	-.35872	-.35872
52.220	-.062	-.33224	-.35412	-.35412	-.28950	-.31037	-.32131	-.35412	-.34318	-.34318	-.35412
52.220	2.535	-.28114	-.32154	-.32154	-.27104	-.29123	-.30134	-.31144	-.32154	-.32154	-.33164
52.260	5.135	-.29943	-.34318	-.31037	-.22287	-.27756	-.28850	-.32131	-.28850	-.31037	-.34318
52.330	7.735	-.29943	-.31037	-.29943	-.22287	-.26662	-.29943	-.32131	-.31037	-.31037	-.31037
52.190	10.341	-.31586	-.33729	-.33729	-.28371	-.28371	-.31586	-.34801	-.33729	-.33729	-.33729
52.250	12.939	-.26921	-.27835	-.28749	-.17782	-.24179	-.26921	-.28749	-.28749	-.25093	-.29663
52.080	15.553	-.30134	-.33164	-.32154	-.19023	-.24073	-.32154	-.33164	-.29123	-.32154	-.32154
52.310	20.819	-.41974	-.44162	-.44162	-.19006	-.33224	-.41974	-.47443	-.41974	-.46349	-.47443
49.060	26.008	-.53505	-.55670	-.54588	-.21030	-.41598	-.53505	-.57835	-.53505	-.56753	-.56753
	GRADIENT	.01702	.00924	.00717	.00864	.00681	.00900	.01118	.00923	.00717	.00522

ARC40X80-462(OA100) OV101 (ANA01A) (16 MAR 82)

REFERENCE DATA

SREF =	2690.0000 SQ.FT.	XMRP =	1076.6800 IN. XO		
LREF =	474.8100 INCHES	YMRP =	.0000 IN. YO		
BREF =	936.6800 INCHES	ZMRP =	375.0000 IN. ZO		
SCALE =	.3600				

PARAMETRIC DATA

BETA =	.000	ELEVON =	.000
AILRON =	.000	BDFLAP =	.000
SPDBRK =	25.000	RUDDER =	.000

RUN NO. 7/ 0 GRADIENT INTERVAL = -5.00/ 5.00

Q	ALPHA	CP2	CP3	CP4	CP5	CP6	CP7	CP8	CP9	CP10	CP11
94.180	-5.245	-.29503	-.30599	-.30051	-.20188	-.25667	-.25119	-.30599	-.30051	-.29503	-.29503
94.780	-2.654	-.26653	-.30469	-.28833	-.20111	-.26653	-.26653	-.29379	-.27743	-.28833	-.28833
95.030	-.061	-.26976	-.26976	-.26976	-.18979	-.23197	-.26976	-.27515	-.28055	-.28595	-.27515
94.450	2.539	-.26108	-.27743	-.26108	-.19020	-.21201	-.25017	-.28833	-.27198	-.26653	-.28288
94.520	5.136	-.24571	-.25119	-.24571	-.17996	-.21284	-.26763	-.26763	-.24023	-.26763	-.26763
94.340	7.737	-.24472	-.26108	-.25592	-.16294	-.20111	-.24472	-.26108	-.23927	-.23927	-.26653
94.570	10.345	-.26001	-.27086	-.25459	-.15695	-.20034	-.23831	-.24916	-.23831	-.27086	-.25459
94.610	12.943	-.26653	-.26108	-.25562	-.15749	-.21201	-.25017	-.27743	-.24472	-.26653	-.26108
95.400	15.559	-.27515	-.28595	-.26976	-.14561	-.22658	-.29135	-.27515	-.26976	-.28595	-.28055
92.940	18.182	-.33077	-.31969	-.31416	-.13702	-.23666	-.30309	-.31416	-.30309	-.31969	-.29755
	GRADIENT	.00105	.00525	.00525	.00210	.01050	.00315	.00105	.00105	.00420	.00105

ARC40X80-462(OA100) OV101(DECREASING ALPHA) (ANA01B) (16 MAR 82)

REFERENCE DATA

SREF =	2690.0000 SQ.FT.	XMRP =	1076.6800 IN. XO		
LREF =	474.8100 INCHES	YMRP =	.0000 IN. YO		
BREF =	936.6800 INCHES	ZMRP =	375.0000 IN. ZO		
SCALE =	.3600				

PARAMETRIC DATA

BETA =	.000	ELEVON =	.000
AILRON =	.000	BDFLAP =	.000
SPDBRK =	25.000	RUDDER =	.000

RUN NO. 6/ 0 GRADIENT INTERVAL = -5.00/ 5.00

Q	ALPHA	CP2	CP3	CP4	CP5	CP6	CP7	CP8	CP9	CP10	CP11
52.300	-5.243	-.36506	-.39787	-.38693	-.28850	-.34318	-.37599	-.38693	-.37599	-.37599	-.39787
51.950	-2.652	-.31144	-.32154	-.33164	-.27104	-.31144	-.33164	-.34174	-.34174	-.33164	-.33164
51.990	-.064	-.28749	-.30577	-.30577	-.25093	-.29663	-.30577	-.31491	-.31491	-.31491	-.31491
51.990	2.533	-.26921	-.29663	-.28749	-.20524	-.24179	-.25093	-.26921	-.26921	-.26921	-.26921
52.180	5.136	-.29443	-.33729	-.33729	-.28371	-.30514	-.32657	-.33729	-.33729	-.33729	-.34801
51.950	7.735	-.27707	-.26715	-.28698	-.20769	-.24733	-.28698	-.29689	-.28698	-.26715	-.28698
52.360	10.339	-.25093	-.24179	-.26921	-.23265	-.25093	-.26921	-.30577	-.29663	-.29663	-.29663
52.100	12.938	-.26007	-.29663	-.26921	-.17782	-.23265	-.26921	-.28749	-.26921	-.26921	-.26921
52.080	15.553	-.33729	-.34801	-.34801	-.21942	-.29443	-.34801	-.35872	-.35872	-.35872	-.35872
52.200	20.822	-.41244	-.42254	-.43264	-.20033	-.36194	-.39224	-.42254	-.42254	-.42254	-.42254
	GRADIENT	.00814	.00480	.00851	.01269	.01343	.01557	.01399	.01399	.01204	.01204

ARC40X80-462(OA100) OV101 (ANA01C) (16 MAR 82)

REFERENCE DATA

SREF = 2690.0000 SQ.FT. XMRP = 1076.6800 IN. XO
LREF = 474.8100 INCHES YMRP = .0000 IN. YO
BREF = 936.6800 INCHES ZMRP = 375.0000 IN. ZO
SCALE = .3600

PARAMETRIC DATA

BETA = .000 ELEVON = 10.000
AILRON = .000 BDFLAP = .000
SPDBRK = 25.000 RUDDER = .000

RUN NO. 2/ 0 GRADIENT INTERVAL = -5.00/ 5.00

Q	ALPHA	CP2	CP3	CP4	CP5	CP6	CP7	CP8	CP9	CP10	CP11
18.990	-5.093	-.35893	-.35893	-.33063	-.27403	-.27403	-.30233	-.35893	-.38722	-.41552	-.3872
18.990	-2.501	-.34681	-.37672	-.34681	-.28698	-.28698	-.31690	-.40663	-.40663	-.37672	-.3767
19.140	.091	-.45917	-.42179	-.42179	-.34704	-.34704	-.34704	-.38442	-.38442	-.38442	-.3844
19.090	2.687	-.51712	-.55321	-.51712	-.51712	-.48103	-.48103	-.48103	-.48103	-.51712	-.55321
19.090	5.288	-.40885	-.40885	-.40885	-.40885	-.37276	-.40885	-.48103	-.51712	-.55321	-.55321
19.050	7.890	-.48577	-.55431	-.52054	-.41925	-.38548	-.38548	-.52054	-.52054	-.52054	-.52054
19.090	10.489	-.45301	-.52054	-.45301	-.41925	-.41925	-.38548	-.48577	-.52054	-.52054	-.52054
19.020	13.095	-.39894	-.43570	-.43570	-.35818	-.35818	-.35918	-.39694	-.43570	-.47446	-.47446
18.970	15.701	-.48677	-.52054	-.52054	-.38548	-.38548	-.38548	-.52054	-.52054	-.52054	-.52054
19.040	20.963	-.50957	-.54035	-.57114	-.38640	-.41719	-.47877	-.54035	-.57114	-.57114	-.57114
18.900	26.117	-.69431	-.72509	-.72509	-.29403	-.50957	-.60193	-.72509	-.72509	-.72509	-.78667
	GRADIENT	-.03282	-.03402	-.03283	-.04436	-.03740	-.03164	-.01434	-.01434	-.02707	-.03402

RUN NO. 8/ 0 GRADIENT INTERVAL = -5.00/ 5.00

Q	ALPHA	CP2	CP3	CP4	CP5	CP6	CP7	CP8	CP9	CP10	CP11
47.540	-5.091	-.33518	-.33518	-.34623	-.20256	-.23571	-.31307	-.34623	-.31307	-.33518	-.35728
47.620	-2.500	-.33518	-.33518	-.32413	-.20256	-.24676	-.26887	-.34623	-.33518	-.32413	-.32413
47.640	.091	-.32131	-.32131	-.31037	-.19006	-.24475	-.31037	-.32131	-.29943	-.33224	-.32131
47.600	2.688	-.31307	-.31307	-.31307	-.18045	-.24676	-.31307	-.31307	-.29097	-.32413	-.32413
47.620	5.284	-.32131	-.31037	-.28850	-.17912	-.27756	-.29943	-.31037	-.27756	-.31037	-.31037
47.580	7.890	-.27992	-.27992	-.27992	-.16940	-.26887	-.30202	-.30202	-.30202	-.30202	-.30202
47.470	10.489	-.32131	-.31037	-.29943	-.15725	-.24475	-.26662	-.27756	-.26662	-.27756	-.28850
47.430	13.093	-.31307	-.31307	-.30202	-.15835	-.27992	-.27992	-.30202	-.29097	-.30202	-.30202
47.540	15.704	-.32131	-.31037	-.29943	-.13538	-.27756	-.29943	-.32131	-.33224	-.33224	-.31037
47.490	20.973	-.39787	-.41974	-.41974	-.13538	-.36506	-.37599	-.43068	-.37599	-.40881	-.43068
45.130	26.111	-.53750	-.51417	-.51417	-.16429	-.46752	-.52583	-.53750	-.49084	-.54916	-.53750
	GRADIENT	.00426	.00426	.00213	.00426	-.00000	-.00852	.00639	.00852	.00000	-.00000

ARC40X80-462(OA100) OV101 (ANA01C) (16 MAR 82)

REFERENCE DATA

SREF =	2690.0000 SQ.FT.	XMRP =	1076.6800 IN. XO		
LREF =	474.8100 INCHES	YMRP =	.0000 IN. YO		
BREF =	936.6800 INCHES	ZMRP =	375.0000 IN. ZO		
SCALE =	.3600				

PARAMETRIC DATA

BETA =	.000	ELEVON =	10.000
AILRON =	.000	BDFLAP =	.000
SPDBRK =	25.000	RUDDER =	.000

RUN NO. 14/ 0 GRADIENT INTERVAL = -5.00/ 5.00

Q	ALPHA	CP2	CP3	CP4	CP5	CP6	CP7	CP8	CP9	CP10	CP11
94.550	-5.093	-.33195	-.36466	-.34285	-.19020	-.27743	-.30469	-.34831	-.32105	-.33195	-.34831
94.050	-2.501	-.29924	-.33195	-.30469	-.18475	-.26653	-.32650	-.32650	-.31014	-.31559	-.33195
94.680	.090	-.30214	-.33453	-.31293	-.18340	-.27515	-.31293	-.32913	-.30214	-.30754	-.33453
94.710	2.690	-.29552	-.30626	-.30626	-.17736	-.25255	-.30626	-.32774	-.29552	-.31700	-.31700
94.230	5.291	-.28595	-.30214	-.28595	-.16720	-.26436	-.29135	-.30754	-.28595	-.29135	-.29135
94.260	7.891	-.27629	-.28714	-.28714	-.15695	-.23931	-.28171	-.29256	-.28171	-.28714	-.29798
94.350	10.495	-.28595	-.29674	-.28595	-.14561	-.28595	-.26436	-.28595	-.26976	-.28055	-.28595
94.610	13.098	-.29135	-.28055	-.29674	-.14561	-.29135	-.29135	-.30754	-.29135	-.28595	-.29135
93.190	15.690	-.29628	-.30730	-.30179	-.13106	-.30179	-.29628	-.31281	-.28527	-.30179	-.31281
94.180	18.341	-.33596	-.34138	-.34680	-.11898	-.35765	-.31426	-.34680	-.32511	-.33053	-.34138
92.530	20.984	-.40092	-.41745	-.40643	-.13106	-.36237	-.36237	-.43397	-.36788	-.41745	-.42295
	GRADIENT	.00072	.00495	-.00030	.00142	.00270	.00390	-.00024	.00282	-.00027	.00288

ARC40X80-462(OA100) OV101 (ANA01D) (16 MAR 82)

REFERENCE DATA

SREF =	2690.0000 SQ.FT.	XMRP =	1076.6800 IN. XO		
LREF =	474.8100 INCHES	YMRP =	.0000 IN. YO		
BREF =	936.6800 INCHES	ZMRP =	375.0000 IN. ZO		
SCALE =	.3600				

PARAMETRIC DATA

BETA =	.000	ELEVON =	-10.000
AILRON =	.000	BDFLAP =	.000
SPDBRK =	25.000	RUDDER =	.000

RUN NO. 3/ 0 GRADIENT INTERVAL = -5.00/ 5.00

Q	ALPHA	CP2	CP3	CP4	CP5	CP6	CP7	CP8	CP9	CP10	CP11
18.910	-5.410	-.30152	-.36496	-.36496	-.30152	-.33324	-.30152	-.36496	-.36496	-.33324	-.36496
19.080	-2.818	-.32483	-.35562	-.35562	-.32483	-.29403	-.29403	-.29403	-.29403	-.32483	-.29403
19.140	-.221	-.32483	-.35562	-.35562	-.29403	-.29403	-.29403	-.29403	-.29403	-.32483	-.32483
19.110	2.371	-.30948	-.34219	-.34219	-.34219	-.34219	-.30948	-.30948	-.34219	-.34219	-.34219
19.110	4.965	-.37672	-.43654	-.46645	-.46645	-.43654	-.40663	-.40663	-.40663	-.40663	-.43654
19.180	7.564	-.36496	-.42841	-.42841	-.42841	-.42841	-.42841	-.42841	-.42841	-.46013	-.46013
19.120	10.174	-.39568	-.42841	-.42841	-.42841	-.42841	-.42841	-.46013	-.49185	-.46013	-.49185
19.060	12.770	-.36496	-.46013	-.46013	-.42841	-.42841	-.46013	-.49185	-.49185	-.49185	-.49185
18.880	15.379	-.39568	-.49185	-.49185	-.42841	-.42841	-.49185	-.49185	-.49185	-.49185	-.49185
18.900	20.638	-.46013	-.49185	-.52357	-.42841	-.42841	-.49185	-.52357	-.52357	-.55529	-.55529
18.990	25.855	-.54035	-.60193	-.60193	-.41719	-.47877	-.57114	-.66352	-.66352	-.63273	-.63273
	GRADIENT	-.00541	-.00884	-.01230	-.01823	-.01834	-.01362	-.01362	-.01488	-.01013	-.01713

ARC40X80-462(OA100) OV101 (ANA01D) (16 MAR 82)

REFERENCE DATA

SREF =	2690.0000 SQ.FT.	XMRP =	1076.6800 IN. XO		
LREF =	474.8100 INCHES	YMRP =	.0000 IN. YO		
BREF =	936.6800 INCHES	ZMRP =	375.0000 IN. ZO		
SCALE =	.3600				

PARAMETRIC DATA

BETA =	.000	ELEVON =	-10.000
AILRON =	.000	BDFLAP =	.000
SPDBRK =	25.000	RUDDER =	.000

RUN NO. 9/ 0 GRADIENT INTERVAL = -5.00/ 5.00

Q	ALPHA	CP2	CP3	CP4	CP5	CP6	CP7	CP8	CP9	CP10	CP11
47.480	-5.409	-.25782	-.27992	-.25782	-.22466	-.24676	-.18045	-.27992	-.24676	-.24676	-.26887
47.600	-2.819	-.27992	-.26887	-.26887	-.22466	-.23571	-.25782	-.27992	-.24676	-.25782	-.24676
47.420	-.225	-.24475	-.25569	-.24475	-.21194	-.21194	-.25569	-.26662	-.21194	-.24475	-.24475
47.530	2.371	-.23381	-.24475	-.24475	-.20100	-.21194	-.24475	-.24475	-.23381	-.24475	-.24475
47.300	4.967	-.25782	-.24676	-.23571	-.20256	-.21361	-.24676	-.24676	-.23571	-.24676	-.22466
47.530	7.568	-.24475	-.23381	-.24475	-.19006	-.20100	-.23381	-.24475	-.20100	-.24475	-.25569
47.500	10.176	-.23571	-.26887	-.23571	-.20256	-.21361	-.24676	-.24676	-.22466	-.23571	-.24676
47.570	12.771	-.23381	-.24475	-.24475	-.17912	-.21194	-.24475	-.26662	-.21194	-.26662	-.26662
47.460	15.385	-.25782	-.25782	-.24676	-.15835	-.22466	-.24676	-.26887	-.24676	-.25782	-.26887
47.490	20.650	-.34318	-.33224	-.32131	-.15725	-.27756	-.32131	-.35412	-.31037	-.33224	-.33224
47.810	25.857	-.43068	-.43068	-.41974	-.17912	-.35412	-.40881	-.46349	-.39787	-.43068	-.41974
	GRADIENT	.00298	.00298	.00393	.00298	.00255	.00170	.00468	.00043	.00128	.00256

RUN NO. 15/ 0 GRADIENT INTERVAL = -5.00/ 5.00

Q	ALPHA	CP2	CP3	CP4	CP5	CP6	CP7	CP8	CP9	CP10	CP11
94.710	-5.412	-.23737	-.26976	-.26436	-.21578	-.22658	-.24277	-.28055	-.26436	-.24277	-.25356
94.220	-2.818	-.21662	-.28171	-.25459	-.21119	-.22204	-.21662	-.27629	-.18407	-.23831	-.25459
93.990	-.223	-.23831	-.25459	-.24374	-.20034	-.21119	-.23289	-.24916	-.23831	-.22204	-.23831
94.430	2.374	-.23289	-.24374	-.23289	-.20034	-.20034	-.23289	-.23831	-.23831	-.23831	-.22204
94.520	4.969	-.21038	-.25356	-.23737	-.18879	-.19959	-.23737	-.22118	-.23197	-.22658	-.25356
94.610	7.572	-.19959	-.24277	-.23737	-.18879	-.19959	-.24277	-.24817	-.23197	-.23737	-.22658
94.380	10.178	-.22747	-.23289	-.23831	-.17654	-.21562	-.26544	-.24374	-.18949	-.23831	-.23289
94.800	12.775	-.22118	-.26436	-.24277	-.17800	-.22658	-.24277	-.24817	-.24277	-.24277	-.24817
94.870	15.391	-.25896	-.29674	-.26436	-.15641	-.23737	-.23737	-.27515	-.25896	-.24817	-.25896
95.210	18.018	-.28477	-.30626	-.29014	-.16125	-.26329	-.28477	-.29552	-.29552	-.28477	-.29552
94.570	20.660	-.33992	-.32913	-.32913	-.15641	-.29135	-.30754	-.34532	-.31833	-.32913	-.33992
88.500	25.862	-.42574	-.44315	-.42574	-.15874	-.40833	-.38511	-.45476	-.40833	-.45476	-.44896
	GRADIENT	.00093	.00367	.00241	.00259	.00301	-.00240	.00679	-.00554	.00073	.00075

ARC40X80-462(OA100) OV101 (ANA01E) (16 MAR 82)

REFERENCE DATA

SREF = 2690.0000 SQ.FT. XMRP = 1076.6800 IN. XO
LREF = 474.8100 INCHES YMRP = .0000 IN. YO
BREF = 936.6900 INCHES ZMRP = 375.0000 IN. ZO
SCALE = .3600

PARAMETRIC DATA

ALPHA = .000 ELEVON = .000
AILRON = .000 BDFLAP = .000
SPDBRK = 25.000 RUDDER = .000

RUN NO. 16/ 0 GRADIENT INTERVAL = -5.00/ 5.00

Q	BETA	CP2	CP3	CP4	CP5	CP6	CP7	CP8	CP9	CP10	CP11
19.200	-13.000	-.32319	-.32319	-.32319	-.26808	-.24052	-.32319	-.32319	-.32319	-.35074	-.35074
19.160	-10.000	-.32319	-.32319	-.32319	-.21297	-.21297	-.29563	-.32319	-.29563	-.35074	-.35074
19.070	-5.000	-.29563	-.32319	-.32319	-.21297	-.21297	-.29563	-.32319	-.26808	-.35074	-.32319
19.050	-2.000	-.28928	-.31613	-.31613	-.20873	-.20873	-.26243	-.31613	-.26243	-.31613	-.31613
19.030	.000	-.28928	-.31613	-.31613	-.20873	-.20873	-.26243	-.31613	-.26243	-.31613	-.31613
19.040	2.000	-.26808	-.32319	-.32319	-.21297	-.21297	-.29563	-.29563	-.29563	-.32319	-.35074
19.130	5.000	-.28928	-.28928	-.28928	-.20873	-.20873	-.28928	-.28928	-.28928	-.31613	-.31613
19.150	10.000	-.28928	-.31613	-.31613	-.20873	-.20873	-.28928	-.31613	-.31613	-.34297	-.34297
19.110	15.000	-.31613	-.31613	-.31613	-.23558	-.20873	-.31513	-.31613	-.31613	-.34297	-.34297
19.040	20.000	-.34297	-.36982	-.34297	-.23558	-.26243	-.34297	-.36982	-.34297	-.36982	-.36982
	GRADIENT	.00128	.00268	.00268	.00022	.00022	-.00060	.00363	-.00297	.00274	-.00058

RUN NO. 21/ 0 GRADIENT INTERVAL = -5.00/ 5.00

Q	BETA	CP2	CP3	CP4	CP5	CP6	CP7	CP8	CP9	CP10	CP11
47.590	-13.000	-.29943	-.31037	-.31037	4.19575	-.26662	-.32131	-.31037	-.31037	-.29943	-.31037
47.590	-10.000	-.25569	-.29943	-.29943	4.20669	-.26662	-.28850	-.29943	-.27756	-.28850	-.29943
47.630	-5.000	-.27756	-.28850	-.29943	4.21762	-.24475	-.24475	-.28850	-.26662	-.26662	-.29943
47.520	-2.000	-.25782	-.31307	-.26887	4.26233	-.24676	-.26887	-.29097	-.24676	-.25782	-.31307
47.490	.000	-.25782	-.30202	-.26887	4.27339	-.24676	-.27992	-.25782	-.24676	-.29097	-.26887
47.480	2.000	-.25782	-.31307	-.27992	4.25128	-.24676	-.30202	-.25782	-.26887	-.27992	-.30202
47.630	5.000	-.26662	-.29943	-.27756	4.21762	-.24475	-.26662	-.28850	-.29943	-.26662	-.29943
47.510	10.000	-.28850	-.27756	-.29943	4.20669	-.26662	-.27756	-.27756	-.26662	-.25569	-.29943
47.500	15.000	-.30202	-.31307	-.31307	4.24023	-.26887	-.30202	-.32413	-.31307	-.30202	-.32413
47.680	20.000	-.33224	-.33693	-.32131	4.17387	-.32131	-.35412	-.35412	-.35412	-.34318	-.35412
	GRADIENT	.00094	-.00094	.00150	-.00038	.00000	-.00303	.00114	-.00359	-.00076	.00038

RUN NO. 45/ 0 GRADIENT INTERVAL = -5.00/ 5.00

Q	BETA	CP2	CP3	CP4	CP5	CP6	CP7	CP8	CP9	CP10	CP11
94.290	-13.000	-.31968	-.31968	-.30341	-.21662	-.30341	-.31426	-.34138	-.30341	-.30341	-.29256
94.680	-10.000	-.26758	-.29430	-.27293	-.19276	-.28361	-.28896	-.31568	-.28361	-.29965	-.28896
94.410	-5.000	-.27827	-.29430	-.27827	-.19811	-.29361	-.29430	-.30499	-.28896	-.28896	-.28361
94.780	-2.000	-.28896	-.31568	-.28896	-.19276	-.27827	-.26758	-.29430	-.26224	-.26758	-.26224
94.730	.000	-.28361	-.28896	-.27827	-.18742	-.29365	-.29430	-.29430	-.28896	-.27827	-.28361
94.410	2.000	-.25255	-.29552	-.28896	-.17736	-.26329	-.29014	-.30626	-.25792	-.29552	-.27940
94.180	5.000	-.26976	-.29135	-.28595	-.19419	-.27515	-.30754	-.28595	-.28055	-.29135	-.28595
94.590	10.000	-.28595	-.29674	-.30214	-.19959	-.29135	-.28595	-.31833	-.28055	-.30214	-.29135
94.450	15.000	-.32373	-.33992	-.31293	-.22118	-.32913	-.31833	-.31833	-.30754	-.32373	-.30754
92.340	20.000	-.37556	-.33740	-.32650	-.25017	-.33101	-.33195	-.33192	-.35921	-.37556	-.38647
	GRADIENT	.00198	.00095	.00004	.00087	.00125	-.00192	.00123	.00087	-.00117	-.00079

ARC40X80-462(OA100) OV101(DECREASING BETA) (ANA01F) (16 MAR 82)

REFERENCE DATA

SREF = 2690.0000 SQ.FT. XMRP = 1076.6800 IN. XO
LREF = 474.8100 INCHES YMRP = .0000 IN. YO
BREF = 936.6800 INCHES ZMRP = 375.0000 IN. ZO
SCALE = .3600

PARAMETRIC DATA

ALPHA = .000 ELEVON = .000
AILRON = .000 BDFLAP = .000
SPDBRK = 25.000 RUDDER = .000

RUN NO. 22/ 0 GRADIENT INTERVAL = -5.00/ 5.00

Q	BETA	CP2	CP3	CP4	CP5	CP6	CP7	CP8	CP9	CP10	CP11
47.510	-13.000	-.28850	-.26662	-.31037	4.19575	-.24475	-.31037	-.29943	-.31037	-.29943	-.31037
47.470	-10.000	-.30202	-.29097	-.27992	4.26233	-.23571	-.29097	-.30202	-.26887	-.25782	-.30202
47.610	-5.000	-.26662	-.27756	-.26662	4.21762	-.21194	-.26662	-.31037	-.24475	-.27756	-.26662
47.600	-2.000	-.26662	-.27756	-.27756	4.22856	-.21194	-.25569	-.26662	-.26662	-.26662	-.26662
47.430	.000	-.25569	-.26662	-.29943	4.22856	-.21194	-.26662	-.28850	-.26662	-.26662	-.31037
47.440	2.000	-.25782	-.30202	-.29097	4.26233	-.22466	-.27992	-.26887	-.26887	-.27992	-.26887
47.550	5.000	-.26887	-.30202	-.30202	4.26233	-.21361	-.27992	-.27992	-.26887	-.26887	-.27992
47.490	10.000	-.28850	-.29943	-.31037	4.21762	-.23381	-.29943	-.28850	-.25569	-.28850	-.29943
47.540	15.000	-.29943	-.31037	-.29943	4.20669	-.26662	-.29943	-.31037	-.33224	-.29943	-.32131
47.670	20.000	-.34318	-.36506	-.34318	4.17387	-.31037	-.34318	-.36506	-.33224	-.34318	-.37599
	GRADIENT	.00011	-.00295	-.00351	.00502	-.00058	-.00198	.00255	-.00216	.00029	-.00122

ARC40X80-462(OA100) OV101 (ANA01G) (16 MAR 82)

REFERENCE DATA

SREF = 2690.0000 SQ.FT. XMRP = 1076.6800 IN. XO
LREF = 474.8100 INCHES YMRP = .0000 IN. YO
BREF = 936.6800 INCHES ZMRP = 375.0000 IN. ZO
SCALE = .3600

PARAMETRIC DATA

ALPHA = 5.000 ELEVON = .000
AILRON = .000 BDFLAP = .000
SPDBRK = 25.000 RUDDER = .000

RUN NO. 17/ 0 GRADIENT INTERVAL = -5.00/ 5.00

Q	BETA	CP2	CP3	CP4	CP5	CP6	CP7	CP8	CP9	CP10	CP11
19.180	-13.000	-.32319	-.32319	-.32319	-.21297	-.21297	-.26808	-.32319	-.32319	-.35074	-.35074
19.120	-10.000	-.26243	-.31613	-.31613	-.20873	-.20873	-.31613	-.31613	-.28928	-.31613	-.34297
19.080	-5.000	-.28928	-.31613	-.31613	-.18189	-.18189	-.26243	-.28928	-.31613	-.31613	-.31613
19.070	-2.000	-.26808	-.29563	-.29563	-.21297	-.21297	-.26808	-.29563	-.26808	-.29563	-.29563
19.070	.000	-.26243	-.28928	-.28928	-.18189	-.18189	-.26243	-.26243	-.28928	-.31613	-.28928
19.060	2.000	-.26243	-.28928	-.28928	-.20873	-.18189	-.26243	-.28928	-.26243	-.28928	-.31613
19.080	5.000	-.26808	-.29563	-.29563	-.18542	-.18542	-.26808	-.26808	-.29563	-.32319	-.32319
19.070	10.000	-.26243	-.31613	-.31613	-.20873	-.20873	-.26243	-.31613	-.31613	-.31613	-.31613
19.020	15.000	-.31613	-.31613	-.31613	-.20873	-.20873	-.31613	-.31613	-.31613	-.34297	-.34297
19.010	20.000	-.36982	-.36982	-.36982	-.23558	-.23558	-.36982	-.36982	-.36982	-.42352	-.39667
	GRADIENT	.00202	.00199	.00199	-.00016	.00077	-.00029	.00205	.00196	-.00039	-.00132

ARC40X80-462(OA100) OV101 (ANA01G) (16 MAR 82)

REFERENCE DATA

SREF =	2690.0000 SQ.FT.	XMRP =	1076.6800 IN. XO		
LREF =	474.8100 INCHES	YMRP =	.0000 IN. YO		
BREF =	936.6800 INCHES	ZMRP =	375.0000 IN. ZO		
SCALE =	.3600				

PARAMETRIC DATA

ALPHA =	5.000	ELEVON =	.000
AILRON =	.000	BDFLAP =	.000
SPDBRK =	25.000	RUDDER =	.000

RUN NO. 23/ 0 GRADIENT INTERVAL = -5.00/ 5.00

Q	BETA	CP2	CP3	CP4	CP5	CP6	CP7	CP8	CP9	CP10	CP11
47.780	-13.000	-.29943	-.32131	-.31037	4.20669	-.24475	-.28850	-.29943	-.27756	-.29943	-.31037
47.770	-10.000	-.26662	-.32131	-.29943	4.22855	-.22287	-.27756	-.28850	-.25569	-.27756	-.29943
47.550	-5.000	-.24676	-.27992	-.26887	4.27339	-.20256	-.26887	-.30202	-.24676	-.26887	-.26887
47.560	-2.000	-.23571	-.26887	-.25782	4.27339	-.20256	-.26887	-.26887	-.26887	-.25782	-.25782
47.450	.000	-.25569	-.26662	-.26662	4.22856	-.20100	-.27756	-.25569	-.25569	-.25569	-.24475
47.560	2.000	-.25569	-.26662	-.26662	4.22856	-.20100	-.25569	-.25569	-.25569	-.25569	-.27756
47.430	5.000	-.25782	-.27992	-.27992	4.28444	-.21361	-.27992	-.25782	-.26887	-.26887	-.24676
47.670	10.000	-.26662	-.31037	-.27756	4.22856	-.22287	-.28850	-.28850	-.26662	-.25569	-.29943
47.470	15.000	-.31307	-.33518	-.32413	4.26233	-.26887	-.31307	-.30202	-.31307	-.30202	-.32413
47.450	20.000	-.34623	-.37938	-.37938	4.24023	-.31307	-.37938	-.35728	-.37938	-.34823	-.37938
	GRADIENT	-.00164	.00008	-.00126	-.00059	-.00090	-.00050	.00427	-.00145	.00007	.00122

ARC40X80-462(OA100) OV101 (ANA01H) (16 MAR 82)

REFERENCE DATA

SREF =	2690.0000 SQ.FT.	XMRP =	1076.6800 IN. XO		
LREF =	474.8100 INCHES	YMRP =	.0000 IN. YO		
BREF =	936.6800 INCHES	ZMRP =	375.0000 IN. ZO		
SCALE =	.3600				

PARAMETRIC DATA

ALPHA =	10.000	ELEVON =	.000
AILRON =	.000	BDFLAP =	.000
SPDBRK =	25.000	RUDDER =	.000

RUN NO. 18/ 0 GRADIENT INTERVAL = -5.00/ 5.00

Q	BETA	CP2	CP3	CP4	CP5	CP6	CP7	CP8	CP9	CP10	CP11
19.060	-13.000	-.31613	-.31613	-.31613	-.18189	-.18189	-.31613	-.31613	-.31613	-.31613	-.34297
19.090	-10.000	-.32319	-.32319	-.32319	-.18542	-.18542	-.32319	-.32319	-.32319	-.35074	-.35074
19.100	-5.000	-.26808	-.32319	-.29563	-.18542	-.18542	-.29563	-.29563	-.26808	-.29563	-.32319
19.180	-2.000	-.26808	-.29563	-.26808	-.18542	-.18542	-.26808	-.26808	-.26808	-.29563	-.29563
19.060	.000	-.26808	-.26808	-.26808	-.18542	-.18542	-.26808	-.26808	-.26808	-.26808	-.29563
19.110	2.000	-.26808	-.26808	-.26808	-.18542	-.18542	-.26808	-.29563	-.26808	-.29563	-.29563
19.080	5.000	-.26808	-.26808	-.26808	-.18542	-.18542	-.26808	-.29563	-.29563	-.32319	-.29563
19.110	10.000	-.32319	-.32319	-.32319	-.18542	-.18542	-.29563	-.32319	-.32319	-.35074	-.35074
19.050	15.000	-.32319	-.32319	-.35074	-.21297	-.18542	-.32319	-.32319	-.32319	-.35074	-.35074
19.040	20.000	-.36982	-.39667	-.36982	-.20873	-.23558	-.36982	-.36982	-.36982	-.39667	-.45037
	GRADIENT	.00000	.00570	.00238	.00000	.00000	.00238	-.00095	-.00238	-.00238	.00238

ARC40X80-462(0A100) OV101 (ANA01H) (16 MAR 82)

REFERENCE DATA

SREF =	2690.0000 SQ.FT.	XMRP =	1076.6800 IN. XO		
LREF =	474.8100 INCHES	YMRP =	.0000 IN. YO		
BREF =	936.6800 INCHES	ZMRP =	375.0000 IN. ZO		
SCALE =	.3600				

PARAMETRIC DATA

ALPHA =	10.000	ELEVON =	.000
AILRON =	.000	BDFLAP =	.000
SPDBRK =	25.000	RUDDER =	.000

RUN NO. 24/ 0 GRADIENT INTERVAL = -5.00/ 5.00

Q	BETA	CP2	CP3	CP4	CP5	CP6	CP7	CP8	CP9	CP10	CP11
47.700	-13.000	-.29943	-.32131	-.32131	4.22856	-.24475	-.31037	-.29943	-.31037	-.31037	-.32131
47.950	-10.000	-.28850	-.32131	-.31037	4.23950	-.23381	-.26662	-.29943	-.28850	-.24475	-.31037
48.370	-5.000	-.25157	-.26228	-.27300	4.16307	-.19799	-.26228	-.25157	-.26228	-.25157	-.26228
47.570	-2.000	-.24475	-.24475	-.25569	4.25043	-.20100	-.24475	-.25569	-.24475	-.23381	-.25569
47.530	.000	-.25569	-.27756	-.25569	4.25043	-.19006	-.26662	-.26662	-.24475	-.25569	-.26662
47.440	2.000	-.23381	-.26662	-.25569	4.25043	-.19006	-.26662	-.23381	-.25569	-.25569	-.25569
47.660	5.000	-.24475	-.26662	-.26662	4.25043	-.21194	-.26662	-.25569	-.26662	-.28850	-.29943
47.390	10.000	-.29097	-.31307	-.31307	4.29549	-.22486	-.30202	-.30202	-.31307	-.27992	-.31307
47.510	15.000	-.32413	-.34623	-.33518	4.27339	-.21361	-.33518	-.31307	-.32413	-.32413	-.32413
47.500	20.000	-.39044	-.42359	-.41254	4.25128	-.31307	-.37938	-.40149	-.39044	-.36833	-.42359
	GRADIENT	.00097	-.00113	.00055	.00753	-.00082	-.00113	.00040	-.00075	-.00394	-.00320

RUN NO. 46/ 0 GRADIENT INTERVAL = -5.00/ 5.00

Q	BETA	CP2	CP3	CP4	CP5	CP6	CP7	CP8	CP9	CP10	CP11
94.480	-13.000	-.32102	-.33171	-.31033	-.18207	-.30499	-.28896	-.30499	-.29965	-.33171	-.31033
94.340	-10.000	-.29674	-.29135	-.29674	-.16720	-.30754	-.28595	-.29135	-.29135	-.29674	-.28595
94.410	-5.000	-.28477	-.30626	-.27940	-.16662	-.27940	-.28477	-.29014	-.26329	-.27403	-.27940
94.550	-2.000	-.25255	-.27940	-.25255	-.17199	-.26329	-.22570	-.26329	-.25792	-.25255	-.25792
94.270	.000	-.25356	-.28595	-.26436	-.16181	-.25356	-.26436	-.26436	-.25896	-.26976	-.25896
94.360	2.000	-.23737	-.27515	-.25896	-.15641	-.25896	-.26436	-.26436	-.26976	-.26976	-.25356
94.430	5.000	-.29135	-.29135	-.27515	-.16181	-.27515	-.28585	-.30214	-.28595	-.29135	-.28055
94.550	10.000	-.30089	-.30626	-.29552	-.17736	-.28477	-.31163	-.31163	-.29552	-.29552	-.28477
94.610	15.000	-.33848	-.34922	-.33311	-.18273	-.34385	-.33848	-.34385	-.30089	-.33311	-.33311
94.360	20.000	-.43708	-.38850	-.40469	-.21578	-.46406	-.45867	-.45867	-.39929	-.37231	-.38850
	GRADIENT	-.00004	.00143	.00015	.00095	.00052	-.00143	-.00107	-.00238	-.00209	.00005

ARC40X80-462(OA100) OV101 (ANA011) (16 MAR 82)

REFERENCE DATA

SREF =	2690.0000 SQ.FT.	XMRP =	1076.6800 IN. XO		
LREF =	474.8100 INCHES	YMRP =	.0000 IN. YO		
BREF =	936.6800 INCHES	ZMRP =	375.0000 IN. ZO		
SCALE =	.3600				

PARAMETRIC DATA

ALPHA =	15.000	ELEVON =	.000
AILRON =	.000	BDFLAP =	.000
SPDBRK =	25.000	RUDDER =	.000

RUN NO. 19/ 0 GRADIENT INTERVAL = -5.00/ 5.00

Q	BETA	CP2	CP3	CP4	CP5	CP6	CP7	CP8	CP9	CP10	CP11
19.000	-13.000	-.35074	-.35074	-.35074	-.18542	-.18542	-.32319	-.35074	-.32319	-.35074	-.37829
19.100	-10.000	-.32319	-.32319	-.32319	-.18542	-.15786	-.32319	-.32319	-.32319	-.35074	-.35074
19.000	-5.000	-.26808	-.29563	-.29563	-.15786	-.15786	-.26808	-.32319	-.29563	-.32319	-.32319
19.000	-2.000	-.26808	-.29563	-.29563	-.15786	-.15786	-.26808	-.26808	-.26808	-.29563	-.32319
18.980	.000	-.26808	-.29563	-.29563	-.15786	-.15786	-.29563	-.32319	-.26808	-.29563	-.35074
19.070	2.000	-.28928	-.28928	-.28928	-.15504	-.15504	-.28928	-.31613	-.28928	-.31613	-.34297
18.980	10.000	-.32319	-.32319	-.32319	-.18542	-.18542	-.32319	-.32319	-.32319	-.35074	-.35074
19.000	15.000	-.35074	-.35074	-.35074	-.18542	-.18542	-.35074	-.37829	-.37829	-.40585	-.35074
18.930	20.000	-.43340	-.43340	-.43340	-.21297	-.24052	-.43340	-.43340	-.43340	-.46095	-.46095
	GRADIENT	-.00258	.00077	.00077	.00034	.00034	-.00386	-.00069	.00129	.00137	-.00369

RUN NO. 25/ 0 GRADIENT INTERVAL = -5.00/ 5.00

Q	BETA	CP2	CP3	CP4	CP5	CP6	CP7	CP8	CP9	CP10	CP11
47.510	-13.000	-.34623	-.33518	-.33518	-.15835	-.26887	-.32413	-.34623	-.27992	-.31307	-.32413
47.800	-10.000	-.31037	-.33224	-.31037	-.15725	-.26662	-.33224	-.32131	-.29943	-.32131	-.31037
48.000	-5.000	-.26443	-.29690	-.27525	-.14535	-.25360	-.27525	-.29690	-.26443	-.27525	-.26443
48.090	-2.000	-.27756	-.27756	-.26662	-.14631	-.24475	-.27756	-.28850	-.27756	-.29943	-.28850
47.970	.000	-.27756	-.26662	-.27756	-.13538	-.25569	-.27756	-.28850	-.27756	-.27756	-.26662
47.910	2.000	-.27756	-.29943	-.28850	-.13538	-.25569	-.25569	-.31037	-.26662	-.28850	-.27756
47.890	5.000	-.27756	-.26662	-.26662	-.13538	-.25569	-.27756	-.27756	-.27756	-.25569	-.26662
47.470	10.000	-.32131	-.33224	-.32131	-.15725	-.25569	-.28850	-.31037	-.31037	-.32131	-.31037
47.450	15.000	-.35412	-.35412	-.36506	-.16819	-.31037	-.35412	-.36506	-.35412	-.37599	-.37599
47.650	20.000	-.44162	-.46349	-.48537	-.19006	-.45255	-.47443	-.48537	-.47443	-.46349	-.47443
	GRADIENT	-.00113	.00186	-.00001	.00124	-.00056	.00056	.00091	-.00075	.00206	.00019

ARC40X80-462(OA100) OV101 (ANA01J) (16 MAR 82)

REFERENCE DATA

SREF =	2690.0000 SQ.FT.	XMRP =	1076.6800 IN.	XO	
LREF =	474.8100 INCHES	YMRP =	.0000 IN.	YO	
BREF =	935.6800 INCHES	ZMRP =	375.0000 IN.	ZO	
SCALE =	.3600				

PARAMETRIC DATA

ALPHA =	20.000	ELEVON =	.000
AILRON =	.000	BDFLAP =	.000
SPDBRK =	25.000	RUDDER =	.000

RUN NO. 20/ 0 GRADIENT INTERVAL = -5.00/ 5.00

Q	BETA	CP2	CP3	CP4	CP5	CP6	CP7	CP8	CP9	CP10	CP11
19.180	-13.000	-.35074	-.40585	-.37829	10.94620	-.15786	-.37829	-.37829	-.37829	-.35074	-.37829
19.130	-10.000	-.32319	-.32319	-.35074	10.97380	-.15786	-.32319	-.32319	-.32319	-.32319	-.35074
19.100	-5.000	-.30233	-.35893	-.35893	11.24290	-.16085	-.33063	-.33063	-.35893	-.30233	-.33063
19.140	-2.000	-.32319	-.35074	-.35074	10.94620	-.15786	-.35074	-.32319	-.32319	-.35074	-.35074
19.220	.000	-.32319	-.37829	-.35074	10.94620	-.18542	-.32319	-.35074	-.32319	-.35074	-.37829
19.130	2.000	-.32319	-.37829	-.35074	10.97380	-.18542	-.32319	-.32319	-.35074	-.32319	-.35074
19.100	5.000	-.29563	-.32319	-.32319	10.94620	-.18542	-.35074	-.29563	-.32319	-.29563	-.35074
19.010	10.000	-.32319	-.37829	-.35074	10.94620	-.18542	-.35074	-.32319	-.35074	-.32319	-.35074
19.040	15.000	-.35893	-.44382	-.41552	11.24290	-.24574	-.41552	-.38722	-.38722	-.38722	-.41552
19.000	20.000	-.43340	-.46095	-.48851	10.91870	-.32319	-.43340	-.46095	-.43340	-.46095	-.46095
	GRADIENT	.00058	.00213	.00308	-.02463	-.00307	-.00078	.00302	.00213	.00153	-.00173

RUN NO. 26/ 0 GRADIENT INTERVAL = -5.00/ 5.00

Q	BETA	CP2	CP3	CP4	CP5	CP6	CP7	CP8	CP9	CP10	CP11
47.490	-13.000	-.37938	-.36833	-.37938	-.13625	-.33518	-.35728	-.39044	-.32413	-.34623	-.39044
47.730	-10.000	-.35412	-.35412	-.35412	-.12444	-.31037	-.34318	-.35412	-.35412	-.34318	-.35412
47.590	-5.000	-.33224	-.33224	-.35412	-.13538	-.27756	-.32131	-.34318	-.32131	-.31037	-.33224
47.600	-2.000	-.34318	-.35412	-.35412	-.13538	-.31037	-.35412	-.37599	-.33224	-.34318	-.36506
47.560	.000	-.35412	-.37599	-.36506	-.13538	-.32131	-.37599	-.37599	-.33224	-.35412	-.37599
47.630	2.000	-.36506	-.34318	-.37599	-.12444	-.31037	-.34318	-.36506	-.36506	-.37599	-.37599
47.700	5.000	-.33224	-.34318	-.34318	-.12444	-.28662	-.35412	-.34318	-.33224	-.34318	-.33224
47.640	10.000	-.36506	-.35412	-.36506	-.12444	-.27756	-.35412	-.37599	-.34318	-.35412	-.36506
47.620	15.000	-.41974	-.41974	-.41974	-.13538	-.31037	-.39787	-.41974	-.40881	-.38693	-.39787
47.420	20.000	-.51818	-.52911	-.52911	-.17912	-.48537	-.48537	-.54005	-.50724	-.50724	-.50724
	GRADIENT	-.00075	-.00057	.00019	.00132	.00094	-.00245	.00038	-.00207	-.00396	-.00038

ARC40X80-462(OA100) OV101 (ANA01K) (16 MAR 82)

REFERENCE DATA

SREF =	2690.0000 SQ.FT.	XMRP =	1076.6800 IN. XO		
LREF =	474.8100 INCHES	YMRP =	.0000 IN. YO		
BREF =	936.6800 INCHES	ZMRP =	375.0000 IN. ZO		
SCALE =	.3600				

PARAMETRIC DATA

ALPHA =	.000	BETA =	.000
AILRON =	.000	BDFLAP =	.000
SPDBRK =	25.000	RUDDER =	.000

RUN NO. 10/ 0 GRADIENT INTERVAL = -5.00/ 5.00

Q	ELEVON	CP2	CP3	CP4	CP5	CP6	CP7	CP8	CP9	CP10	CP11
47.410	-36.343	-.23786	-.19298	-.20415	-.27116	-.24883	-.20415	-.27116	-.20415	-.21532	-.24883
47.600	-31.143	-.20100	-.25569	-.24475	-.25569	-.25569	-.20100	-.26662	-.15725	-.20100	-.24475
47.670	-26.002	-.22287	-.23381	-.22287	-.24475	-.23381	-.21194	-.26662	-.20100	-.22287	-.22287
47.550	-20.742	-.17912	-.25569	-.21194	-.23381	-.21194	-.25569	-.23381	-.24475	-.22287	-.23381
47.580	-15.601	-.20256	-.22466	-.22466	-.22466	-.20256	-.24676	-.24676	-.19150	-.23571	-.24676
47.670	-10.401	-.22287	-.25569	-.24475	-.22287	-.22287	-.23381	-.25569	-.24475	-.22287	-.24475
47.780	-5.200	-.24475	-.25569	-.26662	-.21194	-.23381	-.25569	-.26662	-.26662	-.26662	-.25569
47.640	-.060	-.24576	-.29097	-.29097	-.20256	-.23571	-.26887	-.29097	-.27992	-.29097	-.29097
47.540	5.141	-.25569	-.32131	-.31037	-.19006	-.24475	-.29943	-.29943	-.29943	-.29943	-.31037
47.490	10.281	-.31307	-.31307	-.32413	-.19150	-.25782	-.32413	-.32413	-.32413	-.31307	-.31307
47.580	15.482	-.31307	-.32413	-.33518	-.19150	-.26887	-.33518	-.35728	-.34623	-.34623	-.34623
47.470	20.682	-.32413	-.32413	-.34623	-.20256	-.25782	-.34623	-.35728	-.35728	-.34623	-.35728
	GRADIENT	.00000	.00000	.00000	.00000	.00000	.00000	.00000	.00000	.00000	.00000

ARC40X80-462(OA100) OV101 (ANA01L) (16 MAR 82)

REFERENCE DATA

SREF =	2690.0000 SQ.FT.	XMRP =	1076.6800 IN.	XO	
LREF =	474.8100 INCHES	YMRP =	.0000 IN.	YO	
BREF =	936.6800 INCHES	ZMRP =	375.0000 IN.	ZO	
SCALE =	.3600				

PARAMETRIC DATA

ALPHA =	5.000	BETA =	.000
AILRON =	.000	BDFLAP =	.000
SPDBRK =	25.000	RUDDER =	.000

RUN NO. 11/ 0 GRADIENT INTERVAL = -5.00/ 5.00

Q	ELEVON	CP2	CP3	CP4	CP5	CP6	CP7	CP8	CP9	CP10	CP11
47.520	-36.343	-.16940	-.23571	-.23571	-.26887	-.23571	-.21361	-.23571	-.21361	-.21361	-.21361
47.610	-31.143	-.22466	-.23571	-.19150	-.24676	-.20256	-.24676	-.24676	-.20256	-.24676	-.23571
47.540	-26.002	-.14730	-.24676	-.24676	-.24676	-.23571	-.24676	-.24676	-.23571	-.20256	-.23571
47.510	-20.742	-.16940	-.23571	-.20256	-.20255	-.19150	-.24676	-.24676	-.18045	-.23571	-.23571
47.510	-15.601	-.20256	-.26887	-.23571	-.21361	-.20256	-.15835	-.21361	-.15835	-.23571	-.21361
47.550	-10.401	-.19150	-.25782	-.24676	-.21361	-.19150	-.24676	-.24676	-.21361	-.24676	-.24676
47.510	-5.260	-.23571	-.26887	-.24676	-.19150	-.19150	-.26887	-.27992	-.24676	-.24676	-.25782
47.610	-.060	-.25782	-.25782	-.26887	-.19150	-.20256	-.26887	-.26887	-.27992	-.27992	-.27992
47.450	5.081	-.23571	-.29097	-.27992	-.18045	-.23571	-.26887	-.30202	-.27992	-.27992	-.27992
47.500	10.341	-.25782	-.30202	-.30202	-.16940	-.24676	-.26887	-.31307	-.26887	-.31307	-.31307
47.710	15.482	-.31307	-.32413	-.32413	-.16940	-.29097	-.31307	-.32413	-.32413	-.31307	-.31307
47.420	20.682	-.31307	-.31307	-.32413	-.16940	-.30202	-.31307	-.31307	-.32413	-.33518	-.33518
	GRADIENT	.00000	.00000	.00000	.00000	.00000	.00000	.00000	.00000	.00000	.00000

ARC40X80-462(OA100) OV101 (ANA01M) (16 MAR 82)

REFERENCE DATA

SREF =	2690.0000 SQ.FT.	XMRP =	1076.6800 IN. XO		
LREF =	474.8100 INCHES	YMRP =	.0000 IN. YO		
BREF =	936.6800 INCHES	ZMRP =	375.0000 IN. ZO		
SCALE =	.3600				

PARAMETRIC DATA

ALPHA =	10.000	BETA =	.000
AILRON =	.000	BDFLAP =	.000
SPDBRK =	25.000	RUDDER =	.000

RUN NO. 12/ 0 GRADIENT INTERVAL = -5.00/ 5.00

Q	ELEVON	CP2	CP3	CP4	CP5	CP6	CP7	CP8	CP9	CP10	CP11
47.660	-36.343	-.22466	-.20256	-.23571	-.24676	-.23571	-.23571	-.27992	-.19150	-.27992	-.26887
47.590	-31.143	-.10309	-.20256	-.23571	-.23571	-.21361	-.24676	-.21361	-.18045	-.21361	-.26887
47.530	-26.002	-.14631	-.14631	-.20100	-.20100	-.21194	-.22287	-.31037	-.21194	-.20100	-.23381
47.620	-20.802	-.14730	-.19150	-.19150	-.20256	-.20256	-.21361	-.26887	-.21361	-.22466	-.20256
47.460	-15.601	-.14730	-.23571	-.20256	-.19150	-.19150	-.24676	-.19150	-.22466	-.19150	-.21361
47.530	-10.401	-.18045	-.24676	-.21361	-.19150	-.19150	-.24676	-.24676	-.24676	-.23571	-.24676
47.500	-5.200	-.24676	-.25782	-.25782	-.16940	-.20256	-.24676	-.24676	-.24676	-.26887	-.26887
47.500	-.060	-.25569	-.25569	-.25569	-.16819	-.20100	-.24475	-.27756	-.25569	-.26662	-.26662
47.350	5.141	-.26887	-.26887	-.26887	-.16940	-.21361	-.26887	-.27992	-.27992	-.26887	-.26887
47.430	10.281	-.26887	-.29097	-.30202	-.15835	-.22466	-.26887	-.30202	-.27992	-.31307	-.29097
47.460	15.541	-.25782	-.30202	-.31307	-.15835	-.23571	-.26887	-.32413	-.30202	-.31307	-.31307
47.380	20.622	-.29097	-.32413	-.32413	-.15835	-.23571	-.31307	-.33518	-.31307	-.31307	-.32413
	GRADIENT	.00000	.00000	.00000	.00000	.00000	.00000	.00000	.00000	.00000	.00000

ARC40X80-462(OA100) OV101(DECREASING ELEVON) (ANAOIN) (16 MAR 82)

REFERENCE DATA

SREF =	2690.0000 SQ.FT.	XMRP =	1076.6800 IN. XO		
LREF =	474.8100 INCHES	YMRP =	.0000 IN. YO		
BREF =	936.6900 INCHES	ZMRP =	375.0000 IN. ZO		
SCALE =	.3600				

PARAMETRIC DATA

ALPHA =	10.000	BETA =	.000
AILRON =	.000	BDFLAP =	.000
SPDBRK =	25.000	RUDDER =	.000

RUN NO. 13/ 0 GRADIENT INTERVAL = -5.00/ 5.00

Q	ELEVON	CP2	CP3	CP4	CP5	CP6	CP7	CP8	CP9	CP10	CP11
47.380	-36.343	-.10309	-.19150	-.20256	-.23571	-.23571	-.22466	-.24676	-.24676	-.20256	-.26887
47.430	-31.143	-.11414	-.23571	-.21361	-.23571	-.22466	-.24676	-.19150	-.20256	-.24676	-.24676
47.440	-25.942	-.14730	-.23571	-.20256	-.21361	-.20256	-.24676	-.27992	-.22466	-.21361	-.21361
47.350	-20.742	-.18045	-.14730	-.16940	-.18045	-.19150	-.20256	-.26887	-.18045	-.22466	-.23571
47.340	-15.541	-.16940	-.25782	-.20256	-.20256	-.19150	-.20256	-.20256	-.15835	-.21361	-.20256
47.340	-10.461	-.19150	-.21361	-.23571	-.19150	-.19150	-.20256	-.24676	-.21361	-.25782	-.21361
47.260	-5.200	-.22466	-.25782	-.24676	-.18045	-.22466	-.24676	-.24676	-.25782	-.22466	-.24676
47.300	.000	-.23571	-.25782	-.26887	-.16940	-.20256	-.26887	-.27992	-.25782	-.25782	-.26887
47.260	5.111	-.25782	-.25782	-.26887	-.16940	-.23571	-.27992	-.29097	-.26887	-.26887	-.26887
47.510	10.281	-.26887	-.29097	-.27992	-.15835	-.22466	-.27992	-.31307	-.30202	-.30202	-.29097
47.530	15.541	-.30202	-.30202	-.31307	-.15835	-.22466	-.32413	-.31307	-.25782	-.30202	-.30202
47.400	20.622	-.29943	-.31037	-.32131	-.15725	-.25569	-.31037	-.32131	-.31037	-.32131	-.31037
	GRADIENT	.00000	.00000	.00000	.00000	.00000	.00000	.00000	.00000	.00000	.00000

ARC40X80-462(OA100) OV101 (ANA010) (16 MAR 82)

REFERENCE DATA

SREF =	2690.0000 SQ.FT.	XMRP =	1076.6800 IN. XO		
LREF =	474.8100 INCHES	YMRP =	.0000 IN. YO		
BREF =	936.6800 INCHES	ZMRP =	375.0000 IN. ZO		
SCALE =	.3600				

PARAMETRIC DATA

ALPHA =	15.000	BETA =	.000
AILRON =	.000	BDFLAP =	.000
SPDBRK =	25.000	RUDDER =	.000

RUN NO. 27/ 0 GRADIENT INTERVAL = -5.00/ 5.00

Q	ELEVON	CP2	CP3	CP4	CP5	CP6	CP7	CP8	CP9	CP10	CP11
47.630	-36.343	-.20100	-.19006	-.13538	-.23381	-.24475	-.31037	-.33224	-.24475	-.24475	-.26662
47.880	-31.143	-.20100	-.24475	-.17912	-.19006	-.26662	-.32131	-.31037	-.25569	-.26662	-.26662
47.570	-26.002	-.19006	-.13538	-.15725	-.17912	-.24475	-.27756	-.31037	-.19006	-.23381	-.24475
47.550	-20.742	-.19006	-.29943	-.20100	-.20100	-.22287	-.26662	-.24475	-.24475	-.27756	-.26662
47.520	-15.601	-.24676	-.27992	-.24676	-.19150	-.22466	-.24676	-.31307	-.24676	-.26887	-.24676
47.720	-10.401	-.26662	-.27756	-.26662	-.17912	-.20100	-.25569	-.26662	-.24475	-.26662	-.26662
47.490	-5.200	-.26887	-.27992	-.27992	-.15835	-.20256	-.24676	-.29097	-.26887	-.27992	-.26887
47.560	.000	-.27756	-.29943	-.26662	-.15725	-.21194	-.29943	-.29943	-.29943	-.29943	-.28850
47.560	5.141	-.29943	-.31037	-.31037	-.15725	-.22287	-.27756	-.31037	-.31037	-.27756	-.29943
47.570	10.281	-.31037	-.31037	-.31037	-.13538	-.21194	-.26662	-.31037	-.31037	-.31037	-.33224
47.790	15.482	-.32131	-.31037	-.32131	-.13538	-.24475	-.32131	-.33224	-.32131	-.32131	-.32131
47.430	20.637	-.33224	-.35412	-.34318	-.13538	-.24475	-.34318	-.34318	-.34318	-.35412	-.34318
	GRADIENT	.00000	.00000	.00000	.00000	.00000	.00000	.00000	.00000	.00000	.00000

ARC40X80-462(OA100) OV101 (ANA01P) (16 MAR 82)

REFERENCE DATA

SREF =	2690.0000 SQ.FT.	XMRP =	1076.6800 IN. XO		
LREF =	474.8100 INCHES	YMRP =	.0000 IN. YO		
BREF =	936.6800 INCHES	ZMRP =	375.0000 IN. ZO		
SCALE =	.3600				

PARAMETRIC DATA

ALPHA =	20.000	BETA =	.000
AILRON =	.000	BDFLAP =	.000
SPDBRK =	25.000	RUDDER =	.000

RUN NO. 28/ 0 GRADIENT INTERVAL = -5.00/ 5.00

Q	ELEVON	CP2	CP3	CP4	CP5	CP6	CP7	CP8	CP9	CP10	CP11
47.610	-36.343	-.24475	-.29943	-.25569	-.22287	-.23381	-.31037	-.34318	-.21194	-.28850	-.26662
47.620	-31.143	-.19006	-.31037	-.24475	-.20100	-.23381	-.32131	-.31037	-.24475	-.23381	-.26662
47.500	-25.942	-.26662	-.28850	-.27756	-.19006	-.22287	-.27756	-.32131	-.21194	-.29943	-.29943
47.700	-20.712	-.24475	-.35412	-.29850	-.17912	-.21194	-.26662	-.31037	-.26662	-.29943	-.31037
47.670	-15.601	-.29943	-.31037	-.31037	-.16819	-.21194	-.31037	-.33224	-.29943	-.31037	-.32131
47.810	-10.401	-.33224	-.33224	-.34318	-.15725	-.26662	-.33224	-.33224	-.32131	-.33224	-.34318
47.510	-5.200	-.35412	-.35412	-.34318	-.15725	-.26562	-.35412	-.35412	-.34318	-.34318	-.37599
47.560	-.030	-.34318	-.36506	-.37599	-.13538	-.27756	-.35412	-.37599	-.33224	-.38693	-.37599
47.750	5.141	-.39787	-.38693	-.38693	-.13538	-.29943	-.37599	-.40881	-.37599	-.38693	-.40881
47.560	10.341	-.38693	-.39787	-.41974	-.13538	-.31037	-.37599	-.43068	-.37599	-.40881	-.41974
47.760	15.541	-.44569	-.43464	-.44569	-.11414	-.34623	-.43464	-.46780	-.40149	-.43464	-.42359
47.650	20.682	-.45255	-.45255	-.48537	-.13538	-.37599	-.39787	-.46349	-.38693	-.43068	-.46349
	GRADIENT	.00000	.00000	.00000	.00000	.00000	.00000	.00000	.00000	.00000	.00000

ARC40X80-462(OA100) OV101 (ANA01Q) (16 MAR 82)

REFERENCE DATA

SREF =	2690.0000 SQ.FT.	XMRP =	1076.6800 IN. XO		
LREF =	474.8100 INCHES	YMRP =	.0000 IN. YO		
BREF =	936.6800 INCHES	ZMRP =	375.0000 IN. ZO		
SCALE =	.3600				

PARAMETRIC DATA

ALPHA =	.000	BETA =	.000
ELEVON =	.000	BDFLAP =	.000
SPDBRK =	25.000	RUDDER =	.000

RUN NO. 29/ 0 GRADIENT INTERVAL = -5.00/ 5.00

Q	AILRON	CP2	CP3	CP4	CP5	CP6	CP7	CP8	CP9	CP10	CP11
47.700	-.045	-.27756	-.27756	-.26662	-.20100	-.24475	-.24475	-.31037	-.27756	-.27756	-.27756
47.690	2.570	-.27756	-.31037	-.29943	-.19006	-.27756	-.25569	-.26662	-.26662	-.26662	-.27756
47.620	5.141	-.27756	-.26662	-.27756	-.20100	-.24475	-.26662	-.29943	-.24475	-.28850	-.31037
47.590	7.711	-.29943	-.31037	-.29943	-.20100	-.24475	-.27756	-.28850	-.26662	-.26662	-.29943
47.610	10.281	-.29943	-.29943	-.31037	-.21194	-.27756	-.24475	-.32131	-.27756	-.31037	-.31037
47.630	15.541	-.31307	-.31307	-.30202	-.22466	-.27992	-.26887	-.31307	-.27992	-.29097	-.26887
	GRADIENT	.00000	-.01255	-.01255	.00418	-.01255	-.00418	.01673	.00418	.00418	.00000

ARC40X80-462(OA100) OV101 (ANA01R) (16 MAR 82)

REFERENCE DATA

SREF =	2690.0000 SQ.FT.	XMRP =	1076.6800 IN. XO		
LREF =	474.8100 INCHES	YMRP =	.0000 IN. YO		
BREF =	936.6800 INCHES	ZMRP =	375.0000 IN. ZO		
SCALE =	.3600				

PARAMETRIC DATA

ALPHA =	5.000	BETA =	.000
ELEVON =	.000	BDFLAP =	.000
SPDBRK =	25.000	RUDDER =	.000

RUN NO. 30/ 0 GRADIENT INTERVAL = -5.00/ 5.00

Q	AILRON	CP2	CP3	CP4	CP5	CP6	CP7	CP8	CP9	CP10	CP11
47.600	-.045	-.25569	-.26662	-.26662	-.17912	-.21194	-.26662	-.26662	-.27756	-.26662	-.24475
47.660	2.570	-.26662	-.29943	-.26662	-.17912	-.21194	-.26662	-.26662	-.26662	-.27756	-.26662
47.650	5.141	-.26662	-.26662	-.24475	-.17912	-.20100	-.24475	-.27756	-.26662	-.25569	-.27756
47.570	7.741	-.26887	-.30202	-.27992	-.19150	-.21351	-.26887	-.25782	-.27992	-.26887	-.27992
47.610	10.311	-.24475	-.32131	-.29943	-.19006	-.21194	-.24475	-.24475	-.25569	-.26662	-.28850
47.570	15.541	-.27992	-.32413	-.26887	-.20256	-.21361	-.26887	-.29097	-.23571	-.30202	-.25782
	GRADIENT	-.00418	-.01255	.00000	.00000	.00000	.00000	.00000	.00418	-.00418	-.00836

ARC40X80-462(OA100) OV101 (ANA01S) (16 MAR 82)

REFERENCE DATA

SREF =	2690.0000 SQ.FT.	XMRP =	1076.6900 IN. XO		
LREF =	474.8100 INCHES	YMRP =	.0000 IN. YO		
BREF =	936.6800 INCHES	ZMRP =	375.0000 IN. ZO		
SCALE =	.3600				

PARAMETRIC DATA

ALPHA =	10.000	BETA =	.000
ELEVON =	.000	BDFLAP =	.000
SPDBRK =	25.000	RUDDER =	.000

RUN NO. 31/ 0 GRADIENT INTERVAL = -5.00/ 5.00

Q	AILRON	CP2	CP3	CP4	CP5	CP6	CP7	CP8	CP9	CP10	CP11
47.670	-.060	-.27756	-.26662	-.27756	-.16819	-.20100	-.25569	-.26662	-.26662	-.26662	-.26662
47.530	2.570	-.25782	-.24676	-.26887	-.18045	-.21361	-.26887	-.26887	-.26887	-.26887	-.25782
47.690	5.141	-.26887	-.27992	-.27992	-.16940	-.20256	-.26887	-.27992	-.26887	-.26887	-.27992
47.590	7.711	-.25782	-.27992	-.26887	-.18045	-.20256	-.24676	-.27992	-.26887	-.26887	-.26887
47.650	10.281	-.26662	-.26662	-.26662	-.17912	-.20100	-.26662	-.26662	-.24475	-.24475	-.26662
47.710	15.541	-.30202	-.29097	-.27992	-.19150	-.22466	-.24676	-.31307	-.27992	-.27992	-.25782
	GRADIENT	.00751	.00755	.00331	-.00466	-.00479	-.00501	-.00085	-.00085	-.00085	.00335

ARC40X80-462(OA100) OV101(DECREASING AILERON) (ANA01T) (16 MAR 82)

REFERENCE DATA

SREF =	2690.0000 SQ.FT.	XMRP =	1076.6800 IN. XO		
LREF =	474.8100 INCHES	YMRP =	.0000 IN. YO		
BREF =	936.6800 INCHES	ZMRP =	375.0000 IN. ZO		
SCALE =	.3600				

PARAMETRIC DATA

ALPHA =	10.000	BETA =	.000
ELEVON =	.000	BDFLAP =	.000
SPDBRK =	25.000	RUDDER =	.000

RUN NO. 32/ 0 GRADIENT INTERVAL = -5.00/ 5.00

Q	AILRON	CP2	CP3	CP4	CP5	CP6	CP7	CP8	CP9	CP10	CP11
47.600	.000	-.26662	-.27756	-.26662	-.16819	-.20100	-.24475	-.26662	-.27756	-.24475	-.27756
47.610	2.570	-.26887	-.27992	-.25782	-.16940	-.20256	-.26887	-.25782	-.24676	-.26887	-.26887
47.690	5.141	-.26887	-.31307	-.26887	-.16940	-.21361	-.25782	-.26887	-.25782	-.26887	-.26887
47.670	7.771	-.26662	-.27756	-.27756	-.19006	-.20100	-.24475	-.29943	-.26662	-.26662	-.26662
47.670	10.341	-.26662	-.29943	-.26662	-.17912	-.20100	-.26662	-.27756	-.26662	-.24475	-.26662
47.610	15.541	-.26887	-.31307	-.27992	-.18045	-.22466	-.26997	-.30202	-.24676	-.27992	-.24676
	GRADIENT	-.00087	-.00092	.00343	-.00047	-.00061	-.00938	.00343	.01198	-.00938	.00339

ARC40X80-462(OA100) OV101 (ANA01U) (16 MAR 82)

REFERENCE DATA

SREF =	2690.0000 SQ.FT.	XMRP =	1076.6800 IN. XO		
LREF =	474.8100 INCHES	YMRP =	.0000 IN. YO		
BREF =	936.6800 INCHES	ZMRP =	375.0000 IN. ZO		
SCALE =	.3600				

PARAMETRIC DATA

ALPHA =	15.000	BETA =	.000
ELEVON =	.000	BDFLAP =	.000
SPDBRK =	25.000	RUDDER =	.000

RUN NO. 33/ 0 GRADIENT INTERVAL = -5.00/ 5.00

Q	AILRON	CP2	CP3	CP4	CP5	CP6	CP7	CP8	CP9	CP10	CP11
47.570	-.015	-.27756	-.29943	-.28850	-.15725	-.20100	-.28850	-.28850	-.27756	-.27756	-.31037
47.700	2.570	-.31037	-.26662	-.26662	-.15725	-.20100	-.29943	-.31037	-.26662	-.31037	-.29943
47.690	5.170	-.27756	-.29943	-.27756	-.16819	-.19006	-.26662	-.31037	-.24475	-.31037	-.27756
47.620	7.711	-.25589	-.31037	-.29943	-.15725	-.21194	-.27756	-.31037	-.31037	-.27756	-.29943
47.590	10.281	-.28850	-.31037	-.31037	-.16819	-.23381	-.27756	-.28850	-.29943	-.29943	-.27756
47.490	15.527	-.31037	-.35412	-.31037	-.15725	-.22287	-.26662	-.31037	-.28850	-.31037	-.29943
	GRADIENT	-.01269	.01269	.00846	-.00000	.00000	-.00423	-.00846	.00423	-.01269	.00423

ARC40X80-462(OA100) OV101 (ANA01V) (16 MAR 82)

REFERENCE DATA

SREF =	2690.0000 SQ.FT.	XMRP =	1076.6800 IN. XO		
LREF =	474.8100 INCHES	YMRP =	.0000 IN. YO		
BREF =	936.6800 INCHES	ZMRP =	375.0000 IN. ZO		
SCALE =	.3600				

PARAMETRIC DATA

ALPHA =	20.000	BETA =	.000
ELEVON =	.000	BDFLAP =	.000
SPDBRK =	25.000	RUDDER =	.000

RUN NO. 34/ 0 GRADIENT INTERVAL = -5.00/ 5.00

Q	AILRON	CP2	CP3	CP4	CP5	CP6	CP7	CP8	CP9	CP10	CP11
47.650	.000	-.37599	-.37599	-.37599	-.15725	-.27756	-.34318	-.38693	-.34318	-.34318	-.35412
47.580	2.570	-.37599	-.38693	-.37599	-.15725	-.29943	-.35412	-.37599	-.37599	-.38693	-.37599
47.650	5.185	-.36506	-.37599	-.37599	-.15725	-.28850	-.35412	-.36506	-.35412	-.37599	-.37599
47.670	7.711	-.34318	-.37599	-.37599	-.15725	-.27756	-.33224	-.38693	-.35412	-.37599	-.37599
47.640	10.341	-.38693	-.38693	-.36506	-.15725	-.27756	-.37599	-.37599	-.37599	-.36506	-.35412
47.430	15.541	-.37599	-.36506	-.37599	-.15725	-.27756	-.38693	-.37599	-.37599	-.38693	-.37599
	GRADIENT	.00000	-.00426	.00000	.00000	-.00851	-.00426	.00426	-.01277	-.01702	-.00851

ARC40X80-462(OA100) OV101 (ANA01W) (16 MAR 82)

REFERENCE DATA

SREF =	2690.0000 SQ.FT.	XMRP =	1076.6800 IN. XO		
LREF =	474.8100 INCHES	YMRP =	.0000 IN. YO		
BREF =	936.6800 INCHES	ZMRP =	375.0000 IN. ZO		
SCALE =	.3600				

PARAMETRIC DATA

ALPHA =	.000	BETA =	.000
ELEVON =	10.000	BDFLAP =	.000
SPDBRK =	25.000	RUDDER =	.000

RUN NO. 50/ 0 GRADIENT INTERVAL = -5.00/ 5.00

Q	AILRON	CP2	CP3	CP4	CP5	CP6	CP7	CP8	CP9	CP10	CP11
47.600	.064	-.28371	-.31586	-.30514	-.18728	-.27300	-.30514	-.31586	-.28371	-.30514	-.30514
47.580	2.544	-.31855	-.30773	-.31855	-.18865	-.29690	-.31855	-.31855	-.29608	-.28608	-.31855
47.740	5.068	-.29443	-.30514	-.29443	-.17656	-.27300	-.29443	-.30514	-.29443	-.28371	-.29443
47.600	7.578	-.29443	-.30514	-.29443	-.18728	-.29443	-.27300	-.31586	-.28371	-.30514	-.28371
47.600	10.044	-.27300	-.31586	-.31586	-.18728	-.28371	-.30514	-.32657	-.31586	-.32657	-.27300
47.740	12.896	-.28608	-.30773	-.30773	-.19948	-.30773	-.30773	-.31855	-.29690	-.30773	-.30773
	GRADIENT	-.01405	.00328	-.00541	-.00055	-.00964	-.00541	-.00109	-.00095	.00769	-.00541

ARC40X80-462(OA100) OV101 (ANA01X) (16 MAR 82)

REFERENCE DATA

SREF =	2690.0000 SQ.FT.	XMRP =	1076.6800 IN.	XO	
LREF =	474.8100 INCHES	YMRP =	.0000 IN.	YO	
BREF =	936.6800 INCHES	ZMRP =	375.0000 IN.	ZO	
SCALE =	.3600				

PARAMETRIC DATA

ALPHA =	5.000	BETA =	.000
ELEVON =	10.000	BDFLAP =	.000
SPDBRK =	25.000	RUDDER =	.000

RUN NO. 51/ 0 GRADIENT INTERVAL = -5.00/ 5.00

Q	AILRON	CP2	CP3	CP4	CP5	CP6	CP7	CP8	CP9	CP10	CP11
47.550	.049	-.24278	-.30773	-.27525	-.16700	-.25360	-.29690	-.29690	-.27525	-.27525	-.28608
47.650	2.544	-.27525	-.29690	-.30773	-.15618	-.26443	-.28608	-.29690	-.24278	-.27525	-.27525
47.560	5.068	-.27525	-.30773	-.29690	-.16700	-.26443	-.26443	-.26443	-.26443	-.24278	-.28608
47.540	7.578	-.24278	-.31855	-.30773	-.16700	-.27525	-.28608	-.26443	-.27525	-.27525	-.28608
47.710	10.028	-.29690	-.27525	-.29690	-.15618	-.26443	-.27525	-.30773	-.30773	-.27525	-.29690
47.460	12.896	-.28608	-.30773	-.26443	-.16700	-.27525	-.26443	-.27525	-.26443	-.29690	-.24278
	GRADIENT	-.01302	.00434	-.01302	.00434	-.00434	.00434	.00000	.01302	.00000	.00434

ARC40X80-462(OA100) OV101 (ANA01Y) (16 MAR 82)

REFERENCE DATA

SREF =	2690.0000 SQ.FT.	XMRP =	1076.6800 IN.	XO	
LREF =	474.8100 INCHES	YMRP =	.0000 IN.	YO	
BREF =	936.6800 INCHES	ZMRP =	375.0000 IN.	ZO	
SCALE =	.3600				

PARAMETRIC DATA

ALPHA =	10.000	BETA =	.000
ELEVON =	10.000	BDFLAP =	.000
SPDBRK =	25.000	RUDDER =	.000

RUN NO. 52/ 0 GRADIENT INTERVAL = -5.00/ 5.00

Q	AILRON	CP2	CP3	CP4	CP5	CP6	CP7	CP8	CP9	CP10	CP11
47.580	.049	-.24278	-.28608	-.24278	-.14535	-.22113	-.24278	-.29690	-.23195	-.26443	-.24278
47.430	2.544	-.26443	-.25360	-.26443	-.13453	-.26443	-.27525	-.29690	-.27525	-.26443	-.27525
47.430	5.024	-.27525	-.28608	-.25360	-.14535	-.26443	-.26443	-.28608	-.28608	-.29690	-.26443
47.400	7.578	-.26443	-.26443	-.27525	-.14535	-.26443	-.25360	-.27525	-.25360	-.26443	-.26443
47.480	10.028	-.26228	-.26228	-.26228	-.14442	-.26228	-.27300	-.27300	-.24085	-.29443	-.26228
47.370	12.896	-.24278	-.29690	-.27525	-.15618	-.26443	-.26443	-.27525	-.26443	-.29690	-.24278
	GRADIENT	-.00868	.01302	-.00868	.00434	-.01736	-.01302	.00000	-.01736	.00000	-.01302

ARC40X80-462(OA100) OV101 (ANA01Z) (16 MAR 82)

REFERENCE DATA

SREF =	2690.0000 SQ.FT.	XMRP =	1076.6800 IN.	XO	
LREF =	474.8100 INCHES	YMRP =	.0000 IN.	YO	
BREF =	936.6800 INCHES	ZMRP =	375.0000 IN.	ZO	
SCALE =	.3600				

PARAMETRIC DATA

ALPHA =	15.000	BETA =	.000
ELEVON =	10.000	BDFLAP =	.000
SPDBRK =	25.000	RUDDER =	.000

RUN NO. 53/ 0 GRADIENT INTERVAL = -5.00/ 5.00

Q	AILRON	CP2	CP3	CP4	CP5	CP6	CP7	CP8	CP9	CP10	CP11
47.600	.050	-.32131	-.32131	-.29943	-.14631	-.25569	-.26662	-.31037	-.29943	-.29943	-.27756
47.750	2.559	-.31855	-.32938	-.29690	-.14535	-.25360	-.27525	-.31855	-.28608	-.31855	-.31855
47.780	5.068	-.32131	-.32131	-.29943	-.14631	-.26662	-.27756	-.32131	-.31037	-.32131	-.29943
47.690	7.564	-.32938	-.31855	-.30773	-.16700	-.29608	-.27525	-.32938	-.31855	-.29690	-.30773
47.700	10.043	-.32938	-.31855	-.30773	-.15618	-.29690	-.24278	-.31855	-.31855	-.31855	-.30773
47.670	12.896	-.35103	-.31855	-.30773	-.16700	-.28608	-.29690	-.32938	-.31855	-.32938	-.31855
	GRADIENT	.00110	-.00322	.00101	.00038	.00083	-.00344	-.00326	.00532	-.00762	-.01634

ARC40X80-462(OA100) OV101 (ANA02A) (16 MAR 82)

REFERENCE DATA

SREF =	2690.0000 SQ.FT.	XMRP =	1076.6800 IN.	XO	
LREF =	474.8100 INCHES	YMRP =	.0000 IN.	YO	
BREF =	936.6800 INCHES	ZMRP =	375.0000 IN.	ZO	
SCALE =	.3600				

PARAMETRIC DATA

ALPHA =	20.000	BETA =	.000
ELEVON =	10.000	BDFLAP =	.000
SPDBRK =	25.000	RUDDER =	.000

RUN NO. 54/ 0 GRADIENT INTERVAL = -5.00/ 5.00

Q	AILRON	CP2	CP3	CP4	CP5	CP6	CP7	CP8	CP9	CP10	CP11
47.540	.034	-.38693	-.40881	-.40881	-.14631	-.38693	-.33224	-.41974	-.31037	-.40881	-.39787
47.680	2.559	-.43068	-.41974	-.40881	-.14631	-.39787	-.36506	-.41974	-.38693	-.40881	-.41974
47.590	5.039	-.44162	-.44162	-.40881	-.14631	-.38693	-.38693	-.41974	-.38693	-.45255	-.40881
47.620	7.563	-.44162	-.40881	-.41974	-.14631	-.39787	-.34318	-.40881	-.41974	-.41974	-.40881
47.530	10.043	-.43068	-.40881	-.40881	-.14631	-.39693	-.37599	-.44162	-.38693	-.41974	-.40881
47.520	12.896	-.44162	-.44162	-.39787	-.15725	-.37599	-.39787	-.43068	-.40881	-.41974	-.39787
	GRADIENT	-.01733	-.00433	.00000	.00000	-.00433	-.01300	.00000	-.03033	.00000	-.00866

ARC40X80-462(OA100) OV101 (ANA02B) (16 MAR 82)

REFERENCE DATA

SREF =	2690.0000 SQ.FT.	XMRP =	1076.6800 IN. XO		
LREF =	474.8100 INCHES	YMRP =	.0000 IN. YO		
BREF =	936.6800 INCHES	ZMRP =	375.0000 IN. ZO		
SCALE =	.3600				

PARAMETRIC DATA

ALPHA =	.000	BETA =	.000
ELEVON =	-10.000	BDFLAP =	.000
SPDBRK =	25.000	RUDDER =	.000

RUN NO. 55/ 0 GRADIENT INTERVAL = -5.00/ 5.00

Q	AILRON	CP2	CP3	CP4	CP5	CP6	CP7	CP8	CP9	CP10	CP11
47.620	-.078	-.25360	-.25360	-.24278	-.21030	-.22113	-.19948	-.25360	-.19948	-.24278	-.24278
47.760	2.460	-.25360	-.24278	-.23195	-.22113	-.21030	-.21030	-.23195	-.24278	-.24278	-.25360
47.760	4.985	-.26662	-.25569	-.24475	-.22287	-.20100	-.20100	-.26662	-.24475	-.24475	-.25569
47.580	7.465	-.26662	-.26662	-.22287	-.23381	-.21194	-.23381	-.28850	-.21194	-.22287	-.23381
47.590	10.020	-.27756	-.24475	-.26662	-.20100	-.19006	-.23381	-.24475	-.26662	-.24475	-.23381
47.360	15.069	-.26887	-.31307	-.27992	-.23571	-.21361	-.23571	-.25782	-.24676	-.27992	-.23571
	GRADIENT	-.00257	-.00041	-.00039	-.00248	.00398	-.00030	-.00256	-.00895	-.00039	-.00255

ARC40X80-462(OA100) OV101 (ANA02C) (16 MAR 82)

REFERENCE DATA

SREF =	2690.0000 SQ.FT.	XMRP =	1076.6800 IN. XO		
LREF =	474.8100 INCHES	YMRP =	.0000 IN. YO		
BREF =	936.6800 INCHES	ZMRP =	375.0000 IN. ZO		
SCALE =	.3600				

PARAMETRIC DATA

ALPHA =	5.000	BETA =	.000
ELEVON =	-10.000	BDFLAP =	.000
SPDBRK =	25.000	RUDDER =	.000

RUN NO. 56/ 0 GRADIENT INTERVAL = -5.00/ 5.00

Q	AILRON	CP2	CP3	CP4	CP5	CP6	CP7	CP8	CP9	CP10	CP11
47.640	-.034	-.17783	-.24278	-.23195	-.19948	-.17783	-.18865	-.24278	-.22113	-.24278	-.23195
47.660	2.461	-.24278	-.26443	-.23195	-.21030	-.18865	-.17783	-.24278	-.24278	-.18865	-.24278
47.670	4.985	-.26443	-.27525	-.23195	-.21030	-.18865	-.17783	-.22113	-.21030	-.21030	-.22113
47.670	7.480	-.26443	-.24278	-.23195	-.19948	-.17783	-.21030	-.23195	-.24278	-.19948	-.21030
47.570	10.020	-.26443	-.28608	-.23195	-.21030	-.18865	-.17783	-.24278	-.19948	-.24278	-.24278
47.320	15.054	-.26662	-.27756	-.24475	-.21194	-.20100	-.19006	-.27756	-.20100	-.24475	-.23381
	GRADIENT	-.01724	-.00647	.00000	-.00215	-.00215	.00215	.00432	.00218	.00644	.00217

ARC40X80-462(OA100) OV101 (ANA03F) (16 MAR 82)

REFERENCE DATA

SREF =	2690.0000 SQ.FT.	XMRP =	1076.6800 IN. XO		
LREF =	474.8100 INCHES	YMRP =	.0000 IN. YO		
BREF =	936.6800 INCHES	ZMRP =	375.0000 IN. ZO		
SCALE =	.3600				

PARAMETRIC DATA

ALPHA =	.000	BETA =	.000
ELEVON =	.000	AILRON =	.000
SPDBRK =	25.000	RUDDER =	.000

RUN NO. 35/ 0 GRADIENT INTERVAL = -5.00/ 5.00

Q	BDFLAP	CP2	CP3	CP4	CP5	CP6	CP7	CP8	CP9	CP10	CP11
47.610	-11.543	-.25782	-.29097	-.29097	-.31307	-.30202	-.27992	-.30202	-.24676	-.31307	-.30202
47.740	-.201	-.27756	-.26662	-.26662	-.19006	-.25569	-.26662	-.29943	-.22287	-.26662	-.26662
47.830	.000	-.25569	-.27756	-.24475	-.20100	-.28850	-.27756	-.28850	-.22287	-.31037	-.27756
47.860	16.360	-.25569	-.31037	-.27756	.00681	-.20100	-.26662	-.28950	-.25569	-.27756	-.26662
47.800	22.684	-.26662	-.29943	-.31037	.11618	-.24475	-.26662	-.31037	-.24475	-.31037	-.29943
	GRADIENT	.10897	-.05449	.10897	-.05448	-.16346	-.05449	.05448	.00000	-.21794	-.05449

ARC40X80-462(OA100) OV101 (ANA03G) (16 MAR 82)

REFERENCE DATA

SREF =	2690.0000 SQ.FT.	XMRP =	1076.6800 IN. XO		
LREF =	474.8100 INCHES	YMRP =	.0000 IN. YO		
BREF =	936.6800 INCHES	ZMRP =	375.0000 IN. ZO		
SCALE =	.3600				

PARAMETRIC DATA

ALPHA =	5.000	BETA =	.000
ELEVON =	.000	AILRON =	.000
SPDBRK =	25.000	RUDDER =	.000

RUN NO. 36/ 0 GRADIENT INTERVAL = -5.00/ 5.00

Q	BDFLAP	CP2	CP3	CP4	CP5	CP6	CP7	CP8	CP9	CP10	CP11
47.580	-11.543	-.27756	-.28850	-.27756	-.29943	-.26662	-.27756	-.29943	-.22287	-.26662	-.26662
47.730	-.201	-.25569	-.27756	-.27756	-.17912	-.27756	-.25569	-.26662	-.24475	-.27756	-.25569
47.630	16.561	-.26662	-.26662	-.26662	.03962	-.25569	-.25569	-.31037	-.22287	-.26662	-.25569
47.510	22.684	-.24676	-.21361	-.26887	.16215	-.27992	-.24676	-.31307	-.21361	-.26887	-.25782
	GRADIENT	.00000	.00000	.00000	.00000	.00000	.00000	.00000	.00000	.00000	.00000

ARC40X80-462(OA100) OV101 (ANA03H) (16 MAR 82)

REFERENCE DATA

SREF =	2690.0000 SQ.FT.	XMRP =	1076.6800 IN. XO		
LREF =	474.8100 INCHES	YMRP =	.0000 IN. YO		
BREF =	936.6800 INCHES	ZMRP =	375.0000 IN. ZO		
SCALE =	.3600				

PARAMETRIC DATA

ALPHA =	10.000	BETA =	.000
ELEVON =	.000	AILRON =	.000
SPDBRK =	25.000	RUDDER =	.000

RUN NO. 37/ 0 GRADIENT INTERVAL = -5.00/ 5.00

Q	BDFLAP	CP2	CP3	CP4	CP5	CP6	CP7	CP8	CP9	CP10	CP11
47.700	-11.543	-.26662	-.26662	-.26662	-.27756	-.26662	-.26662	-.23381	-.23381	-.24475	-.25569
47.570	-.100	-.25569	-.27756	-.26662	-.16819	-.26662	-.24475	-.25569	-.24475	-.26662	-.24475
47.350	16.561	-.26887	-.32413	-.27992	.06268	-.27992	-.26887	-.26887	-.21361	-.24676	-.29097
47.070	22.684	-.24883	-.27116	-.27116	.16441	-.31564	-.28233	-.34935	-.24883	-.28233	-.28233
	GRADIENT	.00000	.00000	.00000	.00000	.00000	.00000	.00000	.00000	.00000	.00000

ARC40X80-462(OA100) OV101(DECREASING BDFLAP) (ANA03I) (16 MAR 82)

REFERENCE DATA

SREF =	2690.0000 SQ.FT.	XMRP =	1076.6800 IN. XO		
LREF =	474.8100 INCHES	YMRP =	.0000 IN. YO		
BREF =	936.6800 INCHES	ZMRP =	375.0000 IN. ZO		
SCALE =	.3600				

PARAMETRIC DATA

ALPHA =	10.000	BETA =	.000
ELEVON =	.000	AILRON =	.000
SPDBRK =	25.000	RUDDER =	.000

RUN NO. 38/ 0 GRADIENT INTERVAL = -5.00/ 5.00

Q	BDFLAP	CP2	CP3	CP4	CP5	CP6	CP7	CP8	CP9	CP10	CP11
47.810	-11.543	-.24475	-.28850	-.24475	-.26662	-.27756	-.26662	-.25569	-.22287	-.26662	-.23381
47.910	-.100	-.26662	-.26662	-.26662	-.16819	-.26662	-.29943	-.24475	-.25569	-.26662	-.25569
47.740	16.461	-.24475	-.24475	-.24475	.05056	-.26662	-.26662	-.26662	-.25569	-.24475	-.26662
47.360	22.583	-.15835	-.35728	-.29097	.16215	-.31307	-.26887	-.33518	-.18045	-.26887	-.25782
	GRADIENT	.00000	.00000	.00000	.00000	.00000	.00000	.00000	.00000	.00000	.00000

ARC40X80-462(0A100) OV101 (ANA03J) (16 MAR 82)

REFERENCE DATA

SREF =	2690.0000 SQ.FT.	XMRP =	1076.6800 IN. XO		
LREF =	474.8100 INCHES	YMRP =	.0000 IN. YO		
BREF =	936.6800 INCHES	ZMRP =	375.0000 IN. ZO		
SCALE =	.3600				

PARAMETRIC DATA

ALPHA =	15.000	BETA =	.000
ELEVON =	.000	AILRON =	.000
SPDBRK =	25.000	RUDDER =	.000

RUN NO. 39/ 0 GRADIENT INTERVAL = -5.00/ 5.00

Q	BDFLAP	CP2	CP3	CP4	CP5	CP6	CP7	CP8	CP9	CP10	CP11
47.330	-11.543	-.26887	-.26887	-.27992	-.26887	-.27992	-.25782	-.29097	-.25782	-.26887	-.25782
47.320	-.201	-.27116	-.27116	-.27116	-.15948	-.27116	-.28233	-.26000	-.26000	-.26000	-.27116
47.410	16.360	-.31307	-.31307	-.31307	.08479	-.32413	-.30202	-.31307	-.27992	-.30202	-.31307
47.490	22.684	-.26887	-.33518	-.31307	.17320	-.32413	-.31307	-.34623	-.22466	-.31307	-.30202
	GRADIENT	.00000	.00000	.00000	.00000	.00000	.00000	.00000	.00000	.00000	.00000

ARC40X80-462(0A100) OV101 (ANA03K) (16 MAR 82)

REFERENCE DATA

SREF =	2690.0000 SQ.FT.	XMRP =	1076.6800 IN. XO		
LREF =	474.8100 INCHES	YMRP =	.0000 IN. YO		
BREF =	936.6800 INCHES	ZMRP =	375.0000 IN. ZO		
SCALE =	.3600				

PARAMETRIC DATA

ALPHA =	20.000	BETA =	.000
ELEVON =	.000	AILRON =	.000
SPDBRK =	25.000	RUDDER =	.000

RUN NO. 40/ 0 GRADIENT INTERVAL = -5.00/ 5.00

Q	BDFLAP	CP2	CP3	CP4	CP5	CP6	CP7	CP8	CP9	CP10	CP11
47.330	-11.543	-.37938	-.39044	-.37938	-.26887	-.35728	-.35728	-.36833	-.32413	-.33518	-.35728
47.120	-.100	-.39044	-.35728	-.37938	-.13625	-.35728	-.32413	-.36833	-.33518	-.37938	-.36833
47.470	16.461	-.39044	-.42359	-.37938	.08479	-.39044	-.33518	-.40149	-.35728	-.37938	-.37938
47.930	22.684	-.35412	-.40881	-.38693	.17086	-.37599	-.35412	-.40881	-.34318	-.37599	-.38693
	GRADIENT	.00000	.00000	.00000	.00000	.00000	.00000	.00000	.00000	.00000	.00000

ARC40X80-462(OA100) OV101 (ANA03L) (16 MAR 82)

REFERENCE DATA

SREF =	2690.0000 SQ.FT.	XMRP =	1076.6800 IN. XO		
LREF =	474.8100 INCHES	YMRP =	.0000 IN. YO		
BREF =	936.6800 INCHES	ZMRP =	375.0000 IN. ZO		
SCALE =	.3600				

PARAMETRIC DATA

ALPHA =	.000	BETA =	.000
ELEVON =	.000	AILRON =	.000
BDFLAP =	.000	RUDDER =	.000

RUN NO. 41/ 0 GRADIENT INTERVAL = -5.00/ 5.00

Q	SPDBRK	CP2	CP3	CP4	CP5	CP6	CP7	CP8	CP9	CP10	CP11
47.750	.000	-.24475	-.26662	-.26662	-.19006	-.26662	-.25569	-.26662	-.22287	-.25569	-.25569
47.510	25.180	-.26887	-.26887	-.27992	-.19150	-.27992	-.26887	-.26887	-.24676	-.26887	-.27992
47.610	55.459	-.31307	-.33518	-.32413	-.21361	-.32413	-.32413	-.31307	-.30202	-.33518	-.31307
47.360	87.628	-.41254	-.39044	-.41254	-.25782	-.36833	-.39044	-.43464	-.34623	-.40149	-.40149
	GRADIENT	.00000	.00000	.00000	.00000	.00000	.00000	.00000	.00000	.00000	.00000

ARC40X80-462(OA100) OV101 (ANA03M) (16 MAR 82)

REFERENCE DATA

SREF =	2690.0000 SQ.FT.	XMRP =	1076.6800 IN. XO		
LREF =	474.8100 INCHES	YMRP =	.0000 IN. YO		
BREF =	936.6800 INCHES	ZMRP =	375.0000 IN. ZO		
SCALE =	.3600				

PARAMETRIC DATA

ALPHA =	5.000	BETA =	.000
ELEVON =	.000	AILRON =	.000
BDFLAP =	.000	RUDDER =	.000

RUN NO. 42/ 0 GRADIENT INTERVAL = -5.00/ 5.00

Q	SPDBRK	CP2	CP3	CP4	CP5	CP6	CP7	CP8	CP9	CP10	CP11
47.450	-.039	-.24475	-.26662	-.24475	-.16819	-.24475	-.24475	-.24475	-.22287	-.24475	-.23381
47.560	25.179	-.25569	-.26662	-.25569	-.17912	-.26662	-.25569	-.25569	-.24475	-.26662	-.25569
47.560	55.459	-.29943	-.32131	-.31037	-.19006	-.31037	-.31037	-.29943	-.28850	-.31037	-.28850
47.540	87.629	-.36506	-.36506	-.34318	-.23381	-.34318	-.34318	-.36506	-.33224	-.38693	-.34318
	GRADIENT	.00000	.00000	.00000	.00000	.00000	.00000	.00000	.00000	.00000	.00000

ARC40X80-462(0A100) OV101 (ANA03N) (16 MAR 82)

REFERENCE DATA

SREF =	2690.0000 SQ.FT.	XMRP =	1076.6800 IN.	XO	
LREF =	474.8100 INCHES	YMRP =	.0000 IN.	YO	
BREF =	936.6800 INCHES	ZMRP =	375.0000 IN.	ZO	
SCALE =	.3600				

PARAMETRIC DATA

ALPHA =	10.000	BETA =	.000
ELEVON =	.000	AILRON =	.000
BDFLAP =	.000	RUDDER =	.000

RUN NO. 43/ 0 GRADIENT INTERVAL = -5.00/ 5.00

Q	SPDBRK	CP2	CP3	CP4	CP5	CP6	CP7	CP8	CP9	CP10	CP11
47.640	.039	-.24475	-.26662	-.24475	-.15725	-.21194	-.24475	-.24475	-.22287	-.24475	-.23381
47.530	25.141	-.26662	-.26662	-.26662	-.16819	-.24475	-.26662	-.21194	-.22287	-.26662	-.24475
47.100	55.545	-.27992	-.31307	-.27992	-.16940	-.26887	-.27992	-.31307	-.25782	-.27992	-.26887
47.680	87.677	-.34318	-.33224	-.33224	-.19006	-.31037	-.33224	-.32131	-.31037	-.33224	-.33224
	GRADIENT	.00000	.00000	.00000	.00000	.00000	.00000	.00000	.00000	.00000	.00000

ARC40X80-462(0A100) OV101(DECREASING SPDBRK) (ANA030) (16 MAR 82)

REFERENCE DATA

SREF =	2690.0000 SQ.FT.	XMRP =	1076.6800 IN.	XO	
LREF =	474.8100 INCHES	YMRP =	.0000 IN.	YO	
BREF =	936.6800 INCHES	ZMRP =	375.0000 IN.	ZO	
SCALE =	.3600				

PARAMETRIC DATA

ALPHA =	10.000	BETA =	.000
ELEVON =	.000	AILRON =	.000
BDFLAP =	.000	RUDDER =	.000

RUN NO. 44/ 0 GRADIENT INTERVAL = -5.00/ 5.00

Q	SPDBRK	CP2	CP3	CP4	CP5	CP6	CP7	CP8	CP9	CP10	CP11
47.660	.079	-.21194	-.25569	-.24475	-.15725	-.21194	-.24475	-.25569	-.23381	-.24475	-.23381
47.720	25.139	-.26662	-.26662	-.26662	-.15725	-.22287	-.24475	-.26662	-.24475	-.25569	-.25569
47.360	55.545	-.29943	-.29943	-.29943	-.17912	-.27756	-.29943	-.28850	-.25569	-.31037	-.26662
47.610	87.677	-.32131	-.35412	-.35412	-.17912	-.31037	-.32131	-.32131	-.31037	-.32131	-.32131
	GRADIENT	.00000	.00000	.00000	.00000	.00000	.00000	.00000	.00000	.00000	.00000

ARC40X80-462(OA100) OV101 (ANA03P) (16 MAR 82)

REFERENCE DATA

SREF =	2690.0000 SQ.FT.	XMRP =	1076.6800 IN. XO		
LREF =	474.8100 INCHES	YMRP =	.0000 IN. YO		
BREF =	936.6800 INCHES	ZMRP =	375.0000 IN. ZO		
SCALE =	.3600				

PARAMETRIC DATA

ALPHA =	15.000	BETA =	.000
ELEVON =	.000	AILRON =	.000
BDFLAP =	.000	RUDDER =	.000

RUN NO. 48/ 0 GRADIENT INTERVAL = -5.00/ 5.00

Q	SPDBRK	CP2	CP3	CP4	CP5	CP6	CP7	CP8	CP9	CP10	CP11
47.660	-.079	-.24278	-.24278	-.28608	-.13453	-.25360	-.26443	-.26443	-.24278	-.26443	-.26443
47.500	25.100	-.28608	-.27525	-.27525	-.14535	-.24278	-.24278	-.24278	-.27525	-.24278	-.27525
47.520	55.329	-.30773	-.32938	-.31855	-.15618	-.26443	-.29690	-.31855	-.31855	-.28608	-.30773
47.460	87.629	-.31855	-.35103	-.34020	-.16700	-.32938	-.35103	-.35103	-.31855	-.32938	-.34020
	GRADIENT	.00000	.00000	.00000	.00000	.00000	.00000	.00000	.00000	.00000	.00000

ARC40X80-462(OA100) OV101 (ANA03Q) (16 MAR 82)

REFERENCE DATA

SREF =	2690.0000 SQ.FT.	XMRP =	1076.6800 IN. XO		
LREF =	474.8100 INCHES	YMRP =	.0000 IN. YO		
BREF =	936.6800 INCHES	ZMRP =	375.0000 IN. ZO		
SCALE =	.3600				

PARAMETRIC DATA

ALPHA =	20.000	BETA =	.000
ELEVON =	.000	AILRON =	.000
BDFLAP =	.000	RUDDER =	.000

RUN NO. 49/ 0 GRADIENT INTERVAL = -5.00/ 5.00

Q	SPDBRK	CP2	CP3	CP4	CP5	CP6	CP7	CP8	CP9	CP10	CP11
47.680	.040	-.32383	-.34505	-.34505	-.12229	-.30262	-.29201	-.36626	-.32383	-.34505	-.31323
47.550	25.100	-.36185	-.34020	-.37268	-.12370	-.28608	-.34020	-.39433	-.31855	-.35103	-.36185
47.520	55.415	-.36944	-.40158	-.38015	-.13370	-.34801	-.34801	-.41230	-.34801	-.39087	-.40158
	GRADIENT	.00000	.00000	.00000	.00000	.00000	.00000	.00000	.00000	.00000	.00000

REFERENCE DATA

SREF =	2690.0000 SQ.FT.	XMRP =	1076.6800 IN. XO		
LREF =	474.8100 INCHES	YMRP =	.0000 IN. YO		
BREF =	936.6800 INCHES	ZMRP =	375.0000 IN. ZO		
SCALE =	.3600				

PARAMETRIC DATA

BETA =	.000	ELEVON =	.000
AILRON =	.000	BDFLAP =	.000
SPDBRK =	25.000	RUDDER =	.000

RUN NO. 4/ 0 GRADIENT INTERVAL = -5.00/ 5.00

Q	ALPHA	ALPHAU	BETA	Q1	DP/Q50	DP/Q51	DP/Q52
19.120	-5.245	-5.00000	.00000	17.00000	-.16199	-.47344	1.05602
19.020	-2.655	-2.50000	.00000	17.00000	-.16175	-.40521	1.05447
19.080	-.066	.00000	.00000	17.00000	-.16152	-.35966	1.05293
19.180	2.532	2.50000	.00000	17.00000	-.16128	-.26935	1.05139
19.180	5.128	5.00000	.00000	17.50000	-.16105	-.13448	1.04985
19.170	7.734	7.50000	.00000	17.00000	-.13401	.00000	1.17312
19.110	10.337	10.00000	.00000	14.50000	-.31922	.17770	2.08098
18.960	12.937	12.50000	.00000	13.50000	-.37188	.00000	2.12743
18.920	15.552	15.00000	.00000	16.50000	-.16011	.26740	1.06861
19.050	20.801	20.00000	.00000	18.00000	-.15965	.59990	1.16463
18.940	26.000	25.00000	.00000	18.50000	-.15919	.70894	1.03773
	GRADIENT	.96408	.00000	-.00000	.00009	.02620	-.00059

RUN NO. 5/ 0 GRADIENT INTERVAL = -5.00/ 5.00

Q	ALPHA	ALPHAU	BETA	Q1	DP/Q50	DP/Q51	DP/Q52
52.070	-5.245	-5.00000	.00000	48.00000	-.34487	-.73794	1.12410
52.240	-2.653	-2.50000	.00000	49.00000	-.32284	-.65598	1.13247
52.220	-.062	.00000	.00000	48.00000	-.35461	-.52042	1.12080
52.220	2.535	2.50000	.00000	52.00000	-.30365	-.40896	1.03078
52.260	5.135	5.00000	.00000	48.00000	-.31071	-.29524	1.11752
52.330	7.735	7.50000	.00000	48.00000	-.32095	-.20547	1.12584
52.190	10.341	10.00000	.00000	49.00000	-.37390	-.06244	1.11425
52.250	12.939	12.50000	.00000	57.50000	-.33109	.00000	1.02477
52.080	15.553	15.00000	.00000	52.00000	-.34033	.15427	1.01422
52.310	20.819	20.00000	.00000	48.00000	-.35049	.39022	1.11767
49.060	26.008	25.00000	.00000	48.50000	-.29652	.65438	1.00595
	GRADIENT	.96389	.00000	.57868	.00371	.04762	-.01961

ARC40X80-462(OA100) OV101 (BNA01A) (16 MAR 82)

REFERENCE DATA

SREF =	2690.0000 SQ.FT.	XMRP =	1076.6800 IN. XO		
LREF =	474.8100 INCHES	YMRP =	.0000 IN. YO		
BREF =	936.6800 INCHES	ZMRP =	375.0000 IN. ZO		
SCALE =	.3600				

PARAMETRIC DATA

BETA =	.000	ELEVON =	.000
AILRON =	.000	BDFLAP =	.000
SPDBRK =	25.000	RUDDER =	.000

RUN NO. 7/ 0 GRADIENT INTERVAL = -5.00/ 5.00

Q	ALPHA	ALPHAU	BETA	Q1	DP/Q50	DP/Q51	DP/Q52
94.180	-5.245	-5.00000	.00000	96.50000	-.37038	-.76410	.96885
94.780	-2.654	-2.50000	.00000	97.00000	-.37527	-.67668	.98261
95.030	-.061	.00000	.00000	98.00000	-.37472	-.58045	.98115
94.450	2.539	2.50000	.00000	97.00000	-.37416	-.45734	.97465
94.520	5.136	5.00000	.00000	96.50000	-.37903	-.36623	.97522
94.340	7.737	7.50000	.00000	97.00000	-.40010	-.24380	.97178
94.570	10.345	10.00000	.00000	97.50000	-.41031	-.13074	.98544
94.610	12.943	12.50000	.00000	97.00000	-.42048	.00450	.97897
95.400	15.559	15.00000	.00000	98.00000	-.42525	.11687	.97753
92.940	18.182	17.50000	.00000	95.50000	-.41925	.20646	.95608
	GRADIENT	.96287	.00000	-.00017	.00021	.04224	-.00153

ARC40X80-462(OA100) OV101(DECREASING ALPHA) (SNA01B) (16 MAR 82)

REFERENCE DATA

SREF =	2690.0000 SQ.FT.	XMRP =	1076.6800 IN. XO		
LREF =	474.8100 INCHES	YMRP =	.0000 IN. YO		
BREF =	936.6800 INCHES	ZMRP =	375.0000 IN. ZO		
SCALE =	.3600				

PARAMETRIC DATA

BETA =	.000	ELEVON =	.000
AILRON =	.000	BDFLAP =	.000
SPDBRK =	25.000	RUDDER =	.000

RUN NO. 6/ 0 GRADIENT INTERVAL = -5.00/ 5.00

Q	ALPHA	ALPHAU	BETA	Q1	DP/Q50	DP/Q51	DP/Q52
52.300	-5.243	-5.00000	.00000	48.00000	-.31254	-.72894	1.13414
51.950	-2.652	-2.50000	.00000	52.00000	-.11789	-.55782	1.03381
51.990	-.064	.00000	.00000	57.50000	-.16676	-.51604	1.03230
51.990	2.533	2.50000	.00000	57.50000	-.15672	-.37624	1.02166
52.180	5.136	5.00000	.00000	49.00000	-.06428	-.30418	1.12749
51.950	7.735	7.50000	.00000	53.00000	-.19533	-.18757	1.01867
52.360	10.339	10.00000	.00000	57.50000	-.19504	-.05700	1.04443
52.100	12.938	12.50000	.00000	57.50000	-.24345	.00000	1.02477
52.080	15.553	15.00000	.00000	49.00000	-.15978	.15121	1.11101
52.200	20.822	20.00000	.00000	52.00000	-.17452	.40480	1.02030
	GRADIENT	.96426	.00000	1.06014	-.00748	.03503	-.00234

REFERENCE DATA

SREF =	2690.0000 SQ.FT.	XMRP =	1076.6800 IN.	XO	
LREF =	474.8100 INCHES	YMRP =	.0000 IN.	YO	
BREF =	936.6800 INCHES	ZMRP =	375.0000 IN.	ZO	
SCALE =	.3600				

PARAMETRIC DATA

BETA =	.000	ELEVON =	10.000
AILRON =	.000	BDFLAP =	.000
SPDBRK =	25.000	RUDDER =	.000

RUN NO. 2/ 0 GRADIENT INTERVAL = -5.00/ 5.00

Q	ALPHA	ALPHAU	BETA	Q1	DP/Q50	DP/Q51	DP/Q52
18.990	-5.093	-5.00000	.00000	18.50000	-.21599	-.49598	1.05602
18.990	-2.501	-2.50000	.00000	17.50000	-.10784	-.38270	1.05447
19.140	.091	.00000	.00000	14.00000	-.26757	-.62561	2.09315
19.090	2.687	2.50000	.00000	14.50000	-.32062	-.44621	2.09010
19.080	5.288	5.00000	.00000	14.50000	-.37351	-.31189	2.08705
19.050	7.890	7.50000	.00000	15.50000	-.16081	.02238	1.04832
19.090	10.489	10.00000	.00000	15.50000	-.16058	.06704	1.04680
19.020	13.095	12.50000	.00000	13.50000	-.37188	.00000	2.07796
18.970	15.701	15.00000	.00000	15.50000	-.16011	.28968	1.06861
19.040	20.963	20.00000	.00000	17.00000	-.18626	.59990	1.16463
18.900	26.117	25.00000	.00000	17.00000	-.19572	.84186	1.16127
	GRADIENT	.96367	.00000	-.57804	-.04101	-.01222	.19956

RUN NO. 8/ 0 GRADIENT INTERVAL = -5.00/ 5.00

Q	ALPHA	ALPHAU	BETA	Q1	DP/Q50	DP/Q51	DP/Q52
47.540	-5.091	-5.00000	.00000	47.50000	-.35565	-.66595	1.01370
47.620	-2.500	-2.50000	.00000	47.50000	-.35513	-.59308	1.01221
47.640	.091	.00000	.00000	48.00000	-.34386	-.51145	1.01072
47.600	2.688	2.50000	.00000	47.50000	-.35408	-.39423	.99925
47.620	5.284	5.00000	.00000	48.00000	-.38571	-.30418	.99778
47.580	7.890	7.50000	.00000	47.50000	-.37445	-.17867	1.00629
47.470	10.489	10.00000	.00000	48.00000	-.38458	-.07136	1.00482
47.430	13.093	12.50000	.00000	47.50000	-.39469	.02672	.99342
47.540	15.704	15.00000	.00000	48.00000	-.39411	.14231	.99197
47.490	20.973	20.00000	.00000	48.00000	-.39297	.35475	.98909
45.130	26.111	25.00000	.00000	45.00000	-.34947	.58364	.94678
	GRADIENT	.96376	.00000	-.00008	.00020	.03833	-.00250

ARC40X80-462(OA100) OV101 (BNA01C) (16 MAR 82)

REFERENCE DATA

SREF =	2690.0000 SQ.FT.	XMRP =	1076.6800 IN.	XO	
LREF =	474.8100 INCHES	YMRP =	.0000 IN.	YO	
BREF =	936.6800 INCHES	ZMRP =	375.0000 IN.	ZO	
SCALE =	.3600				

PARAMETRIC DATA

BETA =	.000	ELEVON =	10.000
AILRON =	.000	BDFLAP =	.000
SPDBRK =	25.000	RUDDER =	.000

RUN NO. 14/ 0 GRADIENT INTERVAL = -5.00/ 5.00

Q	ALPHA	ALPHAU	BETA	Q1	DP/Q50	DP/Q51	DP/Q52
94.550	-5.093	-5.00000	.00000	97.00000	-.35404	-.74136	.96885
94.050	-2.501	-2.50000	.00000	97.00000	-.36984	-.65398	.97754
94.680	.090	.00000	.00000	98.00000	-.36386	-.57138	.97610
94.710	2.690	2.50000	.00000	98.50000	-.36874	-.45734	.97970
94.230	5.291	5.00000	.00000	98.00000	-.37903	-.34363	.96817
94.260	7.891	7.50000	.00000	97.50000	-.37847	-.22574	.96675
94.350	10.495	10.00000	.00000	98.00000	-.39411	-.12623	.96030
94.610	13.098	12.50000	.00000	98.00000	-.39353	-.00900	.97395
93.190	15.690	15.00000	.00000	96.00000	-.41997	.06293	.95247
94.180	18.341	17.50000	.00000	97.50000	-.41388	.20646	.96108
92.530	20.984	20.00000	.00000	96.00000	-.39717	.33613	.93968
	GRADIENT	.96322	.00000	.28892	.00021	.03788	.00042

ARC40X80-462(OA100) OV101 (BNA01D) (16 MAR 82)

REFERENCE DATA

SREF =	2690.0000 SQ.FT.	XMRP =	1076.6800 IN.	XO	
LREF =	474.8100 INCHES	YMRP =	.0000 IN.	YO	
BREF =	936.6800 INCHES	ZMRP =	375.0000 IN.	ZO	
SCALE =	.3600				

PARAMETRIC DATA

BETA =	.000	ELEVON =	-10.000
AILRON =	.000	BDFLAP =	.000
SPDBRK =	25.000	RUDDER =	.000

RUN NO. 3/ 0 GRADIENT INTERVAL = -5.00/ 5.00

Q	ALPHA	ALPHAU	BETA	Q1	DP/Q50	DP/Q51	DP/Q52
18.910	-5.410	-5.00000	.00000	16.50000	-.13499	-.51853	1.18174
19.080	-2.818	-2.50000	.00000	17.00000	-.16175	-.40521	1.05447
19.140	-.221	.00000	.00000	17.00000	-.16152	-.31470	1.05293
19.110	2.371	2.50000	.00000	16.00000	-.16128	-.22446	1.05139
19.110	4.965	5.00000	.00000	17.50000	-.18789	-.13448	1.04985
19.180	7.564	7.50000	.00000	16.50000	-.16081	-.22380	1.04832
19.120	10.174	10.00000	.00000	16.50000	-.16058	.08939	1.04680
19.060	12.770	12.50000	.00000	16.50000	-.16034	.00000	1.04528
18.880	15.379	15.00000	.00000	16.50000	-.16011	.31196	1.04376
18.900	20.638	20.00000	.00000	16.50000	-.15965	.51102	1.06552
18.990	25.855	25.00000	.00000	17.00000	-.18572	.75325	1.03773
	GRADIENT	.96373	.00000	.01929	-.00301	.03479	-.00059

ARC40X80-462(OA100) OV101 (BNA01D) (16 MAR 82)

REFERENCE DATA

SREF =	2690.0000 SQ.FT.	XMRP =	1076.6800 IN. XO		
LREF =	474.8100 INCHES	YMRP =	.0000 IN. YO		
BREF =	936.6800 INCHES	ZMRP =	375.0000 IN. ZO		
SCALE =	.3600				

PARAMETRIC DATA

BETA =	.000	ELEVON =	-10.000
AILRON =	.000	BDFLAP =	.000
SPDBRK =	25.000	RUDDER =	.000

RUN NO. 9/ 0 GRADIENT INTERVAL = -5.00/ 5.00

Q	ALPHA	ALPHAU	BETA	Q1	DP/Q50	DP/Q51	DP/Q52
47.480	-5.409	-5.00000	.00000	47.50000	-.33410	-.67495	1.01370
47.600	-2.819	-2.50000	.00000	47.50000	-.35589	-.58409	1.01221
47.420	-.225	.00000	.00000	48.00000	-.37610	-.52042	1.01072
47.530	2.371	2.50000	.00000	48.00000	-.36482	-.41215	1.00924
47.300	4.967	5.00000	.00000	47.50000	-.37499	-.32208	.99778
47.530	7.568	7.50000	.00000	48.00000	-.37445	-.21440	1.00629
47.500	10.176	10.00000	.00000	47.50000	-.40595	-.08028	1.00482
47.570	12.771	12.50000	.00000	48.00000	-.38402	.00891	1.00335
47.460	15.385	15.00000	.00000	47.50000	-.41542	.12452	.99197
47.490	20.650	20.00000	.00000	48.00000	-.41421	.32814	.98909
47.810	25.957	25.00000	.00000	48.00000	-.36006	.59248	1.02568
	GRADIENT	.96328	.00000	-.00001	-.00062	.03446	-.00172

RUN NO. 15/ 0 GRADIENT INTERVAL = -5.00/ 5.00

Q	ALPHA	ALPHAU	BETA	Q1	DP/Q50	DP/Q51	DP/Q52
94.710	-5.412	-5.00000	.00000	98.00000	-.32136	-.70043	.97899
94.220	-2.818	-2.50000	.00000	97.50000	-.75055	-.30428	.98261
93.990	-.223	.00000	.00000	97.50000	-.33127	-.53964	.98621
94.430	2.374	2.50000	.00000	97.50000	-.32536	-.44828	.97465
94.520	4.969	5.00000	.00000	98.00000	-.34654	-.34363	.98330
94.610	7.572	7.50000	.00000	98.00000	-.36766	-.23928	.98185
94.380	10.178	10.00000	.00000	97.50000	-.37251	-.10819	.97035
94.800	12.775	12.50000	.00000	98.00000	-.36118	.00450	.97697
94.870	15.391	15.00000	.00000	98.00000	-.38219	.11237	.97252
95.210	18.018	17.50000	.00000	98.50000	-.38163	.22441	.97610
94.570	20.660	20.00000	.00000	98.00000	-.36497	.29579	.96967
88.500	25.862	25.00000	.00000	91.00000	-.32109	.48261	.90704
	GRADIENT	.96305	.00000	.05778	.04692	-.00103	-.00037

ARC40X80-462(OA100) OV101 (8NA01E) (16 MAR 82)

REFERENCE DATA

SREF =	2690.0000 SQ.FT.	XMRP =	1076.6800 IN.	XO	
LREF =	474.8100 INCHES	YMRP =	.0000 IN.	YO	
BREF =	936.6800 INCHES	ZMRP =	375.0000 IN.	ZO	
SCALE =	.3600				

PARAMETRIC DATA

ALPHA =	.000	ELEVON =	.000
AILRON =	.000	BDFLAP =	.000
SPDBRK =	25.000	RUDDER =	.000

RUN NO. 16/ 0 GRADIENT INTERVAL = -5.00/ 5.00

Q	BETA	ALPHAU	Q1	DP/Q50	DP/Q51	DP/Q52	ALPHA
19.200	-13.000	.00000	19.00000	-.61915	-.38214	1.10307	-.03060
19.160	-10.000	.00000	19.00000	-.59223	-.42709	1.12814	-.03680
19.070	-5.000	.00000	19.00000	-.48456	-.47205	1.00279	-.05330
19.050	-2.000	.00000	19.50000	-.34996	-.49453	1.00279	-.06180
19.080	.000	.00000	19.50000	-.32304	-.49453	1.00279	-.06190
19.040	2.000	.00000	19.00000	-.21536	-.47205	1.00279	-.06270
19.130	5.000	.00000	19.50000	-.08076	-.44957	1.02786	-.05780
19.150	10.000	.00000	19.50000	.18844	-.35966	1.07800	-.04250
19.110	15.000	.00000	19.50000	.51147	-.33718	1.15321	-.03380
19.040	20.000	.00000	19.50000	.78067	-.26974	1.20335	-.03010
	GRADIENT	.00000	.02586	.03945	.00271	.00216	-.00042

RUN NO. 21/ 0 GRADIENT INTERVAL = -5.00/ 5.00

Q	BETA	ALPHAU	Q1	DP/Q50	DP/Q51	DP/Q52	ALPHA
47.590	-13.000	.00000	48.00000	-.65548	-.37686	1.08077	-.03590
47.590	-10.000	.00000	48.00000	-.65548	-.43070	1.05075	-.04110
47.630	-5.000	.00000	48.00000	-.53728	-.50248	.99071	-.05230
47.520	-2.000	.00000	47.50000	-.42982	-.51145	.96068	-.05830
47.490	.000	.00000	47.50000	-.35461	-.52042	.97069	-.06020
47.480	2.000	.00000	47.50000	-.26954	-.49351	.95068	-.06120
47.630	5.000	.00000	48.00000	-.09671	-.47556	.99071	-.05130
47.510	10.000	.00000	48.00000	.18268	-.38583	1.03073	-.04400
47.500	15.000	.00000	47.50000	.44057	-.32302	1.10078	-.03150
47.680	20.000	.00000	48.00000	.77368	-.27816	1.19085	-.02420
	GRADIENT	.00000	.00000	.04354	.00294	-.00035	-.00001

RUN NO. 45/ 0 GRADIENT INTERVAL = -5.00/ 5.00

Q	BETA	ALPHAU	Q1	DP/Q50	DP/Q51	DP/Q52	ALPHA
94.290	-13.000	.00000	97.50000	-.70056	-.37185	1.08736	-.03130
94.680	-10.000	.00000	99.00000	-.67341	-.43534	1.05196	-.03680
94.410	-5.000	.00000	99.00000	-.57023	-.48976	1.00644	-.04540
94.780	-2.000	.00000	99.00000	-.43989	-.54417	.97610	-.05390
94.730	.000	.00000	99.00000	-.36929	-.53510	.97104	-.05510
94.410	2.000	.00000	98.50000	-.24981	-.49883	.97610	-.05100
94.180	5.000	.00000	98.00000	-.11948	-.48069	.99127	-.04550
94.590	10.000	.00000	98.00000	.21180	-.41266	1.05196	-.03590
94.450	15.000	.00000	98.00000	.50506	-.33104	1.12782	-.02520
92.340	20.000	.00000	97.00000	.76573	-.31290	1.17334	-.02330
	GRADIENT	.00000	-.10345	.04541	.00235	-.00131	.00009

ARC40X80-462(OA100) OV101(DECREASING BETA) (BNA01F) (16 MAR 82)

REFERENCE DATA

SREF = 2690.0000 SQ.FT. XMRP = 1076.6800 IN. XO
LREF = 474.8100 INCHES YMRP = .0000 IN. YO
BREF = 936.6800 INCHES ZMRP = 375.0000 IN. ZO
SCALE = .3600

PARAMETRIC DATA

ALPHA = .000 ELEVON = .000
AILRON = .000 BDFLAP = .000
SPDBRK = 25.000 RUDDER = .000

RUN NO. 22/ 0 GRADIENT INTERVAL = -5.00/ 5.00

Q	BETA	ALPHAU	Q1	DP/Q50	DP/Q51	DP/Q52	ALPHA
47.510	-13.000	.00000	48.00000	-.67697	-.37686	1.07076	-.03400
47.470	-10.000	.00000	47.50000	-.63399	-.43070	1.04074	-.04040
47.610	-5.000	.00000	48.00000	-.51579	-.52042	.99071	-.05330
47.600	-2.000	.00000	48.00000	-.42382	-.52940	.96068	-.05830
47.430	.000	.00000	48.00000	-.34386	-.51145	.96068	-.05900
47.440	2.000	.00000	47.50000	-.27939	-.51145	.95068	-.05780
47.550	5.000	.00000	47.50000	-.09671	-.47556	.99071	-.05570
47.490	10.000	.00000	48.00000	.17193	-.39480	1.04074	-.04480
47.540	15.000	.00000	48.00000	.47281	-.31405	1.10078	-.03010
47.670	20.000	.00000	48.00000	.75219	-.28713	1.19085	-.02510
	GRADIENT	.00000	-.06034	.04131	.00449	-.00035	-.00019

ARC40X80-462(OA100) OV101 (BNA01G) (16 MAR 82)

REFERENCE DATA

SREF = 2690.0000 SQ.FT. XMRP = 1076.6800 IN. XO
LREF = 474.8100 INCHES YMRP = .0000 IN. YO
BREF = 936.6800 INCHES ZMRP = 375.0000 IN. ZO
SCALE = .3600

PARAMETRIC DATA

ALPHA = 5.000 ELEVON = .000
AILRON = .000 BDFLAP = .000
SPDBRK = 25.000 RUDDER = .000

RUN NO. 17/ 0 GRADIENT INTERVAL = -5.00/ 5.00

Q	BETA	ALPHAU	Q1	DP/Q50	DP/Q51	DP/Q52	ALPHA
19.180	-13.000	5.00000	19.00000	-.67103	-.20172	1.12484	5.15600
19.120	-10.000	5.00000	19.50000	-.61735	-.15689	1.07485	5.15070
19.080	-5.000	5.00000	19.50000	-.48314	-.29137	.99986	5.13860
19.070	-2.000	5.00000	19.00000	-.37578	-.29137	.99996	5.13240
19.070	.000	5.00000	19.50000	-.29525	-.29137	.97486	5.13300
19.060	2.000	5.00000	19.50000	-.21473	-.22413	.97486	5.13350
19.080	5.000	5.00000	19.00000	-.05368	-.22413	.99986	5.13660
19.070	10.000	5.00000	19.50000	.18789	-.20172	1.04985	5.14540
19.020	15.000	5.00000	19.50000	.48314	-.13448	1.12484	5.15250
19.010	20.000	5.00000	19.50000	.75155	-.08965	1.17484	5.14760
	GRADIENT	.00000	-.02586	.04258	.00812	-.00086	-.00013

ARC40X80-462(OA100) OV101 (BNA01G) (16 MAR 82)

REFERENCE DATA

SREF =	2690.0000 SQ.FT.	XMRP =	1076.6800 IN. XO		
LREF =	474.8100 INCHES	YMRP =	.0000 IN. YO		
BREF =	936.6800 INCHES	ZMRP =	375.0000 IN. ZO		
SCALE =	.3600				

PARAMETRIC DATA

ALPHA =	5.000	ELEVON =	.000
AILRON =	.000	BDFLAP =	.000
SPDBRK =	25.000	RUDDER =	.000

RUN NO. 23/ 0 GRADIENT INTERVAL = -5.00/ 5.00

Q	BETA	ALPHAU	Q1	DP/Q50	DP/Q51	DP/Q52	ALPHA
47.780	-13.000	5.00000	48.00000	-.70713	-.18788	1.07760	5.15350
47.770	-10.000	5.00000	48.00000	-.67499	-.26840	1.04767	5.15150
47.550	-5.000	5.00000	47.50000	-.54642	-.31313	.97783	5.14320
47.560	-2.000	5.00000	47.50000	-.46071	-.32208	.97783	5.13590
47.450	.000	5.00000	48.00000	-.37499	-.32208	.96785	5.13470
47.560	2.000	5.00000	48.00000	-.28928	-.33102	.94789	5.13660
47.430	5.000	5.00000	47.50000	-.13928	-.27734	.98781	5.14390
47.670	10.000	5.00000	48.00000	.17143	-.24156	1.04767	5.14810
47.470	15.000	5.00000	47.50000	.47142	-.16999	1.07760	5.15440
47.450	20.000	5.00000	47.50000	.74999	-.11631	1.15743	5.14970
	GRADIENT	.00000	.01724	.04101	.00278	-.00017	.00008

ARC40X80-462(OA100) OV101 (BNA01H) (16 MAR 82)

REFERENCE DATA

SREF =	2690.0000 SQ.FT.	XMRP =	1076.6800 IN. XO		
LREF =	474.8100 INCHES	YMRP =	.0000 IN. YO		
BREF =	936.6800 INCHES	ZMRP =	375.0000 IN. ZO		
SCALE =	.3600				

PARAMETRIC DATA

ALPHA =	10.000	ELEVON =	.000
AILRON =	.000	BDFLAP =	.000
SPDBRK =	25.000	RUDDER =	.000

RUN NO. 18/ 0 GRADIENT INTERVAL = -5.00/ 5.00

Q	BETA	ALPHAU	Q1	DP/Q50	DP/Q51	DP/Q52	ALPHA
19.060	-13.000	10.00000	19.50000	-.69584	.04470	1.12157	10.35540
19.090	-10.000	10.00000	19.00000	-.64231	-.02235	1.07172	10.35000
19.100	-5.000	10.00000	19.00000	-.50850	-.02235	.99695	10.34090
19.180	-2.000	10.00000	19.00000	-.45497	-.06704	.99695	10.33690
19.060	.000	10.00000	19.00000	-.34792	-.02235	.99695	10.33670
19.110	2.000	10.00000	19.00000	-.26763	-.06704	.97203	10.33810
19.080	5.000	10.00000	19.00000	-.10705	-.04470	.99695	10.33800
19.110	10.000	10.00000	19.00000	.16058	.00000	1.07172	10.34840
19.050	15.000	10.00000	19.00000	.48173	.08939	1.12157	10.34820
19.040	20.000	10.00000	19.50000	.77613	.13409	1.19634	10.33850
	GRADIENT	.00000	.00000	.04107	-.00193	-.00086	-.00021

ARC40X80-462(0A100) OV101 (BNA01H) (16 MAR 82)

REFERENCE DATA

SREF =	2690.0000 SQ.FT.	XMRP =	1076.6800 IN.	XO	
LREF =	474.8100 INCHES	YMRP =	.0000 IN.	YO	
BREF =	936.6800 INCHES	ZMRP =	375.0000 IN.	ZO	
SCALE =	.3600				

PARAMETRIC DATA

ALPHA =	10.000	ELEVON =	.000
AILRON =	.000	BDFLAP =	.000
SPDBRK =	25.000	RUDDER =	.000

RUN NO. 24/ 0 GRADIENT INTERVAL = -5.00/ 5.00

Q	BETA	ALPHAU	QI	DP/Q50	DP/Q51	DP/Q52	ALPHA
47.700	-13.000	10.00000	48.00000	-.72643	.02676	1.08441	10.35330
47.950	-10.000	10.00000	48.00000	-.69370	-.02676	1.05456	10.35370
48.370	-5.000	10.00000	49.00000	-.57687	-.08028	.99487	10.34700
47.570	-2.000	10.00000	48.00000	-.47005	-.09812	.96502	10.33920
47.530	.000	10.00000	48.00000	-.38458	-.05352	.96502	10.34220
47.440	2.000	10.00000	48.00000	-.28844	-.09812	.95507	10.34220
47.660	5.000	10.00000	48.00000	-.10683	-.08028	.98492	10.34330
47.390	10.000	10.00000	47.50000	.16024	-.00892	1.03466	10.35110
47.510	15.000	10.00000	47.50000	.47005	.06244	1.10430	10.35440
47.500	20.000	10.00000	47.50000	.74780	.12489	1.17395	10.34690
	GRADIENT	.00000	-.08621	.04678	-.00000	-.00120	-.00022

RUN NO. 46/ 0 GRADIENT INTERVAL = -5.00/ 5.00

Q	BETA	ALPHAU	QI	DP/Q50	DP/Q51	DP/Q52	ALPHA
94.480	-13.000	10.00000	99.00000	-.73423	.03606	1.09605	10.36180
94.340	-10.000	10.00000	98.00000	-.68564	.00000	1.05080	10.36090
94.410	-5.000	10.00000	98.50000	-.56687	-.06762	.99549	10.35270
94.550	-2.000	10.00000	98.50000	-.45889	-.07664	.98041	10.34830
94.270	.000	10.00000	98.00000	-.36711	-.09016	.97035	10.34640
94.360	2.000	10.00000	98.00000	-.27534	-.07664	.97538	10.34690
94.430	5.000	10.00000	98.00000	-.11337	-.04508	.99549	10.34930
94.550	10.000	10.00000	98.50000	.19435	.00902	1.05582	10.35430
94.610	15.000	10.00000	98.50000	.49129	.07664	1.13124	10.35440
94.360	20.000	10.00000	98.00000	.78282	.11270	1.21168	10.34210
	GRADIENT	.00000	-.06034	.04542	.00194	-.00017	-.00034

ARC40X80-462(OA100) OV101 (BNA011) (16 MAR 82)

REFERENCE DATA

SREF =	2690.0000 SQ.FT.	XMRP =	1076.6800 IN. XO		
LREF =	474.8100 INCHES	YMRP =	.0000 IN. YO		
BREF =	936.6800 INCHES	ZMRP =	375.0000 IN. ZO		
SCALE =	.3600				

PARAMETRIC DATA

ALPHA =	15.000	ELEVON =	.000
AILRON =	.000	BDFLAP =	.000
SPDBRK =	25.000	RUDDER =	.000

RUN NO. 19/ 0 GRADIENT INTERVAL = -5.00/ 5.00

Q	BETA	ALPHAU	QI	DP/Q50	DP/Q51	DP/Q52	ALPHA
19.000	-13.000	15.00000	19.00000	-.72050	.26740	1.11831	15.56640
19.100	-10.000	15.00000	19.00000	-.64045	.22283	1.04376	15.56950
19.000	-5.000	15.00000	19.00000	-.50702	.20055	.99406	15.55260
19.000	-2.000	15.00000	19.00000	-.42696	.17826	.96920	15.54840
18.980	.000	15.00000	19.00000	-.37359	.11141	.99406	15.54310
19.070	2.000	15.00000	19.50000	-.24017	.15598	.96920	15.54750
18.980	10.000	15.00000	19.00000	.21348	.24511	1.06861	15.56530
19.000	15.000	15.00000	19.00000	.48034	.28968	1.11831	15.56340
18.930	20.000	15.00000	19.00000	.77387	.37681	1.19287	15.56490
	GRADIENT	.00000	.06075	.03641	-.00895	-.00232	-.00095

RUN NO. 25/ 0 GRADIENT INTERVAL = -5.00/ 5.00

Q	BETA	ALPHAU	QI	DP/Q50	DP/Q51	DP/Q52	ALPHA
47.510	-13.000	15.00000	47.50000	-.69236	.25794	1.09117	15.57760
47.800	-10.000	15.00000	48.00000	-.68171	.22236	1.06141	15.57950
48.000	-5.000	15.00000	48.50000	-.55399	.15121	1.01181	15.55820
48.090	-2.000	15.00000	48.00000	-.47933	.15121	.99197	15.55530
47.970	.000	15.00000	48.00000	-.40477	.11563	.98205	15.55490
47.910	2.000	15.00000	48.00000	-.30890	.11563	.97213	15.55220
47.890	5.000	15.00000	48.00000	-.12782	.18578	1.00189	15.55430
47.470	10.000	15.00000	48.00000	.19173	.20457	1.05149	15.57390
47.450	15.000	15.00000	48.00000	.47933	.29352	1.12093	15.57670
47.650	20.000	15.00000	48.00000	.77758	.35578	1.21021	15.56620
	GRADIENT	.00000	-.04310	.04261	.00184	-.00154	-.00044

ARC40X80-462(OA100) OV101 (8NA01J) (16 MAR 82)

REFERENCE DATA

SREF =	2690.0000 SQ.FT.	XMRP =	1076.6800 IN.	XO	
LREF =	474.8100 INCHES	YMRP =	.0000 IN.	YO	
BREF =	936.6800 INCHES	ZMRP =	375.0000 IN.	ZO	
SCALE =	.3600				

PARAMETRIC DATA

ALPHA =	20.000	ELEVON =	.000
AILRON =	.000	BDFLAP =	.000
SPDBRK =	25.000	RUDDER =	.000

RUN NO. 20/ 0 GRADIENT INTERVAL = -5.00/ 5.00

Q	BETA	ALPHAU	QI	DP/Q50	DP/Q51	DP/Q52	ALPHA
19.180	-13.000	20.00000	19.00000	-.69181	.53324	1.11508	20.81209
19.130	-10.000	20.00000	19.00000	-.66520	.44437	1.11508	20.80620
19.100	-5.000	20.00000	18.50000	-.53216	.37771	1.01596	20.80550
19.140	-2.000	20.00000	19.00000	-.45234	.35549	.94162	20.80289
19.220	.000	20.00000	19.00000	-.42573	.26662	.99118	20.80119
19.130	2.000	20.00000	19.00000	-.29269	.37771	.94162	20.80600
19.100	5.000	20.00000	19.00000	-.07982	.37771	.99118	20.80370
19.010	10.000	20.00000	19.00000	.15965	.44437	1.06552	20.80730
19.040	15.000	20.00000	18.50000	.47894	.53324	1.13985	20.81590
19.000	20.000	20.00000	19.00000	.77163	.55546	1.16463	20.80350
	GRADIENT	.00000	.04310	.04450	.00077	-.00214	-.00005

RUN NO. 26/ 0 GRADIENT INTERVAL = -5.00/ 5.00

Q	BETA	ALPHAU	QI	DP/Q50	DP/Q51	DP/Q52	ALPHA
47.490	-13.000	20.00000	47.50000	-.64787	.49564	1.13746	20.83099
47.730	-10.000	20.00000	48.00000	-.59477	.45230	1.10778	20.82539
47.590	-5.000	20.00000	48.00000	-.52042	.39909	1.02866	20.81549
47.600	-2.000	20.00000	48.00000	-.43545	.35475	.98909	20.82300
47.560	.000	20.00000	48.00000	-.38235	.32814	.98909	20.82379
47.630	2.000	20.00000	48.00000	-.28676	.32814	.97920	20.82039
47.700	5.000	20.00000	48.00000	-.09559	.39022	1.00887	20.80719
47.640	10.000	20.00000	48.00000	.18055	.45230	1.07811	20.82129
47.620	15.000	20.00000	48.00000	.50980	.51438	1.15724	20.82269
47.420	20.000	20.00000	48.00000	.80718	.55873	1.19680	20.78960
	GRADIENT	.00000	.00000	.04175	-.00168	-.00205	-.00081

ARC40X80-462(OA100) OV101 (BNA01K) (16 MAR 82)

REFERENCE DATA

SREF =	2690.0000 SQ.FT.	XMRP =	1076.6800 IN.	XO	
LREF =	474.8100 INCHES	YMRP =	.0000 IN.	YO	
BREF =	936.6800 INCHES	ZMRP =	375.0000 IN.	ZO	
SCALE =	.3600				

PARAMETRIC DATA

ALPHA =	.000	BETA =	.000
AILRON =	.000	BDFLAP =	.000
SPDBRK =	25.000	RUDDER =	.000

RUN NO. 10/ 0 GRADIENT INTERVAL = -5.00/ 5.00

Q	ELEVON	ALPHAU	BETA	Q1	DP/Q50	DP/Q51	DP/Q52	ALPHA
47.410	-36.343	.00000	.00000	47.00000	-.35461	-.52042	.96068	-.36230
47.600	-31.143	.00000	.00000	48.00000	-.38684	-.57426	.96068	-.34870
47.670	-26.002	.00000	.00000	48.00000	-.37610	-.52940	.96068	-.35020
47.550	-20.742	.00000	.00000	48.00000	-.38684	-.53837	.96068	-.34420
47.580	-15.601	.00000	.00000	47.50000	-.36535	-.52042	.96068	-.30020
47.670	-10.401	.00000	.00000	48.00000	-.35461	-.54734	.96068	-.22370
47.780	-5.200	.00000	.00000	48.00000	-.36535	-.53837	.96068	-.14100
47.640	-.050	.00000	.00000	47.50000	-.39759	-.54734	.96068	-.06010
47.540	5.141	.00000	.00000	48.00000	-.36535	-.52940	.95068	.01740
47.490	10.281	.00000	.00000	47.50000	-.35461	-.52940	.95068	.09020
47.580	15.482	.00000	.00000	47.50000	-.35461	-.56529	.95068	.16370
47.470	20.682	.00000	.00000	47.50000	-.36535	-.55632	.96068	.22960
	GRADIENT	.00000	.00000	.00000	.00000	.00000	.00000	.00000

ARC40X80-462(OA100) OV101 (BNA01L) (16 MAR 82)

REFERENCE DATA

SREF =	2690.0000 SQ.FT.	XMRP =	1076.6800 IN.	XO	
LREF =	474.8100 INCHES	YMRP =	.0000 IN.	YO	
BREF =	936.6800 INCHES	ZMRP =	375.0000 IN.	ZO	
SCALE =	.3600				

PARAMETRIC DATA

ALPHA =	5.000	BETA =	.000
AILRON =	.000	BDFLAP =	.000
SPDBRK =	25.000	RUDDER =	.000

RUN NO. 11/ 0 GRADIENT INTERVAL = -5.00/ 5.00

Q	ELEVON	ALPHAU	BETA	QI	DP/Q50	DP/Q51	DP/Q52	ALPHA
47.520	-36.343	5.00000	.00000	47.50000	-.40714	-.32208	.94789	4.82560
47.610	-31.143	5.00000	.00000	47.50000	-.43928	-.33997	.93792	4.83820
47.540	-26.002	5.00000	.00000	47.50000	-.37499	-.36681	.93792	4.83150
47.510	-20.742	5.00000	.00000	47.50000	-.38571	-.34892	.93792	4.84100
47.510	-15.601	5.00000	.00000	47.50000	-.37499	-.35786	.93792	4.89300
47.550	-10.401	5.00000	.00000	47.50000	-.40714	-.34892	.94789	4.96640
47.510	-5.260	5.00000	.00000	47.50000	-.39642	-.36681	.93792	5.05230
47.610	-.060	5.00000	.00000	47.50000	-.41785	-.34892	.94789	5.13570
47.450	5.081	5.00000	.00000	47.50000	-.38571	-.33997	.93792	5.21180
47.500	10.341	5.00000	.00000	47.50000	-.41785	-.34892	.94789	5.28770
47.710	15.482	5.00000	.00000	47.50000	-.40714	-.34892	.94789	5.36120
47.420	20.682	5.00000	.00000	47.50000	-.41785	-.33102	.93792	5.42780
	GRADIENT	.00000	.00000	.00000	.00000	.00000	.00000	.00000

ARC40X80-462(OA100) OV101 (BNA01M) (16 MAR 82)

REFERENCE DATA

SREF =	2690.0000 SQ.FT.	XMRP =	1076.6800 IN.	XO	
LREF =	474.8100 INCHES	YMRP =	.0000 IN.	YO	
BREF =	936.6800 INCHES	ZMRP =	375.0000 IN.	ZO	
SCALE =	.3600				

PARAMETRIC DATA

ALPHA =	10.000	BETA =	.000
AILRON =	.000	BDFLAP =	.000
SPDBRK =	25.000	RUDDER =	.000

RUN NO. 12/ 0 GRADIENT INTERVAL = -5.00/ 5.00

Q	ELEVON	ALPHAU	BETA	Q1	DP/Q50	DP/Q51	DP/Q52	ALPHA
47.660	-36.343	10.00000	.00000	47.50000	-.43800	-.14273	.94512	10.01980
47.590	-31.143	10.00000	.00000	47.50000	-.42731	-.12489	.94512	10.03190
47.530	-26.002	10.00000	.00000	48.00000	-.41663	-.11597	.93518	10.02680
47.620	-20.802	10.00000	.00000	47.50000	-.39527	-.14273	.95507	10.03190
47.460	-15.601	10.00000	.00000	47.50000	-.42731	-.13381	.93518	10.09800
47.530	-10.401	10.00000	.00000	47.50000	-.41663	-.12489	.95507	10.17700
47.500	-5.200	10.00000	.00000	47.50000	-.42731	-.12489	.92523	10.25980
47.500	-.060	10.00000	.00000	48.00000	-.41663	-.10705	.93518	10.33930
47.350	5.141	10.00000	.00000	47.50000	-.41663	-.11597	.95507	10.41430
47.430	10.291	10.00000	.00000	47.50000	-.43800	-.13381	.94512	10.48700
47.460	15.541	10.00000	.00000	47.50000	-.41663	-.10705	.95507	10.56190
47.380	20.622	10.00000	.00000	47.50000	-.42731	-.12489	.94512	10.63890
	GRADIENT	.00000	.00000	.00000	.00000	.00000	.00000	.00000

ARC40X80-462(OA100) OV101(DECREASING ELEVON) (BNA01N) (16 MAR 82)

REFERENCE DATA

SREF =	2690.0000 SQ.FT.	XMRP =	1076.6800 IN.	XO	
LREF =	474.8100 INCHES	YMRP =	.0000 IN.	YO	
BREF =	936.6800 INCHES	ZMRP =	375.0000 IN.	ZO	
SCALE =	.3600				

PARAMETRIC DATA

ALPHA =	10.000	BETA =	.000
AILRON =	.000	BDFLAP =	.000
SPDBRK =	25.000	RUDDER =	.000

RUN NO. 13/ 0 GRADIENT INTERVAL = -5.00/ 5.00

Q	ELEVON	ALPHAU	BETA	Q1	DP/Q50	DP/Q51	DP/Q52	ALPHA
47.380	-36.343	10.00000	.00000	47.50000	-.41663	-.10705	.94512	10.01530
47.430	-31.143	10.00000	.00000	47.50000	-.41663	-.11597	.95507	10.02770
47.440	-25.942	10.00000	.00000	47.50000	-.42731	-.13381	.95507	10.02480
47.350	-20.742	10.00000	.00000	47.50000	-.42731	-.11597	.94512	10.03260
47.340	-15.541	10.00000	.00000	47.50000	-.40595	-.10705	.95507	10.09620
47.340	-10.461	10.00000	.00000	47.50000	-.42731	-.09812	.95507	10.17660
47.260	-5.200	10.00000	.00000	47.50000	-.41663	-.10705	.95507	10.25610
47.300	.000	10.00000	.00000	47.50000	-.41663	-.14273	.96502	10.33820
47.260	5.111	10.00000	.00000	47.50000	-.40595	-.09812	.96502	10.41200
47.510	10.281	10.00000	.00000	47.50000	-.42731	-.09812	.94512	10.48960
47.530	15.541	10.00000	.00000	47.50000	-.40595	-.13381	.94512	10.56080
47.400	20.622	10.00000	.00000	48.00000	-.41663	-.09812	.95507	10.63970
	GRADIENT	.00000	.00000	.00000	.00000	.00000	.00000	.00000

ARC40X80-462(OA100) OV101

(BNA010) (16 MAR 82)

REFERENCE DATA

SREF =	2690.0000 SQ.FT.	XMRP =	1076.6800 IN.	XO	
LREF =	474.8100 INCHES	YMRP =	.0000 IN.	YO	
BREF =	936.6800 INCHES	ZMRP =	375.0000 IN.	ZO	
SCALE =	.3600				

PARAMETRIC DATA

ALPHA =	15.000	BETA =	.000
AILRON =	.000	BDFLAP =	.000
SPDBRK =	25.000	RUDDER =	.000

RUN NO. 27/ 0 GRADIENT INTERVAL = -5.00/ 5.00

Q	ELEVON	ALPHAU	BETA	QI	DP/Q50	DP/Q51	DP/Q52	ALPHA
47.630	-36.343	15.00000	.00000	48.00000	-.37281	.13342	.98205	15.21490
47.880	-31.143	15.00000	.00000	48.00000	-.37281	.14231	.99197	15.21480
47.570	-26.002	15.00000	.00000	48.00000	-.35151	.16900	.99197	15.19620
47.550	-20.742	15.00000	.00000	48.00000	-.37281	.14231	.99197	15.22920
47.520	-15.601	15.00000	.00000	47.50000	-.35151	.14231	1.00189	15.30240
47.720	-10.401	15.00000	.00000	48.00000	-.39411	.16010	1.00189	15.38470
47.490	-5.200	15.00000	.00000	47.50000	-.37281	.11563	.99197	15.46640
47.560	.000	15.00000	.00000	48.00000	-.37281	.12452	1.01181	15.55290
47.560	5.141	15.00000	.00000	48.00000	-.37281	.14231	1.01181	15.62260
47.570	10.281	15.00000	.00000	48.00000	-.38346	.13342	1.00189	15.70160
47.790	15.482	15.00000	.00000	48.00000	-.40477	.13342	1.01181	15.78050
47.430	20.637	15.00000	.00000	48.00000	-.37281	.09784	.99197	15.85410
	GRADIENT	.00000	.00000	.00000	.00000	.00000	.00000	.00000

ARC40X80-462(OA100) OV101 (BNA01P) (16 MAR 82)

REFERENCE DATA

SREF =	2690.0000 SQ.FT.	XMRP =	1076.6800 IN. XO		
LREF =	474.8100 INCHES	YMRP =	.0000 IN. YO		
BREF =	936.6800 INCHES	ZMRP =	375.0000 IN. ZO		
SCALE =	.3600				

PARAMETRIC DATA

ALPHA =	20.000	BETA =	.000
AILRON =	.000	BDFLAP =	.000
SPDBRK =	25.000	RUDDER =	.000

RUN NO. 28/ 0 GRADIENT INTERVAL = -5.00/ 5.00

Q	ELEVON	ALPHAU	BETA	Q1	DP/Q50	DP/Q51	DP/Q52	ALPHA
47.610	-36.343	20.00000	.00000	48.00000	-.36111	.34588	.98909	20.42749
47.620	-31.143	20.00000	.00000	48.00000	-.37173	.34588	.97920	20.39299
47.500	-25.942	20.00000	.00000	48.00000	-.37173	.30153	.98909	20.40469
47.700	-20.712	20.00000	.00000	48.00000	-.37173	.32814	.99898	20.48399
47.670	-15.601	20.00000	.00000	48.00000	-.37173	.36361	.98909	20.55470
47.810	-10.401	20.00000	.00000	48.00000	-.37173	.32814	.98909	20.65359
47.510	-5.200	20.00000	.00000	48.00000	-.35049	.38135	.98909	20.74120
47.560	-.030	20.00000	.00000	48.00000	-.37173	.36361	1.00887	20.82039
47.750	5.141	20.00000	.00000	48.00000	-.32925	.35475	1.01877	20.89789
47.560	10.341	20.00000	.00000	48.00000	-.35049	.35475	.98909	20.97299
47.760	15.541	20.00000	.00000	47.50000	-.36111	.33701	.96931	21.04719
47.650	20.682	20.00000	.00000	48.00000	-.37173	.39909	1.01877	21.11699
	GRADIENT	.00000	.00000	.00000	.00000	.00000	.00000	.00000

ARC40X80-462(OA100) OV101 (BNA01Q) (16 MAR 82)

REFERENCE DATA

SREF =	2690.0000 SQ.FT.	XMRP =	1076.6800 IN. XO		
LREF =	474.8100 INCHES	YMRP =	.0000 IN. YO		
BREF =	936.6800 INCHES	ZMRP =	375.0000 IN. ZO		
SCALE =	.3600				

PARAMETRIC DATA

ALPHA =	.000	BETA =	.000
ELEVON =	.000	BDFLAP =	.000
SPDBRK =	25.000	RUDDER =	.000

RUN NO. 29/ 0 GRADIENT INTERVAL = -5.00/ 5.00

Q	AILRON	ALPHAU	BETA	Q1	DP/Q50	DP/Q51	DP/Q52	ALPHA
47.700	-.045	.00000	.00000	48.00000	-.30088	-.50248	1.03073	-.06100
47.690	2.570	.00000	.00000	48.00000	-.31162	-.46659	1.01072	-.05980
47.620	5.141	.00000	.00000	48.00000	-.32237	-.49351	1.03073	-.05880
47.590	7.711	.00000	.00000	48.00000	-.29013	-.46659	1.02073	-.05690
47.610	10.281	.00000	.00000	48.00000	-.32237	-.47556	1.01072	-.06270
47.630	15.541	.00000	.00000	47.50000	-.29013	-.49351	1.03073	-.06730
	GRADIENT	.00000	.00000	-.00000	-.00411	.01372	-.00765	.00084

ARC40X80-462(OA100) OV101 (BNA01R) (16 MAR 82)

REFERENCE DATA

SREF =	2690.0000 SQ.FT.	XMRP =	1076.6800 IN.	XO	
LREF =	474.8100 INCHES	YMRP =	.0000 IN.	YO	
BREF =	936.6800 INCHES	ZMRP =	375.0000 IN.	ZO	
SCALE =	.3600				

PARAMETRIC DATA

ALPHA =	5.000	BETA =	.000
ELEVON =	.000	BDFLAP =	.000
SPDBRK =	25.000	RUDDER =	.000

RUN NO. 30/ 0 GRADIENT INTERVAL = -5.00/ 5.00

Q	AILRON	ALPHAU	BETA	QI	DP/Q50	DP/Q51	DP/Q52	ALPHA
47.600	-.045	5.00000	.00000	48.00000	-.33214	-.25945	.99778	5.13420
47.660	2.570	5.00000	.00000	48.00000	-.31071	-.26840	1.01774	5.13750
47.650	5.141	5.00000	.00000	48.00000	-.31071	-.27734	1.00776	5.13710
47.570	7.741	5.00000	.00000	47.50000	-.32142	-.27734	1.01774	5.13390
47.610	10.311	5.00000	.00000	48.00000	-.31071	-.28629	1.00776	5.13260
47.570	15.541	5.00000	.00000	47.50000	-.28928	-.27734	1.01774	5.13040
	GRADIENT	-.00000	.00000	-.00000	.00819	-.00342	.00763	.00126

ARC40X80-462(OA100) OV101 (BNA01S) (16 MAR 82)

REFERENCE DATA

SREF =	2690.0000 SQ.FT.	XMRP =	1076.6800 IN.	XO	
LREF =	474.8100 INCHES	YMRP =	.0000 IN.	YO	
BREF =	936.6800 INCHES	ZMRP =	375.0000 IN.	ZO	
SCALE =	.3600				

PARAMETRIC DATA

ALPHA =	10.000	BETA =	.000
ELEVON =	.000	BDFLAP =	.000
SPDBRK =	25.000	RUDDER =	.000

RUN NO. 31/ 0 GRADIENT INTERVAL = -5.00/ 5.00

Q	AILRON	ALPHAU	BETA	QI	DP/Q50	DP/Q51	DP/Q52	ALPHA
47.670	-.060	10.00000	.00000	48.00000	-.36322	-.06244	1.00482	10.34030
47.530	2.570	10.00000	.00000	47.50000	-.32049	-.06244	1.02471	10.33860
47.690	5.141	10.00000	.00000	47.50000	-.33117	-.04460	1.02471	10.33620
47.590	7.711	10.00000	.00000	47.50000	-.33117	-.07136	.99487	10.33440
47.650	10.281	10.00000	.00000	48.00000	-.34185	-.05352	1.03466	10.33390
47.710	15.541	10.00000	.00000	47.50000	-.33117	-.03568	1.02471	10.33260
	GRADIENT	.00000	.00000	-.19011	.01625	.00000	.00756	-.00065

ARC40X80-462(OA100) OV101(DECREASING AILERON) (BNA01T) (16 MAR 82)

REFERENCE DATA

SREF =	2690.0000 SQ.FT.	XMRP =	1076.6800 IN.	XO	
LREF =	474.8100 INCHES	YMRP =	.0000 IN.	YO	
BREF =	936.6800 INCHES	ZMRP =	375.0000 IN.	ZO	
SCALE =	.3600				

PARAMETRIC DATA

ALPHA =	10.000	BETA =	.000
ELEVON =	.000	BDFLAP =	.000
SPDBRK =	25.000	RUDDER =	.000

RUN NO. 32/ 0 GRADIENT INTERVAL = -5.00/ 5.00

Q	AILRON	ALPHAU	BETA	QI	DP/Q50	DP/Q51	DP/Q52	ALPHA
47.600	.000	10.00000	.00000	48.00000	-.34185	-.07136	1.00482	10.34000
47.610	2.570	10.00000	.00000	47.50000	-.35253	-.05352	1.03466	10.33880
47.690	5.141	10.00000	.00000	47.50000	-.32049	-.05352	1.01477	10.33550
47.670	7.771	10.00000	.00000	48.00000	-.34185	-.05352	1.01477	10.33270
47.670	10.341	10.00000	.00000	48.00000	-.34185	-.06244	1.03466	10.33540
47.610	15.541	10.00000	.00000	47.50000	-.36322	-.05352	1.01477	10.33010
	GRADIENT	.00000	.00000	-.19453	-.00416	.00694	.01161	-.00047

ARC40X80-462(OA100) OV101 (BNA01U) (16 MAR 82)

REFERENCE DATA

SREF =	2690.0000 SQ.FT.	XMRP =	1076.6800 IN.	XO	
LREF =	474.8100 INCHES	YMRP =	.0000 IN.	YO	
BREF =	936.6800 INCHES	ZMRP =	375.0000 IN.	ZO	
SCALE =	.3600				

PARAMETRIC DATA

ALPHA =	15.000	BETA =	.000
ELEVON =	.000	BDFLAP =	.000
SPDBRK =	25.000	RUDDER =	.000

RUN NO. 33/ 0 GRADIENT INTERVAL = -5.00/ 5.00

Q	AILRON	ALPHAU	BETA	QI	DP/Q50	DP/Q51	DP/Q52	ALPHA
47.570	-.015	15.00000	.00000	48.00000	-.36216	.15121	.99197	15.55000
47.700	2.570	15.00000	.00000	48.00000	-.35151	.20457	1.00189	15.55310
47.690	5.170	15.00000	.00000	48.00000	-.36216	.14231	1.00189	15.54670
47.620	7.711	15.00000	.00000	48.00000	-.37281	.16900	1.00189	15.54580
47.590	10.281	15.00000	.00000	48.00000	-.37281	.16900	1.01181	15.54490
47.490	15.527	15.00000	.00000	48.00000	-.36216	.16900	1.00189	15.53910
	GRADIENT	.00000	.00000	.00000	.00412	.02065	.00384	.00120

ARC40X80-462(OA100) OV101 (BNA01V) (16 MAR 82)

REFERENCE DATA

SREF = 2690.0000 SQ.FT. XMRP = 1076.6800 IN. XO
LREF = 474.8100 INCHES YMRP = .0000 IN. YO
BREF = 936.6800 INCHES ZMRP = 375.0000 IN. ZO
SCALE = .3600

PARAMETRIC DATA

ALPHA = 20.000 BETA = .000
ELEVON = .000 BDFLAP = .000
SPDBRK = 25.000 RUDDER = .000

RUN NO. 34/ 0 GRADIENT INTERVAL = -5.00/ 5.00

Q	AILRON	ALPHAU	BETA	Q1	DP/Q50	DP/Q51	DP/Q52	ALPHA
47.650	.000	20.00000	.00000	48.00000	-.33987	.37248	1.01877	20.82100
47.580	2.570	20.00000	.00000	48.00000	-.31862	.34588	.99898	20.82050
47.650	5.185	20.00000	.00000	48.00000	-.35049	.36361	.98909	20.81780
47.670	7.711	20.00000	.00000	48.00000	-.35049	.37248	.98909	20.81279
47.640	10.341	20.00000	.00000	48.00000	-.33987	.36361	1.02866	20.81310
47.430	15.541	20.00000	.00000	48.00000	-.33997	.39022	1.00887	20.80319
	GRADIENT	.00000	.00000	.00000	.00826	-.01035	-.00770	-.00020

ARC40X80-462(OA100) OV101 (BNA01W) (16 MAR 82)

REFERENCE DATA

SREF = 2690.0000 SQ.FT. XMRP = 1076.6800 IN. XO
LREF = 474.8100 INCHES YMRP = .0000 IN. YO
BREF = 936.6800 INCHES ZMRP = 375.0000 IN. ZO
SCALE = .3600

PARAMETRIC DATA

ALPHA = .000 BETA = .000
ELEVON = 10.000 BDFLAP = .000
SPDBRK = 25.000 RUDDER = .000

RUN NO. 50/ 0 GRADIENT INTERVAL = -5.00/ 5.00

Q	AILRON	ALPHAU	BETA	Q1	DP/Q50	DP/Q51	DP/Q52	ALPHA
47.600	.064	.00000	.00000	49.00000	-.34386	-.48453	.97069	.09040
47.580	2.544	.00000	.00000	48.50000	-.34386	-.47556	.97069	.09080
47.740	5.068	.00000	.00000	49.00000	-.34386	-.48453	.97069	.09330
47.600	7.578	.00000	.00000	49.00000	-.32237	-.48453	.98070	.09360
47.600	10.044	.00000	.00000	49.00000	-.34386	-.47556	.96068	.09000
47.740	12.896	.00000	.00000	48.50000	-.33311	-.50248	.97069	.07980
	GRADIENT	.00000	.00000	-.20160	.00000	.00362	-.00000	.00016

ARC40X80-462(OA100) OV101 (BNA01X) (16 MAR 82)

REFERENCE DATA

SREF =	2690.0000 SQ.FT.	XMRP =	1076.6800 IN.	XO	
LREF =	474.8100 INCHES	YMRP =	.0000 IN.	YO	
BREF =	936.6800 INCHES	ZMRP =	375.0000 IN.	ZO	
SCALE =	.3600				

PARAMETRIC DATA

ALPHA =	5.000	BETA =	.000
ELEVON =	10.000	BDFLAP =	.000
SPDBRK =	25.000	RUDDER =	.000

RUN NO. 51/ 0 GRADIENT INTERVAL = -5.00/ 5.00

Q	AILRON	ALPHAU	BETA	QI	DP/Q50	DP/Q51	DP/Q52	ALPHA
47.550	.049	5.00000	.00000	48.50000	-.34285	-.29524	.95787	5.28440
47.650	2.544	5.00000	.00000	48.50000	-.35357	-.28529	.95787	5.28230
47.560	5.068	5.00000	.00000	48.50000	-.35357	-.26840	.96785	5.28750
47.540	7.578	5.00000	.00000	48.50000	-.34285	-.28629	.96785	5.28690
47.710	10.028	5.00000	.00000	48.50000	-.35357	-.25050	.95787	5.28360
47.460	12.896	5.00000	.00000	48.50000	-.37499	-.27734	.95787	5.27420
	GRADIENT	-.00000	.00000	.00000	-.00430	.00359	.00000	-.00084

ARC40X80-462(OA100) OV101 (BNA01Y) (16 MAR 82)

REFERENCE DATA

SREF =	2690.0000 SQ.FT.	XMRP =	1076.6800 IN.	XO	
LREF =	474.8100 INCHES	YMRP =	.0000 IN.	YO	
BREF =	936.6800 INCHES	ZMRP =	375.0000 IN.	ZO	
SCALE =	.3600				

PARAMETRIC DATA

ALPHA =	10.000	BETA =	.000
ELEVON =	10.000	BDFLAP =	.000
SPDBRK =	25.000	RUDDER =	.000

RUN NO. 52/ 0 GRADIENT INTERVAL = -5.00/ 5.00

Q	AILRON	ALPHAU	BETA	QI	DP/Q50	DP/Q51	DP/Q52	ALPHA
47.580	.049	10.00000	.00000	48.50000	-.39527	-.05352	.98492	10.48720
47.430	2.544	10.00000	.00000	48.50000	-.37390	-.03568	.97497	10.47710
47.430	5.024	10.00000	.00000	48.50000	-.38458	-.06244	.95502	10.48660
47.400	7.578	10.00000	.00000	48.50000	-.38458	-.07136	.97497	10.48810
47.480	10.028	10.00000	.00000	49.00000	-.37390	-.09812	.96502	10.48780
47.370	12.896	10.00000	.00000	48.50000	-.35253	-.07136	.97497	10.48630
	GRADIENT	-.00000	.00000	.00000	.00856	.00715	-.00399	-.00004

ARC40X80-462(OA100) OV101 (BNA01Z) (16 MAR 82)

REFERENCE DATA

SREF =	2690.0000 SQ.FT.	XMRP =	1076.6800 IN.	XO	
LREF =	474.8100 INCHES	YMRP =	.0000 IN.	YO	
BREF =	936.6800 INCHES	ZMRP =	375.0000 IN.	ZO	
SCALE =	.3600				

PARAMETRIC DATA

ALPHA =	15.000	BETA =	.000
ELEVON =	10.000	BDFLAP =	.000
SPDBRK =	25.000	RUDDER =	.000

RUN NO. 53/ 0 GRADIENT INTERVAL = -5.00/ 5.00

Q	AILRON	ALPHAU	BETA	QI	DP/Q50	DP/Q51	DP/Q52	ALPHA
47.600	.050	15.00000	.00000	48.00000	-.39411	.14231	.94237	15.70420
47.750	2.559	15.00000	.00000	48.50000	-.37281	.16010	.95221	15.70020
47.780	5.068	15.00000	.00000	48.00000	-.40477	.14231	.96221	15.69900
47.690	7.564	15.00000	.00000	48.50000	-.39411	.11563	.95229	15.70020
47.700	10.043	15.00000	.00000	48.50000	-.40477	.15121	.96221	15.70130
47.670	12.896	15.00000	.00000	48.50000	-.38346	.13342	.95229	15.69340
	GRADIENT	-.00000	.00000	.19926	.00849	.00709	.00791	-.00159

ARC40X80-462(OA100) OV101 (BNA02A) (16 MAR 82)

REFERENCE DATA

SREF =	2690.0000 SQ.FT.	XMRP =	1076.6800 IN.	XO	
LREF =	474.8100 INCHES	YMRP =	.0000 IN.	YO	
BREF =	936.6800 INCHES	ZMRP =	375.0000 IN.	ZO	
SCALE =	.3600				

PARAMETRIC DATA

ALPHA =	20.000	BETA =	.000
ELEVON =	10.000	BDFLAP =	.000
SPDBRK =	25.000	RUDDER =	.000

RUN NO. 54/ 0 GRADIENT INTERVAL = -5.00/ 5.00

Q	AILRON	ALPHAU	BETA	QI	DP/Q50	DP/Q51	DP/Q52	ALPHA
47.540	.034	20.00000	.00000	48.00000	-.39297	.33701	.93964	20.97739
47.680	2.559	20.00000	.00000	48.00000	-.38235	.33701	.94953	20.97490
47.590	5.039	20.00000	.00000	48.00000	-.37173	.35475	.93964	20.97249
47.620	7.563	20.00000	.00000	48.00000	-.38235	.33701	.94953	20.96439
47.530	10.043	20.00000	.00000	48.00000	-.37173	.39022	.92975	20.96399
47.520	12.896	20.00000	.00000	48.00000	-.38235	.40796	.93964	20.95059
	GRADIENT	.00000	.00000	.00000	.00421	-.00000	.00392	-.00099

ARC40X80-462(OA100) OV101 (BNA02B) (16 MAR 82)

REFERENCE DATA

SREF = 2690.0000 SQ.FT. XMRP = 1076.6800 IN. XO
LREF = 474.8100 INCHES YMRP = .0000 IN. YO
BREF = 936.6800 INCHES ZMRP = 375.0000 IN. ZO
SCALE = .3600

PARAMETRIC DATA

ALPHA = .000 BETA = .000
ELEVON = -10.000 BDFLAP = .000
SPDBRK = 25.000 RUDDER = .000

RUN NO. 55/ 0 GRADIENT INTERVAL = -5.00/ 5.00

Q	AILRON	ALPHAU	BETA	Q1	DP/Q50	DP/Q51	DP/Q52	ALPHA
47.620	-.078	.00000	.00000	48.50000	-.33311	-.49351	.94067	-.21900
47.760	2.460	.00000	.00000	48.50000	-.33311	-.47556	.94067	-.22190
47.760	4.985	.00000	.00000	48.00000	-.33311	-.48453	.97069	-.21680
47.580	7.465	.00000	.00000	48.00000	-.35461	-.52042	.96068	-.21810
47.590	10.020	.00000	.00000	48.00000	-.33311	-.49351	.95068	-.20960
47.360	15.069	.00000	.00000	47.50000	-.32237	-.47556	.95068	-.17790
	GRADIENT	.00000	.00000	-.09866	.00000	.00178	.00592	.00043

ARC40X80-462(OA100) OV101 (BNA02C) (16 MAR 82)

REFERENCE DATA

SREF = 2690.0000 SQ.FT. XMRP = 1076.6800 IN. XO
LREF = 474.8100 INCHES YMRP = .0000 IN. YO
BREF = 936.6800 INCHES ZMRP = 375.0000 IN. ZO
SCALE = .3600

PARAMETRIC DATA

ALPHA = 5.000 BETA = .000
ELEVON = -10.000 BDFLAP = .000
SPDBRK = 25.000 RUDDER = .000

RUN NO. 56/ 0 GRADIENT INTERVAL = -5.00/ 5.00

Q	AILRON	ALPHAU	BETA	Q1	DP/Q50	DP/Q51	DP/Q52	ALPHA
47.640	-.034	5.00000	.00000	48.50000	-.36428	-.28629	.95787	4.97260
47.660	2.461	5.00000	.00000	48.50000	-.35357	-.29524	.95787	4.97170
47.670	4.985	5.00000	.00000	48.50000	-.37499	-.30418	.93792	4.97540
47.670	7.480	5.00000	.00000	48.50000	-.36428	-.30418	.93792	4.97780
47.570	10.020	5.00000	.00000	48.50000	-.35357	-.31313	.94789	4.98020
47.320	15.054	5.00000	.00000	48.00000	-.33214	-.27734	.94789	5.01310
	GRADIENT	.00000	.00000	-.00000	-.00215	-.00356	-.00398	.00056

ARC40X80-462(OA100) OV101 (BNA02D) (16 MAR 82)

REFERENCE DATA

SREF =	2690.0000 SQ.FT.	XMRP =	1076.6800 IN.	XO	
LREF =	474.8100 INCHES	YMRP =	.0000 IN.	YO	
BREF =	936.6800 INCHES	ZMRP =	375.0000 IN.	ZO	
SCALE =	.3600				

PARAMETRIC DATA

ALPHA =	10.000	BETA =	.000
ELEVON =	-10.000	BDFLAP =	.000
SPDBRK =	25.000	RUDDER =	.000

RUN NO. 57/ 0 GRADIENT INTERVAL = -5.00/ 5.00

Q	AILRON	ALPHAU	BETA	QI	DP/Q50	DP/Q51	DP/Q52	ALPHA
47.760	-.064	10.00000	.00000	48.00000	-.36322	-.08920	.96502	10.17740
47.770	2.461	10.00000	.00000	48.00000	-.37390	-.08028	.95507	10.17930
47.800	4.956	10.00000	.00000	48.00000	-.37390	-.08028	.96502	10.18250
47.880	7.495	10.00000	.00000	48.50000	-.38458	-.09812	.97497	10.18790
47.690	10.020	10.00000	.00000	48.00000	-.35253	-.04460	.95507	10.18750
47.640	15.039	10.00000	.00000	48.00000	-.37390	-.08920	.97497	10.21370
	GRADIENT	-.00000	.00000	-.00000	-.00213	.00178	-.00001	.00102

ARC40X80-462(OA100) OV101 (BNA02E) (16 MAR 82)

REFERENCE DATA

SREF =	2690.0000 SQ.FT.	XMRP =	1076.6800 IN.	XO	
LREF =	474.8100 INCHES	YMRP =	.0000 IN.	YO	
BREF =	936.6800 INCHES	ZMRP =	375.0000 IN.	ZO	
SCALE =	.3600				

PARAMETRIC DATA

ALPHA =	15.000	BETA =	.000
ELEVON =	-10.000	BDFLAP =	.000
SPDBRK =	25.000	RUDDER =	.000

RUN NO. 58/ 0 GRADIENT INTERVAL = -5.00/ 5.00

Q	AILRON	ALPHAU	BETA	QI	DP/Q50	DP/Q51	DP/Q52	ALPHA
47.510	-.064	15.00000	.00000	48.00000	-.38346	.13342	.95229	15.39270
47.450	2.461	15.00000	.00000	47.00000	-.40477	.12452	.95229	15.38990
47.560	4.971	15.00000	.00000	48.00000	-.38346	.16010	.95229	15.39340
47.500	7.465	15.00000	.00000	48.00000	-.38346	.15121	.95229	15.39760
47.370	10.020	15.00000	.00000	48.00000	-.38346	.13342	.95229	15.39600
47.570	15.055	15.00000	.00000	48.00000	-.38346	.10673	.95229	15.39770
	GRADIENT	.00000	.00000	-.00038	-.00001	.00529	.00000	.00014

ARC40X80-462(OA100) OV101 (BNA02F) (16 MAR 82)

REFERENCE DATA

SREF =	2690.0000 SQ.FT.	XMRP =	1076.6800 IN.	XO	
LREF =	474.8100 INCHES	YMRP =	.0000 IN.	YO	
BREF =	936.6800 INCHES	ZMRP =	375.0000 IN.	ZO	
SCALE =	.3600				

PARAMETRIC DATA

ALPHA =	20.000	BETA =	.000
ELEVON =	-10.000	BDFLAP =	.000
SPDBRK =	25.000	RUDDER =	.000

RUN NO. 59/ 0 GRADIENT INTERVAL = -5.00/ 5.00

Q	AILRON	ALPHAU	BETA	Q1	DP/Q50	DP/Q51	DP/Q52	ALPHA
45.310	-.064	20.00000	.00000	50.00000	-.36111	.32814	.90008	20.65880
47.090	2.461	20.00000	.00000	47.00000	-.37173	.32814	.94953	20.65709
47.600	4.971	20.00000	.00000	48.00000	-.37173	.35475	.94953	20.65230
47.390	7.480	20.00000	.00000	47.00000	-.40359	.35475	.94953	20.65919
47.470	10.020	20.00000	.00000	48.00000	-.36111	.35475	.94953	20.65590
47.360	15.010	20.00000	.00000	48.00000	-.40359	.31040	.94953	20.65469
	GRADIENT	.00000	.00000	-.39805	-.00211	.00528	.00983	-.00129

ARC40X80-462(OA100) OV101 (BNA02G) (16 MAR 82)

REFERENCE DATA

SREF =	2690.0000 SQ.FT.	XMRP =	1076.6800 IN.	XO	
LREF =	474.8100 INCHES	YMRP =	.0000 IN.	YO	
BREF =	936.6800 INCHES	ZMRP =	375.0000 IN.	ZO	
SCALE =	.3600				

PARAMETRIC DATA

ALPHA =	.000	BETA =	.000
ELEVON =	-20.000	BDFLAP =	.000
SPDBRK =	25.000	RUDDER =	.000

RUN NO. 70/ 0 GRADIENT INTERVAL = -5.00/ 5.00

Q	AILRON	ALPHAU	BETA	Q1	DP/Q50	DP/Q51	DP/Q52	ALPHA
48.060	-.053	.00000	.00000	48.50000	-.32237	-.48453	.97069	-.34040
47.800	2.441	.00000	.00000	47.50000	-.34386	-.48453	.95068	-.33890
47.850	4.966	.00000	.00000	48.50000	-.33311	-.50248	.97069	-.32630
47.690	7.475	.00000	.00000	48.50000	-.32237	-.49351	.95068	-.30830
47.660	10.000	.00000	.00000	48.50000	-.33311	-.47556	.97069	-.28860
47.530	15.005	.00000	.00000	47.50000	-.34386	-.47556	.97069	-.25800
	GRADIENT	.00000	.00000	.00082	-.00213	-.00358	.00002	.00201

ARC40X80-462(OA100) OV101 (BNA02H) (16 MAR 82)

REFERENCE DATA

SREF =	2690.0000 SQ.FT.	XMRP =	1076.6800 IN.	XO	
LREF =	474.8100 INCHES	YMRP =	.0000 IN.	YO	
BREF =	936.6800 INCHES	ZMRP =	375.0000 IN.	ZO	
SCALE =	.3600				

PARAMETRIC DATA

ALPHA =	5.000	BETA =	.000
ELEVON =	-20.000	BDFLAP =	.000
SPDBRK =	25.000	RUDDER =	.000

RUN NO. 71/ 0 GRADIENT INTERVAL = -5.00/ 5.00

Q	AILRON	ALPHAU	BETA	QI	DP/Q50	DP/Q51	DP/Q52	ALPHA
47.420	-.068	5.00000	.00000	49.50000	-.35357	-.28629	.95787	4.84390
47.380	2.456	5.00000	.00000	47.50000	-.34285	-.29524	.95787	4.85130
47.560	4.966	5.00000	.00000	47.50000	-.35357	-.29524	.94789	4.86170
47.530	7.476	5.00000	.00000	47.50000	-.34285	-.27734	.95787	4.87510
47.490	9.986	5.00000	.00000	47.50000	-.36428	-.29524	.94789	4.89760
47.450	15.020	5.00000	.00000	47.50000	-.37499	-.30418	.94789	4.93140
	GRADIENT	-.00000	.00000	-.39767	.00000	-.00178	-.00198	.00354

ARC40X80-462(OA100) OV101 (BNA02I) (16 MAR 82)

REFERENCE DATA

SREF =	2690.0000 SQ.FT.	XMRP =	1076.6800 IN.	XO	
LREF =	474.8100 INCHES	YMRP =	.0000 IN.	YO	
BREF =	936.6800 INCHES	ZMRP =	375.0000 IN.	ZO	
SCALE =	.3600				

PARAMETRIC DATA

ALPHA =	10.000	BETA =	.000
ELEVON =	-20.000	BDFLAP =	.000
SPDBRK =	25.000	RUDDER =	.000

RUN NO. 72/ 0 GRADIENT INTERVAL = -5.00/ 5.00

Q	AILRON	ALPHAU	BETA	QI	DP/Q50	DP/Q51	DP/Q52	ALPHA
47.650	-.053	10.00000	.00000	47.50000	-.36322	-.08028	.96502	10.03710
47.620	2.442	10.00000	.00000	48.50000	-.35253	-.08028	.95507	10.03800
47.580	5.408	10.00000	.00000	47.50000	-.36322	-.03568	.96502	10.07030
47.500	7.491	10.00000	.00000	47.50000	-.36322	-.09820	.95507	10.07050
47.460	10.000	10.00000	.00000	47.50000	-.35253	-.07136	.94512	10.09890
47.370	15.035	10.00000	.00000	47.50000	-.35253	-.07136	.95507	10.13050
	GRADIENT	.00000	.00000	.40087	.00428	.00000	-.00399	.00036

ARC40X80-462(OA100) OV101 (BNA02J) (16 MAR 82)

REFERENCE DATA

SREF =	2690.0000 SQ.FT.	XMRP =	1076.6800 IN.	XO	
LREF =	474.8100 INCHES	YMRP =	.0000 IN.	YO	
BREF =	936.6800 INCHES	ZMRP =	375.0000 IN.	ZO	
SCALE =	.3600				

PARAMETRIC DATA

ALPHA =	15.000	BETA =	.000
ELEVON =	-20.000	BDFLAP =	.000
SPDBRK =	25.000	RUDDER =	.000

RUN NO. 73/ 0 GRADIENT INTERVAL = -5.00/ 5.00

Q	AILRON	ALPHAU	BETA	Q1	DP/Q50	DP/Q51	DP/Q52	ALPHA
47.540	-.053	15.00000	.00000	47.50000	-.37281	.13342	.95229	15.23020
47.580	2.456	15.00000	.00000	47.50000	-.38346	.13342	.95229	15.22850
47.480	4.966	15.00000	.00000	47.50000	-.37281	.15121	.94237	15.23270
47.420	7.491	15.00000	.00000	49.00000	-.37281	.15121	.95229	15.26340
47.350	9.970	15.00000	.00000	47.50000	-.37231	.16010	.93245	15.28240
47.430	15.020	15.00000	.00000	47.50000	-.35151	.16900	.96221	15.33470
	GRADIENT	-.00000	.00000	-.00000	.00000	.00354	-.00198	.00050

ARC40X80-462(OA100) OV101 (BNA02K) (16 MAR 82)

REFERENCE DATA

SREF =	2690.0000 SQ.FT.	XMRP =	1076.6800 IN.	XO	
LREF =	474.8100 INCHES	YMRP =	.0000 IN.	YO	
BREF =	936.6800 INCHES	ZMRP =	375.0000 IN.	ZO	
SCALE =	.3600				

PARAMETRIC DATA

ALPHA =	20.000	BETA =	.000
ELEVON =	-20.000	BDFLAP =	.000
SPDBRK =	25.000	RUDDER =	.000

RUN NO. 74/ 0 GRADIENT INTERVAL = -5.00/ 5.00

Q	AILRON	ALPHAU	BETA	Q1	DP/Q50	DP/Q51	DP/Q52	ALPHA
47.470	-.068	20.00000	.00000	48.50000	-.38235	.31927	.95942	20.48309
47.470	2.456	20.00000	.00000	47.50000	-.37173	.34588	.94953	20.48579
47.410	4.981	20.00000	.00000	47.50000	-.36111	.33701	.95942	20.48569
47.390	7.461	20.00000	.00000	47.50000	-.38235	.34588	.94953	20.48910
47.330	9.986	20.00000	.00000	47.50000	-.35049	.34588	.93964	20.49449
47.780	15.020	20.00000	.00000	48.50000	-.35049	.33701	.95942	20.56299
	GRADIENT	-.00000	.00000	-.19805	.00421	.00351	.00000	.00051

ARC40X80-462(OA100) OV101 (BNA02L) (16 MAR 82)

REFERENCE DATA

SREF =	2690.0000 SQ.FT.	XMRP =	1076.6800 IN.	XO	
LREF =	474.8100 INCHES	YMRP =	.0000 IN.	YO	
BREF =	936.6800 INCHES	ZMRP =	375.0000 IN.	ZO	
SCALE =	.3600				

PARAMETRIC DATA

ALPHA =	.000	BETA =	5.000
ELEVON =	.000	BDFLAP =	.000
SPDBRK =	25.000	RUDDER =	.000

RUN NO. 60/ 0 GRADIENT INTERVAL = -5.00/ 5.00

Q	AILRON	ALPHAU	BETA	Q1	DP/Q50	DP/Q51	DP/Q52	ALPHA
47.680	.000	.00000	5.00000	47.00000	-.10746	-.44864	.99071	-.04990
47.880	2.524	.00000	5.00000	48.00000	-.12895	-.43070	.99071	-.05140
47.850	5.005	.00000	5.00000	48.00000	-.10746	-.44864	.99071	-.05250
47.800	7.514	.00000	5.00000	48.00000	-.10746	-.43070	.99071	-.05330
47.730	10.024	.00000	5.00000	48.00000	-.08596	-.42172	.99071	-.05380
47.790	15.088	.00000	5.00000	48.00000	-.11820	-.44864	.99071	-.05320
	GRADIENT	.00000	.00000	.39612	-.00851	.00711	.00000	-.00059

ARC40X80-462(OA100) OV101 (BNA02M) (16 MAR 82)

REFERENCE DATA

SREF =	2690.0000 SQ.FT.	XMRP =	1076.6800 IN.	XO	
LREF =	474.8100 INCHES	YMRP =	.0000 IN.	YO	
BREF =	936.6800 INCHES	ZMRP =	375.0000 IN.	ZO	
SCALE =	.3600				

PARAMETRIC DATA

ALPHA =	5.000	BETA =	5.000
ELEVON =	.000	BDFLAP =	.000
SPDBRK =	25.000	RUDDER =	.000

RUN NO. 61/ 0 GRADIENT INTERVAL = -5.00/ 5.00

Q	AILRON	ALPHAU	BETA	Q1	DP/Q50	DP/Q51	DP/Q52	ALPHA
47.920	.000	5.00000	5.00000	48.00000	-.10714	-.25945	.99778	5.14540
47.840	2.510	5.00000	5.00000	48.00000	-.09643	-.23261	.98781	5.14770
47.740	4.990	5.00000	5.00000	48.00000	-.10714	-.24156	.98781	5.14580
47.700	7.514	5.00000	5.00000	47.00000	-.12857	-.22366	.98781	5.14660
47.820	10.009	5.00000	5.00000	48.00000	-.10714	-.23261	.98781	5.14540
47.620	15.058	5.00000	5.00000	48.00000	-.11786	-.25050	.99778	5.14370
	GRADIENT	-.00000	-.00000	-.00000	.00001	.00360	-.00200	.00008

ARC40X80-462(OA100) OV101 (BNA02N) (16 MAR 82)

REFERENCE DATA

SREF =	2690.0000 SQ.FT.	XMRP =	1076.6800 IN.	XO	
LREF =	474.8100 INCHES	YMRP =	.0000 IN.	YO	
BREF =	936.6800 INCHES	ZMRP =	375.0000 IN.	ZO	
SCALE =	.3600				

PARAMETRIC DATA

ALPHA =	10.000	BETA =	5.000
ELEVON =	.000	BDFLAP =	.000
SPDBRK =	25.000	RUDDER =	.000

RUN NO. 62/ 0 GRADIENT INTERVAL = -5.00/ 5.00

Q	AILRON	ALPHAU	BETA	Q1	DP/Q50	DP/Q51	DP/Q52	ALPHA
47.830	.000	10.00000	5.00000	48.00000	-.13888	-.01784	.99487	10.34720
47.820	2.495	10.00000	5.00000	48.00000	-.10693	.00000	.99487	10.34480
47.780	5.005	10.00000	5.00000	48.00000	-.11751	-.02676	.99487	10.34240
47.670	7.499	10.00000	5.00000	48.00000	-.12819	-.02676	.99487	10.34300
47.670	10.024	10.00000	5.00000	48.00000	-.12819	-.01784	.98492	10.34630
47.800	15.088	10.00000	5.00000	48.00000	-.10683	-.03568	.99487	10.34780
	GRADIENT	.00000	.00000	.00000	.01285	.00715	.00000	-.00096

ARC40X80-462(OA100) OV101 (BNA02O) (16 MAR 82)

REFERENCE DATA

SREF =	2690.0000 SQ.FT.	XMRP =	1076.6800 IN.	XO	
LREF =	474.8100 INCHES	YMRP =	.0000 IN.	YO	
BREF =	936.6800 INCHES	ZMRP =	375.0000 IN.	ZO	
SCALE =	.3600				

PARAMETRIC DATA

ALPHA =	15.000	BETA =	5.000
ELEVON =	.000	BDFLAP =	.000
SPDBRK =	25.000	RUDDER =	.000

RUN NO. 63/ 0 GRADIENT INTERVAL = -5.00/ 5.00

Q	AILRON	ALPHAU	BETA	Q1	DP/Q50	DP/Q51	DP/Q52	ALPHA
47.700	.000	15.00000	5.00000	48.00000	-.12782	.15121	.98205	15.55740
47.800	2.524	15.00000	5.00000	48.00000	-.12782	.16010	.99197	15.55920
47.750	5.005	15.00000	5.00000	48.00000	-.14912	.16900	.99197	15.55860
47.700	7.499	15.00000	5.00000	48.00000	-.14912	.15121	.99197	15.55630
47.770	10.024	15.00000	5.00000	48.00000	-.12782	.16010	.99197	15.56090
47.900	15.059	15.00000	5.00000	48.00000	-.12782	.22236	.98205	15.55980
	GRADIENT	.00000	.00000	.00000	.00000	.00352	.00393	.00071

ARC40X80-462(OA100) CV101 (BNA02P) (16 MAR 82)

REFERENCE DATA

SREF = 2690.0000 SQ.FT. XMRP = 1076.6800 IN. XO
LREF = 474.8100 INCHES YMRP = .0000 IN. YO
BREF = 936.6800 INCHES ZMRP = 375.0000 IN. ZO
SCALE = .3600

PARAMETRIC DATA

ALPHA = 20.000 BETA = 5.000
ELEVON = .000 BDFLAP = .000
SPDBRK = 25.000 RUDDER = .000

RUN NO. 64/ 0 GRADIENT INTERVAL = -5.00/ 5.00

Q	AILRON	ALPHAU	BETA	QI	DP/Q50	DP/Q51	DP/Q52	ALPHA
47.710	.000	20.00000	5.00000	48.50000	-.12745	.36361	.98909	20.81099
48.030	2.524	20.00000	5.00000	48.00000	-.11683	.37248	.98909	20.81099
47.850	5.020	20.00000	5.00000	48.00000	-.12745	.39135	.97920	20.81439
47.840	7.499	20.00000	5.00000	48.00000	-.13807	.39022	.98909	20.81369
47.810	10.009	20.00000	5.00000	48.00000	-.12745	.39909	.99898	20.81110
47.700	15.073	20.00000	5.00000	48.00000	-.10621	.37248	.98909	20.80440
	GRADIENT	.00000	.00000	-.19206	.00421	.00351	.00000	.00000

ARC40X80-462(OA100) OV101 (BNA02Q) (16 MAR 82)

REFERENCE DATA

SREF = 2690.0000 SQ.FT. XMRP = 1076.6800 IN. XO
LREF = 474.8100 INCHES YMRP = .0000 IN. YO
BREF = 936.6800 INCHES ZMRP = 375.0000 IN. ZO
SCALE = .3600

PARAMETRIC DATA

ALPHA = .000 BETA = 5.000
ELEVON = 10.000 BDFLAP = .000
SPDBRK = 25.000 RUDDER = .000

RUN NO. 65/ 0 GRADIENT INTERVAL = -5.00/ 5.00

Q	AILRON	ALPHAU	BETA	QI	DP/Q50	DP/Q51	DP/Q52	ALPHA
47.570	.035	.00000	5.00000	47.00000	-.09671	-.43070	.99071	.09770
47.800	2.559	.00000	5.00000	48.00000	-.09671	-.42172	.99071	.09610
47.770	5.068	.00000	5.00000	48.00000	-.08595	-.43967	1.00071	.09620
47.740	7.533	.00000	5.00000	47.00000	-.07522	-.43070	1.01072	.09830
47.730	10.043	.00000	5.00000	48.00000	-.09671	-.40378	1.00071	.09560
47.770	12.896	.00000	5.00000	48.00000	-.10746	-.42172	1.00071	.08890
	GRADIENT	.00000	.00000	.39622	.00000	.00356	.00000	-.00063

ARC40X80-462(OA100) OV101 (BNA02R) (16 MAR 82)

REFERENCE DATA

SREF =	2690.0000 SQ.FT.	XMRP =	1076.6800 IN.	XO	
LREF =	474.8100 INCHES	YMRP =	.0000 IN.	YO	
BREF =	936.6800 INCHES	ZMRP =	375.0000 IN.	ZO	
SCALE =	.3600				

PARAMETRIC DATA

ALPHA =	5.000	BETA =	5.000
ELEVON =	10.000	BDFLAP =	.000
SPDBRK =	25.000	RUDDER =	.000

RUN NO. 66/ 0 GRADIENT INTERVAL = -5.00/ 5.00

Q	AILRON	ALPHAU	BETA	QI	DP/Q50	DP/Q51	DP/Q52	ALPHA
47.850	.049	5.00000	5.00000	48.00000	-.10714	-.25945	.99778	5.29310
47.690	2.559	5.00000	5.00000	48.00000	-.09543	-.23261	1.00776	5.29330
47.780	5.024	5.00000	5.00000	48.00000	-.08571	-.23261	.99778	5.29510
47.750	7.518	5.00000	5.00000	48.50000	-.09543	-.23261	.99778	5.29330
47.710	10.043	5.00000	5.00000	47.00000	-.09543	-.23261	.99778	5.29450
47.610	12.896	5.00000	5.00000	48.00000	-.09543	-.23261	.99778	5.29540
	GRADIENT	.00000	.00000	.00000	.00427	.01070	.00398	.00008

ARC40X80-462(OA100) OV101 (BNA02S) (16 MAR 82)

REFERENCE DATA

SREF =	2690.0000 SQ.FT.	XMRP =	1076.6800 IN.	XO	
LREF =	474.8100 INCHES	YMRP =	.0000 IN.	YO	
BREF =	936.6800 INCHES	ZMRP =	375.0000 IN.	ZO	
SCALE =	.3600				

PARAMETRIC DATA

ALPHA =	10.000	BETA =	5.000
ELEVON =	10.000	BDFLAP =	.000
SPDBRK =	25.000	RUDDER =	.000

RUN NO. 67/ 0 GRADIENT INTERVAL = -5.00/ 5.00

Q	AILRON	ALPHAU	BETA	QI	DP/Q50	DP/Q51	DP/Q52	ALPHA
47.830	.049	10.00000	5.00000	48.00000	-.11751	-.01784	.98492	10.49490
47.440	2.559	10.00000	5.00000	48.50000	-.11751	-.03568	.99487	10.49380
47.780	5.068	10.00000	5.00000	48.00000	-.10683	-.02676	.98492	10.49550
47.740	7.578	10.00000	5.00000	48.00000	-.12819	-.02676	.98492	10.49660
47.710	10.043	10.00000	5.00000	48.00000	-.11751	-.04460	.99487	10.49480
47.810	12.896	10.00000	5.00000	48.00000	-.09615	-.02676	1.00482	10.49630
	GRADIENT	.00000	.00000	.19925	.00000	-.00711	.00396	-.00044

ARC40X80-462(OA100) OV101 (BNA02T) (16 MAR 82)

REFERENCE DATA

SREF =	2690.0000 SQ.FT.	XMRP =	1076.6800 IN.	XO
LREF =	474.8100 INCHES	YMRP =	.0000 IN.	YO
BREF =	936.6800 INCHES	ZMRP =	375.0000 IN.	ZO
SCALE =	.3600			

PARAMETRIC DATA

ALPHA =	15.000	BETA =	5.000
ELEVON =	10.000	BDFLAP =	.000
SPDBRK =	25.000	RUDDER =	.000

RUN NO. 68/ 0 GRADIENT INTERVAL = -5.00/ 5.00

Q	AILRON	ALPHAU	BETA	Q1	DP/Q50	DP/Q51	DP/Q52	ALPHA
47.580	.049	15.00000	5.00000	47.00000	-.12732	.14231	.99197	15.70980
47.690	2.543	15.00000	5.00000	48.00000	-.11717	.16010	.99197	15.71140
47.710	5.033	15.00000	5.00000	48.00000	-.12782	.23126	1.02173	15.71090
47.740	7.534	15.00000	5.00000	48.50000	-.11717	.18868	1.02173	15.71150
47.700	10.058	15.00000	5.00000	48.00000	-.09587	.22236	1.00189	15.71250
47.800	12.896	15.00000	5.00000	48.00000	-.14912	.17789	.99197	15.70700
	GRADIENT	.00000	.00000	.40095	.00427	.00713	-.00000	.00064

ARC40X80-462(OA100) OV101 (BNA02U) (16 MAR 82)

REFERENCE DATA

SREF =	2690.0000 SQ.FT.	XMRP =	1076.6800 IN.	XO
LREF =	474.8100 INCHES	YMRP =	.0000 IN.	YO
BREF =	936.6800 INCHES	ZMRP =	375.0000 IN.	ZO
SCALE =	.3600			

PARAMETRIC DATA

ALPHA =	20.000	BETA =	5.000
ELEVON =	10.000	BDFLAP =	.000
SPDBRK =	25.000	RUDDER =	.000

RUN NO. 69/ 0 GRADIENT INTERVAL = -5.00/ 5.00

Q	AILRON	ALPHAU	BETA	Q1	DP/Q50	DP/Q51	DP/Q52	ALPHA
47.550	.064	20.00000	5.00000	48.00000	-.12745	.39022	.98909	20.96309
47.680	2.559	20.00000	5.00000	48.00000	-.09559	.37248	.98909	20.96489
47.610	5.054	20.00000	5.00000	48.00000	-.11683	.42559	.98909	20.95999
47.460	7.534	20.00000	5.00000	48.50000	-.08497	.39909	.99898	20.96539
47.300	10.058	20.00000	5.00000	48.50000	-.09559	.34588	.99898	20.95909
47.320	12.896	20.00000	5.00000	48.50000	-.12745	.38135	.99898	20.94559
	GRADIENT	.00000	.00000	.00000	.01278	-.00711	-.00000	.00072

ARC40X80-462(OA100) OV101 (BNA02V) (16 MAR 82)

REFERENCE DATA

SREF =	2690.0000 SQ.FT.	XMRP =	1076.6800 IN.	XO	
LREF =	474.8100 INCHES	YMRP =	.0000 IN.	YO	
BREF =	936.6800 INCHES	ZMRP =	375.0000 IN.	ZO	
SCALE =	.3600				

PARAMETRIC DATA

ALPHA =	.000	BETA =	10.000
ELEVON =	.000	BDFLAP =	.000
SPDBRK =	25.000	RUDDER =	.000

RUN NO. 75/ 0 GRADIENT INTERVAL = -5.00/ 5.00

Q	AILRON	ALPHAU	BETA	QI	DP/Q50	DP/Q51	DP/Q52	ALPHA
47.400	.000	.00000	10.00000	49.50000	.17193	-.37636	1.03073	-.04110
47.360	2.524	.00000	10.00000	47.50000	.19342	-.35891	1.03073	-.04090
47.470	5.005	.00000	10.00000	49.50000	.20417	-.36789	1.03073	-.03970
47.420	7.514	.00000	10.00000	47.50000	.19342	-.35729	1.03073	-.03860
47.490	10.009	.00000	10.00000	47.50000	.16118	-.36583	1.03073	-.03640
47.360	15.058	.00000	10.00000	49.50000	.19342	-.38583	1.03073	-.03750
	GRADIENT	.00000	.00000	-.79224	.00851	.00711	.00000	.00008

ARC40X80-462(OA100) OV101 (BNA02W) (16 MAR 82)

REFERENCE DATA

SREF =	2690.0000 SQ.FT.	XMRP =	1076.6800 IN.	XO	
LREF =	474.8100 INCHES	YMRP =	.0000 IN.	YO	
BREF =	936.6800 INCHES	ZMRP =	375.0000 IN.	ZO	
SCALE =	.3600				

PARAMETRIC DATA

ALPHA =	5.000	BETA =	10.000
ELEVON =	.000	BDFLAP =	.000
SPDBRK =	25.000	RUDDER =	.000

RUN NO. 76/ 0 GRADIENT INTERVAL = -5.00/ 5.00

Q	AILRON	ALPHAU	BETA	QI	DP/Q50	DP/Q51	DP/Q52	ALPHA
47.750	.000	5.00000	10.00000	47.50000	.18214	-.18788	1.03769	5.14960
47.750	2.509	5.00000	10.00000	47.50000	.18214	-.19682	1.02772	5.15250
47.650	4.990	5.00000	10.00000	47.50000	.19265	-.18788	1.03769	5.15210
47.580	7.514	5.00000	10.00000	49.50000	.17143	-.19682	1.02772	5.15420
47.440	10.024	5.00000	10.00000	47.50000	.18214	-.19682	1.02772	5.15550
47.440	15.053	5.00000	10.00000	49.50000	.20357	-.19682	1 02772	5.15870
	GRADIENT	.00000	.00000	.00000	.00214	-.00001	-.00001	.00050

ARC40X80-462(OA100) OV101 (BNA02X) (16 MAR 82)

REFERENCE DATA

SREF =	2690.0000 SQ.FT.	XMRP =	1076.6800 IN. XO		
LREF =	474.8100 INCHES	YMRP =	.0000 IN. YO		
BREF =	936.6800 INCHES	ZMRP =	375.0000 IN. ZO		
SCALE =	.3600				

PARAMETRIC DATA

ALPHA =	10.000	BETA =	10.000
ELEVON =	.000	BDFLAP =	.000
SPDBRK =	25.000	RUDDER =	.000

RUN NO. 77/ 0 GRADIENT INTERVAL = -5.00/ 5.00

Q	AILRON	ALPHAU	BETA	QI	DP/Q50	DP/Q51	DP/Q52	ALPHA
47.680	.000	10.00000	10.00000	47.50000	.18161	.01784	1.03466	10.35210
47.630	2.509	10.00000	10.00000	47.50000	.17093	.00892	1.02471	10.35130
47.600	5.019	10.00000	10.00000	47.50000	.16024	.00892	1.02471	10.34970
47.450	7.529	10.00000	10.00000	47.50000	.17093	.02676	1.02471	10.35210
47.390	10.024	10.00000	10.00000	47.50000	.19229	.02676	1.02471	10.35430
47.370	15.058	10.00000	10.00000	47.50000	.16024	.03568	1.02471	10.36380
	GRADIENT	.00000	.00000	.00000	-.00426	-.00356	-.00397	-.00032

ARC40X80-462(OA100) OV101 (BNA02Y) (16 MAR 82)

REFERENCE DATA

SREF =	2690.0000 SQ.FT.	XMRP =	1076.6800 IN. XO		
LREF =	474.8100 INCHES	YMRP =	.0000 IN. YO		
BREF =	936.6800 INCHES	ZMRP =	375.0000 IN. ZO		
SCALE =	.3600				

PARAMETRIC DATA

ALPHA =	15.000	BETA =	10.000
ELEVON =	.000	BDFLAP =	.000
SPDBRK =	25.000	RUDDER =	.000

RUN NO. 78/ 0 GRADIENT INTERVAL = -5.00/ 5.00

Q	AILRON	ALPHAU	BETA	QI	DP/Q50	DP/Q51	DP/Q52	ALPHA
47.490	.000	15.00000	10.00000	49.00000	.17043	.22236	1.03165	15.57450
47.420	2.481	15.00000	10.00000	49.50000	.17043	.23126	1.03165	15.57630
47.490	5.005	15.00000	10.00000	49.00000	.19173	.24015	1.03165	15.57790
47.420	7.514	15.00000	10.00000	47.50000	.19173	.22236	1.03165	15.57640
47.270	10.024	15.00000	10.00000	47.50000	.15978	.22236	1.02173	15.57920
47.500	15.088	15.00000	10.00000	47.50000	.19173	.22236	1.04157	15.58190
	GRADIENT	.00000	.00000	.20154	.00000	.00358	.00000	.00073

ARC40X80-462(OA100) OV101 (BNA02Z) (16 MAR 82)

REFERENCE DATA

SREF = 2690.0000 SQ.FT. XMRP = 1076.6800 IN. XO
LREF = 474.8100 INCHES YMRP = .0000 IN. YO
BREF = 936.6800 INCHES ZMRP = 375.0000 IN. ZO
SCALE = .3600

PARAMETRIC DATA

ALPHA = 20.000 BETA = 10.000
ELEVON = .000 BDFLAP = .000
SPDBRK = 25.000 RUDDER = .000

RUN NO. 79/ 0 GRADIENT INTERVAL = -5.00/ 5.00

Q	AILRON	ALPHAU	BETA	QI	DP/Q50	DP/Q51	DP/Q52	ALPHA
47.610	.000	20.00000	10.00000	47.50000	.19118	.41683	1.03855	20.82259
47.510	2.510	20.00000	10.00000	47.50000	.18055	.41693	1.02866	20.82199
47.470	5.020	20.00000	10.00000	47.50000	.16993	.39903	1.03855	20.82559
47.420	7.514	20.00000	10.00000	49.00000	.20180	.43456	1.03855	20.82520
47.380	10.009	20.00000	10.00000	47.50000	.18055	.42569	1.01877	20.82790
47.730	15.073	20.00000	10.00000	47.50000	.18055	.42569	1.04844	20.82548
	GRADIENT	.00000	.00000	.00000	-.00423	.00000	-.00394	-.00024

ARC40X80-462(OA100) OV101 (BNA03A) (16 MAR 82)

REFERENCE DATA

SREF = 2690.0000 SQ.FT. XMRP = 1076.6800 IN. XO
LREF = 474.8100 INCHES YMRP = .0000 IN. YO
BREF = 936.6800 INCHES ZMRP = 375.0000 IN. ZO
SCALE = .3600

PARAMETRIC DATA

ALPHA = .000 BETA = 10.000
ELEVON = 10.000 BDFLAP = .000
SPDBRK = 25.000 RUDDER = .000

RUN NO. 80/ 0 GRADIENT INTERVAL = -5.00/ 5.00

Q	AILRON	ALPHAU	BETA	QI	DP/Q50	DP/Q51	DP/Q52	ALPHA
47.370	.035	.00000	10.00000	47.50000	.17193	-.37696	1.01072	.10890
47.290	2.559	.00000	10.00000	47.50000	.16269	-.38583	1.03073	.10520
47.470	5.053	.00000	10.00000	47.50000	.17193	-.39480	1.01072	.10540
47.510	7.533	.00000	10.00000	47.50000	.15044	-.38583	1.02073	.10220
47.370	10.058	.00000	10.00000	47.50000	.17193	-.37686	1.02073	.10200
47.570	12.896	.00000	10.00000	49.00000	.17193	-.36789	1.02073	.09530
	GRADIENT	.00000	.00000	-.00000	.00426	-.00356	.00793	-.00147

ARC40X80-462(OA100) OV101 (BNA03B) (16 MAR 82)

REFERENCE DATA

SREF =	2690.0000 SQ.FT.	XMRP =	1076.6800 IN. XO		
LREF =	474.8100 INCHES	YMRP =	.0000 IN. YO		
BREF =	936.6800 INCHES	ZMRP =	375.0000 IN. ZO		
SCALE =	.3600				

PARAMETRIC DATA

ALPHA =	5.000	BETA =	10.000
ELEVON =	10.000	BDFLAP =	.000
SPDBRK =	25.000	RUDDER =	.000

RUN NO. 81/ 0 GRADIENT INTERVAL = -5.00/ 5.00

Q	AILRON	ALPHAU	BETA	QI	DP/Q50	DP/Q51	DP/Q52	ALPHA
47.580	.010	5.00000	10.00000	47.50000	.17143	-.20577	1.00776	5.30290
47.460	2.529	5.00000	10.00000	49.00000	.17143	-.21472	1.00776	5.29570
47.450	5.054	5.00000	10.00000	47.50000	.15000	-.21472	1.00776	5.29710
47.340	7.548	5.00000	10.00000	47.50000	.19285	-.20577	1.02772	5.29960
47.720	10.043	5.00000	10.00000	47.50000	.19285	-.20577	1.02772	5.30020
47.370	12.896	5.00000	10.00000	47.50000	.17143	-.19682	1.00776	5.30320
	GRADIENT	.00000	.00000	.59555	-.00000	-.00355	-.00000	-.00246

ARC40X80-462(OA100) OV101 (BNA03C) (16 MAR 82)

REFERENCE DATA

SREF =	2690.0000 SQ.FT.	XMRP =	1076.6800 IN. XO		
LREF =	474.8100 INCHES	YMRP =	.0000 IN. YO		
BREF =	936.6800 INCHES	ZMRP =	375.0000 IN. ZO		
SCALE =	.3600				

PARAMETRIC DATA

ALPHA =	10.000	BETA =	10.000
ELEVON =	10.000	BDFLAP =	.000
SPDBRK =	25.000	RUDDER =	.000

RUN NO. 82/ 0 GRADIENT INTERVAL = -5.00/ 5.00

Q	AILRON	ALPHAU	BETA	QI	DP/Q50	DP/Q51	DP/Q52	ALPHA
47.560	.064	10.00000	10.00000	49.00000	.19229	.00000	1.01477	10.50020
47.530	2.543	10.00000	10.00000	47.50000	.19229	.01784	1.01477	10.49990
47.500	5.053	10.00000	10.00000	49.00000	.17093	.01784	1.01477	10.50610
47.540	7.563	10.00000	10.00000	47.50000	.18161	.00892	1.01477	10.50840
47.370	10.043	10.00000	10.00000	47.50000	.17093	.01784	1.01477	10.50960
47.080	12.896	10.00000	10.00000	47.50000	.17093	.01784	1.00482	10.51190
	GRADIENT	.00000	.00000	-.60512	.00000	.00720	-.00000	-.00012

ARC40X80-462(OA100) OV101 (BNA03D) (16 MAR 82)

REFERENCE DATA

SREF =	2690.0000 SQ.FT.	XMRP =	1076.6800 IN. XO		
LREF =	474.8100 INCHES	YMRP =	.0000 IN. YO		
BREF =	936.6800 INCHES	ZMRP =	375.0000 IN. ZO		
SCALE =	.3600				

PARAMETRIC DATA

ALPHA =	15.000	BETA =	10.000
ELEVON =	10.000	BDFLAP =	.000
SPDBRK =	25.000	RUDDER =	.000

RUN NO. 83/ 0 GRADIENT INTERVAL = -5.00/ 5.00

Q	AILRON	ALPHAU	BETA	QI	DP/Q50	DP/Q51	DP/Q52	ALPHA
47.350	.049	15.00000	10.00000	47.50000	.18108	.22236	1.02173	15.73260
47.310	2.543	15.00000	10.00000	47.50000	.19173	.21347	1.02173	15.73400
47.280	5.039	15.00000	10.00000	49.00000	.14912	.24015	1.02173	15.73690
47.390	7.549	15.00000	10.00000	47.50000	.19173	.23126	1.02173	15.73080
47.350	10.028	15.00000	10.00000	47.50000	.17043	.24015	1.03165	15.73340
47.360	12.896	15.00000	10.00000	47.50000	.20238	.24904	1.03165	15.73140
	GRADIENT	-.00000	.00000	-.00000	.00427	-.00357	-.00000	.00056

ARC40X80-462(OA100) OV101 (BNA03E) (16 MAR 82)

REFERENCE DATA

SREF =	2690.0000 SQ.FT.	XMRP =	1076.6800 IN. XO		
LREF =	474.8100 INCHES	YMRP =	.0000 IN. YO		
BREF =	936.6900 INCHES	ZMRP =	375.0000 IN. ZO		
SCALE =	.3600				

PARAMETRIC DATA

ALPHA =	20.000	BETA =	10.000
ELEVON =	10.000	BDFLAP =	.000
SPDBRK =	25.000	RUDDER =	.000

RUN NO. 84/ 0 GRADIENT INTERVAL = -5.00/ 5.00

Q	AILRON	ALPHAU	BETA	QI	DP/Q50	DP/Q51	DP/Q52	ALPHA
47.920	.035	20.00000	10.00000	48.00000	.16993	.43456	1.05833	20.98369
47.790	2.559	20.00000	10.00000	48.00000	.16993	.42569	1.05833	20.98430
47.750	5.038	20.00000	10.00000	48.00000	.18055	.45230	1.05833	20.98329
47.640	7.548	20.00000	10.00000	48.00000	.21242	.47891	1.07811	20.98200
47.520	10.058	20.00000	10.00000	46.00000	.19118	.41683	1.06822	20.97629
47.560	12.896	20.00000	10.00000	48.00000	.19118	.42569	1.07811	20.97119
	GRADIENT	.00000	.00000	.00000	.00000	-.00351	-.00000	.00024

ARC40X80-462(OA100) OV101 (BNA03F) (16 MAR 82)

REFERENCE DATA

SREF =	2690.0000 SQ.FT.	XMRP =	1076.6800 IN.	XO	
LREF =	474.8100 INCHES	YMRP =	.0000 IN.	YO	
BREF =	936.6800 INCHES	ZMRP =	375.0000 IN.	ZO	
SCALE =	.3600				

PARAMETRIC DATA

ALPHA =	.000	BETA =	.000
ELEVON =	.000	AILRON =	.000
SPDBRK =	25.000	RUDDER =	.000

RUN NO. 35/ 0 GRADIENT INTERVAL = -5.00/ 5.00

Q	BDFLAP	ALPHAU	BETA	QI	DP/Q50	DP/Q51	DP/Q52	ALPHA
47.610	-11.543	.00000	.00000	47.50000	-.32237	-.52940	.95068	-.07780
47.740	-.201	.00000	.00000	48.00000	-.31162	-.51145	.97069	-.06050
47.830	.000	.00000	.00000	48.00000	-.35461	-.51145	.98070	-.06130
47.860	16.360	.00000	.00000	48.00000	-.33311	-.52042	.98070	-.02330
47.800	22.684	.00000	.00000	48.00000	-.32237	-.51145	.98070	-.00560
	GRADIENT	.00000	.00000	.00000	-.21412	.00000	.04985	-.00399

ARC40X80-462(OA100) OV101 (BNA03G) (16 MAR 32)

REFERENCE DATA

SREF =	2690.0000 SQ.FT.	XMRP =	1076.6800 IN.	XO	
LREF =	474.8100 INCHES	YMRP =	.0000 IN.	YO	
BREF =	936.6800 INCHES	ZMRP =	375.0000 IN.	ZO	
SCALE =	.3600				

PARAMETRIC DATA

ALPHA =	5.000	BETA =	.000
ELEVON =	.000	AILRON =	.000
SPDBRK =	25.000	RUDDER =	.000

RUN NO. 36/ 0 GRADIENT INTERVAL = -5.00/ 5.00

Q	BDFLAP	ALPHAU	BETA	QI	DP/Q50	DP/Q51	DP/Q52	ALPHA
47.580	-11.543	5.00000	.00000	48.00000	-.33214	-.33102	.95787	5.11250
47.730	-.201	5.00000	.00000	48.00000	-.35357	-.32208	.95787	5.13280
47.630	16.561	5.00000	.00000	48.00000	-.34285	-.28629	.95787	5.17840
47.510	22.684	5.00000	.00000	47.50000	-.33214	-.31313	.95787	5.19520
	GRADIENT	.00000	.00000	.00000	.00000	.00000	.00000	.00000

ARC40X80-462(OA100) OV101 (BNA03H) (16 MAR 82)

REFERENCE DATA

SREF = 2690.0000 SQ.FT. XMRP = 1076.6800 IN. XO
LREF = 474.8100 INCHES YMRP = .0000 IN. YO
BREF = 936.6800 INCHES ZMRP = 375.0000 IN. ZO
SCALE = .3600

PARAMETRIC DATA

ALPHA = 10.000 BETA = .000
ELEVON = .000 AILRON = .000
SPDBRK = 25.000 RUDDER = .000

RUN NO. 37/ 0 GRADIENT INTERVAL = -5.00/ 5.00

Q	BDFLAP	ALPHAU	BETA	QI	DP/Q50	DP/Q51	DP/Q52	ALPHA
47.700	-11.543	10.00000	.00000	48.00000	-.37390	-.06244	.95507	10.31710
47.570	-.100	10.00000	.00000	48.00000	-.36322	-.10705	.95507	10.33990
47.350	16.561	10.00000	.00000	47.50000	-.36322	-.07136	.95507	10.37830
47.070	22.684	10.00000	.00000	47.00000	-.36322	-.10705	.95507	10.39540
	GRADIENT	.00000	.00000	.00000	.00000	.00000	.00000	.00000

ARC40X80-462(OA100) OV101(DECREASING BDFLAP) (BNA03I) (16 MAR 82)

REFERENCE DATA

SREF = 2690.0000 SQ.FT. XMRP = 1076.6800 IN. XO
LREF = 474.8100 INCHES YMRP = .0000 IN. YO
BREF = 936.6800 INCHES ZMRP = 375.0000 IN. ZO
SCALE = .3600

PARAMETRIC DATA

ALPHA = 10.000 BETA = .000
ELEVON = .000 AILRON = .000
SPDBRK = 25.000 RUDDER = .000

RUN NO. 38/ 0 GRADIENT INTERVAL = -5.00/ 5.00

Q	BDFLAP	ALPHAU	BETA	QI	DP/Q50	DP/Q51	DP/Q52	ALPHA
47.810	-11.543	10.00000	.00000	48.00000	-.38458	-.10705	.96502	10.31770
47.910	-.100	10.00000	.00000	48.00000	-.38458	-.09812	.95507	10.33760
47.740	16.461	10.00000	.00000	48.00000	-.39527	-.11597	.96502	10.37720
47.360	22.583	10.00000	.00000	47.50000	-.38458	-.10705	.93518	10.39500
	GRADIENT	.00000	.00000	.00000	.00000	.00000	.00000	.00000

ARC40X80-462(OA100) OV101 (BNA03J) (16 MAR 82)

REFERENCE DATA

SREF =	2690.0000 SQ.FT.	XMRP =	1076.6800 IN.	XO
LREF =	474.8100 INCHES	YMRP =	.0000 IN.	YO
BREF =	936.6800 INCHES	ZMRP =	375.0000 IN.	ZO
SCALE =	.3600			

PARAMETRIC DATA

ALPHA =	15.000	BETA =	.000
ELEVON =	.000	AILRON =	.000
SPDBRK =	25.000	RUDDER =	.000

RUN NO. 39/ 0 GRADIENT INTERVAL = -5.00/ 5.00

Q	BDFLAP	ALPHAU	BETA	QI	DP/Q50	DP/Q51	DP/Q52	ALPHA
47.330	-11.543	15.00000	.00000	47.50000	-.39411	.10673	.93245	15.52380
47.320	-.201	15.00000	.00000	47.00000	-.40477	.09784	.93245	15.55310
47.410	16.360	15.00000	.00000	47.50000	-.40477	.10673	.95229	15.56880
47.490	22.684	15.00000	.00000	47.50000	-.37281	.08894	.94237	15.60380
	GRADIENT	.00000	.00000	.00000	.00000	.00000	.00000	.00000

ARC40X80-462(OA100) OV101 (BNA03K) (16 MAR 82)

REFERENCE DATA

SREF =	2690.0000 SQ.FT.	XMRP =	1076.6800 IN.	XO
LREF =	474.8100 INCHES	YMRP =	.0000 IN.	YO
BREF =	936.6800 INCHES	ZMRP =	375.0000 IN.	ZO
SCALE =	.3600			

PARAMETRIC DATA

ALPHA =	20.000	BETA =	.000
ELEVON =	.000	AILRON =	.000
SPDBRK =	25.000	RUDDER =	.000

RUN NO. 40/ 0 GRADIENT INTERVAL = -5.00/ 5.00

Q	BDFLAP	ALPHAU	BETA	QI	DP/Q50	DP/Q51	DP/Q52	ALPHA
47.330	-11.543	20.00000	.00000	47.50000	-.37173	.28380	.93964	20.80109
47.120	-.100	20.00000	.00000	47.50000	-.40359	.31927	.93964	20.81999
47.470	16.461	20.00000	.00000	47.50000	-.39297	.27493	.93964	20.85300
47.930	22.684	20.00000	.00000	48.00000	-.38235	.38135	.94953	20.95309
	GRADIENT	.00000	.00000	.00000	.00000	.00000	.00000	.00000

ARC40X80-462(0A100) 0V101 (BNA03L) (16 MAR 82)

REFERENCE DATA

SREF =	2690.0000 SQ.FT.	XMRP =	1076.6800 IN.	XO	
LREF =	474.8100 INCHES	YMRP =	.0000 IN.	YO	
BREF =	936.6800 INCHES	ZMRP =	375.0000 IN.	ZO	
SCALE =	.3600				

PARAMETRIC DATA

ALPHA =	.000	BETA =	.000
ELEVON =	.000	AILRON =	.000
BDFLAP =	.000	RUDDER =	.000

RUN NO. 41/ 0 GRADIENT INTERVAL = -5.00/ 5.00

Q	SPDBRK	ALPHAU	BETA	Q1	DP/Q50	DP/Q51	DP/Q52	ALPHA
47.750	.000	.00000	.00000	48.00000	-.35461	-.51145	.96068	-.05120
47.510	25.180	.00000	.00000	47.50000	-.35461	-.52940	.95068	-.06280
47.510	55.459	.00000	.00000	47.50000	-.33311	-.51145	.96068	-.07720
47.360	87.628	.00000	.00000	47.50000	-.34386	-.51145	.96068	-.09460
	GRADIENT	.00000	.00000	.00000	.00000	.00000	.00000	.00000

ARC40X80-462(0A100) 0V101 (BNA03M) (16 MAR 82)

REFERENCE DATA

SREF =	2690.0000 SQ.FT.	XMRP =	1076.6800 IN.	XO	
LREF =	474.8100 INCHES	YMRP =	.0000 IN.	YO	
BREF =	936.6800 INCHES	ZMRP =	375.0000 IN.	ZO	
SCALE =	.3600				

PARAMETRIC DATA

ALPHA =	5.000	BETA =	.000
ELEVON =	.000	AILRON =	.000
BDFLAP =	.000	RUDDER =	.000

RUN NO. 42/ 0 GRADIENT INTERVAL = -5.00/ 5.00

Q	SPDBRK	ALPHAU	BETA	Q1	DP/Q50	DP/Q51	DP/Q52	ALPHA
47.450	-.039	5.00000	.00000	48.00000	-.37499	-.32208	.96785	5.14040
47.560	25.179	5.00000	.00000	48.00000	-.36428	-.33102	.95787	5.13500
47.560	55.459	5.00000	.00000	48.00000	-.33214	-.28629	.93792	5.11380
47.540	87.629	5.00000	.00000	48.00000	-.35357	-.31313	.95787	5.09300
	GRADIENT	.00000	.00000	.00000	.00000	.00000	.00000	.00000

ARC40X80-462(OA100) OV101 (BNA03N) (16 MAR 82)

REFERENCE DATA

SREF =	2690.0000 SQ.FT.	XMRP =	1076.6800 IN. XO		
LREF =	474.8100 INCHES	YMRP =	.0000 IN. YO		
BREF =	936.6800 INCHES	ZMRP =	375.0000 IN. ZO		
SCALE =	.3600				

PARAMETRIC DATA

ALPHA =	10.000	BETA =	.000
ELEVON =	.000	AILRON =	.000
BDFLAP =	.000	RUDDER =	.000

RUN NO. 43/ 0 GRADIENT INTERVAL = -5.00/ 5.00

Q	SPDBRK	ALPHAU	BETA	Q1	DP/Q50	DP/Q51	DP/Q52	ALPHA
47.640	.039	10.00000	.00000	48.00000	-.37390	-.10705	.94512	10.34760
47.530	25.141	10.00000	.00000	48.00000	-.38458	-.12489	.93518	10.34110
47.100	55.545	10.00000	.00000	47.50000	-.37390	-.09812	.94512	10.32230
47.680	87.677	10.00000	.00000	48.00000	-.37390	-.09812	.96502	10.30180
	GRADIENT	.00000	.00000	.00000	.00000	.00000	.00000	.00000

ARC40X80-462(OA100) OV101(DECREASING SPDBRK) (BNA030) (16 MAR 82)

REFERENCE DATA

SREF =	2690.0000 SQ.FT.	XMRP =	1076.6800 IN. XO		
LREF =	474.8100 INCHES	YMRP =	.0000 IN. YO		
BREF =	936.6800 INCHES	ZMRP =	375.0000 IN. ZO		
SCALE =	.3600				

PARAMETRIC DATA

ALPHA =	10.000	BETA =	.000
ELEVON =	.000	AILRON =	.000
BDFLAP =	.000	RUDDER =	.000

RUN NO. 44/ 0 GRADIENT INTERVAL = -5.00/ 5.00

Q	SPDBRK	ALPHAU	BETA	Q1	DP/Q50	DP/Q51	DP/Q52	ALPHA
47.660	.079	10.00000	.00000	48.00000	-.37390	-.09812	.94512	10.34800
47.720	25.139	10.00000	.00000	48.00000	-.37390	-.11597	.94512	10.34010
47.360	55.545	10.00000	.00000	48.00000	-.37390	-.11597	.93518	10.32200
47.610	87.677	10.00000	.00000	48.00000	-.39527	-.08920	.94512	10.30160
	GRADIENT	.00000	.00000	.00000	.00000	.00000	.00000	.00000

ARC40X80-462(OA100) OV101 (BNA03P) (16 MAR 82)

REFERENCE DATA

SREF =	2690.0000 SQ.FT.	XMRP =	1076.6800 IN.	XO	
LREF =	474.8100 INCHES	YMRP =	.0000 IN.	YO	
BREF =	936.6800 INCHES	ZMRP =	375.0000 IN.	ZO	
SCALE =	.3600				

PARAMETRIC DATA

ALPHA =	15.000	BETA =	.000
ELEVON =	.000	AILRON =	.000
BDFLAP =	.000	RUDDER =	.000

RUN NO. 48/ 0 GRADIENT INTERVAL = -5.00/ 5.00

Q	SPDBRK	ALPHAU	BETA	QI	DP/Q50	DP/Q51	DP/Q52	ALPHA
47.660	-.079	15.00000	.00000	48.50000	-.38346	.13342	.96221	15.56060
47.500	25.100	15.00000	.00000	48.50000	-.37281	.16010	.95229	15.55070
47.520	55.329	15.00000	.00000	48.50000	-.39411	.14231	.95229	15.53670
47.460	87.629	15.00000	.00000	48.50000	-.38346	.13342	.96221	15.51420
	GRADIENT	.00000	.00000	.00000	.00000	.00000	.00000	.00000

ARC40X80-462(OA100) OV101 (BNA03Q) (16 MAR 82)

REFERENCE DATA

SREF =	2690.0000 SQ.FT.	XMRP =	1076.6800 IN.	XO	
LREF =	474.8100 INCHES	YMRP =	.0000 IN.	YO	
BREF =	936.6800 INCHES	ZMRP =	375.0000 IN.	ZO	
SCALE =	.3600				

PARAMETRIC DATA

ALPHA =	20.000	BETA =	.000
ELEVON =	.000	AILRON =	.000
BDFLAP =	.000	RUDDER =	.000

RUN NO. 49/ 0 GRADIENT INTERVAL = -5.00/ 5.00

Q	SPDBRK	ALPHAU	BETA	QI	DP/Q50	DP/Q51	DP/Q52	ALPHA
47.680	.040	20.00000	.00000	49.50000	-.37173	.33701	.95942	20.82759
47.550	25.100	20.00000	.00000	48.50000	-.38235	.37248	.94953	20.82480
47.520	55.415	20.00000	.00000	49.00000	-.39297	.33701	.93964	20.80269
	GRADIENT	.00000	.00000	.00000	.00000	.00000	.00000	.00000

ARC40X80-462(OA100) OV101(RCS PORTS CLOSED) (BNA03R) (16 MAR 82)

REFERENCE DATA

SREF =	2690.0000 SQ.FT.	XMRP =	1076.6800 IN. XO		
LREF =	474.8100 INCHES	YMRP =	.0000 IN. YO		
BREF =	936.6800 INCHES	ZMRP =	375.0000 IN. ZO		
SCALE =	.3600				

PARAMETRIC DATA

BETA =	.000	ELEVON =	.000
AILRON =	.000	BDFLAP =	.000
SPDBRK =	25.000	RUDDER =	.000

RUN NO. 101/ 0 GRADIENT INTERVAL = -5.00/ 5.00

Q	ALPHA	ALPHAU	BETA	Q1	DP/Q50	DP/Q51	DP/Q52
47.490	-5.240	-5.00000	.00000	47.50000	-.33410	-.65695	.95348
47.690	-2.649	-2.50000	.00000	47.50000	-.34437	-.55714	.96210
47.600	-.056	.00000	.00000	47.50000	-.33311	-.49351	.96058
47.720	2.541	2.50000	.00000	47.50000	-.32189	-.38527	.96927
47.640	5.139	5.00000	.00000	47.50000	-.34285	-.28629	.96785
47.850	7.739	7.50000	.00000	48.50000	-.36375	-.16090	.95647
47.600	10.342	10.00000	.00000	47.50000	-.36322	-.08920	.93518
47.730	12.941	12.50000	.00000	47.50000	-.38402	.04454	.94375
47.580	15.556	15.00000	.00000	47.50000	-.37281	.16900	.93245
47.500	18.180	17.50000	.00000	47.50000	-.38290	.26645	.95091
47.570	20.826	20.00000	.00000	47.50000	-.38235	.38135	.94953
46.010	26.006	25.00000	.00000	50.50000	-.36006	.54827	.92706
	GRADIENT	.96343	.00000	-.00000	.00433	.03312	.00138

ARC40X80-462(OA100) OV101(RCS PORTS CLOSED) (BNA03S) (16 MAR 82)

REFERENCE DATA

SREF =	2690.0000 SQ.FT.	XMRP =	1076.6800 IN. XO		
LREF =	474.8100 INCHES	YMRP =	.0000 IN. YO		
BREF =	936.6800 INCHES	ZMRP =	375.0000 IN. ZO		
SCALE =	.3600				

PARAMETRIC DATA

ALPHA =	.000	ELEVON =	.000
AILRON =	.000	BDFLAP =	.000
SPDBRK =	25.000	RUDDER =	.000

RUN NO. 102/ 0 GRADIENT INTERVAL = -5.00/ 5.00

Q	BETA	ALPHAU	Q1	DP/Q50	DP/Q51	DP/Q52	ALPHA
47.510	-13.000	.00000	47.50000	-.64474	-.34097	1.06076	-.03430
47.670	-10.000	.00000	47.50000	-.61250	-.39480	1.03073	-.03790
47.610	-5.000	.00000	47.50000	-.49430	-.44864	.97069	-.04830
47.630	-2.000	.00000	47.50000	-.39759	-.47556	.95068	-.05370
47.730	.000	.00000	47.50000	-.33311	-.48453	.97069	-.05820
47.580	2.000	.00000	47.50000	-.24715	-.47556	.95068	-.05560
47.730	5.000	.00000	47.50000	-.09571	-.43967	.98070	-.05050
47.630	10.000	.00000	47.50000	.17193	-.35831	1.03073	-.04280
47.590	15.000	.00000	48.50000	.48355	-.28713	1.10078	-.03150
47.660	20.000	.00000	47.50000	.76294	-.26919	1.17083	-.02170
	GRADIENT	.00000	.00000	.03946	.00077	.00086	-.00026

ARC40X80-462(OA100) OV101(RCS PORTS CLOSED) (BNA03T) (16 MAR 82)

REFERENCE DATA

SREF =	2690.0000 SQ.FT.	XMRP =	1076.6800 IN. XO		
LREF =	474.8100 INCHES	YMRP =	.0000 IN. YO		
BREF =	936.6800 INCHES	ZMRP =	375.0000 IN. ZO		
SCALE =	.3600				

PARAMETRIC DATA

ALPHA =	5.000	ELEVON =	.000
AILRON =	.000	BDFLAP =	.000
SPDBRK =	25.000	RUDDER =	.000

RUN NO. 103/ 0 GRADIENT INTERVAL = -5.00/ 5.00

Q	BETA	ALPHAU	Q1	DP/Q50	DP/Q51	DP/Q52	ALPHA
47.560	-13.000	5.00000	47.50000	-.65356	-.16104	1.06763	5.15850
47.650	-10.000	5.00000	47.50000	-.62142	-.20577	1.03769	5.15620
47.600	-5.000	5.00000	47.50000	-.52499	-.28629	.96785	5.14610
47.660	-2.000	5.00000	47.50000	-.41785	-.28629	.93792	5.13950
47.650	.000	5.00000	47.50000	-.34285	-.27734	.94789	5.14090
47.620	2.000	5.00000	47.50000	-.25714	-.26840	.95787	5.13740
47.710	5.000	5.00000	48.50000	-.11786	-.25050	.97783	5.14340
47.750	10.000	5.00000	48.50000	.18214	-.20577	1.02772	5.14940
47.650	15.000	5.00000	48.50000	.46071	-.14315	1.07760	5.15490
47.600	20.000	5.00000	49.00000	.71785	-.10736	1.15743	5.14970
	GRADIENT	.00000	.08621	.04064	.00370	.00155	-.00031

ARC40X80-462(OA100) OV101(RCS PORTS CLOSED) (BNA03U) (16 MAR 82)

REFERENCE DATA

SREF =	2690.0000 SQ.FT.	XMRP =	1076.6800 IN. XO		
LREF =	474.8100 INCHES	YMRP =	.0000 IN. YO		
BREF =	936.6800 INCHES	ZMRP =	375.0000 IN. ZO		
SCALE =	.3600				

PARAMETRIC DATA

ALPHA =	10.000	ELEVON =	.000
AILRON =	.000	BDFLAP =	.000
SPDBRK =	25.000	RUDDER =	.000

RUN NO. 104/ 0 GRADIENT INTERVAL = -5.00/ 5.00

Q	BETA	ALPHAU	Q1	DP/Q50	DP/Q51	DP/Q52	ALPHA
47.610	-13.000	10.00000	49.00000	-.67302	.07136	1.07446	10.35620
47.590	-10.000	10.00000	48.50000	-.66234	.00000	1.03466	10.35530
47.560	-5.000	10.00000	47.50000	-.53414	-.04460	.99487	10.34610
47.520	-2.000	10.00000	47.50000	-.44868	-.05352	.94512	10.34310
47.450	.000	10.00000	47.50000	-.35253	-.05352	.95507	10.34350
47.610	2.000	10.00000	47.50000	-.27775	-.03568	.97497	10.34430
47.660	5.000	10.00000	48.50000	-.11751	-.03568	.98492	10.34630
47.470	10.000	10.00000	47.50000	.17093	.04460	1.03466	10.35090
47.600	15.000	10.00000	48.50000	.47005	.06244	1.11425	10.35330
47.630	20.000	10.00000	47.50000	.73712	.13381	1.17395	10.34310
	GRADIENT	.00000	.08621	.04181	.00138	.00017	.00006

ARC40X80-462(OA100) OV101(RCS PORTS CLOSED) (BNA03V) (16 MAR 82)

REFERENCE DATA

SREF =	2690.0000 SQ.FT.	XMRP =	1076.6800 IN. XO		
LREF =	474.8100 INCHES	YMRP =	.0000 IN. YO		
BREF =	936.6800 INCHES	ZMRP =	375.0000 IN. ZO		
SCALE =	.3600				

PARAMETRIC DATA

ALPHA =	15.000	ELEVON =	.000
AILRON =	.000	BDFLAP =	.000
SPDBRK =	25.000	RUDDER =	.000

RUN NO. 105/ 0 GRADIENT INTERVAL = -5.00/ 5.00

Q	BETA	ALPHAU	Q1	DP/Q50	DP/Q51	DP/Q52	ALPHA
47.610	-13.000	15.00000	47.50000	-.68171	.29352	1.09117	15.57470
47.680	-10.000	15.00000	48.50000	-.64976	.24015	1.06141	15.58040
47.610	-5.000	15.00000	48.50000	-.55389	.16900	1.00189	15.55980
47.520	-2.000	15.00000	47.50000	-.45803	.14231	.97213	15.55560
47.510	.000	15.00000	47.50000	-.39411	.10673	.95229	15.55590
47.690	2.000	15.00000	48.50000	-.29925	.12452	.94237	15.55470
47.650	5.000	15.00000	49.00000	-.13847	.14231	.98205	15.55750
47.640	10.000	15.00000	47.50000	.14912	.25794	1.04157	15.57710
47.540	15.000	15.00000	47.50000	.51128	.30241	1.11101	15.58260
47.330	20.000	15.00000	47.50000	.75627	.39136	1.18045	15.56830
	GRADIENT	.00000	.07759	.04132	-.00291	-.00274	-.00023

ARC40X80-462(OA100) OV101(RCS PORTS CLOSED) (BNA03W) (16 MAR 82)

REFERENCE DATA

SREF =	2690.0000 SQ.FT.	XMRP =	1076.6800 IN. XO		
LREF =	474.8100 INCHES	YMRP =	.0000 IN. YO		
BREF =	936.6800 INCHES	ZMRP =	375.0000 IN. ZO		
SCALE =	.3600				

PARAMETRIC DATA

ALPHA =	20.000	ELEVON =	.000
AILRON =	.000	BDFLAP =	.000
SPDBRK =	25.000	RUDDER =	.000

RUN NO. 106/ 0 GRADIENT INTERVAL = -5.00/ 5.00

Q	BETA	ALPHAU	Q1	DP/Q50	DP/Q51	DP/Q52	ALPHA
47.510	-13.000	20.00000	47.50000	-.62663	.48778	1.10778	20.83679
47.660	-10.000	20.00000	47.50000	-.58415	.48778	1.07811	20.83179
47.540	-5.000	20.00000	47.50000	-.54166	.37248	.99998	20.81670
47.630	-2.000	20.00000	47.50000	-.44607	.34589	.93964	20.82199
47.540	.000	20.00000	49.00000	-.35049	.35475	.94953	20.82419
47.670	2.000	20.00000	48.50000	-.29738	.32814	.94953	20.81960
47.760	5.000	20.00000	47.50000	-.12745	.38135	.97920	20.80379
47.800	10.000	20.00000	48.50000	.20180	.43456	1.06822	20.82329
47.650	15.000	20.00000	49.00000	.49918	.50551	1.12757	20.82309
47.520	20.000	20.00000	47.50000	.76594	.59420	1.20669	20.80010
	GRADIENT	.00000	.03448	.04084	.00015	-.00136	-.00120

ARC40X80-462(OA100) OV101 (BNA03X) (15 APR 82)

REFERENCE DATA

SREF =	2690.0000 SQ.FT.	XMRP =	1076.6800 IN. XO		
LREF =	474.8100 INCHES	YMRP =	.0000 IN. YO		
BREF =	936.6800 INCHES	ZMRP =	375.0000 IN. ZO		
SCALE =	.3600				

PARAMETRIC DATA

BETA =	.000	ELEVON =	.000
AILRON =	.000	BDFLAP =	.000

RUN NO. 88/ 0 GRADIENT INTERVAL = -5.00/ 5.00

Q	ALPHA	ALPHAU	BETA	Q1	DP/Q50	DP/Q51	DP/Q52
47.710	-.075	.00000	.00000	48.00000	-.34386	-.51145	.97069
47.670	10.320	10.00000	.00000	48.00000	-.36322	-.06244	1.00482
47.790	15.535	15.00000	.00000	48.00000	-.36216	.15121	.97213
	GRADIENT	.00000	.00000	.00000	.00000	.00000	.00000

ARC40X80-462(OA100) OV101 (BNA03Y) (16 MAR 82)

REFERENCE DATA

SREF =	2690.0000 SQ.FT.	XMRP =	1076.6800 IN. XO		
LREF =	474.8100 INCHES	YMRP =	.0000 IN. YO		
BREF =	936.6800 INCHES	ZMRP =	375.0000 IN. ZO		
SCALE =	.3600				

PARAMETRIC DATA

BETA =	.000	ELEVON =	.000
AILRON =	.000	BDFLAP =	.000
SPDBRK =	55.000	RUDDER =	-15.000

RUN NO. 89/ 0 GRADIENT INTERVAL = -5.00/ 5.00

Q	ALPHA	ALPHAU	BETA	Q1	DP/Q50	DP/Q51	DP/Q52
47.690	-.072	.00000	.00000	48.00000	-.33311	-.46659	.98070
47.740	10.326	10.00000	.00000	48.00000	-.36322	-.05352	1.00482
47.760	15.535	15.00000	.00000	48.00000	-.39411	.13342	.99197
47.760	20.801	20.00000	.00000	48.00000	-.36111	.32814	.99898
	GRADIENT	.00000	.00000	.00000	.00000	.00000	.00000

ARC40X80-462(OA100) OV101 (BNA03Z) (16 MAR 82)

REFERENCE DATA

SREF =	2690.0000 SQ.FT.	XMRP =	1076.6800 IN. XO		
LREF =	474.8100 INCHES	YMRP =	.0000 IN. YO		
BREF =	936.6800 INCHES	ZMRP =	375.0000 IN. ZO		
SCALE =	.3600				

PARAMETRIC DATA

BETA =	.000	ELEVON =	.000
AILRON =	.000	BDFLAP =	.000
SPDBRK =	55.000	RUDDER =	.000

RUN NO. 90/ 0 GRADIENT INTERVAL = -5.00/ 5.00

Q	ALPHA	ALPHAU	BETA	QI	DP/Q50	DP/Q51	DP/Q52
47.790	-.073	.00000	.00000	48.00000	-.32237	-.48453	.98070
47.600	5.118	5.00000	.00000	48.00000	-.34285	-.27734	.97783
47.860	10.323	10.00000	.00000	48.00000	-.35253	-.07136	.99487
47.710	15.537	15.00000	.00000	48.00000	-.37281	.13342	.96221
	GRADIENT	.00000	.00000	.00000	.00000	.00000	.00000

ARC40X80-462(OA100) OV101 (BNA04A) (16 MAR 82)

REFERENCE DATA

SREF =	2690.0000 SQ.FT.	XMRP =	1076.6800 IN. XO		
LREF =	474.8100 INCHES	YMRP =	.0000 IN. YO		
BREF =	936.6800 INCHES	ZMRP =	375.0000 IN. ZO		
SCALE =	.3600				

PARAMETRIC DATA

BETA =	.000	ELEVON =	.000
AILRON =	.000	BDFLAP =	.000
SPDBRK =	55.000	RUDDER =	5.000

RUN NO. 91/ 0 GRADIENT INTERVAL = -5.00/ 5.00

Q	ALPHA	ALPHAU	BETA	QI	DP/Q50	DP/Q51	DP/Q52
47.650	-.074	.00000	.00000	47.00000	-.33311	-.45761	.98070
47.790	5.119	5.00000	.00000	48.00000	-.33214	-.26840	1.00776
47.710	10.321	10.00000	.00000	47.00000	-.35253	-.07136	.99487
47.710	15.535	15.00000	.00000	47.00000	-.38346	.11563	.97213
47.720	20.804	20.00000	.00000	48.00000	-.38235	.35475	.97920
	GRADIENT	.00000	.00000	.00000	.00000	.00000	.00000

ARC40X80-462(OA100) OV101 (BNA04B) (16 MAR 82)

REFERENCE DATA

SREF =	2690.0000 SQ.FT.	XMRP =	1076.6800 IN.	XO	
LREF =	474.8100 INCHES	YMRP =	.0000 IN.	YO	
BREF =	936.6800 INCHES	ZMRP =	375.0000 IN.	ZO	
SCALE =	.3600				

PARAMETRIC DATA

BETA =	.000	ELEVON =	.000
AILRON =	.000	BDFLAP =	.000
SPDBRK =	55.000	RUDDER =	10.000

RUN NO. 92/ 0 GRADIENT INTERVAL = -5.00/ 5.00

Q	ALPHA	ALPHAU	BETA	Q1	DP/Q50	DP/Q51	DP/Q52
47.670	-.074	.00000	.00000	48.00000	-.33311	-.48453	.99071
47.690	5.119	5.00000	.00000	47.00000	-.33214	-.27734	.99779
47.570	10.324	10.00000	.00000	48.00000	-.34185	-.06244	1.00482
47.720	15.537	15.00000	.00000	48.00000	-.37281	.16900	.97213
47.780	20.801	20.00000	.00000	48.00000	-.36111	.36361	.96931
	GRADIENT	.00000	.00000	.00000	.00000	.00000	.00000

ARC40X80-462(OA100) OV101 (BNA04C) (16 MAR 82)

REFERENCE DATA

SREF =	2690.0000 SQ.FT.	XMRP =	1076.6800 IN.	XO	
LREF =	474.8100 INCHES	YMRP =	.0000 IN.	YO	
BREF =	936.6800 INCHES	ZMRP =	375.0000 IN.	ZO	
SCALE =	.3600				

PARAMETRIC DATA

BETA =	.000	ELEVON =	.000
AILRON =	.000	BDFLAP =	.000
SPDBRK =	55.000	RUDDER =	15.000

RUN NO. 93/ 0 GRADIENT INTERVAL = -5.00/ 5.00

Q	ALPHA	ALPHAU	BETA	Q1	DP/Q50	DP/Q51	DP/Q52
47.680	-.073	.00000	.00000	47.00000	-.33311	-.46659	.99071
47.710	5.118	5.00000	.00000	47.00000	-.34285	-.27734	.99778
47.630	10.324	10.00000	.00000	48.00000	-.35253	-.05352	.99487
47.710	15.539	15.00000	.00000	48.00000	-.35216	.13342	.99197
47.670	20.802	20.00000	.00000	48.00000	-.37173	.34588	.99898
	GRADIENT	.00000	.00000	.00000	.00000	.00000	.00000

ARC40X80-462(OA100) OV101 (BNA04D) (15 APR 82)

REFERENCE DATA

SREF =	2690.0000 SQ.FT.	XMRP =	1076.6800 IN. XO		
LREF =	474.8100 INCHES	YMRP =	.0000 IN. YO		
BREF =	936.6800 INCHES	ZMRP =	375.0000 IN. ZO		
SCALE =	.3600				

PARAMETRIC DATA

BETA =	.000	ELEVON =	.000
AILRON =	.000	BDFLAP =	.000
SPDBRK =	48.000	RUDDER =	19.500

RUN NO. 94/ 0 GRADIENT INTERVAL = -5.00/ 5.00

Q	ALPHA	ALPHAU	BETA	Q1	DP/Q50	DP/Q51	DP/Q52
47.870	-.072	.00000	.00000	48.00000	-.32237	-.47556	1.00071
47.720	5.119	5.00000	.00000	47.00000	-.34285	-.27734	1.00776
47.720	10.322	10.00000	.00000	47.00000	-.34185	-.05352	.98492
47.720	15.534	15.00000	.00000	48.00000	-.35151	.12452	1.00189
47.660	20.804	20.00000	.00000	47.00000	-.33987	.35475	.96931
	GRADIENT	.00000	.00000	.00000	.00000	.00000	.00000

ARC40X80-462(OA100) OV101 (BNA04E) (16 MAR 82)

REFERENCE DATA

SREF =	2690.0000 SQ.FT.	XMRP =	1076.6800 IN. XO		
LREF =	474.8100 INCHES	YMRP =	.0000 IN. YO		
BREF =	936.6800 INCHES	ZMRP =	375.0000 IN. ZO		
SCALE =	.3600				

PARAMETRIC DATA

BETA =	5.000	ELEVON =	.000
AILRON =	.000	BDFLAP =	.000
SPDBRK =	55.000	RUDDER =	.000

RUN NO. 95/ 0 GRADIENT INTERVAL = -5.00/ 5.00

Q	ALPHA	ALPHAU	BETA	Q1	DP/Q50	DP/Q51	DP/Q52
47.560	-.070	.00000	5.00000	47.50000	-.09571	-.43957	1.00071
47.740	5.125	5.00000	5.00000	48.50000	-.10714	-.25945	.98781
47.800	10.327	10.00000	5.00000	48.50000	-.11751	-.05352	.99487
47.730	15.538	15.00000	5.00000	48.50000	-.12782	.16900	.99197
47.720	20.789	20.00000	5.00000	47.50000	-.12745	.36361	.98909
	GRADIENT	.00000	.00000	.00000	.00000	.00000	.00000

ARC40X80-462(OA100) OV101 (BNA04F) (16 MAR 82)

REFERENCE DATA

SREF =	2690.0000 SQ.FT.	XMRP =	1076.6800 IN. XO		
LREF =	474.8100 INCHES	YMRP =	.0000 IN. YO		
BREF =	936.6800 INCHES	ZMRP =	375.0000 IN. ZO		
SCALE =	.3600				

PARAMETRIC DATA

BETA =	5.000	ELEVON =	.000
AILRON =	.000	BDFLAP =	.000
SPDBRK =	55.000	RUDDER =	5.000

RUN NO. 96/ 0 GRADIENT INTERVAL = -5.00/ 5.00

Q	ALPHA	ALPHAU	BETA	Q1	DP/Q50	DP/Q51	DP/Q52
47.710	-.070	.00000	5.00000	48.50000	-.08596	-.43967	1.00071
47.690	5.123	5.00000	5.00000	47.50000	-.08571	-.27734	.99778
47.710	10.328	10.00000	5.00000	47.50000	-.11751	-.05352	.99487
47.530	20.780	20.00000	5.00000	49.00000	-.09559	.37248	.98909
	GRADIENT	.00000	.00000	.00000	.00000	.00000	.00000

ARC40X80-462(OA100) OV101 (BNA04G) (16 MAR 82)

REFERENCE DATA

SREF =	2690.0000 SQ.FT.	XMRP =	1076.6800 IN. XO		
LREF =	474.8100 INCHES	YMRP =	.0000 IN. YO		
BREF =	936.6800 INCHES	ZMRP =	375.0000 IN. ZO		
SCALE =	.3600				

PARAMETRIC DATA

BETA =	5.000	ELEVON =	.000
AILRON =	.000	BDFLAP =	.000
SPDBRK =	55.000	RUDDER =	10.000

RUN NO. 97/ 0 GRADIENT INTERVAL = -5.00/ 5.00

Q	ALPHA	ALPHAU	BETA	Q1	DP/Q50	DP/Q51	DP/Q52
47.610	-.071	.00000	5.00000	47.50000	-.08596	-.40378	1.00071
47.710	5.122	5.00000	5.00000	48.50000	-.09643	-.26840	.99778
47.700	10.324	10.00000	5.00000	47.50000	-.07478	-.04460	1.00482
47.650	15.535	15.00000	5.00000	47.50000	-.10652	.16900	.99197
47.590	20.784	20.00000	5.00000	47.50000	-.12745	.33701	.98909
	GRADIENT	.00000	.00000	.00000	.00000	.00000	.00000

ARC40X80-462(OA100) OV101 (BNA04H) (16 MAR 82)

REFERENCE DATA

SREF =	2690.0000 SQ.FT.	XMRP =	1076.6800 IN. XO		
LREF =	474.8100 INCHES	YMRP =	.0000 IN. YO		
BREF =	936.6800 INCHES	ZMRP =	375.0000 IN. ZO		
SCALE =	.3600				

PARAMETRIC DATA

BETA =	5.000	ELEVON =	.000
AILRON =	.000	BDFLAP =	.000
SPDBRK =	55.000	RUDDER =	15.000

RUN NO. 98/ 0 GRADIENT INTERVAL = -5.00/ 5.00

Q	ALPHA	ALPHAU	BETA	QI	DP/Q50	DP/Q51	DP/Q52
47.610	-.072	.00000	5.00000	47.50000	-.08596	-.41275	1.00071
47.680	5.123	5.00000	5.00000	47.50000	-.10714	-.24156	1.00776
47.620	10.325	10.00000	5.00000	48.50000	-.09615	-.02676	.99487
47.620	15.537	15.00000	5.00000	49.50000	-.10652	.16010	1.00189
47.590	20.783	20.00000	5.00000	47.50000	-.11683	.37248	.98909
	GRADIENT	.00000	.00000	.00000	.00000	.00000	.00000

ARC40X80-462(OA100) OV101 (BNA04I) (15 APR 82)

REFERENCE DATA

SREF =	2690.0000 SQ.FT.	XMRP =	1076.6800 IN. XO		
LREF =	474.8100 INCHES	YMRP =	.0000 IN. YO		
BREF =	936.6800 INCHES	ZMRP =	375.0000 IN. ZO		
SCALE =	.3600				

PARAMETRIC DATA

BETA =	5.000	ELEVON =	.000
AILRON =	.000	BDFLAP =	.000
SPDBRK =	48.000	RUDDER =	19.500

RUN NO. 99/ 0 GRADIENT INTERVAL = -5.00/ 5.00

Q	ALPHA	ALPHAU	BETA	QI	DP/Q50	DP/Q51	DP/Q52
47.690	-.073	.00000	5.00000	47.50000	-.09671	-.42172	1.01072
47.690	5.122	5.00000	5.00000	48.50000	-.08571	-.24156	.99778
47.750	10.321	10.00000	5.00000	47.50000	-.11751	-.03568	1.01477
47.610	15.534	15.00000	5.00000	47.50000	-.11717	.15121	1.00189
47.600	20.780	20.00000	5.00000	47.50000	-.10621	.36361	.99898
	GRADIENT	.00000	.00000	.00000	.00000	.00000	.00000

ARC40X80-462(0A100) OV101 (BNA04J) (16 MAR 82)

REFERENCE DATA

SREF =	2690.0000 SQ.FT.	XMRP =	1076.6800 IN. XO		
LREF =	474.8100 INCHES	YMRP =	.0000 IN. YO		
BREF =	936.6800 INCHES	ZMRP =	375.0000 IN. ZO		
SCALE =	.3600				

PARAMETRIC DATA

BETA =	.000	ELEVON =	.000
AILRON =	.000	BDFLAP =	.000
SPDBRK =	25.000	RUDDER =	-22.500

RUN NO. 86/ 0 GRADIENT INTERVAL = -5.00/ 5.00

Q	ALPHA	ALPHAU	BETA	Q1	DP/Q50	DP/Q51	DP/Q52
47.740	-.064	.00000	.00000	48.00000	-.34386	-.48453	1.00071
47.680	5.131	5.00000	.00000	48.00000	-.35428	-.27734	.97783
47.780	10.334	10.00000	.00000	48.00000	-.36322	-.09028	1.00482
47.660	15.544	15.00000	.00000	47.00000	-.39411	.10673	.97213
47.710	20.747	20.00000	.00000	48.00000	-.38235	.33701	.96931
	GRADIENT	.00000	.00000	.00000	.00000	.00000	.00000

ARC40X80-462(0A100) OV101 (BNA04K) (16 MAR 82)

REFERENCE DATA

SREF =	2690.0000 SQ.FT.	XMRP =	1076.6800 IN. XO		
LREF =	474.8100 INCHES	YMRP =	.0000 IN. YO		
BREF =	936.6800 INCHES	ZMRP =	375.0000 IN. ZO		
SCALE =	.3600				

PARAMETRIC DATA

BETA =	.000	ELEVON =	.000
AILRON =	.000	BDFLAP =	.000
SPDBRK =	25.000	RUDDER =	-15.000

RUN NO. 87/ 0 GRADIENT INTERVAL = -5.00/ 5.00

Q	ALPHA	ALPHAU	BETA	Q1	DP/Q50	DP/Q51	DP/Q52
47.720	-.058	.00000	.00000	48.00000	-.34386	-.48453	1.00071
47.690	5.133	5.00000	.00000	48.00000	-.36428	-.28629	.97783
47.830	10.338	10.00000	.00000	48.00000	-.38458	-.08920	1.00482
47.580	15.548	15.00000	.00000	48.00000	-.39411	.12452	.96221
47.630	20.754	20.00000	.00000	48.00000	-.36111	.35475	.95942
	GRADIENT	.00000	.00000	.00000	.00000	.00000	.00000

ARC40X80-462(OA100) OV101+NOSE GEAR (BNA04L) (15 APR 82)

REFERENCE DATA

SREF =	2690.0000 SQ.FT.	XMRP =	1076.6800 IN. XO		
LREF =	474.8100 INCHES	YMRP =	.0000 IN. YO		
BREF =	936.6800 INCHES	ZMRP =	375.0000 IN. ZO		
SCALE =	.3600				

PARAMETRIC DATA

BETA =	.000	ELEVON =	.000
AILRON =	.000	BDFLAP =	.000
SPDBRK =	20.000	RUDDER =	3.000

RUN NO. 108/ 0 GRADIENT INTERVAL = -5.00/ 5.00

Q	ALPHA	ALPHAU	BETA	Q1	DP/Q50	DP/Q51	DP/Q52
47.700	-.058	.00000	.00000	47.50000	-.33311	-.47556	.97069
47.560	5.139	5.00000	.00000	47.50000	-.35357	-.26840	.96785
47.530	10.342	10.00000	.00000	47.50000	-.37390	-.06244	.95507
47.540	15.549	15.00000	.00000	47.50000	-.41542	.10673	.95229
47.590	20.797	20.00000	.00000	47.50000	-.37173	.37248	.95942
	GRADIENT	.00000	.00000	.00000	.00000	.00000	.00000

ARC40X80-462(OA100) OV101+NOSE GEAR (BNA04M) (15 APR 82)

REFERENCE DATA

SREF =	2690.0000 SQ.FT.	XMRP =	1076.6800 IN. XO		
LREF =	474.8100 INCHES	YMRP =	.0000 IN. YO		
BREF =	936.6800 INCHES	ZMRP =	375.0000 IN. ZO		
SCALE =	.3600				

PARAMETRIC DATA

BETA =	5.000	ELEVON =	.000
AILRON =	.000	BDFLAP =	.000
SPDBRK =	20.000	RUDDER =	3.000

RUN NO. 109/ 0 GRADIENT INTERVAL = -5.00/ 5.00

Q	ALPHA	ALPHAU	BETA	Q1	DP/Q50	DP/Q51	DP/Q52
47.500	-.051	.00000	5.00000	47.50000	-.07522	-.41275	.99071
47.670	5.143	5.00000	5.00000	47.50000	-.10714	-.23261	.98781
47.630	10.340	10.00000	5.00000	47.50000	-.10683	-.03568	.98492
47.390	15.550	15.00000	5.00000	47.50000	-.09587	.16010	.99197
47.870	20.795	20.00000	5.00000	47.50000	-.12745	.39022	.98909
	GRADIENT	.00000	.00000	.00000	.00000	.00000	.00000

ARC40X80-462(OA100) OV101+NOSE GEAR (BNA04N) (15 APR 82)

REFERENCE DATA

SREF =	2690.0000 SQ.FT.	XMRP =	1076.6800 IN. XO		
LREF =	474.8100 INCHES	YMRP =	.0000 IN. YO		
BREF =	936.6800 INCHES	ZMRP =	375.0000 IN. ZO		
SCALE =	.3600				

PARAMETRIC DATA

BETA =	10.000	ELEVON =	.000
AILRON =	.000	BDFLAP =	.000
SPDBRK =	36.500	RUDDER =	-5.500

RUN NO. 110/ 0 GRADIENT INTERVAL = -5.00/ 5.00

Q	ALPHA	ALPHAU	BETA	Q1	DP/Q50	DP/Q51	DP/Q52
47.530	-.041	.00000	10.00000	47.50000	.21491	-.34994	1.04074
47.710	5.146	5.00000	10.00000	47.50000	.20357	-.20577	1.04767
47.580	10.344	10.00000	10.00000	47.00000	.19229	.01784	1.03466
47.720	15.577	15.00000	10.00000	47.50000	.19173	.25794	1.05141
47.750	20.818	20.00000	10.00000	47.50000	.23366	.43456	1.06822
	GRADIENT	.00000	.00000	.00000	.00000	.00000	.00000

ARC40X80-462(OA100) OV101+NOSE GEAR(FTP OFF) (BNA040) (16 MAR 82)

REFERENCE DATA

SREF =	2690.0000 SQ.FT.	XMRP =	1076.6800 IN. XO		
LREF =	474.8100 INCHES	YMRP =	.0000 IN. YO		
BREF =	936.6800 INCHES	ZMRP =	375.0000 IN. ZO		
SCALE =	.3600				

PARAMETRIC DATA

BETA =	.000	ELEVON =	.000
AILRON =	.000	BDFLAP =	.000
SPDBRK =	25.000	RUDDER =	.000

RUN NO. 111/ 0 GRADIENT INTERVAL = -5.00/ 5.00

Q	ALPHA	ALPHAU	BETA	Q1	DP/Q50	DP/Q51	DP/Q52
47.460	-.059	.00000	.00000	46.50000	-.04298	-.02692	-.03002
47.410	5.135	5.00000	.00000	46.50000	-.04286	-.03579	-.02993
47.690	10.339	10.00000	.00000	47.50000	-.03205	-.02676	-.01990
47.610	15.549	15.00000	.00000	47.50000	-.04261	-.02668	-.01984
47.740	20.797	20.00000	.00000	49.50000	-.02124	-.02661	-.02967
	GRADIENT	.00000	.00000	.00000	.00000	.00000	.00000

ARC40X80-462(OA100) OV101+NOSE GEAR(FTP OFF) (BNA04P) (16 MAR 82)

REFERENCE DATA

SREF = 2690.0000 SQ.FT. XMRP = 1076.6800 IN. XO
LREF = 474.8100 INCHES YMRP = .0000 IN. YO
BREF = 936.6800 INCHES ZMRP = 375.0000 IN. ZO
SCALE = .3600

PARAMETRIC DATA

BETA = 5.000 ELEVON = .000
AILRON = .000 BDFLAP = .000
SPDBRK = 25.000 RUDDER = .000

RUN NO. 112/ 0 GRADIENT INTERVAL = -5.00/ 5.00

Q	ALPHA	ALPHAU	BETA	QI	DP/Q50	DP/Q51	DP/Q52
47.670	-.054	.00000	5.00000	49.50000	-.03224	-.01795	-.02001
47.530	5.142	5.00000	5.00000	49.50000	-.02143	.00000	-.01996
47.610	10.342	10.00000	5.00000	46.50000	-.02137	.00000	-.00995
47.670	15.546	15.00000	5.00000	47.50000	-.02130	.00000	-.00992
47.620	20.797	20.00000	5.00000	47.00000	-.01062	.00887	-.01978
	GRADIENT	.00000	.00000	.00000	.00000	.00000	.00000

ARC40X80-462(OA100) OV101+NOSE GEAR(FTP OFF) (BNA04Q) (16 MAR 82)

REFERENCE DATA

SREF = 2690.0000 SQ.FT. XMRP = 1076.6800 IN. XO
LREF = 474.8100 INCHES YMRP = .0000 IN. YO
BREF = 936.6800 INCHES ZMRP = 375.0000 IN. ZO
SCALE = .3600

PARAMETRIC DATA

BETA = 10.000 ELEVON = .000
AILRON = .000 BDFLAP = .000
SPDBRK = 25.000 RUDDER = .000

RUN NO. 113/ 0 GRADIENT INTERVAL = -5.00/ 5.00

Q	ALPHA	ALPHAU	BETA	QI	DP/Q50	DP/Q51	DP/Q52
47.710	-.041	.00000	10.00000	49.50000	.00000	.00000	.00000
47.530	5.145	5.00000	10.00000	49.50000	.00000	.00000	.00000
47.670	10.345	10.00000	10.00000	49.50000	-.01069	.02676	-.00995
47.560	15.574	15.00000	10.00000	49.50000	.00000	.00889	.00000
47.500	20.818	20.00000	10.00000	46.50000	-.01062	.02661	.00989
	GRADIENT	.00000	.00000	.00000	.00000	.00000	.00000

ARC40X80-462(OA100) OV101(FTP OFF) (BNA04R) (16 MAR 82)

REFERENCE DATA

SREF =	2690.0000 SQ.FT.	XMRP =	1076.6800 IN. XO		
LREF =	474.8100 INCHES	YMRP =	.0000 IN. YO		
BREF =	936.6800 INCHES	ZMRP =	375.0000 IN. ZO		
SCALE =	.3600				

PARAMETRIC DATA

BETA =	.000	ELEVON =	.000
AILRON =	.000	BDFLAP =	.000
SPDBRK =	25.000	RUDDER =	.000

RUN NO. 115/ 0 GRADIENT INTERVAL = -5.00/ 5.00

Q	ALPHA	ALPHAU	BETA	Q1	DP/Q50	DP/Q51	DP/Q52
47.390	-.065	.00000	.00000	47.00000	-.06447	-.05384	-.06004
47.850	5.135	5.00000	.00000	48.00000	-.06428	-.05368	-.02993
47.650	10.337	10.00000	.00000	50.00000	-.05341	-.04460	-.05969
47.250	15.545	15.00000	.00000	47.00000	-.06391	-.04447	-.03968
47.360	20.815	20.00000	.00000	47.00000	-.06372	-.04434	-.04945
	GRADIENT	.00000	.00000	.00000	.00000	.00000	.00000

ARC40X80-462(OA100) OV101(FTP OFF) (BNA04S) (16 MAR 82)

REFERENCE DATA

SREF =	2690.0000 SQ.FT.	XMRP =	1076.6800 IN. XO		
LREF =	474.8100 INCHES	YMRP =	.0000 IN. YO		
BREF =	936.6800 INCHES	ZMRP =	375.0000 IN. ZO		
SCALE =	.3600				

PARAMETRIC DATA

BETA =	.000	ELEVON =	.000
AILRON =	.000	BDFLAP =	.000
SPDBRK =	25.000	RUDDER =	5.000

RUN NO. 114/ 0 GRADIENT INTERVAL = -5.00/ 5.00

Q	ALPHA	ALPHAU	BETA	Q1	DP/Q50	DP/Q51	DP/Q52
47.190	-.061	.00000	.00000	47.00000	-.07522	-.02692	-.04003
47.530	5.135	5.00000	.00000	50.00000	-.03214	-.04473	-.01996
47.510	10.334	10.00000	.00000	47.00000	-.05341	-.05352	-.03979
47.530	15.546	15.00000	.00000	47.00000	-.06391	-.04447	-.04960
47.480	20.816	20.00000	.00000	47.50000	-.07435	-.04434	-.06924
	GRADIENT	.00000	.00000	.00000	.00000	.00000	.00000

ARC40X80-462(OA100) OV101(FTP OFF) (BNA04T) (16 MAR 82)

REFERENCE DATA

SREF =	2690.0000 SQ.FT.	XMRP =	1076.6800 IN. XO		
LREF =	474.8100 INCHES	YMRP =	.0000 IN. YO		
BREF =	936.6800 INCHES	ZMRP =	375.0000 IN. ZO		
SCALE =	.3600				

PARAMETRIC DATA

BETA =	.000	ELEVON =	.000
AILRON =	.000	BDFLAP =	.000
SPDBRK =	25.000	RUDDER =	10.000

RUN NO. 116/ 0 GRADIENT INTERVAL = -5.00/ 5.00

Q	ALPHA	ALPHAU	BETA	Q1	DP/Q50	DP/Q51	DP/Q52
47.580	-.062	.00000	.00000	50.00000	-.07522	-.06281	-.02001
47.680	5.131	5.00000	.00000	48.00000	-.05357	-.04473	-.03991
47.500	10.332	10.00000	.00000	50.00000	-.06410	-.04460	-.04974
47.710	15.543	15.00000	.00000	50.00000	-.05326	-.04447	-.04960
47.370	20.815	20.00000	.00000	47.00000	-.04248	-.04434	-.04945
	GRADIENT	.00000	.00000	.00000	.00000	.00000	.00000

ARC40X80-462(OA100) OV101(FTP OFF) (BNA04U) (16 MAR 82)

REFERENCE DATA

SREF =	2690.0000 SQ.FT.	XMRP =	1076.6800 IN. XO		
LREF =	474.8100 INCHES	YMRP =	.0000 IN. YO		
BREF =	936.6800 INCHES	ZMRP =	375.0000 IN. ZO		
SCALE =	.3600				

PARAMETRIC DATA

BETA =	.000	ELEVON =	.000
AILRON =	.000	BDFLAP =	.000
SPDBRK =	25.000	RUDDER =	15.000

RUN NO. 117/ 0 GRADIENT INTERVAL = -5.00/ 5.00

Q	ALPHA	ALPHAU	BETA	Q1	DP/Q50	DP/Q51	DP/Q52
47.680	-.065	.00000	.00000	48.00000	-.05373	-.05384	-.01001
48.020	5.131	5.00000	.00000	48.00000	-.03214	-.04473	-.03991
47.660	10.329	10.00000	.00000	50.00000	-.04273	-.02676	-.03979
47.470	15.544	15.00000	.00000	50.00000	-.03196	-.04447	-.02976
47.650	20.806	20.00000	.00000	50.00000	-.05310	-.02661	-.03956
	GRADIENT	.00000	.00000	.00000	.00000	.00000	.00000

ARC40X80-462(OA100) OV101(FTP OFF) (BNA04V) (16 MAR 82)

REFERENCE DATA

SREF =	2690.0000 SQ.FT.	XMRP =	1076.6800 IN.	XO	
LREF =	474.8100 INCHES	YMRP =	.0000 IN.	YO	
BREF =	936.6800 INCHES	ZMRP =	375.0000 IN.	ZO	
SCALE =	.3600				

PARAMETRIC DATA

BETA =	.000	ELEVON =	.000
AILRON =	.000	BDFLAP =	.000
SPDBRK =	25.000	RUDDER =	22.500

RUN NO. 118/ 0 GRADIENT INTERVAL = -5.00/ 5.00

Q	ALPHA	ALPHAU	BETA	Q1	DP/Q50	DP/Q51	DP/Q52
47.560	-.067	.00000	.00000	47.00000	-.03224	-.04486	-.02001
47.610	5.125	5.00000	.00000	50.00000	-.03214	-.03579	-.01996
47.540	10.330	10.00000	.00000	50.00000	-.04273	-.02676	-.02985
47.740	15.540	15.00000	.00000	48.00000	-.03196	-.02668	-.03968
47.530	20.806	20.00000	.00000	50.00000	-.03186	-.01774	-.03956
	GRADIENT	.00000	.00000	.00000	.00000	.00000	.00000

ARC40X80-462(OA100) OV101(FTP OFF) (BNA04W) (16 MAR 82)

REFERENCE DATA

SREF =	2690.0000 SQ.FT.	XMRP =	1076.6800 IN.	XO	
LREF =	474.8100 INCHES	YMRP =	.0000 IN.	YO	
BREF =	936.6800 INCHES	ZMRP =	375.0000 IN.	ZO	
SCALE =	.3600				

PARAMETRIC DATA

BETA =	5.000	ELEVON =	.000
AILRON =	.000	BDFLAP =	.000
SPDBRK =	25.000	RUDDER =	.000

RUN NO. 119/ 0 GRADIENT INTERVAL = -5.00/ 5.00

Q	ALPHA	ALPHAU	BETA	Q1	DP/Q50	DP/Q51	DP/Q52
47.790	-.054	.00000	5.00000	47.50000	-.02149	-.03589	-.02001
47.230	5.137	5.00000	5.00000	46.50000	-.02143	-.03579	-.01996
47.200	10.342	10.00000	5.00000	46.50000	-.04273	-.03568	-.02985
47.330	15.548	15.00000	5.00000	46.50000	-.04261	-.01779	-.02976
47.770	20.799	20.00000	5.00000	47.50000	-.04248	-.03547	-.01978
	GRADIENT	.00000	.00000	.00000	.00000	.00000	.00000

ARC40X80-462(OA100) OV101(FTP OFF) (BNA04X) (16 MAR 82)

REFERENCE DATA

SREF =	2690.0000 SQ.FT.	XMRP =	1076.6800 IN.	XO	
LREF =	474.8100 INCHES	YMRP =	.0000 IN.	YO	
BREF =	936.6800 INCHES	ZMRP =	375.0000 IN.	ZO	
SCALE =	.3600				

PARAMETRIC DATA

BETA =	5.000	ELEVON =	.000
AILRON =	.000	BDFLAP =	.000
SPDBRK =	25.000	RUDDER =	5.000

RUN NO. 120/ 0 GRADIENT INTERVAL = -5.00/ 5.00

Q	ALPHA	ALPHAU	BETA	Q1	DP/Q50	DP/Q51	DP/Q52
47.850	-.057	.00000	5.00000	47.50000	-.05373	-.03589	-.03002
47.610	5.138	5.00000	5.00000	47.50000	-.04286	-.03579	-.02993
47.510	10.337	10.00000	5.00000	49.50000	-.05341	-.03568	-.01990
47.350	15.547	15.00000	5.00000	46.50000	-.05326	-.03558	-.02976
47.530	20.801	20.00000	5.00000	48.50000	-.04248	-.02661	-.01978
	GRADIENT	.00000	.00000	.00000	.00000	.00000	.00000

ARC40X80-462(OA100) OV101(FTP OFF) (BNA04Y) (16 MAR 82)

REFERENCE DATA

SREF =	2690.0000 SQ.FT.	XMRP =	1076.6800 IN.	XO	
LREF =	474.8100 INCHES	YMRP =	.0000 IN.	YO	
BREF =	936.6800 INCHES	ZMRP =	375.0000 IN.	ZO	
SCALE =	.3600				

PARAMETRIC DATA

BETA =	5.000	ELEVON =	.000
AILRON =	.000	BDFLAP =	.000
SPDBRK =	25.000	RUDDER =	10.000

RUN NO. 121/ 0 GRADIENT INTERVAL = -5.00/ 5.00

Q	ALPHA	ALPHAU	BETA	Q1	DP/Q50	DP/Q51	DP/Q52
47.500	-.059	.00000	5.00000	49.50000	-.05373	-.03589	-.02001
47.460	5.138	5.00000	5.00000	46.50000	-.03214	-.03579	-.01996
47.440	10.331	10.00000	5.00000	46.50000	-.02137	-.04460	-.02985
47.390	15.542	15.00000	5.00000	46.50000	-.02130	-.02668	-.02976
47.640	20.796	20.00000	5.00000	47.50000	-.03186	-.02661	-.02967
	GRADIENT	.00000	.00000	.00000	.00000	.00000	.00000

ARC40X80-462(OA100) OV101(FTP OFF) (BNA04Z) (16 MAR 82)

REFERENCE DATA

SREF =	2690.0000 SQ.FT.	XMRP =	1076.6800 IN. XO		
LREF =	474.8100 INCHES	YMRP =	.0000 IN. YO		
BREF =	936.6800 INCHES	ZMRP =	375.0000 IN. ZO		
SCALE =	.3600				

PARAMETRIC DATA

BETA =	5.000	ELEVON =	.000
AILRON =	.000	BDFLAP =	.000
SPDBRK =	25.000	RUDDER =	15.000

RUN NO. 122/ 0 GRADIENT INTERVAL = -5.00/ 5.00

Q	ALPHA	ALPHAU	BETA	QI	DP/Q50	DP/Q51	DP/Q52
47.240	-.059	.00000	5.00000	46.50000	-.04298	-.03589	-.02001
47.510	5.131	5.00000	5.00000	49.50000	-.04286	-.03579	-.02993
47.360	10.331	10.00000	5.00000	46.50000	-.02137	-.02676	-.00995
47.540	15.545	15.00000	5.00000	49.50000	-.03196	-.02668	-.00992
47.560	20.799	20.00000	5.00000	47.50000	-.03186	-.01774	-.02967
	GRADIENT	.00000	.00000	.00000	.00000	.00000	.00000

ARC40X80-462(OA100) OV1C1(FTP OFF) (BNA05A) (16 MAR 82)

REFERENCE DATA

SREF =	2690.0000 SQ.FT.	XMRP =	1076.6800 IN. XO		
LREF =	474.8100 INCHES	YMRP =	.0000 IN. YO		
BREF =	936.6800 INCHES	ZMRP =	375.0000 IN. ZO		
SCALE =	.3600				

PARAMETRIC DATA

BETA =	5.000	ELEVON =	.000
AILRON =	.000	BDFLAP =	.000
SPDBRK =	25.000	RUDDER =	22.500

RUN NO. 123/ 0 GRADIENT INTERVAL = -5.00/ 5.00

Q	ALPHA	ALPHAU	BETA	QI	DP/Q50	DP/Q51	DP/Q52
47.490	-.069	.00000	5.00000	47.00000	-.01075	-.00897	.00000
47.630	5.129	5.00000	5.00000	48.00000	-.01071	.00895	-.01996
47.560	10.328	10.00000	5.00000	48.00000	.00000	.00892	.00000
47.570	15.536	15.00000	5.00000	48.00000	.01065	.01779	.00992
47.670	20.792	20.00000	5.00000	47.00000	.02124	.02661	.00989
	GRADIENT	.00000	.00000	.00000	.00000	.00000	.00000

ARC40X80-462(OA100) OV101(FTP OFF) (BNA05B) (16 MAR 82)

REFERENCE DATA

SREF =	2690.0000 SQ.FT.	XMRP =	1076.6800 IN. XO		
LREF =	474.8100 INCHES	YMRP =	.0000 IN. YO		
BREF =	936.6800 INCHES	ZMRP =	375.0000 IN. ZO		
SCALE =	.3600				

PARAMETRIC DATA

BETA =	10.000	ELEVON =	.000
AILRON =	.000	BDFLAP =	.000
SPDBRK =	25.000	RUDDER =	.000

RUN NO. 124/ 0 GRADIENT INTERVAL = -5.00/ 5.00

Q	ALPHA	ALPHAU	BETA	Q1	DP/Q50	DP/Q51	DP/Q52
47.470	-.042	.00000	10.00000	48.00000	.04298	.03589	.03002
47.540	5.146	5.00000	10.00000	47.00000	.03214	.04473	.02993
47.480	10.343	10.00000	10.00000	47.00000	.06410	.05352	.03979
47.480	15.573	15.00000	10.00000	48.00000	.05326	.06226	.03968
47.550	20.820	20.00000	10.00000	48.00000	.06372	.07095	.03956
	GRADIENT	.00000	.00000	.00000	.00000	.00000	.00000

ARC40X80-462(OA100) OV101(FTP OFF) (BNA05C) (16 MAR 82)

REFERENCE DATA

SREF =	2690.0000 SQ.FT.	XMRP =	1076.6800 IN. XO		
LREF =	474.8100 INCHES	YMRP =	.0000 IN. YO		
BREF =	936.6800 INCHES	ZMRP =	375.0000 IN. ZO		
SCALE =	.3600				

PARAMETRIC DATA

BETA =	10.000	ELEVON =	.000
AILRON =	.000	BDFLAP =	.000
SPDBRK =	25.000	RUDDER =	5.000

RUN NO. 125/ 0 GRADIENT INTERVAL = -5.00/ 5.00

Q	ALPHA	ALPHAU	BETA	Q1	DP/Q50	DP/Q51	DP/Q52
47.480	-.044	.00000	10.00000	48.00000	.08596	.08076	.06004
47.500	5.145	5.00000	10.00000	48.00000	.07500	.08052	.05987
47.380	10.345	10.00000	10.00000	47.00000	.07478	.09812	.05969
47.500	15.568	15.00000	10.00000	47.00000	.09587	.09784	.06944
47.380	20.824	20.00000	10.00000	47.00000	.09559	.11529	.06924
	GRADIENT	.00000	.00000	.00000	.00000	.00000	.00000

ARC40X80-462(OA100) OV101(FTP OFF) (BNA05D) (16 MAR 82)

REFERENCE DATA

SREF =	2690.0000 SQ.FT.	XMRP =	1076.6800 IN.	XO	
LREF =	474.8100 INCHES	YMRP =	.0000 IN.	YO	
BREF =	936.6800 INCHES	ZMRP =	375.0000 IN.	ZO	
SCALE =	.3600				

PARAMETRIC DATA

BETA =	10.000	ELEVON =	.000
AILRON =	.000	BDFLAP =	.000
SPDBRK =	25.000	RUDDER =	10.000

RUN NO. 126/ 0 GRADIENT INTERVAL = -5.00/ 5.00

Q	ALPHA	ALPHAU	BETA	Q1	DP/Q50	DP/Q51	DP/Q52
47.500	-.047	.00000	10.00000	47.00000	.12895	.13459	.07005
47.460	5.143	5.00000	10.00000	48.00000	.12857	.12525	.08980
47.430	10.341	10.00000	10.00000	47.00000	.11751	.12489	.08954
47.520	15.569	15.00000	10.00000	47.00000	.12782	.13342	.09920
47.540	20.821	20.00000	10.00000	47.00000	.12745	.14190	.08902
	GRADIENT	.00000	.00000	.00000	.00000	.00000	.00000

ARC40X80-462(OA100) OV101(FTP OFF) (BNA05E) (16 MAR 82)

REFERENCE DATA

SREF =	2690.0000 SQ.FT.	XMRP =	1076.6800 IN.	XO	
LREF =	474.8100 INCHES	YMRP =	.0000 IN.	YO	
BREF =	936.6800 INCHES	ZMRP =	375.0000 IN.	ZO	
SCALE =	.3600				

PARAMETRIC DATA

BETA =	10.000	ELEVON =	.000
AILRON =	.000	BDFLAP =	.000
SPDBRK =	25.000	RUDDER =	15.000

RUN NO. 127/ 0 GRADIENT INTERVAL = -5.00/ 5.00

Q	ALPHA	ALPHAU	BETA	Q1	DP/Q50	DP/Q51	DP/Q52
47.540	-.046	.00000	10.00000	47.00000	.13969	.14357	.11008
47.480	5.142	5.00000	10.00000	47.50000	.13928	.15209	.12971
47.470	10.340	10.00000	10.00000	47.00000	.14956	.15165	.09949
47.540	15.567	15.00000	10.00000	48.00000	.13847	.16010	.09920
47.630	20.816	20.00000	10.00000	48.00000	.15931	.16850	.11869
	GRADIENT	.00000	.00000	.00000	.00000	.00000	.00000

ARC40X80-462(OA100) OV101(FTP OFF) (BNA05F) (16 MAR 82)

REFERENCE DATA

SREF =	2690.0000 SQ.FT.	XMRP =	1076.6800 IN.	XO	
LREF =	474.8100 INCHES	YMRP =	.0000 IN.	YO	
BREF =	936.6800 INCHES	ZMRP =	375.0000 IN.	ZO	
SCALE =	.3600				

PARAMETRIC DATA

BETA =	10.000	ELEVON =	.000
AILRON =	.000	BDFLAP =	.000
SPDBRK =	25.000	RUDDER =	22.500

RUN NO. 128/ 0 GRADIENT INTERVAL = -5.00/ 5.00

Q	ALPHA	ALPHAU	BETA	Q1	DP/Q50	DP/Q51	DP/Q52
47.670	-.050	.00000	10.00000	47.00000	.16118	.16151	.13009
47.620	5.140	5.00000	10.00000	47.00000	.17143	.16999	.11973
47.640	10.336	10.00000	10.00000	47.50000	.16024	.16949	.12933
47.690	15.561	15.00000	10.00000	47.00000	.15978	.16010	.12896
47.600	20.816	20.00000	10.00000	47.00000	.16993	.16850	.11869
	GRADIENT	.00000	.00000	.00000	.00000	.00000	.00000

ARC40X80-462(OA100) OV101(ADS OFF) (BNA05G) (16 MAR 82)

REFERENCE DATA

SREF =	2690.0000 SQ.FT.	XMRP =	1076.6800 IN.	XO	
LREF =	474.8100 INCHES	YMRP =	.0000 IN.	YO	
BREF =	936.6800 INCHES	ZMRP =	375.0000 IN.	ZO	
SCALE =	.3600				

PARAMETRIC DATA

BETA =	.000	ELEVON =	.000
AILRON =	.000	BDFLAP =	.000
SPDBRK =	87.000	RUDDER =	.000

RUN NO. 129/ 0 GRADIENT INTERVAL = -5.00/ 5.00

Q	ALPHA	ALPHAU	BETA	Q1	DP/Q50	DP/Q51	DP/Q52
47.710	-.096	.00000	.00000	47.50000	-.03224	-1.43566	-.02001
47.550	5.092	5.00000	.00000	47.50000	-.02143	-1.23463	-.00998
47.900	10.298	10.00000	.00000	48.00000	-.02137	-1.04369	.00000
47.460	15.507	15.00000	.00000	47.50000	-.01065	-.85387	.00000
47.690	20.773	20.00000	.00000	47.50000	.00000	-.58533	-.00989
	GRADIENT	.00000	.00000	.00000	.00000	.00000	.00000

ARC40X80-462(OA100) OV101(ADS OFF) (BNA05H) (15 APR 82)

REFERENCE DATA

SREF =	2690.0000 SQ.FT.	XMRP =	1076.6800 IN.	XO	
LREF =	474.8100 INCHES	YMRP =	.0000 IN.	YO	
BREF =	936.6800 INCHES	ZMRP =	375.0000 IN.	ZO	
SCALE =	.3600				

PARAMETRIC DATA

BETA =	.000	ELEVON =	.000
AILRON =	.000	BDFLAP =	.000
SPDBRK =	84.500	RUDDER =	3.500

RUN NO. 130/ 0 GRADIENT INTERVAL = -5.00/ 5.00

Q	ALPHA	ALPHAU	BETA	Q1	DP/Q50	DP/Q51	DP/Q52
47.410	-.095	.00000	.00000	47.50000	.01075	-1.40874	.01001
47.580	5.091	5.00000	.00000	47.50000	.02143	-1.24357	.00998
47.720	10.298	10.00000	.00000	48.00000	.01068	-1.04369	.01990
47.330	15.509	15.00000	.00000	47.50000	.02130	-.79161	.00992
47.700	20.773	20.00000	.00000	47.50000	.01062	-.56759	.01978
	GRADIENT	.00000	.00000	.00000	.00000	.00000	.00000

ARC40X80-462(OA100) OV101(ADS OFF) (BNA05I) (15 APR 82)

REFERENCE DATA

SREF =	2690.0000 SQ.FT.	XMRP =	1076.6800 IN.	XO	
LREF =	474.8100 INCHES	YMRP =	.0000 IN.	YO	
BREF =	936.6800 INCHES	ZMRP =	375.0000 IN.	ZO	
SCALE =	.3600				

PARAMETRIC DATA

BETA =	.000	ELEVON =	.000
AILRON =	.000	BDFLAP =	.000
SPDBRK =	80.000	RUDDER =	5.500

RUN NO. 131/ 0 GRADIENT INTERVAL = -5.00/ 5.00

Q	ALPHA	ALPHAU	BETA	Q1	DP/Q50	DP/Q51	DP/Q52
47.640	-.095	.00000	.00000	48.50000	.02149	-1.46257	.04003
47.560	5.091	5.00000	.00000	47.50000	.03214	-1.29725	.03991
47.370	10.296	10.00000	.00000	47.50000	.03205	-1.05261	.01990
47.640	15.503	15.00000	.00000	48.50000	.03196	-.88055	.03968
47.580	20.768	20.00000	.00000	47.50000	.04248	-.66515	.01978
	GRADIENT	.00000	.00000	.00000	.00000	.00000	.00000

ARC40X80-462(OA100) OV101(ADS OFF) (BNA05J) (15 APR 82)

REFERENCE DATA

SREF =	2690.0000 SQ.FT.	XMRP =	1076.6800 IN. XO		
LREF =	474.8100 INCHES	YMRP =	.0000 IN. YO		
BREF =	936.6800 INCHES	ZMRP =	375.0000 IN. ZO		
SCALE =	.3600				

PARAMETRIC DATA

BETA =	.000	ELEVON =	.000
AILRON =	.000	BDFLAP =	.000
SPDBRK =	78.580	RUDDER =	6.000

RUN NO. 132/ 0 GRADIENT INTERVAL = -5.00/ 5.00

Q	ALPHA	ALPHAU	BETA	QI	DP/Q50	DP/Q51	DP/Q52
47.510	-.098	.00000	.00000	47.50000	.04298	-1.51641	.04003
47.620	5.091	5.00000	.00000	47.50000	.04286	-1.34199	.03991
47.760	10.298	10.00000	.00000	47.50000	.04273	-1.15966	.02985
47.780	15.506	15.00000	.00000	48.50000	.05326	-.90724	.02976
47.810	20.777	20.00000	.00000	48.50000	.04248	-.69175	.02967
	GRADIENT	.00000	.00000	.00000	.00000	.00000	.00000

ARC40X80-462(OA100) OV101(ADS OFF) (BNA05K) (16 MAR 82)

REFERENCE DATA

SREF =	2690.0000 SQ.FT.	XMRP =	1076.6800 IN. XO		
LREF =	474.8100 INCHES	YMRP =	.0000 IN. YO		
BREF =	936.6800 INCHES	ZMRP =	375.0000 IN. ZO		
SCALE =	.3600				

PARAMETRIC DATA

BETA =	5.000	ELEVON =	.000
AILRON =	.000	BDFLAP =	.000
SPDBRK =	87.000	RUDDER =	.000

RUN NO. 133/ 0 GRADIENT INTERVAL = -5.00/ 5.00

Q	ALPHA	ALPHAU	BETA	QI	DP/Q50	DP/Q51	DP/Q52
47.730	-.095	.00000	5.00000	48.00000	.04298	-1.57922	.03002
47.660	5.099	5.00000	5.00000	47.50000	.03214	-1.35093	.01996
47.700	10.298	10.00000	5.00000	47.50000	.03205	-1.19534	.01990
47.620	15.505	15.00000	5.00000	47.50000	.04261	-1.02286	.01984
47.490	20.756	20.00000	5.00000	47.50000	.03186	-.71836	.02967
	GRADIENT	.00000	.00000	.00000	.00000	.00000	.00000

ARC40X80-462(OA100) OV101(ADS OFF) (BNA05L) (15 APR 82)

REFERENCE DATA

SREF =	2690.0000 SQ.FT.	XMRP =	1076.6800 IN. XO		
LREF =	474.8100 INCHES	YMRP =	.0000 IN. YO		
BREF =	936.6800 INCHES	ZMRP =	375.0000 IN. ZO		
SCALE =	.3600				

PARAMETRIC DATA

BETA =	5.000	ELEVON =	.000
AILRON =	.000	BDFLAP =	.000
SPDBRK =	84.500	RUDDER =	3.500

RUN NO. 134/ 0 GRADIENT INTERVAL = -5.00/ 5.00

Q	ALPHA	ALPHAU	BETA	Q1	DP/Q50	DP/Q51	DP/Q52
47.590	-.091	.00000	5.00000	48.50000	.04298	-1.63306	.02001
47.640	5.094	5.00000	5.00000	47.50000	.02143	-1.44040	.00998
47.660	10.299	10.00000	5.00000	47.50000	.02137	-1.24886	.01990
47.490	15.508	15.00000	5.00000	47.50000	.04261	-1.02286	.00992
47.850	20.751	20.00000	5.00000	48.50000	.02124	-.83355	.00989
	GRADIENT	.00000	.00000	.00000	.00000	.00000	.00000

ARC40X80-462(OA100) OV101(ADS OFF) (BNA05M) (15 APR 82)

REFERENCE DATA

SREF =	2690.0000 SQ.FT.	XMRP =	1076.6800 IN. XO		
LREF =	474.8100 INCHES	YMRP =	.0000 IN. YO		
BREF =	936.6800 INCHES	ZMRP =	375.0000 IN. ZO		
SCALE =	.3600				

PARAMETRIC DATA

BETA =	5.000	ELEVON =	.000
AILRON =	.000	BDFLAP =	.000
SPDBRK =	80.000	RUDDER =	5.500

RUN NO. 135/ 0 GRADIENT INTERVAL = -5.00/ 5.00

Q	ALPHA	ALPHAU	BETA	Q1	DP/Q50	DP/Q51	DP/Q52
47.760	-.097	.00000	5.00000	48.00000	.01075	-1.72279	.00000
47.690	5.094	5.00000	5.00000	47.50000	.02143	-1.51197	.00998
47.450	10.299	10.00000	5.00000	47.50000	.00000	-1.32023	.00000
47.590	15.507	15.00000	5.00000	47.50000	.00000	-1.10291	.00000
47.670	20.759	20.00000	5.00000	47.50000	-.01062	-.91347	-.00989
	GRADIENT	.00000	.00000	.00000	.00000	.00000	.00000

ARC40X80-462(OA100) OV101(ADS OFF) (BNA05N) (15 APR 82)

REFERENCE DATA

SREF =	2690.0000 SQ.FT.	XMRP =	1076.6800 IN.	XO	
LREF =	474.8100 INCHES	YMRP =	.0000 IN.	YO	
BREF =	936.6800 INCHES	ZMRP =	375.0000 IN.	ZO	
SCALE =	.3600				

PARAMETRIC DATA

BETA =	5.000	ELEVON =	.000
AILRON =	.000	BDFLAP =	.000
SPDBRK =	78.500	RUDDER =	6.000

RUN NO. 136/ 0 GRADIENT INTERVAL = -5.00/ 5.00

Q	ALPHA	ALPHAU	BETA	QI	DP/Q50	DP/Q51	DP/Q52
47.760	-.094	.00000	5.00000	47.50000	-.01075	-1.76765	.00000
47.380	5.095	5.00000	5.00000	47.50000	-.02143	-1.59249	-.00998
47.450	10.299	10.00000	5.00000	47.50000	-.03205	-1.36483	-.02985
47.670	15.508	15.00000	5.00000	47.50000	-.01065	-1.19186	-.04960
47.530	20.755	20.00000	5.00000	47.50000	-.04248	-.96668	-.02967
	GRADIENT	.00000	.00000	.00000	.00000	.00000	.00000

ARC40X80-462(OA100) OV101(ADS OFF) (BNA050) (16 MAR 82)

REFERENCE DATA

SREF =	2690.0000 SQ.FT.	XMRP =	1076.6800 IN.	XO	
LREF =	474.8100 INCHES	YMRP =	.0000 IN.	YO	
BREF =	936.6800 INCHES	ZMRP =	375.0000 IN.	ZO	
SCALE =	.3600				

PARAMETRIC DATA

BETA =	10.000	ELEVON =	.000
AILRON =	.000	BDFLAP =	.000
SPDBRK =	87.000	RUDDER =	.000

RUN NO. 137/ 0 GRADIENT INTERVAL = -5.00/ 5.00

Q	ALPHA	ALPHAU	BETA	QI	DP/Q50	DP/Q51	DP/Q52
47.810	-.077	.00000	10.00000	48.50000	-.02149	-1.43566	-.03002
47.530	5.108	5.00000	10.00000	48.00000	-.04286	-1.24357	-.01996
47.750	10.306	10.00000	10.00000	48.00000	-.04273	-.98125	-.01990
47.630	15.529	15.00000	10.00000	48.00000	-.04261	-.84498	-.03968
47.330	20.781	20.00000	10.00000	48.00000	-.03186	-.60307	-.04945
	GRADIENT	.00000	.00000	.00000	.00000	.00000	.00000

ARC40X80-462(OA100) OV101(ADS OFF) (BNA05P) (15 APR 82)

REFERENCE DATA

SREF =	2690.0000 SQ.FT.	XMRP =	1076.6800 IN.	XO	
LREF =	474.8100 INCHES	YMRP =	.0000 IN.	YO	
BREF =	936.6800 INCHES	ZMRP =	375.0000 IN.	ZO	
SCALE =	.3600				

PARAMETRIC DATA

BETA =	10.000	ELEVON =	.000
AILRON =	.000	BDFLAP =	.000
SPDBRK =	84.500	RUDDER =	3.500

RUN NO. 138/ 0 GRADIENT INTERVAL = -5.00/ 5.00

Q	ALPHA	ALPHAU	BETA	QI	DP/Q50	DP/Q51	DP/Q52
47.520	-.078	.00000	10.00000	48.50000	-.06447	-1.99197	-.03002
47.860	5.110	5.00000	10.00000	48.50000	-.06428	-1.30620	-.03991
47.790	10.307	10.00000	10.00000	48.50000	-.06410	-1.04369	-.05969
47.490	15.529	15.00000	10.00000	48.00000	-.06391	-.85387	-.05952
47.890	20.777	20.00000	10.00000	49.00000	-.05310	-.63854	-.05935
	GRADIENT	.00000	.00000	.00000	.00000	.00000	.00000

ARC40X80-462(OA100) OV101(ADS OFF) (BNA05Q) (15 APR 82)

REFERENCE DATA

SREF =	2690.0000 SQ.FT.	XMRP =	1076.6800 IN.	XO	
LREF =	474.8100 INCHES	YMRP =	.0000 IN.	YO	
BREF =	936.6800 INCHES	ZMRP =	375.0000 IN.	ZO	
SCALE =	.3600				

PARAMETRIC DATA

BETA =	10.000	ELEVON =	.000
AILRON =	.000	BDFLAP =	.000
SPDBRK =	80.000	RUDDER =	5.500

RUN NO. 139/ 0 GRADIENT INTERVAL = -5.00/ 5.00

Q	ALPHA	ALPHAU	BETA	QI	DP/Q50	DP/Q51	DP/Q52
47.450	-.080	.00000	10.00000	49.00000	-.06447	-1.49847	-.07005
47.430	5.109	5.00000	10.00000	49.50000	-.06428	-1.27041	-.06984
47.410	10.307	10.00000	10.00000	48.00000	-.06410	-1.06153	-.06964
47.370	15.529	15.00000	10.00000	48.00000	-.08521	-.89834	-.06944
47.210	20.780	20.00000	10.00000	48.00000	-.10621	-.70949	-.07913
	GRADIENT	.00000	.00000	.00000	.00000	.00000	.00000

ARC40X80-462(OA100) OV101(ADS OFF) (BNA05R) (15 APR 82)

REFERENCE DATA

SREF = 2690.0000 SQ.FT. XMRP = 1076.6800 IN. XO
LREF = 474.8100 INCHES YMRP = .0000 IN. YO
BREF = 936.6800 INCHES ZMRP = 375.0000 IN. ZO
SCALE = .3600

PARAMETRIC DATA

BETA = 10.000 ELEVON = .000
AILRON = .000 BDFLAP = .000
SPDBRK = 78.500 RUDDER = 6.000

RUN NO. 140/ 0 GRADIENT INTERVAL = -5.00/ 5.00

Q	ALPHA	ALPHAU	BETA	Q1	DP/Q50	DP/Q51	DP/Q52
47.560	-.078	.00000	10.00000	48.00000	-.08596	-1.53436	-.10007
47.130	5.110	5.00000	10.00000	48.00000	-.09643	-1.33304	-.09978
47.600	10.309	10.00000	10.00000	48.00000	-.11751	-1.15966	-.08954
47.540	15.526	15.00000	10.00000	48.00000	-.12782	-.95171	-.09920
47.910	20.778	20.00000	10.00000	49.00000	-.12745	-.72723	-.09891
	GRADIENT	.00000	.00000	.00000	.00000	.00000	.00000

ARC40X80-462(OA100) OV101(ADS OFF) (BNA05S) (15 APR 82)

REFERENCE DATA

SREF = 2690.0000 SQ.FT. XMRP = 1076.6800 IN. XO
LREF = 474.8100 INCHES YMRP = .0000 IN. YO
BREF = 936.6800 INCHES ZMRP = 375.0000 IN. ZO
SCALE = .3600

PARAMETRIC DATA

ALPHA = 10.000 BETA = .000
ELEVON = .000 AILRON = .000
BDFLAP = .000 SPDBRK = 25.000

RUN NO. 141/ 0 GRADIENT INTERVAL = -5.00/ 5.00

Q	RUDDER	ALPHAU	BETA	Q1	DP/Q50	DP/Q51	DP/Q52	ALPHA
47.240	-22.907	10.00000	.00000	48.00000	-.13888	-1.22210	-.11938	10.32800
47.740	-15.162	10.00000	.00000	48.00000	-.14956	-1.17750	-.10944	10.33170
47.530	-10.072	10.00000	.00000	48.00000	-.14956	-1.21318	-.13928	10.33640
47.600	-5.054	10.00000	.00000	48.00000	-.14956	-1.24886	-.11938	10.33540
47.530	.043	10.00000	.00000	49.00000	-.14956	-1.20426	-.12933	10.33540
47.640	5.082	10.00000	.00000	48.00000	-.16024	-1.25778	-.12933	10.33550
47.570	10.140	10.00000	.00000	48.50000	-.16024	-1.22210	-.12933	10.33360
47.570	14.990	10.00000	.00000	48.00000	-.17093	-1.23994	-.13928	10.33310
47.430	22.915	10.00000	.00000	48.00000	-.17093	-1.23994	-.13928	10.32910
	GRADIENT	.00000	.00000	.00000	.00000	.00000	.00000	.00000

ARC40X80-462(OA100) OV101(ADS OFF) (BNA05T) (15 APR 82)

REFERENCE DATA

SREF	=	2690.0000	SQ.FT.	XMRP	=	1076.6800	IN. XO	BETA	=	5.000	ELEVON = .000
LREF	=	474.8100	INCHES	YMRP	=	.0000	IN. YO	AILRON	=	.000	BDFLAP = .000
BREF	=	936.6800	INCHES	ZMRP	=	375.0000	IN. ZO	SPDBRK	=	.000	RUDDER = .000
SCALE	=	.3600									

PARAMETRIC DATA

RUN NO. 142/ 0 GRADIENT INTERVAL = -5.00/ 5.00

Q	ALPHA	ALPHAU	BETA	QI	DP/Q50	DP/Q51	DP/Q52
47.510	5.150	5.00000	5.00000	.00000	-.05336	.98023	-.04969
47.650	10.351	10.00000	5.00000	2.00000	-.05320	2.04360	-.14864
47.420	15.562	15.00000	5.00000	.00000	.05305	3.10082	-.14821
47.540	20.810	20.00000	5.00000	2.00000	-.05290	4.06357	-.14778
	GRADIENT	.00000	.00000	.00000	.00000	.00000	.00000

ARC40X80-462(OA100) OV101(ADS OFF) (BNA05U) (16 MAR 82)

REFERENCE DATA

SREF	=	2690.0000	SQ.FT.	XMRP	=	1076.6800	IN. XO	BETA	=	10.000	ELEVON = .000
LREF	=	474.8100	INCHES	YMRP	=	.0000	IN. YO	AILRON	=	.000	BDFLAP = .000
BREF	=	936.6800	INCHES	ZMRP	=	375.0000	IN. ZO	SPDBRK	=	.000	RUDDER = .000
SCALE	=	.3600									

PARAMETRIC DATA

RUN NO. 143/ 0 GRADIENT INTERVAL = -5.00/ 5.00

Q	ALPHA	ALPHAU	BETA	QI	DP/Q50	DP/Q51	DP/Q52
47.620	-.035	.00000	10.00000	2.00000	-.10703	.00000	-.19935
47.660	5.154	5.00000	10.00000	.00000	-.05336	.93567	-.24846
47.870	10.354	10.00000	10.00000	.00000	-.05320	2.08803	-.09909
47.280	15.576	15.00000	10.00000	-1.00000	-.05305	3.10082	-.14821
47.740	20.824	20.00000	10.00000	.00000	-.05290	3.97523	-.09852
	GRADIENT	.00000	.00000	.00000	.00000	.00000	.00000

ARC40X80-462(OA100) OV101(ADS OFF) (BNA05V) (16 MAR 82)

REFERENCE DATA

SREF =	2690.0000 SQ.FT.	XMRP =	1076.6800 IN. XO		
LREF =	474.8100 INCHES	YMRP =	.0000 IN. YO		
BREF =	936.6800 INCHES	ZMRP =	375.0000 IN. ZO		
SCALE =	.3600				

PARAMETRIC DATA

BETA =	10.000	ELEVON =	.000
AILRON =	.000	BDFLAP =	.000
SPDBRK =	25.000	RUDDER =	.000

RUN NO. 144/ 0 GRADIENT INTERVAL = -5.00/ 5.00

Q	ALPHA	ALPHAU	BETA	QI	DP/Q50	DP/Q51	DP/Q52
47.650	-.044	.00000	10.00000	.00000	-.10703	.13408	-.19935
47.530	5.147	5.00000	10.00000	.00000	-.10672	.89112	-.14907
47.640	10.349	10.00000	10.00000	.00000	-.10641	2.08803	-.19819
47.920	15.574	15.00000	10.00000	.00000	-.10610	3.18941	-.24702
47.210	20.816	20.00000	10.00000	2.00000	-.10579	4.01940	-.29556
	GRADIENT	.00000	.00000	.00000	.00000	.00000	.00000

ARC40X80-462(OA100) OV101+NOSE GEAR(ADS OFF) (BNA05W) (16 MAR 82)

REFERENCE DATA

SREF =	2690.0000 SQ.FT.	XMRP =	1076.6800 IN. XO		
LREF =	474.8100 INCHES	YMRP =	.0000 IN. YO		
BREF =	936.6800 INCHES	ZMRP =	375.0000 IN. ZO		
SCALE =	.3600				

PARAMETRIC DATA

BETA =	.000	ELEVON =	.000
AILRON =	.000	BDFLAP =	.000
SPDBRK =	87.000	RUDDER =	.000

RUN NO. 145/ 0 GRADIENT INTERVAL = -5.00/ 5.00

Q	ALPHA	ALPHAU	BETA	QI	DP/Q50	DP/Q51	DP/Q52
47.450	-.089	.00000	.00000	47.00000	-.05373	-1.43566	-.07005
47.710	5.097	5.00000	.00000	47.00000	-.08571	-1.17200	-.06984
47.790	10.302	10.00000	.00000	47.00000	-.10683	-.96341	-.08954
47.640	15.510	15.00000	.00000	50.00000	-.10652	-.72045	-.08928
47.680	20.754	20.00000	.00000	50.00000	-.10621	-.45230	-.09891
	GRADIENT	.00000	.00000	.00000	.00000	.00000	.00000

ARC40X80-462(0A100) OV101+NOSE GEAR(ADS OFF) (BNA05X) (16 MAR 82)

REFERENCE DATA

SREF = 2690.0000 SQ.FT. XMRP = 1076.6800 IN. XO
LREF = 474.8100 INCHES YMRP = .0000 IN. YO
BREF = 936.6800 INCHES ZMRP = 375.0000 IN. ZO
SCALE = .3600

PARAMETRIC DATA

BETA = 5.000 ELEVON = .000
AILRON = .000 BDFLAP = .000
SPDBRK = 87.000 RUDDER = .000

RUN NO. 146/ 0 GRADIENT INTERVAL = -5.00/ 5.00

Q	ALPHA	ALPHAU	BETA	Q1	DP/Q50	DP/Q51	DP/Q52
47.630	-.087	.00000	5.00000	47.50000	-.11820	-1.29209	-.10007
47.570	5.102	5.00000	5.00000	50.00000	-.07500	-1.06464	-.07982
47.600	10.304	10.00000	5.00000	50.00000	-.10683	-.83852	-.07959
47.600	15.506	15.00000	5.00000	47.00000	-.07456	-.61372	-.06944
47.810	20.751	20.00000	5.00000	50.00000	-.10621	-.46117	-.08902
	GRADIENT	.00000	.00000	.00000	.00000	.00000	.00000

ARC40X80-462(0A100) OV101+NOSE GEAR(ADS OFF) (BNA05Y) (16 MAR 82)

REFERENCE DATA

SREF = 2690.0000 SQ.FT. XMRP = 1076.6800 IN. XO
LREF = 474.8100 INCHES YMRP = .0000 IN. YO
BREF = 936.6800 INCHES ZMRP = 375.0000 IN. ZO
SCALE = .3600

PARAMETRIC DATA

BETA = 10.000 ELEVON = .000
AILRON = .000 BDFLAP = .000
SPDBRK = 87.000 RUDDER = .000

RUN NO. 147/ 0 GRADIENT INTERVAL = -5.00/ 5.00

Q	ALPHA	ALPHAU	BETA	Q1	DP/Q50	DP/Q51	DP/Q52
47.690	-.073	.00000	10.00000	48.00000	-.06447	-1.17544	-.07005
47.470	5.110	5.00000	10.00000	50.00000	-.07500	-1.01991	-.05987
47.620	10.303	10.00000	10.00000	48.00000	-.06410	-.79392	-.06964
47.590	15.537	15.00000	10.00000	47.00000	-.05326	-.55146	-.06944
47.460	20.779	20.00000	10.00000	50.00000	-.06372	-.35475	-.06924
	GRADIENT	.00000	.00000	.00000	.00000	.00000	.00000

ARC40X80-462(OA100) OV101+NOSE GEAR(FTP,ADS OFF) (BNA05Z) (16 MAR 82)

REFERENCE DATA

SREF =	2690.0000 SQ.FT.	XMRP =	1076.6800 IN.	XO	
LREF =	474.8100 INCHES	YMRP =	.0000 IN.	YO	
BREF =	936.6800 INCHES	ZMRP =	375.0000 IN.	ZO	
SCALE =	.3600				

PARAMETRIC DATA

BETA =	.000	ELEVON =	.000
AILRON =	.000	BDFLAP =	.000
SPDBRK =	.000	RUDDER =	.000

RUN NO. 148/ 0 GRADIENT INTERVAL = -5.00/ 5.00

Q	ALPHA	ALPHAU	BETA	QI	DP/Q50	DP/Q51	DP/Q52
47.710	-.050	.00000	.00000	50.00000	-.06447	-.04486	-.04003
47.510	5.148	5.00000	.00000	50.00000	-.07500	-.05368	-.04989
47.730	10.347	10.00000	.00000	48.00000	-.05341	-.07136	-.03979
47.530	15.559	15.00000	.00000	47.50000	-.05326	-.06226	-.04960
47.600	20.802	20.00000	.00000	47.50000	-.09559	-.04434	-.04945
	GRADIENT	.00000	.00000	.00000	.00000	.00000	.00000

ARC40X80-462(OA100) OV101+NOSE GEAR(FTP,ADS OFF) (BNA06A) (16 MAR 82)

REFERENCE DATA

SREF =	2690.0000 SQ.FT.	XMRP =	1076.6800 IN.	XO	
LREF =	474.8100 INCHES	YMRP =	.0000 IN.	YO	
BREF =	936.6800 INCHES	ZMRP =	375.0000 IN.	ZO	
SCALE =	.3600				

PARAMETRIC DATA

BETA =	5.000	ELEVON =	.000
AILRON =	.000	BDFLAP =	.000
SPDBRK =	.000	RUDDER =	.000

RUN NO. 149/ 0 GRADIENT INTERVAL = -5.00/ 5.00

Q	ALPHA	ALPHAU	BETA	QI	DP/Q50	DP/Q51	DP/Q52
47.470	-.047	.00000	5.00000	48.00000	-.01075	-.00897	-.02001
47.600	5.147	5.00000	5.00000	48.00000	.00000	.00000	-.01996
47.470	10.342	10.00000	5.00000	48.00000	.01068	.00892	-.00995
47.480	15.552	15.00000	5.00000	48.00000	.00000	.00889	-.00992
47.520	20.802	20.00000	5.00000	48.50000	.00000	.02661	.00000
	GRADIENT	.00000	.00000	.00000	.00000	.00000	.00000

ARC40X80-462(OA100) OV101+NOSE GEAR(FTP,ADS OFF) (BNA06B) (16 MAR 82)

REFERENCE DATA

SREF =	2690.0000 SQ.FT.	XMRP =	1076.6800 IN. XO		
LREF =	474.8100 INCHES	YMRP =	.0000 IN. YO		
BREF =	936.6800 INCHES	ZMRP =	375.0000 IN. ZO		
SCALE =	.3600				

PARAMETRIC DATA

BETA =	10.000	ELEVON =	.000
AILRON =	.000	BDFLAP =	.000
SPDBRK =	.000	RUDDER =	.000

RUN NO. 150/ 0 GRADIENT INTERVAL = -5.00/ 5.00

Q	ALPHA	ALPHAU	BETA	Q1	DP/Q50	DP/Q51	DP/Q52
47.500	-.037	.00000	10.00000	48.50000	.04298	.04486	.01001
47.210	5.149	5.00000	10.00000	47.50000	.06428	.05368	.01995
47.360	10.344	10.00000	10.00000	48.00000	.05341	.07136	.02985
47.620	15.575	15.00000	10.00000	48.50000	.07456	.08894	.02976
47.570	20.823	20.00000	10.00000	48.50000	.08497	.09756	.02967
	GRADIENT	.00000	.00000	.00000	.00000	.00000	.00000

ARC40X80-462(OA100) OV101(FTP AND ADS OFF) (BNA06C) (16 MAR 82)

REFERENCE DATA

SREF =	2690.0000 SQ.FT.	XMRP =	1076.6800 IN. XO		
LREF =	474.8100 INCHES	YMRP =	.0000 IN. YO		
BREF =	936.6800 INCHES	ZMRP =	375.0000 IN. ZO		
SCALE =	.3600				

PARAMETRIC DATA

BETA =	.000	ELEVON =	.000
AILRON =	.000	BDFLAP =	.000
SPDBRK =	.000	RUDDER =	.000

RUN NO. 151/ 0 GRADIENT INTERVAL = -5.00/ 5.00

Q	ALPHA	ALPHAU	BETA	Q1	DP/Q50	DP/Q51	DP/Q52
47.680	-.056	.00000	.00000	48.00000	-.02149	-.01795	-.02001
47.610	5.140	5.00000	.00000	48.50000	-.02143	-.02684	-.01996
47.670	10.340	10.00000	.00000	48.50000	-.01068	-.00892	-.01990
47.610	15.551	15.00000	.00000	48.00000	-.01065	-.00889	-.01984
47.690	20.824	20.00000	.00000	48.00000	.01062	.00000	-.01978
	GRADIENT	.00000	.00000	.00000	.00000	.00000	.00000

ARC40X80-462(OA100) OV101(FTP AND ADS OFF) (BNA06D) (16 MAR 82)

REFERENCE DATA

SREF =	2690.0000 SQ.FT.	XMRP =	1076.6800 IN.	XO	
LREF =	474.8100 INCHES	YMRP =	.0000 IN.	YO	
BREF =	936.6800 INCHES	ZMRP =	375.0000 IN.	ZO	
SCALE =	.3600				

PARAMETRIC DATA

BETA =	.000	ELEVON =	.000
AILRON =	.000	BDFLAP =	.000
SPDBRK =	.000	RUDDER =	5.000

RUN NO. 152/ 0 GRADIENT INTERVAL = -5.00/ 5.00

Q	ALPHA	ALPHAU	BETA	Q1	DP/Q50	DP/Q51	DP/Q52
47.560	-.057	.00000	.00000	48.50000	.01075	.00000	.00000
47.720	5.140	5.00000	.00000	48.50000	.02143	.00000	-.00998
47.480	10.340	10.00000	.00000	48.00000	.01068	.00892	.00995
47.580	15.556	15.00000	.00000	48.00000	.03196	.02668	.00000
47.660	20.824	20.00000	.00000	48.00000	.03186	.01774	-.00989
	GRADIENT	.00000	.00000	.00000	.00000	.00000	.00000

ARC40X80-462(OA100) OV101(FTP AND ADS OFF) (BNA06E) (16 MAR 82)

REFERENCE DATA

SREF =	2690.0000 SQ.FT.	XMRP =	1076.6800 IN.	XO	
LREF =	474.8100 INCHES	YMRP =	.0000 IN.	YO	
BREF =	936.6800 INCHES	ZMRP =	375.0000 IN.	ZO	
SCALE =	.3600				

PARAMETRIC DATA

BETA =	.000	ELEVON =	.000
AILRON =	.000	BDFLAP =	.000
SPDBRK =	.000	RUDDER =	10.000

RUN NO. 153/ 0 GRADIENT INTERVAL = -5.00/ 5.00

Q	ALPHA	ALPHAU	BETA	Q1	DP/Q50	DP/Q51	DP/Q52
47.620	-.054	.00000	.00000	48.00000	-.03224	-.02692	-.02001
47.720	5.139	5.00000	.00000	48.00000	-.02143	-.02684	-.01996
47.540	10.338	10.00000	.00000	48.00000	-.02137	-.01784	-.01990
47.750	15.553	15.00000	.00000	48.00000	-.02130	-.01779	-.01984
47.610	20.822	20.00000	.00000	48.00000	-.01062	-.00887	-.00989
	GRADIENT	.00000	.00000	.00000	.00000	.00000	.00000

ARC40X80-462(OA100) OV101(FTP AND ADS OFF) (BNA06F) (16 MAR 82)

REFERENCE DATA

SREF = 2690.0000 SQ.FT. XMRP = 1076.6800 IN. XO
LREF = 474.8100 INCHES YMRP = .0000 IN. YO
BREF = 936.6800 INCHES ZMRP = 375.0000 IN. ZO
SCALE = .3600

PARAMETRIC DATA

BETA = .000 ELEVON = .000
AILRON = .000 BDFLAP = .000
SPDBRK = .000 RUDDER = 15.000

RUN NO. 154/ 0 GRADIENT INTERVAL = -5.00/ 5.00

Q	ALPHA	ALPHAU	BETA	Q1	DP/Q50	DP/Q51	DP/Q52
47.520	-.056	.00000	.00000	48.00000	-.01075	.00000	.00000
47.620	5.138	5.00000	.00000	48.00000	-.02143	.00895	.00000
47.750	10.338	10.00000	.00000	48.50000	.00000	.00892	.00000
47.570	15.550	15.00000	.00000	48.00000	.00000	.00889	.00000
47.610	20.822	20.00000	.00000	48.00000	.01062	.00887	.00989
	GRADIENT	.00000	.00000	.00000	.00000	.00000	.00000

ARC40X80-462(OA100) OV101(FTP AND ADS OFF) (BNA06G) (15 APR 82)

REFERENCE DATA

SREF = 2690.0000 SQ.FT. XMRP = 1076.6800 IN. XO
LREF = 474.8100 INCHES YMRP = .0000 IN. YO
BREF = 936.6800 INCHES ZMRP = 375.0000 IN. ZO
SCALE = .3600

PARAMETRIC DATA

BETA = .000 ELEVON = .000
AILRON = .000 BDFLAP = .000
SPDBRK = .000 RUDDER = 20.500

RUN NO. 155/ 0 GRADIENT INTERVAL = -5.00/ 5.00

Q	ALPHA	ALPHAU	BETA	Q1	DP/Q50	DP/Q51	DP/Q52
47.510	-.061	.00000	.00000	48.00000	.01075	.00000	.02001
47.600	5.135	5.00000	.00000	48.00000	.03214	.01789	.01996
47.580	10.335	10.00000	.00000	48.00000	.03205	.01784	.00995
47.680	15.550	15.00000	.00000	48.00000	.01065	.00000	.00992
47.440	20.819	20.00000	.00000	47.50000	.03186	.01774	.00989
	GRADIENT	.00000	.00000	.00000	.00000	.00000	.00000

ARC40X80-462(OA100) OV101(FTP AND ADS OFF) (BNA06H) (16 MAR 82)

REFERENCE DATA

SREF =	2690.0000 SQ.FT.	XMRP =	1076.6800 IN.	XO	
LREF =	474.8100 INCHES	YMRP =	.0000 IN.	YO	
BREF =	936.6800 INCHES	ZMRP =	375.0000 IN.	ZO	
SCALE =	.3600				

PARAMETRIC DATA

BETA =	5.000	ELEVON =	.000
AILRON =	.000	BDFLAP =	.000
SPDBRK =	.000	RUDDER =	.000

RUN NO. 156/ 0 GRADIENT INTERVAL = -5.00/ 5.00

Q	ALPHA	ALPHAU	BETA	Q1	DP/Q50	DP/Q51	DP/Q52
47.640	-.047	.00000	5.00000	48.00000	.01075	.02692	.02001
47.700	5.147	5.00000	5.00000	48.00000	.02143	.00000	.01996
47.530	10.343	10.00000	5.00000	48.00000	.02137	.01784	.01990
47.460	15.556	15.00000	5.00000	48.00000	.03196	.01779	.01984
47.670	20.810	20.00000	5.00000	48.00000	.01062	.03547	.01978
	GRADIENT	.00000	.00000	.00000	.00000	.00000	.00000

ARC40X80-462(OA100) OV101(FTP AND ADS OFF) (BNA06I) (16 MAR 82)

REFERENCE DATA

SREF =	2690.0000 SQ.FT.	XMRP =	1076.6800 IN.	XO	
LREF =	474.8100 INCHES	YMRP =	.0000 IN.	YO	
BREF =	936.6800 INCHES	ZMRP =	375.0000 IN.	ZO	
SCALE =	.3600				

PARAMETRIC DATA

BETA =	5.000	ELEVON =	.000
AILRON =	.000	BDFLAP =	.000
SPDBRK =	.000	RUDDER =	5.000

RUN NO. 157/ 0 GRADIENT INTERVAL = -5.00/ 5.00

Q	ALPHA	ALPHAU	BETA	Q1	DP/Q50	DP/Q51	DP/Q52
47.530	-.050	.00000	5.00000	48.00000	.01075	.01795	.02001
47.550	5.145	.00000	5.00000	48.00000	.01075	.00897	.01001
47.470	10.342	10.00000	5.00000	48.00000	.01068	.00892	.01990
47.480	15.554	15.00000	5.00000	48.00000	.01065	.00889	.01984
47.650	20.806	20.00000	5.00000	48.00000	.00000	.00887	.00989
	GRADIENT	.00000	.00000	.00000	.00000	.00000	.00000

ARC40X80-462(OA100) OV101(FTP AND ADS OFF) (BNA06J) (16 MAR 82)

REFERENCE DATA

SREF =	2690.0000 SQ.FT.	XMRP =	1076.6800 IN. XO		
LREF =	474.8100 INCHES	YMRP =	.0000 IN. YO		
BREF =	936.6800 INCHES	ZMRP =	375.0000 IN. ZO		
SCALE =	.3600				

PARAMETRIC DATA

BETA =	5.000	ELEVON =	.000
AILRON =	.000	BDFLAP =	.000
SPDBRK =	.000	RUDDER =	10.000

RUN NO. 158/ 0 GRADIENT INTERVAL = -5.00/ 5.00

Q	ALPHA	ALPHAU	BETA	Q1	DP/Q50	DP/Q51	DP/Q52
47.460	-.051	.00000	5.00000	47.50000	-.01075	.00000	.02001
47.530	5.145	5.00000	5.00000	47.50000	-.01071	.01789	.00998
47.310	10.341	10.00000	5.00000	47.50000	.01068	.00000	-.00995
47.450	15.583	15.00000	5.00000	48.00000	-.02130	-.00889	.00000
47.870	20.783	20.00000	5.00000	48.00000	-.01062	.00000	.00000
	GRADIENT	.00000	.00000	.00000	.00000	.00000	.00000

ARC40X80-462(OA100) OV101(FTP AND ADS OFF) (BNA06K) (16 MAR 82)

REFERENCE DATA

SREF =	2690.0000 SQ.FT.	XMRP =	1076.6800 IN. XO		
LREF =	474.8100 INCHES	YMRP =	.0000 IN. YO		
BREF =	936.6800 INCHES	ZMRP =	375.0000 IN. ZO		
SCALE =	.3600				

PARAMETRIC DATA

BETA =	5.000	ELEVON =	.000
AILRON =	.000	BDFLAP =	.000
SPDBRK =	.000	RUDDER =	15.000

RUN NO. 159/ 0 GRADIENT INTERVAL = -5.00/ 5.00

Q	ALPHA	ALPHAU	BETA	Q1	DP/Q50	DP/Q51	DP/Q52
47.480	-.055	.00000	5.00000	48.00000	-.02149	-.01795	-.01001
47.690	5.140	5.00000	5.00000	48.00000	-.02143	-.01789	.00000
47.600	10.326	10.00000	5.00000	47.50000	-.02137	-.02676	.00000
47.680	15.549	15.00000	5.00000	48.00000	-.01065	-.03558	-.01984
47.830	20.785	20.00000	5.00000	48.50000	-.04248	-.02661	-.01978
	GRADIENT	.00000	.00000	.00000	.00000	.00000	.00000

ARC40X80-462(OA100) OV101(FTP AND ADS OFF) (BNA06L) (15 APR 82)

REFERENCE DATA

SREF =	2690.0000 SQ.FT.	XMRP =	1076.6800 IN.	XO	
LREF =	474.8100 INCHES	YMRP =	.0000 IN.	YO	
BREF =	936.6800 INCHES	ZMRP =	375.0000 IN.	ZO	
SCALE =	.3600				

PARAMETRIC DATA

BETA =	5.000	ELEVON =	.000
AILRON =	.000	BDFLAP =	.000
SPDBRK =	.000	RUDDER =	20.500

RUN NO. 160/ 0 GRADIENT INTERVAL = -5.00/ 5.00

Q	ALPHA	ALPHAU	BETA	QI	DP/Q50	DP/Q51	DP/Q52
47.360	-.050	.00000	5.00000	48.00000	-.04298	-.04486	-.01001
47.530	5.141	5.00000	5.00000	48.00000	-.05357	-.05368	-.00998
47.680	10.336	10.00000	5.00000	48.00000	-.04273	-.04460	-.01990
47.630	15.547	15.00000	5.00000	48.00000	-.05326	-.05337	-.02976
47.440	20.800	20.00000	5.00000	48.00000	-.05310	-.05321	-.02967
	GRADIENT	.00000	.00000	.00000	.00000	.00000	.00000

ARC40X80-462(OA100) OV101(ADS OFF) (BNA06M) (16 MAR 82)

REFERENCE DATA

SREF =	2690.0000 SQ.FT.	XMRP =	1076.6800 IN.	XO	
LREF =	474.8100 INCHES	YMRP =	.0000 IN.	YO	
BREF =	936.6800 INCHES	ZMRP =	375.0000 IN.	ZO	
SCALE =	.3600				

PARAMETRIC DATA

BETA =	10.000	ELEVON =	.000
AILRON =	.000	BDFLAP =	.000
SPDBRK =	.000	RUDDER =	.000

RUN NO. 161/ 0 GRADIENT INTERVAL = -5.00/ 5.00

Q	ALPHA	ALPHAU	BETA	QI	DP/Q50	DP/Q51	DP/Q52
47.610	-.038	.00000	10.00000	47.50000	1.03158	1.03188	1.05075
47.540	5.151	5.00000	10.00000	47.50000	.98570	.97518	.98781
47.550	10.352	10.00000	10.00000	47.50000	.91872	.90989	.92523
47.970	15.573	15.00000	10.00000	48.00000	.86279	.86276	.87294
47.730	20.823	20.00000	10.00000	48.00000	.80718	.80705	.82095
	GRADIENT	.00000	.00000	.00000	.00000	.00000	.00000

ARC40X80-462(OA100) OV101(ADS OFF) (BNA06N) (16 MAR 82)

REFERENCE DATA

SREF = 2690.0000 SQ.FT. XMRP = 1076.6800 IN. XO
LREF = 474.8100 INCHES YMRP = .0000 IN. YO
BREF = 936.6800 INCHES ZMRP = 375.0000 IN. ZO
SCALE = .3600

PARAMETRIC DATA

BETA = 10.000 ELEVON = .000
AILRON = .000 BDFLAP = .000
SPDBRK = .000 RUDDER = 5.000

RUN NO. 162/ 0 GRADIENT INTERVAL = -5.00/ 5.00

Q	ALPHA	ALPHAU	BETA	Q1	DP/Q50	DP/Q51	DP/Q52
47.570	-.037	.00000	10.00000	47.50000	1.05307	1.03188	1.06076
47.700	5.151	5.00000	10.00000	48.00000	.97499	.98412	1.00776
47.440	10.349	10.00000	10.00000	47.50000	.88668	.90989	.90533
47.630	15.572	15.00000	10.00000	48.00000	.85214	.84498	.88285
47.520	20.823	20.00000	10.00000	48.00000	.80718	.80705	.81106
	GRADIENT	.00000	.00000	.00000	.00000	.00000	.00000

ARC40X80-462(OA100) OV101(ADS OFF) (BNA060) (16 MAR 82)

REFERENCE DATA

SREF = 2690.0000 SQ.FT. XMRP = 1076.6800 IN. XO
LREF = 474.8100 INCHES YMRP = .0000 IN. YO
BREF = 936.6800 INCHES ZMRP = 375.0000 IN. ZO
SCALE = .3600

PARAMETRIC DATA

BETA = 10.000 ELEVON = .000
AILRON = .000 BDFLAP = .000
SPDBRK = .000 RUDDER = 10.000

RUN NO. 163/ 0 GRADIENT INTERVAL = -5.00/ 5.00

Q	ALPHA	ALPHAU	BETA	Q1	DP/Q50	DP/Q51	DP/Q52
47.640	5.150	5.00000	10.00000	48.00000	.98570	.98412	.99778
47.480	10.348	10.00000	10.00000	48.00000	.89736	.91881	.94512
47.500	15.575	15.00000	10.00000	47.50000	.85214	.85387	.86302
47.740	20.820	20.00000	10.00000	48.00000	.80718	.81592	.82095
	GRADIENT	.00000	.00000	.00000	.00000	.00000	.00000

ARC40X80-462(OA100) OV101(ADS OFF) (BNA06P) (16 MAR 82)

REFERENCE DATA

SREF =	2690.0000 SQ.FT.	XMRP =	1076.6800 IN. XO		
LREF =	474.8100 INCHES	YMRP =	.0000 IN. YO		
BREF =	936.6800 INCHES	ZMRP =	375.0000 IN. ZO		
SCALE =	.3600				

PARAMETRIC DATA

BETA =	10.000	ELEVON =	.000
AILRON =	.000	BDFLAP =	.000
SPDBRK =	.000	RUDDER =	15.000

RUN NO. 164/ 0 GRADIENT INTERVAL = -5.00/ 5.00

Q	ALPHA	ALPHAU	BETA	Q1	DP/Q50	DP/Q51	DP/Q52
47.630	-.040	.00000	10.00000	48.0000	1.05307	1.04085	1.07076
47.450	5.148	5.00000	10.00000	47.50000	.98570	.98412	.99778
47.590	10.346	10.00000	10.00000	47.50000	.90804	.91881	.94512
47.510	15.566	15.00000	10.00000	48.00000	.86279	.86276	.88285
47.820	20.818	20.00000	10.00000	48.00000	.81780	.82479	.84073
	GRADIENT	.00000	.00000	.00000	.00000	.00000	.00000

ARC40X80-462(OA100) OV101(ADS OFF) (BNA06Q) (15 APR 82)

REFERENCE DATA

SREF =	2690.0000 SQ.FT.	XMRP =	1076.6800 IN. XO		
LREF =	474.8100 INCHES	YMRP =	.0000 IN. YO		
BREF =	936.6800 INCHES	ZMRP =	375.0000 IN. ZO		
SCALE =	.3600				

PARAMETRIC DATA

BETA =	10.000	ELEVON =	.000
AILRON =	.000	BDFLAP =	.000
SPDBRK =	.000	RUDDER =	20.500

RUN NO. 165/ 0 GRADIENT INTERVAL = -5.00/ 5.00

Q	ALPHA	ALPHAU	BETA	Q1	DP/Q50	DP/Q51	DP/Q52
47.640	-.043	.00000	10.00000	48.00000	1.03158	1.05880	1.06076
47.600	5.147	5.00000	10.00000	48.00000	.97499	.97518	1.00776
47.570	10.342	10.00000	10.00000	47.50000	.91872	.91881	.94512
47.760	15.561	15.00000	10.00000	48.00000	.86279	.87166	.89277
47.670	20.817	20.00000	10.00000	48.00000	.82842	.82479	.84073
	GRADIENT	.00000	.00000	.00000	.00000	.00000	.00000

ARC40X80-462(OA100) OV101(ADS OFF) (BNA06R) (16 MAR 82)

REFERENCE DATA

SREF =	2690.0000 SQ.FT.	XMRP =	1076.6800 IN. XO		
LREF =	474.8100 INCHES	YMRP =	.0000 IN. YO		
BREF =	936.6800 INCHES	ZMRP =	375.0000 IN. ZO		
SCALE =	.3600				

PARAMETRIC DATA

BETA =	.000	ELEVON =	.000
AILRON =	.000	BDFLAP =	.000
SPDBRK =	25.000	RUDDER =	.000

RUN NO. 167/ 0 GRADIENT INTERVAL = -5.00/ 5.00

Q	ALPHA	ALPHAU	BETA	QI	DP/Q50	DP/Q51	DP/Q52
47.470	-5.243	-5.00000	.00000	47.00000	1.08850	1.08991	1.12410
47.570	-2.651	-2.50000	.00000	47.50000	1.05462	1.06934	1.09238
47.600	-.058	.00000	.00000	47.50000	1.01009	1.03188	1.05075
47.550	2.540	2.50000	.00000	47.50000	.98715	1.00349	1.01923
47.580	5.139	5.00000	.00000	47.50000	.94284	.96623	.97783
47.810	7.739	7.50000	.00000	47.50000	.92007	.93802	.94651
47.630	10.342	10.00000	.00000	47.00000	.89736	.90097	.92523
47.580	11.379	11.00000	.00000	47.50000	.87548	.89152	.89486
47.690	12.421	12.00000	.00000	47.50000	.86430	.88209	.90428
47.670	13.462	13.00000	.00000	47.50000	.86380	.87268	.88389
47.600	14.505	14.00000	.00000	47.00000	.84198	.84547	.86352
47.680	15.549	15.00000	.00000	47.00000	.83084	.85387	.85310
47.520	16.601	16.00000	.00000	47.50000	.81971	.84448	.83277
47.620	17.651	17.00000	.00000	47.50000	.82987	.82622	.83229
47.520	18.708	18.00000	.00000	47.50000	.79749	.81686	.84171
47.490	19.768	19.00000	.00000	47.50000	.79703	.81639	.82142
47.660	20.817	20.00000	.00000	47.50000	.78594	.82479	.81106
	GRADIENT	.96321	.00000	.00000	-.01300	-.01268	-.01409

ARC40X80-462(OA100) OV101(ADS OFF) (BNA06S) (15 APR 82)

REFERENCE DATA

SREF =	2690.0000 SQ.FT.	XMRP =	1076.6800 IN.	XO	
LREF =	474.8100 INCHES	YMRP =	.0000 IN.	YO	
BREF =	936.6800 INCHES	ZMRP =	375.0000 IN.	ZO	
SCALE =	.3600				

PARAMETRIC DATA

BETA =	-5.000	ELEVON =	.000
AILRON =	.000	BDFLAP =	.000
SPDBRK =	25.000	RUDDER =	.000

RUN NO. 47/ 0 GRADIENT INTERVAL = -5.00/ 5.00

Q	ALPHA	ALPHAU	BETA	QI	DP/Q50	DP/Q51	DP/Q52
94.360	-5.233	-5.00000	-5.00000	98.00000	-.49021	-.65040	1.01450
94.320	-2.640	-2.50000	-5.00000	98.00000	-.50037	-.56769	1.01300
94.430	-.047	.00000	-5.00000	98.50000	-.53221	-.47615	1.01150
94.430	2.550	2.50000	-5.00000	98.00000	-.52600	-.38489	.99990
94.430	5.148	5.00000	-5.00000	98.00000	-.53605	-.26676	.99843
94.320	7.747	7.50000	-5.00000	98.00000	-.54608	-.15350	1.00199
94.550	10.348	10.00000	-5.00000	98.00000	-.54527	-.04508	1.00555
94.320	11.396	11.00000	-5.00000	98.00000	-.55035	-.00901	1.00998
94.410	12.437	12.00000	-5.00000	97.50000	-.56081	.04053	1.01441
94.660	13.479	13.00000	-5.00000	98.50000	-.54431	.11250	1.01883
94.570	14.522	14.00000	-5.00000	98.00000	-.55477	.11693	1.02325
94.550	15.570	15.00000	-5.00000	98.50000	-.56521	.18429	1.02265
94.360	16.617	16.00000	-5.00000	98.00000	-.55411	.23809	1.02205
94.270	17.676	17.00000	-5.00000	98.00000	-.55917	.25591	1.01644
94.500	18.727	18.00000	-5.00000	98.50000	-.53197	.34101	1.02085
94.570	19.777	19.00000	-5.00000	98.50000	-.52092	.38117	1.03026
94.590	20.820	20.00000	-5.00000	98.50000	-.51525	.41680	1.02465
94.340	21.861	21.00000	-5.00000	98.50000	-.50422	.43895	1.02905
	GRADIENT	.96341	-.00000	-.00007	-.00494	.03522	-.00252

ARC40X80-462(OA100) OV101(ADS OFF) (BNA06T) (15 APR 82)

REFERENCE DATA

SREF =	2690.0000 SQ.FT.	XMRP =	1076.6800 IN. XO		
LREF =	474.8100 INCHES	YMRP =	.0000 IN. YO		
BREF =	936.6800 INCHES	ZMRP =	375.0000 IN. ZO		
SCALE =	.3600				

PARAMETRIC DATA

BETA =	2.000	ELEVON =	.000
AILRON =	.000	BDFLAP =	.000
SPDBRK =	25.000	RUDDER =	.000

RUN NO. 168/ 0 GRADIENT INTERVAL = -5.00/ 5.00

Q	ALPHA	ALPHAU	BETA	Q1	DP/Q50	DP/Q51	DP/Q52
47.490	-5.236	-5.00000	2.00000	47.00000	.98073	.98992	1.01370
47.640	-2.648	-2.50000	2.00000	47.00000	.95776	.95252	.97212
47.650	-.056	.00000	2.00000	47.00000	.91338	.91523	.95068
47.620	2.539	2.50000	2.00000	47.00000	.87985	.85117	.88933
47.610	5.139	.00000	2.00000	47.00000	.82741	.82550	.84060
47.580	7.739	7.50000	2.00000	47.00000	.77029	.78615	.78710
47.630	10.339	10.00000	2.00000	47.00000	.73712	.74040	.75610
47.580	11.382	11.00000	2.00000	47.00000	.71533	.72213	.72583
47.620	12.421	12.00000	2.00000	47.00000	.71492	.73062	.71547
47.510	13.462	13.00000	2.00000	46.00000	.68251	.70348	.69519
47.530	14.508	14.00000	2.00000	47.00000	.66079	.66747	.68486
47.560	15.551	15.00000	2.00000	47.00000	.63910	.64930	.65470
47.730	16.598	16.00000	2.00000	47.00000	.61744	.63114	.63449
47.530	17.653	17.00000	2.00000	47.00000	.60644	.60412	.62422
47.600	18.709	18.00000	2.00000	47.00000	.58482	.60377	.60405
47.740	19.762	19.00000	2.00000	47.00000	.57386	.58567	.58390
47.450	20.817	20.00000	2.00000	47.00000	.53104	.55873	.56378
	GRADIENT	.96391	.00000	-.00000	-.01502	-.01954	-.01596

ARC40X80-462(OA100) OV101(ADS OFF) (BNA06U) (16 MAR 82)

REFERENCE DATA

SREF =	2690.0000 SQ.FT.	XMRP =	1076.6800 IN. XO		
LREF =	474.8100 INCHES	YMRP =	.0000 IN. YO		
BREF =	936.6800 INCHES	ZMRP =	375.0000 IN. ZO		
SCALE =	.3600				

PARAMETRIC DATA

BETA =	10.000	ELEVON =	.000
AILRON =	.000	BDFLAP =	.000
SPDBRK =	25.000	RUDDER =	.000

RUN NO. 169/ 0 GRADIENT INTERVAL = -5.00/ 5.00

Q	ALPHA	ALPHAU	BETA	QI	DP/Q50	DP/Q51	DP/Q52
47.530	-5.219	-5.00000	10.00000	47.00000	.88374	.88193	.89326
47.640	-2.630	-2.50000	10.00000	47.00000	.85015	.85367	.85186
47.640	-.041	.00000	10.00000	47.00000	.81667	.81653	.82058
47.710	2.553	2.50000	10.00000	47.00000	.78328	.78845	.78940
47.620	5.146	5.00000	10.00000	47.00000	.73928	.75151	.75831
47.620	7.650	7.50000	10.00000	47.00000	.72750	.73255	.73728
47.620	10.348	10.00000	10.00000	47.00000	.66234	.66903	.66656
47.740	11.389	11.00000	10.00000	47.00000	.64060	.65081	.64629
47.600	12.433	12.00000	10.00000	47.00000	.62955	.64152	.63597
47.480	13.480	13.00000	10.00000	47.00000	.59719	.62334	.61574
47.500	14.523	14.00000	10.00000	47.00000	.58619	.61408	.60546
47.620	15.575	15.00000	10.00000	47.00000	.59650	.60482	.59518
47.600	16.625	16.00000	10.00000	47.00000	.58551	.59558	.57501
47.500	17.671	17.00000	10.00000	47.00000	.57452	.57747	.56477
47.550	18.721	18.00000	10.00000	47.00000	.55292	.55938	.55454
47.530	19.768	19.00000	10.00000	47.00000	.53135	.55905	.54432
47.670	20.819	20.00000	10.00000	47.00000	.54166	.54986	.53411
	GRADIENT	.96462	-.00000	.00000	-.01290	-.01258	-.01205

ARC40X80-462(OA100) OV101(ADS OFF) (BNA06V) (15 APR 82)

REFERENCE DATA

SREF =	2690.0000 SQ.FT.	XMRP =	1076.6800 IN. XO		
LREF =	474.8100 INCHES	YMRP =	.0000 IN. YO		
BREF =	936.6800 INCHES	ZMRP =	375.0000 IN. ZO		
SCALE =	.3600				

PARAMETRIC DATA

BETA =	10.000	ELEVON =	.000
AILRON =	.000	BDFLAP =	.000
SPDBRK =	55.000	RUDDER =	.000

RUN NO. 166/ 0 GRADIENT INTERVAL = -5.00/ 5.00

Q	ALPHA	ALPHAU	BETA	QI	DP/Q50	DP/Q51	DP/Q52
47.850	-.063	.00000	10.00000	48.00000	1.05307	1.05880	1.08077
47.460	5.129	5.00000	10.00000	47.50000	.99641	.98412	1.02772
47.510	10.327	10.00000	10.00000	47.50000	.92941	.93665	.96502
47.600	15.553	15.00000	10.00000	48.00000	.88409	.87166	.91262
47.540	20.804	20.00000	10.00000	48.00000	.82842	.83365	.85062
	GRADIENT	.00000	.00000	.00000	.00000	.00000	.00000

ARC40X80-462(OA100) OV101(ADS OFF) (BNA06W) (15 APR 82)

REFERENCE DATA

SREF =	2690.0000 SQ.FT.	XMRP =	1076.6800 IN. XO		
LREF =	474.8100 INCHES	YMRP =	.0000 IN. YO		
BREF =	936.6800 INCHES	ZMRP =	375.0000 IN. ZO		
SCALE =	.3600				

PARAMETRIC DATA

BETA =	.000	ELEVON =	.000
AILRON =	10.000	BDFLAP =	.000
SPDBRK =	25.000	RUDDER =	.000

RUN NO. 170/ 0 GRADIENT INTERVAL = -5.00/ 5.00

Q	ALPHA	ALPHAU	BETA	QI	DP/Q50	DP/Q51	DP/Q52
47.520	-5.246	-5.00000	.00000	48.00000	1.08850	1.09791	1.08395
47.570	-2.655	-2.50000	.00000	48.00000	1.04386	1.06035	1.05229
47.500	-.063	.00000	.00000	48.00000	1.01009	1.02290	1.01072
47.400	2.538	2.50000	.00000	48.00000	.99788	1.01245	.97926
47.470	5.136	5.00000	.00000	48.00000	.94284	.94834	.93792
47.370	7.735	7.50000	.00000	48.00000	.90937	.91122	.89669
47.510	10.336	10.00000	.00000	48.00000	.86531	.88312	.86554
47.670	12.934	12.50000	.00000	48.00000	.83205	.86402	.82454
47.560	15.548	15.00000	.00000	48.00000	.80953	.81829	.81342
47.370	18.171	17.50000	.00000	47.00000	.78708	.77269	.76271
47.610	20.811	20.00000	.00000	48.00000	.77532	.76270	.74182
47.440	25.982	25.00000	.00000	48.00000	.70954	.73397	.70022
	GRADIENT	.96289	.00000	-.00000	-.00885	-.00922	-.01406

ARC40X80-462(OA100) OV101(ADS OFF) (BNA06X) (16 MAR 82)

REFERENCE DATA

SREF =	2690.0000 SQ.FT.	XMRP =	1076.6800 IN. XO		
LREF =	474.8100 INCHES	YMRP =	.0000 IN. YO		
BREF =	936.6800 INCHES	ZMRP =	375.0000 IN. ZO		
SCALE =	.3600				

PARAMETRIC DATA

ALPHA =	10.000	ELEVON =	.000
AILRON =	10.000	BDFLAP =	.000
SPDBRK =	25.000	RUDDER =	.000

RUN NO. 171/ 0 GRADIENT INTERVAL = -5.00/ 5.00

Q	BETA	ALPHAU	QI	DP/Q50	DP/Q51	DP/Q52	ALPHA
47.650	-13.000	10.00000	48.00000	.95077	.95449	.92523	10.34100
47.520	-10.000	10.00000	48.00000	.88668	.91881	.88543	10.33820
47.410	-2.000	1.00000	48.00000	.85914	.87082	.85011	10.33620
47.410	.000	1.00000	48.00000	.84840	.86986	.84010	10.33440
47.600	5.000	-1.00000	48.00000	.84940	.87986	.85111	10.34450
47.380	10.000	1.00000	48.00000	.90210	.91469	.88011	10.35610
47.390	15.000	1.00000	48.00000	.97728	.97747	.95012	10.36440
47.200	20.000	1.00000	47.00000	1.05245	1.05817	1.04013	10.34170
	GRADIENT	-.30769	.00000	-.00109	.00050	.00054	.00135

ARC40X80-462(OA100) OV101+TUFTS (ADS OFF) (BNA06Y) (16 MAR 82)

REFERENCE DATA

SREF =	2690.0000 SQ.FT.	XMRP =	1076.6800 IN. XO		
LREF =	474.8100 INCHES	YMRP =	.0000 IN. YO		
BREF =	936.6800 INCHES	ZMRP =	375.0000 IN. ZO		
SCALE =	.3600				

PARAMETRIC DATA

BETA =	.000	ELEVON =	.000
AILRON =	.000	BDFLAP =	.000
SPDBRK =	55.000	RUDDER =	.000

RUN NO. 172/ 0 GRADIENT INTERVAL = -5.00/ 5.00

Q	ALPHA	ALPHAU	BETA	Q1	DP/Q50	DP/Q51	DP/Q52
9.590	-.074	.00000	.00000	9.50000	1.01678	1.11715	1.09641
9.630	5.120	5.00000	.00000	9.00000	1.17389	1.06934	1.09322
9.660	10.325	10.00000	.00000	9.50000	1.06407	1.11065	.99094
9.630	15.532	15.00000	.00000	9.50000	1.00793	1.06314	.93867
9.490	20.764	20.00000	.00000	8.50000	.95212	1.06006	.88669
	GRADIENT	.00000	.00000	.00000	.00000	.00000	.00000

RUN NO. 173/ 0 GRADIENT INTERVAL = -5.00/ 5.00

Q	ALPHA	ALPHAU	BETA	Q1	DP/Q50	DP/Q51	DP/Q52
19.020	-.074	.00000	.00000	18.50000	1.13063	1.16889	1.17828
19.040	5.117	5.00000	.00000	18.50000	1.12733	1.12065	1.09985
19.090	10.324	10.00000	.00000	19.00000	1.04376	1.05035	1.04680
19.080	15.531	15.00000	.00000	18.50000	.96067	1.02501	.99406
19.090	20.782	20.00000	.00000	19.00000	.98450	1.04426	.96640
	GRADIENT	.00000	.00000	.00000	.00000	.00000	.00000

RUN NO. 174/ 0 GRADIENT INTERVAL = -5.00/ 5.00

Q	ALPHA	ALPHAU	BETA	Q1	DP/Q50	DP/Q51	DP/Q52
47.410	-5.253	-5.00000	.00000	48.00000	1.17472	1.17891	1.17428
47.630	-2.664	-2.50000	.00000	48.00000	1.14071	1.15920	1.15251
47.490	-.074	.00000	.00000	48.00000	1.11754	1.13955	1.14081
47.330	2.522	2.50000	.00000	47.50000	1.09444	1.07516	1.08918
47.640	5.119	5.00000	.00000	48.00000	1.07141	1.07359	1.06763
47.480	7.720	7.50000	.00000	48.00000	1.03775	1.02735	1.03618
47.660	10.323	10.00000	.00000	48.00000	1.03624	1.02585	1.01477
47.580	12.922	12.50000	.00000	48.00000	1.00272	1.01545	1.02322
47.590	15.533	15.00000	.00000	48.50000	.99061	1.00508	.98205
47.610	18.150	17.50000	.00000	48.00000	.96790	.98585	.97072
47.580	20.791	20.00000	.00000	48.00000	.96649	.99329	.97920
47.190	25.987	25.00000	.00000	48.00000	.94252	.95504	.92706
	GRADIENT	.96415	.00000	-.09645	-.00892	-.01621	-.01221

ARC40X80-462(OA100) OV101+TUFTS (ADS OFF) (BNA06Z) (16 MAR 82)

REFERENCE DATA

SREF =	2690.0000 SQ.FT.	XMRP =	1076.6800 IN. XO		
LREF =	474.8100 INCHES	YMRP =	.0000 IN. YO		
BREF =	936.6800 INCHES	ZMRP =	375.0000 IN. ZO		
SCALE =	.3600				

PARAMETRIC DATA

BETA =	5.000	ELEVON =	.000
AILRON =	.000	BDFLAP =	.000
SPDBRK =	55.000	RUDDER =	.000

RUN NO. 175/ 0 GRADIENT INTERVAL = -5.00/ 5.00

Q	ALPHA	ALPHAU	BETA	QI	DP/Q50	DP/Q51	DP/Q52
47.750	-5.249	-5.00000	5.00000	48.00000	1.15317	1.16091	1.16425
47.650	-2.660	-2.50000	5.00000	47.50000	1.11919	1.14123	1.13247
47.580	-.070	.00000	5.00000	47.50000	1.05307	1.07674	1.06076
47.400	2.526	2.50000	5.00000	47.50000	1.03006	1.04829	1.03922
47.470	5.122	5.00000	5.00000	47.50000	.97499	1.00202	.99778
47.640	7.725	7.50000	5.00000	48.00000	.95216	.96482	.97640
47.450	10.326	10.00000	5.00000	48.00000	.91872	.93665	.93518
47.530	12.928	12.50000	5.00000	47.50000	.89605	.89965	.90401
47.690	15.537	15.00000	5.00000	48.00000	.86279	.88945	.88285
47.480	18.155	17.50000	5.00000	48.00000	.85090	.84375	.85186
47.590	20.788	20.00000	5.00000	48.00000	.80718	.80705	.81106
47.360	25.983	25.00000	5.00000	47.50000	.75190	.76934	.76926
	GRADIENT	.96402	.00000	.00000	-.01718	-.01792	-.01798

ARC40X80-462(OA100) OV101 (BNA07A) (16 APR 82)

REFERENCE DATA

SREF =	2690.0000 SQ.FT.	XMRP =	1076.6800 IN. XO		
LREF =	474.8100 INCHES	YMRP =	.0000 IN. YO		
BREF =	936.6800 INCHES	ZMRP =	375.0000 IN. ZO		
SCALE =	.3600				

PARAMETRIC DATA

BETA =	5.000	ELEVON =	.000
AILRON =	.000	BDFLAP =	.000
SPDBRK =	25.000	RUDDER =	.000

RUN NO. 176/ 0 GRADIENT INTERVAL = -5.00/ 5.00

Q	ALPHA	ALPHAU	BETA	QI	DP/Q50	DP/Q51	DP/Q52
94.180	-.048	.00000	5.00000	97.50000	-.10885	-.50901	.99852
94.280	5.145	5.00000	5.00000	97.50000	-.11974	-.31813	1.00358
94.750	10.344	10.00000	5.00000	98.50000	-.12518	-.11816	.99345
94.370	15.559	15.00000	5.00000	98.00000	-.13062	.12725	1.00358
94.330	20.825	20.00000	5.00000	98.75000	-.13607	.34540	1.00358
	GRADIENT	.00000	.00000	.00000	.00000	.00000	.00000

ARC40X80-462(OA100) OV101 (BNA07B) (16 MAR 82)

REFERENCE DATA

SREF =	2690.0000 SQ.FT.	XMRP =	1076.6800 IN. XO		
LREF =	474.8100 INCHES	YMRP =	.0000 IN. YO		
BREF =	936.6800 INCHES	ZMRP =	375.0000 IN. ZO		
SCALE =	.3600				

PARAMETRIC DATA

BETA =	.000	ELEVON =	.000
AILRON =	.000	BDFLAP =	.000
SPDBRK =	25.000	RUDDER =	.000

RUN NO. 177/ 0 GRADIENT INTERVAL = -5.00/ 5.00

Q	ALPHA	ALPHAU	BETA	Q1	DP/Q50	DP/Q51	DP/Q52
94.560	-5.240	-5.00000	.00000	98.75000	-.37010	-.74534	.97824
94.350	-2.649	-2.50000	.00000	98.50000	-.36466	-.64990	.97824
94.170	-.056	.00000	.00000	98.00000	-.35377	-.57718	.97317
94.450	2.541	2.50000	.00000	98.00000	-.35921	-.43629	.97824
94.510	5.138	5.00000	.00000	98.50000	-.35921	-.36358	.97317
94.320	7.738	7.50000	.00000	98.50000	-.35921	-.22269	.97824
94.710	10.348	10.00000	.00000	98.50000	-.37554	-.14543	.97824
94.310	12.946	12.50000	.00000	99.00000	-.40820	-.00454	.98331
94.310	15.557	15.00000	.00000	98.00000	-.41364	.11816	.97824
94.550	18.382	17.50000	.00000	98.50000	-.41908	.19997	.97317
	GRADIENT	.96334	.00000	-.09631	.00105	.04116	.00000

ARC40X80-462(OA100) OV101 (BNA07C) (16 MAR 82)

REFERENCE DATA

SREF =	2690.0000 SQ.FT.	XMRP =	1076.6800 IN. XO		
LREF =	474.8100 INCHES	YMRP =	.0000 IN. YO		
BREF =	936.6800 INCHES	ZMRP =	375.0000 IN. ZO		
SCALE =	.3600				

PARAMETRIC DATA

BETA =	-5.000	ELEVON =	.000
AILRON =	.000	BDFLAP =	.000
SPDBRK =	25.000	RUDDER =	.000

RUN NO. 178/ 0 GRADIENT INTERVAL = -5.00/ 5.00

Q	ALPHA	ALPHAU	BETA	Q1	DP/Q50	DP/Q51	DP/Q52
94.190	-5.234	-5.00000	-5.00000	97.50000	-.52249	-.69989	.99852
94.480	-2.643	-2.50000	-5.00000	98.50000	-.54971	-.62717	1.00865
94.510	-.049	.00000	-5.00000	98.25000	-.56059	-.54082	1.00358
94.470	2.548	2.50000	-5.00000	98.50000	-.56059	-.43629	1.00358
94.270	5.145	5.00000	-5.00000	99.00000	-.57148	-.31359	1.00358
94.160	7.746	7.50000	-5.00000	97.50000	-.57692	-.21360	.99345
94.150	10.349	10.00000	-5.00000	97.50000	-.59869	-.09998	1.00865
94.370	12.957	12.50000	-5.00000	98.00000	-.57692	.03636	1.01879
94.300	15.565	15.00000	-5.00000	97.50000	-.57692	.16361	1.02386
94.200	18.196	17.50000	-5.00000	97.50000	-.56604	.29086	1.02893
94.170	20.819	20.00000	-5.00000	99.00000	-.55515	.39994	1.03400
	GRADIENT	.96328	-.00000	.00003	-.00210	.03677	-.00098

ARC40X80-462(OA100) OV101 (BNA07D) (16 MAR 82)

REFERENCE DATA

SREF =	2690.0000 SQ.FT.	XMRP =	1076.6800 IN. XO		
LREF =	474.8100 INCHES	YMRP =	.0000 IN. YO		
BREF =	936.6800 INCHES	ZMRP =	375.0000 IN. ZO		
SCALE =	.3600				

PARAMETRIC DATA

BETA =	-10.000	ELEVON =	.000
AILRON =	.000	BDFLAP =	.000
SPDBRK =	25.000	RUDDER =	.000

RUN NO. 179/ 0 GRADIENT INTERVAL = -5.00/ 5.00

Q	ALPHA	ALPHAU	BETA	Q1	DP/Q50	DP/Q51	DP/Q52
94.250	-5.223	-5.00000	-10.00000	96.50000	-.60413	-.64990	1.04920
94.150	-2.632	-2.50000	-10.00000	96.00000	-.63135	-.53628	1.05427
94.300	-.039	.00000	-10.00000	96.25000	-.65856	-.45447	1.04920
94.240	2.556	2.50000	-10.00000	96.25000	-.67489	-.37267	1.04416
94.350	5.153	5.00000	-10.00000	95.75000	-.68033	-.22724	1.04920
94.130	7.751	7.50000	-10.00000	96.25000	-.69666	-.14998	1.04920
94.300	10.357	10.00000	-10.00000	96.50000	-.70754	-.02272	1.05427
94.440	12.965	12.50000	-10.00000	96.50000	-.69666	.08635	1.06441
94.390	15.580	15.00000	-10.00000	95.50000	-.68577	.21360	1.07961
94.270	18.201	17.50000	-10.00000	96.00000	-.66945	.34995	1.08468
94.070	20.817	20.00000	-10.00000	96.00000	-.64223	.43629	1.09482
	GRADIENT	.96376	-.00000	.04819	-.00839	.03154	-.00195

ARC40X80-462(OA100) OV101+NOSE GEAR (BNA07E) (16 MAR 82)

REFERENCE DATA

SREF =	2690.0000 SQ.FT.	XMRP =	1076.6800 IN. XO		
LREF =	474.8100 INCHES	YMRP =	.0000 IN. YO		
BREF =	936.6800 INCHES	ZMRP =	375.0000 IN. ZO		
SCALE =	.3600				

PARAMETRIC DATA

BETA =	5.000	ELEVON =	.000
AILRON =	.000	BDFLAP =	.000
SPDBRK =	25.000	RUDDER =	.000

RUN NO. 180/ 0 GRADIENT INTERVAL = -5.00/ 5.00

Q	ALPHA	ALPHAU	BETA	Q1	DP/Q50	DP/Q51	DP/Q52
94.090	-.048	.00000	5.00000	96.75000	-.10885	-.49992	.97824
94.500	10.345	10.00000	5.00000	97.25000	-.13062	-.09544	.99345
94.420	15.558	15.00000	5.00000	97.25000	-.10885	.12725	.99852
94.220	20.813	20.00000	5.00000	97.00000	-.11430	.34086	.99852
	GRADIENT	.00000	.00000	.00000	.00000	.00000	.00000

ARC40X80-462(OA100) OV101+NOSE GEAR (BNA07F) (16 MAR 82)

REFERENCE DATA

SREF =	2690.0000 SQ.FT.	XMRP =	1076.6800 IN.	XO	
LREF =	474.8100 INCHES	YMRP =	.0000 IN.	YO	
BREF =	936.6800 INCHES	ZMRP =	375.0000 IN.	ZO	
SCALE =	.3600				

PARAMETRIC DATA

BETA =	.000	ELEVON =	.000
AILRON =	.000	BDFLAP =	.000
SPDBRK =	25.000	RUDDER =	.000

RUN NO. 181/ 0 GRADIENT INTERVAL = -5.00/ 5.00

Q	ALPHA	ALPHAU	BETA	QI	DP/Q50	DP/Q51	DP/Q52
94.260	-5.240	-5.00000	.00000	99.75000	-.37010	-.74534	.96304
94.390	-2.648	-2.50000	.00000	95.00000	-.37554	-.64535	.97317
94.370	-.055	.00000	.00000	97.25000	-.35377	-.53174	.96304
93.980	2.539	2.50000	.00000	96.50000	-.35921	-.44539	.96304
94.500	5.138	5.00000	.00000	97.25000	-.36466	-.32722	.96810
94.490	7.739	7.50000	.00000	97.00000	-.36466	-.19088	.96304
94.370	10.347	10.00000	.00000	96.75000	-.37554	-.10453	.96810
94.240	12.946	12.50000	.00000	96.50000	-.38643	-.01818	.96810
94.570	15.556	15.00000	.00000	95.00000	-.38643	.10907	.96810
94.140	20.804	20.00000	.00000	96.75000	-.38643	.32268	.96304
	GRADIENT	.96389	.00000	.28910	.00315	.03855	-.00195

ARC40X80-462(OA100) OV101+NOSE GEAR (BNA07G) (16 MAR 82)

REFERENCE DATA

SREF =	2690.0000 SQ.FT.	XMRP =	1076.6800 IN.	XO	
LREF =	474.8100 INCHES	YMRP =	.0000 IN.	YO	
BREF =	936.6800 INCHES	ZMRP =	375.0000 IN.	ZO	
SCALE =	.3600				

PARAMETRIC DATA

BETA =	-5.000	ELEVON =	.000
AILRON =	.000	BDFLAP =	.000
SPDBRK =	25.000	RUDDER =	.000

RUN NO. 182/ 0 GRADIENT INTERVAL = -5.00/ 5.00

Q	ALPHA	ALPHAU	BETA	QI	DP/Q50	DP/Q51	DP/Q52
94.590	-.048	.00000	-5.00000	97.25000	-.55515	-.49992	.99345
94.180	5.147	5.00000	-5.00000	97.00000	-.56059	-.29541	.98331
94.460	10.351	10.00000	-5.00000	97.00000	-.57148	-.07272	.98838
94.200	15.563	15.00000	-5.00000	96.75000	-.57692	.15907	.99852
94.470	20.815	20.00000	-5.00000	97.00000	-.57148	.37267	1.01372
	GRADIENT	.00000	.00000	.00000	.00000	.00000	.00000

ARC40X80-462(OA100) OV101+NOSE GEAR (BNA07H) (16 MAR 82)

REFERENCE DATA

SREF = 2690.0000 SQ.FT. XMRP = 1076.6800 IN. XO
LREF = 474.8100 INCHES YMRP = .0000 IN. YO
BREF = 936.6800 INCHES ZMRP = 375.0000 IN. ZO
SCALE = .3600

PARAMETRIC DATA

BETA = -10.000 ELEVON = .000
AILRON = .000 BDFLAP = .000
SPDBRK = 25.000 RUDDER = .000

RUN NO. 183/ 0 GRADIENT INTERVAL = -5.00/ 5.00

Q	ALPHA	ALPHAU	BETA	QI	DP/Q50	DP/Q51	DP/Q52
94.280	-.035	.00000	-10.00000	96.50000	-.64223	-.44993	1.04413
94.380	5.152	5.00000	-10.00000	97.00000	-.68033	-.20451	1.04920
94.250	10.356	10.00000	-10.00000	96.50000	-.69666	-.01818	1.05427
94.220	15.581	15.00000	-10.00000	96.50000	-.67489	.22724	1.07454
94.530	20.834	20.00000	-10.00000	96.75000	-.63679	.49083	1.09989
	GRADIENT	.00000	.00000	.00000	.00000	.00000	.00000

ARC40X80-462(OA100) OV101(FTP OFF) (BNA07I) (16 MAR 82)

REFERENCE DATA

SREF = 2690.0000 SQ.FT. XMRP = 1076.6800 IN. XO
LREF = 474.8100 INCHES YMRP = .0000 IN. YO
BREF = 936.6800 INCHES ZMRP = 375.0000 IN. ZO
SCALE = .3600

PARAMETRIC DATA

BETA = 5.000 ELEVON = .000
AILRON = .000 BDFLAP = .000
SPDBRK = 25.000 RUDDER = .000

RUN NO. 184/ 0 GRADIENT INTERVAL = -5.00/ 5.00

Q	ALPHA	ALPHAU	BETA	QI	DP/Q50	DP/Q51	DP/Q52
94.150	-.052	.00000	5.00000	95.50000	.97423	.97712	.00507
94.290	5.140	5.00000	5.00000	96.25000	.88715	.89531	.00507
94.410	10.342	10.00000	5.00000	96.25000	.81095	.80442	.01014
94.530	15.560	15.00000	5.00000	96.25000	.71299	.72261	-.01014
94.310	20.818	20.00000	5.00000	95.75000	.63135	.63626	.00000
	GRADIENT	.00000	.00000	.00000	.00000	.00000	.00000

ARC40X80-462(OA100) OV101(FTP OFF) (BNA07J) (16 MAR 82)

REFERENCE DATA

SREF =	2690.0000 SQ.FT.	XMRP =	1076.6800 IN.	XO	
LREF =	474.8100 INCHES	YMRP =	.0000 IN.	YO	
BREF =	936.6800 INCHES	ZMRP =	375.0000 IN.	ZO	
SCALE =	.3600				

PARAMETRIC DATA

BETA =	.000	ELEVON =	.000
AILRON =	.000	BDFLAP =	.000
SPDBRK =	25.000	RUDDER =	.000

RUN NO. 185/ 0 GRADIENT INTERVAL = -5.00/ 5.00

Q	ALPHA	ALPHAU	BETA	Q1	DP/Q50	DP/Q51	DP/Q52
94.060	-5.240	-5.00000	.00000	95.50000	.99056	.99530	.00000
94.520	-2.649	-2.50000	.00000	96.25000	.95791	.95440	.00000
94.500	-.060	.00000	.00000	96.75000	.91981	.91804	-.00507
93.980	2.537	2.50000	.00000	96.00000	.87082	.87714	-.01014
94.070	5.133	5.00000	.00000	95.00000	.82728	.83623	-.00507
93.670	7.736	7.50000	.00000	95.50000	.78374	.79078	-.00507
94.470	10.340	10.00000	.00000	96.50000	.75653	.74534	-.00507
94.200	12.941	12.50000	.00000	96.00000	.70754	.71807	-.01014
95.730	15.555	15.00000	.00000	97.50000	.69122	.69080	-.00507
94.370	18.182	17.50000	.00000	96.50000	.64223	.64535	-.00507
	GRADIENT	.96417	.00000	-.04834	-.01679	-.01490	-.00195

ARC40X80-462(OA100) OV101(FTP OFF) (BNA07K) (16 MAR 82)

REFERENCE DATA

SREF =	2690.0000 SQ.FT.	XMRP =	1076.6800 IN.	XO	
LREF =	474.8100 INCHES	YMRP =	.0000 IN.	YO	
BREF =	936.6800 INCHES	ZMRP =	375.0000 IN.	ZO	
SCALE =	.3600				

PARAMETRIC DATA

BETA =	-5.000	ELEVON =	.000
AILRON =	.000	BDFLAP =	.000
SPDBRK =	25.000	RUDDER =	.000

RUN NO. 186/ 0 GRADIENT INTERVAL = -5.00/ 5.00

Q	ALPHA	ALPHAU	BETA	Q1	DP/Q50	DP/Q51	DP/Q52
94.190	-.053	.00000	-5.00000	96.00000	.91981	.92258	-.01014
93.830	5.144	5.00000	-5.00000	95.50000	.83272	.83623	-.00507
93.970	10.346	10.00000	-5.00000	95.50000	.76197	.75897	.00000
94.430	15.562	15.00000	-5.00000	96.50000	.69122	.69535	-.00507
94.150	20.819	20.00000	-5.00000	96.00000	.62046	.62717	-.01014
	GRADIENT	.00000	.00000	.00000	.00000	.00000	.00000

ARC40X80-462(OA100) OV101(FTP OFF) (BNA07L) (16 MAR 82)

REFERENCE DATA

SREF =	2690.0000 SQ.FT.	XMRP =	1076.6800 IN. XO			BETA =	-10.000	ELEVON =	.000
LREF =	474.8100 INCHES	YMRP =	.0000 IN. YO			AILRON =	.000	BDFLAP =	.000
BREF =	936.6800 INCHES	ZMRP =	375.0000 IN. ZO			SPDBRK =	25.000	RUDDER =	.000
SCALE =	.3600								

PARAMETRIC DATA

RUN NO. 187/ 0 GRADIENT INTERVAL = -5.00/ 5.00

Q	ALPHA	ALPHAU	BETA	QI	DP/Q50	DP/Q51	DP/Q52
94.450	-.040	.00000	-10.00000	96.25000	.95791	.95440	-.00507
94.330	5.151	5.00000	-10.00000	96.50000	.88171	.88168	-.00507
94.270	10.353	10.00000	-10.00000	96.00000	.80551	.81351	.00000
94.200	20.827	20.00000	-10.00000	95.75000	.66945	.66808	-.00507
	GRADIENT	.00000	.00000	.00000	.00000	.00000	.00000

ARC40X80-462(OA100) OV101(FTP OFF) (BNA07M) (16 MAR 82)

REFERENCE DATA

SREF =	2690.0000 SQ.FT.	XMRP =	1076.6800 IN. XO			BETA =	.000	ELEVON =	.000
LREF =	474.8100 INCHES	YMRP =	.0000 IN. YO			AILRON =	.000	BDFLAP =	.000
BREF =	936.6800 INCHES	ZMRP =	375.0000 IN. ZO			SPDBRK =	55.000	RUDDER =	.000
SCALE =	.3600								

PARAMETRIC DATA

RUN NO. 188/ 0 GRADIENT INTERVAL = -5.00/ 5.00

Q	ALPHA	ALPHAU	BETA	QI	DP/Q50	DP/Q51	DP/Q52
94.160	-.073	.00000	.00000	96.00000	.90348	.90895	-.00507
94.210	5.117	5.00000	.00000	95.75000	.82728	.83169	.00000
94.200	10.325	10.00000	.00000	96.00000	.75653	.77261	-.00507
94.330	15.539	15.00000	.00000	96.25000	.69122	.68171	-.00507
	GRADIENT	.00000	.00000	.00000	.00000	.00000	.00000

ARC40X80-462(OA100) OV101(FTP OFF) (BNA07N) (16 MAR 82)

REFERENCE DATA

SREF =	2690.0000 SQ.FT.	XMRP =	1076.6800 IN. XO		
LREF =	474.8100 INCHES	YMRP =	.0000 IN. YO		
BREF =	936.6800 INCHES	ZMRP =	375.0000 IN. ZO		
SCALE =	.3600				

PARAMETRIC DATA

ALPHA =	10.000	ELEVON =	10.000
AILRON =	.000	BDFLAP =	22.000
SPDBRK =	25.000	RUDDER =	.000

RUN NO. 189/ 0 GRADIENT INTERVAL = -5.00/ 5.00

Q	BETA	ALPHAU	Q1	DP/Q50	DP/Q51	DP/Q52	ALPHA
47.640	-10.000	10.00000	48.25000	.89002	.91331	.00999	10.55350
47.530	-5.000	10.00000	48.25000	.83640	.84168	.00000	10.53930
47.240	-2.000	10.00000	47.75000	.80423	.80587	.00000	10.53680
47.530	.000	10.00000	48.25000	.81496	.81482	.00000	10.53670
47.480	2.000	10.00000	48.25000	.79351	.78796	.00000	10.53580
47.380	5.000	10.00000	47.75000	.79351	.78796	-.00999	10.53490
47.450	10.000	10.00000	49.25000	.82568	.80587	.00999	10.54590
47.380	20.000	10.00000	48.00000	.92219	.92227	.00000	10.53400
	GRADIENT	.00000	-.02586	-.00407	-.00525	-.00086	-.00041

ARC40X80-462(OA100) OV101(FTP OFF) (BNA070) (16 MAR 82)

REFERENCE DATA

SREF =	2690.0000 SQ.FT.	XMRP =	1076.6800 IN. XO		
LREF =	474.8100 INCHES	YMRP =	.0000 IN. YO		
BREF =	936.6800 INCHES	ZMRP =	375.0000 IN. ZO		
SCALE =	.3600				

PARAMETRIC DATA

ALPHA =	10.000	ELEVON =	10.000
AILRON =	.000	BDFLAP =	-11.700
SPDBRK =	25.000	RUDDER =	.000

RUN NO. 190/ 0 GRADIENT INTERVAL = -5.00/ 5.00

Q	BETA	ALPHAU	Q1	DP/Q50	DP/Q51	DP/Q52	ALPHA
47.640	-10.000	10.00000	48.25000	.78279	.79691	.00000	10.48410
47.550	-5.000	10.00000	48.25000	.75062	.76110	.00000	10.47300
47.650	-2.000	10.00000	48.25000	.71845	.73423	.00000	10.46590
47.360	.000	10.00000	47.75000	.69700	.70737	-.00999	10.46350
47.420	2.000	10.00000	48.00000	.69700	.70737	.00000	10.46720
47.500	5.000	10.00000	48.00000	.68628	.69842	.00000	10.47040
47.490	15.000	10.00000	48.25000	.76134	.77900	.00000	10.48130
47.330	20.000	10.00000	48.00000	.82568	.83273	.00000	10.46300
	GRADIENT	.00000	-.03017	-.00629	-.00633	.00000	-.00018

ARC40X80-462(OA100) OV101 (BNA07P) (16 MAR 82)

REFERENCE DATA

SREF =	2690.0000 SQ.FT.	XMRP =	1076.6800 IN.	XO	
LREF =	474.8100 INCHES	YMRP =	.0000 IN.	YO	
BREF =	936.6800 INCHES	ZMRP =	375.0000 IN.	ZO	
SCALE =	.3600				

PARAMETRIC DATA

ALPHA =	10.000	ELEVON =	.000
AILRON =	.000	BDFLAP =	.000
SPDBRK =	.000	RUDDER =	.000

RUN NO. 85/ 0 GRADIENT INTERVAL = -5.00/ 5.00

Q	BETA	ALPHAU	QI	DP/Q50	DP/Q51	DP/Q52	ALPHA
47.990	-13.000	10.00000	48.50000	-.71575	.05352	1.08441	10.36050
47.900	-10.000	10.00000	48.00000	-.67302	.00892	1.05456	10.35670
47.590	-5.000	10.00000	48.00000	-.57687	-.05352	.99487	10.35060
47.840	-2.000	10.00000	48.00000	-.47005	-.08028	.99487	10.34730
47.790	.000	10.00000	48.00000	-.36322	-.05352	.97497	10.34500
47.800	2.000	10.00000	48.00000	-.26707	-.05352	.99487	10.34700
47.750	5.000	10.00000	48.00000	-.14956	-.03568	1.00482	10.34890
47.630	10.000	10.00000	48.00000	.18161	.01784	1.05456	10.35780
47.530	15.000	10.00000	48.00000	.47005	.08028	1.12420	10.35930
	GRADIENT	.00000	.00000	.04384	.00246	.00086	-.00016

ARC40X80-462(OA100) OV101 (BNA07Q) (16 MAR 82)

REFERENCE DATA

SREF =	2690.0000 SQ.FT.	XMRP =	1076.6800 IN.	XO	
LREF =	474.8100 INCHES	YMRP =	.0000 IN.	YO	
BREF =	936.6800 INCHES	ZMRP =	375.0000 IN.	ZO	
SCALE =	.3600				

PARAMETRIC DATA

ALPHA =	10.000	ELEVON =	.000
AILRON =	.000	BDFLAP =	.000
SPDBRK =	55.000	RUDDER =	.000

RUN NO. 100/ 0 GRADIENT INTERVAL = -5.00/ 5.00

Q	BETA	ALPHAU	QI	DP/Q50	DP/Q51	DP/Q52	ALPHA
47.610	-13.000	10.00000	47.50000	-.67302	.04460	1.10430	10.34010
47.820	-10.000	10.00000	48.50000	-.64097	.00000	1.04461	10.33610
47.670	-5.000	10.00000	47.50000	-.53414	-.03568	1.02471	10.32700
47.670	-2.000	10.00000	47.50000	-.43800	-.08028	.97497	10.32420
47.600	.000	10.00000	47.50000	-.34185	-.05352	.97497	10.32430
47.560	2.000	10.00000	49.00000	-.26707	-.03568	.97497	10.32280
47.750	5.000	10.00000	47.50000	-.12819	-.04460	1.00482	10.32720
47.670	10.000	10.00000	49.00000	.18161	.04460	1.07446	10.33270
47.610	15.000	10.00000	49.00000	.47005	.09812	1.12420	15.34150
47.680	20.000	10.00000	47.50000	.72643	.14273	1.19384	15.33100
	GRADIENT	.00000	.05172	.04089	.00077	-.00171	-.00003

ARC40X80-462(OA100) OV101 (CNA02D) (16 MAR 82)

REFERENCE DATA

SREF =	2690.0000 SQ.FT.	XMRP =	1076.6800 IN. XO		
LREF =	474.8100 INCHES	YMRP =	.0000 IN. YO		
BREF =	936.6800 INCHES	ZMRP =	375.0000 IN. ZO		
SCALE =	.3600				

PARAMETRIC DATA

ALPHA =	10.000	BETA =	.000
ELEVON =	-10.000	BDFLAP =	.000
SPDBRK =	25.000	RUDDER =	.000

RUN NO. 57/ 0 GRADIENT INTERVAL = -5.00/ 5.00

Q	AILRON	ALPHAU	BETA	QI	CP68	CP69	CP70	CP71	CP72	CP73	.ALPHA
47.760	-.064	10.00000	.00000	48.00000	.94741	.10524	.12712	.19274	.06149	.10524	10.17740
47.770	2.461	10.00000	.00000	48.00000	.94741	.10524	.12712	.17086	.03962	.08337	10.17930
47.800	4.956	10.00000	.00000	48.00000	.94741	.10524	.12712	.19274	.07243	.08337	10.18250
47.880	7.495	10.00000	.00000	48.50000	.94797	.09280	.12527	.17940	.06032	.07115	10.18790
47.690	10.020	10.00000	.00000	48.00000	.94741	.10524	.12712	.18180	.05056	.07243	10.18750
47.640	15.039	10.00000	.00000	48.00000	.94741	.11618	.12712	.19274	.03962	.07243	10.21370
	GRADIENT	-.00000	.00000	-.00000	.00000	.00000	.00000	-.00002	.00216	-.00437	.00102

ARC40X80-462(OA100) OV101 (CNA02E) (16 MAR 82)

REFERENCE DATA

SREF =	2690.0000 SQ.FT.	XMRP =	1076.6800 IN. XO		
LREF =	474.8100 INCHES	YMRP =	.0000 IN. YO		
BREF =	936.6800 INCHES	ZMRP =	375.0000 IN. ZO		
SCALE =	.3600				

PARAMETRIC DATA

ALPHA =	15.000	BETA =	.000
ELEVON =	-10.000	BDFLAP =	.000
SPDBRK =	25.000	RUDDER =	.000

RUN NO. 58/ 0 GRADIENT INTERVAL = -5.00/ 5.00

Q	AILRON	ALPHAU	BETA	QI	CP68	CP69	CP70	CP71	CP72	CP73	ALPHA
47.510	-.064	15.00000	.00000	48.00000	.83803	.03962	.05056	.13805	.00681	.03962	15.39270
47.450	2.461	15.00000	.00000	47.00000	.86804	.01922	.05273	.14208	.00805	.05273	15.38990
47.560	4.971	15.00000	.00000	48.00000	.82710	.02868	.06149	.12712	.00681	.06149	15.39340
47.500	7.465	15.00000	.00000	48.00000	.83803	.02868	.06149	.11618	-.00413	.03962	15.39760
47.370	10.020	15.00000	.00000	48.00000	.83803	.01774	.03962	.12712	.01774	.05056	15.39600
47.570	15.055	15.00000	.00000	48.00000	.83803	.01774	.08337	.12712	-.00413	.02868	15.39770
	GRADIENT	.00000	.00000	-.00038	-.00216	-.00218	.00217	-.00217	.00000	.00435	.00014

ARC40X80-462(OA100) OV101 (CNA02F) (16 MAR 82)

REFERENCE DATA

SREF =	2690.0000 SQ.FT.	XMRP =	1076.6800 IN. XO		
LREF =	474.8100 INCHES	YMRP =	.0000 IN. YO		
BREF =	936.6800 INCHES	ZMRP =	375.0000 IN. ZO		
SCALE =	.3600				

PARAMETRIC DATA

ALPHA =	20.000	BETA =	.000
ELEVON =	-10.000	BDFLAP =	.000
SPDBRK =	25.000	RUDDER =	.000

RUN NO. 59/ 0 GRADIENT INTERVAL = -5.00/ 5.00

Q	AILRON	ALPHAU	BETA	QI	CP68	CP69	CP70	CP71	CP72	CP73	ALPHA
45.310	-.064	20.00000	.00000	50.00000	.63453	-.07961	-.05860	-.00609	-.11111	-.07961	20.65880
47.090	2.461	20.00000	.00000	47.00000	.72285	-.08130	-.05896	.00805	-.11480	-.05896	20.65709
47.600	4.971	20.00000	.00000	48.00000	.70679	-.06975	-.04788	-.00413	-.11350	-.05882	20.65230
47.390	7.480	20.00000	.00000	47.00000	.70051	-.08130	-.08130	-.02545	-.11480	-.05896	20.65919
47.470	10.020	20.00000	.00000	48.00000	.69585	-.06975	-.04788	.02868	-.09163	-.04788	20.65590
47.360	15.010	20.00000	.00000	48.00000	.69585	-.06975	-.04788	.00681	-.11350	-.05882	20.65469
	GRADIENT	.00000	.00000	-.39805	.01437	.00195	.00213	.00039	-.00048	.00413	-.00129

ARC40X80-462(OA100) OV101 (CNA02G) (16 MAR 82)

REFERENCE DATA

SREF =	2690.0000 SQ.FT.	XMRP =	1076.6800 IN. XO		
LREF =	474.8100 INCHES	YMRP =	.0000 IN. YO		
BREF =	936.6800 INCHES	ZMRP =	375.0000 IN. ZO		
SCALE =	.3600				

PARAMETRIC DATA

ALPHA =	.000	BETA =	.000
ELEVON =	-20.000	BDFLAP =	.000
SPDBRK =	25.000	RUDDER =	.000

RUN NO. 70/ 0 GRADIENT INTERVAL = -5.00/ 5.00

Q	AILRON	ALPHAU	BETA	QI	CP68	CP69	CP70	CP71	CP72	CP73	ALPHA
48.060	-.053	.00000	.00000	48.50000	1.04540	.16857	.16857	.15775	.11445	.13610	-.34040
47.800	2.441	.00000	.00000	47.50000	.85841	.16215	.17320	.16215	.11794	.12899	-.33890
47.850	4.966	.00000	.00000	48.50000	.83972	.16857	.16857	.15775	.12527	.14692	-.32630
47.690	7.475	.00000	.00000	48.50000	1.04540	.15775	.16857	.15775	.11445	.13610	-.30830
47.660	10.000	.00000	.00000	48.50000	.93715	.16857	.17940	.13610	.11445	.13610	-.28860
47.530	15.005	.00000	.00000	47.50000	1.06839	.16215	.17320	.17320	.11794	.14005	-.25800
	GRADIENT	.00000	.00000	.00082	-.04091	.00001	-.00000	-.00000	.00216	.00217	.00281

ARC40X80-462(OA100) OV101 (CNA02H) (16 MAR 82)

REFERENCE DATA

SREF =	2690.0000 SQ.FT.	XMRP =	1076.6800 IN. XO		
LREF =	474.8100 INCHES	YMRP =	.0000 IN. YO		
BREF =	936.6800 INCHES	ZMRP =	375.0000 IN. ZO		
SCALE =	.3600				

PARAMETRIC DATA

ALPHA =	5.000	BETA =	.000
ELEVON =	-20.000	BDFLAP =	.000
SPDBRK =	25.000	RUDDER =	.000

RUN NO. 71/ 0 GRADIENT INTERVAL = -5.00/ 5.00

Q	AILRON	ALPHAU	BETA	Q1	CP68	CP69	CP70	CP71	CP72	CP73	ALPHA
47.420	-.068	5.00000	.00000	49.50000	.95967	.16411	.18533	.18533	.12168	.14290	4.84390
47.380	2.456	5.00000	.00000	47.50000	1.02418	.16215	.20636	.19530	.10689	.16215	4.86130
47.560	4.986	5.00000	.00000	47.50000	1.02418	.17320	.17320	.19530	.11794	.16215	4.86170
47.530	7.476	5.00000	.00000	47.50000	1.02418	.17320	.19530	.19530	.14005	.17320	4.87510
47.490	9.986	5.00000	.00000	47.50000	1.02418	.17320	.18425	.19530	.11794	.15110	4.89760
47.450	15.020	5.00000	.00000	47.50000	1.04629	.18425	.19530	.20636	.11794	.16215	4.93140
	GRADIENT	-.00000	.00000	-.39767	.01283	.00180	-.00240	.00198	-.00075	.00383	.00354

ARC40X80-462(OA100) OV101 (CNA02I) (16 MAR 82)

REFERENCE DATA

SREF =	2690.0000 SQ.FT.	XMRP =	1076.6800 IN. XO		
LREF =	474.8100 INCHES	YMRP =	.0000 IN. YO		
BREF =	936.6800 INCHES	ZMRP =	375.0000 IN. ZO		
SCALE =	.3600				

PARAMETRIC DATA

ALPHA =	10.000	BETA =	.000
ELEVON =	-20.000	BDFLAP =	.000
SPDBRK =	25.000	RUDDER =	.000

RUN NO. 72/ 0 GRADIENT INTERVAL = -5.00/ 5.00

Q	AILRON	ALPHAU	BETA	Q1	CP68	CP69	CP70	CP71	CP72	CP73	ALPHA
47.650	-.053	10.00000	.00000	47.50000	.96892	.10689	.15110	.19530	.08479	.12899	10.03710
47.620	2.442	10.00000	.00000	48.50000	1.04540	.10362	.15775	.17940	.10362	.12527	10.03800
47.580	5.408	10.00000	.00000	47.50000	1.06839	.10689	.15110	.19530	.10689	.12899	10.07030
47.500	7.491	10.00000	.00000	47.50000	1.06939	.09584	.16215	.19530	.08479	.14005	10.07050
47.460	10.000	10.00000	.00000	47.50000	1.06839	.11794	.15110	.19530	.10689	.11794	10.09890
47.370	15.035	10.00000	.00000	47.50000	.97998	.11794	.16215	.18425	.08479	.12899	10.13050
	GRADIENT	.00000	.00000	.40087	.03066	-.00131	.00267	-.00638	.00755	-.00149	.00036

ARC40X80-462(OA100) OV101 (CNA02J) (16 MAR 82)

REFERENCE DATA

SREF =	2690.0000 SQ.FT.	XMRP =	1076.6800 IN. XO		
LREF =	474.8100 INCHES	YMRP =	.0000 IN. YO		
BREF =	936.6800 INCHES	ZMRP =	375.0000 IN. ZO		
SCALE =	.3600				

PARAMETRIC DATA

ALPHA =	15.000	BETA =	.000
ELEVON =	-20.000	BDFLAP =	.000
SPDBRK =	25.000	RUDDER =	.000

RUN NO. 73/ 0 GRADIENT INTERVAL = -5.00/ 5.00

Q	AILRON	ALPHAU	BETA	QI	CP68	CP69	CP70	CP71	CP72	CP73	ALPHA
47.540	-.053	15.00000	.00000	47.50000	.85941	.05163	.09584	.12899	.02953	.07374	15.23020
47.580	2.456	15.00000	.00000	47.50000	.86946	.05163	.10689	.14005	.05163	.10689	15.22850
47.480	4.966	15.00000	.00000	47.50000	.85841	.05163	.08479	.11794	.02953	.07374	15.23270
47.420	7.491	15.00000	.00000	49.00000	.81995	.01631	.08060	.13418	.03774	.09132	15.26340
47.350	9.970	15.00000	.00000	47.50000	.83630	.04058	.10689	.12899	.04058	.08479	15.28240
47.430	15.020	15.00000	.00000	47.50000	.84736	.05163	.09584	.12899	.04058	.08479	15.33470
	GRADIENT	-.00000	.00000	-.00000	-.00000	.00000	-.00220	-.00220	-.00000	-.00000	.00050

ARC40X80-462(OA100) OV101 (CNA02K) (16 MAR 82)

REFERENCE DATA

SREF =	2690.0000 SQ.FT.	XMRP =	1076.6800 IN. XO		
LREF =	474.8100 INCHES	YMRP =	.0000 IN. YO		
BREF =	936.6800 INCHES	ZMRP =	375.0000 IN. ZO		
SCALE =	.3600				

PARAMETRIC DATA

ALPHA =	20.000	BETA =	.000
ELEVON =	-20.000	BDFLAP =	.000
SPDBRK =	25.000	RUDDER =	.000

RUN NO. 74/ 0 GRADIENT INTERVAL = -5.00/ 5.00

Q	AILRON	ALPHAU	BETA	QI	CP68	CP69	CP70	CP71	CP72	CP73	ALPHA
47.470	-.068	20.00000	.00000	48.50000	.70982	-.05875	-.01545	.02785	-.05875	-.00463	20.48309
47.470	2.456	20.00000	.00000	47.50000	.71474	-.04783	-.00363	.00743	-.05888	-.00363	20.48579
47.410	4.981	20.00000	.00000	47.50000	.72579	-.06994	-.01468	.00743	-.05888	-.01468	20.48569
47.390	7.461	20.00000	.00000	47.50000	.72579	-.05888	-.04783	.04058	-.06994	-.01468	20.48810
47.330	9.986	20.00000	.00000	47.50000	.71474	-.04783	-.01468	.00743	-.08099	-.01468	20.49449
47.780	15.020	20.00000	.00000	48.50000	.70982	-.05875	-.00463	.02785	-.05875	-.00463	20.56299
	GRADIENT	-.00000	.00000	-.19805	.00316	-.00222	.00015	-.00404	-.00003	-.00199	.00051

ARC40X80-462(OA100) OV101 (CNA02L) (16 MAR 82)

REFERENCE DATA

SREF =	2690.0000 SQ.FT.	XMRP =	1076.6800 IN. XO		
LREF =	474.8100 INCHES	YMRP =	.0000 IN. YO		
BREF =	936.6800 INCHES	ZMRP =	375.0000 IN. ZO		
SCALE =	.3600				

PARAMETRIC DATA

ALPHA =	.000	BETA =	5.000
ELEVON =	.000	BDFLAP =	.000
SPDBRK =	25.000	RUDDER =	.000

RUN NO. 60/ 0 GRADIENT INTERVAL = -5.00/ 5.00

Q	AILRON	ALPHAU	BETA	QI	CP68	CP69	CP70	CP71	CP72	CP73	ALPHA
47.680	.000	.00000	5.00000	47.00000	.97973	.00805	.03039	.01922	-.01429	.00805	-.04990
47.880	2.524	.00000	5.00000	48.00000	.95834	-.00413	.02868	.01774	-.01507	.01774	-.05140
47.850	5.005	.00000	5.00000	48.00000	1.02396	-.00413	.02868	.01774	-.01507	.00681	-.05250
47.800	7.514	.00000	5.00000	48.00000	.95834	-.00413	.02868	.02868	-.03694	-.00413	-.05330
47.730	10.024	.00000	5.00000	48.00000	1.02396	-.00413	.02868	.01774	-.01507	-.00413	-.05380
47.790	15.088	.00000	5.00000	48.00000	.98022	-.01507	.03962	.00681	-.02600	.00681	-.05320
	GRADIENT	.00000	.00000	.39612	-.00847	-.00483	-.00068	-.00058	-.00031	.00384	-.00059

ARC40X80-462(OA100) OV101 (CNA02M) (16 MAR 82)

REFERENCE DATA

SREF =	2690.0000 SQ.FT.	XMRP =	1076.6800 IN. XO		
LREF =	474.8100 INCHES	YMRP =	.0000 IN. YO		
BREF =	936.6800 INCHES	ZMRP =	375.0000 IN. ZO		
SCALE =	.3600				

PARAMETRIC DATA

ALPHA =	5.000	BETA =	5.000
ELEVON =	.000	BDFLAP =	.000
SPDBRK =	25.000	RUDDER =	.000

RUN NO. 61/ 0 GRADIENT INTERVAL = -5.00/ 5.00

Q	AILRON	ALPHAU	BETA	QI	CP68	CP69	CP70	CP71	CP72	CP73	ALPHA
47.920	.000	5.00000	5.00000	48.00000	.95834	-.02600	.02868	.05056	-.02600	.00681	5.14540
47.840	2.510	5.00000	5.00000	48.00000	.95834	-.01507	.01774	.05056	-.01507	.01774	5.14770
47.740	4.990	5.00000	5.00000	48.00000	.95834	-.01507	.01774	.05056	-.02600	.00681	5.14580
47.700	7.514	5.00000	5.00000	47.00000	.97973	-.01429	.03039	.04156	-.01429	.00805	5.14660
47.820	10.009	5.00000	5.00000	48.00000	.96928	.00681	.01774	.05056	-.01507	.00681	5.14540
47.620	15.058	5.00000	5.00000	48.00000	.95834	-.01507	.03962	.05056	-.02600	.00681	5.14370
	GRADIENT	-.00000	-.00000	-.00000	.00000	.00220	-.00220	.00000	.00001	.00001	.00008

ARC40X80-462(OA100) OV101 (CNA02N) (16 MAR 82)

REFERENCE DATA

SREF =	2690.0000 SQ.FT.	XMRP =	1076.6800 IN.	XO	
LREF =	474.8100 INCHES	YMRP =	.0000 IN.	YO	
BREF =	936.6800 INCHES	ZMRP =	375.0000 IN.	ZO	
SCALE =	.3600				

PARAMETRIC DATA

ALPHA =	10.000	BETA =	5.000
ELEVON =	.000	BDFLAP =	.000
SPDBRK =	25.000	RUDDER =	.000

RUN NO. 62/ 0 GRADIENT INTERVAL = -5.00/ 5.00

Q	AILRON	ALPHAU	BETA	QI	CP68	CP69	CP70	CP71	CP72	CP73	ALPHA
47.830	.000	10.00000	5.00000	48.00000	.91459	-.03694	-.00413	.01774	-.04788	-.03694	10.34720
47.820	2.495	10.00000	5.00000	48.00000	.85991	-.06975	-.01507	.00681	-.04788	-.03694	10.34480
47.780	5.005	10.00000	5.00000	48.00000	.91459	-.04788	-.02600	.01774	-.05882	-.03694	10.34240
47.670	7.499	10.00000	5.00000	48.00000	.91459	-.03694	-.01507	-.00413	-.04788	-.03694	10.34300
47.670	10.024	10.00000	5.00000	48.00000	.90366	-.06975	-.02600	.00681	-.03694	-.03694	10.34630
47.800	15.088	10.00000	5.00000	48.00000	.85991	-.03694	-.00413	.00681	-.04788	-.02600	10.34780
	GRADIENT	.00000	.00000	.00000	-.02192	-.01315	-.00438	-.00438	.00000	.00000	-.00096

ARC40X80-462(OA100) OV101 (CNA020) (16 MAR 82)

REFERENCE DATA

SREF =	2690.0000 SQ.FT.	XMRP =	1076.6800 IN.	XO	
LREF =	474.8100 INCHES	YMRP =	.0000 IN.	YO	
BREF =	936.6800 INCHES	ZMRP =	375.0000 IN.	ZO	
SCALE =	.3600				

PARAMETRIC DATA

ALPHA =	15.000	BETA =	5.000
ELEVON =	.000	BDFLAP =	.000
SPDBRK =	25.000	RUDDER =	.000

RUN NO. 63/ 0 GRADIENT INTERVAL = -5.00/ 5.00

Q	AILRON	ALPHAU	BETA	QI	CP68	CP69	CP70	CP71	CP72	CP73	ALPHA
47.700	.000	15.00000	5.00000	48.00000	.82710	-.11350	-.08069	-.03694	-.12444	-.09163	15.55740
47.800	2.524	15.00000	5.00000	48.00000	.83803	-.10256	-.09163	-.06975	-.12444	-.10256	15.55920
47.750	5.005	15.00000	5.00000	48.00000	.80522	-.11350	-.08069	-.08069	-.12444	-.09163	15.55860
47.700	7.499	15.00000	5.00000	48.00000	.79428	-.12444	-.08069	-.04788	-.11350	-.09163	15.55630
47.770	10.024	15.00000	5.00000	48.00000	.81616	-.12444	-.09163	-.05882	-.12444	-.08069	15.56090
47.900	15.058	15.00000	5.00000	48.00000	.81616	-.12444	-.09163	-.06975	-.12444	-.08069	15.55880
	GRADIENT	.00000	.00000	.00000	.00433	.00433	-.00433	-.01300	.00000	-.00433	.00071

ARC40X80-462(OA100) OV101 (CNA02P) (16 MAR 82)

REFERENCE DATA

SREF =	2690.0000 SQ.FT.	XMRP =	1076.6800 IN. XO		
LREF =	474.8100 INCHES	YMRP =	.0000 IN. YO		
BREF =	936.6800 INCHES	ZMRP =	375.0000 IN. ZO		
SCALE =	.3600				

PARAMETRIC DATA

ALPHA =	20.000	BETA =	5.000
ELEVON =	.000	BDFLAP =	.000
SPDBRK =	25.000	RUDDER =	.000

RUN NO. 64/ 0 GRADIENT INTERVAL = -5.00/ 5.00

Q	AILRON	ALPHAU	BETA	Q1	CP68	CP69	CP70	CP71	CP72	CP73	ALPHA
47.710	.000	20.00000	5.00000	48.50000	.67735	-.21030	-.21030	-.17783	-.21030	-.19948	20.81099
48.030	2.524	20.00000	5.00000	48.00000	.65210	-.23381	-.17912	-.16819	-.20100	-.19006	20.81099
47.850	5.020	20.00000	5.00000	48.00000	.66304	-.23381	-.23381	-.19006	-.21194	-.22287	20.81439
47.840	7.499	20.00000	5.00000	48.00000	.68491	-.23381	-.20100	-.22287	-.23381	-.21194	20.81369
47.810	10.009	20.00000	5.00000	48.00000	.66304	-.23381	-.22287	-.22287	-.22287	-.19006	20.81110
47.700	15.073	20.00000	5.00000	48.00000	.68491	-.22287	-.20100	-.16819	-.21194	-.17912	20.80440
	GRADIENT	.00000	.00000	-.19806	-.01000	-.00931	.01235	.00382	.00369	.00373	.00000

ARC40X80-462(OA100) OV101 (CNA02Q) (16 MAR 82)

REFERENCE DATA

SREF =	2690.0000 SQ.FT.	XMRP =	1076.6800 IN. XO		
LREF =	474.8100 INCHES	YMRP =	.0000 IN. YO		
BREF =	936.6800 INCHES	ZMRP =	375.0000 IN. ZO		
SCALE =	.3600				

PARAMETRIC DATA

ALPHA =	.000	BETA =	5.000
ELEVON =	10.000	BDFLAP =	.000
SPDBRK =	25.000	RUDDER =	.000

RUN NO. 65/ 0 GRADIENT INTERVAL = -5.00/ 5.00

Q	AILRON	ALPHAU	BETA	Q1	CP68	CP69	CP70	CP71	CP72	CP73	ALPHA
47.570	.035	.00000	5.00000	47.00000	.97973	-.00312	.03039	.01922	-.01429	.00805	.09770
47.800	2.559	.00000	5.00000	48.00000	.95834	.00681	.02868	.02868	-.02600	-.00413	.09610
47.770	5.068	.00000	5.00000	48.00000	.95834	.00681	.00681	.02868	-.01507	-.00413	.09620
47.740	7.533	.00000	5.00000	47.00000	.97973	-.01429	.03039	.03039	-.02545	-.00312	.09890
47.730	10.043	.00000	5.00000	48.00000	.95834	-.00413	.02868	.01774	-.03694	-.00413	.09560
47.770	12.896	.00000	5.00000	48.00000	1.04584	-.01507	.01774	.01774	-.03694	-.00413	.08890
	GRADIENT	.00000	.00000	.39622	-.00847	.00393	-.00068	.00375	-.00464	-.00483	-.00063

ARC40X80-462(OA100) OV101 (CNA02R) (16 MAR 82)

REFERENCE DATA

SREF = 2690.0000 SQ.FT. XMRP = 1076.6800 IN. XO
LREF = 474.8100 INCHES YMRP = .0000 IN. YO
BREF = 936.6800 INCHES ZMRP = 375.0000 IN. ZO
SCALE = .3600

PARAMETRIC DATA

ALPHA = 5.000 BETA = 5.000
ELEVON = 10.000 BDFLAP = .000
SPDBRK = 25.000 RUDDER = .000

RUN NO. 66/ 0 GRADIENT INTERVAL = -5.00/ 5.00

Q	AILRON	ALPHAU	BETA	QI	CP68	CP69	CP70	CP71	CP72	CP73	ALPHA
47.850	.049	5.00000	5.00000	48.00000	1.03490	-.01507	.02868	.05056	-.02600	.00681	5.29310
47.690	2.559	5.00000	5.00000	48.00000	1.04584	-.00413	.02868	.06149	-.01507	.00681	5.29330
47.780	5.024	5.00000	5.00000	48.00000	1.04584	-.01507	.02868	.05056	-.02600	.00681	5.29510
47.750	7.518	5.00000	5.00000	48.50000	1.03457	-.00463	.02785	.04950	-.03710	-.00463	5.29330
47.710	10.043	5.00000	5.00000	47.00000	1.06907	-.00312	.03039	.04156	-.03662	.00805	5.29450
47.610	12.896	5.00000	5.00000	48.00000	1.04584	-.00413	.02868	.05056	-.02600	.00681	5.29640
	GRADIENT	.00000	.00000	.00000	.00436	.00436	.00000	.00436	.00436	.00000	.00008

ARC40X80-462(OA100) OV101 (CNA02S) (16 MAR 82)

REFERENCE DATA

SREF = 2690.0000 SQ.FT. XMRP = 1076.6800 IN. XO
LREF = 474.8100 INCHES YMRP = .0000 IN. YO
BREF = 936.6800 INCHES ZMRP = 375.0000 IN. ZO
SCALE = .3600

PARAMETRIC DATA

ALPHA = 10.000 BETA = 5.000
ELEVON = 10.000 BDFLAP = .000
SPDBRK = 25.000 RUDDER = .000

RUN NO. 67/ 0 GRADIENT INTERVAL = -5.00/ 5.00

Q	AILRON	ALPHAU	BETA	QI	CP68	CP69	CP70	CP71	CP72	CP73	ALPHA
47.830	.049	10.00000	5.00000	48.00000	.90366	-.04798	-.00413	.00681	-.05882	-.02600	10.49490
47.440	2.559	10.00000	5.00000	48.50000	.89395	-.06958	-.00463	.02785	-.05875	-.03710	10.49380
47.780	5.068	10.00000	5.00000	48.00000	.88178	-.04788	-.00413	-.00413	-.06975	-.03694	10.49550
47.740	7.578	10.00000	5.00000	48.00000	.90366	-.03694	-.02600	-.00413	-.05882	-.03694	10.49660
47.710	10.043	10.00000	5.00000	48.00000	.90366	-.04788	-.02600	.00681	-.05882	-.03694	10.49480
47.810	12.896	10.00000	5.00000	48.00000	.88178	-.05882	-.02600	.01774	-.04788	-.01507	10.49630
	GRADIENT	.00000	.00000	.19925	-.00391	-.00865	-.00020	.00838	.00003	-.00442	-.00044

ARC40X80-462(OA100) OV101 (CNA02T) (16 MAR 82)

REFERENCE DATA

SREF =	2690.0000 SQ.FT.	XMRP =	1076.6800 IN. XO		
LREF =	474.8100 INCHES	YMRP =	.0000 IN. YO		
BREF =	936.6800 INCHES	ZMRP =	375.0000 IN. ZO		
SCALE =	.3600				

PARAMETRIC DATA

ALPHA =	15.000	BETA =	5.000
ELEVON =	10.000	BDFLAP =	.000
SPDBRK =	25.000	RUDDER =	.000

RUN NO. 68/ 0 GRADIENT INTERVAL = -5.00/ 5.00

Q	AILRON	ALPHAU	BETA	QI	CP68	CP69	CP70	CP71	CP72	CP73	ALPHA
47.580	.049	15.00000	5.00000	47.00000	.81220	-.12597	-.09247	-.04779	-.12597	-.09247	15.70980
47.690	2.543	15.00000	5.00000	48.00000	.81616	-.12444	-.08069	-.05882	-.14631	-.09163	15.71140
47.710	5.038	15.00000	5.00000	48.00000	.80522	-.12444	-.09163	-.05882	-.12444	-.08069	15.71090
47.740	7.534	15.00000	5.00000	48.50000	.79642	-.12370	-.10205	-.03710	-.12370	-.10205	15.71150
47.700	10.058	15.00000	5.00000	48.00000	.79428	-.13538	-.08069	-.05882	-.12444	-.08069	15.71250
47.800	12.896	15.00000	5.00000	48.00000	.80522	-.12444	-.08069	-.06975	-.13538	-.10256	15.70700
	GRADIENT	.00000	.00000	.40095	.00159	.00061	.00472	-.00442	-.00816	.00034	.00064

ARC40X80-462(OA100) OV101 (CNA02U) (16 MAR 82)

REFERENCE DATA

SREF =	2690.0000 SQ.FT.	XMRP =	1076.6800 IN. XO		
LREF =	474.8100 INCHES	YMRP =	.0000 IN. YO		
BREF =	936.6800 INCHES	ZMRP =	375.0000 IN. ZO		
SCALE =	.3600				

PARAMETRIC DATA

ALPHA =	20.000	BETA =	5.000
ELEVON =	10.000	BDFLAP =	.000
SPDBRK =	25.000	RUDDER =	.000

RUN NO. 69/ 0 GRADIENT INTERVAL = -5.00/ 5.00

Q	AILRON	ALPHAU	BETA	QI	CP68	CP69	CP70	CP71	CP72	CP73	ALPHA
47.550	.064	20.00000	5.00000	48.00000	.67397	-.23381	-.20100	-.19006	-.22287	-.19006	20.96309
47.680	2.559	20.00000	5.00000	48.00000	.66304	-.24475	-.20100	-.21194	-.23381	-.20100	20.96489
47.610	5.054	20.00000	5.00000	48.00000	.65210	-.25569	-.22287	-.21194	-.24475	-.21194	20.95999
47.460	7.534	20.00000	5.00000	48.50000	.65570	-.23195	-.21030	-.16700	-.21030	-.18865	20.96539
47.300	10.058	20.00000	5.00000	48.50000	.65570	-.21030	-.18865	-.18865	-.24278	-.23195	20.95909
47.320	12.896	20.00000	5.00000	48.50000	.64487	-.25360	-.19948	-.18865	-.23195	-.21030	20.94559
	GRADIENT	.00000	.00000	.00000	-.00439	-.00439	.00000	-.00877	-.00439	-.00439	.00072

ARC40X80-462(OA100) OV101 (CNA02V) (16 MAR 82)

REFERENCE DATA

SREF =	2690.0000 SQ.FT.	XMRP =	1076.6800 IN. XO		
LREF =	474.8100 INCHES	YMRP =	.0000 IN. YO		
BREF =	936.6800 INCHES	ZMRP =	375.0000 IN. ZO		
SCALE =	.3600				

PARAMETRIC DATA

ALPHA =	.000	BETA =	10.000
ELEVON =	.000	BDFLAP =	.000
SPDBRK =	25.000	RUDDER =	.000

RUN NO. 75/ 0 GRADIENT INTERVAL = -5.00/ 5.00

Q	AILRON	ALPHAU	BETA	Q1	CP68	CP69	CP70	CP71	CP72	CP73	ALPHA
47.400	.000	.00000	10.00000	49.50000	.82178	-.12229	-.09047	-.10108	-.12229	-.06925	-.04110
47.360	2.524	.00000	10.00000	47.50000	.84736	-.12520	-.08099	-.09204	-.13625	-.06994	-.04090
47.470	5.005	.00000	10.00000	49.50000	.81117	-.12229	-.09047	-.09047	-.12229	-.05865	-.03870
47.420	7.514	.00000	10.00000	47.50000	.85841	-.12520	-.09204	-.08099	-.12520	-.06994	-.03860
47.490	10.009	.00000	10.00000	47.50000	.84736	-.13625	-.09204	-.08099	-.13625	-.06994	-.03640
47.360	15.058	.00000	10.00000	49.50000	.80056	-.12229	-.10108	-.09047	-.12229	-.05865	-.03750
	GRADIENT	.00000	.00000	-.79224	.01013	-.00115	.00376	.00358	-.00553	-.00027	.00008

ARC40X80-462(OA100) OV101 (CNA02W) (16 MAR 82)

REFERENCE DATA

SREF =	2690.0000 SQ.FT.	XMRP =	1076.6800 IN. XO		
LREF =	474.8100 INCHES	YMRP =	.0000 IN. YO		
BREF =	936.6800 INCHES	ZMRP =	375.0000 IN. ZO		
SCALE =	.3600				

PARAMETRIC DATA

ALPHA =	5.000	BETA =	10.000
ELEVON =	.000	BDFLAP =	.000
SPDBRK =	25.000	RUDDER =	.000

RUN NO. 76/ 0 GRADIENT INTERVAL = -5.00/ 5.00

Q	AILRON	ALPHAU	BETA	Q1	CP68	CP69	CP70	CP71	CP72	CP73	ALPHA
47.750	.000	5.00000	10.00000	47.50000	.84736	-.11414	-.09204	-.08099	-.12520	-.05888	5.14960
47.750	2.509	5.00000	10.00000	47.50000	.83630	-.14730	-.09204	-.09204	-.12520	-.05888	5.15250
47.660	4.990	5.00000	10.00000	47.50000	.82525	-.14730	-.10309	-.08099	-.10309	-.08099	5.15210
47.580	7.514	5.00000	10.00000	49.50000	.81117	-.14351	-.09047	-.09047	-.11168	-.05865	5.15420
47.440	10.024	5.00000	10.00000	47.50000	.83630	-.11414	-.09204	-.08099	-.12520	-.08099	5.15550
47.440	15.058	5.00000	10.00000	49.50000	.80056	-.11168	-.09047	-.07986	-.13290	-.06925	5.15870
	GRADIENT	.00000	.00000	.00000	-.00443	-.00666	-.00221	-.00001	.00442	-.00442	.00050

ARC40X80-462(OA100) OV101 (CNA02X) (16 MAR 82)

REFERENCE DATA

SREF =	2690.0000 SQ.FT.	XMRP =	1076.6800 IN. XO		
LREF =	474.8100 INCHES	YMRP =	.0000 IN. YO		
BREF =	936.6800 INCHES	ZMRP =	375.0000 IN. ZO		
SCALE =	.3600				

PARAMETRIC DATA

ALPHA =	10.000	BETA =	10.000
ELEVON =	.000	BDFLAP =	.000
SPDBRK =	25.000	RUDDER =	.000

RUN NO. 77/ 0 GRADIENT INTERVAL = -5.00/ 5.00

Q	AILRON	ALPHAU	BETA	QI	CP68	CP69	CP70	CP71	CP72	CP73	ALPHA
47.680	.000	10.00000	10.00000	47.50000	.80315	-.15835	-.12520	-.14730	-.14730	-.11414	10.35210
47.630	2.509	10.00000	10.00000	47.50000	.80315	-.14730	-.12520	-.13625	-.14730	-.11414	10.35130
47.600	5.019	10.00000	10.00000	47.50000	.81420	-.14730	-.13625	-.13625	-.15835	-.11414	10.34970
47.450	7.529	10.00000	10.00000	47.50000	.80315	-.13625	-.13625	-.12520	-.14730	-.11414	10.35210
47.390	10.024	10.00000	10.00000	47.50000	.79210	-.15835	-.13625	-.13625	-.16940	-.11414	10.35430
47.370	15.058	10.00000	10.00000	47.50000	.79210	-.14730	-.13625	-.12520	-.15835	-.11414	10.36380
	GRADIENT	.00000	.00000	.00000	.00000	.00440	.00000	.00440	.00000	.00000	-.00032

ARC40X80-462(OA100) OV101 (CNA02Y) (16 MAR 82)

REFERENCE DATA

SREF =	2690.0000 SQ.FT.	XMRP =	1076.6800 IN. XO		
LREF =	474.8100 INCHES	YMRP =	.0000 IN. YO		
BREF =	936.6800 INCHES	ZMRP =	375.0000 IN. ZO		
SCALE =	.3600				

PARAMETRIC DATA

ALPHA =	15.000	BETA =	10.000
ELEVON =	.000	BDFLAP =	.000
SPDBRK =	25.000	RUDDER =	.000

RUN NO. 78/ 0 GRADIENT INTERVAL = -5.00/ 5.00

Q	AILRON	ALPHAU	BETA	QI	CP68	CP69	CP70	CP71	CP72	CP73	ALPHA
47.490	.000	15.00000	10.00000	49.00000	.68065	-.20871	-.20871	-.20871	-.20871	-.18728	15.57450
47.420	2.481	15.00000	10.00000	49.50000	.66266	-.20715	-.19654	-.19654	-.18594	-.17533	15.57630
47.490	5.005	15.00000	10.00000	49.00000	.68065	-.20871	-.20871	-.20871	-.20871	-.19799	15.57790
47.420	7.514	15.00000	10.00000	47.50000	.64842	-.21361	-.23571	-.23571	-.19150	-.18045	15.57640
47.270	10.024	15.00000	10.00000	47.50000	.69263	-.21361	-.20256	-.20256	-.21361	-.19150	15.57920
47.500	15.088	15.00000	10.00000	47.50000	.72579	-.22466	-.21361	-.23571	-.21361	-.20256	15.58190
	GRADIENT	.00000	.00000	.20154	-.00725	.00063	.00490	.00490	.00918	.00482	.00073

ARC40X80-462(OA100) OV101 (CNA02Z) (16 MAR 82)

REFERENCE DATA

SREF =	2690.0000 SQ.FT.	XMRP =	1076.6800 IN.	XO	
LREF =	474.8100 INCHES	YMRP =	.0000 IN.	YO	
BREF =	936.6800 INCHES	ZMRP =	375.0000 IN.	ZO	
SCALE =	.3600				

PARAMETRIC DATA

ALPHA =	20.000	BETA =	10.000
ELEVON =	.000	BDFLAP =	.000
SPDBRK =	25.000	RUDDER =	.000

RUN NO. 79/ 0 GRADIENT INTERVAL = -5.00/ 5.00

Q	AILRON	ALPHAU	BETA	Q1	CP68	CP69	CP70	CP71	CP72	CP73	ALPHA
47.610	.000	20.00000	10.00000	47.50000	.60422	-.32413	-.31307	-.35728	-.30202	-.29097	20.82259
47.510	2.510	20.00000	10.00000	47.50000	.57106	-.32413	-.32413	-.32413	-.29097	-.30202	20.82199
47.470	5.020	20.00000	10.00000	47.50000	.58211	-.33518	-.33518	-.36833	-.31307	-.31307	20.82559
47.420	7.514	20.00000	10.00000	49.00000	.57350	-.33729	-.31586	-.34801	-.28371	-.27300	20.82520
47.380	10.009	20.00000	10.00000	47.50000	.58211	-.33518	-.32413	-.34623	-.30202	-.29097	20.82790
47.730	15.073	20.00000	10.00000	47.50000	.57106	-.34623	-.34623	-.39044	-.30202	-.27992	20.82548
	GRADIENT	.00000	.00000	.00000	-.01321	.00000	-.00440	.01321	.00440	-.00440	-.00024

ARC40X80-462(OA100) OV101 (CNA03A) (16 MAR 82)

REFERENCE DATA

SREF =	2690.0000 SQ.FT.	XMRP =	1076.6800 IN.	XO	
LREF =	474.8100 INCHES	YMRP =	.0000 IN.	YO	
BREF =	936.6800 INCHES	ZMRP =	375.0000 IN.	ZO	
SCALE =	.3600				

PARAMETRIC DATA

ALPHA =	.000	BETA =	10.000
ELEVON =	10.000	BDFLAP =	.000
SPDBRK =	25.000	RUDDER =	.000

RUN NO. 80/ 0 GRADIENT INTERVAL = -5.00/ 5.00

Q	AILRON	ALPHAU	BETA	Q1	CP68	CP69	CP70	CP71	CP72	CP73	ALPHA
47.370	.035	.00000	10.00000	47.50000	.84736	-.13625	-.10309	-.09204	-.13625	-.06994	.10890
47.290	2.559	.00000	10.00000	47.50000	.84736	-.12520	-.09204	-.08099	-.12520	-.06994	.10520
47.470	5.053	.00000	10.00000	47.50000	.84736	-.12520	-.09204	-.08099	-.13625	-.06994	.10540
47.510	7.533	.00000	10.00000	47.50000	.84736	-.14730	-.09204	-.08099	-.12520	-.06994	.10220
47.370	10.058	.00000	10.00000	47.50000	.84736	-.12520	-.09204	-.06994	-.12520	-.08099	.10200
47.570	12.896	.00000	10.00000	49.00000	.81995	-.12299	-.10156	-.09084	-.12299	-.06941	.09530
	GRADIENT	.00000	.00000	-.00000	.00000	.00438	.00438	.00438	.00438	.00000	-.00147

ARC40X80-462(OA100) OV101 (CNA03B) (16 MAR 82)

REFERENCE DATA

SREF = 2690.0000 SQ.FT. XMRP = 1076.6800 IN. XO
LREF = 474.8100 INCHES YMRP = .0000 IN. YO
BREF = 936.6800 INCHES ZMRP = 375.0000 IN. ZO
SCALE = .3600

PARAMETRIC DATA

ALPHA = 5.000 BETA = 10.000
ELEVON = 10.000 BDFLAP = .000
SPDBRK = 25.000 RUDDER = .000

RUN NO. 81/ 0 GRADIENT INTERVAL = -5.00/ 5.00

Q	AILRON	ALPHAU	BETA	QI	CP68	CP69	CP70	CP71	CP72	CP73	ALPHA
47.580	.010	5.00000	10.00000	47.50000	.84736	-.13625	-.10309	-.10309	-.12520	-.08099	5.30290
47.460	2.529	5.00000	10.00000	49.00000	.79851	-.14442	-.10156	-.06941	-.12299	-.05870	5.29670
47.450	5.054	5.00000	10.00000	47.50000	.84736	-.13625	-.10309	-.08099	-.12520	-.06994	5.29710
47.340	7.548	5.00000	10.00000	47.50000	.84736	-.12520	-.10309	-.06994	-.12520	-.08099	5.29960
47.720	10.043	5.00000	10.00000	47.50000	.84736	-.12520	-.10309	-.06994	-.12520	-.06994	5.30020
47.370	12.896	5.00000	10.00000	47.50000	.84736	-.13625	-.10309	-.08099	-.12520	-.06994	5.30320
	GRADIENT	.00000	.00000	.59555	-.01539	-.00324	.00061	.01337	.00088	.00985	-.00246

ARC40X80-462(OA100) OV101 (CNA03C) (16 MAR 82)

REFERENCE DATA

SREF = 2690.0000 SQ.FT. XMRP = 1076.6800 IN. XO
LREF = 474.8100 INCHES YMRP = .0000 IN. YO
BREF = 936.6800 INCHES ZMRP = 375.0000 IN. ZO
SCALE = .3600

PARAMETRIC DATA

ALPHA = 10.000 BETA = 10.000
ELEVON = 10.000 BDFLAP = .000
SPDBRK = 25.000 RUDDER = .000

RUN NO. 82/ 0 GRADIENT INTERVAL = -5.00/ 5.00

Q	AILRON	ALPHAU	BETA	QI	CP68	CP69	CP70	CP71	CP72	CP73	ALPHA
47.560	.064	10.00000	10.00000	49.00000	.78780	-.15513	-.13370	-.12299	-.13370	-.13370	10.50020
47.530	2.543	10.00000	10.00000	47.50000	.80315	-.14730	-.13625	-.13625	-.14730	-.11414	10.49990
47.500	5.053	10.00000	10.00000	49.00000	.77708	-.14442	-.13370	-.13370	-.14442	-.12299	10.50610
47.540	7.553	10.00000	10.00000	47.50000	.79210	-.14730	-.12520	-.12520	-.14730	-.12520	10.50840
47.370	10.043	10.00000	10.00000	47.50000	.79210	-.14730	-.13625	-.13625	-.13625	-.12520	10.50960
47.080	12.696	10.00000	10.00000	47.50000	.78104	-.15835	-.12520	-.12520	-.15835	-.12520	10.51190
	GRADIENT	.00000	.00000	-.60512	.00619	.00316	-.00103	-.00535	-.00548	.00789	-.00012

ARC40X80-462(OA100) OV101 (CNA03D) (16 MAR 82)

REFERENCE DATA

SREF =	2690.0000 SQ.FT.	XMRP =	1076.6800 IN. XO		
LREF =	474.8100 INCHES	YMRP =	.0000 IN. YO		
BREF =	936.6800 INCHES	ZMRP =	375.0000 IN. ZO		
SCALE =	.3600				

PARAMETRIC DATA

ALPHA =	15.000	BETA =	10.000
ELEVON =	10.000	BDFLAP =	.000
SPDBRK =	25.000	RUDDER =	.000

RUN NO. 83/ 0 GRADIENT INTERVAL = -5.00/ 5.00

Q	AILRON	ALPHAU	BETA	QI	CP68	CP69	CP70	CP71	CP72	CP73	ALPHA
47.350	.049	15.00000	10.00000	47.50000	.69263	-.21361	-.19150	-.19150	-.21361	-.21361	15.73260
47.310	2.543	15.00000	10.00000	47.50000	.69263	-.23571	-.21361	-.21361	-.21361	-.20256	15.73400
47.290	5.039	15.00000	10.00000	49.00000	.68065	-.20871	-.19728	-.23014	-.21942	-.21942	15.73690
47.380	7.549	15.00000	10.00000	47.50000	.70368	-.21361	-.23571	-.20256	-.21361	-.18045	15.73080
47.350	10.028	15.00000	10.00000	47.50000	.70368	-.23571	-.23571	-.21361	-.21361	-.18045	15.73340
47.360	12.896	15.00000	10.00000	47.50000	.70368	-.21361	-.21361	-.21361	-.21361	-.18045	15.73140
	GRADIENT	-.00000	.00000	-.00000	-.00000	-.00886	-.00886	-.00886	.00000	.00443	.00056

ARC40X80-462(OA100) OV101 (CNA03E) (16 MAR 82)

REFERENCE DATA

SREF =	2690.0000 SQ.FT.	XMRP =	1076.6800 IN. XO		
LREF =	474.8100 INCHES	YMRP =	.0000 IN. YO		
BREF =	936.6800 INCHES	ZMRP =	375.0000 IN. ZO		
SCALE =	.3600				

PARAMETRIC DATA

ALPHA =	20.000	BETA =	10.000
ELEVON =	10.000	BDFLAP =	.000
SPDBRK =	25.000	RUDDER =	.000

RUN NO. 84/ 0 GRADIENT INTERVAL = -5.00/ 5.00

Q	AILRON	ALPHAU	BETA	QI	CP68	CP69	CP70	CP71	CP72	CP73	ALPHA
47.920	.035	20.00000	10.00000	48.00000	.64116	-.34318	-.32131	-.36506	-.31037	-.32131	20.98369
47.790	2.559	20.00000	10.00000	48.00000	.58648	-.35412	-.35412	-.38693	-.32131	-.32131	20.98430
47.750	5.038	20.00000	10.00000	48.00000	.59742	-.36506	-.32131	-.35412	-.31037	-.32131	20.98329
47.640	7.548	20.00000	10.00000	48.00000	.58648	-.34318	-.33224	-.29943	-.32131	-.32131	20.98200
47.520	10.058	20.00000	10.00000	48.00000	.60835	-.36506	-.35412	-.34318	-.32131	-.32131	20.97629
47.560	12.896	20.00000	10.00000	48.00000	.59742	-.33224	-.36506	-.40881	-.32131	-.31037	20.97119
	GRADIENT	.00000	.00000	.00000	-.02167	-.00433	-.01300	-.00867	-.00433	.00000	.00024

ARC40X80-462(OA100) OV101(RCS PORTS CLOSED) (CNA03R) (16 MAR 82)

REFERENCE DATA

SREF =	2690.0000 SQ.FT.	XMRP =	1076.6800 IN. XO		
LREF =	474.8100 INCHES	YMRP =	.0000 IN. YO		
BREF =	936.6800 INCHES	ZMRP =	375.0000 IN. ZO		
SCALE =	.3600				

PARAMETRIC DATA

BETA =	.000	ELEVON =	.000
AILRON =	.000	BDFLAP =	.000
SPDBRK =	25.000	RUDDER =	.000

RUN NO. 101/ 0 GRADIENT INTERVAL = -5.00/ 5.00

Q	ALPHA	ALPHAU	BETA	QI	CP68	CP69	CP70	CP71	CP72	CP73
47.490	-5.240	-5.00000	.00000	47.50000	.72579	.09584	.09584	.02953	.05163	.08479
47.690	-2.649	-2.50000	.00000	47.50000	.85841	.14005	.12899	.10689	.09584	.10689
47.600	-.056	.00000	.00000	47.50000	.93577	.14005	.17320	.16215	.11794	.14005
47.720	2.541	2.50000	.00000	47.50000	.90261	.17320	.18425	.17320	.11794	.15110
47.640	5.139	5.00000	.00000	47.50000	1.01313	.16215	.20636	.19530	.11794	.16215
47.850	7.739	7.50000	.00000	48.50000	.96962	.13610	.14692	.19022	.09280	.14692
47.600	10.342	10.00000	.00000	47.50000	1.05734	.09584	.15110	.18425	.09584	.11794
47.730	12.941	12.50000	.00000	47.50000	.90261	.09584	.09584	.16215	.06268	.09584
47.580	15.556	15.00000	.00000	47.50000	.83630	.04058	.09584	.10689	.02953	.05163
47.500	18.180	17.50000	.00000	47.50000	.79210	-.01468	.04058	.08479	-.01468	.00743
47.570	20.826	20.00000	.00000	47.50000	.68158	-.08099	-.03678	.00743	-.06994	-.04783
46.010	26.006	25.00000	.00000	50.50000	.46123	-.19398	-.17309	-.16269	-.21468	-.20428
	GRADIENT	.96343	.00000	-.00000	.00851	.00639	.01065	.01277	.00425	.00852

ARC40X80-462(OA100) OV101(RCS PORTS CLOSED) (CNA03S) (16 MAR 82)

REFERENCE DATA

SREF =	2690.0000 SQ.FT.	XMRP =	1076.6800 IN. XO		
LREF =	474.8100 INCHES	YMRP =	.0000 IN. YO		
BREF =	936.6800 INCHES	ZMRP =	375.0000 IN. ZO		
SCALE =	.3600				

PARAMETRIC DATA

ALPHA =	.000	ELEVON =	.000
AILRON =	.000	BDFLAP =	.000
SPDBRK =	25.000	RUDDER =	.000

RUN NO. 102/ 0 GRADIENT INTERVAL = -5.00/ 5.00

Q	BETA	ALPHAU	ALPHA	QI	CP68	CP69	CP70	CP71	CP72	CP73
47.510	-13.000	.00000	-.03430	47.50000	.79210	.52686	.50475	.43844	.48265	.48265
47.670	-10.000	.00000	-.03790	47.50000	.88051	.44949	.42739	.39424	.38318	.40529
47.610	-5.000	.00000	-.04830	47.50000	1.03523	.28372	.29477	.27267	.25056	.25056
47.630	-2.000	.00000	-.05370	47.50000	1.01313	.22846	.20636	.19530	.17320	.18425
47.730	.000	.00000	-.05820	47.50000	.94682	.16215	.16215	.15110	.10689	.14005
47.580	2.000	.00000	-.05560	47.50000	.99103	.10689	.10689	.09584	.07374	.09584
47.730	5.000	.00000	-.05050	47.50000	.96892	.00743	.01848	.04058	-.01468	.00743
47.630	10.000	.00000	-.04280	47.50000	.85841	-.13625	-.10309	-.09204	-.12520	-.08099
47.590	15.000	.00000	-.03150	48.50000	.65570	-.26443	-.22113	-.21030	-.23195	-.21030
47.660	20.000	.00000	-.02170	47.50000	.44949	-.35833	-.33518	-.32413	-.32413	-.29097
	GRADIENT	.00000	-.00026	.00000	-.00648	-.02801	-.02725	-.02344	-.02630	-.02401

ARC40X80-462(OA100) OV101(RCS PORTS CLOSED) (CNA03T) (16 MAR 82)

REFERENCE DATA

SREF = 2690.0000 SQ.FT. XMRP = 1076.6800 IN. XO
LREF = 474.8100 INCHES YMRP = .0000 IN. YO
BREF = 936.6800 INCHES ZMRP = 375.0000 IN. ZO
SCALE = .3600

PARAMETRIC DATA

ALPHA = 5.000 ELEVON = .000
AILRON = .000 BDFLAP = .000
SPDBRK = 25.000 RUDDER = .000

RUN NO. 103/ 0 GRADIENT INTERVAL = -5.00/ 5.00

Q	BETA	ALPHAU	ALPHA	QI	CP68	CP69	CP70	CP71	CP72	CP73
47.560	-13.000	5.00000	5.15850	47.50000	.80315	.52686	.53791	.52686	.44949	.47160
47.650	-10.000	5.00000	5.15620	47.50000	.88051	.44949	.48265	.47160	.38318	.40529
47.600	-5.000	5.00000	5.14610	47.50000	1.03523	.30582	.31687	.33898	.22846	.27267
47.660	-2.000	5.00000	5.13950	47.50000	.99103	.20636	.23951	.25056	.18425	.20636
47.650	.000	5.00000	5.14090	47.50000	1.01313	.16215	.17320	.19530	.10689	.15110
47.620	2.000	5.00000	5.13740	47.50000	.99103	.09584	.11794	.15110	.07374	.09584
47.710	5.000	5.00000	5.14340	48.50000	1.03457	.02785	.01702	.04950	-.01545	.03867
47.750	10.000	5.00000	5.14940	48.50000	.82890	-.12370	-.10205	-.08040	-.12370	-.08040
47.650	15.000	5.00000	5.15490	48.50000	.67735	-.25360	-.22113	-.19948	-.21030	-.19948
47.600	20.000	5.00000	5.14970	49.00000	.41277	-.35872	-.32657	-.34801	-.31586	-.28371
	GRADIENT	.00000	-.00031	.08621	-.00006	-.02777	-.03004	-.02838	-.02484	-.02398

ARC40X80-462(OA100) OV101(RCS PORTS CLOSED) (CNA03U) (16 MAR 82)

REFERENCE DATA

SREF = 2690.0000 SQ.FT. XMRP = 1076.6800 IN. XO
LREF = 474.8100 INCHES YMRP = .0000 IN. YO
BREF = 936.6800 INCHES ZMRP = 375.0000 IN. ZO
SCALE = .3600

PARAMETRIC DATA

ALPHA = 10.000 ELEVON = .000
AILRON = .000 BDFLAP = .000
SPDBRK = 25.000 RUDDER = .000

RUN NO. 104/ 0 GRADIENT INTERVAL = -5.00/ 5.00

Q	BETA	ALPHAU	ALPHA	QI	CP68	CP69	CP70	CP71	CP72	CP73
47.610	-13.000	10.00000	10.35620	49.00000	.71279	.45563	.50921	.54135	.40205	.45563
47.590	-10.000	10.00000	10.35530	48.50000	.80725	.37425	.43920	.48250	.33095	.38507
47.560	-5.000	10.00000	10.34610	47.50000	.92472	.23951	.28372	.33898	.20636	.26162
47.520	-2.000	10.00000	10.34310	47.50000	.94682	.15110	.22846	.25056	.15110	.18425
47.450	.000	10.00000	10.34350	47.50000	.94682	.08479	.14005	.19530	.08479	.11794
47.610	2.000	10.00000	10.34430	47.50000	.95787	.04058	.10689	.09584	.02953	.07374
47.660	5.000	10.00000	10.34630	48.50000	.88302	-.03710	-.01545	.01702	-.02628	-.01545
47.470	10.000	10.00000	10.35090	47.50000	.80315	-.16940	-.13625	-.13625	-.13625	-.13625
47.600	15.000	10.00000	10.35330	48.50000	.62322	-.28608	-.27525	-.27525	-.24278	-.21030
47.630	20.000	10.00000	10.34310	47.50000	.41634	-.40149	-.37938	-.43464	-.34623	-.32413
	GRADIENT	.00000	.00006	.08621	-.00321	-.02766	-.02998	-.03309	-.02425	-.02770

ARC40X80-462(OA100) OV101(RCS PORTS CLOSED) (CNA03V) (16 MAR 82)

REFERENCE DATA

SREF = 2690.0000 SQ.FT. XMRP = 1076.6800 IN. XO
LREF = 474.8100 INCHES YMRP = .0000 IN. YO
BREF = 936.6800 INCHES ZMRP = 375.0000 IN. ZO
SCALE = .3600

PARAMETRIC DATA

ALPHA = 15.000 ELEVON = .000
AILRON = .000 BDFLAP = .000
SPDBRK = 25.000 RUDDER = .000

RUN NO. 105/ 0 GRADIENT INTERVAL = -5.00/ 5.00

Q	BETA	ALPHAU	ALPHA	Q1	CP68	CP69	CP70	CP71	CP72	CP73
47.610	-13.000	15.00000	15.57470	47.50000	.65948	.38318	.46054	.53791	.36108	.41634
47.680	-10.000	15.00000	15.58040	48.50000	.73147	.29847	.39590	.46085	.26600	.33095
47.610	-5.000	15.00000	15.55980	48.50000	.80725	.16857	.22270	.26600	.15775	.19022
47.520	-2.000	15.00000	15.55560	47.50000	.84736	.09584	.12899	.19530	.07374	.11794
47.510	.000	15.00000	15.55590	47.50000	.85841	.04058	.07374	.10689	.00743	.04058
47.690	2.000	15.00000	15.55470	48.50000	.82890	-.00463	.01702	.04950	-.03710	.00620
47.650	5.000	15.00000	15.55750	49.00000	.78780	-.09084	-.06941	-.05870	-.09084	-.05870
47.640	10.000	15.00000	15.57710	47.50000	.64842	-.23571	-.20256	-.22466	-.21361	-.13625
47.540	15.000	15.00000	15.58260	47.50000	.54896	-.35728	-.36833	-.39044	-.27992	-.30202
47.330	20.000	15.00000	15.56830	47.50000	.31687	-.45675	-.46780	-.56726	-.39044	-.37938
	GRADIENT	.00000	-.00023	.07759	-.00231	-.02583	-.02904	-.03302	-.02525	-.02531

ARC40X80-462(OA100) OV101(RCS PORTS CLOSED) (CNA03W) (16 MAR 82)

REFERENCE DATA

SREF = 2690.0000 SQ.FT. XMRP = 1076.6800 IN. XO
LREF = 474.8100 INCHES YMRP = .0000 IN. YO
BREF = 936.6800 INCHES ZMRP = 375.0000 IN. ZO
SCALE = .3600

PARAMETRIC DATA

ALPHA = 20.000 ELEVON = .000
AILRON = .000 BDFLAP = .000
SPDBRK = 25.000 RUDDER = .000

RUN NO. 106/ 0 GRADIENT INTERVAL = -5.00/ 5.00

Q	BETA	ALPHAU	ALPHA	Q1	CP68	CP69	CP70	CP71	CP72	CP73
47.510	-13.000	20.00000	20.83679	47.50000	.52686	.23951	.36108	.47160	.22846	.31687
47.660	-10.000	20.00000	20.83179	47.50000	.59317	.17320	.26162	.36108	.16215	.25056
47.540	-5.000	20.00000	20.81670	47.50000	.68158	.06268	.11794	.18425	.01848	.09584
47.630	-2.000	20.00000	20.82199	47.50000	.70368	-.02573	.02953	.11794	-.01468	.02953
47.540	.000	20.00000	20.82419	49.00000	.68065	-.10156	-.03727	-.01584	-.08013	-.04798
47.670	2.000	20.00000	20.81960	48.50000	.66652	-.13453	-.11288	-.04793	-.12370	-.10205
47.760	5.000	20.00000	20.80379	47.50000	.67053	-.22466	-.20256	-.21361	-.19150	-.19150
47.800	10.000	20.00000	20.82329	48.50000	.57992	-.32938	-.31855	-.40515	-.31855	-.30773
47.650	15.000	20.00000	20.82309	49.00000	.44492	-.42301	-.44444	-.49802	-.38015	-.40158
47.520	20.000	20.00000	20.80010	47.50000	.21741	-.56726	-.56726	-.69988	-.45675	-.51201
	GRADIENT	.00000	-.00120	.03448	-.00223	-.02852	-.03254	-.04002	-.02186	-.02931

ARC40X80-462(OA100) OV101 (CNA03X) (15 APR 82)

REFERENCE DATA

SREF =	2690.0000	SQ.FT.	XMRP =	1076.6800	IN. XO
LREF =	474.8100	INCHES	YMRP =	.0000	IN. YO
BREF =	936.6800	INCHES	ZMRP =	375.0000	IN. ZO
SCALE =	.3600				

PARAMETRIC DATA

BETA =	.000	ELEVON =	.000
AILRON =	.000	BDFLAP =	.000

RUN NO. 88/ 0 GRADIENT INTERVAL = -5.00/ 5.00

Q	ALPHA	ALPHAU	BETA	QI	CP68	CP69	CP70	CP71	CP72	CP73
47.710	-.075	.00000	.00000	48.00000	1.04584	.13805	.17086	.15993	.10524	.11618
47.670	10.320	10.00000	.00000	48.00000	.95834	.09430	.15993	.18180	.10524	.10524
47.790	15.535	15.00000	.00000	48.00000	.84897	.01774	.10524	.12712	-.00413	.06149
	GRADIENT	.00000	.00000	.00000	.00000	.00000	.00000	.00000	.00000	.00000

ARC40X80-462(OA100) OV101 (CNA03Y) (16 MAR 82)

REFERENCE DATA

SREF =	2690.0000	SQ.FT.	XMRP =	1076.6800	IN. XO
LREF =	474.8100	INCHES	YMRP =	.0000	IN. YO
BREF =	936.6800	INCHES	ZMRP =	375.0000	IN. ZO
SCALE =	.3600				

PARAMETRIC DATA

BETA =	.000	ELEVON =	.000
AILRON =	.000	BDFLAP =	.000
SPDBRK =	55.000	RUDDER =	-15.000

RUN NO. 89/ 0 GRADIENT INTERVAL = -5.00/ 5.00

Q	ALPHA	ALPHAU	BETA	QI	CP68	CP69	CP70	CP71	CP72	CP73
47.690	-.072	.00000	.00000	48.00000	.95834	.14899	.17086	.14899	.10524	.13805
47.740	10.326	10.00000	.00000	48.00000	.95834	.09430	.15993	.18180	.08337	.12712
47.760	15.535	15.00000	.00000	48.00000	.85991	.02868	.10524	.12712	.00681	.08337
47.760	20.801	20.00000	.00000	48.00000	.71772	-.08069	-.03694	-.00413	-.10256	-.06975
	GRADIENT	.00000	.00000	.00000	.00000	.00000	.00000	.00000	.00000	.00000

ARC40X80-462(OA100) OV101 (CNA03Z) (16 MAR 82)

REFERENCE DATA

SREF =	2690.0000 SQ.FT.	XMRP =	1076.6800 IN.	XO	
LREF =	474.8100 INCHES	YMRP =	.0000 IN.	YO	
BREF =	936.6800 INCHES	ZMRP =	375.0000 IN.	ZO	
SCALE =	.3600				

PARAMETRIC DATA

BETA =	.000	ELEVON =	.000
AILRON =	.000	BDFLAP =	.000
SPDBRK =	55.000	RUDDER =	.000

RUN NO. 90/ 0 GRADIENT INTERVAL = -5.00/ 5.00

Q	ALPHA	ALPHAU	BETA	QI	CP68	CP69	CP70	CP71	CP72	CP73
47.790	-.073	.00000	.00000	48.00000	.94741	.14899	.18180	.15993	.11618	.12712
47.600	5.118	5.00000	.00000	48.00000	1.00209	.13805	.19274	.20368	.10524	.13805
47.860	10.323	10.00000	.00000	48.00000	.95834	.09430	.15993	.20368	.08337	.11618
47.710	15.537	15.00000	.00000	48.00000	.84897	.01774	.08337	.13805	.02868	.06149
	GRADIENT	.00000	.00000	.00000	.00000	.00000	.00000	.00000	.00000	.00000

ARC40X80-462(OA100) OV101 (CNA04A) (16 MAR 82)

REFERENCE DATA

SREF =	2690.0000 SQ.FT.	XMRP =	1076.6800 IN.	XO	
LREF =	474.8100 INCHES	YMRP =	.0000 IN.	YO	
BREF =	936.6800 INCHES	ZMRP =	375.0000 IN.	ZO	
SCALE =	.3600				

PARAMETRIC DATA

BETA =	.000	ELEVON =	.000
AILRON =	.000	BDFLAP =	.000
SPDBRK =	55.000	RUDDER =	5.000

RUN NO. 91/ 0 GRADIENT INTERVAL = -5.00/ 5.00

Q	ALPHA	ALPHAU	BETA	QI	CP68	CP69	CP70	CP71	CP72	CP73
47.650	-.074	.00000	.00000	47.00000	.85687	.14208	.18675	.15324	.09740	.14208
47.790	5.119	5.00000	.00000	48.00000	1.01303	.14899	.19274	.19274	.11618	.14899
47.710	10.321	10.00000	.00000	47.00000	1.06907	.10857	.16441	.18675	.08623	.11974
47.710	15.535	15.00000	.00000	47.00000	.87921	.03039	.10857	.14208	.01922	.09740
47.720	20.804	20.00000	.00000	48.00000	.64116	-.08069	-.04788	.01774	-.09163	-.02600
	GRADIENT	.00000	.00000	.00000	.00000	.00000	.00000	.00000	.00000	.00000

ARC40X80-462(OA100) OV101 (CNA04B) (16 MAR 82)

REFERENCE DATA

SREF =	2690.0000 SQ.FT.	XMRP =	1076.6800 IN.	XO	
LREF =	474.8100 INCHES	YMRP =	.0000 IN.	YO	
BREF =	936.6800 INCHES	ZMRP =	375.0000 IN.	ZO	
SCALE =	.3600				

PARAMETRIC DATA

BETA =	.000	ELEVON =	.000
AILRON =	.000	BDFLAP =	.000
SPDBRK =	55.000	RUDDER =	10.000

RUN NO. 92/ 0 GRADIENT INTERVAL = -5.00/ 5.00

Q	ALPHA	ALPHAU	BETA	QI	CP68	CP69	CP70	CP71	CP72	CP73
47.670	-.074	.00000	.00000	48.00000	.93647	.13805	.18180	.15993	.10524	.11618
47.690	5.119	5.00000	.00000	47.00000	1.02440	.14208	.18675	.18675	.11974	.14208
47.570	10.324	10.00000	.00000	48.00000	.94741	.09430	.15993	.18180	.07243	.10524
47.720	15.537	15.00000	.00000	48.00000	.84897	.01774	.07243	.12712	.01774	.03962
47.780	20.801	20.00000	.00000	48.00000	.82710	-.09163	-.02600	.01774	-.09163	-.04788
	GRADIENT	.00000	.00000	.00000	.00000	.00000	.00000	.00000	.00000	.00000

ARC40X80-462(OA100) OV101 (CNA04C) (16 MAR 82)

BETA = 10.000

REFERENCE DATA

SREF =	2690.0000 SQ.FT.	XMRP =	1076.6800 IN.	XO	
LREF =	474.8100 INCHES	YMRP =	.0000 IN.	YO	
BREF =	936.6800 INCHES	ZMRP =	375.0000 IN.	ZO	
SCALE =	.3600				

PARAMETRIC DATA

BETA =	.000	ELEVON =	.000
AILRON =	.000	BDFLAP =	.000
SPDBRK =	55.000	RUDDER =	15.000

RUN NO. 93/ 0 GRADIENT INTERVAL = -5.00/ 5.00

Q	ALPHA	ALPHAU	BETA	QI	CP68	CP69	CP70	CP71	CP72	CP73
47.680	-.073	.00000	.00000	47.00000	1.06907	.15324	.17558	.16441	.10857	.13091
47.710	5.118	5.00000	.00000	47.00000	1.02440	.14208	.19792	.19792	.09740	.14208
47.630	10.324	10.00000	.00000	48.00000	.94741	.08337	.14899	.18180	.08337	.09430
47.710	15.539	15.00000	.00000	48.00000	.84897	.01774	.08337	.12712	.00681	.05056
47.670	20.802	20.00000	.00000	48.00000	.69585	-.11350	-.02600	.01774	-.08069	-.04788
	GRADIENT	.00000	.00000	.00000	.00000	.00000	.00000	.00000	.00000	.00000

ARC40X80-462(OA100) OV101 (CNA04D) (15 APR 82)

REFERENCE DATA

SREF =	2690.0000 SQ.FT.	XMRP =	1076.6800 IN. XO		
LREF =	474.8100 INCHES	YMRP =	.0000 IN. YO		
BREF =	936.6800 INCHES	ZMRP =	375.0000 IN. ZO		
SCALE =	.3600				

PARAMETRIC DATA

BETA =	.000	ELEVON =	.000
AILRON =	.000	BDFLAP =	.000
SPDBRK =	48.000	RUDDER =	19.500

RUN NO. 94/ 0 GRADIENT INTERVAL = -5.00/ 5.00

Q	ALPHA	ALPHAU	BETA	QI	CP68	CP69	CP70	CP71	CP72	CP73
47.870	-.072	.00000	.00000	48.00000	.95834	.13805	.17086	.17086	.10524	.12712
47.720	5.119	5.00000	.00000	47.00000	1.02440	.13091	.19792	.19792	.10857	.14208
47.720	10.322	10.00000	.00000	47.00000	.97973	.08623	.15324	.19792	.09740	.10857
47.720	15.534	15.00000	.00000	48.00000	.84897	.02868	.09430	.12712	.00681	.05056
47.660	20.804	20.00000	.00000	47.00000	.72285	-.08130	-.04779	.04156	-.08130	-.04779
	GRADIENT	.00000	.00000	.00000	.00000	.00000	.00000	.00000	.00000	.00000

ARC40X80-462(OA100) OV101 (CNA04E) (16 MAR 82)

REFERENCE DATA

SREF =	2690.0000 SQ.FT.	XMRP =	1076.6800 IN. XO		
LREF =	474.8100 INCHES	YMRP =	.0000 IN. YO		
BREF =	936.6800 INCHES	ZMRP =	375.0000 IN. ZO		
SCALE =	.3600				

PARAMETRIC DATA

BETA =	5.000	ELEVON =	.000
AILRON =	.000	BDFLAP =	.000
SPDBRK =	55.000	RUDDER =	.000

RUN NO. 95/ 0 GRADIENT INTERVAL = -5.00/ 5.00

Q	ALPHA	ALPHAU	BETA	QI	CP68	CP69	CP70	CP71	CP72	CP73
47.660	-.070	.00000	5.00000	47.50000	1.05734	-.00363	.02953	.05163	-.00363	.02953
47.740	5.125	5.00000	5.00000	48.50000	1.03457	.00620	.03867	.08197	-.00463	.03867
47.800	10.327	10.00000	5.00000	48.50000	.90467	-.03710	.00620	.03867	-.01545	-.01545
47.730	15.538	15.00000	5.00000	48.50000	.79642	-.11288	-.05875	-.00463	-.08040	-.05875
47.720	20.789	20.00000	5.00000	47.50000	.68158	-.21361	-.20256	-.18045	-.19150	-.20256
	GRADIENT	.00000	.00000	.00000	.00000	.00000	.00000	.00000	.00000	.00000

ARC40X80-462(OA100) OV101 (CNA04F) (16 MAR 82)

REFERENCE DATA

SREF =	2690.0000 SQ.FT.	XMRP =	1076.6800 IN.	XO	
LREF =	474.8100 INCHES	YMRP =	.0000 IN.	YO	
BREF =	936.6800 INCHES	ZMRP =	375.0000 IN.	ZO	
SCALE =	.3600				

PARAMETRIC DATA

BETA =	5.000	ELEVON =	.000
AILRON =	.000	BDFLAP =	.000
SPDBRK =	55.000	RUDDER =	5.000

RUN NO. 96/ 0 GRADIENT INTERVAL = -5.00/ 5.00

Q	ALPHA	ALPHAU	BETA	Q1	CP68	CP69	CP70	CP71	CP72	CP73
47.710	-.070	.00000	5.00000	48.50000	.94797	-.00463	.03867	.04950	-.00463	.01702
47.690	5.123	5.00000	5.00000	47.50000	1.05734	-.00363	.04058	.08479	.01848	.04058
47.710	10.328	10.00000	5.00000	47.50000	.86946	-.02573	-.01468	.05163	-.01468	.00743
47.530	20.790	20.00000	5.00000	49.00000	.66993	-.17656	-.13370	-.15513	-.21942	-.18728
	GRADIENT	.00000	.00000	.00000	.00000	.00000	.00000	.00000	.00000	.00000

ARC40X80-462(OA100) OV101 (CNA04G) (16 MAR 82)

REFERENCE DATA

SREF =	2690.0000 SQ.FT.	XMRP =	1076.6800 IN.	XO	
LREF =	474.8100 INCHES	YMRP =	.0000 IN.	YO	
BREF =	936.6800 INCHES	ZMRP =	375.0000 IN.	ZO	
SCALE =	.3600				

PARAMETRIC DATA

BETA =	5.000	ELEVON =	.000
AILRON =	.000	BDFLAP =	.000
SPDBRK =	55.000	RUDDER =	10.000

RUN NO. 97/ 0 GRADIENT INTERVAL = -5.00/ 5.00

Q	ALPHA	ALPHAU	BETA	Q1	CP68	CP69	CP70	CP71	CP72	CP73
47.610	-.071	.00000	5.00000	47.50000	.95787	-.00363	.00743	.06268	-.00363	.00743
47.710	5.122	5.00000	5.00000	48.50000	1.03457	-.00463	.04950	.08197	.01702	.03867
47.700	10.324	10.00000	5.00000	47.50000	.92472	-.02573	.05163	.06268	-.01468	-.01468
47.650	15.535	15.00000	5.00000	47.50000	.80315	-.11414	-.06994	-.01468	-.04783	-.02573
47.590	20.784	20.00000	5.00000	47.50000	.69263	-.21361	-.20256	-.18045	-.21361	-.19150
	GRADIENT	.00000	.00000	.00000	.00000	.00000	.00000	.00000	.00000	.00000

ARC40X80-462(OA100) OV101 (CNA04H) (16 MAR 82)

REFERENCE DATA

SREF =	2690.0000 SQ.FT.	XMRP =	1076.6800 IN.	XO	
LREF =	474.8100 INCHES	YMRP =	.0000 IN.	YO	
BREF =	936.6800 INCHES	ZMRP =	375.0000 IN.	ZO	
SCALE =	.3600				

PARAMETRIC DATA

BETA =	5.000	ELEVON =	.000
AILRON =	.000	BDFLAP =	.000
SPDBRK =	55.000	RUDDER =	15.000

RUN NO. 98/ 0 GRADIENT INTERVAL = -5.00/ 5.00

Q	ALPHA	ALPHAU	BETA	QI	CP68	CP69	CP70	CP71	CP72	CP73
47.610	-.072	.00000	5.00000	47.50000	.96892	-.00363	.02953	.06268	-.00363	.02953
47.660	5.123	5.00000	5.00000	47.50000	.96892	-.00363	.04058	.08479	-.00363	.00743
47.620	10.325	10.00000	5.00000	49.50000	.87481	-.03743	.00500	.04743	-.03743	.00500
47.620	15.537	15.00000	5.00000	49.50000	.76874	-.11168	-.06925	-.03743	-.09047	-.05965
47.590	20.783	20.00000	5.00000	47.50000	.65948	-.21361	-.21361	-.15835	-.20258	-.16840
	GRADIENT	.00000	.00000	.00000	.00000	.00000	.00000	.00000	.00000	.00000

ARC40X80-462(OA100) OV101 (CNA04I) (15 APR 82)

REFERENCE DATA

SREF =	2690.0000 SQ.FT.	XMRP =	1076.6800 IN.	XO	
LREF =	474.8100 INCHES	YMRP =	.0000 IN.	YO	
BREF =	936.6800 INCHES	ZMRP =	375.0000 IN.	ZO	
SCALE =	.3600				

PARAMETRIC DATA

BETA =	5.000	ELEVON =	.000
AILRON =	.000	BDFLAP =	.000
SPDBRK =	48.000	RUDDER =	19.500

RUN NO. 99/ 0 GRADIENT INTERVAL = -5.00/ 5.00

Q	ALPHA	ALPHAU	BETA	QI	CP68	CP69	CP70	CP71	CP72	CP73
47.690	-.073	.00000	5.00000	47.50000	.96892	-.00363	.04058	.05163	-.00363	.01848
47.690	5.122	5.00000	5.00000	48.50000	1.03457	-.00463	.03867	.08197	-.00463	.02785
47.750	10.321	10.00000	5.00000	47.50000	.90261	-.04783	-.00363	.05163	-.01468	-.00363
47.610	15.534	15.00000	5.00000	47.50000	.81420	-.11414	-.06994	-.03678	-.08099	-.06994
47.600	20.780	20.00000	5.00000	47.50000	.68158	-.21361	-.18045	-.18045	-.19150	-.13625
	GRADIENT	.00000	.00000	.00000	.00000	.00000	.00000	.00000	.00000	.00000

ARC40X80-462(OA100) OV101 (CNA04J) (16 MAR 82)

REFERENCE DATA

SREF =	2690.0000 SQ.FT.	XMRP =	1076.6800 IN.	XO	
LREF =	474.8100 INCHES	YMRP =	.0000 IN.	YO	
BREF =	936.6800 INCHES	ZMRP =	375.0000 IN.	ZO	
SCALE =	.3600				

PARAMETRIC DATA

BETA =	.000	ELEVON =	.000
AILRON =	.000	BDFLAP =	.000
SPDBRK =	25.000	RUDDER =	-22.500

RUN NO. 86/ 0 GRADIENT INTERVAL = -5.00/ 5.00

Q	ALPHA	ALPHAU	BETA	QI	CP68	CP69	CP70	CP71	CP72	CP73
47.740	-.064	.00000	.00000	48.00000	.94741	.13805	.18180	.14899	.09430	.10524
47.680	5.131	5.00000	.00000	48.00000	1.00209	.13805	.19274	.20368	.11618	.13805
47.780	10.334	10.00000	.00000	48.00000	1.04584	.10524	.15993	.18180	.07243	.13805
47.680	15.544	15.00000	.00000	47.00000	.87921	.04156	.08623	.13091	.03039	.07506
47.710	20.747	20.00000	.00000	48.00000	.71772	-.06975	-.04788	-.00413	-.10256	-.05882
	GRADIENT	.00000	.00000	.00000	.00000	.00000	.00000	.00000	.00000	.00000

ARC40X80-462(OA100) OV101 (CNA04K) (16 MAR 82)

REFERENCE DATA

SREF =	2690.0000 SQ.FT.	XMRP =	1076.6800 IN.	XO	
LREF =	474.8100 INCHES	YMRP =	.0000 IN.	YO	
BREF =	936.6800 INCHES	ZMRP =	375.0000 IN.	ZO	
SCALE =	.3600				

PARAMETRIC DATA

BETA =	.000	ELEVON =	.000
AILRON =	.000	BDFLAP =	.000
SPDBRK =	25.000	RUDDER =	-15.000

RUN NO. 87/ 0 GRADIENT INTERVAL = -5.00/ 5.00

Q	ALPHA	ALPHAU	BETA	QI	CP68	CP69	CP70	CP71	CP72	CP73
47.720	-.058	.00000	.00000	48.00000	1.04584	.14899	.17086	.14899	.10524	.13805
47.690	5.133	5.00000	.00000	48.00000	1.01303	.13805	.19274	.19274	.11618	.13805
47.830	10.338	10.00000	.00000	48.00000	.95834	.08337	.15993	.19274	.08337	.11618
47.580	15.548	15.00000	.00000	48.00000	.87084	.02968	.09430	.13805	.02868	.06149
47.630	20.754	20.00000	.00000	48.00000	.64116	-.10256	-.01507	.00681	-.10256	-.03694
	GRADIENT	.00000	.00000	.00000	.00000	.00000	.00000	.00000	.00000	.00000

ARC40X80-462(OA100) OV101+NOSE GEAR (CNA04L) (15 APR 82)

REFERENCE DATA

SREF =	2690.0000 SQ.FT.	XMRP =	1076.6800 IN. XO		
LREF =	474.8100 INCHES	YMRP =	.0000 IN. YO		
BREF =	936.6800 INCHES	ZMRP =	375.0000 IN. ZO		
SCALE =	.3600				

PARAMETRIC DATA

BETA =	.000	ELEVON =	.000
AILRON =	.000	BDFLAP =	.000
SPDBRK =	20.000	RUDDER =	3.000

RUN NO. 108/ 0 GRADIENT INTERVAL = -5.00/ 5.00

Q	ALPHA	ALPHAU	BETA	QI	CP68	CP69	CP70	CP71	CP72	CP73
47.700	-.058	.00000	.00000	47.50000	.95787	.15110	.16215	.16215	.12899	.11794
47.560	5.139	5.00000	.00000	47.50000	1.02418	.15110	.15110	.17320	.10689	.14005
47.530	10.342	10.00000	.00000	47.50000	.95787	.09584	.10689	.15110	.10689	.08479
47.540	15.549	15.00000	.00000	47.50000	.86946	.02953	.04058	.07374	.01848	.04058
47.590	20.797	20.00000	.00000	47.50000	.63737	-.10309	-.09204	-.04783	-.09204	-.04783
	GRADIENT	.00000	.00000	.00000	.00000	.00000	.00000	.00000	.00000	.00000

ARC40X80-462(OA100) OV101+NOSE GEAR (CNA04M) (15 APR 82)

REFERENCE DATA

SREF =	2690.0000 SQ.FT.	XMRP =	1076.6800 IN. XO		
LREF =	474.8100 INCHES	YMRP =	.0000 IN. YO		
BREF =	936.6800 INCHES	ZMRP =	375.0000 IN. ZO		
SCALE =	.3600				

PARAMETRIC DATA

BETA =	5.000	ELEVON =	.000
AILRON =	.000	BDFLAP =	.000
SPDBRK =	20.000	RUDDER =	3.000

RUN NO. 109/ 0 GRADIENT INTERVAL = -5.00/ 5.00

Q	ALPHA	ALPHAU	BETA	QI	CP68	CP69	CP70	CP71	CP72	CP73
47.500	-.051	.00000	5.00000	47.50000	.97998	-.01468	.00743	.00743	-.00363	-.00363
47.670	5.143	5.00000	5.00000	47.50000	1.02418	-.00363	.00743	.00743	-.02573	-.01468
47.630	10.340	10.00000	5.00000	47.50000	.91367	-.05888	-.03678	-.01468	-.03678	-.04783
47.390	15.550	15.00000	5.00000	47.50000	.81420	-.12520	-.10309	-.10309	-.11414	-.10309
47.870	20.795	20.00000	5.00000	47.50000	.67053	-.24676	-.22466	-.23571	-.20256	-.20256
	GRADIENT	.00000	.00000	.00000	.00000	.00000	.00000	.00000	.00000	.00000

ARC40X80-462(OA100) OV101+NOSE GEAR (CNA04N) (15 APR 82)

REFERENCE DATA

SREF =	2690.0000 SQ.FT.	XMRP =	1076.6800 IN. XO		
LREF =	474.8100 INCHES	YMRP =	.0000 IN. YO		
BREF =	936.6800 INCHES	ZMRP =	375.0000 IN. ZO		
SCALE =	.3600				

PARAMETRIC DATA

BETA =	10.000	ELEVON =	.000
AILRON =	.000	BDFLAP =	.000
SPDBRK =	36.500	RUDDER =	-5.500

RUN NO. 110/ 0 GRADIENT INTERVAL = -5.00/ 5.00

Q	ALPHA	ALPHAU	BETA	QI	CP68	CP69	CP70	CP71	CP72	CP73
47.530	-.041	.00000	10.00000	47.50000	.85841	-.13625	-.13625	-.13625	-.13625	-.13625
47.710	5.146	5.00000	10.00000	47.50000	.86946	-.14730	-.15835	-.14730	-.13625	-.13625
47.580	10.344	10.00000	10.00000	47.00000	.82336	-.18182	-.18182	-.19298	-.14831	-.17065
47.720	15.577	15.00000	10.00000	47.50000	.70368	-.22466	-.24676	-.27992	-.22466	-.21361
47.750	20.818	20.00000	10.00000	47.50000	.56001	-.35728	-.37938	-.40149	-.30202	-.32413
	GRADIENT	.00000	.00000	.00000	.00000	.00000	.00000	.00000	.00000	.00000

ARC40X80-462(OA100) OV101+NOSE GEAR(FTP OFF) (CNA04O) (16 MAR 82)

REFERENCE DATA

SREF =	2690.0000 SQ.FT.	XMRP =	1076.6800 IN. XO		
LREF =	474.8100 INCHES	YMRP =	.0000 IN. YO		
BREF =	936.6800 INCHES	ZMRP =	375.0000 IN. ZO		
SCALE =	.3600				

PARAMETRIC DATA

BETA =	.000	ELEVON =	.000
AILRON =	.000	BDFLAP =	.000
SPDBRK =	25.000	RUDDER =	.000

RUN NO. 111/ 0 GRADIENT INTERVAL = -5.00/ 5.00

Q	ALPHA	ALPHAU	BETA	QI	CP68	CP69	CP70	CP71	CP72	CP73
47.460	-.059	.00000	.00000	46.50000	1.03591	.16672	.15543	.16672	.11028	.11028
47.410	5.135	5.00000	.00000	46.50000	1.05848	.13286	.16672	.20058	.08770	.14414
47.690	10.339	10.00000	.00000	47.50000	.91367	.09584	.11794	.14005	.07374	.09584
47.610	15.549	15.00000	.00000	47.50000	.79210	.02953	.07374	.08479	.00743	.05163
47.740	20.797	20.00000	.00000	49.50000	.59902	-.07986	-.05865	-.02682	-.09047	-.02682
	GRADIENT	.00000	.00000	.00000	.00000	.00000	.00000	.00000	.00000	.00000

ARC40X80-462(OA100) OV101+NOSE GEAR(FTP OFF) (CNA04P) (16 MAR 82)

REFERENCE DATA

SREF =	2690.0000 SQ.FT.	XMRP =	1076.6800 IN.	XO	
LREF =	474.8100 INCHES	YMRP =	.0000 IN.	YO	
BREF =	936.6800 INCHES	ZMRP =	375.0000 IN.	ZO	
SCALE =	.3600				

PARAMETRIC DATA

BETA =	5.000	ELEVON =	.000
AILRON =	.000	BDFLAP =	.000
SPDBRK =	25.000	RUDDER =	.000

RUN NO. 112/ 0 GRADIENT INTERVAL = -5.00/ 5.00

Q	ALPHA	ALPHAU	BETA	QI	CP68	CP69	CP70	CP71	CP72	CP73
47.670	-.054	.00000	5.00000	49.50000	.91724	.00500	.01561	.01561	-.02682	.00500
47.530	5.142	5.00000	5.00000	49.50000	.92785	-.01622	.01561	.02621	.00500	.02621
47.610	10.342	10.00000	5.00000	46.50000	.87787	-.03547	-.02518	-.01389	-.05904	-.02518
47.670	15.546	15.00000	5.00000	47.50000	.73684	-.12520	-.10309	-.09204	-.12520	-.06994
47.620	20.797	20.00000	5.00000	47.00000	.55532	-.23766	-.21532	-.21532	-.19298	-.17065
	GRADIENT	.00000	.00000	.00000	.00000	.00000	.00000	.00000	.00000	.00000

ARC40X80-462(OA100) OV101+NOSE GEAR(FTP OFF) (CNA04Q) (16 MAR 82)

REFERENCE DATA

SREF =	2690.0000 SQ.FT.	XMRP =	1076.6800 IN.	XO	
LREF =	474.8100 INCHES	YMRP =	.0000 IN.	YO	
BREF =	936.6800 INCHES	ZMRP =	375.0000 IN.	ZO	
SCALE =	.3600				

PARAMETRIC DATA

BETA =	10.000	ELEVON =	.000
AILRON =	.000	BDFLAP =	.000
SPDBRK =	25.000	RUDDER =	.000

RUN NO. 113/ 0 GRADIENT INTERVAL = -5.00/ 5.00

Q	ALPHA	ALPHAU	BETA	QI	CP68	CP69	CP70	CP71	CP72	CP73
47.710	-.041	.00000	10.00000	49.50000	.82178	-.17533	-.14351	-.12229	-.12229	-.12229
47.530	5.145	5.00000	10.00000	49.50000	.81117	-.13290	-.13290	-.13290	-.13290	-.10108
47.670	10.345	10.00000	10.00000	49.50000	.75813	-.16472	-.16472	-.15411	-.15411	-.13290
47.560	15.574	15.00000	10.00000	49.50000	.63084	-.22837	-.20715	-.24958	-.20715	-.18594
47.500	20.818	20.00000	10.00000	46.50000	.47150	-.34125	-.32996	-.35253	-.29609	-.29609
	GRADIENT	.00000	.00000	.00000	.00000	.00000	.00000	.00000	.00000	.00000

ARC40X80-462(OA100) OV101(FTP OFF) (CNA04R) (16 MAR 82)

REFERENCE DATA

SREF = 2690.0000 SQ.FT. XMRP = 1076.6800 IN. XO
LREF = 474.8100 INCHES YMRP = .0000 IN. YO
BREF = 936.6800 INCHES ZMRP = 375.0000 IN. ZO
SCALE = .3600

PARAMETRIC DATA

BETA = .000 ELEVON = .000
AILRON = .000 BDFLAP = .000
SPDBRK = 25.000 RUDDER = .000

RUN NO. 115/ 0 GRADIENT INTERVAL = -5.00/ 5.00

Q	ALPHA	ALPHAU	BETA	Q1	CP68	CP69	CP70	CP71	CP72	CP73
47.390	-.065	.00000	.00000	47.00000	1.01323	.16441	.18575	.17558	.11974	.14208
47.850	5.135	5.00000	.00000	48.00000	.99115	.13805	.18180	.19274	.11618	.13805
47.660	10.337	10.00000	.00000	50.00000	.88658	.09893	.15144	.21445	.09893	.10943
47.250	15.545	15.00000	.00000	47.00000	.80103	.04156	.08623	.10857	.04156	.06389
47.360	20.815	20.00000	.00000	47.00000	.62233	-.07013	-.03662	-.00312	-.09247	-.00312
	GRADIENT	.00000	.00000	.00000	.00000	.00000	.00000	.00000	.00000	.00000

ARC40X80-462(OA100) OV101(FTP OFF) (CNA04S) (16 MAR 82)

REFERENCE DATA

SREF = 2690.0000 SQ.FT. XMRP = 1076.6800 IN. XO
LREF = 474.8100 INCHES YMRP = .0000 IN. YO
BREF = 936.6800 INCHES ZMRP = 375.0000 IN. ZO
SCALE = .3600

PARAMETRIC DATA

BETA = .000 ELEVON = .000
AILRON = .000 BDFLAP = .000
SPDBRK = 25.000 RUDDER = 5.000

RUN NO. 114/ 0 GRADIENT INTERVAL = -5.00/ 5.00

Q	ALPHA	ALPHAU	BETA	Q1	CP68	CP69	CP70	CP71	CP72	CP73
47.190	-.061	.00000	.00000	47.00000	1.02440	.15324	.16441	.16441	.11974	.14208
47.530	5.135	5.00000	.00000	50.00000	.94959	.14094	.18295	.19345	.10943	.15144
47.510	10.334	10.00000	.00000	47.00000	.94622	.11974	.16441	.19792	.08623	.13091
47.530	15.546	15.00000	.00000	47.00000	.81220	.00805	.09740	.09740	.01922	.06389
47.480	20.816	20.00000	.00000	47.50000	.59317	-.09204	-.04783	-.00363	-.08099	-.02573
	GRADIENT	.00000	.00000	.00000	.00000	.00000	.00000	.00000	.00000	.00000

ARC40X80-462(OA100) OV101(FTP OFF) (CNA04T) (16 MAR 82)

REFERENCE DATA

SREF =	2690.0000 SQ.FT.	XMRP =	1076.6800 IN. XO		
LREF =	474.8100 INCHES	YMRP =	.0000 IN. YO		
BREF =	936.6800 INCHES	ZMRP =	375.0000 IN. ZO		
SCALE =	.3600				

PARAMETRIC DATA

BETA =	.000	ELEVON =	.000
AILRON =	.000	BDFLAP =	.000
SPDBRK =	25.000	RUDDER =	10.000

RUN NO. 116/ 0 GRADIENT INTERVAL = -5.00/ 5.00

Q	ALPHA	ALPHAU	BETA	QI	CP68	CP69	CP70	CP71	CP72	CP73
47.580	-.062	.00000	.00000	50.00000	.94959	.11993	.16194	.15144	.10943	.14094
47.680	5.131	5.00000	.00000	48.00000	.99115	.14899	.19274	.20368	.10524	.15993
47.500	10.332	10.00000	.00000	50.00000	.88658	.10943	.13043	.16194	.07792	.11993
47.710	15.543	15.00000	.00000	50.00000	.78156	.03592	.08843	.10943	.02541	.06742
47.370	20.815	20.00000	.00000	47.00000	.65700	-.05896	-.02545	.01922	-.07013	-.01429
	GRADIENT	.00000	.00000	.00000	.00000	.00000	.00000	.00000	.00000	.00000

ARC40X80-462(OA100) OV101(FTP OFF) (CNA04U) (16 MAR 82)

REFERENCE DATA

SREF =	2690.0000 SQ.FT.	XMRP =	1076.6800 IN. XO		
LREF =	474.8100 INCHES	YMRP =	.0000 IN. YO		
BREF =	936.6800 INCHES	ZMRP =	375.0000 IN. ZO		
SCALE =	.3600				

PARAMETRIC DATA

BETA =	.000	ELEVON =	.000
AILRON =	.000	BDFLAP =	.000
SPDBRK =	25.000	RUDDER =	15.000

RUN NO. 117/ 0 GRADIENT INTERVAL = -5.00/ 5.00

Q	ALPHA	ALPHAU	BETA	QI	CP68	CP69	CP70	CP71	CP72	CP73
47.680	-.065	.00000	.00000	48.00000	.99115	.15993	.17086	.15993	.10524	.14899
48.020	5.131	5.00000	.00000	48.00000	.99115	.15993	.20368	.21461	.12712	.15993
47.660	10.329	10.00000	.00000	50.00000	.89708	.09893	.14094	.18295	.09893	.11993
47.470	15.544	15.00000	.00000	50.00000	.77106	.03592	.08843	.11993	.01491	.04642
47.650	20.806	20.00000	.00000	50.00000	.58202	-.09011	-.04810	-.01659	-.09011	-.04810
	GRADIENT	.00000	.00000	.00000	.00000	.00000	.00000	.00000	.00000	.00000

ARC40X80-462(OA100) OV101(FTP OFF) (CNA04V) (16 MAR 82)

REFERENCE DATA

SREF =	2690.0000 SQ.FT.	XMRP =	1076.6800 IN. XO		
LREF =	474.8100 INCHES	YMRP =	.0000 IN. YO		
BREF =	936.6800 INCHES	ZMRP =	375.0000 IN. ZO		
SCALE =	.3600				

PARAMETRIC DATA

BETA =	.000	ELEVON =	.000
AILRON =	.000	BDFLAP =	.000
SPDBRK =	25.000	RUDDER =	22.500

RUN NO. 118/ 0 GRADIENT INTERVAL = -5.00/ 5.00

Q	ALPHA	ALPHAU	BETA	QI	CP68	CP69	CP70	CP71	CP72	CP73
47.560	-.067	.00000	.00000	47.00000	1.03557	.15324	.22026	.17558	.10857	.15324
47.610	5.125	5.00000	.00000	50.00000	.94959	.14094	.18295	.19345	.10943	.16194
47.540	10.330	10.00000	.00000	50.00000	.86658	.09893	.13043	.19345	.08843	.10943
47.740	15.540	15.00000	.00000	48.00000	.80522	.02868	.10524	.11618	.03962	.07243
47.530	20.806	20.00000	.00000	50.00000	.61353	-.05860	-.01659	.01491	-.07961	-.04810
	GRADIENT	.00000	.00000	.00000	.00000	.00000	.00000	.00000	.00000	.00000

ARC40X80-462(OA100) OV101(FTP OFF) (CNA04W) (16 MAR 82)

REFERENCE DATA

SREF =	2690.0000 SQ.FT.	XMRP =	1076.6800 IN. XO		
LREF =	474.8100 INCHES	YMRP =	.0000 IN. YO		
BREF =	936.6800 INCHES	ZMRP =	375.0000 IN. ZO		
SCALE =	.3600				

PARAMETRIC DATA

BETA =	5.000	ELEVON =	.000
AILRON =	.000	BDFLAP =	.000
SPDBRK =	25.000	RUDDER =	.000

RUN NO. 119/ 0 GRADIENT INTERVAL = -5.00/ 5.00

Q	ALPHA	ALPHAU	BETA	QI	CP68	CP69	CP70	CP71	CP72	CP73
47.790	-.054	.00000	5.00000	47.50000	.96892	-.00363	.04058	.04058	.00363	.02953
47.230	5.137	5.00000	5.00000	46.50000	.97947	-.01389	.05384	.06513	-.00260	.04255
47.200	10.342	10.00000	5.00000	46.50000	.90045	-.04775	.00869	.03126	-.01389	-.00260
47.330	15.548	15.00000	5.00000	46.50000	.83272	-.12677	-.05904	-.04775	-.10419	-.05904
47.770	20.799	20.00000	5.00000	47.50000	.59317	-.23571	-.18045	-.18045	-.18045	-.16940
	GRADIENT	.00000	.00000	.00000	.00000	.00000	.00000	.00000	.00000	.00000

ARC40X80-462(0A100) OV101(FTP OFF) (CNA04X) (16 MAR 82)

REFERENCE DATA

SREF =	2690.0000 SQ.FT.	XMRP =	1076.6800 IN. XO		
LREF =	474.8100 INCHES	YMRP =	.0000 IN. YO		
BREF =	936.6800 INCHES	ZMRP =	375.0000 IN. ZO		
SCALE =	.3600				

PARAMETRIC DATA

BETA =	5.000	ELEVON =	.000
AILRON =	.000	BDFLAP =	.000
SPDBRK =	25.000	RUDDER =	5.000

RUN NO. 120/ 0 GRADIENT INTERVAL = -5.00/ 5.00

Q	ALPHA	ALPHAU	BETA	QI	CP68	CP69	CP70	CP71	CP72	CP73
47.850	-.057	.00000	5.00000	47.50000	.96892	-.03678	.02953	.05163	.00743	.04058
47.610	5.138	5.00000	5.00000	47.50000	1.05734	-.00363	.04058	.06268	-.00363	.05163
47.510	10.337	10.00000	5.00000	49.50000	.84299	-.04804	-.00561	.02621	-.00561	.01561
47.350	15.547	15.00000	5.00000	46.50000	.77628	-.12677	-.05904	-.04775	-.09291	-.04775
47.530	20.801	20.00000	5.00000	48.50000	.56910	-.22113	-.14535	-.14535	-.19948	-.16700
	GRADIENT	.00000	.00000	.00000	.00000	.00000	.00000	.00000	.00000	.00000

ARC40X80-462(0A100) OV101(FTP OFF) (CNA04Y) (16 MAR 82)

REFERENCE DATA

SREF =	2690.0000 SQ.FT.	XMRP =	1076.6800 IN. XO		
LREF =	474.8100 INCHES	YMRP =	.0000 IN. YO		
BREF =	936.6800 INCHES	ZMRP =	375.0000 IN. ZO		
SCALE =	.3600				

PARAMETRIC DATA

BETA =	5.000	ELEVON =	.000
AILRON =	.000	BDFLAP =	.000
SPDBRK =	25.000	RUDDER =	10.000

RUN NO. 121/ 0 GRADIENT INTERVAL = -5.00/ 5.00

Q	ALPHA	ALPHAU	BETA	QI	CP68	CP69	CP70	CP71	CP72	CP73
47.500	-.059	.00000	5.00000	49.50000	.92785	-.03743	.03682	.03682	-.00561	.04743
47.460	5.138	5.00000	5.00000	46.50000	1.08106	-.01389	.05384	.08770	-.00260	.04255
47.440	10.331	10.00000	5.00000	46.50000	.91174	-.03647	.01997	.03126	-.01389	.00869
47.390	15.542	15.00000	5.00000	46.50000	.78757	-.10419	-.04775	-.04775	-.09291	-.04775
47.640	20.796	20.00000	5.00000	47.50000	.54896	-.25782	-.18045	-.19150	-.18045	-.14730
	GRADIENT	.00000	.00000	.00000	.00000	.00000	.00000	.00000	.00000	.00000

ARC40X80-462(OA100) OV101(FTP OFF) (CNA04Z) (16 MAR 82)

REFERENCE DATA

SREF =	2690.0000 SQ.FT.	XMRP =	1076.6800 IN.	XO	
LREF =	474.8100 INCHES	YMRP =	.0000 IN.	YO	
BREF =	936.6800 INCHES	ZMRP =	375.0000 IN.	ZO	
SCALE =	.3600				

PARAMETRIC DATA

BETA =	5.000	ELEVON =	.000
AILRON =	.000	BDFLAP =	.000
SPDBRK =	25.000	RUDDER =	15.000

RUN NO. 122/ 0 GRADIENT INTERVAL = -5.00/ 5.00

Q	ALPHA	ALPHAU	BETA	QI	CP68	CP69	CP70	CP71	CP72	CP73
47.240	-.059	.00000	5.00000	46.50000	1.08106	-.01389	.04255	.04255	-.01389	.01997
47.510	5.131	5.00000	5.00000	49.50000	1.01271	-.01622	.04743	.06864	-.00561	.03682
47.360	10.331	10.00000	5.00000	46.50000	.92302	-.03647	.00869	.03126	-.02518	.01997
47.540	15.545	15.00000	5.00000	49.50000	.73692	-.12229	-.06925	-.03743	-.09047	-.05865
47.560	20.799	20.00000	5.00000	47.50000	.61527	-.22455	-.16940	-.15835	-.19150	-.18045
	GRADIENT	.00000	.00000	.00000	.00000	.00000	.00000	.00000	.00000	.00000

ARC40X80-462(OA100) OV101(FTP OFF) (CNA05A) (16 MAR 82)

REFERENCE DATA

SREF =	2690.0000 SQ.FT.	XMRP =	1076.6800 IN.	XO	
LREF =	474.8100 INCHES	YMRP =	.0000 IN.	YO	
BREF =	936.6800 INCHES	ZMRP =	375.0000 IN.	ZO	
SCALE =	.3600				

PARAMETRIC DATA

BETA =	5.000	ELEVON =	.000
AILRON =	.000	BDFLAP =	.000
SPDBRK =	25.000	RUDDER =	22.500

RUN NO. 123/ 0 GRADIENT INTERVAL = -5.00/ 5.00

Q	ALPHA	ALPHAU	BETA	QI	CP68	CP69	CP70	CP71	CP72	CP73
47.490	-.069	.00000	5.00000	47.00000	.96856	-.01429	.03039	.03039	-.00312	.04156
47.630	5.129	5.00000	5.00000	48.00000	.95834	.00681	.03962	.05056	-.00413	.03962
47.560	10.328	10.00000	5.00000	48.00000	.88178	-.03694	.00681	.02868	-.02600	-.00413
47.570	15.536	15.00000	5.00000	48.00000	.78335	-.11350	-.05882	-.04788	-.11350	-.08069
47.670	20.792	20.00000	5.00000	47.00000	.57765	-.23766	-.19298	-.14831	-.18182	-.18182
	GRADIENT	.00000	.00000	.00000	.00000	.00000	.00000	.00000	.00000	.00000

ARC40X80-462(OA100) OV101(FTP OFF) (CNA05B) (16 MAR 82)

REFERENCE DATA

SREF =	2690.0000 SQ.FT.	XMRP =	1076.6800 IN.	XO	
LREF =	474.8100 INCHES	YMRP =	.0000 IN.	YO	
BREF =	936.6800 INCHES	ZMRP =	375.0000 IN.	ZO	
SCALE =	.3600				

PARAMETRIC DATA

BETA =	10.000	ELEVON =	.000
AILRON =	.000	BDFLAP =	.000
SPDBRK =	25.000	RUDDER =	.000

RUN NO. 124/ 0 GRADIENT INTERVAL = -5.00/ 5.00

Q	ALPHA	ALPHAU	BETA	QI	CP68	CP69	CP70	CP71	CP72	CP73
47.470	-.042	.00000	10.00000	48.00000	.85991	-.14631	-.10256	-.09163	-.13538	-.09163
47.540	5.146	5.00000	10.00000	47.00000	.87921	-.13714	-.10364	-.08130	-.14831	-.09247
47.480	10.343	10.00000	10.00000	47.00000	.81220	-.18182	-.12597	-.14831	-.14831	-.13714
47.480	15.573	15.00000	10.00000	48.00000	.63023	-.23381	-.21194	-.22287	-.21194	-.19006
47.560	20.820	20.00000	10.00000	48.00000	.47711	-.35506	-.34318	-.40881	-.31037	-.27756
	GRADIENT	.00000	.00000	.00000	.00000	.00000	.00000	.00000	.00000	.00000

ARC40X80-462(OA100) OV101(FTP OFF) (CNA05C) (16 MAR 82)

REFERENCE DATA

SREF =	2690.0000 SQ.FT.	XMRP =	1076.6800 IN.	XO	
LREF =	474.8100 INCHES	YMRP =	.0000 IN.	YO	
BREF =	936.6800 INCHES	ZMRP =	375.0000 IN.	ZO	
SCALE =	.3600				

PARAMETRIC DATA

BETA =	10.000	ELEVON =	.000
AILRON =	.000	BDFLAP =	.000
SPDBRK =	25.000	RUDDER =	5.000

RUN NO. 125/ 0 GRADIENT INTERVAL = -5.00/ 5.00

Q	ALPHA	ALPHAU	BETA	QI	CP68	CP69	CP70	CP71	CP72	CP73
47.480	-.044	.00000	10.00000	48.00000	.87084	-.14631	-.08069	-.09163	-.14631	-.09163
47.500	5.145	5.00000	10.00000	48.00000	.84897	-.14631	-.10256	-.06975	-.13538	-.08069
47.380	10.345	10.00000	10.00000	47.00000	.80103	-.15948	-.15948	-.14831	-.15948	-.14831
47.500	15.568	15.00000	10.00000	47.00000	.64467	-.26000	-.21532	-.22649	-.24883	-.21532
47.380	20.824	20.00000	10.00000	47.00000	.49947	-.33818	-.34935	-.40519	-.30467	-.30467
	GRADIENT	.00000	.00000	.00000	.00000	.00000	.00000	.00000	.00000	.00000

ARC40X80-462(0A100) 0V101(FTP OFF) (CNA05D) (16 MAR 82)

REFERENCE DATA

SREF =	2690.0000 SQ.FT.	XMRP =	1076.6800 IN. XO		
LREF =	474.8100 INCHES	YMRP =	.0000 IN. YO		
BREF =	936.6800 INCHES	ZMRP =	375.0000 IN. ZO		
SCALE =	.3600				

PARAMETRIC DATA

BETA =	10.000	ELEVON =	.000
AILRON =	.000	BDFLAP =	.000
SPDBRK =	25.000	RUDDER =	10.000

RUN NO. 126/ 0 GRADIENT INTERVAL = -5.00/ 5.00

Q	ALPHA	ALPHAU	BETA	QI	CP68	CP69	CP70	CP71	CP72	CP73
47.500	-.047	.00000	10.00000	47.00000	.89038	-.14831	-.09247	-.09247	-.15948	-.09247
47.460	5.143	5.00000	10.00000	48.00000	.85991	-.14631	-.09163	-.08069	-.12444	-.08069
47.430	10.341	10.00000	10.00000	47.00000	.81220	-.19298	-.14831	-.12597	-.15948	-.13714
47.520	15.569	15.00000	10.00000	47.00000	.67817	-.23766	-.21532	-.22649	-.22649	-.18182
47.540	20.821	20.00000	10.00000	47.00000	.49947	-.34935	-.32701	-.33818	-.29350	-.30467
	GRADIENT	.00000	.00000	.00000	.00000	.00000	.00000	.00000	.00000	.00000

ARC40X80-462(0A100) 0V101(FTP OFF) (CNA05E) (16 MAR 82)

REFERENCE DATA

SREF =	2690.0000 SQ.FT.	XMRP =	1076.6800 IN. XO		
LREF =	474.8100 INCHES	YMRP =	.0000 IN. YO		
BREF =	936.6800 INCHES	ZMRP =	375.0000 IN. ZO		
SCALE =	.3600				

PARAMETRIC DATA

BETA =	10.000	ELEVON =	.000
AILRON =	.000	BDFLAP =	.000
SPDBRK =	25.000	RUDDER =	15.000

RUN NO. 127/ 0 GRADIENT INTERVAL = -5.00/ 5.00

Q	ALPHA	ALPHAU	BETA	QI	CP68	CP69	CP70	CP71	CP72	CP73
47.540	-.046	.00000	10.00000	47.00000	.85687	-.15948	-.10364	-.09247	-.12597	-.10364
47.480	5.142	5.00000	10.00000	47.50000	.85841	-.14730	-.09204	-.10309	-.12520	-.09204
47.470	10.340	10.00000	10.00000	47.00000	.80103	-.14831	-.12597	-.12597	-.14831	-.13714
47.540	15.567	15.00000	10.00000	48.00000	.66304	-.21194	-.21194	-.21194	-.22287	-.20100
47.630	20.816	20.00000	10.00000	48.00000	.46617	-.34318	-.31037	-.33224	-.31037	-.29943
	GRADIENT	.00000	.00000	.00000	.00000	.00000	.00000	.00000	.00000	.00000

ARC40X80-462(OA100) OV101(FTP OFF) (CNA05F) (16 MAR 82)

REFERENCE DATA

SREF =	2690.0000 SQ.FT.	XMRP =	1076.6800 IN.	XO	
LREF =	474.8100 INCHES	YMRP =	.0000 IN.	YO	
BREF =	936.6800 INCHES	ZMRP =	375.0000 IN.	ZO	
SCALE =	.3600				

PARAMETRIC DATA

BETA =	10.000	ELEVON =	.000
AILRON =	.000	BDFLAP =	.000
SPDBRK =	25.000	RUDDER =	22.500

RUN NO. 128/ 0 GRADIENT INTERVAL = -5.00/ 5.00

Q	ALPHA	ALPHAU	BETA	QI	CP68	CP69	CP70	CP71	CP72	CP73
47.670	-.050	.00000	10.00000	47.00000	.86804	-.15948	-.11480	-.10364	-.13714	-.08130
47.620	5.140	5.00000	10.00000	47.00000	.87921	-.14831	-.10364	-.09247	-.13714	-.09247
47.640	10.336	10.00000	10.00000	47.50000	.80315	-.16940	-.13625	-.14730	-.15835	-.13625
47.690	15.561	15.00000	10.00000	47.00000	.70051	-.23766	-.21532	-.22649	-.22649	-.20415
47.600	20.816	20.00000	10.00000	47.00000	.46597	-.37168	-.34935	-.39402	-.30467	-.30467
	GRADIENT	.00000	.00000	.00000	.00000	.00000	.00000	.00000	.00000	.00000

ARC40X80-462(OA100) OV101(ADS OFF) (CNA05G) (16 MAR 82)

REFERENCE DATA

SREF =	2690.0000 SQ.FT.	XMRP =	1076.6800 IN.	XO	
LREF =	474.8100 INCHES	YMRP =	.0000 IN.	YO	
BREF =	936.6800 INCHES	ZMRP =	375.0000 IN.	ZO	
SCALE =	.3600				

PARAMETRIC DATA

BETA =	.000	ELEVON =	.000
AILRON =	.000	BDFLAP =	.000
SPDBRK =	87.000	RUDDER =	.000

RUN NO. 129/ 0 GRADIENT INTERVAL = -5.00/ 5.00

Q	ALPHA	ALPHAU	BETA	QI	CP68	CP69	CP70	CP71	CP72	CP73
47.710	-.096	.00000	.00000	47.50000	.93577	.12899	.17320	.15110	.09584	.14005
47.550	5.092	5.00000	.00000	47.50000	.99103	.12899	.18425	.21741	.11794	.16215
47.900	10.298	10.00000	.00000	48.00000	.93647	.09430	.12712	.17086	.09430	.12712
47.460	15.507	15.00000	.00000	47.50000	.84736	.01848	.09584	.11794	.01848	.09584
47.690	20.773	20.00000	.00000	47.50000	.68158	-.09204	-.04783	.05163	-.05888	-.01468
	GRADIENT	.00000	.00000	.00000	.00000	.00000	.00000	.00000	.00000	.00000

ARC40X80-462(OA100) OV101(ADS OFF) (CNA05H) (15 APR 82)

REFERENCE DATA

SREF =	2690.0000 SQ.FT.	XMRP =	1076.6800 IN.	XO	
LREF =	474.8100 INCHES	YMRP =	.0000 IN.	YO	
BREF =	936.6800 INCHES	ZMRP =	375.0000 IN.	ZO	
SCALE =	.3600				

PARAMETRIC DATA

BETA =	.000	ELEVON =	.000
AILRON =	.000	BDFLAP =	.000
SPDBRK =	84.500	RUDDER =	3.500

RUN NO. 130/ 0 GRADIENT INTERVAL = -5.00/ 5.00

Q	ALPHA	ALPHAU	BETA	QI	CP68	CP69	CP70	CP71	CP72	CP73
47.410	-.095	.00000	.00000	47.50000	.94682	.12899	.16215	.16215	.11794	.11794
47.580	5.091	5.00000	.00000	47.50000	.99103	.14005	.18425	.19530	.11794	.16215
47.720	10.298	10.00000	.00000	48.00000	.93647	.10524	.14899	.19274	.09430	.14899
47.330	15.509	15.00000	.00000	47.50000	.83630	.01848	.10689	.12899	.01843	.08479
47.700	20.773	20.00000	.00000	47.50000	.68158	-.09204	-.01468	.02953	-.06994	-.01468
	GRADIENT	.00000	.00000	.00000	.00000	.00000	.00000	.00000	.00000	.00000

ARC40X80-462(OA100) OV101(ADS OFF) (CNA05I) (15 APR 82)

REFERENCE DATA

SREF =	2690.0000 SQ.FT.	XMRP =	1076.6800 IN.	XO	
LREF =	474.8100 INCHES	YMRP =	.0000 IN.	YO	
BREF =	936.6800 INCHES	ZMRP =	375.0000 IN.	ZO	
SCALE =	.3600				

PARAMETRIC DATA

BETA =	.000	ELEVON =	.000
AILRON =	.000	BDFLAP =	.000
SPDBRK =	80.000	RUDDER =	5.500

RUN NO. 131/ 0 GRADIENT INTERVAL = -5.00/ 5.00

Q	ALPHA	ALPHAU	BETA	QI	CP68	CP69	CP70	CP71	CP72	CP73
47.640	-.095	.00000	.00000	48.50000	.81807	.11445	.16857	.12527	.09280	.13610
47.560	5.091	5.00000	.00000	47.50000	1.00208	.16215	.18425	.22846	.11794	.16215
47.370	10.296	10.00000	.00000	47.50000	.92472	.09584	.16215	.19530	.09584	.10689
47.640	15.503	15.00000	.00000	48.50000	.82890	.04950	.08197	.15775	.04950	.09280
47.580	20.768	20.00000	.00000	47.50000	.69263	-.08099	-.02573	.02953	-.05888	-.00363
	GRADIENT	.00000	.00000	.00000	.00000	.00000	.00000	.00000	.00000	.00000

ARC40X80-462(OA100) OV101(ADS OFF) (CNA05J) (15 APR 82)

REFERENCE DATA

SREF =	2690.0000 SQ.FT.	XMRP =	1076.6800 IN.	XO	
LREF =	474.8100 INCHES	YMRP =	.0000 IN.	YO	
BREF =	936.6800 INCHES	ZMRP =	375.0000 IN.	ZO	
SCALE =	.3600				

PARAMETRIC DATA

BETA =	.000	ELEVON =	.000
AILRON =	.000	BDFLAP =	.000
SPDBRK =	78.500	RUDDER =	6.000

RUN NO. 132/ 0 GRADIENT INTERVAL = -5.00/ 5.00

Q	ALPHA	ALPHAU	BETA	QI	CP68	CP69	CP70	CP71	CP72	CP73
47.510	-.098	.00000	.00000	47.50000	1.04629	.14005	.18425	.14005	.10689	.11794
47.620	5.091	5.00000	.00000	47.50000	1.09208	.14005	.18425	.18425	.11794	.15110
47.760	10.298	10.00000	.00000	47.50000	1.04629	.09584	.16215	.18425	.09584	.14005
47.780	15.506	15.00000	.00000	48.50000	.82890	.02785	.08197	.13610	-4.39959	.07115
47.810	20.777	20.00000	.00000	48.50000	.69900	-.04793	-4.39959	-.01545	-.10205	-.04793
	GRADIENT	.00000	.00000	.00000	.00000	.00000	.00000	.00000	.00000	.00000

ARC40X80-462(OA100) OV101(ADS OFF) (CNA05K) (16 MAR 82)

REFERENCE DATA

SREF =	2690.0000 SQ.FT.	XMRP =	1076.6800 IN.	XO	
LREF =	474.8100 INCHES	YMRP =	.0000 IN.	YO	
BREF =	936.6800 INCHES	ZMRP =	375.0000 IN.	ZO	
SCALE =	.3600				

PARAMETRIC DATA

BETA =	5.000	ELEVON =	.000
AILRON =	.000	BDFLAP =	.000
SPDBRK =	87.000	RUDDER =	.000

RUN NO. 133/ 0 GRADIENT INTERVAL = -5.00/ 5.00

Q	ALPHA	ALPHAU	BETA	QI	CP68	CP69	CP70	CP71	CP72	CP73
47.730	-.095	.00000	5.00000	48.00000	.93647	-.01507	.03962	.03962	-.01507	.02868
47.660	5.099	5.00000	5.00000	47.50000	.95787	.01848	.05163	.07374	-.01468	.04058
47.700	10.298	10.00000	5.00000	47.50000	.90261	-.05888	.00743	.02953	-.02573	.00743
47.620	15.505	15.00000	5.00000	47.50000	.80315	-.12520	-.08099	-.05888	-.09204	-.04783
47.490	20.756	20.00000	5.00000	47.50000	.64842	-.22466	-.14730	-.16940	-.19150	-.15835
	GRADIENT	.00000	.00000	.00000	.00000	.00000	.00000	.00000	.00000	.00000

ARC40X80-462(OA100) OV101(ADS OFF) (CNA05L) (15 APR 82)

REFERENCE DATA

SREF =	2690.0000 SQ.FT.	XMRP =	1076.6800 IN. XO		
LREF =	474.8100 INCHES	YMRP =	.0000 IN. YO		
BREF =	936.6800 INCHES	ZMRP =	375.0000 IN. ZO		
SCALE =	.3600				

PARAMETRIC DATA

BETA =	5.000	ELEVON =	.000
AILRON =	.000	BDFLAP =	.000
SPDBRK =	84.500	RUDDER =	3.500

RUN NO. 134/ 0 GRADIENT INTERVAL = -5.00/ 5.00

Q	ALPHA	ALPHAU	BETA	QI	CP68	CP69	CP70	CP71	CP72	CP73
47.590	-.091	.00000	5.00000	48.50000	1.02375	-.00463	.03867	.03867	-.01545	.02785
47.640	5.094	5.00000	5.00000	47.50000	1.04629	-.00363	.05163	.08479	-.01468	.04058
47.660	10.298	10.00000	5.00000	47.50000	.90261	-.03678	.02953	.02953	-.02573	.00743
47.490	15.508	15.00000	5.00000	47.50000	.79210	-.12520	-.06994	-.06994	-.10309	-.06994
47.850	20.751	20.00000	5.00000	48.50000	.62322	-.23195	-.14535	-.16700	-.18865	-.15618
	GRADIENT	.00000	.00000	.00000	.00000	.00000	.00000	.00000	.00000	.00000

ARC40X80-462(OA100) OV101(ADS OFF) (CNA05M) (15 APR 82)

REFERENCE DATA

SREF =	2690.0000 SQ.FT.	XMRP =	1076.6800 IN. XO		
LREF =	474.8100 INCHES	YMRP =	.0000 IN. YO		
BREF =	936.6800 INCHES	ZMRP =	375.0000 IN. ZO		
SCALE =	.3600				

PARAMETRIC DATA

BETA =	5.000	ELEVON =	.000
AILRON =	.000	BDFLAP =	.000
SPDBRK =	80.000	RUDDER =	5.500

RUN NO. 135/ 0 GRADIENT INTERVAL = -5.00/ 5.00

Q	ALPHA	ALPHAU	BETA	QI	CP68	CP69	CP70	CP71	CP72	CP73
47.760	-.097	.00000	5.00000	48.00000	.94741	.00681	.03962	.01774	-.01507	.00681
47.690	5.094	5.00000	5.00000	47.50000	.94682	-.00363	.04058	.07374	-.01468	.00743
47.450	10.299	10.00000	5.00000	47.50000	.90261	-.03678	.00743	.04058	-.03678	-.01468
47.500	15.507	15.00000	5.00000	47.50000	.79210	-.11414	-.08099	-.05888	-.10309	-.05888
47.670	20.759	20.00000	5.00000	47.50000	.64842	-.20256	-.18045	-.18045	-.20256	-.16940
	GRADIENT	.00000	.00000	.00000	.00000	.00000	.00000	.00000	.00000	.00000

ARC40X80-462(OA100) OV101(ADS OFF) (CNA05N) (15 APR 82)

REFERENCE DATA

SREF =	2690.0000 SQ.FT.	XMRP =	1076.6800 IN.	XO	
LREF =	474.8100 INCHES	YMRP =	.0000 IN.	YO	
BREF =	936.6800 INCHES	ZMRP =	375.0000 IN.	ZO	
SCALE =	.3600				

PARAMETRIC DATA

BETA =	5.000	ELEVON =	.000
AILRON =	.000	BDFLAP =	.000
SPDBRK =	78.500	RUDDER =	6.000

RUN NO. 136/ 0 GRADIENT INTERVAL = -5.00/ 5.00

Q	ALPHA	ALPHAU	BETA	QI	CP68	CP69	CP70	CP71	CP72	CP73
47.760	-.094	.00000	5.00000	47.50000	.95787	.00743	.04058	.02953	-.01468	.00743
47.380	5.095	5.00000	5.00000	47.50000	1.04629	-.00363	.05163	.08479	-.01468	.02953
47.450	10.299	10.00000	5.00000	47.50000	.89156	-.03678	-.00363	.04058	-.02573	-.01468
47.670	15.508	15.00000	5.00000	47.50000	.80315	-.11414	-.05888	-.02573	-.08099	-.06994
47.530	20.755	20.00000	5.00000	47.50000	.67053	-.23571	-.20256	-.19150	-.19150	-.16940
	GRADIENT	.00000	.00000	.00000	.00000	.00000	.00000	.00000	.00000	.00000

ARC40X80-462(OA100) OV101(ADS OFF) (CNA05O) (16 MAR 82)

REFERENCE DATA

SREF =	2690.0000 SQ.FT.	XMRP =	1076.6800 IN.	XO	
LREF =	474.8100 INCHES	YMRP =	.0000 IN.	YO	
BREF =	936.6800 INCHES	ZMRP =	375.0000 IN.	ZO	
SCALE =	.3600				

PARAMETRIC DATA

BETA =	10.000	ELEVON =	.000
AILRON =	.000	BDFLAP =	.000
SPDBRK =	87.000	RUDDER =	.000

RUN NO. 137/ 0 GRADIENT INTERVAL = -5.00/ 5.00

Q	ALPHA	ALPHAU	BETA	QI	CP68	CP69	CP70	CP71	CP72	CP73
47.810	-.077	.00000	10.00000	48.50000	.83972	-.13453	-.08040	-.08040	-.12370	-.12370
47.530	5.108	5.00000	10.00000	48.00000	.84897	-.13538	-.09163	-.06975	-2.10407	-.10256
47.750	10.306	10.00000	10.00000	48.00000	.79428	-.15725	-.12444	-.11350	-.14631	-.13538
47.630	15.529	15.00000	10.00000	48.00000	.70679	-.21194	-.17912	-.22287	-.20100	-.19006
47.330	20.781	20.00000	10.00000	48.00000	.57554	-.34318	-.33224	-.37599	-.29943	-.27756
	GRADIENT	.00000	.00000	.00000	.00000	.00000	.00000	.00000	.00000	.00000

ARC40X80-462(OA100) OV101(ADS OFF) (CNA05P) (15 APR 82)

REFERENCE DATA

SREF =	2690.0000 SQ.FT.	XMRP =	1076.6800 IN. XO		
LREF =	474.8100 INCHES	YMRP =	.0000 IN. YO		
BREF =	936.6800 INCHES	ZMRP =	375.0000 IN. ZO		
SCALE =	.3600				

PARAMETRIC DATA

BETA =	10.000	ELEVON =	.000
AILRON =	.000	BDFLAP =	.000
SPDBRK =	84.500	RUDDER =	3.500

RUN NO. 138/ 0 GRADIENT INTERVAL = -5.00/ 5.00

Q	ALPHA	ALPHAU	BETA	Q1	CP68	CP69	CP70	CP71	CP72	CP73
47.520	-.078	.00000	10.00000	48.50000	.82890	-.15618	-2.09386	-.09123	-.13453	-.11288
47.860	5.110	5.00000	10.00000	48.50000	.83972	-.14535	-.09123	-.06958	-.12370	-.10205
47.790	10.307	10.00000	10.00000	48.50000	.78550	-.17783	-.12370	-.11288	-.12370	-.12370
47.490	15.529	15.00000	10.00000	48.00000	.69585	-.23381	-.19006	-.20100	-.20100	-.19006
47.890	20.777	20.00000	10.00000	49.00000	.53064	-.33729	-.34801	-.38015	-.27300	-.26228
	GRADIENT	.00000	.00000	.00000	.00000	.00000	.00000	.00000	.00000	.00000

ARC40X80-462(OA100) OV101(ADS OFF) (CNA05Q) (15 APR 82)

REFERENCE DATA

SREF =	2690.0000 SQ.FT.	XMRP =	1076.6800 IN. XO		
LREF =	474.8100 INCHES	YMRP =	.0000 IN. YO		
BREF =	936.6800 INCHES	ZMRP =	375.0000 IN. ZO		
SCALE =	.3600				

PARAMETRIC DATA

BETA =	10.000	ELEVON =	.000
AILRON =	.000	BDFLAP =	.000
SPDBRK =	80.000	RUDDER =	5.500

RUN NO. 139/ 0 GRADIENT INTERVAL = -5.00/ 5.00

Q	ALPHA	ALPHAU	BETA	Q1	CP68	CP69	CP70	CP71	CP72	CP73
47.450	-.080	.00000	10.00000	49.00000	.83066	-.12299	-.09084	-.09084	-.12299	-.11227
47.430	5.109	5.00000	10.00000	49.50000	.81117	-.11168	-.09047	-.06925	-.09047	-.09047
47.410	10.307	10.00000	10.00000	48.00000	.79428	-.16819	-.12444	-.13538	-.12444	-.11350
47.370	15.529	15.00000	10.00000	48.00000	.69585	-.23381	-.20100	-.22287	-.21194	-.19006
47.210	20.780	20.00000	10.00000	48.00000	.57554	-.32131	-.31037	-.38693	-.27756	-.27756
	GRADIENT	.00000	.00000	.00000	.00000	.00000	.00000	.00000	.00000	.00000

ARC40X80-462(OA100) OV101(ADS OFF) (CNA05R) (15 APR 82)

REFERENCE DATA

SREF =	2690.0000 SQ.FT.	XMRP =	1076.6800 IN. XO		
LREF =	474.8100 INCHES	YMRP =	.0000 IN. YO		
BREF =	936.6800 INCHES	ZMRP =	375.0000 IN. ZO		
SCALE =	.3600				

PARAMETRIC DATA

BETA =	10.000	ELEVON =	.000
AILRON =	.000	BDFLAP =	.000
SPDBRK =	78.500	RUDDER =	6.000

RUN NO. 140/ 0 GRADIENT INTERVAL = -5.00/ 5.00

Q	ALPHA	ALPHAU	BETA	Q1	CP68	CP69	CP70	CP71	CP72	CP73
47.560	-.078	.00000	10.00000	48.00000	.83803	-.14631	-.09163	-.10256	-.12444	-.11350
47.130	5.110	5.00000	10.00000	48.00000	.82710	-.13538	-.10256	-.06975	-.11350	-.09163
47.600	10.309	10.00000	10.00000	48.00000	.78335	-.13538	-.12444	-.11350	-.14631	-.11350
47.540	15.526	15.00000	10.00000	48.00000	.69565	-.22287	-.22287	-.19006	-.20100	-.19006
47.910	20.778	20.00000	10.00000	49.00000	.58421	-.32657	-.32657	-.35872	-.27300	-.27300
	GRADIENT	.00000	.00000	.00000	.00000	.00000	.00000	.00000	.00000	.00000

ARC40X80-462(OA100) OV101(ADS OFF) (CNA05S) (15 APR 82)

REFERENCE DATA

SREF =	2690.0000 SQ.FT.	XMRP =	1076.6800 IN. XO		
LREF =	474.8100 INCHES	YMRP =	.0000 IN. YO		
BREF =	936.6800 INCHES	ZMRP =	375.0000 IN. ZO		
SCALE =	.3600				

PARAMETRIC DATA

ALPHA =	10.000	BETA =	.000
ELEVON =	.000	AILRON =	.000
BDFLAP =	.000	SPDBRK =	25.000

RUN NO. 141/ 0 GRADIENT INTERVAL = -5.00/ 5.00

Q	RUDDER	ALPHAU	BETA	Q1	CP68	CP69	CP70	CP71	CP72	CP73	ALPHA
47.240	-22.907	10.00000	.00000	48.00000	.93647	.09430	.14899	.20368	.10524	.10524	10.32800
47.740	-15.162	10.00000	.00000	48.00000	1.05678	.10524	.15993	.19274	.09430	.12712	10.33170
47.530	-10.072	10.00000	.00000	48.00000	.96928	.11618	.17086	.18180	.09430	.11618	10.33640
47.600	-5.054	10.00000	.00000	48.00000	.96928	.10524	.15993	.19274	.10524	.12712	10.33540
47.530	.043	10.00000	.00000	49.00000	1.03425	.12346	.15561	.19847	.08060	.10203	10.33540
47.640	5.082	10.00000	.00000	48.00000	1.05678	.09430	.15993	.18180	.10524	.10524	10.33550
47.570	10.140	10.00000	.00000	48.50000	.92632	.09280	.15775	.19022	.11445	.11445	10.33360
47.570	14.990	10.00000	.00000	48.00000	.94741	.10524	.15993	.19274	.11618	.11618	10.33310
47.430	22.915	10.00000	.00000	48.00000	.94741	.09430	.13805	.19274	.09430	.11618	10.32910
	GRADIENT	.00000	.00000	.00000	.00000	.00000	.00000	.00000	.00000	.00000	.00000

ARC40X80-462(OA100) OV101(ADS OFF) (CNA05T) (15 APR 82)

REFERENCE DATA

SREF =	2690.0000 SQ.FT.	XMRP =	1076.6800 IN.	XO	
LREF =	474.8100 INCHES	YMRP =	.0000 IN.	YO	
BREF =	936.6800 INCHES	ZMRP =	375.0000 IN.	ZO	
SCALE =	.3600				

PARAMETRIC DATA

BETA =	5.000	ELEVON =	.000
AILRON =	.000	BDFLAP =	.000
SPDBRK =	.000	RUDDER =	.000

RUN NO. 142/ 0 GRADIENT INTERVAL = -5.00/ 5.00

Q	ALPHA	ALPHAU	BETA	QI	CP68	CP69	CP70	CP71	CP72	CP73
47.510	5.150	5.00000	5.00000	.00000			.00000	.00000		
47.650	10.351	10.00000	5.00000	2.00000	-1.35681	-.57295	-.57295	-.57295	-.83424	-.83424
47.420	15.562	15.00000	5.00000	.00000						
47.540	20.810	20.00000	5.00000	2.00000	-6.58257	-5.01484	-5.53742	-6.05999	-4.75355	-4.23098
	GRADIENT	.00000	.00000	.00000	.00000	.00000	.00000	.00000	.00000	.00000

ARC40X80-462(OA100) OV101(ADS OFF) (CNA05U) (16 MAR 82)

REFERENCE DATA

SREF =	2690.0000 SQ.FT.	XMRP =	1076.6800 IN.	XO	
LREF =	474.8100 INCHES	YMRP =	.0000 IN.	YO	
BREF =	936.6800 INCHES	ZMRP =	375.0000 IN.	ZO	
SCALE =	.3600				

PARAMETRIC DATA

BETA =	10.000	ELEVON =	.000
AILRON =	.000	BDFLAP =	.000
SPDBRK =	.000	RUDDER =	.000

RUN NO. 143/ 0 GRADIENT INTERVAL = -5.00/ 5.00

Q	ALPHA	ALPHAU	BETA	QI	CP68	CP69	CP70	CP71	CP72	CP73
47.620	-.035	.00000	10.00000	2.00000	-2.40196	-3.44711	-3.18583	-3.44711	-2.66325	-2.92454
47.660	5.154	5.00000	10.00000	.00000						
47.870	10.354	10.00000	10.00000	.00000						
47.280	15.576	15.00000	10.00000	-1.00000	11.44220	10.91980	11.44220	13.00950	8.30775	9.35257
47.740	20.824	20.00000	10.00000	.00000						
	GRADIENT	.00000	.00000	.00000	.00000	.00000	.00000	.00000	.00000	.00000

ARC40X80-462(OA100) OV101(ADS OFF) (CNA05V) (16 MAR 82)

REFERENCE DATA

SREF = 2690.0000 SQ.FT. XMRP = 1076.6800 IN. XO
LREF = 474.8100 INCHES YMRP = .0000 IN. YO
BREF = 936.6800 INCHES ZMRP = 375.0000 IN. ZO
SCALE = .3600

PARAMETRIC DATA

BETA = 10.000 ELEVON = .000
AILRON = .000 BDFLAP = .000
SPDBRK = 25.000 RUDDER = .000

RUN NO. 144/ 0 GRADIENT INTERVAL = -5.00/ 5.00

Q	ALPHA	ALPHAU	BETA	QI	CP68	CP69	CP70	CP71	CP72	CP73
47.650	-.044	.00000	10.00000	.00000						
47.530	5.147	5.00000	10.00000	.00000						
47.640	10.349	10.00000	10.00000	.00000						
47.920	15.574	15.00000	10.00000	.00000						
47.210	20.816	20.00000	10.00000	2.00000	-8.15029	-7.36643	-8.41157	-10.50190	-6.84385	-7.10514
	GRADIENT	.00000	.00000	.00000	.00000	.00000	.00000	.00000	.00000	.00000

ARC40X80-462(OA100) OV101+NOSE GEAR(ADS OFF) (CNA05W) (16 MAR 82)

REFERENCE DATA

SREF = 2690.0000 SQ.FT. XMRP = 1076.6800 IN. XO
LREF = 474.8100 INCHES YMRP = .0000 IN. YO
BREF = 936.6800 INCHES ZMRP = 375.0000 IN. ZO
SCALE = .3600

PARAMETRIC DATA

BETA = .000 ELEVON = .000
AILRON = .000 BDFLAP = .000
SPDBRK = 87.000 RUDDER = .000

RUN NO. 145/ 0 GRADIENT INTERVAL = -5.00/ 5.00

Q	ALPHA	ALPHAU	BETA	QI	CP68	CP69	CP70	CP71	CP72	CP73
47.450	-.089	.00000	.00000	47.00000	.94622	.14208	.16441	.16441	.10857	.11974
47.710	5.097	5.00000	.00000	47.00000	1.00206	.15324	.16441	.17558	.10857	.13091
47.790	10.302	10.00000	.00000	47.00000	.94622	.09740	.10857	.16441	.08623	.10857
47.640	15.510	15.00000	.00000	50.00000	.78156	-.01659	.03592	.07792	.01491	.04642
47.680	20.754	20.00000	.00000	50.00000	.63453	-.11111	-.06910	-.02710	-.09011	-.04810
	GRADIENT	.00000	.00000	.00000	.00000	.00000	.00000	.00000	.00000	.00000

ARC40X80-462(OA100) OV101+NOSE GEAR(ADS OFF) (CNA05X) (16 MAR 82)

REFERENCE DATA

SREF =	2690.0000 SQ.FT.	XMRP =	1076.6800 IN.	XO	
LREF =	474.8100 INCHES	YMRP =	.0000 IN.	YO	
BREF =	936.6800 INCHES	ZMRP =	375.0000 IN.	ZO	
SCALE =	.3600				

PARAMETRIC DATA

BETA =	5.000	ELEVON =	.000
AILRON =	.000	BDFLAP =	.000
SPDBRK =	87.000	RUDDER =	.000

RUN NO. 146/ 0 GRADIENT INTERVAL = -5.00/ 5.00

Q	ALPHA	ALPHAU	BETA	QI	CP68	CP69	CP70	CP71	CP72	CP73
47.630	-.087	.00000	5.00000	47.50000	.96892	-.01468	.02953	.00743	-.04783	-.00363
47.570	5.102	5.00000	5.00000	50.00000	.90758	-.00609	.02541	.02541	-.00609	.01491
47.600	10.304	10.00000	5.00000	50.00000	.84457	-.04810	-.01659	-.01659	-.04810	-.01659
47.600	15.506	15.00000	5.00000	47.00000	.80103	-.12597	-.09247	-.10364	-.11480	-.07013
47.810	20.751	20.00000	5.00000	50.00000	.63453	-.20563	-.20563	-.18462	-.17412	-.12161
	GRADIENT	.00000	.00000	.00000	.00000	.00000	.00000	.00000	.00000	.00000

ARC40X80-462(OA100) OV101+NOSE GEAR(ADS OFF) (CNA05Y) (16 MAR 82)

REFERENCE DATA

SREF =	2690.0000 SQ.FT.	XMRP =	1076.6800 IN.	XO	
LREF =	474.8100 INCHES	YMRP =	.0000 IN.	YO	
BREF =	936.6800 INCHES	ZMRP =	375.0000 IN.	ZO	
SCALE =	.3600				

PARAMETRIC DATA

BETA =	10.000	ELEVON =	.000
AILRON =	.000	BDFLAP =	.000
SPDBRK =	87.000	RUDDER =	.000

RUN NO. 147/ 0 GRADIENT INTERVAL = -5.00/ 5.00

Q	ALPHA	ALPHAU	BETA	QI	CP68	CP69	CP70	CP71	CP72	CP73
47.690	-.073	.00000	10.00000	48.00000	.83803	-.14631	-.13538	-.12444	-.12444	-.12444
47.470	5.110	5.00000	10.00000	50.00000	.81306	-.13212	-.12161	-.12161	-.12161	-.11111
47.620	10.303	10.00000	10.00000	48.00000	.79428	-.16819	-.15725	-.20100	-.15725	-.12444
47.590	15.537	15.00000	10.00000	47.00000	.67817	-.23766	-.22649	-.28233	-.20415	-.19298
47.460	20.779	20.00000	10.00000	50.00000	.55051	-.32115	-.28965	-.36316	-.25814	-.25814
	GRADIENT	.00000	.00000	.00000	.00000	.00000	.00000	.00000	.00000	.00000

ARC40X80-462(OA100) OV101+NOSE GEAR(FTP,ADS OFF) (CNA05Z) (16 MAR 82)

REFERENCE DATA

SREF =	2690.0000 SQ.FT.	XMRP =	1076.6800 IN.	XO	
LREF =	474.8100 INCHES	YMRP =	.0000 IN.	YO	
BREF =	936.6800 INCHES	ZMRP =	375.0000 IN.	ZO	
SCALE =	.3600				

PARAMETRIC DATA

BETA =	.000	ELEVON =	.000
AILRON =	.000	BDFLAP =	.000
SPDBRK =	.000	RUDDER =	.000

RUN NO. 148/ 0 GRADIENT INTERVAL = -5.00/ 5.00

Q	ALPHA	ALPHAU	BETA	QI	CP68	CP69	CP70	CP71	CP72	CP73
47.710	-.050	.00000	.00000	50.00000	.96009	.11993	.16194	.13043	.09893	.11993
47.510	5.148	5.00000	.00000	50.00000	.94959	.11993	.16194	.16194	.09893	.11993
47.730	10.347	10.00000	.00000	48.00000	.91459	.06149	.12712	.13805	.10524	.09430
47.530	15.559	15.00000	.00000	47.50000	.78104	.00743	.06268	.10689	.01848	.05163
47.600	20.802	20.00000	.00000	47.50000	.59317	-.09204	-.03678	-.01468	-.06994	-.04783
	GRADIENT	.00000	.00000	.00000	.00000	.00000	.00000	.00000	.00000	.00000

ARC40X80-462(OA100) OV101+NOSE GEAR(FTP,ADS OFF) (CNA06A) (16 MAR 82)

REFERENCE DATA

SREF =	2690.0000 SQ.FT.	XMRP =	1076.6800 IN.	XO	
LREF =	474.8100 INCHES	YMRP =	.0000 IN.	YO	
BREF =	936.6800 INCHES	ZMRP =	375.0000 IN.	ZO	
SCALE =	.3600				

PARAMETRIC DATA

BETA =	5.000	ELEVON =	.000
AILRON =	.000	BDFLAP =	.000
SPDBRK =	.000	RUDDER =	.000

RUN NO. 149/ 0 GRADIENT INTERVAL = -5.00/ 5.00

Q	ALPHA	ALPHAU	BETA	QI	CP68	CP69	CP70	CP71	CP72	CP73
47.470	-.047	.00000	5.00000	48.00000	.96928	-.01507	.00681	-.02600	-.02600	-.00413
47.600	5.147	5.00000	5.00000	48.00000	.96928	-.01507	.02868	-.01507	-.00413	-.00413
47.470	10.342	10.00000	5.00000	48.00000	.89272	-.05882	-.02600	-.02600	-.03694	-.01507
47.480	15.552	15.00000	5.00000	48.00000	.72866	-.15725	-.10256	-.12444	-.09163	-.08069
47.520	20.802	20.00000	5.00000	48.50000	.55827	-.26443	-.21030	-.26443	-.17783	-.15618
	GRADIENT	.00000	.00000	.00000	.00000	.00000	.00000	.00000	.00000	.00000

ARC40X80-462(OA100) OV101+NOSE GEAR(FTP,ADS OFF) (CNA06B) (16 MAR 82)

REFERENCE DATA

SREF =	2690.0000 SQ.FT.	XMRP =	1076.6800 IN.	XO	
LREF =	474.8100 INCHES	YMRP =	.0000 IN.	YO	
BREF =	936.6800 INCHES	ZMRP =	375.0000 IN.	ZO	
SCALE =	.3600				

PARAMETRIC DATA

BETA =	10.000	ELEVON =	.000
AILRON =	.000	BDFLAP =	.000
SPDBRK =	.000	RUDDER =	.000

RUN NO. 150/ 0 GRADIENT INTERVAL = -5.00/ 5.00

Q	ALPHA	ALPHAU	BETA	QI	CP68	CP69	CP70	CP71	CP72	CP73
47.500	-.037	.00000	10.00000	48.50000	.86137	-.17783	-.14535	-.15618	-.13453	-.14535
47.210	5.149	5.00000	10.00000	47.50000	.83946	-.18045	-.14730	-.18045	-.12520	-.13625
47.360	10.344	10.00000	10.00000	48.00000	.79428	-.16819	-.17912	-.21194	-.15725	-.14631
47.620	15.575	15.00000	10.00000	48.50000	.62322	-.25360	-.23195	-.26443	-.21030	-.18865
47.570	20.823	20.00000	10.00000	48.50000	.50415	-.32938	-.35103	-.41598	-.29690	-.23195
	GRADIENT	.00000	.00000	.00000	.00000	.00000	.00000	.00000	.00000	.00000

ARC40X80-462(OA100) OV101(FTP AND ADS OFF) (CNA06C) (16 MAR 82)

REFERENCE DATA

SREF =	2690.0000 SQ.FT.	XMRP =	1076.6800 IN.	XO	
LREF =	474.8100 INCHES	YMRP =	.0000 IN.	YO	
BREF =	936.6800 INCHES	ZMRP =	375.0000 IN.	ZO	
SCALE =	.3600				

PARAMETRIC DATA

BETA =	.000	ELEVON =	.000
AILRON =	.000	BDFLAP =	.000
SPDBRK =	.000	RUDDER =	.000

RUN NO. 151/ 0 GRADIENT INTERVAL = -5.00/ 5.00

Q	ALPHA	ALPHAU	BETA	QI	CP68	CP69	CP70	CP71	CP72	CP73
47.680	-.056	.00000	.00000	48.00000	1.01303	.13805	.14899	.14899	.11618	.13805
47.610	5.140	5.00000	.00000	48.50000	.99127	.13610	.16857	.19022	.10362	.13610
47.670	10.340	10.00000	.00000	48.50000	.99127	.11445	.13610	.17940	.07115	.12527
47.610	15.551	15.00000	.00000	48.00000	.81616	.05056	.06149	.14899	.01774	.05056
47.690	20.824	20.00000	.00000	48.00000	.60835	-.08069	-.04788	-.01507	-.08069	-.03694
	GRADIENT	.00000	.00000	.00000	.00000	.00000	.00000	.00000	.00000	.00000

ARC40X80-462(OA100) OV101(FTP AND ADS OFF) (CNA06D) (16 MAR 82)

REFERENCE DATA

SREF =	2690.0000 SQ.FT.	XMRP =	1076.6800 IN. XO		
LREF =	474.8100 INCHES	YMRP =	.0000 IN. YO		
BREF =	936.6800 INCHES	ZMRP =	375.0000 IN. ZO		
SCALE =	.3600				

PARAMETRIC DATA

BETA =	.000	ELEVON =	.000
AILRON =	.000	BDFLAP =	.000
SPDBRK =	.000	RUDDER =	5.000

RUN NO. 152/ 0 GRADIENT INTERVAL = -5.00/ 5.00

Q	ALPHA	ALPHAU	BETA	QI	CP68	CP69	CP70	CP71	CP72	CP73
47.560	-.057	.00000	.00000	48.50000	.99127	.13610	.14692	.14692	.09280	.13610
47.720	5.140	5.00000	.00000	48.50000	.99127	.13610	.15775	.19022	.09280	.11445
47.480	10.340	10.00000	.00000	48.00000	.93647	.10524	.13805	.18180	.07243	.08337
47.580	15.556	15.00000	.00000	48.00000	.80522	.05056	.06149	.11618	.00681	.02868
47.660	20.824	20.00000	.00000	48.00000	.63023	-.08069	-.04788	-.00413	-.10256	-.09163
	GRADIENT	.00000	.00000	.00000	.00000	.00000	.00000	.00000	.00000	.00000

ARC40X80-462(OA100) OV101(FTP AND ADS OFF) (CNA06E) (16 MAR 82)

REFERENCE DATA

SREF =	2690.0000 SQ.FT.	XMRP =	1076.6800 IN. XO		
LREF =	474.8100 INCHES	YMRP =	.0000 IN. YO		
BREF =	936.6800 INCHES	ZMRP =	375.0000 IN. ZO		
SCALE =	.3600				

PARAMETRIC DATA

BETA =	.000	ELEVON =	.000
AILRON =	.000	BDFLAP =	.000
SPDBRK =	.000	RUDDER =	10.000

RUN NO. 153/ 0 GRADIENT INTERVAL = -5.00/ 5.00

Q	ALPHA	ALPHAU	BETA	QI	CP68	CP69	CP70	CP71	CP72	CP73
47.620	-.054	.00000	.00000	48.00000	1.01303	.15993	.13805	.19274	.10524	.14899
47.720	5.139	5.00000	.00000	48.00000	1.01303	.15993	.14899	.20368	.09430	.14899
47.540	10.338	10.00000	.00000	48.00000	.94741	.11618	.12712	.20368	.07243	.10524
47.750	15.553	15.00000	.00000	48.00000	.82710	.05056	.05056	.12712	.01774	.03962
47.610	20.822	20.00000	.00000	48.00000	.61929	-.06975	-.08069	.02868	-.09163	-.06975
	GRADIENT	.00000	.00000	.00000	.00000	.00000	.00000	.00000	.00000	.00000

ARC40X80-462(OA100) OV101(FTP AND ADS OFF) (CNA06F) (16 MAR 82)

REFERENCE DATA

SREF =	2690.0000 SQ.FT.	XMRP =	1076.6800 IN. XO		
LREF =	474.8100 INCHES	YMRP =	.0000 IN. YO		
BREF =	936.6800 INCHES	ZMRP =	375.0000 IN. ZO		
SCALE =	.3600				

PARAMETRIC DATA

BETA =	.000	ELEVON =	.000
AILRON =	.000	BDFLAP =	.000
SPDBRK =	.000	RUDDER =	15.000

RUN NO. 154/ 0 GRADIENT INTERVAL = -5.00/ 5.00

Q	ALPHA	ALPHAU	BETA	Q1	CP68	CP69	CP70	CP71	CP72	CP73
47.520	-.056	.00000	.00000	48.00000	1.02396	.17086	.13805	.17086	.09430	.09430
47.620	5.139	5.00000	.00000	48.00000	1.01303	.17086	.15993	.21461	.09430	.11618
47.750	10.338	10.00000	.00000	48.50000	.93715	.11445	.13610	.21187	.06032	.10362
47.570	15.550	15.00000	.00000	48.00000	.83803	.06149	.05056	.14899	.00681	.03962
47.610	20.822	20.00000	.00000	48.00000	.66304	-.02600	-.04788	.01774	-.09163	-.06975
	GRADIENT	.00000	.00000	.00000	.00000	.00000	.00000	.00000	.00000	.00000

ARC40X80-462(OA100) OV101(FTP AND ADS OFF) (CNA06G) (15 APR 82)

REFERENCE DATA

SREF =	2690.0000 SQ.FT.	XMRP =	1076.6800 IN. XO		
LREF =	474.8100 INCHES	YMRP =	.0000 IN. YO		
BREF =	936.6800 INCHES	ZMRP =	375.0000 IN. ZO		
SCALE =	.3600				

PARAMETRIC DATA

BETA =	.000	ELEVON =	.000
AILRON =	.000	BDFLAP =	.000
SPDBRK =	.000	RUDDER =	20.500

RUN NO. 155/ 0 GRADIENT INTERVAL = -5.00/ 5.00

Q	ALPHA	ALPHAU	BETA	Q1	CP68	CP69	CP70	CP71	CP72	CP73
47.510	-.061	.00000	.00000	48.00000	1.01303	.15993	.15993	.17086	.09430	.09430
47.600	5.135	5.00000	.00000	48.00000	1.01303	.17086	.15993	.22555	.10524	.12712
47.580	10.335	10.00000	.00000	48.00000	.94741	.13805	.12712	.20368	.07243	.09430
47.680	15.550	15.00000	.00000	48.00000	.82710	.03962	.05056	.12712	.01774	.03962
47.440	20.819	20.00000	.00000	47.50000	.63737	-.06894	-.02573	.04058	-.08099	-.06994
	GRADIENT	.00000	.00000	.00000	.00000	.00000	.00000	.00000	.00000	.00000

ARC40X80-462(OA100) OV101(FTP AND ADS OFF) (CNA06H) (16 MAR 82)

REFERENCE DATA

SREF = 2690.0000 SQ.FT. XMRP = 1076.6800 IN. XO
LREF = 474.8100 INCHES YMRP = .0000 IN. YO
BREF = 936.6800 INCHES ZMRP = 375.0000 IN. ZO
SCALE = .3600

PARAMETRIC DATA

BETA = 5.000 ELEVON = .000
AILRON = .000 BDFLAP = .000
SPDBRK = .000 RUDDER = .000

RUN NO. 156/ 0 GRADIENT INTERVAL = -5.00/ 5.00

Q	ALPHA	ALPHAU	BETA	QI	CP68	CP69	CP70	CP71	CP72	CP73
47.640	-.047	.00000	5.00000	48.00000	.96928	.01774	-.00413	.06149	-.01507	.00681
47.700	5.147	5.00000	5.00000	48.00000	.98022	.03962	.01774	.08337	-.00413	.01774
47.530	10.343	10.00000	5.00000	48.00000	.90366	-.01507	-.01507	.05056	-.03694	-.01507
47.460	15.556	15.00000	5.00000	48.00000	.79428	-.06975	-.10256	-.04788	-.11350	-.08069
47.670	20.810	20.00000	5.00000	48.00000	.60835	-.21194	-.22287	-.16819	-.21194	-.19006
	GRADIENT	.00000	.00000	.00000	.00000	.00000	.00000	.00000	.00000	.00000

ARC40X80-462(OA100) OV101(FTP AND ADS OFF) (CNA06I) (16 MAR 82)

REFERENCE DATA

SREF = 2690.0000 SQ.FT. XMRP = 1076.6800 IN. XO
LREF = 474.8100 INCHES YMRP = .0000 IN. YO
BREF = 936.6800 INCHES ZMRP = 375.0000 IN. ZO
SCALE = .3600

PARAMETRIC DATA

BETA = 5.000 ELEVON = .000
AILRON = .000 BDFLAP = .000
SPDBRK = .000 RUDDER = 5.000

RUN NO. 157/ 0 GRADIENT INTERVAL = -5.00/ 5.00

Q	ALPHA	ALPHAU	BETA	QI	CP68	CP69	CP70	CP71	CP72	CP73
47.530	-.050	.00000	5.00000	48.00000	.99115	.02868	.00681	.05056	-.01507	-.00413
47.550	5.145	.00000	5.00000	48.00000	.96928	.02868	.01774	.07243	-.02600	-.01507
47.470	10.342	10.00000	5.00000	48.00000	.89272	-.01507	-.01507	.06149	-.03694	-.01507
47.480	15.554	15.00000	5.00000	48.00000	.78335	-.10256	-.10256	-.01507	-.10256	-.08069
47.650	20.806	20.00000	5.00000	48.00000	.55367	-.21194	-.20100	-.15725	-.19006	-.16819
	GRADIENT	.00000	.00000	.00000	.00000	.00000	.00000	.00000	.00000	.00000

ARC40X80-462(OA100) OV101(FTP AND ADS OFF) (CNA06J) (16 MAR 82)

REFERENCE DATA

SREF =	2690.0000 SQ.FT.	XMRP =	1076.6800 IN. XO		
LREF =	474.8100 INCHES	YMRP =	.0000 IN. YO		
BREF =	936.6800 INCHES	ZMRP =	375.0000 IN. ZO		
SCALE =	.3600				

PARAMETRIC DATA

BETA =	5.000	ELEVON =	.000
AILRON =	.000	BDFLAP =	.000
SPDBRK =	.000	RUDDER =	10.000

RUN NO. 158/ 0 GRADIENT INTERVAL = -5.00/ 5.00

Q	ALPHA	ALPHAU	BETA	Q1	CP68	CP69	CP70	CP71	CP72	CP73
47.460	-.051	.00000	5.00000	47.50000	.99103	.02953	.00743	.02953	-.02573	-.00363
47.530	5.145	5.00000	5.00000	47.50000	.97998	.01848	.00743	.05268	-.02573	-.01468
47.310	10.341	10.00000	5.00000	47.50000	.90261	-.01468	-.01468	.04058	-.05888	-.01468
47.450	15.593	15.00000	5.00000	48.00000	.78335	-.10256	-.12444	-.05882	-.12444	-.10256
47.870	20.783	20.00000	5.00000	48.00000	.60835	-.20100	-.20100	-.14631	-.19006	-.16819
	GRADIENT	.00000	.00000	.00000	.00000	.00000	.00000	.00000	.00000	.00000

ARC40X80-462(OA100) OV101(FTP AND ADS OFF) (CNA06K) (16 MAR 82)

REFERENCE DATA

SREF =	2690.0000 SQ.FT.	XMRP =	1076.6800 IN. XO		
LREF =	474.8100 INCHES	YMRP =	.0000 IN. YO		
BREF =	936.6800 INCHES	ZMRP =	375.0000 IN. ZO		
SCALE =	.3600				

PARAMETRIC DATA

BETA =	5.000	ELEVON =	.000
AILRON =	.000	BDFLAP =	.000
SPDBRK =	.000	RUDDER =	15.000

RUN NO. 159/ 0 GRADIENT INTERVAL = -5.00/ 5.00

Q	ALPHA	ALPHAU	BETA	Q1	CP68	CP69	CP70	CP71	CP72	CP73
47.480	-.055	.00000	5.00000	48.00000	.96928	.01774	-.01507	.02868	-.01507	-.00413
47.690	5.140	5.00000	5.00000	48.00000	.96928	.02868	.00681	.09430	-.01507	.00681
47.600	10.326	10.00000	5.00000	47.50000	.92472	-.01468	-.02573	.06268	-.036[illegible]3	-.01468
47.680	15.549	15.00000	5.00000	48.00000	.80522	-.10256	-.09163	-.03694	-.10256	-.08069
47.830	20.785	20.00000	5.00000	48.50000	.59075	-.18865	-.16700	-.12370	-.17783	-.15618
	GRADIENT	.00000	.00000	.00000	.00000	.00000	.00000	.00000	.00000	.00000

ARC40X80-462(OA100) OV101(FTP AND ADS OFF) (CNA06L) (15 APR 82)

REFERENCE DATA

SREF =	2690.0000 SQ.FT.	XMRP =	1076.6800 IN.	XO	
LREF =	474.8100 INCHES	YMRP =	.0000 IN.	YO	
BREF =	936.6800 INCHES	ZMRP =	375.0000 IN.	ZO	
SCALE =	.3600				

PARAMETRIC DATA

BETA =	5.000	ELEVON =	.000
AILRON =	.000	BDFLAP =	.000
SPDBRK =	.000	RUDDER =	20.500

RUN NO. 160/ 0 GRADIENT INTERVAL = -5.00/ 5.00

Q	ALPHA	ALPHAU	BETA	QI	CP68	CP69	CP70	CP71	CP72	CP73
47.360	-.050	.00000	5.00000	48.00000	.98022	.01774	.00681	.06149	-.01507	-.01507
47.530	5.141	5.00000	5.00000	48.00000	1.01303	.01774	.01774	.07243	-.01507	.00681
47.680	10.336	10.00000	5.00000	48.00000	.91459	-.01507	-.01507	.05056	-.02600	-.02600
47.630	15.547	15.00000	5.00000	48.00000	.78335	-.08069	-.09163	-.01507	-.11350	-.08069
47.440	20.800	20.00000	5.00000	48.00000	.56460	-.21194	-.22287	-.17912	-.22287	-.19006
	GRADIENT	.00000	.00000	.00000	.00000	.00000	.00000	.00000	.00000	.00000

ARC40X80-462(OA100) OV101(ADS OFF) (CNA06M) (16 MAR 82)

REFERENCE DATA

SREF =	2690.0000 SQ.FT.	XMRP =	1076.6800 IN.	XO	
LREF =	474.8100 INCHES	YMRP =	.0000 IN.	YO	
BREF =	936.6800 INCHES	ZMRP =	375.0000 IN.	ZO	
SCALE =	.3600				

PARAMETRIC DATA

BETA =	10.000	ELEVON =	.000
AILRON =	.000	BDFLAP =	.000
SPDBRK =	.000	RUDDER =	.000

RUN NO. 161/ 0 GRADIENT INTERVAL = -5.00/ 5.00

Q	ALPHA	ALPHAU	BETA	QI	CP68	CP69	CP70	CP71	CP72	CP73
47.610	-.038	.00000	10.00000	47.50000	.85941	-.13625	-.09204	-.10309	-.12520	-.08099
47.540	5.151	5.00000	10.00000	47.50000	.85841	-.13625	-.09204	-.10309	-.12520	-.09204
47.550	10.352	10.00000	10.00000	47.50000	.81420	-.16940	-.13625	-.14730	-.15835	-.12520
47.970	15.573	15.00000	10.00000	48.00000	.82710	-.24475	-.21194	-.22287	-.19006	-.16819
47.730	20.823	20.00000	10.00000	48.00000	.61929	-.31037	-.32131	-.39787	-.31037	-.27756
	GRADIENT	.00000	.00000	.00000	.00000	.00000	.00000	.00000	.00000	.00000

ARC40X80-462(OA100) OV101(ADS OFF) (CNA06N) (16 MAR 82)

REFERENCE DATA

SREF =	2690.0000 SQ.FT.	XMRP =	1076.6800 IN.	XO
LREF =	474.8100 INCHES	YMRP =	.0000 IN.	YO
BREF =	936.6800 INCHES	ZMRP =	375.0000 IN.	ZO
SCALE =	.3600			

PARAMETRIC DATA

BETA =	10.000	ELEVON =	.000
AILRON =	.000	BDFLAP =	.000
SPDBRK =	.000	RUDDER =	5.000

RUN NO. 162/ 0 GRADIENT INTERVAL = -5.00/ 5.00

Q	ALPHA	ALPHAU	BETA	QI	CP68	CP69	CP70	CP71	CP72	CP73
47.570	-.037	.00000	10.00000	47.50000	.85841	-.13625	-.09204	-.10309	-.12520	-.10309
47.700	5.151	5.00000	10.00000	48.00000	.87084	-.13538	-.09163	-.10256	-.12444	-.10256
47.440	10.349	10.00000	10.00000	47.50000	.81420	-.16940	-.13625	-.14730	-.15835	-.13625
47.630	15.572	15.00000	10.00000	48.00000	.64116	-.24475	-.20100	-.23381	-.20100	-.16819
47.520	20.823	20.00000	10.00000	48.00000	.56460	-.34318	-.33224	-.41974	-.31037	-.28850
	GRADIENT	.00000	.00000	.00000	.00000	.00000	.00000	.00000	.00000	.00000

ARC40X80-462(OA100) OV101(ADS OFF) (CNA06O) (16 MAR 82)

REFERENCE DATA

SREF =	2690.0000 SQ.FT.	XMRP =	1076.6800 IN.	XO
LREF =	474.8100 INCHES	YMRP =	.0000 IN.	YO
BREF =	936.6800 INCHES	ZMRP =	375.0000 IN.	ZO
SCALE =	.3600			

PARAMETRIC DATA

BETA =	10.000	ELEVON =	.000
AILRON =	.000	BDFLAP =	.000
SPDBRK =	.000	RUDDER =	10.000

RUN NO. 163/ 0 GRADIENT INTERVAL = -5.00/ 5.00

Q	ALPHA	ALPHAU	BETA	QI	CP68	CP69	CP70	CP71	CP72	CP73
47.640	5.150	5.00000	10.00000	48.00000	.85991	-.13538	-.09163	-.09163	-.12444	-.10256
47.480	10.348	10.00000	10.00000	48.00000	.79428	-.17912	-.13538	-.12444	-.15725	-.12444
47.500	15.575	15.00000	10.00000	47.50000	.62632	-.22466	-.20256	-.24676	-.21361	-.19150
47.740	20.820	20.00000	10.00000	48.00000	.57554	-.34318	-.31037	-.36506	-.29943	-.27756
	GRADIENT	.00000	.00000	.00000	.00000	.00000	.00000	.00000	.00000	.00000

ARC40X80-462(OA100) OV101(ADS OFF) (CNA06P) (16 MAR 82)

REFERENCE DATA

SREF =	2690.0000 SQ.FT.	XMRP =	1076.6800 IN. XO		
LREF =	474.8100 INCHES	YMRP =	.0000 IN. YO		
BREF =	936.6800 INCHES	ZMRP =	375.0000 IN. ZO		
SCALE =	.3600				

PARAMETRIC DATA

BETA =	10.000	ELEVON =	.000
AILRON =	.000	BDFLAP =	.000
SPDBRK =	.000	RUDDER =	15.000

RUN NO. 164/ 0 GRADIENT INTERVAL = -5.00/ 5.00

Q	ALPHA	ALPHAU	BETA	QI	CP68	CP69	CP70	CP71	CP72	CP73
47.630	-.040	.00000	10.00000	48.00000	.85991	-.15725	-.09163	-.10256	-.12444	-.12444
47.450	5.148	5.00000	10.00000	47.50000	.85841	-.15835	-.08099	-.10309	-.11414	-.10309
47.590	10.346	10.00000	10.00000	47.50000	.80315	-.15935	-.13625	-.14730	-.15835	-.12520
47.510	15.566	15.00000	10.00000	48.00000	.82710	-.24475	-.19006	-.22287	-.19006	-.16819
47.820	20.818	20.00000	10.00000	48.00000	.59742	-.31037	-.29943	-.35412	-.31037	-.27756
	GRADIENT	.00000	.00000	.00000	.00000	.00000	.00000	.00000	.00000	.00000

ARC40X80-462(OA100) OV101(ADS OFF) (CNA06Q) (15 APR 82)

REFERENCE DATA

SREF =	2690.0000 SQ.FT.	XMRP =	1076.6800 IN. XO		
LREF =	474.8100 INCHES	YMRP =	.0000 IN. YO		
BREF =	936.6800 INCHES	ZMRP =	375.0000 IN. ZO		
SCALE =	.3600				

PARAMETRIC DATA

BETA =	10.000	ELEVON =	.000
AILRON =	.000	BDFLAP =	.000
SPDBRK =	.000	RUDDER =	20.500

RUN NO. 165/ 0 GRADIENT INTERVAL = -5.00/ 5.00

Q	ALPHA	ALPHAU	BETA	QI	CP68	CP69	CP70	CP71	CP72	CP73
47.640	-.043	.00000	10.00000	48.00000	.84897	-.14631	-.09163	-.10256	-.12444	-.12444
47.600	5.147	5.00000	10.00000	48.00000	.84897	-.14631	-.08069	-.09163	-.12444	-.10256
47.570	10.342	10.00000	10.00000	47.50000	.80315	-.18045	-.13625	-.14730	-.15835	-.13625
47.760	15.561	15.00000	10.00000	48.00000	.82710	-.24475	-.20100	-.21194	-.21194	-.17912
47.670	20.817	20.00000	10.00000	48.00000	.56460	-.34318	-.33224	-.39787	-.29943	-.27756
	GRADIENT	.00000	.00000	.00000	.00000	.00000	.00000	.00000	.00000	.00000

ARC40X80-462(OA100) OV101(ADS OFF) (CNA06R) (16 MAR 82)

REFERENCE DATA

SREF =	2690.0000 SQ.FT.	XMRP =	1076.6800 IN. XO		
LREF =	474.8100 INCHES	YMRP =	.0000 IN. YO		
BREF =	936.6800 INCHES	ZMRP =	375.0000 IN. ZO		
SCALE =	.3600				

PARAMETRIC DATA

BETA =	.000	ELEVON =	.000
AILRON =	.000	BDFLAP =	.000
SPDBRK =	25.000	RUDDER =	.000

RUN NO. 167/ 0 GRADIENT INTERVAL = -5.00/ 5.00

Q	ALPHA	ALPHAU	BETA	QI	CP68	CP69	CP70	CP71	CP72	CP73
47.470	-5.243	-5.00000	.00000	47.00000	.72285	4.60954	.10857	.05273	.06389	.08623
47.570	-2.651	-2.50000	.00000	47.50000	.88051	4.59388	.18425	.08479	.07374	.09584
47.600	-.058	.00000	.00000	47.50000	.99103	4.58283	.18425	.12899	.10689	.12809
47.550	2.540	2.50000	.00000	47.50000	.92472	4.60494	.19530	.17320	.11794	.12899
47.580	5.139	5.00000	.00000	47.50000	1.02418	4.61599	.18425	.16215	.10689	.12899
47.810	7.739	7.50000	.00000	47.50000	1.00208	4.59388	.18425	.17320	.10689	.11794
47.630	10.342	10.00000	.00000	47.00000	.96856	4.58720	.16441	.17558	.06389	.08623
47.580	11.379	11.00000	.00000	47.50000	1.04629	4.53863	.15110	.16215	.06268	.09584
47.690	12.421	12.00000	.00000	47.50000	.92472	4.51652	.15110	.16215	.04058	.08479
47.670	13.462	13.00000	.00000	47.50000	.90261	4.50547	.10689	.16215	.04058	.07374
47.600	14.505	14.00000	.00000	47.00000	.89038	4.55370	.10857	.14208	.04156	.07506
47.680	15.549	15.00000	.00000	47.00000	.86804	4.53136	.08623	.09740	.01922	.03039
47.520	16.601	16.00000	.00000	47.50000	.82525	4.47232	.08479	.10689	-.00363	.01848
47.620	17.651	17.00000	.00000	47.50000	.79210	4.43916	.08479	.06268	-.02573	-.00363
47.520	18.708	18.00000	.00000	47.50000	.78104	4.42811	.01848	.05163	-.03678	-.01468
47.490	19.768	19.00000	.00000	47.50000	.73684	4.39495	.00743	.00743	-.05888	-.02573
47.660	20.817	20.00000	.00000	47.50000	.70368	4.38390	-.02573	.00743	-.08099	-.05888
	GRADIENT	.96321	.00000	.00000	.00851	.00213	.00213	.01703	.00851	.00638

ARC40X80-462(OA100) OV101(ADS OFF) (CNA06S) (15 APR 82)

REFERENCE DATA

SREF =	2690.0000 SQ.FT.	XMRP =	1076.6800 IN. XO		
LREF =	474.8100 INCHES	YMRP =	.0000 IN. YO		
BREF =	936.6800 INCHES	ZMRP =	375.0000 IN. ZO		
SCALE =	.3600				

PARAMETRIC DATA

BETA =	-5.000	ELEVON =	.000
AILRON =	.000	BDFLAP =	.000
SPDBRK =	25.000	RUDDER =	.000

RUN NO. 47/ 0 GRADIENT INTERVAL = -5.00/ 5.00

Q	ALPHA	ALPHAU	BETA	QI	CP68	CP69	CP70	CP71	CP72	CP73
94.360	-5.233	-5.00000	-5.00000	98.00000	-.28055	-.29674	-.29674	-.29135	-.22118	-.31833
94.320	-2.640	-2.50000	-5.00000	98.00000	-.30214	-.28055	-.30754	-.29135	-.19419	-.28595
94.430	-.047	.00000	-5.00000	98.50000	-.28477	-.28477	-.30089	-.29552	-.20958	-.30089
94.430	2.550	2.50000	-5.00000	98.00000	-.29135	-.29135	-.29135	-.28055	-.19419	-.28595
94.430	5.148	5.00000	-5.00000	98.00000	-.28595	-.28595	-.31833	-.29674	-.18340	-.30214
94.320	7.747	7.50000	-5.00000	98.00000	-.27515	-.29135	-.29135	-.26976	-.17800	-.28595
94.550	10.348	10.00000	-5.00000	98.00000	-.28595	-.30214	-.29674	-.28055	-.16181	-.29135
94.320	11.396	11.00000	-5.00000	98.00000	-.27515	-.29674	-.29674	-.28055	-.16720	-.27515
94.410	12.437	12.00000	-5.00000	97.50000	-.28171	-.28714	-.30883	-.27086	-.17322	-.27629
94.660	13.479	13.00000	-5.00000	98.50000	-.27940	-.29552	-.29014	-.28477	-.17199	-.27403
94.570	14.522	14.00000	-5.00000	98.00000	-.28055	-.28595	-.29135	-.29135	-.15101	-.29135
94.550	15.570	15.00000	-5.00000	98.50000	-.29552	-.29014	-.28477	-.31163	-.14514	-.29014
94.360	16.617	16.00000	-5.00000	98.00000	-.29674	-.30754	-.31293	-.30214	-.14561	-.28595
94.270	17.676	17.00000	-5.00000	98.00000	-.31833	-.31833	-.32373	-.31293	-.12942	-.30754
94.500	18.727	18.00000	-5.00000	98.50000	-.32774	-.32237	-.32774	-.31163	-.13439	-.31700
94.570	19.777	19.00000	-5.00000	98.50000	-.33848	-.33311	-.34922	-.32774	-.13439	-.32774
94.590	20.820	20.00000	-5.00000	98.50000	-.37600	-.35459	-.33848	-.34922	-.13439	-.35459
94.340	21.861	21.00000	-5.00000	98.50000	-.38682	-.37071	-.39219	-.38145	-.12902	-.37071
	GRADIENT	.96341	-.00000	-.00007	.00208	-.00208	.00312	.00208	.00000	.00000

ARC40X80-462(OA100) OV101(ADS OFF) (CNA06T) (15 APR 82)

REFERENCE DATA

SREF =	2690.0000 SQ.FT.	XMRP =	1076.6800 IN. XO		
LREF =	474.8100 INCHES	YMRP =	.0000 IN. YO		
BREF =	936.6800 INCHES	ZMRP =	375.0000 IN. ZO		
SCALE =	.3600				

PARAMETRIC DATA

BETA =	2.000	ELEVON =	.000
AILRON =	.000	BOFLAP =	.000
SPDBRK =	25.000	RUDDER =	.000

RUN NO. 168/ 0 GRADIENT INTERVAL = -5.00/ 5.00

Q	ALPHA	ALPHAU	BETA	QI	CP68	CP69	CP70	CP71	CP72	CP73
47.490	-5.236	-5.00000	2.00000	47.00000	.82336	.05273	.06389	.04156	.03039	.01922
47.640	-2.648	-2.50000	2.00000	47.00000	.96855	.08623	.07506	.09740	.07506	.05273
47.650	-.056	.00000	2.00000	47.00000	1.01323	.08623	.09740	.09740	.09740	.07506
47.620	2.539	2.50000	2.00000	47.00000	1.01323	.08623	.10857	.11974	.09740	.07506
47.610	5.139	.00000	2.00000	47.00000	1.01323	.06389	.10857	.15324	.08623	.07506
47.580	7.739	7.50000	2.00000	47.00000	1.03557	.08623	.09740	.13091	.08623	.06389
47.630	10.339	10.00000	2.00000	47.00000	.94622	.06389	.07506	.10857	.04156	.03039
47.580	11.382	11.00000	2.00000	47.00000	.93505	.04156	.07506	.09740	.03039	.01922
47.620	12.421	12.00000	2.00000	47.00000	.91271	.01922	.04156	.10857	.03039	.01922
47.510	13.462	13.00000	2.00000	46.00000	.91074	.00933	.04356	.10061	.00933	-.01349
47.530	14.508	14.00000	2.00000	47.00000	.87921	-.01429	.01922	.09740	.00805	-.00312
47.560	15.551	15.00000	2.00000	47.00000	.83453	-.03662	.00805	.05273	-.01429	-.02545
47.730	16.598	16.00000	2.00000	47.00000	.82336	-.03662	-.01429	.03039	-.03662	-.02545
47.530	17.653	17.00000	2.00000	47.00000	.76752	-.04779	-.01429	.01922	-.04779	-.07013
47.600	18.709	18.00000	2.00000	47.00000	.83453	-.09247	-.07013	-4.51526	-.07013	-.09247
47.740	19.762	19.00000	2.00000	47.00000	.72295	-.09247	-.07013	-.02545	-.09247	-.11480
47.450	20.817	20.00000	2.00000	47.00000	.66700	-.13714	-.09247	-.04779	-.10364	-.11480
	GRADIENT	.96391	.00000	-.00000	.00861	-.00000	.00646	.00431	.00431	.00431

ARC40X80-462(OA100) OV101(ADS OFF) (CNA06U) (16 MAR 82)

REFERENCE DATA

SREF =	2690.0000 SQ.FT.	XMRP =	1076.6800 IN.	XO
LREF =	474.8100 INCHES	YMRP =	.0000 IN.	YO
BREF =	936.6800 INCHES	ZMRP =	375.0000 IN.	ZO
SCALE =	.3600			

PARAMETRIC DATA

BETA =	10.000	ELEVON =	.000
AILRON =	.000	BDFLAP =	.000
SPDBRK =	25.000	RUDDER =	.000

RUN NO. 169/ 0 GRADIENT INTERVAL = -5.00/ 5.00

Q	ALPHA	ALPHAU	BETA	QI	CP68	CP69	CP70	CP71	CP72	CP73
47.530	-5.219	-5.00000	10.00000	47.00000	.80103	-.15948	-.14831	-.12597	-.17065	-.14831
47.640	-2.630	-2.50000	10.00000	47.00000	.82336	-.15948	-.12597	-.13714	-.13714	-.14831
47.640	-.041	.00000	10.00000	47.00000	.84570	-.14831	-.10364	-.09247	-.12597	-.14831
47.710	2.553	2.50000	10.00000	47.00000	.85687	-.14831	-.10364	-.08130	-.10364	-.12597
47.620	5.146	5.00000	10.00000	47.00000	.85687	-.14831	-.11480	-.08130	-.10364	-.13714
47.620	7.650	7.50000	10.00000	47.00000	.85687	-.14831	-.11480	-.08130	-.12597	-.13714
47.620	10.348	10.00000	10.00000	47.00000	.80103	-.15948	-.13714	-.12597	-.13714	-.14831
47.740	11.389	11.00000	10.00000	47.00000	.78986	-.17065	-.15948	-.13714	-.13714	-.13714
47.600	12.433	12.00000	10.00000	47.00000	.76752	-.18182	-.15948	-.12597	-.12597	-.14831
47.480	13.480	13.00000	10.00000	47.00000	.81220	-.20415	-.15948	-.17065	-.15948	-.17065
47.500	14.523	14.00000	10.00000	47.00000	.64467	-.22649	-.20415	-.19298	-.17065	-.18182
47.620	15.575	15.00000	10.00000	47.00000	.66700	-.23766	-.23766	-.21532	-.19298	-.21532
47.600	16.625	16.00000	10.00000	47.00000	.68934	-.23766	-.23766	-.21532	-.19298	-.22649
47.500	17.671	17.00000	10.00000	47.00000	.65588	-.27116	-.26000	-.27116	-.21532	-.23766
47.550	18.721	18.00000	10.00000	47.00000	.59999	-.30467	-.30467	-.30467	-.24883	-.24883
47.530	19.768	19.00000	10.00000	47.00000	.61116	-.30467	-.30467	-.32701	-.27116	-.27116
47.670	20.819	20.00000	10.00000	47.00000	.61116	-.33818	-.32701	-.36051	-.28233	-.30467
	GRADIENT	.96462	-.00000	.00000	.00646	.00215	.00431	.01077	.00646	.00431

ARC40X80-462(OA100) OV101(ADS OFF) (CNA06V) (15 APR 82)

REFERENCE DATA

SREF =	2690.0000 SQ.FT.	XMRP =	1076.6800 IN.	XO
LREF =	474.8100 INCHES	YMRP =	.0000 IN.	YO
BREF =	936.6800 INCHES	ZMRP =	375.0000 IN.	ZO
SCALE =	.3600			

PARAMETRIC DATA

BETA =	10.000	ELEVON =	.000
AILRON =	.000	BDFLAP =	.000
SPDBRK =	65.000	RUDDER =	.000

RUN NO. 166/ 0 GRADIENT INTERVAL = -5.00/ 5.00

Q	ALPHA	ALPHAU	BETA	QI	CP68	CP69	CP70	CP71	CP72	CP73
47.850	-.063	.00000	10.00000	48.00000	.87084	-.13538	-.08069	-.10256	-.12444	-.10256
47.460	5.129	5.00000	10.00000	47.50000	.85841	-.14730	-.09204	-.09204	-.11414	-.10309
47.510	10.327	10.00000	10.00000	47.50000	.82525	-.15835	-.11414	-.14730	-.14730	-.13625
47.600	15.553	15.00000	10.00000	48.00000	.70679	-.23381	-.22287	-.22287	-.20100	-.16819
47.540	20.804	20.00000	10.00000	48.00000	.58648	-.33224	-.29943	-.33224	-.31037	-.27756
	GRADIENT	.00000	.00000	.00000	.00000	.00000	.00000	.00000	.00000	.00000

ARC40X80-462(OA100) OV101(ADS OFF) (CNA06W) (15 APR 82)

REFERENCE DATA

SREF =	2690.0000 SQ.FT.	XMRP =	1076.6800 IN. XO		
LREF =	474.8100 INCHES	YMRP =	.0000 IN. YO		
BREF =	936.6800 INCHES	ZMRP =	375.0000 IN. ZO		
SCALE =	.3600				

PARAMETRIC DATA

BETA =	.000	ELEVON =	.000
AILRON =	10.000	BDFLAP =	.000
SPDBRK =	25.000	RUDDER =	.000

RUN NO. 170/ 0 GRADIENT INTERVAL = -5.00/ 5.00

Q	ALPHA	ALPHAU	BETA	Q1	CP68	CP69	CP70	CP71	CP72	CP73
47.520	-5.246	-5.00000	.00000	48.00000	.68491	.12712	.09430	.02868	.05056	.08337
47.570	-2.655	-2.50000	.00000	48.00000	.82710	.14899	.12712	.09430	.06149	.12712
47.500	-.063	.00000	.00000	48.00000	.91459	.15993	.17086	.13805	.10524	.11618
47.400	2.538	2.50000	.00000	48.00000	.89272	.15993	.15993	.17086	.09430	.12712
47.470	5.135	5.00000	.00000	48.00000	.96928	.18180	.17086	.17086	.08337	.11618
47.370	7.735	7.50000	.00000	48.00000	.94741	.14899	.15993	.17086	.07243	.11618
47.510	10.336	10.00000	.00000	48.00000	1.01303	.12712	.13805	.17086	.05056	.09430
47.670	12.934	12.50000	.00000	48.00000	.82710	.09430	.12712	.12712	.03962	.07243
47.560	15.548	15.00000	.00000	48.00000	.81616	.05056	.07243	.07243	.00681	.03962
47.370	18.171	17.50000	.00000	47.00000	.75635	-.01429	.00805	.05273	-.04779	-.01429
47.610	20.811	20.00000	.00000	48.00000	.58648	-.03694	-.04788	-.02600	-.10256	-.06975
47.440	25.982	25.00000	.00000	48.00000	.57654	-.21194	-.22287	-.19006	-.24475	-.21194
	GRADIENT	.96289	.00000	-.00000	.01263	.00210	.00631	.01474	.00631	.00000

ARC40X80-462(OA100) OV101(ADS OFF) (CNA06X) (16 MAR 82)

REFERENCE DATA

SREF =	2690.0000 SQ.FT.	XMRP =	1076.6800 IN. XO		
LREF =	474.8100 INCHES	YMRP =	.0000 IN. YO		
BREF =	936.6800 INCHES	ZMRP =	375.0000 IN. ZO		
SCALE =	.3600				

PARAMETRIC DATA

ALPHA =	10.000	ELEVON =	.000
AILRON =	10.000	BDFLAP =	.000
SPDBRK =	25.000	RUDDER =	.000

RUN NO. 171/ 0 GRADIENT INTERVAL = -5.00/ 5.00

Q	BETA	ALPHAU	ALPHA	Q1	CP68	CP69	CP70	CP71	CP72	CP73
47.650	-13.000	10.00000	10.34100	48.00000	.71772	.47711	.49898	.54273	.38961	.46617
47.520	-10.000	10.00000	10.33820	48.00000	.79428	.41148	.45523	.46617	.31305	.37867
47.410	-2.000	1.00000	10.33620	48.00000	1.01303	.18180	.19274	.21461	.10524	.15993
47.410	.000	1.00000	10.33440	48.00000	1.01303	.11618	.13805	.17086	.02868	.11618
47.600	5.000	-1.00000	10.34450	48.00000	.68178	-.01507	-.01507	.00681	-.02600	-.00413
47.380	10.000	1.00000	10.35610	48.00000	.76147	-.12444	-.13538	-.15725	-.15725	-.12444
47.390	15.000	1.00000	10.36440	48.00000	.58648	-.26662	-.27756	-.29943	-.25569	-.21194
47.200	20.000	1.00000	10.34170	47.00000	.33428	-.38285	-.39402	-.43869	-.34935	-.30467
	GRADIENT	-.30769	.00135	.00000	-.02019	-.02775	-.02987	-.03029	-.01725	-.02356

ARC40X80-462(OA100) OV101+TUFTS (ADS OFF) (CNA06Y) (16 MAR 82)

REFERENCE DATA

SREF =	2690.0000 SQ.FT.	XMRP =	1076.6800 IN.	XO	
LREF =	474.8100 INCHES	YMRP =	.0000 IN.	YO	
BREF =	936.6800 INCHES	ZMRP =	375.0000 IN.	ZO	
SCALE =	.3600				

PARAMETRIC DATA

BETA =	.000	ELEVON =	.000
AILRON =	.000	BDFLAP =	.000
SPDBRK =	55.000	RUDDER =	.000

RUN NO. 172/ 0 GRADIENT INTERVAL = -5.00/ 5.00

Q	ALPHA	ALPHAU	BETA	QI	CP68	CP69	CP70	CP71	CP72	CP73
9.590	-.074	.00000	.00000	9.50000	-.32449	-.21439	-.26944	-.32449	-.26944	-.26944
9.630	5.120	5.00000	.00000	9.00000	-.28174	-.22363	-.28174	-.33985	-.28174	-.28174
9.660	10.325	10.00000	.00000	9.50000	-.26944	-.21439	-.26944	-.26944	-.21439	-.21439
9.630	15.532	15.00000	.00000	9.50000	-.21439	-.21439	-.26944	-.32449	-.21439	-.21439
9.490	20.764	20.00000	.00000	8.50000	-.23395	-.23395	-.29548	-.29548	-.23395	-.23395
	GRADIENT	.00000	.00000	.00000	.00000	.00000	.00000	.00000	.00000	.00000

RUN NO. 173/ 0 GRADIENT INTERVAL = -5.00/ 5.00

Q	ALPHA	ALPHAU	BETA	QI	CP68	CP69	CP70	CP71	CP72	CP73
19.020	-.074	.00000	.00000	18.50000	-.27403	-.24574	-.27403	-.27403	-.24574	-.24574
19.040	5.117	5.00000	.00000	18.50000	-.21744	-.18914	-.24574	-.24574	-.21744	-.21744
19.090	10.324	10.00000	.00000	19.00000	-.18542	-.18542	-.18542	-.18542	-.18542	-.15786
19.080	15.531	15.00000	.00000	18.50000	-.18914	-.18914	-.21744	-.18914	-.18914	-.16085
19.090	20.782	20.00000	.00000	19.00000	-.18542	-.15786	-.18542	-.21297	-.15786	-.15786
	GRADIENT	.00000	.00000	.00000	.00000	.00000	.00000	.00000	.00000	.00000

RUN NO. 174/ 0 GRADIENT INTERVAL = -5.00/ 5.00

Q	ALPHA	ALPHAU	BETA	QI	CP68	CP69	CP70	CP71	CP72	CP73
47.410	-5.253	-5.00000	.00000	48.00000	-.24475	-.23381	-.25569	-.25569	-.23381	-.23381
47.630	-2.664	-2.50000	.00000	48.00000	-.24475	-.22287	-.24475	-.24475	-.23381	-.23381
47.490	-.074	.00000	.00000	48.00000	-.20100	-.20100	-.22287	-.23381	-.23381	-.22287
47.330	2.522	2.50000	.00000	47.50000	-.20256	-.20256	-.21361	-.21361	-.21361	-.21361
47.640	5.119	5.00000	.00000	48.00000	-.17912	-.17912	-.19006	-.19006	-.19006	-.17912
47.460	7.720	7.50000	.00000	48.00000	-.20100	-.17912	-.17912	-.20100	-.17912	-.17912
47.660	10.323	10.00000	.00000	48.00000	-.15725	-.14631	-.15725	-.20100	-.16819	-.15725
47.580	12.922	12.50000	.00000	48.00000	-.16819	-.17912	-.16819	-.16819	-.15725	-.19006
47.590	15.533	15.00000	.00000	48.50000	-.16700	-.16700	-.16700	-.16700	-.15618	-.15618
47.610	18.150	17.50000	.00000	48.00000	-.16819	-.14631	-.16819	-.17912	-.14631	-.15725
47.580	20.791	20.00000	.00000	48.00000	-.16819	-.17912	-.19006	-.19006	-.14631	-.15725
47.190	25.987	25.00000	.00000	48.00000	-.26662	-.23381	-.24475	-.24475	-.15725	-.19006
	GRADIENT	.96415	.00000	-.09645	.00813	.00392	.00600	.00601	.00390	.00390

ARC40X80-462(OA100) OV101+TUFTS (ADS OFF) (CNA06Z) (16 MAR 82)

REFERENCE DATA

SREF =	2690.0000 SQ.FT.	XMRP =	1076.6800 IN.	XO	
LREF =	474.8100 INCHES	YMRP =	.0000 IN.	YO	
BREF =	936.6800 INCHES	ZMRP =	375.0000 IN.	ZO	
SCALE =	.3600				

PARAMETRIC DATA

BETA =	5.000	ELEVON =	.000
AILRON =	.000	BDFLAP =	.000
SPDBRK =	55.000	RUDDER =	.000

RUN NO. 175/ 0 GRADIENT INTERVAL = -5.00/ 5.00

Q	ALPHA	ALPHAU	BETA	Q1	CP68	CP69	CP70	CP71	CP72	CP73
47.750	-5.249	-5.00000	5.00000	48.00000	4.13013	-.24475	-.23381	-.23381	-.23381	-.23381
47.650	-2.660	-2.50000	5.00000	47.50000	4.17392	-.22466	-.23571	-.23571	-.23571	-.21361
47.580	-.070	.00000	5.00000	47.50000	4.19602	-.21361	-.22466	-.21361	-.22466	-.22466
47.400	2.526	2.50000	5.00000	47.50000	4.21813	-.18045	-.19150	-.19150	-.20256	-.20256
47.470	5.122	5.00000	5.00000	47.50000	4.21813	-.18045	-.18045	-.19150	-.20256	-.19150
47.640	7.725	7.50000	5.00000	48.00000	4.19575	-.15725	-.16819	-.17912	-.17912	-.17912
47.450	10.326	10.00000	5.00000	48.00000	4.18481	-.15725	-.19006	-.16819	-.17912	-.17912
47.530	12.928	12.50000	5.00000	47.50000	4.22918	-.15835	-.16940	-.15835	-.15835	-.15835
47.690	15.537	15.00000	5.00000	48.00000	4.19575	-.15725	-.15725	-.17912	-.15725	-.15725
47.480	18.155	17.50000	5.00000	48.00000	4.17387	-.16819	-.19006	-.19006	-.13538	-.16819
47.590	20.788	20.00000	5.00000	48.00000	4.17387	-.17912	-.19006	-.19006	-.15725	-.15725
47.360	25.983	25.00000	5.00000	47.50000	4.16287	-.23571	-.25782	-.24676	-.12520	-.14730
	GRADIENT	.96402	.00000	.00000	.00852	.00852	.00852	.00852	.00639	.00213

ARC40X80-462(OA100) OV101 (CNA07A) (16 APR 82)

REFERENCE DATA

SREF =	2690.0000 SQ.FT.	XMRP =	1076.6800 IN.	XO	
LREF =	474.8100 INCHES	YMRP =	.0000 IN.	YO	
BREF =	936.6800 INCHES	ZMRP =	375.0000 IN.	ZO	
SCALE =	.3600				

PARAMETRIC DATA

BETA =	5.000	ELEVON =	.000
AILRON =	.000	BDFLAP =	.000
SPDBRK =	25.000	RUDDER =	.000

RUN NO. 176/ 0 GRADIENT INTERVAL = -5.00/ 5.00

Q	ALPHA	ALPHAU	BETA	Q1	CP68	CP69	CP70	CP71	CP72	CP73
94.180	-.048	.00000	5.00000	97.50000	.96507	.00939	.03926	.01482	-.01778	.02025
94.280	5.145	5.00000	5.00000	97.50000	.95692	.00668	.02840	.04197	.01211	.03926
94.750	10.344	10.00000	5.00000	98.50000	.91189	-.02894	.01139	.02483	-.03969	-.02087
94.370	15.559	15.00000	5.00000	98.00000	.80597	-.10982	-.08010	-.05309	-.09631	-.08010
94.330	20.825	20.00000	5.00000	98.75000	.63866	-.23012	-.20867	-.19258	-.20331	-.19526
	GRADIENT	.00000	.00000	.00000	.00000	.00000	.00000	.00000	.00000	.00000

ARC40X80-462(OA100) OV101 (CNA07B) (16 MAR 82)

REFERENCE DATA

SREF =	2690.0000 SQ.FT.	XMRP =	1076.6800 IN.	XO	
LREF =	474.8100 INCHES	YMRP =	.0000 IN.	YO	
BREF =	936.6800 INCHES	ZMRP =	375.0000 IN.	ZO	
SCALE =	.3600				

PARAMETRIC DATA

BETA =	.000	ELEVON =	.000
AILRON =	.000	BDFLAP =	.000
SPDBRK =	25.000	RUDDER =	.000

RUN NO. 177/ 0 GRADIENT INTERVAL = -5.00/ 5.00

Q	ALPHA	ALPHAU	BETA	QI	CP68	CP69	CP70	CP71	CP72	CP73
94.560	-5.240	-5.00000	.00000	98.75000	.75933	.12115	.11310	.05947	.08629	.08629
94.350	-2.649	-2.50000	.00000	98.50000	.86351	.13773	.15117	.10547	.10009	.09740
94.170	-.056	.00000	.00000	98.00000	.96265	.14952	.19274	.16033	.11440	.11170
94.450	2.541	2.50000	.00000	98.00000	.94645	.16303	.18734	.19004	.12791	.12521
94.510	5.138	5.00000	.00000	98.50000	.99791	.15385	.17536	.21030	.10816	.13235
94.320	7.738	7.50000	.00000	98.50000	.98178	.13773	.17805	.20224	.11084	.13773
94.710	10.348	10.00000	.00000	98.50000	.95759	.11084	.16729	.19686	.08128	.12429
94.310	12.946	12.50000	.00000	99.00000	.88837	.08593	.13407	.17687	.04313	.09395
94.310	15.557	15.00000	.00000	98.00000	.85460	.03876	.07388	.13601	.01445	.07118
94.550	18.382	17.50000	.00000	98.50000	.79362	.00332	.04364	.10547	-.03969	.00063
	GRADIENT	.96334	.00000	-.09631	.01597	.00487	.00697	.01629	.00536	.00536

ARC40X80-462(OA100) OV101 (CNA07C) (16 MAR 82)

REFERENCE DATA

SREF =	2690.0000 SQ.FT.	XMRP =	1076.6800 IN.	XO	
LREF =	474.8100 INCHES	YMRP =	.0000 IN.	YO	
BREF =	936.6800 INCHES	ZMRP =	375.0000 IN.	ZO	
SCALE =	.3600				

PARAMETRIC DATA

BETA =	-5.000	ELEVON =	.000
AILRON =	.000	BDFLAP =	.000
SPDBRK =	25.000	RUDDER =	.000

RUN NO. 178/ 0 GRADIENT INTERVAL = -5.00/ 5.00

Q	ALPHA	ALPHAU	BETA	QI	CP68	CP69	CP70	CP71	CP72	CP73
94.190	-5.234	-5.00000	-5.00000	97.50000	.95692	.27003	.24560	.17501	.21573	.19672
94.480	-2.643	-2.50000	-5.00000	98.50000	.96296	.29095	.27213	.23181	.23181	.22106
94.510	-.049	.00000	-5.00000	98.25000	.98168	.30260	.31068	.27565	.26218	.25140
94.470	2.548	2.50000	-5.00000	98.50000	.98447	.30976	.32051	.31783	.25331	.26675
94.270	5.145	5.00000	-5.00000	99.00000	.96059	.28654	.32399	.33736	.24909	.25711
94.160	7.746	7.50000	-5.00000	97.50000	.96778	.28360	.32161	.37048	.24560	.26732
94.150	10.349	10.00000	-5.00000	97.50000	.92434	.26188	.30533	.34876	.21844	.25102
94.370	12.957	12.50000	-5.00000	98.00000	.86541	.23326	.28189	.32241	.18194	.22246
94.300	15.565	15.00000	-5.00000	97.50000	.81574	.17772	.23745	.32161	.15057	.18315
94.200	18.196	17.50000	-5.00000	97.50000	.75058	.13428	.18858	.24831	.08270	.14514
94.170	20.818	20.00000	-5.00000	99.00000	.63427	.05918	.13675	.20897	.02440	.08593
	GRADIENT	.96328	-.00000	.00003	.00414	.00362	.00932	.01657	.00414	.00880

ARC40X80-462(OA100) OV101 (CNA07D) (16 MAR 82)

REFERENCE DATA

SREF =	2690.0000 SQ.FT.	XMRP =	1076.6800 IN.	XO	
LREF =	474.8100 INCHES	YMRP =	.0000 IN.	YO	
BREF =	936.6800 INCHES	ZMRP =	375.0000 IN.	ZO	
SCALE =	.3600				

PARAMETRIC DATA

BETA =	-10.000	ELEVON =	.000
AILRON =	.000	BDFLAP =	.000
SPDBRK =	25.000	RUDDER =	.000

RUN NO. 179/ 0 GRADIENT INTERVAL = -5.00/ 5.00

Q	ALPHA	ALPHAU	BETA	Q1	CP68	CP69	CP70	CP71	CP72	CP73
94.250	-5.223	-5.00000	-10.00000	96.50000	.83557	.40775	.36113	.25418	.34468	.28160
94.150	-2.632	-2.50000	-10.00000	96.00000	.86494	.41013	.40186	.33295	.37154	.33295
94.300	-.039	.00000	-10.00000	96.25000	.87084	.43368	.42269	.37870	.37045	.35120
94.240	2.556	2.50000	-10.00000	96.25000	.87084	.43643	.43643	.41994	.37870	.36495
94.350	5.153	5.00000	-10.00000	95.75000	.87006	.43620	.43897	.45002	.36712	.36159
94.130	7.751	7.50000	-10.00000	96.25000	.83235	.41719	.43368	.46943	.36495	.36220
94.300	10.357	10.00000	-10.00000	96.50000	.80541	.38581	.42146	.46809	.33096	.35839
94.440	12.965	12.50000	-10.00000	96.50000	.75879	.35290	.39404	.43792	.30080	.32548
94.390	15.580	15.00000	-10.00000	96.50000	.70394	.30628	.38033	.44066	.25966	.28983
94.270	18.201	17.50000	-10.00000	96.00000	.63064	.24199	.30263	.40738	.21443	.26129
94.070	20.817	20.00000	-10.00000	96.00000	.58103	.18411	.26129	.34398	.15379	.19789
	GRADIENT	.96376	-.00000	.04819	.00114	.00507	.00666	.01677	.00138	.00617

ARC40X80-462(OA100) OV101+NOSE GEAR (CNA07E) (16 MAR 82)

REFERENCE DATA

SREF =	2690.0000 SQ.FT.	XMRP =	1076.6800 IN.	XO	
LREF =	474.8100 INCHES	YMRP =	.0000 IN.	YO	
BREF =	936.6800 INCHES	ZMRP =	375.0000 IN.	ZO	
SCALE =	.3600				

PARAMETRIC DATA

BETA =	5.000	ELEVON =	.000
AILRON =	.000	BDFLAP =	.000
SPDBRK =	25.000	RUDDER =	.000

RUN NO. 180/ 0 GRADIENT INTERVAL = -5.00/ 5.00

Q	ALPHA	ALPHAU	BETA	Q1	CP68	CP69	CP70	CP71	CP72	CP73
94.090	-.048	.00000	5.00000	96.75000	.97556	-.00923	-.00102	-.02017	-.03111	-.02017
94.500	10.345	10.00000	5.00000	97.25000	.86965	-.04759	-.05576	-.05576	-.06120	-.04215
94.420	15.558	15.00000	5.00000	97.25000	.76623	-.11836	-.11836	-.12108	-.12108	-.08842
94.220	20.813	20.00000	5.00000	97.00000	.59913	-.22219	-.23583	-.24675	-.21128	-.20036
	GRADIENT	.00000	.00000	.00000	.00000	.00000	.00000	.00000	.00000	.00000

ARC40X80-462(OA100) OV101+NOSE GEAR (CNA07F) (16 MAR 82)

REFERENCE DATA

SREF = 2690.0000 SQ.FT. XMRP = 1076.6800 IN. XO
LREF = 474.8100 INCHES YMRP = .0000 IN. YO
BREF = 936.6800 INCHES ZMRP = 375.0000 IN. ZO
SCALE = .3600

PARAMETRIC DATA

BETA = .000 ELEVON = .000
AILRON = .000 BDFLAP = .000
SPDBRK = 25.000 RUDDER = .000

RUN NO. 181/ 0 GRADIENT INTERVAL = -5.00/ 5.00

Q	ALPHA	ALPHAU	BETA	Q1	CP68	CP69	CP70	CP71	CP72	CP73
94.260	-5.240	-5.00000	.00000	99.75000	.78051	.09282	.09547	.05564	.06361	.05564
94.390	-2.648	-2.50000	.00000	95.00000	.88558	.14485	.13371	.09473	.07802	.08359
94.370	-.055	.00000	.00000	97.25000	.93770	.14021	.14566	.12660	.11300	.09394
93.980	2.539	2.50000	.00000	96.50000	.97818	.13351	.15271	.14996	.11705	.11705
94.500	5.138	5.00000	.00000	97.25000	.99486	.13205	.15654	.15654	.10483	.11027
94.490	7.739	7.50000	.00000	97.00000	.97568	.13253	.14072	.14345	.08342	.09706
94.370	10.347	10.00000	.00000	96.75000	.94000	.10019	.10566	.13028	.07557	.08925
94.240	12.946	12.50000	.00000	96.50000	.87671	.06769	.08963	.09786	.04027	.06221
94.570	15.556	15.00000	.00000	95.00000	.84103	.02233	.04460	.06131	.00562	.02789
94.140	20.804	20.00000	.00000	96.75000	.65003	-.08035	-.06120	-.05026	-.08309	-.06120
	GRADIENT	.96389	.00000	.28910	.01785	-.00219	.00366	.01065	.00752	.00645

ARC40X80-462(OA100) OV101+NOSE GEAR (CNA07G) (16 MAR 82)

REFERENCE DATA

SREF = 2690.0000 SQ.FT. XMRP = 1076.6800 IN. XO
LREF = 474.8100 INCHES YMRP = .0000 IN. YO
BREF = 936.6800 INCHES ZMRP = 375.0000 IN. ZO
SCALE = .3600

PARAMETRIC DATA

BETA = -5.000 ELEVON = .000
AILRON = .000 BDFLAP = .000
SPDBRK = 25.000 RUDDER = .000

RUN NO. 182/ 0 GRADIENT INTERVAL = -5.00/ 5.00

Q	ALPHA	ALPHAU	BETA	Q1	CP68	CP69	CP70	CP71	CP72	CP73
94.590	-.048	.00000	-5.00000	97.25000	.98125	.27358	.29263	.27630	.23548	.22459
94.180	5.147	5.00000	-5.00000	97.00000	.95971	.28261	.30717	.30989	.22803	.24714
94.460	10.351	10.00000	-5.00000	97.00000	.91020	.22531	.25805	.30717	.19529	.22258
94.200	15.563	15.00000	-5.00000	96.75000	.78954	.16038	.20141	.23697	.11661	.15217
94.470	20.815	20.00000	-5.00000	97.00000	.64006	.02066	.06432	.12707	.02612	.04522
	GRADIENT	.00000	.00000	.00000	.00000	.00000	.00000	.00000	.00000	.00000

ARC40X80-462(OA100) OV101+NOSE GEAR (CNA07H) (16 MAR 82)

REFERENCE DATA

SREF =	2690.0000 SQ.FT.	XMRP =	1076.6800 IN.	XO	
LREF =	474.8100 INCHES	YMRP =	.0000 IN.	YO	
BREF =	936.6800 INCHES	ZMRP =	375.0000 IN.	ZO	
SCALE =	.3600				

PARAMETRIC DATA

BETA =	-10.000	ELEVON =	.000
AILRON =	.000	BDFLAP =	.000
SPDBRK =	25.000	RUDDER =	.000

RUN NO. 183/ 0 GRADIENT INTERVAL = -5.00/ 5.00

Q	ALPHA	ALPHAU	BETA	Q1	CP68	CP69	CP70	CP71	CP72	CP73
94.280	-.035	.00000	-10.00000	96.50000	.87397	.43518	.41872	.38856	.36113	.34193
94.380	5.152	5.00000	-10.00000	97.00000	.84744	.42995	.43268	.44087	.36447	.35901
94.250	10.356	10.00000	-10.00000	96.50000	.76153	.37484	.39678	.45163	.32274	.34193
94.220	15.581	15.00000	-10.00000	96.50000	.69297	.28160	.33919	.41872	.23498	.28709
94.530	20.834	20.00000	-10.00000	96.75000	.54608	.16311	.23697	.29168	.13028	.17405
	GRADIENT	.00000	.00000	.00000	.00000	.00000	.00000	.00000	.00000	.00000

ARC40X80-462(OA100) OV101(FTP OFF) (CNA07I) (16 MAR 82)

REFERENCE DATA

SREF =	2690.0000 SQ.FT.	XMRP =	1076.6800 IN.	XO	
LREF =	474.8100 INCHES	YMRP =	.0000 IN.	YO	
BREF =	936.6800 INCHES	ZMRP =	375.0000 IN.	ZO	
SCALE =	.3600				

PARAMETRIC DATA

BETA =	5.000	ELEVON =	.000
AILRON =	.000	BDFLAP =	.000
SPDBRK =	25.000	RUDDER =	.000

RUN NO. 184/ 0 GRADIENT INTERVAL = -5.00/ 5.00

Q	ALPHA	ALPHAU	BETA	Q1	CP68	CP69	CP70	CP71	CP72	CP73
94.150	-.052	.00000	5.00000	95.50000	.96386	-.02243	.02467	.00251	-.02243	-.01411
94.290	5.140	5.00000	5.00000	96.25000	.85057	-.00897	.01853	.02128	-.01172	-.00347
94.410	10.342	10.00000	5.00000	96.25000	.87634	-.04471	-.00622	-.00072	-.03921	-.02821
94.530	15.560	15.00000	5.00000	96.25000	.76636	-.10520	-.09145	-.07495	-.10795	-.11069
94.310	20.818	20.00000	5.00000	95.75000	.52740	-.23807	-.22425	-.22978	-.18556	-.19385
	GRADIENT	.00000	.00000	.00000	.00000	.00000	.00000	.00000	.00000	.00000

ARC40X80-462(OA100) OV101(FTP OFF) (CNA07J) (16 MAR 82)

REFERENCE DATA

SREF =	2690.0000 SQ.FT.	XMRP =	1076.6800 IN.	XO	
LREF =	474.8100 INCHES	YMRP =	.0000 IN.	YO	
BREF =	936.6800 INCHES	ZMRP =	375.0000 IN.	ZO	
SCALE =	.3600				

PARAMETRIC DATA

BETA =	.000	ELEVON =	.000
AILRON =	.000	BDFLAP =	.000
SPDBRK =	25.000	RUDDER =	.000

RUN NO. 185/ 0 GRADIENT INTERVAL = -5.00/ 5.00

Q	ALPHA	ALPHAU	BETA	QI	CP68	CP69	CP70	CP71	CP72	CP73
94.060	-5.240	-5.00000	.00000	95.50000	.97494	.09670	.09948	.06069	.09393	.06069
94.520	-2.649	-2.50000	.00000	96.25000	.99731	.12025	.12300	.09001	.09001	.08726
94.500	-.060	.00000	.00000	96.75000	1.00291	.13576	.14123	.13576	.11387	.11387
93.980	2.537	2.50000	.00000	96.00000	1.00827	.15379	.16481	.17584	.12071	.12898
94.070	5.133	5.00000	.00000	95.00000	1.00254	.13093	.15599	.19219	.11979	.12536
93.670	7.736	7.50000	.00000	95.50000	.96940	.13272	.16042	.19367	.11056	.11610
94.470	10.340	10.00000	.00000	96.50000	.92607	.11980	.14174	.18836	.08414	.10060
94.200	12.941	12.50000	.00000	96.00000	.87045	.07661	.09866	.15379	.05180	.07110
95.730	15.555	15.00000	.00000	97.50000	.79945	.04469	.06912	.13157	.03654	.05012
94.370	18.182	17.50000	.00000	96.50000	.67651	-.02830	.02107	.07043	-.02281	-.00636
	GRADIENT	.96417	.00000	-.04834	.00211	.00647	.00806	.01655	.00592	.00804

ARC40X80-462(OA100) OV101(FTP OFF) (CNA07K) (16 MAR 82)

REFERENCE DATA

SREF =	2690.0000 SQ.FT.	XMRP =	1076.6800 IN.	XO	
LREF =	474.8100 INCHES	YMRP =	.0000 IN.	YO	
BREF =	936.6800 INCHES	ZMRP =	375.0000 IN.	ZO	
SCALE =	.3600				

PARAMETRIC DATA

BETA =	-5.000	ELEVON =	.000
AILRON =	.000	BDFLAP =	.000
SPDBRK =	25.000	RUDDER =	.000

RUN NO. 186/ 0 GRADIENT INTERVAL = -5.00/ 5.00

Q	ALPHA	ALPHAU	BETA	QI	CP68	CP69	CP70	CP71	CP72	CP73
94.190	-.053	.00000	-5.00000	96.00000	.97795	.28058	.28885	.26129	.25853	.24475
93.830	5.144	5.00000	-5.00000	95.50000	.98048	.27956	.31003	.31834	.24908	.25739
93.970	10.346	10.00000	-5.00000	95.50000	.89183	.25462	.29895	.34328	.22692	.23800
94.430	15.562	15.00000	-5.00000	96.50000	.76427	.16368	.22127	.28709	.15819	.18013
94.150	20.819	20.00000	-5.00000	96.00000	.58930	.07661	.13725	.19238	.04353	.08212
	GRADIENT	.00000	.00000	.00000	.00000	.00000	.00000	.00000	.00000	.00000

ARC40X80-462(OA100) OV101(FTP OFF) (CNA07L) (16 MAR 82)

REFERENCE DATA

SREF =	2690.0000	SQ.FT.	XMRP =	1076.6800	IN. XO
LREF =	474.8100	INCHES	YMRP =	.0000	IN. YO
BREF =	936.6800	INCHES	ZMRP =	375.0000	IN. ZO
SCALE =	.3600				

PARAMETRIC DATA

BETA =	-10.000	ELEVON =	.000
AILRON =	.000	BDFLAP =	.000
SPDBRK =	25.000	RUDDER =	.000

RUN NO. 187/ 0 GRADIENT INTERVAL = -5.00/ 5.00

Q	ALPHA	ALPHAU	BETA	QI	CP68	CP69	CP70	CP71	CP72	CP73
94.450	-.040	.00000	-10.00000	96.25000	.89283	.45018	.42819	.38695	.38419	.34570
94.330	5.151	5.00000	-10.00000	96.50000	.87945	.41050	.44615	.45986	.37759	.38307
94.270	10.353	10.00000	-10.00000	96.00000	.80430	.37981	.43218	.47629	.35225	.36879
94.200	20.827	20.00000	-10.00000	95.75000	.49423	.20684	.27592	.38646	.16263	.21237
	GRADIENT	.00000	.00000	.00000	.00000	.00000	.00000	.00000	.00000	.00000

ARC40X80-462(OA100) OV101(FTP OFF) (CNA07M) (16 MAR 82)

REFERENCE DATA

SREF =	2690.0000	SQ.FT.	XMRP =	1076.6800	IN. XO
LREF =	474.8100	INCHES	YMRP =	.0000	IN. YO
BREF =	936.6800	INCHES	ZMRP =	375.0000	IN. ZO
SCALE =	.3600				

PARAMETRIC DATA

BETA =	.000	ELEVON =	.000
AILRON =	.000	BDFLAP =	.000
SPDBRK =	55.000	RUDDER =	.000

RUN NO. 188/ 0 GRADIENT INTERVAL = -5.00/ 5.00

Q	ALPHA	ALPHAU	BETA	QI	CP68	CP69	CP70	CP71	CP72	CP73
94.160	-.073	.00000	.00000	96.00000	1.00551	.13725	.14552	.15379	.12347	.12071
94.210	5.117	5.00000	.00000	95.75000	1.00546	.14881	.17092	.19026	.12118	.12670
94.200	10.325	10.00000	.00000	96.00000	.93660	.10693	.13725	.17860	.08212	.09591
94.330	15.539	15.00000	.00000	96.25000	.81035	.03777	.07351	.12575	.02403	.03777
	GRADIENT	.00000	.00000	.00000	.00000	.00000	.00000	.00000	.00000	.00000

ARC40X80-462(OA100) OV101(FTP OFF) (CNA07N) (16 MAR 82)

REFERENCE DATA

SREF =	2690.0000 SQ.FT.	XMRP =	1076.6800 IN.	XO	
LREF =	474.8100 INCHES	YMRP =	.0000 IN.	YO	
BREF =	936.6800 INCHES	ZMRP =	375.0000 IN.	ZO	
SCALE =	.3600				

PARAMETRIC DATA

ALPHA =	10.000	ELEVON =	10.000
AILRON =	.000	BDFLAP =	22.000
SPDBRK =	25.000	RUDDER =	.000

RUN NO. 189/ 0 GRADIENT INTERVAL = -5.00/ 5.00

Q	BETA	ALPHAU	ALPHA	QI	CP68	CP69	CP70	CP71	CP72	CP73
47.640	-10.000	10.00000	10.55350	48.25000	.83030	.38030	.41825	.47789	.35862	.36404
47.530	-5.000	10.00000	10.53930	48.25000	.90078	.25560	.28813	.32609	.20681	.21223
47.240	-2.000	10.00000	10.53680	47.75000	.91618	.17118	.20953	.22596	.13832	.14380
47.530	.000	10.00000	10.53670	48.25000	.92247	.10380	.14175	.15801	.08753	.09211
47.480	2.000	10.00000	10.53580	48.25000	.90620	.05500	.08211	.10380	.02789	.03874
47.380	5.000	10.00000	10.53490	47.75000	.88879	-.04793	-.02054	-.00959	-.03698	-.04245
47.450	10.000	10.00000	10.54590	49.25000	.74874	-.15973	-.15973	-.15442	-.15442	-.16504
47.380	20.000	10.00000	10.53400	48.00000	.36620	-.42399	-.42944	-.46759	-.34770	-.37495
	GRADIENT	.00000	-.00041	-.02586	-.00138	-.03017	-.03100	-.03315	-.02482	-.02558

ARC40X80-462(OA100) OV101(FTP OFF) (CNA07O) (16 MAR 82)

REFERENCE DATA

SREF =	2690.0000 SQ.FT.	XMRP =	1076.6800 IN.	XO	
LREF =	474.8100 INCHES	YMRP =	.0000 IN.	YO	
BREF =	936.6800 INCHES	ZMRP =	375.0000 IN.	ZO	
SCALE =	.3600				

PARAMETRIC DATA

ALPHA =	10.000	ELEVON =	10.000
AILRON =	.000	BDFLAP =	-11.700
SPDBRK =	25.000	RUDDER =	.000

RUN NO. 190/ 0 GRADIENT INTERVAL = -5.00/ 5.00

Q	BETA	ALPHAU	ALPHA	QI	CP68	CP69	CP70	CP71	CP72	CP73
47.640	-10.000	10.00000	10.48410	48.25000	.79777	.40199	.43994	.46705	.33151	.36404
47.550	-5.000	10.00000	10.47300	48.25000	.90620	.25018	.28813	.33151	.21765	.23934
47.650	-2.000	10.00000	10.46590	48.25000	.92247	.15801	.17970	.23392	.13091	.16344
47.360	.000	10.00000	10.46350	47.75000	.95452	.11640	.14380	.17666	.09449	.09449
47.420	2.000	10.00000	10.46720	48.00000	.91662	.03922	.07192	.11007	.03922	.05012
47.500	5.000	10.00000	10.47040	48.00000	.87302	-.04797	-.02617	.01198	-.04797	-.03162
47.490	15.000	10.00000	10.48130	48.25000	.58090	-.30825	-.29741	-.31909	-.26938	-.25945
47.330	20.000	10.00000	10.46300	48.00000	.36620	-.41855	-.42399	-.45669	-.34770	-.35860
	GRADIENT	.00000	-.00018	-.03017	-.00306	-.02980	-.03081	-.03182	-.02606	-.02727

ARC40X80-462(OA100) OV101 (CNA07P) (16 MAR 82)

REFERENCE DATA

SREF =	2690.0000 SQ.FT.	XMRP =	1076.6800 IN.	XO	
LREF =	474.8100 INCHES	YMRP =	.0000 IN.	YO	
BREF =	936.6800 INCHES	ZMRP =	375.0000 IN.	ZO	
SCALE =	.3600				

PARAMETRIC DATA

ALPHA =	10.000	ELEVON =	.000
AILRON =	.000	BDFLAP =	.000
SPDBRK =	.000	RUDDER =	.000

RUN NO. 85/ 0 GRADIENT INTERVAL = -5.00/ 5.00

Q	BETA	ALPHAU	ALPHA	QI	CP68	CP69	CP70	CP71	CP72	CP73
47.990	-13.000	10.00000	10.36050	48.50000	.75312	.48250	.52580	.57992	.40672	.43920
47.900	-10.000	10.00000	10.35670	48.00000	.84897	.38961	.43336	.49898	.32399	.37867
47.590	-5.000	10.00000	10.35060	48.00000	.93647	.24742	.29117	.34586	.20368	.24742
47.840	-2.000	10.00000	10.34730	48.00000	.96928	.17086	.20368	.24742	.12712	.15993
47.790	.000	10.00000	10.34500	48.00000	.96928	.09430	.13805	.19274	.08337	.12712
47.800	2.000	10.00000	10.34700	48.00000	.94741	.03962	.07243	.12712	.01774	.07243
47.750	5.000	10.00000	10.34890	48.00000	.92553	-.03694	-.00413	.03962	-.05882	-.01507
47.630	10.000	10.00000	10.35780	48.00000	.81616	-.17912	-.13538	-.12444	-.17912	-.14631
47.530	15.000	10.00000	10.35930	48.00000	.64116	-.28850	-.29943	-.27756	-.26662	-.24475
	GRADIENT	.00000	-.00016	.00000	-.00170	-.02904	-.02998	-.03055	-.02640	-.02565

ARC40X80-462(OA100) OV101 (CNA07Q) (16 MAR 82)

REFERENCE DATA

SREF =	2690.0000 SQ.FT.	XMRP =	1076.6800 IN.	XO	
LREF =	474.8100 INCHES	YMRP =	.0000 IN.	YO	
BREF =	936.6800 INCHES	ZMRP =	375.0000 IN.	ZO	
SCALE =	.3600				

PARAMETRIC DATA

ALPHA =	10.000	ELEVON =	.000
AILRON =	.000	BDFLAP =	.000
SPDBRK =	55.000	RUDDER =	.000

RUN NO. 100/ 0 GRADIENT INTERVAL = -5.00/ 5.00

Q	BETA	ALPHAU	ALPHA	QI	CP68	CP69	CP70	CP71	CP72	CP73
47.610	-13.000	10.00000	10.34010	47.50000	.74789	.47160	.52686	.59317	.41634	.48265
47.820	-10.000	10.00000	10.33610	48.50000	.79642	.37425	.41755	.48250	.32012	.36342
47.670	-5.000	10.00000	10.32700	47.50000	.92472	.25056	.28372	.33898	.21741	.25056
47.670	-2.000	10.00000	10.32420	47.50000	.84736	.17320	.21741	.23951	.12899	.18425
47.600	.000	10.00000	10.32430	47.50000	.94682	.09584	.14005	.20636	.09584	.12899
47.560	2.000	10.00000	10.32280	49.00000	.90567	.03774	.08060	.13418	.03774	.05917
47.750	5.000	10.00000	10.32720	47.50000	.91367	-.02573	-.01468	.04058	-.00363	-.00363
47.670	10.000	10.00000	10.33270	49.00000	.77708	-.14442	-.12299	-.12299	-.13370	-.13370
47.610	15.000	10.00000	15.34150	49.00000	.61636	-.28371	-.27300	-.25157	-.21942	-.23014
47.680	20.000	10.00000	15.33100	47.50000	.44949	-.39044	-.39044	-.40149	-.32413	-.32413
	GRADIENT	.00000	-.00003	.05172	.00106	-.02849	-.03044	-.02936	-.02220	-.02623

ARC40X80-462(OA100) OV101 (DNA01A) (15 APR 82)

REFERENCE DATA

SREF = 2690.0000 SQ.FT. XMRP = 1076.6800 IN. XO
LREF = 474.8100 INCHES YMRP = .0000 IN. YO
BREF = 936.6800 INCHES ZMRP = 375.0000 IN. ZO
SCALE = .3600

PARAMETRIC DATA

BETA = .000 ELEVON = .000
AILRON = .000 BDFLAP = .000
SPDBRK = 25.000 RUDDER = .000

RUN NO. 4/ 0 GRADIENT INTERVAL = -5.00/ 5.00

Q	ALPHA	DELS1	DELS2	DELS3	DELS4	SPDBRK	RUDDER
19.120	-5.245	15.24810	15.29280	15.19840	15.22900	25.21980	-.01545
19.020	-2.655	15.24810	15.19840	15.10400	15.13200	25.09980	.00446
19.080	-.066	15.24810	15.29280	15.10400	15.22900	25.18020	-.03483
19.180	2.532	15.24810	15.19840	15.10400	15.13200	25.09980	.00446
19.180	5.128	15.24810	15.19840	15.10400	15.13200	25.09980	.00446
19.170	7.734	15.24810	15.19840	15.10400	15.03500	25.05910	.02437
19.110	10.337	15.24810	15.19840	15.10400	15.13200	25.09980	.00446
18.960	12.937	15.24810	15.19840	15.10400	15.13200	25.09980	.00446
18.920	15.552	15.24810	15.19840	15.10400	15.03500	25.05910	.02437
19.050	20.801	15.24810	15.19840	15.10400	15.13200	25.09980	.00446
18.940	26.000	15.24810	15.19840	15.10400	15.13200	25.09980	.00446
	GRADIENT	.00000	-.00002	-.00000	-.00002	-.00002	.00001

RUN NO. 5/ 0 GRADIENT INTERVAL = -5.00/ 5.00

Q	ALPHA	DELS1	DELS2	DELS3	DELS4	SPDBRK	RUDDER
52.070	-5.245	15.24810	15.10400	15.10400	15.03500	26.01950	.04374
52.240	-2.653	15.24810	15.19840	15.10400	15.13200	25.09980	.00446
52.220	-.062	15.24810	15.19840	15.10400	15.13200	25.09980	.00446
52.220	2.535	15.24810	15.10400	15.10400	15.03500	25.01950	.04374
52.260	5.135	15.24810	15.19840	15.10400	15.03500	25.05910	.02437
52.330	7.735	15.24810	15.10400	15.19840	15.03500	25.05910	.06312
52.190	10.341	15.24810	15.19840	15.19840	15.13200	25.13940	.02383
52.250	12.939	15.24810	15.10400	15.10400	15.03500	25.01950	.04374
52.080	15.553	15.24810	15.19840	15.10400	15.13200	25.09980	.00446
52.310	20.819	15.24810	15.19840	15.10400	15.03500	25.05910	.02437
49.060	26.008	15.24810	15.19840	15.10400	15.03500	25.05910	.02437
	GRADIENT	-.00000	-.01820	-.00000	-.01871	-.01549	.00758

ARC40X80-462(OA100) OV101 (DNA01A) (15 APR 82)

REFERENCE DATA

SREF =	2690.0000 SQ.FT.	XMRP =	1076.6800 IN. XO		
LREF =	474.8100 INCHES	YMRP =	.0000 IN. YO		
BREF =	936.6800 INCHES	ZMRP =	375.0000 IN. ZO		
SCALE =	.3600				

PARAMETRIC DATA

BETA =	.000	ELEVON =	.000
AILRON =	.000	BDFLAP =	.000
SPDBRK =	25.000	RUDDER =	.000

RUN NO. 7/ 0 GRADIENT INTERVAL = -5.00/ 5.00

Q	ALPHA	DELS1	DELS2	DELS3	DELS4	SPDBRK	RUDDER
94.180	-5.245	15.24810	15.19840	15.19840	15.32600	25.22090	-.01599
94.780	-2.654	15.24810	15.29280	15.19840	15.22900	25.21980	-.01545
95.030	-.061	15.24810	15.29280	15.19840	15.13200	25.17910	.00446
94.450	2.539	15.24810	15.19840	15.10400	15.13200	25.09980	.00446
94.520	5.136	15.24810	15.19840	15.10400	15.13200	25.09980	.00446
94.340	7.737	15.24810	15.19840	15.10400	15.13200	25.09980	.00446
94.570	10.345	15.24810	15.19840	15.10400	15.13200	25.09980	.00446
94.610	12.943	15.24810	15.19840	15.10400	15.13200	25.09980	.00446
95.400	15.559	15.24810	15.19840	15.10400	15.13200	25.09980	.00446
92.940	18.182	15.24810	15.19840	15.10400	15.22900	25.14050	-.01545
	GRADIENT	.00000	-.01819	-.01819	-.01867	-.02311	.00383

ARC40X80-462(OA100) OV101(DECREASING ALPHA) (DNA01B) (15 APR 82)

REFERENCE DATA

SREF =	2690.0000 SQ.FT.	XMRP =	1076.6800 IN. XO		
LREF =	474.8100 INCHES	YMRP =	.0000 IN. YO		
BREF =	936.6800 INCHES	ZMRP =	375.0000 IN. ZO		
SCALE =	.3600				

PARAMETRIC DATA

BETA =	.000	ELEVON =	.000
AILRON =	.000	BDFLAP =	.000
SPDBRK =	25.000	RUDDER =	.000

RUN NO. 6/ 0 GRADIENT INTERVAL = -5.00/ 5.00

Q	ALPHA	DELS1	DELS2	DELS3	DELS4	SPDBRK	RUDDER
52.300	-5.243	15.24810	15.19840	15.19840	15.03500	25.09870	.04374
51.950	-2.652	15.24810	15.19840	15.10400	15.03500	25.05910	.02437
51.990	-.064	15.24810	15.19840	15.10400	15.03500	25.05910	.02437
51.990	2.533	15.24810	15.19840	15.19840	15.03500	25.09870	.04374
52.180	5.136	15.24810	15.19840	15.10400	15.03500	25.05910	.02437
51.950	7.735	15.24810	15.19840	15.10400	15.03500	25.05910	.02437
52.360	10.339	15.24810	15.19840	15.10400	15.03500	25.05910	.02437
52.100	12.938	15.24810	15.10400	15.10400	15.03500	25.01950	.04374
52.080	15.553	15.24810	15.19840	15.19840	15.03500	25.09870	.04374
52.200	20.822	15.24910	15.19840	15.10400	15.03500	25.05910	.02437
	GRADIENT	-.00000	-.00000	.01821	-.00000	.00764	.00374

ARC40X80-462(OA100) OV101 (DNA01C) (15 APR 82)

REFERENCE DATA

SREF = 2690.0000 SQ.FT. XMRP = 1076.6800 IN. XO
LREF = 474.8100 INCHES YMRP = .0000 IN. YO
BREF = 936.6800 INCHES ZMRP = 375.0000 IN. ZO
SCALE = .3600

PARAMETRIC DATA

BETA = .000 ELEVON = 10.000
AILRON = .000 BDFLAP = .000
SPDBRK = 25.000 RUDDER = .000

RUN NO. 2/ 0 GRADIENT INTERVAL = -5.00/ 5.00

Q	ALPHA	DELS1	DELS2	DELS3	DELS4	SPDBRK	RUDDER
18.990	-5.093	15.24810	15.19840	15.10400	15.13200	25.09980	.00446
18.990	-2.501	15.24810	15.19840	15.10400	15.13200	25.09980	.00446
19.140	.091	15.24810	15.38720	15.10400	15.03500	25.13830	-.01439
19.090	2.687	15.24810	15.19840	15.10400	15.13200	25.09980	.00446
19.080	5.288	15.24810	15.19840	15.19840	15.13200	25.13940	.02383
19.050	7.890	15.24810	15.19840	15.10400	15.13200	25.09980	.00446
19.090	10.489	15.24810	15.19840	15.19840	15.13200	25.13940	.02383
19.020	13.095	15.24810	15.19840	15.10400	15.13200	25.09980	.00446
18.970	15.701	15.24810	15.19840	15.10400	15.13200	25.09980	.00446
19.040	20.963	15.24810	15.19840	15.10400	15.13200	25.09980	.00446
18.900	26.117	15.24810	15.19840	15.10400	15.03500	25.05910	.02437
	GRADIENT	.00000	-.00002	.00000	.00001	-.00000	.00000

RUN NO. 8/ 0 GRADIENT INTERVAL = -5.00/ 5.00

Q	ALPHA	DELS1	DELS2	DELS3	DELS4	SPDBRK	RUDDER
47.540	-5.091	15.24810	15.29280	15.19840	15.13200	25.17910	.00446
47.620	-2.500	15.34400	15.19840	15.10400	15.13200	25.14010	.02414
47.640	.091	15.34400	15.29280	15.19840	15.13200	25.21930	.02414
47.600	2.688	15.34400	15.29280	15.19840	15.13200	25.21930	.02414
47.620	5.284	15.34400	15.29280	15.19840	15.13200	25.21930	.02414
47.580	7.890	15.34400	15.29280	15.19840	15.13200	25.21930	.02414
47.470	10.489	15.34400	15.29280	15.19840	15.13200	25.21930	.02414
47.430	13.093	15.34400	15.29280	15.19840	15.13200	25.21930	.02414
47.540	15.704	15.24810	15.19840	15.19840	15.13200	25.13940	.02383
47.490	20.973	15.24810	15.19840	15.19840	15.13200	25.13940	.02383
45.130	26.111	15.34400	15.29280	15.19840	15.13200	25.21930	.02414
	GRADIENT	.00000	.01819	.01819	-.00000	.01526	-.00000

ARC40X80-462(OA100) OV101 (DNA01C) (15 APR 82)

REFERENCE DATA

SREF =	2690.0000 SQ.FT.	XMRP =	1076.6800 IN.	XO	
LREF =	474.8100 INCHES	YMRP =	.0000 IN.	YO	
BREF =	936.6800 INCHES	ZMRP =	375.0000 IN.	ZO	
SCALE =	.3600				

PARAMETRIC DATA

BETA =	.000	ELEVON =	10.000
AILRON =	.000	BDFLAP =	.000
SPDBRK =	25.000	RUDDER =	.000

RUN NO. 14/ 0 GRADIENT INTERVAL = -5.00/ 5.00

Q	ALPHA	DELS1	DELS2	DELS3	DELS4	SPDBRK	RUDDER
94.550	-5.093	15.05630	15.19840	15.10400	15.13200	25.01930	-.03491
94.050	-2.501	15.15220	15.19840	15.00960	15.03500	24.97920	-.01469
94.680	.090	15.15220	15.19840	15.10400	15.03500	25.01880	.00468
94.710	2.690	15.15220	15.19840	15.10400	15.03500	25.01880	.00468
94.230	5.291	15.15220	15.19840	15.00960	15.03500	24.97920	-.01469
94.260	7.891	15.15220	15.19840	15.10400	14.93800	24.97810	.02459
94.350	10.495	15.15220	15.19840	15.10400	14.93800	24.97810	.02459
94.610	13.098	15.15220	15.19840	15.10400	15.03500	25.01880	.00468
93.190	15.690	15.15220	15.19840	15.10400	15.03500	25.01880	.00468
94.180	18.341	15.15220	15.19840	15.10400	15.03500	25.01880	.00468
92.530	20.984	15.15220	15.19840	15.10400	15.03500	25.01880	.00468
	GRADIENT	-.00000	-.00000	.01818	.00000	.00762	.00373

ARC40X80-462(OA100) OV101 (DNA01D) (15 APR 82)

REFERENCE DATA

SREF =	2690.0000 SQ.FT.	XMRP =	1076.6800 IN.	XO	
LREF =	474.8100 INCHES	YMRP =	.0000 IN.	YO	
BREF =	936.6800 INCHES	ZMRP =	375.0000 IN.	ZO	
SCALE =	.3600				

PARAMETRIC DATA

BETA =	.000	ELEVON =	-10.000
AILRON =	.000	BDFLAP =	.000
SPDBRK =	25.000	RUDDER =	.000

RUN NO. 3/ 0 GRADIENT INTERVAL = -5.00/ 5.00

Q	ALPHA	DELS1	DELS2	DELS3	DELS4	SPDBRK	RUDDER
18.910	-5.410	15.24810	15.19840	15.10400	15.13200	25.09980	.00446
19.080	-2.818	15.24810	15.29280	15.10400	15.13200	25.13940	-.01492
19.140	-.221	15.24810	15.19840	15.10400	15.13200	25.09980	.00446
19.110	2.371	15.24810	15.19840	15.10400	15.13200	25.09980	.00446
19.110	4.965	15.24810	15.19840	15.10400	15.13200	25.09980	.00446
19.180	7.564	15.24810	15.19840	15.10400	15.03500	25.05910	.02437
19.120	10.174	15.24810	15.19840	15.10400	15.13200	25.09980	.00446
19.060	12.770	15.24810	15.19840	15.10400	15.13200	25.09980	.00446
18.880	15.379	15.24810	15.19840	15.10400	15.13200	25.09980	.00446
18.900	20.638	15.24810	15.19840	15.10400	15.13200	25.09980	.00446
18.990	25.855	15.24810	15.19840	15.10400	15.13200	25.09980	.00446
	GRADIENT	.00000	-.01092	.00000	-.00000	-.00458	.00224

ARC40X80-462(OA100) OV101 (DNA01D) (15 APR 82)

REFERENCE DATA

SREF =	2690.0000 SQ.FT.	XMRP =	1076.6800 IN. XO		
LREF =	474.8100 INCHES	YMRP =	.0000 IN. YO		
BREF =	936.6800 INCHES	ZMRP =	375.0000 IN. ZO		
SCALE =	.3600				

PARAMETRIC DATA

BETA =	.000	ELEVON =	-10.000
AILRON =	.000	BDFLAP =	.000
SPDBRK =	25.000	RUDDER =	.000

RUN NO. 9/ 0 GRADIENT INTERVAL = -5.00/ 5.00

Q	ALPHA	DELS1	DELS2	DELS3	DELS4	SPDBRK	RUDDER
47.480	-5.409	15.24810	15.29280	15.19840	15.13200	25.17910	.00446
47.600	-2.819	15.34400	15.29280	15.19840	15.13200	25.21930	.02414
47.420	-.225	15.24810	15.29280	15.19840	15.13200	25.17910	.00446
47.530	2.371	15.34400	15.19840	15.19840	15.22900	25.22040	.02361
47.300	4.967	15.34400	15.19840	15.19840	15.13200	25.17970	.04351
47.530	7.568	15.34400	15.19840	15.19840	15.13200	25.17970	.04351
47.500	10.176	15.34400	15.19840	15.19840	15.13200	25.17970	.04351
47.570	12.771	15.24810	15.19840	15.19840	15.13200	25.13940	.02383
47.460	15.385	15.34400	15.29280	15.19840	15.22900	25.26010	.00423
47.490	20.650	15.24810	15.29280	15.19840	15.13200	25.17910	.00446
47.810	25.857	15.34400	15.29280	15.19840	15.13200	25.21930	.02414
	GRADIENT	.00370	-.01455	.00000	.00374	-.00299	.00298

RUN NO. 15/ 0 GRADIENT INTERVAL = -5.00/ 5.00

Q	ALPHA	DELS1	DELS2	DELS3	DELS4	SPDBRK	RUDDER
94.710	-5.412	15.15220	15.19840	15.10400	15.03500	25.01880	.00468
94.220	-2.818	15.15220	15.19840	14.44320	15.61700	24.98570	-.25040
93.990	-.223	15.15220	15.19840	15.10400	14.93800	24.97810	.02459
94.430	2.374	15.15220	15.38720	15.00960	14.93800	25.01770	-.03354
94.520	4.969	15.15220	15.38720	15.10400	14.93800	25.05730	-.01416
94.610	7.572	15.15220	15.38720	15.10400	14.93800	25.05730	-.01416
94.380	10.178	15.15220	15.38720	15.10400	14.93800	25.05730	-.01416
94.800	12.775	15.15220	15.38720	15.10400	14.93800	25.05730	-.01416
94.870	15.391	15.15220	15.38720	15.10400	14.93800	25.05730	-.01416
95.210	18.018	15.15220	15.38720	15.10400	14.93800	25.05730	-.01416
94.570	20.660	15.15220	15.38720	15.00960	15.03500	25.05840	-.05345
88.500	25.862	15.15220	15.38720	15.10400	15.03500	25.09810	-.03407
	GRADIENT	.00000	.02909	.07273	-.07847	.00980	.02506

ARC40X80-462(OA100) OV101 (DNA01E) (15 APR 82)

REFERENCE DATA

SREF =	2690.0000 SQ.FT.	XMRP =	1076.6800 IN. XO		
LREF =	474.8100 INCHES	YMRP =	.0000 IN. YO		
BREF =	936.6800 INCHES	ZMRP =	375.0000 IN. ZO		
SCALE =	.3600				

PARAMETRIC DATA

ALPHA =	.000	ELEVON =	.000
AILRON =	.000	BDFLAP =	.000
SPDBRK =	25.000	RUDDER =	.000

RUN NO. 16/ 0 GRADIENT INTERVAL = -5.00/ 5.00

Q	BETA	DELS1	DELS2	DELS3	DELS4	SPDBRK	RUDDER
19.200	-13.000	15.15220	15.19840	15.19840	15.13200	25.09920	.00415
19.160	-10.000	15.24810	15.19840	15.19840	15.22900	25.18020	.00392
19.070	-5.000	15.24810	15.19840	15.19840	15.22900	25.18020	.00392
19.050	-2.000	15.24810	15.19840	15.19840	15.22900	25.18020	.00392
19.080	.000	15.24810	15.19840	15.19840	15.22900	25.18020	.00392
19.040	2.000	15.24810	15.19840	15.19840	15.13200	25.13940	.02383
19.130	5.000	15.24810	15.19840	15.19840	15.13200	25.13940	.02383
19.150	10.000	15.24810	15.19840	15.19840	15.13200	25.13940	.02383
19.110	15.000	15.24810	15.19840	15.19840	15.22900	25.18020	.00392
19.040	20.000	15.34400	15.19840	15.19840	15.13200	25.17970	.04351
	GRADIENT	.00000	.00000	.00000	-.01171	-.00492	.00240

RUN NO. 21/ 0 GRADIENT INTERVAL = -5.00/ 5.00

Q	BETA	DELS1	DELS2	DELS3	DELS4	SPDBRK	RUDDER
47.590	-13.000	15.15220	15.29280	15.19840	15.03500	25.09810	.00468
47.590	-10.000	15.24810	15.19840	15.19840	15.13200	25.13940	.02383
47.630	-5.000	15.24810	15.19840	15.19840	15.03500	25.09870	.04374
47.520	-2.000	15.24810	15.29280	15.19840	15.03500	25.13840	.02436
47.490	.000	15.24810	15.19840	15.19840	15.13200	25.13940	.02383
47.480	2.000	15.24810	15.29280	15.19840	15.03500	25.13840	.02436
47.630	5.000	15.24810	15.29280	15.19840	15.13200	25.17910	.00446
47.510	10.000	15.24810	15.19840	15.19840	15.03500	25.09870	.04374
47.500	15.000	15.34400	15.19840	15.19840	15.03500	25.13900	.06342
47.680	20.000	15.24810	15.19840	15.29280	15.03500	25.13830	.06312
	GRADIENT	.00000	.00814	.00000	.00836	.00693	-.00339

RUN NO. 45/ 0 GRADIENT INTERVAL = -5.00/ 5.00

Q	BETA	DELS1	DELS2	DELS3	DELS4	SPDBRK	RUDDER
94.290	-13.000	15.24810	15.57600	15.10400	15.13200	25.25840	-.07305
94.680	-10.000	15.34400	15.19840	15.19840	15.13200	25.17970	.04351
94.410	-5.000	15.34400	15.00950	15.19840	15.13200	25.10040	.08227
94.780	-2.000	15.34400	15.00960	15.19840	15.13200	25.10040	.08227
94.730	.000	15.34400	15.00960	15.19840	15.13200	25.10040	.08227
94.410	2.000	15.34400	15.10400	15.29280	15.13200	25.17970	.08227
94.180	5.000	15.34400	15.38720	15.10400	15.13200	25.21930	-.01461
94.590	10.000	15.34400	15.29280	15.10400	15.03500	25.13900	.02467
94.450	15.000	15.91940	15.29280	15.10400	14.93800	25.33990	.16268
92.340	20.000	16.11120	15.19840	15.29280	14.93800	25.46010	.26017
	GRADIENT	.00000	.03581	-.00488	.00000	.01298	-.00835

ARC40X80-462(OA100) OV101(DECREASING BETA) (DNA01F) (15 APR 82)

REFERENCE DATA

SREF = 2690.0000 SQ.FT. XMRP = 1076.6800 IN. XO
LREF = 474.8100 INCHES YMRP = .0000 IN. YO
BREF = 936.6800 INCHES ZMRP = 375.0000 IN. ZO
SCALE = .3600

PARAMETRIC DATA

ALPHA = .000 ELEVON = .000
AILRON = .000 BDFLAP = .000
SPDBRK = 25.000 RUDDER = .000

RUN NO. 22/ 0 GRADIENT INTERVAL = -5.00/ 5.00

Q	BETA	DELS1	DELS2	DELS3	DELS4	SPDBRK	RUDDER
47.510	-13.000	15.15220	15.48160	15.19840	15.13200	25.21810	-.05398
47.470	-10.000	15.24810	15.29280	15.19840	15.13200	25.17910	.00446
47.610	-5.000	15.24810	15.29280	15.19840	15.13200	25.17910	.00446
47.600	-2.000	15.24810	15.29280	15.19840	15.13200	25.17910	.00446
47.430	.000	15.24810	15.29280	15.19840	15.13200	25.17910	.00446
47.440	2.000	15.24810	15.29280	15.19840	15.13200	25.17910	.00446
47.550	5.000	15.24810	15.29280	15.19940	15.22900	25.21980	-.01545
47.490	10.000	15.24810	15.19840	15.10400	15.13200	25.09980	.00446
47.540	15.000	15.15220	15.19840	15.19840	15.13200	25.09920	.00415
47.670	20.000	15.15220	15.19840	15.29280	15.03500	25.09810	.04343
	GRADIENT	.00000	.00000	.00000	.00836	.00351	-.00172

ARC40X80-462(OA100) OV101 (DNA01G) (15 APR 82)

REFERENCE DATA

SREF = 2690.0000 SQ.FT. XMRP = 1076.6800 IN. XO
LREF = 474.8100 INCHES YMRP = .0000 IN. YO
BREF = 936.6800 INCHES ZMRP = 375.0000 IN. ZO
SCALE = .3600

PARAMETRIC DATA

ALPHA = 5.000 ELEVON = .000
AILRON = .000 BDFLAP = .000
SPDBRK = 25.000 RUDDER = .000

RUN NO. 17/ 0 GRADIENT INTERVAL = -5.00/ 5.00

Q	BETA	DELS1	DELS2	DELS3	DELS4	SPDBRK	RUDDER
19.180	-13.000	15.24810	15.29280	15.19840	15.22900	25.21980	-.01545
19.120	-10.000	15.24810	15.19840	15.19940	15.22900	25.18020	.00392
19.080	-5.000	15.24810	15.19840	15.19840	15.22900	25.18020	.00392
19.070	-2.000	15.24810	15.19840	15.10400	15.22900	25.14050	-.01545
19.070	.000	15.24810	15.19840	15.10400	15.22900	25.14050	-.01545
19.060	2.000	15.24810	15.19840	15.19840	15.13200	25.13940	.02383
19.080	5.000	15.24810	15.19840	15.19840	15.22900	25.18020	.00392
19.070	10.000	15.24810	15.19840	15.19840	15.13200	25.13940	.02383
19.020	15.000	15.24810	15.19840	15.19840	15.22900	25.18020	.00392
19.010	20.000	15.24810	15.19840	15.19840	15.13200	25.13940	.02383
	GRADIENT	.00000	.00000	.00326	-.00334	-.00004	.00135

ARC40X80-462(OA100) OV101 (DNA01G) (15 APR 82)

REFERENCE DATA

SREF =	2690.0000 SQ.FT.	XMRP =	1076.6800 IN.	XO	
LREF =	474.8100 INCHES	YMRP =	.0000 IN.	YO	
BREF =	936.6800 INCHES	ZMRP =	375.0000 IN.	ZO	
SCALE =	.3600				

PARAMETRIC DATA

ALPHA =	5.000	ELEVON =	.000
AILRON =	.000	BDFLAP =	.000
SPDBRK =	25.000	RUDDER =	.000

RUN NO. 23/ 0 GRADIENT INTERVAL = -5.00/ 5.00

Q	BETA	DELS1	DELS2	DELS3	DELS4	SPDBRK	RUDDER
47.780	-13.000	15.15220	15.19840	15.19840	15.03500	25.05840	.02406
47.770	-10.000	15.24810	15.00960	15.19840	15.03500	25.01950	.08249
47.550	-5.000	15.24810	14.91520	15.19840	15.13200	25.02050	.08196
47.560	-2.000	15.24810	15.00960	15.19840	15.13200	25.06020	.06258
47.450	.000	15.24810	15.00960	15.19840	15.03500	25.01950	.08249
47.560	2.000	15.24810	15.19840	15.10400	15.03500	25.05910	.02437
47.430	5.000	15.24810	15.29280	15.19840	15.03500	25.13840	.02436
47.670	10.000	15.24810	15.29280	15.19840	15.03500	25.13840	.02436
47.470	15.000	15.34400	15.29280	15.19840	14.93800	25.13790	.06396
47.450	20.000	15.15220	15.19840	15.10400	15.03500	25.01880	.00468
	GRADIENT	.00000	.03906	-.00326	-.01171	.01013	-.00628

ARC40X80-462(OA100) OV101 (DNA01H) (15 APR 82)

REFERENCE DATA

SREF =	2690.0000 SQ.FT.	XMRP =	1076.6800 IN.	XO	
LREF =	474.8100 INCHES	YMRP =	.0000 IN.	YO	
BREF =	936.6800 INCHES	ZMRP =	375.0000 IN.	ZO	
SCALE =	.3600				

PARAMETRIC DATA

ALPHA =	10.000	ELEVON =	.000
AILRON =	.000	BDFLAP =	.000
SPDBRK =	25.000	RUDDER =	.000

RUN NO. 18/ 0 GRADIENT INTERVAL = -5.00/ 5.00

Q	BETA	DELS1	DELS2	DELS3	DELS4	SPDBRK	RUDDER
19.060	-13.000	15.24810	15.38720	15.19840	15.13200	25.21870	-.01492
19.090	-10.000	15.24810	15.29280	15.19840	15.22900	25.21980	-.01546
19.100	-5.000	15.15220	15.19840	15.19840	15.22900	25.13990	-.01576
19.180	-2.000	15.24810	15.19840	15.19840	15.22900	25.18020	.00392
19.060	.000	15.24810	15.19840	15.19840	15.13200	25.13940	.02383
19.110	2.000	15.15220	15.29280	15.10400	15.13200	25.09920	-.03460
19.080	5.000	15.24810	15.19840	15.19840	15.13200	25.13940	.02383
19.110	10.000	15.24810	15.19840	15.19840	15.13200	25.13940	.02383
19.050	15.000	15.24810	15.10400	15.19840	15.13200	25.09980	.04321
19.040	20.000	15.24810	15.19840	15.19840	15.13200	25.13940	.02383
	GRADIENT	.00496	.00326	-.00326	-.01171	-.00284	.00208

ARC40X80-462(OA100) OV101 (DNA01H) (15 APR 82)

REFERENCE DATA

SREF =	2690.0000 SQ.FT.	XMRP =	1076.6800 IN. XO		
LREF =	474.8100 INCHES	YMRP =	.0000 IN. YO		
BREF =	936.6800 INCHES	ZMRP =	375.0000 IN. ZO		
SCALE =	.3600				

PARAMETRIC DATA

ALPHA =	10.000	ELEVON =	.000
AILRON =	.000	BDFLAP =	.000
SPDBRK =	25.000	RUDDER =	.000

RUN NO. 24/ 0 GRADIENT INTERVAL = -5.00/ 5.00

Q	BETA	DELS1	DELS2	DELS3	DELS4	SPDBRK	RUDDER
47.700	-13.000	15.24810	15.29280	15.19840	15.03500	25.13840	.02436
47.950	-10.000	15.24810	15.29280	15.19840	15.03500	25.13840	.02436
48.370	-5.000	15.24810	15.19840	15.19840	15.03500	25.09870	.04374
47.570	-2.000	15.24810	15.19840	15.10400	15.03500	25.05910	.02437
47.530	.000	15.24810	15.29280	15.19840	15.13200	25.17910	.00446
47.440	2.000	15.24810	15.19840	15.19840	15.13200	25.13940	.02383
47.660	5.000	15.24810	15.29280	15.19840	15.13200	25.17910	.00446
47.390	10.000	15.15220	15.19840	15.19840	15.03500	25.05840	.02406
47.510	15.000	15.15220	15.29280	15.19840	15.03500	25.09810	.00468
47.500	20.000	15.05630	15.19840	15.19840	15.03500	25.01820	.00437
	GRADIENT	.00000	.00814	.00326	.01171	.00970	-.00341

RUN NO. 46/ 0 GRADIENT INTERVAL = -5.00/ 5.00

Q	BETA	DELS1	DELS2	DELS3	DELS4	SPDBRK	RUDDER
94.480	-13.000	15.15220	15.38720	15.00960	15.13200	25.09920	-.07335
94.340	-10.000	15.15220	15.38720	15.10400	15.13200	25.13880	-.05398
94.410	-5.000	15.15220	15.19840	15.19840	15.22900	25.13990	-.01576
94.550	-2.000	15.15220	15.19840	15.10400	15.13200	25.05950	-.01523
94.270	.000	15.15220	15.10400	15.10400	15.13200	25.01990	.00415
94.360	2.000	15.15220	15.10400	15.10400	15.13200	25.01990	.00415
94.430	5.000	15.24810	15.29280	15.10400	15.13200	25.13940	-.01492
94.550	10.000	15.43990	15.19840	15.10400	15.03500	25.13960	.06373
94.610	15.000	15.91940	15.19840	15.19840	14.93800	25.33990	.20143
94.360	20.000	14.76860	15.29280	15.57600	15.22900	25.17700	-.03637
	GRADIENT	.00827	.00488	-.00814	-.00836	-.00141	.00074

REFERENCE DATA

SREF =	2690.0000 SQ.FT.	XMRP =	1076.6800 IN. XO		
LREF =	474.8100 INCHES	YMRP =	.0000 IN. YO		
BREF =	936.6800 INCHES	ZMRP =	375.0000 IN. ZO		
SCALE =	.3600				

PARAMETRIC DATA

ALPHA =	15.000	ELEVON =	.000
AILRON =	.000	BDFLAP =	.000
SPDBRK =	25.000	RUDDER =	.000

RUN NO. 19/ 0 GRADIENT INTERVAL = -5.00/ 5.00

Q	BETA	DELS1	DELS2	DELS3	DELS4	SPDBRK	RUDDER
19.000	-13.000	15.24810	15.29280	15.19840	15.22900	25.21980	-.01545
19.100	-10.000	15.24810	15.19840	15.19840	15.13200	25.13940	.02383
19.000	-5.000	15.24810	15.19840	15.19840	15.13200	25.13940	.02383
19.000	-2.000	15.24810	15.19840	15.19840	15.13200	25.13940	.02383
18.980	.000	15.24810	15.19840	15.19840	15.13200	25.13940	.02383
19.070	2.000	15.24810	15.19840	15.19840	15.13200	25.13940	.02383
18.980	10.000	15.24810	15.19840	15.19840	15.13200	25.13940	.02383
19.000	15.000	15.24810	15.10400	15.19840	15.03500	25.05910	.06312
18.930	20.000	15.24810	15.10400	15.19840	15.13200	25.09980	.04321
	GRADIENT	.00000	.00000	.00000	.00000	-.00000	-.00000

RUN NO. 25/ 0 GRADIENT INTERVAL = -5.00/ 5.00

Q	BETA	DELS1	DELS2	DELS3	DELS4	SPDBRK	RUDDER
47.510	-13.000	15.34400	15.48160	15.29280	15.13200	25.33830	.00476
47.800	-10.000	15.34400	15.19840	15.29280	15.13200	25.21930	.06289
48.000	-5.000	15.24810	15.19840	15.29280	15.22900	25.21980	.02330
48.090	-2.000	15.34400	15.29280	15.19840	15.22900	25.26010	.00423
47.970	.000	15.34400	15.29280	15.29280	15.22900	25.29970	.02361
47.910	2.000	15.34400	15.19840	15.29280	15.22900	25.26010	.04298
47.890	5.000	15.34400	15.19840	15.38720	15.13200	25.25900	.08227
47.470	10.000	15.34400	15.19840	15.19840	15.03500	25.13900	.06342
47.450	15.000	15.34400	15.19840	15.29280	15.22900	25.26010	.04298
47.650	20.000	15.24610	15.19840	15.29280	15.13200	25.17910	.04321
	GRADIENT	.00827	-.00326	.01139	-.00836	.00338	.00642

ARC40X80-462(0A100) 0V101 (DNA01J) (15 APR 82)

REFERENCE DATA

SREF =	2690.0000 SQ.FT.	XMRP =	1076.6800 IN. XO		
LREF =	474.8100 INCHES	YMRP =	.0000 IN. YO		
BREF =	936.6800 INCHES	ZMRP =	375.0000 IN. ZO		
SCALE =	.3600				

PARAMETRIC DATA

ALPHA =	20.000	ELEVON =	.000
AILRON =	.000	BDFLAP =	.000
SPDBRK =	25.000	RUDDER =	.000

RUN NO. 20/ 0 GRADIENT INTERVAL = -5.00/ 5.00

Q	BETA	DELS1	DELS2	DELS3	DELS4	SPDBRK	RUDDER
19.180	-13.000	15.15220	15.19840	15.10400	14.93800	24.97810	.02459
19.130	-10.000	15.15220	15.19840	15.10400	15.03500	25.01880	.00468
19.100	-5.000	15.15220	15.19840	15.19840	14.93800	25.01770	.04397
19.140	-2.000	15.15220	15.19840	15.19840	14.93800	25.01770	.04397
19.220	.000	15.15220	15.10400	15.19840	15.03500	25.01880	.04343
19.130	2.000	15.15220	15.10400	15.10400	14.93800	24.93850	.04397
19.100	5.000	15.15220	15.10400	15.19840	15.03500	25.01880	.04343
19.010	10.000	15.15220	15.29280	15.19840	15.03500	25.09810	.00468
19.040	15.000	15.24810	15.19840	15.19840	15.03500	25.09870	.04374
19.000	20.000	15.24810	15.19840	15.19840	15.03500	25.09870	.04374
	GRADIENT	.00000	-.01139	-.00326	.00836	-.00264	-.00005

RUN NO. 26/ 0 GRADIENT INTERVAL = -5.00/ 5.00

Q	BETA	DELS1	DELS2	DELS3	DELS4	SPDBRK	RUDDER
47.490	-13.000	15.24810	15.29280	15.29280	15.13200	25.21870	.02383
47.730	-10.000	15.34400	15.19840	15.29280	15.13200	25.21930	.06289
47.590	-5.000	15.34400	15.29280	15.29280	15.13200	25.25900	.04351
47.600	-2.000	15.24810	15.19840	15.29280	15.13200	25.17910	.04321
47.560	.000	15.34400	15.19840	15.29280	15.13200	25.21930	.06289
47.630	2.000	15.34400	15.19840	15.29280	15.22900	25.26010	.04298
47.700	5.000	15.34400	15.19840	15.29280	15.13200	25.21930	.06289
47.640	10.000	15.34400	15.29280	15.29280	15.13200	25.25900	.04351
47.620	15.000	15.34400	15.19840	15.19840	15.13200	25.17970	.04351
47.420	20.000	14.76860	15.19840	15.29280	15.13200	24.97780	-.05521
	GRADIENT	.00331	-.00814	.00000	.00334	-.00063	.00166

ARC40X80-462(OA100) OV101 (DNA01K) (15 APR 82)

REFERENCE DATA

SREF =	2690.0000 SQ.FT.	XMRP =	1076.6800 IN. XO		
LREF =	474.8100 INCHES	YMRP =	.0000 IN. YO		
BREF =	936.6800 INCHES	ZMRP =	375.0000 IN. ZO		
SCALE =	.3600				

PARAMETRIC DATA

ALPHA =	.000	BETA =	.000
AILRON =	.000	BDFLAP =	.000
SPDBRK =	25.000	RUDDER =	.000

RUN NO. 10/ 0 GRADIENT INTERVAL = -5.00/ 5.00

Q	ELEVON	DELS1	DELS2	DELS3	DELS4	SPDBRK	RUDDER
47.410	-36.343	15.34400	15.19840	15.10400	15.13200	25.14010	.02414
47.600	-31.143	15.34400	15.19840	15.10400	15.13200	25.14010	.02414
47.670	-26.002	15.34400	15.19840	15.19840	15.13200	25.17970	.04351
47.550	-20.742	15.34400	15.19840	15.19840	15.13200	25.17970	.04351
47.580	-15.601	15.34400	15.19840	15.10400	15.13200	25.14010	.02414
47.670	-10.401	15.34400	15.19840	15.10400	15.13200	25.14010	.02414
47.780	-5.200	15.34400	15.19840	15.19840	15.13200	25.17970	.04351
47.640	-.060	15.34400	15.19840	15.19840	15.22900	25.22040	.02361
47.540	5.141	15.34400	15.19840	15.19840	15.13200	25.17970	.04351
47.490	10.281	15.34400	15.19840	15.19840	15.13200	25.17970	.04351
47.580	15.482	15.34400	15.19840	15.19840	15.13200	25.17970	.04351
47.470	20.682	15.34400	15.19840	15.19840	15.13200	25.17970	.04351
	GRADIENT	.00000	.00000	.00000	.00000	.00000	.00000

ARC40X80-462(OA100) OV101 (DNA01L) (15 APR 82)

REFERENCE DATA

SREF =	2690.0000 SQ.FT.	XMRP =	1076.6800 IN. XO		
LREF =	474.8100 INCHES	YMRP =	.0000 IN. YO		
BREF =	936.6800 INCHES	ZMRP =	375.0000 IN. ZO		
SCALE =	.3600				

PARAMETRIC DATA

ALPHA =	5.000	BETA =	.000
AILRON =	.000	BDFLAP =	.000
SPDBRK =	25.000	RUDDER =	.000

RUN NO. 11/ 0 GRADIENT INTERVAL = -5.00/ 5.00

Q	ELEVON	DELS1	DELS2	DELS3	DELS4	SPDBRK	RUDDER
47.520	-36.343	15.34400	15.29280	15.19840	15.13200	25.21930	.02414
47.610	-31.143	15.34400	15.19840	15.19840	15.22900	25.22040	.02361
47.540	-26.002	15.24810	15.19840	15.19840	15.13200	25.13940	.02383
47.510	-20.742	15.24810	15.19840	15.19840	15.13200	25.13940	.02383
47.510	-15.601	15.34400	15.19840	15.19840	15.13200	25.17970	.04351
47.550	-10.401	15.34400	15.19840	15.19840	15.13200	25.17970	.04351
47.510	-5.260	15.34400	15.19840	15.19840	15.13200	25.17970	.04351
47.610	-.060	15.34400	15.19840	15.19840	15.13200	25.17970	.04351
47.450	5.081	15.34400	15.19840	15.19840	15.22900	25.22040	.02361
47.500	10.341	15.34400	15.19840	15.19840	15.13200	25.17970	.04351
47.710	15.482	15.34400	15.19840	15.19840	15.13200	25.17970	.04351
47.420	20.682	15.34400	15.19840	15.19840	15.13200	25.17970	.04351
	GRADIENT	.00000	.00000	.00000	.00000	.00000	.00000

ARC40X80-462(OA100) OV101 (DNA01M) (15 APR 82)

REFERENCE DATA

SREF =	2690.0000	SQ.FT.	XMRP =	1076.6800	IN. XO
LREF =	474.8100	INCHES	YMRP =	.0000	IN. YO
BREF =	936.6800	INCHES	ZMRP =	375.0000	IN. ZO
SCALE =	.3600				

PARAMETRIC DATA

ALPHA =	10.000	BETA =	.000
AILRON =	.000	BDFLAP =	.000
SPDBRK =	25.000	RUDDER =	.000

RUN NO. 12/ 0 GRADIENT INTERVAL = -5.00/ 5.00

Q	ELEVON	DELS1	DELS2	DELS3	DELS4	SPDBRK	RUDDER
47.660	-36.343	15.34400	15.19840	15.19840	15.13200	25.17970	.04351
47.590	-31.143	15.34400	15.19840	15.19840	15.13200	25.17970	.04351
47.530	-26.002	15.34400	15.19840	15.19840	15.13200	25.17970	.04351
47.620	-20.802	15.34400	15.19840	15.19840	15.22900	25.22040	.02361
47.460	-15.601	15.34400	15.19840	15.19840	15.22900	25.22040	.02361
47.530	-10.401	15.34400	15.19840	15.19840	15.13200	25.17970	.04351
47.500	-5.200	15.34400	15.19840	15.19840	15.22900	25.22040	.02361
47.500	-.060	15.34400	15.19840	15.19840	15.22900	25.22040	.02361
47.350	5.141	15.34400	15.29280	15.19840	15.22900	25.26010	.00423
47.430	10.281	15.34400	15.19840	15.19840	15.13200	25.17970	.04351
47.460	15.541	15.34400	15.19840	15.19840	15.13200	25.17970	.04351
47.380	20.622	15.34400	15.19840	15.19840	15.13200	25.17970	.04351
	GRADIENT	.00000	.00000	.00000	.00000	.00000	.00000

ARC40X80-462(OA100) OV101(DECREASING ELEVON) (DNA01N) (15 APR 82)

REFERENCE DATA

SREF =	2690.0000 SQ.FT.	XMRP =	1076.6800 IN. XO		
LREF =	474.8100 INCHES	YMRP =	.0000 IN. YO		
BREF =	936.6800 INCHES	ZMRP =	375.0000 IN. ZO		
SCALE =	.3600				

PARAMETRIC DATA

ALPHA =	10.000	BETA =	.000
AILRON =	.000	BDFLAP =	.000
SPDBRK =	25.000	RUDDER =	.000

RUN NO. 13/ 0 GRADIENT INTERVAL = -5.00/ 5.00

Q	ELEVON	DELS1	DELS2	DELS3	DELS4	SPDBRK	RUDDER
47.380	-36.343	15.34400	15.29280	15.19840	15.13200	25.21930	.02414
47.430	-31.143	15.34400	15.19840	15.19840	15.13200	25.17970	.04351
47.440	-25.942	15.34400	15.29280	15.19840	15.22900	25.26010	.00423
47.350	-20.742	15.34400	15.29280	15.19840	15.13200	25.21930	.02414
47.340	-15.541	15.34400	15.19840	15.19840	15.13200	25.17970	.04351
47.340	-10.461	15.34400	15.19840	15.19840	15.13200	25.17970	.04351
47.260	-5.200	15.34400	15.19840	15.19840	15.22900	25.22040	.02361
47.300	.000	15.34400	15.19840	15.19840	15.13200	25.17970	.04351
47.260	5.111	15.34400	15.19840	15.19840	15.13200	25.17970	.04351
47.510	10.281	15.34400	15.19840	15.19840	15.13200	25.17970	.04351
47.530	15.541	15.34400	15.29280	15.19840	15.22900	25.26010	.00423
47.400	20.622	15.34400	15.19840	15.19840	15.22900	25.22040	.02361
	GRADIENT	.00000	.00000	.00000	.00000	.00000	.00000

ARC40X80-462(OA100) OV101 (DNA010) (15 APR 82)

REFERENCE DATA

SREF =	2690.0000 SQ.FT.	XMRP =	1076.6800 IN.	XO	
LREF =	474.8100 INCHES	YMRP =	.0000 IN.	YO	
BREF =	936.6800 INCHES	ZMRP =	375.0000 IN.	ZO	
SCALE =	.3600				

PARAMETRIC DATA

ALPHA =	15.000	BETA =	.000
AILRON =	.000	BDFLAP =	.000
SPDBRK =	25.000	RUDDER =	.000

RUN NO. 27/ 0 GRADIENT INTERVAL = -5.00/ 5.00

Q	ELEVON	DELS1	DELS2	DELS3	DELS4	SPDBRK	RUDDER
47.630	-36.343	15.24810	15.19840	15.29280	15.22900	25.21980	.02330
47.880	-31.143	15.34400	15.29280	15.29280	15.22900	25.29970	.02361
47.570	-26.002	15.34400	15.29280	15.29280	15.22900	25.29970	.02361
47.550	-20.742	15.34400	15.29280	15.29280	15.13200	25.25900	.04351
47.520	-15.601	15.34400	15.29280	15.29280	15.22900	25.29970	.02361
47.720	-10.401	15.34400	15.29280	15.29280	15.22900	25.29970	.02361
47.490	-5.200	15.34400	15.29280	15.29280	15.13200	25.25900	.04351
47.560	.000	15.34400	15.29280	15.19840	15.22900	25.26010	.00423
47.560	5.141	15.34400	15.29280	15.29280	15.13200	25.25900	.04351
47.570	10.281	15.34400	15.29280	15.29280	15.22900	25.29970	.02361
47.790	15.482	15.34400	15.29280	15.29280	15.22900	25.29970	.02361
47.430	20.637	15.34400	15.29280	15.29280	15.13200	25.25900	.04351
	GRADIENT	.00000	.00000	.00000	.00000	.00000	.00000

ARC40X80-462(OA100) OV101 (DNA01P) (15 APR 82)

REFERENCE DATA

SREF =	2690.0000 SQ.FT.	XMRP =	1076.6800 IN.	XO	
LREF =	474.8100 INCHES	YMRP =	.0000 IN.	YO	
BREF =	936.6800 INCHES	ZMRP =	375.0000 IN.	ZO	
SCALE =	.3600				

PARAMETRIC DATA

ALPHA =	20.000	BETA =	.000
AILRON =	.000	BDFLAP =	.000
SPDBRK =	25.000	RUDDER =	.000

RUN NO. 28/ 0 GRADIENT INTERVAL = -5.00/ 5.00

Q	ELEVON	DELS1	DELS2	DELS3	DELS4	SPDBRK	RUDDER
47.610	-36.343	15.34400	15.19840	15.29280	15.22900	25.26010	.04298
47.620	-31.143	15.34400	15.19840	15.19840	15.22900	25.22040	.02361
47.500	-25.942	15.34400	15.19840	15.19840	15.22900	25.22040	.02361
47.700	-20.712	15.34400	15.19840	15.29280	15.13200	25.21930	.06289
47.670	-15.601	15.34400	15.19840	15.29280	15.22900	25.26010	.04298
47.810	-10.401	15.34400	15.19840	15.29280	15.22900	25.26010	.04298
47.510	-5.200	15 34400	15.29280	15.29280	15.22900	25.29970	.02361
47.560	-.030	15.34400	15.29280	15.29280	15.22900	25.29970	.02361
47.750	5.141	15.34400	15.29280	15.19840	15.13200	25.21930	.02414
47.560	10.341	15.34400	15.29280	15.29280	15.13200	25.25900	.04351
47.760	15.541	15.34400	15.29280	15.19840	15.22900	25.26010	.00423
47.650	20.682	15.24810	15.29280	15.29280	15.22900	25.25950	.00392
	GRADIENT	.00000	.00000	.00000	.00000	.00000	.00000

ARC40X80-462(OA100) OV101 (DNA01Q) (15 APR 82)

REFERENCE DATA

SREF =	2690.0000 SQ.FT.	XMRP =	1076.6800 IN.	XO	
LREF =	474.8100 INCHES	YMRP =	.0000 IN.	YO	
BREF =	936.6800 INCHES	ZMRP =	375.0000 IN.	ZO	
SCALE =	.3600				

PARAMETRIC DATA

ALPHA =	.000	BETA =	.000
ELEVON =	.000	BDFLAP =	.000
SPDBRK =	25.000	RUDDER =	.000

RUN NO. 29/ 0 GRADIENT INTERVAL = -5.00/ 5.00

Q	AILRON	DELS1	DELS2	DELS3	DELS4	SPDBRK	RUDDER
47.700	-.045	15.34400	15.29280	15.29280	15.22900	25.29970	.02361
47.690	2.570	15.34400	15.29280	15.29280	15.13200	25.25900	.04351
47.620	5.141	15.24810	15.29280	15.29280	15.13200	25.21870	.02383
47.590	7.711	15.24810	15.29280	15.29280	15.22900	25.25950	.00392
47.610	10.281	15.34400	15.29280	15.29280	15.22900	25.29970	.02361
47.630	15.541	15.34400	15.29280	15.29280	15.22900	25.29970	.02361
	GRADIENT	.00000	-.00000	-.00000	-.03709	-.01556	.00761

ARC40X80-462(OA100) OV101 (DNA01R) (15 APR 82)

REFERENCE DATA

SREF =	2690.0000 SQ.FT.	XMRP =	1076.6800 IN. XO		
LREF =	474.8100 INCHES	YMRP =	.0000 IN. YO		
BREF =	936.6800 INCHES	ZMRP =	375.0000 IN. ZO		
SCALE =	.3600				

PARAMETRIC DATA

ALPHA =	5.000	BETA =	.000
ELEVON =	.000	BDFLAP =	.000
SPDBRK =	25.000	RUDDER =	.000

RUN NO. 30/ 0 GRADIENT INTERVAL = -5.00/ 5.00

Q	AILRON	DELS1	DELS2	DELS3	DELS4	SPDBRK	RUDDER
47.600	-.045	15.34400	15.29280	15.29280	15.13200	25.25900	.04351
47.660	2.570	15.34400	15.29280	15.19840	15.22900	25.26010	.00423
47.650	5.141	15.34400	15.29280	15.29280	15.22900	25.29970	.02361
47.570	7.741	15.34400	15.29280	15.29280	15.13200	25.25900	.04351
47.610	10.311	15.34400	15.19840	15.29280	15.13200	25.21930	.06289
47.570	15.541	15.34400	15.19840	15.19840	15.13200	25.17970	.04351
	GRADIENT	.00000	-.00000	-.03610	.03709	.00042	-.01502

ARC40X80-462(OA100) OV101 (DNA01S) (15 APR 82)

REFERENCE DATA

SREF =	2690.0000 SQ.FT.	XMRP =	1076.6800 IN. XO		
LREF =	474.8100 INCHES	YMRP =	.0000 IN. YO		
BREF =	936.6800 INCHES	ZMRP =	375.0000 IN. ZO		
SCALE =	.3600				

PARAMETRIC DATA

ALPHA =	10.000	BETA =	.000
ELEVON =	.000	BDFLAP =	.000
SPDBRK =	25.000	RUDDER =	.000

RUN NO. 31/ 0 GRADIENT INTERVAL = -5.00/ 5.00

Q	AILRON	DELS1	DELS2	DELS3	DELS4	SPDBRK	RUDDER
47.670	-.060	15.34400	15.29280	15.29280	15.22900	25.29970	.02361
47.530	2.570	15.34400	15.29280	15.19840	15.22900	25.26010	.00423
47.690	5.141	15.34400	15.29280	15.19840	15.13200	25.21930	.02414
47.590	7.711	15.24810	15.29280	15.29280	15.13200	25.21870	.02383
47.650	10.281	15.34400	15.29280	15.19840	15.13200	25.21930	.02414
47.710	15.541	15.34400	15.19840	15.29280	15.13200	25.21930	.06289
	GRADIENT	.00000	.00000	-.03589	.00000	-.01506	-.00737

ARC40X80-462(OA100) OV101(DECREASING AILERON) (DNA01T) (15 APR 82)

REFERENCE DATA

SREF = 2690.0000 SQ.FT. XMRP = 1076.6800 IN. XO
LREF = 474.8100 INCHES YMRP = .0000 IN. YO
BREF = 936.6800 INCHES ZMRP = 375.0000 IN. ZO
SCALE = .3600

PARAMETRIC DATA

ALPHA = 10.000 BETA = .000
ELEVON = .000 BDFLAP = .000
SPDBRK = 25.000 RUDDER = .000

RUN NO. 32/ 0 GRADIENT INTERVAL = -5.00/ 5.00

Q	AILRON	DELS1	DELS2	DELS3	DELS4	SPDBRK	RUDDER
47.600	.000	15.34400	15.29280	15.29280	15.13200	25.25900	.04351
47.610	2.570	15.34400	15.29280	15.19840	15.13200	25.21930	.02414
47.690	5.141	15.34400	15.29280	15.19840	15.13200	25.21930	.02414
47.670	7.771	15.34400	15.19840	15.19840	15.13200	25.17970	.04351
47.670	10.341	15.34400	15.29280	15.29280	15.13200	25.25900	.04351
47.610	15.541	15.34400	15.19840	15.29280	15.13200	25.21930	.06289
	GRADIENT	.00000	.00000	-.03673	.00000	-.01545	-.00754

ARC40X80-462(OA100) OV101 (DNA01U) (15 APR 82)

REFERENCE DATA

SREF = 2690.0000 SQ.FT. XMRP = 1076.6800 IN. XO
LREF = 474.8100 INCHES YMRP = .0000 IN. YO
BREF = 936.6800 INCHES ZMRP = 375.0000 IN. ZO
SCALE = .3600

PARAMETRIC DATA

ALPHA = 15.000 BETA = .000
ELEVON = .000 BDFLAP = .000
SPDBRK = 25.000 RUDDER = .000

RUN NO. 33/ 0 GRADIENT INTERVAL = -5.00/ 5.00

Q	AILRON	DELS1	DELS2	DELS3	DELS4	SPDBRK	RUDDER
47.570	-.015	15.34400	15.19840	15.29280	15.13200	25.21930	.06289
47.700	2.570	15.34400	15.29280	15.19840	15.13200	25.21930	.02414
47.690	5.170	15.34400	15.29280	15.29280	15.13200	25.25900	.04351
47.620	7.711	15.34400	15.19840	15.19840	15.13200	25.17970	.04351
47.590	10.281	15.34400	15.19840	15.29280	15.22900	25.26010	.04298
47.490	15.527	15.34400	15.19840	15.29280	15.13200	25.21930	.06289
	GRADIENT	.00000	.03652	-.03652	.00000	.00000	-.01499

ARC40X80-462(OA100) OV101 (DNA01V) (15 APR 82)

REFERENCE DATA

SREF =	2690.0000 SQ.FT.	XMRP =	1076.6800 IN. XO		
LREF =	474.8100 INCHES	YMRP =	.0000 IN. YO		
BREF =	936.6800 INCHES	ZMRP =	375.0000 IN. ZO		
SCALE =	.3600				

PARAMETRIC DATA

ALPHA =	20.000	BETA =	.000
ELEVON =	.000	BDFLAP =	.000
SPDBRK =	25.000	RUDDER =	.000

RUN NO. 34/ 0 GRADIENT INTERVAL = -5.00/ 5.00

Q	AILRON	DELS1	DELS2	DELS3	DELS4	SPDBRK	RUDDER
47.650	.000	15.34400	15.19840	15.29280	15.13200	25.21930	.06289
47.580	2.570	15.24810	15.19840	15.29280	15.13200	25.17910	.04321
47.650	5.185	15.24810	15.19840	15.29280	15.22900	25.21980	.02330
47.670	7.711	15.34400	15.29280	15.29280	15.13200	25.25900	.04351
47.640	10.341	15.34400	15.19840	15.28280	15.13200	25.21930	.06289
47.430	15.541	15.34400	15.19840	15.28280	15.13200	25.21930	.06289
	GRADIENT	-.03731	.00000	.00000	.00000	-.01564	-.00766

ARC40X80-462(OA100) OV101 (DNA01W) (15 APR 82)

REFERENCE DATA

SREF =	2690.0000 SQ.FT.	XMRP =	1076.6800 IN. XO		
LREF =	474.8100 INCHES	YMRP =	.0000 IN. YO		
BREF =	936.6800 INCHES	ZMRP =	375.0000 IN. ZO		
SCALE =	.3600				

PARAMETRIC DATA

ALPHA =	.000	BETA =	.000
ELEVON =	10.000	BDFLAP =	.000
SPDBRK =	25.000	RUDDER =	.000

RUN NO. 50/ 0 GRADIENT INTERVAL = -5.00/ 5.00

Q	AILRON	DELS1	DELS2	DELS3	DELS4	SPDBRK	RUDDER
47.600	.064	15.24810	15.19840	15.10400	15.13200	25.09980	.00446
47.580	2.544	15.24810	15.19840	15.19840	15.13200	25.13940	.02383
47.740	5.068	15.24810	15.19840	15.10400	15.13200	25.09980	.00446
47.600	7.578	15.24810	15.19840	15.19840	15.13200	25.13940	.02383
47.600	10.044	15.24810	15.19840	15.19840	15.13200	25.13940	.02383
47.740	12.896	15.24810	15.19840	15.19840	15.13200	25.13940	.02383
	GRADIENT	-.00000	.00000	.03806	.00000	.01597	.00781

ARC40X80-462(OA100) OV101 (DNA01X) (15 APR 82)

REFERENCE DATA

SREF = 2690.0000 SQ.FT. XMRP = 1076.6800 IN. XO
LREF = 474.8100 INCHES YMRP = .0000 IN. YO
BREF = 936.6800 INCHES ZMRP = 375.0000 IN. ZO
SCALE = .3600

PARAMETRIC DATA

ALPHA = 5.000 BETA = .000
ELEVON = 10.000 BDFLAP = .000
SPDBRK = 25.000 RUDDER = .000

RUN NO. 51/ 0 GRADIENT INTERVAL = -5.00/ 5.00

Q	AILRON	DELS1	DELS2	DELS3	DELS4	SPDBRK	RUDDER
47.550	.049	15.24810	15.19840	15.10400	15.13200	25.09980	.00446
47.650	2.544	15.24810	15.19840	15.10400	15.13200	25.09980	.00446
47.560	5.068	15.24810	15.10400	15.10400	15.13200	25.06020	.02383
47.540	7.578	15.24810	15.19840	15.10400	15.13200	25.09980	.00446
47.710	10.028	15.24810	15.19840	15.10400	15.13200	25.09980	.00446
47.460	12.896	15.24810	15.10400	15.10400	15.13200	25.06020	.02383
	GRADIENT	-.00000	-.00000	-.00000	.00000	.00000	.00000

ARC40X80-462(OA100) OV101 (DNA01Y) (15 APR 82)

REFERENCE DATA

SREF = 2690.0000 SQ.FT. XMRP = 1076.6800 IN. XO
LREF = 474.8100 INCHES YMRP = .0000 IN. YO
BREF = 936.6800 INCHES ZMRP = 375.0000 IN. ZO
SCALE = .3600

PARAMETRIC DATA

ALPHA = 10.000 BETA = .000
ELEVON = 10.000 BDFLAP = .000
SPDBRK = 25.000 RUDDER = .000

RUN NO. 52/ 0 GRADIENT INTERVAL = -5.00/ 5.00

Q	AILRON	DELS1	DELS2	DELS3	DELS4	SPDBRK	RUDDER
47.580	.049	15.24810	15.19840	15.10400	15.13200	25.09980	.00446
47.430	2.544	15.24810	15.19840	15.10400	15.13200	25.09980	.00446
47.430	5.024	15.24810	15.19840	15.10400	15.13200	25.09980	.00446
47.400	7.578	15.24810	15.10400	15.19840	15.13200	25.09980	.04321
47.480	10.028	15.24810	15.19840	15.19840	15.13200	25.13940	.02383
47.370	12.896	15.24810	15.10400	15.19840	15.13200	25.09980	.04321
	GRADIENT	.00000	-.00000	-.00000	.00000	.00000	-.00000

ARC40X80-462(OA100) OV101 (DNA01Z) (15 APR 82)

REFERENCE DATA

SREF =	2690.0000 SQ.FT.	XMRP =	1076.6800 IN. XO		
LREF =	474.8100 INCHES	YMRP =	.0000 IN. YO		
BREF =	936.6800 INCHES	ZMRP =	375.0000 IN. ZO		
SCALE =	.3600				

PARAMETRIC DATA

ALPHA =	15.000	BETA =	.000
ELEVON =	10.000	BDFLAP =	.000
SPDBRK =	25.000	RUDDER =	.000

RUN NO. 53/ 0 GRADIENT INTERVAL = -5.00/ 5.00

Q	AILRON	DELS1	DELS2	DELS3	DELS4	SPDBRK	RUDDER
47.600	.050	15.15220	15.19840	15.10400	15.03500	25.01880	.00468
47.750	2.559	15.15220	15.29280	15.10400	15.03500	25.05840	-.01469
47.780	5.068	15.15220	15.19840	15.10400	15.03500	25.01880	.00468
47.690	7.564	15.15220	15.19840	15.10400	15.03500	25.01880	.00468
47.700	10.043	15.24810	15.19840	15.10400	15.03500	25.05910	.02437
47.670	12.896	15.24810	15.19840	15.10400	15.03500	25.05910	.02437
	GRADIENT	.00000	.03762	-.00000	.00000	.01578	-.00772

ARC40X80-462(OA100) OV101 (DNA02A) (15 APR 82)

REFERENCE DATA

SREF =	2690.0000 SQ.FT.	XMRP =	1076.6800 IN. XO		
LREF =	474.8100 INCHES	YMRP =	.0000 IN. YO		
BREF =	936.6800 INCHES	ZMRP =	375.0000 IN. ZO		
SCALE =	.3600				

PARAMETRIC DATA

ALPHA =	20.000	BETA =	.000
ELEVON =	10.000	BDFLAP =	.000
SPDBRK =	25.000	RUDDER =	.000

RUN NO. 54/ 0 GRADIENT INTERVAL = -5.00/ 5.00

Q	AILRON	DELS1	DELS2	DELS3	DELS4	SPDBRK	RUDDER
47.540	.034	15.24810	15.29280	15.10400	15.03500	25.09870	.00499
47.680	2.559	15.24810	15.29280	15.10400	15.03500	25.09870	.00499
47.590	5.039	15.24810	15.29280	15.10400	15.03500	25.09870	.00499
47.620	7.563	15.24810	15.29280	15.10400	15.03500	25.09870	.00499
47.530	10.043	15.24810	15.29280	15.10400	15.03500	25.09870	.00499
47.520	12.896	15.24810	15.29280	15.10400	15.03500	25.09870	.00499
	GRADIENT	-.00000	.00000	.00000	-.00000	-.00000	-.00000

ARC40X80-462(OA100) OV101 (DNA02B) (15 APR 82)

REFERENCE DATA

SREF =	2690.0000 SQ.FT.	XMRP =	1076.6800 IN. XO		
LREF =	474.8100 INCHES	YMRP =	.0000 IN. YO		
BREF =	936.6800 INCHES	ZMRP =	375.0000 IN. ZO		
SCALE =	.3600				

PARAMETRIC DATA

ALPHA =	.000	BETA =	.000
ELEVON =	-10.000	BDFLAP =	.000
SPDBRK =	25.000	RUDDER =	.000

RUN NO. 55/ 0 GRADIENT INTERVAL = -5.00/ 5.00

Q	AILRON	DELS1	DELS2	DELS3	DELS4	SPDBRK	RUDDER
47.620	-.078	15.24810	15.29280	15.10400	15.03500	25.09870	.00499
47.760	2.460	15.24810	15.19840	15.10400	15.03500	25.05910	.02437
47.760	4.985	15.24810	15.19840	15.10400	15.03500	25.05910	.02437
47.580	7.465	15.24810	15.29280	15.10400	15.03500	25.09870	.00499
47.590	10.020	15.24810	15.19840	15.10400	15.03500	25.05910	.02437
47.360	15.069	15.24810	15.29280	15.10400	15.03500	25.09870	.00499
	GRADIENT	.00000	-.01866	.00000	.00000	-.00783	.00383

ARC40X80-462(OA100) OV101 (DNA02C) (15 APR 82)

REFERENCE DATA

SREF =	2690.0000 SQ.FT.	XMRP =	1076.6800 IN. XO		
LREF =	474.8100 INCHES	YMRP =	.0000 IN. YO		
BREF =	936.6800 INCHES	ZMRP =	375.0000 IN. ZO		
SCALE =	.3600				

PARAMETRIC DATA

ALPHA =	5.000	BETA =	.000
ELEVON =	-10.000	BDFLAP =	.000
SPDBRK =	25.000	RUDDER =	.000

RUN NO. 56/ 0 GRADIENT INTERVAL = -5.00/ 5.00

Q	AILRON	DELS1	DELS2	DELS3	DELS4	SPDBRK	RUDDER
47.640	-.034	15.24810	15.19840	15.00960	15.03500	25.01950	.00499
47.660	2.461	15.24810	15.29280	15.10400	15.03500	25.09870	.00499
47.670	4.985	15.24810	15.19840	15.10400	15.03500	25.05910	.02437
47.670	7.480	15.24810	15.19840	15.10400	15.03500	25.05910	.02437
47.570	10.020	15.24810	15.19840	15.10400	15.03500	25.05910	.02437
47.320	15.054	15.24810	15.19840	15.10400	15.03500	25.05910	.02437
	GRADIENT	.00000	-.00007	.01877	.00000	.00784	.00387

ARC40X80-462(OA100) OV101 (DNA02D) (15 APR 82)

REFERENCE DATA

SREF =	2690.0000 SQ.FT.	XMRP =	1076.6800 IN. XO		
LREF =	474.8100 INCHES	YMRP =	.0000 IN. YO		
BREF =	936.6800 INCHES	ZMRP =	375.0000 IN. ZO		
SCALE =	.3600				

PARAMETRIC DATA

ALPHA =	10.000	BETA =	.000
ELEVON =	-10.000	BDFLAP =	.000
SPDBRK =	25.000	RUDDER =	.000

RUN NO. 57/ 0 GRADIENT INTERVAL = -5.00/ 5.00

Q	AILRON	DELS1	DELS2	DELS3	DELS4	SPDBRK	RUDDER
47.760	-.064	15.15220	15.10400	15.19840	15.03500	25.01880	.04343
47.770	2.461	15.15220	15.19840	15.19840	15.03500	25.05840	.02406
47.800	4.956	15.15220	15.19840	15.19840	15.03500	25.05840	.02406
47.880	7.495	15.15220	15.10400	15.19840	15.03500	25.01880	.04343
47.690	10.020	15.15220	15.19840	15.19840	15.03500	25.05840	.02406
47.640	15.039	15.15220	15.10400	15.19840	15.03500	25.01880	.04343
	GRADIENT	.00000	.01884	.00000	.00000	.00790	-.00387

ARC40X80-462(OA100) OV101 (DNA02E) (15 APR 82)

REFERENCE DATA

SREF =	2690.0000 SQ.FT.	XMRP =	1076.6800 IN. XO		
LREF =	474.8100 INCHES	YMRP =	.0000 IN. YO		
BREF =	936.6800 INCHES	ZMRP =	375.0000 IN. ZO		
SCALE =	.3600				

PARAMETRIC DATA

ALPHA =	15.000	BETA =	.000
ELEVON =	-10.000	BDFLAP =	.000
SPDBRK =	25.000	RUDDER =	.000

RUN NO. 58/ 0 GRADIENT INTERVAL = -5.00/ 5.00

Q	AILRON	DELS1	DELS2	DELS3	DELS4	SPDBRK	RUDDER
47.510	-.064	15.15220	15.19840	15.19840	15.03500	25.05840	.02406
47.450	2.461	15.15220	15.19840	15.19840	15.13200	25.09920	.00415
47.560	4.971	15.24810	15.19840	15.19840	15.03500	25.09870	.04374
47.500	7.465	15.24810	15.19840	15.19840	15.03500	25.09870	.04374
47.370	10.020	15.15220	15.10400	15.10400	15.03500	24.97920	.02406
47.570	15.055	15.15220	15.10400	15.19840	15.03500	25.01880	.04343
	GRADIENT	.01903	-.00000	-.00000	.00004	.00801	.00390

ARC40X80-462(OA100) OV101 (DNA02F) (15 APR 82)

REFERENCE DATA

SREF =	2690.0000 SQ.FT.	XMRP =	1076.6800 IN. XO		
LREF =	474.8100 INCHES	YMRP =	.0000 IN. YO		
BREF =	936.6800 INCHES	ZMRP =	375.0000 IN. ZO		
SCALE =	.3600				

PARAMETRIC DATA

ALPHA =	20.000	BETA =	.000
ELEVON =	-10.000	BDFLAP =	.000
SPDBRK =	25.000	RUDDER =	.000

RUN NO. 59/ 0 GRADIENT INTERVAL = -5.00/ 5.00

Q	AILRON	DELS1	DELS2	DELS3	DELS4	SPDBRK	RUDDER
45.310	-.064	15.15220	15.19840	15.19840	15.03500	25.05840	.02406
47.090	2.461	15.15220	15.19840	15.19840	15.13200	25.09920	.00415
47.600	4.971	15.15220	15.19840	15.19840	15.03500	25.05840	.02406
47.390	7.480	15.15220	15.19840	15.19840	15.03500	25.05840	.02406
47.470	10.020	15.15220	15.10400	15.19840	15.03500	25.01880	.04343
47.360	15.010	15.15220	15.10400	15.19840	15.03500	25.01880	.04343
	GRADIENT	.00000	-.00000	-.00000	.00004	.00002	-.00001

ARC40X80-462(OA100) OV101 (DNA02G) (15 APR 82)

REFERENCE DATA

SREF =	2690.0000 SQ.FT.	XMRP =	1076.6800 IN. XO		
LREF =	474.8100 INCHES	YMRP =	.0000 IN. YO		
BREF =	936.6800 INCHES	ZMRP =	375.0000 IN. ZO		
SCALE =	.3600				

PARAMETRIC DATA

ALPHA =	.000	BETA =	.000
ELEVON =	-20.000	BDFLAP =	.000
SPDBRK =	25.000	RUDDER =	.000

RUN NO. 70/ 0 GRADIENT INTERVAL = -5.00/ 5.00

Q	AILRON	DELS1	DELS2	DELS3	DELS4	SPDBRK	RUDDER
48.060	-.053	15.24810	15.19840	15.10400	15.03500	25.05910	.02437
47.800	2.441	15.34400	15.19840	15.10400	15.03500	25.09930	.04405
47.850	4.966	15.34400	15.19840	15.00960	15.03500	25.05970	.02467
47.690	7.475	15.34400	15.10400	15.10400	15.03500	25.05970	.06342
47.660	10.000	15.34400	15.10400	15.10400	15.03500	25.05970	.06342
47.530	15.005	15.34400	15.10400	15.10400	15.03500	25.05970	.06342
	GRADIENT	.01907	-.00000	-.01885	.00000	.00009	.00005

ARC40X80-462(OA100) OV101 (DNA02H) (15 APR 82)

REFERENCE DATA

SREF =	2690.0000 SQ.FT.	XMRP =	1076.6800 IN. XO		
LREF =	474.8100 INCHES	YMRP =	.0000 IN. YO		
BREF =	936.6800 INCHES	ZMRP =	375.0000 IN. ZO		
SCALE =	.3600				

PARAMETRIC DATA

ALPHA =	5.000	BETA =	.000
ELEVON =	-20.000	BDFLAP =	.000
SPDBRK =	25.000	RUDDER =	.000

RUN NO. 71/ 0 GRADIENT INTERVAL = -5.00/ 5.00

Q	AILRON	DELS1	DELS2	DELS3	DELS4	SPDBRK	RUDDER
47.420	-.068	15.34400	15.10400	15.10400	15.03500	25.05970	.06342
47.380	2.456	15.34400	15.19840	15.10400	15.03500	25.09930	.04405
47.560	4.966	15.24810	15.10400	15.00960	15.03500	24.97980	.02436
47.530	7.476	15.34400	15.10400	15.10400	15.03500	25.05970	.06342
47.490	9.986	15.34400	15.10400	15.00960	15.03500	25.02010	.04405
47.450	15.020	5.34400	15.10400	15.10400	15.03500	25.05970	.06342
	GRADIENT	-.01903	.00004	-.01873	.00000	-.01584	-.00776

ARC40X80-462(OA100) OV101 (DNA02I) (15 APR 82)

REFERENCE DATA

SREF =	2690.0000 SQ.FT.	XMRP =	1076.6800 IN. XO		
LREF =	474.8100 INCHES	YMRP =	.0000 IN. YO		
BREF =	936.6800 INCHES	ZMRP =	375.0000 IN. ZO		
SCALE =	.3600				

PARAMETRIC DATA

ALPHA =	10.000	BETA =	.000
ELEVON =	-20.000	BDFLAP =	.000
SPDBRK =	25.000	RUDDER =	.000

RUN NO. 72/ 0 GRADIENT INTERVAL = -5.00/ 5.00

Q	AILRON	DELS1	DELS2	DELS3	DELS4	SPDBRK	RUDDER
47.650	-.053	15.34400	15.10400	15.10400	15.03500	25.05970	.06342
47.620	2.442	15.34400	15.10400	15.10400	15.03500	25.05970	.06342
47.580	5.408	15.34400	15.10400	15.10400	15.03500	25.05970	.06342
47.500	7.491	15.24810	15.10400	15.10400	15.03500	25.01950	.04374
47.460	10.000	15.34400	15.10400	15.10400	15.03500	25.05970	.06342
47.370	15.035	15.34400	15.10400	15.10400	15.03500	25.05970	.06342
	GRADIENT	.00000	.00000	.00000	.00000	.00000	.00000

ARC40X80-462(OA100) OV101 (DNA02J) (15 APR 82)

REFERENCE DATA

SREF =	2690.0000 SQ.FT.	XMRP =	1076.6800 IN.	XO	
LREF =	474.8100 INCHES	YMRP =	.0000 IN.	YO	
BREF =	936.6800 INCHES	ZMRP =	375.0000 IN.	ZO	
SCALE =	.3600				

PARAMETRIC DATA

ALPHA =	15.000	BETA =	.000
ELEVON =	-20.000	BDFLAP =	.000
SPDBRK =	25.000	RUDDER =	.000

RUN NO. 73/ 0 GRADIENT INTERVAL = -5.00/ 5.00

Q	AILRON	DELS1	DELS2	DELS3	DELS4	SPDBRK	RUDDER
47.540	-.053	15.34400	15.10400	15.10400	15.03500	25.05970	.06342
47.580	2.456	15.34400	15.10400	15.10400	15.03500	25.05970	.06342
47.480	4.966	15.34400	15.10400	15.10400	15.03500	25.05970	.06342
47.420	7.491	15.34400	15.19840	15.10400	15.03500	25.09930	.04405
47.350	9.970	15.24810	15.10400	15.10400	15.03500	25.01950	.04374
47.430	15.020	15.34400	15.10400	15.10400	15.03500	25.05970	.06342
	GRADIENT	.00000	-.00000	-.00000	.00000	.00000	.00000

ARC40X80-462(OA100) OV101 (DNA02K) (15 APR 82)

REFERENCE DATA

SREF =	2690.0000 SQ.FT.	XMRP =	1076.6800 IN.	XO	
LREF =	474.8100 INCHES	YMRP =	.0000 IN.	YO	
BREF =	936.6800 INCHES	ZMRP =	375.0000 IN.	ZO	
SCALE =	.3600				

PARAMETRIC DATA

ALPHA =	20.000	BETA =	.000
ELEVON =	-20.000	BDFLAP =	.000
SPDBRK =	25.000	RUDDER =	.000

RUN NO. 74/ 0 GRADIENT INTERVAL = -5.00/ 5.00

Q	AILRON	DELS1	DELS2	DELS3	DELS4	SPDBRK	RUDDER
47.470	-.068	15.34400	15.19840	15.10400	15.03500	25.09930	.04405
47.470	2.456	15.34400	15.19840	15.10400	15.03500	25.09930	.04405
47.410	4.981	15.34400	15.10400	15.10400	15.03500	25.05970	.06342
47.390	7.461	15.34400	15.19840	15.10400	15.03500	25.09930	.04405
47.330	9.986	15.34400	15.10400	15.10400	15.03500	25.05970	.06342
47.780	15.020	15.34400	15.19840	15.10400	15.03500	25.09930	.04405
	GRADIENT	.00000	-.01870	.00000	.00000	-.00784	.00384

ARC40X80-462(OA100) OV101 (DNA02L) (15 APR 82)

REFERENCE DATA

SREF =	2690.0000 SQ.FT.	XMRP =	1076.6800 IN. XO		
LREF =	474.8100 INCHES	YMRP =	.0000 IN. YO		
BREF =	936.6800 INCHES	ZMRP =	375.0000 IN. ZO		
SCALE =	.3600				

PARAMETRIC DATA

ALPHA =	.000	BETA =	5.000
ELEVON =	.000	BDFLAP =	.000
SPDBRK =	25.000	RUDDER =	.000

RUN NO. 60/ 0 GRADIENT INTERVAL = -5.00/ 5.00

Q	AILRON	DELS1	DELS2	DELS3	DELS4	SPDBRK	RUDDER
47.680	.000	15.15220	15.00960	15.10400	15.03500	24.93950	.04343
47.880	2.524	15.15220	15.29280	15.19840	15.13200	25.13880	-.01523
47.850	5.005	15.24810	15.29280	15.19840	15.13200	25.17910	.00446
47.800	7.514	15.24810	15.29280	15.19840	15.03500	25.13840	.02436
47.730	10.024	15.24810	15.29280	15.19840	15.13200	25.17910	.00446
47.790	15.088	15.24810	15.29280	15.19840	15.13200	25.17910	.00446
	GRADIENT	.00000	.11218	.03739	.03842	.07895	-.02324

ARC40X80-462(OA100) OV101 (DNA02M) (15 APR 82)

REFERENCE DATA

SREF =	2690.0000 SQ.FT.	XMRP =	1076.6800 IN. XO		
LREF =	474.8100 INCHES	YMRP =	.0000 IN. YO		
BREF =	936.6800 INCHES	ZMRP =	375.0000 IN. ZO		
SCALE =	.3600				

PARAMETRIC DATA

ALPHA =	5.000	BETA =	5.000
ELEVON =	.000	BDFLAP =	.000
SPDBRK =	25.000	RUDDER =	.000

RUN NO. 61/ 0 GRADIENT INTERVAL = -5.00/ 5.00

Q	AILRON	DELS1	DELS2	DELS3	DELS4	SPDBRK	RUDDER
47.920	.000	15.24810	15.29280	15.19840	15.13200	25.17910	.00446
47.840	2.510	15.15220	15.29280	15.19840	15.13200	25.13880	-.01523
47.740	4.990	15.24810	15.29280	15.19840	15.03500	25.13840	.02436
47.700	7.514	15.15220	15.19840	15.19840	15.13200	25.09920	.00415
47.820	10.009	15.24810	15.29280	15.19840	15.13200	25.17910	.00446
47.620	15.058	15.24810	15.29280	15.19840	15.13200	25.17910	.00446
	GRADIENT	-.00008	-.00000	-.00000	-.01940	-.00817	.00397

ARC40X80-462(OA100) OV101 (DNA02N) (15 APR 82)

REFERENCE DATA

SREF =	2690.0000 SQ.FT.	XMRP =	1076.6800 IN. XO		
LREF =	474.8100 INCHES	YMRP =	.0000 IN. YO		
BREF =	936.6800 INCHES	ZMRP =	375.0000 IN. ZO		
SCALE =	.3600				

PARAMETRIC DATA

ALPHA =	10.000	BETA =	5.000
ELEVON =	.000	BDFLAP =	.000
SPDBRK =	25.000	RUDDER =	.000

RUN NO. 62/ 0 GRADIENT INTERVAL = -5.00/ 5.00

Q	AILRON	DELS1	DELS2	DELS3	DELS4	SPDBRK	RUDDER
47.830	.000	15.15220	15.19840	15.19840	15.13200	25.09920	.00415
47.820	2.495	15.15220	15.29280	15.19840	15.13200	25.13880	-.01523
47.780	5.005	15.15220	15.19840	15.19840	15.13200	25.09920	.00415
47.670	7.499	15.15220	15.29280	15.19840	15.13200	25.13880	-.01523
47.670	10.024	15.15220	15.19840	15.19840	15.13200	25.09920	.00415
47.800	15.088	15.24810	15.29280	15.19840	15.13200	25.17910	.00446
	GRADIENT	.00000	.03784	.00000	.00000	.01587	-.00777

ARC40X80-462(OA100) OV101 (DNA020) (15 APR 82)

REFERENCE DATA

SREF =	2690.0000 SQ.FT.	XMRP =	1076.6800 IN. XO		
LREF =	474.8100 INCHES	YMRP =	.0000 IN. YO		
BREF =	936.6800 INCHES	ZMRP =	375.0000 IN. ZO		
SCALE =	.3600				

PARAMETRIC DATA

ALPHA =	15.000	BETA =	5.000
ELEVON =	.000	BDFLAP =	.000
SPDBRK =	25.000	RUDDER =	.000

RUN NO. 63/ 0 GRADIENT INTERVAL = -5.00/ 5.00

Q	AILRON	DELS1	DELS2	DELS3	DELS4	SPDBRK	RUDDER
47.700	.000	15.24810	15.29280	15.19840	15.13200	25.17910	.00446
47.800	2.524	15.24810	15.29280	15.19840	15.13200	25.17910	.00446
47.750	5.005	15.24810	15.29280	15.10400	15.13200	25.13940	-.01492
47.700	7.499	15.24810	15.29280	15.19840	15.13200	25.17910	.00446
47.770	10.024	15.24810	15.29280	15.19840	15.13200	25.17910	.00446
47.900	15.058	15.15220	15.29280	15.19840	15.13200	25.13880	-.01523
	GRADIENT	.00000	.00000	.00000	.00000	.00000	.00000

ARC40X80-462(OA100) OV101 (DNA02P) (15 APR 82)

REFERENCE DATA

SREF =	2690.0000 SQ.FT.	XMRP =	1076.6800 IN. XO		
LREF =	474.8100 INCHES	YMRP =	.0000 IN. YO		
BREF =	936.6800 INCHES	ZMRP =	375.0000 IN. ZO		
SCALE =	.3600				

PARAMETRIC DATA

ALPHA =	20.000	BETA =	5.000
ELEVON =	.000	BDFLAP =	.000
SPDBRK =	25.000	RUDDER =	.000

RUN NO. 64/ 0 GRADIENT INTERVAL = -5.00/ 5.00

Q	AILRON	DELS1	DELS2	DELS3	DELS4	SPDBRK	RUDDER
47.710	.000	15.24810	15.29280	15.19840	15.13200	25.17910	.00446
48.030	2.524	15.24810	15.29280	15.10400	15.13200	25.13940	-.01492
47.850	5.020	15.24810	15.29280	15.19940	15.13200	25.17910	.00446
47.840	7.499	15.15220	15.29280	15.19840	15.13200	25.13880	-.01523
47.810	10.009	15.24810	15.29280	15.19840	15.13200	25.17910	.00446
47.700	15.073	15.15220	15.29280	15.19840	15.13200	25.13880	-.01523
	GRADIENT	.00000	.00000	-.03739	.00000	-.01573	-.00768

ARC40X80-462(OA100) OV101 (DNA02Q) (15 APR 82)

REFERENCE DATA

SREF =	2690.0000 SQ.FT.	XMRP =	1076.6800 IN. XO		
LREF =	474.8100 INCHES	YMRP =	.0000 IN. YO		
BREF =	936.6800 INCHES	ZMRP =	375.0000 IN. ZO		
SCALE =	.3600				

PARAMETRIC DATA

ALPHA =	.000	BETA =	5.000
ELEVON =	10.000	BDFLAP =	.000
SPDBRK =	25.000	RUDDER =	.000

RUN NO. 65/ 0 GRADIENT INTERVAL = -5.00/ 5.00

Q	AILRON	DELS1	DELS2	DELS3	DELS4	SPDBRK	RUDDER
47.570	.035	15.24810	15.29280	15.19840	15.13200	25.17910	.00446
47.800	2.559	15.24810	15.29280	15.19940	15.03500	25.13840	.02436
47.770	5.068	15.24810	15.29280	15.19840	15.13200	25.17910	.00446
47.740	7.533	15.24810	15.29280	15.10400	15.03500	25.09870	.00499
47.730	10.043	15.24810	15.29280	15.19840	15.13200	25.17910	.00446
47.770	12.896	15.15220	15.19840	15.19840	15.13200	25.09920	.00415
	GRADIENT	-.00000	.00000	-.00000	-.03843	-.01613	.00789

ARC40X80-462(OA100) OV101 (DNA02R) (15 APR 82)

REFERENCE DATA

SREF =	2690.0000 SQ.FT.	XMRP =	1076.6800 IN. XO		
LREF =	474.8100 INCHES	YMRP =	.0000 IN. YO		
BREF =	936.6800 INCHES	ZMRP =	375.0000 IN. ZO		
SCALE =	.3600				

PARAMETRIC DATA

ALPHA =	5.000	BETA =	5.000
ELEVON =	10.000	BDFLAP =	.000
SPDBRK =	25.000	RUDDER =	.000

RUN NO. 66/ 0 GRADIENT INTERVAL = -5.00/ 5.00

Q	AILRON	DELS1	DELS2	DELS3	DELS4	SPDBRK	RUDDER
47.850	.049	15.24810	15.29280	15.19840	15.13200	25.17910	.00446
47.690	2.559	15.24810	15.19840	15.19840	15.13200	25.13940	.02383
47.780	5.024	15.15220	15.19640	15.10400	15.03500	25.01880	.00468
47.750	7.518	15.15220	15.29280	15.19840	15.13200	25.13880	-.01523
47.710	10.043	15.15220	15.19840	15.10400	15.13200	25.05950	-.01523
47.610	12.896	15.15220	15.29280	15.19840	15.03500	25.09810	.00468
GRADIENT		-.00000	-.03762	-.00000	.00000	-.01582	.00772

ARC40X80-462(OA100) OV101 (DNA02S) (15 APR 82)

REFERENCE DATA

SREF =	2690.0000 SQ.FT.	XMRP =	1076.6800 IN. XO		
LREF =	474.8100 INCHES	YMRP =	.0000 IN. YO		
BREF =	936.6800 INCHES	ZMRP =	375.0000 IN. ZO		
SCALE =	.3600				

PARAMETRIC DATA

ALPHA =	10.000	BETA =	5.000
ELEVON =	10.000	BDFLAP =	.000
SPDBRK =	25.000	RUDDER =	.000

RUN NO. 67/ 0 GRADIENT INTERVAL = -5.00/ 5.00

Q	AILRON	DELS1	DELS2	DELS3	DELS4	SPDBRK	RUDDER
47.830	.049	15.15220	15.29280	15.19840	15.03500	25.09810	.00468
47.440	2.559	15.15220	15.29280	15.19840	15.13200	25.13880	-.01523
47.780	5.068	15.24810	15.29280	15.19840	15.13200	25.17910	.00446
47.740	7.578	15.24810	15.29280	15.19840	15.13200	25.17910	.00446
47.710	10.043	15.15220	15.29280	15.19840	15.13200	25.13880	-.01523
47.810	12.896	15.24810	15.29280	15.19840	15.13200	25.17910	.00446
GRADIENT		.00000	.00000	-.00000	.03866	.01622	-.00793

ARC40X80-462(OA100) OV101 (DNA02T) (15 APR 82)

REFERENCE DATA

SREF =	2690.0000 SQ.FT.	XMRP =	1076.6800 IN. XO		
LREF =	474.8100 INCHES	YMRP =	.0000 IN. YO		
BREF =	936.6800 INCHES	ZMRP =	375.0000 IN. ZO		
SCALE =	.3600				

PARAMETRIC DATA

ALPHA =	15.000	BETA =	5.000
ELEVON =	10.000	BDFLAP =	.000
SPDBRK =	25.000	RUDDER =	.000

RUN NO. 68/ 0 GRADIENT INTERVAL = -5.00/ 5.00

Q	AILRON	DELS1	DELS2	DELS3	DELS4	SPDBRK	RUDDER
47.590	.049	15.15220	15.29280	15.19840	15.13200	25.13880	-.01523
47.690	2.543	15.24810	15.29280	15.19840	15.13200	25.17910	.00446
47.710	5.038	15.24810	15.29280	15.19840	15.13200	25.17910	.00446
47.740	7.534	15.24810	15.29280	15.19840	15.13200	25.17310	.00446
47.700	10.058	15.15220	15.29280	15.19840	15.03500	25.09810	.00468
47.800	12.896	15.15220	15.29280	15.19840	15.13200	25.13880	-.01523
	GRADIENT	.03845	.00000	-.00000	-.00000	.01616	.00789

ARC40X80-462(OA100) OV101 (DNA02U) (15 APR 82)

REFERENCE DATA

SREF =	2690.0000 SQ.FT.	XMRP =	1076.6800 IN. XO		
LREF =	474.8100 INCHES	YMRP =	.0000 IN. YO		
BREF =	936.6800 INCHES	ZMRP =	375.0000 IN. ZO		
SCALE =	.3600				

PARAMETRIC DATA

ALPHA =	20.000	BETA =	5.000
ELEVON =	10.000	BDFLAP =	.000
SPDBRK =	25.000	RUDDER =	.000

RUN NO. 69/ 0 GRADIENT INTERVAL = -5.00/ 5.00

Q	AILRON	DELS1	DELS2	DELS3	DELS4	SPDBRK	RUDDER
47.550	.064	15.24810	15.29280	15.10400	15.13200	25.13940	-.01492
47.680	2.559	15.24810	15.19840	15.10400	15.13200	25.09980	.00446
47.610	5.054	15.15220	15.29280	15.19840	15.03500	25.09810	.00468
47.460	7.534	15.15220	15.29280	15.10400	15.13200	25.09920	-.03460
47.300	10.058	15.15220	15.29280	15.19840	15.13200	25.13880	-.01523
47.320	12.896	15.24810	15.29280	15.19840	15.13200	25.17910	.00446
	GRADIENT	.00000	-.03785	.00000	-.00000	-.01588	.00777

ARC40X80-462(OA100) OV101 (DNA02V) (15 APR 82)

REFERENCE DATA

SREF =	2690.0000 SQ.FT.	XMRP =	1076.6800 IN. XO		
LREF =	474.8100 INCHES	YMRP =	.0000 IN. YO		
BREF =	936.6800 INCHES	ZMRP =	375.0000 IN. ZO		
SCALE =	.3600				

PARAMETRIC DATA

ALPHA =	.000	BETA =	10.000
ELEVON =	.000	BDFLAP =	.000
SPDBRK =	25.000	RUDDER =	.000

RUN NO. 75/ 0 GRADIENT INTERVAL = -5.00/ 5.00

Q	AILRON	DELS1	DELS2	DELS3	DELS4	SPDBRK	RUDDER
47.400	.000	15.24810	15.19840	15.10400	15.03500	25.05910	.02437
47.360	2.524	15.24810	15.19840	15.10400	15.03500	25.05910	.02437
47.470	5.005	15.24810	15.19840	15.10400	15.03500	25.05910	.02437
47.420	7.514	15.24810	15.19840	15.10400	15.03500	25.05910	.02437
47.490	10.009	15.15220	15.10400	15.10400	15.03500	24.97920	.02406
47.360	15.058	15.15220	15.19840	15.10400	15.03500	25.01880	.00468
	GRADIENT	.00000	.00000	.00000	.00000	.00000	.00000

ARC40X80-462(OA100) OV101 (DNA02W) (15 APR 82)

REFERENCE DATA

SREF =	2690.0000 SQ.FT.	XMRP =	1076.6800 IN. XO		
LREF =	474.8100 INCHES	YMRP =	.0000 IN. YO		
BREF =	936.6800 INCHES	ZMRP =	375.0000 IN. ZO		
SCALE =	.3600				

PARAMETRIC DATA

ALPHA =	5.000	BETA =	10.000
ELEVON =	.000	BDFLAP =	.000
SPDBRK =	25.000	RUDDER =	.000

RUN NO. 76/ 0 GRADIENT INTERVAL = -5.00/ 5.00

Q	AILRON	DELS1	DELS2	DELS3	DELS4	SPDBRK	RUDDER
47.750	.000	15.15220	15.19840	15.10400	15.03500	25.01880	.00468
47.750	2.509	15.15220	15.19840	15.10400	15.03500	25.01880	.00468
47.660	4.990	15.05630	15.19840	15.10400	15.03500	24.97850	-.01500
47.580	7.514	15.15220	15.10400	15.10400	15.03500	24.97920	.02406
47.440	10.024	15.15220	15.19840	15.10400	15.03500	25.01880	.00468
47.440	15.058	15.15220	15.19840	15.10400	15.03500	25.01880	.00468
	GRADIENT	-.01918	.00000	.00000	.00000	-.00806	-.00394

ARC40X80-462(OA100) OV101 (DNA02X) (15 APR 82)

REFERENCE DATA

SREF =	2690.0000 SQ.FT.	XMRP =	1076.6800 IN. XO		
LREF =	474.8100 INCHES	YMRP =	.0000 IN. YO		
BREF =	936.6800 INCHES	ZMRP =	375.0000 IN. ZO		
SCALE =	.3600				

PARAMETRIC DATA

ALPHA =	10.000	BETA =	10.000
ELEVON =	.000	BDFLAP =	.000
SPDBRK =	25.000	RUDDER =	.000

RUN NO. 77/ 0 GRADIENT INTERVAL = -5.00/ 5.00

Q	AILRON	DELS1	DELS2	DELS3	DELS4	SPDBRK	RUDDER
47.680	.000	15.15220	15.19840	15.10400	15.13200	25.05950	-.01523
47.630	2.509	15.15220	15.10400	15.10400	15.03500	24.97920	.02406
47.600	5.019	15.15220	15.19840	15.10400	15.03500	25.01880	.00468
47.450	7.529	15.24810	15.19840	15.10400	15.03500	25.05910	.02437
47.390	10.024	15.24810	15.19840	15.10400	15.03500	25.05910	.02437
47.370	15.058	15.24810	15.10400	15.10400	15.03500	25.01950	.04374
	GRADIENT	.00000	-.03762	.00000	-.03866	-.03200	.01566

ARC40X80-462(OA100) OV101 (DNA02Y) (15 APR 82)

REFERENCE DATA

SREF =	2690.0000 SQ.FT.	XMRP =	1076.6800 IN. XO		
LREF =	474.8100 INCHES	YMRP =	.0000 IN. YO		
BREF =	936.6800 INCHES	ZMRP =	375.0000 IN. ZO		
SCALE =	.3600				

PARAMETRIC DATA

ALPHA =	15.000	BETA =	10.000
ELEVON =	.000	BDFLAP =	.000
SPDBRK =	25.000	RUDDER =	.000

RUN NO. 78/ 0 GRADIENT INTERVAL = -5.00/ 5.00

Q	AILRON	DELS1	DELS2	DELS3	DELS4	SPDBRK	RUDDER
47.490	.000	15.24810	15.19840	15.19840	15.03500	25.09870	.04374
47.420	2.481	15.24810	15.29280	15.19840	15.03500	25.13840	.02436
47.490	5.005	15.24810	15.19840	15.19840	15.03500	25.09870	.04374
47.420	7.514	15.24810	15.19840	15.19840	15.03500	25.09870	.04374
47.270	10.024	15.24810	15.29280	15.19840	15.03500	25.13840	.02436
47.500	15.088	15.24810	15.19840	15.19840	15.03500	25.09870	.04374
	GRADIENT	.00000	.03805	.00000	.00000	.01600	-.00781

ARC40X80-462(OA100) OV101 (DNA02Z) (15 APR 82)

REFERENCE DATA

SREF =	2690.0000 SQ.FT.	XMRP =	1076.6800 IN. XO		
LREF =	474.8100 INCHES	YMRP =	.0000 IN. YO		
BREF =	936.6800 INCHES	ZMRP =	375.0000 IN. ZO		
SCALE =	.3600				

PARAMETRIC DATA

ALPHA =	20.000	BETA =	10.000
ELEVON =	.000	BDFLAP =	.000
SPDBRK =	25.000	RUDDER =	.000

RUN NO. 79/ 0 GRADIENT INTERVAL = -5.00/ 5.00

Q	AILRON	DELS1	DELS2	DELS3	DELS4	SPDBRK	RUDDER
47.610	.000	15.15220	15.29280	15.10400	15.03500	25.05840	-.01469
47.510	2.510	15.15220	15.29280	15.19840	15.03500	25.09810	.00468
47.470	5.020	15.15220	15.29280	15.19840	15.03500	25.09810	.00468
47.420	7.514	15.24810	15.29280	15.19840	15.03500	25.13840	.02436
47.380	10.009	15.24810	15.29280	15.19840	15.03500	25.13840	.02436
47.730	15.073	15.15220	15.29280	15.19840	15.03500	25.09810	.00468
	GRADIENT	.00000	.00000	.03761	.00000	.01582	.00772

ARC40X80-462(OA100) OV101 (DNA03A) (15 APR 82)

REFERENCE DATA

SREF =	2690.0000 SQ.FT.	XMRP =	1076.6800 IN. XO		
LREF =	474.8100 INCHES	YMRP =	.0000 IN. YO		
BREF =	936.6800 INCHES	ZMRP =	375.0000 IN. ZO		
SCALE =	.3600				

PARAMETRIC DATA

ALPHA =	.000	BETA =	10.000
ELEVON =	10.000	BDFLAP =	.000
SPDBRK =	25.000	RUDDER =	.000

RUN NO. 80/ 0 GRADIENT INTERVAL = -5.00/ 5.00

Q	AILRON	DELS1	DELS2	DELS3	DELS4	SPDBRK	RUDDER
47.370	.035	15.15220	15.29280	15.19840	15.13200	25.13880	-.01523
47.290	2.559	15.24810	15.19840	15.19840	15.13200	25.13940	.02383
47.470	5.053	15.24810	15.19840	15.19840	15.13200	25.13940	.02383
47.510	7.533	15.24810	15.19840	15.19840	15.03500	25.09870	.04374
47.370	10.058	15.24810	15.29280	15.10400	15.03500	25.09870	.00499
47.570	12.896	15.24810	15.29280	15.19840	15.03500	25.13840	.02436
	GRADIENT	.03800	-.03740	-.00000	.00000	.00024	.01548

ARC40X80-462(OA100) OV101 (DNA03B) (15 APR 82)

REFERENCE DATA

SREF =	2690.0000 SQ.FT.	XMRP =	1076.6800 IN.	XO	
LREF =	474.8100 INCHES	YMRP =	.0000 IN.	YO	
BREF =	936.6800 INCHES	ZMRP =	375.0000 IN.	ZO	
SCALE =	.3600				

PARAMETRIC DATA

ALPHA =	5.000	BETA =	10.000
ELEVON =	10.000	BDFLAP =	.000
SPDBRK =	25.000	RUDDER =	.000

RUN NO. 81/ 0 GRADIENT INTERVAL = -5.00/ 5.00

Q	AILRON	DELS1	DELS2	DELS3	DELS4	SPDBRK	RUDDER
47.580	.010	15.24810	15.19840	15.10400	15.03500	25.05910	.02437
47.460	2.529	15.15220	15.19840	15.10400	15.03500	25.01880	.00468
47.450	5.054	15.24810	15.29280	15.10400	15.03500	25.09870	.00499
47.340	7.548	15.24810	15.29280	15.19840	15.03500	25.13840	.02436
47.720	10.043	15.24810	15.29280	15.10400	15.03500	25.09870	.00499
47.370	12.896	15.24810	15.29280	15.10400	15.03500	25.09870	.00499
	GRADIENT	-.03808	.00000	-.00000	.00000	-.01600	-.00781

ARC40X80-462(OA100) OV101 (DNA03C) (15 APR 82)

REFERENCE DATA

SREF =	2690.0000 SQ.FT.	XMRP =	1076.6800 IN.	XO	
LREF =	474.8100 INCHES	YMRP =	.0000 IN.	YO	
BREF =	936.6800 INCHES	ZMRP =	375.0000 IN.	ZO	
SCALE =	.3600				

PARAMETRIC DATA

ALPHA =	10.000	BETA =	10.000
ELEVON =	10.000	BDFLAP =	.000
SPDBRK =	25.000	RUDDER =	.000

RUN NO. 82/ 0 GRADIENT INTERVAL = -5.00/ 5.00

Q	AILRON	DELS1	DELS2	DELS3	DELS4	SPDBRK	RUDDER
47.560	.064	15.24810	15.19840	15.19840	15.03500	25.09870	.04374
47.530	2.543	15.24810	15.19840	15.19840	15.03500	25.09870	.04374
47.500	5.053	15.24810	15.19840	15.10400	15.03500	25.05910	.02437
47.540	7.563	15.24810	15.19840	15.10400	15.03500	25.05910	.02437
47.370	10.043	15.24810	15.29280	15.10400	15.03500	25.09870	.00499
47.080	12.896	15.24810	15.19840	15.10400	15.03500	25.05910	.02437
	GRADIENT	.00000	-.00000	-.00000	.00000	.00000	-.00000

ARC40X80-462(OA100) OV101 (DNA03D) (15 APR 82)

REFERENCE DATA

SREF =	2690.0000 SQ.FT.	XMRP =	1076.6800 IN. XO		
LREF =	474.8100 INCHES	YMRP =	.0000 IN. YO		
BREF =	936.6800 INCHES	ZMRP =	375.0000 IN. ZO		
SCALE =	.3600				

PARAMETRIC DATA

ALPHA =	15.000	BETA =	10.000
ELEVON =	10.000	BDFLAP =	.000
SPDBRK =	25.000	RUDDER =	.000

RUN NO. 83/ 0 GRADIENT INTERVAL = -5.00/ 5.00

Q	AILRON	DELS1	DELS2	DELS3	DELS4	SPDBRK	RUDDER
47.350	.049	15.24810	15.29280	15.19840	15.03500	25.13840	.02436
47.310	2.543	15.24810	15.29280	15.10400	15.03500	25.09870	.00499
47.290	5.039	15.24810	15.19840	15.19840	15.03500	25.09870	.04374
47.380	7.549	15.24810	15.29280	15.10400	15.03500	25.09870	.00499
47.350	10.028	15.24810	15.29280	15.19840	15.03500	25.13840	.02436
47.360	12.896	15.24810	15.29280	15.10400	15.03500	25.09870	.00499
	GRADIENT	.00000	-.00000	-.03785	.00000	-.01592	-.00777

ARC40X80-462(OA100) OV101 (DNA03E) (15 APR 82)

REFERENCE DATA

SREF =	2690.0000 SQ.FT.	XMRP =	1076.6800 IN. XO		
LREF =	474.8100 INCHES	YMRP =	.0000 IN. YO		
BREF =	936.6800 INCHES	ZMRP =	375.0000 IN. ZO		
SCALE =	.3600				

PARAMETRIC DATA

ALPHA =	20.000	BETA =	10.000
ELEVON =	10.000	BDFLAP =	.000
SPDBRK =	25.000	RUDDER =	.000

RUN NO. 84/ 0 GRADIENT INTERVAL = -5.00/ 5.00

Q	AILRON	DELS1	DELS2	DELS3	DELS4	SPDBRK	RUDDER
47.920	.035	15.15220	15.10400	15.19840	15.03500	25.01880	.04343
47.790	2.559	15.15220	15.10400	15.19840	15.03500	25.01880	.04343
47.750	5.038	15.15220	15.19840	15.19840	15.03500	25.05840	.02406
47.640	7.548	15.15220	15.19840	15.19840	15.03500	25.05840	.02406
47.520	10.058	15.15220	15.19840	15.19840	15.03500	25.05840	.02406
47.560	12.896	15.05630	15.10400	15.19840	15.03500	24.97850	.02375
	GRADIENT	.00000	.00000	-.00000	-.00000	.00000	-.00000

ARC40X80-462(OA100) OV101 (DNA03F) (15 APR 82)

REFERENCE DATA

SREF =	2690.0000 SQ.FT.	XMRP =	1076.6800 IN. XO		
LREF =	474.8100 INCHES	YMRP =	.0000 IN. YO		
BREF =	936.6800 INCHES	ZMRP =	375.0000 IN. ZO		
SCALE =	.3600				

PARAMETRIC DATA

ALPHA =	.000	BETA =	.000
ELEVON =	.000	AILRON =	.000
SPDBRK =	25.000	RUDDER =	.000

RUN NO. 35/ 0 GRADIENT INTERVAL = -5.00/ 5.00

Q	BDFLAP	DELS1	DELS2	DELS3	DELS4	SPDBRK	RUDDER
47.610	-11.543	15.34400	15.29280	15.19840	15.22900	25.26010	.00423
47.740	-.201	15.34400	15.29280	15.19840	15.22900	25.26010	.00423
47.830	.000	15.34400	15.19840	15.19840	15.13200	25.17970	.04351
47.860	16.360	15.34400	15.19840	15.19840	15.13200	25.17970	.04351
47.800	22.684	15.34400	15.19840	15.19840	15.13200	25.17970	.04351
	GRADIENT	.00000	-.47026	.00000	-.48321	-.40052	.19570

ARC40X80-462(OA100) OV101 (DNA03G) (15 APR 82)

REFERENCE DATA

SREF =	2690.0000 SQ.FT.	XMRP =	1076.6800 IN. XO		
LREF =	474.8100 INCHES	YMRP =	.0000 IN. YO		
BREF =	936.6800 INCHES	ZMRP =	375.0000 IN. ZO		
SCALE =	.3600				

PARAMETRIC DATA

ALPHA =	5.000	BETA =	.000
ELEVON =	.000	AILRON =	.000
SPDBRK =	25.000	RUDDER =	.000

RUN NO. 36/ 0 GRADIENT INTERVAL = -5.00/ 5.00

Q	BDFLAP	DELS1	DELS2	DELS3	DELS4	SPDBRK	RUDDER
47.580	-11.543	15.34400	15.29280	15.19840	15.13200	25.21930	.02414
47.730	-.201	15.34400	15.19840	15.10400	15.13200	25.14010	.02414
47.630	16.561	15.34400	15.19840	15.19840	15.13200	25.17970	.04351
47.510	22.684	15.34400	15.19840	15.19840	15.13200	25.17970	.04351
	GRADIENT	.00000	.00000	.00000	.00000	.00000	.00000

ARC40X80-462(OA100) OV101 (DNA03H) (15 APR 82)

REFERENCE DATA

SREF =	2690.0000 SQ.FT.	XMRP =	1076.6800 IN. XO		
LREF =	474.8100 INCHES	YMRP =	.0000 IN. YO		
BREF =	936.6800 INCHES	ZMRP =	375.0000 IN. ZO		
SCALE =	.3600				

PARAMETRIC DATA

ALPHA =	10.000	BETA =	.000
ELEVON =	.000	AILRON =	.000
SPDBRK =	25.000	RUDDER =	.000

RUN NO. 37/ 0 GRADIENT INTERVAL = -5.00/ 5.00

Q	BDFLAP	DELS1	DELS2	DELS3	DELS4	SPDBRK	RUDDER
47.700	-11.543	15.34400	15.19840	15.19840	15.13200	25.17970	.04351
47.570	-.100	15.34400	15.19840	15.10400	15.13200	25.14010	.02414
47.350	16.561	15.34400	15.19840	15.19840	15.13200	25.17970	.04351
47.070	22.684	15.24810	15.19840	15.10400	15.13200	25.09980	.00446
	GRADIENT	.00000	.00000	.00000	.00000	.00000	.00000

ARC40X80-462(OA100) OV101(DECREASING BDFLAP) (DNA03I) (15 APR 82)

REFERENCE DATA

SREF =	2690.0000 SQ.FT.	XMRP =	1076.6800 IN. XO		
LREF =	474.8100 INCHES	YMRP =	.0000 IN. YO		
BREF =	936.6800 INCHES	ZMRP =	375.0000 IN. ZO		
SCALE =	.3600				

PARAMETRIC DATA

ALPHA =	10.000	BETA =	.000
ELEVON =	.000	AILRON =	.000
SPDBRK =	25.000	RUDDER =	.000

RUN NO. 38/ 0 GRADIENT INTERVAL = -5.00/ 5.00

Q	BDFLAP	DELS1	DELS2	DELS3	DELS4	SPDBRK	RUDDER
47.810	-11.543	15.34400	15.29280	15.19840	15.13200	25.21930	.02414
47.910	-.100	15.34400	15.19840	15.10400	15.13200	25.14010	.02414
47.740	16.461	15.34400	15.29280	15.19840	15.03500	25.17860	.04405
47.360	22.583	15.34400	15.29280	15.19840	15.13200	25.21930	.02414
	GRADIENT	.00000	.00000	.00000	.00000	.00000	.00000

ARC40X80-462(OA100) OV101 (DNA03J) (15 APR 82)

REFERENCE DATA

SREF =	2690.0000	SQ.FT.	XMRP =	1076.6800	IN. XO			
LREF =	474.8100	INCHES	YMRP =	.0000	IN. YO			
BREF =	936.6800	INCHES	ZMRP =	375.0000	IN. ZO			
SCALE =	.3600							

PARAMETRIC DATA

ALPHA =	15.000	BETA =	.000
ELEVON =	.000	AILRON =	.000
SPDBRK =	25.000	RUDDER =	.000

RUN NO. 39/ 0 GRADIENT INTERVAL = -5.00/ 5.00

Q	BDFLAP	DELS1	DELS2	DELS3	DELS4	SPDBRK	RUDDER
47.330	-11.543	15.34400	15.29280	15.10400	15.22900	25.22040	-.01515
47.320	-.201	15.34400	15.29280	15.10400	15.13200	25.17970	.00476
47.410	16.360	15.34400	15.29280	15.10400	15.13200	25.17970	.00476
47.490	22.684	15.34400	15.29280	15.19840	15.03500	25.17860	.04405
	GRADIENT	.00000	.00000	.00000	.00000	.00000	.00000

ARC40X80-462(OA100) OV101 (DNA03K) (15 APR 82)

REFERENCE DATA

SREF =	2690.0000	SQ.FT.	XMRP =	1076.6800	IN. XO			
LREF =	474.8100	INCHES	YMRP =	.0000	IN. YO			
BREF =	936.6800	INCHES	ZMRP =	375.0000	IN. ZO			
SCALE =	.3600							

PARAMETRIC DATA

ALPHA =	20.000	BETA =	.000
ELEVON =	.000	AILRON =	.000
SPDBRK =	25.000	RUDDER =	.000

RUN NO. 40/ 0 GRADIENT INTERVAL = -5.00/ 5.00

Q	BDFLAP	DELS1	DELS2	DELS3	DELS4	SPDBRK	RUDDER
47.330	-11.543	15.34400	15.29280	15.19840	15.22900	25.26010	.00423
47.120	-.100	15.34400	15.29280	15.19840	15.13200	25.21930	.02414
47.470	16.461	15.24810	15.29280	15.10400	15.13200	25.13940	-.01492
47.930	22.684	15.24810	15.19840	15.19840	15.13200	25.13940	.02383
	GRADIENT	.00000	.00000	.00000	.00000	.00000	.00000

ARC40X80-462(OA100) OV101 (DNA03L) (15 APR 82)

REFERENCE DATA

SREF =	2690.0000 SQ.FT.	XMRP =	1076.6800 IN.	XO	
LREF =	474.8100 INCHES	YMRP =	.0000 IN.	YO	
BREF =	936.6800 INCHES	ZMRP =	375.0000 IN.	ZO	
SCALE =	.3600				

PARAMETRIC DATA

ALPHA =	.000	BETA =	.000
ELEVON =	.000	AILRON =	.000
BDFLAP =	.000	RUDDER =	.000

RUN NO. 41/ 0 GRADIENT INTERVAL = -5.00/ 5.00

Q	SPDBRK	DELS1	DELS2	DELS3	DELS4	RUDDER
47.750	.000	.00000	.00000	.00000	.00000	.00000
47.510	25.180	15.34400	15.19840	15.19840	15.13200	.04351
47.510	55.459	32.79780	32.66240	32.56800	32.49500	.04278
47.360	87.628	49.58030	49.56000	49.46560	49.17900	.06300
	GRADIENT	.00000	.00000	.00000	.00000	.00000

ARC40X80-462(OA100) OV101 (DNA03M) (15 APR 82)

REFERENCE DATA

SREF =	2690.0000 SQ.FT.	XMRP =	1076.6800 IN.	XO	
LREF =	474.8100 INCHES	YMRP =	.0000 IN.	YO	
BREF =	936.6800 INCHES	ZMRP =	375.0000 IN.	ZO	
SCALE =	.3600				

PARAMETRIC DATA

ALPHA =	5.000	BETA =	.000
ELEVON =	.000	AILRON =	.000
BDFLAP =	.000	RUDDER =	.000

RUN NO. 42/ 0 GRADIENT INTERVAL = -5.00/ 5.00

Q	SPDBRK	DELS1	DELS2	DELS3	DELS4	RUDDER
47.450	-.039	.00000	-.09440	.00000	.00000	.01938
47.560	25.179	15.24810	15.29280	15.19840	15.13200	.00446
47.560	55.459	32.79780	32.66240	32.56800	32.49500	.04278
47.540	87.629	49.67620	49.56000	49.37120	49.17900	.06330
	GRADIENT	.00000	.00000	.00000	.00000	.00000

ARC40X80-462(OA100) OV101 (DNA03N) (15 APR 82)

REFERENCE DATA

SREF =	2690.0000 SQ.FT.	XMRP =	1076.6800 IN. XO		
LREF =	474.8100 INCHES	YMRP =	.0000 IN. YO		
BREF =	936.6800 INCHES	ZMRP =	375.0000 IN. ZO		
SCALE =	.3600				

PARAMETRIC DATA

ALPHA =	10.000	BETA =	.000
ELEVON =	.000	AILRON =	.000
BDFLAP =	.000	RUDDER =	.000

RUN NO. 43/ 0 GRADIENT INTERVAL = -5.00/ 5.00

Q	SPDBRK	DELS1	DELS2	DELS3	DELS4	RUDDER
47.640	.039	.09590	.00000	.00000	.00000	.01968
47.530	25.141	15.24810	15.19840	15.10400	15.22900	-.01545
47.100	55.545	32.70190	32.75680	32.66240	32.59200	.00318
47.680	87.677	49.67620	49.56000	49.46560	49.17900	.08268
	GRADIENT	.00000	.00000	.00000	.00000	.00000

ARC40X80-462(OA100) OV101(DECREASING SPDBRK) (DNA030) (15 APR 82)

REFERENCE DATA

SREF =	2690.0000 SQ.FT.	XMRP =	1076.6800 IN. XO		
LREF =	474.8100 INCHES	YMRP =	.0000 IN. YO		
BREF =	936.6800 INCHES	ZMRP =	375.0000 IN. ZO		
SCALE =	.3600				

PARAMETRIC DATA

ALPHA =	10.000	BETA =	.000
ELEVON =	.000	AILRON =	.000
BDFLAP =	.000	RUDDER =	.000

RUN NO. 44/ 0 GRADIENT INTERVAL = -5.00/ 5.00

Q	SPDBRK	DELS1	DELS2	DELS3	DELS4	RUDDER
47.660	.079	.09590	.00000	.00000	.09700	-.00023
47.720	25.139	15.24810	15.19840	15.19840	15.13200	.02383
47.360	55.545	32.70190	32.75680	32.66240	32.59200	.00318
47.610	87.677	49.67620	49.56000	49.46560	49.17900	.08268
	GRADIENT	.00000	.00000	.00000	.00000	.00000

ARC40X80-462(OA100) OV101 (DNA03P) (15 APR 82)

REFERENCE DATA

SREF =	2690.0000 SQ.FT.	XMRP =	1076.6800 IN. XO		
LREF =	474.8100 INCHES	YMRP =	.0000 IN. YO		
BREF =	936.6800 INCHES	ZMRP =	375.0000 IN. ZO		
SCALE =	.3600				

PARAMETRIC DATA

ALPHA =	15.000	BETA =	.000
ELEVON =	.000	AILRON =	.000
BDFLAP =	.000	RUDDER =	.000

RUN NO. 48/ 0 GRADIENT INTERVAL = -5.00/ 5.00

Q	SPDBRK	DELS1	DELS2	DELS7	DELS4	RUDDER
47.660	-.079	.00000	.00000	-.09440	-.09700	.00053
47.500	25.100	15.24810	15.10400	15.19840	15.13200	.04321
47.520	55.329	32.70190	32.66240	32.47360	32.39800	.02363
47.460	87.629	49.67620	49.56000	49.37120	49.17900	.06330
	GRADIENT	.00000	.00000	.00000	.00000	.00000

ARC40X80-462(OA100) OV101 (DNA03Q) (15 APR 82)

REFERENCE DATA

SREF =	2690.0000 SQ.FT.	XMRP =	1076.6800 IN. XO		
LREF =	474.8100 INCHES	YMRP =	.0000 IN. YO		
BREF =	936.6800 INCHES	ZMRP =	375.0000 IN. ZO		
SCALE =	.3600				

PARAMETRIC DATA

ALPHA =	20.000	BETA =	.000
ELEVON =	.000	AILRON =	.000
BDFLAP =	.000	RUDDER =	.000

RUN NO. 49/ 0 GRADIENT INTERVAL = -5.00/ 5.00

Q	SPDBRK	DELS1	DELS2	DELS3	DELS4	RUDDER
47.680	.040	.00000	.00000	.00000	.09700	-.01991
47.550	25.100	15.24810	15.10400	15.19840	15.13200	.04321
47.520	55.415	32.60600	32.75680	32.56800	32.49500	-.01597
	GRADIENT	.00000	.00000	.00000	.00000	.00000

ARC40X80-462(OA100) OV101(RCS PORTS CLOSED) (DNA03R) (15 APR 82)

REFERENCE DATA

SREF =	2690.0000 SQ.FT.	XMRP =	1076.6800 IN. XO		
LREF =	474.8100 INCHES	YMRP =	.0000 IN. YO		
BREF =	936.6800 INCHES	ZMRP =	375.0000 IN. ZO		
SCALE =	.3600				

PARAMETRIC DATA

BETA =	.000	ELEVON =	.000
AILRON =	.000	BDFLAP =	.000
SPDBRK =	25.000	RUDDER =	.000

RUN NO. 101/ 0 GRADIENT INTERVAL = -5.00/ 5.00

Q	ALPHA	DELS1	DELS2	DELS3	DELS4	SPDBRK	RUDDER
47.490	-5.240	15.15220	15.29280	15.10400	14.84100	24.97700	.02512
47.690	-2.649	15.24810	15.29280	15.10400	14.93800	25.05800	.02490
47.600	-.056	15.24810	15.29280	15.10400	14.93800	25.05800	.02490
47.720	2.541	15.24810	15.29280	15.10400	14.93800	25.05800	.02490
47.640	5.139	15.24810	15.29280	15.10400	14.93800	25.05800	.02490
47.850	7.739	15.24810	15.19840	15.00960	14.93800	24.97870	.02490
47.600	10.342	15.15220	15.19840	15.10400	14.93800	24.97810	.02459
47.730	12.941	15.15220	15.29280	15.00960	14.93800	24.97810	-.01416
47.580	15.556	15.15220	15.29280	15.00960	14.93800	24.97810	-.01416
47.500	18.180	15.15220	15.29280	15.10400	14.93800	25.01770	.00522
47.570	20.826	15.24810	15.29280	15.10400	14.93800	25.05800	.02490
46.010	26.006	15.15220	15.19840	15.10400	14.93800	24.97810	.02459
	GRADIENT	-.00000	.00000	.00000	.00000	.00000	.00000

ARC40X80-462(OA100) OV101(RCS PORTS CLOSED) (DNA03S) (15 APR 82)

REFERENCE DATA

SREF =	2690.0000 SQ.FT.	XMRP =	1076.6800 IN. XO		
LREF =	474.8100 INCHES	YMRP =	.0000 IN. YO		
BREF =	936.6800 INCHES	ZMRP =	375.0000 IN. ZO		
SCALE =	.3600				

PARAMETRIC DATA

ALPHA =	.000	ELEVON =	.000
AILRON =	.000	BDFLAP =	.000
SPDBRK =	25.000	RUDDER =	.000

RUN NO. 102/ 0 GRADIENT INTERVAL = -5.00/ 5.00

Q	BETA	DELS1	DELS2	DELS3	DELS4	SPDBRK	RUDDER
47.510	-13.000	15.15220	15.57600	15.00960	14.93800	25.09700	-.07229
47.670	-10.000	15.15220	15.38720	15.10400	14.93800	25.05730	-.01416
47.610	-5.000	15.15220	15.38720	15.10400	14.93800	25.05730	-.01416
47.630	-2.000	15.15220	15.29280	15.10400	14.93800	25.01770	.00522
47.730	.000	15.15220	15.29280	15.10400	14.93800	25.01770	.00522
47.580	2.000	15.24810	15.29280	15.10400	14.93800	25.05800	.02490
47.730	5.000	15.24810	15.29280	15.10400	14.93800	25.05800	.02490
47.630	10.000	15.24810	15.19840	15.10400	14.93800	25.01830	.04427
47.590	15.000	15.53580	15.19840	15.00960	14.93800	25.09950	.08395
47.660	20.000	15.43990	15.29280	15.19840	14.93800	25.17810	.08364
	GRADIENT	.01157	-.00814	.00000	.00000	.00145	.00405

ARC40X80-462(OA100) OV101(RCS PORTS CLOSED) (DNA03T) (15 APR 82)

REFERENCE DATA

SREF =	2690.0000 SQ.FT.	XMRP =	1076.6800 IN.	XO	
LREF =	474.8100 INCHES	YMRP =	.0000 IN.	YO	
BREF =	936.6800 INCHES	ZMRP =	375.0000 IN.	ZO	
SCALE =	.3600				

PARAMETRIC DATA

ALPHA =	5.000	ELEVON =	.000
AILRON =	.000	BDFLAP =	.000
SPDBRK =	25.000	RUDDER =	.000

RUN NO. 103/ 0 GRADIENT INTERVAL = -5.00/ 5.00

Q	BETA	DELS1	DELS2	DELS3	DELS4	SPDBRK	RUDDER
47.560	-13.000	15.15220	15.38720	15.00960	14.93800	25.01770	-.03354
47.650	-10.000	15.24810	15.29280	15.10400	15.03500	25.09870	.00199
47.600	-5.000	15.24810	15.29260	15.10400	14.93800	25.05800	.02490
47.660	-2.000	15.24810	15.29280	15.10400	14.93800	25.05800	.02490
47.650	.000	15.24810	15.19840	15.10400	14.93800	25.01830	.04427
47.620	2.000	15.24810	15.19840	15.10400	15.03500	25.05910	.02437
47.710	5.000	15.24810	15.19840	15.10400	14.93800	25.01830	.04427
47.750	10.000	15.24810	15.29280	15.10400	14.93800	25.05800	.02490
47.650	15.000	15.53580	15.29280	15.10400	14.84100	25.13800	.10386
47.600	20.000	15.24810	15.19840	15.10400	14.93800	25.01830	.04427
	GRADIENT	.00000	-.01139	.00000	.00334	-.00338	.00165

ARC40X80-462(OA100) OV101(RCS PORTS CLOSED) (DNA03U) (15 APR 82)

REFERENCE DATA

SREF =	2690.0000 SQ.FT.	XMRP =	1076.6800 IN.	XO	
LREF =	474.8100 INCHES	YMRP =	.0000 IN.	YO	
BREF =	936.6800 INCHES	ZMRP =	375.0000 IN.	ZO	
SCALE =	.3600				

PARAMETRIC DATA

ALPHA =	10.000	ELEVON =	.000
AILRON =	.000	BDFLAP =	.000
SPDBRK =	25.000	RUDDER =	.000

RUN NO. 104/ 0 GRADIENT INTERVAL = -5.00/ 5.00

Q	BETA	DELS1	DELS2	DELS3	DELS4	SPDBRK	RUDDER
47.610	-13.000	15.15220	15.19840	15.10400	15.13200	25.05950	-.01523
47.590	-10.000	15.24810	15.10400	15.19840	15.13200	25.09980	.04321
47.560	-5.000	15.24810	15.00960	15.19840	15.13200	25.06020	.06258
47.520	-2.000	15.24810	15.29280	15.19840	15.03500	25.13840	.02436
47.450	.000	15.24810	15.29280	15.19840	15.03500	25.13840	.02436
47.610	2.000	15.15220	15.29280	15.19840	15.03500	25.09810	.00468
47.660	5.000	15.24810	15.19840	15.10400	15.03500	25.05910	.02437
47.470	10.000	15.15220	15.29280	15.19840	14.93800	25.05740	.02459
47.600	15.000	15.53580	15.19840	15.19840	14.93800	25.17880	.12270
47.630	20.000	15.24810	15.19840	15.19840	15.13200	25.13940	.02383
	GRADIENT	-.00331	.01628	-.00814	-.00836	-.00148	-.00397

ARC40X80-462(OA100) OV101(RCS PORTS CLOSED) (DNA03V) (15 APR 82)

REFERENCE DATA

SREF =	2690.0000 SQ.FT.	XMRP =	1076.6800 IN. XO		
LREF =	474.8100 INCHES	YMRP =	.0000 IN. YO		
BREF =	936.6800 INCHES	ZMRP =	375.0000 IN. ZO		
SCALE =	.3600				

PARAMETRIC DATA

ALPHA =	15.000	ELEVON =	.000
AILRON =	.000	BDFLAP =	.000
SPDBRK =	25.000	RUDDER =	.000

RUN NO. 105/ 0 GRADIENT INTERVAL = -5.00/ 5.00

Q	BETA	DELS1	DELS2	DELS3	DELS4	SPDBRK	RUDDER
47.610	-13.000	15.15220	15.57600	15.10400	15.22900	25.25680	-.11264
47.680	-10.000	15.15220	15.29280	15.19840	15.13200	25.13880	-.01523
47.610	-5.000	15.24810	15.19840	15.19840	15.13200	25.13940	.02383
47.520	-2.000	15.15220	15.19840	15.19840	15.03500	25.05840	.02406
47.510	.000	15.15220	15.19840	15.19840	15.03500	25.05840	.02406
47.690	2.000	15.15220	15.19840	15.19840	15.03500	25.05840	.02406
47.650	5.000	15.15220	15.19840	15.19840	15.03500	25.05840	.02406
47.640	10.000	15.15220	15.19840	15.19840	15.03500	25.05840	.02406
47.540	15.000	15.15220	15.29290	15.19840	15.13200	25.13880	-.01523
47.330	20.000	15.15220	15.29280	15.10400	15.13200	25.09920	-.03460
	GRADIENT	-.00827	.00000	.00000	-.00836	-.00698	.00002

ARC40X80-462(OA100) OV101(RCS PORTS CLOSED) (DNA03W) (15 APR 82)

REFERENCE DATA

SREF =	2690.0000 SQ.FT.	XMRP =	1076.6800 IN. XO		
LREF =	474.8100 INCHES	YMRP =	.0000 IN. YO		
BREF =	936.6800 INCHES	ZMRP =	375.0000 IN. ZO		
SCALE =	.3600				

PARAMETRIC DATA

ALPHA =	20.000	ELEVON =	.000
AILRON =	.000	BDFLAP =	.000
SPDBRK =	25.000	RUDDER =	.000

RUN NO. 106/ 0 GRADIENT INTERVAL = -5.00/ 5.00

Q	BETA	DELS1	DELS2	DELS3	DELS4	SPDBRK	RUDDER
47.510	-13.000	15.15220	15.29280	15.19840	15.03500	25.09810	.00468
47.660	-10.000	15.15220	15.19840	15.19840	15.03500	25.05840	.02406
47.540	-5.000	15.15220	15.19840	15.19840	15.03500	25.05840	.02406
47.630	-2.000	15.15220	15.19840	15.19840	15.03500	25.05840	.02406
47.540	.000	15.15220	15.19840	15.19840	15.03500	25.05840	.02406
47.670	2.000	15.15220	15.29280	15.19840	15.13200	25.13880	-.01523
47.760	5.000	15.15220	15.29280	15.10400	15.13200	25.09920	-.03460
47.800	10.000	15.15220	15.29280	15.19840	15.03500	25.09810	.00468
47.650	15.000	15.15220	15.19840	15.19840	15.03500	25.05840	.02406
47.520	20.000	15.24810	15.19840	15.29280	15.03500	25.13830	.06312
	GRADIENT	.00000	.01139	-.00814	.01171	.00629	-.00641

ARC40X80-462(OA100) OV101 (DNA03X) (15 APR 82)

REFERENCE DATA

SREF =	2690.0000 SQ.FT.	XMRP =	1076.6800 IN. XO		
LREF =	474.8100 INCHES	YMRP =	.0000 IN. YO		
BREF =	936.6800 INCHES	ZMRP =	375.0000 IN. ZO		
SCALE =	.3600				

PARAMETRIC DATA

BETA =	.000	ELEVON =	.000
AILRON =	.000	BDFLAP =	.000

RUN NO. 88/ 0 GRADIENT INTERVAL = -5.00/ 5.00

Q	ALPHA	DELS1	DELS2	DELS3	DELS4	SPDBRK	RUDDER
47.710	-.075	5.27450	6.98560	5.28640	53.15600	29.32320	-10.22820
47.670	10.320	5.27450	51.73120	5.28640	53.15600	48.69410	-19.71620
47.790	15.535	5.27450	42.48000	5.28640	53.15600	44.60840	-17.72280
	GRADIENT	.00000	.00000	.00000	.00000	.00000	.00000

ARC40X80-462(OA100) OV101 (DNA03Y) (15 APR 82)

REFERENCE DATA

SREF =	2690.0000 SQ.FT.	XMRP =	1076.6800 IN. XO		
LREF =	474.8100 INCHES	YMRP =	.0000 IN. YO		
BREF =	936.6800 INCHES	ZMRP =	375.0000 IN. ZO		
SCALE =	.3600				

PARAMETRIC DATA

BETA =	.000	ELEVON =	.000
AILRON =	.000	BDFLAP =	.000
SPDBRK =	55.000	RUDDER =	-15.000

RUN NO. 89/ 0 GRADIENT INTERVAL = -5.00/ 5.00

Q	ALPHA	DELS1	DELS2	DELS3	DELS4	SPDBRK	RUDDER
47.690	-.072	14.38500	50.69280	14.25440	50.34300	55.07500	-15.02030
47.740	10.326	14.38500	50.59840	14.25440	50.34300	55.03230	-15.00030
47.760	15.535	14.38500	50.69280	14.34880	50.34300	55.11780	-15.00030
47.760	20.801	14.38500	50.59840	14.25440	50.34300	55.03230	-15.00030
	GRADIENT	.00000	.00000	.00000	.00000	.00000	.00000

ARC40X80-462(OA100) OV101 (DNA03Z) (15 APR 82)

REFERENCE DATA

SREF =	2690.0000 SQ.FT.	XMRP =	1076.6800 IN. XO		
LREF =	474.8100 INCHES	YMRP =	.0000 IN. YO		
BREF =	936.6800 INCHES	ZMRP =	375.0000 IN. ZO		
SCALE =	.3600				

PARAMETRIC DATA

BETA =	.000	ELEVON =	.000
AILRON =	.000	BDFLAP =	.000
SPDBRK =	55.000	RUDDER =	.000

RUN NO. 90/ 0 GRADIENT INTERVAL = -5.00/ 5.00

Q	ALPHA	DELS1	DELS2	DELS3	DELS4	SPDBRK	RUDDER
47.790	-.073	32.79780	32.56800	32.47360	32.39800	55.32980	.06268
47.600	5.118	32.79780	32.56800	32.47360	32.39800	55.32980	.06268
47.860	10.323	32.79780	32.56800	32.47360	32.39800	55.32980	.06268
47.710	15.537	32.79780	32.56800	32.47360	32.39800	55.32980	.06268
	GRADIENT	.00000	.00000	.00000	.00000	.00000	.00000

ARC40X80-462(OA100) OV101 (DNA04A) (15 APR 82)

REFERENCE DATA

SREF =	2690.0000 SQ.FT.	XMRP =	1076.6800 IN. XO		
LREF =	474.8100 INCHES	YMRP =	.0000 IN. YO		
BREF =	936.6800 INCHES	ZMRP =	375.0000 IN. ZO		
SCALE =	.3600				

PARAMETRIC DATA

BETA =	.000	ELEVON =	.000
AILRON =	.000	BDFLAP =	.000
SPDBRK =	55.000	RUDDER =	5.000

RUN NO. 91/ 0 GRADIENT INTERVAL = -5.00/ 5.00

Q	ALPHA	DELS1	DELS2	DELS3	DELS4	SPDBRK	RUDDER
47.650	-.074	38.83950	26.43200	38.70400	26.19000	55.29720	5.12171
47.790	5.119	38.83950	26.43200	38.60960	26.28700	55.29840	5.08227
47.710	10.321	38.83950	26.43200	38.51520	26.19000	55.21160	5.08280
47.710	15.535	38.83950	26.43200	38.60960	26.19000	55.25440	5.10226
47.720	20.804	38.83950	26.43200	38.60960	26.19000	55.25440	5.10226
	GRADIENT	.00000	.00000	.00000	.00000	.00000	.00000

ARC40X80-462(OA100) OV101 (DNA04B) (15 APR 82)

REFERENCE DATA

SREF =	2690.0000 SQ.FT.	XMRP =	1076.6800 IN. XO		
LREF =	474.8100 INCHES	YMRP =	.0000 IN. YO		
BREF =	936.6800 INCHES	ZMRP =	375.0000 IN. ZO		
SCALE =	.3600				

PARAMETRIC DATA

BETA =	.000	ELEVON =	.000
AILRON =	.000	BDFLAP =	.000
SPDBRK =	55.000	RUDDER =	10.000

RUN NO. 92/ 0 GRADIENT INTERVAL = -5.00/ 5.00

Q	ALPHA	DELS1	DELS2	DELS3	DELS4	SPDBRK	RUDDER
47.670	-.074	44.88120	20.39040	44.55680	20.17600	55.22420	10.08040
47.690	5.119	44.78530	20.20160	44.55680	20.07900	55.05130	10.12000
47.570	10.324	44.78530	20.39040	44.55680	20.17600	55.18080	10.06050
47.720	15.537	44.78530	20.29600	44.55680	20.17600	55.13800	10.08010
47.780	20.801	44.78530	20.29600	44.55680	20.17600	55.13800	10.08010
	GRADIENT	.00000	.00000	.00000	.00000	.00000	.00000

ARC40X80-462(OA100) OV101 (DNA04C) (15 APR 82)

REFERENCE DATA

SREF =	2690.0000 SQ.FT.	XMRP =	1076.6800 IN. XO		
LREF =	474.8100 INCHES	YMRP =	.0000 IN. YO		
BREF =	936.6800 INCHES	ZMRP =	375.0000 IN. ZO		
SCALE =	.3600				

PARAMETRIC DATA

BETA =	.000	ELEVON =	.000
AILRON =	.000	BDFLAP =	.000
SPDBRK =	55.000	RUDDER =	15.000

RUN NO. 93/ 0 GRADIENT INTERVAL = -5.00/ 5.00

Q	ALPHA	DELS1	DELS2	DELS3	DELS4	SPDBRK	RUDDER
47.680	-.073	50.82700	14.34880	50.59840	14.45300	55.32520	15.06850
47.710	5.118	50.82700	14.34880	50.50400	14.16200	55.15050	15.11020
47.630	10.324	50.82700	14.44320	50.50400	14.25900	55.23720	15.06960
47.710	15.539	50.82700	14.34880	50.50400	14.25900	55.19450	15.08960
47.670	20.802	50.82700	14.34880	50.50400	14.35600	55.23840	15.06900
	GRADIENT	.00000	.00000	.00000	.00000	.00000	.00000

ARC40X80-462(OA100) OV101 (DNA04D) (15 APR 82)

REFERENCE DATA

SREF =	2690.0000 SQ.FT.	XMRP =	1076.6800 IN. XO		
LREF =	474.8100 INCHES	YMRP =	.0000 IN. YO		
BREF =	936.6800 INCHES	ZMRP =	375.0000 IN. ZO		
SCALE =	.3600				

PARAMETRIC DATA

BETA =	.000	ELEVON =	.000
AILRON =	.000	BDFLAP =	.000
SPDBRK =	48.000	RUDDER =	19.500

RUN NO. 94/ 0 GRADIENT INTERVAL = -5.00/ 5.00

Q	ALPHA	DELS1	DELS2	DELS3	DELS4	SPDBRK	RUDDER
47.870	-.072	52.45730	5.28640	51.63680	5.23800	48.32570	19.55240
47.720	5.119	52.45730	5.28640	51.63680	5.23800	48.32570	19.55240
47.720	10.322	52.45730	5.28640	51.63680	5.23800	48.32570	19.55240
47.720	15.534	52.45730	5.19200	51.63680	5.23800	48.28390	19.57290
47.660	20.804	52.45730	5.38080	51.63680	5.33500	48.41070	19.51100
	GRADIENT	.00000	.00000	.00000	.00000	.00000	.00000

ARC40X80-462(OA100) OV101 (DNA04E) (15 APR 82)

REFERENCE DATA

SREF =	2690.0000 SQ.FT.	XMRP =	1076.6800 IN. XO		
LREF =	474.8100 INCHES	YMRP =	.0000 IN. YO		
BREF =	936.6800 INCHES	ZMRP =	375.0000 IN. ZO		
SCALE =	.3600				

PARAMETRIC DATA

BETA =	5.000	ELEVON =	.000
AILRON =	.000	BDFLAP =	.000
SPDBRK =	55.000	RUDDER =	.000

RUN NO. 95/ 0 GRADIENT INTERVAL = -5.00/ 5.00

Q	ALPHA	DELS1	DELS2	DELS3	DELS4	SPDBRK	RUDDER
47.660	-.070	32.60600	32.56800	32.47360	32.39800	55.24290	.02332
47.740	5.125	32.60600	32.66240	32.56800	32.39800	55.32840	.02332
47.800	10.327	32.60600	32.66240	32.47360	32.39800	55.28560	.00394
47.730	15.539	32.60600	32.66240	32.47360	32.39800	55.28560	.00394
47.720	20.789	32.70190	32.66240	32.47360	32.39800	55.32910	.02363
	GRADIENT	.00000	.00000	.00000	.00000	.00000	.00000

ARC40X80-462(OA100) OV101 (DNA04F) (15 APR 82)

REFERENCE DATA

SREF = 2690.0000 SQ.FT. XMRP = 1076.6800 IN. XO
LREF = 474.8100 INCHES YMRP = .0000 IN. YO
BREF = 936.6800 INCHES ZMRP = 375.0000 IN. ZO
SCALE = .3600

PARAMETRIC DATA

BETA = 5.000 ELEVON = .000
AILRON = .000 BDFLAP = .000
SPDBRK = 55.000 RUDDER = 5.000

RUN NO. 96/ 0 GRADIENT INTERVAL = -5.00/ 5.00

Q	ALPHA	DELS1	DELS2	DELS3	DELS4	SPDBRK	RUDDER
47.710	-.070	38.74360	26.43200	38.70400	26.19000	55.25370	5.10195
47.690	5.123	38.83950	26.52640	38.70400	26.19000	55.34000	5.10226
47.710	10.328	38.74360	26.52640	38.70400	26.19000	55.29650	5.08250
47.530	20.790	38.83950	26.52640	38.70400	26.19000	55.34000	5.10226
	GRADIENT	.00000	.00000	.00000	.00000	.00000	.00000

ARC40X80-462(OA100) OV101 (DNA04G) (15 APR 82)

REFERENCE DATA

SREF = 2690.0000 SQ.FT. XMRP = 1076.6800 IN. XO
LREF = 474.8100 INCHES YMRP = .0000 IN. YO
BREF = 936.6800 INCHES ZMRP = 375.0000 IN. ZO
SCALE = .3600

PARAMETRIC DATA

BETA = 5.000 ELEVON = .000
AILRON = .000 BDFLAP = .000
SPDBRK = 55.000 RUDDER = 10.000

RUN NO. 97/ 0 GRADIENT INTERVAL = -5.00/ 5.00

Q	ALPHA	DELS1	DELS2	DELS3	DELS4	SPDBRK	RUDDER
47.610	-.071	44.68940	20.39040	44.55680	20.17600	55.13730	10.04050
47.710	5.122	44.78530	20.39040	44.46240	20.17600	55.13800	10.04080
47.700	10.324	44.78530	20.29600	44.55680	20.17600	55.13800	10.08010
47.650	15.535	44.78530	20.39040	44.55680	20.17600	55.18080	10.06050
47.590	20.784	44.78530	20.39040	44.55680	20.17600	55.18080	10.06050
	GRADIENT	.00000	.00000	.00000	.00000	.00000	.00000

ARC40X80-462(OA100) OV101 (DNA04H) (15 APR 82)

REFERENCE DATA

SREF =	2690.0000 SQ.FT.	XMRP =	1076.6800 IN. XO		
LREF =	474.8100 INCHES	YMRP =	.0000 IN. YO		
BREF =	936.6800 INCHES	ZMRP =	375.0000 IN. ZO		
SCALE =	.3600				

PARAMETRIC DATA

BETA =	5.000	ELEVON =	.000
AILRON =	.000	BDFLAP =	.000
SPDBRK =	55.000	RUDDER =	15.000

RUN NO. 98/ 0 GRADIENT INTERVAL = -5.00/ 5.00

Q	ALPHA	DELS1	DELS2	DELS3	DELS4	SPDBRK	RUDDER
47.610	-.072	50.63520	14.44320	50.50400	14.25900	55.15030	15.02890
47.660	5.123	50.73110	14.44320	50.50400	14.16200	55.14980	15.06980
47.620	10.325	50.73110	14.44320	50.50400	14.25900	55.19380	15.04930
47.620	15.527	50.73110	14.44320	50.59840	14.25900	55.23660	15.06930
47.590	20.783	50.73110	14.34880	50.50400	14.25900	55.15100	15.06930
	GRADIENT	.00000	.00000	.00000	.00000	.00000	.00000

ARC40X80-462(OA100) OV101 (DNA04I) (15 APR 82)

REFERENCE DATA

SREF =	2690.0000 SQ.FT.	XMRP =	1076.6800 IN. XO		
LREF =	474.8100 INCHES	YMRP =	.0000 IN. YO		
BREF =	936.6800 INCHES	ZMRP =	375.0000 IN. ZO		
SCALE =	.3600				

PARAMETRIC DATA

BETA =	5.000	ELEVON =	.000
AILRON =	.000	BDFLAP =	.000
SPDBRK =	48.000	RUDDER =	19.500

RUN NO. 99/ 0 GRADIENT INTERVAL = -5.00/ 5.00

Q	ALPHA	DELS1	DELS2	DELS3	DELS4	SPDBRK	RUDDER
47.690	-.073	52.36140	5.38080	51.63680	5.23800	48.32510	19.51130
47.690	5.122	52.36140	5.38080	51.63680	5.23800	48.32510	19.51130
47.750	10.321	52.36140	5.38080	51.63680	5.23800	48.32510	19.51130
47.610	15.534	52.36140	5.38080	51.63680	5.23800	48.32510	19.51130
47.600	20.780	52.36140	5.56960	51.63680	5.04400	48.32280	19.51240
	GRADIENT	.00000	.00000	.00000	.00000	.00000	.00000

ARC40X80-462(OA100) OV101 (DNA04J) (15 APR 82)

REFERENCE DATA

SREF =	2690.0000 SQ.FT.	XMRP =	1076.6800 IN. XO		
LREF =	474.8100 INCHES	YMRP =	.0000 IN. YO		
BREF =	936.6800 INCHES	ZMRP =	375.0000 IN. ZO		
SCALE =	.3600				

PARAMETRIC DATA

BETA =	.000	ELEVON =	.000
AILRON =	.000	BDFLAP =	.000
SPDBRK =	25.000	RUDDER =	-22.500

RUN NO. 86/ 0 GRADIENT INTERVAL = -5.00/ 5.00

Q	ALPHA	DELS1	DELS2	DELS3	DELS4	SPDBRK	RUDDER
47.740	-.064	-11.89160	42.48000	-12.08320	42.19500	25.10720	-22.84360
47.680	5.131	-11.89160	42.48000	-11.89440	42.19500	25.18650	-22.80200
47.780	10.334	-11.98750	42.48000	-11.98880	42.19500	25.10660	-22.84390
47.680	15.544	-11.98750	42.57440	-11.89440	42.19500	25.18590	-22.84390
47.710	20.747	-11.98750	42.57440	-11.98880	42.19500	25.14620	-22.86470
	GRADIENT	.00000	.00000	.00000	.00000	.00000	.00000

ARC40X80-462(OA100) OV101 (DNA04K) (15 APR 82)

REFERENCE DATA

SREF =	2690.0000 SQ.FT.	XMRP =	1076.6800 IN. XO		
LREF =	474.8100 INCHES	YMRP =	.0000 IN. YO		
BREF =	936.6800 INCHES	ZMRP =	375.0000 IN. ZO		
SCALE =	.3600				

PARAMETRIC DATA

BETA =	.000	ELEVON =	.000
AILRON =	.000	BDFLAP =	.000
SPDBRK =	25.000	RUDDER =	-15.000

RUN NO. 87/ 0 GRADIENT INTERVAL = -5.00/ 5.00

Q	ALPHA	DELS1	DELS2	DELS3	DELS4	SPDBRK	RUDDER
47.720	-.058	-2.97290	33.51200	-3.02080	33.07700	25.06320	-15.05980
47.690	5.133	-2.97290	33.51200	-3.02080	33.17400	25.10390	-15.08040
47.830	10.338	-3.06880	33.41760	-3.11520	33.17400	24.98440	-15.10070
47.580	15.548	-3.26060	-2.17120	-3.02080	33.17400	10.16090	-7.67457
47.630	20.754	-3.26060	-2.54880	-3.02080	33.17400	10.00540	-7.59640
	GRADIENT	.00000	.00000	.00000	.00000	.00000	.00000

ARC40X80-462(OA100) OV101+NOSE GEAR (DNA04L) (15 APR 82)

REFERENCE DATA

SREF =	2690.0000 SQ.FT.	XMRP =	1076.6800 IN. XO		
LREF =	474.8100 INCHES	YMRP =	.0000 IN. YO		
BREF =	936.6800 INCHES	ZMRP =	375.0000 IN. ZO		
SCALE =	.3600				

PARAMETRIC DATA

BETA =	.000	ELEVON =	.000
AILRON =	.000	BDFLAP =	.000
SPDBRK =	20.000	RUDDER =	3.000

RUN NO. 108/ 0 GRADIENT INTERVAL = -5.00/ 5.00

Q	ALPHA	DELS1	DELS2	DELS3	DELS4	SPDBRK	RUDDER
47.700	-.058	15.15220	1.32160	15.19840	15.03500	19.25980	2.87343
47.560	5.139	15.24810	.09440	15.19840	15.03500	18.78930	3.14535
47.530	10.342	15.24810	3.02080	15.19840	15.03500	20.00700	2.54400
47.540	15.549	15.24810	1.69920	15.19840	15.03500	19.45680	2.81554
47.590	20.797	15.24810	.28320	15.19840	15.03500	18.86770	3.10655
	GRADIENT	.00000	.00000	.00000	.00000	.00000	.00000

ARC40X80-462(OA100) OV101+NOSE GEAR (DNA04M) (15 APR 82)

REFERENCE DATA

SREF =	2690.0000 SQ.FT.	XMRP =	1076.6800 IN. XO		
LREF =	474.8100 INCHES	YMRP =	.0000 IN. YO		
BREF =	936.6800 INCHES	ZMRP =	375.0000 IN. ZO		
SCALE =	.3600				

PARAMETRIC DATA

BETA =	5.000	ELEVON =	.000
AILRON =	.000	BDFLAP =	.000
SPDBRK =	20.000	RUDDER =	3.000

RUN NO. 109/ 0 GRADIENT INTERVAL = -5.00/ 5.00

Q	ALPHA	DELS1	DELS2	DELS3	DELS4	SPDBRK	RUDDER
47.500	-.051	15.24810	3.30400	15.29280	15.03500	20.16430	2.50521
47.670	5.143	15.24810	.47200	15.19840	15.13200	18.98660	3.04780
47.630	10.340	15.24810	.00000	15.19840	15.03500	18.75000	3.16476
47.390	15.550	15.24810	-.37760	15.19840	15.03500	18.59300	3.24238
47.870	20.795	15.24810	42.19680	15.19840	15.03500	36.56350	-5.50583
	GRADIENT	.00000	.00000	.00000	.00000	.00000	.00000

ARC40X80-462(OA100) OV101+NOSE GEAR (DNA04N) (15 APR 82)

REFERENCE DATA

SREF =	2690.0000 SQ.FT.	XMRP =	1076.6800 IN.	XO	
LREF =	474.8100 INCHES	YMRP =	.0000 IN.	YO	
BREF =	936.6800 INCHES	ZMRP =	375.0000 IN.	ZO	
SCALE =	.3600				

PARAMETRIC DATA

BETA =	10.000	ELEVON =	.000
AILRON =	.000	BDFLAP =	.000
SPDBRK =	36.500	RUDDER =	-5.500

RUN NO. 110/ 0 GRADIENT INTERVAL = -5.00/ 5.00

Q	ALPHA	DELS1	DELS2	DELS3	DELS4	SPDBRK	RUDDER
47.530	-.041	15.24810	42.00800	15.19840	15.03500	36.48230	-5.46690
47.710	5.146	15.24810	42.10240	15.19840	15.03500	36.52290	-5.48636
47.580	10.344	15.24810	42.10240	15.19840	15.13200	36.56460	-5.50636
47.720	15.577	15.15220	42.10240	15.19840	15.03500	36.48170	-5.50613
47.750	20.818	15.24810	42.10240	15.19840	15.03500	36.52290	-5.48636
	GRADIENT	.00000	.00000	.00000	.00000	.00000	.00000

ARC40X80-462(OA100) OV101+NOSE GEAR(FTP OFF) (DNA040) (15 APR 82)

REFERENCE DATA

SREF =	2690.0000 SQ.FT.	XMRP =	1076.6800 IN.	XO	
LREF =	474.8100 INCHES	YMRP =	.0000 IN.	YO	
BREF =	936.6800 INCHES	ZMRP =	375.0000 IN.	ZO	
SCALE =	.3600				

PARAMETRIC DATA

BETA =	.000	ELEVON =	.000
AILRON =	.000	BDFLAP =	.000
SPDBRK =	25.000	RUDDER =	.000

RUN NO. 111/ 0 GRADIENT INTERVAL = -5.00/ 5.00

Q	ALPHA	DELS1	DELS2	DELS3	DELS4	SPDBRK	RUDDER
47.460	-.059	15.15220	15.19840	15.19840	15.03500	25.05840	.02406
47.410	5.135	15.24810	15.19840	15.19840	15.03500	25.09870	.04374
47.690	10.339	15.24810	15.29280	15.19840	15.03500	25.13840	.02436
47.610	15.549	15.24810	15.19840	15.19840	15.03500	25.09870	.04374
47.740	20.797	15.24810	15.29280	15.19840	15.03500	25.13840	.02436
	GRADIENT	.00000	.00000	.00000	.00000	.00000	.00000

ARC40X80-462(OA100) OV101+NOSE GEAR(FTP OFF) (DNA04P) (15 APR 82)

REFERENCE DATA

SREF	=	2690.0000	SQ.FT.	XMRP	=	1076.6800	IN. XO	BETA	=	5.000	ELEVON = .000
LREF	=	474.8100	INCHES	YMRP	=	.0000	IN. YO	AILRON	=	.000	BDFLAP = .000
BREF	=	936.6800	INCHES	ZMRP	=	375.0000	IN. ZO	SPDBRK	=	25.000	RUDDER = .000
SCALE	=	.3600									

PARAMETRIC DATA

RUN NO. 112/ 0 GRADIENT INTERVAL = -5.00/ 5.00

Q	ALPHA	DELS1	DELS2	DELS3	DELS4	SPDBRK	RUDDER
47.670	-.054	15.15220	15.19840	15.19840	15.03500	25.05840	.02406
47.530	5.142	15.15220	15.19840	15.19840	15.03500	25.05840	.02406
47.610	10.342	15.15220	15.19840	15.19840	15.03500	25.05840	.02406
47.670	15.546	15.24810	15.29280	15.19840	15.03500	25.13840	.02436
47.620	20.797	15.15220	15.29280	15.19840	15.03500	25.09810	.00468
	GRADIENT	.00000	.00000	.00000	.00000	.00000	.00000

ARC40X80-462(OA100) OV101+NOSE GEAR(FTP OFF) (DNA04Q) (15 APR 82)

REFERENCE DATA

SREF	=	2690.0000	SQ.FT.	XMRP	=	1076.6800	IN. XO	BETA	=	10.000	ELEVON = .000
LREF	=	474.8100	INCHES	YMRP	=	.0000	IN. YO	AILRON	=	.000	BDFLAP = .000
BREF	=	936.6800	INCHES	ZMRP	=	375.0000	IN. ZO	SPDBRK	=	25.000	RUDDER = .000
SCALE	=	.3600									

PARAMETRIC DATA

RUN NO. 113/ 0 GRADIENT INTERVAL = -5.00/ 5.00

Q	ALPHA	DELS1	DELS2	DELS3	DELS4	SPDBRK	RUDDER
47.710	-.041	15.15220	15.19840	15.19840	15.03500	25.05840	.02406
47.530	5.145	15.24810	15.19840	15.10400	15.03500	25.05910	.02437
47.670	10.345	15.24810	15.19840	15.19840	15.03500	25.09870	.04374
47.560	15.574	15.24810	15.29280	15.19840	15.03500	25.13840	.02436
47.500	20.818	15.15220	15.29280	15.19840	15.22900	25.17960	-.03514
	GRADIENT	.00000	.00000	.00000	.00000	.00000	.00000

ARC40X80-462(0A100) OV101(FTP OFF) (DNA04R) (15 APR 82)

REFERENCE DATA

SREF =	2690.0000 SQ.FT.	XMRP =	1076.6800 IN.	XO	
LREF =	474.8100 INCHES	YMRP =	.0000 IN.	YO	
BREF =	936.6800 INCHES	ZMRP =	375.0000 IN.	ZO	
SCALE =	.3600				

PARAMETRIC DATA

BETA =	.000	ELEVON =	.000
AILRON =	.000	BDFLAP =	.000
SPDBRK =	25.000	RUDDER =	.000

RUN NO. 115/ 0 GRADIENT INTERVAL = -5.00/ 5.00

Q	ALPHA	DELS1	DELS2	DELS3	DELS4	SPDBRK	RUDDER
47.390	-.065	15.34400	15.19840	15.19840	15.03500	25.13900	.06342
47.850	5.135	15.34400	15.10400	15.19840	15.03500	25.09930	.08280
47.660	10.337	15.34400	15.19840	15.19840	15.03500	25.13900	.06342
47.250	15.545	15.34400	15.19840	15.19840	15.03500	25.13900	.06342
47.360	20.815	15.24810	15.19840	15.19840	15.03500	25.09870	.04374
	GRADIENT	.00000	.00000	.00000	.00000	.00000	.00000

ARC40X80-462(0A100) OV101(FTP OFF) (DNA04S) (15 APR 82)

REFERENCE DATA

SREF =	2690.0000 SQ.FT.	XMRP =	1076.6800 IN.	XO	
LREF =	474.8100 INCHES	YMRP =	.0000 IN.	YO	
BREF =	936.6800 INCHES	ZMRP =	375.0000 IN.	ZO	
SCALE =	.3600				

PARAMETRIC DATA

BETA =	.000	ELEVON =	.000
AILRON =	.000	BDFLAP =	.000
SPDBRK =	25.000	RUDDER =	5.000

RUN NO. 114/ 0 GRADIENT INTERVAL = -5.00/ 5.00

Q	ALPHA	DELS1	DELS2	DELS3	DELS4	SPDBRK	RUDDER
47.190	-.061	21.38570	9.06240	21.24000	9.02099	25.11100	5.04357
47.530	5.135	21.38570	9.06240	21.33440	9.02099	25.15060	5.06302
47.510	10.334	21.38570	9.06240	21.24000	8.92399	25.07020	5.06355
47.530	15.546	21.38570	9.06240	21.33440	9.02099	25.15060	5.06302
47.480	20.816	21.38570	9.06240	21.24000	9.02099	25.11100	5.04357
	GRADIENT	.00000	.00000	.00000	.00000	.00000	.00000

ARC40X80-462(OA100) OV101(FTP OFF) (DNA04T) (15 APR 82)

REFERENCE DATA

SREF =	2690.0000 SQ.FT.	XMRP =	1076.6800 IN. XO		
LREF =	474.8100 INCHES	YMRP =	.0000 IN. YO		
BREF =	936.6800 INCHES	ZMRP =	375.0000 IN. ZO		
SCALE =	.3600				

PARAMETRIC DATA

BETA =	.000	ELEVON =	.000
AILRON =	.000	BDFLAP =	.000
SPDBRK =	25.000	RUDDER =	10.000

RUN NO. 116/ 0 GRADIENT INTERVAL = -5.00/ 5.00

Q	ALPHA	DELS1	DELS2	DELS3	DELS4	SPDBRK	RUDDER
47.580	-.062	27.61920	2.92640	27.47040	2.91000	25.20200	10.15990
47.680	5.131	27.61920	2.92640	27.37600	2.91000	25.16240	10.14030
47.500	10.332	27.61920	2.92640	27.37600	2.91000	25.16240	10.14030
47.710	15.543	27.61920	2.92640	27.37600	2.91000	25.16240	10.14030
47.370	20.815	27.61920	3.02080	27.47040	2.91000	25.24170	10.14030
	GRADIENT	.00000	.00000	.00000	.00000	.00000	.00000

ARC40X80-462(OA100) OV101(FTP OFF) (DNA04U) (15 APR 82)

REFERENCE DATA

SREF =	2690.0000 SQ.FT.	XMRP =	1076.6800 IN. XO		
LREF =	474.8100 INCHES	YMRP =	.0000 IN. YO		
BREF =	936.6800 INCHES	ZMRP =	375.0000 IN. ZO		
SCALE =	.3600				

PARAMETRIC DATA

BETA =	.000	ELEVON =	.000
AILRON =	.000	BDFLAP =	.000
SPDBRK =	25.000	RUDDER =	15.000

RUN NO. 117/ 0 GRADIENT INTERVAL = -5.00/ 5.00

Q	ALPHA	DELS1	DELS2	DELS3	DELS4	SPDBRK	RUDDER
47.680	-.065	33.66090	-2.07680	33.41760	-3.00700	25.65100	14.97070
48.020	5.131	33.66090	-2.07680	33.41760	-3.00700	25.65100	14.97070
47.660	10.329	33.66090	-2.07680	33.51200	-3.00700	25.69070	14.99070
47.470	15.544	33.66090	-2.17120	33.51200	-3.00700	25.65100	15.01070
47.650	20.806	33.66090	-2.17120	33.41760	-3.00700	25.61130	14.99070
	GRADIENT	.00000	.00000	.00000	.00000	.00000	.00000

ARC40X80-462(OA100) OV101(FTP OFF) (DNA04V) (15 APR 82)

REFERENCE DATA

SREF = 2690.0000 SQ.FT. XMRP = 1076.6800 IN. XO
LREF = 474.8100 INCHES YMRP = .0000 IN. YO
BREF = 936.6800 INCHES ZMRP = 375.0000 IN. ZO
SCALE = .3600

PARAMETRIC DATA

BETA = .000 ELEVON = .000
AILRON = .000 BDFLAP = .000
SPDBRK = 25.000 RUDDER = 22.500

RUN NO. 118/ 0 GRADIENT INTERVAL = -5.00/ 5.00

Q	ALPHA	DELS1	DELS2	DELS3	DELS4	SPDBRK	RUDDER
47.560	-.067	42.67550	-11.98880	42.48000	-11.93100	25.33210	22.93730
47.610	5.125	42.67550	-11.98880	42.48000	-11.93100	25.33210	22.93730
47.540	10.330	42.57960	-11.89440	42.48000	-11.93100	25.33150	22.89540
47.740	15.540	42.67550	-12.08320	42.48000	-11.93100	25.29250	22.95810
47.530	20.806	42.67550	-11.98880	42.48000	-11.93100	25.33210	22.93730
	GRADIENT	.00000	.00000	.00000	.00000	.00000	.00000

ARC40X80-462(OA100) OV101(FTP OFF) (DNA04W) (15 APR 82)

REFERENCE DATA

SREF = 2690.0000 SQ.FT. XMRP = 1076.6800 IN. XO
LREF = 474.8100 INCHES YMRP = .0000 IN. YO
BREF = 936.6800 INCHES ZMRP = 375.0000 IN. ZO
SCALE = .3600

PARAMETRIC DATA

BETA = 5.000 ELEVON = .000
AILRON = .000 BDFLAP = .000
SPDBRK = 25.000 RUDDER = .000

RUN NO. 119/ 0 GRADIENT INTERVAL = -5.00/ 5.00

Q	ALPHA	DELS1	DELS2	DELS3	DELS4	SPDBRK	RUDDER
47.790	-.054	15.15220	15.19840	15.19840	15.03500	25.05840	.02406
47.230	5.137	15.24810	15.29280	15.19840	15.03500	25.13840	.02436
47.200	10.342	15.24810	15.19840	15.19840	15.03500	25.09870	.04374
47.330	15.548	15.24810	15.19840	15.19840	15.13200	25.13940	.02383
47.770	20.799	15.24810	15.19840	15.19840	15.03500	25.09870	.04374
	GRADIENT	.00000	.00000	.00000	.00000	.00000	.00000

ARC40X80-462(OA100) OV101(FTP OFF) (DNA04X) (15 APR 82)

REFERENCE DATA

SREF =	2690.0000 SQ.FT.	XMRP =	1076.6800 IN. XO		
LREF =	474.8100 INCHES	YMRP =	.0000 IN. YO		
BREF =	936.6800 INCHES	ZMRP =	375.0000 IN. ZO		
SCALE =	.3600				

PARAMETRIC DATA

BETA =	5.000	ELEVON =	.000
AILRON =	.000	BDFLAP =	.000
SPDBRK =	25.000	RUDDER =	5.000

RUN NO. 120/ 0 GRADIENT INTERVAL = -5.00/ 5.00

Q	ALPHA	DELS1	DELS2	DELS3	DELS4	SPDBRK	RUDDER
47.850	-.057	21.28980	9.15680	21.33440	9.02099	25.15000	5.02382
47.610	5.138	21.28980	9.15680	21.24000	8.92399	25.06960	5.02435
47.510	10.337	21.28980	9.15680	21.33440	8.92399	25.10920	5.04380
47.350	15.547	21.28980	9.15680	21.33440	8.92399	25.10920	5.04380
47.530	20.801	21.28980	9.15680	21.24000	8.92399	25.06960	5.02435
	GRADIENT	.00000	.00000	.00000	.00000	.00000	.00000

ARC40X80-462(OA100) OV101(FTP OFF) (DNA04Y) (15 APR 82)

REFERENCE DATA

SREF =	2690.0000 SQ.FT.	XMRP =	1076.6800 IN. XO		
LREF =	474.8100 INCHES	YMRP =	.0000 IN. YO		
BREF =	936.6800 INCHES	ZMRP =	375.0000 IN. ZO		
SCALE =	.3600				

PARAMETRIC DATA

BETA =	5.000	ELEVON =	.000
AILRON =	.000	BDFLAP =	.000
SPDBRK =	25.000	RUDDER =	10.000

RUN NO. 121/ 0 GRADIENT INTERVAL = -5.00/ 5.00

Q	ALPHA	DELS1	DELS2	DELS3	DELS4	SPDBRK	RUDDER
47.500	-.059	27.52330	3.11520	27.47040	2.91000	25.24100	10.10060
47.460	5.138	27.52330	3.20960	27.47040	2.91000	25.28070	10.08090
47.440	10.331	27.42740	3.11520	27.47040	2.91000	25.20080	10.08060
47.390	15.542	27.42740	3.11520	27.47040	3.00700	25.24150	10.06040
47.640	20.796	27.52330	3.11520	27.47040	2.91000	25.24100	10.10060
	GRADIENT	.00000	.00000	.00000	.00000	.00000	.00000

ARC40X80-462(OA100) OV101(FTP OFF) (DNA04Z) (15 APR 82)

REFERENCE DATA

SREF =	2690.0000 SQ.FT.	XMRP =	1076.6800 IN.	XO	
LREF =	474.8100 INCHES	YMRP =	.0000 IN.	YO	
BREF =	936.6800 INCHES	ZMRP =	375.0000 IN.	ZO	
SCALE =	.3600				

PARAMETRIC DATA

BETA =	5.000	ELEVON =	.000
AILRON =	.000	BDFLAP =	.000
SPDBRK =	25.000	RUDDER =	15.000

RUN NO. 122/ 0 GRADIENT INTERVAL = -5.00/ 5.00

Q	ALPHA	DELS1	DELS2	DELS3	DELS4	SPDBRK	RUDDER
47.240	-.059	33.46910	-2.07680	33.41760	-3.00700	25.57040	14.93010
47.510	5.131	33.56500	-2.07680	33.51200	-2.91000	25.69110	14.94990
47.360	10.331	33.56500	-1.98240	33.41760	-3.00700	25.65040	14.93040
47.540	15.545	33.56500	-1.98240	33.41760	-3.00700	25.65040	14.93040
47.560	20.799	33.56500	-1.98240	33.41760	-3.00700	25.65040	14.93040
	GRADIENT	.00000	.00000	.00000	.00000	.00000	.00000

ARC40X80-462(OA100) OV101(FTP OFF) (DNA05A) (15 APR 82)

REFERENCE DATA

SREF =	2690.0000 SQ.FT.	XMRP =	1076.6800 IN.	XO	
LREF =	474.8100 INCHES	YMRP =	.0000 IN.	YO	
BREF =	936.6800 INCHES	ZMRP =	375.0000 IN.	ZO	
SCALE =	.3600				

PARAMETRIC DATA

BETA =	5.000	ELEVON =	.000
AILRON =	.000	BDFLAP =	.000
SPDBRK =	25.000	RUDDER =	22.500

RUN NO. 123/ 0 GRADIENT INTERVAL = -5.00/ 5.00

Q	ALPHA	DELS1	DELS2	DELS3	DELS4	SPDBRK	RUDDER
47.490	-.069	42.67550	-11.89440	42.38560	-12.61000	25.04700	23.04530
47.630	5.129	42.67550	-11.98880	42.38560	-12.61000	25.00740	23.06610
47.560	10.328	42.67550	-11.89440	42.38560	-12.70700	25.00630	23.06670
47.570	15.536	42.67550	-11.98880	42.38560	-12.70700	24.96660	23.08750
47.670	20.792	42.67550	-12.17760	42.38560	-12.61000	24.92810	23.10780
	GRADIENT	.00000	.00000	.00000	.00000	.00000	.00000

ARC40X80-462(OA100) OV101(FTP OFF) (DNA05B) (15 APR 82)

REFERENCE DATA

SREF =	2690.0000 SQ.FT.	XMRP =	1076.6800 IN. XO		
LREF =	474.8100 INCHES	YMRP =	.0000 IN. YO		
BREF =	936.6800 INCHES	ZMRP =	375.0000 IN. ZO		
SCALE =	.3600				

PARAMETRIC DATA

BETA =	10.000	ELEVON =	.000
AILRON =	.000	BDFLAP =	.000
SPDBRK =	25.000	RUDDER =	.000

RUN NO. 124/ 0 GRADIENT INTERVAL = -5.00/ 5.00

Q	ALPHA	DELS1	DELS2	DELS3	DELS4	SPDBRK	RUDDER
47.470	-.042	15.15220	15.19840	15.00960	15.03500	24.97920	-.01469
47.540	5.146	15.15220	15.19840	15.10400	15.03500	25.01880	.00468
47.480	10.343	15.15220	15.19840	15.10400	15.03500	25.01880	.00468
47.480	15.573	15.15220	15.19840	15.10400	15.03500	25.01880	.00468
47.560	20.820	15.24810	15.19840	15.10400	15.03500	25.05910	.02437
	GRADIENT	.00000	.00000	.00000	.00000	.00000	.00000

ARC40X80-462(OA100) OV101(FTP OFF) (DNA05C) (15 APR 82)

REFERENCE DATA

SREF =	2690.0000 SQ.FT.	XMRP =	1076.6800 IN. XO		
LREF =	474.8100 INCHES	YMRP =	.0000 IN. YO		
BREF =	936.6800 INCHES	ZMRP =	375.0000 IN. ZO		
SCALE =	.3600				

PARAMETRIC DATA

BETA =	10.000	ELEVON =	.000
AILRON =	.000	BDFLAP =	.000
SPDBRK =	25.000	RUDDER =	5.000

RUN NO. 125/ 0 GRADIENT INTERVAL = -5.00/ 5.00

Q	ALPHA	DELS1	DELS2	DELS3	DELS4	SPDBRK	RUDDER
47.480	-.044	21.28980	9.06240	21.14560	8.92399	24.99030	5.02435
47.500	5.145	21.28980	9.06240	21.14560	8.92399	24.99030	5.02435
47.380	10.345	21.28980	9.06240	21.14560	8.92399	24.99030	5.02435
47.500	15.568	21.28980	9.06240	21.14560	8.92399	24.99030	5.02435
47.380	20.824	21.28980	9.06240	21.24000	8.92399	25.03000	5.04380
	GRADIENT	.00000	.00000	.00000	.00000	.00000	.00000

ARC40X80-462(OA100) OV101(FTP OFF) (DNA05D) (15 APR 82)

REFERENCE DATA

SREF = 2690.0000 SQ.FT. XMRP = 1076.6800 IN. XO
LREF = 474.8100 INCHES YMRP = .0000 IN. YO
BREF = 936.6800 INCHES ZMRP = 375.0000 IN. ZO
SCALE = .3600

PARAMETRIC DATA

BETA = 10.000 ELEVON = .000
AILRON = .000 BDFLAP = .000
SPDBRK = 25.000 RUDDER = 10.000

RUN NO. 126/ 0 GRADIENT INTERVAL = -5.00/ 5.00

Q	ALPHA	DELS1	DELS2	DELS3	DELS4	SPDBRK	RUDDER
47.500	-.047	27.52330	3.11520	27.28160	3.00700	25.20250	10.04110
47.460	5.143	27.42740	2.92640	27.28160	3.00700	25.08300	10.06040
47.430	10.341	27.52330	2.92640	27.37600	3.00700	25.16290	10.10010
47.520	15.569	27.42740	2.92640	27.28160	3.00700	25.08300	10.06040
47.540	20.821	27.42740	2.92640	27.37600	3.00700	25.12260	10.08010
	GRADIENT	.00000	.00000	.00000	.00000	.00000	.00000

ARC40X80-462(OA100) OV101(FTP OFF) (DNA05E) (15 APR 82)

REFERENCE DATA

SREF = 2690.0000 SQ.FT. XMRP = 1076.6800 IN. XO
LREF = 474.8100 INCHES YMRP = .0000 IN. YO
BREF = 936.6800 INCHES ZMRP = 375.0000 IN. ZO
SCALE = .3600

PARAMETRIC DATA

BETA = 10.000 ELEVON = .000
AILRON = .000 BDFLAP = .000
SPDBRK = 25.000 RUDDER = 15.000

RUN NO. 127/ 0 GRADIENT INTERVAL = -5.00/ 5.00

Q	ALPHA	DELS1	DELS2	DELS3	DELS4	SPDBRK	RUDDER
47.540	-.046	33.37320	-2.17120	33.32320	-3.00700	25.45080	14.90980
47.480	5.142	33.56500	-2.17120	33.41760	-3.00700	25.57100	14.97040
47.470	10.340	33.56500	9.72320	33.32320	-3.00700	30.55290	12.44270
47.540	15.567	33.56500	-2.17120	33.22880	-3.00700	25.49170	14.93040
47.630	20.816	33.56500	-2.17120	33.41760	-3.00700	25.57100	14.97040
	GRADIENT	.00000	.00000	.00000	.00000	.00000	.00000

ARC40X80-462(OA100) OV101(FTP OFF) (DNA05F) (15 APR 82)

REFERENCE DATA

SREF =	2690.0000 SQ.FT.	XMRP =	1076.6800 IN. XO		
LREF =	474.8100 INCHES	YMRP =	.0000 IN. YO		
BREF =	936.6800 INCHES	ZMRP =	375.0000 IN. ZO		
SCALE =	.3600				

PARAMETRIC DATA

BETA =	10.000	ELEVON =	.000
AILRON =	.000	BDFLAP =	.000
SPDBRK =	25.000	RUDDER =	22.500

RUN NO. 128/ 0 GRADIENT INTERVAL = -5.00/ 5.00

Q	ALPHA	DELS1	DELS2	DELS3	DELS4	SPDBRK	RUDDER
47.670	-.050	42.57960	-12.08320	42.29120	-11.93100	25.17290	22.89540
47.620	5.140	42.57960	-12.27200	42.29120	-11.93100	25.09360	22.93700
47.640	10.336	42.57960	-12.17760	42.29120	-11.83400	25.17400	22.89480
47.690	15.561	42.57960	-12.36640	42.48000	-11.93100	25.13330	22.99940
47.600	20.816	42.57960	-12.55520	42.38560	-12.02800	24.97360	23.04150
	GRADIENT	.00000	.00000	.00000	.00000	.00000	.00000

ARC40X80-462(OA100) OV101(ADS OFF) (DNA05G) (15 APR 82)

REFERENCE DATA

SREF =	2690.0000 SQ.FT.	XMRP =	1076.6800 IN. XO		
LREF =	474.8100 INCHES	YMRP =	.0000 IN. YO		
BREF =	936.6800 INCHES	ZMRP =	375.0000 IN. ZO		
SCALE =	.3600				

PARAMETRIC DATA

BETA =	.000	ELEVON =	.000
AILRON =	.000	BDFLAP =	.000
SPDBRK =	87.000	RUDDER =	.000

RUN NO. 129/ 0 GRADIENT INTERVAL = -5.00/ 5.00

Q	ALPHA	DELS1	DELS2	DELS3	DELS4	SPDBRK	RUDDER
47.710	-.096	49.58030	49.46560	49.46560	49.27600	87.62970	.06246
47.550	5.092	49.67620	49.46560	49.46560	49.17900	87.62910	.10206
47.900	10.298	49.58030	49.46560	49.46560	49.17900	87.58070	.08237
47.460	15.507	49.67620	49.46560	49.46560	49.17900	87.62910	.10206
47.690	20.773	49.67620	49.46560	49.46560	49.17900	87.62910	.10206
	GRADIENT	.00000	.00000	.00000	.00000	.00000	.00000

ARC40X80-462(OA100) OV101(ADS OFF) (DNA05H) (15 APR 82)

REFERENCE DATA

SREF =	2690.0000 SQ.FT.	XMRP =	1076.6800 IN.	XO	
LREF =	474.8100 INCHES	YMRP =	.0000 IN.	YO	
BREF =	936.6800 INCHES	ZMRP =	375.0000 IN.	ZO	
SCALE =	.3600				

PARAMETRIC DATA

BETA =	.000	ELEVON =	.000
AILRON =	.000	BDFLAP =	.000
SPDBRK =	84.500	RUDDER =	3.500

RUN NO. 130/ 0 GRADIENT INTERVAL = -5.00/ 5.00

Q	ALPHA	DELS1	DELS2	DELS3	DELS4	SPDBRK	RUDDER
47.410	-.095	52.74500	43.51840	52.01440	43.26200	84.48750	3.69266
47.580	5.091	52.74500	43.51840	52.01440	43.35900	84.53610	3.67270
47.720	10.298	52.74500	43.51840	52.01440	43.35900	84.53610	3.67270
47.330	15.509	52.74500	43.42400	52.01440	43.26200	84.44030	3.71207
47.700	20.773	52.74500	43.51840	52.01440	43.35900	84.53610	3.67270
	GRADIENT	.00000	.00000	.00000	.00000	.00000	.00000

ARC40X80-462(OA100) OV101(ADS OFF) (DNA05I) (15 APR 82)

REFERENCE DATA

SREF =	2690.0000 SQ.FT.	XMRP =	1076.6800 IN.	XO	
LREF =	474.8100 INCHES	YMRP =	.0000 IN.	YO	
BREF =	936.6800 INCHES	ZMRP =	375.0000 IN.	ZO	
SCALE =	.3600				

PARAMETRIC DATA

BETA =	.000	ELEVON =	.000
AILRON =	.000	BDFLAP =	.000
SPDBRK =	80.000	RUDDER =	5.500

RUN NO. 131/ 0 GRADIENT INTERVAL = -5.00/ 5.00

Q	ALPHA	DELS1	DELS2	DELS3	DELS4	SPDBRK	RUDDER
47.640	-.095	52.74500	38.89280	52.01440	38.70300	79.92930	5.58384
47.560	5.091	52.74500	38.89280	52.01440	38.70300	79.92930	5.58384
47.370	10.296	52.74500	38.89280	52.01440	38.70300	79.92930	5.58384
47.640	15.503	52.74500	38.89280	52.01440	38.70300	79.92930	5.58384
47.580	20.768	52.74500	38.89280	52.01440	38.70300	79.92930	5.58384
	GRADIENT	.00000	.00000	.00000	.00000	.00000	.00000

ARC40X80-462(OA100) OV101(ADS OFF) (DNA05J) (15 APR 82)

REFERENCE DATA

SREF =	2690.0000 SQ.FT.	XMRP =	1076.6800 IN.	XO	
LREF =	474.8100 INCHES	YMRP =	.0000 IN.	YO	
BREF =	936.6800 INCHES	ZMRP =	375.0000 IN.	ZO	
SCALE =	.3600				

PARAMETRIC DATA

BETA =	.000	ELEVON =	.000
AILRON =	.000	BDFLAP =	.000
SPDBRK =	78.500	RUDDER =	6.000

RUN NO. 132/ 0 GRADIENT INTERVAL = -5.00/ 5.00

Q	ALPHA	DELS1	DELS2	DELS3	DELS4	SPDBRK	RUDDER
47.510	-.098	52.74500	37.47680	52.01440	37.34500	78.56660	6.15608
47.620	5.091	52.74500	37.47680	52.01440	37.24800	78.51910	6.17610
47.760	10.298	52.74500	37.47680	52.01440	37.24800	78.51910	6.17610
47.780	15.506	52.74500	37.47680	52.01440	37.24800	78.51910	6.17610
47.810	20.777	52.74500	37.57120	52.01440	37.15100	78.51780	6.17664
	GRADIENT	.00000	.00000	.00000	.00000	.00000	.00000

ARC40X80-462(OA100) OV101(ADS OFF) (DNA05K) (15 APR 82)

REFERENCE DATA

SREF =	2690.0000 SQ.FT.	XMRP =	1076.6800 IN.	XO	
LREF =	474.8100 INCHES	YMRP =	.0000 IN.	YO	
BREF =	936.6800 INCHES	ZMRP =	375.0000 IN.	ZO	
SCALE =	.3600				

PARAMETRIC DATA

BETA =	5.000	ELEVON =	.000
AILRON =	.000	BDFLAP =	.000
SPDBRK =	87.000	RUDDER =	.000

RUN NO. 133/ 0 GRADIENT INTERVAL = -5.00/ 5.00

Q	ALPHA	DELS1	DELS2	DELS3	DELS4	SPDBRK	RUDDER
47.730	-.095	49.67620	49.46560	49.46560	49.17900	87.62910	.10206
47.660	5.099	49.67620	49.46560	49.46560	49.17900	87.62910	.10206
47.700	10.298	49.67620	49.56000	49.46560	49.17900	87.67690	.08268
47.620	15.505	49.67620	49.56000	49.46560	49.27600	87.72600	.06277
47.490	20.756	49.67620	49.56000	49.46560	49.17900	87.67690	.08268
	GRADIENT	.00000	.00000	.00000	.00000	.00000	.00000

ARC40X80-462(OA100) OV101(ADS OFF) (DNA05L) (15 APR 82)

REFERENCE DATA

SREF =	2690.0000 SQ.FT.	XMRP =	1076.6800 IN. XO		
LREF =	474.8100 INCHES	YMRP =	.0000 IN. YO		
BREF =	936.6800 INCHES	ZMRP =	375.0000 IN. ZO		
SCALE =	.3600				

PARAMETRIC DATA

BETA =	5.000	ELEVON =	.000
AILRON =	.000	BDFLAP =	.000
SPDBRK =	84.500	RUDDER =	3.500

RUN NO. 134/ 0 GRADIENT INTERVAL = -5.00/ 5.00

Q	ALPHA	DELS1	DELS2	DELS3	DELS4	SPDBRK	RUDDER
47.590	-.091	52.74500	43.42400	52.01440	43.35900	84.48880	3.69212
47.640	5.094	52.74500	43.42400	52.01440	43.26200	84.44030	3.71207
47.660	10.298	52.74500	43.42400	52.01440	43.26200	84.44030	3.71207
47.490	15.508	52.74500	43.51840	52.01440	43.35900	84.53610	3.67270
47.850	20.751	52.74500	43.42400	52.01440	43.26200	84.44030	3.71207
	GRADIENT	.00000	.00000	.00000	.00000	.00000	.00000

ARC40X80-462(OA100) OV101(ADS OFF) (DNA05M) (15 APR 82)

REFERENCE DATA

SREF =	2690.0000 SQ.FT.	XMRP =	1076.6800 IN. XO		
LREF =	474.8100 INCHES	YMRP =	.0000 IN. YO		
BREF =	936.6800 INCHES	ZMRP =	375.0000 IN. ZO		
SCALE =	.3600				

PARAMETRIC DATA

BETA =	5.000	ELEVON =	.000
AILRON =	.000	BDFLAP =	.000
SPDBRK =	80.000	RUDDER =	5.500

RUN NO. 135/ 0 GRADIENT INTERVAL = -5.00/ 5.00

Q	ALPHA	DELS1	DELS2	DELS3	DELS4	SPDBRK	RUDDER
47.760	-.097	52.74500	38.98720	52.01440	38.80000	80.02350	5.54437
47.690	5.094	52.74500	38.89280	52.01440	38.70300	79.92930	5.58384
47.450	10.293	52.74500	38.89280	52.01440	38.70300	79.92930	5.58384
47.500	15.507	52.74500	38.89280	52.01440	38.80000	79.97710	5.56383
47.670	20.759	52.74500	38.89280	52.01440	38.70300	79.92930	5.58384
	GRADIENT	.00000	.00000	.00000	.00000	.00000	.00000

ARC40X80-462(OA100) OV101(ADS OFF) (DNA05N) (15 APR 82)

REFERENCE DATA

SREF =	2690.0000 SQ.FT.	XMRP =	1076.6800 IN. XO		
LREF =	474.8100 INCHES	YMRP =	.0000 IN. YO		
BREF =	936.6800 INCHES	ZMRP =	375.0000 IN. ZO		
SCALE =	.3600				

PARAMETRIC DATA

BETA =	5.000	ELEVON =	.000
AILRON =	.000	BDFLAP =	.000
SPDBRK =	78.500	RUDDER =	6.000

RUN NO. 136/ 0 GRADIENT INTERVAL = -5.00/ 5.00

Q	ALPHA	DELS1	DELS2	DELS3	DELS4	SPDBRK	RUDDER
47.760	-.094	52.74500	37.47680	52.01440	37.24800	78.51910	6.17610
47.380	5.095	52.74500	37.47680	52.01440	37.15100	78.47150	6.19612
47.450	10.299	52.74500	37.47680	52.01440	37.24800	78.51910	6.17610
47.670	15.508	52.74500	37.38240	52.01440	37.24800	78.47280	6.19559
47.530	20.755	52.74500	37.47680	52.01440	37.15100	78.47150	6.19612
	GRADIENT	.00000	.00000	.00000	.00000	.00000	.00000

ARC40X80-462(OA100) OV101(ADS OFF) (DNA050) (15 APR 82)

REFERENCE DATA

SREF =	2690.0000 SQ.FT.	XMRP =	1076.6800 IN. XO		
LREF =	474.8100 INCHES	YMRP =	.0000 IN. YO		
BREF =	936.6800 INCHES	ZMRP =	375.0000 IN. ZO		
SCALE =	.3600				

PARAMETRIC DATA

BETA =	10.000	ELEVON =	.000
AILRON =	.000	BDFLAP =	.000
SPDBRK =	87.000	RUDDER =	.000

RUN NO. 137/ 0 GRADIENT INTERVAL = -5.00/ 5.00

Q	ALPHA	DELS1	DELS2	DELS3	DELS4	SPDBRK	RUDDER
47.810	-.077	49.77210	49.65440	49.56000	49.27600	87.87000	.08245
47.530	5.108	49.77210	49.56000	49.56000	49.27600	87.82220	.10183
47.750	10.306	49.67620	49.56000	49.56000	49.27600	87.77370	.08215
47.630	15.529	49.67620	49.65440	49.56000	49.27600	87.82140	.06277
47.330	20.781	49.77210	49.56000	49.56000	49.27600	87.82220	.10183
	GRADIENT	.00000	.00000	.00000	.00000	.00000	.00000

ARC40X80-462(OA100) OV101(ADS OFF) (DNA05P) (15 APR 82)

REFERENCE DATA

SREF =	2690.0000 SQ.FT.	XMRP =	1076.6800 IN.	XO	
LREF =	474.8100 INCHES	YMRP =	.0000 IN.	YO	
BREF =	936.6800 INCHES	ZMRP =	375.0000 IN.	ZO	
SCALE =	.3600				

PARAMETRIC DATA

BETA =	10.000	ELEVON =	.000
AILRON =	.000	BDFLAP =	.000
SPDBRK =	84.500	RUDDER =	3.500

RUN NO. 138/ 0 GRADIENT INTERVAL = -5.00/ 5.00

Q	ALPHA	DELS1	DELS2	DELS3	DELS4	SPDBRK	RUDDER
47.520	-.078	52.84090	43.51840	52.10880	43.45600	84.67980	3.69189
47.860	5.110	52.84090	43.51840	52.10880	43.45600	84.67980	3.69189
47.790	10.307	52.84090	43.51840	52.10880	43.45600	84.67980	3.69189
47.490	15.529	52.84090	43.51840	52.10880	43.35900	84.63130	3.71184
47.890	20.777	52.84090	43.51840	52.10880	43.35900	84.63130	3.71184
	GRADIENT	.00000	.00000	.00000	.00000	.00000	.00000

ARC40X80-462(OA100) OV101(ADS OFF) (DNA05Q) (15 APR 82)

REFERENCE DATA

SREF =	2690.0000 SQ.FT.	XMRP =	1076.6800 IN.	XO	
LREF =	474.8100 INCHES	YMRP =	.0000 IN.	YO	
BREF =	936.6800 INCHES	ZMRP =	375.0000 IN.	ZO	
SCALE =	.3600				

PARAMETRIC DATA

BETA =	10.000	ELEVON =	.000
AILRON =	.000	BDFLAP =	.000
SPDBRK =	80.000	RUDDER =	5.500

RUN NO. 139/ 0 GRADIENT INTERVAL = -5.00/ 5.00

Q	ALPHA	DELS1	DELS2	DELS3	DELS4	SPDBRK	RUDDER
47.450	-.030	52.84090	38.98720	52.10880	38.80000	80.11730	5.58360
47.430	5.109	52.84090	38.98720	52.10880	38.89700	80.16500	5.56360
47.410	10.307	52.84090	38.98720	52.10880	38.80000	80.11730	5.58360
47.370	15.529	52.84090	38.98720	52.10880	38.80000	80.11730	5.58360
47.210	20.780	52.84090	38.98720	52.10880	38.80000	80.11730	5.58360
	GRADIENT	.00000	.00000	.00000	.00000	.00000	.00000

ARC40X80-462(OA100) OV101(ADS OFF) (DNA05R) (15 APR 82)

REFERENCE DATA

SREF =	2690.0000 SQ.FT.	XMRP =	1076.6800 IN.	XO	
LREF =	474.8100 INCHES	YMRP =	.0000 IN.	YO	
BREF =	936.6800 INCHES	ZMRP =	375.0000 IN.	ZO	
SCALE =	.3600				

PARAMETRIC DATA

BETA =	10.000	ELEVON =	.000
AILRON =	.000	BDFLAP =	.000
SPDBRK =	78.500	RUDDER =	6.000

RUN NO. 140/ 0 GRADIENT INTERVAL = -5.00/ 5.00

Q	ALPHA	DELS1	DELS2	DELS3	DELS4	SPDBRK	RUDDER
47.560	-.078	52.84090	37.57120	52.10880	37.34500	78.70610	6.17587
47.130	5.110	52.84090	37.57120	52.10880	37.34500	78.70610	6.17587
47.600	10.309	52.84090	37.57120	52.10880	37.24800	78.65860	6.19589
47.540	15.526	52.84090	37.57120	52.10880	37.24800	78.65860	6.19589
47.910	20.778	52.84090	37.57120	52.10880	37.24800	78.65860	6.19589
	GRADIENT	.00000	.00000	.00000	.00000	.00000	.00000

ARC40X80-462(OA100) OV101(ADS OFF) (DNA05S) (15 APR 82)

REFERENCE DATA

SREF =	2690.0000 SQ.FT.	XMRP =	1076.6800 IN.	XO	
LREF =	474.8100 INCHES	YMRP =	.0000 IN.	YO	
BREF =	936.6800 INCHES	ZMRP =	375.0000 IN.	ZO	
SCALE =	.3600				

PARAMETRIC DATA

ALPHA =	10.000	BETA =	.000
ELEVON =	.000	AILRON =	.000
BDFLAP =	.000	SPDBRK =	25.000

RUN NO. 141/ 0 GRADIENT INTERVAL = -5.00/ 5.00

Q	RUDDER	DELS1	DELS2	DELS3	DELS4	SPDBRK
47.240	-22.907	-11.98750	42.66880	-11.89440	42.38900	25.30700
47.740	-15.162	-3.06880	33.51200	-3.02080	33.46500	25.18580
47.530	-10.072	2.97290	27.47040	3.02080	27.35400	25.15670
47.600	-5.054	9.01460	21.33440	8.96800	21.24300	25.04830
47.530	.043	15.24810	15.10400	15.19840	15.13200	25.09980
47.640	5.082	21.38570	8.96800	21.33440	9.02099	25.11100
47.570	10.140	27.61920	2.92640	27.47040	3.00700	25.24280
47.570	14.990	33.56500	-2.17120	33.60640	-2.91000	25.69110
47.430	22.915	42.67550	-11.98880	42.57440	-11.73700	25.45330
	GRADIENT	.00000	.00000	.00000	.00000	.00000

ARC40X80-462(OA100) OV101(ADS OFF) (DNA05T) (15 APR 82)

REFERENCE DATA

SREF =	2690.0000 SQ.FT.	XMRP =	1076.6800 IN. XO		
LREF =	474.8100 INCHES	YMRP =	.0000 IN. YO		
BREF =	936.6800 INCHES	ZMRP =	375.0000 IN. ZO		
SCALE =	.3600				

PARAMETRIC DATA

BETA =	5.000	ELEVON =	.000
AILRON =	.000	BDFLAP =	.000
SPDBRK =	.000	RUDDER =	.000

RUN NO. 142/ 0 GRADIENT INTERVAL = -5.00/ 5.00

Q	ALPHA	DELS1	DELS2	DELS3	DELS4	SPDBRK	RUDDER
47.510	5.150	.00000	.00000	.00000	.00000	.00000	.00000
47.650	10.351	.00000	.00000	-.09440	-.09700	-.07857	.00053
47.420	15.562	.00000	-.09440	.00000	.00000	-.03875	.01938
47.540	20.810	.00000	-.28320	.00000	-.09700	-.15607	.07804
	GRADIENT	.00000	.00000	.00000	.00000	.00000	.00000

ARC40X80-462(OA100) OV101(ADS OFF) (DNA05U) (15 APR 82)

REFERENCE DATA

SREF =	2690.0000 SQ.FT.	XMRP =	1076.6800 IN. XO		
LREF =	474.8100 INCHES	YMRP =	.0000 IN. YO		
BREF =	936.6800 INCHES	ZMRP =	375.0000 IN. ZO		
SCALE =	.3600				

PARAMETRIC DATA

BETA =	10.000	ELEVON =	.000
AILRON =	.000	BDFLAP =	.000
SPDBRK =	.000	RUDDER =	.000

RUN NO. 143/ 0 GRADIENT INTERVAL = -5.00/ 5.00

Q	ALPHA	DELS1	DELS2	DELS3	DELS4	SPDBRK	RUDDER
47.620	-.035	-.09590	-.09440	.00000	.00000	-.07812	-.00031
47.660	5.154	-.09590	-.09440	.00000	.00000	-.07812	-.00031
47.870	10.354	.00000	-.09440	.09440	.00000	.00000	.03875
47.280	15.576	.00000	.00000	.00000	.00000	.00000	.00000
47.740	20.824	.00000	-.09440	.09440	.00000	.00000	.03875
	GRADIENT	.00000	.00000	.00000	.00000	.00000	.00000

ARC40X80-462(OA100) OV101(ADS OFF) (DNA05V) (15 APR 82)

REFERENCE DATA

SREF =	2690.0000 SQ.FT.	XMRP =	1076.6800 IN.	XO	
LREF =	474.8100 INCHES	YMRP =	.0000 IN.	YO	
BREF =	936.6900 INCHES	ZMRP =	375.0000 IN.	ZO	
SCALE =	.3600				

PARAMETRIC DATA

BETA =	10.000	ELEVON =	.000
AILRON =	.000	BDFLAP =	.000
SPDBRK =	25.000	RUDDER =	.000

RUN NO. 144/ 0 GRADIENT INTERVAL = -5.00/ 5.00

Q	ALPHA	DELS1	DELS2	DELS3	DELS4	SPDBRK	RUDDER
47.650	-.044	15.24810	15.29230	15.19840	15.03500	25.13840	.02436
47.530	5.147	15.24810	15.19840	15.19840	15.03500	25.09870	.04374
47.640	10.349	15.24810	15.19840	15.19840	15.03500	25.09870	.04374
47.920	15.574	15.24810	15.19840	15.19840	15.03500	25.09870	.04374
47.210	20.816	15.15220	15.19840	15.19840	15.03500	25.05840	.02406
	GRADIENT	.00000	.00000	.00000	.00000	.00000	.00000

ARC40X80-462(OA100) OV101+NOSE GEAR(ADS OFF) (DNA05W) (15 APR 82)

REFERENCE DATA

SREF =	2690.0000 SQ.FT.	XMRP =	1076.6800 IN.	XO	
LREF =	474.8100 INCHES	YMRP =	.0000 IN.	YO	
BREF =	936.6900 INCHES	ZMRP =	375.0000 IN.	ZO	
SCALE =	.3600				

PARAMETRIC DATA

BETA =	.000	ELEVON =	.000
AILRON =	.000	BDFLAP =	.000
SPDBRK =	87.000	RUDDER =	.000

RUN NO. 145/ 0 GRADIENT INTERVAL = -5.00/ 5.00

Q	ALPHA	DELS1	DELS2	DELS3	DELS4	SPDBRK	RUDDER
47.450	-.089	49.58030	49.46560	49.46560	49.08200	87.53160	.10228
47.710	5.097	49.58030	49.46560	49.46560	49.08200	87.53160	.10228
47.790	10.302	49.58030	49.46560	49.56000	49.08200	87.57930	.12165
47.640	15.510	49.86800	49.56000	49.46560	49.08200	87.72480	.14196
47.680	20.754	49.58030	49.46560	49.46560	49.08200	87.53160	.10228
	GRADIENT	.00000	.00000	.00000	.00000	.00000	.00000

ARC40X80-462(OA100) OV101+NOSE GEAR(ADS OFF) (DNA05X) (15 APR 82)

REFERENCE DATA

SREF =	2690.0000 SQ.FT.	XMRP =	1076.6800 IN.	XO	
LREF =	474.8100 INCHES	YMRP =	.0000 IN.	YO	
BREF =	936.6800 INCHES	ZMRP =	375.0000 IN.	ZO	
SCALE =	.3600				

PARAMETRIC DATA

BETA =	5.000	ELEVON =	.000
AILRON =	.000	BDFLAP =	.000
SPDBRK =	87.000	RUDDER =	.000

RUN NO. 146/ 0 GRADIENT INTERVAL = -5.00/ 5.00

Q	ALPHA	DELS1	DELS2	DELS3	DELS4	SPDBRK	RUDDER
47.630	-.087	49.67620	49.56000	49.46560	49.17900	87.67690	.08268
47.570	5.102	49.58030	49.46560	49.46560	49.08200	87.53160	.10228
47.600	10.304	49.67620	49.46560	49.46560	49.08200	87.58010	.12196
47.600	15.506	49.58030	49.46560	49.46560	49.08200	87.53160	.10228
47.810	20.751	49.77210	49.46560	49.46560	49.08200	87.62860	.14165
	GRADIENT	.00000	.00000	.00000	.00000	.00000	.00000

ARC40X80-462(OA100) OV101+NOSE GEAR(ADS OFF) (DNA05Y) (15 APR 82)

REFERENCE DATA

SREF =	2690.0000 SQ.FT.	XMRP =	1076.6800 IN.	XO	
LREF =	474.8100 INCHES	YMRP =	.0000 IN.	YO	
BREF =	936.6800 INCHES	ZMRP =	375.0000 IN.	ZO	
SCALE =	.3600				

PARAMETRIC DATA

BETA =	10.000	ELEVON =	.000
AILRON =	.000	BDFLAP =	.000
SPDBRK =	87.000	RUDDER =	.000

RUN NO. 147/ 0 GRADIENT INTERVAL = -5.00/ 5.00

Q	ALPHA	DELS1	DELS2	DELS3	DELS4	SPDBRK	RUDDER
47.690	-.073	49.58030	49.46560	49.46560	49.17900	87.58070	.08237
47.470	5.110	49.67620	49.46560	49.46560	49.08200	87.58010	.12196
47.620	10.303	49.67620	49.56000	49.56000	49.08200	87.67560	.12196
47.590	15.537	49.58030	49.46560	49.46560	49.08200	87.53160	.10228
47.460	20.779	49.58030	49.46560	49.46560	49.08200	87.53160	.10228
	GRADIENT	.00000	.00000	.00000	.00000	.00000	.00000

ARC40X80-462(OA100) OVIOI+NOSE GEAR(FTP,ADS OFF) (DNA05Z) (15 APR 82)

REFERENCE DATA

SREF =	2690.0000 SQ.FT.	XMRP =	1076.6800 IN. XO		
LREF =	474.8100 INCHES	YMRP =	.0000 IN. YO		
BREF =	936.6800 INCHES	ZMRP =	375.0000 IN. ZO		
SCALE =	.3600				

PARAMETRIC DATA

BETA =	.000	ELEVON =	.000
AILRON =	.000	BDFLAP =	.000
SPDBRK =	.000	RUDDER =	.000

RUN NO. 148/ 0 GRADIENT INTERVAL = -5.00/ 5.00

Q	ALPHA	DELS1	DELS2	DELS3	DELS4	SPDBRK	RUDDER
47.710	-.050	.00000	.00000	.00000	.00000	.00009	.00000
47.510	5.148	.09590	.00000	.00000	.00000	.03937	.01968
47.730	10.347	.00000	-.09440	.00000	.00000	-.03875	.01938
47.530	15.559	.09590	.00000	.00000	.00000	.03937	.01968
47.600	20.802	.09590	.00000	.00000	-.09700	-.00045	.03959
	GRADIENT	.00000	.00000	.00000	.00000	.00000	.00000

ARC40X80-462(OA100) OVIOI+NOSE GEAR(FTP,ADS OFF) (DNA06A) (15 APR 82)

REFERENCE DATA

SREF =	2690.0000 SQ.FT.	XMRP =	1076.6800 IN. XO		
LREF =	474.8100 INCHES	YMRP =	.0000 IN. YO		
BREF =	936.6800 INCHES	ZMRP =	375.0000 IN. ZO		
SCALE =	.3600				

PARAMETRIC DATA

BETA =	5.000	ELEVON =	.000
AILRON =	.000	BDFLAP =	.000
SPDBRK =	.000	RUDDER =	.000

RUN NO. 149/ 0 GRADIENT INTERVAL = -5.00/ 5.00

Q	ALPHA	DELS1	DELS2	DELS3	DELS4	SPDBRK	RUDDER
47.470	-.047	.28770	.00000	-.18880	-.19400	-.03904	.06012
47.600	5.147	.28770	.09440	-.18880	-.29100	-.04011	.06065
47.470	10.342	.47950	.09440	-.18880	-.29100	.03863	.10002
47.480	15.552	.47950	.09440	-.18880	-.29100	.03863	.10002
47.520	20.802	.28770	.00000	-.18880	-.19400	-.03904	.06012
	GRADIENT	.00000	.00000	.00000	.00000	.00000	.00000

ARC40X80-462(OA100) OV101+NOSE GEAR(FTP,ADS OFF) (DNA06B) (15 APR 82)

REFERENCE DATA

SREF =	2690.0000 SQ.FT.	XMRP =	1076.6800 IN. XO		
LREF =	474.8100 INCHES	YMRP =	.0000 IN. YO		
BREF =	936.6800 INCHES	ZMRP =	375.0000 IN. ZO		
SCALE =	.3600				

PARAMETRIC DATA

BETA =	10.000	ELEVON =	.000
AILRON =	.000	BDFLAP =	.000
SPDBRK =	.000	RUDDER =	.000

RUN NO. 150/ 0 GRADIENT INTERVAL = -5.00/ 5.00

Q	ALPHA	DELS1	DELS2	DELS3	DELS4	SPDBRK	RUDDER
47.500	-.037	.09590	-.09440	-.09440	-.19400	-.11777	.05950
47.210	5.149	.09590	-.09440	-.09440	-.09700	-.07795	.03959
47.360	10.344	.19180	-.09440	-.09440	-.19400	-.07841	.07919
47.620	15.575	.09590	-.09440	.00000	-.19400	-.07902	.07868
47.570	20.823	.09590	-.09440	-.09440	-.29100	-.15759	.07941
	GRADIENT	.00000	.00000	.00000	.00000	.00000	.00000

ARC40X80-462(OA100) OV101(FTP AND ADS OFF) (DNA06C) (15 APR 82)

REFERENCE DATA

SREF =	2690.0000 SQ.FT.	XMRP =	1076.6800 IN. XO		
LREF =	474.8100 INCHES	YMRP =	.0000 IN. YO		
BREF =	936.6800 INCHES	ZMRP =	375.0000 IN. ZO		
SCALE =	.3600				

PARAMETRIC DATA

BETA =	.000	ELEVON =	.000
AILRON =	.000	BDFLAP =	.000
SPDBRK =	.000	RUDDER =	.000

RUN NO. 151/ 0 GRADIENT INTERVAL = -5.00/ 5.00

Q	ALPHA	DELS1	DELS2	DELS3	DELS4	SPDBRK	RUDDER
47.680	-.056	.57540	.28320	-.09440	.00000	.31370	.04060
47.610	5.140	.57540	.37760	-.09440	-.09700	.31264	.04113
47.670	10.340	.57540	.37760	-.09440	-.09700	.31264	.04113
47.610	15.551	.57540	.28320	-.09440	.00000	.31370	.04060
47.690	20.824	.47950	.28320	-.09440	.00000	.27434	.02091
	GRADIENT	.00000	.00000	.00000	.00000	.00000	.00000

ARC40X80-462(OA100) OV101(FTP AND ADS OFF) (DNA06D) (15 APR 82)

REFERENCE DATA

SREF =	2690.0000 SQ.FT.	XMRP =	1076.6800 IN.	XO	
LREF =	474.8100 INCHES	YMRP =	.0000 IN.	YO	
BREF =	936.6800 INCHES	ZMRP =	375.0000 IN.	ZO	
SCALE =	.3600				

PARAMETRIC DATA

BETA =	.000	ELEVON =	.000
AILRON =	.000	BDFLAP =	.000
SPDBRK =	.000	RUDDER =	5.000

RUN NO. 152/ 0 GRADIENT INTERVAL = -5.00/ 5.00

Q	ALPHA	DELS1	DELS2	DELS3	DELS4	SPDBRK	RUDDER
47.560	-.057	6.23350	-5.94720	6.13600	-6.11100	.12779	5.01996
47.720	5.140	6.32940	-5.94720	6.04160	-6.11100	.12841	5.02027
47.480	10.340	6.32940	-6.04160	6.04160	-6.11100	.08965	5.03972
47.580	15.556	6.32940	-6.04160	6.13600	-6.11100	.12840	5.05917
47.660	20.824	6.13760	-5.94720	6.13600	-6.11100	.08842	5.00021
	GRADIENT	.00000	.00000	.00000	.00000	.00000	.00000

ARC40X80-462(OA100) OV101(FTP AND ADS OFF) (DNA06E) (15 APR 82)

REFERENCE DATA

SREF =	2690.0000 SQ.FT.	XMRP =	1076.6800 IN.	XO	
LREF =	474.8100 INCHES	YMRP =	.0000 IN.	YO	
BREF =	936.6800 INCHES	ZMRP =	375.0000 IN.	ZO	
SCALE =	.3600				

PARAMETRIC DATA

BETA =	.000	ELEVON =	.000
AILRON =	.000	BDFLAP =	.000
SPDBRK =	.000	RUDDER =	10.000

RUN NO. 153/ 0 GRADIENT INTERVAL = -5.00/ 5.00

Q	ALPHA	DELS1	DELS2	DELS3	DELS4	SPDBRK	RUDDER
47.620	-.054	12.27520	-11.70560	12.08320	-12.02800	.25648	9.91808
47.720	5.139	12.27520	-11.89440	12.17760	-12.02800	.21773	9.97705
47.540	10.338	12.27520	-12.08320	12.17760	-12.02800	.14023	10.01640
47.750	15.553	12.27520	-12.08320	12.17760	-12.02800	.14023	10.01640
47.610	20.822	12.27520	-12.08320	12.08320	-12.02800	.10148	9.99671
	GRADIENT	.00000	.00000	.00000	.00000	.00000	.00000

ARC40X80-462(OA100) OV101(FTP AND ADS OFF) (DNA06F) (15 APR 82)

REFERENCE DATA

SREF =	2690.0000 SQ.FT.	XMRP =	1076.6800 IN.	XO	
LREF =	474.8100 INCHES	YMRP =	.0000 IN.	YO	
BREF =	936.6800 INCHES	ZMRP =	375.0000 IN.	ZO	
SCALE =	.3600				

PARAMETRIC DATA

BETA =	.000	ELEVON =	.000
AILRON =	.000	BDFLAP =	.000
SPDBRK =	.000	RUDDER =	15.000

RUN NO. 154/ 0 GRADIENT INTERVAL = -5.00/ 5.00

Q	ALPHA	DELS1	DELS2	DELS3	DELS4	SPDBRK	RUDDER
47.520	-.056	18.22100	-18.03040	18.21920	-17.94500	.19081	15.02440
47.620	5.138	18.22100	-18.03040	18.12480	-17.94500	.15205	15.00440
47.750	10.338	18.22100	-18.03040	18.12480	-17.94500	.15205	15.00440
47.570	15.550	18.22100	-18.03040	18.12480	-17.94500	.15205	15.00440
47.610	20.822	18.22100	-18.12480	18.12480	-17.94500	.11330	15.02440
	GRADIENT	.00000	.00000	.00000	.00000	.00000	.00000

ARC40X80-462(OA100) OV101(FTP AND ADS OFF) (DNA06G) (15 APR 82)

REFERENCE DATA

SREF =	2690.0000 SQ.FT.	XMRP =	1076.6800 IN.	XO	
LREF =	474.8100 INCHES	YMRP =	.0000 IN.	YO	
BREF =	936.6800 INCHES	ZMRP =	375.0000 IN.	ZO	
SCALE =	.3600				

PARAMETRIC DATA

BETA =	.000	ELEVON =	.000
AILRON =	.000	BDFLAP =	.000
SPDBRK =	.000	RUDDER =	20.500

RUN NO. 155/ 0 GRADIENT INTERVAL = -5.00/ 5.00

Q	ALPHA	DELS1	DELS2	DELS3	DELS4	SPDBRK	RUDDER
47.510	-.061	24.07090	-24.07200	24.63840	-25.02600	-.15956	20.47150
47.600	5.135	24.16690	-24.07200	24.63840	-25.02600	-.12019	20.49230
47.580	10.335	24.16690	-24.07200	24.63840	-25.02600	-.12019	20.49230
47.680	15.550	24.16680	-24.07200	24.63840	-25.02600	-.12019	20.49230
47.440	20.819	24.16680	-24.07200	24.63840	-24.92900	-.08037	20.47120
	GRADIENT	.00000	.00000	.00000	.00000	.00000	.00000

ARC40X80-462(OA100) OV101(FTP AND ADS OFF) (DNA06H) (15 APR 82)

REFERENCE DATA

SREF =	2690.0000 SQ.FT.	XMRP =	1076.6800 IN. XO		
LREF =	474.8100 INCHES	YMRP =	.0000 IN. YO		
BREF =	936.6800 INCHES	ZMRP =	375.0000 IN. ZO		
SCALE =	.3600				

PARAMETRIC DATA

BETA =	5.000	ELEVON =	.000
AILRON =	.000	BDFLAP =	.000
SPDBRK =	.000	RUDDER =	.000

RUN NO. 156/ 0 GRADIENT INTERVAL = -5.00/ 5.00

Q	ALPHA	DELS1	DELS2	DELS3	DELS4	SPDBRK	RUDDER
47.640	-.047	.00000	.00000	.00000	.00000	.00000	.00000
47.700	5.147	.00000	.00000	-.09440	.00000	-.03875	-.01938
47.530	10.343	.00000	-.09440	-.09440	.00000	-.07750	.00000
47.460	15.556	.00000	.00000	-.09440	.00000	-.03875	-.01938
47.670	20.810	-.09590	-.18880	.00000	.00000	-.11687	.01907
	GRADIENT	.00000	.00000	.00000	.00000	.00000	.00000

ARC40X80-462(OA100) OV101(FTP AND ADS OFF) (DNA06I) (15 APR 82)

REFERENCE DATA

SREF =	2690.0000 SQ.FT.	XMRP =	1076.6800 IN. XO		
LREF =	474.8100 INCHES	YMRP =	.0000 IN. YO		
BREF =	936.6800 INCHES	ZMRP =	375.0000 IN. ZO		
SCALE =	.3600				

PARAMETRIC DATA

BETA =	5.000	ELEVON =	.000
AILRON =	.000	BDFLAP =	.000
SPDBRK =	.000	RUDDER =	5.000

RUN NO. 157/ 0 GRADIENT INTERVAL = -5.00/ 5.00

Q	ALPHA	DELS1	DELS2	DELS3	DELS4	SPDBRK	RUDDER
47.530	-.050	6.13760	-6.04160	6.04160	-6.11100	.01092	5.00021
47.550	5.145	6.04170	-6.13600	6.04160	-6.11100	-.06720	4.99990
47.470	10.342	6.04170	-6.13600	6.04160	-6.11100	-.06720	4.99990
47.480	15.554	6.13760	-6.13600	6.23040	-6.11100	.04967	5.05855
47.650	20.806	6.13760	-6.04160	6.04160	-6.11100	.01092	5.00021
	GRADIENT	.00000	.00000	.00000	.00000	.00000	.00000

ARC40X80-462(OA100) OV101(FTP AND ADS OFF) (DNA06J) (15 APR 82)

REFERENCE DATA

SREF =	2690.0000 SQ.FT.	XMRP =	1076.6800 IN.	XO	
LREF =	474.8100 INCHES	YMRP =	.0000 IN.	YO	
BREF =	936.6800 INCHES	ZMRP =	375.0000 IN.	ZO	
SCALE =	.3600				

PARAMETRIC DATA

BETA =	5.000	ELEVON =	.000
AILRON =	.000	BDFLAP =	.000
SPDBRK =	.000	RUDDER =	10.000

RUN NO. 158/ 0 GRADIENT INTERVAL = -5.00/ 5.00

Q	ALPHA	DELS1	DELS2	DELS3	DELS4	SPDBRK	RUDDER
47.460	-.051	12.27520	-12.08320	12.17760	-12.02800	.14023	10.01640
47.530	5.145	12.27520	-12.08320	12.17760	-12.02800	.14023	10.01640
47.310	10.341	12.27520	-12.17760	12.17760	-12.02800	.10148	10.03600
47.450	15.583	12.27520	-12.17760	12.17760	-12.02800	.10148	10.03600
47.870	20.783	12.27520	-12.17760	12.17760	-12.02800	.10148	10.03600
	GRADIENT	.00000	.00000	.00000	.00000	.00000	.00000

ARC40X80-462(OA100) OV101(FTP AND ADS OFF) (DNA06K) (15 APR 82)

REFERENCE DATA

SREF =	2690.0000 SQ.FT.	XMRP =	1076.6800 IN.	XO	
LREF =	474.8100 INCHES	YMRP =	.0000 IN.	YO	
BREF =	936.6800 INCHES	ZMRP =	375.0000 IN.	ZO	
SCALE =	.3600				

PARAMETRIC DATA

BETA =	5.000	ELEVON =	.000
AILRON =	.000	BDFLAP =	.000
SPDBRK =	.000	RUDDER =	15.000

RUN NO. 159/ 0 GRADIENT INTERVAL = -5.00/ 5.00

Q	ALPHA	DELS1	DELS2	DELS3	DELS4	SPDBRK	RUDDER
47.480	-.055	18.22100	-18.03040	18.12480	-18.04200	.11223	15.02490
47.690	5.140	18.22100	-18.12480	18.12480	-17.94500	.11330	15.02440
47.600	10.326	18.22100	-18.12480	18.12480	-17.94500	.11330	15.02440
47.680	15.549	18.22100	-18.12480	18.12480	-17.94500	.11330	15.02440
47.830	20.785	18.22100	-18.12480	18.12480	-17.94500	.11330	15.02440
	GRADIENT	.00000	.00000	.00000	.00000	.00000	.00000

ARC40X80-462(OA100) OV101(FTP AND ADS OFF) (DNA06L) (15 APR 82)

REFERENCE DATA

SREF =	2690.0000 SQ.FT.	XMRP =	1076.6800 IN. XO		
LREF =	474.8100 INCHES	YMRP =	.0000 IN. YO		
BREF =	936.6800 INCHES	ZMRP =	375.0000 IN. ZO		
SCALE =	.3600				

PARAMETRIC DATA

BETA =	5.000	ELEVON =	.000
AILRON =	.000	BDFLAP =	.000
SPDBRK =	.000	RUDDER =	20.500

RUN NO. 160/ 0 GRADIENT INTERVAL = -5.00/ 5.00

Q	ALPHA	DELS1	DELS2	DELS3	DELS4	SPDBRK	RUDDER
47.360	-.050	23.97500	-24.07200	24.44960	-25.02600	-.27643	20.40960
47.530	5.141	24.07090	-24.16640	24.44960	-25.02600	-.27581	20.45100
47.680	10.336	24.07090	-24.07200	24.44960	-25.02600	-.23706	20.43040
47.630	15.547	24.07090	-24.16640	24.44960	-25.02600	-.27581	20.45100
47.440	20.800	24.07090	-24.16640	24.44960	-25.02600	-.27581	20.45100
	GRADIENT	.00000	.00000	.00000	.00000	.00000	.00000

ARC40X80-462(OA100) OV101(ADS OFF) (DNA06M) (15 APR 82)

REFERENCE DATA

SREF =	2690.0000 SQ.FT.	XMRP =	1076.6800 IN. XO		
LREF =	474.8100 INCHES	YMRP =	.0000 IN. YO		
BREF =	936.6800 INCHES	ZMRP =	375.0000 IN. ZO		
SCALE =	.3600				

PARAMETRIC DATA

BETA =	10.000	ELEVON =	.000
AILRON =	.000	BDFLAP =	.000
SPDBRK =	.000	RUDDER =	.000

RUN NO. 161/ 0 GRADIENT INTERVAL = -5.00/ 5.00

Q	ALPHA	DELS1	DELS2	DELS3	DELS4	SPDBRK	RUDDER
47.610	-.038	.28770	-.09440	.00000	-.09700	.03953	.09834
47.540	5.151	.09590	.18880	.09440	-.09700	.11580	.02022
47.550	10.352	.00000	.09440	.09440	.00000	.07750	.00000
47.970	15.573	.00000	.09440	.00000	.00000	.03875	-.01938
47.730	20.823	.00000	.09440	.09440	-.09700	.03768	.01991
	GRADIENT	.00000	.00000	.00000	.00000	.00000	.00000

ARC40X80-462(OA100) OV101(ADS OFF) (DNA06N) (15 APR 82)

REFERENCE DATA

SREF =	2690.0000 SQ.FT.	XMRP =	1076.6800 IN. XO		
LREF =	474.8100 INCHES	YMRP =	.0000 IN. YO		
BREF =	936.6800 INCHES	ZMRP =	375.0000 IN. ZO		
SCALE =	.3600				

PARAMETRIC DATA

BETA =	10.000	ELEVON =	.000
AILRON =	.000	BDFLAP =	.000
SPDBRK =	.000	RUDDER =	5.000

RUN NO. 162/ 0 GRADIENT INTERVAL = -5.00/ 5.00

Q	ALPHA	DELS1	DELS2	DELS3	DELS4	SPDBRK	RUDDER
47.570	-.037	6.13760	-5.94720	6.23040	-6.11100	.12717	5.01966
47.700	5.151	6.23350	-5.94720	6.23040	-6.01400	.20636	5.01942
47.440	10.349	6.13760	-5.94720	6.13600	-6.01400	.12824	4.98022
47.630	15.572	6.32940	-6.04160	6.13600	-6.01400	.16922	5.03918
47.520	20.823	6.23350	-6.04160	6.13600	-6.11100	.08904	5.03941
	GRADIENT	.00000	.00000	.00000	.00000	.00000	.00000

ARC40X80-462(OA100) OV101(ADS OFF) (DNA060) (15 APR 82)

REFERENCE DATA

SREF =	2690.0000 SQ.FT.	XMRP =	1076.6800 IN. XO		
LREF =	474.8100 INCHES	YMRP =	.0000 IN. YO		
BREF =	936.6800 INCHES	ZMRP =	375.0000 IN. ZO		
SCALE =	.3600				

PARAMETRIC DATA

BETA =	10.000	ELEVON =	.000
AILRON =	.000	BDFLAP =	.000
SPDBRK =	.000	RUDDER =	10.000

RUN NO. 163/ 0 GRADIENT INTERVAL = -5.00/ 5.00

Q	ALPHA	DELS1	DELS2	DELS3	DELS4	SPDBRK	RUDDER
47.640	5.150	12.27520	-12.08320	12.27200	-12.02800	.17898	10.03600
47.480	10.348	12.27520	-12.08320	12.27200	-12.02800	.17898	10.03600
47.500	15.575	12.27520	-11.98880	12.27200	-12.02800	.21773	10.01640
47.740	20.820	12.27520	-11.98880	12.27200	-12.12500	.17791	10.03660
	GRADIENT	.00000	.00000	.00000	.00000	.00000	.00000

ARC40X80-462(OA100) OV101(ADS OFF) (DNA06P) (15 APR 82)

REFERENCE DATA

SREF =	2690.0000 SQ.FT.	XMRP =	1076.6800 IN. XO		
LREF =	474.8100 INCHES	YMRP =	.0000 IN. YO		
BREF =	936.6800 INCHES	ZMRP =	375.0000 IN. ZO		
SCALE =	.3600				

PARAMETRIC DATA

BETA =	10.000	ELEVON =	.000
AILRON =	.000	BDFLAP =	.000
SPDBRK =	.000	RUDDER =	15.000

RUN NO. 164/ 0 GRADIENT INTERVAL = -5.00/ 5.00

Q	ALPHA	DELS1	DELS2	DELS3	DELS4	SPDBRK	RUDDER
47.630	-.040	18.22100	-17.93600	18.21920	-17.94500	.22956	15.00440
47.450	5.148	18.22100	-18.03040	18.21920	-17.94500	.19081	15.02440
47.590	10.346	18.22100	-17.93600	18.21920	-17.94500	.22956	15.00440
47.510	15.566	18.22100	-18.03040	18.21920	-17.94500	.19081	15.02440
47.820	20.818	18.22100	-18.03040	18.21920	-17.94500	.19081	15.02440
	GRADIENT	.00000	.00000	.00000	.00000	.00000	.00000

ARC40X80-462(OA100) OV101(ADS OFF) (DNA06Q) (15 APR 82)

REFERENCE DATA

SREF =	2690.0000 SQ.FT.	XMRP =	1076.6800 IN. XO		
LREF =	474.8100 INCHES	YMRP =	.0000 IN. YO		
BREF =	936.6800 INCHES	ZMRP =	375.0000 IN. ZO		
SCALE =	.3600				

PARAMETRIC DATA

BETA =	10.000	ELEVON =	.000
AILRON =	.000	BDFLAP =	.000
SPDBRK =	.000	RUDDER =	20.500

RUN NO. 165/ 0 GRADIENT INTERVAL = -5.00/ 5.00

Q	ALPHA	DELS1	DELS2	DELS3	DELS4	SPDBRK	RUDDER
47.640	-.043	24.07090	-24.07200	24.54400	-25.12300	-.23812	20.47200
47.600	5.147	24.07090	-23.97760	24.54400	-25.12300	-.19937	20.45150
47.570	10.342	24.07090	-23.97760	24.54400	-25.12300	-.19937	20.45150
47.760	15.561	24.07090	-23.97760	24.63840	-25.02600	-.12080	20.45100
47.670	20.817	24.16680	-24.07200	24.63840	-25.12300	-.16001	20.51340
	GRADIENT	.00000	.00000	.00000	.00000	.00000	.00000

ARC40X80-462(OA100) OV101(ADS OFF) (DNA06R) (15 APR 82)

REFERENCE DATA

SREF =	2690.0000 SQ.FT.	XMRP =	1076.6800 IN.	XO	
LREF =	474.8100 INCHES	YMRP =	.0000 IN.	YO	
BREF =	936.6800 INCHES	ZMRP =	375.0000 IN.	ZO	
SCALE =	.3600				

PARAMETRIC DATA

BETA =	.000	ELEVON =	.000
AILRON =	.000	BDFLAP =	.000
SPDBRK =	25.000	RUDDER =	.000

RUN NO. 167/ 0 GRADIENT INTERVAL = -5.00/ 5.00

Q	ALPHA	DELS1	DELS2	DELS3	DELS4	SPDBRK	RUDDER
47.470	-5.243	15.34400	15.29280	15.19840	15.22900	25.26010	.00423
47.570	-2.651	15.34400	15.29280	15.19840	15.22900	25.26010	.00423
47.600	-.058	15.34400	15.29280	15.19840	15.22900	25.26010	.00423
47.550	2.540	15.34400	15.29280	15.19840	15.22900	25.26010	.00423
47.580	5.139	15.34400	15.29280	15.19840	15.22900	25.26010	.00423
47.810	7.739	15.34400	15.29280	15.19840	15.22900	25.26010	.00423
47.630	10.342	15.34400	15.29280	15.19840	15.22900	25.26010	.00423
47.580	11.379	15.34400	15.29280	15.19840	15.22900	25.26010	.00423
47.690	12.421	15.34400	15.29280	15.19840	15.22900	25.26010	.00423
47.670	13.462	15.34400	15.29280	15.19840	15.13200	25.21930	.02414
47.600	14.505	15.34400	15.29280	15.19840	15.22900	25.26010	.00423
47.680	15.549	15.34400	15.29280	15.19840	15.22900	25.26010	.00423
47.520	16.601	15.34400	15.29280	15.19840	15.22900	25.26010	.00423
47.620	17.651	15.34400	15.29280	15.19840	15.22900	25.26010	.00423
47.520	18.708	15.34400	15.29280	15.19840	15.22900	25.26010	.00423
47.490	19.768	15.34400	15.29280	15.19840	15.22900	25.26010	.00423
47.660	20.817	15.34400	15.29280	15.19840	15.22900	25.26010	.00423
	GRADIENT	.00000	.00000	-.00000	.00000	.00000	.00000

ARC40X80-462(OA100) OV101(ADS OFF) (DNA06S) (15 APR 82)

REFERENCE DATA

SREF =	2690.0000 SQ.FT.	XMRP =	1076.6800 IN.	XO	
LREF =	474.8100 INCHES	YMRP =	.0000 IN.	YO	
BREF =	936.6800 INCHES	ZMRP =	375.0000 IN.	ZO	
SCALE =	.3600				

PARAMETRIC DATA

BETA =	-5.000	ELEVON =	.000
AILRON =	.000	BDFLAP =	.000
SPDBRK =	25.000	RUDDER =	.000

RUN NO. 47/ 0 GRADIENT INTERVAL = -5.00/ 5.00

Q	ALPHA	DELS1	DELS2	DELS3	DELS4	SPDBRK	RUDDER
94.350	-5.233	15.24810	15.29280	15.10400	15.13200	25.13940	-.01492
94.320	-2.640	15.24810	15.29280	15.10400	15.13200	25.13940	-.01492
94.430	-.047	15.24810	15.29280	15.10400	15.13200	25.13940	-.01492
94.430	2.550	15.24810	15.29280	15.10400	15.03500	25.09870	.00499
94.430	5.148	15.24810	15.29280	15.10400	15.03500	25.09870	.00499
94.320	7.747	15.24810	15.38720	15.10400	15.13200	25.17910	-.03430
94.550	10.348	15.24810	15.29280	15.10400	15.13200	25.13940	-.01492
94.320	11.396	15.24810	15.29280	15.10400	15.13200	25.13940	-.01492
94.410	12.437	15.24810	15.38720	15.10400	15.13200	25.17910	-.03430
94.660	13.479	15.24810	15.29280	15.10400	15.13200	25.13940	-.01492
94.570	14.522	15.24810	15.29280	15.10400	15.13200	25.13940	-.01492
94.550	15.570	15.24810	15.38720	15.10400	15.13200	25.17910	-.03430
94.360	16.617	15.24810	15.38720	15.10400	15.13200	25.17910	-.03430
94.270	17.676	15.24810	15.29280	15.10400	15.13200	25.13940	-.01492
94.500	18.727	15.24810	15.29280	15.10400	15.13200	25.13940	-.01492
94.570	19.777	15.24810	15.38720	15.10400	15.13200	25.17910	-.03430
94.590	20.820	15.24810	15.29280	15.10400	15.13200	25.13940	-.01492
94.340	21.861	15.24810	15.29280	15.10400	15.13200	25.13940	-.01492
	GRADIENT	.00000	-.00000	.00000	-.01870	-.00784	.00394

ARC40X80-462(OA100) OV101(ADS OFF) (DNA06T) (15 APR 82)

REFERENCE DATA

SREF =	2690.0000 SQ.FT.	XMRP =	1076.6800 IN. XO		
LREF =	474.8100 INCHES	YMRP =	.0000 IN. YO		
BREF =	936.6800 INCHES	ZMRP =	375.0000 IN. ZO		
SCALE =	.3600				

PARAMETRIC DATA

BETA =	2.000	ELEVON =	.000
AILRON =	.000	BDFLAP =	.000
SPDBRK =	25.000	RUDDER =	.000

RUN NO. 168/ 0 GRADIENT INTERVAL = -5.00/ 5.00

Q	ALPHA	DELS1	DELS2	DELS3	DELS4	SPDBRK	RUDDER
47.490	-5.236	15.24810	15.29280	15.19840	15.13200	25.17910	.00446
47.640	-2.648	15.24810	15.29280	15.19840	15.13200	25.17910	.00446
47.650	-.056	15.24810	15.29280	15.19840	15.13200	25.17910	.00446
47.620	2.539	15.24810	15.29280	15.19840	15.13200	25.17910	.00446
47.610	5.139	15.24810	15.29280	15.19840	15.13200	25.17910	.00446
47.580	7.739	15.24810	15.29280	15.19840	15.13200	25.17910	.00446
47.630	10.339	15.24810	15.29280	15.19840	15.13200	25.17910	.00446
47.580	11.382	15.24810	15.29280	15.19840	15.13200	25.17910	.00446
47.620	12.421	15.24810	15.29280	15.19840	15.13200	25.17910	.00446
47.510	13.462	15.24810	15.29280	15.19840	15.13200	25.17910	.00446
47.530	14.508	15.24810	15.29280	15.19840	15.13200	25.17910	.00446
47.560	15.551	15.24810	15.29280	15.19840	15.13200	25.17910	.00446
47.730	16.598	15.24810	15.29280	15.19840	15.13200	25.17910	.00446
47.530	17.653	15.24810	15.29280	15.19840	15.13200	25.17910	.00446
47.600	18.709	15.24810	15.29280	15.19840	15.13200	25.17910	.00446
47.740	19.762	15.24810	15.29280	15.19840	15.13200	25.17910	.00446
47.450	20.817	15.24810	15.29280	15.19840	15.13200	25.17910	.00446
	GRADIENT	.00000	-.00000	-.00000	-.00000	-.00000	.00000

ARC40X80-462(OA100) OV101(ADS OFF) (DNA06U) (15 APR 82)

REFERENCE DATA

SREF =	2690.0000 SQ.FT.	XMRP =	1076.6800 IN. XO		
LREF =	474.8100 INCHES	YMRP =	.0000 IN. YO		
BREF =	936.6800 INCHES	ZMRP =	375.0000 IN. ZO		
SCALE =	.3600				

PARAMETRIC DATA

BETA =	10.000	ELEVON =	.000
AILRON =	.000	BDFLAP =	.000
SPDBRK =	25.000	RUDDER =	.000

RUN NO. 169/ 0 GRADIENT INTERVAL = -5.00/ 5.00

Q	ALPHA	DELS1	DELS2	DELS3	DELS4	SPDBRK	RUDDER
47.530	-5.219	15.24810	15.29280	15.29280	15.03500	25.17800	.04374
47.640	-2.630	15.24810	15.29280	15.19840	15.13200	25.17910	.00446
47.640	-.041	15.24810	15.29280	15.19840	15.03500	25.13840	.02436
47.710	2.553	15.24810	15.19840	15.19840	15.03500	25.09870	.04374
47.620	5.146	15.24810	15.29280	15.18840	15.13200	25.17910	.00446
47.620	7.650	15.24810	15.29280	15.19840	15.13200	25.17910	.00446
47.620	10.348	15.24810	15.29280	15.29280	15.13200	25.21870	.02393
47.740	11.389	15.24810	15.29280	15.19840	15.13200	25.17910	.00446
47.600	12.433	15.24810	15.29280	15.19840	15.13200	25.17910	.00446
47.480	13.480	15.15220	15.29280	15.19840	15.13200	25.13880	-.01523
47.500	14.523	15.24810	15.29280	15.19840	15.13200	25.17910	.00446
47.620	15.575	15.24810	15.29280	15.19840	15.13200	25.17910	.00446
47.600	16.625	15.24810	15.29280	15.19840	15.13200	25.17910	.00446
47.500	17.671	15.24810	15.29280	15.19840	15.13200	25.17910	.00446
47.550	18.721	15.24810	15.29280	15.19840	15.13200	25.17910	.00446
47.530	19.768	15.24810	15.38720	15.19840	15.13200	25.21870	-.01492
47.670	20.819	15.15220	15.29280	15.19840	15.13200	25.13880	-.01523
	GRADIENT	.00000	-.01822	-.00000	-.01871	-.01551	.00758

ARC40X80-462(OA100) CV101(ADS OFF) (DNA06V) (15 APR 82)

REFERENCE DATA

SREF =	2690.0000 SQ.FT.	XMRP =	1076.6800 IN. XO		
LREF =	474.8100 INCHES	YMRP =	.0000 IN. YO		
BREF =	936.6800 INCHES	ZMRP =	375.0000 IN. ZO		
SCALE =	.3600				

PARAMETRIC DATA

BETA =	10.000	ELEVON =	.000
AILRON =	.000	BDFLAP =	.000
SPDBRK =	55.000	RUDDER =	.000

RUN NO. 166/ 0 GRADIENT INTERVAL = -5.00/ 5.00

Q	ALPHA	DELS1	DELS2	DELS3	DELS4	SPDBRK	RUDDER
47.850	-.063	32.79780	32.66240	32.66240	32.39800	55.45820	.08206
47.460	5.129	32.79780	32.66240	32.66240	32.39800	55.45820	.08206
47.510	10.327	32.79780	32.66240	32.66240	32.39800	55.45820	.08206
47.600	15.553	32.79780	32.66240	32.55800	32.39800	55.41540	.06269
47.540	20.804	32.79190	32.66240	32.66240	32.39800	55.41470	.06238
	GRADIENT	.00000	.00000	.00000	.00000	.00000	.00000

ARC40X80-462(OA100) OV101(ADS OFF) (DNA06W) (15 APR 82)

REFERENCE DATA

SREF =	2690.0000 SQ.FT.	XMRP =	1076.6800 IN.	XO	
LREF =	474.8100 INCHES	YMRP =	.0000 IN.	YO	
BREF =	936.6800 INCHES	ZMRP =	375.0000 IN.	ZO	
SCALE =	.3600				

PARAMETRIC DATA

BETA =	.000	ELEVON =	.000
AILRON =	10.000	BDFLAP =	.000
SPDBRK =	25.000	RUDDER =	.000

RUN NO. 170/ 0 GRADIENT INTERVAL = -5.00/ 5.00

Q	ALPHA	DELS1	DELS2	DELS3	DELS4	SPDBRK	RUDDER
47.520	-5.246	15.15220	15.19840	15.10400	15.03500	25.01880	.00468
47.570	-2.655	15.24810	15.19840	15.10400	15.03500	25.05910	.02437
47.500	-.063	15.24810	15.29280	15.10400	15.13200	25.13940	-.01492
47.400	2.538	15.24810	15.29280	15.10400	15.13200	25.13940	-.01492
47.470	5.136	15.24810	15.19840	15.10400	15.13200	25.09980	.00446
47.370	7.735	15.24810	15.19840	15.10400	15.13200	25.09980	.00446
47.510	10.336	15.24810	15.19840	15.10400	15.13200	25.09980	.00446
47.670	12.934	15.24810	15.29280	15.10400	15.13200	25.13940	-.01492
47.560	15.548	15.24810	15.29280	15.10400	15.13200	25.13940	-.01492
47.370	18.171	15.24810	15.29280	15.10400	15.13200	25.13940	-.01492
47.610	20.811	15.24810	15.38720	15.10400	15.13200	25.17910	-.03430
47.440	25.982	15.24810	15.29280	15.10400	15.13200	25.13940	-.01492
	GRADIENT	.00000	.01817	.00000	.01867	.01545	-.00756

ARC40X80-462(OA100) OV101(ADS OFF) (DNA06X) (15 APR 82)

REFERENCE DATA

SREF =	2690.0000 SQ.FT.	XMRP =	1076.6800 IN.	XO	
LREF =	474.8100 INCHES	YMRP =	.0000 IN.	YO	
BREF =	936.6800 INCHES	ZMRP =	375.0000 IN.	ZO	
SCALE =	.3600				

PARAMETRIC DATA

ALPHA =	10.000	ELEVON =	.000
AILRON =	10.000	BDFLAP =	.000
SPDBRK =	25.000	RUDDER =	.000

RUN NO. 171/ 0 GRADIENT INTERVAL = -5.00/ 5.00

Q	BETA	DELS1	DELS2	DELS3	DELS4	SPDBRK	RUDDER
47.650	-13.000	15.24810	15.48160	15.10400	15.13200	25.21870	-.05367
47.520	-10.000	15.24810	15.38720	15.10400	15.13200	25.17910	-.03430
47.410	-2.000	15.24810	15.29280	15.10400	15.13200	25.13940	-.01492
47.410	.000	15.24810	15.29280	15.10400	15.13200	25.13940	-.01492
47.600	5.000	15.24810	15.29280	15.10400	15.13200	25.13940	-.01492
47.380	10.000	15.24810	15.29280	15.10400	15.13200	25.13940	-.01492
47.390	15.000	15.34400	15.19840	15.10400	15.13200	25.14010	.02414
47.200	20.000	15.43990	15.29280	15.10400	15.13200	25.22000	.02445
	GRADIENT	.00000	.00000	.00000	.00000	.00000	-.00000

ARC40X80-462(OA100) OV101+TUFTS (ADS OFF) (DNA06Y) (15 APR 82)

REFERENCE DATA

SREF =	2690.0000 SQ.FT.	XMRP =	1076.6800 IN. XO		
LREF =	474.8100 INCHES	YMRP =	.0000 IN. YO		
BREF =	936.6800 INCHES	ZMRP =	375.0000 IN. ZO		
SCALE =	.3600				

PARAMETRIC DATA

BETA =	.000	ELEVON =	.000
AILRON =	.000	BDFLAP =	.000
SPDBRK =	55.000	RUDDER =	.000

RUN NO. 172/ 0 GRADIENT INTERVAL = -5.00/ 5.00

Q	ALPHA	DELS1	DELS2	DELS3	DELS4	SPDBRK	RUDDER
9.590	-.074	32.70190	32.56300	32.47360	32.39800	55.28630	.04300
9.630	5.120	32.70190	32.66240	32.56800	32.49500	55.41590	.02309
9.660	10.325	32.70190	32.56800	32.56800	32.39800	55.32910	.06238
9.630	15.532	32.79780	32.66240	32.47360	32.39800	55.37260	.04331
9.490	20.764	32.79780	32.66240	32.56800	32.49500	55.45940	.04278
	GRADIENT	.00000	.00000	.00000	.00000	.00000	.00000

RUN NO. 173/ 0 GRADIENT INTERVAL = -5.00/ 5.00

Q	ALPHA	DELS1	DELS2	DELS3	DELS4	SPDBRK	RUDDER
19.020	-.074	32.79780	32.56800	32.47360	32.39800	55.32980	.06268
19.040	5.117	32.79780	32.66240	32.56800	32.39800	55.41540	.06269
19.090	10.324	32.79780	32.56800	32.47360	32.39800	55.32980	.06268
19.080	15.531	32.79780	32.66240	32.56800	32.39800	55.41540	.06269
19.090	20.782	32.79780	32.66240	32.56800	32.39800	55.41540	.06269
	GRADIENT	.00000	.00000	.00000	.00000	.00000	.00000

RUN NO. 174/ 0 GRADIENT INTERVAL = -5.00/ 5.00

Q	ALPHA	DELS1	DELS2	DELS3	DELS4	SPDBRK	RUDDER
47.410	-5.253	32.79780	32.66240	32.56800	32.39800	55.41540	.06269
47.630	-2.664	32.79780	32.56800	32.47360	32.39800	55.32980	.06268
47.490	-.074	32.79780	32.66240	32.56800	32.49500	55.45940	.04278
47.330	2.522	32.79780	32.56800	32.47360	32.39800	55.32980	.06268
47.640	5.119	32.79780	32.56800	32.56800	32.39800	55.37260	.08206
47.460	7.720	32.79780	32.66240	32.56800	32.39800	55.41540	.06269
47.660	10.323	32.79780	32.66240	32.47360	32.39800	55.37260	.04331
47.580	12.922	32.79780	32.66240	32.47360	32.49500	55.41650	.02340
47.590	15.533	32.79780	32.66240	32.47360	32.39800	55.37260	.04331
47.610	18.150	32.70190	32.66240	32.47360	32.39800	55.32910	.02363
47.580	20.791	32.79780	32.66240	32.47360	32.39800	55.37260	.04331
47.190	25.987	32.70190	32.66240	32.47360	32.39800	55.32910	.02363
	GRADIENT	.00000	-.00001	-.00001	-.00001	-.00002	.00000

ARC40X80-462(OA100) OV101+TUFTS (ADS OFF) (DNA06Z) (15 APR 82)

REFERENCE DATA

SREF =	2690.0000 SQ.FT.	XMRP =	1076.6800 IN.	XO	
LREF =	474.8100 INCHES	YMRP =	.0000 IN.	YO	
BREF =	936.6800 INCHES	ZMRP =	375.0000 IN.	ZO	
SCALE =	.3600				

PARAMETRIC DATA

BETA =	5.000	ELEVON =	.000
AILRON =	.000	BDFLAP =	.000
SPDBRK =	55.000	RUDDER =	.000

RUN NO. 175/ 0 GRADIENT INTERVAL = -5.00/ 5.00

Q	ALPHA	DELS1	DELS2	DELS3	DELS4	SPDBRK	RUDDER
47.750	-5.249	32.70190	32.66240	32.66240	32.39800	55.41470	.06238
47.650	-2.660	32.70190	32.66240	32.66240	32.39800	55.41470	.06238
47.580	-.070	32.70190	32.56800	32.56800	32.39800	55.32910	.06238
47.400	2.526	32.70190	32.56800	32.56800	32.39800	55.32910	.06238
47.470	5.122	32.70190	32.66240	32.66240	32.39800	55.41470	.06238
47.640	7.725	32.70190	32.56800	32.56800	32.39800	55.32910	.06238
47.450	10.326	32.70190	32.56800	32.56800	32.39800	55.32910	.06238
47.530	12.928	32.70190	32.56800	32.56800	32.39800	55.32910	.06238
47.690	15.537	32.70190	32.56800	32.56800	32.39800	55.32910	.06238
47.480	18.155	32.70190	32.56800	32.56800	32.39800	55.32910	.06238
47.590	20.788	32.70190	32.56800	32.56800	32.39800	55.32910	.06238
47.360	25.983	32.70190	32.56800	32.56800	32.39800	55.32910	.06238
	GRADIENT	.00000	-.01820	-.01820	.00000	-.01650	.00000

ARC40X80-462(OA100) OV101 (DNA07A) (16 APR 82)

REFERENCE DATA

SREF =	2690.0000 SQ.FT.	XMRP =	1076.6800 IN.	XO	
LREF =	474.8100 INCHES	YMRP =	.0000 IN.	YO	
BREF =	936.6800 INCHES	ZMRP =	375.0000 IN.	ZO	
SCALE =	.3600				

PARAMETRIC DATA

BETA =	5.000	ELEVON =	.000
AILRON =	.000	BDFLAP =	.000
SPDBRK =	25.000	RUDDER =	.000

RUN NO. 176/ 0 GRADIENT INTERVAL = -5.00/ 5.00

Q	ALPHA	DELS1	DELS2	DELS3	DELS4	SPDBRK	RUDDER
94.180	-.048	15.24810	15.38720	15.19840	15.22900	25.25950	-.03483
94.280	5.145	15.24810	15.29280	15.10400	15.22900	25.18020	-.03483
94.750	10.344	15.24810	15.29280	15.19840	15.22900	25.21980	-.01545
94.370	15.559	15.24810	15.29280	15.19840	15.22900	25.21980	-.01545
94.330	20.825	15.24810	15.29280	15.19840	15.22900	25.21980	-.01545
	GRADIENT	.00000	.00000	.00000	.00000	.00000	.00000

ARC40X80-462(OA100) OV101 (DNA07B) (15 APR 82)

REFERENCE DATA

SREF =	2690.0000 SQ.FT.	XMRP =	1076.6800 IN. XO		
LREF =	474.8100 INCHES	YMRP =	.0000 IN. YO		
BREF =	936.6800 INCHES	ZMRP =	375.0000 IN. ZO		
SCALE =	.3600				

PARAMETRIC DATA

BETA =	.000	ELEVON =	.000
AILRON =	.000	BDFLAP =	.000
SPDBRK =	25.000	RUDDER =	.000

RUN NO. 177/ 0 GRADIENT INTERVAL = -5.00/ 5.00

Q	ALPHA	DELS1	DELS2	DELS3	DELS4	SPDBRK	RUDDER
94.560	-5.240	15.24810	15.38720	15.19840	15.22900	25.25950	-.03483
94.350	-2.649	15.24810	15.38720	15.19840	15.22900	25.25950	-.03483
94.170	-.056	15.24810	15.29280	15.19840	15.22900	25.21980	-.01545
94.450	2.541	15.24810	15.29280	15.19840	15.22900	25.21980	-.01545
94.510	5.138	15.24810	15.19840	15.10400	15.13200	25.09980	.00446
94.320	7.738	15.24810	15.19840	15.19840	15.22900	25.18020	.00392
94.710	10.348	15.24810	15.29280	15.19840	15.22900	25.21980	-.01545
94.310	12.946	15.24810	15.29280	15.19840	15.22900	25.21980	-.01545
94.310	15.557	15.24810	15.29280	15.19840	15.22900	25.21980	-.01545
94.550	18.382	15.24810	15.38720	15.19840	15.22900	25.25950	-.03483
	GRADIENT	-.00000	-.01818	.00000	-.00000	-.00765	.00373

ARC40X80-462(OA100) OV101 (DNA07C) (15 APR 82)

REFERENCE DATA

SREF =	2690.0000 SQ.FT.	XMRP =	1076.6800 IN. XO		
LREF =	474.8100 INCHES	YMRP =	.0000 IN. YO		
BREF =	936.6800 INCHES	ZMRP =	375.0000 IN. ZO		
SCALE =	.3600				

PARAMETRIC DATA

BETA =	-5.000	ELEVON =	.000
AILRON =	.000	BDFLAP =	.000
SPDBRK =	25.000	RUDDER =	.000

RUN NO. 178/ 0 GRADIENT INTERVAL = -5.00/ 5.00

Q	ALPHA	DELS1	DELS2	DELS3	DELS4	SPDBRK	RUDDER
94.190	-5.234	15.24810	15.38720	15.19840	15.22900	25.25950	-.03483
94.480	-2.643	15.24810	15.38720	15.19840	15.22900	25.25950	-.03483
94.510	-.049	15.24810	15.38720	15.19840	15.22900	25.25950	-.03483
94.470	2.548	15.15220	15.29280	15.19840	15.22900	25.17960	-.03514
94.270	5.145	15.24810	15.29280	15.19840	15.22900	25.21980	-.01545
94.160	7.746	15.24810	15.29280	15.19840	15.13200	25.17910	.00446
94.150	10.349	15.24810	15.38720	15.19840	15.22900	25.25950	-.03483
94.370	12.957	15.24810	15.29280	15.19840	15.22900	25.21980	-.01545
94.300	15.565	15.24810	15.29280	15.19840	15.22900	25.21980	-.01545
94.200	18.196	15.24810	15.29280	15.10400	15.13200	25.13940	-.01492
94.170	20.818	15.24810	15.38720	15.19840	15.13200	25.21870	-.01492
	GRADIENT	-.01648	-.01819	-.00000	-.00000	-.01540	-.00006

ARC40X80-462(OA100) OV101 (DNA07D) (15 APR 82)

REFERENCE DATA

SREF =	2690.0000 SQ.FT.	XMRP =	1076.6800 IN. XO		
LREF =	474.8100 INCHES	YMRP =	.0000 IN. YO		
BREF =	936.6800 INCHES	ZMRP =	375.0000 IN. ZO		
SCALE =	.3600				

PARAMETRIC DATA

BETA =	-10.000	ELEVON =	.000
AILRON =	.000	BDFLAP =	.000
SPDBRK =	25.000	RUDDER =	.000

RUN NO. 179/ 0 GRADIENT INTERVAL = -5.00/ 5.00

Q	ALPHA	DELS1	DELS2	DELS3	DELS4	SPDBRK	RUDDER
94.250	-5.223	15.24810	15.57600	15.10400	14.93800	25.17690	-.03323
94.150	-2.632	15.24810	15.48160	15.00960	14.93800	25.09760	-.03323
94.300	-.039	15.24810	15.38720	15.00960	14.93800	25.05800	-.01385
94.240	2.556	15.24810	15.19840	15.19840	15.22900	25.18020	.00392
94.350	5.153	15.24810	15.19840	15.10400	15.22900	25.14050	-.01545
94.130	7.751	15.24810	15.10400	15.19840	15.22900	25.14050	.02330
94.300	10.357	15.24810	15.10400	15.19840	15.22900	25.14050	.02330
94.440	12.955	15.24810	15.10400	15.19840	15.22900	25.14050	.02330
94.390	15.580	15.24810	15.10400	15.19840	15.22900	25.14050	.02330
94.270	18.201	15.24810	15.10400	15.19840	15.22900	25.14050	.02330
94.070	20.817	15.24810	15.29280	15.19840	15.22900	25.21980	-.01545
	GRADIENT	-.00000	-.05459	.03640	.05610	.01593	.00716

ARC40X80-462(OA100) OV101+NOSE GEAR (DNA07E) (15 APR 82)

REFERENCE DATA

SREF =	2690.0000 SQ.FT.	XMRP =	1076.6800 IN. XO		
LREF =	474.8100 INCHES	YMRP =	.0000 IN. YO		
BREF =	936.6800 INCHES	ZMRP =	375.0000 IN. ZO		
SCALE =	.3600				

PARAMETRIC DATA

BETA =	5.000	ELEVON =	.000
AILRON =	.000	BDFLAP =	.000
SPDBRK =	25.000	RUDDER =	.000

RUN NO. 180/ 0 GRADIENT INTERVAL = -5.00/ 5.00

Q	ALPHA	DELS1	DELS2	DELS3	DELS4	SPDBRK	RUDDER
94.090	-.048	15.24810	15.19840	15.10400	15.03500	25.05910	.02437
94.260	5.141	15.24810	15.29280	15.10400	15.13200	25.13940	-.01492
94.500	10.345	15.24810	15.19840	15.10400	15.03500	25.05910	.02437
94.420	15.558	15.24810	15.19840	15.10400	15.03500	25.05910	.02437
94.220	20.813	15.24810	15.19840	15.10400	15.13200	25.09980	.00446
	GRADIENT	.00000	.00000	.00000	.00000	.00000	.00000

ARC40X80-462(OA100) OV101+NOSE GEAR (DNA07F) (15 APR 82)

REFERENCE DATA

SREF =	2690.0000 SQ.FT.	XMRP =	1076.6800 IN.	XO	
LREF =	474.8100 INCHES	YMRP =	.0000 IN.	YO	
BREF =	936.6800 INCHES	ZMRP =	375.0000 IN.	ZO	
SCALE =	.3600				

PARAMETRIC DATA

BETA =	.000	ELEVON =	.000
AILRON =	.000	BDFLAP =	.000
SPDBRK =	25.000	RUDDER =	.000

RUN NO. 181/ 0 GRADIENT INTERVAL = -5.00/ 5.00

Q	ALPHA	DELS1	DELS2	DELS3	DELS4	SPDBRK	RUDDER
94.260	-5.240	15.24810	15.38720	15.10400	15.13200	25.17910	-.03430
94.390	-2.648	15.24810	15.38720	15.10400	15.13200	25.17910	-.03430
94.370	-.055	15.24810	15.29280	15.10400	15.13200	25.13940	-.01492
93.980	2.539	15.24810	15.29280	15.10400	15.13200	25.13940	-.01492
94.500	5.138	15.24810	15.29280	15.10400	15.13200	25.13940	-.01492
94.490	7.739	15.24810	15.29280	15.10400	15.13200	25.13940	-.01492
94.370	10.347	15.24810	15.19940	15.10400	15.13200	25.05980	.00446
94.240	12.946	15.24810	15.29280	15.10400	15.13200	25.13940	-.01492
94.570	15.556	15.24810	15.29280	15.10400	15.13200	25.13940	-.01492
94.180	18.173	15.24810	15.29280	15.10400	15.13200	25.13940	-.01492
94.140	20.804	15.24810	15.38720	15.10400	15.13200	25.17910	-.03430
	GRADIENT	-.00000	-.01820	-.00000	-.00000	-.00765	.00373

ARC40X80-462(OA100) OV101+NOSE GEAR (DNA07G) (15 APR 82)

REFERENCE DATA

SREF =	2690.0000 SQ.FT.	XMRP =	1076.6800 IN.	XO	
LREF =	474.8100 INCHES	YMRP =	.0000 IN.	YO	
BREF =	936.6800 INCHES	ZMRP =	375.0000 IN.	ZO	
SCALE =	.3600				

PARAMETRIC DATA

BETA =	-5.000	ELEVON =	.000
AILRON =	.000	BDFLAP =	.000
SPDBRK =	25.000	RUDDER =	.000

RUN NO. 182/ 0 GRADIENT INTERVAL = -5.00/ 5.00

Q	ALPHA	DELS1	DELS2	DELS3	DELS4	SPDBRK	RUDDER
94.130	-.047	15.24810	15.29280	15.00960	15.13200	25.09980	-.03430
94.180	5.147	15.15220	15.29280	15.10400	15.13200	25.09920	-.03460
94.460	10.351	15.24810	15.29280	15.10400	15.13200	25.13940	-.01492
94.200	15.563	15.24810	15.29280	15.10400	15.13200	25.13940	-.01492
94.470	20.815	15.24810	15.29280	15.10400	15.13200	25.13940	-.01492
	GRADIENT	.00000	.00000	.00000	.00000	.00000	.00000

ARC40X80-462(OA100) OV101+NOSE GEAR (DNA07H) (15 APR 82)

REFERENCE DATA

SREF =	2690.0000 SQ.FT.	XMRP =	1076.6800 IN.	XO	
LREF =	474.8100 INCHES	YMRP =	.0000 IN.	YO	
BREF =	936.6800 INCHES	ZMRP =	375.0000 IN.	ZO	
SCALE =	.3600				

PARAMETRIC DATA

BETA =	-10.000	ELEVON =	.000
AILRON =	.000	BDFLAP =	.000
SPDBRK =	25.000	RUDDER =	.000

RUN NO. 183/ 0 GRADIENT INTERVAL = -5.00/ 5.00

Q	ALPHA	DELS1	DELS2	DELS3	DELS4	SPDBRK	RUDDER
94.320	-.038	15.24810	15.48160	15.00960	15.03500	25.13840	-.05314
94.380	5.152	15.15220	15.38720	15.00960	15.03500	25.05840	-.05345
94.250	10.356	15.24810	15.29280	15.00960	15.03500	25.05910	-.01439
94.220	15.581	15.24810	15.10400	15.00960	15.13200	25.02050	.00446
94.530	20.834	15.24810	15.10400	15.00960	15.13200	25.02050	.00446
	GRADIENT	.00000	.00000	.00000	.00000	.00000	.00000

ARC40X80-462(OA100) OV101(FTP OFF) (DNA07I) (15 APR 82)

REFERENCE DATA

SREF =	2690.0000 SQ.FT.	XMRP =	1076.6800 IN.	XO	
LREF =	474.8100 INCHES	YMRP =	.0000 IN.	YO	
BREF =	936.6800 INCHES	ZMRP =	375.0000 IN.	ZO	
SCALE =	.3600				

PARAMETRIC DATA

BETA =	5.000	ELEVON =	.000
AILRON =	.000	BDFLAP =	.000
SPDBRK =	25.000	RUDDER =	.000

RUN NO. 184/ 0 GRADIENT INTERVAL = -5.00/ 5.00

Q	ALPHA	DELS1	DELS2	DELS3	DELS4	SPDBRK	RUDDER
94.150	-.052	15.24810	15.19840	15.10400	15.22900	25.14050	-.01545
94.290	5.140	15.24810	15.19840	15.10400	15.13200	25.09980	.00446
94.410	10.342	15.24810	15.19840	15.10400	15.22900	25.14050	-.01545
94.530	15.560	15.24810	15.19840	15.10400	15.22900	25.14050	-.01545
94.310	20.818	15.24810	15.19840	15.10400	15.13200	25.09980	.00446
	GRADIENT	.00000	.00000	.00000	.00000	.00000	.00000

ARC40X80-462(OA100) OV101(FTP OFF) (DNA07J) (15 APR 82)

REFERENCE DATA

SREF = 2690.0000 SQ.FT. XMRP = 1076.6800 IN. XO
LREF = 474.8100 INCHES YMRP = .0000 IN. YO
BREF = 936.6800 INCHES ZMRP = 375.0000 IN. ZO
SCALE = .3600

PARAMETRIC DATA

BETA = .000 ELEVON = .000
AILRON = .000 BDFLAP = .000
SPDBRK = 25.000 RUDDER = .000

RUN NO. 185/ 0 GRADIENT INTERVAL = -5.00/ 5.00

Q	ALPHA	DELS1	DELS2	DELS3	DELS4	SPDBRK	RUDDER
94.060	-5.240	15.24810	15.19840	15.10400	15.22900	25.14050	-.01545
94.520	-2.649	15.24810	15.19840	15.10400	15.22900	25.14050	-.01545
94.500	-.060	15.24810	15.19840	15.10400	15.22900	25.14050	-.01545
93.980	2.537	15.24810	15.10400	15.10400	15.22900	25.10090	.00392
94.070	5.133	15.24810	15.10400	15.10400	15.22900	25.10090	.00392
93.670	7.736	15.24810	15.19840	15.10400	15.22900	25.14050	-.01545
94.470	10.340	15.24810	15.10400	15.10400	15.22900	25.10090	.00392
94.200	12.941	15.24810	15.19840	15.10400	15.22900	25.14050	-.01545
95.730	15.555	15.24810	15.19840	15.10400	15.22900	25.14050	-.01545
94.370	18.182	15.24810	15.19840	15.10400	15.22900	25.14050	-.01545
94.420	20.822	15.24810	15.19840	15.10400	15.22900	25.14050	-.01545
	GRADIENT	-.00000	-.01821	-.00000	-.00000	-.00764	.00374

ARC40X80-462(OA100) OV101(FTP OFF) (DNA07K) (15 APR 82)

REFERENCE DATA

SREF = 2690.0000 SQ.FT. XMRP = 1076.6800 IN. XO
LREF = 474.8100 INCHES YMRP = .0000 IN. YO
BREF = 936.6800 INCHES ZMRP = 375.0000 IN. ZO
SCALE = .3600

PARAMETRIC DATA

BETA = -5.000 ELEVON = .000
AILRON = .000 BDFLAP = .000
SPDBRK = 25.000 RUDDER = .000

RUN NO. 186/ 0 GRADIENT INTERVAL = -5.00/ 5.00

Q	ALPHA	DELS1	DELS2	DELS3	DELS4	SPDBRK	RUDDER
94.190	-.053	15.24810	15.19840	15.10400	15.22900	25.14050	-.01545
93.830	5.144	15.24810	15.19840	15.10400	15.22900	25.14050	-.01545
93.970	10.346	15.15220	15.19840	15.10400	15.22900	25.10030	-.03514
94.430	15.562	15.24810	15.19840	15.10400	15.22900	25.14050	-.01545
94.150	20.819	15.24810	15.29280	15.10400	15.22900	25.18020	-.03483
	GRADIENT	.00000	.00000	.00000	.00000	.00000	.00000

ARC40X80-462(OA100) OV101(FTP OFF) (DNA07L) (15 APR 82)

REFERENCE DATA

SREF =	2690.0000 SQ.FT.	XMRP =	1076.6800 IN.	XO	
LREF =	474.8100 INCHES	YMRP =	.0000 IN.	YO	
BREF =	936.6800 INCHES	ZMRP =	375.0000 IN.	ZO	
SCALE =	.3600				

PARAMETRIC DATA

BETA =	-10.000	ELEVON =	.000
AILRON =	.000	BDFLAP =	.000
SPDBRK =	25.000	RUDDER =	.000

RUN NO. 187/ 0 GRADIENT INTERVAL = -5.00/ 5.00

Q	ALPHA	DELS1	DELS2	DELS3	DELS4	SPDBRK	RUDDER
94.450	-.040	15.24810	15.38720	15.00960	15.22900	25.18020	-.07358
94.330	5.151	15.24810	15.38720	15.00960	15.13200	25.13940	-.05367
94.270	10.353	15.24810	15.38720	15.10400	15.22900	25.21980	-.05420
94.420	15.574	15.24810	15.29280	15.10400	15.22900	25.18020	-.03483
94.200	20.827	15.15220	15.29280	15.00960	15.32600	25.14100	-.09380
	GRADIENT	.00000	.00000	.00000	.00000	.00000	.00000

ARC40X80-462(OA100) OV101(FTP OFF) (DNA07M) (15 APR 82)

REFERENCE DATA

SREF =	2690.0000 SQ.FT.	XMRP =	1076.6800 IN.	XO	
LREF =	474.8100 INCHES	YMRP =	.0000 IN.	YO	
BREF =	936.6800 INCHES	ZMRP =	375.0000 IN.	ZO	
SCALE =	.3600				

PARAMETRIC DATA

BETA =	.000	ELEVON =	.000
AILRON =	.000	BDFLAP =	.000
SPDBRK =	55.000	RUDDER =	.000

RUN NO. 188/ 0 GRADIENT INTERVAL = -5.00/ 5.00

Q	ALPHA	DELS1	DELS2	DELS3	DELS4	SPDBRK	RUDDER
94.160	-.073	32.70190	31.71840	32.47360	32.49500	54.94540	.19747
94.210	5.117	32.70190	31.71840	32.47360	32.59200	54.98930	.17756
94.200	10.325	32.70190	31.71840	32.47360	32.49500	54.94540	.19747
94.330	15.539	32.79780	31.71840	32.47360	32.49500	54.98380	.21716
94.070	20.805	32.70190	31.71840	32.47360	32.49500	54.94540	.19747
	GRADIENT	.00000	.00000	.00000	.00000	.00000	.00000

ARC40X80-462(OA100) OV101(FTP OFF) (DNA07N) (15 APR 82)

REFERENCE DATA

SREF =	2690.0000 SQ.FT.	XMRP =	1076.6800 IN. XO		
LREF =	474.8100 INCHES	YMRP =	.0000 IN. YO		
BREF =	936.6800 INCHES	ZMRP =	375.0000 IN. ZO		
SCALE =	.3600				

PARAMETRIC DATA

ALPHA =	10.000	ELEVON =	10.000
AILRON =	.000	BDFLAP =	22.000
SPDBRK =	25.000	RUDDER =	.000

RUN NO. 189/ 0 GRADIENT INTERVAL = -5.00/ 5.00

Q	BETA	DELS1	DELS2	DELS3	DELS4	SPDBRK	RUDDER
47.810	-13.000	15.24810	15.29280	15.10400	15.22900	25.18020	-.03483
47.640	-10.000	15.24810	15.00960	15.10400	15.22900	25.06120	.02330
47.530	-5.000	15.24810	15.19840	15.10400	15.22900	25.14050	-.01545
47.240	-2.000	15.24810	15.29280	15.10400	15.13200	25.13940	-.01492
47.530	.000	15.24810	15.29280	15.10400	15.13200	25.13940	-.01492
47.480	2.000	15.24810	15.29280	15.10400	15.13200	25.13940	-.01492
47.380	5.000	15.34400	15.29280	15.10400	15.13200	25.17970	.00476
47.450	10.000	15.24810	15.38720	15.10400	15.22900	25.21980	-.05420
47.380	20.000	15.34400	15.19840	15.10400	15.22900	25.18080	.00423
	GRADIENT	.00827	.00814	.00000	-.00836	.00338	.00174

ARC40X80-462(OA100) OV101(FTP OFF) (DNA07O) (15 APR 82)

REFERENCE DATA

SREF =	2690.0000 SQ.FT.	XMRP =	1076.6800 IN. XO		
LREF =	474.8100 INCHES	YMRP =	.0000 IN. YO		
BREF =	936.6800 INCHES	ZMRP =	375.0000 IN. ZO		
SCALE =	.3600				

PARAMETRIC DATA

ALPHA =	10.000	ELEVON =	10.000
AILRON =	.000	BDFLAP =	-11.700
SPDBRK =	25.000	RUDDER =	.000

RUN NO. 190/ 0 GRADIENT INTERVAL = -5.00/ 5.00

Q	BETA	DELS1	DELS2	DELS3	DELS4	SPDBRK	RUDDER
47.560	-13.000	15.15220	15.57600	15.00960	15.22900	25.21920	-.13201
47.640	-10.000	15.24810	15.48160	15.10400	15.22900	25.25950	-.07358
47.550	-5.000	15.24810	15.48160	15.10400	15.22900	25.25950	-.07358
47.650	-2.000	15.24810	15.38720	15.10400	15.13200	25.17910	-.03430
47.360	.000	15.24810	15.38720	15.10400	15.13200	25.17910	-.03430
47.420	2.000	15.24810	15.29280	15.10400	15.22900	25.18020	-.03483
47.500	5.000	15.24810	15.29280	15.10400	15.22900	25.18020	-.03483
47.340	10.000	15.24810	15.29280	15.10400	15.13200	25.13940	-.01492
47.490	15.000	15.53590	15.29280	15.10400	15.22900	25.30100	.02422
47.330	20.000	15.24810	15.29280	15.29280	15.22900	25.25950	.00332
	GRADIENT	.00000	-.01953	.00000	.00334	-.00680	.00332

ARC40X80-462(OA100) OV101 (DNA07P) (15 APR 82)

REFERENCE DATA

SREF =	2690.0000 SQ.FT.	XMRP =	1076.6800 IN. XO		
LREF =	474.8100 INCHES	YMRP =	.0000 IN. YO		
BREF =	936.6800 INCHES	ZMRP =	375.0000 IN. ZO		
SCALE =	.3600				

PARAMETRIC DATA

ALPHA =	10.000	ELEVON =	.000
AILRON =	.000	BDFLAP =	.000
SPDBRK =	.000	RUDDER =	.000

RUN NO. 85/ 0 GRADIENT INTERVAL = -5.00/ 5.00

Q	BETA	DELS1	DELS2	DELS3	DELS4	SPDBRK	RUDDER
47.990	-13.000	-.09590	-.09440	.00000	.00000	-.07812	-.00031
47.900	-10.000	-.09590	.00000	.00000	.09700	.00045	-.03959
47.590	-5.000	.09590	-.09440	.00000	.00000	.00062	.03906
47.840	-2.000	.09590	-.18880	.00000	-.09700	-.07795	.07834
47.790	.000	.09590	-.18880	.09440	.00000	.00062	.07781
47.800	2.000	.19180	-.18880	.00000	.00000	.00123	.07812
47.750	5.000	.28770	-.18880	.00000	.00000	.04060	.09780
47.630	10.000	.19180	-.75520	.00000	.00000	-.23127	.19437
47.530	15.000	-.19180	-.09440	.09440	-.19400	-.15837	.03920
	GRADIENT	.01984	-.00814	.00000	.00334	.00618	.00506

ARC40X80-462(OA100) OV101 (DNA07Q) (15 APR 82)

REFERENCE DATA

SREF =	2690.0000 SQ.FT.	XMRP =	1076.6800 IN. XO		
LREF =	474.8100 INCHES	YMRP =	.0000 IN. YO		
BREF =	936.6800 INCHES	ZMRP =	375.0000 IN. ZO		
SCALE =	.3600				

PARAMETRIC DATA

ALPHA =	10.000	ELEVON =	.000
AILRON =	.000	BDFLAP =	.000
SPDBRK =	55.000	RUDDER =	.000

RUN NO. 100/ 0 GRADIENT INTERVAL = -5.00/ 5.00

Q	BETA	DELS1	DELS2	DELS3	DELS4	SPDBRK	RUDDER
47.610	-13.000	32.60600	32.66240	32.47360	32.39800	55.28560	.00394
47.820	-10.000	32.60600	32.56800	32.47360	32.39800	55.24290	.02332
47.670	-5.000	32.60600	32.56800	32.47360	32.39800	55.24290	.02332
47.670	-2.000	32.60600	32.66240	32.47360	32.39800	55.28560	.00394
47.600	.000	32.60600	32.66240	32.47360	32.39800	55.28560	.00394
47.560	2.000	32.60600	32.56800	32.47360	32.39800	55.24290	.02332
47.750	5.000	32.60600	32.66240	32.56800	32.39800	55.32840	.02332
47.670	10.000	32.60600	32.56800	32.47360	32.30100	55.19890	.04323
47.610	15.000	32.70190	32.66240	32.47360	32.30100	55.28510	.04354
47.680	20.000	32.79780	32.66240	32.56800	32.39800	55.41540	.06269
	GRADIENT	.00000	.00488	.00814	.00000	.00590	.00067

ARC40X80-462(OA100) OV101 (ENA01A) (15 APR 82)

REFERENCE DATA

SREF = 2690.0000 SQ.FT. XMRP = 1076.6800 IN. XO
LREF = 474.8100 INCHES YMRP = .0000 IN. YO
BREF = 936.6800 INCHES ZMRP = 375.0000 IN. ZO
SCALE = .3600

PARAMETRIC DATA

BETA = .000 ELEVON = .000
AILRON = .000 BDFLAP = .000
SPDBRK = 25.000 RUDDER = .000

RUN NO. 4/ 0 GRADIENT INTERVAL = -5.00/ 5.00

Q	ALPHA	DELE1	DELE2	DELE3	DELE4	BDFLAP	ELEVON	AILRON
19.120	-5.245	.00000	.00000	.00000	.00000	.00000	.00000	.00000
19.020	-2.655	.00000	.00000	.00000	.00000	.00000	.00000	.00000
19.080	-.066	.00000	.00000	.00000	.00000	.00000	.00000	.00000
19.180	2.532	.00000	.00000	.00000	.00000	.00000	.00000	.00000
19.180	5.128	.00000	.00000	.00000	.00000	.00000	.00000	.00000
19.170	7.734	.00000	.00000	.00000	.00000	.00000	.00000	.00000
19.110	10.337	.00000	.00000	.00000	.00000	.00000	.00000	.00000
18.960	12.937	.00000	.00000	.00000	.00000	.00000	.00000	.00000
18.920	15.552	.00000	.00000	.00000	.00000	.00000	.00000	.00000
19.050	20.801	.00000	.00000	.00000	.00000	.00000	.00000	.00000
18.940	26.000	.00000	.00000	.00000	.00000	.00000	.00000	.00000
	GRADIENT	.00000	.00000	.00000	.00000	.00000	.00000	.00000

RUN NO. 5/ 0 GRADIENT INTERVAL = -5.00/ 5.00

Q	ALPHA	DELE1	DELE2	DELE3	DELE4	BDFLAP	ELEVON	AILRON
52.070	-5.245	.00000	.00000	.00000	.00000	.00000	.00000	.00000
52.240	-2.653	.00000	.00000	.00000	.00000	.00000	.00000	.00000
52.220	-.062	.00000	.00000	.00000	.00000	.00000	.00000	.00000
52.220	2.535	.00000	.00000	.00000	.00000	.00000	.00000	.00000
52.260	5.135	.00000	.00000	.00000	.00000	.00000	.00000	.00000
52.330	7.735	.00000	.00000	.00000	.00000	.00000	.00000	.00000
52.190	10.341	.00000	.00000	.00000	.00000	.00000	.00000	.00000
52.250	12.939	.00000	.00000	.00000	.00000	.00000	.00000	.00000
52.080	15.553	.00000	.00000	.00000	.00000	.00000	.00000	.00000
52.310	20.819	.00000	.00000	.00000	.00000	.00000	.00000	.00000
49.060	26.008	.00000	.00000	.00000	.00000	.00000	.00000	.00000
	GRADIENT	.00000	.00000	.00000	.00000	.00000	.00000	.00000

ARC40X80-462(OA100) OV101 (ENA01A) (15 APR 82)

REFERENCE DATA

SREF =	2690.0000 SQ.FT.	XMRP =	1076.6800 IN.	XO	
LREF =	474.8100 INCHES	YMRP =	.0000 IN.	YO	
BREF =	936.6800 INCHES	ZMRP =	375.0000 IN.	ZO	
SCALE =	.3600				

PARAMETRIC DATA

BETA =	.000	ELEVON =	.000
AILRON =	.000	BDFLAP =	.000
SPDBRK =	25.000	RUDDER =	.000

RUN NO. 7/ 0 GRADIENT INTERVAL = -5.00/ 5.00

Q	ALPHA	DELE1	DELE2	DELE3	DELE4	BDFLAP	ELEVON	AILRON
94.180	-5.245	.00000	.00000	.00000	.00000	.00000	.00000	.00000
94.780	-2.654	.00000	.00000	.00000	.00000	.00000	.00000	.00000
95.030	-.061	.00000	.00000	.00000	.00000	.00000	.00000	.00000
94.450	2.539	.00000	.00000	.00000	.00000	.00000	.00000	.00000
94.520	5.136	.00000	.00000	.00000	.00000	.00000	.00000	.00000
94.340	7.737	.00000	.00000	.00000	.00000	.00000	.00000	.00000
94.570	10.345	.00000	.00000	.00000	.00000	.00000	.00000	.00000
94.610	12.943	.00000	.00000	.00000	.00000	.00000	.00000	.00000
95.400	15.559	.00000	.00000	.00000	.00000	.00000	.00000	.00000
92.940	18.182	.00000	.00000	.00000	.00000	.00000	.00000	.00000
	GRADIENT	.00000	.00000	.00000	.00000	.00000	.00000	.00000

ARC40X80-462(OA100) OV101(DECREASING ALPHA) (ENA01B) (15 APR 82)

REFERENCE DATA

SREF =	2690.0000 SQ.FT.	XMRP =	1076.6800 IN.	XO	
LREF =	474.8100 INCHES	YMRP =	.0000 IN.	YO	
BREF =	936.6800 INCHES	ZMRP =	375.0000 IN.	ZO	
SCALE =	.3600				

PARAMETRIC DATA

BETA =	.000	ELEVON =	.000
AILRON =	.000	BDFLAP =	.000
SPDBRK =	25.000	RUDDER =	.000

RUN NO. 6/ 0 GRADIENT INTERVAL = -5.00/ 5.00

Q	ALPHA	DELE1	DELE2	DELE3	DELE4	BDFLAP	ELEVON	AILRON
52.300	-5.243	.00000	.00000	.00000	.00000	.00000	.00000	.00000
51.950	-2.652	.00000	.00000	.00000	.00000	.00000	.00000	.00000
51.990	-.064	.00000	.00000	.00000	.00000	.00000	.00000	.00000
51.990	2.533	.00000	.00000	.00000	.00000	.00000	.00000	.00000
52.180	5.136	.00000	.00000	.00000	.00000	.00000	.00000	.00000
51.950	7.735	.00000	.00000	.00000	.00000	.00000	.00000	.00000
52.350	10.339	.00000	.00000	.00000	.00000	.00000	.00000	.00000
52.100	12.938	.00000	.00000	.00000	.00000	.00000	.00000	.00000
52.080	15.553	.00000	.00000	.00000	.00000	.00000	.00000	.00000
52.200	20.822	.00000	.00000	.00000	.00000	.00000	.00000	.00000
	GRADIENT	.00000	.00000	.00000	.00000	.00000	.00000	.00000

ARC40X80-462(OA100) OV101 (ENA01C) (15 APR 82)

REFERENCE DATA

SREF = 2690.0000 SQ.FT. XMRP = 1076.6800 IN. XO
LREF = 474.8100 INCHES YMRP = .0000 IN. YO
BREF = 936.6800 INCHES ZMRP = 375.0000 IN. ZO
SCALE = .3600

PARAMETRIC DATA

BETA = .000 ELEVON = 10.000
AILRON = .000 BDFLAP = .000
SPDBRK = 25.000 RUDDER = .000

RUN NO. 2/ 0 GRADIENT INTERVAL = -5.00/ 5.00

Q	ALPHA	DELE1	DELE2	DELE3	DELE4	BDFLAP	ELEVON	AILRON
18.990	-5.093	10.05130	10.55300	10.46650	10.29350	.00000	10.34107	-.03892
18.990	-2.501	10.05130	10.55300	10.46650	10.29350	.00000	10.34107	-.03892
19.140	.091	10.05130	10.55300	10.46650	10.29350	.00000	10.34107	-.03892
19.090	2.687	10.05130	10.55300	10.46650	10.29350	.00000	10.34107	-.03892
19.080	5.288	10.05130	10.55300	10.46650	10.29350	.00000	10.34107	-.03892
19.050	7.890	10.05130	10.55300	10.46650	10.29350	.00000	10.34107	-.03892
19.090	10.489	10.05130	10.55300	10.46650	10.29350	.00000	10.34107	-.03892
19.020	13.095	10.05130	10.55300	10.46650	10.29350	.00000	10.34107	-.03892
18.970	15.701	10.05130	10.55300	10.46650	10.29350	.00000	10.34107	-.03892
19.040	20.963	10.05130	10.55300	10.46650	10.29350	.00000	10.34107	-.03892
18.900	26.117	10.05130	10.55300	10.46650	10.29350	.00000	10.34107	-.03892
	GRADIENT	.00000	.00000	-.00000	-.00000	.00000	.00000	.00000

RUN NO. 8/ 0 GRADIENT INTERVAL = -5.00/ 5.00

Q	ALPHA	DELE1	DELE2	DELE3	DELE4	BDFLAP	ELEVON	AILRON
47.540	-5.091	9.99320	10.55300	10.46650	10.29350	.00000	10.32655	-.05345
47.620	-2.500	10.05130	10.55300	10.46650	10.29350	.00000	10.34107	-.03892
47.640	.091	10.05130	10.55300	10.46650	10.29350	.00000	10.34107	-.03892
47.600	2.688	10.05130	10.55300	10.46650	10.29350	.00000	10.34107	-.03892
47.620	5.284	10.05130	10.55300	10.46650	10.29350	.00000	10.34107	-.03892
47.580	7.890	10.05130	10.55300	10.46650	10.29350	.00000	10.34107	-.03892
47.470	10.489	10.05130	10.55300	10.46650	10.29350	.00000	10.34107	-.03892
47.430	13.093	10.05130	10.55300	10.46650	10.29350	.00000	10.34107	-.03892
47.540	15.704	10.05130	10.55300	10.46650	10.29350	.00000	10.34107	-.03892
47.490	20.973	10.05130	10.55300	10.46650	10.29350	.00000	10.34107	-.03892
45.130	26.111	10.05130	10.55300	10.46650	10.29350	.00000	10.34107	-.03892
	GRADIENT	-.00000	-.00000	.00000	-.00000	.00000	-.00000	.00000

ARC40X80-462(OA100) OV101 (ENA01C) (15 APR 82)

REFERENCE DATA

SREF =	2690.0000 SQ.FT.	XMRP =	1076.6800 IN.	XO	
LREF =	474.8100 INCHES	YMRP =	.0000 IN.	YO	
BREF =	936.6800 INCHES	ZMRP =	375.0000 IN.	ZO	
SCALE =	.3600				

PARAMETRIC DATA

BETA =	.000	ELEVON =	10.000
AILRON =	.000	BDFLAP =	.000
SPDBRK =	25.000	RUDDER =	.000

RUN NO. 14/ 0 GRADIENT INTERVAL = -5.00/ 5.00

Q	ALPHA	DELE1	DELE2	DELE3	DELE4	BDFLAP	ELEVON	AILRON
94.550	-5.093	10.05130	10.55300	10.46650	10.29350	.00000	10.34107	-.03892
94.050	-2.501	10.05130	10.55300	10.46650	10.29350	.00000	10.34107	-.03892
94.680	.090	10.05130	10.55300	10.46650	10.29350	.00000	10.34107	-.03892
94.710	2.690	10.05130	10.55300	10.46650	10.29350	.00000	10.34107	-.03892
94.230	5.291	10.05130	10.55300	10.46650	10.29350	.00000	10.34107	-.03892
94.260	7.891	10.05130	10.55300	10.46650	10.29350	.00000	10.34107	-.03892
94.350	10.495	10.05130	10.55300	10.46650	10.29350	.00000	10.34107	-.03892
94.610	13.098	10.05130	10.55300	10.46650	10.29350	.00000	10.34107	-.03892
93.190	15.690	10.05130	10.55300	10.46650	10.29350	.00000	10.34107	-.03892
94.180	18.341	10.05130	10.55300	10.46650	10.29350	.00000	10.34107	-.03892
92.530	20.984	10.05130	10.55300	10.46650	10.29350	.00000	10.34107	-.03892
	GRADIENT	.00000	.00000	.00000	.00000	.00000	.00000	-.00000

ARC40X80-462(OA100) OV101 (ENA01D) (15 APR 82)

REFERENCE DATA

SREF =	2690.0000 SQ.FT.	XMRP =	1076.6800 IN.	XO	
LREF =	474.8100 INCHES	YMRP =	.0000 IN.	YO	
BREF =	936.6800 INCHES	ZMRP =	375.0000 IN.	ZO	
SCALE =	.3600				

PARAMETRIC DATA

BETA =	.000	ELEVON =	-10.000
AILRON =	.000	BDFLAP =	.000
SPDBRK =	25.000	RUDDER =	.000

RUN NO. 3/ 0 GRADIENT INTERVAL = -5.00/ 5.00

Q	ALPHA	DELE1	DELE2	DELE3	DELE4	BDFLAP	ELEVON	AILRON
18.910	-5.410	-10.05130	-10.55300	-10.46650	-10.29350	.00000	-10.34107	.03892
19.080	-2.818	-10.05130	-10.55300	-10.46650	-10.29350	.00000	-10.34107	.03892
19.140	-.221	-10.05130	-10.55300	-10.46650	-10.29350	.00000	-10.34107	.03892
19.110	2.371	-10.05130	-10.55300	-10.46650	-10.29350	.00000	-10.34107	.03892
19.110	4.965	-10.05130	-10.55300	-10.46650	-10.29350	.00000	-10.34107	.03892
19.180	7.564	-10.05130	-10.55300	-10.46650	-10.29350	.00000	-10.34107	.03892
19.120	10.174	-10.05130	-10.55300	-10.46650	-10.29350	.00000	-10.34107	.03892
19.060	12.770	-10.05130	-10.55300	-10.46650	-10.29350	.00000	-10.34107	.03892
18.880	15.379	-10.05130	-10.55300	-10.46650	-10.29350	.00000	-10.34107	.03892
18.800	20.636	-10.05130	-10.55300	-10.46650	-10.29350	.00000	-10.34107	.03892
18.990	25.855	-10.05130	-10.55300	-10.46650	-10.29350	.00000	-10.34107	.03892
	GRADIENT	.00000	.00000	.00000	.00000	.00000	.00000	.00000

ARC40X80-462(OA100) OV101 (ENA01D) (15 APR 82)

REFERENCE DATA

SREF =	2690.0000 SQ.FT.	XMRP =	1076.6800 IN.	XO	
LREF =	474.8100 INCHES	YMRP =	.0000 IN.	YO	
BREF =	936.6800 INCHES	ZMRP =	375.0000 IN.	ZO	
SCALE =	.3600				

PARAMETRIC DATA

BETA =	.000	ELEVON =	-10.000
AILRON =	.000	BDFLAP =	.000
SPDBRK =	25.000	RUDDER =	.000

RUN NO. 9/ 0 GRADIENT INTERVAL = -5.00/ 5.00

Q	ALPHA	DELE1	DELE2	DELE3	DELE4	BDFLAP	ELEVON	AILRON
47.480	-5.409	-10.05130	-10.55300	-10.46650	-10.29350	.00000	-10.34107	.03892
47.600	-2.819	-10.05130	-10.55300	-10.46650	-10.29350	.00000	-10.34107	.03892
47.420	-.225	-10.05130	-10.55300	-10.46650	-10.29350	.00000	-10.34107	.03892
47.530	2.371	-10.05130	-10.55300	-10.46650	-10.29350	.00000	-10.34107	.03892
47.300	4.967	-10.05130	-10.55300	-10.46650	-10.29350	.00000	-10.34107	.03892
47.530	7.568	-10.05130	-10.55300	-10.46650	-10.29350	.00000	-10.34107	.03892
47.500	10.176	-10.05130	-10.55300	-10.46650	-10.29350	.00000	-10.34107	.03892
47.570	12.771	-10.05130	-10.55300	-10.46650	-10.29350	.00000	-10.34107	.03892
47.460	15.385	-10.05130	-10.55300	-10.46650	-10.29350	.00000	-10.34107	.03892
47.490	20.650	-10.05130	-10.55300	-10.46650	-10.29350	.00000	-10.34107	.03892
47.810	25.857	-10.05130	-10.55300	-10.46650	-10.29350	.00000	-10.34107	.03892
	GRADIENT	.00000	.00000	.00000	.00000	.00000	.00000	.00000

RUN NO. 15/ 0 GRADIENT INTERVAL = -5.00/ 5.00

Q	ALPHA	DELE1	DELE2	DELE3	DELE4	BDFLAP	ELEVON	AILRON
94.710	-5.412	-10.10940	-10.61400	-10.52700	-10.35300	.00000	-10.40085	.03915
94.220	-2.818	-10.10940	-10.61400	-10.52700	-10.35300	.00000	-10.40085	.03915
93.990	-.223	-10.10940	-10.61400	-10.52700	-10.35300	.00000	-10.40085	.03915
94.430	2.374	-10.10940	-10.61400	-10.52700	-10.35300	.00000	-10.40085	.03915
94.520	4.969	-10.10940	-10.61400	-10.52700	-10.35300	.00000	-10.40085	.03915
94.610	7.572	-10.10940	-10.61400	-10.52700	-10.35300	.00000	-10.40085	.03915
94.380	10.178	-10.10940	-10.61400	-10.52700	-10.35300	.00000	-10.40085	.03915
94.800	12.775	-10.10940	-10.61400	-10.52700	-10.35300	.00000	-10.40085	.03915
94.870	15.391	-10.10940	-10.61400	-10.52700	-10.35300	.00000	-10.40085	.03915
95.210	18.018	-10.10940	-10.61400	-10.52700	-10.35300	.00000	-10.40085	.03915
94.570	20.660	-10.10940	-10.61400	-10.52700	-10.35300	.00000	-10.40085	.03915
88.500	25.862	-10.10940	-10.61400	-10.52700	-10.35300	.00000	-10.40085	.03915
	GRADIENT	-.00000	-.00000	-.00000	-.00000	.00000	-.00000	.00000

ARC40X80-462(0A100) OV101 (ENA01E) (15 APR 82)

REFERENCE DATA

SREF =	2690.0000 SQ.FT.	XMRP =	1076.6800 IN.	XO	
LREF =	474.8100 INCHES	YMRP =	.0000 IN.	YO	
BREF =	936.6800 INCHES	ZMRP =	375.0000 IN.	ZO	
SCALE =	.3600				

PARAMETRIC DATA

ALPHA =	.000	ELEVON =	.000
AILRON =	.000	BDFLAP =	.000
SPDBRK =	25.000	RUDDER =	.000

RUN NO. 16/ 0 GRADIENT INTERVAL = -5.00/ 5.00

Q	BETA	DELE1	DELE2	DELE3	DELE4	BDFLAP	ELEVON	AILRON
19.200	-13.000	-.05810	-.06100	.00000	-.05950	.00000	-.04465	-.01490
19.160	-10.000	-.05810	-.06100	-.06050	-.05950	.00000	-.05977	.00022
19.070	-5.000	-.05810	-.06100	-.06050	-.05950	.00000	-.05977	.00022
19.050	-2.000	-.05810	-.06100	-.06050	.00000	.00000	-.04490	-.01465
19.080	.000	.00000	.00000	.00000	.00000	.00000	.00000	.00000
19.040	2.000	.00000	.00000	.00000	.00000	.00000	.00000	.00000
19.130	5.000	-.05810	-.06100	.00000	-.05950	.00000	-.04465	-.01490
19.150	10.000	-.05810	-.06100	-.06050	.00000	.00000	-.04490	-.01465
19.110	15.000	.00000	.00000	.00000	.00000	.00000	.00000	.00000
19.040	20.000	-.05810	-.06100	.00000	.00000	.00000	-.02977	-.02977
	GRADIENT	.00200	.00210	.00730	.00000	.00000	.00285	-.00080

RUN NO. 21/ 0 GRADIENT INTERVAL = -5.00/ 5.00

Q	BETA	DELE1	DELE2	DELE3	DELE4	BDFLAP	ELEVON	AILRON
47.590	-13.000	.05810	.00000	.06050	.05950	.00000	.04452	-.01548
47.590	-10.000	.05810	.00000	.06050	.05950	.00000	.04452	-.01548
47.630	-5.000	.05810	.00000	.06050	.05950	.00000	.04452	-.01548
47.520	-2.000	.05810	.00000	.06050	.05950	.00000	.04452	-.01548
47.490	.000	.05810	.00000	.06050	.05950	.00000	.04452	-.01548
47.480	2.000	.05810	.00000	.06050	.05950	.00000	.04452	-.01548
47.630	5.000	.05810	.00000	.06050	.05950	.00000	.04452	-.01548
47.510	10.000	.05810	.00000	.06050	.05950	.00000	.04452	-.01548
47.500	15.000	.05810	.00000	.06050	.05950	.00000	.04452	-.01548
47.680	20.000	.05810	.00000	.06050	.05950	.00000	.04452	-.01548
	GRADIENT	.00000	.00000	.00000	.00000	.00000	.00000	.00000

RUN NO. 45/ 0 GRADIENT INTERVAL = -5.00/ 5.00

Q	BETA	DELE1	DELE2	DELE3	DELE4	BDFLAP	ELEVON	AILRON
94.290	-13.000	.00000	.00000	.00000	.00000	.00000	.00000	.00000
94.680	-10.000	.00000	.00000	.00000	.00000	.00000	.00000	.00000
94.410	-5.000	.00000	.00000	.00000	.00000	.00000	.00000	.00000
94.780	-2.000	-.05810	.00000	.00000	.00000	.00000	-.01453	-.01453
94.730	.000	-.05810	.00000	.00000	.00000	.00000	-.01453	-.01453
94.410	2.000	.00000	.00000	.00000	.00000	.00000	.00000	.00000
94.180	5.000	.00000	.00000	.00000	.00000	.00000	.00000	.00000
94.590	10.000	.00000	.00000	.00000	.00000	.00000	.00000	.00000
94.450	15.000	.00000	.00000	.00000	.00000	.00000	.00000	.00000
92.340	20.000	.00000	.00000	.00000	.00000	.00000	.00000	.00000
	GRADIENT	.00200	.00000	.00000	.00000	.00000	.00050	.00050

ARC40X80-462(OA100) OV101(DECREASING BETA) (ENA01F) (15 APR 82)

REFERENCE DATA

SREF =	2690.0000 SQ.FT.	XMRP =	1076.6800 IN.	XO	
LREF =	474.8100 INCHES	YMRP =	.0000 IN.	YO	
BREF =	936.6800 INCHES	ZMRP =	375.0000 IN.	ZO	
SCALE =	.3600				

PARAMETRIC DATA

ALPHA =	.000	ELEVON =	.000
AILRON =	.000	BDFLAP =	.000
SPDBRK =	25.000	RUDDER =	.000

RUN NO. 22/ 0 GRADIENT INTERVAL = -5.00/ 5.00

Q	BETA	DELE1	DELE2	DELE3	DELE4	BDFLAP	ELEVON	AILRON
47.510	-13.000	.05810	.00000	.06050	.05950	.00000	.04452	-.01548
47.470	-10.000	.05810	.00000	.06050	.05950	.00000	.04452	-.01548
47.610	-5.000	.05810	.00000	.06050	.05950	.00000	.04452	-.01548
47.600	-2.000	.05810	.00000	.06050	.05950	.00000	.04452	-.01548
47.430	.000	.05810	.00000	.06050	.05950	.00000	.04452	-.01548
47.440	2.000	.05810	.00000	.06050	.05950	.00000	.04452	-.01548
47.550	5.000	.05810	.00000	.06050	.05950	.00000	.04452	-.01548
47.490	10.000	.05810	.00000	.06050	.05950	.00000	.04452	-.01548
47.540	15.000	.05810	.00000	.06050	.05950	.00000	.04452	-.01548
47.670	20.000	.05810	.00000	.06050	.05950	.00000	.04452	-.01548
	GRADIENT	.00000	.00000	.00000	.00000	.00000	.00000	.00000

ARC40X80-462(OA100) OV101 (ENA01G) (15 APR 82)

REFERENCE DATA

SREF =	2690.0000 SQ.FT.	XMRP =	1076.6800 IN.	XO	
LREF =	474.8100 INCHES	YMRP =	.0000 IN.	YO	
BREF =	936.6800 INCHES	ZMRP =	375.0000 IN.	ZO	
SCALE =	.3600				

PARAMETRIC DATA

ALPHA =	5.000	ELEVON =	.000
AILRON =	.000	BDFLAP =	.000
SPDBRK =	25.000	RUDDER =	.000

RUN NO. 17/ 0 GRADIENT INTERVAL = -5.00/ 5.00

Q	BETA	DELE1	DELE2	DELE3	DELE4	BDFLAP	ELEVON	AILRON
19.180	-13.000	-.05810	-.06100	-.06050	-.05950	.00000	-.05977	.00022
19.120	-10.000	-.05810	-.06100	-.06050	-.05950	.00000	-.05977	.00022
19.080	-5.000	-.05810	-.06100	-.06050	-.05950	.00000	-.05977	.00022
19.070	-2.000	.00000	.00000	.00000	.00000	.00000	.00000	.00000
19.070	.000	-.05810	-.06100	-.06050	.00000	.00000	-.04490	-.01465
19.060	2.000	.00000	.00000	.00000	.00000	.00000	.00000	.00000
19.080	5.000	-.05810	-.06100	-.06050	-.05950	.00000	-.05977	.00022
19.070	10.000	.00000	.00000	-.06050	-.05950	.00000	-.03000	.03000
19.020	15.000	-.05810	-.06100	.00000	.00000	.00000	-.02977	-.02977
19.010	20.000	-.05810	-.06100	-.06050	-.05950	.00000	-.05977	.00022
	GRADIENT	.00000	.00000	.00000	.00000	.00000	.00000	.00000

ARC40X80-462(0A100) 0V101 (ENA01G) (15 APR 82)

REFERENCE DATA

SREF =	2690.0000 SQ.FT.	XMRP =	1076.6800 IN.	XO	
LREF =	474.8100 INCHES	YMRP =	.0000 IN.	YO	
BREF =	936.6800 INCHES	ZMRP =	375.0000 IN.	ZO	
SCALE =	.3600				

PARAMETRIC DATA

ALPHA =	5.000	ELEVON =	.000
AILRON =	.000	BDFLAP =	.000
SPDBRK =	25.000	RUDDER =	.000

RUN NO. 23/ 0 GRADIENT INTERVAL = -5.00/ 5.00

Q	BETA	DELE1	DELE2	DELE3	DELE4	BDFLAP	ELEVON	AILRON
47.780	-13.000	.05810	.00000	.06050	.05950	.00000	.04452	-.01548
47.770	-10.000	.05810	.00000	.06050	.05950	.00000	.04452	-.01548
47.550	-5.000	.05810	.00000	.06050	.05950	.00000	.04452	-.01548
47.560	-2.000	.05810	.00000	.06050	.05950	.00000	.04452	-.01548
47.450	.000	.05810	.00000	.06050	.05950	.00000	.04452	-.01548
47.560	2.000	.05810	.00000	.06050	.05950	.00000	.04452	-.01548
47.430	5.000	.05810	.00000	.06050	.05950	.00000	.04452	-.01548
47.670	10.000	.05810	.00000	.06050	.05950	.00000	.04452	-.01548
47.470	15.000	.05810	.00000	.06050	.05950	.00000	.04452	-.01548
47.450	20.000	.05810	.00000	.06050	.05950	.00000	.04452	-.01548
	GRADIENT	.00000	.00000	.00000	.00000	.00000	.00000	.00000

ARC40X80-462(0A100) 0V101 (ENA01H) (15 APR 82)

REFERENCE DATA

SREF =	2690.0000 SQ.FT.	XMRP =	1076.6800 IN.	XO	
LREF =	474.8100 INCHES	YMRP =	.0000 IN.	YO	
BREF =	936.6800 INCHES	ZMRP =	375.0000 IN.	ZO	
SCALE =	.3600				

PARAMETRIC DATA

ALPHA =	10.000	ELEVON =	.000
AILRON =	.000	BDFLAP =	.000
SPDBRK =	25.000	RUDDER =	.000

RUN NO. 18/ 0 GRADIENT INTERVAL = -5.00/ 5.00

Q	BETA	DELE1	DELE2	DELE3	DELE4	BDFLAP	ELEVON	AILRON
19.060	-13.000	-.05810	-.06100	-.06050	-.05950	.00000	-.05977	.00022
19.090	-10.000	-.05810	-.06100	-.06050	.00000	.00000	-.04490	-.01465
19.100	-5.000	.00000	.00000	.00000	.00000	.00000	.00000	.00000
19.180	-2.000	-.05810	-.06100	-.06050	-.05950	.00000	-.05977	.00022
19.060	.000	-.05810	-.06100	.00000	-.05950	.00000	-.04465	-.01490
19.110	2.000	-.05810	-.06100	-.06050	-.05950	.00000	-.05977	.00022
19.080	5.000	-.05810	-.06100	-.06050	-.05950	.00000	-.05977	.00022
19.110	10.000	-.05810	-.06100	-.06050	-.05950	.00000	-.05977	.00022
19.050	15.000	.00000	.00000	.00000	.00000	.00000	.00000	.00000
19.040	20.000	.00000	.00000	.00000	.00000	.00000	.00000	.00000
	GRADIENT	-.00501	-.00526	-.00522	-.00513	.00000	-.00515	.00002

ARC40X80-462(0A100) 0V101 (ENA01H) (15 APR 82)

REFERENCE DATA

SREF =	2690.0000 SQ.FT.	XMRP =	1076.6800 IN.	XO	
LREF =	474.8100 INCHES	YMRP =	.0000 IN.	YO	
BREF =	936.6800 INCHES	ZMRP =	375.0000 IN.	ZO	
SCALE =	.3600				

PARAMETRIC DATA

ALPHA =	10.000	ELEVON =	.000
AILRON =	.000	BDFLAP =	.000
SPDBRK =	25.000	RUDDER =	.000

RUN NO. 24/ 0 GRADIENT INTERVAL = -5.00/ 5.00

Q	BETA	DELE1	DELE2	DELE3	DELE4	BDFLAP	ELEVON	AILRON
47.700	-13.000	.05810	.00000	.06050	.05950	.00000	.04452	-.01548
47.950	-10.000	.05810	.00000	.06050	.05950	.00000	.04452	-.01548
48.370	-5.000	.05810	.00000	.06050	.05950	.00000	.04452	-.01548
47.570	-2.000	.05810	.00000	.06050	.05950	.00000	.04452	-.01548
47.530	.000	.05810	.00000	.06050	.05950	.00000	.04452	-.01548
47.440	2.000	.05810	.00000	.06050	.05950	.00000	.04452	-.01548
47.660	5.000	.05810	.00000	.06050	.05950	.00000	.04452	-.01548
47.390	10.000	.05810	.00000	.06050	.05950	.00000	.04452	-.01548
47.510	15.000	.05810	.00000	.06050	.05950	.00000	.04452	-.01548
47.500	20.000	.05810	.00000	.06050	.05950	.00000	.04452	-.01548
	GRADIENT	.00000	.00000	.00000	.00000	.00000	.00000	.00000

RUN NO. 46/ 0 GRADIENT INTERVAL = -5.00/ 5.00

Q	BETA	DELE1	DELE2	DELE3	DELE4	BDFLAP	ELEVON	AILRON
94.480	-13.000	.00000	.00000	.00000	.00000	.00000	.00000	.00000
94.340	-10.000	.00000	.00000	.00000	.00000	.00000	.00000	.00000
94.410	-5.000	.00000	.00000	.00000	.00000	.00000	.00000	.00000
94.550	-2.000	.00000	.00000	.00000	.00000	.00000	.00000	.00000
94.270	.000	.00000	.00000	.00000	.00000	.00000	.00000	.00000
94.360	2.000	.00000	.00000	.00000	.00000	.00000	.00000	.00000
94.430	5.000	.00000	.00000	.00000	.00000	.00000	.00000	.00000
94.550	10.000	.00000	.00000	.00000	.00000	.00000	.00000	.00000
94.610	15.000	.00000	.00000	.00000	.00000	.00000	.00000	.00000
94.360	20.000	.00000	.00000	.00000	.00000	.00000	.00000	.00000
	GRADIENT	.00000	.00000	.00000	.00000	.00000	.00000	.00000

ARC40X80-462(OA100) OV101 (ENA011) (15 APR 82)

REFERENCE DATA

SREF =	2690.0000 SQ.FT.	XMRP =	1076.6800 IN.	XO
LREF =	474.8100 INCHES	YMRP =	.0000 IN.	YO
BREF =	936.6800 INCHES	ZMRP =	375.0000 IN.	ZO
SCALE =	.3600			

PARAMETRIC DATA

ALPHA =	15.000	ELEVON =	.000
AILRON =	.000	BDFLAP =	.000
SPDBRK =	25.000	RUDDER =	.000

RUN NO. 19/ 0 GRADIENT INTERVAL = -5.00/ 5.00

Q	BETA	DELE1	DELE2	DELE3	DELE4	BDFLAP	ELEVON	AILRON
19.000	-13.000	-.05810	-.06100	-.06050	-.05950	.00000	-.05977	.00022
19.100	-10.000	-.05810	-.06100	-.06050	-.05950	.00000	-.05977	.00022
19.000	-5.000	.00000	.00000	-.06050	-.05950	.00000	-.03000	.03000
19.000	-2.000	-.05810	-.06100	.00000	.00000	.00000	-.02977	-.02977
18.980	.000	-.05810	-.06100	-.06050	-.05950	.00000	-.05977	.00022
19.070	2.000	.00000	.00000	-.06050	.00000	.00000	-.01513	.01513
18.980	10.000	.00000	.00000	.00000	.00000	.00000	.00000	.00000
19.000	15.000	.00000	.00000	.00000	.00000	.00000	.00000	.00000
18.930	20.000	.00000	.00000	.00000	.00000	.00000	.00000	.00000
	GRADIENT	-.00109	-.00114	-.00170	.00556	.00000	.00041	-.00152

RUN NO. 25/ 0 GRADIENT INTERVAL = -5.00/ 5.00

Q	BETA	DELE1	DELE2	DELE3	DELE4	BDFLAP	ELEVON	AILRON
47.510	-13.000	.00000	.00000	.00000	.00000	.00000	.00000	.00000
47.800	-10.000	.00000	.00000	.00000	.00000	.00000	.00000	.00000
48.000	-5.000	.00000	.00000	.00000	.00000	.00000	.00000	.00000
48.090	-2.000	.00000	.00000	.00000	.00000	.00000	.00000	.00000
47.970	.000	.00000	.00000	.00000	.00000	.00000	.00000	.00000
47.910	2.000	.00000	.00000	.00000	.00000	.00000	.00000	.00000
47.890	5.000	.00000	.00000	.00000	.00000	.00000	.00000	.00000
47.470	10.000	.00000	.00000	.00000	.00000	.00000	.00000	.00000
47.450	15.000	.00000	.00000	.00000	.00000	.00000	.00000	.00000
47.650	20.000	.00000	.00000	.00000	.00000	.00000	.00000	.00000
	GRADIENT	.00000	.00000	.00000	.00000	.00000	.00000	.00000

ARC40X80-462(OA100) OV101 (ENA01J) (15 APR 82)

REFERENCE DATA

SREF =	2690.0000 SQ.FT.	XMRP =	1076.6800 IN.	XO	
LREF =	474.8100 INCHES	YMRP =	.0000 IN.	YO	
BREF =	936.6800 INCHES	ZMRP =	375.0000 IN.	ZO	
SCALE =	.3600				

PARAMETRIC DATA

ALPHA =	20.000	ELEVON =	.000
AILRON =	.000	BDFLAP =	.000
SPDBRK =	25.000	RUDDER =	.000

RUN NO. 20/ 0 GRADIENT INTERVAL = -5.00/ 5.00

Q	BETA	DELE1	DELE2	DELE3	DELE4	BDFLAP	ELEVON	AILRON
19.180	-13.000	.00000	.00000	.06050	.05950	.00000	.03000	-.03000
19.130	-10.000	.05810	.00000	.06050	.05950	.00000	.04452	-.01548
19.100	-5.000	.00000	-.06100	.00000	.00000	.00000	-.01525	-.01525
19.140	-2.000	.05810	.00000	.00000	.00000	.00000	.01453	.01453
19.220	.000	.05810	.00000	.06050	.05950	.00000	.04452	-.01548
19.130	2.000	.05810	.00000	.06050	.05950	.00000	.04452	-.01548
19.100	5.000	.05810	.00000	.06050	.05950	.00000	.04452	-.01548
19.010	10.000	.05810	.00000	.06050	.00000	.00000	.02965	-.00060
19.040	15.000	.05810	.00000	.06050	.05950	.00000	.04452	-.01548
19.000	20.000	.05810	.00000	.06050	.05950	.00000	.04452	-.01548
	GRADIENT	.00501	.00526	.00730	.00718	.00000	.00619	-.00105

RUN NO. 26/ 0 GRADIENT INTERVAL = -5.00/ 5.00

Q	BETA	DELE1	DELE2	DELE3	DELE4	BDFLAP	ELEVON	AILRON
47.490	-13.000	-.05810	-.06100	-.06050	-.05950	.00000	-.05977	.00022
47.730	-10.000	.00000	.00000	.00000	.00000	.00000	.00000	.00000
47.590	-5.000	.00000	.00000	-.06050	-.05950	.00000	-.03000	.03000
47.600	-2.000	.00000	.00000	.00000	.00000	.00000	.00000	.00000
47.560	.000	.00000	.00000	.00000	.00000	.00000	.00000	.00000
47.630	2.000	.00000	.00000	.00000	.00000	.00000	.00000	.00000
47.700	5.000	-.05810	.00000	.00000	.00000	.00000	-.01453	-.01453
47.640	10.000	-.05810	-.06100	-.06050	-.05950	.00000	-.05977	.00022
47.620	15.000	.00000	-.06100	-.06050	-.05950	.00000	-.04525	.01475
47.420	20.000	-.05810	-.06100	-.06050	-.05950	.00000	-.05877	.00022
	GRADIENT	-.00501	.00000	.00522	.00513	.00000	.00133	-.00384

ARC40X80-462(OA100) OV101

(ENA01K) (15 APR 82)

REFERENCE DATA

SREF =	2690.0000 SQ.FT.	XMRP =	1076.6800 IN.	XO	
LREF =	474.8100 INCHES	YMRP =	.0000 IN.	YO	
BREF =	936.6800 INCHES	ZMRP =	375.0000 IN.	ZO	
SCALE =	.3600				

PARAMETRIC DATA

ALPHA =	.000	BETA =	.000
AILRON =	.000	BDFLAP =	.000
SPDBRK =	25.000	RUDDER =	.000

RUN NO. 10/ 0 GRADIENT INTERVAL = -5.00/ 5.00

Q	ELEVON	DELE1	DELE2	DELE3	DELE4	BDFLAP	AILRON
47.410	-36.343	-35.32480	-37.08800	-36.78400	-36.17600	.00000	.13680
47.600	-31.143	-30.27010	-31.78100	-31.52050	-30.99950	.00000	.11722
47.670	-26.002	-25.27350	-26.53500	-26.31750	-25.88250	.00000	.09788
47.550	-20.742	-20.16070	-21.16700	-20.99350	-20.64650	.00000	.07807
47.580	-15.601	-15.16410	-15.92100	-15.79050	-15.52950	.00000	.05872
47.670	-10.401	-10.10940	-10.61400	-10.52700	-10.35300	.00000	.03915
47.780	-5.200	-5.05470	-5.30700	-5.26350	-5.17650	.00000	.01958
47.640	-.060	-.05810	-.06100	-.06050	-.05950	.00000	.00022
47.540	5.141	4.99660	5.24600	5.20300	5.11700	.00000	-.01935
47.490	10.281	9.99320	10.49200	10.40600	10.23400	.00000	-.03870
47.580	15.482	15.04790	15.79900	15.66950	15.41050	.00000	-.05827
47.470	20.692	20.10260	21.10600	20.93300	20.58700	.00000	-.07785
	GRADIENT	.00000	.00000	.00000	.00000	.00000	.00000

ARC40X80-462(OA100) OV101 (ENA01L) (15 APR 82)

REFERENCE DATA

SREF =	2690.0000 SQ.FT.	XMRP =	1076.6800 IN.	XO	
LREF =	474.8100 INCHES	YMRP =	.0000 IN.	YO	
BREF =	936.6800 INCHES	ZMRP =	375.0000 IN.	ZO	
SCALE =	.3600				

PARAMETRIC DATA

ALPHA =	5.000	BETA =	.000
AILRON =	.000	BDFLAP =	.000
SPDBRK =	25.000	RUDDER =	.000

RUN NO. 11/ 0 GRADIENT INTERVAL = -5.00/ 5.00

Q	ELEVON	DELE1	DELE2	DELE3	DELE4	BDFLAP	AILRON
47.520	-36.343	-35.32480	-37.08800	-36.78400	-36.17600	.00000	.13680
47.610	-31.143	-30.27010	-31.78100	-31.52050	-30.99950	.00000	.11722
47.540	-26.002	-25.27350	-26.53500	-26.31750	-25.88250	.00000	.09788
47.510	-20.742	-20.16070	-21.16700	-20.99350	-20.64650	.00000	.07807
47.510	-15.601	-15.16410	-15.92100	-15.78050	-15.52950	.00000	.05872
47.550	-10.401	-10.10940	-10.61400	-10.52700	-10.35300	.00000	.03915
47.510	-5.260	-5.11280	-5.36800	-5.32400	-5.23600	.00000	.01980
47.610	-.060	-.05810	-.06100	-.06050	-.05950	.00000	.00022
47.450	5.081	4.93860	5.18500	5.14250	5.05750	.00000	-.01912
47.500	10.341	10.05130	10.55300	10.46650	10.29350	.00000	-.03892
47.710	15.482	15.04790	15.79800	15.66950	15.41050	.00000	-.05827
47.420	20.682	20.10260	21.10600	20.93300	20.58700	.00000	-.07785
	GRADIENT	.00000	.00000	.00000	.00000	.00000	.00000

ARC40X80-462(OA100) OV101 (ENA01M) (15 APR 82)

REFERENCE DATA

SREF =	2690.0000 SQ.FT.	XMRP =	1076.6800 IN.	XO	
LREF =	474.8100 INCHES	YMRP =	.0000 IN.	YO	
BREF =	936.6800 INCHES	ZMRP =	375.0000 IN.	ZO	
SCALE =	.3600				

PARAMETRIC DATA

ALPHA =	10.000	BETA =	.000
AILRON =	.000	BDFLAP =	.000
SPDBRK =	25.000	RUDDER =	.000

RUN NO. 12/ 0 GRADIENT INTERVAL = -5.00/ 5.00

Q	ELEVON	DELE1	DELE2	DELE3	DELE4	BDFLAP	AILRON
47.660	-36.343	-35.32480	-37.08800	-36.78400	-36.17600	.00000	.13680
47.590	-31.143	-30.27010	-31.78100	-31.52050	-30.99950	.00000	.11722
47.530	-26.002	-25.27350	-26.53500	-26.31750	-25.88250	.00000	.09788
47.620	-20.802	-20.21880	-21.22800	-21.05400	-20.70600	.00000	.07830
47.460	-15.601	-15.16410	-15.92100	-15.79050	-15.52950	.00000	.05872
47.530	-10.401	-10.10940	-10.61400	-10.52700	-10.35300	.00000	.03915
47.500	-5.200	-5.05470	-5.30700	-5.26350	-5.17650	.00000	.01958
47.500	-.060	-.05810	-.06100	-.06050	-.05950	.00000	.00022
47.350	5.141	4.99660	5.24600	5.20300	5.11700	.00000	-.01935
47.430	10.281	9.99320	10.49200	10.40600	10.23400	.00000	-.03870
47.460	15.541	15.10600	15.86000	15.73000	15.47000	.00000	-.05850
47.380	20.622	20.04450	21.04500	20.87250	20.52750	.00000	-.07762
	GRADIENT	.00000	.00000	.00000	.00000	.00000	.00000

ARC40X80-462(OA100) OV101(DECREASING ELEVON) (ENA01N) (15 APR 82)

REFERENCE DATA

SREF =	2690.0000 SQ.FT.	XMRP =	1076.6800 IN. XO		
LREF =	474.8100 INCHES	YMRP =	.0000 IN. YO		
BREF =	936.6800 INCHES	ZMRP =	375.0000 IN. ZO		
SCALE =	.3600				

PARAMETRIC DATA

ALPHA =	10.000	BETA =	.000
AILRON =	.000	BDFLAP =	.000
SPDBRK =	25.000	RUDDER =	.000

RUN NO. 13/ 0 GRADIENT INTERVAL = -5.00/ 5.00

Q	ELEVON	DELE1	DELE2	DELE3	DELE4	BDFLAP	AILRON
47.380	-36.343	-35.32480	-37.08800	-36.78400	-36.17600	.00000	.13680
47.430	-31.143	-30.27010	-31.78100	-31.52050	-30.99950	.00000	.11722
47.440	-25.942	-25.21540	-26.47400	-26.25700	-25.82300	.00000	.09765
47.350	-20.742	-20.16070	-21.16700	-20.99350	-20.64650	.00000	.07807
47.340	-15.541	-15.10600	-15.86000	-15.73000	-15.47000	.00000	.05850
47.340	-10.461	-10.16750	-10.67500	-10.58750	-10.41250	.00000	.03937
47.260	-5.200	-5.05470	-5.30700	-5.26350	-5.17650	.00000	.01958
47.300	.000	.00000	.00000	.00000	.00000	.00000	.00000
47.260	5.111	4.93250	5.18500	5.20300	5.11700	.00000	-.04912
47.510	10.281	9.99320	10.49200	10.40600	10.23400	.00000	-.03870
47.530	15.541	15.10600	15.86000	15.73000	15.47000	.00000	-.05850
47.400	20.622	20.04450	21.04500	20.87250	20.52750	.00000	-.07762
	GRADIENT	.00000	.00000	.00000	.00000	.00000	.00000

ARC40X80-462(OA100) QV101 (ENA010) (15 APR 82)

REFERENCE DATA

SREF =	2690.0000 SQ.FT.	XMRP =	1076.6800 IN.	XO	
LREF =	474.8100 INCHES	YMRP =	.0000 IN.	YO	
BREF =	936.6800 INCHES	ZMRP =	375.0000 IN.	ZO	
SCALE =	.3600				

PARAMETRIC DATA

ALPHA =	15.000	BETA =	.000
AILRON =	.000	BDFLAP =	.000
SPDBRK =	25.000	RUDDER =	.000

RUN NO. 27/ 0 GRADIENT INTERVAL = -5.00/ 5.00

Q	ELEVON	DELE1	DELE2	DELE3	DELE4	BDFLAP	AILRON
47.630	-36.343	-35.32480	-37.08800	-36.78400	-36.17600	.00000	.13680
47.880	-31.143	-30.27010	-31.78100	-31.52050	-30.99950	.00000	.11722
47.570	-26.002	-25.27350	-26.53500	-26.31750	-25.88250	.00000	.09788
47.550	-20.742	-20.16070	-21.16700	-20.98350	-20.64650	.00000	.07807
47.520	-15.601	-15.16410	-15.82100	-15.79050	-15.52950	.00000	.05872
47.720	-10.401	-10.10840	-10.61400	-10.52700	-10.35300	.00000	.03915
47.490	-5.200	-5.05470	-5.30700	-5.26350	-5.17650	.00000	.01958
47.550	.000	.00000	.00000	.00000	.00000	.00000	.00000
47.560	5.141	4.99980	5.24600	5.20300	5.11700	.00000	-.01935
47.570	10.281	9.99320	10.49200	10.40800	10.23400	.00000	-.03870
47.790	15.482	15.04790	15.79900	15.68950	15.41050	.00000	-.05827
47.430	20.637	20.04450	21.04500	20.87250	20.58700	.00000	-.09250
	GRADIENT	.00000	.00000	.00000	.00000	.00000	.00000

ARC40X80-462(OA100) OV101 (ENA01P) (15 APR 82)

REFERENCE DATA

SREF =	2690.0000 SQ.FT.	XMRP =	1076.6800 IN. XO		
LREF =	474.8100 INCHES	YMRP =	.0000 IN. YO		
BREF =	936.6800 INCHES	ZMRP =	375.0000 IN. ZO		
SCALE =	.3600				

PARAMETRIC DATA

ALPHA =	20.000	BETA =	.000
AILRON =	.000	BDFLAP =	.000
SPDBRK =	25.000	RUDDER =	.000

RUN NO. 28/ 0 GRADIENT INTERVAL = -5.00/ 5.00

Q	ELEVON	DELE1	DELE2	DELE3	DELE4	BDFLAP	AILRON
47.610	-36.343	-35.32480	-37.08800	-36.78400	-36.17600	.00000	.13680
47.620	-31.143	-30.27010	-31.78100	-31.52050	-30.99950	.00000	.11722
47.500	-25.942	-25.21540	-26.47400	-26.25700	-25.82300	.00000	.09765
47.700	-20.712	-20.16070	-21.16700	-20.93300	-20.58700	.00000	.04807
47.670	-15.601	-15.16410	-15.92100	-15.79050	-15.52950	.00000	.05872
47.810	-10.401	-10.10940	-10.61400	-10.52700	-10.35300	.00000	.03915
47.510	-5.200	-5.05470	-5.30700	-5.26350	-5.17650	.00000	.01958
47.560	-.030	-.05810	-.06100	.00000	.00000	.00000	-.02977
47.750	5.141	4.99660	5.24600	5.20300	5.11700	.00000	-.01935
47.560	10.341	10.05130	10.55300	10.46650	10.29350	.00000	-.03892
47.760	15.541	15.10600	15.86000	15.73000	15.47000	.00000	-.05850
47.650	20.682	20.10260	21.10600	20.93300	20.58700	.00000	-.07785
	GRADIENT	.00000	.00000	.00000	.00000	.00000	.00000

ARC40X80-462(OA100) OV101 (ENA01Q) (15 APR 82)

REFERENCE DATA

SREF =	2690.0000 SQ.FT.	XMRP =	1076.6800 IN. XO		
LREF =	474.8100 INCHES	YMRP =	.0000 IN. YO		
BREF =	936.6800 INCHES	ZMRP =	375.0000 IN. ZO		
SCALE =	.3600				

PARAMETRIC DATA

ALPHA =	.000	BETA =	.000
ELEVON =	.000	BDFLAP =	.000
SPDBRK =	25.000	RUDDER =	.000

RUN NO. 29/ 0 GRADIENT INTERVAL = -5.00/ 5.00

Q	AILPON	DELE1	DELE2	DELE3	DELE4	BDFLAP	ELEVON
47.700	-.045	-.05810	-.06100	.08050	.00000	.00000	-.01465
47.690	2.570	2.49830	2.62300	-2.60150	-2.55850	.00000	-.00967
47.620	5.141	4.99660	5.24600	-5.20300	-5.11700	.00000	-.01935
47.590	7.711	7.49490	7.86900	-7.80450	-7.67550	.00000	-.02903
47.610	10.281	9.99320	10.49200	-10.40600	-10.23400	.00000	-.03870
47.630	15.541	15.10600	15.86000	-15.73000	-15.47000	.00000	-.05850
	GRADIENT	.97751	1.02630	-1.01783	-.97831	.00000	.00190

ARC40X80-462(OA100) OV101 (ENA01R) (15 APR 82)

REFERENCE DATA

SREF =	2690.0000 SQ.FT.	XMRP =	1076.6800 IN. XO		
LREF =	474.8100 INCHES	YMRP =	.0000 IN. YO		
BREF =	938.6800 INCHES	ZMRP =	375.0000 IN. ZO		
SCALE =	.3600				

PARAMETRIC DATA

ALPHA =	5.000	BETA =	.000
ELEVON =	.000	BDFLAP =	.000
SPDBRK =	25.000	RUDDER =	.000

RUN NO. 30/ 0 GRADIENT INTERVAL = -5.00/ 5.00

Q	AILRON	DELE1	DELE2	DELE3	DELE4	BDFLAP	ELEVON
47.600	-.045	-.05810	-.06100	.06050	.00000	.00000	-.01465
47.660	2.570	2.49830	2.62300	-2.60150	-2.55850	.00000	-.00967
47.650	5.141	4.99660	5.24600	-5.20300	-5.11700	.00000	-.01935
47.570	7.741	7.55300	7.93000	-7.80450	-7.67550	.00000	.00075
47.610	10.311	9.99320	10.49200	-10.46650	-10.29350	.00000	-.06870
47.570	15.541	15.10600	15.86000	-15.73000	-15.47000	.00000	-.05850
	GRADIENT	.97751	1.02630	-1.01789	-.97831	.00000	.00190

ARC40X80-462(OA100) OV101 (ENA01S) (15 APR 82)

REFERENCE DATA

SREF =	2690.0000 SQ.FT.	XMRP =	1076.6800 IN. XO		
LREF =	474.8100 INCHES	YMRP =	.0000 IN. YO		
BREF =	938.6800 INCHES	ZMRP =	375.0000 IN. ZO		
SCALE =	.3600				

PARAMETRIC DATA

ALPHA =	10.000	BETA =	.000
ELEVON =	.000	BDFLAP =	.000
SPDBRK =	25.000	RUDDER =	.000

RUN NO. 31/ 0 GRADIENT INTERVAL = -5.00/ 5.00

Q	AILRON	DELE1	DELE2	DELE3	DELE4	BDFLAP	ELEVON
47.670	-.060	-.05810	-.06100	.06050	.05950	.00000	.00022
47.530	2.570	2.49830	2.62300	-2.60150	-2.55850	.00000	-.00967
47.690	5.141	4.99660	5.24600	-5.20300	-5.11700	.00000	-.01935
47.590	7.711	7.49490	7.86900	-7.80450	-7.67550	.00000	-.02903
47.650	10.281	9.99320	10.49200	-10.40600	-10.23400	.00000	-.03870
47.710	15.541	15.10600	15.86000	-15.73000	-15.47000	.00000	-.05850
	GRADIENT	.97198	1.02049	-1.01213	-.98540	.00000	-.00376

ARC40X80-462(OA100) OV101(DECREASING AILERON) (ENA01T) (15 APR 82)

REFERENCE DATA

SREF =	2690.0000 SQ.FT.	XMRP =	1076.6800 IN. XO		
LREF =	474.8100 INCHES	YMRP =	.0000 IN. YO		
BREF =	936.6800 INCHES	ZMRP =	375.0000 IN. ZO		
SCALE =	.3600				

PARAMETRIC DATA

ALPHA =	10.000	BETA =	.000
ELEVON =	.000	BDFLAP =	.000
SPDBRK =	25.000	RUDDER =	.000

RUN NO. 32/ 0 GRADIENT INTERVAL = -5.00/ 5.00

Q	AILRON	DELE1	DELE2	DELE3	DELE4	BDFLAP	ELEVON
47.600	.000	.00000	.00000	.00000	.00000	.00000	.00000
47.610	2.570	2.49830	2.62300	-2.60150	-2.55850	.00000	-.00967
47.690	5.141	4.93650	5.24600	-5.20300	-5.11700	.00000	-.01935
47.670	7.771	7.55300	7.93000	-7.86500	-7.73500	.00000	-.02925
47.670	10.341	10.05130	10.55300	-10.46550	-10.29350	.00000	-.03892
47.610	15.541	15.10600	15.85000	-15.73000	-15.47000	.00000	-.05850
	GRADIENT	.97198	1.02049	-1.01213	-.99540	.00000	-.00376

ARC40X80-462(OA100) OV101 (ENA01U) (15 APR 82)

REFERENCE DATA

SREF =	2690.0000 SQ.FT.	XMRP =	1076.6800 IN. XO		
LREF =	474.8100 INCHES	YMRP =	.0000 IN. YO		
BREF =	936.6800 INCHES	ZMRP =	375.0000 IN. ZO		
SCALE =	.3600				

PARAMETRIC DATA

ALPHA =	15.000	BETA =	.000
ELEVON =	.000	BDFLAP =	.000
SPDBRK =	25.000	RUDDER =	.000

RUN NO. 33/ 0 GRADIENT INTERVAL = -5.00/ 5.00

Q	AILRON	DELE1	DELE2	DELE3	DELE4	BDFLAP	ELEVON
47.570	-.015	-.05810	.00000	.00000	.00000	.00000	-.01453
47.700	2.570	2.49830	2.62300	-2.60150	-2.55850	.00000	-.00967
47.690	5.170	5.05470	5.30700	-5.20300	-5.11700	.00000	.01043
47.620	7.711	7.49490	7.86900	-7.80450	-7.67550	.00000	-.02903
47.590	10.281	9.99320	10.49200	-10.40600	-10.23400	.00000	-.03870
47.490	15.527	15.04790	15.86000	-15.73000	-15.47000	.00000	-.07303
	GRADIENT	.98899	1.01476	-1.00644	-.98981	.00000	.00188

ARC40X80-462(OA100) OV101 (ENA01V) (15 APR 82)

REFERENCE DATA

SREF =	2690.0000 SQ.FT.	XMRP =	1076.6800 IN. XO		
LREF =	474.8100 INCHES	YMRP =	.0000 IN. YO		
BREF =	936.6800 INCHES	ZMRP =	375.0000 IN. ZO		
SCALE =	.3600				

PARAMETRIC DATA

ALPHA =	20.000	BETA =	.000
ELEVON =	.000	BDFLAP =	.000
SPDBRK =	25.000	RUDDER =	.000

RUN NO. 34/ 0 GRADIENT INTERVAL = -5.00/ 5.00

Q	AILRON	DELE1	DELE2	DELE3	DELE4	BDFLAP	ELEVON
47.650	.000	.00000	.00000	.00000	.00000	-26.69840	.00000
47.580	2.570	2.49830	2.62300	-2.60150	-2.55850	-26.59800	-.00967
47.650	5.185	5.05470	5.24600	-5.26350	-5.17650	-26.49770	-.03483
47.670	7.711	7.49490	7.86900	-7.80450	-7.67550	-26.49770	-.02903
47.640	10.341	10.05130	10.55300	-10.46650	-10.29350	-26.59800	-.03892
47.430	15.541	15.10600	15.86000	-15.73000	-15.47000	-26.59800	-.05850
	GRADIENT	.97198	1.02049	-1.01213	-.99540	.03906	-.00376

ARC40X80-462(OA100) OV101 (ENA01W) (15 APR 82)

REFERENCE DATA

SREF =	2690.0000 SQ.FT.	XMRP =	1076.6800 IN. XO		
LREF =	474.8100 INCHES	YMRP =	.0000 IN. YO		
BREF =	936.6800 INCHES	ZMRP =	375.0000 IN. ZO		
SCALE =	.3600				

PARAMETRIC DATA

ALPHA =	.000	BETA =	.000
ELEVON =	10.000	BDFLAP =	.000
SPDBRK =	25.000	RUDDER =	.000

RUN NO. 50/ 0 GRADIENT INTERVAL = -5.00/ 5.00

Q	AILRON	DELE1	DELE2	DELE3	DELE4	BDFLAP	ELEVON
47.600	.064	10.10940	10.06500	9.98250	9.93650	.00000	10.02335
47.580	2.544	12.54960	12.56600	7.50200	7.43750	.00000	10.01377
47.740	5.068	15.10600	15.06700	4.96100	4.93850	.00000	10.01812
47.600	7.578	17.66240	17.55900	2.48050	2.43950	.00000	10.03760
47.600	10.044	19.98640	20.06900	-.06050	-.05950	.00000	9.98385
47.740	12.896	20.27690	21.28900	-5.02150	-4.99300	.00000	7.88660
	GRADIENT	.98388	1.00840	-1.00013	-1.00759	.00000	-.00386

ARC40X80-462(OA100) OV101 (ENA01X) (15 APR 82)

REFERENCE DATA

SREF =	2690.0000 SQ.FT.	XMRP =	1076.6800 IN. XO		
LREF =	474.8100 INCHES	YMRP =	.0000 IN. YO		
BREF =	936.6800 INCHES	ZMRP =	375.0000 IN. ZO		
SCALE =	.3600				

PARAMETRIC DATA

ALPHA =	5.000	BETA =	.000
ELEVON =	10.000	BDFLAP =	.000
SPDBRK =	25.000	RUDDER =	.000

RUN NO. 51/ 0 GRADIENT INTERVAL = -5.00/ 5.00

Q	AILRON	DELE1	DELE2	DELE3	DELE4	BDFLAP	ELEVON
47.550	.049	10.05130	10.06500	9.98250	9.93650	.00000	10.00882
47.650	2.544	12.60770	12.56600	7.50200	7.49700	.00000	10.04317
47.560	5.068	15.16410	15.06700	4.96100	4.99800	.00000	10.04752
47.540	7.578	17.65240	17.56800	2.42000	2.49900	.00000	10.03735
47.710	10.028	20.04450	20.00800	-.06050	.00000	.00000	9.99800
47.460	12.896	20.27690	21.28900	-5.02150	-4.99800	.00000	7.88660
	GRADIENT	1.02488	1.00267	-.99445	-.97801	.00000	.01377

ARC40X80-462(OA100) OV101 (ENA01Y) (15 APR 82)

REFERENCE DATA

SREF =	2690.0000 SQ.FT.	XMRP =	1076.6800 IN. XO		
LREF =	474.8100 INCHES	YMRP =	.0000 IN. YO		
BREF =	936.6800 INCHES	ZMRP =	375.0000 IN. ZO		
SCALE =	.3600				

PARAMETRIC DATA

ALPHA =	10.000	BETA =	.000
ELEVON =	10.000	BDFLAP =	.000
SPDBRK =	25.000	RUDDER =	.000

RUN NO. 52/ 0 GRADIENT INTERVAL = -5.00/ 5.00

Q	AILRON	DELE1	DELE2	DELE3	DELE4	BDFLAP	ELEVON
47.580	.049	10.05130	10.00400	9.92200	9.93550	.00000	9.97845
47.430	2.544	12.60770	12.56600	7.50200	7.49700	.00000	10.04317
47.430	5.024	15.04790	15.06700	5.02150	4.99800	.00000	10.03360
47.400	7.578	17.60430	17.56800	2.42000	2.43950	.00000	10.00795
47.480	10.028	20.04450	20.00800	-.06050	.00000	.00000	9.99800
47.370	12.896	20.27690	21.28900	-5.02150	-4.99800	.00000	7.88660
	GRADIENT	1.02482	1.02707	-.97014	-.97796	.00000	.02595

ARC40X80-462(OA100) OV101 (ENA01Z) (15 APR 82)

REFERENCE DATA

SREF =	2690.0000 SQ.FT.	XMRP =	1076.6800 IN. XO		
LREF =	474.8100 INCHES	YMRP =	.0000 IN. YO		
BREF =	936.6800 INCHES	ZMRP =	375.0000 IN. ZO		
SCALE =	.3600				

PARAMETRIC DATA

ALPHA =	15.000	BETA =	.000
ELEVON =	10.000	BDFLAP =	.000
SPDBRK =	25.000	RUDDER =	.000

RUN NO. 53/ 0 GRADIENT INTERVAL = -5.00/ 5.00

Q	AILRON	DELE1	DELE2	DELE3	DELE4	BDFLAP	ELEVON
47.600	.050	9.99320	10.06500	9.92200	9.93650	.00000	9.97917
47.750	2.559	12.54960	12.56600	7.44150	7.43750	.00000	9.99865
47.780	5.068	15.10600	15.06700	4.96100	4.93850	.00000	10.01812
47.690	7.564	17.54620	17.55900	2.42000	2.43950	.00000	9.99342
47.700	10.043	20.04450	20.00800	-.06050	-.05950	.00000	9.98313
47.670	12.896	20.27690	21.28900	-5.02150	-4.99800	.00000	7.88660
	GRADIENT	1.01880	.99672	-.98355	-.99593	.00000	.00776

ARC40X80-462(OA100) OV101 (ENA02A) (15 APR 82)

REFERENCE DATA

SREF =	2690.0000 SQ.FT.	XMRP =	1076.6800 IN. XO		
LREF =	474.8100 INCHES	YMRP =	.0000 IN. YO		
BREF =	936.6800 INCHES	ZMRP =	375.0000 IN. ZO		
SCALE =	.3600				

PARAMETRIC DATA

ALPHA =	20.000	BETA =	.000
ELEVON =	10.000	BDFLAP =	.000
SPDBRK =	25.000	RUDDER =	.000

RUN NO. 54/ 0 GRADIENT INTERVAL = -5.00/ 5.00

Q	AILRON	DELE1	DELE2	DELE3	DELE4	BDFLAP	ELEVON
47.540	.034	10.05130	10.00400	9.98250	9.93650	.00000	9.99357
47.680	2.559	12.60770	12.56600	7.50200	7.43750	.00000	10.02830
47.590	5.039	15.04790	15.06700	4.96100	4.99800	.00000	10.01847
47.620	7.563	17.60430	17.56800	2.42000	2.49900	.00000	10.02282
47.530	10.043	20.10260	20.00800	-.06050	.00000	.00000	10.01253
47.520	12.896	20.27690	21.28900	-5.02150	-4.99800	.00000	7.88660
	GRADIENT	1.01265	1.01486	-.98258	-.98991	.00000	.01376

ARC40X80-462(OA100) OV101 (ENA02B) (15 APR 82)

REFERENCE DATA

SREF =	2690.0000 SQ.FT.	XMRP =	1076.6800 IN. XO		
LREF =	474.8100 INCHES	YMRP =	.0000 IN. YO		
BREF =	936.6800 INCHES	ZMRP =	375.0000 IN. ZO		
SCALE =	.3600				

PARAMETRIC DATA

ALPHA =	.000	BETA =	.000
ELEVON =	-10.000	BDFLAP =	.000
SPDBRK =	25.000	RUDDER =	.000

RUN NO. 55/ 0 GRADIENT INTERVAL = -5.00/ 5.00

Q	AILRON	DELE1	DELE2	DELE3	DELE4	BDFLAP	ELEVON
47.620	-.078	-10.16750	-10.03500	-9.98250	-9.93650	.00000	-10.03787
47.760	2.460	-7.55300	-7.56400	-12.46300	-12.49500	.00000	-10.01875
47.760	4.985	-5.05470	-5.06300	-15.06450	-14.99400	.00000	-10.04405
47.580	7.465	-2.55640	-2.56200	-17.54500	-17.43350	.00000	-10.02422
47.590	10.020	-.05810	.00000	-20.14650	-19.99200	.00000	-10.04915
47.360	15.069	4.99660	5.06300	-25.18800	-25.04950	.00000	-10.03947
	GRADIENT	1.00974	.99784	-1.00361	-.99881	.00000	-.00121

ARC40X80-462(OA100) OV101 (ENA02C) (15 APR 82)

REFERENCE DATA

SREF =	2690.0000 SQ.FT.	XMRP =	1076.6800 IN. XO		
LREF =	474.8100 INCHES	YMRP =	.0000 IN. YO		
BREF =	936.6800 INCHES	ZMRP =	375.0000 IN. ZO		
SCALE =	.3600				

PARAMETRIC DATA

ALPHA =	5.000	BETA =	.000
ELEVON =	-10.000	BDFLAP =	.000
SPDBRK =	25.000	RUDDER =	.000

RUN NO. 56/ 0 GRADIENT INTERVAL = -5.00/ 5.00

Q	AILRON	DELE1	DELE2	DELE3	DELE4	BDFLAP	ELEVON
47.640	-.034	-10.05130	-10.03500	-9.98250	-9.99500	.00000	-10.02370
47.660	2.461	-7.61110	-7.56400	-12.52350	-12.49500	.00000	-10.04840
47.670	4.985	-5.05470	-5.06300	-15.06450	-14.99400	.00000	-10.04405
47.670	7.480	-2.48830	-2.56200	-17.54500	-17.43350	.00000	-10.00970
47.570	10.020	-.05810	.00000	-20.14650	-19.99200	.00000	-10.04915
47.320	15.054	4.99660	5.00200	-25.22850	-24.99000	.00000	-10.05498
	GRADIENT	.99544	.99647	-1.01241	-.99568	.00000	-.00404

ARC40X80-462(OA100) OV101 (ENA02D) (15 APR 82)

REFERENCE DATA

SREF =	2690.0000 SQ.FT.	XMRP =	1076.6800 IN. XO		
LREF =	474.8100 INCHES	YMRP =	.0000 IN. YO		
BREF =	936.6800 INCHES	ZMRP =	375.0000 IN. ZO		
SCALE =	.3600				

PARAMETRIC DATA

ALPHA =	10.000	BETA =	.000
ELEVON =	-10.000	BDFLAP =	.000
SPDBRK =	25.000	RUDDER =	.000

RUN NO. 57/ 0 GRADIENT INTERVAL = -5.00/ 5.00

Q	AILRON	DELE1	DELE2	DELE3	DELE4	BDFLAP	ELEVON
47.760	-.064	-10.16750	-10.06500	-9.98250	-9.99600	.00000	-10.05275
47.770	2.461	-7.61110	-7.56400	-12.52350	-12.49500	.00000	-10.04840
47.800	4.956	-5.17090	-5.06300	-15.06450	-14.99400	.00000	-10.07310
47.680	7.485	-2.59640	-2.50100	-17.54500	-17.49300	.00000	-10.02385
47.690	10.020	-.05810	.00000	-20.14650	-19.99200	.00000	-10.04915
47.640	15.039	4.93850	5.00200	-25.16800	-25.04950	.00000	-10.06925
	GRADIENT	.99544	.99647	-1.01241	-.99568	.00000	-.00404

ARC40X80-462(OA100) OV101 (ENA02E) (15 APR 82)

REFERENCE DATA

SREF =	2690.0000 SQ.FT.	XMRP =	1076.6800 IN. XO		
LREF =	474.8100 INCHES	YMRP =	.0000 IN. YO		
BREF =	936.6800 INCHES	ZMRP =	375.0000 IN. ZO		
SCALE =	.3600				

PARAMETRIC DATA

ALPHA =	15.000	BETA =	.000
ELEVON =	-10.000	BDFLAP =	.000
SPDBRK =	25.000	RUDDER =	.000

RUN NO. 58/ 0 GRADIENT INTERVAL = -5.00/ 5.00

Q	AILRON	DELE1	DELE2	DELE3	DELE4	BDFLAP	ELEVON
47.510	-.064	-10.16750	-10.06500	-9.98250	-9.99600	.00000	-10.05275
47.450	2.461	-7.61110	-7.56400	-12.52350	-12.49500	.00000	-10.04840
47.560	4.971	-5.11280	-5.06300	-15.06450	-14.99400	.00000	-10.05857
47.500	7.465	-2.61450	-2.56200	-17.54500	-17.49300	.00000	-10.05362
47.370	10.020	-.05810	.00000	-20.14650	-19.99200	.00000	-10.04915
47.570	15.055	4.93850	5.00200	-25.22850	-25.04950	.00000	-10.08438
	GRADIENT	1.00409	.99361	-1.00950	-.99281	.00000	-.00115

ARC40X80-462(0A100) OV101 (ENA02F) (15 APR 82)

REFERENCE DATA

SREF =	2690.0000 SQ.FT.	XMRP =	1076.6800 IN. XO		
LREF =	474.8100 INCHES	YMRP =	.0000 IN. YO		
BREF =	936.6800 INCHES	ZMRP =	375.0000 IN. ZO		
SCALE =	.3600				

PARAMETRIC DATA

ALPHA =	20.000	BETA =	.000
ELEVON =	-10.000	BDFLAP =	.000
SPDBRK =	25.000	RUDDER =	.000

RUN NO. 59/ 0 GRADIENT INTERVAL = -5.00/ 5.00

Q	AILRON	DELE1	DELE2	DELE3	DELE4	BDFLAP	ELEVON
45.310	-.064	-10.16750	-10.06500	-9.99250	-9.99600	.00000	-10.05275
47.090	2.461	-7.61110	-7.55400	-12.52350	-12.49500	.00000	-10.04840
47.600	4.971	-5.11280	-5.06300	-15.05450	-14.99400	.00000	-10.05857
47.390	7.480	-2.55640	-2.56200	-17.54500	-17.49300	.00000	-10.03910
47.470	10.020	-.05810	.00000	-20.14650	-19.99200	.00000	-10.04915
47.360	15.010	4.88040	4.94100	-25.16800	-25.04950	.00000	-10.09903
	GRADIENT	1.00409	.99361	-1.00950	-.99281	.00000	-.00115

ARC40X80-462(0A100) OV101 (ENA02G) (15 APR 82)

REFERENCE DATA

SREF =	2690.0000 SQ.FT.	XMRP =	1076.6800 IN. XO		
LREF =	474.8100 INCHES	YMRP =	.0000 IN. YO		
BREF =	936.6800 INCHES	ZMRP =	375.0000 IN. ZO		
SCALE =	.3600				

PARAMETRIC DATA

ALPHA =	.000	BETA =	.000
ELEVON =	-20.000	BDFLAP =	.000
SPDBRK =	25.000	RUDDER =	.000

RUN NO. 70/ 0 GRADIENT INTERVAL = -5.00/ 5.00

Q	AILRON	DELE1	DELE2	DELE3	DELE4	BDFLAP	ELEVON
48.060	-.053	-20.16070	-20.06900	-20.02550	-19.99200	.00000	-20.06180
47.800	2.441	-17.60430	-17.62900	-22.50600	-22.49100	.00000	-20.05757
47.850	4.966	-15.10600	-15.12800	-25.10750	-24.99000	.00000	-20.08287
47.690	7.475	-12.60770	-12.62700	-27.58900	-27.54850	.00000	-20.09280
47.660	10.000	-10.05130	-10.06500	-30.12900	-29.98800	.00000	-20.05832
47.530	15.005	-5.05470	-5.06300	-35.15050	-34.98600	.00000	-20.06355
	GRADIENT	1.00709	.98449	-1.01260	-.99582	.00000	-.00421

ARC40X80-462(OA100) OV101 (ENA02M) (15 APR 82)

REFERENCE DATA

SREF =	2690.0000 SQ.FT.	XMRP =	1076.6800 IN. XO		
LREF =	474.8100 INCHES	YMRP =	.0000 IN. YO		
BREF =	936.6800 INCHES	ZMRP =	375.0000 IN. ZO		
SCALE =	.3600				

PARAMETRIC DATA

ALPHA =	5.000	BETA =	.000
ELEVON =	-20.000	BDFLAP =	.000
SPDBRK =	25.000	RUDDER =	.000

RUN NO. 71/ 0 GRADIENT INTERVAL = -5.00/ 5.00

Q	AILRON	DELE1	DELE2	DELE3	DELE4	BDFLAP	ELEVON
47.420	-.068	-20.16070	-20.13000	-20.02550	-19.99200	.00000	-20.07705
47.380	2.456	-17.60430	-17.62900	-22.56650	-22.49100	.00000	-20.07270
47.560	4.966	-15.10600	-15.12800	-25.10750	-24.99000	.00000	-20.08287
47.530	7.476	-12.66580	-12.62700	-27.64850	-27.54650	.00000	-20.12245
47.490	9.986	-10.10940	-10.06500	-30.12900	-29.98800	.00000	-20.07285
47.450	15.020	-5.05470	-5.06300	-35.15050	-35.04550	.00000	-20.07842
	GRADIENT	1.00409	.99361	-1.00950	-.99281	.00000	-.00115

ARC40X80-462(OA100) OV101 (ENA02I) (15 APR 82)

REFERENCE DATA

SREF =	2690.0000 SQ.FT.	XMRP =	1076.6800 IN. XO		
LREF =	474.8100 INCHES	YMRP =	.0000 IN. YO		
BREF =	936.6800 INCHES	ZMRP =	375.0000 IN. ZO		
SCALE =	.3600				

PARAMETRIC DATA

ALPHA =	10.000	BETA =	.000
ELEVON =	-20.000	BDFLAP =	.000
SPDBRK =	25.000	RUDDER =	.000

RUN NO. 72/ 0 GRADIENT INTERVAL = -5.00/ 5.00

Q	AILRON	DELE1	DELE2	DELE3	DELE4	BDFLAP	ELEVON
47.650	-.053	-20.16070	-20.06900	-20.02550	-19.99200	.00000	-20.05180
47.620	2.442	-17.66240	-17.62900	-22.56650	-22.49100	.00000	-20.08722
47.580	5.408	-15.10600	-13.35900	-25.10750	-24.99000	.00000	-19.64052
47.500	7.491	-12.60770	-12.56600	-27.64950	-27.48900	.00000	-20.07780
47.460	10.000	-10.05130	-10.06500	-30.12900	-29.98800	.00000	-20.05832
47.370	15.035	-5.05470	-5.00200	-35.15050	-35.04550	.00000	-20.06317
	GRADIENT	1.00149	.97812	-1.01861	-1.00177	.00000	-.01019

ARC40X80-462(OA100) OV101 (ENA02J) (15 APR 82)

REFERENCE DATA

SREF =	2690.0000 SQ.FT.	XMRP =	1076.6800 IN. XO		
LREF =	474.8100 INCHES	YMRP =	.0000 IN. YO		
BREF =	936.6800 INCHES	ZMRP =	375.0000 IN. ZO		
SCALE =	.3600				

PARAMETRIC DATA

ALPHA =	15.000	BETA =	.000
ELEVON =	-20.000	BDFLAP =	.000
SPDBRK =	25.000	RUDDER =	.000

RUN NO. 73/ 0 GRADIENT INTERVAL = -5.00/ 5.00

Q	AILRON	DELE1	DELE2	DELE3	DELE4	BDFLAP	ELEVON
47.540	-.053	-20.16070	-20.06900	-20.02550	-19.99200	.00000	-20.06180
47.580	2.456	-17.60430	-17.62900	-22.56650	-22.49100	.00000	-20.07270
47.480	4.966	-15.10600	-15.12800	-25.10750	-24.99000	.00000	-20.08287
47.420	7.491	-12.60770	-12.62700	-27.64850	-27.54850	.00000	-20.10792
47.350	9.970	-10.10940	-10.12600	-30.12900	-29.98800	.00000	-20.08810
47.430	15.020	-5.05470	-5.06300	-35.15050	-35.04550	.00000	-20.07842
	GRADIENT	1.00713	.98447	-1.01257	-.99583	.00000	-.00420

ARC40X80-462(OA100) OV101 (ENA02K) (15 APR 82)

REFERENCE DATA

SREF =	2690.0000 SQ.FT.	XMRP =	1076.6800 IN. XO		
LREF =	474.8100 INCHES	YMRP =	.0000 IN. YO		
BREF =	936.6800 INCHES	ZMRP =	375.0000 IN. ZO		
SCALE =	.3600				

PARAMETRIC DATA

ALPHA =	20.000	BETA =	.000
ELEVON =	-20.000	BDFLAP =	.000
SPDBRK =	25.000	RUDDER =	.000

RUN NO. 74/ 0 GRADIENT INTERVAL = -5.00/ 5.00

Q	AILRON	DELE1	DELE2	DELE3	DELE4	BDFLAP	ELEVON
47.470	-.068	-20.16070	-20.13000	-20.02550	-19.99200	.00000	-20.07705
47.470	2.456	-17.60430	-17.62900	-22.50600	-22.55050	.00000	-20.07245
47.410	4.981	-15.10600	-15.12800	-25.10750	-25.04950	.00000	-20.09775
47.390	7.461	-12.60770	-12.62700	-27.59800	-27.48900	.00000	-20.07792
47.330	9.986	-10.10940	-10.06500	-30.12900	-29.98800	.00000	-20.07285
47.780	15.020	-5.05470	-5.06300	-35.15050	-35.04550	.00000	-20.07842
	GRADIENT	1.00112	.99068	-1.00653	-1.00167	.00000	-.00410

ARC40X80-462(OA100) OV101 (ENA02L) (15 APR 82)

REFERENCE DATA

SREF = 2690.0000 SQ.FT. XMRP = 1076.6800 IN. XO
LREF = 474.8100 INCHES YMRP = .0000 IN. YO
BREF = 936.6800 INCHES ZMRP = 375.0000 IN. ZO
SCALE = .3600

PARAMETRIC DATA

ALPHA = .000 BETA = 5.000
ELEVON = .000 BDFLAP = .000
SPDBRK = 25.000 RUDDER = .000

RUN NO. 60/ 0 GRADIENT INTERVAL = -5.00/ 5.00

Q	AILRON	DELE1	DELE2	DELE3	DELE4	BDFLAP	ELEVON
47.680	.000	.00000	.00000	.00000	.00000	.00000	.00000
47.880	2.524	2.55540	2.56200	-2.48050	-2.49900	.00000	.03472
47.850	5.005	4.99660	5.00200	-5.02150	-4.99800	.00000	-.00523
47.800	7.514	7.55300	7.50300	-7.50200	-7.49700	.00000	.01425
47.730	10.024	10.05130	10.00400	-10.04300	-9.99600	.00000	.00407
47.790	15.088	15.10600	15.06700	-15.12500	-15.05350	.00000	-.00138
	GRADIENT	1.01265	1.01486	-.98258	-.98991	.00000	.01376

ARC40X80-462(OA100) OV101 (ENA02M) (15 APR 82)

REFERENCE DATA

SREF = 2690.0000 SQ.FT. XMRP = 1076.6800 IN. XO
LREF = 474.8100 INCHES YMRP = .0000 IN. YO
BREF = 936.6800 INCHES ZMRP = 375.0000 IN. ZO
SCALE = .3600

PARAMETRIC DATA

ALPHA = 5.000 BETA = 5.000
ELEVON = .000 BDFLAP = .000
SPDBRK = 25.000 RUDDER = .000

RUN NO. 61/ 0 GRADIENT INTERVAL = -5.00/ 5.00

Q	AILRON	DELE1	DELE2	DELE3	DELE4	BDFLAP	ELEVON
47.920	.000	.00000	.00000	.00000	.00000	.00000	.00000
47.840	2.510	2.49830	2.56200	-2.48050	-2.49900	.00000	.02020
47.740	4.990	4.93650	5.00200	-5.02150	-4.99800	.00000	-.01975
47.700	7.514	7.55300	7.50300	-7.50200	-7.49700	.00000	.01425
47.820	10.009	9.99320	10.00400	-10.04300	-9.99600	.00000	-.01045
47.620	15.058	15.10600	15.00600	-15.12500	-14.99400	.00000	-.00175
	GRADIENT	.98569	1.00244	-1.00628	-1.00159	.00000	-.00393

ARC40X80-462(0A100) OV101 (ENA02N) (15 APR 82)

REFERENCE DATA

SREF = 2690.0000 SQ.FT. XMRP = 1076.6800 IN. XO
LREF = 474.8100 INCHES YMRP = .0000 IN. YO
BREF = 936.6800 INCHES ZMRP = 375.0000 IN. ZO
SCALE = .3600

PARAMETRIC DATA

ALPHA = 10.000 BETA = 5.000
ELEVON = .000 BDFLAP = .000
SPDBRK = 25.000 RUDDER = .000

RUN NO. 62/ 0 GRADIENT INTERVAL = -5.00/ 5.00

Q	AILRON	DELE1	DELE2	DELE3	DELE4	BDFLAP	ELEVON
47.830	.000	.00000	.00000	.00000	.00000	.00000	.00000
47.820	2.495	2.49830	2.50100	-2.48050	-2.49900	.00000	.00495
47.780	5.005	4.99860	5.00200	-5.02150	-4.99900	.00000	-.00523
47.670	7.499	7.49490	7.50300	-7.50200	-7.49700	.00000	-.00027
47.670	10.024	10.05130	10.00400	-10.04300	-9.99600	.00000	.00407
47.800	15.088	15.10600	15.06700	-15.12500	-15.05350	.00000	-.00138
	GRADIENT	1.00144	1.00253	-.99431	-1.00172	.00000	.00198

ARC40X80-462(0A100) OV101 (ENA020) (15 APR 82)

REFERENCE DATA

SREF = 2690.0000 SQ.FT. XMRP = 1076.6800 IN. XO
LREF = 474.8100 INCHES YMRP = .0000 IN. YO
BREF = 936.6800 INCHES ZMRP = 375.0000 IN. ZO
SCALE = .3600

PARAMETRIC DATA

ALPHA = 15.000 BETA = 5.000
ELEVON = .000 BDFLAP = .000
SPDBRK = 25.000 RUDDER = .000

RUN NO. 63/ 0 GRADIENT INTERVAL = -5.00/ 5.00

Q	AILRON	DELE1	DELE2	DELE3	DELE4	BDFLAP	ELEVON
47.700	.000	.00000	.00000	.00000	.00000	.00000	.00000
47.800	2.524	2.55640	2.56200	-2.48050	-2.49900	.00000	.03472
47.750	5.005	4.99660	5.00200	-5.02150	-4.99800	.00000	-.00523
47.700	7.499	7.49490	7.50300	-7.50200	-7.49700	.00000	-.00027
47.770	10.024	10.05130	10.00400	-10.04300	-9.99600	.00000	.00407
47.900	15.058	15.04790	15.00600	-15.12500	-15.05350	.00000	-.03115
	GRADIENT	1.01265	1.01486	-.98258	-.98991	.00000	.01376

ARC40X80-462(OA100) OV101 (ENA02P) (15 APR 82)

REFERENCE DATA

SREF =	2690.0000 SQ.FT.	XMRP =	1076.6800 IN. XO		
LREF =	474.8100 INCHES	YMRP =	.0000 IN. YO		
BREF =	936.6800 INCHES	ZMRP =	375.0000 IN. ZO		
SCALE =	.3600				

PARAMETRIC DATA

ALPHA =	20.000	BETA =	5.000
ELEVON =	.000	BDFLAP =	.000
SPDBRK =	25.000	RUDDER =	.000

RUN NO. 64/ 0 GRADIENT INTERVAL = -5.00/ 5.00

Q	AILRON	DELE1	DELE2	DELE3	DELE4	BDFLAP	ELEVON
47.710	.000	.00000	.00000	.00000	.00000	.00000	.00000
48.030	2.524	2.55640	2.56200	-2.48050	-2.49900	.00000	.03472
47.850	5.020	4.99660	5.06300	-5.02150	-4.99800	.00000	.01002
47.840	7.499	7.49490	7.50300	-7.50200	-7.49700	.00000	-.00027
47.810	10.009	9.99320	10.00400	-10.04300	-9.99600	.00000	-.01045
47.700	15.073	15.10600	15.00600	-15.12500	-15.05350	.00000	-.01663
	GRADIENT	1.01265	1.01486	-.98258	-.98991	.00000	.01376

ARC40X80-462(OA100) OV101 (ENA02Q) (15 APR 82)

REFERENCE DATA

SREF =	2690.0000 SQ.FT.	XMRP =	1076.6800 IN. XO		
LREF =	474.8100 INCHES	YMRP =	.0000 IN. YO		
BREF =	936.6800 INCHES	ZMRP =	375.0000 IN. ZO		
SCALE =	.3500				

PARAMETRIC DATA

ALPHA =	.000	BETA =	5.000
ELEVON =	10.000	BDFLAP =	.000
SPDBRK =	25.000	RUDDER =	.000

RUN NO. 65/ 0 GRADIENT INTERVAL = -5.00/ 5.00

Q	AILRON	DELE1	DELE2	DELE3	DELE4	BDFLAP	ELEVON
47.570	.035	9.99320	10.00400	9.92200	9.93650	.00000	9.96392
47.800	2.559	12.60770	12.56600	7.50200	7.43750	.00000	10.02930
47.770	5.068	15.10600	15.06700	4.96100	4.93850	.00000	10.01812
47.740	7.533	17.54620	17.50700	2.48050	2.43950	.00000	9.99330
47.730	10.043	20.04450	20.06900	-.06050	.00000	.00000	10.01325
47.770	12.896	20.27690	21.28900	-5.02150	-4.99800	.00000	7.88660
	GRADIENT	1.03591	1.01511	-.95884	-.99014	.00000	.02551

ARC40X80-462(OA100) OV101 (ENA02R) (15 APR 82)

REFERENCE DATA

SREF =	2690.0000 SQ.FT.	XMRP =	1076.6800 IN.	XO	
LREF =	474.8100 INCHES	YMRP =	.0000 IN.	YO	
BREF =	936.6800 INCHES	ZMRP =	375.0000 IN.	ZO	
SCALE =	.3600				

PARAMETRIC DATA

ALPHA =	5.000	BETA =	5.000
ELEVON =	10.000	BDFLAP =	.000
SPDBRK =	25.000	RUDDER =	.000

RUN NO. 66/ 0 GRADIENT INTERVAL = -5.00/ 5.00

Q	AILRON	DELE1	DELE2	DELE3	DELE4	BDFLAP	ELEVON
47.850	.049	10.05130	10.06500	9.98250	9.93650	.00000	10.00882
47.690	2.559	12.60770	12.56600	7.50200	7.43750	.00000	10.02830
47.780	5.024	15.04790	15.00600	4.96100	4.99800	.00000	10.00322
47.750	7.518	17.54820	17.50700	2.48050	2.49900	.00000	10.00817
47.710	10.043	20.10260	20.00800	-.06050	.00000	.00000	10.01253
47.610	12.896	20.27690	21.28900	-5.02150	-4.99800	.00000	7.88660
	GRADIENT	1.01880	.99672	-.98855	-.99592	.00000	.00776

ARC40X80-462(OA100) OV101 (ENA02S) (15 APR 82)

REFERENCE DATA

SREF =	2690.0000 SQ.FT.	XMRP =	1076.6800 IN.	XO	
LREF =	474.8100 INCHES	YMRP =	.0000 IN.	YO	
BREF =	936.6800 INCHES	ZMRP =	375.0000 IN.	ZO	
SCALE =	.3600				

PARAMETRIC DATA

ALPHA =	10.000	BETA =	5.000
ELEVON =	10.000	BDFLAP =	.000
SPDBRK =	25.000	RUDDER =	.000

RUN NO. 67/ 0 GRADIENT INTERVAL = -5.00/ 5.00

Q	AILRON	DELE1	DELE2	DELE3	DELE4	BDFLAP	ELEVON
47.830	.049	10.05130	10.00400	9.92200	9.93650	.00000	9.97845
47.440	2.559	12.60770	12.56600	7.50200	7.43750	.00000	10.02830
47.780	5.068	15.16410	15.06700	4.96100	4.99800	.00000	10.04752
47.740	7.578	17.60430	17.56800	2.42000	2.43950	.00000	10.00795
47.710	10.043	20.10260	20.00800	-.06050	.00000	.00000	10.01253
47.810	12.896	20.27690	21.28900	-5.02150	-4.99800	.00000	7.88660
	GRADIENT	1.01875	1.02098	-.96439	-.99588	.00000	.01987

ARC40X80-462(OA100) OV101 (ENA02T) (15 APR 82)

REFERENCE DATA

SREF =	2690.0000 SQ.FT.	XMRP =	1076.6800 IN. XO		
LREF =	474.8100 INCHES	YMRP =	.0000 IN. YO		
BREF =	936.6800 INCHES	ZMRP =	375.0000 IN. ZO		
SCALE =	.3600				

PARAMETRIC DATA

ALPHA =	15.000	BETA =	5.000
ELEVON =	10.000	BDFLAP =	.000
SPDBRK =	25.000	RUDDER =	.000

RUN NO. 68/ 0 GRADIENT INTERVAL = -5.00/ 5.00

Q	AILRON	DELE1	DELE2	DELE3	DELE4	BDFLAP	ELEVON
47.580	.049	10.05130	10.00400	9.92200	9.93650	.00000	9.97845
47.690	2.543	12.60770	12.50500	7.50200	7.43750	.00000	10.01305
47.710	5.038	15.10600	15.00600	4.95100	4.99800	.00000	10.01775
47.740	7.534	17.54620	17.50700	2.42000	2.49900	.00000	9.99305
47.700	10.058	20.10260	20.06900	-.06050	.00000	.00000	10.02778
47.800	12.896	20.27690	21.28900	-5.02150	-4.99800	.00000	7.88650
	GRADIENT	1.02498	1.00277	-.97029	-1.00196	.00000	.01387

ARC40X80-462(OA100) OV101 (ENA02U) (15 APR 82)

REFERENCE DATA

SREF =	2690.0000 SQ.FT.	XMRP =	1076.6800 IN. XO		
LREF =	474.8100 INCHES	YMRP =	.0000 IN. YO		
BREF =	936.6800 INCHES	ZMRP =	375.0000 IN. ZO		
SCALE =	.3600				

PARAMETRIC DATA

ALPHA =	20.000	BETA =	5.000
ELEVON =	10.000	BDFLAP =	.000
SPDBRK =	25.000	RUDDER =	.000

RUN NO. 69/ 0 GRADIENT INTERVAL = -5.00/ 5.00

Q	AILRON	DELE1	DELE2	DELE3	DELE4	BDFLAP	ELEVON
47.550	.064	10.05130	10.06500	9.92200	9.93650	.00000	9.99370
47.680	2.559	12.60770	12.56600	7.50200	7.43750	.00000	10.02830
47.610	5.054	15.04790	15.06700	4.96100	4.93850	.00000	10.00360
47.460	7.534	17.54620	17.50700	2.42000	2.49900	.00000	9.99305
47.300	10.058	20.10260	20.06900	-.06050	.00000	.00000	10.02778
47.320	12.896	20.27690	21.28900	-5.02150	-4.99800	.00000	7.88660
	GRADIENT	1.02498	1.00277	-.97029	-1.00196	.00000	.01387

ARC40X80-462(OA100) OV101 (ENA02V) (15 APR 82)

REFERENCE DATA

SREF =	2690.0000 SQ.FT.	XMRP =	1076.6800 IN. XO		
LREF =	474.8100 INCHES	YMRP =	.0000 IN. YO		
BREF =	936.6800 INCHES	ZMRP =	375.0000 IN. ZO		
SCALE =	.3600				

PARAMETRIC DATA

ALPHA =	.000	BETA =	10.000
ELEVON =	.000	BDFLAP =	.000
SPDBRK =	25.000	RUDDER =	.000

RUN NO. 75/ 0 GRADIENT INTERVAL = -5.00/ 5.00

Q	AILRON	DELE1	DELE2	DELE3	DELE4	BDFLAP	ELEVON
47.400	.000	.00000	.00000	.00000	.00000	.00000	.00000
47.360	2.524	2.55640	2.55200	-2.48050	-2.49900	.00000	.03472
47.470	5.005	4.99660	5.00200	-5.02150	-4.99800	.00000	-.00523
47.420	7.514	7.55300	7.50300	-7.50200	-7.49700	.00000	.01425
47.490	10.009	9.99320	10.00400	-10.04300	-9.99600	.00000	-.01045
47.360	15.058	15.04790	15.06700	-15.12500	-14.99400	.00000	-.00103
	GRADIENT	1.01265	1.01486	-.98258	-.98991	.00000	.01376

ARC40X80-462(OA100) OV101 (ENA02W) (15 APR 82)

REFERENCE DATA

SREF =	2690.0000 SQ.FT.	XMRP =	1076.6800 IN. XO		
LREF =	474.8100 INCHES	YMRP =	.0000 IN. YO		
BREF =	936.6800 INCHES	ZMRP =	375.0000 IN. ZO		
SCALE =	.3600				

PARAMETRIC DATA

ALPHA =	5.000	BETA =	10.000
ELEVON =	.000	BDFLAP =	.000
SPDBRK =	25.000	RUDDER =	.000

RUN NO. 76/ 0 GRADIENT INTERVAL = -5.00/ 5.00

Q	AILRON	DELE1	DELE2	DELE3	DELE4	BDFLAP	ELEVON
47.750	.000	.00000	.00000	.00000	.00000	.00000	.00000
47.750	2.509	2.55640	2.50100	-2.48050	-2.49900	.00000	.01947
47.650	4.990	4.99760	5.00200	-5.02150	-4.99800	.00000	-.01975
47.580	7.514	7.55300	7.50300	-7.50200	-7.49700	.00000	.01425
47.440	10.024	9.99320	10.00400	-10.10350	-9.99600	.00000	-.02558
47.440	15.058	15.04790	15.00600	-15.18550	-14.99400	.00000	-.03140
	GRADIENT	.98974	1.00239	-1.00628	-1.00159	.00000	-.00394

ARC40X80-462(OA100) OV101 (ENA02X) (15 APR 82)

REFERENCE DATA

SREF = 2690.0000 SQ.FT. XMRP = 1076.6800 IN. XO
LREF = 474.8100 INCHES YMRP = .0000 IN. YO
BREF = 936.6800 INCHES ZMRP = 375.0000 IN. ZO
SCALE = .3600

PARAMETRIC DATA

ALPHA = 10.000 BETA = 10.000
ELEVON = .000 BDFLAP = .000
SPDBRK = 25.000 RUDDER = .000

RUN NO. 77/ 0 GRADIENT INTERVAL = -5.00/ 5.00

Q	AILRON	DELE1	DELE2	DELE3	DELE4	BDFLAP	ELEVON
47.680	.000	.00000	.00000	.00000	.00000	.00000	.00000
47.630	2.509	2.55640	2.50100	-2.48050	-2.49900	.00000	.01947
47.600	5.019	5.05470	5.00200	-5.02150	-4.99800	.00000	.00930
47.450	7.529	7.55300	7.50300	-7.56250	-7.49700	.00000	-.00087
47.390	10.024	10.05130	10.00400	-10.04300	-9.99600	.00000	.00407
47.370	15.058	15.04790	15.06700	-15.12500	-14.99400	.00000	-.00103
	GRADIENT	1.01880	.99672	-.98855	-.99593	.00000	.00776

ARC40X80-462(OA100) OV101 (ENA02Y) (15 APR 82)

REFERENCE DATA

SREF = 2690.0000 SQ.FT. XMRP = 1076.6800 IN. XO
LREF = 474.8100 INCHES YMRP = .0000 IN. YO
BREF = 936.6800 INCHES ZMRP = 375.0000 IN. ZO
SCALE = .3600

PARAMETRIC DATA

ALPHA = 15.000 BETA = 10.000
ELEVON = .000 BDFLAP = .000
SPDBRK = 25.000 RUDDER = .000

RUN NO. 78/ 0 GRADIENT INTERVAL = -5.00/ 5.00

Q	AILRON	DELE1	DELE2	DELE3	DELE4	BDFLAP	ELEVON
47.490	.000	.00000	.00000	.00000	.00000	.00000	.00000
47.420	2.481	2.33210	2.56200	-2.48050	-2.49900	.00000	-.00885
47.490	5.005	4.99660	5.00200	-5.02150	-4.99800	.00000	-.00523
47.420	7.514	7.55300	7.50300	-7.50200	-7.49700	.00000	.01425
47.270	10.024	9.99320	10.00400	-10.10350	-9.99600	.00000	-.02558
47.500	15.088	15.10600	15.00600	-15.18550	-15.05350	.00000	-.03175
	GRADIENT	.96018	1.03269	-.99984	-1.00730	.00000	-.00357

ARC40X80-462(OA100) OV101 (ENA02Z) (15 APR 82)

REFERENCE DATA

SREF =	2690.0000 SQ.FT.	XMRP =	1076.6800 IN. XO		
LREF =	474.8100 INCHES	YMRP =	.0000 IN. YO		
BREF =	936.6800 INCHES	ZMRP =	375.0000 IN. ZO		
SCALE =	.3600				

PARAMETRIC DATA

ALPHA =	20.000	BETA =	10.000
ELEVON =	.000	BDFLAP =	.000
SPDBRK =	25.000	RUDDER =	.000

RUN NO. 79/ 0 GRADIENT INTERVAL = -5.00/ 5.00

Q	AILRON	DELE1	DELE2	DELE3	DELE4	BDFLAP	ELEVON
47.610	.000	.00000	.00000	.00000	.00000	.00000	.00000
47.510	2.510	2.49830	2.56200	-2.48050	-2.49900	.00000	.02020
47.470	5.020	4.99660	5.05300	-5.02150	-4.99800	.00000	.01002
47.420	7.514	7.55300	7.50300	-7.50200	-7.49700	.00000	.01425
47.380	10.009	9.99320	10.00400	-10.04300	-9.99600	.00000	-.01045
47.730	15.073	15.10600	15.06700	-15.12500	-14.99400	.00000	.01350
	GRADIENT	.99536	1.02074	-.98827	-.99564	.00000	.00805

ARC40X80-462(OA100) OV101 (ENA03A) (15 APR 82)

REFERENCE DATA

SREF =	2690.0000 SQ.FT.	XMRP =	1076.6800 IN. XO		
LREF =	474.8100 INCHES	YMRP =	.0000 IN. YO		
BREF =	936.6800 INCHES	ZMRP =	375.0000 IN. ZO		
SCALE =	.3600				

PARAMETRIC DATA

ALPHA =	.000	BETA =	10.000
ELEVON =	10.000	BDFLAP =	.000
SPDBRK =	25.000	RUDDER =	.000

RUN NO. 80/ 0 GRADIENT INTERVAL = -5.00/ 5.00

Q	AILRON	DELE1	DELE2	DELE3	DELE4	BDFLAP	ELEVON
47.370	.035	9.99320	10.00400	9.92200	9.93650	.00000	9.96392
47.290	2.559	12.60770	12.56600	7.50200	7.43750	.00000	10.02830
47.470	5.053	15.10600	15.06700	4.96100	4.99800	.00000	10.03300
47.510	7.533	17.60430	17.50700	2.48050	2.49900	.00000	10.02270
47.370	10.058	20.10260	20.00800	-.06050	-.05950	.00000	9.99765
47.570	12.896	20.27690	21.28900	-5.02150	-4.99800	.00000	7.88660
	GRADIENT	1.03591	1.01511	-.95884	-.99014	.00000	.02551

ARC40X80-462(OA100) OV101 (ENA03B) (15 APR 82)

REFERENCE DATA

SREF = 2690.0000 SQ.FT. XMRP = 1076.6800 IN. XO
LREF = 474.8100 INCHES YMRP = .0000 IN. YO
BREF = 936.6800 INCHES ZMRP = 375.0000 IN. ZO
SCALE = .3600

PARAMETRIC DATA

ALPHA = 5.000 BETA = 10.000
ELEVON = 10.000 BDFLAP = .000
SPDBRK = 25.000 RUDDER = .000

RUN NO. 81/ 0 GRADIENT INTERVAL = -5.00/ 5.00

Q	AILRON	DELE1	DELE2	DELE3	DELE4	BDFLAP	ELEVON
47.580	.010	9.52840	10.43100	9.98250	9.93650	.00000	9.96960
47.460	2.529	12.54960	12.50500	7.50200	7.43750	.00000	9.99852
47.450	5.054	15.04790	15.06700	4.96100	4.93850	.00000	10.00360
47.340	7.548	17.60430	17.50700	2.48050	2.43950	.00000	10.00782
47.720	10.043	20.10260	20.00800	-.06050	.00000	.00000	10.01253
47.370	12.896	20.27690	21.28900	-5.02150	-4.99800	.00000	7.88660
	GRADIENT	1.19952	.82345	-.98484	-.99219	.00000	.01148

ARC40X80-462(OA100) OV101 (ENA03C) (15 APR 82)

REFERENCE DATA

SREF = 2690.0000 SQ.FT. XMRP = 1076.6800 IN. XO
LREF = 474.8100 INCHES YMRP = .0000 IN. YO
BREF = 936.6800 INCHES ZMRP = 375.0000 IN. ZO
SCALE = .3600

PARAMETRIC DATA

ALPHA = 10.000 BETA = 10.000
ELEVON = 10.000 BDFLAP = .000
SPDBRK = 25.000 RUDDER = .000

RUN NO. 82/ 0 GRADIENT INTERVAL = -5.00/ 5.00

Q	AILRON	DELE1	DELE2	DELE3	DELE4	BDFLAP	ELEVON
47.560	.064	10.05130	10.06500	9.92200	9.93650	.00000	9.99370
47.530	2.543	12.60770	12.50500	7.50200	7.43750	.00000	10.01305
47.500	5.053	15.10600	15.06700	4.96100	4.99800	.00000	10.03300
47.540	7.563	17.60430	17.56800	2.48050	2.43950	.00000	10.02307
47.370	10.043	20.10260	20.00800	-.06050	.00000	.00000	10.01253
47.080	12.896	20.27690	21.28900	-5.02150	-4.99800	.00000	7.88660
	GRADIENT	1.03128	.98433	-.97626	-1.00813	.00000	.00781

ARC40X80-462(OA100) OV101 (ENA03D) (15 APR 82)

REFERENCE DATA

SREF = 2690.0000 SQ.FT. XMRP = 1076.6800 IN. XO
LREF = 474.8100 INCHES YMRP = .0000 IN. YO
BREF = 936.6800 INCHES ZMRP = 375.0000 IN. ZO
SCALE = .3600

PARAMETRIC DATA

ALPHA = 15.000 BETA = 10.000
ELEVON = 10.000 BDFLAP = .000
SPDBRK = 25.000 RUDDER = .000

RUN NO. 83/ 0 GRADIENT INTERVAL = -5.00/ 5.00

Q	AILRON	DELE1	DELE2	DELE3	DELE4	BDFLAP	ELEVON
47.350	.049	10.05130	10.06500	9.98250	9.93650	.00000	10.00892
47.310	2.543	12.60770	12.50500	7.50200	7.43750	.00000	10.01305
47.290	5.039	15.10600	15.06700	4.96100	5.05750	.00000	10.04787
47.380	7.549	17.54620	17.56800	2.42000	2.49900	.00000	10.00830
47.350	10.028	20.04450	20.00800	-.06050	.00000	.00000	9.99800
47.360	12.896	20.27690	21.28900	-5.02150	-4.99800	.00000	7.89660
	GRADIENT	1.02503	.97836	-.99460	-1.00201	.00000	.00169

ARC40X80-462(OA100) OV101 (ENA03E) (15 APR 82)

REFERENCE DATA

SREF = 2690.0000 SQ.FT. XMRP = 1076.6800 IN. XO
LREF = 474.8100 INCHES YMRP = .0000 IN. YO
BREF = 936.6800 INCHES ZMRP = 375.0000 IN. ZO
SCALE = .3600

PARAMETRIC DATA

ALPHA = 20.000 BETA = 10.000
ELEVON = 10.000 BDFLAP = .000
SPDBRK = 25.000 RUDDER = .000

RUN NO. 84/ 0 GRADIENT INTERVAL = -5.00/ 5.00

Q	AILRON	DELE1	DELE2	DELE3	DELE4	BDFLAP	ELEVON
47.920	.035	9.99320	10.00400	9.92200	9.93650	.00000	9.98392
47.790	2.559	12.60770	12.56600	7.50200	7.43750	.00000	10.02830
47.750	5.038	15.10600	15.06700	5.02150	4.99800	.00000	10.04812
47.640	7.548	17.60430	17.58900	2.48050	2.49900	.00000	10.03795
47.520	10.058	20.10260	20.06900	-.06050	.00000	.00000	10.02778
47.560	12.896	20.27690	21.28900	-5.02150	-4.99800	.00000	7.88660
	GRADIENT	1.03591	1.01511	-.95894	-.99014	.00000	.02551

ARC40X80-462(0A100) 0V101 (ENA03F) (15 APR 82)

REFERENCE DATA

SREF =	2690.0000 SQ.FT.	XMRP =	1076.6800 IN. XO		
LREF =	474.8100 INCHES	YMRP =	.0000 IN. YO		
BREF =	936.6800 INCHES	ZMRP =	375.0000 IN. ZO		
SCALE =	.3600				

PARAMETRIC DATA

ALPHA =	.000	BETA =	.000
ELEVON =	.000	AILRON =	.000
SPDBRK =	25.000	RUDDER =	.000

RUN NO. 35/ 0 GRADIENT INTERVAL = -5.00/ 5.00

Q	BDFLAP	DELE1	DELE2	DELE3	DELE4	ELEVON	AILRON
47.610	-11.543	-.11620	-.12200	.00000	-.05950	-.07442	-.04468
47.740	-.201	-.11620	-.12200	-.06050	-.05950	-.08955	-.02955
47.830	.000	-.05810	-.06100	.00000	.00000	-.02977	-.02977
47.860	16.360	-.11620	-.12200	-.06050	-.05950	-.08955	-.02955
47.800	22.684	-.11620	-.12200	-.06050	-.05950	-.08955	-.02955
	GRADIENT	.28943	.30388	.30138	.29640	.29777	-.00112

ARC40X80-462(0A100) 0V101 (ENA03G) (15 APR 82)

REFERENCE DATA

SREF =	2690.0000 SQ.FT.	XMRP =	1076.6800 IN. XO		
LREF =	474.8100 INCHES	YMRP =	.0000 IN. YO		
BREF =	936.6800 INCHES	ZMRP =	375.0000 IN. ZO		
SCALE =	.3600				

PARAMETRIC DATA

ALPHA =	5.000	BETA =	.000
ELEVON =	.000	AILRON =	.000
SPDBRK =	25.000	RUDDER =	.000

RUN NO. 36/ 0 GRADIENT INTERVAL = -5.00/ 5.00

Q	BDFLAP	DELE1	DELE2	DELE3	DELE4	ELEVON	AILRON
47.580	-11.543	-.11620	-.12200	-.06050	-.05950	-.08955	-.02955
47.730	-.201	-.05810	-.06100	.00000	.00000	-.02977	-.02977
47.630	16.561	-.11620	-.12200	-.06050	-.05950	-.08955	-.02955
47.510	22.684	-.05810	-.06100	-.06050	-.05950	-.05977	.00022
	GRADIENT	.00000	.00000	.00000	.00000	.00000	.00000

ARC40X80-462(OA100) OV101 (ENA03H) (15 APR 82)

REFERENCE DATA

SREF	=	2690.0000	SQ.FT.	XMRP	=	1076.6800	IN. XO	ALPHA	=	10.000	BETA = .000
LREF	=	474.8100	INCHES	YMRP	=	.0000	IN. YO	ELEVON	=	.000	AILRON = .000
BREF	=	936.6800	INCHES	ZMRP	=	375.0000	IN. ZO	SPDBRK	=	25.000	RUDDER = .000
SCALE	=	.3600									

PARAMETRIC DATA

RUN NO. 37/ 0 GRADIENT INTERVAL = -5.00/ 5.00

Q	BDFLAP	DELE1	DELE2	DELE3	DELE4	ELEVON	AILRON
47.700	-11.543	-.11620	-.12200	-.06050	-.05950	-.08955	-.02955
47.570	-.100	-.11620	-.12200	-.06050	-.05950	-.08955	-.02955
47.350	16.561	-.11620	-.12200	-.06050	-.05950	-.08955	-.02955
47.070	22.684	-.05810	-.06100	.00000	-.05950	-.04469	-.01490
	GRADIENT	.00000	.00000	.00000	.00000	.00000	.00000

ARC40X80-462(OA100) OV101(DECREASING BDFLAP) (ENA03I) (15 APR 82)

REFERENCE DATA

SREF	=	2690.0000	SQ.FT.	XMRP	=	1076.6800	IN. XO	ALPHA	=	10.000	BETA = .000
LREF	=	474.8100	INCHES	YMRP	=	.0000	IN. YO	ELEVON	=	.000	AILRON = .000
BREF	=	936.6800	INCHES	ZMRP	=	375.0000	IN. ZO	SPDBRK	=	25.000	RUDDER = .000
SCALE	=	.3600									

PARAMETRIC DATA

RUN NO. 38/ 0 GRADIENT INTERVAL = -5.00/ 5.00

Q	BDFLAP	DELE1	DELE2	DELE3	DELE4	ELEVON	AILRON
47.810	-11.543	-.05810	-.06100	.00000	.00000	-.02977	-.02977
47.910	-.100	-.05810	-.06100	.00000	.00000	-.02977	-.02977
47.740	16.461	-.11620	-.12200	-.06050	-.05950	-.08955	-.02955
47.360	22.583	-.11620	-.12200	-.06050	-.05950	-.08955	-.02955
	GRADIENT	.00000	.00000	.00000	.00000	.00000	.00000

ARC40X80-462(OA100) OV101 (ENA03J) (15 APR 82)

REFERENCE DATA

SREF =	2690.0000 SQ.FT.	XMRP =	1076.6800 IN.	XO	
LREF =	474.8100 INCHES	YMRP =	.0000 IN.	YO	
BREF =	936.6800 INCHES	ZMRP =	375.0000 IN.	ZO	
SCALE =	.3600				

PARAMETRIC DATA

ALPHA =	15.000	BETA =	.000
ELEVON =	.000	AILRON =	.000
SPDBRK =	25.000	RUDDER =	.000

RUN NO. 39/ 0 GRADIENT INTERVAL = -5.00/ 5.00

Q	BDFLAP	DELE1	DELE2	DELE3	DELE4	ELEVON	AILRON
47.330	-11.543	-.11620	-.12200	-.06050	-.05950	-.08955	-.02955
47.320	-.201	-.11620	-.12200	-.06050	-.05950	-.08955	-.02955
47.410	16.360	-.11620	-.12200	-.06050	-.05950	-.08955	-.02955
47.490	22.684	-.11620	-.12200	-.06050	-.05950	-.08955	-.02955
	GRADIENT	.00000	.00000	.00000	.00000	.00000	.00000

ARC40X80-462(OA100) OV101 (ENA03K) (15 APR 82)

REFERENCE DATA

SREF =	2690.0000 SQ.FT.	XMRP =	1076.6800 IN.	XO	
LREF =	474.8100 INCHES	YMRP =	.0000 IN.	YO	
BREF =	936.6800 INCHES	ZMRP =	375.0000 IN.	ZO	
SCALE =	.3600				

PARAMETRIC DATA

ALPHA =	20.000	BETA =	.000
ELEVON =	.000	AILRON =	.000
SPDBRK =	25.000	RUDDER =	.000

RUN NO. 40/ 0 GRADIENT INTERVAL = -5.00/ 5.00

Q	BDFLAP	DELE1	DELE2	DELE3	DELE4	ELEVON	AILRON
47.330	-11.543	-.11620	-.12200	-.06050	-.05950	-.08955	-.02955
47.120	-.100	-.11620	-.12200	-.06050	-.05950	-.08955	-.02955
47.470	16.461	-.11620	-.12200	-.06050	-.05950	-.08955	-.02955
47.930	22.684	-.11620	-.12200	-.06050	-.05950	-.08955	-.02955
	GRADIENT	.00000	.00000	.00000	.00000	.00000	.00000

ARC40X80-462(0A100) OV101 (ENA03L) (15 APR 82)

REFERENCE DATA

SREF =	2690.0000 SQ.FT.	XMRP =	1076.6800 IN.	XO	
LREF =	474.8100 INCHES	YMRP =	.0000 IN.	YO	
BREF =	936.6800 INCHES	ZMRP =	375.0000 IN.	ZO	
SCALE =	.3600				

PARAMETRIC DATA

ALPHA =	.000	BETA =	.000
ELEVON =	.000	AILRON =	.000
BDFLAP =	.000	RUDDER =	.000

RUN NO. 41/ 0 GRADIENT INTERVAL = -5.00/ 5.00

Q	SPDBRK	DELE1	DELE2	DELE3	DELE4	BDFLAP	ELEVON	AILRON
47.750	.000	-.11620	-.12200	-.06050	-.05950	.00000	-.08955	-.02955
47.510	25.180	-.05810	-.06100	.00000	.00000	.00000	-.02977	-.02977
47.510	55.459	-.05810	-.06100	.00000	.00000	.00000	-.02977	-.02977
47.360	87.628	-.11620	-.12200	-.06050	-.05950	.00000	-.08955	-.02955
	GRADIENT	.00000	.00000	.00000	.00000	.00000	.00000	.00000

ARC40X80-462(0A100) OV101 (ENA03M) (15 APR 82)

REFERENCE DATA

SREF =	2690.0000 SQ.FT.	XMRP =	1076.6800 IN.	XO	
LREF =	474.8100 INCHES	YMRP =	.0000 IN.	YO	
BREF =	936.6800 INCHES	ZMRP =	375.0000 IN.	ZO	
SCALE =	.3600				

PARAMETRIC DATA

ALPHA =	5.000	BETA =	.000
ELEVON =	.000	AILRON =	.000
BDFLAP =	.000	RUDDER =	.000

RUN NO. 42/ 0 GRADIENT INTERVAL = -5.00/ 5.00

Q	SPDBRK	DELE1	DELE2	DELE3	DELE4	BDFLAP	ELEVON	AILRON
47.450	-.039	-.11620	-.12200	-.06050	-.05950	.00000	-.08955	-.02955
47.560	25.179	-.11620	-.12200	-.06050	-.05950	.00000	-.08955	-.02955
47.560	55.459	-.11620	-.12200	-.06050	-.05950	.00000	-.08955	-.02955
47.540	87.629	-.11620	-.12200	-.06050	-.05950	.00000	-.08955	-.02955
	GRADIENT	.00000	.00000	.00000	.00000	.00000	.00000	.00000

ARC40X80-462(OA100) OV101 (ENA03N) (15 APR 82)

REFERENCE DATA

SREF = 2690.0000 SQ.FT. XMRP = 1076.6800 IN. XO
LREF = 474.8100 INCHES YMRP = .0000 IN. YO
BREF = 936.6800 INCHES ZMRP = 375.0000 IN. ZO
SCALE = .3600

PARAMETRIC DATA

ALPHA = 10.000 BETA = .000
ELEVON = .000 AILRON = .000
BDFLAP = .000 RUDDER = .000

RUN NO. 43/ 0 GRADIENT INTERVAL = -5.00/ 5.00

Q	SPDBRK	DELE1	DELE2	DELE3	DELE4	BDFLAP	ELEVON	AILRON
47.640	.039	-.11620	-.12200	-.06050	-.05950	.00000	-.08955	-.02955
47.530	25.141	-.05810	-.06100	.00000	.00000	.00000	-.02977	-.02977
47.100	55.545	-.11620	-.12200	-.06050	-.05950	.00000	-.08955	-.02955
47.680	87.677	-.11620	-.12200	-.06050	-.05950	.00000	-.08955	-.02955
	GRADIENT	.00000	.00000	.00000	.00000	.00000	.00000	.00000

ARC40X80-462(OA100) OV101(DECREASING SPDBRK) (ENA030) (15 APR 82)

REFERENCE DATA

SREF = 2690.0000 SQ.FT. XMRP = 1076.6800 IN. XO
LREF = 474.8100 INCHES YMRP = .0000 IN. YO
BREF = 936.6800 INCHES ZMRP = 375.0000 IN. ZO
SCALE = .3600

PARAMETRIC DATA

ALPHA = 10.000 BETA = .000
ELEVON = .000 AILRON = .000
BDFLAP = .000 RUDDER = .000

RUN NO. 44/ 0 GRADIENT INTERVAL = -5.00/ 5.00

Q	SPDBRK	DELE1	DELE2	DELE3	DELE4	BDFLAP	ELEVON	AILRON
47.660	.079	-.05810	-.06100	.00000	-.05950	.00000	-.04465	-.01490
47.720	25.139	-.11620	-.12200	-.06050	-.05950	.00000	-.08955	-.02955
47.360	55.545	-.11620	-.12200	-.06050	-.05950	.00000	-.08955	-.02955
47.610	87.677	-.11620	-.12200	-.06050	-.05950	.00000	-.08955	-.02955
	GRADIENT	.00000	.00000	.00000	.00000	.00000	.00000	.00000

ARC40X80-462(0A100) 0V101 (ENA03P) (15 APR 82)

REFERENCE DATA

SREF =	2690.0000 SQ.FT.	XMRP =	1076.6800 IN.	XO	
LREF =	474.8100 INCHES	YMRP =	.0000 IN.	YO	
BREF =	936.6800 INCHES	ZMRP =	375.0000 IN.	ZO	
SCALE =	.3600				

PARAMETRIC DATA

ALPHA =	15.000	BETA =	.000
ELEVON =	.000	AILRON =	.000
BDFLAP =	.000	RUDDER =	.000

RUN NO. 48/ 0 GRADIENT INTERVAL = -5.00/ 5.00

Q	SPDBRK	DELE1	DELE2	DELE3	DELE4	BDFLAP	ELEVON	AILRON
47.660	-.079	.00000	.00000	.00000	.00000	.00000	.00000	.00000
47.500	25.100	.00000	.00000	.00000	.00000	.00000	.00000	.00000
47.520	55.329	.00000	.00000	.00000	.00000	.00000	.00000	.00000
47.460	87.629	.00000	.00000	.00000	.00000	.00000	.00000	.00000
	GRADIENT	.00000	.00000	.00000	.00000	.00000	.00000	.00000

ARC40X80-462(0A100) 0V101 (ENA03Q) (15 APR 82)

REFERENCE DATA

SREF =	2690.0000 SQ.FT.	XMRP =	1076.6800 IN.	XO	
LREF =	474.8100 INCHES	YMRP =	.0000 IN.	YO	
BREF =	936.6800 INCHES	ZMRP =	375.0000 IN.	ZO	
SCALE =	.3600				

PARAMETRIC DATA

ALPHA =	20.000	BETA =	.000
ELEVON =	.000	AILRON =	.000
BDFLAP =	.000	RUDDER =	.000

RUN NO. 49/ 0 GRADIENT INTERVAL = -5.00/ 5.00

Q	SPDBRK	DELE1	DELE2	DELE3	DELE4	BDFLAP	ELEVON	AILRON
47.680	.040	.00000	.00000	.00000	.00000	.00000	.00000	.00000
47.550	25.100	.00000	.00000	.00000	.00000	.00000	.00000	.00000
47.520	55.415	.00000	.00000	.00000	.00000	.00000	.00000	.00000
	GRADIENT	.00000	.00000	.00000	.00000	.00000	.00000	.00000

ARC40X80-462(OA100) OV101(RCS PORTS CLOSED) (ENA03R) (15 APR 82)

REFERENCE DATA

SREF =	2690.0000 SQ.FT.	XMRP =	1076.6800 IN. XO		
LREF =	474.8100 INCHES	YMRP =	.0000 IN. YO		
BREF =	936.6800 INCHES	ZMRP =	375.0000 IN. ZO		
SCALE =	.3600				

PARAMETRIC DATA

BETA =	.000	ELEVON =	.000
AILRON =	.000	BDFLAP =	.000
SPDBRK =	25.000	RUDDER =	.000

RUN NO. 101/ 0 GRADIENT INTERVAL = -5.00/ 5.00

Q	ALPHA	DELE1	DELE2	DELE3	DELE4	BDFLAP	ELEVON	AILRON
47.490	-5.240	.00000	.00000	.00000	.00000	.00000	.00000	.00000
47.690	-2.649	.00000	.00000	.00000	.00000	.00000	.00000	.00000
47.600	-.056	.00000	.00000	.00000	.00000	.00000	.00000	.00000
47.720	2.541	.00000	.00000	.00000	.00000	.00000	.00000	.00000
47.640	5.139	.00000	.00000	.00000	.00000	.00000	.00000	.00000
47.850	7.739	.00000	.00000	.00000	.00000	.00000	.00000	.00000
47.600	10.342	.00000	.00000	.00000	.00000	.00000	.00000	.00000
47.730	12.941	.00000	.00000	.00000	.00000	.00000	.00000	.00000
47.580	15.556	.00000	.00000	.00000	.00000	.00000	.00000	.00000
47.500	18.180	.00000	.00000	.00000	.00000	.00000	.00000	.00000
47.570	20.826	.00000	.00000	.00000	.00000	.00000	.00000	.00000
46.010	26.006	.00000	.00000	.00000	.00000	.00000	.00000	.00000
	GRADIENT	.00000	.00000	.00000	.00000	.00000	.00000	.00000

ARC40X80-462(OA100) OV101(RCS PORTS CLOSED) (ENA03S) (15 APR 82)

REFERENCE DATA

SREF =	2690.0000 SQ.FT.	XMRP =	1076.6800 IN. XO		
LREF =	474.8100 INCHES	YMRP =	.0000 IN. YO		
BREF =	936.6800 INCHES	ZMRP =	375.0000 IN. ZO		
SCALE =	.3600				

PARAMETRIC DATA

ALPHA =	.000	ELEVON =	.000
AILRON =	.000	BDFLAP =	.000
SPDBRK =	25.000	RUDDER =	.000

RUN NO. 102/ 0 GRADIENT INTERVAL = -5.00/ 5.00

Q	BETA	DELE1	DELE2	DELE3	DELE4	BDFLAP	ELEVON	AILRON
47.510	-13.000	.00000	.00000	.00000	.00000	.00000	.00000	.00000
47.670	-10.000	.00000	.00000	.00000	.00000	.00000	.00000	.00000
47.610	-5.000	.00000	.00000	.00000	.00000	.00000	.00000	.00000
47.630	-2.000	.00000	.00000	.00000	.00000	.00000	.00000	.00000
47.730	.000	.00000	.00000	.00000	.00000	.00000	.00000	.00000
47.580	2.000	.00000	.00000	.00000	.00000	.00000	.00000	.00000
47.730	5.000	.00000	.00000	.00000	.00000	.00000	.00000	.00000
47.630	10.000	.00000	.00000	.00000	.00000	.00000	.00000	.00000
47.590	15.000	.00000	.00000	.00000	.00000	.00000	.00000	.00000
47.660	20.000	.00000	.00000	.00000	.00000	.00000	.00000	.00000
	GRADIENT	.00000	.00000	.00000	.00000	.00000	.00000	.00000

ARC40X80-462(OA100) OV101(RCS PORTS CLOSED) (ENA03T) (15 APR 82)

REFERENCE DATA

SREF =	2690.0000 SQ.FT.	XMRP =	1076.6800 IN.	XO	
LREF =	474.8100 INCHES	YMRP =	.0000 IN.	YO	
BREF =	936.6800 INCHES	ZMRP =	375.0000 IN.	ZO	
SCALE =	.3600				

PARAMETRIC DATA

ALPHA =	5.000	ELEVON =	.000
AILRON =	.000	BDFLAP =	.000
SPDBRK =	25.000	RUDDER =	.000

RUN NO. 103/ 0 GRADIENT INTERVAL = -5.00/ 5.00

Q	BETA	DELE1	DELE2	DELE3	DELE4	BDFLAP	ELEVON	AILRON
47.560	-13.000	.00000	.00000	.00000	.00000	.00000	.00000	.00000
47.650	-10.000	.00000	.00000	.00000	.00000	.00000	.00000	.00000
47.600	-5.000	.00000	.00000	.00000	.00000	.00000	.00000	.00000
47.800	-2.000	.00000	.00000	.00000	.00000	.00000	.00000	.00000
47.650	.000	.00000	.00000	.00000	.00000	.00000	.00000	.00000
47.620	2.000	.00000	.00000	.00000	.00000	.00000	.00000	.00000
47.710	5.000	.00000	.00000	.00000	.00000	.00000	.00000	.00000
47.750	10.000	.00000	.00000	.00000	.00000	.00000	.00000	.00000
47.650	15.000	.00000	.00000	.00000	.00000	.00000	.00000	.00000
47.600	20.000	.00000	.00000	.00000	.00000	.00000	.00000	.00000
	GRADIENT	.00000	.00000	.00000	.00000	.00000	.00000	.00000

ARC40X80-462(OA100) OV101(RCS PORTS CLOSED) (ENA03U) (15 APR 82)

REFERENCE DATA

SREF =	2690.0000 SQ.FT.	XMRP =	1076.6800 IN.	XO	
LREF =	474.8100 INCHES	YMRP =	.0000 IN.	YO	
BREF =	936.6800 INCHES	ZMRP =	375.0000 IN.	ZO	
SCALE =	.3600				

PARAMETRIC DATA

ALPHA =	10.000	ELEVON =	.000
AILRON =	.000	BDFLAP =	.000
SPDBRK =	25.000	RUDDER =	.000

RUN NO. 104/ 0 GRADIENT INTERVAL = -5.00/ 5.00

Q	BETA	DELE1	DELE2	DELE3	DELE4	BDFLAP	ELEVON	AILRON
47.610	-13.000	.00000	.00000	.00000	.00000	.00000	.00000	.00000
47.590	-10.000	.00000	.00000	.00000	.00000	.00000	.00000	.00000
47.560	-5.000	.00000	.00000	.00000	.00000	.00000	.00000	.00000
47.520	-2.000	.00000	.00000	.00000	.00000	.00000	.00000	.00000
47.450	.000	.00000	.00000	.00000	.00000	.00000	.00000	.00000
47.610	2.000	.00000	.00000	.00000	.00000	.00000	.00000	.00000
47.660	5.000	.00000	.00000	.00000	.00000	.00000	.00000	.00000
47.470	10.000	.00000	.00000	.00000	.00000	.00000	.00000	.00000
47.600	15.000	.00000	.00000	.00000	.00000	.00000	.00000	.00000
47.630	20.000	.00000	.00000	.00000	.00000	.00000	.00000	.00000
	GRADIENT	.00000	.00000	.00000	.00000	.00000	.00000	.00000

ARC40X80-462(OA100) OV101(RCS PORTS CLOSED) (ENA03V) (15 APR 82)

REFERENCE DATA

SREF = 2690.0000 SQ.FT. XMRP = 1076.6800 IN. XO
LREF = 474.8100 INCHES YMRP = .0000 IN. YO
BREF = 936.6800 INCHES ZMRP = 375.0000 IN. ZO
SCALE = .3600

PARAMETRIC DATA

ALPHA = 15.000 ELEVON = .000
AILRON = .000 BDFLAP = .000
SPDBRK = 25.000 RUDDER = .000

RUN NO. 105/ 0 GRADIENT INTERVAL = -5.00/ 5.00

Q	BETA	DELE1	DELE2	DELE3	DELE4	BDFLAP	ELEVON	AILRON
47.610	-13.000	.00000	.00000	.00000	.00000	.00000	.00000	.00000
47.680	-10.000	.00000	.00000	.00000	.00000	.00000	.00000	.00000
47.610	-5.000	.00000	.00000	.00000	.00000	.00000	.00000	.00000
47.520	-2.000	.00000	.00000	.00000	.00000	.00000	.00000	.00000
47.510	.000	.00000	.00000	.00000	.00000	.00000	.00000	.00000
47.690	2.000	.00000	.00000	.00000	.00000	.00000	.00000	.00000
47.650	5.000	.00000	.00000	.00000	.00000	.00000	.00000	.00000
47.640	10.000	.00000	.00000	.00000	.00000	.00000	.00000	.00000
47.540	15.000	.00000	.00000	.00000	.00000	.00000	.00000	.00000
47.330	20.000	.00000	.00000	.00000	.00000	.00000	.00000	.00000
	GRADIENT	.00000	.00000	.00000	.00000	.00000	.00000	.00000

ARC40X80-462(OA100) OV101(RCS PORTS CLOSED) (ENA03W) (15 APR 82)

REFERENCE DATA

SREF = 2690.0000 SQ.FT. XMRP = 1076.6800 IN. XO
LREF = 474.8100 INCHES YMRP = .0000 IN. YO
BREF = 936.6800 INCHES ZMRP = 375.0000 IN. ZO
SCALE = .3600

PARAMETRIC DATA

ALPHA = 20.000 ELEVON = .000
AILRON = .000 BDFLAP = .000
SPDBRK = 25.000 RUDDER = .000

RUN NO. 106/ 0 GRADIENT INTERVAL = -5.00/ 5.00

Q	BETA	DELE1	DELE2	DELE3	DELE4	BDFLAP	ELEVON	AILRON
47.510	-13.000	.00000	.00000	.00000	.00000	.00000	.00000	.00000
47.660	-10.000	.00000	.00000	.00000	.00000	.00000	.00000	.00000
47.540	-5.000	.00000	.00000	.00000	.00000	.00000	.00000	.00000
47.630	-2.000	.00000	.00000	.00000	.00000	.00000	.00000	.00000
47.540	.000	.00000	.00000	.00000	.00000	.00000	.00000	.00000
47.670	2.000	.00000	.00000	.00000	.00000	.00000	.00000	.00000
47.760	5.000	.00000	.00000	.00000	.00000	.00000	.00000	.00000
47.800	10.000	.00000	.00000	.00000	.00000	.00000	.00000	.00000
47.650	15.000	.00000	.00000	.00000	.00000	.00000	.00000	.00000
47.520	20.000	.00000	.00000	.00000	.00000	.00000	.00000	.00000
	GRADIENT	.00000	.00000	.00000	.00000	.00000	.00000	.00000

ARC40X80-462(OA100) OV101 (ENA03X) (15 APR 82)

REFERENCE DATA

SREF =	2690.0000 SQ.FT.	XMRP =	1076.6800 IN. XO		
LREF =	474.8100 INCHES	YMRP =	.0000 IN. YO		
BREF =	936.6800 INCHES	ZMRP =	375.0000 IN. ZO		
SCALE =	.3600				

PARAMETRIC DATA

BETA =	.000	ELEVON =	.000
AILRON =	.000	BDFLAP =	.000

RUN NO. 88/ 0 GRADIENT INTERVAL = -5.00/ 5.00

Q	ALPHA	DELE1	DELE2	DELE3	DELE4	BDFLAP	ELEVON	AILRON
47.710	-.075	.00000	.00000	.00000	.00000	.00000	.00000	.00000
47.670	10.320	.00000	.00000	.00000	.00000	.00000	.00000	.00000
47.790	15.535	.00000	.00000	.00000	.00000	.00000	.00000	.00000
	GRADIENT	.00000	.00000	.00000	.00000	.00000	.00000	.00000

ARC40X80-462(OA100) OV101 (ENA03Y) (15 APR 82)

REFERENCE DATA

SREF =	2690.0000 SQ.FT.	XMRP =	1076.6800 IN. XO		
LREF =	474.8100 INCHES	YMRP =	.0000 IN. YO		
BREF =	936.6800 INCHES	ZMRP =	375.0000 IN. ZO		
SCALE =	.3600				

PARAMETRIC DATA

BETA =	.000	ELEVON =	.000
AILRON =	.000	BDFLAP =	.000
SPDBRK =	55.000	RUDDER =	-15.000

RUN NO. 89/ 0 GRADIENT INTERVAL = -5.00/ 5.00

Q	ALPHA	DELE1	DELE2	DELE3	DELE4	BDFLAP	ELEVON	AILRON
47.690	-.072	.00000	.00000	.00000	.00000	.00000	.00000	.00000
47.740	10.326	.00000	.00000	.00000	.00000	.00000	.00000	.00000
47.760	15.535	.00000	.00000	.00000	.00000	.00000	.00000	.00000
47.760	20.801	.00000	.00000	.00000	.00000	.00000	.00000	.00000
	GRADIENT	.00000	.00000	.00000	.00000	.00000	.00000	.00000

ARC40X80-462(OA100) OV101 (ENA03Z) (15 APR 82)

REFERENCE DATA

SREF =	2690.0000 SQ.FT.	XMRP =	1076.6800 IN. XO		
LREF =	474.8100 INCHES	YMRP =	.0000 IN. YO		
BREF =	936.6800 INCHES	ZMRP =	375.0000 IN. ZO		
SCALE =	.3600				

PARAMETRIC DATA

BETA =	.000	ELEVON =	.000
AILRON =	.000	BDFLAP =	.000
SPDBRK =	55.000	RUDDER =	.000

RUN NO. 90/ 0 GRADIENT INTERVAL = -5.00/ 5.00

Q	ALPHA	DELE1	DELE2	DELE3	DELE4	BDFLAP	ELEVON	AILRON
47.790	-.073	.00000	.00000	.00000	.00000	.00000	.00000	.00000
47.600	5.118	.00000	.00000	.00000	.00000	.00000	.00000	.00000
47.860	10.323	.00000	.00000	.00000	.00000	.00000	.00000	.00000
47.710	15.537	.00000	.00000	.00000	.00000	.00000	.00000	.00000
	GRADIENT	.00000	.00000	.00000	.00000	.00000	.00000	.00000

ARC40X80-462(OA100) OV101 (ENA04A) (15 APR 82)

REFERENCE DATA

SREF =	2690.0000 SQ.FT.	XMRP =	1076.6800 IN. XO		
LREF =	474.8100 INCHES	YMRP =	.0000 IN. YO		
BREF =	936.6800 INCHES	ZMRP =	375.0000 IN. ZO		
SCALE =	.3600				

PARAMETRIC DATA

BETA =	.000	ELEVON =	.000
AILRON =	.000	BDFLAP =	.000
SPDBRK =	55.000	RUDDER =	5.000

RUN NO. 91/ 0 GRADIENT INTERVAL = -5.00/ 5.00

Q	ALPHA	DELE1	DELE2	DELE3	DELE4	BDFLAP	ELEVON	AILRON
47.650	-.074	.00000	.00000	.00000	.00000	.00000	.00000	.00000
47.790	5.119	.00000	.00000	.00000	.00000	.00000	.00000	.00000
47.710	10.321	.00000	.00000	.00000	.00000	.00000	.00000	.00000
47.710	15.526	.00000	.00000	.00000	.00000	.00000	.00000	.00000
47.720	20.804	.00000	.00000	.00000	.00000	.00000	.00000	.00000
	GRADIENT	.00000	.00000	.00000	.00000	.00000	.00000	.00000

ARC40X80-462(OA100) OV101 (ENA04B) (15 APR 82)

REFERENCE DATA

SREF =	2690.0000 SQ.FT.	XMRP =	1076.6800 IN. XO		
LREF =	474.8100 INCHES	YMRP =	.0000 IN. YO		
BREF =	936.6800 INCHES	ZMRP =	375.0000 IN. ZO		
SCALE =	.3600				

PARAMETRIC DATA

BETA =	.000	ELEVON =	.000
AILRON =	.000	BDFLAP =	.000
SPDBRK =	55.000	RUDDER =	10.000

RUN NO. 92/ 0 GRADIENT INTERVAL = -5.00/ 5.00

Q	ALPHA	DELE1	DELE2	DELE3	DELE4	BDFLAP	ELEVON	AILRON
47.670	-.074	.00000	.00000	.00000	.00000	.00000	.00000	.00000
47.690	5.119	.00000	.00000	.00000	.00000	.00000	.00000	.00000
47.570	10.324	.00000	.00000	.00000	.00000	.00000	.00000	.00000
47.720	15.537	.00000	.00000	.00000	.00000	.00000	.00000	.00000
47.780	20.801	.00000	.00000	.00000	.00000	.00000	.00000	.00000
	GRADIENT	.00000	.00000	.00000	.00000	.00000	.00000	.00000

ARC40X80-462(OA100) OV101 (ENA04C) (15 APR 82)

REFERENCE DATA

SREF =	2690.0000 SQ.FT.	XMRP =	1076.6800 IN. XO		
LREF =	474.8100 INCHES	YMRP =	.0000 IN. YO		
BREF =	936.6800 INCHES	ZMRP =	375.0000 IN. ZO		
SCALE =	.3600				

PARAMETRIC DATA

BETA =	.000	ELEVON =	.000
AILRON =	.000	BDFLAP =	.000
SPDBRK =	55.000	RUDDER =	15.000

RUN NO. 93/ 0 GRADIENT INTERVAL = -5.00/ 5.00

Q	ALPHA	DELE1	DELE2	DELE3	DELE4	BDFLAP	ELEVON	AILRON
47.680	-.073	.00000	.00000	.00000	.00000	.00000	.00000	.00000
47.710	5.118	.00000	.00000	.00000	.00000	.00000	.00000	.00000
47.630	10.324	.00000	.00000	.00000	.00000	.00000	.00000	.00000
47.710	15.539	.00000	.00000	.00000	.00000	.00000	.00000	.00000
47.670	20.802	.00000	.00000	.00000	.00000	.00000	.00000	.00000
	GRADIENT	.00000	.00000	.00000	.00000	.00000	.00000	.00000

ARC40X80-462(OA100) OV101 (ENA04D) (15 APR 82)

REFERENCE DATA

SREF =	2690.0000 SQ.FT.	XMRP =	1076.6800 IN.	XO	
LREF =	474.8100 INCHES	YMRP =	.0000 IN.	YO	
BREF =	936.6800 INCHES	ZMRP =	375.0000 IN.	ZO	
SCALE =	.3600				

PARAMETRIC DATA

BETA =	.000	ELEVON =	.000
AILRON =	.000	BDFLAP =	.000
SPDBRK =	48.000	RUDDER =	19.500

RUN NO. 94/ 0 GRADIENT INTERVAL = -5.00/ 5.00

Q	ALPHA	DELE1	DELE2	DELE3	DELE4	BDFLAP	ELEVON	AILRON
47.870	-.072	.00000	.00000	.00000	.00000	.00000	.00000	.00000
47.720	5.119	.00000	.00000	.00000	.00000	.00000	.00000	.00000
47.720	10.322	.00000	.00000	.00000	.00000	.00000	.00000	.00000
47.720	15.534	.00000	.00000	.00000	.00000	.00000	.00000	.00000
47.660	20.804	.00000	.00000	.00000	.00000	.00000	.00000	.00000
	GRADIENT	.00000	.00000	.00000	.00000	.00000	.00000	.00000

ARC40X80-462(OA100) OV101 (ENA04E) (15 APR 82)

REFERENCE DATA

SREF =	2690.0000 SQ.FT.	XMRP =	1076.6800 IN.	XO	
LREF =	474.8100 INCHES	YMRP =	.0000 IN.	YO	
BREF =	936.6800 INCHES	ZMRP =	375.0000 IN.	ZO	
SCALE =	.3600				

PARAMETRIC DATA

BETA =	5.000	ELEVON =	.000
AILRON =	.000	BDFLAP =	.000
SPDBRK =	55.000	RUDDER =	.000

RUN NO. 95/ 0 GRADIENT INTERVAL = -5.00/ 5.00

Q	ALPHA	DELE1	DELE2	DELE3	DELE4	BDFLAP	ELEVON	AILRON
47.660	-.070	.00000	.00000	.00000	.00000	.00000	.00000	.00000
47.740	5.125	.00000	.00000	.00000	.00000	.00000	.00000	.00000
47.800	10.327	.00000	.00000	.00000	.00000	.00000	.00000	.00000
47.730	15.538	.00000	.00000	.00000	.00000	.00000	.00000	.00000
47.720	20.789	.00000	.00000	.00000	.00000	.00000	.00000	.00000
	GRADIENT	.00000	.00000	.00000	.00000	.00000	.00000	.00000

ARC40X80-462(0A100) 0V101 (ENA04F) (15 APR 82)

REFERENCE DATA

SREF =	2690.0000 SQ.FT.	XMRP =	1076.6800 IN.	XO	
LREF =	474.8100 INCHES	YMRP =	.0000 IN.	YO	
BREF =	936.6800 INCHES	ZMRP =	375.0000 IN.	ZO	
SCALE =	.3600				

PARAMETRIC DATA

BETA =	5.000	ELEVON =	.000
AILRON =	.000	BDFLAP =	.000
SPDBRK =	55.000	RUDDER =	5.000

RUN NO. 96/ 0 GRADIENT INTERVAL = -5.00/ 5.00

Q	ALPHA	DELE1	DELE2	DELE3	DELE4	BDFLAP	ELEVON	AILRON
47.710	-.070	.00000	.00000	.00000	.00000	.00000	.00000	.00000
47.690	5.123	.00000	.00000	.00000	.00000	.00000	.00000	.00000
47.710	10.328	.00000	.00000	.00000	.00000	.00000	.00000	.00000
47.530	20.790	.00000	.00000	.00000	.00000	.00000	.00000	.00000
	GRADIENT	.00000	.00000	.00000	.00000	.00000	.00000	.00000

ARC40X80-462(0A100) 0V101 (ENA04G) (15 APR 82)

REFERENCE DATA

SREF =	2690.0000 SQ.FT.	XMRP =	1076.6800 IN.	XO	
LREF =	474.8100 INCHES	YMRP =	.0000 IN.	YO	
BREF =	936.6800 INCHES	ZMRP =	375.0000 IN.	ZO	
SCALE =	.3600				

PARAMETRIC DATA

BETA =	5.000	ELEVON =	.000
AILRON =	.000	BDFLAP =	.000
SPDBRK =	55.000	RUDDER =	10.000

RUN NO. 97/ 0 GRADIENT INTERVAL = -5.00/ 5.00

Q	ALPHA	DELE1	DELE2	DELE3	DELE4	BDFLAP	ELEVON	AILRON
47.610	-.071	.00000	.00000	.00000	.00000	.00000	.00000	.00000
47.710	5.122	.00000	.00000	.00000	.00000	.00000	.00000	.00000
47.700	10.324	.00000	.00000	.00000	.00000	.00000	.00000	.00000
47.650	15.535	.00000	.00000	.00000	.00000	.00000	.00000	.00000
47.590	20.784	.00000	.00000	.00000	.00000	.00000	.00000	.00000
	GRADIENT	.00000	.00000	.00000	.00000	.00000	.00000	.00000

ARC40X80-462(OA100) OV101 (ENA04H) (15 APR 82)

REFERENCE DATA

SREF =	2690.0000 SQ.FT.	XMRP =	1076.6800 IN.	XO	
LREF =	474.8100 INCHES	YMRP =	.0000 IN.	YO	
BREF =	936.6800 INCHES	ZMRP =	375.0000 IN.	ZO	
SCALE =	.3600				

PARAMETRIC DATA

BETA =	5.000	ELEVON =	.000
AILRON =	.000	BDFLAP =	.000
SPDBRK =	55.000	RUDDER =	15.000

RUN NO. 98/ 0 GRADIENT INTERVAL = -5.00/ 5.00

Q	ALPHA	DELE1	DELE2	DELE3	DELE4	BDFLAP	ELEVON	AILRON
47.610	-.072	.00000	.00000	.00000	.00000	.00000	.00000	.00000
47.660	5.123	.00000	.00000	.00000	.00000	.00000	.00000	.00000
47.620	10.325	.00000	.00000	.00000	.00000	.00000	.00000	.00000
47.620	15.537	.00000	.00000	.00000	.00000	.00000	.00000	.00000
47.590	20.783	.00000	.00000	.00000	.00000	.00000	.00000	.00000
	GRADIENT	.00000	.00000	.00000	.00000	.00000	.00000	.00000

ARC40X80-462(OA100) OV101 (ENA04I) (15 APR 82)

REFERENCE DATA

SREF =	2690.0000 SQ.FT.	XMRP =	1076.6800 IN.	XO	
LREF =	474.8100 INCHES	YMRP =	.0000 IN.	YO	
BREF =	936.6800 INCHES	ZMRP =	375.0000 IN.	ZO	
SCALE =	.3600				

PARAMETRIC DATA

BETA =	5.000	ELEVON =	.000
AILRON =	.000	BDFLAP =	.000
SPDBRK =	48.000	RUDDER =	19.500

RUN NO. 99/ 0 GRADIENT INTERVAL = -5.00/ 5.00

Q	ALPHA	DELE1	DELE2	DELE3	DELE4	BDFLAP	ELEVON	AILRON
47.690	-.073	.00000	.00000	.00000	.00000	.00000	.00000	.00000
47.690	5.122	.00000	.00000	.00000	.00000	.00000	.00000	.00000
47.750	10.321	.00000	.00000	.00000	.00000	.00000	.00000	.00000
47.610	15.534	.00000	.00000	.00000	.00000	.00000	.00000	.00000
47.600	20.780	.00000	.00000	.00000	.00000	.00000	.00000	.00000
	GRADIENT	.00000	.00000	.00000	.00000	.00000	.00000	.00000

ARC40X80-462(OA100) OV101 (ENA04J) (15 APR 82)

REFERENCE DATA

SREF =	2690.0000 SQ.FT.	XMRP =	1076.6800 IN. XO		
LREF =	474.8100 INCHES	YMRP =	.0000 IN. YO		
BREF =	936.6800 INCHES	ZMRP =	375.0000 IN. ZO		
SCALE =	.3600				

PARAMETRIC DATA

BETA =	.000	ELEVON =	.000
AILRON =	.000	BDFLAP =	.000
SPDBRK =	25.000	RUDDER =	-22.500

RUN NO. 86/ 0 GRADIENT INTERVAL = -5.00/ 5.00

Q	ALPHA	DELE1	DELE2	DELE3	DELE4	BDFLAP	ELEVON	AILRON
47.740	-.064	.00000	.00000	.00000	.00000	.00000	.00000	.00000
47.680	5.131	.00000	.00000	.00000	.00000	.00000	.00000	.00000
47.780	10.334	.00000	.00000	.00000	.00000	.00000	.00000	.00000
47.680	15.544	.00000	.00000	.00000	.00000	.00000	.00000	.00000
47.710	20.747	.00000	.00000	.00000	.00000	.00000	.00000	.00000
	GRADIENT	.00000	.00000	.00000	.00000	.00000	.00000	.00000

ARC40X80-462(OA100) OV101 (ENA04K) (15 APR 82)

REFERENCE DATA

SREF =	2690.0000 SQ.FT.	XMRP =	1076.6800 IN. XO		
LREF =	474.8100 INCHES	YMRP =	.0000 IN. YO		
BREF =	936.6800 INCHES	ZMRP =	375.0000 IN. ZO		
SCALE =	.3600				

PARAMETRIC DATA

BETA =	.000	ELEVON =	.000
AILRON =	.000	BDFLAP =	.000
SPDBRK =	25.000	RUDDER =	-15.000

RUN NO. 87/ 0 GRADIENT INTERVAL = -5.00/ 5.00

Q	ALPHA	DELE1	DELE2	DELE3	DELE4	BDFLAP	ELEVON	AILRON
47.720	-.058	.00000	.00000	.00000	.00000	.00000	.00000	.00000
47.690	5.133	.00000	.00000	.00000	.00000	.00000	.00000	.00000
47.830	10.338	.00000	.00000	.00000	.00000	.00000	.00000	.00000
47.580	15.548	.00000	.00000	.00000	.00000	.00000	.00000	.00000
47.630	20.754	.00000	.00000	.00000	.00000	.00000	.00000	.00000
	GRADIENT	.00000	.00000	.00000	.00000	.00000	.00000	.00000

ARC40X80-462(OA100) OV101+NOSE GEAR (ENA04L) (15 APR 82)

REFERENCE DATA

SREF =	2690.0000 SQ.FT.	XMRP =	1076.6800 IN. XO		
LREF =	474.8100 INCHES	YMRP =	.0000 IN. YO		
BREF =	936.6800 INCHES	ZMRP =	375.0000 IN. ZO		
SCALE =	.3600				

PARAMETRIC DATA

BETA =	.000	ELEVON =	.000
AILRON =	.000	BDFLAP =	.000
SPDBRK =	20.000	RUDDER =	3.000

RUN NO. 108/ 0 GRADIENT INTERVAL = -5.00/ 5.00

Q	ALPHA	DELE1	DELE2	DELE3	DELE4	BDFLAP	ELEVON	AILRON
47.700	-.058	.00000	.00000	.00000	.00000	.00000	.00000	.00000
47.560	5.139	-.05810	-.06100	.00000	.00000	.00000	-.02977	-.02977
47.530	10.342	-.05810	-.06100	-.06050	.00000	.00000	-.04490	-.01465
47.540	15.549	.00000	.00000	.00000	.00000	.00000	.00000	.00000
47.590	20.797	-.05810	.00000	.00000	.00000	.00000	-.01453	-.01453
	GRADIENT	.00000	.00000	.00000	.00000	.00000	.00000	.00000

ARC40X80-462(OA100) OV101+NOSE GEAR (ENA04M) (15 APR 82)

REFERENCE DATA

SREF =	2690.0000 SQ.FT.	XMRP =	1076.6800 IN. XO		
LREF =	474.8100 INCHES	YMRP =	.0000 IN. YO		
BREF =	936.6800 INCHES	ZMRP =	375.0000 IN. ZO		
SCALE =	.3600				

PARAMETRIC DATA

BETA =	5.000	ELEVON =	.000
AILRON =	.000	BDFLAP =	.000
SPDBRK =	20.000	RUDDER =	3.000

RUN NO. 109/ 0 GRADIENT INTERVAL = -5.00/ 5.00

Q	ALPHA	DELE1	DELE2	DELE3	DELE4	BDFLAP	ELEVON	AILRON
47.500	-.051	.00000	.00000	.00000	.00000	.00000	.00000	.00000
47.670	5.143	-.05810	.00000	.00000	.00000	.00000	-.01453	-.01453
47.630	10.340	.00000	.00000	.06050	.00000	.00000	.01513	-.01513
47.390	15.550	.00000	.00000	.00000	.00000	.00000	.00000	.00000
47.870	20.795	.00000	.00000	.00000	.00000	.00000	.00000	.00000
	GRADIENT	.00000	.00000	.00000	.00000	.00000	.00000	.00000

ARC40X80-462(OA100) OV101+NOSE GEAR (ENA04N) (15 APR 82)

REFERENCE DATA

SREF =	2690.0000 SQ.FT.	XMRP =	1076.6800 IN.	XO	
LREF =	474.8100 INCHES	YMRP =	.0000 IN.	YO	
BREF =	936.6800 INCHES	ZMRP =	375.0000 IN.	ZO	
SCALE =	.3600				

PARAMETRIC DATA

BETA =	10.000	ELEVON =	.000
AILRON =	.000	BDFLAP =	.000
SPDBRK =	36.500	RUDDER =	-5.500

RUN NO. 110/ 0 GRADIENT INTERVAL = -5.00/ 5.00

Q	ALPHA	DELE1	DELE2	DELE3	DELE4	BDFLAP	ELEVON	AILRON
47.530	-.041	.00000	.00000	.00000	.00000	.00000	.00000	.00000
47.710	5.146	-.05810	-.06100	-.06050	.00000	.00000	-.04490	-.01465
47.580	10.344	-.05810	.00000	.00000	.00000	.00000	-.01453	-.01453
47.720	15.577	.00000	.00000	.00000	.00000	.00000	.00000	.00000
47.750	20.818	.00000	.00000	.00000	.00000	.00000	.00000	00000
	GRADIENT	.00000	.00000	.00000	.00000	.00000	.00000	.00000

ARC40X80-462(OA100) OV101+NOSE GEAR(FTP OFF) (ENA040) (15 APR 82)

REFERENCE DATA

SREF =	2690.0000 SQ.FT.	XMRP =	1076.6800 IN.	XO	
LREF =	474.8100 INCHES	YMRP =	.0000 IN.	YO	
BREF =	936.6800 INCHES	ZMRP =	375.0000 IN.	ZO	
SCALE =	.3600				

PARAMETRIC DATA

BETA =	.000	ELEVON =	.000
AILRON =	.000	BDFLAP =	.000
SPDBRK =	25.000	RUDDER =	.000

RUN NO. 111/ 0 GRADIENT INTERVAL = -5.00/ 5.00

Q	ALPHA	DELE1	DELE2	DELE3	DELE4	BDFLAP	ELEVON	AILRON
47.460	-.059	-.05810	-.06100	-.06050	.00000	.00000	-.04490	-.01465
47.410	5.135	.00000	.00000	.00000	.00000	.00000	.00000	.00000
47.690	10.339	-.05810	.00000	.00000	.00000	.00000	-.01453	-.01453
47.610	15.549	.00000	.00000	.00000	.00000	.00000	.00000	.00000
47.740	20.797	.00000	.00000	.00000	.00000	.00000	.00000	.00000
	GRADIENT	.00000	.00000	.00000	.00000	.00000	.00000	.00000

ARC40X80-462(OA100) OV101+NOSE GEAR(FTP OFF) (ENA04P) (15 APR 82)

REFERENCE DATA

SREF =	2690.0000 SQ.FT.	XMRP =	1076.6800 IN. XO		
LREF =	474.8100 INCHES	YMRP =	.0000 IN. YO		
BREF =	936.6800 INCHES	ZMRP =	375.0000 IN. ZO		
SCALE =	.3600				

PARAMETRIC DATA

BETA =	5.000	ELEVON =	.000
AILRON =	.000	BDFLAP =	.000
SPDBRK =	25.000	RUDDER =	.000

RUN NO. 112/ 0 GRADIENT INTERVAL = -5.00/ 5.00

Q	ALPHA	DELE1	DELE2	DELE3	DELE4	BDFLAP	ELEVON	AILRON
47.670	-.054	.00000	.00000	.00000	.00000	.00000	.00000	.00000
47.530	5.142	-.05810	.00000	.00000	.00000	.00000	-.01453	-.01453
47.610	10.342	.00000	.00000	.00000	.00000	.00000	.00000	.00000
47.670	15.546	.00000	.00000	.00000	.00000	.00000	.00000	.00000
47.620	20.797	.00000	.00000	.00000	.00000	.00000	.00000	.00000
	GRADIENT	.00000	.00000	.00000	.00000	.00000	.00000	.00000

ARC40X80-462(OA100) OV101+NOSE GEAR(FTP OFF) (ENA04Q) (15 APR 82)

REFERENCE DATA

SREF =	2690.0000 SQ.FT.	XMRP =	1076.6800 IN. XO		
LREF =	474.8100 INCHES	YMRP =	.0000 IN. YO		
BREF =	936.6800 INCHES	ZMRP =	375.0000 IN. ZO		
SCALE =	.3600				

PARAMETRIC DATA

BETA =	10.000	ELEVON =	.000
AILRON =	.000	BDFLAP =	.000
SPDBRK =	25.000	RUDDER =	.000

RUN NO. 113/ 0 GRADIENT INTERVAL = -5.00/ 5.00

Q	ALPHA	DELE1	DELE2	DELE3	DELE4	BDFLAP	ELEVON	AILRON
47.710	-.041	-.05810	.00000	.00000	.00000	.00000	-.01453	-.01453
47.530	5.145	.00000	.00000	.00000	.00000	.00000	.00000	.00000
47.670	10.345	-.05810	.00000	.00000	.00000	.00000	-.01453	-.01453
47.560	15.574	.00000	.00000	.00000	.00000	.00000	.00000	.00000
47.500	20.818	.00000	.00000	.00000	.00000	.00000	.00000	.00000
	GRADIENT	.00000	.00000	.00000	.00000	.00000	.00000	.00000

ARC40X80-462(0A100) OV101(FTP OFF) (ENA04R) (15 APR 82)

REFERENCE DATA

SREF =	2690.0000 SQ.FT.	XMRP =	1076.6800 IN. XO		
LREF =	474.8100 INCHES	YMRP =	.0000 IN. YO		
BREF =	936.6800 INCHES	ZMRP =	375.0000 IN. ZO		
SCALE =	.3600				

PARAMETRIC DATA

BETA =	.000	ELEVON =	.000
AILRON =	.000	BDFLAP =	.000
SPDBRK =	25.000	RUDDER =	.000

RUN NO. 115/ 0 GRADIENT INTERVAL = -5.00/ 5.00

Q	ALPHA	DELE1	DELE2	DELE3	DELE4	BDFLAP	ELEVON	AILRON
47.390	-.065	-.05810	.00000	.00000	.00000	.00000	-.01453	-.01453
47.850	5.135	.00000	.00000	.00000	.00000	.00000	.00000	.00000
47.660	10.337	.00000	.00000	.00000	.00000	.00000	.00000	.00000
47.250	15.545	.00000	.00000	.00000	.00000	.00000	.00000	.00000
47.360	20.815	.00000	.00000	.00000	.00000	.00000	.00000	.00000
	GRADIENT	.00000	.00000	.00000	.00000	.00000	.00000	.00000

ARC40X80-462(0A100) OV101(FTP OFF) (ENA04S) (15 APR 82)

REFERENCE DATA

SREF =	2690.0000 SQ.FT.	XMRP =	1076.6800 IN. XO		
LREF =	474.8100 INCHES	YMRP =	.0000 IN. YO		
BREF =	936.6800 INCHES	ZMRP =	375.0000 IN. ZO		
SCALE =	.3600				

PARAMETRIC DATA

BETA =	.000	ELEVON =	.000
AILRON =	.000	BDFLAP =	.000
SPDBRK =	25.000	RUDDER =	5.000

RUN NO. 114/ 0 GRADIENT INTERVAL = -5.00/ 5.00

Q	ALPHA	DELE1	DELE2	DELE3	DELE4	BDFLAP	ELEVON	AILRON
47.190	-.061	.00000	.00000	.00000	.00000	.00000	.00000	.00000
47.530	5.135	.00000	.00000	.00000	.00000	.00000	.00000	.00000
47.510	10.334	.00000	.00000	.00000	.00000	.00000	.00000	.00000
47.530	15.546	.00000	.00000	.00000	.00000	.00000	.00000	.00000
47.480	20.816	-.05810	.00000	.00000	.00000	.00000	-.01453	-.01453
	GRADIENT	.00000	.00000	.00000	.00000	.00000	.00000	.00000

ARC40X80-462(OA100) OV101(FTP OFF) (ENA04T) (15 APR 82)

REFERENCE DATA

SREF =	2690.0000 SQ.FT.	XMRP =	1076.6800 IN. XO		
LREF =	474.8100 INCHES	YMRP =	.0000 IN. YO		
BREF =	936.6800 INCHES	ZMRP =	375.0000 IN. ZO		
SCALE =	.3600				

PARAMETRIC DATA

BETA =	.000	ELEVON =	.000
AILRON =	.000	BDFLAP =	.000
SPDBRK =	25.000	RUDDER =	10.000

RUN NO. 116/ 0 GRADIENT INTERVAL = -5.00/ 5.00

Q	ALPHA	DELE1	DELE2	DELE3	DELE4	BDFLAP	ELEVON	AILRON
47.580	-.062	-.05810	.00000	.00000	.00000	.00000	-.01453	-.01453
47.680	5.131	.00000	.00000	.00000	.00000	.00000	.00000	.00000
47.500	10.332	.00000	.00000	.00000	.00000	.00000	.00000	.00000
47.710	15.543	.00000	.00000	.00000	.00000	.00000	.00000	.00000
47.370	20.815	.00000	.00000	.00000	.00000	.00000	.00000	.00000
	GRADIENT	.00000	.00000	.00000	.00000	.00000	.00000	.00000

ARC40X80-462(OA100) OV101(FTP OFF) (ENA04U) (15 APR 82)

REFERENCE DATA

SREF =	2690.0000 SQ.FT.	XMRP =	1076.6800 IN. XO		
LREF =	474.8100 INCHES	YMRP =	.0000 IN. YO		
BREF =	936.6800 INCHES	ZMRP =	375.0000 IN. ZO		
SCALE =	.3600				

PARAMETRIC DATA

BETA =	.000	ELEVON =	.000
AILRON =	.000	BDFLAP =	.000
SPDBRK =	25.000	RUDDER =	15.000

RUN NO. 117/ 0 GRADIENT INTERVAL = -5.00/ 5.00

Q	ALPHA	DELE1	DELE2	DELE3	DELE4	BDFLAP	ELEVON	AILRON
47.680	-.065	.00000	.00000	.00000	.00000	.00000	.00000	.00000
48.020	5.131	.00000	.00000	.00000	.00000	.00000	.00000	.00000
47.660	10.329	.00000	.00000	.00000	.00000	.00000	.00000	.00000
47.470	15.544	.00000	.00000	.00000	.00000	.00000	.00000	.00000
47.650	20.806	.00000	.00000	.00000	.00000	.00000	.00000	.00000
	GRADIENT	.00000	.00000	.00000	.00000	.00000	.00000	.00000

ARC40X80-462(0A100) OV101(FTP OFF) (ENA04V) (15 APR 82)

REFERENCE DATA

SREF =	2690.0000 SQ.FT.	XMRP =	1076.6800 IN.	XO	
LREF =	474.8100 INCHES	YMRP =	.0000 IN.	YO	
BREF =	936.6800 INCHES	ZMRP =	375.0000 IN.	ZO	
SCALE =	.3600				

PARAMETRIC DATA

BETA =	.000	ELEVON =	.000
AILRON =	.000	BDFLAP =	.000
SPDBRK =	25.000	RUDDER =	22.500

RUN NO. 118/ 0 GRADIENT INTERVAL = -5.00/ 5.00

Q	ALPHA	DELE1	DELE2	DELE3	DELE4	BDFLAP	ELEVON	AILRON
47.560	-.067	.00000	.00000	.00000	.00000	.00000	.00000	.00000
47.610	5.125	-.05810	.00000	.00000	.00000	.00000	-.01453	-.01453
47.540	10.330	-.05810	-.06100	-.06050	-.05950	.00000	-.05977	.00022
47.740	15.540	-.05810	.00000	.00000	.00000	.00000	-.01453	-.01453
47.530	20.806	.00000	.00000	.00000	.00000	.00000	.00000	.00000
	GRADIENT	.00000	.00000	.00000	.00000	.00000	.00000	.00000

ARC40X80-462(0A100) OV101(FTP OFF) (ENA04W) (15 APR 82)

REFERENCE DATA

SREF =	2690.0000 SQ.FT.	XMRP =	1076.6800 IN.	XO	
LREF =	474.8100 INCHES	YMRP =	.0000 IN.	YO	
BREF =	936.6800 INCHES	ZMRP =	375.0000 IN.	ZO	
SCALE =	.3600				

PARAMETRIC DATA

BETA =	5.000	ELEVON =	.000
AILRON =	.000	BDFLAP =	.000
SPDBRK =	25.000	RUDDER =	.000

RUN NO. 119/ 0 GRADIENT INTERVAL = -5.00/ 5.00

Q	ALPHA	DELE1	DELE2	DELE3	DELE4	BDFLAP	ELEVON	AILRON
47.790	-.054	.00000	-.06100	-.06050	-.05950	.00000	-.04525	.01475
47.230	5.137	.00000	.00000	.00000	.00000	.00000	.00000	.00000
47.200	10.342	.00000	.00000	.00000	.00000	.00000	.00000	.00000
47.330	15.548	.00000	.00000	.00000	.00000	.00000	.00000	.00000
47.770	20.799	.05810	.00000	.00000	.00000	.00000	.01453	.01453
	GRADIENT	.00000	.00000	.00000	.00000	.00000	.00000	.00000

ARC40X80-462(OA100) OV101(FTP OFF) (ENA04X) (15 APR 82)

REFERENCE DATA

SREF =	2690.0000 SQ.FT.	XMRP =	1076.6800 IN.	XO	
LREF =	474.8100 INCHES	YMRP =	.0000 IN.	YO	
BREF =	936.6800 INCHES	ZMRP =	375.0000 IN.	ZO	
SCALE =	.3600				

PARAMETRIC DATA

BETA =	5.000	ELEVON =	.000
AILRON =	.000	BDFLAP =	.000
SPDBRK =	25.000	RUDDER =	5.000

RUN NO. 120/ 0 GRADIENT INTERVAL = -5.00/ 5.00

Q	ALPHA	DELE1	DELE2	DELE3	DELE4	BDFLAP	ELEVON	AILRON
47.850	-.057	.00000	.00000	.00000	.00000	.00000	.00000	.00000
47.610	5.138	.05810	.00000	.00000	.00000	.00000	.01453	.01453
47.510	10.337	.05810	.00000	.00000	.00000	.00000	.01453	.01453
47.350	15.547	.05810	.00000	.00000	.00000	.00000	.01453	.01453
47.530	20.801	.05810	.00000	.00000	.00000	.00000	.01453	.01453
	GRADIENT	.00000	.00000	.00000	.00000	.00000	.00000	.00000

ARC40X80-462(OA100) OV101(FTP OFF) (ENA04Y) (15 APR 82)

REFERENCE DATA

SREF =	2690.0000 SQ.FT.	XMRP =	1076.6800 IN.	XO	
LREF =	474.8100 INCHES	YMRP =	.0000 IN.	YO	
BREF =	936.6800 INCHES	ZMRP =	375.0000 IN.	ZO	
SCALE =	.3600				

PARAMETRIC DATA

BETA =	5.000	ELEVON =	.000
AILRON =	.000	BDFLAP =	.000
SPDBRK =	25.000	RUDDER =	10.000

RUN NO. 121/ 0 GRADIENT INTERVAL = -5.00/ 5.00

Q	ALPHA	DELE1	DELE2	DELE3	DELE4	BDFLAP	ELEVON	AILRON
47.500	-.059	.05810	.00000	.00000	.00000	.00000	.01453	.01453
47.460	5.138	.05810	.00000	.00000	.00000	.00000	.01453	.01453
47.440	10.331	.05810	.00000	.00000	.00000	.00000	.01453	.01453
47.390	15.542	.00000	-.06100	.00000	.00000	.00000	-.01525	-.01525
47.640	20.796	.05810	.00000	.00000	.00000	.00000	.01453	.01453
	GRADIENT	.00000	.00000	.00000	.00000	.00000	.00000	.00000

ARC40X80-462(OA100) OV101(FTP OFF) (ENA04Z) (15 APR 82)

REFERENCE DATA

SREF = 2690.0000 SQ.FT. XMRP = 1076.6800 IN. XO
LREF = 474.8100 INCHES YMRP = .0000 IN. YO
BREF = 936.6800 INCHES ZMRP = 375.0000 IN. ZO
SCALE = .3600

PARAMETRIC DATA

BETA = 5.000 ELEVON = .000
AILRON = .000 BDFLAP = .000
SPDBRK = 25.000 RUDDER = 15.000

RUN NO. 122/ 0 GRADIENT INTERVAL = -5.00/ 5.00

Q	ALPHA	DELE1	DELE2	DELE3	DELE4	BDFLAP	ELEVON	AILRON
47.240	-.059	.05810	.00000	.00000	.00000	.00000	.01453	.01453
47.510	5.131	.05810	.00000	.00000	.00000	.00000	.01453	.01453
47.360	10.331	.05810	.00000	.00000	.00000	.00000	.01453	.01453
47.540	15.545	.05810	.00000	.00000	.00000	.00000	.01453	.01453
47.560	20.799	.05810	.00000	.00000	.00000	.00000	.01453	.01453
	GRADIENT	.00000	.00000	.00000	.00000	.00000	.00000	.00000

ARC40X80-462(OA100) OV101(FTP OFF) (ENA05A) (15 APR 82)

REFERENCE DATA

SREF = 2690.0000 SQ.FT. XMRP = 1076.6800 IN. XO
LREF = 474.8100 INCHES YMRP = .0000 IN. YO
BREF = 936.6800 INCHES ZMRP = 375.0000 IN. ZO
SCALE = .3600

PARAMETRIC DATA

BETA = 5.000 ELEVON = .000
AILRON = .000 BDFLAP = .000
SPDBRK = 25.000 RUDDER = 22.500

RUN NO. 123/ 0 GRADIENT INTERVAL = -5.00/ 5.00

Q	ALPHA	DELE1	DELE2	DELE3	DELE4	BDFLAP	ELEVON	AILRON
47.490	-.069	.00000	.00000	.00000	.00000	.00000	.00000	.00000
47.630	5.129	.00000	.00000	.00000	.00000	.00000	.00000	.00000
47.560	10.328	.00000	-.06100	-.06050	.00000	.00000	-.03038	-.00013
47.570	15.536	.00000	.00000	.00000	.00000	.00000	.00000	.00000
47.670	20.792	.05810	.00000	.00000	.00000	.00000	.01453	.01453
	GRADIENT	.00000	.00000	.00000	.00000	.00000	.00000	.00000

ARC40X80-462(OA100) OV101(FTP OFF) (ENA05B) (15 APR 82)

REFERENCE DATA

SREF =	2690.0000 SQ.FT.	XMRP =	1076.6800 IN.	XO	
LREF =	474.8100 INCHES	YMRP =	.0000 IN.	YO	
BREF =	936.6800 INCHES	ZMRP =	375.0000 IN.	ZO	
SCALE =	.3600				

PARAMETRIC DATA

BETA =	10.000	ELEVON =	.000
AILRON =	.000	BDFLAP =	.000
SPDBRK =	25.000	RUDDER =	.000

RUN NO. 124/ 0 GRADIENT INTERVAL = -5.00/ 5.00

Q	ALPHA	DELE1	DELE2	DELE3	DELE4	BDFLAP	ELEVON	AILRON
47.470	-.042	.05810	.00000	.00000	.00000	.00000	.01453	.01453
47.540	5.146	.05810	.00000	.00000	.00000	.00000	.01453	.01453
47.480	10.343	.00000	.00000	.00000	.00000	.00000	.00000	.00000
47.480	15.573	.05810	.00000	.00000	.00000	.00000	.01453	.01453
47.560	20.820	.05810	.00000	.00000	.00000	.00000	.01453	.01453
	GRADIENT	.00000	.00000	.00000	.00000	.00000	.00000	.00000

ARC40X80-462(OA100) OV101(FTP OFF) (ENA05C) (15 APR 82)

REFERENCE DATA

SREF =	2690.0000 SQ.FT.	XMRP =	1076.6800 IN.	XO	
LREF =	474.8100 INCHES	YMRP =	.0000 IN.	YO	
BREF =	936.6800 INCHES	ZMRP =	375.0000 IN.	ZO	
SCALE =	.3600				

PARAMETRIC DATA

BETA =	10.000	ELEVON =	.000
AILRON =	.000	BDFLAP =	.000
SPDBRK =	25.000	RUDDER =	5.000

RUN NO. 125/ 0 GRADIENT INTERVAL = -5.00/ 5.00

Q	ALPHA	DELE1	DELE2	DELE3	DELE4	BDFLAP	ELEVON	AILRON
47.480	-.044	.05810	.06100	.00000	.00000	.00000	.02977	.02977
47.500	5.145	.00000	-.06100	-.06050	-.05950	.00000	-.04525	.01475
47.380	10.345	.00000	.00000	.00000	.00000	.00000	.00000	.00000
47.500	15.568	.05810	.00000	.00000	.00000	.00000	.01453	.01453
47.380	20.824	.05810	.00000	.00000	.00000	.00000	.01453	.01453
	GRADIENT	.00000	.00000	.00000	.00000	.00000	.00000	.00000

ARC40X80-462(0A100) OV101(FTP OFF) (ENA05D) (15 APR 82)

REFERENCE DATA

SREF =	2690.0000 SQ.FT.	XMRP =	1076.6800 IN. XO		
LREF =	474.8100 INCHES	YMRP =	.0000 IN. YO		
BREF =	936.6800 INCHES	ZMRP =	375.0000 IN. ZO		
SCALE =	.3600				

PARAMETRIC DATA

BETA =	10.000	ELEVON =	.000
AILRON =	.000	BDFLAP =	.000
SPDBRK =	25.000	RUDDER =	10.000

RUN NO. 126/ 0 GRADIENT INTERVAL = -5.00/ 5.00

Q	ALPHA	DELE1	DELE2	DELE3	DELE4	BDFLAP	ELEVON	AILRON
47.500	-.047	.05810	.00000	.00000	.00000	.00000	.01453	.01453
47.460	5.143	.05810	.00000	.00000	.00000	.00000	.01453	.01453
47.430	10.341	.00000	-.06100	-.06050	.00000	.00000	-.03038	-.00013
47.520	15.569	.05810	.00000	.00000	.00000	.00000	.01453	.01453
47.540	20.821	.05810	.00000	.00000	.00000	.00000	.01453	.01453
	GRADIENT	.00000	.00000	.00000	.00000	.00000	.00000	.00000

ARC40X80-462(0A100) OV101(FTP OFF) (ENA05E) (15 APR 82)

REFERENCE DATA

SREF =	2690.0000 SQ.FT.	XMRP =	1076.6800 IN. XO		
LREF =	474.8100 INCHES	YMRP =	.0000 IN. YO		
BREF =	936.6800 INCHES	ZMRP =	375.0000 IN. ZO		
SCALE =	.3600				

PARAMETRIC DATA

BETA =	10.000	ELEVON =	.000
AILRON =	.000	BDFLAP =	.000
SPDBRK =	25.000	RUDDER =	15.000

RUN NO. 127/ 0 GRADIENT INTERVAL = -5.00/ 5.00

Q	ALPHA	DELE1	DELE2	DELE3	DELE4	BDFLAP	ELEVON	AILRON
47.540	-.046	.05810	.00000	.00000	.00000	.00000	.01453	.01453
47.480	5.142	.05810	.00000	.00000	.00000	.00000	.01453	.01453
47.470	10.340	.05810	.00000	.00000	.00000	.00000	.01453	.01453
47.540	15.567	.05810	.00000	.00000	.00000	.00000	.01453	.01453
47.630	20.816	.05810	.00000	.00000	.00000	.00000	.01453	.01453
	GRADIENT	.00000	.00000	.00000	.00000	.00000	.00000	.00000

ARC40X80-462(OA100) OV101(FTP OFF) (ENA05F) (15 APR 82)

REFERENCE DATA

SREF = 2690.0000 SQ.FT. XMRP = 1076.6800 IN. XO
LREF = 474.8100 INCHES YMRP = .0000 IN. YO
BREF = 936.6800 INCHES ZMRP = 375.0000 IN. ZO
SCALE = .3600

PARAMETRIC DATA

BETA = 10.000 ELEVON = .000
AILRON = .000 BDFLAP = .000
SPDBRK = 25.000 RUDDER = 22.500

RUN NO. 128/ 0 GRADIENT INTERVAL = -5.00/ 5.00

Q	ALPHA	DELE1	DELE2	DELE3	DELE4	BDFLAP	ELEVON	AILRON
47.670	-.050	.05810	.00000	.00000	.00000	.00000	.01453	.01453
47.620	5.140	.00000	-.06100	-.06050	-.05950	.00000	-.04525	.01475
47.640	10.336	.00000	.00000	.00000	.00000	.00000	.00000	.00000
47.690	15.561	.00000	.00000	.00000	.00000	.00000	.00000	.00000
47.600	20.816	.05810	.00000	.00000	.00000	.00000	.01453	.01453
	GRADIENT	.00000	.00000	.00000	.00000	.00000	.00000	.00000

ARC40X80-462(OA100) OV101(ADS OFF) (ENA05G) (15 APR 82)

REFERENCE DATA

SREF = 2690.0000 SQ.FT. XMRP = 1076.6800 IN. XO
LREF = 474.8100 INCHES YMRP = .0000 IN. YO
BREF = 936.6800 INCHES ZMRP = 375.0000 IN. ZO
SCALE = .3600

PARAMETRIC DATA

BETA = .000 ELEVON = .000
AILRON = .000 BDFLAP = .000
SPDBRK = 87.000 RUDDER = .000

RUN NO. 129/ 0 GRADIENT INTERVAL = -5.00/ 5.00

Q	ALPHA	DELE1	DELE2	DELE3	DELE4	BDFLAP	ELEVON	AILRON
47.710	-.096	.00000	.00000	.00000	.00000	.00000	.00000	.00000
47.550	5.092	.00000	.00000	.00000	.00000	.00000	.00000	.00000
47.900	10.298	-.05810	.00000	.00000	.00000	.00000	-.01453	-.01453
47.460	15.507	-.05810	.00000	.00000	.00000	.00000	-.01453	-.01453
47.690	20.773	-.05810	-.06100	-.06050	-.05950	.00000	-.05977	.00022
	GRADIENT	.00000	.00000	.00000	.00000	.00000	.00000	.00000

ARC40X80-462(OA100) OV101(ADS OFF) (ENA05H) (15 APR 82)

REFERENCE DATA

SREF =	2690.0000 SQ.FT.	XMRP =	1076.6800 IN. XO		
LREF =	474.8100 INCHES	YMRP =	.0000 IN. YO		
BREF =	936.6800 INCHES	ZMRP =	375.0000 IN. ZO		
SCALE =	.3600				

PARAMETRIC DATA

BETA =	.000	ELEVON =	.000
AILRON =	.000	BDFLAP =	.000
SPDBRK =	84.500	RUDDER =	3.500

RUN NO. 130/ 0 GRADIENT INTERVAL = -5.00/ 5.00

Q	ALPHA	DELE1	DELE2	DELE3	DELE4	BDFLAP	ELEVON	AILRON
47.410	-.095	-.05810	.00000	.00000	.00000	.00000	-.01453	-.01453
47.580	5.091	-.05810	-.06100	-.06050	-.05950	.00000	-.05977	.00022
47.720	10.298	-.05810	-.06100	-.06050	-.05950	.00000	-.05977	.00022
47.330	15.509	-.05810	-.06100	-.06050	-.05950	.00000	-.05977	.00022
47.700	20.773	-.05810	.00000	.00000	.00000	.00000	-.01453	-.01453
	GRADIENT	.00000	.00000	.00000	.00000	.00000	.00000	.00000

ARC40X80-462(OA100) OV101(ADS OFF) (ENA05I) (15 APR 82)

REFERENCE DATA

SREF =	2690.0000 SQ.FT.	XMRP =	1076.6800 IN. XO		
LREF =	474.8100 INCHES	YMRP =	.0000 IN. YO		
BREF =	936.6800 INCHES	ZMRP =	375.0000 IN. ZO		
SCALE =	.3600				

PARAMETRIC DATA

BETA =	.000	ELEVON =	.000
AILRON =	.000	BDFLAP =	.000
SPDBRK =	80.000	RUDDER =	5.500

RUN NO. 131/ 0 GRADIENT INTERVAL = -5.00/ 5.00

Q	ALPHA	DELE1	DELE2	DELE3	DELE4	BDFLAP	ELEVON	AILRON
47.640	-.095	-.05810	.00000	.00000	.00000	.00000	-.01453	-.01453
47.560	5.091	-.05810	.00000	.00000	.00000	.00000	-.01453	-.01453
47.370	10.296	-.05810	-.06100	.00000	.00000	.00000	-.02977	-.02977
47.640	15.503	-.05810	.00000	.00000	.00000	.00000	-.01453	-.01453
47.580	20.768	-.05810	.00000	-.06050	-.05950	.00000	-.04452	.01548
	GRADIENT	.00000	.00000	.00000	.00000	.00000	.00000	.00000

ARC40X80-462(OA100) OV101(ADS OFF) (ENA05J) (15 APR 82)

REFERENCE DATA

SREF =	2690.0000 SQ.FT.	XMRP =	1076.6800 IN.	XO	
LREF =	474.8100 INCHES	YMRP =	.0000 IN.	YO	
BREF =	936.6800 INCHES	ZMRP =	375.0000 IN.	ZO	
SCALE =	.3600				

PARAMETRIC DATA

BETA =	.000	ELEVON =	.000
AILRON =	.000	BDFLAP =	.000
SPDBRK =	78.500	RUDDER =	6.000

RUN NO. 132/ 0 GRADIENT INTERVAL = -5.00/ 5.00

Q	ALPHA	DELE1	DELE2	DELE3	DELE4	BDFLAP	ELEVON	AILRON
47.510	-.098	-.05810	.00000	.00000	.00000	.00000	-.01453	-.01453
47.620	5.091	.00000	.00000	.00000	.00000	.00000	.00000	.00000
47.760	10.298	-.05810	.00000	.00000	.00000	.00000	-.01453	-.01453
47.780	15.506	-.05810	-.06100	.00000	.00000	.00000	-.02977	-.02977
47.810	20.777	-.05810	.00000	-.06050	-.05950	.00000	-.04452	.01548
	GRADIENT	.00000	.00000	.00000	.00000	.00000	.00000	.00000

ARC40X80-462(OA100) OV101(ADS OFF) (ENA05K) (15 APR 82)

REFERENCE DATA

SREF =	2690.0000 SQ.FT.	XMRP =	1076.6800 IN.	XO	
LREF =	474.8100 INCHES	YMRP =	.0000 IN.	YO	
BREF =	936.6800 INCHES	ZMRP =	375.0000 IN.	ZO	
SCALE =	.3600				

PARAMETRIC DATA

BETA =	5.000	ELEVON =	.000
AILRON =	.000	BDFLAP =	.000
SPDBRK =	87.000	RUDDER =	.000

RUN NO. 133/ 0 GRADIENT INTERVAL = -5.00/ 5.00

Q	ALPHA	DELE1	DELE2	DELE3	DELE4	BDFLAP	ELEVON	AILRON
47.730	-.095	-.05810	.00000	.00000	.00000	.00000	-.01453	-.01453
47.660	5.099	-.05810	-.06100	-.06050	-.05950	.00000	-.05977	.00022
47.700	10.298	-.05810	.00000	.00000	.00000	.00000	-.01453	-.01453
47.620	15.505	-.05810	-.06100	-.06050	-.05950	.00000	-.05977	.00022
47.490	20.756	-.05810	.00000	.00000	.00000	.00000	-.01453	-.01453
	GRADIENT	.00000	.00000	.00000	.00000	.00000	.00000	.00000

ARC40X80-462(OA100) OV101(ADS OFF) (ENA05L) (15 APR 82)

REFERENCE DATA

SREF =	2690.0000 SQ.FT.	XMRP =	1076.6800 IN. XO		
LREF =	474.8100 INCHES	YMRP =	.0000 IN. YO		
BREF =	936.6800 INCHES	ZMRP =	375.0000 IN. ZO		
SCALE =	.3600				

PARAMETRIC DATA

BETA =	5.000	ELEVON =	.000
AILRON =	.000	BDFLAP =	.000
SPDBRK =	84.500	RUDDER =	3.500

RUN NO. 134/ 0 GRADIENT INTERVAL = -5.00/ 5.00

Q	ALPHA	DELE1	DELE2	DELE3	DELE4	BDFLAP	ELEVON	AILRON
47.590	-.091	.00000	.00000	.00000	.00000	.00000	.00000	.00000
47.640	5.094	-.05810	.00000	.00000	.00000	.00000	-.01453	-.01453
47.660	10.298	-.05810	.00000	-.06050	-.05950	.00000	-.04452	.01548
47.490	15.508	-.05810	-.06100	-.06050	.00000	.00000	-.04490	-.01465
47.850	20.751	.00000	.00000	.00000	.00000	.00000	.00000	.00000
	GRADIENT	.00000	.00000	.00000	.00000	.00000	.00000	.00000

ARC40X80-462(OA100) OV101(ADS OFF) (ENA05M) (15 APR 82)

REFERENCE DATA

SREF =	2690.0000 SQ.FT.	XMRP =	1076.6800 IN. XO		
LREF =	474.8100 INCHES	YMRP =	.0000 IN. YO		
BREF =	936.6800 INCHES	ZMRP =	375.0000 IN. ZO		
SCALE =	.3600				

PARAMETRIC DATA

BETA =	5.000	ELEVON =	.000
AILRON =	.000	BDFLAP =	.000
SPDBRK =	80.000	RUDDER =	5.500

RUN NO. 135/ 0 GRADIENT INTERVAL = -5.00/ 5.00

Q	ALPHA	DELE1	DELE2	DELE3	DELE4	BDFLAP	ELEVON	AILRON
47.760	-.097	.00000	.00000	.00000	.00000	.00000	.00000	.00000
47.690	5.094	-.05810	.00000	.00000	.00000	.00000	-.01453	-.01453
47.450	10.299	-.05810	.00000	.00000	.00000	.00000	-.01453	-.01453
47.500	15.507	.00000	.00000	.00000	.00000	.00000	.00000	.00000
47.670	20.759	-.05810	-.06100	-.06050	.00000	.00000	-.04490	-.01465
	GRADIENT	.00000	.00000	.00000	.00000	.00000	.00000	.00000

ARC40X80-462(OA100) OV101(ADS OFF) (ENA05N) (15 APR 82)

REFERENCE DATA

SREF =	2690.0000 SQ.FT.	XMRP =	1076.6800 IN.	XO	
LREF =	474.8100 INCHES	YMRP =	.0000 IN.	YO	
BREF =	936.6800 INCHES	ZMRP =	375.0000 IN.	ZO	
SCALE =	.3600				

PARAMETRIC DATA

BETA =	5.000	ELEVON =	.000
AILRON =	.000	BDFLAP =	.000
SPDBRK =	78.500	RUDDER =	6.000

RUN NO. 136/ 0 GRADIENT INTERVAL = -5.00/ 5.00

Q	ALPHA	DELE1	DELE2	DELE3	DELE4	BDFLAP	ELEVON	AILRON
47.760	-.094	.00000	.00000	.00000	.00000	.00000	.00000	.00000
47.380	5.095	-.05810	-.06100	-.06050	-.05950	.00000	-.05977	.00022
47.450	10.299	-.05810	.00000	.00000	.00000	.00000	-.01453	-.01453
47.670	15.508	-.05810	.00000	.00000	.00000	.00000	-.01453	-.01453
47.530	20.755	.00000	.00000	.00000	.00000	.00000	.00000	.00000
	GRADIENT	.00000	.00000	.00000	.00000	.00000	.00000	.00000

ARC40X80-462(OA100) OV101(ADS OFF) (ENA05O) (15 APR 82)

REFERENCE DATA

SREF =	2690.0000 SQ.FT.	XMRP =	1076.6800 IN.	XO	
LREF =	474.8100 INCHES	YMRP =	.0000 IN.	YO	
BREF =	936.6800 INCHES	ZMRP =	375.0000 IN.	ZO	
SCALE =	.3600				

PARAMETRIC DATA

BETA =	10.000	ELEVON =	.000
AILRON =	.000	BDFLAP =	.000
SPDBRK =	87.000	RUDDER =	.000

RUN NO. 137/ 0 GRADIENT INTERVAL = -5.00/ 5.00

Q	ALPHA	DELE1	DELE2	DELE3	DELE4	BDFLAP	ELEVON	AILRON
47.810	-.077	.00000	.06100	.06050	.05950	.00000	.04525	-.01475
47.530	5.108	.00000	.06100	.06050	.05950	.00000	.04525	-.01475
47.750	10.306	.00000	.06100	.06050	.05950	.00000	.04525	-.01475
47.630	15.529	.00000	.00000	.00000	.00000	.00000	.00000	.00000
47.330	20.781	.05810	.06100	.06050	.05950	.00000	.05977	-.00022
	GRADIENT	.00000	.00000	.00000	.00000	.00000	.00000	.00000

ARC40X80-462(0A100) OV101(ADS OFF) (ENA05P) (15 APR 82)

REFERENCE DATA

SREF =	2690.0000 SQ.FT.	XMRP =	1076.6800 IN. XO		
LREF =	474.8100 INCHES	YMRP =	.0000 IN. YO		
BREF =	936.6800 INCHES	ZMRP =	375.0000 IN. ZO		
SCALE =	.3600				

PARAMETRIC DATA

BETA =	10.000	ELEVON =	.000
AILRON =	.000	BDFLAP =	.000
SPDBRK =	84.500	RUDDER =	3.500

RUN NO. 138/ 0 GRADIENT INTERVAL = -5.00/ 5.00

Q	ALPHA	DELE1	DELE2	DELE3	DELE4	BDFLAP	ELEVON	AILRON
47.520	-.078	.05810	.06100	.06050	.05950	.00000	.05977	-.00022
47.860	5.110	.00000	.00000	.00000	.05950	.00000	.01487	-.01487
47.790	10.307	.00000	.00000	.00000	.00000	.00000	.00000	.00000
47.490	15.529	.00000	.00000	.00000	.05950	.00000	.01487	-.01487
47.890	20.777	.05810	.06100	.06050	.05950	.00000	.05977	-.00022
	GRADIENT	.00000	.00000	.00000	.00000	.00000	.00000	.00000

ARC40X80-462(0A100) OV101(ADS OFF) (ENA05Q) (15 APR 82)

REFERENCE DATA

SREF =	2690.0000 SQ.FT.	XMRP =	1076.6800 IN. XO		
LREF =	474.8100 INCHES	YMRP =	.0000 IN. YO		
BREF =	936.6800 INCHES	ZMRP =	375.0000 IN. ZO		
SCALE =	.3600				

PARAMETRIC DATA

BETA =	10.000	ELEVON =	.000
AILRON =	.000	BDFLAP =	.000
SPDBRK =	80.000	RUDDER =	5.500

RUN NO. 139/ 0 GRADIENT INTERVAL = -5.00/ 5.00

Q	ALPHA	DELE1	DELE2	DELE3	DELE4	BDFLAP	ELEVON	AILRON
47.450	-.080	.00000	.06100	.06050	.05950	.00000	.04525	-.01475
47.430	5.109	.00000	.06100	.00000	.05950	.00000	.03013	.00038
47.410	10.307	.05810	.06100	.06050	.05950	.00000	.05977	-.00022
47.370	15.529	.00000	.06100	.00000	.00000	.00000	.01525	.01525
47.210	20.780	.05810	.06100	.06050	.05950	.00000	.05977	-.00022
	GRADIENT	.00000	.00000	.00000	.00000	.00000	.00000	.00000

ARC40X80-462(OA100) OV101(ADS OFF) (ENA05R) (15 APR 82)

REFERENCE DATA

SREF =	2690.0000 SQ.FT.	XMRP =	1076.6800 IN.	XO	
LREF =	474.8100 INCHES	YMRP =	.0000 IN.	YO	
BREF =	936.6800 INCHES	ZMRP =	375.0000 IN.	ZO	
SCALE =	.3600				

PARAMETRIC DATA

BETA =	10.000	ELEVON =	.000
AILRON =	.000	BDFLAP =	.000
SPDBRK =	78.500	RUDDER =	6.000

RUN NO. 140/ 0 GRADIENT INTERVAL = -5.00/ 5.00

Q	ALPHA	DELE1	DELE2	DELE3	DELE4	BDFLAP	ELEVON	AILRON
47.560	-.078	.05810	.06100	.06050	.05950	.00000	.05977	-.00022
47.130	5.110	.00000	.00000	.00000	.00000	.00000	.00000	.00000
47.600	10.309	.00000	.00000	.00000	.00000	.00000	.00000	.00000
47.540	15.526	.05810	.06100	.06050	.05950	.00000	.05977	-.00022
47.910	20.778	.05810	.06100	.06050	.05950	.00000	.05977	-.00022
	GRADIENT	.00000	.00000	.00000	.00000	.00000	.00000	.00000

ARC40X80-462(OA100) OV101(ADS OFF) (ENA05S) (15 APR 82)

REFERENCE DATA

SREF =	2690.0000 SQ.FT.	XMRP =	1076.6800 IN.	XO	
LREF =	474.8100 INCHES	YMRP =	.0000 IN.	YO	
BREF =	936.6800 INCHES	ZMRP =	375.0000 IN.	ZO	
SCALE =	.3600				

PARAMETRIC DATA

ALPHA =	10.000	BETA =	.000
ELEVON =	.000	AILRON =	.000
BDFLAP =	.000	SPDBRK =	25.000

RUN NO. 141/ 0 GRADIENT INTERVAL = -5.00/ 5.00

Q	RUDDER	DELE1	DELE2	DELE3	DELE4	BDFLAP	ELEVON	AILRON
47.240	-22.907	.00000	.06100	.06050	.05950	.00000	.04525	-.01475
47.740	-15.162	.00000	.06100	.06050	.05950	.00000	.04525	-.01475
47.530	-10.072	.00000	.00000	.00000	.00000	.00000	.00000	.00000
47.600	-5.054	.00000	.06100	.06050	.05950	.00000	.04525	-.01475
47.530	.043	.00000	.06100	.06050	.05950	.00000	.04525	-.01475
47.640	5.082	.00000	.00000	.00000	.05950	.00000	.01487	-.01487
47.570	10.140	.00000	.00000	.00000	.00000	.00000	.00000	.00000
47.570	14.990	.00000	.00000	.00000	.00000	.00000	.00000	.00000
47.430	22.915	.00000	.00000	.00000	.00000	.00000	.00000	.00000
	GRADIENT	.00000	.00000	.00000	.00000	.00000	.00000	.00000

ARC40X80-462(OA100) OV101(ADS OFF) (ENA05T) (15 APR 82)

REFERENCE DATA

SREF =	2690.0000 SQ.FT.	XMRP =	1076.6800 IN. XO		
LREF =	474.8100 INCHES	YMRP =	.0000 IN. YO		
BREF =	936.6800 INCHES	ZMRP =	375.0000 IN. ZO		
SCALE =	.3600				

PARAMETRIC DATA

BETA =	5.000	ELEVON =	.000
AILRON =	.000	BDFLAP =	.000
SPDBRK =	.000	RUDDER =	.000

RUN NO. 142/ 0 GRADIENT INTERVAL = -5.00/ 5.00

Q	ALPHA	DELE1	DELE2	DELE3	DELE4	BDFLAP	ELEVON	AILRON
47.510	5.150	.00000	.06100	.06050	.05950	.00000	.04525	-.01475
47.650	10.351	.00000	.06100	.06050	.05950	.00000	.04525	-.01475
47.420	15.562	.00000	.06100	.06050	.05950	.00000	.04525	-.01475
47.540	20.810	.00000	.06100	.00000	.00000	.00000	.01525	.01525
	GRADIENT	.00000	.00000	.00000	.00000	.00000	.00000	.00000

ARC40X80-462(OA100) OV101(ADS OFF) (ENA05U) (15 APR 82)

REFERENCE DATA

SREF =	2690.0000 SQ.FT.	XMRP =	1076.6800 IN. XO		
LREF =	474.8100 INCHES	YMRP =	.0000 IN. YO		
BREF =	936.6800 INCHES	ZMRP =	375.0000 IN. ZO		
SCALE =	.3600				

PARAMETRIC DATA

BETA =	10.000	ELEVON =	.000
AILRON =	.000	BDFLAP =	.000
SPDBRK =	.000	RUDDER =	.000

RUN NO. 143/ 0 GRADIENT INTERVAL = -5.00/ 5.00

Q	ALPHA	DELE1	DELE2	DELE3	DELE4	BDFLAP	ELEVON	AILRON
47.620	-.035	.00000	.00000	.06050	.05950	.00000	.03000	-.03000
47.660	5.154	.00000	.06100	.06050	.05950	.00000	.04525	-.01475
47.870	10.354	.00000	.00000	.00000	.00000	.00000	.00000	.00000
47.280	15.576	.00000	.00000	.00000	.00000	.00000	.00000	.00000
47.740	20.824	.05810	.06100	.06050	.05950	.00000	.05977	-.00022
	GRADIENT	.00000	.00000	.00000	.00000	.00000	.00000	.00000

ARC40X80-462(OA100) OV101(ADS OFF) (ENA05V) (15 APR 82)

REFERENCE DATA

SREF =	2690.0000 SQ.FT.	XMRP =	1076.6800 IN. XO		
LREF =	474.8100 INCHES	YMRP =	.0000 IN. YO		
BREF =	936.6800 INCHES	ZMRP =	375.0000 IN. ZO		
SCALE =	.3600				

PARAMETRIC DATA

BETA =	10.000	ELEVON =	.000
AILRON =	.000	BDFLAP =	.000
SPDBRK =	25.000	RUDDER =	.000

RUN NO. 144/ 0 GRADIENT INTERVAL = -5.00/ 5.00

Q	ALPHA	DELE1	DELE2	DELE3	DELE4	BDFLAP	ELEVON	AILRON
47.650	-.044	.00000	.06100	.06050	.05950	.00000	.04525	-.01475
47.530	5.147	.00000	.06100	.06050	.05950	.00000	.04525	-.01475
47.640	10.349	.00000	.00000	.00000	.00000	.00000	.00000	.00000
47.920	15.574	.00000	.06100	.00000	.00000	.00000	.01525	.01525
47.210	20.816	.05810	.06100	.06050	.05950	.00000	.05977	-.00022
	GRADIENT	.00000	.00000	.00000	.00000	.00000	.00000	.00000

ARC40X80-462(OA100) OV101+NOSE GEAR(ADS OFF) (ENA05W) (15 APR 82)

REFERENCE DATA

SREF =	2690.0000 SQ.FT.	XMRP =	1076.6800 IN. XO		
LREF =	474.8100 INCHES	YMRP =	.0000 IN. YO		
BREF =	936.6800 INCHES	ZMRP =	375.0000 IN. ZO		
SCALE =	.3600				

PARAMETRIC DATA

BETA =	.000	ELEVON =	.000
AILRON =	.000	BDFLAP =	.000
SPDBRK =	87.000	RUDDER =	.000

RUN NO. 145/ 0 GRADIENT INTERVAL = -5.00/ 5.00

Q	ALPHA	DELE1	DELE2	DELE3	DELE4	BDFLAP	ELEVON	AILRON
47.450	-.089	-.05810	.00000	.00000	.00000	.00000	-.01453	-.01453
47.710	5.097	-.05810	-.06100	-.06050	-.05950	.00000	-.05977	.00022
47.790	10.302	-.05810	.00000	.00000	.00000	.00000	-.01453	-.01453
47.640	15.510	.00000	.00000	.00000	.00000	.00000	.00000	.00000
47.680	20.754	-.05810	.00000	.00000	.00000	.00000	-.01453	-.01453
	GRADIENT	.00000	.00000	.00000	.00000	.00000	.00000	.00000

ARC40X80-462(0A100) OV101+NOSE GEAR(ADS OFF) (ENA05X) (15 APR 82)

REFERENCE DATA

SREF =	2690.0000 SQ.FT.	XMRP =	1076.6800 IN. XO		
LREF =	474.8100 INCHES	YMRP =	.0000 IN. YO		
BREF =	936.6800 INCHES	ZMRP =	375.0000 IN. ZO		
SCALE =	.3600				

PARAMETRIC DATA

BETA =	5.000	ELEVON =	.000
AILRON =	.000	BDFLAP =	.000
SPDBRK =	87.000	RUDDER =	.000

RUN NO. 146/ 0 GRADIENT INTERVAL = -5.00/ 5.00

Q	ALPHA	DELE1	DELE2	DELE3	DELE4	BDFLAP	ELEVON	AILRON
47.630	-.087	-.05810	-.06100	-.06050	-.05950	.00000	-.05977	.00022
47.570	5.102	-.05810	-.06100	-.06050	-.05950	.00000	-.05977	.00022
47.600	10.304	-.05810	.00000	.00000	.00000	.00000	-.01453	-.01453
47.600	15.506	-.05810	.00000	.00000	.00000	.00000	-.01453	-.01453
47.810	20.751	.00000	.00000	.00000	.00000	.00000	.00000	.00000
	GRADIENT	.00000	.00000	.00000	.00000	.00000	.00000	.00000

ARC40X80-462(0A100) OV101+NOSE GEAR(ADS OFF) (ENA05Y) (15 APR 82)

REFERENCE DATA

SREF =	2690.0000 SQ.FT.	XMRP =	1076.6800 IN. XO		
LREF =	474.8100 INCHES	YMRP =	.0000 IN. YO		
BREF =	936.6800 INCHES	ZMRP =	375.0000 IN. ZO		
SCALE =	.3600				

PARAMETRIC DATA

BETA =	10.000	ELEVON =	.000
AILRON =	.000	BDFLAP =	.000
SPDBRK =	87.000	RUDDER =	.000

RUN NO. 147/ 0 GRADIENT INTERVAL = -5.00/ 5.00

Q	ALPHA	DELE1	DELE2	DELE3	DELE4	BDFLAP	ELEVON	AILRON
47.690	-.073	-.05810	.00000	.00000	.00000	.00000	-.01453	-.01453
47.470	5.110	-.05810	-.06100	-.06050	-.05950	.00000	-.05977	.00022
47.620	10.303	-.05810	-.06100	-.06050	-.05950	.00000	-.05977	.00022
47.590	15.537	-.05810	-.06100	-.06050	-.05950	.00000	-.05977	.00022
47.460	20.779	.00000	.00000	.00000	.00000	.00000	.00000	.00000
	GRADIENT	.00000	.00000	.00000	.00000	.00000	.00000	.00000

ARC40X80-462(OA100) OV101+NOSE GEAR(FTP,ADS OFF) (ENA05Z) (15 APR 82)

REFERENCE DATA

SREF =	2690.0000 SQ.FT.	XMRP =	1076.6800 IN.	XO	
LREF =	474.8100 INCHES	YMRP =	.0000 IN.	YO	
BREF =	936.6800 INCHES	ZMRP =	375.0000 IN.	ZO	
SCALE =	.3600				

PARAMETRIC DATA

BETA =	.000	ELEVON =	.000
AILRON =	.000	BDFLAP =	.000
SPDBRK =	.000	RUDDER =	.000

RUN NO. 148/ 0 GRADIENT INTERVAL = -5.00/ 5.00

Q	ALPHA	DELE1	DELE2	DELE3	DELE4	BDFLAP	ELEVON	AILRON
47.710	-.050	-.05810	.00000	-.06050	-.05950	.00000	-.04452	.01548
47.510	5.148	-.05810	.00000	.00000	.00000	.00000	-.01453	-.01453
47.730	10.347	-.05810	-.06100	-.06050	.00000	.00000	-.04490	-.01465
47.530	15.559	-.05810	-.06100	-.06050	-.05950	.00000	-.05977	.00022
47.600	20.802	-.05810	-.06100	-.06050	-.05950	.00000	-.05977	.00022
	GRADIENT	.00000	.00000	.00000	.00000	.00000	.00000	.00000

ARC40X80-462(OA100) OV101+NOSE GEAR(FTP,ADS OFF) (ENA06A) (15 APR 82)

REFERENCE DATA

SREF =	2690.0000 SQ.FT.	XMRP =	1076.6800 IN.	XO	
LREF =	474.8100 INCHES	YMRP =	.0000 IN.	YO	
BREF =	936.6800 INCHES	ZMRP =	375.0000 IN.	ZO	
SCALE =	.3600				

PARAMETRIC DATA

BETA =	5.000	ELEVON =	.000
AILRON =	.000	BDFLAP =	.000
SPDBRK =	.000	RUDDER =	.000

RUN NO. 149/ 0 GRADIENT INTERVAL = -5.00/ 5.00

Q	ALPHA	DELE1	DELE2	DELE3	DELE4	BDFLAP	ELEVON	AILRON
47.470	-.047	.05810	.06100	.00000	.00000	.00000	.02977	.02977
47.600	5.147	.00000	.06100	.00000	.00000	.00000	.01525	.01525
47.470	10.342	.05810	.06100	.00000	.00000	.00000	.02977	.02977
47.480	15.552	.05810	.06100	.00000	.00000	.00000	.02977	.02977
47.520	20.802	.05810	.06100	.00000	.00000	.00000	.02977	.02977
	GRADIENT	.00000	.00000	.00000	.00000	.00000	.00000	.00000

ARC40X80-462(0A100) 0V101+NOSE GEAR(FTP,ADS OFF) (ENA06B) (15 APR 82)

REFERENCE DATA

SREF =	2690.0000 SQ.FT.	XMRP =	1076.6800 IN.	XO	
LREF =	474.8100 INCHES	YMRP =	.0000 IN.	YO	
BREF =	936.6800 INCHES	ZMRP =	375.0000 IN.	ZO	
SCALE =	.3600				

PARAMETRIC DATA

BETA =	10.000	ELEVON =	.000
AILRON =	.000	BDFLAP =	.000
SPDBRK =	.000	RUDDER =	.000

RUN NO. 150/ 0 GRADIENT INTERVAL = -5.00/ 5.00

Q	ALPHA	DELE1	DELE2	DELE3	DELE4	BDFLAP	ELEVON	AILRON
47.500	-.037	.05810	.06100	.00000	.00000	.00000	.02977	.02977
47.210	5.149	.00000	.06100	.00000	.00000	.00000	.01525	.01525
47.360	10.344	.05810	.06100	.00000	.00000	.00000	.02977	.02977
47.620	15.575	.00000	.00000	-.06050	.00000	.00000	-.01513	.01513
47.570	20.823	.05810	.06100	.00000	.00000	.00000	.02977	.02977
	GRADIENT	.00000	.00000	.00000	.00000	.00000	.00000	.00000

ARC40X80-462(0A100) 0V101(FTP AND ADS OFF) (ENA06C) (15 APR 82)

REFERENCE DATA

SREF =	2690.0000 SQ.FT.	XMRP =	1076.6800 IN.	XO	
LREF =	474.8100 INCHES	YMRP =	.0000 IN.	YO	
BREF =	936.6800 INCHES	ZMRP =	375.0000 IN.	ZO	
SCALE =	.3600				

PARAMETRIC DATA

BETA =	.000	ELEVON =	.000
AILRON =	.000	BDFLAP =	.000
SPDBRK =	.000	RUDDER =	.000

RUN NO. 151/ 0 GRADIENT INTERVAL = -5.00/ 5.00

Q	ALPHA	DELE1	DELE2	DELE3	DELE4	BDFLAP	ELEVON	AILRON
47.680	-.056	.00000	.00000	.00000	.00000	.00000	.00000	.00000
47.610	5.140	-.05810	.00000	.00000	.00000	.00000	-.01453	-.01453
47.670	10.340	-.05810	.00000	.00000	.00000	.00000	-.01453	-.01453
47.610	15.551	.00000	.00000	.00000	.00000	.00000	.00000	.00000
47.690	20.824	.00000	.00000	.00000	.00000	.00000	.00000	.00000
	GRADIENT	.00000	.00000	.00000	.00000	.00000	.00000	.00000

ARC40X80-462(OA100) OV101(FTP AND ADS OFF) (ENA06D) (15 APR 82)

REFERENCE DATA

SREF =	2690.0000 SQ.FT.	XMRP =	1076.6800 IN.	XO	
LREF =	474.8100 INCHES	YMRP =	.0000 IN.	YO	
BREF =	936.6800 INCHES	ZMRP =	375.0000 IN.	ZO	
SCALE =	.3600				

PARAMETRIC DATA

BETA =	.000	ELEVON =	.000
AILRON =	.000	BDFLAP =	.000
SPDBRK =	.000	RUDDER =	5.000

RUN NO. 152/ 0 GRADIENT INTERVAL = -5.00/ 5.00

Q	ALPHA	DELE1	DELE2	DELE3	DELE4	BDFLAP	ELEVON	AILRON
47.560	-.057	-.05810	.00000	.00000	.00000	.00000	-.01453	-.01453
47.720	5.140	.00000	.00000	.00000	.00000	.00000	.00000	.00000
47.480	10.340	-.05810	.00000	.00000	.00000	.00000	-.01453	-.01453
47.580	15.556	-.05810	.00000	.00000	.00000	.00000	-.01453	-.01453
47.660	20.824	-.05810	.00000	.00000	.00000	.00000	-.01453	-.01453
	GRADIENT	.00000	.00000	.00000	.00000	.00000	.00000	.00000

ARC40X80-462(OA100) OV101(FTP AND ADS OFF) (ENA06E) (15 APR 82)

REFERENCE DATA

SREF =	2690.0000 SQ.FT.	XMRP =	1076.6800 IN.	XO	
LREF =	474.8100 INCHES	YMRP =	.0000 IN.	YO	
BREF =	936.6800 INCHES	ZMRP =	375.0000 IN.	ZO	
SCALE =	.3600				

PARAMETRIC DATA

BETA =	.000	ELEVON =	.000
AILRON =	.000	BDFLAP =	.000
SPDBRK =	.000	RUDDER =	10.000

RUN NO. 153/ 0 GRADIENT INTERVAL = -5.00/ 5.00

Q	ALPHA	DELE1	DELE2	DELE3	DELE4	BDFLAP	ELEVON	AILRON
47.620	-.054	-.05810	.00000	.00000	.00000	.00000	-.01453	-.01453
47.720	5.139	.00000	.00000	.00000	.00000	.00000	.00000	.00000
47.540	10.338	-.05810	-.06100	-.06050	.00000	.00000	-.04490	-.01465
47.750	15.553	-.05810	.00000	.00000	.00000	.00000	-.01453	-.01453
47.610	20.822	.00000	.00000	.00000	.00000	.00000	.00000	.00000
	GRADIENT	.00000	.00000	.00000	.00000	.00000	.00000	.00000

ARC40X80-462(0A100) OV101(FTP AND ADS OFF) (ENA06F) (15 APR 82)

REFERENCE DATA

SREF =	2630.0000 SQ.FT.	XMRP =	1076.6800 IN. XO		
LREF =	474.8100 INCHES	YMRP =	.0000 IN. YO		
BREF =	936.6800 INCHES	ZMRP =	375.0000 IN. ZO		
SCALE =	.3600				

PARAMETRIC DATA

BETA =	.000	ELEVON =	.000
AILRON =	.000	BDFLAP =	.000
SPDBRK =	.000	RUDDER =	15.000

RUN NO. 154/ 0 GRADIENT INTERVAL = -5.00/ 5.00

Q	ALPHA	DELE1	DELE2	DELE3	DELE4	BDFLAP	ELEVON	AILRON
47.520	-.056	.00000	.00000	.00000	.00000	.00000	.00000	.00000
47.620	5.138	-.05810	.00000	.00000	.00000	.00000	-.01453	-.01453
47.750	10.338	.00000	.00000	.00000	.00000	.00000	.00000	.00000
47.570	15.550	-.05810	.00000	.00000	.00000	.00000	-.01453	-.01453
47.610	20.822	.00000	.00000	.00000	.00000	.00000	.00000	.00000
	GRADIENT	.00000	.00000	.00000	.00000	.00000	.00000	.00000

ARC40X80-462(0A100) OV101(FTP AND ADS OFF) (ENA06G) (15 APR 82)

REFERENCE DATA

SREF =	2690.0000 SQ.FT.	XMRP =	1076.6800 IN. XO		
LREF =	474.8100 INCHES	YMRP =	.0000 IN. YO		
BREF =	936.6800 INCHES	ZMRP =	375.0000 IN. ZO		
SCALE =	.3600				

PARAMETRIC DATA

BETA =	.000	ELEVON =	.000
AILRON =	.000	BDFLAP =	.000
SPDBRK =	.000	RUDDER =	20.500

RUN NO. 155/ 0 GRADIENT INTERVAL = -5.00/ 5.00

Q	ALPHA	DELE1	DELE2	DELE3	DELE4	BDFLAP	ELEVON	AILRON
47.510	-.061	.00000	.00000	.00000	.00000	.00000	.00000	.00000
47.600	5.135	.00000	.00000	.00000	.00000	.00000	.00000	.00000
47.580	10.335	.00000	.00000	.00000	.00000	.00000	.00000	.00000
47.680	15.550	.00000	.00000	.00000	.00000	.00000	.00000	.00000
47.440	20.819	.00000	.00000	.00000	.00000	.00000	.00000	.00000
	GRADIENT	.00000	.00000	.00000	.00000	.00000	.00000	.00000

ARC40X80-462(OA100) OV101(FTP AND ADS OFF) (ENA06H) (15 APR 82)

REFERENCE DATA

SREF =	2690.0000 SQ.FT.	XMRP =	1076.6800 IN.	XO	
LREF =	474.8100 INCHES	YMRP =	.0000 IN.	YO	
BREF =	936.6800 INCHES	ZMRP =	375.0000 IN.	ZO	
SCALE =	.3600				

PARAMETRIC DATA

BETA =	5.000	ELEVON =	.000
AILRON =	.000	BDFLAP =	.000
SPDBRK =	.000	RUDDER =	.000

RUN NO. 156/ 0 GRADIENT INTERVAL = -5.00/ 5.00

Q	ALPHA	DELE1	DELE2	DELE3	DELE4	BDFLAP	ELEVON	AILRON
47.640	-.047	.00000	.00000	.00000	.00000	.00000	.00000	.00000
47.700	5.147	.00000	.00000	.00000	.00000	.00000	.00000	.00000
47.530	10.343	.00000	.00000	.00000	-.05950	.00000	-.01487	.01487
47.460	15.556	.00000	.00000	.00000	.00000	.00000	.00000	.00000
47.670	20.810	.00000	.00000	.00000	.00000	.00000	.00000	.00000
	GRADIENT	.00000	.00000	.00000	.00000	.00000	.00000	.00000

ARC40X80-462(OA100) OV101(FTP AND ADS OFF) (ENA06I) (15 APR 82)

REFERENCE DATA

SREF =	2690.0000 SQ.FT.	XMRP =	1076.6800 IN.	XO	
LREF =	474.8100 INCHES	YMRP =	.0000 IN.	YO	
BREF =	936.6800 INCHES	ZMRP =	375.0000 IN.	ZO	
SCALE =	.3600				

PARAMETRIC DATA

BETA =	5.000	ELEVON =	.000
AILRON =	.000	BDFLAP =	.000
SPDBRK =	.000	RUDDER =	5.000

RUN NO. 157/ 0 GRADIENT INTERVAL = -5.00/ 5.00

Q	ALPHA	DELE1	DELE2	DELE3	DELE4	BDFLAP	ELEVON	AILRON
47.530	-.050	.00000	.00000	.00000	.00000	.00000	.00000	.00000
47.550	5.145	.00000	.00000	.00000	.00000	.00000	.00000	.00000
47.470	10.342	.00000	.00000	.00000	.00000	.00000	.00000	.00000
47.480	15.554	.00000	.00000	.00000	.00000	.00000	.00000	.00000
47.650	20.806	.00000	.00000	.00000	.00000	.00000	.00000	.00000
	GRADIENT	.00000	.00000	.00000	.00000	.00000	.00000	.00000

ARC40X80-462(0A100) OV101(FTP AND ADS OFF) (ENA06J) (15 APR 82)

REFERENCE DATA

SREF =	2690.0000 SQ.FT.	XMRP =	1076.6800 IN.	XO	
LREF =	474.8100 INCHES	YMRP =	.0000 IN.	YO	
BREF =	936.6800 INCHES	ZMRP =	375.0000 IN.	ZO	
SCALE =	.3600				

PARAMETRIC DATA

BETA =	5.000	ELEVON =	.000
AILRON =	.000	BDFLAP =	.000
SPDBRK =	.000	RUDDER =	10.000

RUN NO. 158/ 0 GRADIENT INTERVAL = -5.00/ 5.00

Q	ALPHA	DELE1	DELE2	DELE3	DELE4	BDFLAP	ELEVON	AILRON
47.460	-.051	.00000	.00000	.00000	.00000	.00000	.00000	.00000
47.530	5.145	.00000	.00000	.00000	.00000	.00000	.00000	.00000
47.310	10.341	.00000	.00000	.00000	.00000	.00000	.00000	.00000
47.450	15.583	.00000	.00000	.00000	.00000	.00000	.00000	.00000
47.870	20.783	.00000	.00000	.00000	.00000	.00000	.00000	.00000
	GRADIENT	.00000	.00000	.00000	.00000	.00000	.00000	.00000

ARC40X80-462(0A100) OV101(FTP AND ADS OFF) (ENA06K) (15 APR 82)

REFERENCE DATA

SREF =	2690.0000 SQ.FT.	XMRP =	1076.6800 IN.	XO	
LREF =	474.8100 INCHES	YMRP =	.0000 IN.	YO	
BREF =	936.6800 INCHES	ZMRP =	375.0000 IN.	ZO	
SCALE =	.3600				

PARAMETRIC DATA

BETA =	5.000	ELEVON =	.000
AILRON =	.000	BDFLAP =	.000
SPDBRK =	.000	RUDDER =	15.000

RUN NO. 159/ 0 GRADIENT INTERVAL = -5.00/ 5.00

Q	ALPHA	DELE1	DELE2	DELE3	DELE4	BDFLAP	ELEVON	AILRON
47.480	-.055	.00000	.00000	.00000	.00000	.00000	.00000	.00000
47.690	5.140	.00000	.00000	.00000	.00000	.00000	.00000	.00000
47.600	10.326	.00000	.00000	.00000	.00000	.00000	.00000	.00000
47.680	15.549	.00000	.00000	.00000	.00000	.00000	.00000	.00000
47.830	20.785	.00000	.00000	.00000	.00000	.00000	.00000	.00000
	GRADIENT	.00000	.00000	.00000	.00000	.00000	.00000	.00000

ARC40X80-462(OA100) OV101(FTP AND ADS OFF) (ENA06L) (15 APR 82)

REFERENCE DATA

SREF =	2690.0000 SQ.FT.	XMRP =	1076.6800 IN.	XO	
LREF =	474.8100 INCHES	YMRP =	.0000 IN.	YO	
BREF =	936.6800 INCHES	ZMRP =	375.0000 IN.	ZO	
SCALE =	.3600				

PARAMETRIC DATA

BETA =	5.000	ELEVON =	.000
AILRON =	.000	BDFLAP =	.000
SPDBRK =	.000	RUDDER =	20.500

RUN NO. 160/ 0 GRADIENT INTERVAL = -5.00/ 5.00

Q	ALPHA	DELE1	DELE2	DELE3	DELE4	BDFLAP	ELEVON	AILRON
47.360	-.050	.00000	.00000	.00000	.00000	.00000	.00000	.00000
47.530	5.141	.00000	.00000	.00000	.00000	.00000	.00000	.00000
47.680	10.336	.00000	.00000	.00000	.00000	.00000	.00000	.00000
47.630	15.547	.00000	.00000	.00000	.00000	.00000	.00000	.00000
47.440	20.800	.00000	.00000	.00000	.00000	.00000	.00000	.00000
	GRADIENT	.00000	.00000	.00000	.00000	.00000	.00000	.00000

ARC40X80-462(OA100) OV101(ADS OFF) (ENA06M) (15 APR 82)

REFERENCE DATA

SREF =	2690.0000 SQ.FT.	XMRP =	1076.6800 IN.	XO	
LREF =	474.8100 INCHES	YMRP =	.0000 IN.	YO	
BREF =	936.6800 INCHES	ZMRP =	375.0000 IN.	ZO	
SCALE =	.3600				

PARAMETRIC DATA

BETA =	10.000	ELEVON =	.000
AILRON =	.000	BDFLAP =	.000
SPDBRK =	.000	RUDDER =	.000

RUN NO. 161/ 0 GRADIENT INTERVAL = -5.00/ 5.00

Q	ALPHA	DELE1	DELE2	DELE3	DELE4	BDFLAP	ELEVON	AILRON
47.610	-.038	.00000	.00000	.00000	.00000	.00000	.00000	.00000
47.540	5.151	.00000	.00000	.00000	.00000	.00000	.00000	.00000
47.550	10.352	.00000	.00000	.00000	.00000	.00000	.00000	.00000
47.970	15.573	.00000	.00000	.00000	.00000	.00000	.00000	.00000
47.730	20.823	.00000	.00000	.00000	.00000	.00000	.00000	.00000
	GRADIENT	.00000	.00000	.00000	.00000	.00000	.00000	.00000

ARC40X80-462(OA100) OV101(ADS OFF) (ENA06N) (15 APR 82)

REFERENCE DATA

SREF =	2690.0000 SQ.FT.	XMRP =	1076.6800 IN. XO		
LREF =	474.8100 INCHES	YMRP =	.0000 IN. YO		
BREF =	936.6800 INCHES	ZMRP =	375.0000 IN. ZO		
SCALE =	.3600				

PARAMETRIC DATA

BETA =	10.000	ELEVON =	.000
AILRON =	.000	BDFLAP =	.000
SPDBRK =	.000	RUDDER =	5.000

RUN NO. 162/ 0 GRADIENT INTERVAL = -5.00/ 5.00

Q	ALPHA	DELE1	DELE2	DELE3	DELE4	BDFLAP	ELEVON	AILRON
47.570	-.037	.00000	.00000	.00000	.00000	.00000	.00000	.00000
47.700	5.151	.00000	.00000	.00000	.00000	.00000	.00000	.00000
47.440	10.349	.00000	.00000	.00000	.00000	.00000	.00000	.00000
47.630	15.572	.00000	.00000	.00000	.00000	.00000	.00000	.00000
47.520	20.823	.00000	.00000	.00000	.00000	.00000	.00000	.00000
	GRADIENT	.00000	.00000	.00000	.00000	.00000	.00000	.00000

ARC40X80-462(OA100) OV101(ADS OFF) (ENA06O) (15 APR 82)

REFERENCE DATA

SREF =	2690.0000 SQ.FT.	XMRP =	1076.6800 IN. XO		
LREF =	474.8100 INCHES	YMRP =	.0000 IN. YO		
BREF =	936.6800 INCHES	ZMRP =	375.0000 IN. ZO		
SCALE =	.3600				

PARAMETRIC DATA

BETA =	10.000	ELEVON =	.000
AILRON =	.000	BDFLAP =	.000
SPDBRK =	.000	RUDDER =	10.000

RUN NO. 163/ 0 GRADIENT INTERVAL = -5.00/ 5.00

Q	ALPHA	DELE1	DELE2	DELE3	DELE4	BDFLAP	ELEVON	AILRON
47.640	5.150	.00000	.00000	.00000	.00000	.00000	.00000	.00000
47.480	10.348	.00000	.00000	.00000	.00000	.00000	.00000	.00000
47.500	15.575	.00000	.00000	.00000	.00000	.00000	.00000	.00000
47.740	20.820	.00000	.00000	.00000	.00000	.00000	.00000	.00000
	GRADIENT	.00000	.00000	.00000	.00000	.00000	.00000	.00000

ARC40X80-462(OA100) OV101(ADS OFF) (ENA06P) (15 APR 82)

REFERENCE DATA

SREF =	2690.0000 SQ.FT.	XMRP =	1076.6800 IN.	XO	
LREF =	474.8100 INCHES	YMRP =	.0000 IN.	YO	
BREF =	936.6800 INCHES	ZMRP =	375.0000 IN.	ZO	
SCALE =	.3600				

PARAMETRIC DATA

BETA =	10.000	ELEVON =	.000
AILRON =	.000	BDFLAP =	.000
SPDBRK =	.000	RUDDER =	15.000

RUN NO. 164/ 0 GRADIENT INTERVAL = -5.00/ 5.00

Q	ALPHA	DELE1	DELE2	DELE3	DELE4	BDFLAP	ELEVON	AILRON
47.630	-.040	.00000	.00000	.00000	.00000	.00000	.00000	.00000
47.450	5.148	.00000	.00000	.00000	.00000	.00000	.00000	.00000
47.590	10.346	.00000	.00000	.00000	.00000	.00000	.00000	.00000
47.510	15.566	.00000	.00000	.00000	.00000	.00000	.00000	.00000
47.820	20.818	.00000	.00000	.00000	.00000	.00000	.00000	.00000
	GRADIENT	.00000	.00000	.00000	.00000	.00000	.00000	.00000

ARC40X80-462(OA100) OV101(ADS OFF) (ENA06Q) (15 APR 82)

REFERENCE DATA

SREF =	2690.0000 SQ.FT.	XMRP =	1076.6800 IN.	XO	
LREF =	474.8100 INCHES	YMRP =	.0000 IN.	YO	
BREF =	936.6800 INCHES	ZMRP =	375.0000 IN.	ZO	
SCALE =	.3600				

PARAMETRIC DATA

BETA =	10.000	ELEVON =	.000
AILRON =	.000	BDFLAP =	.000
SPDBRK =	.000	RUDDER =	20.500

RUN NO. 165/ 0 GRADIENT INTERVAL = -5.00/ 5.00

Q	ALPHA	DELE1	DELE2	DELE3	DELE4	BDFLAP	ELEVON	AILRON
47.640	-.043	.00000	.00000	.00000	.00000	.00000	.00000	.00000
47.600	5.147	.00000	.00000	.00000	.00000	.00000	.00000	.00000
47.570	10.342	.00000	.00000	.00000	.00000	.00000	.00000	.00000
47.760	15.561	.00000	.00000	.00000	.00000	.00000	.00000	.00000
47.670	20.817	.00000	.00000	.00000	.00000	.00000	.00000	.00000
	GRADIENT	.00000	.00000	.00000	.00000	.00000	.00000	.00000

ARC40X80-462(OA100) OV101(ADS OFF) (ENA06R) (15 APR 82)

REFERENCE DATA

SREF =	2690.0000 SQ.FT.	XMRP =	1076.6800 IN. XO		
LREF =	474.8100 INCHES	YMRP =	.0000 IN. YO		
BREF =	936.6800 INCHES	ZMRP =	375.0000 IN. ZO		
SCALE =	.3600				

PARAMETRIC DATA

BETA =	.000	ELEVON =	.000
AILRON =	.000	BDFLAP =	.000
SPOBRK =	25.000	RUDDER =	.000

RUN NO. 167/ 0 GRADIENT INTERVAL = -5.00/ 5.00

Q	ALPHA	DELE1	DELE2	DELE3	DELE4	BDFLAP	ELEVON	AILRON
47.470	-5.243	.00000	.00000	.00000	.00000	.00000	.00000	.00000
47.570	-2.651	.00000	.00000	.00000	.00000	.00000	.00000	.00000
47.600	-.058	.00000	.00000	.00000	.00000	.00000	.00000	.00000
47.550	2.540	.00000	.00000	.00000	.00000	.00000	.00000	.00000
47.580	5.139	.00000	.00000	.00000	.00000	.00000	.00000	.00000
47.810	7.739	.00000	.00000	.00000	.00000	.00000	.00000	.00000
47.630	10.342	.00000	.00000	.00000	.00000	.00000	.00000	.00000
47.580	11.379	.00000	.00000	.00000	.00000	.00000	.00000	.00000
47.680	12.421	.00000	.00000	.00000	.00000	.00000	.00000	.00000
47.670	13.462	-.05810	-.06100	-.06050	-.05950	.00000	-.05977	.00022
47.600	14.505	-.05810	.00000	.00000	.00000	.00000	-.01453	-.01453
47.680	15.549	.00000	.00000	.00000	.00000	.00000	.00000	.00000
47.520	16.601	-.05810	.00000	.00000	.00000	.00000	-.01453	-.01453
47.620	17.651	.00000	.00000	.00000	.00000	.00000	.00000	.00000
47.520	18.708	.00000	.00000	.00000	.00000	.00000	.00000	.00000
47.490	19.768	.00000	.00000	.00000	.00000	.00000	.00000	.00000
47.660	20.817	.00000	.00000	.00000	.00000	.00000	.00000	.00000
	GRADIENT	.00000	.00000	.00000	.00000	.00000	.00000	.00000

ARC40X80-462(OA100) OV101(ADS OFF) (ENA06S) (15 APR 82)

REFERENCE DATA

SREF =	2690.0000 SQ.FT.	XMRP =	1076.6800 IN.	XO	
LREF =	474.8100 INCHES	YMRP =	.0000 IN.	YO	
BREF =	936.6800 INCHES	ZMRP =	375.0000 IN.	ZO	
SCALE =	.3600				

PARAMETRIC DATA

BETA =	-5.000	ELEVON =	.000
AILRON =	.000	BDFLAP =	.000
SPDBRK =	25.000	RUDDER =	.000

RUN NO. 47/ 0 GRADIENT INTERVAL = -5.00/ 5.00

Q	ALPHA	DELE1	DELE2	DELE3	DELE4	BDFLAP	ELEVON	AILRON
94.360	-5.233	.00000	.00000	.00000	.00000	.00000	.00000	.00000
94.320	-2.640	.00000	.00000	.00000	.00000	.00000	.00000	.00000
94.430	-.047	.00000	.00000	.00000	.00000	.00000	.00000	.00000
94.430	2.550	-.05810	.00000	.00000	.00000	.00000	-.01453	-.01453
94.430	5.148	.00000	.00000	.00000	.00000	.00000	.00000	.00000
94.320	7.747	.00000	.00000	.00000	.00000	.00000	.00000	.00000
94.550	10.348	.00000	.00000	.00000	.00000	.00000	.00000	.00000
94.320	11.396	.00000	.00000	.00000	.00000	.00000	.00000	.00000
94.410	12.437	.00000	.00000	.00000	.00000	.00000	.00000	.00000
94.660	13.479	.00000	.00000	.00000	.00000	.00000	.00000	.00000
94.570	14.522	.00000	.00000	.00000	.00000	.00000	.00000	.00000
94.550	15.570	.00000	.00000	.00000	.00000	.00000	.00000	.00000
94.360	16.617	.00000	.00000	.00000	.00000	.00000	.00000	.00000
94.270	17.676	.00000	.00000	.00000	.00000	.00000	.00000	.00000
94.500	18.727	.00000	.00000	.00000	.00000	.00000	.00000	.00000
94.570	19.777	.00000	.00000	.00000	.00000	.00000	.00000	.00000
94.590	20.820	.00000	.00000	.00000	.00000	.00000	.00000	.00000
94.340	21.861	.00000	.00000	.00000	.00000	.00000	.00000	.00000
	GRADIENT	-.01120	.00000	.00000	.00000	.00000	-.00280	-.00280

ARC40X80-462(OA100) OV101(ADS OFF) (ENA06T) (15 APR 82)

REFERENCE DATA

SREF =	2690.0000 SQ.FT.	XMRP =	1076.6800 IN.	XO	
LREF =	474.8100 INCHES	YMRP =	.0000 IN.	YO	
BREF =	936.6800 INCHES	ZMRP =	375.0000 IN.	ZO	
SCALE =	.3600				

PARAMETRIC DATA

BETA =	2.000	ELEVON =	.000
AILRON =	.000	BDFLAP =	.000
SPDBRK =	25.000	RUDDER =	.000

RUN NO. 168/ 0 GRADIENT INTERVAL = -5.00/ 5.00

Q	ALPHA	DELE1	DELE2	DELE3	DELE4	BDFLAP	ELEVON	AILRON
47.490	-5.236	.00000	.00000	.00000	.00000	.00000	.00000	.00000
47.640	-2.648	.00000	.00000	.00000	.00000	.00000	.00000	.00000
47.650	-.056	.00000	.00000	.00000	.00000	.00000	.00000	.00000
47.620	2.539	.00000	.00000	.00000	.00000	.00000	.00000	.00000
47.610	5.139	.00000	.00000	.00000	.00000	.00000	.00000	.00000
47.580	7.739	.00000	.00000	.00000	.00000	.00000	.00000	.00000
47.630	10.339	.00000	.00000	.00000	.00000	.00000	.00000	.00000
47.580	11.382	.00000	.00000	.00000	.00000	.00000	.00000	.00000
47.620	12.421	.00000	.00000	.00000	.00000	.00000	.00000	.00000
47.510	13.462	.00000	.00000	.00000	.00000	.00000	.00000	.00000
47.530	14.508	.00000	.00000	.00000	.00000	.00000	.00000	.00000
47.560	15.551	.00000	.00000	.00000	.00000	.00000	.00000	.00000
47.730	16.598	.00000	.00000	.00000	.00000	.00000	.00000	.00000
47.530	17.653	.00000	.00000	.00000	.00000	.00000	.00000	.00000
47.600	18.709	.00000	.00000	.00000	.00000	.00000	.00000	.00000
47.740	19.762	.00000	.00000	.00000	.00000	.00000	.00000	.00000
47.450	20.817	.00000	.00000	.00000	.00000	.00000	.00000	.00000
	GRADIENT	.00000	.00000	.00000	.00000	.00000	.00000	.00000

ARC40X80-462(OA100) OV101(ADS OFF) (ENA06U) (15 APR 82)

REFERENCE DATA

SREF =	2690.0000 SQ.FT.	XMRP =	1076.6800 IN.	XO	
LREF =	474.8100 INCHES	YMRP =	.0000 IN.	YO	
BREF =	936.6800 INCHES	ZMRP =	375.0000 IN.	ZO	
SCALE =	.3600				

PARAMETRIC DATA

BETA =	10.000	ELEVON =	.000
AILRON =	.000	BDFLAP =	.000
SPDBRK =	25.000	RUDDER =	.000

RUN NO. 169/ 0 GRADIENT INTERVAL = -5.00/ 5.00

Q	ALPHA	DELE1	DELE2	DELE3	DELE4	BDFLAP	ELEVON	AILRON
47.530	-5.219	.00000	.00000	.00000	.00000	.00000	.00000	.00000
47.640	-2.630	.00000	.00000	.00000	.00000	.00000	.00000	.00000
47.640	-.041	.00000	.00000	.00000	.00000	.00000	.00000	.00000
47.710	2.553	.00000	.00000	.00000	.00000	.00000	.00000	.00000
47.620	5.146	.00000	.00000	.00000	.00000	.00000	.00000	.00000
47.620	7.650	.00000	.00000	.00000	.00000	.00000	.00000	.00000
47.620	10.348	.00000	.00000	.00000	.00000	.00000	.00000	.00000
47.740	11.389	.00000	.00000	.00000	.00000	.00000	.00000	.00000
47.600	12.433	.00000	.00000	.00000	.00000	.00000	.00000	.00000
47.480	13.480	.00000	.00000	.00000	.00000	.00000	.00000	.00000
47.500	14.523	.00000	.00000	.00000	.00000	.00000	.00000	.00000
47.620	15.575	.00000	.00000	.00000	.00000	.00000	.00000	.00000
47.600	16.625	.00000	.00000	.00000	.00000	.00000	.00000	.00000
47.500	17.671	.00000	.00000	.00000	.00000	.00000	.00000	.00000
47.550	18.721	.00000	.00000	.00000	.00000	.00000	.00000	.00000
47.530	19.768	.00000	.00000	.00000	.00000	.00000	.00000	.00000
47.670	20.819	.00000	.00000	.00000	.00000	.00000	.00000	.00000
	GRADIENT	.00000	.00000	.00000	.00000	.00000	.00000	.00000

ARC40X80-462(OA100) OV101(ADS OFF) (ENA06V) (15 APR 82)

REFERENCE DATA

SREF =	2690.0000 SQ.FT.	XMRP =	1076.6800 IN.	XO	
LREF =	474.8100 INCHES	YMRP =	.0000 IN.	YO	
BREF =	936.6800 INCHES	ZMRP =	375.0000 IN.	ZO	
SCALE =	.3600				

PARAMETRIC DATA

BETA =	10.000	ELEVON =	.000
AILRON =	.000	BDFLAP =	.000
SPDBRK =	55.000	RUDDER =	.000

RUN NO. 166/ 0 GRADIENT INTERVAL = -5.00/ 5.00

Q	ALPHA	DELE1	DELE2	DELE3	DELE4	BDFLAP	ELEVON	AILRON
47.850	-.063	.00000	.00000	.00000	.00000	.00000	.00000	.00000
47.460	5.129	.00000	.00000	.00000	.00000	.00000	.00000	.00000
47.510	10.327	.00000	.00000	.00000	.00000	.00000	.00000	.00000
47.600	15.553	.00000	.00000	.00000	.00000	.00000	.00000	.00000
47.540	20.804	.00000	.00000	.00000	.00000	.00000	.00000	.00000
	GRADIENT	.00000	.00000	.00000	.00000	.00000	.00000	.00000

ARC40X80-462(OA100) OV101(ADS OFF) (ENA06W) (15 APR 82)

REFERENCE DATA

SREF =	2690.0000 SQ.FT.	XMRP =	1076.6800 IN.	XO	
LREF =	474.8100 INCHES	YMRP =	.0000 IN.	YO	
BREF =	936.6800 INCHES	ZMRP =	375.0000 IN.	ZO	
SCALE =	.3600				

PARAMETRIC DATA

BETA =	.000	ELEVON =	.000
AILRON =	10.000	BDFLAP =	.000
SPDBRK =	25.000	RUDDER =	.000

RUN NO. 170/ 0 GRADIENT INTERVAL = -5.00/ 5.00

Q	ALPHA	DELE1	DELE2	DELE3	DELE4	BDFLAP	ELEVON	AILRON
47.520	-5.246	10.05130	10.00400	-10.04300	-9.99600	.00000	.00407	10.02357
47.570	-2.655	10.05130	10.00400	-10.04300	-9.99600	.00000	.00407	10.02357
47.500	-.063	10.05130	10.00400	-10.04300	-9.99600	.00000	.00407	10.02357
47.400	2.538	10.05130	10.00400	-10.04300	-9.99600	.00000	.00407	10.02357
47.470	5.136	10.05130	10.00400	-10.04300	-9.99600	.00000	.00407	10.02357
47.370	7.735	10.05130	10.00400	-10.04300	-9.99600	.00000	.00407	10.02357
47.510	10.336	10.05130	10.00400	-10.04300	-9.99600	.00000	.00407	10.02357
47.670	12.934	10.05130	10.00400	-10.04300	-9.99600	.00000	.00407	10.02357
47.560	15.548	10.05130	10.00400	-10.04300	-9.99600	.00000	.00407	10.02357
47.370	18.171	10.05130	10.00400	-10.04300	-9.99600	.00000	.00407	10.02357
47.610	20.811	10.05130	10.00400	-10.04300	-9.99600	.00000	.00407	10.02357
47.440	25.982	10.05130	10.00400	-10.04300	-9.99600	.00000	.00407	10.02357
	GRADIENT	-.00000	.00000	-.00000	-.00000	.00000	.00000	.00000

ARC40X80-462(OA100) OV101(ADS OFF) (ENA06X) (15 APR 82)

REFERENCE DATA

SREF =	2690.0000 SQ.FT.	XMRP =	1076.6800 IN.	XO	
LREF =	474.8100 INCHES	YMRP =	.0000 IN.	YO	
BREF =	936.6800 INCHES	ZMRP =	375.0000 IN.	ZO	
SCALE =	.3600				

PARAMETRIC DATA

ALPHA =	10.000	ELEVON =	.000
AILRON =	10.000	BDFLAP =	.000
SPDBRK =	25.000	RUDDER =	.000

RUN NO. 171/ 0 GRADIENT INTERVAL = -5.00/ 5.00

Q	BETA	DELE1	DELE2	DELE3	DELE4	BDFLAP	ELEVON	AILRON
47.650	-13.000	10.05130	10.00400	-10.04300	-9.99600	.00000	.00407	10.02357
47.520	-10.000	10.05130	10.00400	-10.04300	-9.99600	.00000	.00407	10.02357
47.410	-2.000	10.05130	10.00400	-10.04300	-9.99600	.00000	.00407	10.02357
47.410	.000	10.05130	10.00400	-10.04300	-9.99600	.00000	.00407	10.02357
47.600	5.000	10.05130	10.00400	-10.04300	-9.99600	.00000	.00407	10.02357
47.380	10.000	10.05130	10.00400	-10.04300	-9.99600	.00000	.00407	10.02357
47.390	15.000	10.05130	10.00400	-10.04300	-9.99600	.00000	.00407	10.02357
47.200	20.000	10.05130	10.00400	-10.04300	-9.99600	.00000	.00407	10.02357
	GRADIENT	.00000	-.00000	.00000	.00000	.00000	.00000	.00000

ARC40X80-462(OA100) OV101+TUFTS (ADS OFF) (ENA06Y) (15 APR 82)

REFERENCE DATA

SREF =	2690.0000 SQ.FT.	XMRP =	1076.6800 IN.	XO	
LREF =	474.8100 INCHES	YMRP =	.0000 IN.	YO	
BREF =	936.6800 INCHES	ZMRP =	375.0000 IN.	ZO	
SCALE =	.3600				

PARAMETRIC DATA

BETA =	.000	ELEVON =	.000
AILRON =	.000	BDFLAP =	.000
SPDBRK =	55.000	RUDDER =	.000

RUN NO. 172/ 0 GRADIENT INTERVAL = -5.00/ 5.00

Q	ALPHA	DELE1	DELE2	DELE3	DELE4	BDFLAP	ELEVON	AILRON
9.590	-.074	-.05810	.00000	.00000	.00000	.00000	-.01453	-.01453
9.630	5.120	.00000	.00000	.00000	.00000	.00000	.00000	.00000
9.650	10.325	-.05810	.00000	.00000	.00000	.00000	-.01453	-.01453
9.630	15.532	.00000	.00000	.00000	.00000	.00000	.00000	.00000
9.490	20.764	.00000	.00000	.00000	.00000	.00000	.00000	.00000
	GRADIENT	.00000	.00000	.00000	.00000	.00000	.00000	.00000

RUN NO. 173/ 0 GRADIENT INTERVAL = -5.00/ 5.00

Q	ALPHA	DELE1	DELE2	DELE3	DELE4	BDFLAP	ELEVON	AILRON
19.020	-.074	-.05810	.00000	.00000	.00000	.00000	-.01453	-.01453
19.040	5.117	.00000	.00000	.00000	.00000	.00000	.00000	.00000
19.090	10.324	-.05810	.00000	.00000	.00000	.00000	-.01453	-.01453
19.080	15.531	.00000	.00000	.00000	.00000	.00000	.00000	.00000
19.090	20.782	.00000	.00000	.00000	.00000	.00000	.00000	.00000
	GRADIENT	.00000	.00000	.00000	.00000	.00000	.00000	.00000

RUN NO. 174/ 0 GRADIENT INTERVAL = -5.00/ 5.00

Q	ALPHA	DELE1	DELE2	DELE3	DELE4	BDFLAP	ELEVON	AILRON
47.410	-5.253	.00000	.00000	.00000	.00000	.00000	.00000	.00000
47.630	-2.664	.00000	.00000	.00000	.00000	.00000	.00000	.00000
47.490	-.074	.00000	.00000	.00000	.00000	.00000	.00000	.00000
47.330	2.522	.00000	.00000	.00000	.00000	.00000	.00000	.00000
47.640	5.119	.00000	.00000	.00000	.00000	.00000	.00000	.00000
47.460	7.720	.00000	.00000	.00000	.00000	.00000	.00000	.00000
47.660	10.323	.00000	.00000	.00000	.00000	.00000	.00000	.00000
47.580	12.922	-.05810	.00000	.00000	.00000	.00000	-.01453	-.01453
47.590	15.533	.00000	.00000	.00000	.00000	.00000	.00000	.00000
47.610	18.150	.00000	.00000	.00000	.00000	.00000	.00000	.00000
47.580	20.791	.00000	.00000	.00000	.00000	.00000	.00000	.00000
47.190	25.987	.00000	.00000	.00000	.00000	.00000	.00000	.00000
	GRADIENT	.00000	.00000	.00000	.00000	.00000	.00000	.00000

ARC40X80-462(OA100) OV101+TUFTS (ADS OFF) (ENA06Z) (15 APR 82)

REFERENCE DATA

SREF = 2690.0000 SQ.FT. XMRP = 1076.6800 IN. XO
LREF = 474.8100 INCHES YMRP = .0000 IN. YO
BREF = 936.6800 INCHES ZMRP = 375.0000 IN. ZO
SCALE = .3600

PARAMETRIC DATA

BETA = 5.000 ELEVON = .000
AILRON = .000 BDFLAP = .000
SPDBRK = 55.000 RUDDER = .000

RUN NO. 175/ 0 GRADIENT INTERVAL = -5.00/ 5.00

Q	ALPHA	DELE1	DELE2	DELE3	DELE4	BDFLAP	ELEVON	AILRON
47.750	-5.249	.00000	.00000	.00000	.00000	.00000	.00000	.00000
47.650	-2.660	.00000	.00000	.00000	.00000	.00000	.00000	.00000
47.580	-.070	.00000	.00000	.00000	.00000	.00000	.00000	.00000
47.400	2.526	.00000	.00000	.00000	.00000	.00000	.00000	.00000
47.470	5.122	.00000	.00000	.00000	.00000	.00000	.00000	.00000
47.640	7.725	.00000	.00000	.00000	.00000	.00000	.00000	.00000
47.450	10.326	.00000	.00000	.00000	.00000	.00000	.00000	.00000
47.530	12.928	.00000	.00000	.00000	.00000	.00000	.00000	.00000
47.690	15.537	.00000	.00000	.00000	.00000	.00000	.00000	.00000
47.480	18.155	.00000	.00000	.00000	.00000	.00000	.00000	.00000
47.590	20.788	.00000	.00000	.00000	.00000	.00000	.00000	.00000
47.360	25.983	.00000	.00000	.00000	.00000	.00000	.00000	.00000
	GRADIENT	.00000	.00000	.00000	.00000	.00000	.00000	.00000

ARC40X80-462(OA100) OV101 (ENA07A) (16 APR 82)

REFERENCE DATA

SREF = 2690.0000 SQ.FT. XMRP = 1076.6800 IN. XO
LREF = 474.8100 INCHES YMRP = .0000 IN. YO
BREF = 936.6800 INCHES ZMRP = 375.0000 IN. ZO
SCALE = .3600

PARAMETRIC DATA

BETA = 5.000 ELEVON = .000
AILRON = .000 BDFLAP = .000
SPDBRK = 25.000 RUDDER = .000

RUN NO. 176/ 0 GRADIENT INTERVAL = -5.00/ 5.00

Q	ALPHA	DELE1	DELE2	DELE3	DELE4	BDFLAP	ELEVON	AILRON
94.180	-.048	.00000	.00000	.00000	.00000	.00000	.00000	.00000
94.280	5.145	.00000	.00000	.00000	.00000	.00000	.00000	.00000
94.750	10.344	.00000	.00000	.00000	.00000	.00000	.00000	.00000
94.370	15.559	.00000	.00000	.00000	.00000	.00000	.00000	.00000
94.330	20.825	.00000	.00000	.00000	.00000	.00000	.00000	.00000
	GRADIENT	.00000	.00000	.00000	.00000	.00000	.00000	.00000

ARC40X80-462(OA100) OV101 (ENA07B) (15 APR 82)

REFERENCE DATA

SREF =	2690.0000 SQ.FT.	XMRP =	1076.6800 IN.	XO	
LREF =	474.8100 INCHES	YMRP =	.0000 IN.	YO	
BREF =	936.6800 INCHES	ZMRP =	375.0000 IN.	ZO	
SCALE =	.3600				

PARAMETRIC DATA

BETA =	.000	ELEVON =	.000
AILRON =	.000	BDFLAP =	.000
SPDBRK =	25.000	RUDDER =	.000

RUN NO. 177/ 0 GRADIENT INTERVAL = -5.00/ 5.00

Q	ALPHA	DELE1	DELE2	DELE3	DELE4	BDFLAP	ELEVON	AILRON
94.560	-5.240	.00000	.00000	.00000	.00000	.00000	.00000	.00000
94.350	-2.649	.00000	.00000	.00000	.00000	.00000	.00000	.00000
94.170	-.056	.00000	.00000	.00000	.00000	.00000	.00000	.00000
94.450	2.541	.00000	.00000	.00000	.00000	.00000	.00000	.00000
94.510	5.138	.00000	.00000	.00000	.00000	.00000	.00000	.00000
94.320	7.738	.00000	.00000	.00000	.00000	.00000	.00000	.00000
94.710	10.348	.00000	.00000	.00000	.00000	.00000	.00000	.00000
94.310	12.946	.00000	.00000	.00000	.00000	.00000	.00000	.00000
94.310	15.557	.00000	.00000	.00000	.00000	.00000	.00000	.00000
94.550	18.382	.00000	.00000	.00000	.00000	.00000	.00000	.00000
	GRADIENT	.00000	.00000	.00000	.00000	.00000	.00000	.00000

ARC40X80-462(OA100) OV101 (ENA07C) (15 APR 82)

REFERENCE DATA

SREF =	2690.0000 SQ.FT.	XMRP =	1076.6800 IN.	XO	
LREF =	474.8100 INCHES	YMRP =	.0000 IN.	YO	
BREF =	936.6800 INCHES	ZMRP =	375.0000 IN.	ZO	
SCALE =	.3600				

PARAMETRIC DATA

BETA =	-5.000	ELEVON =	.000
AILRON =	.000	BDFLAP =	.000
SPDBRK =	25.000	RUDDER =	.000

RUN NO. 178/ 0 GRADIENT INTERVAL = -5.00/ 5.00

Q	ALPHA	DELE1	DELE2	DELE3	DELE4	BDFLAP	ELEVON	AILRON
94.190	-5.234	.00000	.00000	.00000	.00000	.00000	.00000	.00000
94.480	-2.643	.00000	.00000	.00000	.00000	.00000	.00000	.00000
94.510	-.049	.00000	.00000	.00000	.00000	.00000	.00000	.00000
94.470	2.548	.00000	.00000	.00000	.00000	.00000	.00000	.00000
94.270	5.145	.00000	.00000	.00000	.00000	.00000	.00000	.00000
94.160	7.746	.00000	.00000	.00000	.00000	.00000	.00000	.00000
94.150	10.349	.00000	.00000	.00000	.00000	.00000	.00000	.00000
94.370	12.957	.00000	.00000	.00000	.00000	.00000	.00000	.00000
94.300	15.565	.00000	.00000	.00000	.00000	.00000	.00000	.00000
94.200	18.196	.00000	.00000	.00000	.00000	.00000	.00000	.00000
94.170	20.818	.00000	.00000	.00000	.00000	.00000	.00000	.00000
	GRADIENT	.00000	.00000	.00000	.00000	.00000	.00000	.00000

ARC40X80-462(OA100) OV101 (ENA07D) (15 APR 82)

REFERENCE DATA

SREF = 2690.0000 SQ.FT. XMRP = 1076.6800 IN. XO
LREF = 474.8100 INCHES YMRP = .0000 IN. YO
BREF = 936.6800 INCHES ZMRP = 375.0000 IN. ZO
SCALE = .3600

PARAMETRIC DATA

BETA = -10.000 ELEVON = .000
AILRON = .000 BDFLAP = .000
SPDBRK = 25.000 RUDDER = .000

RUN NO. 179/ 0 GRADIENT INTERVAL = -5.00/ 5.00

Q	ALPHA	DELE1	DELE2	DELE3	DELE4	BDFLAP	ELEVON	AILRON
94.250	-5.223	.00000	.00000	.00000	.00000	.00000	.00000	.00000
94.150	-2.632	.00000	.00000	.00000	.00000	.00000	.00000	.00000
94.300	-.039	.00000	.00000	.00000	.00000	.00000	.00000	.00000
94.240	2.556	.00000	.00000	.00000	.00000	.00000	.00000	.00000
94.350	5.153	.00000	.00000	.00000	.00000	.00000	.00000	.00000
94.130	7.751	.00000	.00000	.00000	.00000	.00000	.00000	.00000
94.300	10.357	.00000	.00000	.00000	.00000	.00000	.00000	.00000
94.440	12.965	.00000	.00000	.00000	.00000	.00000	.00000	.00000
94.390	15.580	.00000	.00000	.00000	.00000	.00000	.00000	.00000
94.270	18.201	.00000	.00000	.00000	.00000	.00000	.00000	.00000
94.070	20.817	.00000	.00000	.00000	.00000	.00000	.00000	.00000
	GRADIENT	.00000	.00000	.00000	.00000	.00000	.00000	.00000

ARC40X80-462(OA100) OV101+NOSE GEAR (ENA07E) (15 APR 82)

REFERENCE DATA

SREF = 2690.0000 SQ.FT. XMRP = 1076.6800 IN. XO
LREF = 474.8100 INCHES YMRP = .0000 IN. YO
BREF = 936.6800 INCHES ZMRP = 375.0000 IN. ZO
SCALE = .3600

PARAMETRIC DATA

BETA = 5.000 ELEVON = .000
AILRON = .000 BDFLAP = .000
SPDBRK = 25.000 RUDDER = .000

RUN NO. 180/ 0 GRADIENT INTERVAL = -5.00/ 5.00

Q	ALPHA	DELE1	DELE2	DELE3	DELE4	BDFLAP	ELEVON	AILRON
94.090	-.048	.00000	.00000	.00000	.00000	.00000	.00000	.00000
94.260	5.141	.00000	.00000	.00000	.00000	.00000	.00000	.00000
94.500	10.345	.00000	.00000	.00000	.00000	.00000	.00000	.00000
94.420	15.558	.00000	.00000	.00000	.00000	.00000	.00000	.00000
94.220	20.813	.00000	.00000	.00000	.00000	.00000	.00000	.00000
	GRADIENT	.00000	.00000	.00000	.00000	.00000	.00000	.00000

ARC40X80-462(OA100) OV101+NOSE GEAR (ENA07F) (15 APR 82)

REFERENCE DATA

SREF =	2690.0000 SQ.FT.	XMRP =	1076.6800 IN.	XO	
LREF =	474.8100 INCHES	YMRP =	.0000 IN.	YO	
BREF =	936.6800 INCHES	ZMRP =	375.0000 IN.	ZO	
SCALE =	.3600				

PARAMETRIC DATA

BETA =	.000	ELEVON =	.000
AILRON =	.000	BDFLAP =	.000
SPDBRK =	25.000	RUDDER =	.000

RUN NO. 181/ 0 GRADIENT INTERVAL = -5.00/ 5.00

Q	ALPHA	DELE1	DELE2	DELE3	DELE4	BDFLAP	ELEVON	AILRON
94.260	-5.240	.00000	.00000	.00000	.00000	.00000	.00000	.00000
94.390	-2.648	.00000	.00000	.00000	.00000	.00000	.00000	.00000
94.370	-.055	.00000	.00000	.00000	.00000	.00000	.00000	.00000
93.980	2.539	.00000	.00000	.00000	.00000	.00000	.00000	.00000
94.500	5.138	.00000	.00000	.00000	.00000	.00000	.00000	.00000
94.490	7.739	.00000	.00000	.00000	.00000	.00000	.00000	.00000
94.370	10.347	.00000	.00000	.00000	.00000	.00000	.00000	.00000
94.240	12.946	.00000	.00000	.00000	.00000	.00000	.00000	.00000
94.570	15.556	.00000	.00000	.00000	.00000	.00000	.00000	.00000
94.180	18.173	.00000	.00000	.00000	.00000	.00000	.00000	.00000
94.140	20.804	.00000	.00000	.00000	.00000	.00000	.00000	.00000
	GRADIENT	.00000	.00000	.00000	.00000	.00000	.00000	.00000

ARC40X80-462(OA100) OV101+NOSE GEAR (ENA07G) (15 APR 82)

REFERENCE DATA

SREF =	2690.0000 SQ.FT.	XMRP =	1076.6800 IN.	XO	
LREF =	474.8100 INCHES	YMRP =	.0000 IN.	YO	
BREF =	936.6800 INCHES	ZMRP =	375.0000 IN.	ZO	
SCALE =	.3600				

PARAMETRIC DATA

BETA =	-5.000	ELEVON =	.000
AILRON =	.000	BDFLAP =	.000
SPDBRK =	25.000	RUDDER =	.000

RUN NO. 182/ 0 GRADIENT INTERVAL = -5.00/ 5.00

Q	ALPHA	DELE1	DELE2	DELE3	DELE4	BDFLAP	ELEVON	AILRON
94.130	-.047	.00000	.00000	.00000	.00000	.00000	.00000	.00000
94.180	5.147	.00000	.00000	.00000	.00000	.00000	.00000	.00000
94.460	10.351	.00000	.00000	.00000	.00000	.00000	.00000	.00000
94.200	15.563	.00000	.00000	.00000	.00000	.00000	.00000	.00000
94.470	20.815	.00000	.00000	.00000	.00000	.00000	.00000	.00000
	GRADIENT	.00000	.00000	.00000	.00000	.00000	.00000	.00000

ARC40X80-462(0A100) OV101+NOSE GEAR (ENA07H) (15 APR 82)

REFERENCE DATA

SREF =	2690.0000 SQ.FT.	XMRP =	1076.6800 IN.	XO	
LREF =	474.8100 INCHES	YMRP =	.0000 IN.	YO	
BREF =	936.6800 INCHES	ZMRP =	375.0000 IN.	ZO	
SCALE =	.3600				

PARAMETRIC DATA

BETA =	-10.000	ELEVON =	.000
AILRON =	.000	BDFLAP =	.000
SPDBRK =	25.000	RUDDER =	.000

RUN NO. 183/ 0 GRADIENT INTERVAL = -5.00/ 5.00

Q	ALPHA	DELE1	DELE2	DELE3	DELE4	BDFLAP	ELEVON	AILRON
94.320	-.038	.00000	.00000	.00000	.00000	.00000	.00000	.00000
94.380	5.152	.00000	.00000	.00000	.00000	.00000	.00000	.00000
94.250	10.356	.00000	.00000	.00000	.00000	.00000	.00000	.00000
94.220	15.581	.00000	.00000	.00000	.00000	.00000	.00000	.00000
94.530	20.834	.00000	.00000	.00000	.00000	.00000	.00000	.00000
	GRADIENT	.00000	.00000	.00000	.00000	.00000	.00000	.00000

ARC40X80-462(0A100) OV101(FTP OFF) (ENA07I) (15 APR 82)

REFERENCE DATA

SREF =	2690.0000 SQ.FT.	XMRP =	1076.6800 IN.	XO	
LREF =	474.8100 INCHES	YMRP =	.0000 IN.	YO	
BREF =	936.6800 INCHES	ZMRP =	375.0000 IN.	ZO	
SCALE =	.3600				

PARAMETRIC DATA

BETA =	5.000	ELEVON =	.000
AILRON =	.000	BDFLAP =	.000
SPDBRK =	25.000	RUDDER =	.000

RUN NO. 184/ 0 GRADIENT INTERVAL = -5.00/ 5.00

Q	ALPHA	DELE1	DELE2	DELE3	DELE4	BDFLAP	ELEVON	AILRON
94.150	-.052	.00000	.00000	.00000	.00000	.00000	.00000	.00000
94.290	5.140	.00000	.00000	.00000	.00000	.00000	.00000	.00000
94.410	10.342	.00000	.00000	.00000	.00000	.00000	.00000	.00000
94.530	15.560	.00000	.00000	.00000	.00000	.00000	.00000	.00000
94.310	20.818	.00000	.00000	.00000	.00000	.00000	.00000	.00000
	GRADIENT	.00000	.00000	.00000	.00000	.00000	.00000	.00000

ARC40X80-462(OA100) OV101(FTP OFF) (ENA07J) (15 APR 82)

REFERENCE DATA

SREF =	2690.0000 SQ.FT.	XMRP =	1076.6800 IN.	XO	
LREF =	474.8100 INCHES	YMRP =	.0000 IN.	YO	
BREF =	936.6800 INCHES	ZMRP =	375.0000 IN.	ZO	
SCALE =	.3600				

PARAMETRIC DATA

BETA =	.000	ELEVON =	.000
AILRON =	.000	BDFLAP =	.000
SPDBRK =	25.000	RUDDER =	.000

RUN NO. 185/ 0 GRADIENT INTERVAL = -5.00/ 5.00

Q	ALPHA	DELE1	DELE2	DELE3	DELE4	BDFLAP	ELEVON	AILRON
94.060	-5.240	.00000	.00000	.00000	.00000	.00000	.00000	.00000
94.520	-2.649	.00000	.00000	.00000	.00000	.00000	.00000	.00000
94.500	-.060	.00000	.00000	.00000	.00000	.00000	.00000	.00000
93.980	2.537	.00000	.00000	.00000	.00000	.00000	.00000	.00000
94.070	5.133	.00000	.00000	.00000	.00000	.00000	.00000	.00000
93.670	7.736	.00000	.00000	.00000	.00000	.00000	.00000	.00000
94.470	10.340	.00000	.00000	.00000	.00000	.00000	.00000	.00000
94.200	12.941	.00000	.00000	.00000	.00000	.00000	.00000	.00000
95.730	15.555	.00000	.00000	.00000	.00000	.00000	.00000	.00000
94.370	18.182	.00000	.00000	.00000	.00000	.00000	.00000	.00000
94.420	20.822	.00000	.00000	.00000	.00000	.00000	.00000	.00000
	GRADIENT	.00000	.00000	.00000	.00000	.00000	.00000	.00000

ARC40X80-462(OA100) OV101(FTP OFF) (ENA07K) (15 APR 82)

REFERENCE DATA

SREF =	2690.0000 SQ.FT.	XMRP =	1076.6800 IN.	XO	
LREF =	474.8100 INCHES	YMRP =	.0000 IN.	YO	
BREF =	936.6800 INCHES	ZMRP =	375.0000 IN.	ZO	
SCALE =	.3600				

PARAMETRIC DATA

BETA =	-5.000	ELEVON =	.000
AILRON =	.000	BDFLAP =	.000
SPDBRK =	25.000	RUDDER =	.000

RUN NO. 186/ 0 GRADIENT INTERVAL = -5.00/ 5.00

Q	ALPHA	DELE1	DELE2	DELE3	DELE4	BDFLAP	ELEVON	AILRON
94.190	-.053	.00000	.00000	.00000	.00000	.00000	.00000	.00000
93.830	5.144	.00000	.00000	.00000	.00000	.00000	.00000	.00000
93.970	10.346	.00000	.00000	.00000	.00000	.00000	.00000	.00000
94.430	15.562	.00000	.00000	.00000	.00000	.00000	.00000	.00000
94.150	20.819	.00000	.00000	.00000	.00000	.00000	.00000	.00000
	GRADIENT	.00000	.00000	.00000	.00000	.00000	.00000	.00000

ARC40X80-462(OA100) OV101(FTP OFF) (ENA07L) (15 APR 82)

REFERENCE DATA

SREF =	2690.0000 SQ.FT.	XMRP =	1076.6800 IN.	XO	
LREF =	474.8100 INCHES	YMRP =	.0000 IN.	YO	
BREF =	936.6800 INCHES	ZMRP =	375.0000 IN.	ZO	
SCALE =	.3600				

PARAMETRIC DATA

BETA =	-10.000	ELEVON =	.000
AILRON =	.000	BDFLAP =	.000
SPDBRK =	25.000	RUDDER =	.000

RUN NO. 187/ 0 GRADIENT INTERVAL = -5.00/ 5.00

Q	ALPHA	DELE1	DELE2	DELE3	DELE4	BDFLAP	ELEVON	AILRON
94.450	-.040	.00000	.00000	.00000	.00000	.00000	.00000	.00000
94.330	5.151	.00000	.00000	.00000	.00000	.00000	.00000	.00000
94.270	10.353	.00000	.00000	.00000	.00000	.00000	.00000	.00000
94.420	15.574	.00000	.00000	.00000	.00000	.00000	.00000	.00000
94.200	20.827	.00000	.00000	.00000	.00000	.00000	.00000	.00000
	GRADIENT	.00000	.00000	.00000	.00000	.00000	.00000	.00000

ARC40X80-462(OA100) OV101(FTP OFF) (ENA07M) (15 APR 82)

REFERENCE DATA

SREF =	2690.0000 SQ.FT.	XMRP =	1076.6800 IN.	XO	
LREF =	474.8100 INCHES	YMRP =	.0000 IN.	YO	
BREF =	936.6800 INCHES	ZMRP =	375.0000 IN.	ZO	
SCALE =	.3600				

PARAMETRIC DATA

BETA =	.000	ELEVON =	.000
AILRON =	.000	BDFLAP =	.000
SPDBRK =	55.000	RUDDER =	.000

RUN NO. 188/ 0 GRADIENT INTERVAL = -5.00/ 5.00

Q	ALPHA	DELE1	DELE2	DELE3	DELE4	BDFLAP	ELEVON	AILRON
94.160	-.073	.00000	.00000	.00000	.00000	.00000	.00000	.00000
94.210	5.117	.00000	.00000	.00000	.00000	.00000	.00000	.00000
94.200	10.325	.00000	.00000	.00000	.00000	.00000	.00000	.00000
94.330	15.539	.00000	.00000	.00000	.00000	.00000	.00000	.00000
94.070	20.805	.00000	.00000	.00000	.00000	.00000	.00000	.00000
	GRADIENT	.00000	.00000	.00000	.00000	.00000	.00000	.00000

ARC40X80-462(OA100) OV101(FTP OFF) (ENA07N) (15 APR 82)

REFERENCE DATA

SREF =	2690.0000 SQ.FT.	XMRP =	1076.6800 IN.	XO
LREF =	474.8100 INCHES	YMRP =	.0000 IN.	YO
BREF =	936.6800 INCHES	ZMRP =	375.0000 IN.	ZO
SCALE =	.3600			

PARAMETRIC DATA

ALPHA =	10.000	ELEVON =	10.000
AILRON =	.000	BDFLAP =	22.000
SPDBRK =	25.000	RUDDER =	.000

RUN NO. 189/ 0 GRADIENT INTERVAL = -5.00/ 5.00

Q	BETA	DELE1	DELE2	DELE3	DELE4	BDFLAP	ELEVON	AILRON
47.810	-13.000	10.05130	10.00400	9.92200	9.93650	22.44120	9.97845	.04920
47.640	-10.000	10.05130	10.00400	9.92200	9.93650	22.24350	9.97845	.04920
47.530	-5.000	10.05130	10.00400	9.92200	9.93650	22.24350	9.97845	.04920
47.240	-2.000	10.05130	10.00400	9.92200	9.93650	22.44120	9.97845	.04920
47.530	.000	10.05130	10.06500	9.92200	9.93650	22.54010	9.99370	.06445
47.480	2.000	10.05130	10.00400	9.92200	9.93650	22.34230	9.97845	.04920
47.380	5.000	10.05130	10.00400	9.92200	9.93650	22.44120	9.97845	.04920
47.450	10.000	10.05130	10.00400	9.98250	9.93650	22.54010	9.99357	.03408
47.380	20.000	10.05130	10.00400	9.92200	9.93650	22.54010	9.97845	.04920
	GRADIENT	.00000	.00000	.00000	-.00000	.01363	.00000	.00000

ARC40X80-462(OA100) OV101(FTP OFF) (ENA070) (15 APR 82)

REFERENCE DATA

SREF =	2690.0000 SQ.FT.	XMRP =	1076.6800 IN.	XO
LREF =	474.8100 INCHES	YMRP =	.0000 IN.	YO
BREF =	936.6800 INCHES	ZMRP =	375.0000 IN.	ZO
SCALE =	.3600			

PARAMETRIC DATA

ALPHA =	10.000	ELEVON =	10.000
AILRON =	.000	BDFLAP =	-11.700
SPDBRK =	25.000	RUDDER =	.000

RUN NO. 190/ 0 GRADIENT INTERVAL = -5.00/ 5.00

Q	BETA	DELE1	DELE2	DELE3	DELE4	BDFLAP	ELEVON	AILRON
47.560	-13.000	10.05130	10.00400	9.98250	9.93650	-12.06090	9.99357	.03408
47.640	-10.000	10.05130	10.00400	9.92200	9.93650	-12.15980	9.97845	.04920
47.550	-5.000	10.05130	10.00400	9.92200	9.93650	-12.06090	9.97845	.04920
47.650	-2.000	10.05130	10.06500	9.92200	9.93650	-12.06090	9.99370	.06445
47.360	.000	10.05130	10.00400	9.92200	9.93650	-12.25860	9.97845	.04920
47.420	2.000	10.05130	10.00400	9.92200	9.93650	-12.15980	9.97845	.04920
47.500	5.000	10.05130	10.00400	9.92200	9.93650	-12.06090	9.97845	.04920
47.340	10.000	10.05130	10.06500	9.92200	9.93650	-11.96210	9.99370	.06445
47.490	15.000	10.05130	10.00400	9.98250	9.93650	-11.86320	9.99357	.03408
47.330	20.000	10.05130	10.00400	9.92200	9.93650	-11.96210	9.97845	.04920
	GRADIENT	.00000	-.00210	.00000	-.00000	-.00341	-.00053	-.00053

ARC40X80-462(OA100) OV101 (ENA07P) (15 APR 82)

REFERENCE DATA

SREF = 2690.0000 SQ.FT. XMRP = 1076.6800 IN. XO
LREF = 474.8100 INCHES YMRP = .0000 IN. YO
BREF = 936.6800 INCHES ZMRP = 375.0000 IN. ZO
SCALE = .3600

PARAMETRIC DATA

ALPHA = 10.000 ELEVON = .000
AILRON = .000 BDFLAP = .000
SPDBRK = .000 RUDDER = .000

RUN NO. 85/ 0 GRADIENT INTERVAL = -5.00/ 5.00

Q	BETA	DELE1	DELE2	DELE3	DELE4	BDFLAP	ELEVON	AILRON
47.990	-13.000	.00000	.00000	.00000	.00000	.00000	.00000	.00000
47.900	-10.000	.00000	.00000	.00000	.00000	.00000	.00000	.00000
47.590	-5.000	.00000	.00000	.00000	.00000	.00000	.00000	.00000
47.840	-2.000	.00000	.00000	.00000	.00000	.00000	.00000	.00000
47.790	.000	.00000	.00000	.00000	.00000	.00000	.00000	.00000
47.800	2.000	.00000	.00000	.00000	.00000	.00000	.00000	.00000
47.750	5.000	.00000	.00000	.00000	.00000	.00000	.00000	.00000
47.630	10.000	.00000	.00000	.00000	.00000	.00000	.00000	.00000
47.530	15.000	.00000	.00000	.00000	.00000	.00000	.00000	.00000
	GRADIENT	.00000	.00000	.00000	.00000	.00000	.00000	.00000

ARC40X80-462(OA100) OV101 (ENA07Q) (15 APR 82)

REFERENCE DATA

SREF = 2690.0000 SQ.FT. XMRP = 1076.6800 IN. XO
LREF = 474.8100 INCHES YMRP = .0000 IN. YO
BREF = 936.6800 INCHES ZMRP = 375.0000 IN. ZO
SCALE = .3600

PARAMETRIC DATA

ALPHA = 10.000 ELEVON = .000
AILRON = .000 BDFLAP = .000
SPDBRK = 55.000 RUDDER = .000

RUN NO. 100/ 0 GRADIENT INTERVAL = -5.00/ 5.00

Q	BETA	DELE1	DELE2	DELE3	DELE4	BDFLAP	ELEVON	AILRON
47.610	-13.000	.00000	.00000	.00000	.00000	.00000	.00000	.00000
47.820	-10.000	.00000	.00000	.00000	.00000	.00000	.00000	.00000
47.670	-5.000	.00000	.00000	.00000	.00000	.00000	.00000	.00000
47.670	-2.000	.00000	.00000	.00000	.00000	.00000	.00000	.00000
47.600	.000	.00000	.00000	.00000	.00000	.00000	.00000	.00000
47.560	2.000	.00000	.00000	.00000	.00000	.00000	.00000	.00000
47.750	5.000	.00000	.00000	.00000	.00000	.00000	.00000	.00000
47.670	10.000	.00000	.00000	.00000	.00000	.00000	.00000	.00000
47.610	15.000	.00000	.00000	.00000	.00000	.00000	.00000	.00000
47.680	20.000	.00000	.00000	.00000	.00000	.00000	.00000	.00000
	GRADIENT	.00000	.00000	.00000	.00000	.00000	.00000	.00000

ARC40X80-462(OA100) OV101 (FNA01A) (16 MAR 82)

REFERENCE DATA

SREF =	2690.0000 SQ.FT.	XMRP =	1076.6800 IN. XO		
LREF =	474.8100 INCHES	YMRP =	.0000 IN. YO		
BREF =	936.6800 INCHES	ZMRP =	375.0000 IN. ZO		
SCALE =	.3600				

PARAMETRIC DATA

BETA =	.000	ELEVON =	.000
AILRON =	.000	BDFLAP =	.000
SPDBRK =	25.000	RUDDER =	.000

RUN NO. 4/ 0 GRADIENT INTERVAL = -5.00/ 5.00

Q	ALPHA	CP12	CP13	CP14	CP15	CP16	CP17	CP18	CP19	CP20	CP21
19.120	-5.245	-.50957	-.50957	-.47877	-.47877	-.47877	-.50957	-.47877	-.22716	-.28698	-.28698
19.020	-2.655	-.50957	-.50957	-.47877	-.47877	-.47877	-.47877	-.47877	-.19725	-.25707	-.25707
19.080	-.066	-.50957	-.50957	-.47877	-.47877	-.47877	-.47877	-.50957	-.19308	-.28033	-.28033
19.180	2.532	-.47877	-.50957	-.41719	-.44799	-.47877	-.47877	-.47877	-.21744	-.27403	-.27403
19.180	5.128	-.46645	-.46645	-.43654	-.46645	-.46645	-.46645	-.46645	-.16400	-.25124	-.25124
19.170	7.734	-.47877	-.47877	-.47877	-.44799	-.44799	-.47877	-.47877	-.13255	-.24574	-.18914
19.110	10.337	-.55321	-.55321	-.51712	-.48103	-.48103	-.55321	-.55321	-.19725	-.25707	-.22716
18.960	12.937	-.59074	-.55198	-.51322	-.51322	-.51322	-.55198	-.55198	-.16085	-.24574	-.24574
18.920	15.552	-.49185	-.49185	-.42841	-.39668	-.42841	-.46013	-.49185	-.22716	-.25707	-.25707
19.050	20.801	-.54206	-.54206	-.39665	-.39665	-.45482	-.51298	-.51298	-.28033	-.33849	-.33849
18.940	26.000	-.67019	-.67019	-.33063	-.47211	-.61360	-.61360	-.64190	-.43654	-.49636	-.46645
	GRADIENT	.00594	.00000	.01188	.00594	-.00000	-.00000	.00001	-.00390	-.00327	-.00327

RUN NO. 5/ 0 GRADIENT INTERVAL = -5.00/ 5.00

Q	ALPHA	CP12	CP13	CP14	CP15	CP16	CP17	CP18	CP19	CP20	CP21
52.070	-5.245	-.35412	-.35412	-.31037	-.31037	-.32131	-.33224	-.33224	-.25908	-.29909	-.26908
52.240	-2.653	-.38015	-.38015	-.31586	-.33729	-.33729	-.34801	-.34801	-.26908	-.27908	-.24907
52.220	-.062	-.35412	-.35412	-.28850	-.31037	-.32131	-.34318	-.32131	-.22906	-.27908	-.24907
52.220	2.535	-.33164	-.33164	-.27104	-.29123	-.29123	-.31144	-.32154	-.29909	-.26908	-.26908
52.260	5.135	-.34318	-.35412	-.28850	-.28850	-.31037	-.31037	-.31037	-.24907	-.22906	-.22906
52.330	7.735	-.31037	-.31037	-.21194	-.24475	-.32131	-.31037	-.27756	-.20769	-.22751	-.24733
52.190	10.341	-.33729	-.34801	-.26228	-.28371	-.30514	-.31586	-.30514	-.20905	-.21906	-.19905
52.250	12.939	-.29663	-.30577	-.17782	-.21438	-.27835	-.28749	-.26921	-.19905	-.22906	-.20905
52.080	15.553	-.32154	-.32154	-.17003	-.23063	-.30134	-.29123	-.29123	-.24907	-.27908	-.24907
52.310	20.819	-.46349	-.47443	-.17912	-.31037	-.37599	-.39787	-.41974	-.29909	-.34912	-.24907
49.060	26.008	-.56753	-.56753	-.17783	-.35103	-.43763	-.47010	-.56753	-.43373	-.49802	-.44444
	GRADIENT	.00935	.00935	.00864	.00888	.00888	.00705	.00510	-.00579	.00193	-.00386

ARC40X80-462(OA100) OV101 (FNA01A) (16 MAR 82)

REFERENCE DATA

SREF =	2690.0000 SQ.FT.	XMRP =	1076.6800 IN. XO		
LREF =	474.8100 INCHES	YMRP =	.0000 IN. YO		
BREF =	936.6800 INCHES	ZMRP =	375.0000 IN. ZO		
SCALE =	.3600				

PARAMETRIC DATA

BETA =	.000	ELEVON =	.000
AILRON =	.000	BDFLAP =	.000
SPDBRK =	25.000	RUDDER =	.000

RUN NO. 7/ 0 GRADIENT INTERVAL = -5.00/ 5.00

Q	ALPHA	CP12	CP13	CP14	CP15	CP16	CP17	CP18	CP19	CP20	CP21
94.180	-5.245	-.29503	-.30599	-.20188	-.28955	-.24571	-.28955	-.26763	-.30996	-.29327	-.30996
94.780	-2.654	-.28833	-.29924	-.19565	-.29924	-.27198	-.28288	-.23927	-.23207	-.29327	-.34891
95.030	-.061	-.28595	-.29674	-.18879	-.29674	-.25356	-.26436	-.28055	-.27976	-.31831	-.24121
94.450	2.539	-.27198	-.27743	-.17930	-.28288	-.26653	-.26653	-.25562	-.20981	-.24319	-.24319
94.520	5.136	-.27859	-.26215	-.16352	-.26215	-.23475	-.25667	-.23475	-.18755	-.25969	-.25432
94.340	7.737	-.25562	-.26108	-.16294	-.25562	-.21746	-.22291	-.21201	-.22650	-.20981	-.26545
94.570	10.345	-.26544	-.27086	-.14610	-.25459	-.23289	-.22747	-.18407	-.21367	-.22469	-.23570
94.610	12.943	-.26653	-.26108	-.14659	-.26108	-.21746	-.22837	-.27198	-.23207	-.23763	-.24876
95.400	15.559	-.28595	-.28595	-.14561	-.25356	-.26436	-.26436	-.21038	-.18613	-.27976	-.25222
92.940	18.182	-.31416	-.32523	-.12595	-.29755	-.29202	-.30309	-.26987	-.27452	-.31408	-.24626
	GRADIENT	.00315	.00420	.00315	.00315	.00105	.00315	-.00314	.00430	.00965	.02035

ARC40X80-462(OA100) OV101(DECREASING ALPHA) (FNA01B) (16 MAR 82)

REFERENCE DATA

SREF =	2690.0000 SQ.FT.	XMRP =	1076.6800 IN. XO		
LREF =	474.8100 INCHES	YMRP =	.0000 IN. YO		
BREF =	936.6800 INCHES	ZMRP =	375.0000 IN. ZO		
SCALE =	.3600				

PARAMETRIC DATA

BETA =	.000	ELEVON =	.000
AILRON =	.000	BDFLAP =	.000
SPDBRK =	25.000	RUDDER =	.000

RUN NO. 6/ 0 GRADIENT INTERVAL = -5.00/ 5.00

Q	ALPHA	CP12	CP13	CP14	CP15	CP16	CP17	CP18	CP19	CP20	CP21
52.300	-5.243	-.39787	-.39787	-.31037	-.37599	-.37599	-.37599	-.34318	-.22751	-.29689	-.27707
51.950	-2.652	-.34174	-.34174	-.29123	-.33164	-.34174	-.34174	-.33164	-.22906	-.26908	-.28909
51.990	-.064	-.31491	-.31491	-.25093	-.30577	-.29663	-.30577	-.31491	-.24907	-.29909	-.29909
51.990	2.533	-.26921	-.27835	-.23265	-.26921	-.26007	-.26921	-.25093	-.22906	-.34912	-.19905
52.180	5.136	-.33729	-.34801	-.28371	-.30514	-.30514	-.30514	-.31586	-.21906	-.29909	-.26908
51.950	7.735	-.28698	-.28698	-.25724	-.28698	-.28698	-.28698	-.28698	-.19905	-.26908	-.21906
52.360	10.339	-.30577	-.30577	-.23265	-.26921	-.26007	-.26921	-.27835	-.22906	-.21906	-.19905
52.100	12.938	-.26921	-.28749	-.16868	-.26921	-.25093	-.26921	-.26921	-.22905	-.24907	-.24907
52.080	15.553	-.36944	-.36944	-.19799	-.32657	-.33729	-.34801	-.33729	-.15903	-.26908	-.24907
52.200	20.822	-.42254	-.43264	-.18013	-.39224	-.39224	-.39224	-.39224	-.29689	-.37617	-.31671
	GRADIENT	.01399	.01222	.01130	.01204	.01575	.01399	.01557	.00000	-.01544	.01738

ARC40X80-462(OA100) OV101 (FNA01C) (16 MAR 82)

REFERENCE DATA

SREF =	2690.0000 SQ.FT.	XMRP =	1076.6800 IN. XO		
LREF =	474.8100 INCHES	YMRP =	.0000 IN. YO		
BREF =	936.6800 INCHES	ZMRP =	375.0000 IN. ZO		
SCALE =	.3600				

PARAMETRIC DATA

BETA =	.000	ELEVON =	10.000
AILRON =	.000	BDFLAP =	.000
SPDBRK =	25.000	RUDDER =	.000

RUN NO. 2/ 0 GRADIENT INTERVAL = -5.00/ 5.00

Q	ALPHA	CP12	CP13	CP14	CP15	CP16	CP17	CP18	CP19	CP20	CP21
18.990	-5.093	-.35893	-.35893	-.30233	-.30233	-.33063	-.33063	-.33063	-.28698	-.34681	-.34681
18.990	-2.501	-.37672	-.37672	-.31690	-.28698	-.28698	-.28698	-.31690	-.28698	-.34681	-.34681
19.140	.091	-.42179	-.42179	-.38442	-.34704	-.34704	-.34704	-.38442	-.28698	-.46645	-.34681
19.090	2.687	-.51712	-.55321	-.51712	-.48103	-.48103	-.48103	-.48103	-.22716	-.34681	-.28698
19.080	5.288	-.55321	-.55321	-.51712	-.48103	-.48103	-.48103	-.48103	-.21744	-.30233	-.27403
19.050	7.890	-.52054	-.52054	-.38548	-.41925	-.45301	-.45301	-.45301	-.27403	-.27403	-.24574
19.090	10.489	-.52054	-.52054	-.45301	-.45301	-.45301	-.45301	-.45301	-.18914	-.24574	-.30233
19.020	13.095	-.47446	-.51322	-.43570	-.39694	-.39694	-.39694	-.39694	-.22216	-.28033	-.28033
18.970	15.701	-.52054	-.52054	-.41925	-.41925	-.45301	-.41925	-.45301	-.18914	-.24574	-.27403
19.040	20.963	-.57114	-.57114	-.32483	-.47877	-.47877	-.50957	-.54035	-.31690	-.49636	-.34681
18.900	26.117	-.78667	-.78667	-.29403	-.47877	-.60193	-.65352	-.72509	-.49636	-.55619	-.55619
	GRADIENT	-.02706	-.03402	-.03859	-.03740	-.03740	-.03740	-.03164	.01153	.00001	.01153

RUN NO. 8/ 0 GRADIENT INTERVAL = -5.00/ 5.00

Q	ALPHA	CP12	CP13	CP14	CP15	CP16	CP17	CP18	CP19	CP20	CP21
47.540	-5.091	-.33518	-.35728	-.20256	-.33518	-.31307	-.32413	-.37938	-.36606	-.40144	-.38964
47.620	-2.500	-.33518	-.33518	-.19150	-.32413	-.27992	-.31307	-.27992	-.31591	-.39754	-.36256
47.640	.091	-.32131	-.32131	-.19006	-.31037	-.31037	-.31037	-.28850	-.31591	-.38588	-.32757
47.600	2.688	-.32413	-.31307	-.19150	-.31307	-.23571	-.30202	-.27992	-.28092	-.32757	-.32757
47.620	5.284	-.31037	-.29943	-.16819	-.31037	-.26662	-.29943	-.24475	-.33923	-.33923	-.31591
47.580	7.890	-.31307	-.31307	-.15835	-.27992	-.26887	-.30202	-.26887	-.30424	-.32757	-.30424
47.470	10.489	-.29943	-.29943	-.14631	-.28850	-.26662	-.26662	-.25569	-.28092	-.31591	-.30424
47.430	13.093	-.30202	-.31307	-.13625	-.27992	-.24676	-.26997	-.24676	-.25759	-.26926	-.26926
47.540	15.704	-.31037	-.31037	-.13538	-.29943	-.27756	-.26662	-.24475	-.28092	-.31591	-.32757
47.490	20.973	-.40081	-.41974	-.11350	-.38693	-.37599	-.37599	-.39787	-.42087	-.38588	-.38588
45.130	26.111	-.53750	-.56082	-.14097	-.47918	-.46752	-.51417	-.51417	-.44736	-.63473	-.57227
	GRADIENT	.00213	.00426	-.00000	.00213	.00853	.00213	.00000	.00675	.01349	.00674

ARC40X80-462(OA100) OV101 (FNA01C) (16 MAR 82)

REFERENCE DATA

SREF = 2690.0000 SQ.FT. XMRP = 1076.6800 IN. XO
LREF = 474.8100 INCHES YMRP = .0000 IN. YO
BREF = 936.6800 INCHES ZMRP = 375.0000 IN. ZO
SCALE = .3600

PARAMETRIC DATA

BETA = .000 ELEVON = 10.000
AILRON = .000 BDFLAP = .000
SPDBRK = 25.000 RUDDER = .000

RUN NO. 14/ 0 GRADIENT INTERVAL = -5.00/ 5.00

Q	ALPHA	CP12	CP13	CP14	CP15	CP16	CP17	CP18	CP19	CP20	CP21
94.550	-5.093	-.34831	-.34831	-.19020	1.83242	-.31014	-.33195	-.31014	-.31695	-.32243	-.34434
94.050	-2.501	-.33740	-.33740	-.18475	1.86513	-.31014	-.32105	-.30469	-.29202	-.28094	-.30862
94.680	.090	-.31293	-.32373	-.17800	1.85144	-.29674	-.32373	-.30754	-.28407	-.28955	-.28407
94.710	2.690	-.30626	-.30626	-.17199	1.84739	-.30626	-.29552	-.24718	-.23382	-.26108	-.30469
94.230	5.291	-.29674	-.30754	-.16181	1.89462	-.28595	-.26976	-.29135	-.26215	-.30599	-.25119
94.260	7.891	-.29256	-.29798	-.14610	1.89808	-.22747	-.25459	-.27086	-.22380	-.22380	-.25119
94.350	10.495	-.29135	-.28595	-.14561	1.90002	-.24817	-.26976	-.24277	-.23475	-.24023	-.21832
94.610	13.098	-.29135	-.29674	-.12942	1.90002	-.23197	-.29135	-.26436	-.26108	-.26108	-.23382
93.190	15.690	-.31281	-.31281	-.12005	1.89565	-.29078	-.30179	-.26324	-.24773	-.22559	-.26434
94.180	18.341	-.34680	-.35765	-.10813	1.87723	-.35223	-.31426	-.32511	-.29503	-.30599	-.26763
92.530	20.984	-.42295	-.42846	-.10903	1.81304	-.35136	-.38991	-.35136	-.35448	-.40455	-.34891
	GRADIENT	.00600	.00600	.00246	-.00342	.00075	.00492	.01109	.01122	.00383	.00075

ARC40X80-462(OA100) OV101 (FNA01D) (16 MAR 82)

REFERENCE DATA

SREF = 2690.0000 SQ.FT. XMRP = 1076.6800 IN. XO
LREF = 474.8100 INCHES YMRP = .0000 IN. YO
BREF = 936.6800 INCHES ZMRP = 375.0000 IN. ZO
SCALE = .3600

PARAMETRIC DATA

BETA = .000 ELEVON = -10.000
AILRON = .000 BDFLAP = .000
SPDBRK = 25.000 RUDDER = .000

RUN NO. 3/ 0 GRADIENT INTERVAL = -5.00/ 5.00

Q	ALPHA	CP12	CP13	CP14	CP15	CP16	CP17	CP18	CP19	CP20	CP21
18.910	-5.410	-.36496	-.39668	-.36496	-.33324	-.33324	-.30152	-.36496	-.19725	-.28698	-.28698
19.080	-2.818	-.29403	-.32483	-.29403	-.29403	-.29403	-.29403	-.29403	-.19725	-.22716	-.25707
19.140	-.221	-.32483	-.32483	-.29403	-.29403	-.29403	-.29403	-.29403	-.22716	-.34681	-.28698
19.110	2.371	-.34219	-.34219	-.34219	-.34219	-.34219	-.34219	-.34219	-.19725	-.22716	-.22716
19.110	4.965	-.46645	-.46645	-.43654	-.43654	-.43654	-.43654	-.46645	-.13255	-.18914	-.21744
19.180	7.564	-.46013	-.46013	-.46013	-.46013	-.46013	-.42841	-.46013	-.13255	-.18914	-.18914
19.120	10.174	-.49185	-.49185	-.46013	-.42841	-.42841	-.42841	-.49185	-.18914	-.24574	-.21744
19.060	12.770	-.49185	-.49185	-.46013	-.42841	-.42841	-.42841	-.42841	-.13742	-.22716	-.19725
18.880	15.379	-.49185	-.49185	-.42841	-.42841	-.49185	-.49185	-.49185	-.13742	-.25707	-.19725
18.900	20.638	-.55529	-.55529	-.46013	-.42841	-.49185	-.52357	-.52357	-.19725	-.25707	-.34681
18.990	25.855	-.66352	-.66352	-.44799	-.47877	-.57114	-.60193	-.63273	-.35893	-.38722	-.38722
	GRADIENT	-.02061	-.01705	-.01834	-.01834	-.01834	-.01834	-.02179	.00863	.00900	.00689

ARC40X80-462(OA100) OV101 (FNA01D) (16 MAR 82)

REFERENCE DATA

SREF =	2690.0000 SQ.FT.	XMRP =	1076.6800 IN. XO		
LREF =	474.8100 INCHES	YMRP =	.0000 IN. YO		
BREF =	936.6800 INCHES	ZMRP =	375.0000 IN. ZO		
SCALE =	.3600				

PARAMETRIC DATA

BETA =	.000	ELEVON =	-10.000
AILRON =	.000	BDFLAP =	.000
SPDBRK =	25.000	RUDDER =	.000

RUN NO. 9/ 0 GRADIENT INTERVAL = -5.00/ 5.00

Q	ALPHA	CP12	CP13	CP14	CP15	CP16	CP17	CP18	CP19	CP20	CP21
47.480	-5.409	-.26887	-.24676	-.21361	-.26887	-.26887	-.26887	-.24676	-.28351	-.36606	-.28351
47.600	-2.819	-.25782	-.26887	-.21361	-.26887	-.26887	-.25782	-.24676	-.28092	-.28092	-.29258
47.420	-.225	-.25569	-.26662	-.21194	-.24475	-.24475	-.24475	-.19006	-.24593	-.32757	-.24593
47.530	2.371	-.26662	-.25569	-.20100	-.26662	-.24475	-.22287	-.24475	-.24593	-.30424	-.26926
47.300	4.967	-.24676	-.24676	-.19150	-.26887	-.19150	-.20256	-.21361	-.28351	-.31889	-.21275
47.530	7.568	-.22287	-.25569	-.19006	-.23381	-.23381	-.24475	-.24475	-.24593	-.26926	-.23427
47.500	10.176	-.24676	-.24676	-.18045	-.23571	-.24676	-.20256	-.20256	-.22261	-.24593	-.26926
47.570	12.771	-.24475	-.25569	-.16819	-.26662	-.25569	-.24475	-.24475	-.22261	-.28092	-.21095
47.460	15.385	-.26887	-.26887	-.15835	-.26887	-.24676	-.24676	-.22466	-.24813	-.27172	-.24813
47.490	20.650	-.33224	-.33224	-.15725	-.32131	-.32131	-.31037	-.26662	-.31591	-.33923	-.30424
47.810	25.857	-.43068	-.43068	-.15725	-.39787	-.37599	-.41974	-.39787	-.37422	-.44419	-.44419
	GRADIENT	.00086	.00298	.00298	-.00084	.00894	.00723	.00172	-.00030	-.00349	.00833

RUN NO. 15/ 0 GRADIENT INTERVAL = -5.00/ 5.00

Q	ALPHA	CP12	CP13	CP14	CP15	CP16	CP17	CP18	CP19	CP20	CP21
94.710	-5.412	-.25896	-.26436	-.21038	1.89462	-.18340	-.23737	-.21038	-.22380	-.27859	-.26215
94.220	-2.818	-.25459	-.27086	-.21119	1.93148	-.22204	-.24916	-.20034	-2.20735	-.26763	-.20736
93.990	-.223	-.27086	-.26544	-.19492	1.94233	-.17864	-.25459	-.27629	-.25119	-.20736	-.24023
94.430	2.374	-.22747	-.26544	-.18949	1.93690	-.24374	-.21662	-.25459	-.19640	-.26763	-.24023
94.520	4.969	-.23197	-.26436	-.18879	1.92700	-.22658	-.23737	-.21578	-.23382	-.26108	-.27743
94.610	7.572	-.23737	-.25356	-.17800	1.92161	-.19959	-.22658	-.22118	-.25017	-.20656	-.23927
94.380	10.178	-.24916	-.24916	-.14610	1.94775	-.22204	-.18407	-.22204	-.19640	-.19640	-.21284
94.800	12.775	-.25356	-.25356	-.15101	1.92700	-.23737	-.23737	-.21578	-.19640	-.19640	-.20736
94.870	15.391	-.27515	-.28055	-.14561	1.91081	-.19959	-.26436	-.23737	-.24571	-.25119	-.22380
95.210	18.018	-.29014	-.30626	-.14514	1.88499	-.26866	-.29552	-.25255	-.27743	-.26653	-.27198
94.570	20.660	-.33453	-.34532	-.12403	1.85144	-.29135	-.33992	-.28595	-.29503	-.36078	-.28407
88.500	25.862	-.43155	-.44315	-.14133	1.93661	-.39672	-.46057	-.38511	-.39467	-.35360	-.34186
	GRADIENT	.00429	.00075	.00280	-.00073	-.00303	.00283	-.00095	.23018	-.00157	-.00810

ARC40X80-462(OA100) OV101 (FNAOIE) (16 MAR 82)

REFERENCE DATA

SREF = 2690.0000 SQ.FT. XMRP = 1076.6800 IN. XO
LREF = 474.8100 INCHES YMRP = .0000 IN. YO
BREF = 936.6800 INCHES ZMRP = 375.0000 IN. ZO
SCALE = .3600

PARAMETRIC DATA

ALPHA = .000 ELEVON = .000
AILRON = .000 BDFLAP = .000
SPDBRK = 25.000 RUDDER = .000

RUN NO. 16/ 0 GRADIENT INTERVAL = -5.00/ 5.00

Q	BETA	CP12	CP13	CP14	CP15	CP16	CP17	CP18	CP19	CP20	CP21
19.200	-13.000	-.35074	-.37829	-.29563	-.37829	-.37829	-.37829	-.32319	-.40663	-.40663	-.34681
19.160	-10.000	-.35074	-.37829	-.26808	-.37829	-.35074	-.32319	-.26808	-.34681	-.34681	-.28698
19.070	-5.000	-.35074	-.37829	-.26808	-.35074	-.32319	-.32319	-.18542	-.19725	-.25707	-.25707
19.050	-2.000	-.31613	-.34297	-.23558	-.34297	-.31613	-.31613	-.31613	-.28698	-.34681	-.28698
19.080	.000	-.34297	-.36982	-.26243	-.34297	-.28928	-.31613	-.26243	-.34681	-.34681	-.28698
19.040	2.000	-.35074	-.37829	-.26808	-.35074	-.37829	-.37829	-.29563	-.28698	-.28698	-.28698
19.130	5.000	-.34297	-.36982	-.26243	-.36982	-.31613	-.31613	-.31613	-.28698	-.28698	-.28698
19.150	10.000	-.34297	-.36982	-.23558	-.36982	-.31613	-.34297	-.31613	-.34681	-.34681	-.28698
19.110	15.000	-.34297	-.36982	-.26243	-.36982	-.28928	-.36982	-.28928	-.31690	-.28698	-.28698
19.040	20.000	-.39667	-.39667	-.26243	-.45037	-.39667	-.39667	-.31613	-.40663	-.34681	-.40663
	GRADIENT	-.00052	-.00049	-.00063	-.00191	-.00154	-.00154	-.01056	-.00774	-.00052	-.00258

RUN NO. 21/ 0 GRADIENT INTERVAL = -5.00/ 5.00

Q	BETA	CP12	CP13	CP14	CP15	CP16	CP17	CP18	CP19	CP20	CP21
47.590	-13.000	-.31037	-.31037	-.20100	-.32131	-.27756	-.31037	-.32131	-.30738	-.34125	-.32996
47.590	-10.000	-.29943	-.31037	-.17912	-.29943	-.31037	-.31037	-.20100	-.23965	-.28481	-.22837
47.630	-5.000	-.29943	-.28850	-.19006	-.26662	-.26662	-.24475	-.21194	-.27352	-.19450	-.22837
47.520	-2.000	-.27992	-.30202	-.19150	-.26887	-.27992	-.25782	-.22466	-.25094	-.25094	-.19450
47.490	.000	-.27992	-.29097	-.18045	-.30202	-.24676	-.26887	-.24676	-.27352	-.25094	-.22837
47.480	2.000	-.29097	-.29097	-.18045	-.27992	-.29097	-.29097	-.26887	-.21708	-.19450	-.22837
47.630	5.000	-.27756	-.27756	-.17912	-.28850	-.27756	-.29943	-.26662	-.21708	-.25094	-.25094
47.510	10.000	-.31037	-.29943	-.17912	-.31037	-.26662	-.27756	-.26662	-.27352	-.25094	-.25094
47.500	15.000	-.32413	-.32413	-.19150	-.33518	-.32413	-.31307	-.25782	-.23965	-.26223	-.25094
47.680	20.000	-.32131	-.37599	-.21194	-.37599	-.37599	-.37599	-.27756	-.35253	-.29609	-.25094
	GRADIENT	.00150	.00132	.00132	-.00227	-.00132	-.00586	-.00624	.00603	-.00292	-.00311

RUN NO. 45/ 0 GRADIENT INTERVAL = -5.00/ 5.00

Q	BETA	CP12	CP13	CP14	CP15	CP16	CP17	CP18	CP19	CP20	CP21
94.290	-13.000	-.33053	-.31968	-.20577	-.31968	-.31426	-.34680	-.35223	-.36308	-.35223	-.34138
94.680	-10.000	-.31033	-.30499	-.20345	-.27827	-.26224	-.28361	-.25155	-.31568	-.27827	-.28896
94.410	-5.000	-.28896	-.28361	-.19276	-.27827	-.28361	-.27293	-.21414	-.27293	-.20879	-.24620
94.780	-2.000	-.28896	-.28361	-.18742	-.27293	-.20879	-.26896	-.27827	-.24086	-.27293	-.23552
94.730	.000	-.28361	-.28896	-.18207	-.28896	-.24620	-.29430	-.26758	-.27403	-.27403	-.23644
94.410	2.000	-.29552	-.31163	-.18273	-.28477	-.25792	-.27940	-.27403	-.23289	-.26544	-.24916
94.180	5.000	-.29674	-.30214	-.17800	-.26595	-.26436	-.29135	-.27515	-.26329	-.27940	-.27403
94.590	10.000	-.30754	-.30754	-.17800	-.29674	-.30754	-.29674	-.28595	-.29552	-.30626	-.27403
94.450	15.000	-.33453	-.31833	-.19419	-.32373	-.28595	-.33453	-.31293	-.26976	-.28055	-.26976
92.340	20.000	-.40828	-.38647	-.22837	-.40828	-.35921	-.34831	-.37011	-.36818	-.38818	-.30599
	GRADIENT	-.00090	-.00256	.00143	-.00107	-.00003	-.00126	-.00511	.00111	-.00583	-.00287

ARC40X80-462(OA100) OV101(DECREASING BETA) (FNA01F) (16 MAR 82)

REFERENCE DATA

SREF =	2690.0000 SQ.FT.	XMRP =	1076.6800 IN. XO		
LREF =	474.8100 INCHES	YMRP =	.0000 IN. YO		
BREF =	936.6800 INCHES	ZMRP =	375.0000 IN. ZO		
SCALE =	.3600				

PARAMETRIC DATA

ALPHA =	.000	ELEVON =	.000
AILRON =	.000	BDFLAP =	.000
SPDBRK =	25.000	RUDDER =	.000

RUN NO. 22/ 0 GRADIENT INTERVAL = -5.00/ 5.00

Q	BETA	CP12	CP13	CP14	CP15	CP16	CP17	CP18	CP19	CP20	CP21
47.510	-13.000	-.32131	-.32131	-.19006	-.32131	-.25569	-.31037	-.33224	-.28481	-.32996	-.30738
47.470	-10.000	-.26887	-.31307	-.19150	-.30202	-.26887	-.31307	-.24676	-.22837	-.28481	-.25094
47.610	-5.000	-.27756	-.31037	-.19006	-.26662	-.25569	-.24475	-.26662	-.22837	-.19450	-.19450
47.600	-2.000	-.24475	-.29943	-.17912	-.24475	-.23381	-.24475	-.26662	-.22837	-.19450	-.19450
47.430	.000	-.28850	-.31037	-.17912	-.29943	-.24475	-.25569	-.24475	-.21708	-.21708	-.21708
47.440	2.000	-.27992	-.30202	-.18045	-.26887	-.23571	-.26887	-.26887	-.21708	-.25094	-.19450
47.550	5.000	-.27992	-.30202	-.18045	-.27992	-.26887	-.27992	-.26887	-.22837	-.25094	-.21708
47.490	10.000	-.31037	-.31037	-.17912	-.31037	-.31037	-.29943	-.31037	-.27352	-.27352	-.27352
47.540	15.000	-.32131	-.33224	-.19006	-.32131	-.31037	-.29943	-.28850	-.27352	-.27352	-.22837
47.670	20.000	-.37599	-.38693	-.22287	-.41974	-.37599	-.37599	-.39787	-.32996	-.38640	-.29609
	GRADIENT	-.00142	.00063	.00078	-.00198	-.00120	-.00386	-.00027	.00039	-.00681	-.00195

ARC40X80-462(OA100) OV101 (FNA01G) (16 MAR 82)

REFERENCE DATA

SREF =	2690.0000 SQ.FT.	XMRP =	1076.6800 IN. XO		
LREF =	474.8100 INCHES	YMRP =	.0000 IN. YO		
BREF =	936.6800 INCHES	ZMRP =	375.0000 IN. ZO		
SCALE =	.3600				

PARAMETRIC DATA

ALPHA =	5.000	ELEVON =	.000
AILRON =	.000	BDFLAP =	.000
SPDBRK =	25.000	RUDDER =	.000

RUN NO. 17/ 0 GRADIENT INTERVAL = -5.00/ 5.00

Q	BETA	CP12	CP13	CP14	CP15	CP16	CP17	CP18	CP19	CP20	CP21
19.180	-13.000	-.35074	-.37829	-.24052	-.37829	-.40585	-.37829	-.32319	-.25707	-.34681	-.34681
19.120	-10.000	-.31613	-.36982	-.26243	-.36982	-.36982	-.31613	-.26243	-.25707	-.25707	-.25707
19.080	-5.000	-.31613	-.36982	-.23558	-.31613	-.28928	-.31613	-.23558	-.25707	-.25707	-.28698
19.070	-2.000	-.29563	-.35074	-.24052	-.32319	-.29563	-.32319	-.21297	-.19725	-.34681	-.19725
19.070	.000	-.28928	-.34297	-.23558	-.31613	-.31613	-.31613	-.23558	-.22716	-.25707	-.22716
19.060	2.000	-.31613	-.34297	-.23558	-.34297	-.31613	-.31613	-.26243	-.34681	-.28698	-.28698
19.080	5.000	-.32319	-.37829	-.21297	-.32319	-.32319	-.32319	-.26808	-.25707	-.34681	-.25707
19.070	10.000	-.34297	-.36982	-.26243	-.34297	-.31613	-.36982	-.26243	-.28698	-.25707	-.28698
19.020	15.000	-.34297	-.39667	-.26243	-.39667	-.36982	-.36982	-.23558	-.28698	-.28698	-.25707
19.010	20.000	-.39667	-.45037	-.26243	-.42352	-.42352	-.42352	-.34297	-.34681	-.34681	-.34681
	GRADIENT	-.00132	-.00046	.00212	-.00129	-.00363	-.00037	-.00451	-.00516	-.00567	-.00052

ARC40X80-462(OA100) OV101 (FNA01G) (16 MAR 82)

REFERENCE DATA

SREF =	2690.0000 SQ.FT.	XMRP =	1076.6800 IN. XO		
LREF =	474.8100 INCHES	YMRP =	.0000 IN. YO		
BREF =	936.6800 INCHES	ZMRP =	375.0000 IN. ZO		
SCALE =	.3600				

PARAMETRIC DATA

ALPHA =	5.000	ELEVON =	.000
AILRON =	.000	BDFLAP =	.000
SPDBRK =	25.000	RUDDER =	.000

RUN NO. 23/ 0 GRADIENT INTERVAL = -5.00/ 5.00

Q	BETA	CP12	CP13	CP14	CP15	CP16	CP17	CP18	CP19	CP20	CP21
47.780	-13.000	-.31037	-.32131	-.19006	-.32131	-.23381	-.33224	-.35412	-.28481	-.30738	-.32996
47.770	-10.000	-.29943	-.31037	-.17912	-.27756	-.31037	-.29943	-.24475	-.21708	-.22837	-.25094
47.550	-5.000	-.27992	-.26887	-.18045	-.26887	-.24676	-.26887	-.18045	-.21708	-.34125	-.21708
47.560	-2.000	-.25782	-.29097	-.16940	-.26887	-.22466	-.23571	-.20256	-.22837	-.25094	-.19450
47.450	.000	-.26662	-.27756	-.16819	-.26662	-.25569	-.24475	-.24475	-.25094	-.25094	-.21708
47.560	2.000	-.26662	-.26662	-.15725	-.27756	-.24475	-.26662	-.26662	-.19450	-.19450	-.21708
47.430	5.000	-.27992	-.26887	-.15835	-.26887	-.26887	-.27992	-.24676	-.21708	-.25094	-.21708
47.670	10.000	-.27756	-.29943	-.16819	-.27756	-.27756	-.26662	-.29943	-.22837	-.27352	-.25094
47.470	15.000	-.32413	-.32413	-.18045	-.32413	-.31307	-.31307	-.31307	-.25094	-.27352	-.25094
47.450	20.000	-.37938	-.37938	-.20256	-.39044	-.34623	-.35728	-.33518	-.34125	-.32996	-.30738
	GRADIENT	-.00030	.00084	.00232	-.00030	-.00260	-.00202	-.00793	.00117	.00973	-.00078

ARC40X80-462(OA100) OV101 (FNA01H) (16 MAR 82)

REFERENCE DATA

SREF =	2690.0000 SQ.FT.	XMRP =	1076.6800 IN. XO		
LREF =	474.8100 INCHES	YMRP =	.0000 IN. YO		
BREF =	936.6800 INCHES	ZMRP =	375.0000 IN. ZO		
SCALE =	.3600				

PARAMETRIC DATA

ALPHA =	10.000	ELEVON =	.000
AILRON =	.000	BDFLAP =	.000
SPDBRK =	25.000	RUDDER =	.000

RUN NO. 18/ 0 GRADIENT INTERVAL = -5.00/ 5.00

Q	BETA	CP12	CP13	CP14	CP15	CP16	CP17	CP18	CP19	CP20	CP21
19.060	-13.000	-.36982	-.36982	-.23558	-.36982	-.36982	-.36982	-.34297	-.34681	-.34681	-.34681
19.090	-10.000	-.35074	-.37829	-.24052	-.32319	-.32319	-.35074	-.35074	-.28698	-.34681	-.28698
19.100	-5.000	-.29563	-.35074	-.24052	-.32319	-.32319	-.32319	-.24052	-.19725	-.28698	-.22716
19.180	-2.000	-.29563	-.32319	-.24052	-.32319	-.26808	-.32319	-.21297	-.22716	-.19725	-.19725
19.060	.000	-.29563	-.32319	-.24052	-.32319	-.32319	-.32319	-.26808	-.25707	-.25707	-.25707
19.110	2.000	-.29563	-.35074	-.21297	-.32319	-.32319	-.32319	-.26808	-.28698	-.28698	-.25707
19.080	5.000	-.29563	-.32319	-.21297	-.32319	-.32319	-.32319	-.24052	-.28698	-.28698	-.28698
19.110	10.000	-.35074	-.37829	-.24052	-.35074	-.37829	-.37829	-.26808	-.31690	-.31690	-.28698
19.050	15.000	-.35074	-.40585	-.24052	-.40585	-.35074	-.37829	-.26808	-.28698	-.28698	-.25707
19.040	20.000	-.42352	-.45037	-.26243	-.45037	-.42352	-.45037	-.34297	-.40663	-.40663	-.34681
	GRADIENT	.00000	.00143	.00333	-.00000	-.00190	-.00000	-.00190	-.00980	-.00309	-.00722

REFERENCE DATA

SREF =	2690.0000 SQ.FT.	XMRP =	1076.6800 IN. XO		
LREF =	474.8100 INCHES	YMRP =	.0000 IN. YO		
BREF =	936.6800 INCHES	ZMRP =	375.0000 IN. ZO		
SCALE =	.3600				

PARAMETRIC DATA

ALPHA =	10.000	ELEVON =	.000
AILRON =	.000	BDFLAP =	.000
SPDBRK =	25.000	RUDDER =	.000

RUN NO. 24/ 0 GRADIENT INTERVAL = -5.00/ 5.00

Q	BETA	CP12	CP13	CP14	CP15	CP16	CP17	CP18	CP19	CP20	CP21
47.700	-13.000	-.32131	-.32131	-.16819	-.31037	-.31037	-.31037	-.33224	-.32996	-.31867	-.32996
47.950	-10.000	-.29943	-.31037	-.15725	-.29943	-.29943	-.27756	-.26662	-.26887	-.26887	-.27992
48.370	-5.000	-.26228	-.29443	-.15513	-.27300	-.27300	-.27300	-.16585	-.19150	-.19150	-.19150
47.570	-2.000	-.26662	-.27756	-.14631	-.26662	-.21194	-.24475	-.20100	-.19450	-.21708	-.17192
47.530	.000	-.26662	-.26662	-.14631	-.26662	-.27756	-.26662	-.25569	-.21708	-.21708	-.22837
47.440	2.000	-.25569	-.26662	-.14631	-.25569	-.24475	-.24475	-.24475	-.21708	-.21708	-.25094
47.660	5.000	-.26662	-.27756	-.13538	-.27756	-.24475	-.25569	-.28850	-.21708	-.19450	-.21708
47.390	10.000	-.31307	-.31307	-.15835	-.26887	-.27992	-.26887	-.19150	-.23965	-.25094	-.25094
47.510	15.000	-.33518	-.35728	-.16940	-.31307	-.22466	-.31307	-.30202	-.27352	-.25094	-.22837
47.500	20.000	-.40149	-.41254	-.18045	-.43464	-.37938	-.42359	-.33518	-.28481	-.36382	-.30738
	GRADIENT	.00000	.00183	.00170	-.00002	.00130	.00149	-.01208	-.00298	-.00026	-.00493

RUN NO. 46/ 0 GRADIENT INTERVAL = -5.00/ 5.00

Q	BETA	CP12	CP13	CP14	CP15	CP16	CP17	CP18	CP19	CP20	CP21
94.480	-13.000	-.33171	-.33706	-.17138	-.31568	-.28896	-.30499	-.31568	-.30341	-.35765	-.34138
94.340	-10.000	-.29674	-.32373	-.17260	-.28595	-.24817	-.30754	-.31293	-.29014	-.27940	-.26329
94.410	-5.000	-.29014	-.28477	-.15588	-.29014	-.28477	-.28477	-.26329	-.26544	-.27629	-.27629
94.550	-2.000	-.27403	-.27403	-.16125	-.22570	-.20421	-.23644	-.17736	-.23552	-.24620	-.18742
94.270	.000	-.27515	-.26976	-.16181	-.25896	-.25356	-.24817	-.24817	-.22747	-.23831	-.25459
94.360	2.000	-.29135	-.27515	-.15101	-.26976	-.23197	-.25356	-.24277	-.26544	-.30341	-.26001
94.430	5.000	-.30214	-.29135	-.15101	-.29135	-.23197	-.28595	-.26436	-.25459	-.29256	-.29256
94.550	10.000	-.31700	-.29014	-.16125	-.28477	-.24181	-.26866	-.27940	-.26544	-.34138	-.26544
94.610	15.000	-.34385	-.34922	-.17199	-.34922	-.30089	-.32237	-.30089	-.28171	-.30341	-.30683
94.360	20.000	-.42628	-.42628	-.19959	-.44787	-.41009	-.40469	-.32913	-.35223	-.37935	-.35765
	GRADIENT	-.00163	-.00061	.00077	-.00162	.00359	-.00069	-.00235	-.00010	-.00338	-.00391

ARC40X80-462(OA100) OV101 (FNA011) (16 MAR 82)

REFERENCE DATA

SREF =	2690.0000 SQ.FT.	XMRP =	1076.6800 IN. XO		
LREF =	474.8100 INCHES	YMRP =	.0000 IN. YO		
BREF =	936.6800 INCHES	ZMRP =	375.0000 IN. ZO		
SCALE =	.3600				

PARAMETRIC DATA

ALPHA =	15.000	ELEVON =	.000
AILRON =	.000	BDFLAP =	.000
SPDBRK =	25.000	RUDDER =	.000

RUN NO. 19/ 0 GRADIENT INTERVAL = -5.00/ 5.00

Q	BETA	CP12	CP13	CP14	CP15	CP16	CP17	CP18	CP19	CP20	CP21
19.000	-13.000	-.37829	-.40585	-.21297	-.40585	-.35074	-.37829	-.32319	-.40663	-.40663	-.40663
19.100	-10.000	-.35074	-.37829	-.21297	-.37829	-.40585	-.37829	-.35074	-.28698	-.34681	-.34681
19.000	-5.000	-.29563	-.32319	-.21297	-.32319	-.32319	-.35074	-.26808	-.25707	-.28698	-.28698
19.000	-2.000	-.32319	-.35074	-.21297	-.32319	-.35074	-.32319	-.21297	-.25707	-.22716	-.25707
18.980	.000	-.35074	-.37829	-.21297	-.32319	-.32319	-.32319	-.26808	-.25707	-.25707	-.25707
19.070	2.000	-.34297	-.36982	-.20873	-.36982	-.28928	-.31613	-.28928	-.25707	-.25707	-.25707
18.980	10.000	-.35074	-.37829	-.24052	-.37829	-.32319	-.37829	-.32319	-.28698	-.28698	-.28698
19.000	15.000	-.35074	-.43340	-.21297	-.43340	-.37829	-.37829	-.32319	-.34681	-.34681	-.34681
18.930	20.000	-.46095	-.48851	-.26808	-.48851	-.48851	-.46095	-.40585	-.40663	-.46645	-.34681
	GRADIENT	-.00755	-.00747	.00051	-.00567	.00489	.00472	-.00412	.00000	.00335	.00419

RUN NO. 25/ 0 GRADIENT INTERVAL = -5.00/ 5.00

Q	BETA	CP12	CP13	CP14	CP15	CP16	CP17	CP18	CP19	CP20	CP21
47.510	-13.000	-.33518	-.33518	-.15835	-.32413	-.24676	-.30202	-.31307	-.33298	-.33298	-.33298
47.800	-10.000	-.31037	-.32131	-.15725	-.29943	-.29943	-.29943	-.29943	-.27352	-.30738	-.29609
48.000	-5.000	-.28608	-.27525	-.13453	-.26443	-.26443	-.26443	-.24278	-.23965	-.27352	-.25094
48.090	-2.000	-.26662	-.26662	-.14631	-.26662	-.26662	-.24475	-.24475	-.27352	-.27352	-.25094
47.970	.000	-.27756	-.26662	-.13538	-.24475	-.24475	-.26662	-.16819	-.21708	-.23965	-.22837
47 910	2.000	-.29943	-.29943	-.15725	-.27756	-.24475	-.26662	-.28850	-.27352	-.27352	-.27352
47.890	5.000	-.29943	-.27756	-.13538	-.28850	-.24475	-.24475	-.23381	-.27352	-.21708	-.23965
47.470	10.000	-.32131	-.32131	-.15725	-.32131	-.28850	-.29943	-.28850	-.28734	-.31016	-.32157
47.450	15.000	-.35412	-.37599	-.16819	-.36506	-.31037	-.35412	-.27756	-.32157	-.33298	-.35580
47.650	20.000	-.47443	-.47443	-.19006	-.48537	-.41974	-.45255	-.40881	-.44284	-.40898	-.42026
	GRADIENT	-.00228	-.00133	-.00045	-.00245	.00245	.00094	-.00074	-.00292	.00487	.00019

ARC40X80-462(OA100) OV101 (FNA01J) (16 MAR 82)

REFERENCE DATA

SREF =	2690.0000 SQ.FT.	XMRP =	1076.6800 IN. XO		
LREF =	474.8100 INCHES	YMRP =	.0000 IN. YO		
BREF =	936.6800 INCHES	ZMRP =	375.0000 IN. ZO		
SCALE =	.3600				

PARAMETRIC DATA

ALPHA =	20.000	ELEVON =	.000
AILRON =	.000	BDFLAP =	.000
SPDBRK =	25.000	RUDDER =	.000

RUN NO. 20/ 0 GRADIENT INTERVAL = -5.00/ 5.00

Q	BETA	CP12	CP13	CP14	CP15	CP16	CP17	CP18	CP19	CP20	CP21
19.180	-13.000	-.37829	-.40585	-.13031	-.35074	-.35074	-.37829	-.37829	-.28698	-.43654	-.34681
19.130	-10.000	-.35074	-.37829	-.07520	-.35074	-.29563	-.32319	-.37829	-.22716	-.28698	-.28698
19.100	-5.000	-.33063	-.35893	-.10425	-.33063	-.30233	-.33063	-.35893	-.28698	-.28698	-.28698
19.140	-2.000	-.32319	-.35074	-.15786	-.32319	-.32319	-.32319	-.32319	-.28698	-.22716	-.19725
19.220	.000	-.37829	-.37829	-.15786	-.35074	-.37829	-.35074	-.35074	-.19725	-.22716	-.22716
19.130	2.000	-.35074	-.37829	-.15786	-.35074	-.32319	-.35074	-.35074	-.28698	-.34681	-.34681
19.100	5.000	-.32319	-.35074	-.10276	-.32319	-.32319	-.32319	-.26808	-.22716	-.28698	-.25707
19.010	10.000	-.35074	-.35074	-.13031	-.35074	-.32319	-.32319	-.32319	-.34681	-.34681	-.28698
19.040	15.000	-.38722	-.41552	-.16085	-.44382	-.35893	-.41552	-.35893	-.34681	-.28698	-.34681
19.000	20.000	-.43340	-.46095	-.15786	-.51606	-.46095	-.43340	-.40585	-.40663	-.49636	-.37672
	GRADIENT	-.00031	-.00024	.00013	-.00031	-.00180	-.00031	.00688	.00516	-.00413	-.00258

RUN NO. 26/ 0 GRADIENT INTERVAL = -5.00/ 5.00

Q	BETA	CP12	CP13	CP14	CP15	CP16	CP17	CP18	CP19	CP20	CP21
47.490	-13.000	-.37938	-.41254	-.11414	-.37938	-.35728	-.33518	-.33518	-.35580	-.46990	-.42426
47.730	-10.000	-.34318	-.37599	-.11350	-.35412	-.27756	-.33224	-.34318	-.33298	-.44708	-.33298
47.590	-5.000	-.33224	-.34318	-.11350	-.33224	-.31037	-.31037	-.28850	-.37862	-.32157	-.33298
47.600	-2.000	-.35412	-.37599	-.11350	-.33224	-.33224	-.36506	-.32131	-.39003	-.29875	-.26452
47.560	.000	-.35412	-.37599	-.13538	-.35412	-.33224	-.37599	-.34318	-.35580	-.42426	-.33298
47.630	2.000	-.37599	-.36506	-.13538	-.35412	-.35412	-.36506	-.35412	-.38640	-.40898	-.37511
47.700	5.000	-.34318	-.35412	-.12444	-.33224	-.31037	-.29943	-.32131	-.33298	-.33298	-.33298
47.640	10.000	-.36506	-.36506	-.13538	-.35412	-.34318	-.33224	-.28850	-.30738	-.32996	-.31867
47.620	15.000	-.41974	-.39787	-.13538	-.41974	-.32131	-.37599	-.33224	-.35580	-.39003	-.35580
47.420	20.000	-.52911	-.50724	-.16819	-.52911	-.46349	-.48537	-.40881	-.46990	-.46990	-.41285
	GRADIENT	-.00170	-.00057	-.00170	-.00075	-.00075	.00094	-.00396	.00406	-.00478	-.00381

ARC40X80-462(OA100) OV101 (FNA01K) (16 MAR 82)

REFERENCE DATA

SREF =	2690.0000 SQ.FT.	XMRP =	1076.6800 IN. XO				
LREF =	474.8100 INCHES	YMRP =	.0000 IN. YO				
BREF =	936.6800 INCHES	ZMRP =	375.0000 IN. ZO				
SCALE =	.3600						

PARAMETRIC DATA

ALPHA =	.000	BETA =	.000
AILRON =	.000	BDFLAP =	.000
SPOBRK =	25.000	RUDDER =	.000

RUN NO. 10/ 0 GRADIENT INTERVAL = -5.00/ 5.00

Q	ELEVON	CP12	CP13	CP14	CP15	CP16	CP17	CP18	CP19	CP20	CP21
47.410	-36.343	-.27116	-.32701	-.26000	-.24883	-.27116	-.27116	-.27116	-.23029	-.16182	-.19606
47.600	-31.143	-.25569	-.32131	-.26662	-.27756	-.21194	-.24475	-.23381	-.20579	-.16064	-.22837
47.670	-26.002	-.24475	-.25569	-.25569	-.24475	-.24475	-.24475	-.21194	-.25094	-.25094	-.27352
47.550	-20.742	-.22287	-.24475	-.24475	-.25569	-.24475	-.24475	-.20100	-.21708	-.25094	-.25094
47.580	-15.601	-.24676	-.24676	-.21361	-.24676	-.18045	-.20256	-.26887	-.19450	-.23965	-.16064
47.670	-10.401	-.26662	-.25569	-.21194	-.26662	-.23381	-.22287	-.21194	-.25094	-.23965	-.17192
47.780	-5.200	-.26662	-.26662	-.20100	-.26662	-.20100	-.24475	-.24475	-.25094	-.31867	-.21708
47.640	-.060	-.29097	-.30202	-.19150	-.30202	-.26887	-.26887	-.26887	-.25094	-.27352	-.25094
47.540	5.141	-.31037	-.32131	-.19006	-.31037	-.27756	-.27756	-.28850	-.30738	-.27352	-.28481
47.490	10.281	-.31307	-.32413	-.19150	-.32413	-.26887	-.29097	-.32413	-.27352	-.32996	-.28481
47.580	15.482	-.35728	-.33518	-.19150	-.33518	-.30202	-.31307	-.23571	-.28481	-.39769	-.27352
47.470	20.682	-.35728	-.35728	-.19150	-.35728	-.31307	-.32413	-.31307	-.28481	-.34125	-.27352
	GRADIENT	.00000	.00000	.00000	.00000	.00000	.00000	.00000	.00000	.00000	.00000

ARC40X80-462(OA100) OV101 (FNAOIL) (16 MAR 82)

REFERENCE DATA

SREF =	2690.0000 SQ.FT.	XMRP =	1076.6800 IN. XO		
LREF =	474.8100 INCHES	YMRP =	.0000 IN. YO		
BREF =	936.6800 INCHES	ZMRP =	375.0000 IN. ZO		
SCALE =	.3600				

PARAMETRIC DATA

ALPHA =	5.000	BETA =	.000
AILRON =	.000	BDFLAP =	.000
SPDBRK =	25.000	RUDDER =	.000

RUN NO. 11/ 0 GRADIENT INTERVAL = -5.00/ 5.00

Q	ELEVON	CP12	CP13	CP14	CP15	CP16	CP17	CP18	CP19	CP20	CP21
47.520	-36.343	-.30202	-.26887	-.26887	-.26887	-.24676	-.19150	-.26887	-.25094	-.25094	-.21708
47.610	-31.143	-.26887	-.30202	-.23571	-.26887	-.22466	-.22466	-.23571	-.21708	-.25094	-.21708
47.540	-26.002	-.24676	-.27992	-.23571	-.27992	-.24676	-.24676	-.16940	-.25094	-.27352	-.21708
47.510	-20.742	-.24676	-.26887	-.21361	-.24676	-.22466	-.21361	-.26887	-.21708	-.19450	-.19450
47.510	-15.601	-.22466	-.25782	-.20256	-.24676	-.18045	-.19150	-.23571	-.21708	-.28481	-.21708
47.550	-10.401	-.24676	-.24676	-.19150	-.24676	-.16940	-.19150	-.24676	-.17192	-.25094	-.21708
47.510	-5.260	-.25782	-.26887	-.19150	-.25782	-.21361	-.22466	-.22466	-.18321	-.19450	-.18321
47.610	-.060	-.25782	-.26887	-.18045	-.26887	-.16940	-.24676	-.26887	-.21708	-.28481	-.22837
47.450	5.081	-.29097	-.30202	-.18045	-.30202	-.24676	-.26887	-.24676	-.25094	-.27352	-.27352
47.500	10.341	-.31307	-.31307	-.18045	-.31307	-.24676	-.26887	-.26887	-.25094	-.30738	-.21708
47.710	15.482	-.32413	-.32413	-.16940	-.33518	-.30202	-.29097	-.27992	-.22837	-.22837	-.27352
47.420	20.682	-.33518	-.33518	-.18045	-.33518	-.31307	-.31307	-.31307	-.28481	-.27352	-.27352
	GRADIENT	.00000	.00000	.00000	.00000	.00000	.00000	.00000	.00000	.00000	.00000

ARC40X80-462(OA100) OV101 (FNA01M) (16 MAR 82)

REFERENCE DATA

SREF =	2690.0000 SQ.FT.	XMRP =	1076.6800 IN. XO		
LREF =	474.8100 INCHES	YMRP =	.0000 IN. YO		
BREF =	936.6800 INCHES	ZMRP =	375.0000 IN. ZO		
SCALE =	.3600				

PARAMETRIC DATA

ALPHA =	10.000	BETA =	.000
AILRON =	.000	BDFLAP =	.000
SPDBRK =	25.000	RUDDER =	.000

RUN NO. 12/ 0 GRADIENT INTERVAL = -5.00/ 5.00

Q	ELEVON	CP12	CP13	CP14	CP15	CP16	CP17	CP18	CP19	CP20	CP21
47.660	-36.343	-.25782	-.32413	-.24676	-.26887	-.24676	-.24676	-.27992	-.26223	-.31867	-.25094
47.590	-31.143	-.24676	-.31307	-.23571	-.27992	-.27992	-.31307	-.32413	-.19450	-.28481	-.22837
47.530	-26.002	-.23381	-.24475	-.21194	-.27756	-.27756	-.24475	-.24475	-.27352	-.25094	-.27352
47.620	-20.802	-.24676	-.26887	-.19150	-.27992	-.30202	-.26887	-.29097	-.28481	-.28481	-.25094
47.460	-15.601	-.23571	-.24676	-.19150	-.26887	-.24676	-.21361	-.25782	-.21708	-.23965	-.22837
47.530	-10.401	-.22466	-.26887	-.16940	-.24676	-.20256	-.22466	-.23571	-.13806	-.20579	-.22837
47.500	-5.200	-.24676	-.26887	-.15835	-.24676	-.23571	-.24676	-.24676	-.19450	-.19450	-.13806
47.500	-.060	-.26662	-.25569	-.15725	-.25569	-.23381	-.25569	-.20100	-.19450	-.19450	-.16064
47.350	5.141	-.26887	-.27992	-.15835	-.26887	-.24676	-.26887	-.24676	-.19450	-.26223	-.17192
47.430	10.281	-.26887	-.26887	-.15835	-.26887	-.25782	-.26887	-.24676	-.21708	-.20579	-.20579
47.460	15.541	-.31307	-.31307	-.15835	-.29097	-.26887	-.29097	-.26887	-.26223	-.22837	-.19450
47.380	20.622	-.31307	-.33518	-.15835	-.31307	-.31307	-.31307	-.26887	-.27352	-.27352	-.25094
	GRADIENT	.00000	.00000	.00000	.00000	.00000	.00000	.00000	.00000	.00000	.00000

ARC40X80-462(OA100) OV101(DECREASING ELEVON) (FNAOIN) (16 MAR 82)

REFERENCE DATA

SREF = 2690.0000 SQ.FT. XMRP = 1076.6800 IN. XO
LREF = 474.8100 INCHES YMRP = .0000 IN. YO
BREF = 936.6800 INCHES ZMRP = 375.0000 IN. ZO
SCALE = .3600

PARAMETRIC DATA

ALPHA = 10.000 BETA = .000
AILRON = .000 BDFLAP = .000
SPDBRK = 25.000 RUDDER = .000

RUN NO. 13/ 0 GRADIENT INTERVAL = -5.00/ 5.00

Q	ELEVON	CP12	CP13	CP14	CP15	CP16	CP17	CP18	CP19	CP20	CP21
47.380	-36.343	-.24676	-.23571	-.24676	-.32413	-.19150	-.26887	-.23571	-.22837	-.27352	-.21708
47.430	-31.143	-.25782	-.26887	-.21361	-.23571	-.35728	-.31307	-.30202	-.27352	-.27352	-.16064
47.440	-25.942	-.26887	-.26887	-.18045	-.24676	-.27992	-.30202	-.26887	-.30738	-.27352	-.21708
47.350	-20.742	-.22466	-.26887	-.18045	-.30202	-.25782	-.24676	-.27992	-.25094	-.25094	-.25094
47.340	-15.541	-.22466	-.24676	-.18045	-.24676	-.19150	-.24676	-.21361	-.19450	-.22837	-.19450
47.340	-10.461	-.24676	-.26887	-.16940	-.23571	-.22466	-.24676	-.26887	-.13806	-.16064	-.21708
47.260	-5.200	-.25782	-.26887	-.16940	-.25782	-.26887	-.24676	-.24676	-.19450	-.21708	-.18321
47.300	.000	-.26887	-.25782	-.15835	-.26887	-.22466	-.24676	-.21361	-.21708	-.19450	-.19450
47.260	5.111	-.27992	-.29097	-.15835	-.27992	-.24676	-.26887	-.24676	-.21708	-.19450	-.19450
47.510	10.281	-.30202	-.31307	-.15835	-.27992	-.23571	-.27992	-.24676	-.23965	-.19450	-.25094
47.530	15.541	-.31307	-.31307	-.13625	-.29097	-.29097	-.27992	-.26887	-.25094	-.23965	-.23965
47.400	20.622	-.31037	-.32131	-.14631	-.31037	-.28850	-.31037	-.26662	-.25094	-.27352	-.28481
	GRADIENT	.00000	.00000	.00000	.00000	.00000	.00000	.00000	.00000	.00000	.00000

ARC40X80-462(OA100) OV101 (FNA010) (16 MAR 82)

REFERENCE DATA

SREF =	2690.0000 SQ.FT.	XMRP =	1076.6800 IN. XO		
LREF =	474.8100 INCHES	YMRP =	.0000 IN. YO		
BREF =	936.6800 INCHES	ZMRP =	375.0000 IN. ZO		
SCALE =	.3600				

PARAMETRIC DATA

ALPHA =	15.000	BETA =	.000
AILRON =	.000	BDFLAP =	.000
SPDBRK =	25.000	RUDDER =	.000

RUN NO. 27/ 0 GRADIENT INTERVAL = -5.00/ 5.00

Q	ELEVON	CP12	CP13	CP14	CP15	CP16	CP17	CP18	CP19	CP20	CP21
47.630	-36.343	-.26662	-.36506	-.24475	-.32131	-.27756	-.32131	-.32131	-.31016	-.29875	-.39003
47.880	-31.143	-.26662	-.31037	-.20100	-.31037	-.37599	-.40881	-.31037	-.33298	-.33298	-.36721
47.570	-26.002	-.23381	-.31037	-.19006	-.33224	-.32131	-.37599	-.29943	-.35580	-.33298	-.35580
47.550	-20.742	-.25569	-.27756	-.19006	-.27756	-.28850	-.26662	-.29943	-.24170	-.25311	-.21888
47.520	-15.601	-.26887	-.27992	-.18045	-.27992	-.21361	-.24676	-.24676	-.24379	-.25532	-.25532
47.720	-10.401	-.26662	-.26662	-.16819	-.25569	-.24475	-.22287	-.23381	-.26452	-.33298	-.24170
47.490	-5.200	-.27992	-.26887	-.15835	-.26887	-.26887	-.26887	-.23571	-.27593	-.24170	-.27593
47.560	.000	-.29943	-.29943	-.14631	-.27756	-.26662	-.26662	-.23381	-.27593	-.27593	-.25311
47.560	5.141	-.31037	-.31037	-.13538	-.27756	-.26662	-.26662	-.23381	-.25311	-.24170	-.24170
47.570	10.281	-.31037	-.32131	-.13538	-.31037	-.25569	-.25569	-.25569	-.25532	-.30146	-.27839
47.790	15.482	-.33224	-.33224	-.12444	-.33224	-.27756	-.32131	-.29943	-.25094	-.29609	-.29609
47.430	20.637	-.34318	-.34318	-.12444	-.33224	-.33224	-.34318	-.29943	-.30146	-.39374	-.30146
	GRADIENT	.00000	.00000	.00000	.00000	.00000	.00000	.00000	.00000	.00000	.00000

ARC40X80-462(OA100) OV101 (FNA01P) (16 MAR 82)

REFERENCE DATA

SREF =	2690.0000 SQ.FT.	XMRP =	1076.6800 IN.	XO	
LREF =	474.8100 INCHES	YMRP =	.0000 IN.	YO	
BREF =	936.6800 INCHES	ZMRP =	375.0000 IN.	ZO	
SCALE =	.3600				

PARAMETRIC DATA

ALPHA =	20.000	BETA =	.000
AILRON =	.000	BDFLAP =	.000
SPDBRK =	25.000	RUDDER =	.000

RUN NO. 28/ 0 GRADIENT INTERVAL = -5.00/ 5.00

Q	ELEVON	CP12	CP13	CP14	CP15	CP16	CP17	CP18	CP19	CP20	CP21
47.610	-36.343	-.31037	-.31037	-.19006	-.33224	-.31037	-.28850	-.33224	-.31300	-.35914	-.35914
47.620	-31.143	-.32131	-.35412	-.20100	-.34318	-.28850	-.31037	-.25569	-.33298	-.35580	-.29875
47.500	-25.942	-.33224	-.35412	-.20100	-.29943	-.27756	-.29943	-.27756	-.29875	-.41285	-.24170
47.700	-20.712	-.32131	-.32131	-.17912	-.31037	-.26662	-.31037	-.25569	-.24170	-.33298	-.24170
47.670	-15.601	-.32131	-.32131	-.16819	-.29943	-.26662	-.26662	-.25569	-.25532	-.30146	-.27839
47.810	-10.401	-.33224	-.34318	-.15725	-.32131	-.32131	-.31037	-.25569	-.31016	-.31016	-.27593
47.510	-5.200	-.35412	-.36506	-.14631	-.35412	-.31037	-.32131	-.31037	-.33607	-.33607	-.33607
47.560	-.030	-.38693	-.38693	-.13538	-.36506	-.33224	-.35412	-.29943	-.42087	-.36256	-.37422
47.750	5.141	-.39787	-.40881	-.13538	-.35412	-.33224	-.37599	-.39787	-.39003	-.41285	-.39003
47.560	10.341	-.43068	-.41974	-.11350	-.39787	-.35412	-.39787	-.41974	-.36721	-.44708	-.41285
47.760	15.541	-.43464	-.46780	-.11414	-.42359	-.42359	-.43464	-.44569	-.39003	-.49272	-.41285
47.650	20.682	-.47443	-.48537	-.10256	-.44162	-.38693	-.49630	-.39787	-.44708	-.48131	-.39003
	GRADIENT	.00000	.00000	.00000	.00000	.00000	.00000	.00000	.00000	.00000	.00000

ARC40X80-462(OA100) OV101 (FNA01Q) (16 MAR 82)

REFERENCE DATA

SREF =	2690.0000 SQ.FT.	XMRP =	1076.6800 IN.	XO	
LREF =	474.8100 INCHES	YMRP =	.0000 IN.	YO	
BREF =	936.6800 INCHES	ZMRP =	375.0000 IN.	ZO	
SCALE =	.3600				

PARAMETRIC DATA

ALPHA =	.000	BETA =	.000
ELEVON =	.000	BDFLAP =	.000
SPDBRK =	25.000	RUDDER =	.000

RUN NO. 29/ 0 GRADIENT INTERVAL = -5.00/ 5.00

Q	AILRON	CP12	CP13	CP14	CP15	CP16	CP17	CP18	CP19	CP20	CP21
47.700	-.045	-.27756	-.31037	-.19006	-.29943	-.25569	-.25569	-.24475	-.28734	-.31016	-.27593
47.690	2.570	-.26662	-.27756	-.20100	-.31037	-.26662	-.27756	-.25569	-.27839	-.27839	-.27839
47.620	5.141	-.31037	-.31037	-.19006	-.28850	-.20100	-.27756	-.23381	-.27839	-.24379	-.24379
47.590	7.711	-.28850	-.28850	-.19006	-.27756	-.24475	-.25569	-.16819	-.27593	-.24170	-.21888
47.610	10.281	-.27756	-.31037	-.20100	-.24475	-.28850	-.26662	-.29943	-.28092	-.19928	-.16429
47.630	15.541	-.25782	-.31307	-.22466	-.29097	-.18045	-.21361	-.20256	-.19765	-.27839	-.26686
	GRADIENT	.00418	.01255	-.00418	-.00418	-.00418	-.00836	-.00418	.00342	.01215	-.00094

ARC40X80-462(OA100) OV101 (FNA01R) (16 MAR 82)

REFERENCE DATA

SREF =	2690.0000 SQ.FT.	XMRP =	1076.6800 IN. XO		
LREF =	474.8100 INCHES	YMRP =	.0000 IN. YO		
BREF =	936.6800 INCHES	ZMRP =	375.0000 IN. ZO		
SCALE =	.3600				

PARAMETRIC DATA

ALPHA =	5.000	BETA =	.000
ELEVON =	.000	BDFLAP =	.000
SPDBRK =	25.000	RUDDER =	.000

RUN NO. 30/ 0 GRADIENT INTERVAL = -5.00/ 5.00

Q	AILRON	CP12	CP13	CP14	CP15	CP16	CP17	CP18	CP19	CP20	CP21
47.600	-.045	-.28850	-.27756	-.19006	-.25569	-.26662	-.24475	-.24475	-.24379	-.33607	-.25532
47.660	2.570	-.26662	-.27756	-.19006	-.25569	-.25569	-.25569	-.25569	-.28092	-.32757	-.22261
47.650	5.141	-.27756	-.27756	-.19006	-.25569	-.26662	-.24475	-.23381	-.25759	-.30424	-.24593
47.570	7.741	-.30202	-.30202	-.19150	-.26887	-.23571	-.21361	-.24676	-.25759	-.28092	-.24593
47.610	10.311	-.25569	-.29943	-.19006	-.24475	-.26662	-.26662	-.23381	-.24593	-.22261	-.28092
47.570	15.541	-.26887	-.31307	-.20256	-.26887	-.18045	-.24676	-.19150	-.24593	-.22261	-.24593
	GRADIENT	.00836	.00000	.00000	.00000	.00418	-.00418	-.00418	-.01420	.00325	.01251

ARC40X80-462(OA100) OV101 (FNA01S) (16 MAR 82)

REFERENCE DATA

SREF =	2690.0000 SQ.FT.	XMRP =	1076.6800 IN. XO		
LREF =	474.8100 INCHES	YMRP =	.0000 IN. YO		
BREF =	936.6800 INCHES	ZMRP =	375.0000 IN. ZO		
SCALE =	.3600				

PARAMETRIC DATA

ALPHA =	10.000	BETA =	.000
ELEVON =	.000	BDFLAP =	.000
SPDBRK =	25.000	RUDDER =	.000

RUN NO. 31/ 0 GRADIENT INTERVAL = -5.00/ 5.00

Q	AILRON	CP12	CP13	CP14	CP15	CP16	CP17	CP18	CP19	CP20	CP21
47.670	-.060	-.26662	-.27756	-.16819	-.27756	-.25569	-.24475	-.23381	-.25532	-.31300	-.24379
47.530	2.570	-.26887	-.26887	-.18045	-.25782	-.24676	-.23571	-.22466	-.24593	-.24593	-.19928
47.690	5.141	-.26887	-.25782	-.15835	-.26887	-.26887	-.25782	-.18045	-.26686	-.26686	-.24379
47.590	7.711	-.26887	-.27992	-.16940	-.24676	-.24676	-.24576	-.23571	-.22261	-.22261	-.24593
47.650	10.281	-.25569	-.29943	-.17912	-.24475	-.21194	-.20100	-.14631	-.19606	-.27593	-.19606
47.710	15.541	-.26887	-.31307	-.18045	-.26887	-.21361	-.19150	-.19150	-.24379	-.27839	-.22072
	GRADIENT	-.00085	.00331	-.00466	.00751	.00339	.00344	.00348	.00357	.02550	.01692

ARC40X80-462(OA100) OV101(DECREASING AILERON) (FNA01T) (16 MAR 82)

REFERENCE DATA

SREF =	2690.0000 SQ.FT.	XMRP =	1076.6800 IN.	XO	
LREF =	474.8100 INCHES	YMRP =	.0000 IN.	YO	
BREF =	936.6800 INCHES	ZMRP =	375.0000 IN.	ZO	
SCALE =	.3600				

PARAMETRIC DATA

ALPHA =	10.000	BETA =	.000
ELEVON =	.000	BDFLAP =	.000
SPDBRK =	25.000	RUDDER =	.000

RUN NO. 32/ 0 GRADIENT INTERVAL = -5.00/ 5.00

Q	AILRON	CP12	CP13	CP14	CP15	CP16	CP17	CP18	CP19	CP20	CP21
47.600	.000	-.27756	-.27756	-.16819	-.26662	-.25569	-.25569	-.23381	-.25759	-.22261	-.22261
47.610	2.570	-.24676	-.26887	-.16940	-.26887	-.26887	-.27992	-.19150	-.22261	-.30424	-.24593
47.690	5.141	-.26887	-.27992	-.16940	-.26887	-.23571	-.27992	-.22466	-.25759	-.24593	-.24593
47.670	7.771	-.26662	-.27756	-.16819	-.26662	-.23381	-.19006	-.23381	-.25311	-.21888	-.21888
47.670	10.341	-.26662	-.29943	-.16819	-.24475	-.22287	-.23381	-.19006	-.22072	-.22072	-.25532
47.610	15.541	-.26887	-.30202	-.19150	-.25782	-.20256	-.23571	-.22466	-.25532	-.22072	-.22072
	GRADIENT	.01198	.00338	-.00047	-.00087	-.00513	-.00943	.01646	.01361	-.03176	-.00907

ARC40X80-462(OA100) OV101 (FNA01U) (16 MAR 82)

REFERENCE DATA

SREF =	2690.0000 SQ.FT.	XMRP =	1076.6800 IN.	XO	
LREF =	474.8100 INCHES	YMRP =	.0000 IN.	YO	
BREF =	936.6800 INCHES	ZMRP =	375.0000 IN.	ZO	
SCALE =	.3600				

PARAMETRIC DATA

ALPHA =	15.000	BETA =	.000
ELEVON =	.000	BDFLAP =	.000
SPDBRK =	25.000	RUDDER =	.000

RUN NO. 33/ 0 GRADIENT INTERVAL = -5.00/ 5.00

Q	AILRON	CP12	CP13	CP14	CP15	CP16	CP17	CP18	CP19	CP20	CP21
47.570	-.015	-.29943	-.31037	-.15725	-.27756	-.26662	-.26662	-.23381	-.26926	-.30424	-.25759
47.700	2.570	-.29943	-.29943	-.15725	-.29943	-.25569	-.25569	-.23381	-.27593	-.29875	-.25311
47.690	5.170	-.26662	-.32131	-.15725	-.27756	-.22287	-.27756	-.25569	-.30424	-.28092	-.28092
47.620	7.711	-.29943	-.29943	-.15725	-.29943	-.26662	-.27756	-.22287	-.24593	-.28092	-.28092
47.590	10.281	-.29943	-.31037	-.13538	-.27756	-.26662	-.26662	-.19006	-.28092	-.28092	-.24593
47.490	15.527	-.31037	-.31037	-.15725	-.31037	-.21194	-.24475	-.26662	-.25759	-.31591	-.24593
	GRADIENT	-.00000	.00423	-.00000	-.00846	.00423	.00423	.00000	-.00258	.00213	.00174

ARC40X80-462(OA100) OV101 (FNA01V) (16 MAR 82)

REFERENCE DATA

SREF =	2690.0000 SQ.FT.	XMRP =	1076.6800 IN. XO		
LREF =	474.8100 INCHES	YMRP =	.0000 IN. YO		
BREF =	936.6800 INCHES	ZMRP =	375.0000 IN. ZO		
SCALE =	.3600				

PARAMETRIC DATA

ALPHA =	20.000	BETA =	.000
ELEVON =	.000	BDFLAP =	.000
SPDBRK =	25.000	RUDDER =	.000

RUN NO. 34/ 0 GRADIENT INTERVAL = -5.00/ 5.00

Q	AILRON	CP12	CP13	CP14	CP15	CP16	CP17	CP18	CP19	CP20	CP21
47.650	.000	-.38693	-.39787	-.14631	-.37599	-.34318	-.38693	-.32131	-.35914	-.35914	-.33607
47.580	2.570	-.38693	-.39787	-.13538	-.35412	-.32131	-.39787	-.31037	-.38588	-.36256	-.36256
47.650	5.185	-.38693	-.40881	-.13538	-.37599	-.31037	-.38693	-.32131	-.42835	-.39374	-.35914
47.670	7.711	-.37599	-.37599	-.13538	-.33224	-.31037	-.36506	-.35412	-.42087	-.33923	-.33923
47.640	10.341	-.37599	-.38693	-.13538	-.37599	-.34318	-.34318	-.32131	-.35914	-.47449	-.35914
47.430	15.541	-.36506	-.37599	-.13538	-.33224	-.34318	-.36506	-.29943	-.31591	-.43253	-.35089
	GRADIENT	.00000	.00000	.00426	.00851	.00851	-.00426	.00426	-.01040	-.00133	-.01031

ARC40X80-462(OA100) OV101 (FNA01W) (16 MAR 82)

REFERENCE DATA

SREF =	2690.0000 SQ.FT.	XMRP =	1076.6800 IN. XO		
LREF =	474.8100 INCHES	YMRP =	.0000 IN. YO		
BREF =	936.6800 INCHES	ZMRP =	375.0000 IN. ZO		
SCALE =	.3600				

PARAMETRIC DATA

ALPHA =	.000	BETA =	.000
ELEVON =	10.000	BDFLAP =	.000
SPDBRK =	25.000	RUDDER =	.000

RUN NO. 50/ 0 GRADIENT INTERVAL = -5.00/ 5.00

Q	AILRON	CP12	CP13	CP14	CP15	CP16	CP17	CP18	CP19	CP20	CP21
47.600	.064	-.31586	-.31586	-.18728	-.29443	-.23014	-.30514	-.23014	-.34935	-.24883	-.27116
47.580	2.544	-.31855	-.30773	-.16700	-.30773	-.26443	-.24278	-.26443	-.19150	-.32413	-.30202
47.740	5.068	-.29443	-.31586	-.18728	-.30514	-.24085	-.31586	-.25157	-.25782	-.26887	-.21361
47.600	7.578	-.31586	-.30514	-.16585	-.30514	-.26228	-.30514	-.31586	-.24676	-.26887	-.29097
47.600	10.044	-.29443	-.32657	-.16585	-.28371	-.23014	-.29443	-.21942	-.27116	-.29350	-.23766
47.740	12.896	-.30773	-.34020	-.19948	-.27525	-.24278	-.29690	-.21030	-.22466	-.23571	-.21361
	GRADIENT	-.00109	.00328	.00817	-.00536	-.01383	.02515	-.01383	.06364	-.03036	-.01244

ARC40X80-462(OA100) OV101 (FNA01X) (16 MAR 82)

REFERENCE DATA

SREF =	2690.0000 SQ.FT.	XMRP =	1076.6800 IN. XO		
LREF =	474.8100 INCHES	YMRP =	.0000 IN. YO		
BREF =	936.6800 INCHES	ZMRP =	375.0000 IN. ZO		
SCALE =	.3600				

PARAMETRIC DATA

ALPHA =	5.000	BETA =	.000
ELEVON =	10.000	BDFLAP =	.000
SPDBRK =	25.000	RUDDER =	.000

RUN NO. 51/ 0 GRADIENT INTERVAL = -5.00/ 5.00

Q	AILRON	CP12	CP13	CP14	CP15	CP16	CP17	CP18	CP19	CP20	CP21
47.550	.049	-.29690	-.30773	-.16700	-.30773	-.21030	-.28608	-.19948	-.26887	-.26887	-.29097
47.650	2.544	-.27525	-.29690	-.15618	-.24278	-.25360	-.27525	-.26443	-.26887	-.24676	-.24676
47.560	5.068	-.27525	-.29690	-.16700	-.26443	-.25360	-.30773	-.26443	-.23766	-.21532	-.24883
47.540	7.578	-.27525	-.30773	-.16700	-.28608	-.26443	-.25360	-.29690	-.21361	-.23571	-.23571
47.710	10.028	-.29690	-.30773	-.16700	-.26443	-.30773	-.24278	-.17783	-.26887	-.23571	-.21361
47.460	12.896	-.23195	-.29690	.16865	-.26443	-.24278	-.29690	-.24278	-.23766	-.24883	-.22649
	GRADIENT	.00868	.00434	.00434	.02604	-.01736	.00434	-.02604	.00000	.00886	.01772

ARC40X80-462(OA100) OV101 (FNA01Y) (16 MAR 82)

REFERENCE DATA

SREF =	2690.0000 SQ.FT.	XMRP =	1076.6800 IN. XO		
LREF =	474.8100 INCHES	YMRP =	.0000 IN. YO		
BREF =	936.6800 INCHES	ZMRP =	375.0000 IN. ZO		
SCALE =	.3600				

PARAMETRIC DATA

ALPHA =	10.000	BETA =	.000
ELEVON =	10.000	BDFLAP =	.000
SPDBRK =	25.000	RUDDER =	.000

RUN NO. 52/ 0 GRADIENT INTERVAL = -5.00/ 5.00

Q	AILRON	CP12	CP13	CP14	CP15	CP16	CP17	CP18	CP19	CP20	CP21
47.580	.049	-.27525	-.27525	-.14535	-.24278	-.24278	-.27525	-.24278	-.26887	-.21361	-.23571
47.430	2.544	-.27525	-.28608	-.13453	-.27525	-.27525	-.23195	-.22113	-.23571	-.23571	-.23571
47.430	5.024	-.27525	-.27525	-.13453	-.26443	-.23195	-.24278	-.22113	-.29350	-.24883	-.24883
47.400	7.578	-.26443	-.29690	-.13453	-.26443	-.23195	-.27525	-.21030	-.21532	-.28233	-.21532
47.480	10.028	-.26228	-.29443	-.15513	-.25157	-.24085	-.29443	-.20871	-.23571	-.23571	-.21361
47.370	12.896	-.27525	-.30773	-.15618	-.26443	-.18865	-.25360	-.18865	-.26887	-.26887	-.18045
	GRADIENT	.00000	-.00434	.00434	-.01302	-.01302	.01736	.00868	.01329	-.00886	.00000

ARC40X80-462(OA100) OV101 (FNA01Z) (16 MAR 82)

REFERENCE DATA

SREF = 2690.0000 SQ.FT. XMRP = 1076.6800 IN. XO
LREF = 474.8100 INCHES YMRP = .0000 IN. YO
BREF = 936.6800 INCHES ZMRP = 375.0000 IN. ZO
SCALE = .3600

PARAMETRIC DATA

ALPHA = 15.000 BETA = .000
ELEVON = 10.000 BDFLAP = .000
SPDBRK = 25.000 RUDDER = .000

RUN NO. 53/ 0 GRADIENT INTERVAL = -5.00/ 5.00

Q	AILRON	CP12	CP13	CP14	CP15	CP16	CP17	CP18	CP19	CP20	CP21
47.600	.050	-.31037	-.32131	-.13538	-.29943	-.31037	-.29943	-.23381	-.25569	-.24475	-.21194
47.750	2.559	-.30773	-.31855	-.13453	-.30773	-.30773	-.26443	-.23195	-.27116	-.21532	-.23766
47.780	5.068	-.29943	-.32131	-.13538	-.31037	-.27756	-.31037	-.19006	-.23766	-.21532	-.23766
47.690	7.564	-.32938	-.31855	-.13453	-.30773	-.27525	-.30773	-.28608	-.23195	-.18865	-.25360
47.700	10.043	-.31855	-.31855	-.13453	-.26508	-.26443	-.29690	-.25360	-.29350	-.23766	-.26000
47.670	12.896	-.31855	-.31855	-.13453	-.31855	-.23195	-.29690	-.23195	-.27116	-.27116	-.23766
	GRADIENT	.00105	.00110	.00034	-.00331	.00105	.01395	.00074	-.00617	.01173	-.01025

ARC40X80-462(OA100) OV101 (FNA02A) (16 MAR 82)

REFERENCE DATA

SREF = 2690.0000 SQ.FT. XMRP = 1076.6800 IN. XO
LREF = 474.8100 INCHES YMRP = .0000 IN. YO
BREF = 936.6800 INCHES ZMRP = 375.0000 IN. ZO
SCALE = .3600

PARAMETRIC DATA

ALPHA = 20.000 BETA = .000
ELEVON = 10.000 BDFLAP = .000
SPDBRK = 25.000 RUDDER = .000

RUN NO. 54/ 0 GRADIENT INTERVAL = -5.00/ 5.00

Q	AILRON	CP12	CP13	CP14	CP15	CP16	CP17	CP18	CP19	CP20	CP21
47.540	.034	-.40881	-.41974	-.11350	-.40881	-.37599	-.40881	-.41974	-.36185	-.32938	-.30773
47.680	2.559	-.41974	-.41974	-.11350	-.40881	-.35412	-.36506	-.31037	-.31855	-.28508	-.30773
47.590	5.039	-.41974	-.40881	-.10256	-.40861	-.36506	-.40881	-.29943	-.37938	-.26887	-.36833
47.620	7.563	-.41974	-.41974	-.10256	-.37599	-.35412	-.39787	-.28850	-.26443	-.34020	-.34020
47.530	10.043	-.40881	-.41974	-.11350	-.37599	-.33224	-.40881	-.33224	-.34935	-.34935	-.38285
47.520	12.896	-.40881	-.41974	-.10256	-.38693	-.35412	-.41974	-.37599	-.32701	-.30467	-.32701
	GRADIENT	-.00433	.00000	.00000	.00000	.00866	.01733	.04332	.01715	.01715	.00000

ARC40X80-462(OA100) OV101 (FNA02B) (16 MAR 82)

REFERENCE DATA

SREF =	2690.0000 SQ.FT.	XMRP =	1076.6800 IN. XO		
LREF =	474.8100 INCHES	YMRP =	.0000 IN. YO		
BREF =	936.6600 INCHES	ZMRP =	375.0000 IN. ZO		
SCALE =	.3600				

PARAMETRIC DATA

ALPHA =	.000	BETA =	.000
ELEVON =	-10.000	BDFLAP =	.000
SPDBRK =	25.000	RUDDER =	.000

RUN NO. 55/ 0 GRADIENT INTERVAL = -5.00/ 5.00

Q	AILRON	CP12	CP13	CP14	CP15	CP16	CP17	CP18	CP19	CP20	CP21
47.620	-.078	-.23195	-.27525	-.19948	-.26443	-.23195	-.25360	-.23195	-.20256	-.23571	-.26887
47.760	2.460	-.24278	-.26443	-.22113	-.26443	-.18865	-.23195	-.19948	-.23381	-.15725	-.20100
47.760	4.985	-.27756	-.26682	-.21194	-.24475	-.22287	-.25569	-.19006	-.20100	-.17912	-.23381
47.580	7.465	-.25569	-.29943	-.20100	-.22287	-.22287	-.25569	-.19006	-.14831	-.10364	-.20415
47.590	10.020	-.24475	-.27756	-.21194	-.22287	-.22287	-.14631	-.23381	-.18045	-.12520	-.14730
47.360	15.069	-.26897	-.29097	-.19150	-.24676	-.19150	-.18045	-.12520	-.18182	-.18182	-.13714
	GRADIENT	-.00900	.00171	-.00247	.00388	.00181	-.00040	.00828	.00030	.01119	.00694

ARC40X80-462(OA100) OV101 (FNA02C) (16 MAR 82)

REFERENCE DATA

SREF =	2690.0000 SQ.FT.	XMRP =	1076.6800 IN. XO		
LREF =	474.8100 INCHES	YMRP =	.0000 IN. YO		
BREF =	936.6800 INCHES	ZMRP =	375.0000 IN. ZO		
SCALE =	.3600				

PARAMETRIC DATA

ALPHA =	5.000	BETA =	.000
ELEVON =	-10.000	BDFLAP =	.000
SPDBRK =	25.000	RUDDER =	.000

RUN NO. 56/ 0 GRADIENT INTERVAL = -5.00/ 5.00

Q	AILRON	CP12	CP13	CP14	CP15	CP16	CP17	CP18	CP19	CP20	CP21
47.640	-.034	-.22113	-.24278	-.16700	-.26443	-.23195	-.15618	-.17783	-.17912	-.23381	-.23381
47.660	2.461	-.25360	-.24278	-.19948	-.24278	-.23195	-.23195	-.17783	-.17912	-.17912	-.17912
47.670	4.985	-.25360	-.26443	-.19948	-.26443	-.15618	-.25360	-.21030	-.21194	-.21194	-.17912
47.670	7.480	-.22113	-.28608	-.18865	-.25360	-.13453	-.23195	-.19948	-.17912	-.15725	-.17912
47.570	10.020	-.23195	-.26443	-.19948	-.25360	-.15618	-.25360	-.19948	-.10256	-.23381	-.14631
47.320	15.054	-.23381	-.24475	-.17912	-.23381	-.20100	-.23381	-.23381	-.19298	-.15948	-.18182
	GRADIENT	-.00646	-.00432	-.00646	-.00002	.01512	-.01939	-.00648	-.00655	.00432	.01087

ARC40X80-462(0A100) 0V101 (FNA03F) (16 MAR 82)

REFERENCE DATA

SREF =	2690.0000 SQ.FT.	XMRP =	1076.6800 IN. XO		
LREF =	474.8100 INCHES	YMRP =	.0000 IN. YO		
BREF =	936.6800 INCHES	ZMRP =	375.0000 IN. ZO		
SCALE =	.3600				

PARAMETRIC DATA

ALPHA =	.000	BETA =	.000
ELEVON =	.000	AILRON =	.000
SPDBRK =	25.000	RUDDER =	.000

RUN NO. 35/ 0 GRADIENT INTERVAL = -5.00/ 5.00

Q	BDFLAP	CP12	CP13	CP14	CP15	CP16	CP17	CP18	CP19	CP20	CP21
47.610	-11.543	-.30202	-.30202	-.27992	-.31307	-.29097	-.30202	-.27992	-.31016	-.28734	-.27593
47.740	-.201	-.29943	-.28850	-.19006	-.31037	-.26662	-.28850	-.28950	-.24883	-.26000	-.24883
47.830	.000	-.29943	-.28850	-.20100	-.27756	-.19006	-.27756	-.29943	-.24883	-.27116	-.24883
47.860	16.388	-.31037	-.29943	.00681	-.27756	-.21194	-.27756	-.26662	-.22648	-.24883	-.27116
47.800	22.684	-.31037	-.29943	.10524	-.27756	-.29943	-.28850	-.31037	-.27116	-.28233	-.28233
	GRADIENT	.00000	.00000	-.05448	.16345	.38139	.05448	-.05448	.00000	-.05564	.00000

ARC40X80-462(0A100) 0V101 (FNA03G) (16 MAR 82)

REFERENCE DATA

SREF =	2690.0000 SQ.FT.	XMRP =	1076.6800 IN. XO		
LREF =	474.8100 INCHES	YMRP =	.0000 IN. YO		
BREF =	936.6800 INCHES	ZMRP =	375.0000 IN. ZO		
SCALE =	.3600				

PARAMETRIC DATA

ALPHA =	5.000	BETA =	.000
ELEVON =	.000	AILRON =	.000
SPDBRK =	25.000	RUDDER =	.000

RUN NO. 36/ 0 GRADIENT INTERVAL = -5.00/ 5.00

Q	BDFLAP	CP12	CP13	CP14	CP15	CP16	CP17	CP18	CP19	CP20	CP21
47.580	-11.543	-.24475	-.26662	-.26662	-.29943	-.25569	-.28850	-.24475	-.25094	-.28481	-.21708
47.730	-.201	-.25569	-.25569	-.17912	-.26662	-.23381	-.26662	-.23381	-.21532	-.27116	-.24883
47.630	16.561	-.26662	-.26662	.02868	-.28850	-.24475	-.26662	-.29943	-.22837	-.25094	-.28481
47.510	22.684	-.26887	-.31307	.14005	-.29097	-.30202	-.34623	-.32413	-.28734	-.28734	-.34439
	GRADIENT	.00000	.00000	.00000	.00000	.00000	.00000	.00000	.00000	.00000	.00000

ARC40X80-462(OA100) OV101 (FNA03H) (16 MAR 82)

REFERENCE DATA

SREF =	2690.0000 SQ.FT.	XMRP =	1076.6800 IN. XO		
LREF =	474.8100 INCHES	YMRP =	.0000 IN. YO		
BREF =	936.6800 INCHES	ZMRP =	375.0000 IN. ZO		
SCALE =	.3600				

PARAMETRIC DATA

ALPHA =	10.000	BETA =	.000
ELEVON =	.000	AILRON =	.000
SPDBRK =	25.000	RUDDER =	.000

RUN NO. 37/ 0 GRADIENT INTERVAL = -5.00/ 5.00

Q	BDFLAP	CP12	CP13	CP14	CP15	CP16	CP17	CP18	CP19	CP20	CP21
47.700	-11.543	-.26662	-.23381	-.25569	-.27756	-.25569	-.25569	-.27756	-.24883	-.27116	-.24883
47.570	-.100	-.26662	-.25569	-.16819	-.26662	-.24475	-.25569	-.26662	-.19450	-.21708	-.19450
47.350	16.561	-.26887	-.29097	.06258	-.26887	-.25782	-.30202	-.27992	-.27593	-.28734	-.25311
47.070	22.684	-.29350	-.31584	.16441	-.32701	-.32701	-.40519	-.32701	-.33298	-.33298	-.33298
	GRADIENT	.00000	.00000	.00000	.00000	.00000	.00000	.00000	.00000	.00000	.00000

ARC40X80-462(OA100) OV101(DECREASING BDFLAP) (FNA03I) (16 MAR 82)

REFERENCE DATA

SREF =	2690.0000 SQ.FT.	XMRP =	1076.6800 IN. XO		
LREF =	474.8100 INCHES	YMRP =	.0000 IN. YO		
BREF =	936.6800 INCHES	ZMRP =	375.0000 IN. ZO		
SCALE =	.3600				

PARAMETRIC DATA

ALPHA =	10.000	BETA =	.000
ELEVON =	.000	AILRON =	.000
SPDBRK =	25.000	RUDDER =	.000

RUN NO. 38/ 0 GRADIENT INTERVAL = -5.00/ 5.00

Q	BDFLAP	CP12	CP13	CP14	CP15	CP16	CP17	CP18	CP19	CP20	CP21
47.810	-11.543	-.26662	-.25569	-.25569	-.26662	-.25569	-.25569	-.25569	-.26000	-.21532	-.21532
47.910	-.100	-.26662	-.25569	-.16819	-.26662	-.23381	-.25569	-.25569	-.22649	-.19298	-.21532
47.740	16.461	-.26662	-.25569	.06149	-.26662	-.24475	-.29943	-.31037	-.24883	-.27116	-.27116
47.360	22.583	-.32413	-.32413	.17320	-.31307	-.32413	-.36833	-.32413	-.31016	-.31016	-.36721
	GRADIENT	.00000	.00000	.00000	.00000	.00000	.00000	.00000	.00000	.00000	.00000

ARC40X80-462(OA100) OV101 (FNA03J) (16 MAR 82)

REFERENCE DATA

SREF =	2690.0000 SQ.FT.	XMRP =	1076.6800 IN. XO		
LREF =	474.8100 INCHES	YMRP =	.0000 IN. YO		
BREF =	936.6800 INCHES	ZMRP =	375.0000 IN. ZO		
SCALE =	.3600				

PARAMETRIC DATA

ALPHA =	15.000	BETA =	.000
ELEVON =	.000	AILRON =	.000
SPDBRK =	25.000	RUDDER =	.000

RUN NO. 39/ 0 GRADIENT INTERVAL = -5.00/ 5.00

Q	BDFLAP	CP12	CP13	CP14	CP15	CP16	CP17	CP18	CP19	CP20	CP21
47.330	-11.543	-.30202	-.27992	-.24676	-.25782	-.25782	-.30202	-.26887	-.25094	-.22837	-.25094
47.320	-.201	-.28233	-.27116	-.14831	-.28233	-.26000	-.30467	-.27116	-.25311	-.28734	-.21888
47.410	16.360	-.30202	-.31307	.07374	-.31307	-.23571	-.26887	-.24676	-.26452	-.23029	-.21888
47.480	22.684	-.31307	-.33618	.17320	-.32413	-.28782	-.31307	-.32413	-.25311	-.27593	-.33298
	GRADIENT	.00000	.00000	.00000	.00000	.00000	.00000	.00000	.00000	.00000	.00000

ARC40X80-462(OA100) OV101 (FNA03K) (16 MAR 82)

REFERENCE DATA

SREF =	2690.0000 SQ.FT.	XMRP =	1076.6800 IN. XO		
LREF =	474.8100 INCHES	YMRP =	.0000 IN. YO		
BREF =	936.6800 INCHES	ZMRP =	375.0000 IN. ZO		
SCALE =	.3600				

PARAMETRIC DATA

ALPHA =	20.000	BETA =	.000
ELEVON =	.000	AILRON =	.000
SPDBRK =	25.000	RUDDER =	.000

RUN NO. 40/ 0 GRADIENT INTERVAL = -5.00/ 5.00

Q	BDFLAP	CP12	CP13	CP14	CP15	CP16	CP17	CP18	CP19	CP20	CP21
47.330	-11.543	-.36833	-.36833	-.21361	-.37938	-.33518	-.36833	-.37938	-.30738	-.42026	-.30738
47.120	-.100	-.37938	-.36833	-.13625	-.35728	-.34623	-.42359	-.35728	-.27593	-.42426	-.31016
47.470	16.461	-.37938	-.37938	.08479	-.40149	-.31307	-.30202	-.29097	-.30738	-.35253	-.27352
47.930	22.684	-.40881	-.41974	.19274	-.35412	-.38693	-.39787	-.24475	-.30202	-.32413	-.30202
	GRADIENT	.00000	.00000	.00000	.00000	.00000	.00000	.00000	.00000	.00000	.00000

ARC40X80-462(OA100) OV101 (FNA03L) (16 MAR 82)

REFERENCE DATA

SREF =	2690.0000 SQ.FT.	XMRP =	1076.6800 IN. XO		
LREF =	474.8100 INCHES	YMRP =	.0000 IN. YO		
BREF =	936.6800 INCHES	ZMRP =	375.0000 IN. ZO		
SCALE =	.3600				

PARAMETRIC DATA

ALPHA =	.000	BETA =	.000
ELEVON =	.000	AILRON =	.000
BDFLAP =	.000	RUDDER =	.000

RUN NO. 41/ 0 GRADIENT INTERVAL = -5.00/ 5.00

Q	SPDBRK	CP12	CP13	CP14	CP15	CP16	CP17	CP18	CP19	CP20	CP21
47.750	.000	-.25569	-.26662	-.19006	-.26662	-.21194	-.25569	-.26662	-.19298	-.24883	-.21532
47.510	25.180	-.29097	-.26887	-.20256	-.27992	-.30202	-.23571	-.31307	-.25094	-.28481	-.25094
47.510	55.459	-.33518	-.32413	-.22466	-.33518	-.35728	-.32413	-.31307	-.30738	-.35253	-.28481
47.360	87.628	-.42359	-.42359	-.24676	-.42359	-.32413	-.42359	-.46790	-.45849	-.44708	-.44708
	GRADIENT	.00000	.00000	.00000	.00000	.00000	.00000	.00000	.00000	.00000	.00000

ARC40X80-462(OA100) OV101 (FNA03M) (16 MAR 82)

REFERENCE DATA

SREF =	2690.0000 SQ.FT.	XMRP =	1076.6800 IN. XO		
LREF =	474.8100 INCHES	YMRP =	.0000 IN. YO		
BREF =	936.6800 INCHES	ZMRP =	375.0000 IN. ZO		
SCALE =	.3600				

PARAMETRIC DATA

ALPHA =	5.000	BETA =	.000
ELEVON =	.000	AILRON =	.000
BDFLAP =	.000	RUDDER =	.000

RUN NO. 42/ 0 GRADIENT INTERVAL = -5.00/ 5.00

Q	SPDBRK	CP12	CP13	CP14	CP15	CP16	CP17	CP18	CP19	CP20	CP21
47.450	-.039	-.23381	-.25569	-.16819	-.25569	-.17912	-.23381	-.27756	-.21532	-.19298	-.19298
47.560	25.179	-.26662	-.24475	-.17912	-.24475	-.19006	-.25569	-.22287	-.24883	-.24883	-.22649
47.560	55.459	-.31037	-.29943	-.19006	-.32131	-.23381	-.26662	-.24475	-.30467	-.29350	-.28233
47.540	87.629	-.37599	-.37599	-.23381	-.37599	-.31037	-.35412	-.37599	-.36382	-.44284	-.32996
	GRADIENT	.00000	.00000	.00000	.00000	.00000	.00000	.00000	.00000	.00000	.00000

ARC40X80-462(OA100) OV101 (FNA03N) (16 MAR 82)

REFERENCE DATA

SREF =	2690.0000 SQ.FT.	XMRP =	1076.6800 IN. XO		
LREF =	474.8100 INCHES	YMRP =	.0000 IN. YO		
BREF =	936.6800 INCHES	ZMRP =	375.0000 IN. ZO		
SCALE =	.3600				

PARAMETRIC DATA

ALPHA =	10.000	BETA =	.000
ELEVON =	.000	AILRON =	.000
BDFLAP =	.000	RUDDER =	.000

RUN NO. 43/ 0 GRADIENT INTERVAL = -5.00/ 5.00

Q	SPDBRK	CP12	CP13	CP14	CP15	CP16	CP17	CP18	CP19	CP20	CP21
47.640	.039	-.25569	-.23381	-.15725	-.24475	-.19006	-.20100	-.24475	-.19298	-.19298	-.19298
47.530	25.141	-.24475	-.25569	-.15725	-.24475	-.24475	-.25569	-.25569	-.22649	-.19298	-.20415
47.100	55.545	-.30202	-.29097	-.16940	-.31307	-.25782	-.30202	-.24676	-.27593	-.25311	-.23029
47.680	87.677	-.34318	-.34318	-.17912	-.35412	-.29943	-.34318	-.29943	-.27116	-.28233	-.28233
	GRADIENT	.00000	.00000	.00000	.00000	.00000	.00000	.00000	.00000	.00000	.00000

ARC40X80-462(OA100) OV101(DECREASING SPDBRK) (FNA03O) (16 MAR 82)

REFERENCE DATA

SREF =	2690.0000 SQ.FT.	XMRP =	1076.6800 IN. XO		
LREF =	474.8100 INCHES	YMRP =	.0000 IN. YO		
BREF =	936.6800 INCHES	ZMRP =	375.0000 IN. ZO		
SCALE =	.3600				

PARAMETRIC DATA

ALPHA =	10.000	BETA =	.000
ELEVON =	.000	AILRON =	.000
BDFLAP =	.000	RUDDER =	.000

RUN NO. 44/ 0 GRADIENT INTERVAL = -5.00/ 5.00

Q	SPDBRK	CP12	CP13	CP14	CP15	CP16	CP17	CP18	CP19	CP20	CP21
47.660	.079	-.25569	-.23381	-.15725	-.25569	-.21194	-.25569	-.20100	-.19298	-.19298	-.20415
47.720	25.139	-.26662	-.24475	-.15725	-.24475	-.20100	-.26662	-.24475	-.21532	-.22649	-.21532
47.360	55.545	-.27756	-.28850	-.16819	-.29943	-.28850	-.25569	-.26662	-.24883	-.24883	-.21532
47.610	87.677	-.35412	-.34318	-.19006	-.32131	-.31037	-.32131	-.32131	-.29350	-.27116	-.32701
	GRADIENT	.00000	.00000	.00000	.00000	.00000	.00000	.00000	.00000	.00000	.00000

ARC40X80-462(OA100) OV101 (FNA03P) (16 MAR 82)

REFERENCE DATA

SREF = 2690.0000 SQ.FT. XMRP = 1076.6800 IN. XO
LREF = 474.8100 INCHES YMRP = .0000 IN. YO
BREF = 936.6800 INCHES ZMRP = 375.0000 IN. ZO
SCALE = .3600

PARAMETRIC DATA

ALPHA = 15.000 BETA = .000
ELEVON = .000 AILRON = .000
BDFLAP = .000 RUDDER = .000

RUN NO. 48/ 0 GRADIENT INTERVAL = -5.00/ 5.00

Q	SPDBRK	CP12	CP13	CP14	CP15	CP16	CP17	CP18	CP19	CP20	CP21
47.660	-.079	-.24278	-.27525	-.12370	-.27525	-.22113	-.26443	-.19948	-.21532	-.23766	-.23766
47.500	25.100	-.29690	-.26443	-.13453	-.26443	-.26443	-.29690	-.24278	-.23571	-.19150	-.23571
47.520	55.329	-.29690	-.31855	-.13453	-.29690	-.26443	-.30773	-.24278	-.29350	-.27116	-.23766
47.460	87.629	-.32938	-.37268	-.14535	-.30773	-.30773	-.35103	-.29690	-.27116	-.41636	-.29350
	GRADIENT	.00000	.00000	.00000	.00000	.00000	.00000	.00000	.00000	.00000	.00000

ARC40X80-462(OA100) OV101 (FNA03Q) (16 MAR 82)

REFERENCE DATA

SREF = 2690.0000 SQ.FT. XMRP = 1076.6800 IN. XO
LREF = 474.8100 INCHES YMRP = .0000 IN. YO
BREF = 936.6800 INCHES ZMRP = 375.0000 IN. ZO
SCALE = .3600

PARAMETRIC DATA

ALPHA = 20.000 BETA = .000
ELEVON = .000 AILRON = .000
BDFLAP = .000 RUDDER = .000

RUN NO. 49/ 0 GRADIENT INTERVAL = -5.00/ 5.00

Q	SPDBRK	CP12	CP13	CP14	CP15	CP16	CP17	CP18	CP19	CP20	CP21
47.680	.040	-.35566	-.34505	-.11168	-.30262	-.31323	-.32383	-.30262	-.32413	-.30202	-.45675
47.550	25.100	-.37268	-.37268	-.11288	-.34020	-.30773	-.44845	-.34020	-.30467	-.41636	-.30467
47.520	55.415	-.41230	-.41230	-.12299	-.35872	-.36944	-.40158	-.38015	-.32701	-.32701	-.37168
	GRADIENT	.00000	.00000	.00000	.00000	.00000	.00000	.00000	.00000	.00000	.00000

ARC40X80-462(0A100) OV101 (GNA01A) (16 MAR 82)

REFERENCE DATA

SREF = 2690.0000 SQ.FT. XMRP = 1076.6800 IN. XO
LREF = 474.8100 INCHES YMRP = .0000 IN. YO
BREF = 936.6800 INCHES ZMRP = 375.0000 IN. ZO
SCALE = .3600

PARAMETRIC DATA

BETA = .000 ELEVON = .000
AILRON = .000 BDFLAP = .000
SPDBRK = 25.000 RUDDER = .000

RUN NO. 4/ 0 GRADIENT INTERVAL = -5.00/ 5.00

Q	ALPHA	CP22	CP23	CP24	CP25	CP26	CP27	CP28	CP29	CP30	CP31
19.120	-5.245	-.25707	-.25707	-.22716	-.25707	-.25707	-.34681	-.34681	-.34681	-.34681	-.34681
19.020	-2.655	-.25707	-.25707	-.25707	-.25707	-.25707	-.34681	-.34681	-.28698	-.34681	-.28698
19.080	-.066	-.19308	-.25124	-.19308	-.19308	-.25124	-.25124	-.25124	-.28033	-.28033	-.30941
19.180	2.532	-.24574	-.24574	-.24574	-.24574	-.24574	-.27403	-.27403	-.24574	-.24574	-.27403
19.180	5.128	-.18400	-.19308	-.19308	-.19308	-.25124	-.28033	-.28033	-.25124	-.25124	-.25124
19.170	7.734	-.18914	-.21744	-.24574	-.18914	-.18914	-.27403	-.27403	-.24574	-.24574	-.24574
19.110	10.337	-.19725	-.19725	-.19725	-.19725	-.19725	-.25707	-.28698	-.25707	-.25707	-.28698
18.960	12.937	-.24574	-.24574	-.18914	-.18914	-.18914	-.24574	-.24574	-.27403	-.24574	-.24574
18.920	15.552	-.22716	-.22716	-.22716	-.22716	-.25707	-.28698	-.28698	-.25707	-.34681	-.28698
19.050	20.801	-.25124	-.28033	-.25124	-.33849	-.33849	-.39665	-.33849	-.39665	-.39665	-.39665
18.940	26.000	-.28698	-.43654	-.25707	-.34681	-.49636	-.43654	-.49636	-.49636	-.52628	-.49636
	GRADIENT	.00217	.00219	.00217	.00217	.00219	.01402	.01402	.00796	.01948	.00250

RUN NO. 5/ 0 GRADIENT INTERVAL = -5.00/ 5.00

Q	ALPHA	CP22	CP23	CP24	CP25	CP26	CP27	CP28	CP29	CP30	CP31
52.070	-5.245	-.19905	-.24907	-.19905	-.21906	-.24907	-.26908	-.31910	-.29909	-.28909	-.31910
52.240	-2.653	-.17904	-.22906	-.23907	-.21906	-.19905	-.27908	-.26908	-.29909	-.27908	-.29909
52.220	-.062	-.17904	-.21906	-.16903	-.21906	-.21906	-.27908	-.27908	-.29909	-.26908	-.27908
52.220	2.535	-.19905	-.22906	-.19905	-.20905	-.24907	-.26908	-.26908	-.27908	-.27908	-.26908
52.260	5.135	-.16903	-.19905	-.16903	-.19905	-.21906	-.25908	-.26908	-.24907	-.26908	-.25908
52.330	7.735	-.17796	-.21760	-.19778	-.19778	-.21760	-.25724	-.26715	-.26715	-.27707	-.24733
52.190	10.341	-.14903	-.21906	-.19905	-.22906	-.21906	-.23907	-.26908	-.22906	-.26908	-.26908
52.250	12.939	-.19905	-.24907	-.19905	-.21906	-.24907	-.24907	-.22906	-.23907	-.25908	-.26908
52.080	15.553	-.16903	-.22906	-.21906	-.19905	-.26908	-.27908	-.27908	-.26908	-.27908	-.26908
52.310	20.819	-.20905	-.29909	-.22906	-.29909	-.34912	-.36913	-.37913	-.39914	-.35912	-.37913
49.060	26.008	-.28371	-.42301	-.29443	-.36944	-.42301	-.42301	-.44444	-.45516	-.46587	-.48730
	GRADIENT	-.00386	-.00000	.00771	.00193	-.00964	.00193	.00000	.00386	-.00000	.00579

ARC40X80-462(OA100) OV101 (GNA01A) (16 MAR 82)

REFERENCE DATA

SREF =	2690.0000 SQ.FT.	XMRP =	1076.6800 IN. XO		
LREF =	474.8100 INCHES	YMRP =	.0000 IN. YO		
BREF =	936.6800 INCHES	ZMRP =	375.0000 IN. ZO		
SCALE =	.3600				

PARAMETRIC DATA

BETA =	.000	ELEVON =	.000
AILRON =	.000	BDFLAP =	.000
SPDBRK =	25.000	RUDDER =	.000

RUN NO. 7/ 0 GRADIENT INTERVAL = -5.00/ 5.00

Q	ALPHA	CP22	CP23	CP24	CP25	CP26	CP27	CP28	CP29	CP30	CP31
94.180	-5.245	-.19868	-.23763	-.22094	-.20981	-.23763	-.30996	-.32666	-.29884	-.27658	-.27658
94.780	-2.654	-.20424	-.20981	-.20424	-.25432	-.24876	-.28771	-.29327	-.30996	-.28771	-.30440
95.030	-.061	-.15309	-.22469	-.17512	-.18063	-.24121	-.29078	-.27976	-.26324	-.29078	-.31281
94.450	2.539	-.20981	-.20981	-.17643	-.19868	-.24876	-.26545	-.29327	-.26545	-.25989	-.28771
94.520	5.136	-.17086	-.18755	-.17643	-.20981	-.23207	-.27101	-.27101	-.25432	-.26545	-.25432
94.340	7.737	-.15417	-.19868	-.15417	-.18755	-.19312	-.24319	-.25432	-.26545	-.24876	-.26545
94.570	10.345	-.15309	-.19715	-.15309	-.20816	-.23370	-.26324	-.25324	-.26875	-.23019	-.27425
94.610	12.943	-.18199	-.22650	-.17086	-.20981	-.23207	-.27101	-.26545	-.25432	-.25989	-.26545
95.400	15.559	-.19715	-.25222	-.20266	-.19715	-.21918	-.26875	-.29078	-.26324	-.24672	-.27425
92.940	18.182	-.18974	-.25756	-.21235	-.25181	-.28017	-.31408	-.31408	-.28017	-.30843	-.33669
	GRADIENT	-.00108	.00000	.00535	.01071	-.00000	.00429	-.00000	.00857	.00536	.00322

ARC40X80-462(OA100) OV101(DECREASING ALPHA) (GNA01B) (16 MAR 82)

REFERENCE DATA

SREF =	2690.0000 SQ.FT.	XMRP =	1076.6800 IN. XO		
LREF =	474.8100 INCHES	YMRP =	.0000 IN. YO		
BREF =	936.6800 INCHES	ZMRP =	375.0000 IN. ZO		
SCALE =	.3600				

PARAMETRIC DATA

BETA =	.000	ELEVON =	.000
AILRON =	.000	BDFLAP =	.000
SPDBRK =	25.000	RUDDER =	.000

RUN NO. 6/ 0 GRADIENT INTERVAL = -5.00/ 5.00

Q	ALPHA	CP22	CP23	CP24	CP25	CP26	CP27	CP28	CP29	CP30	CP31
52.300	-5.243	-.16805	-.24733	-.17796	-.21760	-.25724	-.29689	-.29689	-.29689	-.26715	-.28698
51.950	-2.652	-.19905	-.20905	-.17904	-.21906	-.26908	-.26908	-.26908	-.27908	-.29909	-.29909
51.990	-.064	-.18904	-.21906	-.16903	-.19905	-.20905	-.26908	-.26908	-.26908	-.27908	-.29909
51.990	2.533	-.17904	-.17904	-.17904	-.22906	-.19905	-.23907	-.26908	-.26908	-.22906	-.29909
52.180	5.136	-.16903	-.21906	-.16903	-.19905	-.21906	-.24907	-.26908	-.26908	-.27908	-.27908
51.950	7.735	-.16903	-.19905	-.16903	-.19905	-.22906	-.24907	-.24907	-.26908	-.26908	-.26908
52.360	10.339	-.16903	-.21906	-.17904	-.16903	-.21906	-.23907	-.24907	-.26908	-.22906	-.24907
52.100	12.938	-.17904	-.21906	-.16903	-.21906	-.22906	-.24907	-.21906	-.22906	-.26908	-.26908
52.080	15.553	-.16903	-.21906	-.21906	-.21906	-.24907	-.29909	-.26908	-.27908	-.27908	-.27908
52.200	20.822	-.21760	-.31671	-.22751	-.29689	-.32662	-.39599	-.37617	-.36626	-.36626	-.37617
	GRADIENT	.00386	.00579	-.00000	-.00193	.01350	.00579	.00000	.00193	.01351	.00000

ARC40X80-462(OA100) OV101 (GNA01C) (15 MAR 82)

REFERENCE DATA

SREF =	2690.0000 SQ.FT.	XMRP =	1076.6800 IN. XO		
LREF =	474.8100 INCHES	YMRP =	.0000 IN. YO		
BREF =	936.6800 INCHES	ZMRP =	375.0000 IN. ZO		
SCALE =	.3600				

PARAMETRIC DATA

BETA =	.000	ELEVON =	10.000
AILRON =	.000	BDFLAP =	.000
SPDBRK =	25.000	RUDDER =	.000

RUN NO. 2/ 0 GRADIENT INTERVAL = -5.00/ 5.00

Q	ALPHA	CP22	CP23	CP24	CP25	CP26	CP27	CP28	CP29	CP30	CP31
18.990	-5.093	-.25707	-.25707	-.25707	-.25707	-.28698	-.34681	-.34681	-.34681	-.34681	-.40663
18.980	-2.501	-.25707	-.28698	-.25707	-.28698	-.34681	-.34681	-.34681	-.28698	-.34681	-.40663
19.140	.091	-.25707	-.25707	-.25707	-.25707	-.28698	-.34681	-.34681	-.34681	-.34681	-.34681
19.090	2.687	-.25707	-.25707	-.25707	-.25707	-.25707	-.31690	-.28698	-.28698	-.34681	-.34681
19.080	5.286	-.24574	-.24574	-.24574	-.24574	-.27403	-.33063	-.33063	-.33063	-.33063	-.33063
19.050	7.890	-.24574	-.24574	-.24574	-.24574	-.24574	-.27403	-.27403	-.27403	-.27403	-.27403
19.090	10.489	-.27403	-.24574	-.24574	-.24574	-.27403	-.33063	-.27403	-.27403	-.27403	-.33063
19.020	13.085	-.22216	-.28033	-.22216	-.25124	-.28033	-.33849	-.33849	-.33849	-.33849	-.38941
18.970	15.701	-.24574	-.27403	-.24574	-.24574	-.27403	-.30233	-.33063	-.33063	-.33063	-.33063
19.040	20.983	-.25707	-.34681	-.25707	-.34681	-.34681	-.40663	-.40663	-.40663	-.40663	-.43654
18.900	26.117	-.40663	-.55619	-.34681	-.40663	-.55619	-.55619	-.49636	-.55619	-.49636	-.58610
	GRADIENT	.00000	.00576	.00000	.00576	.01729	.00577	.01153	.00000	.00000	.01153

RUN NO. 8/ 0 GRADIENT INTERVAL = -5.00/ 5.00

Q	ALPHA	CP22	CP23	CP24	CP25	CP26	CP27	CP28	CP29	CP30	CP31
47.540	-5.091	-.27172	-.33068	-.25992	-.27172	-.29530	-.33068	-.34247	-.36606	-.31889	-.37785
47.620	-2.500	-.22261	-.30424	-.25759	-.24593	-.29258	-.36256	-.36256	-.36256	-.35089	-.35089
47.640	.091	-.21095	-.26926	-.29258	-.24593	-.29258	-.33923	-.33923	-.32757	-.31591	-.31591
47.600	2.688	-.22261	-.24593	-.23427	-.26926	-.26926	-.32757	-.33923	-.35089	-.32757	-.32757
47.620	5.284	-.21095	-.26926	-.21095	-.26926	-.26926	-.32757	-.33923	-.32757	-.32757	-.31591
47.580	7.890	-.25759	-.26926	-.25759	-.28092	-.26926	-.33923	-.33923	-.33923	-.32757	-.32757
47.470	10.489	-.22261	-.24593	-.23427	-.25759	-.26926	-.26926	-.32757	-.31591	-.31591	-.31591
47.430	13.093	-.24593	-.26926	-.23427	-.28092	-.29258	-.32757	-.32757	-.28092	-.31591	-.32757
47.540	15.704	-.23427	-.26926	-.25759	-.29258	-.31591	-.38588	-.37422	-.32757	-.32757	-.31591
47.490	20.973	-.26926	-.36256	-.31591	-.39754	-.37422	-.44419	-.42087	-.49084	-.43253	-.44419
45.130	26.111	-.38490	-.48483	-.39740	-.44736	-.50982	-.50982	-.50982	-.60975	-.53480	-.58477
	GRADIENT	-.00000	.01124	.00450	-.00450	.00450	.00674	.00449	.00224	.00449	.00449

ARC40X80-462(0A100) OV101 (GNA01C) (16 MAR 82)

REFERENCE DATA

SREF =	2690.0000 SQ.FT.	XMRP =	1076.6800 IN. XO		
LREF =	474.8100 INCHES	YMRP =	.0000 IN. YO		
BREF =	936.6800 INCHES	ZMRP =	375.0000 IN. ZO		
SCALE =	.3600				

PARAMETRIC DATA

BETA =	.000	ELEVON =	10.000
AILRON =	.000	BDFLAP =	.000
SPDBRK =	25.000	RUDDER =	.000

RUN NO. 14/ 0 GRADIENT INTERVAL = -5.00/ 5.00

Q	ALPHA	CP22	CP23	CP24	CP25	CP26	CP27	CP28	CP29	CP30	CP31
94.550	-5.093	-.20736	-.27859	-.22380	-.26215	-.30599	-.29503	-.31695	-.34434	-.33338	-.34434
94.050	-2.501	-.18130	-.26434	-.25327	-.23666	-.29202	-.29755	-.31969	-.30862	-.31969	-.33630
94.680	.090	-.19640	-.25119	-.23475	-.25119	-.23475	-.31695	-.32243	-.30599	-.30051	
94.710	2.690	-.17930	-.23927	-.19565	-.21746	-.26653	-.28833	-.33195	-.30469	-.29379	-.29924
94.230	5.291	-.22380	-.20188	-.20736	-.19640	-.25119	-.27859	-.28955	-.27859	-.28407	-.29503
94.260	7.891	-.19640	-.24023	-.18544	-.19640	-.27859	-.27859	-.29503	-.29503	-.27859	-.28955
94.350	10.495	-.18544	-.24023	-.18544	-.21284	-.24023	-.26215	-.29503	-.27859	-.28955	-.27859
94.610	13.098	-.17930	-.24472	-.20656	-.22291	-.26108	-.26653	-.27743	-.28833	-.27743	-.28833
93.190	15.690	-.19791	-.25327	-.22559	-.22559	-.26987	-.30309	-.28094	-.28648	-.29202	-.29202
94.180	18.341	-.20736	-.26763	-.20736	-.28955	-.29503	-.33338	-.33338	-.34434	-.31695	-.34982
92.530	20.984	-.19868	-.32666	-.22650	-.33222	-.33779	-.39343	-.40455	-.39899	-.38230	-.42125
	GRADIENT	.00039	.00483	.01110	.00370	.00490	.00178	-.00236	.00076	.00499	.00714

ARC40X80-462(0A100) OV101 (GNA01D) (16 MAR 82)

REFERENCE DATA

SREF =	2690.0000 SQ.FT.	XMRP =	1076.6800 IN. XO		
LREF =	474.8100 INCHES	YMRP =	.0000 IN. YO		
BREF =	936.6800 INCHES	ZMRP =	375.0000 IN. ZO		
SCALE =	.3600				

PARAMETRIC DATA

BETA =	.000	ELEVON =	-10.000
AILRON =	.000	BDFLAP =	.000
SPDBRK =	25.000	RUDDER =	.000

RUN NO. 3/ 0 GRADIENT INTERVAL = -5.00/ 5.00

Q	ALPHA	CP22	CP23	CP24	CP25	CP26	CP27	CP28	CP29	CP30	CP31
18.910	-5.410	-.19725	-.19725	-.19725	-.16734	-.16734	-.19725	-.25707	-.25707	-.25707	-.28698
19.080	-2.818	-.19725	-.22716	-.16734	-.19725	-.19725	-.28698	-.31680	-.25707	-.25707	-.28698
19.140	-.221	-.19725	-.19725	-.19725	-.19725	-.25707	-.25707	-.28698	-.25707	-.25707	-.25707
19.110	2.371	-.16734	-.19725	-.13742	-.13742	-.19725	-.22716	-.19725	-.25707	-.25707	-.25707
19.110	4.965	-.18914	-.18914	-.18914	-.18914	-.18914	-.18914	-.18914	-.24574	-.24574	-.18914
19.180	7.564	-.13255	-.13255	-.18914	-.18914	-.18914	-.24574	-.24574	-.21744	-.24574	-.24574
19.120	10.174	-.18914	-.18914	-.18914	-.18914	-.18914	-.24574	-.18914	-.21744	-.24574	-.24574
19.060	12.770	-.16734	-.16734	-.16734	-.16734	-.19725	-.25707	-.25707	-.25707	-.25707	-.28698
18.880	15.379	-.19725	-.22716	-.19725	-.19725	-.22716	-.25707	-.22716	-.25707	-.25707	-.25707
18.900	20.638	-.25707	-.25707	-.22716	-.25707	-.28698	-.34681	-.34681	-.34681	-.34681	-.34681
18.990	25.855	-.27403	-.38722	-.27403	-.33063	-.38722	-.38722	-.41552	-.38722	-.41552	-.47211
	GRADIENT	.00209	.00440	-.00022	.00324	.00324	.01247	.01823	.00786	.00131	.01132

ARC40X80-462(OA100) OV101 (GNA01D) (16 MAR 82)

REFERENCE DATA

SREF =	2690.0000 SQ.FT.	XMRP =	1076.6800 IN. XO		
LREF =	474.8100 INCHES	YMRP =	.0000 IN. YO		
BREF =	936.6800 INCHES	ZMRP =	375.0000 IN. ZO		
SCALE =	.3600				

PARAMETRIC DATA

BETA =	.000	ELEVON =	-10.000
AILRON =	.000	BDFLAP =	.000
SPDBRK =	25.000	RUDDER =	.000

RUN NO. 9/ 0 GRADIENT INTERVAL = -5.00/ 5.00

Q	ALPHA	CP22	CP23	CP24	CP25	CP26	CP27	CP28	CP29	CP30	CP31
47.480	-5.409	-.18917	-.21275	-.17737	-.18917	-.21275	-.25992	-.29530	-.33068	-.27172	-.25992
47.600	-2.819	-.18762	-.22261	-.17596	-.18762	-.23427	-.26926	-.32757	-.25759	-.26926	-.29258
47.420	-.225	-.18762	-.21095	-.19928	-.21095	-.23427	-.24593	-.29258	-.26926	-.26926	-.29258
47.530	2.371	-.18762	-.19928	-.17596	-.18762	-.21095	-.28092	-.26926	-.22261	-.29258	-.25926
47.300	4.987	-.18917	-.18917	-.15379	-.15379	-.23634	-.24813	-.30709	-.27172	-.25992	-.27172
47.630	7.566	-.19928	-.18762	-.17596	-.17596	-.17596	-.26926	-.28092	-.21095	-.22261	-.26926
47.500	10.176	-.18762	-.17596	-.23427	-.18762	-.19928	-.26926	-.30424	-.28092	-.23427	-.30424
47.570	12.771	-.18762	-.21095	-.17596	-.21095	-.19928	-.26926	-.28092	-.26926	-.25759	-.23427
47.460	15.385	-.18917	-.21275	-.23634	-.21275	-.17737	-.30709	-.30709	-.24813	-.27172	-.29530
47.490	20.650	-.24593	-.30424	-.21095	-.25926	-.31591	-.36256	-.36256	-.36256	-.35089	-.35089
47.810	25.857	-.24593	-.38588	-.29258	-.42087	-.42087	-.45586	-.45586	-.44419	-.44419	-.49084
	GRADIENT	-.00018	.00432	.00346	.00481	.00066	.00109	.00326	.00017	.00018	.00331

RUN NO. 15/ 0 GRADIENT INTERVAL = -5.00/ 5.00

Q	ALPHA	CP22	CP23	CP24	CP25	CP26	CP27	CP28	CP29	CP30	CP31
94.710	-5.412	-.16900	-.17448	-.14160	-.18544	-.22380	-.23475	-.26215	-.23475	-.22380	-.26215
94.220	-2.818	-.12517	-.15804	-.14160	-.14708	-.21284	-.25119	-.26215	-.24023	-.24023	-.26215
93.990	-.223	-.15256	-.17996	-.17448	-.18544	-.23475	-.22380	-.25119	-.25119	-.25119	-.26215
94.430	2.374	-.14160	-.15256	-.15256	-.14708	-.16900	-.19640	-.25119	-.23475	-.20736	-.26215
94.520	4.969	-.16839	-.16839	-.14659	-.15204	-.19565	-.22837	-.25017	-.22291	-.20656	-.25017
94.610	7.572	-.16839	-.15749	-.15749	-.13023	-.16839	-.25017	-.22291	-.18475	-.19565	-.26108
94.380	10.178	-.15256	-.15256	-.15256	-.15256	-.21284	-.20736	-.20736	-.20736	-.18544	-.26215
94.800	12.775	-.14160	-.17996	-.18544	-.19640	-.17996	-.25119	-.23475	-.26215	-.23475	-.25667
94.870	15.391	-.17996	-.19640	-.16900	-.18544	-.25119	-.25119	-.26763	-.25667	-.24023	-.26763
95.210	18.018	-.17385	-.19565	-.19565	-.23382	-.22291	-.30469	-.30469	-.26108	-.30469	-.28833
94.570	20.660	-.20736	-.25119	-.20736	-.23475	-.31695	-.29503	-.31695	-.33338	-.34434	-.34982
88.500	25.862	-.25384	-.30665	-.30665	-.32426	-.35360	-.39467	-.43575	-.46509	-.40054	-.45335
	GRADIENT	-.00457	-.00014	.00027	.00091	.00452	.00369	.00138	.00263	.00558	.00138

ARC40X80-462(OA100) OV101 (GNA01E) (16 MAR 82)

REFERENCE DATA

SREF =	2690.0000 SQ.FT.	XMRP =	1076.6800 IN.	XO	
LREF =	474.8100 INCHES	YMRP =	.0000 IN.	YO	
BREF =	936.6800 INCHES	ZMRP =	375.0000 IN.	ZO	
SCALE =	.3600				

PARAMETRIC DATA

ALPHA =	.000	ELEVON =	.000
AILRON =	.000	BDFLAP =	.000
SPDBRK =	25.000	RUDDER =	.000

RUN NO. 16/ 0 GRADIENT INTERVAL = -5.00/ 5.00

Q	BETA	CP22	CP23	CP24	CP25	CP26	CP27	CP28	CP29	CP30	CP31
19.200	-13.000	-.25707	-.28698	-.25707	-.25707	-.28698	-.28698	-.25707	-.28698	-.25707	-.28698
19.160	-10.000	-.28698	-.28698	-.28698	-.28698	-.25707	-.25707	-.25707	-.25707	-.25707	-.25707
19.070	-5.000	-.19725	-.19725	-.19725	-.25707	-.25707	-.25707	-.25707	-.25707	-.22716	-.25707
19.050	-2.000	-.19725	-.19725	-.19725	-.19725	-.25707	-.19726	-.25707	-.22716	-.22716	-.28698
19.080	.000	-.19725	-.22716	-.19725	-.22716	-.25707	-.25707	-.28698	-.25707	-.25707	-.34681
19.040	2.000	-.25707	-.25707	-.19725	-.19725	-.25707	-.34681	-.28698	-.28698	-.28698	-.28698
19.130	5.000	-.19725	-.22716	-.19725	-.22716	-.25707	-.34681	-.34681	-.28698	-.28698	-.28698
19.150	10.000	-.25707	-.28698	-.25707	-.25707	-.28698	-.34681	-.31690	-.28698	-.28698	-.28698
19.110	15.000	-.25707	-.28698	-.25707	-.25707	-.31690	-.34681	-.34681	-.34681	-.34681	-.34681
19.040	20.000	-.25707	-.31690	-.28698	-.28698	-.34681	-.34681	-.40663	-.34681	-.34681	-.37672
	GRADIENT	-.00206	-.00464	.00000	.00258	.00000	-.01289	-.00877	-.00464	-.00722	-.00258

RUN NO. 21/ 0 GRADIENT INTERVAL = -5.00/ 5.00

Q	BETA	CP22	CP23	CP24	CP25	CP26	CP27	CP28	CP29	CP30	CP31
47.590	-13.000	-.21708	-.23965	-.23965	-.22837	-.23965	-.27352	-.25094	-.27352	-.25094	-.28481
47.590	-10.000	-.21708	-.23965	-.23965	-.23965	-.27352	-.21708	-.25094	-.21708	-.27352	-.25094
47.630	-5.000	-.16064	-.20579	-.19450	-.23965	-.23965	-.23965	-.21708	-.25094	-.21708	-.25094
47.520	-2.000	-.17192	-.19450	-.18321	-.21708	-.23965	-.19450	-.25094	-.27352	-.21708	-.27352
47.490	.000	-.13806	-.19450	-.18321	-.16064	-.21708	-.27352	-.29609	-.25094	-.27352	-.29609
47.480	2.000	-.16064	-.21708	-.18321	-.19450	-.21708	-.27352	-.29609	-.29609	-.27352	-.29609
47.630	5.000	-.16064	-.23965	-.21708	-.21708	-.22837	-.29609	-.27352	-.29609	-.25094	-.27352
47.510	10.000	-.19450	-.23965	-.20579	-.23965	-.25094	-.29609	-.28491	-.30738	-.29609	-.29609
47.500	15.000	-.19450	-.23965	-.25094	-.28481	-.21708	-.35253	-.29609	-.30738	-.29609	-.32996
47.680	20.000	-.21708	-.29609	-.23965	-.29609	-.29609	-.35253	-.35253	-.31867	-.30738	-.36382
	GRADIENT	.00039	-.00370	-.00195	.00272	.00175	-.00759	-.00642	-.00467	-.00487	-.00272

RUN NO. 45/ 0 GRADIENT INTERVAL = -5.00/ 5.00

Q	BETA	CP22	CP23	CP24	CP25	CP26	CP27	CP28	CP29	CP30	CP31
94.290	-13.000	-.23831	-.28171	-.25459	-.26544	-.26544	-.27629	-.26544	-.25459	-.24916	-.28171
94.680	-10.000	-.23552	-.21948	-.21948	-.23552	-.28896	-.23017	-.24620	-.22483	-.25155	-.26224
94.410	-5.000	-.19276	-.21414	-.18207	-.23552	-.21948	-.23017	-.24620	-.22483	-.27293	-.25155
94.780	-2.000	-.18207	-.21414	-.19276	-.19811	-.25155	-.25689	-.26224	-.24086	-.25155	-.26758
94.730	.000	-.18273	-.22570	-.19347	-.18273	-.23107	-.26866	-.26329	-.29014	-.23644	-.26866
94.410	2.000	-.16780	-.24374	-.18407	-.20577	-.20034	-.28714	-.29256	-.29256	-.27629	-.29256
94.180	5.000	-.18273	-.26329	-.19884	-.19884	-.23644	-.26866	-.29552	-.29552	-.27403	-.27940
94.590	10.000	-.24718	-.27940	-.20958	-.24718	-.27403	-.28477	-.30089	-.29014	-.31163	-.29014
94.450	15.000	-.22658	-.26976	-.28595	-.28055	-.28595	-.33992	-.33992	-.30754	-.32913	-.30754
92.340	20.000	-.30599	-.29503	-.28407	-.30599	-.33886	-.31695	-.34982	-.34982	-.36626	-.37722
	GRADIENT	.00136	-.00526	-.00115	.00290	.00030	-.00436	-.00530	-.00738	-.00095	-.00326

ARC40X80-462(0A100) OV101(DECREASING BETA) (GNA01F) (16 MAR 82)

REFERENCE DATA

SREF = 2690.0000 SQ.FT. XMRP = 1076.6800 IN. XO
LREF = 474.8100 INCHES YMRP = .0000 IN. YO
BREF = 936.6800 INCHES ZMRP = 375.0000 IN. ZO
SCALE = .3600

PARAMETRIC DATA

ALPHA = .000 ELEVON = .000
AILRON = .000 BDFLAP = .000
SPDBRK = 25.000 RUDDER = .000

RUN NO. 22/ 0 GRADIENT INTERVAL = -5.00/ 5.00

Q	BETA	CP22	CP23	CP24	CP25	CP26	CP27	CP28	CP29	CP30	CP31
47.510	-13.000	-.16064	-.23965	-.21708	-.23965	-.27352	-.27352	-.28481	-.21708	-.27352	-.29609
47.470	-10.000	-.16064	-.25094	-.23965	-.21708	-.27352	-.21708	-.25094	-.21708	-.23965	-.23965
47.610	-5.000	-.17192	-.21708	-.18321	-.21708	-.21708	-.23965	-.21708	-.23965	-.21708	-.25094
47.600	-2.000	-.16064	-.23965	-.18321	-.19450	-.21708	-.25094	-.21708	-.25094	-.23965	-.27352
47.430	.000	-.13806	-.19450	-.19450	-.20579	-.23965	-.25094	-.23965	-.27352	-.26223	-.29609
47.440	2.000	-.16064	-.22837	-.17192	-.18321	-.21708	-.27352	-.27352	-.23965	-.25094	-.29609
47.550	5.000	-.16064	-.21708	-.21708	-.21708	-.25094	-.27352	-.27352	-.23965	-.27352	-.27352
47.490	10.000	-.19450	-.26223	-.21708	-.21708	-.25094	-.29609	-.28481	-.30738	-.29609	-.29609
47.540	15.000	-.21708	-.27352	-.23965	-.29609	-.27352	-.32996	-.32996	-.30738	-.32996	-.32996
47.670	20.000	-.25094	-.25094	-.32996	-.28481	-.32996	-.32996	-.36382	-.35253	-.32996	-.35253
	GRADIENT	.00097	.00039	-.00253	.00039	-.00292	-.00370	-.00681	.00039	-.00525	-.00272

ARC40X80-462(0A100) OV101 (GNA01G) (16 MAR 82)

REFERENCE DATA

SREF = 2690.0000 SQ.FT. XMRP = 1076.6800 IN. XO
LREF = 474.8100 INCHES YMRP = .0000 IN. YO
BREF = 936.6800 INCHES ZMRP = 375.0000 IN. ZO
SCALE = .3600

PARAMETRIC DATA

ALPHA = 5.000 ELEVON = .000
AILRON = .000 BDFLAP = .000
SPDBRK = 25.000 RUDDER = .000

RUN NO. 17/ 0 GRADIENT INTERVAL = -5.00/ 5.00

Q	BETA	CP22	CP23	CP24	CP25	CP26	CP27	CP28	CP29	CP30	CP31
19.180	-13.000	-.19725	-.22716	-.28698	-.19725	-.25707	-.28698	-.25707	-.28698	-.25707	-.28698
19.120	-10.000	-.19725	-.22716	-.19725	-.25707	-.31690	-.25707	-.25707	-.25707	-.19725	-.25707
19.080	-5.000	-.19725	-.19725	-.19725	-.22716	-.19725	-.19725	-.22716	-.25707	-.25707	-.28698
19.070	-2.000	-.19725	-.19725	-.19725	-.19725	-.22716	-.19725	-.25707	-.28698	-.25707	-.25707
19.070	.000	-.19725	-.19725	-.19725	-.16734	-.19725	-.25707	-.25707	-.25707	-.22716	-.25707
19.060	2.000	-.19725	-.19725	-.19725	-.19725	-.22716	-.28698	-.28698	-.25707	-.28698	-.28698
19.080	5.000	-.22716	-.22716	-.19725	-.19725	-.19725	-.28698	-.28698	-.28698	-.28698	-.28698
19.070	10.000	-.25707	-.25707	-.25707	-.25707	-.25707	-.28698	-.28698	-.28698	-.25707	-.28698
19.020	15.000	-.25707	-.25707	-.25707	-.25707	-.25707	-.31690	-.31690	-.34681	-.28698	-.34681
19.010	20.000	-.28698	-.28698	-.34691	-.31690	-.28698	-.40663	-.40663	-.40663	-.34681	-.40663
	GRADIENT	-.00258	-.00258	.00000	.00258	.00000	-.01083	-.00619	-.00155	-.00361	-.00103

ARC40X80-462(OA100) OV101 (GNA01G) (16 MAR 82)

REFERENCE DATA

SREF =	2690.0000 SQ.FT.	XMRP =	1076.6800 IN. XO		
LREF =	474.8100 INCHES	YMRP =	.0000 IN. YO		
BREF =	936.6800 INCHES	ZMRP =	375.0000 IN. ZO		
SCALE =	.3600				

PARAMETRIC DATA

ALPHA =	5.000	ELEVON =	.000
AILRON =	.000	BDFLAP =	.000
SPDBRK =	25.000	RUDDER =	.000

RUN NO. 23/ 0 GRADIENT INTERVAL = -5.00/ 5.00

Q	BETA	CP22	CP23	CP24	CP25	CP26	CP27	CP28	CP29	CP30	CP31
47.780	-13.000	-.21708	-.23965	-.22837	-.23965	-.27352	-.21708	-.29609	-.25094	-.25094	-.27352
47.770	-10.000	-.16064	-.23965	-.23965	-.23965	-.27352	-.23965	-.25094	-.21708	-.21708	-.27352
47.550	-5.000	-.16064	-.18321	-.19450	-.18321	-.23965	-.22837	-.21708	-.21708	-.23965	-.25094
47.560	-2.000	-.13806	-.18321	-.16064	-.16064	-.16064	-.23965	-.25094	-.23965	-.25094	-.26223
47.450	.000	-.13806	-.19450	-.16064	-.18321	-.21708	-.25094	-.23965	-.23965	-.23965	-.27352
47.560	2.000	-.13806	-.21708	-.18321	-.19450	-.21708	-.23965	-.27352	-.23965	-.25094	-.27352
47.430	5.000	-.16064	-.22837	-.17192	-.21708	-.23965	-.25094	-.27352	-.27352	-.27352	-.27352
47.670	10.000	-.19450	-.23965	-.23965	-.21708	-.27352	-.27352	-.29609	-.29609	-.27352	-.29609
47.470	15.000	-.21708	-.29609	-.23965	-.26223	-.29609	-.32996	-.29609	-.31867	-.29609	-.30738
47.450	20.000	-.25094	-.27352	-.28481	-.29609	-.40898	-.38640	-.36382	-.35253	-.35253	-.35253
	GRADIENT	.00000	-.00506	.00117	-.00409	-.00195	-.00195	-.00564	-.00487	-.00292	-.00234

ARC40X80-462(OA100) OV101 (GNA01H) (16 MAR 82)

REFERENCE DATA

SREF =	2690.0000 SQ.FT.	XMRP =	1076.6800 IN. XO		
LREF =	474.8100 INCHES	YMRP =	.0000 IN. YO		
BREF =	936.6800 INCHES	ZMRP =	375.0000 IN. ZO		
SCALE =	.3600				

PARAMETRIC DATA

ALPHA =	10.000	ELEVON =	.000
AILRON =	.000	BDFLAP =	.000
SPDBRK =	25.000	RUDDER =	.000

RUN NO. 18/ 0 GRADIENT INTERVAL = -5.00/ 5.00

Q	BETA	CP22	CP23	CP24	CP25	CP26	CP27	CP28	CP29	CP30	CP31
19.060	-13.000	-.25707	-.28698	-.25707	-.25707	-.28698	-.28698	-.25707	-.28698	-.25707	-.25707
19.090	-10.000	-.25707	-.22716	-.25707	-.25707	-.28698	-.25707	-.25707	-.25707	-.25707	-.28698
19.100	-5.000	-.13742	-.19725	-.19725	-.19725	-.28698	-.25707	-.28698	-.25707	-.28698	-.28698
19.180	-2.000	-.16734	-.19725	-.16734	-.19725	-.19725	-.25707	-.25707	-.25707	-.25707	-.22716
19.060	.000	-.19725	-.25707	-.19725	-.19725	-.19725	-.25707	-.25707	-.25707	-.25707	-.25707
19.110	2.000	-.25707	-.19725	-.19725	-.19725	-.28698	-.25707	-.28698	-.19725	-.19725	-.28698
19.080	5.000	-.13742	-.25707	-.25707	-.19725	-.22716	-.25707	-.25707	-.25707	-.25707	-.25707
19.110	10.000	-.25707	-.25707	-.25707	-.25707	-.25707	-.28698	-.28698	-.28698	-.28698	-.28698
19.050	15.000	-.25707	-.25707	-.25707	-.25707	-.28698	-.34681	-.34681	-.31690	-.31690	-.34681
19.040	20.000	-.22716	-.28698	-.34681	-.28698	-.28698	-.40663	-.43654	-.40663	-.40663	-.43654
	GRADIENT	-.00309	-.00516	-.00619	.00000	.00206	.00000	.00155	.00206	.00464	.00052

ARC40X80-462(OA100) OV101 (GNA01H) (16 MAR 82)

REFERENCE DATA

SREF = 2690.0000 SQ.FT. XMRP = 1076.6800 IN. XO
LREF = 474.8100 INCHES YMRP = .0000 IN. YO
BREF = 936.6800 INCHES ZMRP = 375.0000 IN. ZO
SCALE = .3600

PARAMETRIC DATA

ALPHA = 10.000 ELEVON = .000
AILRON = .000 BDFLAP = .000
SPDBRK = 25.000 RUDDER = .000

RUN NO. 24/ 0 GRADIENT INTERVAL = -5.00/ 5.00

Q	BETA	CP22	CP23	CP24	CP25	CP26	CP27	CP28	CP29	CP30	CP31
47.700	-13.000	-.19450	-.25094	-.21708	-.23965	-.29609	-.30738	-.26223	-.27352	-.27352	-.27352
47.950	-10.000	-.19150	-.23571	-.20256	-.23571	-.25782	-.24676	-.21361	-.23571	-.24676	-.26887
48.370	-5.000	-.13625	-.21361	-.15835	-.21361	-.23571	-.21361	-.21361	-.23571	-.23571	-.25782
47.570	-2.000	-.16064	-.16064	-.19450	-.23965	-.21708	-.23965	-.21708	-.21708	-.21708	-.23965
47.530	.000	-.16064	-.20579	-.16064	-.19450	-.21708	-.23965	-.23965	-.25094	-.20579	-.23965
47.440	2.000	-.16064	-.16064	-.16064	-.18321	-.23965	-.21708	-.21708	-.21708	-.22837	-.23965
47.660	5.000	-.17192	-.19450	-.18321	-.16321	-.23965	-.25094	-.29609	-.27352	-.23965	-.25094
47.390	10.000	-.16064	-.25094	-.20579	-.21708	-.26223	-.29609	-.28481	-.29609	-.30738	-.29609
47.510	15.000	-.18321	-.29609	-.26223	-.23965	-.27352	-.30738	-.31867	-.29609	-.29609	-.30738
47.500	20.000	-.18321	-.27352	-.23965	-.25094	-.35253	-.38540	-.42026	-.40898	-.40898	-.42026
	GRADIENT	-.00308	.00165	-.00098	.00457	-.00112	-.00244	-.00711	-.00326	-.00073	.00059

RUN NO. 46/ 0 GRADIENT INTERVAL = -5.00/ 5.00

Q	BETA	CP22	CP23	CP24	CP25	CP26	CP27	CP28	CP29	CP30	CP31
94.480	-13.000	-.21119	-.24916	-.24916	-.26544	-.26544	-.24916	-.26544	-.28171	-.24916	-.29256
94.340	-10.000	-.19884	-.25255	-.23644	-.26329	-.29014	-.25792	-.27403	-.24181	-.27403	-.29014
94.410	-5.000	-.15695	-.24374	-.22204	-.21119	-.25459	-.25459	-.29256	-.25459	-.22747	-.26544
94.550	-2.000	-.16604	-.24086	-.19811	-.22483	-.23552	-.24086	-.23552	-.23552	-.26224	-.25155
94.270	.000	-.16780	-.25459	-.20034	-.21662	-.22747	-.26001	-.26544	-.24374	-.26544	-.26544
94.360	2.000	-.17322	-.20034	-.19492	-.22204	-.22204	-.27086	-.26544	-.23831	-.26544	-.27086
94.430	5.000	-.17322	-.27086	-.21119	-.22204	-.23831	-.27629	-.29256	-.26544	-.29256	-.29256
94.550	10.000	-.24916	-.28714	-.23831	-.24374	-.30341	-.29798	-.30341	-.26544	-.30883	-.29256
94.610	15.000	-.22204	-.28171	-.24916	-.29256	-.31968	-.32511	-.33053	-.31426	-.32511	-.33596
94.360	20.000	-.26544	-.31426	-.31968	-.29256	-.41190	-.44987	-.42275	-.41732	-.42817	-.44444
	GRADIENT	-.00165	-.00094	.00105	-.00084	.00187	-.00291	-.00103	-.00103	-.00572	-.00300

ARC40X80-462(OA100) OV101 (GNA011) (16 MAR 82)

REFERENCE DATA

SREF =	2690.0000 SQ.FT.	XMRP =	1076.6800 IN. XO		
LREF =	474.8100 INCHES	YMRP =	.0000 IN. YO		
BREF =	936.6800 INCHES	ZMRP =	375.0000 IN. ZO		
SCALE =	.3600				

PARAMETRIC DATA

ALPHA =	15.000	ELEVON =	.000
AILRON =	.000	BDFLAP =	.000
SPDBRK =	25.000	RUDDER =	.000

RUN NO. 19/ 0 GRADIENT INTERVAL = -5.00/ 5.00

Q	BETA	CP22	CP23	CP24	CP25	CP26	CP27	CP28	CP29	CP30	CP31
19.000	-13.000	-.28698	-.28698	-.28698	-.25707	-.25707	-.28698	-.34681	-.34681	-.28598	-.34681
19.100	-10.000	-.25707	-.22716	-.19725	-.28698	-.25707	-.28698	-.28698	-.28698	-.34681	-.34681
19.000	-5.000	-.22716	-.22716	-.25707	-.22716	-.22716	-.25707	-.28698	-.25707	-.25707	-.25707
19.000	-2.000	-.19725	-.19725	-.19725	-.22716	-.22716	-.28698	-.25707	-.25707	-.19725	-.28698
18.980	.000	-.19725	-.22716	-.19725	-.22716	-.25707	-.28698	-.28698	-.25707	-.28698	-.25707
19.070	2.000	-.19725	-.22716	-.19725	-.25707	-.25707	-.28698	-.28698	-.31690	-.28698	-.25707
18.980	10.000	-.28698	-.25707	-.25707	-.25707	-.28698	-.31690	-.28698	-.28698	-.28698	-.28698
19.000	15.000	-.28698	-.28698	-.28698	-.28598	-.34681	-.34681	-.34681	-.34681	-.34681	-.34681
18.930	20.000	-.25707	-.28698	-.28698	-.28698	-.40663	-.43654	-.49636	-.49636	-.49636	-.49636
	GRADIENT	.00419	-.00084	.00839	-.00363	-.00503	-.00419	-.00084	-.00727	-.00671	.00084

RUN NO. 25/ 0 GRADIENT INTERVAL = -5.00/ 5.00

Q	BETA	CP22	CP23	CP24	CP25	CP26	CP27	CP28	CP29	CP30	CP31
47.510	-13.000	-.24170	-.24170	-.29875	-.31016	-.29875	-.27593	-.31016	-.27593	-.31016	-.32157
47.800	-10.000	-.23965	-.25094	-.26223	-.27352	-.36382	-.29609	-.30738	-.27352	-.28481	-.30738
48.000	-5.000	-.18321	-.23965	-.21708	-.22837	-.23965	-.27352	-.27352	-.27352	-.27352	-.27352
48.090	-2.000	-.16064	-.25094	-.21708	-.19450	-.21708	-.23965	-.27352	-.27352	-.25094	-.25094
47.970	.000	-.18321	-.21708	-.19450	-.21708	-.23965	-.27352	-.27352	-.25094	-.23965	-.27352
47.910	2.000	-.18321	-.23965	-.18321	-.19450	-.27352	-.25094	-.25094	-.27352	-.25094	-.27352
47.890	5.000	-.18321	-.21708	-.19450	-.20579	-.26223	-.25094	-.21708	-.26223	-.23965	-.27352
47.470	10.000	-.21888	-.27593	-.21888	-.27593	-.29875	-.29875	-.29875	-.27593	-.29875	-.32157
47.450	15.000	-.25311	-.39003	-.29875	-.26452	-.33298	-.39003	-.39003	-.36721	-.36721	-.39003
47.650	20.000	-.27352	-.35253	-.35253	-.31867	-.35253	-.47670	-.52186	-.52186	-.52186	-.52186
	GRADIENT	-.00078	.00234	.00311	.00195	-.00389	.00156	.00564	.00097	.00292	-.00078

ARC40X80-462(OA100) OV101 (GNA01J) (16 MAR 82)

REFERENCE DATA

SREF =	2690.0000 SQ.FT.	XMRP =	1076.6800 IN. XO		
LREF =	474.8100 INCHES	YMRP =	.0000 IN. YO		
BREF =	936.6800 INCHES	ZMRP =	375.0000 IN. ZO		
SCALE =	.3600				

PARAMETRIC DATA

ALPHA =	20.000	ELEVON =	.000
AILRON =	.000	BDFLAP =	.000
SPDBRK =	25.000	RUDDER =	.000

RUN NO. 20/ 0 GRADIENT INTERVAL = -5.00/ 5.00

Q	BETA	CP22	CP23	CP24	CP25	CP26	CP27	CP28	CP29	CP30	CP31
19.180	-13.000	-.19725	-.28698	-.25707	-.34681	-.40663	-.31690	-.40663	-.34681	-.34681	-.37672
19.130	-10.000	-.19725	-.25707	-.25707	-.25707	-.28698	-.34681	-.34681	-.28698	-.31690	-.34681
19.100	-5.000	-.19725	-.28698	-.22716	-.28698	-.28698	-.28698	-.34681	-.31690	-.34681	-.34681
19.140	-2.000	-.13742	-.28698	-.19725	-.25707	-.31690	-.25707	-.34681	-.28698	-.28698	-.34681
19.220	.000	-.16734	-.19725	-.22716	-.25707	-.28698	-.34681	-.40663	-.34681	-.34681	-.34681
19.130	2.000	-.13742	-.34681	-.25707	-.22716	-.25707	-.34681	-.28698	-.34681	-.34681	-.34681
19.100	5.000	-.19725	-.28698	-.25707	-.25707	-.28698	-.28698	-.28698	-.28698	-.25707	-.28698
19.010	10.000	-.19725	-.28698	-.25707	-.25707	-.28698	-.34681	-.34681	-.34681	-.34681	-.40663
19.040	15.000	-.19725	-.34681	-.34681	-.25707	-.34681	-.34681	-.34681	-.34681	-.40663	-.40663
19.000	20.000	-.19725	-.43654	-.34681	-.25707	-.46645	-.46645	-.43654	-.49636	-.49636	-.55619
	GRADIENT	.00000	-.00206	-.00464	.00361	.00206	-.00309	.00722	.00052	.00567	.00516

RUN NO. 26/ 0 GRADIENT INTERVAL = -5.00/ 5.00

Q	BETA	CP22	CP23	CP24	CP25	CP26	CP27	CP28	CP29	CP30	CP31
47.490	-13.000	-.27593	-.27593	-.27593	-.35580	-.33298	-.35580	-.39003	-.35580	-.33298	-.39003
47.730	-10.000	-.26452	-.29875	-.29875	-.33298	-.33298	-.31016	-.33298	-.35580	-.33298	-.39003
47.590	-5.000	-.24170	-.29875	-.27593	-.29875	-.31016	-.29875	-.33298	-.31016	-.33298	-.33298
47.600	-2.000	-.21888	-.29875	-.24170	-.29875	-.35580	-.35580	-.35580	-.33298	-.29875	-.36721
47.560	.000	-.19606	-.27593	-.26452	-.21888	-.33298	-.35580	-.35580	-.39003	-.33298	-.39003
47.630	2.000	-.25094	-.30738	-.28481	-.29609	-.32996	-.38640	-.35253	-.36382	-.36382	-.38640
47.700	5.000	-.24170	-.31016	-.29875	-.29875	-.29875	-.35580	-.33298	-.35580	-.33298	-.29875
47.640	10.000	-.26223	-.30738	-.23965	-.21708	-.29609	-.35253	-.38640	-.35253	.35253	-.38640
47.620	15.000	-.25311	-.33298	-.29875	-.27593	-.40144	-.39003	-.41285	-.41285	-.40144	-.44708
47.420	20.000	-.24170	-.37862	-.39003	-.31016	-.48131	-.52695	-.59541	-.56118	-.56118	-.59541
	GRADIENT	-.00111	-.00128	-.00345	.00009	.00187	-.00597	.00011	-.00500	-.00224	.00229

ARC40X80-462(OA100) OV101 (GNA01K) (16 MAR 82)

REFERENCE DATA

SREF =	2690.0000 SQ.FT.	XMRP =	1076.6800 IN. XO		
LREF =	474.8100 INCHES	YMRP =	.0000 IN. YO		
BREF =	936.6800 INCHES	ZMRP =	375.0000 IN. ZO		
SCALE =	.3600				

PARAMETRIC DATA

ALPHA =	.000	BETA =	.000
AILRON =	.000	BDFLAP =	.000
SPDBRK =	25.000	RUDDER =	.000

RUN NO. 10/ 0 GRADIENT INTERVAL = -5.00/ 5.00

Q	ELEVON	CP22	CP23	CP24	CP25	CP26	CP27	CP28	CP29	CP30	CP31
47.410	-36.343	-.15041	-.13900	-.16182	-.12759	-.15041	-.12759	-.10477	-.26452	-.16182	-.19606
47.600	-31.143	-.12677	-.13806	-.18321	-.12677	-.12677	-.13806	-.16064	-.27352	-.23965	-.30738
47.670	-26.002	-.09291	-.12677	-.13806	-.12677	-.16064	-.27352	-.32996	-.21708	-.21708	-.23965
47.550	-20.742	-.11548	-.12677	-.12677	-.16064	-.16064	-.21708	-.20579	-.19450	-.19450	-.25094
47.580	-15.601	-.11548	-.16064	-.12677	-.14935	-.10419	-.21708	-.23965	-.19450	-.23965	-.23965
47.670	-10.401	-.12677	-.19450	-.16064	-.18321	-.21708	-.23965	-.25094	-.23965	-.21708	-.26223
47.780	-5.200	-.14935	-.16064	-.19450	-.19450	-.22837	-.29609	-.27352	-.25094	-.23965	-.27352
47.640	-.060	-.17192	-.23965	-.18321	-.21708	-.23965	-.25094	-.27352	-.25094	-.27352	-.27352
47.540	5.141	-.18321	-.21708	-.18321	-.21708	-.29609	-.29609	-.30738	-.29609	-.25094	-.32996
47.490	10.281	-.20579	-.23965	-.21708	-.25094	-.25094	-.35253	-.32996	-.32996	-.27352	-.30738
47.580	15.482	-.20579	-.25094	-.21708	-.21708	-.29609	-.32996	-.35253	-.32996	-.35253	-.34125
47.470	20.682	-.22837	-.27352	-.23965	-.27352	-.32996	-.34125	-.35253	-.35253	-.30738	-.32996
	GRADIENT	.00000	.00000	.00000	.00000	.00000	.00000	.00000	.00000	.00000	.00000

ARC40X80-462(OA100) OV101 (GNA01L) (16 MAR 82)

REFERENCE DATA

SREF =	2690.0000 SQ.FT.	XMRP =	1076.6800 IN.	XO	
LREF =	474.8100 INCHES	YMRP =	.0000 IN.	YO	
BREF =	936.6800 INCHES	ZMRP =	375.0000 IN.	ZO	
SCALE =	.3600				

PARAMETRIC DATA

ALPHA =	5.000	BETA =	.000
AILRON =	.000	BDFLAP =	.000
SPDBRK =	25.000	RUDDER =	.000

RUN NO. 11/ 0 GRADIENT INTERVAL = -5.00/ 5.00

Q	ELEVON	CP22	CP23	CP24	CP25	CP26	CP27	CP28	CP29	CP30	CP31
47.520	-36.343	-.14935	-.11548	-.13806	-.12677	-.10419	-.16064	-.21708	-.21708	-.21708	-.21708
47.610	-31.143	-.12677	-.13806	-.11548	-.16064	-.18321	-.16064	-.25094	-.18321	-.21708	-.16064
47.540	-26.002	-.14935	-.12677	-.18321	-.12677	-.12677	-.21708	-.28481	-.27352	-.25094	-.29609
47.510	-20.742	-.11548	-.18321	-.12677	-.18321	-.27352	-.12677	-.18321	-.21708	-.21708	-.12677
47.510	-15.601	-.11548	-.12677	-.12677	-.12677	-.16064	-.13806	-.22837	-.22837	-.22837	-.23965
47.550	-10.401	-.11548	-.16064	-.13806	-.16064	-.21708	-.25094	-.21708	-.19450	-.19450	-.21708
47.510	-5.260	-.11548	-.16064	-.12677	-.16064	-.21708	-.22837	-.27352	-.25094	-.23965	-.23965
47.610	-.060	-.17192	-.21708	-.16064	-.21708	-.23965	-.27352	-.27352	-.27352	-.25094	-.27352
47.450	5.081	-.14935	-.23965	-.18321	-.19450	-.23965	-.27352	-.29609	-.27352	-.25094	-.29609
47.500	10.341	-.20579	-.23965	-.18321	-.23965	-.27352	-.29609	-.29609	-.29609	-.29609	-.32996
47.710	15.482	-.22837	-.21708	-.21708	-.21708	-.23965	-.30739	-.30738	-.29609	-.29609	-.29609
47.420	20.682	-.18321	-.25094	-.21708	-.23965	-.29609	-.29609	-.32996	-.31867	-.27352	-.32996
	GRADIENT	.00000	.00000	.00000	.00000	.00000	.00000	.00000	.00000	.00000	.00000

ARC40X80-462(0A100) 0V10: (GNA01M) (16 MAR 82)

REFERENCE DATA

SREF =	2690.0000 SQ.FT.	XMRP =	1076.6800 IN.	XO	
LREF =	474.8100 INCHES	YMRP =	.0000 IN.	YO	
BREF =	936.6800 INCHES	ZMRP =	375.0000 IN.	ZO	
SCALE =	.3600				

PARAMETRIC DATA

ALPHA =	10.000	BETA =	.000
AILRON =	.000	BDFLAP =	.000
SPDBRK =	25.000	RUDDER =	.000

RUN NO. 12/ 0 GRADIENT INTERVAL = -5.00/ 5.00

Q	ELEVON	CP22	CP23	CP24	CP25	CP26	CP27	CP28	CP29	CP30	CP31
47.660	-36.343	-.17192	-.14935	-.18321	-.12677	-.27352	-.10419	-.12677	-.09291	-.21708	-.27352
47.590	-31.143	-.16064	-.14935	-.18321	-.16064	-.12677	-.10419	-.16064	-.10419	-.17192	-.19450
47.530	-26.002	-.11548	-.23965	-.29609	-.27352	-.29609	-.11548	-.08162	-.07033	-.13806	-.12677
47.620	-20.802	-.20579	-.12677	-.20579	-.25094	-.27352	-.08162	-.13806	-.10419	-.13806	-.18321
47.460	-15.601	-.09291	-.11548	-.10419	-.11548	-.08162	-.23965	-.21708	-.23965	-.21708	-.23965
47.530	-10.401	-.12677	-.16064	-.09291	-.16064	-.21708	-.25094	-.27352	-.25094	-.19450	-.23965
47.500	-5.200	-.14935	-.16064	-.16064	-.19450	-.18321	-.21708	-.23965	-.23965	-.21708	-.23965
47.500	-.060	-.17192	-.19450	-.18321	-.18321	-.23965	-.23965	-.25094	-.23965	-.23965	-.27352
47.350	5.141	-.17192	-.21708	-.21708	-.21708	-.23965	-.28481	-.29609	-.27352	-.28481	-.27352
47.430	10.281	-.17192	-.23965	-.21708	-.21708	-.27352	-.26223	-.29609	-.27352	-.27352	-.25094
47.460	15.541	-.20579	-.23965	-.18321	-.22837	-.27352	-.30738	-.29609	-.27352	-.29609	-.29609
47.380	20.622	-.22837	-.23965	-.21708	-.26223	-.29609	-.29609	-.30738	-.26223	-.29609	-.30738
	GRADIENT	.00000	.00000	.00000	.00000	.00000	.00000	.00000	.00000	.00000	.00000

ARC40X80-462(OA100) OV101(DECREASING ELEVON) (GNA01N) (16 MAR 82)

REFERENCE DATA

SREF =	2690.0000 SQ.FT.	XMRP =	1076.6800 IN. XO		
LREF =	474.8100 INCHES	YMRP =	.0000 IN. YO		
BREF =	936.6800 INCHES	ZMRP =	375.0000 IN. ZO		
SCALE =	.3600				

PARAMETRIC DATA

ALPHA =	10.000	BETA =	.000
AILRON =	.000	BDFLAP =	.000
SPDBRK =	25.000	RUDDER =	.000

RUN NO. 13/ 0 GRADIENT INTERVAL = -5.00/ 5.00

Q	ELEVON	CP22	CP23	CP24	CP25	CP26	CP27	CP28	CP29	CP30	CP31
47.380	-36.343	-.07033	-.23965	-.16064	-.12677	-.19450	-.10419	-.13806	-.07033	-.13806	-.12677
47.430	-31.143	-.13806	-.21708	-.21708	-.23965	-.12677	-.16064	-.23965	-.23965	-.13806	-.16064
47.440	-25.942	-.12677	-.23965	-.13806	-.18321	-.29609	-.13806	-.14935	-.12677	-.18321	-.10419
47.350	-20.742	-.23965	-.27352	-.23965	-.21708	-.18321	-.16064	-.16064	-.12677	-.10419	-.18321
47.340	-15.541	-.09291	-.12677	-.10419	-.16064	-.12677	-.18321	-.16064	-.08162	-.10419	-.28481
47.340	-10.461	-.14935	-.10419	-.12677	-.16064	-.19450	-.23965	-.21708	-.16064	-.21708	-.23965
47.260	-5.200	-.11548	-.18321	-.18321	-.18321	-.19450	-.23965	-.23965	-.23965	-.21708	-.25094
47.300	.000	-.14935	-.19450	-.16064	-.18321	-.21708	-.25094	-.25094	-.23965	-.23965	-.26223
47.260	5.111	-.14935	-.19450	-.18321	-.21708	-.21708	-.27352	-.27352	-.25094	-.25094	-.26223
47.510	10.281	-.17192	-.19450	-.18321	-.21708	-.19450	-.28481	-.27352	-.27352	-.28481	-.30738
47.530	15.541	-.19450	-.23965	-.21708	-.23965	-.23965	-.29609	-.29609	-.25094	-.26223	-.29609
47.400	20.622	-.20579	-.27352	-.21708	-.21708	-.27352	-.32996	-.29609	-.29609	-.29609	-.29609
	GRADIENT	.00000	.00000	.00000	.00000	.00000	.00000	.00000	.00000	.00000	.00000

ARC40X80-462(OA100) OV101 (GNA010) (16 MAR 82)

REFERENCE DATA

SREF =	2690.0000 SQ.FT.	XMRP =	1076.6800 IN.	XO	
LREF =	474.8100 INCHES	YMRP =	.0000 IN.	YO	
BREF =	936.6800 INCHES	ZMRP =	375.0000 IN.	ZO	
SCALE =	.3600				

PARAMETRIC DATA

ALPHA =	15.000	BETA =	.000
AILRON =	.000	BDFLAP =	.000
SPDBRK =	25.000	RUDDER =	.000

RUN NO. 27/ 0 GRADIENT INTERVAL = -5.00/ 5.00

Q	ELEVON	CP22	CP23	CP24	CP25	CP26	CP27	CP28	CP29	CP30	CP31
47.630	-36.343	-.24170	-.19606	-.25311	-.27593	-.29875	-.18465	-.13900	-.21888	-.08195	-.24170
47.880	-31.143	-.28734	-.31016	-.33298	-.33298	-.33298	-.15041	-.13900	-.12759	-.18465	-.16182
47.570	-26.002	-.26452	-.29875	-.28734	-.33298	-.35580	-.10477	-.12759	-.12759	-.12759	-.18465
47.550	-20.742	-.12759	-.16182	-.13900	-.13900	-.16182	-.21898	-.21888	-.29875	-.24170	-.27593
47.520	-15.601	-.15151	-.16304	-.16304	-.13997	-.17458	-.24379	-.28993	-.24379	-.27839	-.30146
47.720	-10.401	-.18465	-.25311	-.18465	-.18465	-.24170	-.27593	-.24170	-.25311	-.21888	-.27593
47.490	-5.200	-.21888	-.21888	-.18465	-.24170	-.24170	-.25311	-.27593	-.27593	-.29875	-.28734
47.560	.000	-.18465	-.25311	-.21888	-.21888	-.27593	-.29875	-.27593	-.29875	-.24170	-.28734
47.560	5.141	-.19606	-.24170	-.21888	-.21888	-.25311	-.29875	-.29875	-.27593	-.29875	-.33298
47.570	10.281	-.22072	-.27839	-.22072	-.25532	-.30146	-.30146	-.31300	-.33607	-.30146	-.33607
47.790	15.482	-.23965	-.30738	-.27352	-.27352	-.27352	-.29609	-.32996	-.30738	-.29609	-.35253
47.430	20.637	-.27839	-.31300	-.26686	-.30146	-.32453	-.33607	-.35914	-.35914	-.35914	-.35914
	GRADIENT	.00000	.00000	.00000	.00000	.00000	.00000	.00000	.00000	.00000	.00000

ARC40X80-462(0A100) OV101 (GNA01P) (16 MAR 82)

REFERENCE DATA

SREF =	2690.0000 SQ.FT.	XMRP =	1076.6800 IN.	XO	
LREF =	474.8100 INCHES	YMRP =	.0000 IN.	YO	
BREF =	936.6800 INCHES	ZMRP =	375.0000 IN.	ZO	
SCALE =	.3600				

PARAMETRIC DATA

ALPHA =	20.000	BETA =	.000
AILRON =	.000	BDFLAP =	.000
SPDBRK =	25.000	RUDDER =	.000

RUN NO. 28/ 0 GRADIENT INTERVAL = -5.00/ 5.00

Q	ELEVON	CP22	CP23	CP24	CP25	CP26	CP27	CP28	CP29	CP30	CP31
47.610	-36.343	-.19765	-.19765	-.19765	-.22072	-.19765	-.18611	-.13997	-.10537	-.08230	-.11690
47.620	-31.143	-.18465	-.16182	-.16182	-.19606	-.24170	-.21888	-.25311	-.18465	-.29875	-.27593
47.500	-25.942	-.17323	-.16182	-.16182	-.16182	-.19606	-.26452	-.33298	-.27593	-.33298	-.35580
47.700	-20.712	-.18465	-.21888	-.18465	-.21888	-.24170	-.29875	-.33298	-.31016	-.29875	-.34439
47.670	-15.601	-.16304	-.27839	-.18611	-.27839	-.27839	-.33607	-.33607	-.27839	-.30146	-.35914
47.810	-10.401	-.21888	-.27593	-.24170	-.25311	-.24170	-.33298	-.33298	-.31016	-.33298	-.35580
47.510	-5.200	-.22072	-.30146	-.25532	-.27839	-.30146	-.37067	-.35914	-.37067	-.34760	-.39374
47.560	-.030	-.26826	-.30424	-.24593	-.28092	-.31591	-.37422	-.36256	-.39754	-.37422	-.42087
47.750	5.141	-.27593	-.29875	-.26452	-.31016	-.35580	-.36721	-.41285	-.39003	-.39003	-.44708
47.560	10.341	-.25311	-.35580	-.25311	-.33298	-.35580	-.42426	-.41285	-.43567	-.41285	-.45849
47.760	15.541	-.27593	-.35580	-.28734	-.39003	-.40144	-.44708	-.39003	-.44708	-.41285	-.50413
47.650	20.682	-.28734	-.35580	-.35580	-.35721	-.39003	-.46990	-.42426	-.48272	-.39003	-.50413
	GRADIENT	.00000	.00000	.00000	.00000	.00000	.00000	.00000	.00000	.00000	.00000

ARC40X80-462(0A100) OV101 (GNA01Q) (16 MAR 82)

REFERENCE DATA

SREF =	2690.0000 SQ.FT.	XMRP =	1076.6800 IN.	XO	
LREF =	474.8100 INCHES	YMRP =	.0000 IN.	YO	
BREF =	936.6800 INCHES	ZMRP =	375.0000 IN.	ZO	
SCALE =	.3600				

PARAMETRIC DATA

ALPHA =	.000	BETA =	.000
ELEVON =	.000	BDFLAP =	.000
SPDBRK =	25.000	RUDDER =	.000

RUN NO. 29/ 0 GRADIENT INTERVAL = -5.00/ 5.00

Q	AILRON	CP22	CP23	CP24	CP25	CP26	CP27	CP28	CP29	CP30	CP31
47.700	-.045	-.24170	-.26452	-.18465	-.23029	-.24170	-.29875	-.29875	-.27593	-.26452	-.29875
47.690	2.570	-.24379	-.22072	-.22072	-.19765	-.22072	-.28993	-.31300	-.27839	-.30146	-.31300
47.620	5.141	-.20918	-.24379	-.22072	-.20918	-.25532	-.30146	-.30146	-.33607	-.30146	-.30146
47.590	7.711	-.19606	-.21888	-.21888	-.25311	-.24170	-.31016	-.32157	-.33298	-.29875	-.29875
47.610	10.281	-.16429	-.22261	-.24593	-.22261	-.25759	-.30424	-.33923	-.30424	-.30424	-.31591
47.630	15.541	-.24379	-.24379	-.24379	-.25532	-.27839	-.32453	-.30146	-.31300	-.30146	-.32453
	GRADIENT	-.00080	.01675	-.01379	.01248	.00802	.00337	-.00545	-.00094	-.01413	-.00545

ARC40X80-462(OA100) OV101 (GNA01R) (16 MAR 82)

REFERENCE DATA

SREF =	2690.0000 SQ.FT.	XMRP =	1076.6800 IN. XO		
LREF =	474.8100 INCHES	YMRP =	.0000 IN. YO		
BREF =	936.6800 INCHES	ZMRP =	375.0000 IN. ZO		
SCALE =	.3600				

PARAMETRIC DATA

ALPHA =	5.000	BETA =	.000
ELEVON =	.000	BDFLAP =	.000
SPDBRK =	25.000	RUDDER =	.000

RUN NO. 30/ 0 GRADIENT INTERVAL = -5.00/ 5.00

Q	AILRON	CP22	CP23	CP24	CP25	CP26	CP27	CP28	CP29	CP30	CP31
47.600	-.045	-.18611	-.24379	-.18611	-.22072	-.18611	-.31300	-.30146	-.27839	-.30146	-.25532
47.660	2.570	-.22261	-.23427	-.22261	-.21095	-.23427	-.24593	-.30424	-.30424	-.24593	-.28092
47.650	5.141	-.16429	-.19928	-.19928	-.25759	-.26926	-.30424	-.31591	-.30424	-.28092	-.28092
47.570	7.741	-.18762	-.25759	-.18762	-.18762	-.26926	-.28092	-.30424	-.28032	-.30424	-.30424
47.610	10.311	-.18762	-.24593	-.22261	-.24593	-.25759	-.32757	-.30424	-.32757	-.28092	-.33923
47.570	15.541	-.22261	-.25759	-.28092	-.24593	-.28092	-.30424	-.33923	-.28092	-.33923	-.33923
	GRADIENT	-.01395	.00364	-.01395	.00374	-.01841	.02564	-.00106	-.00989	.02123	-.00979

ARC40X80-462(OA100) OV101 (GNA01S) (16 MAR 82)

REFERENCE DATA

SREF =	2690.0000 SQ.FT.	XMRP =	1076.6800 IN. XO		
LREF =	474.8100 INCHES	YMRP =	.0000 IN. YO		
BREF =	936.6800 INCHES	ZMRP =	375.0000 IN. ZO		
SCALE =	.3600				

PARAMETRIC DATA

ALPHA =	10.000	BETA =	.000
ELEVON =	.000	BDFLAP =	.000
SPDBRK =	25.000	RUDDER =	.000

RUN NO. 31/ 0 GRADIENT INTERVAL = -5.00/ 5.00

Q	AILRON	CP22	CP23	CP24	CP25	CP26	CP27	CP28	CP29	CP30	CP31
47.670	-.060	-.18611	-.24379	-.18611	-.23225	-.25532	-.27839	-.27839	-.27839	-.24379	-.30146
47.530	2.570	-.19928	-.19928	-.19928	-.18762	-.24593	-.29258	-.25759	-.28092	-.25759	-.28092
47.690	5.141	-.18611	-.24379	-.19765	-.22072	-.24379	-.27839	-.30146	-.30146	-.27839	-.27839
47.590	7.711	-.18762	-.21095	-.19928	-.25759	-.22261	-.28002	-.28092	-.28092	-.30424	-.28092
47.650	10.281	-.18465	-.21888	- 19465	-.21888	-.27593	-.28734	-.25311	-.28734	-.29875	-.29875
47.710	15.541	-.19765	-.22072	-.22072	-.24379	-.27839	-.30146	-.31300	-.25532	-.28686	-.30146
	GRADIENT	-.00501	.01692	-.00501	.01697	.00357	-.00540	.00791	-.00096	-.00525	.00781

ARC40X80-462(0A100) 0V101(DECREASING AILERON) (GNA01T) (16 MAR 82)

REFERENCE DATA

SREF =	2690.0000 SQ.FT.	XMRP =	1076.6800 IN. XO		
LREF =	474.8100 INCHES	YMRP =	.0000 IN. YO		
BREF =	936.6800 INCHES	ZMRP =	375.0000 IN. ZO		
SCALE =	.3600				

PARAMETRIC DATA

ALPHA =	10.000	BETA =	.000
ELEVON =	.000	BDFLAP =	.000
SPDBRK =	25.000	RUDDER =	.000

RUN NO. 32/ 0 GRADIENT INTERVAL = -5.00/ 5.00

Q	AILRON	CP22	CP23	CP24	CP25	CP26	CP27	CP28	CP29	CP30	CP31
47.600	.000	-.18762	-.24593	-.19928	-.22261	-.22261	-.28092	-.28092	-.30424	-.28092	-.28092
47.610	2.570	-.19928	-.24593	-.19928	-.22261	-.28092	-.30424	-.26926	-.28092	-.28092	-.30424
47.690	5.141	-.19928	-.19928	-.19928	-.22261	-.25759	-.28092	-.30424	-.30424	-.25759	-.30424
47.670	7.771	-.18465	-.24170	-.19606	-.23029	-.21888	-.24170	-.27593	-.25311	-.25311	-.29875
47.670	10.341	-.20918	-.19765	-.20918	-.24379	-.24379	-.30146	-.28993	-.27839	-.27839	-.30146
47.610	15.541	-.22072	-.26686	-.24379	-.20918	-.26686	-.31300	-.31300	-.30146	-.30146	-.30146
	GRADIENT	-.00454	.00000	.00000	.00000	-.02269	-.00907	.00454	.00907	.00000	-.00907

ARC40X80-462(0A100) 0V101 (GNA01U) (16 MAR 82)

REFERENCE DATA

SREF =	2690.0000 SQ.FT.	XMRP =	1076.6800 IN. XO		
LREF =	474.8100 INCHES	YMRP =	.0000 IN. YO		
BREF =	936.6800 INCHES	ZMRP =	375.0000 IN. ZO		
SCALE =	.3600				

PARAMETRIC DATA

ALPHA =	15.000	BETA =	.000
ELEVON =	.000	BDFLAP =	.000
SPDBRK =	25.000	RUDDER =	.000

RUN NO. 33/ 0 GRADIENT INTERVAL = -5.00/ 5.00

Q	AILRON	CP22	CP23	CP24	CP25	CP26	CP27	CP28	CP29	CP30	CP31
47.570	-.015	-.21095	-.28092	-.22261	-.19928	-.28092	-.30424	-.28092	-.28092	-.30424	-.30424
47.700	2.570	-.24170	-.21888	-.19606	-.24170	-.27593	-.29875	-.31016	-.32157	-.29875	-.31016
47.690	5.170	-.19928	-.26926	-.24593	-.24593	-.28092	-.28092	-.30424	-.30424	-.28092	-.33923
47.620	7.711	-.22261	-.28092	-.24593	-.24593	-.28092	-.31591	-.31591	-.30424	-.30424	-.31591
47.590	10.281	-.18762	-.25759	-.24593	-.28092	-.28092	-.32757	-.31591	-.28092	-.31591	-.29258
47.490	15.527	-.22261	-.24593	-.22261	-.23427	-.28092	-.30424	-.30424	-.30424	-.28092	-.33923
	GRADIENT	-.01190	.02400	.01027	-.01641	.00193	.00213	-.01131	-.01573	.00213	-.00229

ARC40X80-462(OA100) OV101 (GNA01V) (16 MAR 82)

REFERENCE DATA

SREF =	2690.0000 SQ.FT.	XMRP =	1076.6800 IN. XO		
LREF =	474.8100 INCHES	YMRP =	.0000 IN. YO		
BREF =	936.6800 INCHES	ZMRP =	375.0000 IN. ZO		
SCALE =	.3600				

PARAMETRIC DATA

ALPHA =	20.000	BETA =	.000
ELEVON =	.000	BDFLAP =	.000
SPDBRK =	25.000	RUDDER =	.000

RUN NO. 34/ 0 GRADIENT INTERVAL = -5.00/ 5.00

Q	AILRON	CP22	CP23	CP24	CP25	CP26	CP27	CP28	CP29	CP30	CP31
47.650	.000	-.24379	-.31300	-.27839	-.30146	-.37067	-.39374	-.38221	-.39374	-.42835	-.42835
47.580	2.570	-.28092	-.28092	-.25759	-.30424	-.33923	-.42087	-.33923	-.39754	-.42087	-.46752
47.650	5.185	-.27839	-.35914	-.25532	-.30146	-.35914	-.41681	-.39374	-.40528	-.41681	-.37067
47.670	7.711	-.22261	-.33923	-.25759	-.31591	-.33923	-.43253	-.39754	-.38588	-.36256	-.39754
47.640	10.341	-.25532	-.30146	-.27839	-.30146	-.34760	-.41681	-.41681	-.35914	-.35914	-.42835
47.430	15.541	-.30424	-.30424	-.30424	-.28092	-.37422	-.39754	-.39754	-.40921	-.39754	-.36256
	GRADIENT	-.01445	.01248	.00809	-.00108	.01223	-.01055	.01672	-.00148	.00291	-.01524

ARC40X80-462(OA100) OV101 (GNA01W) (16 MAR 82)

REFERENCE DATA

SREF =	2690.0000 SQ.FT.	XMRP =	1076.6800 IN. XO		
LREF =	474.8100 INCHES	YMRP =	.0000 IN. YO		
BREF =	936.6800 INCHES	ZMRP =	375.0000 IN. ZO		
SCALE =	.3600				

PARAMETRIC DATA

ALPHA =	.000	BETA =	.000
ELEVON =	10.000	BDFLAP =	.000
SPDBRK =	25.000	RUDDER =	.000

RUN NO. 50/ 0 GRADIENT INTERVAL = -5.00/ 5.00

Q	AILRON	CP22	CP23	CP24	CP25	CP26	CP27	CP28	CP29	CP30	CP31
47.600	.064	-.20415	-.24883	-.22649	-.21532	-.23766	-.29350	-.34935	-.29350	-.34935	-.32701
47.580	2.544	-.15835	-.21361	-.22466	-.23571	-.26887	-.32413	-.34623	-.32413	-.30202	-.32413
47.740	5.068	-.21361	-.21361	-.24676	-.19150	-.29097	-.32413	-.32413	-.30202	-.29097	-.30202
47.600	7.578	-.18045	-.23571	-.27992	-.26887	-.26987	-.29097	-.32413	-.32413	-.30202	-.29097
47.600	10.044	-.27116	-.23766	-.24883	-.19298	-.29350	-.34935	-.32701	-.29350	-.29350	-.32701
47.740	12.896	-.21361	-.23571	-.26887	-.19150	-.25887	-.29097	-.32413	-.29097	-.29097	-.32413
	GRADIENT	.01847	.01420	.00074	-.00922	-.01258	-.01235	.00126	-.01235	.01908	.00116

ARC40X80-462(OA100) OV101 (GNA01X) (16 MAR 82)

REFERENCE DATA

SREF = 2690.0000 SQ.FT. XMRP = 1076.6800 IN. XO
LREF = 474.8100 INCHES YMRP = .0000 IN. YO
BREF = 936.6800 INCHES ZMRP = 375.0000 IN. ZO
SCALE = .3600

PARAMETRIC DATA

ALPHA = 5.000 BETA = .000
ELEVON = 10.000 BDFLAP = .000
SPDBRK = 25.000 RUDDER = .000

RUN NO. 51/ 0 GRADIENT INTERVAL = -5.00/ 5.00

Q	AILRON	CP22	CP23	CP24	CP25	CP26	CP27	CP28	CP29	CP30	CP31
47.550	.049	-.18045	-.21361	-.22466	-.16940	-.24676	-.26887	-.26887	-.25782	-.31307	-.32413
47.650	2.544	-.15835	-.21361	-.24676	-.19150	-.21361	-.24676	-.29097	-.26887	-.29097	-.26887
47.560	5.068	-.18182	-.23766	-.27116	-.23766	-.20415	-.23766	-.23766	-.29350	-.27116	-.29350
47.540	7.578	-.18045	-.21361	-.22466	-.19150	-.26887	-.26887	-.26887	-.26887	-.29097	-.29097
47.710	10.028	-.15835	-.21361	-.24676	-.18150	-.21361	-.25782	-.26887	-.29097	-.31307	-.26887
47.460	12.896	-.18182	-.23766	-.21532	-.15948	-.23766	-.27116	-.26000	-.27116	-.32701	-.30467
	GRADIENT	.00886	.00000	-.00886	-.00886	.01329	.00886	-.00886	-.00443	.00886	.02215

ARC40X80-462(OA100) OV101 (GNA01Y) (16 MAR 82)

REFERENCE DATA

SREF = 2690.0000 SQ.FT. XMRP = 1076.6800 IN. XO
LREF = 474.8100 INCHES YMRP = .0000 IN. YO
BREF = 936.6800 INCHES ZMRP = 375.0000 IN. ZO
SCALE = .3600

PARAMETRIC DATA

ALPHA = 10.000 BETA = .000
ELEVON = 10.000 BDFLAP = .000
SPDBRK = 25.000 RUDDER = .000

RUN NO. 52/ 0 GRADIENT INTERVAL = -5.00/ 5.00

Q	AILRON	CP22	CP23	CP24	CP25	CP26	CP27	CP28	CP29	CP30	CP31
47.580	.049	-.21361	-.21361	-.22466	-.19150	-.24676	-.26887	-.29097	-.24676	-.26887	-.29097
47.430	2.544	-.23571	-.18045	-.19150	-.19150	-.23571	-.26887	-.29097	-.26887	-.23571	-.29097
47.430	5.024	-.18182	-.19298	-.22649	-.21532	-.21532	-.27116	-.29350	-.29350	-.27116	-.27116
47.400	7.578	-.15948	-.23766	-.24883	-.19298	-.23765	-.27116	-.27116	-.27116	-.27116	-.24883
47.480	10.028	-.18045	-.19150	-.23571	-.21361	-.26887	-.27932	-.30202	-.26887	-.25782	-.26887
47.370	12.896	-.15835	-.19150	-.24676	-.21361	-.22466	-.29097	-.26887	-.24676	-.25782	-.29097
	GRADIENT	-.00886	.01329	.01329	.00000	.00443	.00000	.00000	-.00886	.01329	.00000

ARC40X80-462(OA100) OV101 (GNA01Z) (16 MAR 82)

REFERENCE DATA

SREF =	2690.0000 SQ.FT.	XMRP =	1076.6800 IN. XO		
LREF =	474.8100 INCHES	YMRP =	.0000 IN. YO		
BREF =	936.6800 INCHES	ZMRP =	375.0000 IN. ZO		
SCALE =	.3600				

PARAMETRIC DATA

ALPHA =	15.000	BETA =	.000
ELEVON =	10.000	BDFLAP =	.000
SPDBRK =	25.000	RUDDER =	.000

RUN NO. 53/ 0 GRADIENT INTERVAL = -5.00/ 5.00

Q	AILRON	CP22	CP23	CP24	CP25	CP26	CP27	CP28	CP29	CP30	CP31
47.600	.050	-.20100	-.26662	-.21194	-.24475	-.24475	4.15200	-.27756	-.24475	-.26850	-.29943
47.750	2.559	-.20415	-.21532	-.20415	-.24883	-.26000	4.24098	-.29350	-.29350	-.31584	-.30467
47.780	5.068	-.20415	-.27116	-.20415	-.22649	-.23766	4.21864	-.28233	-.27116	-.26000	-.28233
47.690	7.564	-.14535	-.21030	-.18948	-.24278	-.28608	4.08723	-.27525	-.28608	-.28608	-.30773
47.700	10.043	-.21532	-.23766	-.22649	-.24883	-.29350	4.21864	-.30467	-.29350	-.30467	-.28233
47.670	12.896	-.23766	-.27116	-.20415	-.23766	-.31584	4.25214	-.30467	-.29350	-.31584	-.31584
	GRADIENT	-.00126	.02044	.00310	-.00163	-.00608	.03546	-.00635	-.01943	-.01090	-.00209

ARC40X80-462(OA100) OV101 (GNA02A) (16 MAR 82)

REFERENCE DATA

SREF =	2690.0000 SQ.FT.	XMRP =	1076.6800 IN. XO		
LREF =	474.8100 INCHES	YMRP =	.0000 IN. YO		
BREF =	936.6800 INCHES	ZMRP =	375.0000 IN. ZO		
SCALE =	.3600				

PARAMETRIC DATA

ALPHA =	20.000	BETA =	.000
ELEVON =	10.000	BDFLAP =	.000
SPDBRK =	25.000	RUDDER =	.000

RUN NO. 54/ 0 GRADIENT INTERVAL = -5.00/ 5.00

Q	AILRON	CP22	CP23	CP24	CP25	CP26	CP27	CP28	CP29	CP30	CP31
47.540	.034	-.25360	-.30773	-.25360	-.27525	-.31855	4.05476	-.40515	-.34020	-.36185	-.42680
47.680	2.559	-.25360	-.29690	-.23195	-.32938	-.31855	4.00063	-.38350	-.31855	-.37268	-.40515
47.590	5.039	-.26687	-.29097	-.29097	-.30202	-.33518	4.08551	-.39044	-.37938	-.40149	-.42359
47.620	7.563	-.21030	-.28608	-.28608	-.29690	-.36185	4.00063	-.38350	-.36185	-.39433	-.38350
47.530	10.043	-.23766	-.29350	-.27116	-.28233	-.37168	4.12929	-.39402	-.38285	-.37168	-.37168
47.520	12.896	-.26000	-.33818	-.26000	-.31584	-.37168	4.18513	-.39402	-.32701	-.37168	-.37168
	GRADIENT	.00000	.00429	.00858	-.02144	.00000	-.02144	.00858	.00858	-.00429	.00858

ARC40X80-462(OA100) OV101 (GNA02B) (16 MAR 82)

REFERENCE DATA

SREF = 2690.0000 SQ.FT. XMRP = 1076.6800 IN. XO
LREF = 474.8100 INCHES YMRP = .0000 IN. YO
BREF = 936.6800 INCHES ZMRP = 375.0000 IN. ZO
SCALE = .3600

PARAMETRIC DATA

ALPHA = .000 BETA = .000
ELEVON = -10.000 BDFLAP = .000
SPDBRK = 25.000 RUDDER = .000

RUN NO. 55/ 0 GRADIENT INTERVAL = -5.00/ 5.00

Q	AILRON	CP22	CP23	CP24	CP25	CP26	CP27	CP28	CP29	CP30	CP31
47.620	-.078	-.15930	-.14730	-.15936	-.16940	-.20256	4.25128	-.20256	-.21381	-.20256	-.22466
47.760	2.460	-.14631	-.14631	-.13538	-.13538	-.17912	4.19575	-.20100	-.21194	-.21194	-.24475
47.760	4.985	-.12444	-.14631	-.14631	-.16819	-.20100	4.18491	-.22287	-.23381	-.23381	-.20100
47.580	7.480	-.09247	-.18182	-.19182	-.17065	-.20415	4.35266	-.22649	-.18182	-.21532	-.20415
47.590	10.020	-.14730	-.18045	-.18045	-.16940	-.17835	4.22916	-.22466	-.21381	-.23571	-.22466
47.350	15.069	-.23766	-.21532	-.21532	-.22649	-.23766	4.27448	-.22649	-.23766	-.15948	-.26000
	GRADIENT	.00670	.00019	.00238	.00025	.00032	-.01313	-.00401	-.00399	-.00517	.00466

ARC40X80-462(OA100) OV101 (GNA02C) (16 MAR 82)

REFERENCE DATA

SREF = 2690.0000 SQ.FT. XMRP = 1076.6800 IN. XO
LREF = 474.8100 INCHES YMRP = .0000 IN. YO
BREF = 936.6800 INCHES ZMRP = 375.0000 IN. ZO
SCALE = .3600

PARAMETRIC DATA

ALPHA = 5.000 BETA = .000
ELEVON = -10.000 BDFLAP = .000
SPDBRK = 25.000 RUDDER = .000

RUN NO. 56/ 0 GRADIENT INTERVAL = -5.00/ 5.00

Q	AILRON	CP22	CP23	CP24	CP25	CP26	CP27	CP28	CP29	CP30	CP31
47.640	-.034	-.10256	-.20100	-.17912	-.13538	-.14631	4.23950	-.22287	-.21194	-.21194	-.22287
47.660	2.461	-.17912	-.12444	-.12444	-.13538	-.17912	4.20669	-.20100	-.19006	-.25569	-.22287
47.670	4.985	-.11350	-.17912	-.14631	-.11350	-.17912	4.20669	-.19006	-.17912	-.19006	-.24475
47.670	7.480	-.12444	-.12444	-.15725	-.13538	-.16819	4.22856	-.20100	-.21194	-.23381	-.20100
47.570	10.020	-.14631	-.13538	-.14631	-.16819	-.23381	4.27231	-.19006	-.21194	-.13538	-.20100
47.320	15.054	-.21532	-.18182	-.18182	-.19298	-.20415	4.31916	-.19298	-.15948	-.14831	-.19298
	GRADIENT	-.00212	.00431	.00651	.00437	-.00652	-.00652	.00653	.00653	.00440	-.00437

ARC40X80-462(OA100) OV101 (GNA03F) (16 MAR 82)

REFERENCE DATA

SREF = 2690.0000 SQ.FT. XMRP = 1076.6800 IN. XO
LREF = 474.8100 INCHES YMRP = .0000 IN. YO
BREF = 936.6800 INCHES ZMRP = 375.0000 IN. ZO
SCALE = .3600

PARAMETRIC DATA

ALPHA = .000 BETA = .000
ELEVON = .000 AILRON = .000
SPDBRK = 25.000 RUDDER = .000

RUN NO. 35/ 0 GRADIENT INTERVAL = -5.00/ 5.00

Q	BDFLAP	CP22	CP23	CP24	CP25	CP26	CP27	CP28	CP29	CP30	CP31
47.610	-11.543	-.17323	-.19606	-.19606	-.21888	-.25311	-.28734	-.31016	-.27593	-.26452	-.28734
47.740	-.201	-.19298	-.21532	-.17065	-.22649	-.24893	-.27116	-.24893	-.27116	-.23766	-.27116
47.630	.000	-.19298	-.21532	-.17065	-.19298	-.21532	-.21532	-.24883	-.27116	-.27116	-.27116
47.860	16.360	-.19298	-.19298	-.22649	-.19298	-.21532	-.24883	-.27116	-.24883	-.27116	-.28233
47.800	22.684	-.21532	-.20415	-.24883	-.19298	-.21532	-.22649	-.21532	-.22649	-.23766	-.27116
	GRADIENT	.00000	.00000	.00000	.16691	.16691	.27819	.00000	.00000	-.16691	.00000

ARC40X80-462(OA100) OV101 (GNA03G) (16 MAR 82)

REFERENCE DATA

SREF = 2690.0000 SQ.FT. XMRP = 1076.6800 IN. XO
LREF = 474.8100 INCHES YMRP = .0000 IN. YO
BREF = 936.6800 INCHES ZMRP = 375.0000 IN. ZO
SCALE = .3600

PARAMETRIC DATA

ALPHA = 5.000 BETA = .000
ELEVON = .000 AILRON = .000
SPDBRK = 25.000 RUDDER = .000

RUN NO. 36/ 0 GRADIENT INTERVAL = -5.00/ 5.00

Q	BDFLAP	CP22	CP23	CP24	CP25	CP26	CP27	CP28	CP29	CP30	CP31
47.580	-11.543	-.17192	-.17192	-.18321	-.19450	-.21708	-.25094	-.25094	-.26223	-.25094	-.28481
47.730	-.201	-.15948	-.19298	-.17065	-.19298	-.19298	-.24883	-.27116	-.24883	-.24883	-.24883
47.630	16.561	-.16064	-.19450	-.22837	-.17192	-.14935	-.25094	-.25094	-.19450	-.19450	-.27352
47.510	22.684	-.27593	-.33298	-.28734	-.21888	-.19606	-.19606	-.16182	-.21888	-.13900	-.29747
	GRADIENT	.00000	.00000	.00000	.00000	.00000	.00000	.00000	.00000	.00000	.00000

ARC40X80-462(OA100) OV101 (GNA03H) (16 MAR 82)

REFERENCE DATA

SREF = 2690.0000 SQ.FT. XMRP = 1076.6800 IN. XO
LREF = 474.8100 INCHES YMRP = .0000 IN. YO
BREF = 936.6800 INCHES ZMRP = 375.0000 IN. ZO
SCALE = .3600

PARAMETRIC DATA

ALPHA = 10.000 BETA = .000
ELEVON = .000 AILRON = .000
SPDBRK = 25.000 RUDDER = .000

RUN NO. 37/ 0 GRADIENT INTERVAL = -5.00/ 5.00

Q	BDFLAP	CP22	CP23	CP24	CP25	CP26	CP27	CP28	CP29	CP30	CP31
47.700	-11.543	-.15948	-.19298	-.15948	-.19298	-.20415	-.24883	-.24883	-.24883	-.24883	-.21532
47.570	-.100	-.14035	-.21708	-.16064	-.19450	-.21708	-.22837	-.22837	-.21708	-.22837	-.25094
47.350	16.591	-.27711	-.17323	-.16182	-.13900	-.17323	-.19606	-.17323	-.20747	-.25311	-.20747
47.070	22.684	-.19606	-.32157	-.31016	-.31016	-.31016	-.13900	-.17323	-.21888	-.11618	-.25311
	GRADIENT	.00000	.00000	.00000	.00000	.00000	.00000	.00000	.00000	.00000	.00000

ARC40X80-462(OA100) OV101(DECREASING BDFLAP) (GNA03I) (16 MAR 82)

REFERENCE DATA

SREF = 2690.0000 SQ.FT. XMRP = 1076.6800 IN. XO
LREF = 474.8100 INCHES YMRP = .0000 IN. YO
BREF = 936.6800 INCHES ZMRP = 375.0000 IN. ZO
SCALE = .3600

PARAMETRIC DATA

ALPHA = 10.000 BETA = .000
ELEVON = .000 AILRON = .000
SPDBRK = 25.000 RUDDER = .000

RUN NO. 38/ 0 GRADIENT INTERVAL = -5.00/ 5.00

Q	BDFLAP	CP22	CP23	CP24	CP25	CP26	CP27	CP28	CP29	CP30	CP31
47.810	-11.543	-.15948	-.19298	-.15948	-.15948	-.19298	-.24883	-.22649	-.21532	-.24883	-.27116
47.910	-.100	-.13714	-.19298	-.19298	-.15948	-.24883	-.23766	-.21532	-.24883	-.22649	-.27116
47.740	16.461	-.11480	-.13714	-.15948	-.22649	-.24883	-.21532	-.27116	-.18182	-.21532	-.24883
47.360	22.583	-.23029	-.28734	-.27593	-.21888	-.21888	-.19606	-.13900	-.16182	-.24170	-.19606
	GRADIENT	.00000	.00000	.00000	.00000	.00000	.00000	.00000	.00000	.00000	.00000

ARC40X80-462(OA100) OV101 (GNA03J) (16 MAR 82)

REFERENCE DATA

SREF =	2690.0000 SQ.FT.	XMRP =	1076.6800 IN. XO		
LREF =	474.8100 INCHES	YMRP =	.0000 IN. YO		
BREF =	936.6800 INCHES	ZMRP =	375.0000 IN. ZO		
SCALE =	.3600				

PARAMETRIC DATA

ALPHA =	15.000	BETA =	.000
ELEVON =	.000	AILRON =	.000
SPDBRK =	25.000	RUDDER =	.000

RUN NO. 39/ 0 GRADIENT INTERVAL = -5.00/ 5.00

Q	BDFLAP	CP22	CP23	CP24	CP25	CP26	CP27	CP28	CP29	CP30	CP31
47.330	-11.543	-.17192	-.19450	-.19450	-.21708	-.21708	-.27352	-.25094	-.25094	-.27352	-.27352
47.320	-.201	-.16162	-.21888	-.19606	-.19606	-.21888	-.27593	-.25311	-.25311	-.24170	-.25311
47.410	16.360	-.19606	-.19606	-.23029	-.17323	-.23029	-.25311	-.31016	-.27593	-.25311	-.25311
47.490	22.684	-.19606	-.21888	-.19606	-.21888	-.19606	-.27593	-.31016	-.27593	-.23029	-.31016
	GRADIENT	.00000	.00000	.00000	.00000	.00000	.00000	.00000	.00000	.00000	.00000

ARC40X80-462(OA100) OV101 (GNA03K) (16 MAR 82)

REFERENCE DATA

SREF =	2690.0000 SQ.FT.	XMRP =	1076.6800 IN. XO		
LREF =	474.8100 INCHES	YMRP =	.0000 IN. YO		
BREF =	936.6800 INCHES	ZMRP =	375.0000 IN. ZO		
SCALE =	.3600				

PARAMETRIC DATA

ALPHA =	20.000	BETA =	.000
ELEVON =	.000	AILRON =	.000
SPDBRK =	25.000	RUDDER =	.000

RUN NO. 40/ 0 GRADIENT INTERVAL = -5.00/ 5.00

Q	BDFLAP	CP22	CP23	CP24	CP25	CP26	CP27	CP28	CP29	CP30	CP31
47.330	-11.543	-.19450	-.30738	-.21708	-.21708	-.34125	-.32996	-.28481	-.32996	-.30738	-.32996
47.120	-.100	-.19606	-.27593	-.21888	-.31016	-.29875	-.36721	-.33298	-.36721	-.33298	-.39003
47.470	16.461	-.21708	-.30738	-.25094	-.26223	-.32996	-.36382	-.38640	-.36382	-.36382	-.34125
47.930	22.684	-.26887	-.27992	-.30202	-.24676	-.32413	-.37938	-.37938	-.37938	-.35728	-.41254
	GRADIENT	.00000	.00000	.00000	.00000	.00000	.00000	.00000	.00000	.00000	.00000

ARC40X80-462(OA100) OV101 (GNA03L) (16 MAR 82)

REFERENCE DATA

SREF = 2690.0000 SQ.FT. XMRP = 1076.6800 IN. XO
LREF = 474.8100 INCHES YMRP = .0000 IN. YO
BREF = 936.6800 INCHES ZMRP = 375.0000 IN. ZO
SCALE = .3600

PARAMETRIC DATA

ALPHA = .000 BETA = .000
ELEVON = .000 AILRON = .000
BDFLAP = .000 RUDDER = .000

RUN NO. 41/ 0 GRADIENT INTERVAL = -5.00/ 5.00

Q	SPDBRK	CP22	CP23	CP24	CP25	CP26	CP27	CP28	CP29	CP30	CP31
47.750	.000	-.13714	-.15948	-.15948	-.19298	-.21532	-.24883	-.24883	-.24883	-.24983	-.26000
47.510	25.190	-.16064	-.20579	-.16064	-.18321	-.18321	-.27352	-.28481	-.27352	-.25094	-.25094
47.510	55.459	-.21708	-.21708	-.19450	-.21708	-.23965	-.32996	-.30738	-.29609	-.32996	-.32996
47.360	87.628	-.18465	-.29875	-.21898	-.25311	-.33298	-.34439	-.36721	-.36721	-.34439	-.45849
	GRADIENT	.00000	.00000	.00000	.00000	.00000	.00000	.00000	.00000	.00000	.00000

ARC40X80-462(OA100) OV101 (GNA03M) (16 MAR 82)

REFERENCE DATA

SREF = 2690.0000 SQ.FT. XMRP = 1076.6800 IN. XO
LREF = 474.8100 INCHES YMRP = .0000 IN. YO
BREF = 936.6800 INCHES ZMRP = 375.0000 IN. ZO
SCALE = .3600

PARAMETRIC DATA

ALPHA = 5.000 BETA = .000
ELEVON = .000 AILRON = .000
BDFLAP = .000 RUDDER = .000

RUN NO. 42/ 0 GRADIENT INTERVAL = -5.00/ 5.00

Q	SPDBRK	CP22	CP23	CP24	CP25	CP26	CP27	CP28	CP29	CP30	CP31
47.450	-.039	-.15948	-.15948	-.15948	-.15948	-.13714	-.22649	-.21532	-.24883	-.21532	-.24883
47.560	25.179	-.13714	-.14831	-.15948	-.19298	-.19298	-.24883	-.24883	-.24883	-.24883	-.24883
47.560	55.459	-.19298	-.19298	-.17065	-.20415	-.21532	-.29350	-.28233	-.28233	-.27116	-.27116
47.540	87.629	-.19450	-.30738	-.19450	-.25094	-.30738	-.34125	-.36382	-.32996	-.32996	-.36382
	GRADIENT	.00000	.00000	.00000	.00000	.00000	.00000	.00000	.00000	.00000	.00000

ARC40X80-462(OA100) OV101 (GNA03N) (16 MAR 82)

REFERENCE DATA

SREF =	2690.0000 SQ.FT.	XMRP =	1076.6800 IN. XO		
LREF =	474.8100 INCHES	YMRP =	.0000 IN. YO		
BREF =	936.6800 INCHES	ZMRP =	375.0000 IN. ZO		
SCALE =	.3600				

PARAMETRIC DATA

ALPHA =	10.000	BETA =	.000
ELEVON =	.000	AILRON =	.000
BDFLAP =	.000	RUDDER =	.000

RUN NO. 43/ 0 GRADIENT INTERVAL = -5.00/ 5.00

Q	SPDBRK	CP22	CP23	CP24	CP25	CP26	CP27	CP28	CP29	CP30	CP31
47.640	.039	-.15948	-.17065	-.15948	-.19298	-.15948	-.21532	-.21532	-.21532	-.19298	-.24883
47.530	25.141	-.15948	-.15948	-.15948	-.17065	-.15948	-.24883	-.24883	-.23766	-.22649	-.24883
47.100	55.545	-.19606	-.21888	-.19606	-.19606	-.25311	-.27593	-.25311	-.23029	-.27593	-.27593
47.680	87.677	-.19298	-.27116	-.21532	-.24883	-.27116	-.32701	-.30467	-.30467	-.28233	-.32701
	GRADIENT	.00000	.00000	.00000	.00000	.00000	.00000	.00000	.00000	.00000	.00000

ARC40X80-462(OA100) OV101(DECREASING SPDBRK) (GNA030) (16 MAR 82)

REFERENCE DATA

SREF =	2690.0000 SQ.FT.	XMRP =	1076.6800 IN. XO		
LREF =	474.8100 INCHES	YMRP =	.0000 IN. YO		
BREF =	936.6800 INCHES	ZMRP =	375.0000 IN. ZO		
SCALE =	.3600				

PARAMETRIC DATA

ALPHA =	10.000	BETA =	.000
ELEVON =	.000	AILRON =	.000
BDFLAP =	.000	RUDDER =	.000

RUN NO. 44/ 0 GRADIENT INTERVAL = -5.00/ 5.00

Q	SPDBRK	CP22	CP23	CP24	CP25	CP26	CP27	CP28	CP29	CP30	CP31
47.660	.079	-.15948	-.21532	-.19298	-.15948	-.15948	-.21532	-.21532	-.21532	-.21532	-.21532
47.720	25.139	-.13714	-.19298	-.17065	-.15948	-.21532	-.24883	-.24883	-.24883	-.24883	-.24883
47.360	55.545	-.15948	-.19298	-.17065	-.19298	-.24883	-.27116	-.27116	-.24883	-.27116	-.27116
47.610	87.677	-.21532	-.26000	-.22649	-.24883	-.24883	-.28233	-.30467	-.32701	-.32701	-.32701
	GRADIENT	.00000	.00000	.00000	.00000	.00000	.00000	.00000	.00000	.00000	.00000

ARC40X80-462(OA100) OV101 (GNA03P) (16 MAR 82)

REFERENCE DATA

SREF =	2690.0000 SQ.FT.	XMRP =	1076.6800 IN. XO		
LREF =	474.8100 INCHES	YMRP =	.0000 IN. YO		
BREF =	936.6800 INCHES	ZMRP =	375.0000 IN. ZO		
SCALE =	.3600				

PARAMETRIC DATA

ALPHA =	15.000	BETA =	.000
ELEVON =	.000	AILRON =	.000
BDFLAP =	.000	RUDDER =	.000

RUN NO. 48/ 0 GRADIENT INTERVAL = -5.00/ 5.00

Q	SPDBRK	CP22	CP23	CP24	CP25	CP26	CP27	CP28	CP29	CP30	CP31
47.660	-.079	-.13714	-.18182	-.21532	-.19298	-.24883	-.23766	-.23766	-.27116	-.27116	-.27116
47.500	25.100	-.18045	-.18045	-.23571	-.19150	-.24676	-.29097	-.25782	-.29097	-.29097	-.29097
47.520	55.329	-.18182	-.27116	-.24883	-.22649	-.29350	-.30467	-.29350	-.29350	-.29350	-.32701
47.460	87.629	-.21532	-.27116	-.27116	-.21532	-.28233	-.32701	-.36051	-.32701	-.32701	-.37168
	GRADIENT	.00000	.00000	.00000	.00000	.00000	.00000	.00000	.00000	.00000	.00000

ARC40X80-462(OA100) OV101 (GNA03Q) (16 MAR 82)

REFERENCE DATA

SREF =	2690.0000 SQ.FT.	XMRP =	1076.6800 IN. XO		
LREF =	474.8100 INCHES	YMRP =	.0000 IN. YO		
BREF =	936.6800 INCHES	ZMRP =	375.0000 IN. ZO		
SCALE =	.3600				

PARAMETRIC DATA

ALPHA =	20.000	BETA =	.000
ELEVON =	.000	AILRON =	.000
BDFLAP =	.000	RUDDER =	.000

RUN NO. 49/ 0 GRADIENT INTERVAL = -5.00/ 5.00

Q	SPDBRK	CP22	CP23	CP24	CP25	CP26	CP27	CP28	CP29	CP30	CP31
47.680	.040	-.18045	-.31307	-.26887	-.26887	-.32413	-.32413	-.34623	-.32413	-.35720	-.37938
47.550	25.100	-.15949	-.29350	-.21532	-.24883	-.38285	-.34935	-.32701	-.40519	-.32701	-.39285
47.520	55.415	-.21532	-.34935	-.27116	-.27116	-.33818	-.40519	-.43869	-.38285	-.32701	-.4[illegible]
	GRADIENT	.00000	.00000	.00000	.00000	.00000	.00000	.00000	.00000	.00000	.00000

ARC40X80-462(OA100) OV101 (HNA01A) (16 MAR 82)

REFERENCE DATA

SREF =	2690.0000 SQ.FT.	XMRP =	1076.6800 IN.	XO	
LREF =	474.8100 INCHES	YMRP =	.0000 IN.	YO	
BREF =	936.6800 INCHES	ZMRP =	375.0000 IN.	ZO	
SCALE =	.3600				

PARAMETRIC DATA

BETA =	.000	ELEVON =	.000
AILRON =	.000	BDFLAP =	.000
SPOBRK =	25.000	RUDDER =	.000

RUN NO. 4/ 0 GRADIENT INTERVAL = -5.00/ 5.00

Q	ALPHA	BAR	ALPHAU	QI	DP/Q55	DP/Q54	DP/Q52	DP/Q53	DP/Q56
19.120	-5.245	29.83000	-5.00000	17.00000	1.22740	-1.03445	1.05602	.15447	.07604
19.020	-2.655	29.83000	-2.50000	17.00000	1.22560	-1.00845	1.05447	-.10283	.07593
19.080	-.066	29.83000	.00000	17.00000	1.22380	-1.00499	1.05293	-.10268	.03791
19.180	2.532	29.83000	2.50000	17.00000	1.22201	-1.02991	1.05139	-.10253	.03785
19.180	5.128	29.83000	5.00000	17.50000	1.22023	-1.02841	1.04985	-.05119	.00000
19.170	7.734	29.83000	7.50000	17.00000	1.19196	-1.02691	1.17312	.10223	.11323
19.110	10.337	29.83000	10.00000	14.50000	2.47127	-1.98621	2.08098	-.10146	.07492
18.960	12.937	29.83000	12.50000	13.50000	2.46768	-1.98332	2.12743	-.10132	.07481
18.920	15.552	29.83000	15.00000	16.50000	1.34501	-.23395	1.06861	-.05089	.03758
19.030	20.801	29.83000	20.00000	18.00000	1.31482	-.47053	1.16463	.02537	.11241
18.940	26.000	29.83000	25.00000	18.50000	1.31102	-.93934	1.03773	.00000	.07472
	GRADIENT	.00000	.96408	-.00000	-.00069	-.00453	-.00059	.00006	-.00734

RUN NO. 5/ 0 GRADIENT INTERVAL = -5.00/ 5.00

Q	ALPHA	BAR	ALPHAU	QI	DP/Q55	DP/Q54	DP/Q52	DP/Q53	DP/Q56
52.070	-5.245	29.83000	-5.00000	48.00000	1.27812	-1.14349	1.12410	.12332	-.03035
52.240	-2.653	29.83000	-2.50000	49.00000	1.27624	-1.15238	1.13247	.12314	.07577
52.220	-.062	29.83000	.00000	48.00000	1.26375	-1.15069	1.12080	.11271	-.01513
52.220	2.535	29.83000	2.50000	52.00000	1.18100	-1.03928	1.03078	.10274	.06897
52.260	5.135	29.83000	5.00000	48.00000	1.15416	-1.11574	1.11752	.12260	.00000
52.330	7.735	29.83000	7.50000	48.00000	1.30050	-1.12462	1.12584	.11222	.01507
52.190	10.341	29.83000	10.00000	49.00000	1.14023	-1.15446	1.11425	.10187	.00000
52.250	12.939	29.83000	12.50000	57.50000	1.17411	-1.05235	1.02477	.09265	.00000
52.080	15.553	29.83000	15.00000	52.00000	1.03787	-1.05082	1.01422	.09272	.00000
52.310	20.819	29.83000	20.00000	48.00000	1.22808	-1.09559	1.11767	.09115	.01496
49.060	26.008	29.83000	25.00000	48.50000	1.17219	-.99878	1.00595	-.02020	.02983
	GRADIENT	.00000	.96389	.57868	-.01837	.02181	-.01961	-.00393	-.00130

ARC40X80-462(OA100) OV101 (HNA01A) (16 MAR 82)

REFERENCE DATA

SREF =	2690.0000	SQ.FT.	XMRP =	1076.6800	IN. XO		
LREF =	474.8100	INCHES	YMRP =	.0000	IN. YO		
BREF =	936.6800	INCHES	ZMRP =	375.0000	IN. ZO		
SCALE =	.3600						

PARAMETRIC DATA

BETA =	.000	ELEVON =	.000
AILRON =	.000	BDFLAP =	.000
SPDBRK =	25.000	RUDDER =	.000

RUN NO. 7/ 0 GRADIENT INTERVAL = -5.00/ 5.00

Q	ALPHA	BAR	ALPHAU	Q1	DP/Q55	DP/Q54	DP/Q52	DP/Q53	DP/Q56
94.180	-5.245	29.76000	-5.00000	96.50000	1.09814	-.98481	.98885	.10388	.00767
94.780	-2.654	29.76000	-2.50000	97.00000	1.11263	-.98849	.98261	.10372	.00766
95.030	-.061	29.76000	.00000	98.00000	1.10025	-.99236	.98115	.09839	.00765
94.450	2.539	29.76000	2.50000	97.00000	1.10359	-.98024	.97465	.09824	.01527
94.520	5.136	29.76000	5.00000	96.50000	1.08701	-.98411	.97322	.08777	.00763
94.340	7.737	29.76000	7.50000	97.00000	1.08005	-.98267	.97178	.08249	.00000
94.570	10.345	29.76000	10.00000	97.50000	1.09911	-.98652	.98544	.07722	.01521
94.610	12.943	29.76000	12.50000	97.00000	1.08584	-.97448	.97897	.07710	.00000
95.400	15.559	29.76000	15.00000	98.00000	1.09589	-.99421	.97753	.07699	.00758
92.940	18.182	29.76000	17.50000	95.50000	1.05710	-.96635	.95608	.08200	.00757
	GRADIENT	-.00000	.96287	-.00017	-.00165	.00159	-.00153	-.00105	.00147

ARC40X80-462(OA100) OV101(DECREASING ALPHA) (HNA01B) (16 MAR 82)

REFERENCE DATA

SREF =	2690.0000	SQ.FT.	XMRP =	1076.6800	IN. XO		
LREF =	474.8100	INCHES	YMRP =	.0000	IN. YO		
BREF =	936.6800	INCHES	ZMRP =	375.0000	IN. ZO		
SCALE =	.3600						

PARAMETRIC DATA

BETA =	.000	ELEVON =	.000
AILRON =	.000	BDFLAP =	.000
SPDBRK =	25.000	RUDDER =	.000

RUN NO. 6/ 0 GRADIENT INTERVAL = -5.00/ 5.00

Q	ALPHA	BAR	ALPHAU	Q1	DP/Q55	DP/Q54	DP/Q52	DP/Q53	DP/Q56
52.300	-5.243	29.83000	-5.00000	48.00000	2.74796	-.61410	1.13414	.13359	-.03035
51.950	-2.652	29.83000	-2.50000	52.00000	1.88352	-.92653	1.03381	.12178	-.01383
51.990	-.064	29.83000	.00000	57.50000	1.74503	-.77087	1.03230	.10289	.00000
51.990	2.533	29.83000	2.50000	57.50000	2.27489	-.94305	1.02166	.10274	.00000
52.180	5.136	29.83000	5.00000	49.00000	2.61539	-.63155	1.12749	.11238	.00000
51.950	7.735	29.83000	7.50000	53.00000	2.25823	-1.02695	1.01867	.10244	-.02751
52.360	10.339	29.83000	10.00000	57.50000	2.27466	-1.01557	1.04443	.08359	.00000
52.100	12.938	29.83000	12.50000	57.50000	2.09801	-.77492	1.02477	.08285	.00000
52.080	15.553	29.83000	15.00000	49.00000	1.57905	-1.13017	1.11101	.10157	.00000
52.200	20.822	29.83000	20.00000	52.00000	2.01221	-.91442	1.02038	.06472	.02731
	GRADIENT	.00000	.98420	1.06014	.07584	-.00322	-.00234	-.00367	.00267

ARC40X80-462(OA100) OV101 (HNA01C) (16 MAR 82)

REFERENCE DATA

SREF =	2590.0000 SQ.FT.	XMRP =	1076.6800 IN.	XO	
LREF =	474.8100 INCHES	YMRP =	.0000 IN.	YO	
BREF =	936.6800 INCHES	ZMRP =	375.0000 IN.	ZO	
SCALE =	.3600				

PARAMETRIC DATA

BETA =	.000	ELEVON =	10.000
AILRON =	.000	BDFLAP =	.000
SPDBRK =	25.000	RUDDER =	.000

RUN NO. 2/ 0 GRADIENT INTERVAL = -5.00/ 5.00

Q	ALPHA	BAR	ALPHAU	QI	DP/Q55	DP/Q54	DP/Q52	DP/Q53	DP/Q56
18.990	-5.093	29.83000	-5.00000	18.50000	1.22740	-1.00793	1.05602	.15447	.03802
18.990	-2.501	29.83000	-2.50000	17.50000	1.19895	-1.03293	1.05447	-.10283	.00000
19.140	.091	29.83000	.00000	14.00000	2.37995	-2.10297	2.09315	-.20411	.00000
19.090	2.687	29.83000	2.50000	14.50000	2.37648	-2.04740	2.09010	-.20381	.15950
19.080	5.283	29.83000	5.00000	14.50000	2.37301	-2.04442	2.08705	-.20352	.15028
19.050	7.890	29.83000	7.50000	15.50000	1.19196	-1.02691	1.04832	-.05111	.03774
19.090	10.489	29.83000	10.00000	15.50000	1.21668	-.99912	1.04680	-.07656	.03769
19.020	13.095	29.83000	12.50000	13.50000	2.36267	-2.03551	2.07796	-.20263	.07481
18.970	15.701	29.83000	15.00000	15.50000	1.18677	-.99622	1.06861	-.02545	.03758
19.040	20.963	29.83000	20.00000	17.00000	1.23593	-.96720	1.16463	.02537	.14988
18.900	26.117	29.83000	25.00000	17.00000	1.23236	-.96441	1.16127	.00000	.18681
	GRADIENT	-.00000	.96367	-.57804	.22690	-.19548	.19956	-.01946	.02901

RUN NO. 8/ 0 GRADIENT INTERVAL = -5.00/ 5.00

Q	ALPHA	BAR	ALPHAU	QI	DP/Q55	DP/Q54	DP/Q52	DP/Q53	DP/Q56
47.540	-5.091	29.76000	-5.00000	47.50000	1.08510	-1.04820	1.01370	.13359	.06071
47.620	-2.500	29.76000	-2.50000	47.50000	1.06353	-1.03609	1.01221	.13340	.03031
47.640	.091	29.76000	.00000	48.00000	1.05135	-1.02401	1.01072	.13320	.06053
47.600	2.688	29.76000	2.50000	47.50000	1.06042	-1.03305	.99925	.12277	.03022
47.620	5.284	29.76000	5.00000	48.00000	1.04827	-1.03154	.99778	.11238	.04526
47.580	7.890	29.76000	7.50000	47.50000	1.06789	-1.00901	1.00629	.11222	.04520
47.470	10.489	29.76000	10.00000	48.00000	1.04521	-1.02652	1.00482	.11205	.06018
47.430	13.093	29.76000	12.50000	47.50000	1.06477	-1.01654	.99342	.10172	.04507
47.540	15.704	29.76000	15.00000	48.00000	1.04217	-1.00460	.99197	.11172	.04500
47.490	20.973	29.76000	20.00000	48.00000	1.04964	-1.03299	.98909	.08102	.04487
45.130	26.111	29.76000	25.00000	45.00000	.99427	-.96757	.94678	.06059	.01491
	GRADIENT	.00000	.96376	-.00008	-.00060	.00058	-.00250	-.00285	-.00002

ARC40X80-462(OA100) OV101 (HNA01C) (16 MAR 82)

REFERENCE DATA

SREF =	2690.0000 SQ.FT.	XMRP =	1076.6800 IN. XO		
LREF =	474.8100 INCHES	YMRP =	.0000 IN. YO		
BREF =	936.6800 INCHES	ZMRP =	375.0000 IN. ZO		
SCALE =	.3600				

PARAMETRIC DATA

BETA =	.000	ELEVON =	10.000
AILRON =	.000	BDFLAP =	.000
SPDBRK =	25.000	RUDDER =	.000

RUN NO. 14/ 0 GRADIENT INTERVAL = -5.00/ 5.00

Q	ALPHA	BAR	ALPHAU	QI	DP/Q55	DP/Q54	DP/Q52	DP/Q53	DP/Q56
94.550	-5.093	29.78000	-5.00000	97.00000	1.09814	-1.02206	.95985	.11426	.03835
94.050	-2.501	29.78000	-2.50000	97.00000	1.09114	-1.00452	.97754	.11928	.02298
94.680	.090	29.78000	.00000	99.00000	1.09489	-1.01904	.97610	.11392	.02294
94.710	2.690	29.78000	2.50000	98.50000	1.09327	-1.01753	.97970	.09307	.02291
94.230	5.291	29.78000	5.00000	98.00000	1.08630	-1.01071	.96817	.10326	.02288
94.260	7.891	29.78000	7.50000	97.50000	1.08470	-1.00922	.96675	.09280	.00761
94.350	10.495	29.78000	10.00000	98.00000	1.08311	-1.00774	.96030	.08751	.01521
94.610	13.098	29.78000	12.50000	98.00000	1.08684	-1.01155	.97395	.09253	.00000
93.190	15.690	29.78000	15.00000	96.00000	1.05865	-.64518	.95247	.09239	.00758
94.180	18.341	29.78000	17.50000	97.50000	1.07835	-1.00331	.96108	.09225	.00757
92.530	20.994	29.78000	20.00000	96.00000	1.05555	-.98502	.93988	.08700	.00000
	GRADIENT	.00000	.96322	.28892	.00041	-.00250	.00042	-.00505	-.00001

ARC40X80-462(OA100) OV101 (HNA01D) (16 MAR 82)

REFERENCE DATA

SREF =	2690.0000 SQ.FT.	XMRP =	1076.6800 IN. XO		
LREF =	474.8100 INCHES	YMRP =	.0000 IN. YO		
BREF =	936.6800 INCHES	ZMRP =	375.0000 IN. ZO		
SCALE =	.3600				

PARAMETRIC DATA

BETA =	.000	ELEVON =	-10.000
AILRON =	.000	BDFLAP =	.000
SPDBRK =	25.000	RUDDER =	.000

RUN NO. 3/ 0 GRADIENT INTERVAL = -5.00/ 5.00

Q	ALPHA	BAR	ALPHAU	QI	DP/Q55	DP/Q54	DP/Q52	DP/Q53	DP/Q56
18.910	-5.410	29.83000	-5.00000	16.50000	1.20071	-1.00793	1.18174	.15447	-.03802
19.080	-2.818	29.83000	-2.50000	17.00000	1.22560	-1.00645	1.05447	-.07712	.00000
19.140	-.221	29.83000	.00000	17.00000	1.22380	-1.00498	1.05293	-.10268	.03791
19.110	2.371	29.83000	2.50000	16.00000	1.22201	-1.00351	1.05139	-.07689	.03785
19.110	4.965	29.83000	5.00000	17.50000	1.22023	-1.00204	1.04985	-.07678	.03780
19.180	7.564	29.83000	7.50000	16.50000	1.21845	-1.00058	1.04832	-.05111	.01949
19.120	10.174	29.83000	10.00000	16.50000	1.21668	-.99912	1.04680	-.02552	.00000
19.060	12.770	29.83000	12.50000	16.50000	1.21491	-.99767	1.04528	-.05086	.00000
18.880	15.379	29.83000	15.00000	16.50000	1.18677	-.97001	1.04376	-.05089	.07516
18.900	20.638	29.83000	20.00000	16.50000	1.18334	-.96720	1.03552	-.07612	.07494
18.990	25.855	29.83000	25.00000	17.00000	1.20614	-.98441	1.03773	.00000	.07472
	GRADIENT	.00000	.96373	.01929	-.00069	.00057	-.00059	.00103	.00437

ARC40X80-462(OA100) OV101 (HNA01D) (16 MAR 82)

REFERENCE DATA

SREF =	2690.0000 SQ.FT.	XMRP =	1076.6800 IN. XO		
LREF =	474.8100 INCHES	YMRP =	.0000 IN. YO		
BREF =	936.6800 INCHES	ZMRP =	375.0000 IN. ZO		
SCALE =	.3600				

PARAMETRIC DATA

BETA =	.000	ELEVON =	-10.000
AILRON =	.000	BDFLAP =	.000
SPDBRK =	25.000	RUDDER =	.000

RUN NO. 9/ 0 GRADIENT INTERVAL = -5.00/ 5.00

Q	ALPHA	BAR	ALPHAU	QI	DP/Q55	DP/Q54	DP/Q52	DP/Q53	DP/Q56
47.480	-5.409	29.76000	-5.00000	47.50000	1.06510	-1.03761	1.01370	.14387	.03035
47.600	-2.819	29.76000	-2.50000	47.50000	1.05290	-1.03609	1.01221	.13340	.07577
47.420	-.225	29.76000	.00000	48.00000	1.04073	-1.03456	1.01072	.13320	.03026
47.530	2.371	29.76000	2.50000	48.00000	1.04961	-1.04359	1.00924	.13301	.04533
47.300	4.967	29.76000	5.00000	47.50000	1.06945	-1.04206	.99778	.13281	.07544
47.530	7.568	29.76000	7.50000	48.00000	1.05731	-1.03003	1.00629	.12242	.05026
47.500	10.176	29.76000	10.00000	47.50000	1.06533	-1.01803	1.00482	.11205	.06018
47.570	12.771	29.76000	12.50000	48.00000	1.05423	-1.03750	1.00335	.11189	.06009
47.460	15.385	29.76000	15.00000	47.50000	1.05270	-1.03599	.99197	.10157	.06000
47.490	20.650	29.76000	20.00000	48.00000	1.07063	-1.02255	.98909	.11140	.04487
47.810	25.857	29.76000	25.00000	48.00000	1.05707	-.98978	1.02568	.06059	.02983
	GRADIENT	.00000	.95328	-.00001	.00226	-.00104	-.00172	-.00008	.00054

RUN NO. 15/ 0 GRADIENT INTERVAL = -5.00/ 5.00

Q	ALPHA	BAR	ALPHAU	QI	DP/Q55	DP/Q54	DP/Q52	DP/Q53	DP/Q56
94.710	-5.412	29.78000	-5.00000	98.00000	1.08199	-1.03277	.97899	.11946	.02301
94.220	-2.818	29.78000	-2.50000	97.50000	1.09114	-1.03124	.98261	.10891	.02298
93.990	-.223	29.78000	.00000	97.50000	1.07342	-1.02971	.98621	.11910	.02294
94.430	2.374	29.78000	2.50000	97.50000	1.07719	-1.03352	.97465	.10869	.01527
94.520	4.969	29.78000	5.00000	98.00000	1.08095	-1.03731	.98330	.11359	.03050
94.610	7.572	29.78000	7.50000	98.00000	1.07936	-1.03047	.98185	.10827	.01523
94.380	10.178	29.78000	10.00000	97.50000	1.07777	-1.03426	.97035	.09781	.02281
94.800	12.775	29.78000	12.50000	98.00000	1.07086	-1.03803	.97897	.09767	.02277
94.870	15.391	29.78000	15.00000	98.00000	1.06929	-1.03122	.97252	.10779	.00758
95.210	18.018	29.78000	17.50000	98.50000	1.07304	-1.03499	.97610	.09738	.01514
94.570	20.660	29.78000	20.00000	98.00000	1.06086	-1.02821	.96967	.10235	.01512
88.500	25.862	29.78000	25.00000	91.00000	.97314	-.96212	.90704	.06123	.00754
	GRADIENT	.00000	.96305	.05778	-.00103	-.00085	-.00037	.00014	.00057

ARC40X80-462(0A100) OV101 (HNA01E) (16 MAR 82)

REFERENCE DATA

SREF =	2690.0000 SQ.FT.	XMRP =	1076.6800 IN. XO		
LREF =	474.8100 INCHES	YMRP =	.0000 IN. YO		
BREF =	936.6900 INCHES	ZMRP =	375.0000 IN. ZO		
SCALE =	.3600				

PARAMETRIC DATA

ALPHA =	.000	ELEVON =	.000
AILRON =	.000	BDFLAP =	.000
SPDBRK =	25.000	RUDDER =	.000

RUN NO. 16/ 0 GRADIENT INTERVAL = -5.00/ 5.00

Q	BETA	BAR	ALPHAU	Q1	DP/Q55	DP/Q54	DP/Q52	DP/Q53	DP/Q56
19.200	-13.000	29.69000	.00000	19.00000	1.11738	-.97853	1.10307	.05134	.07582
19.160	-10.000	29.69000	.00000	19.00000	1.11738	-.97853	1.12814	.05134	.03791
19.070	-5.000	29.69000	.00000	19.00000	1.09079	-.97853	1.00279	.12834	.03791
19.050	-2.000	29.69000	.00000	19.50000	1.09078	-.97853	1.00279	.15401	-.03791
19.080	.000	29.69000	.00000	19.50000	1.11738	-.97853	1.00279	.12834	-.03791
19.040	2.000	29.69000	.00000	19.00000	1.11738	-.97853	1.00279	.12834	.07582
19.130	5.000	29.69000	.00000	19.50000	1.09078	-.97853	1.02786	.05134	.03791
19.150	10.000	29.69000	.00000	19.50000	1.11738	-.97853	1.07800	.02567	-.03791
19.110	15.000	29.69000	.00000	19.50000	1.11739	-.97853	1.15321	.00000	.03791
19.040	20.000	29.69000	.00000	19.50000	1.09078	-.97853	1.20335	-.10268	.00000
	GRADIENT	.00000	.00000	.02586	.00032	.00000	.00216	-.00752	.00392

RUN NO. 21/ 0 GRADIENT INTERVAL = -5.00/ 5.00

Q	BETA	BAR	ALPHAU	Q1	DP/Q55	DP/Q54	DP/Q52	DP/Q53	DP/Q56
47.590	-13.000	29.75000	.00000	48.00000	1.09383	-.96067	1.08077	-.01025	.00000
47.590	-10.000	29.75000	.00000	48.00000	1.09383	-.96067	1.05075	.03074	.00000
47.630	-5.000	29.75000	.00000	48.00000	1.10445	-.97122	.99071	.07172	.00000
47.520	-2.000	29.75000	.00000	47.50000	1.08321	-.96067	.96068	.10246	.03026
47.490	.000	29.75000	.00000	47.50000	1.08321	-.96067	.97069	.11271	.03026
47.480	2.000	29.75000	.00000	47.50000	1.09383	-.96067	.96068	.10246	.03026
47.630	5.000	29.75000	.00000	48.00000	1.09383	-.96067	.99071	.08197	.00000
47.510	10.000	29.75000	.00000	48.00000	1.08321	-.96067	1.03073	.01025	.01513
47.500	15.000	29.75000	.00000	47.50000	1.09383	-.96067	1.10078	-.04099	.00000
47.680	20.000	29.75000	.00000	48.00000	1.09383	-.96067	1.19085	-.14345	-.01513
	GRADIENT	.00000	.00000	.00000	-.00055	.00091	-.00035	.00088	.00000

RUN NO. 45/ 0 GRADIENT INTERVAL = -5.00/ 5.00

Q	BETA	BAR	ALPHAU	Q1	DP/Q55	DP/Q54	DP/Q52	DP/Q53	DP/Q56
94.290	-13.000	29.88000	.00000	97.50000	1.08415	-.00534	1.08736	-.02589	.01530
94.690	-10.000	29.88000	.00000	99.00000	1.10562	.00000	1.05196	.02071	.00000
94.410	-5.000	29.88000	.00000	99.00000	1.08952	.00000	1.00644	.07250	.02294
94.780	-2.000	29.88000	.00000	99.00000	1.08952	-.00534	.97610	.10357	.01530
94.730	.000	29.88000	.00000	99.00000	1.08952	-.00534	.97104	.10357	.00000
94.410	2.000	29.88000	.00000	98.50000	1.08952	-.00534	.97610	.09839	.01530
94.180	5.000	29.88000	.00000	99.00000	1.08405	.00000	.99127	.07788	.01530
94.590	10.000	29.88000	.00000	98.00000	1.08405	-.00534	1.05186	.01554	.01530
94.450	15.000	29.88000	.00000	96.00000	1.07342	.00534	1.12782	-.07250	.00765
92.340	20.000	29.88000	.00000	97.00000	1.04858	.00534	1.17334	-.13982	.00000
	GRADIENT	.00000	.00000	-.10345	-.00185	.00000	-.00131	.00027	-.00066

ARC40X80-462(OA100) OV101(DECREASING BETA) (HNA01F) (16 MAR 82)

REFERENCE DATA

SREF =	2690.0000 SQ.FT.	XMRP =	1076.6800 IN. XO		
LREF =	474.8100 INCHES	YMRP =	.0000 IN. YO		
BREF =	936.6800 INCHES	ZMRP =	375.0000 IN. ZO		
SCALE =	.3600				

PARAMETRIC DATA

ALPHA =	.000	ELEVON =	.000
AILRON =	.000	BDFLAP =	.000
SPDBRK =	25.000	RUDDER =	.000

RUN NO. 22/ 0 GRADIENT INTERVAL = -5.00/ 5.00

Q	BETA	BAR	ALPHAU	Q1	DP/Q55	DP/Q54	DP/Q52	DP/Q53	DP/Q56
47.510	-13.000	29.75000	.00000	48.00000	1.09383	-.97122	1.07076	-.02049	.00000
47.470	-10.000	29.75000	.00000	47.50000	1.08321	-.97122	1.04074	.02049	.03026
47.610	-5.000	29.75000	.00000	48.00000	1.09383	-.97122	.99071	.09222	.01513
47.600	-2.000	29.75000	.00000	48.00000	1.08321	-.97122	.96068	.10246	.01513
47.430	.000	29.75000	.00000	48.00000	1.08321	-.96067	.96068	.09222	.03028
47.440	2.000	29.75000	.00000	47.50000	1.08321	-.96067	.95068	.10246	.03026
47.550	5.000	29.75000	.00000	47.50000	1.09383	-.96067	.99071	.08197	.03026
47.490	10.000	29.75000	.00000	48.00000	1.08321	-.96067	1.04074	.00000	.03026
47.540	15.000	29.75000	.00000	48.00000	1.09383	-.96067	1.10078	-.04099	.01513
47.670	20.000	29.75000	.00000	48.00000	1.09383	-.96067	1.19085	-.14345	.00000
	GRADIENT	.00000	.00000	-.06034	.00000	.00127	-.00035	-.00088	.00183

ARC40X80-462(OA100) OV101 (HNA01G) (16 MAR 82)

REFERENCE DATA

SREF =	2690.0000 SQ.FT.	XMRP =	1076.6800 IN. XO		
LREF =	474.8100 INCHES	YMRP =	.0000 IN. YO		
BREF =	936.6800 INCHES	ZMRP =	375.0000 IN. ZO		
SCALE =	.3600				

PARAMETRIC DATA

ALPHA =	5.000	ELEVON =	.000
AILRON =	.000	BDFLAP =	.000
SPDBRK =	25.000	RUDDER =	.000

RUN NO. 17/ 0 GRADIENT INTERVAL = -5.00/ 5.00

Q	BETA	BAR	ALPHAU	Q1	DP/Q55	DP/Q54	DP/Q52	DP/Q53	DP/Q56
19.180	-13.000	29.69000	5.00000	19.00000	1.08759	-1.00204	1.12484	.00000	-.07560
19.120	-10.000	29.69000	5.00000	19.50000	1.11412	-.97567	1.07485	.02559	.03780
19.030	-5.000	29.69000	5.00000	19.50000	1.08759	-.97567	.99986	.10238	.03780
19.070	-2.000	29.69000	5.00000	19.00000	1.08759	-.97567	.99986	.12797	-.03780
19.070	.000	29.69000	5.00000	19.50000	1.08759	-.97567	.97486	.10238	-.03780
19.050	2.000	29.69000	5.00000	19.50000	1.08759	-.97567	.97486	.07678	-.03780
19.080	5.000	29.69000	5.00000	19.00000	1.08759	-.97567	.99986	.07678	.07560
19.070	10.000	29.69000	5.00000	19.50000	1.08759	-1.00204	1.04985	.02559	.00000
19.020	15.000	29.69000	5.00000	19.50000	1.08759	-.97567	1.12484	-.05119	-.03780
19.010	20.000	29.69000	5.00000	19.50000	1.08759	-.94930	1.17484	-.10238	-.03780
	GRADIENT	.00000	.00000	-.02586	.00000	.00000	-.00086	-.00397	.00326

ARC40X80-462(OA100) OV101 (HNA01G) (16 MAR 82)

REFERENCE DATA

SREF =	2690.0000 SQ.FT.	XMRP =	1076.6800 IN. XO		
LREF =	474.8100 INCHES	YMRP =	.0000 IN. YO		
BREF =	936.6800 INCHES	ZMRP =	375.0000 IN. ZO		
SCALE =	.3600				

PARAMETRIC DATA

ALPHA =	5.000	ELEVON =	.000
AILRON =	.000	BDFLAP =	.000
SPDBRK =	25.000	RUDDER =	.000

RUN NO. 23/ 0 GRADIENT INTERVAL = -5.00/ 5.00

Q	BETA	BAR	ALPHAU	Q1	DP/Q55	DP/Q54	DP/Q52	DP/Q53	DP/Q56
47.780	-13.000	29.75000	5.00000	48.00000	1.09063	-.96838	1.07760	-.04087	.00000
47.770	-10.000	29.75000	5.00000	48.00000	1.08004	-.96838	1.04767	.03065	.03018
47.550	-5.000	29.75000	5.00000	47.50000	1.08004	-.95786	.97783	.06130	.00000
47.560	-2.000	29.75000	5.00000	47.50000	1.08004	-.95786	.97783	.10216	.00000
47.450	.000	29.75000	5.00000	48.00000	1.08004	-.95786	.95786	.08173	.03018
47.550	2.000	29.75000	5.00000	48.00000	1.09063	-.96838	.94789	.08173	.00000
47.430	5.000	29.75000	5.00000	47.50000	1.08004	-.96838	.98781	.08173	-.03018
47.670	10.000	29.75000	5.00000	48.00000	1.08004	-.96838	1.04767	.01022	.01509
47.470	15.000	29.75000	5.00000	47.50000	1.08004	-.95786	1.07760	-.04087	.00000
47.450	20.000	29.75000	5.00000	47.50000	1.08004	-.95786	1.15743	-.12260	.00000
	GRADIENT	.00000	.00000	.01724	.00037	-.00127	-.00017	.00106	-.00260

ARC40X80-462(OA100) OV101 (HNA01H) (16 MAR 82)

REFERENCE DATA

SREF =	2690.0000 SQ.FT.	XMRP =	1076.6800 IN. XO		
LREF =	474.8100 INCHES	YMRP =	.0000 IN. YO		
BREF =	936.6800 INCHES	ZMRP =	375.0000 IN. ZO		
SCALE =	.3600				

PARAMETRIC DATA

ALPHA =	10.000	ELEVON =	.000
AILRON =	.000	BDFLAP =	.000
SPDBRK =	25.000	RUDDER =	.000

RUN NO. 18/ 0 GRADIENT INTERVAL = -5.00/ 5.00

Q	BETA	BAR	ALPHAU	Q1	DP/Q55	DP/Q54	DP/Q52	DP/Q53	DP/Q56
19.060	-13.000	29.69000	10.00000	19.50000	1.08443	-.97283	1.12157	.00000	.03769
19.090	-10.000	29.69000	10.00000	19.00000	1.08443	-.97283	1.07172	.00000	-.03769
19.100	-5.000	29.69000	10.00000	19.00000	1.08443	-.97283	.99595	.05104	-.03769
19.180	-2.000	29.69000	10.00000	19.00000	1.08443	-1.89308	.99595	.10208	-.03769
19.060	.000	29.69000	10.00000	19.00000	1.08443	-.97283	.99595	.10208	-.03769
19.110	2.000	29.69000	10.00000	19.00000	1.08443	-.97283	.97203	.07656	-.03769
19.080	5.000	29.69000	10.00000	19.00000	1.08443	-.97283	.99595	.05104	-.03769
19.110	10.000	29.69000	10.00000	19.00000	1.08443	-.97283	1.07172	.02552	.00000
19.050	15.000	29.69000	10.00000	19.00000	1.08443	-.97283	1.12157	-.05104	-.03769
19.040	20.000	29.69000	10.00000	19.50000	1.08443	-.97283	1.19634	-.15312	.00000
	GRADIENT	.00000	.00000	.00000	.00000	.03173	-.00026	-.00088	.00000

ARC40X80-T462(OA100) OV101 (HNAC1H) (16 MAR 82)

REFERENCE DATA

SREF =	2690.0000 SQ.FT.	XMRP =	1076.6800 IN.	XO	
LREF =	474.8100 INCHES	YMRP =	.0000 IN.	YO	
BREF =	936.6800 INCHES	ZMRP =	375.0000 IN.	ZO	
SCALE =	.3600				

PARAMETRIC DATA

ALPHA =	10.000	ELEVON =	.000
AILRON =	.000	BDFLAP =	.000
SPDBRK =	25.000	RUDDER =	.000

RUN NO. 24/ 0 GRADIENT INTERVAL = -5.00/ 5.00

Q	BETA	BAR	ALPHAU	QI	DP/Q55	DP/Q54	DP/Q52	DP/Q53	DP/Q56
47.700	-13.000	29.75000	10.00000	48.00000	1.08744	-.96555	1.08441	-.03056	-.01504
47.950	-10.000	29.75000	10.00000	48.00000	1.09800	-.96555	1.05456	.00000	-.01504
48.370	-5.000	29.75000	10.00000	49.00000	1.08744	-.98654	.99487	.08149	.01504
47.570	-2.000	29.75000	10.00000	48.00000	1.08744	-.96555	.96502	.08149	.00000
47.530	.000	29.75000	10.00000	48.00000	1.08744	-.96555	.96502	.08149	.03009
47.440	2.000	29.75000	10.00000	48.00000	1.07689	-.94456	.95507	.08149	.01504
47.660	5.000	29.75000	10.00000	48.00000	1.07689	-.97605	.98492	.06112	.01504
47.390	10.000	29.75000	10.00000	47.50000	1.07689	-.96555	1.03466	-.01019	.01504
47.510	15.000	29.75000	10.00000	47.50000	1.07689	-.96556	1.10430	-.05093	.01504
47.500	20.000	29.75000	10.00000	47.50000	1.08744	-.96555	1.17395	-.15280	.00000
	GRADIENT	.00000	.00000	-.08621	-.00127	.00163	-.00120	-.00176	.00052

RUN NO. 46/ 0 GRADIENT INTERVAL = -5.00/ 5.00

Q	BETA	BAR	ALPHAU	QI	DP/Q55	DP/Q54	DP/Q52	DP/Q53	DP/Q56
94.480	-13.000	29.88000	10.00000	99.00000	1.07777	-.01061	1.09605	-.03604	.01521
94.340	-10.000	29.88000	10.00000	99.00000	1.08311	-.01591	1.05080	.01030	.01521
94.410	-5.000	29.88000	10.00000	98.50000	1.05710	.00000	.99549	.07722	.01521
94.550	-2.000	29.88000	10.00000	98.50000	1.07244	-.00530	.98041	.09781	.02281
94.270	.000	29.88000	10.00000	98.00000	1.05110	.00000	.97035	.10811	.02281
94.360	2.000	29.88000	10.00000	98.00000	1.05110	-.00530	.97538	.09781	.02281
94.430	5.000	29.88000	10.00000	98.00000	1.04042	.00000	.99549	.07722	.01521
94.550	10.000	29.88000	10.00000	98.50000	1.04042	-.01061	1.05582	.02059	.02281
94.610	15.000	29.88000	10.00000	98.50000	1.04042	-.01061	1.13124	-.05663	.02281
94.360	20.000	29.88000	10.00000	98.00000	1.04042	-.00530	1.21168	-.14929	.02281
	GRADIENT	.00000	.00000	-.06034	-.00304	.00000	-.00017	.00000	.00000

ARC40X80-462(OA100) OV101 (HNA011) (16 MAR 82)

REFERENCE DATA

SREF =	2690.0000 SQ.FT.	XMRP =	1076.6800 IN.	XO	
LREF =	474.8100 INCHES	YMRP =	.0000 IN.	YO	
BREF =	936.6800 INCHES	ZMRP =	375.0000 IN.	ZO	
SCALE =	.3500				

PARAMETRIC DATA

ALPHA =	15.000	ELEVON =	.000
AILRON =	.000	BDFLAP =	.000
SPDBRK =	25.000	RUDDER =	.000

RUN NO. 19/ 0 GRADIENT INTERVAL = -5.00/ 5.00

Q	BETA	BAR	ALPHAU	QI	DP/Q55	DP/Q54	DP/Q52	DP/Q53	DP/Q56
19.000	-13.000	29.69000	15.00000	19.00000	1.08128	-.97001	1.11831	-.10178	-.03758
19.100	-10.000	29.69000	15.00000	19.00000	1.10765	-.97001	1.04376	-.05089	.03758
19.000	-5.000	29.69000	15.00000	19.00000	1.10765	-.97001	.99406	.02545	.07516
19.000	-2.000	29.69000	15.00000	19.00000	1.08128	-.97001	.96920	.02545	.03758
19.980	.000	29.69000	15.00000	19.00000	1.10765	-.94379	.99406	.07634	.03758
19.070	2.000	29.69000	15.00000	19.50000	1.10765	-.97001	.96920	.05089	-.03758
18.980	10.000	29.69000	15.00000	19.00000	1.08128	-.94379	1.06061	-.05089	.00000
19.000	15.000	29.69000	15.00000	19.00000	1.08128	-.97001	1.11831	-.07634	-.07516
18.930	20.000	29.69000	15.00000	19.00000	1.08128	-.94379	1.19287	-.17812	-.07516
	GRADIENT	.00000	.00000	.06075	.00074	.00123	-.00232	.00547	-.01440

RUN NO. 25/ 0 GRADIENT INTERVAL = -5.00/ 5.00

Q	BETA	BAR	ALPHAU	QI	DP/Q55	DP/Q54	DP/Q52	DP/Q53	DP/Q56
47.510	-13.000	30.77000	15.00000	47.50000	1.08428	-1.00460	1.09117	-.06094	.00000
47.800	-10.000	30.77000	15.00000	48.00000	1.09480	-1.00460	1.06141	-.02031	.00000
48.000	-5.000	30.77000	15.00000	48.50000	1.09480	-1.00460	1.01181	.04063	.01500
48.090	-2.000	30.77000	15.00000	48.00000	1.08428	-1.00460	.99197	.07110	.00000
47.970	.000	30.77000	15.00000	48.00000	1.08428	-1.02553	.99205	.08125	.00000
47.910	2.000	30.77000	15.00000	48.00000	1.08428	-1.01506	.97213	.07110	.00000
47.890	5.000	30.77000	15.00000	48.00000	1.07375	-1.01506	1.00189	.04063	.01500
47.470	10.000	30.77000	15.00000	48.00000	1.06322	-1.01506	1.05149	-.01016	.00000
47.450	15.000	30.77000	15.00000	48.00000	1.06322	-1.00460	1.12093	-.08125	.00000
47.650	20.000	30.77000	15.00000	48.00000	1.08428	-1.00460	1.21021	-.17267	-.01500
	GRADIENT	.00000	.00000	-.04310	-.00181	-.00126	-.00154	.00000	.00000

ARC40X80-462(OA100) OV101 (HNA01J) (16 MAR 82)

REFERENCE DATA

SREF =	2690.0000 SQ.FT.	XMRP =	1076.6800 IN. XO	ALPHA =	20.000	ELEVON =	.000
LREF =	474.8100 INCHES	YMRP =	.0000 IN. YO	AILRON =	.000	BDFLAP =	.000
BREF =	936.6800 INCHES	ZMRP =	375.0000 IN. ZO	SPDBRK =	25.000	RUDDER =	.000
SCALE =	.3600						

PARAMETRIC DATA

RUN NO. 20/ 0 GRADIENT INTERVAL = -5.00/ 5.00

Q	BETA	BAR	ALPHAU	Q1	DP/Q55	DP/Q54	DP/Q52	DP/Q53	DP/Q56
19.180	-13.000	29.75000	20.00000	19.00000	1.10445	-.91492	1.11508	-.12686	-.03747
19.130	-10.000	29.75000	20.00000	19.00000	1.10445	-.91492	1.11508	-.07612	.00000
19.100	-5.000	29.75000	20.00000	18.50000	1.10445	-.91492	1.01596	-.02537	-.03747
19.140	-2.000	29.75000	20.00000	19.00000	1.13074	-.91492	.94162	.02537	-.03747
19.220	.000	29.75000	20.00000	19.00000	1.10445	-.91492	.99118	.02537	-.03747
19.130	2.000	29.75000	20.00000	19.00000	1.10445	-.91492	.94162	.02537	.00000
19.100	5.000	29.75000	20.00000	19.00000	1.10445	-.91492	.99118	.05074	-.03747
19.010	10.000	29.75000	20.00000	19.00000	1.10445	-.88878	1.06552	-.05074	-.03747
19.040	15.000	29.75000	20.00000	18.50000	1.10445	-.88878	1.13985	-.10149	.00000
19.000	20.000	29.75000	20.00000	19.00000	1.10445	-.88878	1.16463	-.22934	.03747
	GRADIENT	.00000	.00000	.04310	-.00091	.00000	-.00214	.00656	.00129

RUN NO. 26/ 0 GRADIENT INTERVAL = -5.00/ 5.00

Q	BETA	BAR	ALPHAU	Q1	DP/Q55	DP/Q54	DP/Q52	DP/Q53	DP/Q56
47.490	-13.000	30.77000	20.00000	47.50000	1.08113	-1.02255	1.13746	-.09115	-.01496
47.730	-10.000	30.77000	20.00000	48.00000	1.09163	-1.02255	1.10778	-.05064	-.01496
47.590	-5.000	30.77000	20.00000	48.00000	1.08113	-1.02255	1.02866	.02025	.00000
47.600	-2.000	30.77000	20.00000	48.00000	1.06014	-1.02255	.98909	.07089	.01496
47.560	.000	30.77000	20.00000	48.00000	1.07063	-1.03299	.98909	.08102	.01496
47.630	2.000	30.77000	20.00000	48.00000	1.07063	-1.04342	.97920	.08102	.01496
47.700	5.000	30.77000	20.00000	48.00000	1.07063	-1.04342	1.00987	.04051	.01496
47.640	10.000	30.77000	20.00000	48.00000	1.06014	-1.04342	1.07811	-.01013	.01496
47.620	15.000	30.77000	20.00000	48.00000	1.04964	-1.04342	1.15724	-.10127	.00000
47.420	20.000	30.77000	20.00000	48.00000	1.07063	-1.03299	1.19680	-.19242	.00000
	GRADIENT	.00000	.00000	.00000	-.00054	-.00252	-.00205	.00210	.00129

ARC40X80-462(OA100) OV101 (HNAOIK) (16 MAR 82)

REFERENCE DATA

SREF =	2690.0000 SQ.FT.	XMRP =	1076.6800 IN.	XO	
LREF =	474.8100 INCHES	YMRP =	.0000 IN.	YO	
BREF =	936.6800 INCHES	ZMRP =	375.0000 IN.	ZO	
SCALE =	.3600				

PARAMETRIC DATA

ALPHA =	.000	BETA =	.000
AILRON =	.000	BDFLAP =	.000
SPDBRK =	25.000	RUDDER =	.000

RUN NO. 10/ 0 GRADIENT INTERVAL = -5.00/ 5.00

Q	ELEVON	BAR	ALPHAU	QI	DP/Q55	DP/Q54	DP/Q52	DP/Q53	DP/Q56
47.410	-36.343	29.66000	.00000	47.00000	1.07259	-.90178	.96068	.07172	.01513
47.600	-31.143	29.66000	.00000	48.00000	1.07259	-1.00289	.96068	.09222	.01513
47.670	-26.002	29.66000	.00000	48.00000	1.09393	-.99234	.96068	.07172	.01513
47.550	-20.742	29.66000	.00000	48.00000	1.08321	-.99234	.96068	.09222	.01513
47.580	-15.601	29.66000	.00000	47.50000	1.09321	-1.00289	.96068	.07172	.01513
47.670	-10.401	29.66000	.00000	48.00000	1.08321	-.97122	.96068	.08197	.01513
47.780	-5.200	29.66000	.00000	48.00000	1.07259	-.99234	.96068	.09222	.01513
47.640	-.060	29.66000	.00000	47.50000	1.07259	-.99234	.96068	.07172	.01513
47.540	5.141	29.66000	.00000	48.00000	1.07259	-.99234	.95068	.09222	.01513
47.490	10.281	29.66000	.00000	47.50000	1.07259	-.97122	.95068	.08197	.00000
47.590	15.482	29.66000	.00000	47.50000	1.08321	-.96057	.95068	.06148	-.01513
47.470	20.582	29.66000	.00000	47.50000	1.08321	-.97122	.96068	.09222	.01513
	GRADIENT	.00000	.00000	.00000	.00000	.00000	.00000	.00000	.00000

ARC40X80-462(OA100) OV101 (HNA01L) (16 MAR 82)

REFERENCE DATA

SREF =	2690.0000 SQ.FT.	XMRP =	1076.6800 IN.	XO	
LREF =	474.8100 INCHES	YMRP =	.0000 IN.	YO	
BREF =	936.6800 INCHES	ZMRP =	375.0000 IN.	ZO	
SCALE =	.3600				

PARAMETRIC DATA

ALPHA =	5.000	BETA =	.000
AILRON =	.000	BDFLAP =	.000
SPDBRK =	25.000	RUDDER =	.000

RUN NO. 11/ 0 GRADIENT INTERVAL = -5.00/ 5.00

Q	ELEVON	BAR	ALPHAU	Q1	DP/Q55	DP/Q54	DP/Q52	DP/Q53	DP/Q56
47.520	-36.343	29.66000	5.00000	47.50000	1.06945	-.98943	.94789	.07151	.00000
47.610	-31.143	29.66000	5.00000	47.50000	1.06945	-.99986	.93792	.08173	.01509
47.540	-26.002	29.66000	5.00000	47.50000	1.08004	-.96838	.93792	.10216	.01509
47.510	-20.742	29.66000	5.00000	47.50000	1.08004	-.96838	.93792	.08173	.01509
47.510	-15.601	29.66000	5.00000	47.50000	1.06945	-.96838	.93792	.06130	.01509
47.550	-10.401	29.66000	5.00000	47.50000	1.06945	-.97891	.94789	.09195	.01509
47.510	-5.260	29.66000	5.00000	47.50000	1.06945	-.98943	.93792	.06130	.00000
47.610	-.060	29.66000	5.00000	47.50000	1.10122	-.97891	.94789	.06130	.00000
47.450	5.081	29.66000	5.00000	47.50000	1.09063	-.96838	.93792	.09195	.00000
47.500	10.341	29.66000	5.00000	47.50000	1.06945	-.96838	.94789	.07151	.00000
47.710	15.482	29.66000	5.00000	47.50000	1.08004	-.96838	.94789	.09195	-.01509
47.420	20.682	29.66000	5.00000	47.50000	1.06945	-.96838	.93792	.09195	.01509
	GRADIENT	.00000	.00000	.00000	.00000	.00000	.00000	.00000	.00000

ARC40X80-462(OA100) OV101 (HNA01M) (16 MAR 82)

REFERENCE DATA

SREF =	2690.0000	SQ.FT.	XMRP =	1076.6800	IN. XO		
LREF =	474.8100	INCHES	YMRP =	.0000	IN. YO		
BREF =	936.6800	INCHES	ZMRP =	375.0000	IN. ZO		
SCALE =	.3600						

PARAMETRIC DATA

ALPHA =	10.000	BETA =	.000
AILRON =	.000	BDFLAP =	.000
SPDBRK =	25.000	RUDDER =	.000

RUN NO. 12/ 0 GRADIENT INTERVAL = -5.00/ 5.00

Q	ELEVON	BAR	ALPHAU	Q1	DP/Q55	DP/Q54	DP/Q52	DP/Q53	DP/Q56
47.660	-36.343	29.66000	10.00000	47.50000	1.08744	-.97605	.94512	.09168	.01504
47.590	-31.143	29.66000	10.00000	47.50000	1.07689	-.95506	.94512	.06112	.00000
47.530	-26.002	29.66000	10.00000	48.00000	1.08633	-.97605	.93518	.07131	.01504
47.620	-20.802	29.66000	10.00000	47.50000	1.08744	-.96555	.95507	.07131	.01504
47.460	-15.601	29.66000	10.00000	47.50000	1.07689	-.96555	.93518	.07131	-.01504
47.530	-10.401	29.66000	10.00000	47.50000	1.07689	-.96555	.95507	.07131	.01504
47.500	-5.200	29.66000	10.00000	47.50000	1.06633	-.96555	.92523	.06112	.00000
47.500	-.060	29.66000	10.00000	48.00000	1.07689	-.96555	.93518	.06112	-.01504
47.350	5.141	29.66000	10.00000	47.50000	1.06633	-.96555	.95507	.07131	.01504
47.430	10.281	29.66000	10.00000	47.50000	1.07689	-.96555	.94512	.08149	.00000
47.460	15.541	29.66000	10.00000	47.50000	1.07689	-.95506	.95507	.08149	.01504
47.380	20.622	29.66000	10.00000	47.50000	1.08744	-.95506	.94512	.06112	.00000
	GRADIENT	.00000	.00000	.00000	.00000	.00000	.00000	.00000	.00000

ARC40X80-462(OA100) OV101(DECREASING ELEVON) (HNA01N) (16 MAR 82)

REFERENCE DATA

SREF =	2690.0000 SQ.FT.	XMRP =	1076.6800 IN.	XO	
LREF =	474.8100 INCHES	YMRP =	.0000 IN.	YO	
BREF =	935.6800 INCHES	ZMRP =	375.0000 IN.	ZO	
SCALE =	.3600				

PARAMETRIC DATA

ALPHA =	10.000	BETA =	.000
AILRON =	.000	BDFLAP =	.000
SPDBRK =	25.000	RUDDER =	.000

RUN NO. 13/ 0 GRADIENT INTERVAL = -5.00/ 5.00

Q	ELEVON	BAR	ALPHAU	Q1	DP/Q55	DP/Q54	DP/Q52	DP/Q53	DP/Q56
47.380	-36.343	29.66000	10.00000	47.50000	1.08744	-.97605	.94512	.07131	.01504
47.430	-31.143	29.66000	10.00000	47.50000	1.06633	-.95506	.95507	.06112	.03009
47.440	-25.942	29.66000	10.00000	47.50000	1.06633	-.96555	.95507	.06112	.03009
47.350	-20.742	29.66000	10.00000	47.50000	1.06633	-.96555	.94512	.07131	.00000
47.340	-15.541	29.66000	10.00000	47.50000	1.07689	-.96555	.95507	.07131	.00000
47.340	-10.461	29.66000	10.00000	47.50000	1.06633	-.96555	.95507	.06112	-.01504
47.260	-5.200	29.66000	10.00000	47.50000	1.06633	-.95555	.95507	.08149	.01504
47.300	.000	29.66000	10.00000	47.50000	1.06633	-.96555	.96502	.06112	.00000
47.260	5.111	29.66000	10.00000	47.50000	1.06633	-.95506	.96502	.06112	.00000
47.510	10.281	29.66000	10.00000	47.50000	1.07689	-.95555	.94512	.08149	-.01504
47.530	15.541	29.66000	10.00000	47.50000	1.06633	-.96555	.94512	.09168	.00000
47.400	20.622	29.66000	10.00000	48.00000	1.07689	-.98654	.95507	.06112	.00000
	GRADIENT	.00000	.00000	.00000	.00000	.00000	.00000	.00000	.00000

ARC40X80-462(OA100) OV101 (HNA010) (16 MAR 82)

REFERENCE DATA

SREF =	2690.0000 SQ.FT.	XMRP =	1076.6800 IN. XO		
LREF =	474.8100 INCHES	YMRP =	.0000 IN. YO		
BREF =	936.6800 INCHES	ZMRP =	375.0000 IN. ZO		
SCALE =	.3600				

PARAMETRIC DATA

ALPHA =	15.000	BETA =	.000
AILRON =	.000	BDFLAP =	.000
SPDBRK =	25.000	RUDDER =	.000

RUN NO. 27/ 0 GRADIENT INTERVAL = -5.00/ 5.00

Q	ELEVON	BAR	ALPHAU	QI	DP/Q55	DP/Q54	DP/Q52	DP/Q53	DP/Q56
47.630	-36.343	30.77000	15.00000	48.00000	1.06322	-1.04646	.98205	.09141	.03000
47.880	-31.143	30.77000	15.00000	48.00000	1.07375	-1.04646	.99197	.10157	.03000
47.570	-26.002	30.77000	15.00000	48.00000	1.06322	-1.04646	.99197	.09141	.06000
47.550	-20.742	30.77000	15.00000	48.00000	1.05270	-1.04646	.99197	.10157	.03000
47.520	-15.601	30.77000	15.00000	47.50000	1.05270	-1.04646	1.00189	.10157	.03000
47.720	-10.401	30.77000	15.00000	48.00000	1.06322	-1.05692	1.00189	.11172	.03000
47.490	-5.209	30.77000	15.00000	47.50000	1.05270	-1.05692	.99197	.10157	.03000
47.560	.000	30.77000	15.00000	48.00000	1.06322	-1.04646	1.01181	.09141	.06000
47.560	5.141	30.77000	15.00000	48.00000	1.05270	-1.04646	1.01181	.10157	.01500
47.570	10.281	30.77000	15.00000	48.00000	1.05270	-1.05692	1.00189	.10157	.03000
47.790	15.482	30.77000	15.00000	48.00000	1.09480	-1.05692	1.01181	.11172	.03000
47.430	20.637	30.77000	15.00000	48.00000	1.06322	-1.04646	.99197	.10157	.03000
	GRADIENT	.00000	.00000	.00000	.00000	.00000	.00000	.00000	.00000

ARC40X80-462(OA100) OV101 (HNA01P) (16 MAR 82)

REFERENCE DATA

SREF =	2690.0000	SQ.FT.	XMRP =	1076.6800	IN. XO	ALPHA =	20.000	BETA =	.000
LREF =	474.8100	INCHES	YMRP =	.0000	IN. YO	AILRON =	.000	BDFLAP =	.000
BREF =	936.6800	INCHES	ZMRP =	375.0000	IN. ZO	SPDBRK =	25.000	RUDDER =	.000
SCALE =	.3600								

PARAMETRIC DATA

RUN NO. 28/ 0 GRADIENT INTERVAL = -5.00/ 5.00

Q	ELEVON	BAR	ALPHAU	Q1	DP/Q55	DP/Q54	DP/Q52	DP/Q53	DP/Q56
47.610	-36.343	30.77000	20.00000	48.00000	1.07063	-1.05385	.98909	.09115	.02991
47.620	-31.143	30.77000	20.00000	48.00000	1.06014	-1.05395	.97920	.09115	.02991
47.500	-25.942	30.77000	20.00000	48.00000	1.07063	-1.05385	.98909	.09115	.02991
47.700	-20.712	30.77000	20.00000	48.00000	1.07063	-1.05385	.99898	.10127	.02991
47.670	-15.601	30.77000	20.00000	48.00000	1.04964	-1.05385	.98909	.10127	.02991
47.810	-10.401	30.77000	20.00000	48.00000	1.06014	-1.05385	.98909	.11140	.04487
47.510	-5.200	30.77000	20.00000	48.00000	1.04964	-1.05385	.98909	.10127	.02991
47.560	-.030	30.77000	20.00000	48.00000	1.06014	-1.05385	1.00887	.10127	.02991
47.750	5.141	30.77000	20.00000	48.00000	1.07063	-1.05385	1.01877	.09115	.04487
47.560	10.341	30.77000	20.00000	48.00000	1.06014	-1.05385	.98909	.09115	.02991
47.760	15.541	30.77000	20.00000	47.50000	1.06014	-1.04342	.96931	.10127	.01496
47.650	20.662	30.77000	20.00000	48.00000	1.08113	-1.05385	1.01877	.10127	.00000
	GRADIENT	.00000	.00000	.00000	.00000	.00000	.00000	.00000	.00000

ARC40X80-462(OA100) OV101 (HNA01Q) (16 MAR 82)

REFERENCE DATA

SREF =	2690.0000	SQ.FT.	XMRP =	1076.6800	IN. XO	ALPHA =	.000	BETA =	.000
LREF =	474.8100	INCHES	YMRP =	.0000	IN. YO	ELEVON =	.000	BDFLAP =	.000
BREF =	936.6800	INCHES	ZMRP =	375.0000	IN. ZO	SPDBRK =	25.000	RUDDER =	.000
SCALE =	.3600								

PARAMETRIC DATA

RUN NO. 29/ 0 GRADIENT INTERVAL = -5.00/ 5.00

Q	AILRON	BAR	ALPHAU	Q1	DP/Q55	DP/Q54	DP/Q52	DP/Q53	DP/Q56
47.700	-.045	30.77000	.00000	48.00000	1.06197	-1.07679	1.03073	.15369	.04540
47.690	2.570	30.77000	.00000	48.00000	1.07259	-1.08624	1.01072	.12296	.04540
47.620	5.141	30.77000	.00000	48.00000	1.06197	-1.07679	1.03073	.13320	.03026
47.590	7.711	30.77000	.00000	48.00000	1.07259	-1.07679	1.02073	.12296	.00053
47.610	10.281	30.77000	.00000	48.00000	1.07259	-1.07679	1.01072	.15369	.03026
47.630	15.541	30.77000	.00000	47.50000	1.06197	-1.07679	1.03073	.14345	.04540
	GRADIENT	.00000	.00000	-.00000	.00406	.00403	-.00765	-.01175	.00000

ARC40X80-462(OA100) OV101 (HNA01R) (16 MAR 82)

REFERENCE DATA

SREF =	2690.0000 SQ.FT.	XMRP =	1076.6800 IN. XO		
LREF =	474.8100 INCHES	YMRP =	.0000 IN. YO		
BREF =	936.6800 INCHES	ZMRP =	375.0000 IN. ZO		
SCALE =	.3600				

PARAMETRIC DATA

ALPHA =	5.000	BETA =	.000
ELEVON =	.000	BDFLAP =	.000
SPDBRK =	25.000	RUDDER =	.000

RUN NO. 30/ 0 GRADIENT INTERVAL = -5.00/ 5.00

Q	AILRON	BAR	ALPHAU	Q1	DP/Q55	DP/Q54	DP/Q52	DP/Q53	DP/Q56
47.600	-.045	30.77000	5.00000	48.00000	1.08004	-1.06311	.99778	.13281	.04526
47.660	2.570	30.77000	5.00000	48.00000	1.06945	-1.06311	1.01774	.12260	.03018
47.650	5.141	30.77000	5.00000	48.00000	1.05886	-1.06311	1.00776	.12260	.04526
47.570	7.741	30.77000	5.00000	47.50000	1.06945	-1.07364	1.01774	.12260	.06035
47.610	10.311	30.77000	5.00000	48.00000	1.05886	-1.07364	1.00776	.15324	.04526
47.570	15.541	30.77000	5.00000	47.50000	1.05886	-1.07364	1.01774	.12260	.07544
	GRADIENT	.00000	-.00000	-.00000	-.00405	.00000	.00763	-.00391	-.00577

ARC40X80-462(OA100) OV101 (HNA01S) (16 MAR 82)

REFERENCE DATA

SREF =	2690.0000 SQ.FT.	XMRP =	1076.6800 IN. XO		
LREF =	474.8100 INCHES	YMRP =	.0000 IN. YO		
BREF =	936.6800 INCHES	ZMRP =	375.0000 IN. ZO		
SCALE =	.3600				

PARAMETRIC DATA

ALPHA =	10.000	BETA =	.000
ELEVON =	.000	BDFLAP =	.000
SPDBRK =	25.000	RUDDER =	.000

RUN NO. 31/ 0 GRADIENT INTERVAL = -5.00/ 5.00

Q	AILRON	BAR	ALPHAU	Q1	DP/Q55	DP/Q54	DP/Q52	DP/Q53	DP/Q56
47.670	-.060	30.77000	10.00000	48.00000	1.05577	-1.06001	1.00482	.12224	.04513
47.530	2.570	30.77000	10.00000	47.50000	1.05577	-1.07050	1.02471	.12224	.06018
47.690	5.141	30.77000	10.00000	47.50000	1.05577	-1.06001	1.02471	.12224	.06018
47.590	7.711	30.77000	10.00000	47.50000	1.05577	-1.08100	.99487	.11205	.06018
47.650	10.281	30.77000	10.00000	48.00000	1.06633	-1.07050	1.03466	.11205	.04513
47.710	15.541	30.77000	10.00000	47.50000	1.06633	-1.08100	1.02471	.11205	.06018
	GRADIENT	.00000	.00000	-.19011	.00000	-.00399	.00756	.00000	.00572

ARC40X80-462(OA100) OV101(DECREASING AILERON) (HNA01T) (16 MAR 82)

REFERENCE DATA

SREF = 2690.0000 SQ.FT. XMRP = 1076.6800 IN. XO
LREF = 474.8100 INCHES YMRP = .0000 IN. YO
BREF = 936.6800 INCHES ZMRP = 375.0000 IN. ZO
SCALE = .3600

PARAMETRIC DATA

ALPHA = 10.000 BETA = .000
ELEVON = .000 BDFLAP = .000
SPDBRK = 25.000 RUDDER = .000

RUN NO. 32/ 0 GRADIENT INTERVAL = -5.00/ 5.00

Q	AILRON	BAR	ALPHAU	Q1	DP/Q55	DP/Q54	DP/Q52	DP/Q53	DP/Q56
47.600	.000	30.77000	10.00000	48.00000	1.05577	-1.10199	1.00482	.13242	.04513
47.610	2.570	30.77000	10.00000	47.50000	1.05577	-1.08100	1.03486	.13242	.04513
47.690	5.141	30.77000	10.00000	47.50000	1.05577	-1.07050	1.01477	.12224	.04513
47.670	7.771	30.77000	10.00000	48.00000	1.06633	-1.07050	1.01477	.13242	.04513
47.670	10.341	30.77000	10.00000	48.00000	1.05577	-1.07050	1.03466	.12224	.06018
47.610	15.541	30.77000	10.00000	47.50000	1.07689	-1.08100	1.01477	.11205	.06018
	GRADIENT	.00000	.00000	-.19453	.00000	.00817	.01161	.00000	.00000

ARC40X80-462(OA100) OV101 (HNA01U) (16 MAR 82)

REFERENCE DATA

SREF = 2690.0000 SQ.FT. XMRP = 1076.6800 IN. XO
LREF = 474.8100 INCHES YMRP = .0000 IN. YO
BREF = 936.6800 INCHES ZMRP = 375.0000 IN. ZO
SCALE = .3600

PARAMETRIC DATA

ALPHA = 15.000 BETA = .000
ELEVON = .000 BDFLAP = .000
SPDBRK = 25.000 RUDDER = .000

RUN NO. 33/ 0 GRADIENT INTERVAL = -5.00/ 5.00

Q	AILRON	BAR	ALPHAU	Q1	DP/Q55	DP/Q54	DP/Q52	DP/Q53	DP/Q56
47.570	-.015	30.77000	15.00000	48.00000	1.05270	-1.07785	.99197	.12188	.04500
47.700	2.570	30.77000	15.00000	48.00000	1.05270	-1.05692	1.00189	.12188	.04500
47.690	5.170	30.77000	15.00000	48.00000	1.07375	-1.06739	1.00189	.14219	.07500
47.620	7.711	30.77000	15.00000	48.00000	1.06322	-1.07785	1.00189	.12188	.06000
47.590	10.281	30.77000	15.00000	48.00000	1.06322	-1.06739	1.01181	.13204	.04500
47.490	15.527	30.77000	15.00000	48.00000	1.08428	-1.06739	1.00189	.12188	.03000
	GRADIENT	.00000	.00000	.00000	.00000	.00810	.00384	.00000	.00000

ARC40X80-462(OA100) OV101 (HNA01V) (16 MAR 82)

REFERENCE DATA

SREF =	2690.0000 SQ.FT.	XMRP =	1076.6800 IN. XO		
LREF =	474.8100 INCHES	YMRP =	.0000 IN. YO		
BREF =	936.6800 INCHES	ZMRP =	375.0000 IN. ZO		
SCALE =	.3600				

PARAMETRIC DATA

ALPHA =	20.000	BETA =	.000
ELEVON =	.000	BDFLAP =	.000
SPDBRK =	25.000	RUDDER =	.000

RUN NO. 34/ 0 GRADIENT INTERVAL = -5.00/ 5.00

Q	AILRON	BAR	ALPHAU	QI	DP/Q55	DP/Q54	DP/Q52	DP/Q53	DP/Q56
47.650	.000	30.77000	20.00000	48.00000	1.07063	-1.06429	1.01877	.10127	.02991
47.580	2.570	30.77000	20.00000	48.00000	1.04964	-1.06429	.99898	.10127	.02991
47.550	5.185	30.77000	20.00000	48.00000	1.07063	-1.06429	.98909	.11140	.02991
47.670	7.711	30.77000	20.00000	48.00000	1.04964	-1.06429	.98909	.10127	.05983
47.640	10.341	30.77000	20.00000	48.00000	1.06014	-1.06429	1.02865	.10127	.04487
47.430	15.541	30.77000	20.00000	48.00000	1.06014	-1.06429	1.00897	.10127	.02991
	GRADIENT	.00000	.00000	.00000	-.00817	.00000	-.00770	.00000	.00000

ARC40X80-462(OA100) OV101 (HNA01W) (16 MAR 82)

REFERENCE DATA

SREF =	2690.0000 SQ.FT.	XMRP =	1076.6800 IN. XO		
LREF =	474.8100 INCHES	YMRP =	.0000 IN. YO		
BREF =	936.6800 INCHES	ZMRP =	375.0000 IN. ZO		
SCALE =	.3600				

PARAMETRIC DATA

ALPHA =	.000	BETA =	.000
ELEVON =	10.000	BDFLAP =	.000
SPDBRK =	25.000	RUDDER =	.000

RUN NO. 50/ 0 GRADIENT INTERVAL = -5.00/ 5.00

Q	AILRON	BAR	ALPHAU	QI	DP/Q55	DP/Q54	DP/Q52	DP/Q53	DP/Q56
47.600	.064	29.86000	.00000	49.00000	1.10445	.01056	.97069	.11271	.01513
47.580	2.544	29.86000	.00000	48.50000	1.09383	.00000	.97069	.09222	-.01513
47.740	5.069	29.86000	.00000	49.00000	1.10445	-.01056	.97069	.11271	.00000
47.600	7.578	29.86000	.00000	49.00000	1.10445	.00000	.98070	.09222	-.01513
47.600	10.044	29.86000	.00000	49.00000	1.08321	.01056	.96068	.09222	-.01513
47.740	12.896	29.86000	.00000	48.50000	1.09383	.01056	.97069	.10246	-.03026
	GRADIENT	.00000	.00000	-.20160	-.00428	-.00426	-.00000	-.00826	-.01220

ARC40X80-462(OA100) OV101 (HNA01X) (16 MAR 82)

REFERENCE DATA

SREF =	2690.0000 SQ.FT.	XMRP =	1076.6800 IN. XO		
LREF =	474.8100 INCHES	YMRP =	.0000 IN. YO		
BREF =	936.6800 INCHES	ZMRP =	375.0000 IN. ZO		
SCALE =	.3600				

PARAMETRIC DATA

ALPHA =	5.000	BETA =	.000
ELEVON =	10.000	BDFLAP =	.000
SPDBRK =	25.000	RUDDER =	.000

RUN NO. 51/ 0 GRADIENT INTERVAL = -5.00/ 5.00

Q	AILRON	BAR	ALPHAU	Q1	DP/Q55	DP/Q54	DP/Q52	DP/Q53	DP/Q56
47.550	.049	29.86000	5.00000	48.50000	1.09063	.01053	.95787	.10216	.00000
47.650	2.544	29.86000	5.00000	48.50000	1.08004	.00000	.95787	.10216	-.01509
47.560	5.068	29.86000	5.00000	48.50000	1.09063	.00000	.96785	.09195	.00000
47.540	7.578	29.86000	5.00000	48.50000	1.10122	.01053	.96785	.08173	.00000
47.710	10.028	29.86000	5.00000	48.50000	1.09063	.02105	.95787	.10216	.00000
47.460	12.896	29.86000	5.00000	48.50000	1.09063	.01053	.95787	.09195	.01509
	GRADIENT	-.00000	-.00000	.00000	-.00425	-.00422	.00000	-.00000	-.00605

ARC40X80-462(OA100) OV101 (HNA01Y) (16 MAR 82)

REFERENCE DATA

SREF =	2690.0000 SQ.FT.	XMRP =	1076.6800 IN. XO		
LREF =	474.8100 INCHES	YMRP =	.0000 IN. YO		
BREF =	936.6800 INCHES	ZMRP =	375.0000 IN. ZO		
SCALE =	.3600				

PARAMETRIC DATA

ALPHA =	10.000	BETA =	.000
ELEVON =	10.000	BDFLAP =	.000
SPDBRK =	25.000	RUDDER =	.000

RUN NO. 52/ 0 GRADIENT INTERVAL = -5.00/ 5.00

Q	AILRON	BAR	ALPHAU	Q1	DP/Q55	DP/Q54	DP/Q52	DP/Q53	DP/Q56
47.580	.049	29.86000	10.00000	48.50000	1.10856	.00000	.98492	.07131	-.01504
47.430	2.544	29.86000	10.00000	48.50000	1.08744	.00000	.97497	.08149	.00000
47.430	5.024	29.85000	10.00000	48.50000	1.11912	.00000	.96502	.07131	-.01504
47.400	7.578	29.86000	10.00000	48.50000	1.09800	.00000	.97497	.07131	-.01504
47.480	10.028	29.86000	10.00000	48.00000	1.10856	.00000	.96502	.09168	-.01504
47.370	12.896	29.86000	10.00000	48.50000	1.08744	.00000	.97497	.06112	-.01504
	GRADIENT	.00000	-.00000	.00000	-.00847	.00000	-.00399	.00408	.00608

ARC40X80-462(OA100) OV101 (HNA01Z) (16 MAR 82)

REFERENCE DATA

SREF =	2690.0000 SQ.FT.	XMRP =	1076.6800 IN.	XO	
LREF =	474.8100 INCHES	YMRP =	.0000 IN.	YO	
BREF =	936.6900 INCHES	ZMRP =	375.0000 IN.	ZO	
SCALE =	.3600				

PARAMETRIC DATA

ALPHA =	15.000	BETA =	.000
ELEVON =	10.000	BDFLAP =	.000
SPDBRK =	25.000	RUDDER =	.000

RUN NO. 53/ 0 GRADIENT INTERVAL = -5.00/ 5.00

Q	AILRON	BAR	ALPHAU	Q1	DP/Q55	DP/Q54	DP/Q52	DP/Q53	DP/Q56
47.600	.050	29.92000	15.00000	48.00000	1.08428	.00000	.94237	.07110	.00000
47.750	2.559	29.92000	15.00000	48.50000	1.08428	.00000	.96221	.08125	-.01500
47.780	5.068	29.92000	15.00000	48.00000	1.09490	.00000	.96221	.07110	.00000
47.690	7.584	29.92000	15.00000	48.50000	1.10533	.00000	.95229	.08125	.00000
47.700	10.043	29.92000	15.00000	48.50000	1.08428	.00000	.96221	.07110	-.01500
47.670	12.896	29.92000	15.00000	48.50000	1.08428	.00000	.95229	.07110	-.01500
	GRADIENT	-.00000	-.00000	.19926	-.00000	.00000	.00791	.00405	-.00598

ARC40X80-462(OA100) OV101 (HNA02A) (16 MAR 82)

REFERENCE DATA

SREF =	2690.0000 SQ.FT.	XMRP =	1076.6800 IN.	XO	
LREF =	474.8100 INCHES	YMRP =	.0000 IN.	YO	
BREF =	936.6900 INCHES	ZMRP =	375.0000 IN.	ZO	
SCALE =	.3600				

PARAMETRIC DATA

ALPHA =	20.000	BETA =	.000
ELEVON =	10.000	BDFLAP =	.000
SPDBRK =	25.000	RUDDER =	.000

RUN NO. 54/ 0 GRADIENT INTERVAL = -5.00/ 5.00

Q	AILRON	BAR	ALPHAU	Q1	DP/Q55	DP/Q54	DP/Q52	DP/Q53	DP/Q56
47.540	.034	29.92000	20.00000	48.00000	1.10212	-.01043	.93964	.06076	-.01496
47.680	2.559	29.92000	20.00000	48.00000	1.10212	.00000	.94953	.06076	-.02991
47.590	5.039	29.92000	20.00000	48.00000	1.09163	.00000	.93964	.06076	-.02991
47.620	7.563	29.92000	20.00000	48.00000	1.10212	.00000	.94953	.06076	-.01496
47.530	10.043	29.92000	20.00000	48.00000	1.09163	.00000	.92975	.06076	-.02991
47.520	12.896	29.92000	20.00000	48.00000	1.10212	.00000	.93964	.06076	-.01496
	GRADIENT	.00000	.00000	.00000	-.00000	.00413	.00392	-.00000	-.00592

ARC40X80-462(0A100) 0V101 (HNA02B) (16 MAR 82)

REFERENCE DATA

SREF =	2690.0000 SQ.FT.	XMRP =	1076.6800 IN. XO		
LREF =	474.8100 INCHES	YMRP =	.0000 IN. YO		
BREF =	936.6800 INCHES	ZMRP =	375.0000 IN. ZO		
SCALE =	.3600				

PARAMETRIC DATA

ALPHA =	.000	BETA =	.000
ELEVON =	-10.000	BDFLAP =	.000
SPDBRK =	25.000	RUDDER =	.000

RUN NO. 55/ 0 GRADIENT INTERVAL = -5.00/ 5.00

Q	AILRON	BAR	ALPHAU	QI	DP/Q55	DP/Q54	DP/Q52	DP/Q53	DP/Q56
47.620	-.078	29.92000	.00000	48.50000	1.09383	.00000	.94067	.10246	.00000
47.760	2.460	29.92000	.00000	48.50000	1.10445	.00000	.94067	.10246	.00000
47.760	4.985	29.92000	.00000	48.00000	1.10445	.00000	.97069	.09222	.00000
47.580	7.465	29.92000	.00000	48.00000	1.09383	.02111	.96069	.09222	.00000
47.590	10.020	29.92000	.00000	48.00000	1.09383	.00000	.95068	.09222	.00000
47.360	15.069	29.92000	.00000	47.50000	1.11507	.00000	.95068	.10246	.00000
	GRADIENT	.00000	.00000	-.09866	.00210	.00000	.00592	-.00202	.00000

ARC40X80-462(0A100) 0V101 (HNA02C) (16 MAR 82)

REFERENCE DATA

SREF =	2690.0000 SQ.FT.	XMRP =	1076.6800 IN. XO		
LREF =	474.8100 INCHES	YMRP =	.0000 IN. YO		
BREF =	936.6800 INCHES	ZMRP =	375.0000 IN. ZO		
SCALE =	.3600				

PARAMETRIC DATA

ALPHA =	5.000	BETA =	.000
ELEVON =	-10.000	BDFLAP =	.000
SPDBRK =	25.000	RUDDER =	.000

RUN NO. 56/ 0 GRADIENT INTERVAL = -5.00/ 5.00

Q	AILRON	BAR	ALPHAU	QI	DP/Q55	DP/Q54	DP/Q52	DP/Q53	DP/Q56
47.640	-.034	29.92000	5.00000	48.50000	1.10122	.00000	.95787	.09195	-.01509
47.660	2.461	29.92000	5.00000	48.50000	1.09063	-.01053	.95787	.09195	.00000
47.670	4.985	29.92000	5.00000	48.50000	1.10122	.00000	.93792	.09195	.00000
47.670	7.480	29.92000	5.00000	48.50000	1.09063	-.01053	.93792	.08173	.00000
47.570	10.020	29.92000	5.00000	48.50000	1.08004	-.01053	.94789	.08173	.00000
47.320	15.054	29.92000	5.00000	48.00000	1.08004	.00000	.94789	.09195	-.01509
	GRADIENT	-.00000	.00000	-.00000	.00001	.00001	-.00398	.00000	.00300

ARC40X80-462(OA100) OV101 (HNA020) (16 MAR 82)

REFERENCE DATA

SREF =	2690.0000 SQ.FT.	XMRP =	1076.6800 IN. XO		
LREF =	474.8100 INCHES	YMRP =	.0000 IN. YO		
BREF =	936.6800 INCHES	ZMRP =	375.0000 IN. ZO		
SCALE =	.3600				

PARAMETRIC DATA

ALPHA =	10.000	BETA =	.000
ELEVON =	-10.000	BDFLAP =	.000
SPDBRK =	25.000	RUDDER =	.000

RUN NO. 57/ 0 GRADIENT INTERVAL = -5.00/ 5.00

Q	AILRON	BAR	ALPHAU	QI	DP/Q55	DP/Q54	DP/Q52	DP/Q53	DP/Q56
47.760	-.064	29.87000	10.00000	48.00000	1.08744	.01050	.96502	.09168	.00000
47.770	2.461	29.87000	10.00000	48.00000	1.08744	.01050	.95507	.09168	.00000
47.800	4.956	29.87000	10.00000	48.00000	1.08744	.01050	.96502	.09168	.00000
47.880	7.495	29.87000	10.00000	48.50000	1.08744	.01050	.97497	.08149	.00000
47.690	10.020	29.87000	10.00000	48.00000	1.08744	.02089	.95507	.08149	.00000
47.640	15.039	29.87000	10.00000	48.00000	1.08744	.01050	.97497	.08149	.00000
	GRADIENT	.00000	-.00000	-.00000	-.00000	-.00000	-.00001	.00000	.00000

ARC40X80-462(OA100) OV101 (HNA02E) (16 MAR 82)

REFERENCE DATA

SREF =	2690.0000 SQ.FT.	XMRP =	1076.6800 IN. XO		
LREF =	474.8100 INCHES	YMRP =	.0000 IN. YO		
BREF =	936.6800 INCHES	ZMRP =	375.0000 IN. ZO		
SCALE =	.3600				

PARAMETRIC DATA

ALPHA =	15.000	BETA =	.000
ELEVON =	-10.000	BDFLAP =	.000
SPDBRK =	25.000	RUDDER =	.000

RUN NO. 58/ 0 GRADIENT INTERVAL = -5.00/ 5.00

Q	AILRON	BAR	ALPHAU	QI	DP/Q55	DP/Q54	DP/Q52	DP/Q53	DP/Q56
47.510	-.064	29.87000	15.00000	48.00000	1.08428	.01046	.95229	.07110	-.01500
47.450	2.461	29.87000	15.00000	47.00000	1.07375	.01046	.95229	.08125	.00000
47.550	4.971	29.87000	15.00000	48.00000	1.06322	.01046	.95229	.08125	-.01500
47.500	7.465	29.87000	15.00000	48.00000	1.06322	.01046	.95229	.08125	.00000
47.370	10.020	29.87000	15.00000	48.00000	1.07375	.01046	.95229	.08125	.00000
47.570	15.055	29.87000	15.00000	48.00000	1.08428	.01046	.95229	.08125	.00000
	GRADIENT	-.00000	.00000	-.00038	-.00418	.00000	.00000	.00202	.00001

ARC40X80-462(OA100) OV101 (HNA02F) (16 MAR 82)

REFERENCE DATA

SREF =	2690.0000 SQ.FT.	XMRP =	1076.6800 IN. XO		
LREF =	474.8100 INCHES	YMRP =	.0000 IN. YO		
BREF =	936.6800 INCHES	ZMRP =	375.0000 IN. ZO		
SCALE =	.3600				

PARAMETRIC DATA

ALPHA =	20.000	BETA =	.000
ELEVON =	-10.000	BDFLAP =	.000
SPDBRK =	25.000	RUDDER =	.000

RUN NO. 59/ 0 GRADIENT INTERVAL = -5.00/ 5.00

Q	AILRON	BAR	ALPHAU	QI	DP/Q55	DP/Q54	DP/Q52	DP/Q53	DP/Q56
45.310	-.064	29.87000	20.00000	50.00000	1.01815	.01043	.90008	.07089	-.01496
47.090	2.461	29.87000	20.00000	47.00000	1.04964	.01043	.94953	.07089	-.01496
47.600	4.971	29.87000	20.00000	48.00000	1.07063	.02097	.94953	.07089	-.02991
47.390	7.480	29.87000	20.00000	47.00000	1.06014	.01043	.94953	.07089	-.01496
47.470	10.020	29.87000	20.00000	48.00000	1.06014	.01043	.94953	.07089	-.01496
47.360	15.010	29.87000	20.00000	48.00000	1.07063	.01043	.94953	.07089	-.01496
	GRADIENT	-.00000	.00000	-.39805	.01043	.00207	.00983	.00000	-.00297

ARC40X80-462(OA100) OV101 (HNA02G) (16 MAR 82)

REFERENCE DATA

SREF =	2690.0000 SQ.FT.	XMRP =	1076.6800 IN. XO		
LREF =	474.8100 INCHES	YMRP =	.0000 IN. YO		
BREF =	936.6800 INCHES	ZMRP =	375.0000 IN. ZO		
SCALE =	.3600				

PARAMETRIC DATA

ALPHA =	.000	BETA =	.000
ELEVON =	-20.000	BDFLAP =	.000
SPDBRK =	25.000	RUDDER =	.000

RUN NO. 70/ 0 GRADIENT INTERVAL = -5.00/ 5.00

Q	AILRON	BAR	ALPHAU	QI	DP/Q55	DP/Q54	DP/Q52	DP/Q53	DP/Q56
48.060	-.053	29.83000	.00000	48.50000	1.09383	.00000	.97069	.10246	.01513
47.800	2.441	29.83000	.00000	47.50000	1.08321	.01056	.95068	.10246	.01513
47.850	4.966	29.83000	.00000	48.50000	1.09383	.01056	.97069	.10246	.03026
47.690	7.475	29.83000	.00000	48.50000	1.09383	.01056	.95068	.12296	.03026
47.660	10.000	29.83000	.00000	48.50000	1.08321	.01056	.97069	.12296	.03026
47.530	15.005	29.83000	.00000	47.50000	1.08321	.02111	.97069	.11271	.03026
	GRADIENT	-.00000	.00000	.00082	.00001	.00210	.00002	.00000	.00302

ARC40X80-462(OA100) OV101 (HNA02H) (16 MAR 82)

REFERENCE DATA

SREF =	2690.0000 SQ.FT.	XMRP =	1076.6800 IN. XO		
LREF =	474.8100 INCHES	YMRP =	.0000 IN. YO		
BREF =	936.6900 INCHES	ZMRP =	375.0000 IN. ZO		
SCALE =	.3600				

PARAMETRIC DATA

ALPHA =	5.000	BETA =	.000
ELEVON =	-20.000	BDFLAP =	.000
SPDBRK =	25.000	RUDDER =	.000

RUN NO. 71/ 0 GRADIENT INTERVAL = -5.00/ 5.00

Q	AILRON	BAR	ALPHAU	Q1	DP/Q55	DP/Q54	DP/Q52	DP/Q53	DP/Q56
47.420	-.068	29.83000	5.00000	49.50000	1.08004	.01053	.95787	.10216	.03018
47.380	2.456	29.83000	5.00000	47.50000	1.05886	.01053	.95787	.10216	.01509
47.560	4.966	29.83000	5.00000	47.50000	1.06945	.01053	.94789	.12260	.03018
47.530	7.476	29.83000	5.00000	47.50000	1.08004	.01053	.95787	.11238	.03018
47.490	9.986	29.83000	5.00000	47.50000	1.06945	.01053	.94789	.10216	.01509
47.450	15.020	29.83000	5.00000	47.50000	1.08004	.01053	.94769	.10216	.01509
	GRADIENT	.00000	-.00000	-.39767	-.00211	.00000	-.00198	.00405	-.00001

ARC40X80-462(OA100) OV101 (HNA02I) (16 MAR 82)

REFERENCE DATA

SREF =	2690.0000 SQ.FT.	XMRP =	1076.6800 IN. XO		
LREF =	474.8100 INCHES	YMRP =	.0000 IN. YO		
BREF =	936.6800 INCHES	ZMRP =	375.0000 IN. ZO		
SCALE =	.3600				

PARAMETRIC DATA

ALPHA =	10.000	BETA =	.000
ELEVON =	-20.000	BDFLAP =	.000
SPDBRK =	25.000	RUDDER =	.000

RUN NO. 72/ 0 GRADIENT INTERVAL = -5.00/ 5.00

Q	AILRON	BAR	ALPHAU	Q1	DP/Q55	DP/Q54	DP/Q52	DP/Q53	DP/Q56
47.650	-.053	29.83000	10.00000	47.50000	1.06633	.01050	.96502	.09168	.03009
47.620	2.442	29.83000	10.00000	48.50000	1.07689	.01050	.95507	.09168	.01504
47.580	5.408	29.83000	10.00000	47.50000	1.06633	.02099	.96502	.09168	.01504
47.500	7.491	29.83000	10.00000	47.50000	1.06633	.01050	.95507	.10187	.01504
47.460	10.000	29.83000	10.00000	47.50000	1.06633	.01050	.94512	.10187	.00000
47.370	15.035	29.83000	10.00000	47.50000	1.06633	.01050	.95507	.09168	.03009
	GRADIENT	.00000	.00000	.40087	.00423	.00000	-.00399	.00000	-.00603

ARC40X80-462(OA100) OV101 (HNA02J) (16 MAR 82)

REFERENCE DATA

SREF =	2690.0000 SQ.FT.	XMRP =	1076.6800 IN. XO		
LREF =	474.8100 INCHES	YMRP =	.0000 IN. YO		
BREF =	936.6800 INCHES	ZMRP =	375.0000 IN. ZO		
SCALE =	.3600				

PARAMETRIC DATA

ALPHA =	15.000	BETA =	.000
ELEVON =	-20.000	BDFLAP =	.000
SPDBRK =	25.000	RUDDER =	.000

RUN NO. 73/ 0 GRADIENT INTERVAL = -5.00/ 5.00

Q	AILRON	BAR	ALPHAU	QI	DP/Q55	DP/Q54	DP/Q52	DP/Q53	DP/Q56
47.540	-.053	29.83000	15.00000	47.50000	1.06322	.01046	.95229	.09141	.01500
47.580	2.456	29.83000	15.00000	47.50000	1.06322	.01046	.95229	.09141	.01500
47.480	4.966	29.83000	15.00000	47.50000	1.06322	.00000	.94237	.09141	.03000
47.420	7.491	29.83000	15.00000	49.00000	1.06322	-.01046	.95229	.09141	.01500
47.350	9.970	29.83000	15.00000	47.50000	1.06322	.02093	.93245	.09141	.03000
47.430	15.020	29.83000	15.00000	47.50000	1.06322	.00000	.96221	.09141	.03000
	GRADIENT	.00000	-.00000	-.00000	.00000	-.00209	-.00198	.00000	.00299

ARC40X80-462(OA100) OV101 (HNA02K) (16 MAR 82)

REFERENCE DATA

SREF =	2690.0000 SQ.FT.	XMRP =	1076.6800 IN. XO		
LREF =	474.8100 INCHES	YMRP =	.0000 IN. YO		
BREF =	936.6800 INCHES	ZMRP =	375.0000 IN. ZO		
SCALE =	.3600				

PARAMETRIC DATA

ALPHA =	20.000	BETA =	.000
ELEVON =	-20.000	BDFLAP =	.000
SPDBRK =	25.000	RUDDER =	.000

RUN NO. 74/ 0 GRADIENT INTERVAL = -5.00/ 5.00

Q	AILRON	BAR	ALPHAU	QI	DP/Q55	DP/Q54	DP/Q52	DP/Q53	DP/Q56
47.470	-.068	29.83000	20.00000	48.50000	1.07063	.01043	.95942	.08102	.02991
47.470	2.456	29.83000	20.00000	47.50000	1.07063	.01043	.94953	.08102	.02991
47.410	4.981	29.83000	20.00000	47.50000	1.06014	.01043	.95942	.08102	.01496
47.390	7.461	29.83000	20.00000	47.50000	1.08113	.00000	.94953	.08102	.02991
47.330	9.986	29.83000	20.00000	47.50000	1.08113	.01043	.93964	.08102	.01496
47.780	15.020	29.83000	20.00000	48.50000	1.07063	.01043	.95942	.08102	.01496
	GRADIENT	-.00000	-.00000	-.19905	-.00208	-.00000	.00000	-.00000	-.00296

ARC40X80-462(OA100) OV101 (HNA02L) (16 MAR 82)

REFERENCE DATA

SREF =	2690.0000	SQ.FT.	XMRP =	1076.6800	IN. XO	ALPHA =	.000	BETA =	5.000
LREF =	474.8100	INCHES	YMRP =	.0000	IN. YO	ELEVON =	.000	BDFLAP =	.000
BREF =	936.6800	INCHES	ZMRP =	375.0000	IN. ZO	SPDBRK =	25.000	RUDDER =	.000
SCALE =	.3600								

PARAMETRIC DATA

RUN NO. 60/ 0 GRADIENT INTERVAL = -5.00/ 5.00

Q	AILRON	BAR	ALPHAU	Q1	DP/Q55	DP/Q54	DP/Q52	DP/Q53	DP/Q56
47.680	.000	29.86000	.00000	47.00000	1.09383	.02111	.99071	.10246	.00000
47.880	2.524	29.86000	.00000	48.00000	1.09383	.01056	.99071	.08197	.00000
47.850	5.005	29.86000	.00000	48.00000	1.10445	.01056	.99071	.08197	.00000
47.600	7.514	29.86000	.00000	48.00000	1.08321	.01056	.99071	.08197	.03026
47.730	10.024	29.86000	.00000	48.00000	1.08321	.01056	.99071	.10246	.00000
47.790	15.088	29.86000	.00000	48.00000	1.10445	.01056	.99071	.10246	.00000
	GRADIENT	.00000	.00000	.39612	.00000	-.00418	.00000	-.00812	.00000

ARC40X80-462(OA100) OV101 (HNA02M) (16 MAR 82)

REFERENCE DATA

SREF =	2690.0000	SQ.FT.	XMRP =	1076.6800	IN. XO	ALPHA =	5.000	BETA =	5.000
LREF =	474.8100	INCHES	YMRP =	.0000	IN. YO	ELEVON =	.000	BDFLAP =	.000
BREF =	936.6800	INCHES	ZMRP =	375.0000	IN. ZO	SPDBRK =	25.000	RUDDER =	.000
SCALE =	.3600								

PARAMETRIC DATA

RUN NO. 61/ 0 GRADIENT INTERVAL = -5.00/ 5.00

Q	AILRON	BAR	ALPHAU	Q1	DP/Q55	DP/Q54	DP/Q52	DP/Q53	DP/Q56
47.920	.000	29.86000	5.00000	48.00000	1.09063	.01053	.99778	.08173	.01509
47.840	2.510	29.86000	5.00000	48.00000	1.08004	.00000	.98781	.08173	.00000
47.740	4.990	29.86000	5.00000	48.00000	1.08004	.02105	.98781	.08173	.00000
47.700	7.514	29.86000	5.00000	47.00000	1.09063	.01053	.98781	.08173	.01509
47.820	10.009	29.86000	5.00000	48.00000	1.09063	.01053	.98781	.09195	.00000
47.620	15.058	29.86000	5.00000	48.00000	1.08004	.01053	.99778	.08173	.00000
	GRADIENT	.00000	-.00000	-.00000	-.00213	.00210	-.00200	.00000	-.00303

ARC40X80-462(OA100) OV101 (HNA02N) (16 MAR 82)

REFERENCE DATA

SREF =	2690.0000	SQ.FT.	XMRP =	1076.6800	IN. XO			ALPHA =	10.000	BETA =	5.000
LREF =	474.8100	INCHES	YMRP =	.0000	IN. YO			ELEVON =	.000	BDFLAP =	.000
BREF =	936.6800	INCHES	ZMRP =	375.0000	IN. ZO			SPDBRK =	25.000	RUDDER =	.000
SCALE =	.3600										

PARAMETRIC DATA

RUN NO. 62/ 0 GRADIENT INTERVAL = -5.00/ 5.00

Q	AILRON	BAR	ALPHAU	QI	DP/Q55	DP/Q54	DP/Q52	DP/Q53	DP/Q56
47.830	.000	29.86000	10.00000	48.00000	1.07689	.00000	.99487	.07131	.01504
47.820	2.495	29.86000	10.00000	48.00000	1.07689	.01050	.99487	.08149	.00000
47.780	5.005	29.86000	10.00000	48.00000	1.07689	.01050	.99487	.07131	.00000
47.670	7.499	29.86000	10.00000	48.00000	1.07689	.01050	.99487	.08149	.00000
47.670	10.024	29.86000	10.00000	48.00000	1.07689	.01050	.99492	.07131	.01504
47.800	15.089	29.86000	10.00000	48.00000	1.06633	.00000	.99487	.07131	.00000
	GRADIENT	.00000	.00000	.00000	.00000	.00421	.00000	.00408	-.00603

ARC40X80-462(OA100) OV101 (HNA020) (16 MAR 82)

REFERENCE DATA

SREF =	2690.0000	SQ.FT.	XMRP =	1076.6800	IN. XO			ALPHA =	15.000	BETA =	5.000
LREF =	474.8100	INCHES	YMRP =	.0000	IN. YO			ELEVON =	.000	BDFLAP =	.000
BREF =	936.6800	INCHES	ZMRP =	375.0000	IN. ZO			SPDBRK =	25.000	RUDDER =	.000
SCALE =	.3600										

PARAMETRIC DATA

RUN NO. 63/ 0 GRADIENT INTERVAL = -5.00/ 5.00

Q	AILRON	BAR	ALPHAU	QI	DP/Q55	DP/Q54	DP/Q52	DP/Q53	DP/Q56
47.700	.000	29.86000	15.00000	48.00000	1.07375	.01046	.98205	.06094	.00000
47.800	2.524	29.86000	15.00000	48.00000	1.07375	.00000	.99197	.05078	.00000
47.750	5.005	29.86000	15.00000	48.00000	1.08428	.00000	.99197	.07110	.00000
47.700	7.499	29.86000	15.00000	48.00000	1.06322	.00000	.99197	.06094	.00000
47.770	10.024	29.86000	15.00000	48.00000	1.06322	.01046	.99197	.06094	.01500
47.900	15.058	29.86000	15.00000	48.00000	1.07375	.02093	.98205	.06094	.01500
	GRADIENT	.00000	.00000	.00000	.00000	-.00415	.00393	-.00402	.00000

ARC40X80-462(OA100) OV101 (HNA02P) (16 MAR 82)

REFERENCE DATA

SREF =	2690.0000 SQ.FT.	XMRP =	1076.6800 IN. XO		
LREF =	474.8100 INCHES	YMRP =	.0000 IN. YO		
BREF =	936.6800 INCHES	ZMRP =	375.0000 IN. ZO		
SCALE =	.3600				

PARAMETRIC DATA

ALPHA =	20.000	BETA =	5.000
ELEVON =	.000	BDFLAP =	.000
SPDBRK =	25.000	RUDDER =	.000

RUN NO. 64/ 0 GRADIENT INTERVAL = -5.00/ 5.00

Q	AILRON	BAR	ALPHAU	QI	DP/Q55	DP/Q54	DP/Q52	DP/Q53	DP/Q56
47.710	.000	29.86000	20.00000	48.50000	1.06014	.01043	.98909	.05064	-.01496
48.030	2.524	29.86000	20.00000	48.00000	1.07063	.01043	.98909	.05064	-.02991
47.850	5.020	29.86000	20.00000	48.00000	1.07063	.01043	.97920	.07089	-.01496
47.840	7.499	29.86000	20.00000	48.00000	1.07063	.01043	.98909	.05076	.00000
47.810	10.009	29.86000	20.00000	48.00000	1.09163	.01043	.99898	.05064	-.01496
47.700	15.073	29.86000	20.00000	48.00000	1.07063	.00000	.98909	.05064	.01496
	GRADIENT	.00000	.00000	-.19806	.00416	.00000	.00000	.00000	-.00592

ARC40X80-462(OA100) OV101 (HNA02Q) (16 MAR 82)

REFERENCE DATA

SREF =	2690.0000 SQ.FT.	XMRP =	1076.6800 IN. XO		
LREF =	474.8100 INCHES	YMRP =	.0000 IN. YO		
BREF =	936.6800 INCHES	ZMRP =	375.0000 IN. ZO		
SCALE =	.3600				

PARAMETRIC DATA

ALPHA =	.000	BETA =	5.000
ELEVON =	10.000	BDFLAP =	.000
SPDBRK =	25.000	RUDDER =	.000

RUN NO. 65/ 0 GRADIENT INTERVAL = -5.00/ 5.00

Q	AILRON	BAR	ALPHAU	QI	DP/Q55	DP/Q54	DP/Q52	DP/Q53	DP/Q56
47.570	.035	29.86000	.00000	47.00000	1.06197	.01056	.99071	.09222	.01513
47.800	2.559	29.86000	.00000	48.00000	1.07259	.01056	.99071	.10246	.01513
47.770	5.068	29.86000	.00000	48.00000	1.06197	.01056	1.00071	.10246	.01513
47.740	7.533	29.86000	.00000	47.00000	1.06197	.01056	1.01072	.09222	.01513
47.730	10.043	29.86000	.00000	48.00000	1.07259	.02111	1.00071	.09222	.01513
47.770	12.896	29.86000	.00000	48.00000	1.08321	.01056	1.00071	.09222	.01513
	GRADIENT	.00000	.00000	.39622	.00421	-.00000	.00000	.00406	.00000

ARC40X80-462(OA100) OV101 (HNA02R) (16 MAR 82)

REFERENCE DATA

SREF =	2690.0000	SQ.FT.	XMRP =	1076.6800	IN.	XO	
LREF =	474.8100	INCHES	YMRP =	.0000	IN.	YO	
BREF =	936.6800	INCHES	ZMRP =	375.0000	IN.	ZO	
SCALE =	.3600						

PARAMETRIC DATA

ALPHA =	5.000	BETA =	5.000
ELEVON =	10.000	BDFLAP =	.000
SPDBRK =	25.000	RUDDER =	.000

RUN NO. 66/ 0 GRADIENT INTERVAL = -5.00/ 5.00

Q	AILRON	BAR	ALPHAU	Q1	DP/Q55	DP/Q54	DP/Q52	DP/Q53	DP/Q56
47.850	.049	29.86000	5.00000	48.00000	1.06845	.01053	.99778	.09195	.01509
47.690	2.559	29.86000	5.00000	48.00000	1.06945	.01053	1.00776	.08173	.01509
47.780	5.024	29.86000	5.00000	48.00000	1.06945	.01053	.99778	.10216	.01509
47.750	7.518	29.86000	5.00000	48.50000	1.05886	.01053	.99778	.08173	.01509
47.710	10.043	29.86000	5.00000	47.00000	1.06945	.01053	.99778	.09195	.01509
47.610	12.896	29.86000	5.00000	48.00000	1.05886	.01053	.99778	.08173	.01509
	GRADIENT	-.00000	.00000	.00000	-.00000	-.00000	.00398	-.00407	-.00000

ARC40X80-462(OA100) OV101 (HNA02S) (16 MAR 82)

REFERENCE DATA

SREF =	2690.0000	SQ.FT.	XMRP =	1076.6800	IN.	XO	
LREF =	474.8100	INCHES	YMRP =	.0000	IN.	YO	
BREF =	936.6800	INCHES	ZMRP =	375.0000	IN.	ZO	
SCALE =	.3600						

PARAMETRIC DATA

ALPHA =	10.000	BETA =	5.000
ELEVON =	10.000	BDFLAP =	.000
SPDBRK =	25.000	RUDDER =	.000

RUN NO. 67/ 0 GRADIENT INTERVAL = -5.00/ 5.00

Q	AILRON	BAR	ALPHAU	Q1	DP/Q55	DP/Q54	DP/Q52	DP/Q53	DP/Q56
47.830	.049	29.86000	10.00000	48.00000	1.06633	.00000	.98492	.08149	.01504
47.440	2.559	29.86000	10.00000	48.50000	1.05577	.00000	.99487	.08149	.01504
47.780	5.068	29.86000	10.00000	48.00000	1.06633	.00000	.98492	.08149	.01504
47.740	7.578	29.86000	10.00000	48.00000	1.06633	.01050	.98492	.08149	.01504
47.710	10.043	29.86000	10.00000	48.00000	1.05577	.01050	.99487	.08149	.01504
47.810	12.896	29.86000	10.00000	48.00000	1.06633	.01050	1.00482	.08149	.01504
	GRADIENT	-.00000	.00000	.19925	-.00421	.00000	.00396	-.00000	-.00000

ARC40X80-462(OA100) OV101 (HNA02T) (16 MAR 82)

REFERENCE DATA

SREF =	2690.0000 SQ.FT.	XMRP =	1076.6800 IN. XO		
LREF =	474.8100 INCHES	YMRP =	.0000 IN. YO		
BREF =	936.6800 INCHES	ZMRP =	375.0000 IN. ZO		
SCALE =	.3600				

PARAMETRIC DATA

ALPHA =	15.000	BETA =	5.000
ELEVON =	10.000	BDFLAP =	.000
SPDBRK =	25.000	RUDDER =	.000

RUN NO. 68/ 0 GRADIENT INTERVAL = -5.00/ 5.00

Q	AILRON	BAR	ALPHAU	QI	DP/Q55	DP/Q54	DP/Q52	DP/Q53	DP/Q56
47.580	.049	29.86000	15.00000	47.00000	1.05270	.01046	.99197	.07110	.00000
47.690	2.543	29.86000	15.00000	48.00000	1.06322	.01046	.99197	.07110	.01500
47.710	5.038	29.86000	15.00000	48.00000	1.06322	.02093	1.02173	.08125	.00000
47.740	7.534	29.86000	15.00000	48.50000	1.06322	.01046	1.02173	.07110	.01500
47.700	10.058	29.86000	15.00000	48.00000	1.06322	.01046	1.00189	.06094	.01500
47.800	12.896	29.86000	15.00000	48.00000	1.06322	.00000	.99197	.07110	.01500
	GRADIENT	-.00000	.00000	.40095	.00422	-.00000	-.00000	.00000	.00601

ARC40X80-462(OA100) OV101 (HNA02U) (16 MAR 82)

REFERENCE DATA

SREF =	2690.0000 SQ.FT.	XMRP =	1076.6800 IN. XO		
LREF =	474.8100 INCHES	YMRP =	.0000 IN. YO		
BREF =	936.6800 INCHES	ZMRP =	375.0000 IN. ZO		
SCALE =	.3600				

PARAMETRIC DATA

ALPHA =	20.000	BETA =	5.000
ELEVON =	10.000	BDFLAP =	.000
SPDBRK =	25.000	RUDDER =	.000

RUN NO. 69/ 0 GRADIENT INTERVAL = -5.00/ 5.00

Q	AILRON	BAR	ALPHAU	QI	DP/Q55	DP/Q54	DP/Q52	DP/Q53	DP/Q56
47.550	.064	29.86000	20.00000	48.00000	1.07063	.00000	.98909	.06076	.01496
47.680	2.559	29.86000	20.00000	48.00000	1.07063	.01043	.98909	.07089	.01496
47.610	5.054	29.86000	20.00000	48.00000	1.06014	.00000	.98909	.06076	.01496
47.460	7.534	29.86000	20.00000	48.50000	1.04984	.00000	.99898	.07089	.00000
47.300	10.058	29.86000	20.00000	48.50000	1.08113	.00000	.99898	.07089	.01496
47.320	12.896	29.86000	20.00000	48.50000	1.06014	-.01043	.99898	.06076	.00000
	GRADIENT	.00000	.00000	.00000	.00000	.00418	-.00000	.00406	.00000

ARC40X80-462(OA100) OV101 (HNA02V) (16 MAR 82)

REFERENCE DATA

SREF =	2690.0000 SQ.FT.	XMRP =	1076.6800 IN. XO		
LREF =	474.8100 INCHES	YMRP =	.0000 IN. YO		
BREF =	936.6800 INCHES	ZMRP =	375.0000 IN. ZO		
SCALE =	.3600				

PARAMETRIC DATA

ALPHA =	.000	BETA =	10.000
ELEVON =	.000	BDFLAP =	.000
SPDBRK =	25.000	RUDDER =	.000

RUN NO. 75/ 0 GRADIENT INTERVAL = -5.00/ 5.00

Q	AILRON	BAR	ALPHAU	QI	DP/Q55	DP/Q54	DP/Q52	DP/Q53	DP/Q56
47.400	.000	29.82000	.00000	49.50000	1.08321	-.01056	1.03073	.01025	.00000
47.360	2.524	29.82000	.00000	47.50000	1.08321	.00000	1.03073	.04099	.00000
47.470	5.005	29.82000	.00000	49.50000	1.08321	.00000	1.03073	.03074	.00000
47.420	7.514	29.82000	.00000	47.50000	1.08321	.00000	1.03073	.02049	.00000
47.490	10.009	29.82000	.00000	47.50000	1.07259	.00000	1.03073	.02049	.00000
47.360	15.058	29.82000	.00000	49.50000	1.07259	.00000	1.03073	.02049	.00000
	GRADIENT	.00000	.00000	-.79224	.00000	.00418	.00000	.01218	.00000

ARC40X80-462(OA100) OV101 (HNA02W) (16 MAR 82)

REFERENCE DATA

SREF =	2690.0000 SQ.FT.	XMRP =	1076.6800 IN. XO		
LREF =	474.8100 INCHES	YMRP =	.0000 IN. YO		
BREF =	936.6800 INCHES	ZMRP =	375.0000 IN. ZO		
SCALE =	.3600				

PARAMETRIC DATA

ALPHA =	5.000	BETA =	10.000
ELEVON =	.000	BDFLAP =	.000
SPDBRK =	25.000	RUDDER =	.000

RUN NO. 76/ 0 GRADIENT INTERVAL = -5.00/ 5.00

Q	AILRON	BAR	ALPHAU	QI	DP/Q55	DP/Q54	DP/Q52	DP/Q53	DP/Q56
47.750	.000	29.82000	5.00000	47.50000	1.08004	.00000	1.03769	.02043	.00000
47.750	2.509	29.82000	5.00000	47.50000	1.08004	.01053	1.02772	.03065	.00000
47.660	4.990	29.82000	5.00000	47.50000	1.08004	.00000	1.03769	.01022	.00000
47.580	7.514	29.82000	5.00000	49.50000	1.06945	.00000	1.02772	.00000	.00000
47.440	10.024	29.82000	5.00000	47.50000	1.06945	.00000	1.02772	.01022	.00000
47.440	15.058	29.82000	5.00000	49.50000	1.06945	.00000	1.02772	.02043	.00000
	GRADIENT	.00000	.00000	.00000	.00000	.00001	-.00001	-.00204	.00000

ARC40X80-462(OA100) OV101 (HNA02X) (16 MAR 82)

REFERENCE DATA

SREF =	2690.0000 SQ.FT.	XMRP =	1076.6800 IN. XO		
LREF =	474.8100 INCHES	YMRP =	.0000 IN. YO		
BREF =	936.6800 INCHES	ZMRP =	375.0000 IN. ZO		
SCALE =	.3600				

PARAMETRIC DATA

ALPHA =	10.000	BETA =	10.000
ELEVON =	.000	BDFLAP =	.000
SPDBRK =	25.000	RUDDER =	.000

RUN NO. 77/ 0 GRADIENT INTERVAL = -5.00/ 5.00

Q	AILRON	BAR	ALPHAU	QI	DP/Q55	DP/Q54	DP/Q52	DP/Q53	DP/Q56
47.680	.000	29.82000	10.00000	47.50000	1.07689	.01050	1.03466	.02037	.00000
47.630	2.509	29.82000	10.00000	47.50000	1.07689	.00000	1.02471	.01019	.00000
47.600	5.019	29.82000	10.00000	47.50000	1.03800	.02099	1.02471	.01019	.00000
47.450	7.529	29.82000	10.00000	47.50000	1.06633	.00000	1.02471	.01019	.00000
47.390	10.024	29.82000	10.00000	47.50000	1.08744	.00000	1.02471	.01019	.00000
47.370	15.058	29.82000	10.00000	47.50000	1.07689	.00000	1.02471	.01019	.00000
	GRADIENT	.00000	.00000	.00000	.00000	-.00418	-.00397	-.00406	.00000

ARC40X80-462(OA100) OV101 (HNA02Y) (16 MAR 82)

REFERENCE DATA

SREF =	2690.0000 SQ.FT.	XMRP =	1076.6800 IN. XO		
LREF =	474.8100 INCHES	YMRP =	.0000 IN. YO		
BREF =	936.6800 INCHES	ZMRP =	375.0000 IN. ZO		
SCALE =	.3600				

PARAMETRIC DATA

ALPHA =	15.000	BETA =	10.000
ELEVON =	.000	BDFLAP =	.000
SPDBRK =	25.000	RUDDER =	.000

RUN NO. 78/ 0 GRADIENT INTERVAL = -5.00/ 5.00

Q	AILRON	BAR	ALPHAU	QI	DP/Q55	DP/Q54	DP/Q52	DP/Q53	DP/Q56
47.490	.000	29.85000	15.00000	49.00000	1.07375	.00000	1.03165	.00000	.00000
47.420	2.481	29.85000	15.00000	49.50000	1.07375	.01046	1.03165	-.01016	.00000
47.490	5.005	29.85000	15.00000	49.00000	1.07375	.02093	1.03165	-.02031	.00000
47.420	7.514	29.85000	15.00000	47.50000	1.07375	.00000	1.03165	-.01016	-.01500
47.270	10.024	29.85000	15.00000	47.50000	1.05270	.02093	1.02173	-.02031	.01500
47.500	15.088	29.85000	15.00000	47.50000	1.07375	.00000	1.04157	-.01016	.00000
	GRADIENT	.00000	.00000	.20154	.00000	.00422	.00000	-.00409	.00000

ARC40X80-462(OA100) OV101 (HNA02Z) (16 MAR 82)

REFERENCE DATA

SREF =	2690.0000 SQ.FT.	XMRP =	1076.6800 IN.	XO	
LREF =	474.8100 INCHES	YMRP =	.0000 IN.	YO	
BREF =	936.6800 INCHES	ZMRP =	375.0000 IN.	ZO	
SCALE =	.3600				

PARAMETRIC DATA

ALPHA =	20.000	BETA =	10.000
ELEVON =	.000	BDFLAP =	.000
SPDBRK =	25.000	RUDDER =	.000

RUN NO. 79/ 0 GRADIENT INTERVAL = -5.00/ 5.00

Q	AILRON	BAR	ALPHAU	Q1	DP/Q55	DP/Q54	DP/Q52	DP/Q53	DP/Q56
47.610	.000	29.85000	20.00000	47.50000	1.09163	.00000	1.03855	-.04051	.00000
47.510	2.510	29.85000	20.00000	47.50000	1.08113	.00000	1.02866	-.03038	.00000
47.470	5.020	29.85000	20.00000	47.50000	1.09163	.01043	1.03855	-.04051	.00000
47.420	7.514	29.85000	20.00000	49.00000	1.07063	.02087	1.03855	-.04051	-.01496
47.380	10.009	29.85000	20.00000	47.50000	1.09163	.00000	1.01877	-.03038	.00000
47.730	15.073	29.85000	20.00000	47.50000	1.09163	.00000	1.04844	-.04051	.00000
	GRADIENT	.00000	.00000	.00000	-.00418	.00000	-.00394	.00403	.00000

ARC40X80-462(OA100) OV101 (HNA03A) (16 MAR 82)

REFERENCE DATA

SREF =	2690.0000 SQ.FT.	XMRP =	1076.6800 IN.	XO	
LREF =	474.8100 INCHES	YMRP =	.0000 IN.	YO	
BREF =	936.6800 INCHES	ZMRP =	375.0000 IN.	ZO	
SCALE =	.3600				

PARAMETRIC DATA

ALPHA =	.000	BETA =	10.000
ELEVON =	10.000	BDFLAP =	.000
SPDBRK =	25.000	RUDDER =	.000

RUN NO. 80/ 0 GRADIENT INTERVAL = -5.00/ 5.00

Q	AILRON	BAR	ALPHAU	Q1	DP/Q55	DP/Q54	DP/Q52	DP/Q53	DP/Q56
47.370	.035	29.85000	.00000	47.50000	1.07259	.00000	1.01072	.03074	.00000
47.290	2.559	29.85000	.00000	47.50000	1.07259	.00000	1.03073	.02049	.01513
47.470	5.053	29.85000	.00000	47.50000	1.08321	.00000	1.01072	.03074	.01513
47.510	7.533	29.85000	.00000	47.50000	1.08321	.00000	1.02073	.04099	.01513
47.370	10.058	29.85000	.00000	47.50000	1.08321	.01056	1.02073	.02049	.00000
47.570	12.896	29.85000	.00000	49.00000	1.08321	.00000	1.02073	.03074	-.01513
	GRADIENT	.00000	.00000	-.00000	.00000	.00000	.00793	-.00406	.00600

ARC40X80-462(OA100) OV101 (HNA03B) (16 MAR 82)

REFERENCE DATA

SREF =	2690.0000 SQ.FT.	XMRP =	1076.6800 IN.	XO	
LREF =	474.8100 INCHES	YMRP =	.0000 IN.	YO	
BREF =	936.6800 INCHES	ZMRP =	375.0000 IN.	ZO	
SCALE =	.3600				

PARAMETRIC DATA

ALPHA =	5.000	BETA =	10.000
ELEVON =	10.000	BDFLAP =	.000
SPDBRK =	25.000	RUDDER =	.000

RUN NO. 81/ 0 GRADIENT INTERVAL = -5.00/ 5.00

Q	AILRON	BAR	ALPHAU	QI	DP/Q55	DP/Q54	DP/Q52	DP/Q53	DP/Q56
47.580	.010	29.85000	5.00000	47.50000	1.06945	.00000	1.00776	.03065	.01509
47.460	2.529	29.85000	5.00000	49.00000	1.09063	.00000	1.00776	.02043	.00000
47.450	5.054	29.85000	5.00000	47.50000	1.06945	.00000	1.00776	.02043	.00000
47.340	7.548	29.85000	5.00000	47.50000	1.06945	.02105	1.02772	.02043	.00000
47.720	10.043	29.85000	5.00000	47.50000	1.09063	.00000	1.02772	.02043	.00000
47.370	12.896	29.85000	5.00000	47.50000	1.06945	.00000	1.00776	.02043	.00000
	GRADIENT	.00000	.00000	.59555	.00841	.00000	-.00000	-.00406	-.00599

ARC40X80-462(OA100) OV101 (HNA03C) (16 MAR 82)

REFERENCE DATA

SREF =	2690.0000 SQ.FT.	XMRP =	1076.6800 IN.	XO	
LREF =	474.8100 INCHES	YMRP =	.0000 IN.	YO	
BREF =	936.6800 INCHES	ZMRP =	375.0000 IN.	ZO	
SCALE =	.3600				

PARAMETRIC DATA

ALPHA =	10.000	BETA =	10.000
ELEVON =	10.000	BDFLAP =	.000
SPDBRK =	25.000	RUDDER =	.000

RUN NO. 82/ 0 GRADIENT INTERVAL = -5.00/ 5.00

Q	AILRON	BAR	ALPHAU	QI	DP/Q55	DP/Q54	DP/Q52	DP/Q53	DP/Q56
47.560	.064	29.85000	10.00000	49.00000	1.07689	.00000	1.01477	.01019	.00000
47.530	2.543	29.85000	10.00000	47.50000	1.08744	.01050	1.01477	-.01019	.00000
47.500	5.053	29.85000	10.00000	49.00000	1.06633	.00000	1.01477	.01019	.00000
47.540	7.563	29.85000	10.00000	47.50000	1.06633	.02099	1.01477	.00000	-.01504
47.370	10.043	29.85000	10.00000	47.50000	1.06633	.01050	1.01477	.01019	.00000
47.080	12.896	29.85000	10.00000	47.50000	1.06633	.02099	1.00482	.01019	.00000
	GRADIENT	.00000	.00000	-.60512	.00426	.00423	-.00000	-.00822	.00000

ARC40X80-462(OA100) OV101 (HNA03D) (16 MAR 82)

REFERENCE DATA

SREF =	2690.0000 SQ.FT.	XMRP =	1076.6800 IN. XO		
LREF =	474.8100 INCHES	YMRP =	.0000 IN. YO		
BREF =	936.6800 INCHES	ZMRP =	375.0000 IN. ZO		
SCALE =	.3600				

PARAMETRIC DATA

ALPHA =	15.000	BETA =	10.000
ELEVON =	10.000	BDFLAP =	.000
SPDBRK =	25.000	RUDDER =	.000

RUN NO. 83/ 0 GRADIENT INTERVAL = -5.00/ 5.00

Q	AILRON	BAR	ALPHAU	QI	DP/Q55	DP/Q54	DP/Q52	DP/Q53	DP/Q56
47.350	.049	29.85000	15.00000	47.50000	1.07375	.00000	1.02173	-.02031	.00000
47.310	2.543	29.85000	15.00000	47.50000	1.07375	.01046	1.02173	-.01016	.00000
47.290	5.039	29.85000	15.00000	49.00000	1.07375	.00000	1.02173	-.02031	.00000
47.380	7.549	29.85000	15.00000	47.50000	1.07375	.00000	1.02173	-.01016	.00000
47.350	10.028	29.85000	15.00000	47.50000	1.07375	.01046	1.03165	-.02031	.00000
47.360	12.896	29.85000	15.00000	47.50000	1.08428	.00000	1.03165	-.02031	-.01500
	GRADIENT	-.00000	-.00000	-.00000	-.00000	.00420	-.00000	.00407	.00000

ARC40X80-462(OA100) OV101 (HNA03E) (16 MAR 82)

REFERENCE DATA

SREF =	2690.0000 SQ.FT.	XMRP =	1076.6800 IN. XO		
LREF =	474.8100 INCHES	YMRP =	.0000 IN. YO		
BREF =	936.6800 INCHES	ZMRP =	375.0000 IN. ZO		
SCALE =	.3600				

PARAMETRIC DATA

ALPHA =	20.000	BETA =	10.000
ELEVON =	10.000	BDFLAP =	.000
SPDBRK =	25.000	RUDDER =	.000

RUN NO. 84/ 0 GRADIENT INTERVAL = -5.00/ 5.00

Q	AILRON	BAR	ALPHAU	QI	DP/Q55	DP/Q54	DP/Q52	DP/Q53	DP/Q56
47.920	.035	29.82000	20.00000	48.00000	1.08113	.00000	1.05833	-.05064	-.01496
47.790	2.559	29.82000	20.00000	48.00000	1.07063	.00000	1.05833	-.05064	-.01496
47.750	5.038	29.82000	20.00000	48.00000	1.08113	.02097	1.05833	-.06076	-.01496
47.640	7.548	29.82000	20.00000	48.00000	1.07063	.00000	1.07811	-.05064	-.01496
47.520	10.058	29.82000	20.00000	48.00000	1.07063	.00000	1.06822	-.05064	-.01496
47.560	12.896	29.82000	20.00000	48.00000	1.06014	.00000	1.07811	-.04051	-.01496
	GRADIENT	-.00000	.00000	.00000	-.00416	.00000	-.00000	.00000	.00000

ARC40X80-462(OA100) OV101 (HNA03F) (16 MAR 82)

REFERENCE DATA

SREF =	2690.0000 SQ.FT.	XMRP =	1076.6800 IN.	XO	
LREF =	474.8100 INCHES	YMRP =	.0000 IN.	YO	
BREF =	936.6800 INCHES	ZMRP =	375.0000 IN.	ZO	
SCALE =	.3600				

PARAMETRIC DATA

ALPHA =	.000	BETA =	.000
ELEVON =	.000	AILRON =	.000
SPDBRK =	25.000	RUDDER =	.000

RUN NO. 35/ 0 GRADIENT INTERVAL = -5.00/ 5.00

Q	BDFLAP	BAR	ALPHAU	Q1	DP/Q55	DP/Q54	DP/Q52	DP/Q53	DP/Q56
47.610	-11.543	29.83000	.00000	47.50000	1.09383	-.98178	.95069	.10246	.00000
47.740	-.201	29.83000	.00000	48.00000	1.09383	-.99234	.97069	.12296	.00000
47.830	.000	29.83000	.00000	48.00000	1.09383	-.99234	.98070	.11271	.03026
47.850	16.350	29.83000	.00000	48.00000	1.09383	-.99234	.98070	.11271	.00000
47.800	22.684	29.83000	.00000	48.00000	1.10445	-.98178	.98070	.11271	.00000
	GRADIENT	.00000	.00000	.00000	.00000	.00000	.04985	-.05105	.15077

ARC40X80-462(OA100) OV101 (HNA03G) (16 MAR 82)

REFERENCE DATA

SREF =	2690.0000 SQ.FT.	XMRP =	1076.6800 IN.	XO	
LREF =	474.8100 INCHES	YMRP =	.0000 IN.	YO	
BREF =	936.6800 INCHES	ZMRP =	375.0000 IN.	ZO	
SCALE =	.3600				

PARAMETRIC DATA

ALPHA =	5.000	BETA =	.000
ELEVON =	.000	AILRON =	.000
SPDBRK =	25.000	RUDDER =	.000

RUN NO. 36/ 0 GRADIENT INTERVAL = -5.00/ 5.00

Q	BDFLAP	BAR	ALPHAU	Q1	DP/Q55	DP/Q54	DP/Q52	DP/Q53	DP/Q56
47.580	-11.543	29.83000	5.00000	48.00000	1.13298	-.97891	.95787	.09195	.00000
47.730	-.201	29.83000	5.00000	48.00000	1.09063	-.97891	.95787	.10216	.00000
47.630	16.561	29.83000	5.00000	48.00000	1.10122	-.97891	.95787	.11238	-.01509
47.510	22.684	29.83000	5.00000	47.50000	1.09063	-.96838	.95787	.09195	.01509
	GRADIENT	.00000	.00000	.00000	.00000	.00000	.00000	.00000	.00000

ARC40X80-462(0A100) OV101 (HNA03H) (16 MAR 82)

REFERENCE DATA

SREF =	2690.0000 SQ.FT.	XMRP =	1076.6800 IN. XO		
LREF =	474.8100 INCHES	YMRP =	.0000 IN. YO		
BREF =	936.6800 INCHES	ZMRP =	375.0000 IN. ZO		
SCALE =	.3600				

PARAMETRIC DATA

ALPHA =	10.000	BETA =	.000
ELEVON =	.000	AILRON =	.000
SPDBRK =	25.000	RUDDER =	.000

RUN NO. 37/ 0 GRADIENT INTERVAL = -5.00/ 5.00

Q	BDFLAP	BAR	ALPHAU	QI	DP/Q55	DP/Q54	DP/Q52	DP/Q53	DP/Q56
47.700	-11.543	29.83000	10.00000	48.00000	1.09800	-.96555	.95507	.11205	.00000
47.570	-.100	29.83000	10.00000	48.00000	1.08744	-.96555	.95507	.08149	.00000
47.350	16.561	29.83000	10.00000	47.50000	1.07689	-.95506	.95507	.07131	.00000
47.070	22.684	29.83000	10.00000	47.00000	1.07689	-.95506	.95507	.08149	-.01504
	GRADIENT	.00000	.00000	.00000	.00000	.00000	.00000	.00000	.00000

ARC40X80-462(0A100) OV101(DECREASING BDFLAP) (HNA03I) (16 MAR 82)

REFERENCE DATA

SREF =	2690.0000 SQ.FT.	XMRP =	1076.6800 IN. XO		
LREF =	474.8100 INCHES	YMRP =	.0000 IN. YO		
BREF =	936.6800 INCHES	ZMRP =	375.0000 IN. ZO		
SCALE =	.3600				

PARAMETRIC DATA

ALPHA =	10.000	BETA =	.000
ELEVON =	.000	AILRON =	.000
SPDBRK =	25.000	RUDDER =	.000

RUN NO. 38/ 0 GRADIENT INTERVAL = -5.00/ 5.00

Q	BDFLAP	BAR	ALPHAU	QI	DP/Q55	DP/Q54	DP/Q52	DP/Q53	DP/Q56
47.810	-11.543	29.83000	10.00000	48.00000	1.09800	-.96555	.96502	.08149	.00000
47.910	-.100	29.83000	10.00000	48.00000	1.09800	-.96555	.95507	.07131	.01504
47.740	16.461	29.83000	10.00000	48.00000	1.09800	-.95506	.96502	.10187	.00000
47.360	22.583	29.83000	10.00000	47.50000	1.09800	-.95506	.93518	.10187	-.01504
	GRADIENT	.00000	.00000	.00000	.00000	.00000	.00000	.00000	.00000

ARC40X80-462(OA100) OV101 (HNA03J) (16 MAR 82)

REFERENCE DATA

SREF =	2690.0000	SQ.FT.	XMRP =	1076.6800	IN. XO	ALPHA =	15.000	BETA =	.000
LREF =	474.8100	INCHES	YMRP =	.0000	IN. YO	ELEVON =	.000	AILRON =	.000
BREF =	936.6800	INCHES	ZMRP =	375.0000	IN. ZO	SPDBRK =	25.000	RUDDER =	.000
SCALE =	.3600								

PARAMETRIC DATA

RUN NO. 39/ 0 GRADIENT INTERVAL = -5.00/ 5.00

Q	BDFLAP	BAR	ALPHAU	QI	DP/Q55	DP/Q54	DP/Q52	DP/Q53	DP/Q56
47.330	-11.543	29.83000	15.00000	47.50000	1.10533	-.95228	.93245	.07110	.00000
47.320	-.201	29.83000	15.00000	47.00000	1.09480	-.94181	.93245	.08125	-.03000
47.410	16.360	29.83000	15.00000	47.50000	1.09480	-.94181	.95229	.07110	.00000
47.490	22.684	29.83000	15.00000	47.50000	1.08428	-.94181	.94237	.07110	-.01500
	GRADIENT	.00000	.00000	.00000	.00000	.00000	.00000	.00000	.00000

ARC40X80-462(OA100) OV101 (HNA03K) (16 MAR 82)

REFERENCE DATA

SREF =	2690.0000	SQ.FT.	XMRP =	1076.6800	IN. XO	ALPHA =	20.000	BETA =	.000
LREF =	474.8100	INCHES	YMRP =	.0000	IN. YO	ELEVON =	.000	AILRON =	.000
BREF =	936.6800	INCHES	ZMRP =	375.0000	IN. ZO	SPDBRK =	25.000	RUDDER =	.000
SCALE =	.3600								

PARAMETRIC DATA

RUN NO. 40/ 0 GRADIENT INTERVAL = -5.00/ 5.00

Q	BDFLAP	BAR	ALPHAU	QI	DP/Q55	DP/Q54	DP/Q52	DP/Q53	DP/Q56
47.330	-11.543	29.83000	20.00000	47.50000	1.10212	-.93908	.93964	.07089	-.02991
47.120	-.100	29.83000	20.00000	47.50000	1.09163	-.92864	.93964	.06076	-.02991
47.470	16.461	29.83000	20.00000	47.50000	1.10212	-.94951	.93964	.06076	.00000
47.930	22.684	29.83000	20.00000	48.00000	1.12312	-.94951	.94953	.07089	-.02991
	GRADIENT	.00000	.00000	.00000	.00000	.00000	.00000	.00000	.00000

ARC40X80-462(OA100) OV101 (HNA03L) (16 MAR 82)

REFERENCE DATA

SREF =	2690.0000 SQ.FT.	XMRP =	1076.6800 IN.	XO	
LREF =	474.8100 INCHES	YMRP =	.0000 IN.	YO	
BREF =	936.6800 INCHES	ZMRP =	375.0000 IN.	ZO	
SCALE =	.3600				

PARAMETRIC DATA

ALPHA =	.000	BETA =	.000
ELEVON =	.000	AILRON =	.000
BDFLAP =	.000	RUDDER =	.000

RUN NO. 41/ 0 GRADIENT INTERVAL = -5.00/ 5.00

Q	SPDBRK	BAR	ALPHAU	QI	DP/Q55	DP/Q54	DP/Q52	DP/Q53	DP/Q56
47.750	.000	29.83000	.00000	48.00000	1.09393	-.97122	.96068	.10246	.00000
47.510	25.180	29.83000	.00000	47.50000	1.08321	-.97122	.95068	.12296	.00000
47.510	55.459	29.83000	.00000	47.50000	1.10445	-.96067	.96068	.11271	-.03026
47.360	87.628	29.83000	.00000	47.50000	1.11507	-.96067	.96068	.10246	-.01513
	GRADIENT	.00000	.00000	.00000	.00000	.00000	.00000	.00000	.00000

ARC40X80-462(OA100) OV101 (HNA03M) (16 MAR 82)

REFERENCE DATA

SREF =	2690.0000 SQ.FT.	XMRP =	1076.6800 IN.	XO	
LREF =	474.8100 INCHES	YMRP =	.0000 IN.	YO	
BREF =	936.6800 INCHES	ZMRP =	375.0000 IN.	ZO	
SCALE =	.3600				

PARAMETRIC DATA

ALPHA =	5.000	BETA =	.000
ELEVON =	.000	AILRON =	.000
BDFLAP =	.000	RUDDER =	.000

RUN NO. 42/ 0 GRADIENT INTERVAL = -5.00/ 5.00

Q	SPDBRK	BAR	ALPHAU	QI	DP/Q55	DP/Q54	DP/Q52	DP/Q53	DP/Q56
47.450	-.039	29.83000	5.00000	48.00000	1.10122	-.95786	.96785	.09195	-.03018
47.560	25.179	29.83000	5.00000	48.00000	1.09063	-.95786	.95787	.08173	-.01509
47.560	55.459	29.83000	5.00000	48.00000	1.09063	-.96838	.93792	.09195	-.01509
47.540	87.629	29.83000	5.00000	48.00000	1.10122	-.94733	.95787	.07151	-.03018
	GRADIENT	.00000	.00000	.00000	.00000	.00000	.00000	.00000	.00000

ARC40X80-462(0A100) OV101 (HNA03N) (16 MAR 82)

REFERENCE DATA

SREF	=	2690.0000	SQ.FT.	XMRP	=	1076.6800	IN. XO	ALPHA	=	10.000	BETA = .000
LREF	=	474.8100	INCHES	YMRP	=	.0000	IN. YO	ELEVON	=	.000	AILRON = .000
BREF	=	936.6800	INCHES	ZMRP	=	375.0000	IN. ZO	BDFLAP	=	.000	RUDDER = .000
SCALE	=	.3600									

PARAMETRIC DATA

RUN NO. 43/ 0 GRADIENT INTERVAL = -5.00/ 5.00

Q	SPDBRK	BAR	ALPHAU	QI	DP/Q55	DP/Q54	DP/Q52	DP/Q53	DP/Q56
47.640	.039	29.83000	10.00000	48.00000	1.09800	-.96555	.94512	.08149	-.01504
47.530	25.141	29.83000	10.00000	48.00000	1.09800	-.94456	.93518	.08149	-.01504
47.100	55.545	29.83000	10.00000	47.50000	1.07689	-.96555	.94512	.07131	-.04513
47.680	87.677	29.83000	10.00000	48.00000	1.09800	-.95506	.96502	.08149	.00000
	GRADIENT	.00000	.00000	.00000	.00000	.00000	.00000	.00000	.00000

ARC40X80-462(0A100) OV101(DECREASING SPDBRK) (HNA030) (16 MAR 82)

REFERENCE DATA

SREF	=	2690.0000	SQ.FT.	XMRP	=	1076.6800	IN. XO	ALPHA	=	10.000	BETA = .000
LREF	=	474.8100	INCHES	YMRP	=	.0000	IN. YO	ELEVON	=	.000	AILRON = .000
BREF	=	936.6800	INCHES	ZMRP	=	375.0000	IN. ZO	BDFLAP	=	.000	RUDDER = .000
SCALE	=	.3600									

PARAMETRIC DATA

RUN NO. 44/ 0 GRADIENT INTERVAL = -5.00/ 5.00

Q	SPDBRK	BAR	ALPHAU	QI	DP/Q55	DP/Q54	DP/Q52	DP/Q53	DP/Q56
47.660	.079	29.83000	10.00000	48.00000	1.09800	-.95506	.94512	.08149	-.01504
47.720	25.139	29.83000	10.00000	48.00000	1.08744	-.96555	.94512	.08149	-.03009
47.360	55.545	29.83000	10.00000	48.00000	1.08744	-.95506	.93518	.08149	-.01504
47.610	87.677	29.83000	10.00000	48.00000	1.09800	-.95506	.94512	.09168	-.01504
	GRADIENT	.00000	.00000	.00000	.00000	.00000	.00000	.00000	.00000

ARC40X80-462(OA100) OV101 (HNA03P) (16 MAR 82)

REFERENCE DATA

SREF =	2690.0000 SQ.FT.	XMRP =	1076.6800 IN.	XO	
LREF =	474.8100 INCHES	YMRP =	.0000 IN.	YO	
BREF =	936.6800 INCHES	ZMRP =	375.0000 IN.	ZO	
SCALE =	.3600				

PARAMETRIC DATA

ALPHA =	15.000	BETA =	.000
ELEVON =	.000	AILRON =	.000
BDFLAP =	.000	RUDDER =	.000

RUN NO. 48/ 0 GRADIENT INTERVAL = -5.00/ 5.00

Q	SPDBRK	BAR	ALPHAU	Q1	DP/Q55	DP/Q54	DP/Q52	DP/Q53	DP/Q56
47.660	-.079	29.86000	15.00000	48.50000	1.08428	.00000	.96221	.07110	-.01500
47.500	25.100	29.86000	15.00000	48.50000	1.08428	.00000	.95229	.08125	.00000
47.520	55.329	29.86000	15.00000	48.50000	1.08428	.00000	.95229	.08125	-.01500
47.460	87.629	29.86000	15.00000	48.50000	1.07375	.00000	.96221	.07110	-.01500
	GRADIENT	.00000	.00000	.00000	.00000	.00000	.00000	.00000	.00000

ARC40X80-462(OA100) OV101 (HNA03Q) (16 MAR 82)

REFERENCE DATA

SREF =	2690.0000 SQ.FT.	XMRP =	1076.6800 IN.	XO	
LREF =	474.8100 INCHES	YMRP =	.0000 IN.	YO	
BREF =	936.6800 INCHES	ZMRP =	375.0000 IN.	ZO	
SCALE =	.3600				

PARAMETRIC DATA

ALPHA =	20.000	BETA =	.000
ELEVON =	.000	AILRON =	.000
BDFLAP =	.000	RUDDER =	.000

RUN NO. 49/ 0 GRADIENT INTERVAL = -5.00/ 5.00

Q	SPDBRK	BAR	ALPHAU	Q1	DP/Q55	DP/Q54	DP/Q52	DP/Q53	DP/Q56
47.680	.040	29.86000	20.00000	49.50000	1.09163	.02087	.95942	.07089	-.01496
47.550	25.100	29.86000	20.00000	48.50000	1.09163	.00000	.94953	.05064	-.02991
47.520	55.415	29.86000	20.00000	49.00000	1.09163	.01043	.93984	.06076	-.01496
	GRADIENT	.00000	.00000	.00000	.00000	.00000	.00000	.00000	.00000

ARC40X80-462(OA100) OV101(RCS PORTS CLOSED) (HNA03R) (16 MAR 82)

REFERENCE DATA

SREF =	2690.0000 SQ.FT.	XMRP =	1076.6800 IN.	XO	
LREF =	474.8100 INCHES	YMRP =	.0000 IN.	YO	
BREF =	936.6800 INCHES	ZMRP =	375.0000 IN.	ZO	
SCALE =	.3600				

PARAMETRIC DATA

BETA =	.000	ELEVON =	.000
AILRON =	.000	BDFLAP =	.000
SPDBRK =	25.000	RUDDER =	.000

RUN NO. 101/ 0 GRADIENT INTERVAL = -5.00/ 5.00

Q	ALPHA	BAR	ALPHAU	QI	DP/Q55	DP/Q54	DP/Q52	DP/Q53	DP/Q56
47.490	-5.240	29.81000	-5.00000	47.50000	1.06640	.00000	.95348	.11304	.03035
47.690	-2.649	29.81000	-2.50000	47.50000	1.08460	.00000	.96210	.10261	.01515
47.600	-.056	29.81000	.00000	47.50000	1.08321	.00000	.96068	.11271	.00000
47.720	2.541	29.81000	2.50000	47.50000	1.08162	-.01054	.96927	.09208	.00000
47.640	5.139	29.81000	5.00000	47.50000	1.08004	.01053	.96785	.09195	.00000
47.850	7.739	29.81000	7.50000	48.50000	1.07848	-.01051	.95647	.09181	.00000
47.600	10.342	29.81000	10.00000	47.50000	1.07689	.01050	.93518	.08149	.00000
47.730	12.941	29.81000	12.50000	47.50000	1.08586	.00000	.94375	.08137	.00000
47.580	15.556	29.81000	15.00000	47.50000	1.08428	.00000	.93245	.06094	.00000
47.500	18.180	29.81000	17.50000	47.50000	1.08270	.00000	.95091	.06085	.00000
47.570	20.826	29.81000	20.00000	47.50000	1.08113	.01043	.94953	.06076	-.01496
46.010	26.006	29.81000	25.00000	50.50000	1.05707	.00000	.92706	.03029	-.02993
	GRADIENT	.00000	.96343	-.00000	-.00061	-.00203	.00138	-.00203	-.00292

ARC40X80-462(OA100) OV101(RCS PORTS CLOSED) (HNA03S) (16 MAR 82)

REFERENCE DATA

SREF =	2690.0000 SQ.FT.	XMRP =	1076.6800 IN.	XO	
LREF =	474.8100 INCHES	YMRP =	.0000 IN.	YO	
BREF =	936.6800 INCHES	ZMRP =	375.0000 IN.	ZO	
SCALE =	.3600				

PARAMETRIC DATA

ALPHA =	.000	ELEVON =	.000
AILRON =	.000	BDFLAP =	.000
SPDBRK =	25.000	RUDDER =	.000

RUN NO. 102/ 0 GRADIENT INTERVAL = -5.00/ 5.00

Q	BETA	BAR	ALPHAU	QI	DP/Q55	DP/Q54	DP/Q52	DP/Q53	DP/Q56
47.510	-13.000	29.81000	.00000	47.50000	1.08321	.01056	1.06076	-.02049	.00000
47.670	-10.000	29.81000	.00000	47.50000	1.11507	.00000	1.03073	.02049	.00000
47.610	-5.000	29.81000	.00000	47.50000	1.09383	.01056	.97069	.08197	.00000
47.630	-2.000	29.81000	.00000	47.50000	1.09383	-.01056	.95068	.10246	.01513
47.730	.000	29.81000	.00000	47.50000	1.08321	.00000	.97069	.09222	.00000
47.580	2.000	29.81000	.00000	47.50000	1.08321	-.01056	.95068	.09222	.01513
47.730	5.000	29.81000	.00000	47.50000	1.08321	-.01056	.98070	.07172	.00000
47.630	10.000	29.81000	.00000	47.50000	1.09321	.00000	1.03073	.02049	.00000
47.590	15.000	29.81000	.00000	48.50000	1.08321	-.01056	1.10078	-.06148	.00000
47.660	20.000	29.81000	.00000	47.50000	1.08321	.00000	1.17083	-.14345	-.01513
	GRADIENT	.00000	.00000	.00000	-.00128	-.00182	.00086	-.00124	.00000

ARC40X80-462(0A100) OV101(RCS PORTS CLOSED) (HNA03T) (16 MAR 82)

REFERENCE DATA

SREF =	2690.0000	SQ.FT.	XMRP =	1076.6800	IN. XO				
LREF =	474.8100	INCHES	YMRP =	.0000	IN. YO				
BREF =	936.6800	INCHES	ZMRP =	375.0000	IN. ZO				
SCALE =	.3600								

PARAMETRIC DATA

ALPHA =	5.000	ELEVON =	.000
AILRON =	.000	BDFLAP =	.000
SPDBRK =	25.000	RUDDER =	.000

RUN NO. 103/ 0 GRADIENT INTERVAL = -5.00/ 5.00

Q	BETA	BAR	ALPHAU	Q1	DP/Q55	DP/Q54	DP/Q52	DP/Q53	DP/Q56
47.560	-13.000	29.81000	5.00000	47.50000	1.09063	.00000	1.06763	-.04087	.00000
47.650	-10.000	29.81000	5.00000	47.50000	1.10122	.00000	1.03769	.01022	.00000
47.600	-5.000	29.81000	5.00000	47.50000	1.08004	.00000	.96785	.06130	.00000
47.660	-2.000	29.81000	5.00000	47.50000	1.09063	.00000	.93792	.09195	.00000
47.650	.000	29.81000	5.00000	47.50000	1.08004	.02105	.94799	.09195	.00000
47.620	2.000	29.81000	5.00000	47.50000	1.08004	.00000	.95787	.09195	.00000
47.710	5.000	29.81000	5.00000	48.50000	1.08004	.00000	.97783	.06130	.00000
47.750	10.000	29.81000	5.00000	48.50000	1.08004	.01053	1.02772	.00000	-.01509
47.650	15.000	29.81000	5.00000	48.50000	1.09063	.00000	1.07760	-.07151	.00000
47.600	20.000	29.81000	5.00000	49.00000	1.08004	.01053	1.15743	-.13281	-.01509
	GRADIENT	.00000	.00000	.08621	-.00037	.00000	.00155	.00000	.00000

ARC40X80-462(0A100) OV101(RCS PORTS CLOSED) (HNA03U) (16 MAR 82)

REFERENCE DATA

SREF =	2690.0000	SQ.FT.	XMRP =	1076.6800	IN. XO				
LREF =	474.8100	INCHES	YMRP =	.0000	IN. YO				
BREF =	936.6800	INCHES	ZMRP =	375.0000	IN. ZO				
SCALE =	.3600								

PARAMETRIC DATA

ALPHA =	10.000	ELEVON =	.000
AILRON =	.000	BDFLAP =	.000
SPDBRK =	25.000	RUDDER =	.000

RUN NO. 104/ 0 GRADIENT INTERVAL = -5.00/ 5.00

Q	BETA	BAR	ALPHAU	Q1	DP/Q55	DP/Q54	DP/Q52	DP/Q53	DP/Q56
47.610	-13.000	29.81000	10.00000	49.00000	1.06633	.00000	1.07446	-.04075	.00000
47.590	-10.000	29.81000	10.00000	48.50000	1.06633	.00000	1.03466	.02037	.01504
47.560	-5.000	29.81000	10.00000	47.50000	1.06633	.00000	.99487	.05093	.01504
47.520	-2.000	29.81000	10.00000	47.50000	1.06633	.00000	.94512	.08149	.01504
47.450	.000	29.81000	10.00000	47.50000	1.06633	.00000	.95507	.09168	.01504
47.610	2.000	29.81000	10.00000	47.50000	1.07689	.01050	.97497	.08149	.01504
47.660	5.000	29.81000	10.00000	48.50000	1.06633	.01050	.98492	.06112	.01504
47.470	10.000	29.81000	10.00000	47.50000	1.06633	.00000	1.03466	.00000	.00000
47.500	15.000	29.81000	10.00000	48.50000	1.06633	.02099	1.11425	-.06112	.01504
47.630	20.000	29.81000	10.00000	47.50000	1.07689	.00000	1.17395	-.14261	-.01504
	GRADIENT	.00000	.00000	.08621	.00036	.00127	.00017	.00088	.00000

ARC40X80-462(OA100) OV101(RCS PORTS CLOSED) (HNA03V) (16 MAR 82)

REFERENCE DATA

SREF =	2690.0000	SQ.FT.	XMRP =	1076.6800	IN. XO	ALPHA =	15.000	ELEVON =	.000
LREF =	474.8100	INCHES	YMRP =	.0000	IN. YO	AILRON =	.000	BDFLAP =	.000
BREF =	936.6800	INCHES	ZMRP =	375.0000	IN. ZO	SPDBRK =	25.000	RUDDER =	.000
SCALE =	.3600								

PARAMETRIC DATA

RUN NO. 105/ 0 GRADIENT INTERVAL = -5.00/ 5.00

Q	BETA	BAR	ALPHAU	QI	DP/Q55	DP/Q54	DP/Q52	DP/Q53	DP/Q56
47.610	-13.000	29.81000	15.00000	47.50000	1.08428	.00000	1.09117	-.07110	.00000
47.690	-10.000	29.81000	15.00000	48.50000	1.08428	.00000	1.06141	-.03047	-.01500
47.610	-5.000	29.81000	15.00000	48.50000	1.07375	.01046	1.00189	.03047	.00000
47.520	-2.000	29.81000	15.00000	47.50000	1.07375	.01046	.97213	.07110	.00000
47.510	.000	29.81000	15.00000	47.50000	1.07375	.00000	.95229	.07110	.00000
47.690	2.000	29.81000	15.00000	48.50000	1.07375	.00000	.94237	.07110	.01500
47.650	5.000	29.81000	15.00000	49.00000	1.07375	.00000	.98205	.04063	.00000
47.640	10.000	29.81000	15.00000	47.50000	1.06428	.01046	1.04157	-.02031	.00000
47.540	15.000	29.81000	15.00000	47.50000	1.06322	.00000	1.11101	-.10157	-.01500
47.330	20.000	29.81000	15.00000	47.50000	1.06322	.01046	1.18045	-.18282	-.01500
	GRADIENT	.00000	.00000	.07759	.00000	-.00126	-.00274	.00088	.00052

ARC40X80-462(OA100) OV101(RCS PORTS CLOSED) (HNA03W) (16 MAR 82)

REFERENCE DATA

SREF =	2690.0000	SQ.FT.	XMRP =	1076.6800	IN. XO	ALPHA =	20.000	ELEVON =	.000
LREF =	474.8100	INCHES	YMRP =	.0000	IN. YO	AILRON =	.000	BDFLAP =	.000
BREF =	936.6800	INCHES	ZMRP =	375.0000	IN. ZO	SPDBRK =	25.000	RUDDER =	.000
SCALE =	.3600								

PARAMETRIC DATA

RUN NO. 106/ 0 GRADIENT INTERVAL = -5.00/ 5.00

Q	BETA	BAR	ALPHAU	QI	DP/Q55	DP/Q54	DP/Q52	DP/Q53	DP/Q56
47.510	-13.000	29.81000	20.00000	47.50000	1.08113	.02087	1.10778	-.10127	-.01496
47.660	-10.000	29.81000	20.00000	47.50000	1.11262	.01043	1.07811	-.06076	.00000
47.540	-5.000	29.81000	20.00000	47.50000	1.07063	.00000	.99898	.01013	.00000
47.630	-2.000	29.81000	20.00000	47.50000	1.07063	.01043	.93964	.05064	-.01496
47.540	.000	29.81000	20.00000	49.00000	1.09163	.00000	.94953	.06076	-.01496
47.670	2.000	29.81000	20.00000	48.50000	1.07063	.00000	.94953	.06076	.01496
47.760	5.000	29.81000	20.00000	47.50000	1.07063	.00000	.97920	.04051	-.01496
47.800	10.000	29.81000	20.00000	48.50000	1.08113	.00000	1.06822	-.05064	.00000
47.650	15.000	29.81000	20.00000	49.00000	1.06014	.00000	1.12757	-.13166	-.02991
47.520	20.000	29.81000	20.00000	47.50000	1.07063	.00000	1.20669	-.22280	-.04487
	GRADIENT	.00000	.00000	.03448	.00000	-.00036	-.00136	.00297	-.00026

ARC40X80-462(OA100) OV101 (HNA03X) (15 APR 82)

REFERENCE DATA

SREF =	2690.0000 SQ.FT.	XMRP =	1076.6800 IN. XO		
LREF =	474.8100 INCHES	YMRP =	.0000 IN. YO		
BREF =	936.6900 INCHES	ZMRP =	375.0000 IN. ZO		
SCALE =	.3600				

PARAMETRIC DATA

BETA =	.000	ELEVON =	.000
AILRON =	.000	BDFLAP =	.000

RUN NO. 88/ 0 GRADIENT INTERVAL = -5.00/ 5.00

Q	ALPHA	BAR	ALPHAU	QI	DP/Q55	DP/Q54	DP/Q52	DP/Q53	DP/Q56
47.710	-.075	29.82000	.00000	48.00000	1.07259	.00000	.97069	.11271	.01513
47.670	10.320	29.82000	10.00000	48.00000	1.06633	.00000	1.00482	.11205	.00000
47.790	15.535	29.82000	15.00000	48.00000	1.06322	.00000	.97213	.09141	.00000
	GRADIENT	.00000	.00000	.00000	.00000	.00000	.00000	.00000	.00000

ARC40X80-462(OA100) OV101 (HNA03Y) (16 MAR 82)

REFERENCE DATA

SREF =	2690.0000 SQ.FT.	XMRP =	1076.6800 IN. XO		
LREF =	474.8100 INCHES	YMRP =	.0000 IN. YO		
BREF =	936.6900 INCHES	ZMRP =	375.0000 IN. ZO		
SCALE =	.3600				

PARAMETRIC DATA

BETA =	.000	ELEVON =	.000
AILRON =	.000	BDFLAP =	.000
SPDBRK =	55.000	RUDDER =	-15.000

RUN NO. 89/ 0 GRADIENT INTERVAL = -5.00/ 5.00

Q	ALPHA	BAR	ALPHAU	QI	DP/Q55	DP/Q54	DP/Q52	DP/Q53	DP/Q56
47.690	-.072	29.82000	.00000	48.00000	1.06197	.00000	.99070	.13320	.01513
47.740	10.326	29.82000	10.00000	48.00000	1.06633	.00000	1.00482	.09168	.01504
47.760	15.535	29.82000	15.00000	48.00000	1.06322	.00000	.99197	.11172	.01500
47.760	20.801	29.82000	20.00000	48.00000	1.04964	.00000	.99898	.08102	-.01496
	GRADIENT	.00000	.00000	.00000	.00000	.00000	.00000	.00000	.00000

ARC40X80-462(OA100) OV101 (HNA03Z) (16 MAR 82)

REFERENCE DATA

SREF =	2690.0000 SQ.FT.	XMRP =	1076.6800 IN.	XO	
LREF =	474.8100 INCHES	YMRP =	.0000 IN.	YO	
BREF =	936.6800 INCHES	ZMRP =	375.0000 IN.	ZO	
SCALE =	.3600				

PARAMETRIC DATA

BETA =	.000	ELEVON =	.000
AILRON =	.000	BDFLAP =	.000
SPDBRK =	55.000	RUDDER =	.000

RUN NO. 90/ 0 GRADIENT INTERVAL = -5.00/ 5.00

Q	ALPHA	BAR	ALPHAU	Q1	DP/Q55	DP/Q54	DP/Q52	DP/Q53	DP/Q56
47.790	-.073	29.82000	.00000	48.00000	1.06197	-.01056	.98070	.12296	.03026
47.600	5.118	29.82000	5.00000	48.00000	1.05896	.00000	.97783	.11238	.01509
47.860	10.323	29.82000	10.00000	48.00000	1.06633	.00000	.99487	.10187	.01504
47.710	15.537	29.82000	15.00000	48.00000	1.06322	.00000	.96221	.11172	.01500
	GRADIENT	.00000	.00000	.00000	.00000	.00000	.00000	.00000	.00000

ARC40X80-452(OA100) OV101 (HNA04A) (16 MAR 82)

REFERENCE DATA

SREF =	2690.0000 SQ.FT.	XMRP =	1076.6800 IN.	XO	
LREF =	474.8100 INCHES	YMRP =	.0000 IN.	YO	
BREF =	936.6800 INCHES	ZMRP =	375.0000 IN.	ZO	
SCALE =	.3600				

PARAMETRIC DATA

BETA =	.000	ELEVON =	.000
AILRON =	.000	BDFLAP =	.000
SPDBRK =	55.000	RUDDER =	5.000

RUN NO. 91/ 0 GRADIENT INTERVAL = -5.00/ 5.00

Q	ALPHA	BAR	ALPHAU	Q1	DP/Q55	DP/Q54	DP/Q52	DP/Q53	DP/Q56
47.650	-.074	29.82000	.00000	47.00000	1.05135	.00000	.98070	.11271	.01513
47.790	5.119	29.82000	5.00000	48.00000	1.06945	.00000	1.00776	.11238	.01509
47.710	10.321	29.82000	10.00000	47.00000	1.06633	-.01050	.99487	.10187	.01504
47.710	15.535	29.82000	15.00000	47.00000	1.05270	.02093	.97213	.11172	.01500
47.720	20.804	29.82000	20.00000	48.00000	1.06014	.00000	.97920	.09115	.01496
	GRADIENT	.00000	.00000	.00000	.00000	.00000	.00000	.00000	.00000

ARC40X80-462(OA100) OV101 (HNA04B) (16 MAR 82)

REFERENCE DATA

SREF =	2690.0000 SQ.FT.	XMRP =	1076.6800 IN.	XO	
LREF =	474.8100 INCHES	YMRP =	.0000 IN.	YO	
BREF =	936.6800 INCHES	ZMRP =	375.0000 IN.	ZO	
SCALE =	.3600				

PARAMETRIC DATA

BETA =	.000	ELEVON =	.000
AILRON =	.000	BDFLAP =	.000
SPDBRK =	55.000	RUDDER =	10.000

RUN NO. 92/ 0 GRADIENT INTERVAL = -5.00/ 5.00

Q	ALPHA	BAR	ALPHAU	QI	DP/Q55	DP/Q54	DP/Q52	DP/Q53	DP/Q56
47.670	-.074	29.82000	.00000	48.00000	1.06197	.00000	.99071	.12296	.03026
47.690	5.119	29.82000	5.00000	47.00000	1.05886	.00000	.99778	.13281	.03018
47.570	10.324	29.82000	10.00000	48.00000	1.06633	-.01050	1.00488	.11205	.01504
47.720	15.537	29.82000	15.00000	48.00000	1.06322	.00000	.97213	.10157	.01500
47.780	20.801	29.82000	20.00000	48.00000	1.06014	.00000	.96931	.11140	.01496
	GRADIENT	.00000	.00000	.00000	.00000	.00000	.00000	.00000	.00000

ARC40X80-462(OA100) OV101 (HNA04C) (16 MAR 82)

REFERENCE DATA

SREF =	2690.0000 SQ.FT.	XMRP =	1076.6800 IN.	XO	
LREF =	474.8100 INCHES	YMRP =	.0000 IN.	YO	
BREF =	936.6800 INCHES	ZMRP =	375.0000 IN.	ZO	
SCALE =	.3600				

PARAMETRIC DATA

BETA =	.000	ELEVON =	.000
AILRON =	.000	BDFLAP =	.000
SPDBRK =	55.000	RUDDER =	15.000

RUN NO. 93/ 0 GRADIENT INTERVAL = -5.00/ 5.00

Q	ALPHA	BAR	ALPHAU	QI	DP/Q55	DP/Q54	DP/Q52	DP/Q53	DP/Q56
47.680	-.073	29.82000	.00000	47.00000	1.06197	.00000	.99071	.12296	.04540
47.710	5.118	29.82000	5.00000	47.00000	1.05886	.00000	.99778	.12260	.03018
47.630	10.324	29.82000	10.00000	48.00000	1.04521	.01050	.99487	.11205	.01504
47.710	15.539	29.82000	15.00000	48.00000	1.06322	.00000	.99197	.10157	.01500
47.670	20.802	29.82000	20.00000	48.00000	1.04964	.00000	.99998	.09115	.01496
	GRADIENT	.00000	.00000	.00000	.00000	.00000	.00000	.00000	.00000

ARC40X80-462(0A100) OV101 (HNA04D) (15 APR 82)

REFERENCE DATA

SREF =	2690.0000 SQ.FT.	XMRP =	1076.6800 IN. XO		
LREF =	474.9100 INCHES	YMRP =	.0000 IN. YO		
BREF =	936.6800 INCHES	ZMRP =	375.0000 IN. ZO		
SCALE =	.3600				

PARAMETRIC DATA

BETA =	.000	ELEVON =	.000
AILRON =	.000	BDFLAP =	.000
SPDBRK =	48.000	RUDDER =	19.500

RUN NO. 94/ 0 GRADIENT INTERVAL = -5.00/ 5.00

Q	ALPHA	BAR	ALPHAU	QI	DP/Q55	DP/Q54	DP/Q52	DP/Q53	DP/Q56
47.870	-.072	29.82000	.00000	48.00000	1.06197	.00000	1.00071	.13320	.03026
47.720	5.119	29.82000	5.00000	47.00000	1.05836	.00000	1.00776	.12260	.01509
47.720	10.322	29.82000	10.00000	47.00000	1.05577	.00000	.98492	.11205	.01504
47.720	15.534	29.82000	15.00000	48.00000	1.05270	.00000	1.00189	.10157	.03000
47.660	20.804	29.82000	20.00000	47.00000	1.06014	.00000	.96931	.09115	.01496
	GRADIENT	.00000	.00000	.00000	.00000	.00000	.00000	.00000	.00000

ARC40X80-462(0A100) OV101 (HNA04E) (16 MAR 82)

REFERENCE DATA

SREF =	2690.0000 SQ.FT.	XMRP =	1076.6800 IN. XO		
LREF =	474.8100 INCHES	YMRP =	.0000 IN. YO		
BREF =	936.6800 INCHES	ZMRP =	375.0000 IN. ZO		
SCALE =	.3600				

PARAMETRIC DATA

BETA =	5.000	ELEVON =	.000
AILRON =	.000	BDFLAP =	.000
SPDBRK =	55.000	RUDDER =	.000

RUN NO. 95/ 0 GRADIENT INTERVAL = -5.00/ 5.00

Q	ALPHA	BAR	ALPHAU	QI	DP/Q55	DP/Q54	DP/Q52	DP/Q53	DP/Q56
47.660	-.070	29.80000	.00000	47.50000	1.07259	.01056	1.00071	.08197	.00000
47.740	5.125	29.80000	5.00000	48.50000	1.06945	.00000	.98781	.07151	.01509
47.800	10.327	29.80000	10.00000	48.50000	1.06633	.00000	.98487	.06112	.00000
47.730	15.538	29.80000	15.00000	48.50000	1.06322	-.01046	.98197	.05078	-.01500
47.720	20.789	29.80000	20.00000	47.50000	1.06014	.00000	.98909	.04051	-.01496
	GRADIENT	.00000	.00000	.00000	.00000	.00000	.00000	.00000	.00000

ARC40X80-462(OA100) OV101 (HNA04F) (16 MAR 82)

REFERENCE DATA

SREF =	2690.0000 SQ.FT.	XMRP =	1076.6800 IN. XO		
LREF =	474.8100 INCHES	YMRP =	.0000 IN. YO		
BREF =	936.6800 INCHES	ZMRP =	375.0000 IN. ZO		
SCALE =	.3600				

PARAMETRIC DATA

BETA =	5.000	ELEVON =	.000
AILRON =	.000	BDFLAP =	.000
SPDBRK =	55.000	RUDDER =	5.000

RUN NO. 96/ 0 GRADIENT INTERVAL = -5.00/ 5.00

Q	ALPHA	BAR	ALPHAU	Q1	DP/Q55	DP/Q54	DP/Q52	DP/Q53	DP/Q56
47.710	-.070	29.80000	.00000	48.50000	1.07259	.00000	1.00071	.08197	.00000
47.690	5.123	29.80000	5.00000	47.50000	1.05886	-.01053	.99778	.07151	.00000
47.710	10.328	29.80000	10.00000	47.50000	1.05577	.01050	.99487	.06112	.01504
47.530	20.790	29.80000	20.00000	49.00000	1.06014	.00000	.98909	.05064	-.02991
	GRADIENT	.00000	.00000	.00000	.00000	.00000	.00000	.00000	.00000

ARC40X80-462(OA100) OV101 (HNA04G) (16 MAR 82)

REFERENCE DATA

SREF =	2690.0000 SQ.FT.	XMRP =	1076.6800 IN. XO		
LREF =	474.8100 INCHES	YMRP =	.0000 IN. YO		
BREF =	936.6800 INCHES	ZMRP =	375.0000 IN. ZO		
SCALE =	.3600				

PARAMETRIC DATA

BETA =	5.000	ELEVON =	.000
AILRON =	.000	BDFLAP =	.000
SPDBRK =	55.000	RUDDER =	10.000

RUN NO. 97/ 0 GRADIENT INTERVAL = -5.00/ 5.00

Q	ALPHA	BAR	ALPHAU	Q1	DP/Q55	DP/Q54	DP/Q52	DP/Q53	DP/Q56
47.610	-.071	29.80000	.00000	47.50000	1.08321	.00000	1.00071	.09222	.01513
47.710	5.122	29.80000	5.00000	48.50000	1.05686	.01053	.99778	.08173	.01509
47.700	10.324	29.80000	10.00000	47.50000	1.06633	.00000	1.00482	.05093	.00000
47.650	15.535	29.80000	15.00000	47.50000	1.05270	.01046	.99197	.05078	.01500
47.590	20.724	29.80000	20.00000	47.50000	1.04964	.00000	.98909	.05064	.00000
	GRADIENT	.00000	.00000	.00000	.00000	.00000	.00000	.00000	.00000

ARC40X80-462(0A100) OV101 (HNA04H) (16 MAR 82)

REFERENCE DATA

SREF =	2690.0000 SQ.FT.	XMRP =	1076.6800 IN. XO		
LREF =	474.8100 INCHES	YMRP =	.0000 IN. YO		
BREF =	936.6900 INCHES	ZMRP =	375.0000 IN. ZO		
SCALE =	.3600				

PARAMETRIC DATA

BETA =	5.000	ELEVON =	.000
AILRON =	.000	BDFLAP =	.000
SPDBRK =	55.000	RUDDER =	15.000

RUN NO. 98/ 0 GRADIENT INTERVAL = -5.00/ 5.00

Q	ALPHA	BAR	ALPHAU	Q1	DP/Q55	DP/Q54	DP/Q52	DP/Q53	DP/Q56
47.610	-.072	29.80000	.00000	47.50000	1.06197	.00000	1.00071	.08197	.01513
47.660	5.123	29.80000	5.00000	47.50000	1.04827	.00000	1.00776	.07151	.01509
47.620	10.325	29.80000	10.00000	49.50000	1.04521	-.01050	.99487	.07131	.01504
47.620	15.537	29.80000	15.00000	49.50000	1.05322	.00000	1.00189	.06094	.01500
47.590	20.783	29.80000	20.00000	47.50000	1.07053	.00000	.99909	.05064	.01496
	GRADIENT	.00000	.00000	.00000	.00000	.00000	.00000	.00000	.00000

ARC40X80-462(0A100) OV101 (HNA04I) (15 APR 82)

REFERENCE DATA

SREF =	2690.0000 SQ.FT.	XMRP =	1076.6800 IN. XO		
LREF =	474.8100 INCHES	YMRP =	.0000 IN. YO		
BREF =	936.6900 INCHES	ZMRP =	375.0000 IN. ZO		
SCALE =	.3600				

PARAMETRIC DATA

BETA =	5.000	ELEVON =	.000
AILRON =	.000	BDFLAP =	.000
SPDBRK =	48.000	RUDDER =	19.500

RUN NO. 99/ 0 GRADIENT INTERVAL = -5.00/ 5.00

Q	ALPHA	BAR	ALPHAU	Q1	DP/Q55	DP/Q54	DP/Q52	DP/Q53	DP/Q56
47.690	-.073	29.80000	.00000	47.50000	1.06197	.01056	1.01072	.09222	.01513
47.690	5.122	29.80000	5.00000	48.50000	1.04827	.00000	.99778	.08173	.01509
47.750	10.321	29.80000	10.00000	47.50000	1.05633	.00000	1.01477	.07131	.01504
47.610	15.534	29.80000	15.00000	47.50000	1.05270	.00000	1.00189	.06094	.01500
47.600	20.780	29.80000	20.00000	47.50000	1.04964	.00000	.99898	.05064	.01496
	GRADIENT	.00000	.00000	.00000	.00000	.00000	.00000	.00000	.00000

ARC40X80-462(OA100) OV101 (HNA04J) (16 MAR 82)

REFERENCE DATA

SREF =	2690.0000 SQ.FT.	XMRP =	1076.6800 IN. XO			BETA =	.000	ELEVON =	.000
LREF =	474.8100 INCHES	YMRP =	.0000 IN. YO			AILRON =	.000	BDFLAP =	.000
BREF =	936.6800 INCHES	ZMRP =	375.0000 IN. ZO			SPDBRK =	25.000	RUDDER =	-22.500
SCALE =	.3600								

PARAMETRIC DATA

RUN NO. 86/ 0 GRADIENT INTERVAL = -5.00/ 5.00

Q	ALPHA	BAR	ALPHAU	QI	DP/Q55	DP/Q54	DP/Q52	DP/Q53	DP/Q56
47.740	-.064	29.82000	.00000	48.00000	1.08321	.00000	1.00071	.11271	.00000
47.680	5.131	29.82000	5.00000	48.00000	1.06945	.00000	.97783	.11238	.00000
47.780	10.334	29.82000	10.00000	48.00000	1.06633	.00000	1.00482	.10187	.00000
47.680	15.544	29.82000	15.00000	47.00000	1.07375	.00000	.97213	.08125	.00000
47.710	20.747	29.82000	20.00000	48.00000	1.07063	.00000	.96931	.08102	.00000
	GRADIENT	.00000	.00000	.00000	.00000	.00000	.00000	.00000	.00000

ARC40X80-462(OA100) OV101 (HNA04K) (16 MAR 82)

REFERENCE DATA

SREF =	2690.0000 SQ.FT.	XMRP =	1076.6800 IN. XO			BETA =	.000	ELEVON =	.000
LREF =	474.8100 INCHES	YMRP =	.0000 IN. YO			AILRON =	.000	BDFLAP =	.000
BREF =	936.6800 INCHES	ZMRP =	375.0000 IN. ZO			SPDBRK =	25.000	RUDDER =	-15.000
SCALE =	.3600								

PARAMETRIC DATA

RUN NO. 87/ 0 GRADIENT INTERVAL = -5.00/ 5.00

Q	ALPHA	BAR	ALPHAU	QI	DP/Q55	DP/Q54	DP/Q52	DP/Q53	DP/Q56
47.720	-.058	29.82000	.00000	48.00000	1.07259	.01056	1.00071	.11271	.01513
47.690	5.133	29.82000	5.00000	48.00000	1.06945	.00000	.97783	.10216	.00000
47.830	10.338	29.82000	10.00000	48.00000	1.06633	.00000	1.00482	.10187	.01504
47.580	15.548	29.82000	15.00000	48.00000	1.06322	.00000	.96221	.09141	.00000
47.630	20.754	29.82000	20.00000	48.00000	1.06014	.01043	.95942	.08102	.00000
	GRADIENT	.00000	.00000	.00000	.00000	.00000	.00000	.00000	.00000

ARC40X80-462(OA100) OV101+NOSE GEAR (HNA04L) (15 APR 82)

REFERENCE DATA

SREF =	2690.0000 SQ.FT.	XMRP =	1076.6800 IN. XO			BETA =	.000	ELEVON =	.000
LREF =	474.8100 INCHES	YMRP =	.0000 IN. YO			AILRON =	.000	BDFLAP =	.000
BREF =	936.6800 INCHES	ZMRP =	375.0000 IN. ZO			SPDBRK =	20.000	RUDDER =	3.000
SCALE =	.3600								

PARAMETRIC DATA

RUN NO. 108/ 0 GRADIENT INTERVAL = -5.00/ 5.00

Q	ALPHA	BAR	ALPHAU	Q1	DP/Q55	DP/Q54	DP/Q52	DP/Q53	DP/Q56
47.700	-.058	29.76000	.00000	47.50000	1.08321	-1.00289	.97069	.10246	-.03026
47.560	5.139	29.76000	5.00000	47.50000	1.08004	-.99996	.96785	.09195	-.03018
47.530	10.342	29.76000	10.00000	47.50000	1.07689	-1.01803	.95507	.10187	-.01504
47.540	15.549	29.76000	15.00000	47.50000	1.07375	-.99413	.95229	.10157	-.01500
47.590	20.797	29.76000	20.00000	47.50000	1.08113	-.99125	.95942	.07089	-.04487
	GRADIENT	.00000	.00000	.00000	.00000	.00000	.00000	.00000	.00000

ARC40X80-462(OA100) OV101+NOSE GEAR (HNA04M) (15 APR 82)

REFERENCE DATA

SREF =	2690.0000 SQ.FT.	XMRP =	1076.6800 IN. XO			BETA =	5.000	ELEVON =	.000
LREF =	474.8100 INCHES	YMRP =	.0000 IN. YO			AILRON =	.000	BDFLAP =	.000
BREF =	936.6800 INCHES	ZMRP =	375.0000 IN. ZO			SPDBRK =	20.000	RUDDER =	3.000
SCALE =	.3600								

PARAMETRIC DATA

RUN NO. 109/ 0 GRADIENT INTERVAL = -5.00/ 5.00

Q	ALPHA	BAR	ALPHAU	Q1	DP/Q55	DP/Q54	DP/Q52	DP/Q53	DP/Q56
47.500	-.051	29.76000	.00000	47.50000	1.08321	-1.00289	.99071	.08197	.00000
47.670	5.143	29.75000	5.00000	47.50000	1.08004	-1.02101	.98781	.08173	.00000
47.630	10.340	29.76000	10.00000	47.50000	1.07689	-1.00753	.98492	.05093	.00000
47.390	15.550	29.76000	15.00000	47.50000	1.07375	-1.00460	.99197	.05078	.00000
47.870	20.795	29.76000	20.00000	47.50000	1.07063	-.99125	.98909	.03038	.00000
	GRADIENT	.00000	.00000	.00000	.00000	.00000	.00000	.00000	.00000

ARC40X80-462(OA100) OV101+NOSE GEAR (HNA04N) (15 APR 82)

REFERENCE DATA

SREF =	2690.0000	SQ.FT.	XMRP =	1076.6800	IN. XO				
LREF =	474.8100	INCHES	YMRP =	.0000	IN. YO				
BREF =	936.6800	INCHES	ZMRP =	375.0000	IN. ZO				
SCALE =	.3600								

PARAMETRIC DATA

BETA =	10.000	ELEVON =	.000
AILRON =	.000	BDFLAP =	.000
SPDBRK =	36.500	RUDDER =	-5.500

RUN NO. 110/ 0 GRADIENT INTERVAL = -5.00/ 5.00

Q	ALPHA	BAR	ALPHAU	Q1	DP/Q55	DP/Q54	DP/Q52	DP/Q53	DP/Q56
47.530	-.041	29.76000	.00000	47.50000	1.06197	-1.02401	1.04074	.02049	.00000
47.710	5.146	29.76000	5.00000	47.50000	1.06945	-1.02101	1.04767	.02043	.00000
47.580	10.344	29.76000	10.00000	47.00000	1.06633	-1.01803	1.03466	.01019	.00000
47.720	15.577	29.76000	15.00000	47.50000	1.06322	-1.01506	1.06141	-.03047	.00000
47.750	20.818	29.76000	20.00000	47.50000	1.07063	-1.01212	1.06822	-.04051	-.01498
	GRADIENT	.00000	.00000	.00000	.00000	.00000	.00000	.00000	.00000

ARC40X80-462(OA100) OV101+NOSE GEAR(FTP OFF) (HNA04O) (16 MAR 82)

REFERENCE DATA

SREF =	2690.0000	SQ.FT.	XMRP =	1076.6800	IN. XO				
LREF =	474.8100	INCHES	YMRP =	.0000	IN. YO				
BREF =	936.6800	INCHES	ZMRP =	375.0000	IN. ZO				
SCALE =	.3600								

PARAMETRIC DATA

BETA =	.000	ELEVON =	.000
AILRON =	.000	BDFLAP =	.000
SPDBRK =	25.000	RUDDER =	.000

RUN NO. 111/ 0 GRADIENT INTERVAL = -5.00/ 5.00

Q	ALPHA	BAR	ALPHAU	Q1	DP/Q55	DP/Q54	DP/Q52	DP/Q53	DP/Q56
47.460	-.059	29.74000	.00000	46.50000	1.06197	-.98178	-.03002	.99389	-.12106
47.410	5.135	29.74000	5.00000	46.50000	1.05886	-.97891	-.02993	1.00120	-.09053
47.690	10.339	29.74000	10.00000	47.50000	1.06633	-.97605	-.01990	1.00846	-.10531
47.610	15.549	29.74000	15.00000	47.50000	1.06322	-.97321	-.01984	1.01568	-.07500
47.740	20.797	29.74000	20.00000	49.50000	1.06014	-.97038	-.02967	.99248	-.07478
	GRADIENT	.00000	.00000	.00000	.00000	.00000	.00000	.00000	.00000

ARC40X80-462(OA100) OV101+NOSE GEAR(FTP OFF) (HNA04P) (16 MAR 82)

REFERENCE DATA

SREF =	2690.0000	SQ.FT.	XMRP =	1076.6800	IN. XO				
LREF =	474.8100	INCHES	YMRP =	.0000	IN. YO				
BREF =	936.6800	INCHES	ZMRP =	375.0000	IN. ZO				
SCALE =	.3600								

PARAMETRIC DATA

BETA =	5.000	ELEVON =	.000
AILRON =	.000	BDFLAP =	.000
SPDBRK =	25.000	RUDDER =	.000

RUN NO. 112/ 0 GRADIENT INTERVAL = -5.00/ 5.00

Q	ALPHA	BAR	ALPHAU	Q1	DP/Q55	DP/Q54	DP/Q52	DP/Q53	DP/Q56
47.670	-.054	29.74000	.00000	49.50000	1.07259	-1.00289	-.02001	1.02463	-.06053
47.530	5.142	29.74000	5.00000	49.50000	1.06945	-.98943	-.01996	1.02163	-.04526
47.610	10.342	29.74000	10.00000	46.50000	1.06633	-.98654	-.00995	1.02883	-.07522
47.670	15.546	29.74000	15.00000	47.50000	1.05270	-.98367	-.00992	1.02584	-.06000
47.620	20.797	29.74000	20.00000	47.00000	1.06014	-.98082	-.01978	1.04311	-.02991
	GRADIENT	.00000	.00000	.00000	.00000	.00000	.00000	.00000	.00000

ARC40X80-462(OA100) OV101+NOSE GEAR(FTP OFF) (HNA04Q) (16 MAR 82)

REFERENCE DATA

SREF =	2690.0000	SQ.FT.	XMRP =	1076.6800	IN. XO				
LREF =	474.8100	INCHES	YMRP =	.0000	IN. YO				
BREF =	936.6800	INCHES	ZMRP =	375.0000	IN. ZO				
SCALE =	.3600								

PARAMETRIC DATA

BETA =	10.000	ELEVON =	.000
AILRON =	.000	BDFLAP =	.000
SPDBRK =	25.000	RUDDER =	.000

RUN NO. 113/ 0 GRADIENT INTERVAL = -5.00/ 5.00

Q	ALPHA	BAR	ALPHAU	Q1	DP/Q55	DP/Q54	DP/Q52	DP/Q53	DP/Q56
47.710	-.041	29.74000	.00000	49.50000	1.07259	-1.02401	.00000	1.06561	-.01513
47.530	5.145	29.74000	5.00000	49.50000	1.05896	-.98943	.00000	1.06249	-.01509
47.670	10.345	29.74000	10.00000	49.50000	1.05577	-.98654	-.00995	1.06958	.00000
47.560	15.574	29.74000	15.00000	49.50000	1.05270	-.99413	.00000	1.05631	.00000
47.500	20.818	29.74000	20.00000	46.50000	1.04964	-.98082	.00989	1.06337	.01496
	GRADIENT	.00000	.00000	.00000	.00000	.00000	.00000	.00000	.00000

ARC40X80-462(OA100) OV101(FTP OFF) (HNA04R) (16 MAR 82)

REFERENCE DATA

SREF =	2690.0000	SQ.FT.	XMRP =	1076.6800	IN. XO	BETA =	.000	ELEVON =	.000
LREF =	474.8100	INCHES	YMRP =	.0000	IN. YO	AILRON =	.000	BDFLAP =	.000
BREF =	936.6800	INCHES	ZMRP =	375.0000	IN. ZO	SPDBRK =	25.000	RUDDER =	.000
SCALE =	.3600								

PARAMETRIC DATA

RUN NO. 115/ 0 GRADIENT INTERVAL = -5.00/ 5.00

Q	ALPHA	BAR	ALPHAU	Q1	DP/Q55	DP/Q54	DP/Q52	DP/Q53	DP/Q56
47.390	-.065	29.76000	.00000	47.00000	1.09383	-.95011	-.06004	.88118	-.21185
47.850	5.135	29.76000	5.00000	48.00000	1.08063	-.96838	-.02993	.87860	-.22632
47.660	10.337	29.76000	10.00000	50.00000	1.07689	-.95506	-.05969	.84548	-.21062
47.250	15.545	29.76000	15.00000	47.00000	1.06322	-.93135	-.03968	.83286	-.27000
47.360	20.815	29.76000	20.00000	47.00000	1.08113	-.91821	-.04945	.81019	-.26922
	GRADIENT	.00000	.00000	.00000	.00000	.00000	.00000	.00000	.00000

ARC40X80-462(OA100) OV101(FTP OFF) (HNA04S) (16 MAR 82)

REFERENCE DATA

SREF =	2690.0000	SQ.FT.	XMRP =	1076.6800	IN. XO	BETA =	.000	ELEVON =	.000
LREF =	474.8100	INCHES	YMRP =	.0000	IN. YO	AILRON =	.000	BDFLAP =	.000
BREF =	936.6800	INCHES	ZMRP =	375.0000	IN. ZO	SPDBRK =	25.000	RUDDER =	5.000
SCALE =	.3600								

PARAMETRIC DATA

RUN NO. 114/ 0 GRADIENT INTERVAL = -5.00/ 5.00

Q	ALPHA	BAR	ALPHAU	Q1	DP/Q55	DP/Q54	DP/Q52	DP/Q53	DP/Q56
47.190	-.061	29.76000	.00000	47.00000	1.07259	-.93955	-.04003	.93241	-.12106
47.530	5.135	29.76000	5.00000	50.00000	1.08004	-.94733	-.01996	.91947	-.16597
47.510	10.334	29.76000	10.00000	47.00000	1.07689	-.94456	-.03979	.91678	-.18053
47.530	15.546	29.76000	15.00000	47.00000	1.09480	-.94181	-.04960	.88364	-.18000
47.480	20.816	29.76000	20.00000	47.50000	1.08113	-.91821	-.06924	.87095	-.20939
	GRADIENT	.00000	.00000	.00000	.00000	.00000	.00000	.00000	.00000

ARC40X80-462(OA100) OV101(FTP OFF) (HNA04T) (16 MAR 82)

REFERENCE DATA

SREF =	2690.0000 SQ.FT.	XMRP =	1076.6800 IN. XO		
LREF =	474.8100 INCHES	YMRP =	.0000 IN. YO		
BREF =	936.6800 INCHES	ZMRP =	375.0000 IN. ZO		
SCALE =	.3600				

PARAMETRIC DATA

BETA =	.000	ELEVON =	.000
AILRON =	.000	BDFLAP =	.000
SPDBRK =	25.000	RUDDER =	10.000

RUN NO. 116/ 0 GRADIENT INTERVAL = -5.00/ 5.00

Q	ALPHA	BAR	ALPHAU	QI	DP/Q55	DP/Q54	DP/Q52	DP/Q53	DP/Q56
47.580	-.062	29.76000	.00000	50.00000	1.08321	-.97122	-.02001	.82995	-.27238
47.680	5.131	29.76000	5.00000	48.00000	1.08004	-.93680	-.03991	.82752	-.27158
47.500	10.332	29.76000	10.00000	50.00000	1.06633	-.94456	-.04974	.82510	-.27079
47.710	15.543	29.76000	15.00000	50.00000	1.10533	-.95228	-.04960	.79223	-.28500
47.370	20.815	29.76000	20.00000	47.00000	1.04163	-.92864	-.04945	.76968	-.32905
	GRADIENT	.00000	.00000	.00000	.00000	.00000	.00000	.00000	.00000

ARC40X80-462(OA100) OV101(FTP OFF) (HNA04U) (16 MAR 82)

REFERENCE DATA

SREF =	2690.0000 SQ.FT.	XMRP =	1076.6800 IN. XO		
LREF =	474.8100 INCHES	YMRP =	.0000 IN. YO		
BREF =	936.6800 INCHES	ZMRP =	375.0000 IN. ZO		
SCALE =	.3600				

PARAMETRIC DATA

BETA =	.000	ELEVON =	.000
AILRON =	.000	BDFLAP =	.000
SPDBRK =	25.000	RUDDER =	15.000

RUN NO. 117/ 0 GRADIENT INTERVAL = -5.00/ 5.00

Q	ALPHA	BAR	ALPHAU	QI	DP/Q55	DP/Q54	DP/Q52	DP/Q53	DP/Q56
47.680	-.065	29.76000	.00000	48.00000	1.08321	-.96067	-.01001	.79921	-.30265
48.020	5.131	29.76000	5.00000	48.00000	1.09063	-.94733	-.03991	.78665	-.33194
47.660	10.329	29.76000	10.00000	50.00000	1.07689	-.94456	-.03979	.78436	-.31592
47.470	15.544	29.76000	15.00000	50.00000	1.08428	-.93135	-.02976	.75160	-.34500
47.650	20.806	29.76000	20.00000	50.00000	1.08113	-.92864	-.03956	.72917	-.32905
	GRADIENT	.00000	.00000	.00000	.00000	.00000	.00000	.00000	.00000

ARC40X80-462(OA100) OV101(FTP OFF) (HNA04V) (16 MAR 82)

REFERENCE DATA

SREF = 2690.0000 SQ.FT. XMRP = 1076.6800 IN. XO
LREF = 474.8100 INCHES YMRP = .0000 IN. YO
BREF = 936.6800 INCHES ZMRP = 375.0000 IN. ZO
SCALE = .3600

PARAMETRIC DATA

BETA = .000 ELEVON = .000
AILRON = .000 BDFLAP = .000
SPDBRK = 25.000 RUDDER = 22.500

RUN NO. 118/ 0 GRADIENT INTERVAL = -5.00/ 5.00

Q	ALPHA	BAR	ALPHAU	QI	DP/Q55	DP/Q54	DP/Q52	DP/Q53	DP/Q56
47.560	-.067	29.76000	.00000	47.00000	1.08321	-.96067	-.02001	.75823	-.33291
47.610	5.125	29.76000	5.00000	50.00000	1.08004	-.95786	-.01996	.75600	-.33194
47.540	10.330	29.76000	10.00000	50.00000	1.06633	-.93407	-.02985	.74361	-.34601
47.740	15.540	29.76000	15.00000	48.00000	1.09480	-.95228	-.03968	.73129	-.34500
47.530	20.806	29.76000	20.00000	50.00000	1.09163	-.93908	-.03956	.70891	-.38887
	GRADIENT	.00000	.00000	.00000	.00000	.00000	.00000	.00000	.00000

ARC40X80-462(OA100) OV101(FTP OFF) (HNA04W) (16 MAR 82)

REFERENCE DATA

SREF = 2690.0000 SQ.FT. XMRP = 1076.6800 IN. XO
LREF = 474.8100 INCHES YMRP = .0000 IN. YO
BREF = 936.6800 INCHES ZMRP = 375.0000 IN. ZO
SCALE = .3600

PARAMETRIC DATA

BETA = 5.000 ELEVON = .000
AILRON = .000 BDFLAP = .000
SPDBRK = 25.000 RUDDER = .000

RUN NO. 119/ 0 GRADIENT INTERVAL = -5.00/ 5.00

Q	ALPHA	BAR	ALPHAU	QI	DP/Q55	DP/Q54	DP/Q52	DP/Q53	DP/Q56
47.790	-.054	29.80000	.00000	47.50000	1.08321	-.96067	-.02001	.96315	-.15132
47.230	5.137	29.80000	5.00000	46.50000	1.08004	-.94733	-.01996	.93990	-.15088
47.200	10.342	29.80000	10.00000	46.50000	1.06633	-.95506	-.02985	.93715	-.13540
47.330	15.548	29.80000	15.00000	46.50000	1.06322	-.94181	-.02976	.91411	-.13500
47.770	20.799	29.80000	20.00000	47.50000	1.07063	-.94951	-.01978	.91146	-.13461
	GRADIENT	.00000	.00000	.00000	.00000	.00000	.00000	.00000	.00000

ARC40X80-462(OA100) OV101(FTP OFF) (HNA04X) (16 MAR 82)

REFERENCE DATA

SREF =	2690.0000	SQ.FT.	XMRP =	1076.6800	IN. XO	BETA =	5.000	ELEVON =	.000
LREF =	474.8100	INCHES	YMRP =	.0000	IN. YO	AILRON =	.000	BDFLAP =	.000
BREF =	936.6800	INCHES	ZMRP =	375.0000	IN. ZO	SPDBRK =	25.000	RUDDER =	5.000
SCALE =	.3600								

PARAMETRIC DATA

RUN NO. 120/ 0 GRADIENT INTERVAL = -5.00/ 5.00

Q	ALPHA	BAR	ALPHAU	Q1	DP/Q55	DP/Q54	DP/Q52	DP/Q53	DP/Q56
47.850	-.057	29.80000	.00000	47.50000	1.08321	-.96067	-.03002	.94266	-.15132
47.610	5.138	29.80000	5.00000	47.50000	1.06945	-.94733	-.02993	.92968	-.15088
47.510	10.337	29.80000	10.00000	49.50000	1.08744	-.94456	-.01990	.91678	-.16548
47.350	15.547	29.80000	15.00000	46.50000	1.06322	-.94181	-.02976	.90395	-.13500
47.530	20.801	29.80000	20.00000	48.50000	1.06014	-.93908	-.01978	.89120	-.17948
	GRADIENT	.00000	.00000	.00000	.00000	.00000	.00000	.00000	.00000

ARC40X80-462(OA100) OV101(FTP OFF) (HNA04Y) (16 MAR 82)

REFERENCE DATA

SREF =	2690.0000	SQ.FT.	XMRP =	1076.6800	IN. XO	BETA =	5.000	ELEVON =	.000
LREF =	474.8100	INCHES	YMRP =	.0000	IN. YO	AILRON =	.000	BDFLAP =	.000
BREF =	936.6800	INCHES	ZMRP =	375.0000	IN. ZO	SPDBRK =	25.000	RUDDER =	10.000
SCALE =	.3600								

PARAMETRIC DATA

RUN NO. 121/ 0 GRADIENT INTERVAL = -5.00/ 5.00

Q	ALPHA	BAR	ALPHAU	Q1	DP/Q55	DP/Q54	DP/Q52	DP/Q53	DP/Q56
47.500	-.059	29.80000	.00000	49.50000	1.08321	-.95011	-.02001	.93241	-.18159
47.460	5.138	29.80000	5.00000	46.50000	1.06945	-.96838	-.01996	.91947	-.16597
47.440	10.331	29.80000	10.00000	46.50000	1.06633	-.94456	-.02985	.89641	-.13540
47.390	15.542	29.80000	15.00000	46.50000	1.07375	-.94181	-.02976	.88364	-.15000
47.640	20.796	29.80000	20.00000	47.50000	1.07063	-.92864	-.02967	.89120	-.20939
	GRADIENT	.00000	.00000	.00000	.00000	.00000	.00000	.00000	.00000

ARC40X80-462(OA100) OV101(FTP OFF) (HNA04Z) (16 MAR 82)

REFERENCE DATA

SREF =	2690.0000	SQ.FT.	XMRP =	1076.6800	IN. XO			BETA =	5.000	ELEVON =	.000
LREF =	474.8100	INCHES	YMRP =	.0000	IN. YO			AILRON =	.000	BDFLAP =	.000
BREF =	936.6800	INCHES	ZMRP =	375.0000	IN. ZO			SPDBRK =	25.000	RUDDER =	15.000
SCALE =	.3600										

PARAMETRIC DATA

RUN NO. 122/ 0 GRADIENT INTERVAL = -5.00/ 5.00

Q	ALPHA	BAR	ALPHAU	Q1	DP/Q55	DP/Q54	DP/Q52	DP/Q53	DP/Q56
47.240	-.059	29.80000	.00000	46.50000	1.06197	-.95011	-.02001	.88118	-.19672
47.510	5.131	29.80000	5.00000	49.50000	1.06945	-.94733	-.02993	.88882	-.15088
47.360	10.331	29.80000	10.00000	46.50000	1.06633	-.94456	-.00995	.85566	-.21062
47.540	15.545	29.80000	15.00000	49.50000	1.07375	-.96274	-.00992	.89380	-.21000
47.560	20.799	29.80000	20.00000	47.50000	1.07063	-.91821	-.02967	.86082	-.20939
	GRADIENT	.00000	.00000	.00000	.00000	.00000	.00000	.00000	.00000

ARC40X80-462(OA100) OV101(FTP OFF) (HNA05A) (16 MAR 82)

REFERENCE DATA

SREF =	2690.0000	SQ.FT.	XMRP =	1076.6800	IN. XO			BETA =	5.000	ELEVON =	.000
LREF =	474.8100	INCHES	YMRP =	.0000	IN. YO			AILRON =	.000	BDFLAP =	.000
BREF =	936.6800	INCHES	ZMRP =	375.0000	IN. ZO			SPDBRK =	25.000	RUDDER =	22.500
SCALE =	.3600										

PARAMETRIC DATA

RUN NO. 123/ 0 GRADIENT INTERVAL = -5.00/ 5.00

Q	ALPHA	BAR	ALPHAU	Q1	DP/Q55	DP/Q54	DP/Q52	DP/Q53	DP/Q56
47.490	-.069	29.83000	.00000	47.00000	1.07259	-.97122	.00000	.93241	-.10593
47.630	5.129	29.83000	5.00000	48.00000	1.05886	-.93680	-.01996	.92968	-.12070
47.560	10.328	29.83000	10.00000	48.00000	1.05577	-.94456	.00000	.91678	-.10531
47.570	15.536	29.83000	15.00000	48.00000	1.04217	-.93135	.00992	.90395	-.10500
47.670	20.792	29.83000	20.00000	47.00000	1.07063	-.92864	.00989	.89120	-.11965
	GRADIENT	.00000	.00000	.00000	.00000	.00000	.00000	.00000	.00000

ARC40X80-462(OA100) OV101(FTP OFF) (HNA05B) (16 MAR 82)

REFERENCE DATA

SREF = 2690.0000 SQ.FT. XMRP = 1076.6800 IN. XO
LREF = 474.8100 INCHES YMRP = .0000 IN. YO
BREF = 936.6800 INCHES ZMRP = 375.0000 IN. ZO
SCALE = .3600

PARAMETRIC DATA

BETA = 10.000 ELEVON = .000
AILRON = .000 BDFLAP = .000
SPDBRK = 25.000 RUDDER = .000

RUN NO. 124/ 0 GRADIENT INTERVAL = -5.00/ 5.00

Q	ALPHA	BAR	ALPHAU	Q1	DP/Q55	DP/Q54	DP/Q52	DP/Q53	DP/Q56
47.470	-.042	29.83000	.00000	48.00000	1.06197	-.95011	.03002	.93241	-.10593
47.540	5.146	29.83000	5.00000	47.00000	1.05886	-.93680	.02993	.93990	-.06035
47.480	10.343	29.83000	10.00000	47.00000	1.05577	-.95506	.03979	.89641	-.12035
47.480	15.573	29.83000	15.00000	48.00000	1.05270	-.93135	.03968	.89380	-.07500
47.560	20.820	29.83000	20.00000	48.00000	1.06014	-.93908	.03956	.90133	-.08974
	GRADIENT	.00000	.00000	.00000	.00000	.00000	.00000	.00000	.00000

ARC40X80-462(OA100) OV101(FTP OFF) (HNA05C) (16 MAR 82)

REFERENCE DATA

SREF = 2690.0000 SQ.FT. XMRP = 1076.6800 IN. XO
LREF = 474.8100 INCHES YMRP = .0000 IN. YO
BREF = 936.6800 INCHES ZMRP = 375.0000 IN. ZO
SCALE = .3600

PARAMETRIC DATA

BETA = 10.000 ELEVON = .000
AILRON = .000 BDFLAP = .000
SPDBRK = 25.000 RUDDER = 5.000

RUN NO. 125/ 0 GRADIENT INTERVAL = -5.00/ 5.00

Q	ALPHA	BAR	ALPHAU	Q1	DP/Q55	DP/Q54	DP/Q52	DP/Q53	DP/Q56
47.480	-.044	29.83000	.00000	48.00000	1.06197	-.95011	.06004	.94266	-.06053
47.500	5.145	29.83000	5.00000	48.00000	1.05886	-.94733	.05987	.92968	-.03018
47.380	10.345	29.83000	10.00000	47.00000	1.05577	-.92357	.05969	.92697	-.06018
47.500	15.568	29.83000	15.00000	47.00000	1.05270	-.94181	.06944	.94458	-.04500
47.380	20.824	29.83000	20.00000	47.00000	1.04964	-.92864	.06924	.92159	-.02991
	GRADIENT	.00000	.00000	.00000	.00000	.00000	.00000	.00000	.00000

ARC40X80-462(OA100) OV101(FTP OFF) (HNA05D) (16 MAR 82)

REFERENCE DATA

SREF =	2690.0000	SQ.FT.	XMRP =	1076.6800	IN. XO			BETA =	10.000	ELEVON =	.000
LREF =	474.8100	INCHES	YMRP =	.0000	IN. YO			AILRON =	.000	BDFLAP =	.000
BREF =	936.6800	INCHES	ZMRP =	375.0000	IN. ZO			SPDBRK =	25.000	RUDDER =	10.000
SCALE =	.3600										

PARAMETRIC DATA

RUN NO. 126/ 0 GRADIENT INTERVAL = -5.00/ 5.00

Q	ALPHA	BAR	ALPHAU	Q1	DP/Q55	DP/Q54	DP/Q52	DP/Q53	DP/Q56
47.500	-.047	29.83000	.00000	47.00000	1.06197	-.93955	.07005	.96315	-.03026
47.460	5.143	29.83000	5.00000	48.00000	1.06945	-.94733	.08980	.98076	.01509
47.430	10.341	29.83000	10.00000	47.00000	1.05577	-.95506	.08954	.96771	.01504
47.520	15.569	29.83000	15.00000	47.00000	1.05270	-.95229	.09920	.96490	.03000
47.540	20.821	29.83000	20.00000	47.00000	1.08113	-.93908	.08902	.98235	.05983
	GRADIENT	.00000	.00000	.00000	.00000	.00000	.00000	.00000	.00000

ARC40X80-462(OA100) OV101(FTP OFF) (HNA05E) (16 MAR 82)

REFERENCE DATA

SREF =	2690.0000	SQ.FT.	XMRP =	1076.6800	IN. XO			BETA =	10.000	ELEVON =	.000
LREF =	474.8100	INCHES	YMRP =	.0000	IN. YO			AILRON =	.000	BDFLAP =	.000
BREF =	936.6800	INCHES	ZMRP =	375.0000	IN. ZO			SPDBRK =	25.000	RUDDER =	15.000
SCALE =	.3600										

PARAMETRIC DATA

RUN NO. 127/ 0 GRADIENT INTERVAL = -5.00/ 5.00

Q	ALPHA	BAR	ALPHAU	Q1	DP/Q55	DP/Q54	DP/Q52	DP/Q53	DP/Q56
47.540	-.046	29.83000	.00000	47.00000	1.06197	-.95011	.11008	1.00414	.06053
47.480	5.142	29.83000	5.00000	47.50000	1.06945	-.95786	.12971	1.04206	.07544
47.470	10.340	29.83000	10.00000	47.00000	1.04521	-.94456	.09949	1.01865	.09026
47.540	15.567	29.83000	15.00000	48.00000	1.05270	-.95228	.09920	1.01568	.10500
47.630	20.816	29.83000	20.00000	48.00000	1.07063	-.94951	.11869	1.01273	.11965
	GRADIENT	.00000	.00000	.00000	.00000	.00000	.00000	.00000	.00000

ARC40X80-462(0A100) OV101(FTP OFF) (HNA05F) (16 MAR 82)

REFERENCE DATA

SREF =	2690.0000 SQ.FT.	XMRP =	1076.6800 IN. XO		
LREF =	474.8100 INCHES	YMRP =	.0000 IN. YO		
BREF =	936.6800 INCHES	ZMRP =	375.0000 IN. ZO		
SCALE =	.3600				

PARAMETRIC DATA

BETA =	10.000	ELEVON =	.000
AILRON =	.000	BDFLAP =	.000
SPDBRK =	25.000	RUDDER =	22.500

RUN NO. 128/ 0 GRADIENT INTERVAL = -5.00/ 5.00

Q	ALPHA	BAR	ALPHAU	QI	DP/Q55	DP/Q54	DP/Q52	DP/Q53	DP/Q56
47.670	-.050	29.83000	.00000	47.00000	1.07259	-.96067	.13009	1.07586	.15132
47.620	5.140	29.83000	5.00000	47.00000	1.05886	-.95786	.11973	1.07271	.15088
47.640	10.336	29.83000	10.00000	47.50000	1.06633	-.95506	.12933	1.10014	.16548
47.690	15.561	29.83000	15.00000	47.00000	1.06322	-.95274	.12896	1.08678	.16500
47.600	20.816	29.83000	20.00000	47.00000	1.04964	-.94951	.11869	1.09375	.17948
	GRADIENT	.00000	.00000	.00000	.00000	.00000	.00000	.00000	.00000

ARC40X80-462(0A100) OV101(ADS OFF) (HNA05G) (16 MAR 82)

REFERENCE DATA

SREF =	2690.0000 SQ.FT.	XMRP =	1076.6800 IN. XO		
LREF =	474.8100 INCHES	YMRP =	.0000 IN. YO		
BREF =	936.6800 INCHES	ZMRP =	375.0000 IN. ZO		
SCALE =	.3600				

PARAMETRIC DATA

BETA =	.000	ELEVON =	.000
AILRON =	.000	BDFLAP =	.000
SPDBRK =	87.000	RUDDER =	.000

RUN NO. 129/ 0 GRADIENT INTERVAL = -5.00/ 5.00

Q	ALPHA	BAR	ALPHAU	QI	DP/Q55	DP/Q54	DP/Q52	DP/Q53	DP/Q56
47.710	-.096	29.79000	.00000	47.50000	1.07259	-.98178	-.02001	.93241	-.10593
47.550	5.092	29.79000	5.00000	47.50000	1.05886	-.96838	-.00998	.93990	-.10562
47.900	10.298	29.79000	10.00000	48.00000	1.06633	-.96555	.00000	.93715	-.09026
47.460	15.507	29.79000	15.00000	47.50000	1.05270	-.95228	.00000	.92427	-.09000
47.690	20.773	29.79000	20.00000	47.50000	1.08113	-.95995	-.00989	.92159	-.07478
	GRADIENT	.00000	.00000	.00000	.00000	.00000	.00000	.00000	.00000

ARC40X80-462(OA100) OV101(ADS OFF) (HNA05H) (15 APR 82)

REFERENCE DATA

SREF =	2690.0000 SQ.FT.	XMRP =	1076.6800 IN. XO		
LREF =	474.8100 INCHES	YMRP =	.0000 IN. YO		
BREF =	936.6800 INCHES	ZMRP =	375.0000 IN. ZO		
SCALE =	.3600				

PARAMETRIC DATA

BETA =	.000	ELEVON =	.000
AILRON =	.000	BDFLAP =	.000
SPDBRK =	84.500	RUDDER =	3.500

RUN NO. 130/ 0 GRADIENT INTERVAL = -5.00/ 5.00

Q	ALPHA	BAR	ALPHAU	QI	DP/Q55	DP/Q54	DP/Q52	DP/Q53	DP/Q56
47.410	-.095	29.79000	.00000	47.50000	1.06197	-.98178	.01001	.95290	-.07566
47.580	5.091	29.79000	5.00000	47.50000	1.05886	-.94733	.00998	.96033	-.06035
47.720	10.298	29.79000	10.00000	48.00000	1.06633	-.96555	.01990	.95753	-.04513
47.330	15.509	29.79000	15.00000	47.50000	1.04217	-.95228	.00992	.95474	-.04500
47.700	20.773	29.79000	20.00000	47.50000	1.06014	-.94951	.01978	.94184	-.04487
	GRADIENT	.00000	.00000	.00000	.00000	.00000	.00000	.00000	.00000

ARC40X80-462(OA100) OV101(ADS OFF) (HNA05I) (15 APR 82)

REFERENCE DATA

SREF =	2690.0000 SQ.FT.	XMRP =	1076.6800 IN. XO		
LREF =	474.8100 INCHES	YMRP =	.0000 IN. YO		
BREF =	936.6800 INCHES	ZMRP =	375.0000 IN. ZO		
SCALE =	.3600				

PARAMETRIC DATA

BETA =	.000	ELEVON =	.000
AILRON =	.000	BDFLAP =	.000
SPDBRK =	80.000	RUDDER =	5.500

RUN NO. 131/ 0 GRADIENT INTERVAL = -5.00/ 5.00

Q	ALPHA	BAR	ALPHAU	QI	DP/Q55	DP/Q54	DP/Q52	DP/Q53	DP/Q56
47.640	-.095	29.79000	.00000	48.50000	1.06197	-.97122	.04003	.98364	.00000
47.560	5.091	29.79000	5.00000	47.50000	1.05886	-.97891	.03991	1.00120	-.03018
47.370	10.296	29.79000	10.00000	47.50000	1.05577	-.95506	.01990	.96771	.03009
47.640	15.503	29.79000	15.00000	48.50000	1.05270	-.97321	.03968	.99537	.00000
47.580	20.768	29.79000	20.00000	47.50000	1.06014	-.94951	.01978	.98235	.00000
	GRADIENT	.00000	.00000	.00000	.00000	.00000	.00000	.00000	.00000

ARC40X80-462(OA100) OV101(ADS OFF) (HNA05J) (15 APR 82)

REFERENCE DATA

SREF =	2690.0000 SQ.FT.	XMRP =	1076.6800 IN. XO		
LREF =	474.8100 INCHES	YMRP =	.0000 IN. YO		
BREF =	936.6800 INCHES	ZMRP =	375.0000 IN. ZO		
SCALE =	.3600				

PARAMETRIC DATA

BETA =	.000	ELEVON =	.000
AILRON =	.000	BDFLAP =	.000
SPDBRK =	78.500	RUDDER =	6.000

RUN NO. 132/ 0 GRADIENT INTERVAL = -5.00/ 5.00

Q	ALPHA	BAR	ALPHAU	QI	DP/Q55	DP/Q54	DP/Q52	DP/Q53	DP/Q56
47.510	-.098	29.79000	.00000	47.50000	1.06197	-.97122	.04003	1.03487	.03026
47.620	5.091	29.79000	5.00000	47.50000	1.04827	-.97891	.03991	1.03184	.04526
47.760	10.298	29.79000	10.00000	47.50000	1.06633	-.97605	.02985	1.04920	.06018
47.780	15.506	29.79000	15.00000	48.50000	1.05270	-.97321	.02976	1.05631	.06000
47.810	20.777	29.79000	20.00000	48.50000	1.04964	-.95995	.02967	1.04311	.07478
	GRADIENT	.00000	.00000	.00000	.00000	.00000	.00000	.00000	.00000

ARC40X80-462(OA100) OV101(ADS OFF) (HNA05K) (16 MAR 82)

REFERENCE DATA

SREF =	2690.0000 SQ.FT.	XMRP =	1076.6800 IN. XO		
LREF =	474.8100 INCHES	YMRP =	.0000 IN. YO		
BREF =	936.6800 INCHES	ZMRP =	375.0000 IN. ZO		
SCALE =	.3600				

PARAMETRIC DATA

BETA =	5.000	ELEVON =	.000
AILRON =	.000	BDFLAP =	.000
SPDBRK =	87.000	RUDDER =	.000

RUN NO. 133/ 0 GRADIENT INTERVAL = -5.00/ 5.00

Q	ALPHA	BAR	ALPHAU	QI	DP/Q55	DP/Q54	DP/Q52	DP/Q53	DP/Q56
47.730	-.095	29.79000	.00000	48.00000	1.06197	-.98178	.03002	1.10660	.09079
47.660	5.099	29.79000	5.00000	47.50000	1.05886	-.97891	.01996	1.12379	.09053
47.700	10.298	29.79000	10.00000	47.50000	1.05577	-.97605	.01990	1.13070	.10531
47.620	15.505	29.79000	15.00000	47.50000	1.04217	-.97321	.01984	1.11725	.12000
47.490	20.756	29.79000	20.00000	47.50000	1.03914	-.95995	.02967	1.10388	.11965
	GRADIENT	.00000	.00000	.00000	.00000	.00000	.00000	.00000	.00000

ARC40X80-462(OA100) OV101(ADS OFF) (HNA05L) (15 APR 82)

REFERENCE DATA

SREF =	2690.0000 SQ.FT.	XMRP =	1076.6800 IN. XO		BETA =	5.000	ELEVON =	.000
LREF =	474.8100 INCHES	YMRP =	.0000 IN. YO		AILRON =	.000	BDFLAP =	.000
BREF =	936.6800 INCHES	ZMRP =	375.0000 IN. ZO		SPDBRK =	84.500	RUDDER =	3.500
SCALE =	.3600							

PARAMETRIC DATA

RUN NO. 134/ 0 GRADIENT INTERVAL = -5.00/ 5.00

Q	ALPHA	BAR	ALPHAU	QI	DP/Q55	DP/Q54	DP/Q52	DP/Q53	DP/Q56
47.590	-.091	29.79000	.00000	48.50000	1.06197	-.98178	.02001	1.18857	.13619
47.640	5.094	29.79000	5.00000	47.50000	1.04827	-.98943	.00998	1.17487	.13579
47.660	10.298	29.79000	10.00000	47.50000	1.04521	-.98654	.01990	1.18163	.15044
47.490	15.508	29.79000	15.00000	47.50000	1.04217	-.97321	.00992	1.18834	.18000
47.850	20.751	29.79000	20.00000	48.50000	1.04964	-.97038	.00989	1.19502	.19444
	GRADIENT	.00000	.00000	.00000	.00000	.00000	.00000	.00000	.00000

ARC40X80-462(OA100) OV101(ADS OFF) (HNA05M) (15 APR 82)

REFERENCE DATA

SREF =	2690.0000 SQ.FT.	XMRP =	1076.6800 IN. XO		BETA =	5.000	ELEVON =	.000
LREF =	474.8100 INCHES	YMRP =	.0000 IN. YO		AILRON =	.000	BDFLAP =	.000
BREF =	936.6800 INCHES	ZMRP =	375.0000 IN. ZO		SPDBRK =	80.000	RUDDER =	5.500
SCALE =	.3600							

PARAMETRIC DATA

RUN NO. 135/ 0 GRADIENT INTERVAL = -5.00/ 5.00

Q	ALPHA	BAR	ALPHAU	QI	DP/Q55	DP/Q54	DP/Q52	DP/Q53	DP/Q56
47.760	-.097	29.79000	.00000	48.00000	1.06197	-1.00289	.00000	1.27054	.19672
47.690	5.094	29.79000	5.00000	47.50000	1.03769	-.97891	.00998	1.24639	.22632
47.450	10.299	29.79000	10.00000	47.50000	1.05577	-.98654	.00000	1.24275	.25575
47.500	15.507	29.79000	15.00000	47.50000	1.03164	-.98367	.00000	1.27976	.24000
47.670	20.759	29.79000	20.00000	47.50000	1.03914	-.97038	-.00989	1.25579	.23931
	GRADIENT	.00000	.00000	.00000	.00000	.00000	.00000	.00000	.00000

ARC40X80-462(0A100) OV101(ADS OFF) (HNA05N) (15 APR 82)

REFERENCE DATA

SREF =	2690.0000 SQ.FT.	XMRP =	1076.6800 IN.	XO	
LREF =	474.8100 INCHES	YMRP =	.0000 IN.	YO	
BREF =	936.6800 INCHES	ZMRP =	375.0000 IN.	ZO	
SCALE =	.3600				

PARAMETRIC DATA

BETA =	5.000	ELEVON =	.000
AILRON =	.000	BDFLAP =	.000
SPDBRK =	78.500	RUDDER =	6.000

RUN NO. 136/ 0 GRADIENT INTERVAL = -5.00/ 5.00

Q	ALPHA	BAR	ALPHAU	QI	DP/Q55	DP/Q54	DP/Q52	DP/Q53	DP/Q56
47.760	-.094	29.79000	.00000	47.50000	1.06197	-.99234	.00000	1.35251	.27238
47.380	5.095	29.79000	5.00000	47.50000	1.03769	-.98943	-.00998	1.33833	.28667
47.450	10.299	29.79000	10.00000	47.50000	1.03465	-.98654	-.02985	1.33443	.25575
47.670	15.508	29.79000	15.00000	47.50000	1.04217	-.98367	-.04960	1.34070	.28500
47.530	20.755	29.79000	20.00000	47.50000	1.03914	-.97038	-.02967	1.33681	.25426
	GRADIENT	.00000	.00000	.00000	.00000	.00000	.00000	.00000	.00000

ARC40X80-462(0A100) OV101(ADS OFF) (HNA05O) (15 MAR 82)

REFERENCE DATA

SREF =	2690.0000 SQ.FT.	XMRP =	1076.6800 IN.	XO	
LREF =	474.8100 INCHES	YMRP =	.0000 IN.	YO	
BREF =	936.6800 INCHES	ZMRP =	375.0000 IN.	ZO	
SCALE =	.3600				

PARAMETRIC DATA

BETA =	10.000	ELEVON =	.000
AILRON =	.000	BDFLAP =	.000
SPDBRK =	87.000	RUDDER =	.000

RUN NO. 137/ 0 GRADIENT INTERVAL = -5.00/ 5.00

Q	ALPHA	BAR	ALPHAU	QI	DP/Q55	DP/Q54	DP/Q52	DP/Q53	DP/Q56
47.810	-.077	29.80000	.00000	48.50000	1.08321	-.95011	-.03002	1.00414	-.09079
47.530	5.108	29.80000	5.00000	48.00000	1.06945	-.94733	-.01996	.98076	-.07544
47.750	10.306	29.80000	10.00000	48.00000	1.06633	-.96555	-.01990	.99827	-.10531
47.630	15.529	29.80000	15.00000	48.00000	1.06322	-.95228	-.03968	1.00552	-.10500
47.330	20.781	29.80000	20.00000	48.00000	1.07063	-.92864	-.04945	.98235	-.08974
	GRADIENT	.00000	.00000	.00000	.00000	.00000	.00000	.00000	.00000

ARC40X80-462(0A100) OV101(ADS OFF) (HNA05P) (15 APR 82)

REFERENCE DATA

SREF =	2690.0000 SQ.FT.	XMRP =	1076.6800 IN. XO		
LREF =	474.8100 INCHES	YMRP =	.0000 IN. YO		
BREF =	936.6800 INCHES	ZMRP =	375.0000 IN. ZO		
SCALE =	.3600				

PARAMETRIC DATA

BETA =	10.000	ELEVON =	.000
AILRON =	.000	BDFLAP =	.000
SPDBRK =	84.500	RUDDER =	3.500

RUN NO. 138/ 0 GRADIENT INTERVAL = -5.00/ 5.00

Q	ALPHA	BAR	ALPHAU	QI	DP/Q55	DP/Q54	DP/Q52	DP/Q53	DP/Q56
47.520	-.078	29.80000	.00000	48.50000	1.07259	-.95011	-.03002	1.04512	-.07566
47.860	5.110	29.80000	5.00000	48.50000	1.06945	-.94733	-.03991	1.03184	-.03018
47.790	10.307	29.80000	10.00000	48.50000	1.06633	-.94456	-.05969	1.03902	-.07522
47.490	15.529	29.80000	15.00000	48.00000	1.05270	-.96274	-.05952	1.02584	-.06000
47.890	20.777	29.80000	20.00000	49.00000	1.07063	-.94951	-.05935	1.05324	-.08974
	GRADIENT	.00000	.00000	.00000	.00000	.00000	.00000	.00000	.00000

ARC40X80-462(0A100) OV101(ADS OFF) (HNA05Q) (15 APR 82)

REFERENCE DATA

SREF =	2690.0000 SQ.FT.	XMRP =	1076.6800 IN. XO		
LREF =	474.8100 INCHES	YMRP =	.0000 IN. YO		
BREF =	936.6800 INCHES	ZMRP =	375.0000 IN. ZO		
SCALE =	.3600				

PARAMETRIC DATA

BETA =	10.000	ELEVON =	.000
AILRON =	.000	BDFLAP =	.000
SPDBRK =	80.000	RUDDER =	5.500

RUN NO. 139/ 0 GRADIENT INTERVAL = -5.00/ 5.00

Q	ALPHA	BAR	ALPHAU	QI	DP/Q55	DP/Q54	DP/Q52	DP/Q53	DP/Q56
47.450	-.080	29.80000	.00000	49.00000	1.07259	-.97122	-.07005	1.07586	-.04540
47.430	5.109	29.80000	5.00000	49.50000	1.06945	-.95786	-.06984	1.07271	-.03018
47.410	10.307	29.80000	10.00000	48.00000	1.06633	-.95506	-.06964	1.05939	-.03009
47.370	15.529	29.80000	15.00000	48.00000	1.06322	-.95228	-.06944	1.08678	-.03000
47.210	20.780	29.80000	20.00000	48.00000	1.04964	-.93908	-.07913	1.07349	-.05983
	GRADIENT	.00000	.00000	.00000	.00000	.00000	.00000	.00000	.00000

ARC40X80-462(OA100) OV101(ADS OFF) (HNA05R) (15 APR 82)

REFERENCE DATA

SREF =	2690.0000 SQ.FT.	XMRP =	1076.6800 IN. XO		
LREF =	474.8100 INCHES	YMRP =	.0000 IN. YO		
BREF =	936.6800 INCHES	ZMRP =	375.0000 IN. ZO		
SCALE =	.3600				

PARAMETRIC DATA

BETA =	10.000	ELEVON =	.000
AILRON =	.000	BDFLAP =	.000
SPDBRK =	78.500	RUDDER =	6.000

RUN NO. 140/ 0 GRADIENT INTERVAL = -5.00/ 5.00

Q	ALPHA	BAR	ALPHAU	Q1	DP/Q55	DP/Q54	DP/Q52	DP/Q53	DP/Q56
47.560	-.078	29.80000	.00000	48.00000	1.06197	-.96067	-.10007	1.12709	-.01513
47.130	5.110	29.80000	5.00000	48.00000	1.05886	-.95786	-.09978	1.13401	-.01509
47.600	10.309	29.80000	10.00000	48.00000	1.05577	-.96555	-.08954	1.12051	.01504
47.540	15.526	29.80000	15.00000	48.00000	1.06322	-.96274	-.09920	1.12740	-.01500
47.910	20.778	29.80000	20.00000	49.00000	1.08113	-.93908	-.09891	1.13426	-.01496
	GRADIENT	.00000	.00000	.00000	.00000	.00000	.00000	.00000	.00000

ARC40X80-462(OA100) OV101(ADS OFF) (HNA05S) (15 APR 82)

REFERENCE DATA

SREF =	2690.0000 SQ.FT.	XMRP =	1076.6800 IN. XO		
LREF =	474.8100 INCHES	YMRP =	.0000 IN. YO		
BREF =	936.6800 INCHES	ZMRP =	375.0000 IN. ZO		
SCALE =	.3600				

PARAMETRIC DATA

ALPHA =	10.000	BETA =	.000
ELEVON =	.000	AILRON =	.000
BDFLAP =	.000	SPDBRK =	25.000

RUN NO. 141/ 0 GRADIENT INTERVAL = -5.00/ 5.00

Q	RUDDER	BAR	ALPHAU	Q1	DP/Q55	DP/Q54	DP/Q52	DP/Q53	DP/Q56
47.240	-22.907	29.80000	10.00000	48.00000	1.05577	-.96555	-.11938	1.16126	.01504
47.740	-15.162	29.80000	10.00000	48.00000	1.06633	-.97605	-.10944	1.17144	.01504
47.530	-10.072	29.80000	10.00000	48.00000	1.06633	-.95506	-.13928	1.18163	.01504
47.600	-5.054	29.80000	10.00000	48.00000	1.05577	-.98654	-.11938	1.18163	.03009
47.530	.043	29.80000	10.00000	49.00000	1.05577	-.96555	-.12933	1.21219	.01504
47.640	5.082	29.80000	10.00000	48.00000	1.05577	-.96555	-.12933	1.21219	.03009
47.570	10.140	29.80000	10.00000	48.50000	1.06633	-.96555	-.12933	1.21219	.03009
47.570	14.990	29.90000	10.00000	48.00000	1.06633	-.95506	-.13928	1.22237	.03009
47.430	22.915	29.80000	10.00000	48.00000	1.05577	-.97605	-.13928	1.21219	.03009
	GRADIENT	.00000	.00000	.00000	.00000	.00000	.00000	.00000	.00000

ARC40X80-462(OA100) OV101(ADS OFF) (HNA05T) (15 APR 82)

REFERENCE DATA

SREF =	2690.0000 SQ.FT.	XMRP =	1076.6800 IN. XO		
LREF =	474.8100 INCHES	YMRP =	.0000 IN. YO		
BREF =	936.6800 INCHES	ZMRP =	375.0000 IN. ZO		
SCALE =	.3600				

PARAMETRIC DATA

BETA =	5.000	ELEVON =	.000
AILRON =	.000	BDFLAP =	.000
SPDBRK =	.000	RUDDER =	.000

RUN NO. 142/ 0 GRADIENT INTERVAL = -5.00/ 5.00

Q	ALPHA	BAR	ALPHAU	QI	DP/Q55	DP/Q54	DP/Q52	DP/Q53	DP/Q56
47.510	5.150	29.80000	5.00000	.00000	-.05273	.15726	-.04969	.05088	-.15028
47.650	10.351	29.80000	10.00000	2.00000	-.05258	.00000	-.14864	.05073	-.14985
47.420	15.562	29.80000	15.00000	.00000	-.05243	.10423	-.14821	.00000	-.14941
47.540	20.810	29.80000	20.00000	2.00000	.15683	.20786	-.14778	-.10088	-.22347
	GRADIENT	.00000	.00000	.00000	.00000	.00000	.00000	.00000	.00000

ARC40X80-462(OA100) OV101(ADS OFF) (HNA05U) (16 MAR 82)

REFERENCE DATA

SREF =	2690.0000 SQ.FT.	XMRP =	1076.6800 IN. XO		
LREF =	474.8100 INCHES	YMRP =	.0000 IN. YO		
BREF =	936.6800 INCHES	ZMRP =	375.0000 IN. ZO		
SCALE =	.3600				

PARAMETRIC DATA

BETA =	10.000	ELEVON =	.000
AILRON =	.000	BDFLAP =	.000
SPDBRK =	.000	RUDDER =	.000

RUN NO. 143/ 0 GRADIENT INTERVAL = -5.00/ 5.00

Q	ALPHA	BAR	ALPHAU	QI	DP/Q55	DP/Q54	DP/Q52	DP/Q53	DP/Q56
47.620	-.035	29.80000	.00000	2.00000	-.05289	.05257	-.19935	-.05103	-.22608
47.660	5.154	29.80000	5.00000	.00000	-.05273	.15726	-.24846	-.10176	-.22542
47.870	10.354	29.80000	10.00000	.00000	.00000	.05227	-.09909	.05073	-.22477
47.280	15.576	29.80000	15.00000	-1.00000	-.05243	.05212	-.14821	-.10117	-.22412
47.740	20.824	29.80000	20.00000	.00000	.05228	.15590	-.09852	.00000	-.29796
	GRADIENT	.00000	.00000	.00000	.00000	.00000	.00000	.00000	.00000

ARC40X80-462(0A100) OV101(ADS OFF) (HNA05V) (16 MAR 82)

REFERENCE DATA

SREF =	2690.0000 SQ.FT.	XMRP =	1076.6800 IN. XO		
LREF =	474.8100 INCHES	YMRP =	.0000 IN. YO		
BREF =	936.6800 INCHES	ZMRP =	375.0000 IN. ZO		
SCALE =	.3600				

PARAMETRIC DATA

BETA =	10.000	ELEVON =	.000
AILRON =	.000	BDFLAP =	.000
SPDBRK =	25.000	RUDDER =	.000

RUN NO. 144/ 0 GRADIENT INTERVAL = -5.00/ 5.00

Q	ALPHA	BAR	ALPHAU	QI	DP/Q55	DP/Q54	DP/Q52	DP/Q53	DP/Q56
47.650	-.044	29.80000	.00000	.00000	.00000	.15772	-.19935	-.05103	-.30145
47.530	5.147	29.80000	5.00000	.00000	-.05273	.05242	-.14907	-.15264	-.30057
47.640	10.349	29.80000	10.00000	.00000	.00000	.15681	-.19819	-.15219	-.29969
47.920	15.574	29.80000	15.00000	.00000	.00000	.10423	-.24702	-.05058	-.29882
47.210	20.816	29.80000	20.00000	2.00000	-.05228	.15590	-.29556	-.10088	-.37245
	GRADIENT	.00000	.00000	.00000	.00000	.00000	.00000	.00000	.00000

ARC40X80-462(0A100) OV101+NOSE GEAR(ADS OFF) (HNA05W) (16 MAR 82)

REFERENCE DATA

SREF =	2690.0000 SQ.FT.	XMRP =	1076.6800 IN. XO		
LREF =	474.8100 INCHES	YMRP =	.0000 IN. YO		
BREF =	936.6800 INCHES	ZMRP =	375.0000 IN. ZO		
SCALE =	.3600				

PARAMETRIC DATA

BETA =	.000	ELEVON =	.000
AILRON =	.000	BDFLAP =	.000
SPDBRK =	87.000	RUDDER =	.000

RUN NO. 145/ 0 GRADIENT INTERVAL = -5.00/ 5.00

Q	ALPHA	BAR	ALPHAU	QI	DP/Q55	DP/Q54	DP/Q52	DP/Q53	DP/Q56
47.450	-.089	29.84000	.00000	47.00000	1.06197	-.96067	-.07005	.94266	-.16646
47.710	5.097	29.84000	5.00000	47.00000	1.06945	-.97891	-.06984	.95012	-.21123
47.790	10.302	29.84000	10.00000	47.00000	1.06633	-.97605	-.08954	.92697	-.18053
47.640	15.510	29.84000	15.00000	50.00000	1.06322	-.98367	-.08928	.89380	-.22500
47.680	20.754	29.84000	20.00000	50.00000	1.07063	-.96082	-.09991	.87095	-.25426
	GRADIENT	.00000	.00000	.00000	.00000	.00000	.00000	.00000	.00000

ARC40X80-462(0A100) OV101+NOSE GEAR(ADS OFF) (HNA05X) (16 MAR 82)

REFERENCE DATA

SREF =	2690.0000 SQ.FT.	XMRP =	1076.6800 IN. XO		
LREF =	474.8100 INCHES	YMRP =	.0000 IN. YO		
BREF =	936.6800 INCHES	ZMRP =	375.0000 IN. ZO		
SCALE =	.3600				

PARAMETRIC DATA

BETA =	5.000	ELEVON =	.000
AILRON =	.000	BDFLAP =	.000
SPDBRK =	87.000	RUDDER =	.000

RUN NO. 146/ 0 GRADIENT INTERVAL = -5.00/ 5.00

Q	ALPHA	BAR	ALPHAU	Q1	DP/Q55	DP/Q54	DP/Q52	DP/Q53	DP/Q56
47.630	-.087	29.84000	.00000	47.50000	1.08321	-.98178	-.10007	.88118	-.27238
47.570	5.102	29.84000	5.00000	50.00000	1.06945	-.96838	-.07982	.84795	-.28667
47.600	10.304	29.84000	10.00000	50.00000	1.06633	-.97605	-.07959	.83529	-.30088
47.600	15.506	29.84000	15.00000	47.00000	1.06322	-.95228	-.06944	.81254	-.33001
47.810	20.751	29.84000	20.00000	50.00000	1.07063	-.97038	-.08902	.77980	-.32905
	GRADIENT	.00000	.00000	.00000	.00000	.00000	.00000	.00000	.00000

ARC40X80-462(0A100) OV101+NOSE GEAR(ADS OFF) (HNA05Y) (16 MAR 82)

REFERENCE DATA

SREF =	2690.0000 SQ.FT.	XMRP =	1076.6800 IN. XO		
LREF =	474.8100 INCHES	YMRP =	.0000 IN. YO		
BREF =	936.6800 INCHES	ZMRP =	375.0000 IN. ZO		
SCALE =	.3600				

PARAMETRIC DATA

BETA =	10.000	ELEVON =	.000
AILRON =	.000	BDFLAP =	.000
SPDBRK =	87.000	RUDDER =	.000

RUN NO. 147/ 0 GRADIENT INTERVAL = -5.00/ 5.00

Q	ALPHA	BAR	ALPHAU	Q1	DP/Q55	DP/Q54	DP/Q52	DP/Q53	DP/Q56
47.690	-.073	29.84000	.00000	48.00000	1.08321	-.98178	-.07005	.77813	-.33291
47.470	5.110	29.84000	5.00000	50.00000	1.08004	-.96838	-.05987	.76682	-.33194
47.620	10.303	29.84000	10.00000	48.00000	1.05577	-.95506	-.06964	.76398	-.33097
47.590	15.537	29.84000	15.00000	47.00000	1.06322	-.97321	-.06944	.74145	-.34500
47.460	20.779	29.84000	20.00000	50.00000	1.06014	-.95995	-.06924	.70891	-.35896
	GRADIENT	.00000	.00000	.00000	.00000	.00000	.00000	.00000	.00000

ARC40X80-462(OA1C0) OV101+NOSE GEAR(FTP,ADS OFF) (HNA05Z) (16 MAR 82)

REFERENCE DATA

SREF =	2690.0000	SQ.FT.	XMRP =	1076.6800	IN. XO		
LREF =	474.8100	INCHES	YMRP =	.0000	IN. YO		
BREF =	936.6800	INCHES	ZMRP =	375.0000	IN. ZO		
SCALE =	.3600						

PARAMETRIC DATA

BETA =	.000	ELEVON =	.000
AILRON =	.000	BDFLAP =	.000
SPDBRK =	.000	RUDDER =	.000

RUN NO. 148/ 0 GRADIENT INTERVAL = -5.00/ 5.00

Q	ALPHA	BAR	ALPHAU	Q1	DP/Q55	DP/Q54	DP/Q52	DP/Q53	DP/Q56
47.710	-.050	29.85000	.00000	50.00000	1.08321	-1.00289	-.04003	.94266	-.16646
47.510	5.148	29.85000	5.00000	50.00000	1.08004	-.98943	-.04989	.91947	-.16597
47.730	10.347	29.85000	10.00000	48.00000	1.07689	-.99704	-.03979	.89641	-.19557
47.530	15.559	29.85000	15.00000	47.50000	1.07375	-.98367	-.04960	.88364	-.19500
47.600	20.802	29.85000	20.00000	47.50000	1.09163	-.95995	-.04945	.86082	-.23931
	GRADIENT	.00000	.00000	.00000	.00000	.00000	.00000	.00000	.00000

ARC40X80-462(OA100) OV101+NOSE GEAR(FTP,ADS OFF) (HNA06A) (16 MAR 82)

REFERENCE DATA

SREF =	2690.0000	SQ.FT.	XMRP =	1076.6800	IN. XO		
LREF =	474.8100	INCHES	YMRP =	.0000	IN. YO		
BREF =	936.6800	INCHES	ZMRP =	375.0000	IN. ZO		
SCALE =	.3600						

PARAMETRIC DATA

BETA =	5.000	ELEVON =	.000
AILRON =	.000	BDFLAP =	.000
SPDBRK =	.000	RUDDER =	.000

RUN NO. 149/ 0 GRADIENT INTERVAL = -5.00/ 5.00

Q	ALPHA	BAR	ALPHAU	Q1	DP/Q55	DP/Q54	DP/Q52	DP/Q53	DP/Q56
47.470	-.047	29.90000	.00000	48.00000	1.07259	-.95011	-.02001	.95290	-.12106
47.600	5.147	29.90000	5.00000	48.00000	1.06945	-.92628	-.01996	.93990	-.12070
47.470	10.342	29.90000	10.00000	48.00000	1.05577	-.94456	-.00995	.94734	-.12035
47.480	15.552	29.90000	15.00000	48.00000	1.06322	-.94181	-.00992	.94458	-.07500
47.520	20.802	29.90000	20.00000	48.50000	1.08113	-.91821	.00000	.91146	-.11965
	GRADIENT	.00000	.00000	.00000	.00000	.00000	.00000	.00000	.00000

ARC40X80-462(0A100) 0V101+NOSE GEAR(FTP,ADS OFF) (HNA06B) (16 MAR 82)

REFERENCE DATA

SREF =	2690.0000 SQ.FT.	XMRP =	1076.6800 IN.	XO	
LREF =	474.8100 INCHES	YMRP =	.0000 IN.	YO	
BREF =	936.6800 INCHES	ZMRP =	375.0000 IN.	ZO	
SCALE =	.3600				

PARAMETRIC DATA

BETA =	10.000	ELEVON =	.000
AILRON =	.000	BDFLAP =	.000
SPDBRK =	.000	RUDDER =	.000

RUN NO. 150/ 0 GRADIENT INTERVAL = -5.00/ 5.00

Q	ALPHA	BAR	ALPHAU	QI	DP/Q55	DP/Q54	DP/Q52	DP/Q53	DP/Q56
47.500	-.037	29.90000	.00000	48.50000	1.06197	-.95011	.01001	.93241	-.09079
47.210	5.149	29.90000	5.00000	47.50000	1.05986	-.94733	.01996	.93890	-.09053
47.360	10.344	29.90000	10.00000	48.00000	1.05577	-.94456	.02985	.93715	-.04513
47.620	15.575	29.90000	15.00000	48.50000	1.06322	-.94181	.02976	.93443	-.06000
47.570	20.823	29.90000	20.00000	48.50000	1.06014	-.93908	.02967	.93171	-.05983
	GRADIENT	.00000	.00000	.00000	.00000	.00000	.00000	.00000	.00000

ARC40X80-462(0A100) 0V101(FTP AND ADS OFF) (HNA06C) (16 MAR 82)

REFERENCE DATA

SREF =	2690.0000 SQ.FT.	XMRP =	1076.6800 IN.	XO	
LREF =	474.8100 INCHES	YMRP =	.0000 IN.	YO	
BREF =	936.6800 INCHES	ZMRP =	375.0000 IN.	ZO	
SCALE =	.3600				

PARAMETRIC DATA

BETA =	.000	ELEVON =	.000
AILRON =	.000	BDFLAP =	.000
SPDBRK =	.000	RUDDER =	.000

RUN NO. 151/ 0 GRADIENT INTERVAL = -5.00/ 5.00

Q	ALPHA	BAR	ALPHAU	QI	DP/Q55	DP/Q54	DP/Q52	DP/Q53	DP/Q56
47.680	-.056	29.90000	.00000	48.00000	1.06321	-.96067	-.02001	.96315	-.10593
47.610	5.140	29.90000	5.00000	48.50000	1.06945	-.95786	-.01996	.97055	-.10562
47.670	10.340	29.90000	10.00000	48.50000	1.06633	-.95506	-.01990	.96771	-.07522
47.610	15.551	29.90000	15.00000	48.00000	1.06322	-.94181	-.01984	.95474	-.07500
47.690	20.824	29.90000	20.00000	48.00000	1.07063	-.94951	-.01978	.97222	-.07478
	GRADIENT	.00000	.00000	.00000	.00000	.00000	.00000	.00000	.00000

ARC40X80-462(OA100) OV101(FTP AND ADS OFF) (HNA06D) (16 MAR 82)

REFERENCE DATA

SREF =	2690.0000 SQ.FT.	XMRP =	1076.6800 IN. XO		
LREF =	474.8100 INCHES	YMRP =	.0000 IN. YO		
BREF =	936.6800 INCHES	ZMRP =	375.0000 IN. ZO		
SCALE =	.3600				

PARAMETRIC DATA

BETA =	.000	ELEVON =	.000
AILRON =	.000	BDFLAP =	.000
SPDBRK =	.000	RUDDER =	5.000

RUN NO. 152/ 0 GRADIENT INTERVAL = -5.00/ 5.00

Q	ALPHA	BAR	ALPHAU	Q1	DP/Q55	DP/Q54	DP/Q52	DP/Q53	DP/Q56
47.560	-.057	29.90000	.00000	48.50000	1.07259	-.97122	.00000	1.00414	-.04540
47.720	5.140	29.90000	5.00000	48.50000	1.06945	-.95786	-.00998	1.01141	-.01509
47.480	10.340	29.90000	10.00000	48.00000	1.06633	-.95506	.00995	.99827	-.03009
47.580	15.556	29.90000	15.00000	48.00000	1.06322	-.95228	.00000	.99537	.00000
47.660	20.824	29.90000	20.00000	48.00000	1.07063	-.93908	-.00989	.99248	-.04487
	GRADIENT	.00000	.00000	.00000	.00000	.00000	.00000	.00000	.00000

ARC40X80-462(OA100) OV101(FTP AND ADS OFF) (HNA06E) (16 MAR 82)

REFERENCE DATA

SREF =	2690.0000 SQ.FT.	XMRP =	1076.6800 IN. XO		
LREF =	474.8100 INCHES	YMRP =	.0000 IN. YO		
BREF =	936.6800 INCHES	ZMRP =	375.0000 IN. ZO		
SCALE =	.3600				

PARAMETRIC DATA

BETA =	.000	ELEVON =	.000
AILRON =	.000	BDFLAP =	.000
SPDBRK =	.000	RUDDER =	10.000

RUN NO. 153/ 0 GRADIENT INTERVAL = -5.00/ 5.00

Q	ALPHA	BAR	ALPHAU	Q1	DP/Q55	DP/Q54	DP/Q52	DP/Q53	DP/Q56
47.620	-.054	29.90000	.00000	48.00000	1.07259	-.96067	-.02001	1.00414	-.09079
47.720	5.139	29.90000	5.00000	48.00000	1.06945	-.96838	-.01996	.99098	-.07544
47.540	10.338	29.90000	10.00000	48.00000	1.06633	-.95506	-.01990	.98809	-.07522
47.750	15.553	29.90000	15.00000	48.00000	1.07375	-.96274	-.01984	.99537	-.06000
47.610	20.822	29.90000	20.00000	48.00000	1.06014	-.94951	-.00989	.98235	-.07478
	GRADIENT	.00000	.00000	.00000	.00000	.00000	.00000	.00000	.00000

ARC40X80-462(OA100) OV101(FTP AND ADS OFF) (HNA06F) (16 MAR 82)

REFERENCE DATA

SREF =	2690.0000 SQ.FT.	XMRP =	1076.6800 IN. XO		
LREF =	474.8100 INCHES	YMRP =	.0000 IN. YO		
BREF =	936.6800 INCHES	ZMRP =	375.0000 IN. ZO		
SCALE =	.3600				

PARAMETRIC DATA

BETA =	.000	ELEVON =	.000
AILRON =	.000	BDFLAP =	.000
SPDBRK =	.000	RUDDER =	15.000

RUN NO. 154/ 0 GRADIENT INTERVAL = -5.00/ 5.00

Q	ALPHA	BAR	ALPHAU	QI	DP/Q55	DP/Q54	DP/Q52	DP/Q53	DP/Q56
47.520	-.056	29.90000	.00000	48.00000	1.06197	-.96067	.00000	1.02463	-.03026
47.620	5.138	29.90000	5.00000	48.00000	1.06945	-.97891	.00000	1.03184	-.03018
47.750	10.338	29.90000	10.00000	48.50000	1.06633	-.95506	.00000	1.02883	-.01504
47.570	15.550	29.90000	15.00000	48.00000	1.05270	-.96274	.00000	1.04615	.00000
47.610	20.822	29.90000	20.00000	48.00000	1.06014	-.94951	.00989	1.03299	.00000
	GRADIENT	.00000	.00000	.00000	.00000	.00000	.00000	.00000	.00000

ARC40X80-462(OA100) OV101(FTP AND ADS OFF) (HNA06G) (15 APR 82)

REFERENCE DATA

SREF =	2690.0000 SQ.FT.	XMRP =	1076.6800 IN. XO		
LREF =	474.8100 INCHES	YMRP =	.0000 IN. YO		
BREF =	936.6800 INCHES	ZMRP =	375.0000 IN. ZO		
SCALE =	.3600				

PARAMETRIC DATA

BETA =	.000	ELEVON =	.000
AILRON =	.000	BDFLAP =	.000
SPDBRK =	.000	RUDDER =	20.500

RUN NO. 155/ 0 GRADIENT INTERVAL = -5.00/ 5.00

Q	ALPHA	BAR	ALPHAU	QI	DP/Q55	DP/Q54	DP/Q52	DP/Q53	DP/Q56
47.510	-.061	29.90000	.00000	48.00000	1.06197	-.97122	.02001	1.08611	.03026
47.600	5.135	29.90000	5.00000	48.00000	1.05886	-.94733	.01996	1.09314	.04526
47.580	10.335	29.90000	10.00000	48.00000	1.05577	-.95506	.00995	1.08995	.06018
47.680	15.550	29.90000	15.00000	48.00000	1.06322	-.95228	.00992	1.10709	.07500
47.440	20.819	29.90000	20.00000	47.50000	1.04964	-.94951	.00989	1.10388	.08974
	GRADIENT	.00000	.00000	.00000	.00000	.00000	.00000	.00000	.00000

ARC40X80-462(OA100) OV101(FTP AND ADS OFF) (HNA06H) (16 MAR 82)

REFERENCE DATA

SREF =	2690.0000	SQ.FT.	XMRP =	1076.6800	IN.	XO	
LREF =	474.8100	INCHES	YMRP =	.0000	IN.	YO	
BREF =	936.6800	INCHES	ZMRP =	375.0000	IN.	ZO	
SCALE =	.3600						

PARAMETRIC DATA

BETA =	5.000	ELEVON =	.000
AILRON =	.000	BDFLAP =	.000
SPDBRK =	.000	RUDDER =	.000

RUN NO. 156/ 0 GRADIENT INTERVAL = -5.00/ 5.00

Q	ALPHA	BAR	ALPHAU	QI	DP/Q55	DP/Q54	DP/Q52	DP/Q53	DP/Q56
47.640	-.047	29.90000	.00000	48.00000	1.06197	-.97122	.02001	1.16808	.12106
47.700	5.147	29.90000	5.00000	48.00000	1.05886	-.96838	.01996	1.17487	.15088
47.530	10.343	29.90000	10.00000	48.00000	1.05577	-.95506	.01990	1.18163	.15044
47.460	15.556	29.90000	15.00000	48.00000	1.05270	-.96274	.01984	1.18834	.15000
47.670	20.810	29.90000	20.00000	48.00000	1.04964	-.93908	.01978	1.17477	.13461
	GRADIENT	.00000	.00000	.00000	.00000	.00000	.00000	.00000	.00000

ARC40X80-462(OA100) OV101(FTP AND ADS OFF) (HNA06I) (16 MAR 82)

REFERENCE DATA

SREF =	2690.0000	SQ.FT.	XMRP =	1076.6800	IN.	XO	
LREF =	474.8100	INCHES	YMRP =	.0000	IN.	YO	
BREF =	936.6800	INCHES	ZMRP =	375.0000	IN.	ZO	
SCALE =	.3600						

PARAMETRIC DATA

BETA =	5.000	ELEVON =	.000
AILRON =	.000	BDFLAP =	.000
SPDBRK =	.000	RUDDER =	5.000

RUN NO. 157/ 0 GRADIENT INTERVAL = -5.00/ 5.00

Q	ALPHA	BAR	ALPHAU	QI	DP/Q55	DP/Q54	DP/Q52	DP/Q53	DP/Q56
47.530	-.050	29.90000	.00000	48.00000	1.05135	-.96067	.02001	1.22956	.19672
47.550	5.145	29.90000	.00000	48.00000	1.06197	-.98178	.01001	1.26029	.19672
47.470	10.342	29.90000	10.00000	48.00000	1.05577	-.96555	.01990	1.25293	.22566
47.480	15.554	29.90000	15.00000	48.00000	1.04217	-.96274	.01984	1.26960	.22500
47.650	20.806	29.90000	20.00000	48.00000	1.09163	-.93908	.00989	1.27604	.25426
	GRADIENT	.00000	.00000	.00000	.00000	.00000	.00000	.00000	.00000

ARC40X80-462(0A100) OV101(FTP AND ADS OFF) (HNA06J) (16 MAR 82)

REFERENCE DATA

SREF =	2690.0000 SQ.FT.	XMRP =	1076.6800 IN. XO		
LREF =	474.8100 INCHES	YMRP =	.0000 IN. YO		
BREF =	936.6800 INCHES	ZMRP =	375.0000 IN. ZO		
SCALE =	.3600				

PARAMETRIC DATA

BETA =	5.000	ELEVON =	.000
AILRON =	.000	BDFLAP =	.000
SPDBRK =	.000	RUDDER =	10.000

RUN NO. 158/ 0 GRADIENT INTERVAL = -5.00/ 5.00

Q	ALPHA	BAR	ALPHAU	Q1	DP/Q55	DP/Q54	DP/Q52	DP/Q53	DP/Q56
47.460	-.051	29.90000	.00000	47.50000	1.06197	-.98178	.02001	1.33202	.27238
47.530	5.145	29.90000	5.00000	47.50000	1.04827	-.97891	.00998	1.32812	.28667
47.310	10.341	29.90000	10.00000	47.50000	1.04521	-.97605	-.00995	1.32424	.28584
47.450	15.583	29.90000	15.00000	48.00000	1.04217	-.98367	.00000	1.34070	.31500
47.870	20.783	29.90000	20.00000	48.00000	1.06014	-.97038	.00000	1.34693	.29913
	GRADIENT	.00000	.00000	.00000	.00000	.00000	.00000	.00000	.00000

ARC40X80-462(0A100) OV101(FTP AND ADS OFF) (HNA06K) (16 MAR 82)

REFERENCE DATA

SREF =	2690.0000 SQ.FT.	XMRP =	1076.6800 IN. XO		
LREF =	474.8100 INCHES	YMRP =	.0000 IN. YO		
BREF =	936.6800 INCHES	ZMRP =	375.0000 IN. ZO		
SCALE =	.3600				

PARAMETRIC DATA

BETA =	5.000	ELEVON =	.000
AILRON =	.000	BDFLAP =	.000
SPDBRK =	.000	RUDDER =	15.000

RUN NO. 159/ 0 GRADIENT INTERVAL = -5.00/ 5.00

Q	ALPHA	BAR	ALPHAU	Q1	DP/Q55	DP/Q54	DP/Q52	DP/Q53	DP/Q56
47.480	-.055	29.90000	.00000	48.00000	1.06197	-.98178	-.01001	1.41399	.34804
47.690	5.140	29.90000	5.00000	48.00000	1.05886	-.98943	.00000	1.40985	.36211
47.600	10.326	29.90000	10.00000	47.50000	1.05577	-.98654	.00000	1.41592	.34601
47.680	15.549	29.90000	15.00000	48.00000	1.04217	-.97321	-.01984	1.41179	.34500
47.930	20.785	29.90000	20.00000	48.50000	1.04964	-.97038	-.01978	1.41782	.40383
	GRADIENT	.00000	.00000	.00000	.00000	.00000	.00000	.00000	.00000

ARC40X80-462(0A100) OV101(FTP AND ADS OFF) (HNA06L) (15 APR 82)

REFERENCE DATA

SREF =	2690.0000 SQ.FT.	XMRP =	1076.6800 IN.	XO	
LREF =	474.8100 INCHES	YMRP =	.0000 IN.	YO	
BREF =	936.6800 INCHES	ZMRP =	375.0000 IN.	ZO	
SCALE =	.3600				

PARAMETRIC DATA

BETA =	5.000	ELEVON =	.000
AILRON =	.000	BDFLAP =	.000
SPDBRK =	.000	RUDDER =	30.600

RUN NO. 160/ 0 GRADIENT INTERVAL = -5.00/ 5.00

Q	ALPHA	BAR	ALPHAU	QI	DP/Q55	DP/Q54	DP/Q52	DP/Q53	DP/Q56
47.380	- 050	29.90000	.00000	48.00000	1.05135	-.98176	-.01001	1.48571	.42371
47.530	5.141	29.90000	5.00000	48.00000	1.05866	-.97891	-.00998	1.50170	.42738
47.680	10.336	29.90000	10.00000	48.00000	1.05577	-.98654	-.01990	1.50760	.42123
47.630	15.547	29.90000	15.00000	48.00000	1.05270	-.98367	-.02976	1.50321	.43501
47.440	20.800	29.90000	20.00000	48.00000	1.04954	-.97038	-.02967	1.48672	.43374
	GRADIENT	.00000	.00000	.00000	.00000	.00000	.00000	.00000	.00000

ARC40X80-462(0A100) OV101(ADS OFF) (HNA06M) (16 MAR 82)

REFERENCE DATA

SREF =	2690.0000 SQ.FT.	XMRP =	1076.6800 IN.	XO	
LREF =	474.8100 INCHES	YMRP =	.0000 IN.	YO	
BREF =	936.6800 INCHES	ZMRP =	375.0000 IN.	ZO	
SCALE =	.3600				

PARAMETRIC DATA

BETA =	10.000	ELEVON =	.000
AILRON =	.000	BDFLAP =	.000
SPDBRK =	.000	RUDDER =	.000

RUN NO. 161/ 0 GRADIENT INTERVAL = -5.00/ 5.00

Q	ALPHA	BAR	ALPHAU	QI	DP/Q55	DP/Q54	DP/Q52	DP/Q53	DP/Q56
47.610	-.038	29.85000	.00000	47.50000	1.07259	-.97122	1.05075	-.11271	-.10593
47.540	5.151	29.85000	5.00000	47.50000	1.06945	-.96838	.98781	-.05108	-.10562
47.550	10.352	29.85000	10.00000	47.50000	1.05577	-.96555	.92523	.00000	-.10531
47.970	15.573	29.85000	15.00000	48.00000	1.06322	-.95228	.87294	.05078	-.10500
47.730	20.823	29.85000	20.00000	48.00000	1.10212	-.94951	.82095	.09115	-.08974
	GRADIENT	.00000	.00000	.00000	.00000	.00000	.00000	.00000	.00000

ARC40X80-462(OA100) OV101(ADS OFF) (HNA06N) (16 MAR 82)

REFERENCE DATA

SREF =	2690.0000 SQ.FT.	XMRP =	1076.6800 IN.	XO	
LREF =	474.8100 INCHES	YMRP =	.0000 IN.	YO	
BREF =	936.6800 INCHES	ZMRP =	375.0000 IN.	ZO	
SCALE =	.3600				

PARAMETRIC DATA

BETA =	10.000	ELEVON =	.000
AILRON =	.000	BDFLAP =	.000
SPDBRK =	.000	RUDDER =	5.000

RUN NO. 162/ 0 GRADIENT INTERVAL = -5.00/ 5.00

Q	ALPHA	BAR	ALPHAU	Q1	DP/Q55	DP/Q54	DP/Q52	DP/Q53	DP/Q56
47.570	-.037	29.85000	.00000	47.50000	1.06197	-.97122	1.06076	-.11271	-.10593
47.700	5.151	29.85000	5.00000	48.00000	1.05886	-.97891	1.00776	-.04087	-.10562
47.440	10.349	29.85000	10.00000	47.50000	1.06633	-.96555	.90533	.00000	-.10531
47.630	15.572	29.85000	15.00000	48.00000	1.06322	-.96274	.88285	.05078	-.12000
47.520	20.823	29.85000	20.00000	48.00000	1.08113	-.93908	.81106	.10127	-.08974
	GRADIENT	.00000	.00000	.00000	.00000	.00000	.00000	.00000	.00000

ARC40X80-462(OA100) OV101(ADS OFF) (HNA060) (16 MAR 82)

REFERENCE DATA

SREF =	2690.0000 SQ.FT.	XMRP =	1076.6800 IN.	XO	
LREF =	474.8100 INCHES	YMRP =	.0000 IN.	YO	
BREF =	936.6800 INCHES	ZMRP =	375.0000 IN.	ZO	
SCALE =	.3600				

PARAMETRIC DATA

BETA =	10.000	ELEVON =	.000
AILRON =	.000	BDFLAP =	.000
SPDBRK =	.000	RUDDER =	10.000

RUN NO. 163/ 0 GRADIENT INTERVAL = -5.00/ 5.00

Q	ALPHA	BAR	ALPHAU	Q1	DP/Q55	DP/Q54	DP/Q52	DP/Q53	DP/Q56
47.640	5.150	29.85000	5.00000	48.00000	1.06945	-.96838	.99778	-.05108	-.10562
47.480	10.348	29.85000	10.00000	48.00000	1.05577	-.95506	.94512	.01019	-.10531
47.500	15.575	29.85000	15.00000	47.50000	1.05270	-.96274	.86302	.05078	-.09000
47.740	20.820	29.85000	20.00000	48.00000	1.08113	-.95995	.82095	.09115	-.11965
	GRADIENT	.00000	.00000	.00000	.00000	.00000	.00000	.00000	.00000

ARC40X80-462(OA100) OV101(ADS OFF) (HNA06P) (16 MAR 82)

REFERENCE DATA

SREF =	2690.0000 SQ.FT.	XMRP =	1076.6800 IN. XO		
LREF =	474.8100 INCHES	YMRP =	.0000 IN. YO		
BREF =	936.6800 INCHES	ZMRP =	375.0000 IN. ZO		
SCALE =	.3600				

PARAMETRIC DATA

BETA =	10.000	ELEVON =	.000
AILRON =	.000	BDFLAP =	.000
SPDBRK =	.000	RUDDER =	15.000

RUN NO. 164/ 0 GRADIENT INTERVAL = -5.00/ 5.00

Q	ALPHA	BAR	ALPHAU	Q1	DP/Q55	DP/Q54	DP/Q52	DP/Q53	DP/Q56
47.630	-.040	29.85000	.00000	48.00000	1.07259	-.96067	1.07076	-.11271	-.10593
47.450	5.148	29.85000	5.00000	47.50000	1.05886	-.95838	.99778	-.05108	-.10562
47.590	10.346	29.85000	10.00000	47.50000	1.06633	-.96555	.94512	.00000	-.10531
47.510	15.566	29.85000	15.00000	48.00000	1.05270	-.96274	.88285	.04053	-.10500
47.820	20.818	29.85000	20.00000	48.00000	1.07063	-.94951	.84073	.10127	-.11965
	GRADIENT	.00000	.00000	.00000	.00000	.00000	.00000	.00000	.00000

ARC40X80-462(OA100) OV101(ADS OFF) (HNA06Q) (15 APR 82)

REFERENCE DATA

SREF =	2690.0000 SQ.FT.	XMRP =	1076.6800 IN. XO		
LREF =	474.8100 INCHES	YMRP =	.0000 IN. YO		
BREF =	936.6800 INCHES	ZMRP =	375.0000 IN. ZO		
SCALE =	.3600				

PARAMETRIC DATA

BETA =	10.000	ELEVON =	.000
AILRON =	.000	BDFLAP =	.000
SPDBRK =	.000	RUDDER =	20.500

RUN NO. 165/ 0 GRADIENT INTERVAL = -5.00/ 5.00

Q	ALPHA	BAR	ALPHAU	Q1	DP/Q55	DP/Q54	DP/Q52	DP/Q53	DP/Q56
47.640	-.043	29.85000	.00000	48.00000	1.07259	-.98178	1.06076	-.10246	-.07566
47.600	5.147	29.85000	5.00000	48.00000	1.06945	-.97891	1.00776	-.05108	-.07544
47.570	10.342	29.85000	10.00000	47.50000	1.05577	-.97605	.94512	.00000	-.09026
47.760	15.561	29.85000	15.00000	48.00000	1.06322	-.98367	.89277	.04063	-.10500
47.670	20.817	29.85000	20.00000	48.00000	1.04964	-.95995	.84073	.10127	-.10470
	GRADIENT	.00000	.00000	.00000	.00000	.00000	.00000	.00000	.00000

ARC40X80-462(OA100) OV101(ADS OFF) (HNA06R) (16 MAR 82)

REFERENCE DATA

SREF =	2690.0000 SQ.FT.	XMRP =	1076.6800 IN.	XO
LREF =	474.8100 INCHES	YMRP =	.0000 IN.	YO
BREF =	936.6800 INCHES	ZMRP =	375.0000 IN.	ZO
SCALE =	.3600			

PARAMETRIC DATA

BETA =	.000	ELEVON =	.000
AILRON =	.000	BDFLAP =	.000
SPDBRK =	25.000	RUDDER =	.000

RUN NO. 167/ 0 GRADIENT INTERVAL = -5.00/ 5.00

Q	ALPHA	BAR	ALPHAU	QI	DP/Q55	DP/Q54	DP/Q52	DP/Q53	DP/Q56
47.470	-5.243	29.85000	-5.00000	47.00000	1.06510	-1.00585	1.12410	-.10277	-.07588
47.570	-2.651	29.85000	-2.50000	47.50000	1.07417	-1.00437	1.09238	-.08209	-.07577
47.600	-.058	29.85000	.00000	47.50000	1.06197	-1.00289	1.05075	-.07172	-.07566
47.550	2.540	29.85000	2.50000	47.50000	1.06042	-1.00142	1.01923	-.02046	-.04533
47.580	5.139	29.85000	5.00000	47.50000	1.05886	-1.01048	.97783	.00000	-.07544
47.810	7.739	29.85000	7.50000	47.50000	1.05731	-1.00901	.94651	.03060	-.07533
47.630	10.342	29.85000	10.00000	47.00000	1.06633	-.99704	.92523	.06112	-.07522
47.580	11.379	29.85000	11.00000	47.50000	1.05515	-1.00694	.89486	.07126	-.07518
47.690	12.421	29.85000	12.00000	47.50000	1.05454	-.98539	.90428	.08140	-.07513
47.670	13.462	29.85000	13.00000	47.50000	1.05392	-.99529	.88389	.08135	-.07509
47.600	14.505	29.85000	14.00000	47.00000	1.05331	-.97377	.86352	.09146	-.07504
47.680	15.549	29.85000	15.00000	47.00000	1.06322	-.98367	.85310	.10157	-.07500
47.520	16.601	29.85000	16.00000	47.50000	1.06260	-1.00401	.83277	.11166	-.07496
47.620	17.651	29.85000	17.00000	47.50000	1.06199	-.99298	.83229	.11160	-.07491
47.520	18.708	29.85000	18.00000	47.50000	1.05086	-.99240	.84171	.12167	-.08984
47.490	19.768	29.85000	19.00000	47.50000	1.06075	-.99182	.82142	.13173	-.07483
47.660	20.817	29.85000	20.00000	47.50000	1.06014	-.99125	.81106	.12153	-.08974
	GRADIENT	.00000	.96321	.00000	-.00265	.00057	-.01409	.01187	.00587

ARC40X80-462(0A100) OV101(ADS OFF) (HNA065) (15 APR 82)

REFERENCE DATA

SREF =	2690.0000 SQ.FT.	XMRP =	1076.6800 IN. XO		
LREF =	474.8100 INCHES	YMRP =	.0000 IN. YO		
BREF =	936.6800 INCHES	ZMRP =	375.0000 IN. ZO		
SCALE =	.3600				

PARAMETRIC DATA

BETA =	-5.000	ELEVON =	.000
AILRON =	.000	BDFLAP =	.000
SPDBRK =	25.000	RUDDER =	.000

RUN NO. 47/ 0 GRADIENT INTERVAL = -5.00/ 5.00

Q	ALPHA	BAR	ALPHAU	Q1	DP/Q55	DP/Q54	DP/Q52	DP/Q53	DP/Q56
94.360	-5.233	29.88000	-5.00000	98.00000	1.08199	-.00535	1.01450	.10388	.04602
94.320	-2.540	29.88000	-2.50000	98.00000	1.06963	-.00534	1.01300	.10372	.03064
94.430	-.047	29.88000	.00000	98.50000	1.06805	-.02134	1.01150	.10357	.03824
94.430	2.550	29.88000	2.50000	98.00000	1.06647	-.00533	.99980	.09307	.02291
94.430	5.148	29.88000	5.00000	98.00000	1.06490	-.00532	.99843	.08777	.03813
94.320	7.747	29.88000	7.50000	98.00000	1.05264	-.00531	1.00199	.08764	.03807
94.550	10.348	29.88000	10.00000	98.00000	1.05110	.00000	1.00555	.08237	.03801
94.320	11.396	29.88000	11.00000	98.00000	1.03981	-.00530	1.00998	.07717	.03039
94.410	12.437	29.88000	12.00000	97.50000	1.04453	.00000	1.01441	.07713	.03797
94.660	13.479	29.88000	13.00000	98.50000	1.04924	.00000	1.01883	.06680	.03036
94.570	14.522	29.88000	14.00000	98.00000	1.04863	-.01058	1.02325	.06677	.02275
94.550	15.570	29.88000	15.00000	98.50000	1.03737	-.00529	1.02265	.06673	.03790
94.360	16.617	29.88000	16.00000	98.00000	1.05803	-.00529	1.02205	.06156	.03030
94.270	17.676	29.88000	17.00000	98.00000	1.03616	.00000	1.01644	.05639	.03786
94.500	18.727	29.88000	18.00000	98.50000	1.04086	-.00528	1.02085	.05636	.02270
94.570	19.777	29.88000	19.00000	98.50000	1.04025	.00000	1.03026	.05121	.03025
94.590	20.820	29.88000	20.00000	98.50000	1.03434	-.00527	1.02465	.05118	.02267
94.340	21.861	29.88000	21.00000	98.50000	1.02843	.00000	1.02905	.04603	.03777
	GRADIENT	-.00000	.96341	-.00007	-.00061	.00001	-.00252	-.00205	-.00149

ARC40X80-462(OA100) OV101(ADS OFF) (HNA06T) (15 APR 82)

REFERENCE DATA

SREF =	2690.0000 SQ.FT.	XMRP =	1076.6800 IN. XO		
LREF =	474.8100 INCHES	YMRP =	.0000 IN. YO		
BREF =	936.6800 INCHES	ZMRP =	375.0000 IN. ZO		
SCALE =	.3600				

PARAMETRIC DATA

BETA =	2.000	ELEVON =	.000
AILRON =	.000	BDFLAP =	.000
SPDBRK =	25.000	RUDDER =	.000

RUN NO. 168/ 0 GRADIENT INTERVAL = -5.00/ 5.00

Q	ALPHA	BAR	ALPHAU	QI	DP/Q55	DP/Q54	DP/Q52	DP/Q53	DP/Q56
47.490	-5.236	29.84000	-5.00000	47.00000	1.06510	-1.01644	1.01370	-.12332	-.16695
47.640	-2.648	29.84000	-2.50000	47.00000	1.06353	-1.00437	.97212	-.10261	-.18186
47.650	-.056	29.84000	.00000	47.00000	1.06197	-1.01345	.95068	-.08197	-.15132
47.620	2.539	29.84000	2.50000	47.00000	1.06042	-.98034	.88933	-.03069	-.19643
47.610	5.139	29.84000	.00000	47.00000	1.06197	-1.00289	.84060	.00000	-.19672
47.580	7.739	29.84000	7.50000	47.00000	1.05731	-.99850	.78710	.03060	-.19586
47.630	10.339	29.84000	10.00000	47.00000	1.05577	-.99704	.75610	.05093	-.22566
47.580	11.382	29.84000	11.00000	47.00000	1.06571	-.98646	.72583	.07126	-.22553
47.620	12.421	29.84000	12.00000	47.00000	1.05454	-.99588	.71547	.07122	-.22540
47.510	13.462	29.84000	13.00000	46.00000	1.05392	-.98482	.69519	.09152	-.25530
47.530	14.508	29.84000	14.00000	47.00000	1.05331	-.98424	.68486	.11179	-.24014
47.560	15.551	29.84000	15.00000	47.00000	1.06322	-.98367	.65470	.09141	-.25500
47.730	16.598	29.84000	16.00000	47.00000	1.06260	-.99366	.63449	.10151	-.26985
47.530	17.653	29.84000	17.00000	47.00000	1.06199	-.97207	.62422	.13188	-.26969
47.600	18.709	29.84000	18.00000	47.00000	1.07188	-.96106	.60405	.12167	-.26953
47.740	19.762	29.84000	19.00000	47.00000	1.07126	-.98139	.58390	.13173	-.29931
47.450	20.817	29.84000	20.00000	47.00000	1.06014	-.97038	.56378	.13166	-.31409
	GRADIENT	-.00000	.96391	-.00000	-.00060	.00463	-.01596	.01387	-.00281

ARC40X80-462(OA100) OV101(ADS OFF) (HNA06U) (16 MAR 82)

REFERENCE DATA

SREF =	2690.0000 SQ.FT.	XMRP =	1076.6800 IN. XO		
LREF =	474.8100 INCHES	YMRP =	.0000 IN. YO		
BREF =	936.6800 INCHES	ZMRP =	375.0000 IN. ZO		
SCALE =	.3600				

PARAMETRIC DATA

BETA =	10.000	ELEVON =	.000
AILRON =	.000	BDFLAP =	.000
SPDBRK =	25.000	RUDDER =	.000

RUN NO. 169/ 0 GRADIENT INTERVAL = -5.00/ 5.00

Q	ALPHA	BAR	ALPHAU	QI	DP/Q55	DP/Q54	DP/Q52	DP/Q53	DP/Q56
47.530	-5.219	29.84000	-5.00000	47.00000	1.06510	-.99526	.89326	-.17470	-.33389
47.640	-2.630	29.84000	-2.50000	47.00000	1.07417	-1.00437	.85186	-.15392	-.33340
47.640	-.041	29.84000	.00000	47.00000	1.06197	-1.00289	.82058	-.11271	-.33291
47.710	2.553	29.84000	2.50000	47.00000	1.07102	-1.00142	.78940	-.08185	-.33242
47.620	5.146	29.84000	5.00000	47.00000	1.05886	-.99996	.75831	-.05108	-.34702
47.620	7.550	29.84000	7.50000	47.00000	1.05731	-.98799	.73728	-.04081	-.34652
47.620	10.348	29.84000	10.00000	47.00000	1.05577	-.99704	.66656	.00000	-.33097
47.740	11.389	29.84000	11.00000	47.00000	1.06571	-.99646	.64629	.02036	-.37588
47.600	12.433	29.84000	12.00000	47.00000	1.05454	-.99588	.63597	.02035	-.37566
47.480	13.480	29.84000	13.00000	47.00000	1.05392	-.98482	.61574	.03051	-.36042
47.500	14.523	29.84000	14.00000	47.00000	1.04278	-.98424	.60546	.04065	-.36021
47.620	15.575	29.84000	15.00000	47.00000	1.05270	-.99413	.59518	.05078	-.37500
47.600	16.625	29.84000	16.00000	47.00000	1.05208	-.98310	.57501	.06091	-.37479
47.500	17.671	29.84000	17.00000	47.00000	1.05147	-.98253	.56477	.07101	-.38955
47.550	18.721	29.84000	18.00000	47.00000	1.05086	-.98196	.55454	.08111	-.38933
47.530	19.768	29.84000	19.00000	47.00000	1.05025	-.98139	.54432	.08107	-.37413
47.670	20.819	29.84000	20.00000	47.00000	1.04964	-.99125	.53411	.08102	-.37392
	GRADIENT	-.00000	.96462	.00000	-.00061	.00057	-.01205	.01390	.00019

ARC40X80-462(OA100) OV101(ADS OFF) (HNA06V) (15 APR 82)

REFERENCE DATA

SREF =	2690.0000 SQ.FT.	XMRP =	1076.6800 IN. XO		
LREF =	474.8100 INCHES	YMRP =	.0000 IN. YO		
BREF =	936.6800 INCHES	ZMRP =	375.0000 IN. ZO		
SCALE =	.3600				

PARAMETRIC DATA

BETA =	10.000	ELEVON =	.000
AILRON =	.000	BDFLAP =	.000
SPDBRK =	55.000	RUDDER =	.000

RUN NO. 166/ 0 GRADIENT INTERVAL = -5.00/ 5.00

Q	ALPHA	BAR	ALPHAU	QI	DP/Q55	DP/Q54	DP/Q52	DP/Q53	DP/Q56
47.850	-.063	29.85000	.00000	48.00000	1.06197	-.98178	1.08077	-.10246	-.06053
47.460	5.129	29.85000	5.00000	47.50000	1.05886	-.97891	1.02772	-.05108	-.10562
47.510	10.327	29.85000	10.00000	47.50000	1.05577	-.97605	.96502	.01019	-.04513
47.600	15.553	29.85000	15.00000	48.00000	1.05270	-.97321	.91262	.05078	-.07500
47.540	20.804	29.85000	20.00000	48.00000	1.06014	-.95995	.85062	.08115	-.11965
	GRADIENT	.00000	.00000	.00000	.00000	.00000	.00000	.00000	.00000

ARC40X80-462(OA100) OV101(ADS OFF) (HNA06W) (16 MAR 82)

REFERENCE DATA

SREF =	2690.0000	SQ.FT.	XMRP =	1076.6800	IN. XO				
LREF =	474.8100	INCHES	YMRP =	.0000	IN. YO				
BREF =	936.6800	INCHES	ZMRP =	375.0000	IN. ZO				
SCALE =	.3600								

PARAMETRIC DATA

BETA =	.000	ELEVON =	.000
AILRON =	10.000	BDFLAP =	.000
SPDBRK =	25.000	RUDDER =	.000

RUN NO. 170/ 0 GRADIENT INTERVAL = -5.00/ 5.00

Q	ALPHA	BAR	ALPHAU	Q1	DP/Q55	DP/Q54	DP/Q52	DP/Q53	DP/Q56
47.520	-5.246	29.89000	-5.00000	48.00000	1.06510	-1.00585	1.08395	-.10277	-.09106
47.570	-2.655	29.89000	-2.50000	48.00000	1.06353	-1.00437	1.05229	-.06157	-.09093
47.500	-.063	29.89000	.00000	48.00000	1.07259	-.99234	1.01072	-.04099	-.09079
47.400	2.538	29.89000	2.50000	48.00000	1.06042	-.99088	.97926	.00000	-.09066
47.470	5.136	29.89000	5.00000	48.00000	1.05886	-.98943	.93792	.03065	-.09053
47.370	7.735	29.89000	7.50000	48.00000	1.04674	-.99850	.89569	.06121	-.09040
47.510	10.336	29.89000	10.00000	48.00000	1.06633	-.99704	.86554	.07131	-.10531
47.670	12.934	29.89000	12.50000	48.00000	1.06477	-.97462	.82454	.11189	-.12018
47.560	15.548	29.89000	15.00000	48.00000	1.05270	-.99413	.81342	.13204	-.12000
47.370	18.171	29.89000	17.50000	47.00000	1.08270	-.96134	.76271	.15213	-.11983
47.610	20.811	29.89000	20.00000	48.00000	1.06014	-.99125	.74182	.18229	-.13461
47.440	25.982	29.89000	25.00000	48.00000	1.06753	-.96757	.70022	.17167	-.13422
	GRADIENT	.00000	.96289	-.00000	-.00060	.00260	-.01406	.01186	.00005

ARC40X80-462(OA100) OV101(ADS OFF) (HNA06X) (16 MAR 82)

REFERENCE DATA

SREF =	2690.0000	SQ.FT.	XMRP =	1076.6800	IN. XO				
LREF =	474.8100	INCHES	YMRP =	.0000	IN. YO				
BREF =	936.6800	INCHES	ZMRP =	375.0000	IN. ZO				
SCALE =	.3600								

PARAMETRIC DATA

ALPHA =	10.000	ELEVON =	.000
AILRON =	10.000	BDFLAP =	.000
SPDBRK =	25.000	RUDDER =	.000

RUN NO. 171/ 0 GRADIENT INTERVAL = -5.00/ 5.00

Q	BETA	BAR	ALPHAU	Q1	DP/Q55	DP/Q54	DP/Q52	DP/Q53	DP/Q56
47.650	-13.000	29.89000	10.00000	48.00000	1.06633	-.99704	.92523	.00000	-.13540
47.520	-10.000	29.89000	10.00000	48.00000	1.05577	-.99704	.88543	.03056	-.13540
47.410	-2.000	29.89000	1.00000	48.00000	1.06135	-1.00231	.85011	.08192	-.13611
47.410	.000	29.89000	1.00000	48.00000	1.06135	-1.00231	.84010	.09216	-.13611
47.600	5.000	29.89000	-1.00000	48.00000	1.06260	-1.00348	.85111	.07177	-.13627
47.380	10.000	29.89000	1.00000	48.00000	1.06135	-1.00231	.88011	.03072	-.13611
47.390	15.000	29.89000	1.00000	48.00000	1.05074	-.99176	.95012	-.02048	-.13611
47.200	20.000	29.89000	1.00000	47.00000	1.05074	-.99176	1.04013	-.11264	-.13611
	GRADIENT	.00000	-.30769	.00000	.00019	-.00018	.00054	-.00196	-.00002

ARC40X80-462(0A100) OV101+TUFTS (ADS OFF) (HNA06Y) (16 MAR 82)

REFERENCE DATA

SREF = 2880.0000 SQ.FT. XMRP = 1076.6800 IN. XO
LREF = 474.8100 INCHES YMRP = .0000 IN. YO
BREF = 930.6000 INCHES ZMRP = 375.0000 IN. ZO
SCALE = .3600

PARAMETRIC DATA

BETA =	.000	ELEVON =	.000
AILRON =	.000	BDFLAP =	.000
SPDBRK =	55.000	RUDDER =	.000

RUN NO. 172/ 0 GRADIENT INTERVAL = -5.00/ 5.00

Q	ALPHA	BAR	ALPHAU	QI	DP/Q55	DP/Q54	DP/Q52	DP/Q53	DP/Q56
9.590	-.074	29.86000	.00000	9.50000	1.05776	-1.05149	1.09641	-.10206	.00000
9.630	5.120	29.86000	5.00000	9.00000	1.05467	-.99600	1.09322	-.05088	.00000
9.660	10.325	29.86000	10.00000	9.50000	1.05160	-.99310	.99094	.00000	.00000
9.630	15.532	29.86000	15.00000	9.50000	1.04855	-.99022	.93867	.00000	.00000
9.490	20.764	29.86000	20.00000	8.50000	1.04552	-.93539	.88669	.10088	.14898
	GRADIENT	.00000	.00000	.00000	.00000	.00000	.00000	.00000	.00000

RUN NO. 173/ 0 GRADIENT INTERVAL = -5.00/ 5.00

Q	ALPHA	BAR	ALPHAU	QI	DP/Q55	DP/Q54	DP/Q52	DP/Q53	DP/Q56
19.020	-.074	29.86000	.00000	18.50000	1.06418	-1.00498	1.17828	-.07701	.03791
19.040	5.117	29.86000	5.00000	18.50000	1.06107	-1.00204	1.09985	.00000	.03780
18.090	10.324	29.86000	10.00000	19.00000	1.05798	-.99912	1.04680	.02552	.07538
19.080	15.531	29.86000	15.00000	18.50000	1.05491	-.99622	.99406	.07634	.07516
19.090	20.782	29.86000	20.00000	19.00000	1.05185	-.99334	.96640	.12686	.07494
	GRADIENT	.00000	.00000	.00000	.00000	.00000	.00000	.00000	.00000

RUN NO. 174/ 0 GRADIENT INTERVAL = -5.00/ 5.00

Q	ALPHA	BAR	ALPHAU	QI	DP/Q55	DP/Q54	DP/Q52	DP/Q53	DP/Q56
47.410	-5.253	29.86000	-5.00000	48.00000	1.05445	-1.01644	1.17428	-.11304	.00000
47.630	-2.664	29.86000	-2.50000	48.00000	1.06353	-1.00437	1.15251	-.11287	.03031
47.490	-.074	29.86000	.00000	48.00000	1.06197	-1.00289	1.14081	-.07172	.03026
47.330	2.522	29.86000	2.50000	47.50000	1.06042	-1.01197	1.08918	-.03069	.01511
47.640	5.119	29.86000	5.00000	48.00000	1.08004	-.99996	1.06763	.00000	.04526
47.460	7.720	29.86000	7.50000	48.00000	1.05731	-.98799	1.03618	.04081	.04520
47.660	10.323	29.86000	10.00000	48.00000	1.05577	-.99704	1.01477	.06112	.06018
47.580	12.922	29.86000	12.50000	48.00000	1.05423	-.99559	1.02322	.08137	.04507
47.590	15.533	29.86000	15.00000	48.50000	1.08428	-.98367	.98205	.12188	.07500
47.610	18.150	29.86000	17.50000	48.00000	1.05117	-.98224	.97072	.14199	.08987
47.580	20.791	29.86000	20.00000	48.00000	1.04964	-1.01212	.97920	.15191	.10470
47.190	25.987	29.86000	25.00000	48.00000	1.04660	-.96757	.92706	.15147	.10439
	GRADIENT	.00000	.96415	-.09645	-.00060	-.00147	-.01221	.01585	-.00293

ARC40X80-462(0A100) 0V101+TUFTS (ADS OFF) (HNA06Z) (16 MAR 82)

REFERENCE DATA

SREF =	2690.0000 SQ.FT.	XMRP =	1076.6800 IN. XO		
LREF =	474.8100 INCHES	YMRP =	.0000 IN. YO		
BREF =	936.6800 INCHES	ZMRP =	375.0000 IN. ZO		
SCALE =	.3600				

PARAMETRIC DATA

BETA =	5.000	ELEVON =	.000
AILRON =	.000	BDFLAP =	.000
SPDBRK =	55.000	RUDDER =	.000

RUN NO. 175/ 0 GRADIENT INTERVAL = -5.00/ 5.00

Q	ALPHA	BAR	ALPHAU	QI	DP/Q55	DP/Q54	DP/Q52	DP/Q53	DP/Q56
47.750	-5.249	29.89000	-5.00000	48.00000	1.07575	-.99526	1.16425	-.12332	-.01518
47.650	-2.660	29.89000	-2.50000	47.50000	1.07417	-.98323	1.13247	-.10261	-.03031
47.580	-.070	29.89000	.00000	47.50000	1.07259	-.99234	1.06076	-.05123	-.03026
47.400	2.526	29.89000	2.50000	47.50000	1.06042	-.99088	1.03922	-.03069	-.03022
47.470	5.122	29.89000	5.00000	47.50000	1.05886	-.98943	.99778	.00000	-.03018
47.640	7.725	29.89000	7.50000	48.00000	1.05731	-.96696	.97640	.02040	-.03013
47.450	10.326	29.89000	10.00000	48.00000	1.06633	-.96555	.93518	.06112	-.04513
47.530	12.928	29.89000	12.50000	47.50000	1.06477	-.97462	.90401	.08137	-.04507
47.680	15.537	29.89000	15.00000	48.00000	1.05270	-.99413	.88285	.12188	-.06000
47.480	18.155	29.89000	17.50000	48.00000	1.07219	-.97179	.85186	.13185	-.05991
47.590	20.788	29.89000	20.00000	48.00000	1.07063	-.95995	.81106	.15191	-.05983
47.360	25.983	29.89000	25.00000	47.50000	1.06753	-.96757	.76926	.16157	-.07457
	GRADIENT	.00000	.96402	.00000	-.00265	-.00148	-.01798	.01386	.00002

ARC40X80-462(0A100) 0V101 (HNA07A) (16 APR 82)

REFERENCE DATA

SREF =	2690.0000 SQ.FT.	XMRP =	1076.6800 IN. XO		
LREF =	474.8100 INCHES	YMRP =	.0000 IN. YO		
BREF =	936.6800 INCHES	ZMRP =	375.0000 IN. ZO		
SCALE =	.3600				

PARAMETRIC DATA

BETA =	5.000	ELEVON =	.000
AILRON =	.000	BDFLAP =	.000
SPDBRK =	25.000	RUDDER =	.000

RUN NO. 176/ 0 GRADIENT INTERVAL = -5.00/ 5.00

Q	ALPHA	BAR	ALPHAU	QI	DP/Q55	DP/Q54	DP/Q52	DP/Q53	DP/Q56
94.180	-.048	29.89000	.00000	97.50000	1.07040	-.99989	.99852	.07785	.00766
94.280	5.145	29.89000	5.00000	97.50000	1.07578	-1.01593	1.00358	.07525	.01150
94.750	10.344	29.89000	10.00000	98.50000	1.08653	-1.02128	.99345	.07266	.00766
94.370	15.559	29.89000	15.00000	98.00000	1.09729	-1.01593	1.00358	.05968	.00766
94.330	20.825	29.89000	20.00000	98.75000	1.08653	-1.01058	1.00358	.04930	.00000
	GRADIENT	.00000	.00000	.00000	.00000	.00000	.00000	.00000	.00000

ARC40X80-462(OA100) OV101 (HNA07B) (16 MAR 82)

REFERENCE DATA

SREF = 2690.0000 SQ.FT. XMRP = 1076.6800 IN. XO
LREF = 474.8100 INCHES YMRP = .0000 IN. YO
BREF = 936.6800 INCHES ZMRP = 375.0000 IN. ZO
SCALE = .3600

PARAMETRIC DATA

BETA = .000 ELEVON = .000
AILRON = .000 BDFLAP = .000
SPDBRK = 25.000 RUDDER = .000

RUN NO. 177/ 0 GRADIENT INTERVAL = -5.00/ 5.00

Q	ALPHA	BAR	ALPHAU	Q1	DP/Q55	DP/Q54	DP/Q52	DP/Q53	DP/Q56
94.560	-5.240	29.89000	-5.00000	98.75000	1.07578	-1.02662	.97824	.11158	.01150
94.350	-2.649	29.89000	-2.50000	98.50000	1.07578	-1.02662	.97824	.10639	.01533
94.170	-.056	29.89000	.00000	98.00000	1.07040	-1.02128	.97317	.10639	.01533
94.450	2.541	29.89000	2.50000	98.00000	1.07578	-1.02662	.97824	.10639	.01533
94.510	5.138	29.89000	5.00000	98.50000	1.07040	-1.03197	.97317	.10380	.00766
94.320	7.738	29.89000	7.50000	98.50000	1.07040	-1.02128	.97824	.10120	.01533
94.710	10.348	29.89000	10.00000	98.50000	1.08116	-1.04801	.97824	.09861	.01150
94.310	12.946	29.89000	12.50000	99.00000	1.07040	-1.03732	.98331	.09342	.00766
94.310	15.557	29.89000	15.00000	98.00000	1.06502	-1.03732	.97824	.09342	.01150
94.560	18.382	29.89000	17.50000	98.50000	1.07040	-1.03732	.97317	.09342	.00383
	GRADIENT	-.00000	.96334	-.09631	.00000	-.00000	.00000	.00000	-.00000

ARC40X80-462(OA100) OV101 (HNA07C) (16 MAR 82)

REFERENCE DATA

SREF = 2690.0000 SQ.FT. XMRP = 1076.6800 IN. XO
LREF = 474.8100 INCHES YMRP = .0000 IN. YO
BREF = 936.6800 INCHES ZMRP = 375.0000 IN. ZO
SCALE = .3600

PARAMETRIC DATA

BETA = -5.000 ELEVON = .000
AILRON = .000 BDFLAP = .000
SPDBRK = 25.000 RUDDER = .000

RUN NO. 178/ 0 GRADIENT INTERVAL = -5.00/ 5.00

Q	ALPHA	BAR	ALPHAU	Q1	DP/Q55	DP/Q54	DP/Q52	DP/Q53	DP/Q56
94.190	-5.234	29.89000	-5.00000	97.50000	1.05964	-1.05336	.99852	.08563	.01916
94.480	-2.643	29.89000	-2.50000	98.50000	1.05964	-1.04801	1.00865	.08823	.01916
94.510	-.049	29.89000	.00000	98.25000	1.05964	-1.05336	1.00358	.08823	.01916
94.470	2.548	29.89000	2.50000	98.50000	1.05964	-1.05871	1.00358	.09082	.01916
94.270	5.145	29.89000	5.00000	99.00000	1.05426	-1.04267	1.00358	.08304	.02299
94.160	7.746	29.89000	7.50000	97.50000	1.05964	-1.05336	.99345	.08044	.01916
94.150	10.349	29.89000	10.00000	97.50000	1.04888	-1.04267	1.00865	.07785	.01916
94.370	12.957	29.89000	12.50000	98.00000	1.05964	-1.05336	1.01879	.06487	.01533
94.300	15.565	29.89000	15.00000	97.50000	1.05426	-1.05336	1.02386	.05449	.01150
94.200	18.196	29.89000	17.50000	97.50000	1.05426	-1.03732	1.02893	.05190	.01533
94.170	20.818	29.89000	20.00000	99.00000	1.04888	-1.05336	1.03400	.03892	.00768
	GRADIENT	-.00000	.96328	.00003	.00000	-.00206	-.00098	.00050	.00000

ARC40X80-462(OA100) OV101 (HNA07D) (16 MAR 82)

REFERENCE DATA

SREF = 2690.0000 SQ.FT. XMRP = 1076.6800 IN. XO
LREF = 474.0100 INCHES YMRP = .0000 IN. YO
BREF = 936.6800 INCHES ZMRP = 375.0000 IN. ZO
SCALE = .3000

PARAMETRIC DATA

BETA = -10.000 ELEVON = .000
AILRON = .000 BDFLAP = .000
SPDBRK = 25.000 RUDDER = .000

RUN NO. 179/ 0 GRADIENT INTERVAL = -5.00/ 5.00

Q	ALPHA	BAR	ALPHAU	Q1	DP/Q55	DP/Q54	DP/Q52	DP/Q53	DP/Q56
94.258	-5.223	29.90000	-5.00000	96.50000	1.07578	-1.00524	1.04920	.01557	.01150
94.158	-2.632	29.90000	-2.50000	96.00000	1.08116	-1.01058	1.05427	.02076	.01150
94.308	-.039	29.90000	.00000	96.25000	1.07040	-1.01593	1.04920	.02335	.01150
94.248	2.556	29.90000	2.50000	96.25000	1.09729	-1.01058	1.04413	.02335	.01533
94.368	5.153	29.90000	5.00000	95.75000	1.08116	-1.01058	1.04920	.01557	.01533
94.138	7.751	29.90000	7.50000	96.25000	1.08116	-1.01058	1.04920	.01557	.00766
94.308	10.357	29.90000	10.00000	96.50000	1.07040	-1.01058	1.05427	.00778	.00766
94.448	12.965	29.90000	12.50000	96.50000	1.07578	-1.01593	1.06441	-.00259	.01150
94.398	15.580	29.90000	15.00000	96.50000	1.07578	-1.01593	1.07961	-.01816	.00383
94.278	18.201	29.90000	17.50000	96.00000	1.08116	-1.00524	1.08468	-.03373	.00383
94.078	20.817	29.90000	20.00000	96.00000	1.07578	-1.01058	1.09482	-.05190	.00000
	GRADIENT	.00000	.96376	.04819	.00311	.00000	-.00195	.00050	.00074

ARC40X80-462(OA100) OV101+NOSE GEAR (HNA07E) (16 MAR 82)

REFERENCE DATA

SREF = 2690.0000 SQ.FT. XMRP = 1076.6800 IN. XO
LREF = 474.0100 INCHES YMRP = .0000 IN. YO
BREF = 936.6800 INCHES ZMRP = 375.0000 IN. ZO
SCALE = .3000

PARAMETRIC DATA

BETA = 5.000 ELEVON = .000
AILRON = .000 BDFLAP = .000
SPDBRK = 25.000 RUDDER = .000

RUN NO. 180/ 0 GRADIENT INTERVAL = -5.00/ 5.00

Q	ALPHA	BAR	ALPHAU	Q1	DP/Q55	DP/Q54	DP/Q52	DP/Q53	DP/Q56
94.098	-.048	29.93000	.00000	96.75000	1.07040	-1.00524	.97824	.08304	.01150
94.598	10.345	29.93000	10.00000	97.25000	1.07578	-1.02128	.99345	.07525	.00766
94.420	15.558	29.93000	15.00000	97.25000	1.09729	-1.01058	.99852	.05968	.00383
94.228	20.813	29.93000	20.00000	97.00000	1.08116	-.98385	.99852	.05190	.00000
	GRADIENT	.00000	.00000	.00000	.00000	.00000	.00000	.00000	.00000

ARC40X80-462(OA100) OV101+NOSE GEAR (HNA07F) (16 MAR 82)

REFERENCE DATA

SREF = 2690.0000 SQ.FT. XMRP = 1076.6800 IN. XO
LREF = 474.8100 INCHES YMRP = .0000 IN. YO
BREF = 936.6800 INCHES ZMRP = 375.0000 IN. ZO
SCALE = .3600

PARAMETRIC DATA

BETA = .000 ELEVON = .000
AILRON = .000 BDFLAP = .000
SPDBRK = 25.000 RUDDER = .000

RUN NO. 181/ 0 GRADIENT INTERVAL = -5.00/ 5.00

Q	ALPHA	BAR	ALPHAU	Q1	DP/Q55	DP/Q54	DP/Q52	DP/Q53	DP/Q56
94.260	-5.240	29.93000	-5.00000	99.75000	1.08116	-1.01058	.96304	.11158	.01150
94.390	-2.648	29.93000	-2.50000	95.00000	1.08653	-1.01058	.97317	.10899	.01150
94.370	-.055	29.93000	.00000	97.25000	1.07578	-1.01058	.96304	.10380	.00383
93.880	2.539	29.93000	2.50000	96.50000	1.06502	-1.00524	.96304	.10120	.01150
94.500	5.138	29.93000	5.00000	97.25000	1.08116	-1.00524	.96810	.10120	.00766
94.490	7.739	29.93000	7.50000	97.00000	1.08116	-1.01593	.96304	.09861	.01150
94.370	10.347	29.93000	10.00000	96.75000	1.08116	-1.01058	.96810	.09342	.00383
94.240	12.948	29.93000	12.50000	96.50000	1.08116	-1.01593	.96810	.09082	.00383
94.570	15.556	29.93000	15.00000	95.00000	1.08653	-1.00524	.96810	.09342	.00383
94.140	20.804	29.93000	20.00000	96.75000	1.07578	-.99454	.96304	.08823	.00000
	GRADIENT	.00000	.96389	.28910	-.00415	.00103	-.00195	-.00150	.00000

ARC40X80-462(OA100) OV101+NOSE GEAR (HNA07G) (16 MAR 82)

REFERENCE DATA

SREF = 2690.0000 SQ.FT. XMRP = 1076.6800 IN. XO
LREF = 474.8100 INCHES YMRP = .0000 IN. YO
BREF = 936.6800 INCHES ZMRP = 375.0000 IN. ZO
SCALE = .3600

PARAMETRIC DATA

BETA = -5.000 ELEVON = .000
AILRON = .000 BDFLAP = .000
SPDBRK = 25.000 RUDDER = .000

RUN NO. 182/ 0 GRADIENT INTERVAL = -5.00/ 5.00

Q	ALPHA	BAR	ALPHAU	Q1	DP/Q55	DP/Q54	DP/Q52	DP/Q53	DP/Q56
94.590	-.048	29.93000	.00000	97.25000	1.06502	-1.02128	.99345	.08563	.01150
94.180	5.147	29.93000	5.00000	97.00000	1.06502	-1.02128	.98331	.08044	.00766
94.480	10.351	29.93000	10.00000	97.00000	1.07040	-1.01593	.98838	.07266	.00766
94.280	15.563	29.93000	15.00000	96.75000	1.06502	-1.02128	.99852	.05190	.00766
94.470	20.815	29.93000	20.00000	97.00000	1.07578	-1.01593	1.01372	.03114	.00000
	GRADIENT	.00000	.00000	.00000	.00000	.00000	.00000	.00000	.00000

ARC40X80-462(OA100) OV101+NOSE GEAR (HNA07H) (16 MAR 82)

REFERENCE DATA

SREF =	2680.0000 SQ.FT.	XMRP =	1076.6800 IN.	XO	
LREF =	474.8100 INCHES	YMRP =	.0000 IN.	YO	
BREF =	936.6000 INCHES	ZMRP =	375.0000 IN.	ZO	
SCALE =	.3600				

PARAMETRIC DATA

BETA =	-10.000	ELEVON =	.000
AILRON =	.000	BDFLAP =	.000
SPDBRK =	25.000	RUDDER =	.000

RUN NO. 183/ 0 GRADIENT INTERVAL = -5.00/ 5.00

Q	ALPHA	BAR	ALPHAU	QI	DP/Q55	DP/Q54	DP/Q52	DP/Q53	DP/Q56
94.280	-.035	29.93000	.00000	96.50000	1.05964	-1.02662	1.04413	.02854	.01150
94.380	5.152	29.93000	5.00000	97.00000	1.08116	-1.03197	1.04920	.01557	.01150
94.250	10.356	29.93000	10.00000	96.50000	1.06502	-1.02128	1.05427	.01038	.00766
94.320	15.581	29.93000	15.00000	96.50000	1.05964	-1.01593	1.07454	-.01557	.00000
94.530	20.834	29.93000	20.00000	96.75000	1.07040	-1.02128	1.09989	-.05449	-.00383
	GRADIENT	.00000	.00000	.00000	.00000	.00000	.00000	.00000	.00000

ARC40X80-462(OA100) OV101(FTP OFF) (HNA07I) (16 MAR 82)

REFERENCE DATA

SREF =	2680.0000 SQ.FT.	XMRP =	1076.6800 IN.	XO	
LREF =	474.8100 INCHES	YMRP =	.0000 IN.	YO	
BREF =	936.6000 INCHES	ZMRP =	375.0000 IN.	ZO	
SCALE =	.3600				

PARAMETRIC DATA

BETA =	5.000	ELEVON =	.000
AILRON =	.000	BDFLAP =	.000
SPDBRK =	25.000	RUDDER =	.000

RUN NO. 184/ 0 GRADIENT INTERVAL = -5.00/ 5.00

Q	ALPHA	BAR	ALPHAU	QI	DP/Q55	DP/Q54	DP/Q52	DP/Q53	DP/Q56
94.150	-.052	29.95000	.00000	95.50000	1.08116	-.96781	.00507	-.07525	-1.11504
94.280	5.140	29.95000	5.00000	96.25000	1.09729	-.97315	.00507	.00519	-1.03840
94.410	10.342	29.95000	10.00000	96.25000	1.09191	-.97315	.01014	.09342	-.94644
94.530	15.560	29.95000	15.00000	96.25000	1.09191	-.98385	-.01014	.15829	-.88130
94.310	20.818	29.95000	20.00000	95.75000	1.09729	-.96246	.00000	.23094	-.80083
	GRADIENT	.00000	.00000	.00000	.00000	.00000	.00000	.00000	.00000

ARC40X80-462(0A100) OV101(FTP OFF) (HNA07J) (16 MAR 82)

REFERENCE DATA

SREF =	2690.0000 SQ.FT.	XMRP =	1076.6800 IN. XO		
LREF =	474.8100 INCHES	YMRP =	.0000 IN. YO		
BREF =	936.6800 INCHES	ZMRP =	375.0000 IN. ZO		
SCALE =	.3600				

PARAMETRIC DATA

BETA =	.000	ELEVON =	.000
AILRON =	.000	BDFLAP =	.000
SPDBRK =	25.000	RUDDER =	.000

RUN NO. 185/ 0 GRADIENT INTERVAL = -5.00/ 5.00

Q	ALPHA	BAR	ALPHAU	QI	DP/Q55	DP/Q54	DP/Q52	DP/Q53	DP/Q56
94.060	-5.240	29.95000	-5.00000	95.50000	1.08116	-.96781	.00000	-.14791	-1.18784
94.520	-2.649	29.95000	-2.50000	96.25000	1.08653	-.97315	.00000	-.10999	-1.17634
94.590	-.060	29.95000	.00000	96.75000	1.10267	-.96246	-.00507	-.07525	-1.13419
93.980	2.537	29.95000	2.50000	96.00000	1.08653	-.96781	-.01014	-.02854	-1.06905
94.070	5.133	29.95000	5.00000	95.00000	1.07578	-.96246	-.00507	.00259	-1.03074
93.670	7.736	29.95000	7.50000	95.50000	1.08116	-.97315	-.00507	.04671	-.98476
94.470	10.340	29.95000	10.00000	96.50000	1.09729	-.97850	-.00507	.08823	-.96177
94.200	12.941	29.95000	12.50000	96.00000	1.10805	-.96781	-.01014	.11936	-.91579
95.730	15.555	29.95000	15.00000	97.50000	1.11343	-.97850	-.00507	.15829	-.90429
94.370	18.182	29.95000	17.50000	96.50000	1.09191	-.96246	-.00507	.19202	-.85065
	GRADIENT	-.00000	.96417	-.04834	-.00000	.00103	-.00195	.01551	.02069

ARC40X80-462(0A100) OV101(FTP OFF) (HNA07K) (16 MAR 82)

REFERENCE DATA

SREF =	2690.0000 SQ.FT.	XMRP =	1076.6800 IN. XO		
LREF =	474.8100 INCHES	YMRP =	.0000 IN. YO		
BREF =	936.6800 INCHES	ZMRP =	375.0000 IN. ZO		
SCALE =	.3600				

PARAMETRIC DATA

BETA =	-5.000	ELEVON =	.000
AILRON =	.000	BDFLAP =	.000
SPDBRK =	25.000	RUDDER =	.000

RUN NO. 186/ 0 GRADIENT INTERVAL = -5.00/ 5.00

Q	ALPHA	BAR	ALPHAU	QI	DP/Q55	DP/Q54	DP/Q52	DP/Q53	DP/Q56
94.180	-.053	29.95000	.00000	96.00000	1.09729	-.97315	-.01014	-.08823	-1.13803
93.830	5.144	29.95000	5.00000	95.50000	1.08116	-.96781	-.00507	-.01038	-1.04606
93.970	10.346	29.95000	10.00000	95.50000	1.08116	-.96246	.00000	.07266	-.97709
94.430	15.562	29.95000	15.00000	96.50000	1.09191	-.97315	-.00507	.13753	-.90812
94.160	20.819	29.95000	20.00000	96.00000	1.09729	-.95711	-.01014	.19202	-.84681
	GRADIENT	.00000	.00000	.00000	.00000	.00000	.00000	.00000	.00000

ARC40X80-462(0A100) OV101(FTP OFF) (HNA07L) (16 MAR 82)

REFERENCE DATA

SREF = 2690.0000 SQ.FT. XMRP = 1076.6800 IN. XO
LREF = 474.8100 INCHES YMRP = .0000 IN. YO
BREF = 936.6800 INCHES ZMRP = 375.0000 IN. ZO
SCALE = .3600

PARAMETRIC DATA

BETA = -10.000 ELEVON = .000
AILRON = .000 BDFLAP = .000
SPDBRK = 25.000 RUDDER = .000

RUN NO. 187/ 0 GRADIENT INTERVAL = -5.00/ 5.00

Q	ALPHA	BAR	ALPHAU	Q1	DP/Q55	DP/Q54	DP/Q52	DP/Q53	DP/Q56
94.450	-.040	29.95000	.00000	96.25000	1.08653	-.96781	-.00507	-.12455	-1.17634
94.330	5.151	29.95000	5.00000	96.50000	1.09191	-.97315	-.00507	-.04930	-1.09204
94.270	10.353	29.95000	10.00000	96.00000	1.08116	-.97850	.00000	.02076	-1.02691
94.200	20.827	29.95000	20.00000	95.75000	1.09191	-.96246	-.00507	.15050	-.90429
	GRADIENT	.00000	.00000	.00000	.00000	.00000	.00000	.00000	.00000

ARC40X80-462(0A100) OV101(FTP OFF) (HNA07M) (16 MAR 82)

REFERENCE DATA

SREF = 2690.0000 SQ.FT. XMRP = 1076.6800 IN. XO
LREF = 474.8100 INCHES YMRP = .0000 IN. YO
BREF = 936.6800 INCHES ZMRP = 375.0000 IN. ZO
SCALE = .3600

PARAMETRIC DATA

BETA = .000 ELEVON = .000
AILRON = .000 BDFLAP = .000
SPDBRK = 55.000 RUDDER = .000

RUN NO. 188/ 0 GRADIENT INTERVAL = -5.00/ 5.00

Q	ALPHA	BAR	ALPHAU	Q1	DP/Q55	DP/Q54	DP/Q52	DP/Q53	DP/Q56
94.160	-.073	29.95000	.00000	96.00000	1.08116	-.96781	-.00507	-.06747	-1.11887
94.210	5.117	29.95000	5.00000	95.75000	1.08116	-.97315	.00000	.01297	-1.03840
94.200	10.325	29.95000	10.00000	96.00000	1.08116	-.97850	-.00507	.08563	-.95027
94.330	15.539	29.95000	15.00000	96.25000	1.09191	-.96781	-.00507	.15829	-.88896
	GRADIENT	.00000	.00000	.00000	.00000	.00000	.00000	.00000	.00000

ARC40X80-462(OA100) OV101(FTP OFF) (HNA07N) (16 MAR 82)

REFERENCE DATA

SREF =	2690.0000	SQ.FT.	XMRP =	1076.6800	IN. XO	ALPHA =	10.000	ELEVON =	10.000
LREF =	474.8100	INCHES	YMRP =	.0000	IN. YO	AILRON =	.000	BDFLAP =	22.000
BREF =	936.6800	INCHES	ZMRP =	375.0000	IN. ZO	SPDBRK =	25.000	RUDDER =	.000
SCALE =	.3600								

PARAMETRIC DATA

RUN NO. 189/ 0 GRADIENT INTERVAL = -5.00/ 5.00

Q	BETA	BAR	ALPHAU	QI	DP/Q55	DP/Q54	DP/Q52	DP/Q53	DP/Q56
47.640	-10.000	29.92000	10.00000	48.25000	1.07035	-.94812	.00999	.01534	-.99651
47.530	-5.000	29.92000	10.00000	48.25000	1.07035	-.95866	.00000	.06135	-.95876
47.240	-2.000	29.92000	10.00000	47.75000	1.07035	-.94812	.00000	.08180	-.95121
47.530	.000	29.92000	10.00000	48.25000	1.07035	-.95919	.00000	.08180	-.94366
47.480	2.000	29.92000	10.00000	48.25000	1.07035	-.94812	.00000	.08691	-.94366
47.380	5.000	29.92000	10.00000	47.75000	1.08094	-.93759	-.00999	.07669	-.93611
47.450	10.000	29.92000	10.00000	49.25000	1.09154	-.92705	.00999	.05624	-.98141
47.380	20.000	29.92000	10.00000	48.00000	1.07035	-.94812	.00000	-.07669	-1.10975
	GRADIENT	.00000	.00000	-.02586	.00091	.00182	-.00086	.00150	.00221

ARC40X80-462(OA100) OV101(FTP OFF) (HNA070) (16 MAR 82)

REFERENCE DATA

SREF =	2690.0000	SQ.FT.	XMRP =	1076.6800	IN. XO	ALPHA =	10.000	ELEVON =	10.000
LREF =	474.8100	INCHES	YMRP =	.0000	IN. YO	AILRON =	.000	BDFLAP =	-11.700
BREF =	936.6800	INCHES	ZMRP =	375.0000	IN. ZO	SPDBRK =	25.000	RUDDER =	.000
SCALE =	.3600								

PARAMETRIC DATA

RUN NO. 190/ 0 GRADIENT INTERVAL = -5.00/ 5.00

Q	BETA	BAR	ALPHAU	QI	DP/Q55	DP/Q54	DP/Q52	DP/Q53	DP/Q56
47.640	-10.000	29.92000	10.00000	48.25000	1.09154	-.93759	.00000	.01022	-1.00406
47.550	-5.000	29.92000	10.00000	48.25000	1.08094	-.94812	.00000	.05624	-.96631
47.650	-2.000	29.92000	10.00000	48.25000	1.08094	-.95866	.00000	.07669	-.94366
47.360	.000	29.92000	10.00000	47.75000	1.08094	-.93759	-.00999	.07157	-.95121
47.420	2.000	29.92000	10.00000	48.00000	1.07035	-.93759	.00000	.08180	-.94366
47.500	5.000	29.92000	10.00000	48.00000	1.09154	-.93759	.00000	.08180	-.94366
47.490	15.000	29.92000	10.00000	48.25000	1.08094	-.93759	.00000	-.01534	-1.03425
47.330	20.000	29.92000	10.00000	48.00000	1.09154	-.92705	.00000	-.07669	-1.10975
	GRADIENT	.00000	.00000	-.03017	.00055	.00163	.00000	.00238	.00195

ARC40X80-462(OA100) OV101 (HNA07P) (16 MAR 82)

REFERENCE DATA

SREF =	2690.0000 SQ.FT.	XMRP =	1076.6800 IN.	XO	
LREF =	474.8100 INCHES	YMRP =	.0000 IN.	YO	
BREF =	936.6800 INCHES	ZMRP =	375.0000 IN.	ZO	
SCALE =	.3600				

PARAMETRIC DATA

ALPHA =	10.000	ELEVON =	.000
AILRON =	.000	BDFLAP =	.000
SPDBRK =	.000	RUDDER =	.000

RUN NO. 85/ 0 GRADIENT INTERVAL = -5.00/ 5.00

Q	BETA	BAR	ALPHAU	QI	DP/Q55	DP/Q54	DP/Q52	DP/Q53	DP/Q56
47.990	-13.000	29.82000	10.00000	48.50000	1.07689	.00000	1.08441	-.04075	.00000
47.900	-10.000	29.82000	10.00000	48.00000	1.06633	.00000	1.05456	.00000	.00000
47.590	-5.000	29.82000	10.00000	48.00000	1.07689	.00000	.99487	.06112	.00000
47.840	-2.000	29.82000	10.00000	48.00000	1.05577	.00000	.99487	.08149	.01504
47.790	.000	29.82000	10.00000	48.00000	1.05577	.00000	.97497	.08149	.00000
47.800	2.000	29.82000	10.00000	48.00000	1.05577	.00000	.99487	.08149	.01504
47.750	5.000	29.82000	10.00000	48.00000	1.05577	.00000	1.00482	.06112	.01504
47.630	10.000	29.82000	10.00000	48.00000	1.05577	.00000	1.05456	.00000	.03009
47.530	15.000	29.82000	10.00000	48.00000	1.05577	.01050	1.12420	-.06112	.01504
	GRADIENT	.00000	.00000	.00000	-.00182	.00000	.00086	.00000	.00130

ARC40X80-462(OA100) OV101 (HNA07Q) (16 MAR 82)

REFERENCE DATA

SREF =	2690.0000 SQ.FT.	XMRP =	1076.6800 IN.	XO	
LREF =	474.8100 INCHES	YMRP =	.0000 IN.	YO	
BREF =	936.6800 INCHES	ZMRP =	375.0000 IN.	ZO	
SCALE =	.3600				

PARAMETRIC DATA

ALPHA =	10.000	ELEVON =	.000
AILRON =	.000	BDFLAP =	.000
SPDBRK =	55.000	RUDDER =	.000

RUN NO. 100/ 0 GRADIENT INTERVAL = -5.00/ 5.00

Q	BETA	BAR	ALPHAU	QI	DP/Q55	DP/Q54	DP/Q52	DP/Q53	DP/Q56
47.610	-13.000	29.80000	10.00000	47.50000	1.06633	.00000	1.10430	-.02037	.01504
47.820	-10.000	29.80000	10.00000	48.50000	1.05577	.00000	1.04461	.02037	.01504
47.670	-5.000	29.80000	10.00000	47.50000	1.04521	.00000	1.02471	.08149	.01504
47.670	-2.000	29.80000	10.00000	47.50000	1.04521	.00000	.97497	.10187	.01504
47.600	.000	29.80000	10.00000	47.50000	1.04521	.00000	.97497	.10187	.01504
47.560	2.000	29.80000	10.00000	49.00000	1.06633	.01050	.97497	.10187	.01504
47.750	5.000	29.80000	10.00000	47.50000	1.06633	.00000	1.00482	.08149	.01504
47.670	10.000	29.80000	10.00000	49.00000	1.05577	.02099	1.07446	.03056	.01504
47.610	15.000	29.80000	10.00000	49.00000	1.05577	.00000	1.12420	-.04075	.03009
47.680	20.000	29.80000	10.00000	47.50000	1.06633	.00000	1.19384	-.12224	.00000
	GRADIENT	.00000	.00000	.05172	.00255	.00036	-.00171	-.00000	.00000

ARC40X80-462(OA100) OVI01 (INAOIA) (16 MAR 82)

REFERENCE DATA

SREF =	2690.0000 SQ.FT.	XMRP =	1076.6800 IN. XO		
LREF =	474.8100 INCHES	YMRP =	.0000 IN. YO		
BREF =	936.6800 INCHES	ZMRP =	375.0000 IN. ZO		
SCALE =	.3600				

PARAMETRIC DATA

BETA =	.000	ELEVON =	.000
AILRON =	.000	BDFLAP =	.000
SPDBRK =	25.000	RUDDER =	.000

RUN NO. 4/ 0 GRADIENT INTERVAL = -5.00/ 5.00

Q	ALPHA	BETA	DP/Q61	DP/Q63	DP/Q62	DP/Q64	DP/Q67
19.120	-5.245	.00000	1.34418	-1.90672	1.34226	-1.91299	.00000
19.020	-2.655	.00000	1.34221	-1.61305	1.05677	-1.54047	-.47971
19.080	-.066	.00000	1.36602	-1.34664	1.10670	-1.35363	.00000
19.180	2.532	.00000	1.31255	-1.05464	1.15648	-1.04446	-.06833
19.180	5.128	.00000	1.25924	-.81616	1.10347	-1.04293	-.47761
19.170	7.734	.00000	1.15476	-.49949	1.05061	-.36756	-.06813
19.110	10.337	.00000	1.98662	-.57404	1.67859	-.72962	-.94669
18.960	12.937	.00000	1.67855	-.15533	1.16823	.36428	-.94532
18.920	15.552	.00000	.66429	.44497	.48475	.54894	-.47493
19.050	20.801	.00000	.28023	1.04396	.07632	1.09469	-.40582
18.940	26.000	.00000	-.17781	1.63949	-.48195	1.81922	-.47209
	GRADIENT	.00000	-.00573	.10767	.01923	.09565	.07926

RUN NO. 5/ 0 GRADIENT INTERVAL = -5.00/ 5.00

Q	ALPHA	BETA	DP/Q61	DP/Q63	DP/Q62	DP/Q64	DP/Q67
52.070	-5.245	.00000	1.44460	-2.02954	1.37041	-2.01989	-.21916
52.240	-2.653	.00000	1.42187	-1.82610	1.37868	-1.64797	.00000
52.220	-.062	.00000	1.32718	-1.49668	1.34584	-1.35083	-.19121
52.220	2.535	.00000	1.20979	-1.09528	1.17997	-.87313	-.17429
52.260	5.135	.00000	1.29252	-.87226	1.21897	-.78363	-.02724
52.330	7.735	.00000	1.15747	-.65111	1.06376	-.36679	-.19037
52.190	10.341	.00000	1.01259	-.13622	.92943	-.17092	-.19008
52.250	12.939	.00000	.76453	.11462	.68895	.24483	-.12377
52.080	15.553	.00000	.61445	.48642	.47413	.60007	-.14831
52.310	20.819	.00000	.26439	1.23970	.10154	1.33514	-.16199
49.060	26.008	.00000	-.19265	1.52696	-.38475	1.96060	-.18844
	GRADIENT	.00000	-.04089	.14089	-.03832	.14938	-.03359

ARC40X80-462(OA100) OV101 (INA01A) (16 MAR 82)

REFERENCE DATA

SREF =	2690.0000 SQ.FT.	XMRP =	1076.6800 IN. XO		
LREF =	474.8100 INCHES	YMRP =	.0000 IN. YO		
BREF =	936.6800 INCHES	ZMRP =	375.0000 IN. ZO		
SCALE =	.3600				

PARAMETRIC DATA

BETA =	.000	ELEVON =	.000
AILRON =	.000	BDFLAP =	.000
SPDBRK =	25.000	RUDDER =	.000

RUN NO. 7/ 0 GRADIENT INTERVAL = -5.00/ 5.00

Q	ALPHA	BETA	DP/Q61	DP/Q63	DP/Q62	DP/Q64	DP/Q67
94.180	-5.245	.00000	1.26203	-1.88594	1.34355	-1.80517	.01385
94.780	-2.654	.00000	1.24454	-1.62708	1.32076	-1.55387	.00000
95.030	-.061	.00000	1.19590	-1.37964	1.26688	-1.24126	.02761
94.450	2.539	.00000	1.16298	-1.11698	1.22872	-.97915	.02757
94.520	5.136	.00000	1.13016	-.87102	1.14925	-.69305	-.01376
94.340	7.737	.00000	1.03014	-.51442	1.00799	-.36309	.02749
94.570	10.345	.00000	.90457	-.23300	.85693	.01234	.02745
94.610	12.943	.00000	.73292	.13748	.70095	.27107	.00000
95.400	15.559	.00000	.56692	.48575	.48377	.65208	.01368
92.940	18.182	.00000	.40655	.71702	.31861	.93368	.01366
	GRADIENT	.00000	-.01571	.09823	-.01772	.11067	.00531

ARC40X80-462(OA100) OV101(DECREASING ALPHA) (INA01B) (16 MAR 82)

REFERENCE DATA

SREF =	2690.0000 SQ.FT.	XMRP =	1076.6800 IN. XO		
LREF =	474.8100 INCHES	YMRP =	.0000 IN. YO		
BREF =	936.6800 INCHES	ZMRP =	375.0000 IN. ZO		
SCALE =	.3600				

PARAMETRIC DATA

BETA =	.000	ELEVON =	.000
AILRON =	.000	BDFLAP =	.000
SPDBRK =	25.000	RUDDER =	.000

RUN NO. 6/ 0 GRADIENT INTERVAL = -5.00/ 5.00

Q	ALPHA	BETA	DP/Q61	DP/Q63	DP/Q62	DP/Q64	DP/Q67
52.300	-5.243	.00000	1.46523	-2.14592	1.44254	-1.99526	-.16437
51.950	-2.652	.00000	1.30741	-1.66702	1.23040	-1.45950	-.19978
51.990	-.064	.00000	1.25853	-1.29894	1.25573	-1.23315	-.19948
51.990	2.536	.00000	1.23792	-1.09528	1.25489	-.94030	-.19919
52.180	5.136	.00000	1.31304	-.87226	1.29068	-.73466	.02724
51.950	7.735	.00000	1.09404	-.57478	1.01778	-.35716	-.17378
52.360	10.339	.00000	.96172	-.19131	.88576	-.20061	-.17353
52.100	12.938	.00000	.82047	.12417	.75413	.22257	-.02475
52.080	15.553	.00000	.71389	.51195	.64158	.63299	-.21661
52.200	20.822	.00000	.24136	1.12218	.09270	1.28530	-.14787
	GRADIENT	.00000	-.01340	.11025	.00472	.10014	.00011

ARC40X80-462(OA100) OV101 (INA01C) (16 MAR 82)

REFERENCE DATA

SREF =	2690.0000 SQ.FT.	XMRP =	1076.6800 IN. XO		
LREF =	474.8100 INCHES	YMRP =	.0000 IN. YO		
BREF =	936.6800 INCHES	ZMRP =	375.0000 IN. ZO		
SCALE =	.3600				

PARAMETRIC DATA

BETA =	.000	ELEVON =	10.000
AILRON =	.000	BDFLAP =	.000
SPDBRK =	25.000	RUDDER =	.000

RUN NO. 2/ 0 GRADIENT INTERVAL = -5.00/ 5.00

Q	ALPHA	BETA	DP/Q61	DP/Q63	DP/Q62	DP/Q64	DP/Q67
18.990	-5.093	.00000	1.31833	-1.82727	1.05832	-1.85128	-.48041
18.990	-2.501	.00000	1.35803	-1.63949	1.05677	-1.54047	-.06853
19.140	.091	.00000	2.66433	-2.67703	2.40470	-2.32398	-1.08826
19.090	2.687	.00000	2.55811	-1.99174	2.29901	-1.83204	-.81501
19.080	5.286	.00000	2.50329	-1.57013	2.19363	-2.19524	-1.08509
19.050	7.890	.00000	1.10343	-.47321	.87124	-.42882	-.54504
19.090	10.489	.00000	.99833	-.31501	.81880	-.42819	-.40819
19.020	13.095	.00000	1.72941	-.10422	1.26981	.48571	-.13504
18.970	15.701	.00000	.69984	.41880	.43372	.67092	-.47483
19.040	20.963	.00000	.28023	.98566	.07632	1.09469	-.33819
18.900	26.117	.00000	-.12701	1.69154	-.55605	1.87986	-.06744
	GRADIENT	.00000	.22931	-.06782	.23936	-.05614	-.14382

RUN NO. 8/ 0 GRADIENT INTERVAL = -5.00/ 5.00

Q	ALPHA	BETA	DP/Q61	DP/Q63	DP/Q62	DP/Q64	DP/Q67
47.540	-5.091	.00000	1.24855	-1.87108	1.38071	-1.79819	.00000
47.620	-2.500	.00000	1.21580	-1.63610	1.32724	-1.47579	.05471
47.640	.091	.00000	1.19344	-1.25426	1.29447	-1.22802	.02732
47.600	2.688	.00000	1.15059	-1.04193	1.25154	-.98098	.00000
47.620	5.284	.00000	1.09762	-.79869	1.20873	-.75914	.02724
47.580	7.890	.00000	1.01407	-.48271	1.05354	-.31789	.05439
47.470	10.489	.00000	.84894	-.15718	.86815	-.02442	.02716
47.430	13.093	.00000	.69450	.15695	.69351	.31696	.00000
47.540	15.704	.00000	.58131	.47016	.53974	.68169	.00000
47.490	20.973	.00000	.13219	1.14594	.15231	1.21376	.00000
45.130	26.111	.00000	-.28390	1.56851	-.35437	1.69435	.00000
	GRADIENT	.00000	-.01257	.11451	-.01459	.09538	-.01055

ARC40X80-462(0A100) OV101 (INA01C) (16 MAR 82)

REFERENCE DATA

SREF =	2690.0000 SQ.FT.	XMRP =	1076.6800 IN. XO		
LREF =	474.8100 INCHES	YMRP =	.0000 IN. YO		
BREF =	936.6800 INCHES	ZMRP =	375.0000 IN. ZO		
SCALE =	.3500				

PARAMETRIC DATA

BETA =	.000	ELEVON =	10.000
AILRON =	.000	BDFLAP =	.000
SPDBRK =	25.000	RUDDER =	.000

RUN NO. 14/ 0 GRADIENT INTERVAL = -5.00/ 5.00

Q	ALPHA	BETA	DP/Q61	DP/Q63	DP/Q62	DP/Q64	DP/Q67
94.550	-5.093	.00000	1.23596	-1.86457	1.29668	-1.73047	.04154
94.050	-2.501	.00000	1.22371	-1.55240	1.24796	-1.44199	.01383
94.680	.090	.00000	1.18550	-1.33703	1.24612	-1.22885	.02761
94.710	2.690	.00000	1.17956	-1.10102	1.22872	-.94196	.01378
94.230	5.291	.00000	1.14053	-.86571	1.12337	-.68068	.01376
94.260	7.891	.00000	1.00943	-.50911	1.00282	-.38309	.01374
94.350	10.495	.00000	.88389	-.21711	.84134	-.03702	.02745
94.610	13.098	.00000	.74324	.11104	.68033	.32036	.01370
93.190	15.690	.00000	.61846	.36431	.50950	.57826	-.01368
94.180	18.341	.00000	.33965	.78556	.30933	.94597	-.01366
92.530	20.984	.00000	.18493	1.05289	.05131	1.23900	.02729
	GRADIENT	.00000	-.00869	.08696	-.00371	.09633	-.00001

ARC40X80-462(0A100) OV101 (INA01D) (16 MAR 82)

REFERENCE DATA

SREF =	2690.0000 SQ.FT.	XMRP =	1076.6800 IN. XO		
LREF =	474.8100 INCHES	YMRP =	.0000 IN. YO		
BREF =	936.6800 INCHES	ZMRP =	375.0000 IN. ZO		
SCALE =	.3600				

PARAMETRIC DATA

BETA =	.000	ELEVON =	-10.000
AILRON =	.000	BDFLAP =	.000
SPDBRK =	25.000	RUDDER =	.000

RUN NO. 3/ 0 GRADIENT INTERVAL = -5.00/ 5.00

Q	ALPHA	BETA	DP/Q61	DP/Q63	DP/Q62	DP/Q64	DP/Q67
18.910	-5.410	.00000	1.34418	-1.88024	1.31645	-1.91299	-.06863
19.080	-2.818	.00000	1.36803	-1.66593	1.05677	-1.60209	-.47971
19.140	-.221	.00000	1.36602	-1.29383	1.10670	-1.29210	-.54744
19.110	2.371	.00000	1.31255	-1.08101	1.15648	-.98302	-.06833
19.110	4.965	.00000	1.25924	-.78983	1.10347	-1.04293	-.54584
19.180	7.564	.00000	1.05211	-.55207	.84561	-.36756	-.40878
19.120	10.174	.00000	.99933	-.31501	.84438	-.30585	-.54425
19.060	12.770	.00000	.86995	.10485	.68985	.24433	-.06793
18.880	15.379	.00000	.69984	.44497	.45924	.60393	-.40700
18.900	20.638	.00000	.28023	1.07006	.05068	1.15551	-.40582
18.990	25.855	.00000	-.22862	1.58744	-.43122	1.75858	-.40465
	GRADIENT	.00000	-.01464	.10953	.00732	.07658	.01081

ARC40X80-462(OA100) OV101 (INA01D) (16 MAR 82)

REFERENCE DATA

SREF =	2690.0000 SQ.FT.	XMRP =	1076.6800 IN. XO		
LREF =	474.8100 INCHES	YMRP =	.0000 IN. YO		
BREF =	936.6800 INCHES	ZMRP =	375.0000 IN. ZO		
SCALE =	.3600				

PARAMETRIC DATA

BETA =	.000	ELEVON =	-10.000
AILRON =	.000	BDFLAP =	.000
SPDBRK =	25.000	RUDDER =	.000

RUN NO. 9/ 0 GRADIENT INTERVAL = -5.00/ 5.00

Q	ALPHA	BETA	DP/Q61	DP/Q63	DP/Q62	DP/Q64	DP/Q67
47.480	-5.409	.00000	1.28982	-1.89222	1.39102	-1.79819	.02740
47.600	-2.819	.00000	1.23641	-1.60444	1.34782	-1.52499	.02736
47.420	-.225	.00000	1.18315	-1.30696	1.29447	-1.25258	.05463
47.530	2.371	.00000	1.14032	-1.08403	1.26180	-1.05455	.00000
47.300	4.967	.00000	1.09752	-.84073	1.19849	-.68568	.02724
47.530	7.568	.00000	1.01407	-.50370	1.05376	-.41570	.02720
47.500	10.176	.00000	.82848	-.17813	.90901	-.04883	-.02716
47.570	12.771	.00000	.72514	.14648	.73431	.29258	.00000
47.460	15.385	.00000	.55071	.44926	.56011	.63299	.00000
47.490	20.650	.00000	.13219	1.18761	.17262	1.16521	.00000
47.810	25.857	.00000	-.29404	1.76587	-.39487	1.83958	.00000
	GRADIENT	.00000	-.01769	.09687	-.01652	.10465	-.00212

RUN NO. 15/ 0 GRADIENT INTERVAL = -5.00/ 5.00

Q	ALPHA	BETA	DP/Q61	DP/Q63	DP/Q62	DP/Q64	DP/Q67
94.710	-5.412	.00000	1.24639	-1.89863	1.32272	-1.73047	.06923
94.220	-2.818	.00000	1.24454	-1.66976	1.29896	-1.46686	.05530
93.990	-.223	.00000	1.20630	-1.35933	1.24092	-1.20402	.00000
94.430	2.374	.00000	1.18894	-1.09570	1.22872	-.97915	.00000
94.520	4.969	.00000	1.15608	-.89757	1.14925	-.69305	.04129
94.610	7.572	.00000	1.03532	-.57806	1.03901	-.39545	.02749
94.380	10.178	.00000	.89423	-.21711	.87747	-.02468	.02745
94.800	12.775	.00000	.75872	.07932	.69579	.27107	.05481
94.870	15.391	.00000	.58238	.40127	.51979	.61517	.01368
95.210	18.018	.00000	.38597	.75919	.30933	.94597	.02733
94.570	20.660	.00000	.19013	1.06342	.11289	1.21447	.04093
88.500	25.862	.00000	-.26131	1.52224	-.38885	1.62660	.01360
	GRADIENT	.00000	-.01089	.09936	-.01789	.09809	-.00162

ARC40X80-462(OA100) OV101 (INA01E) (16 MAR 82)

REFERENCE DATA

SREF =	2690.0000 SQ.FT.	XMRP =	1076.6800 IN. XO		
LREF =	474.8100 INCHES	YMRP =	.0000 IN. YO		
BREF =	936.6800 INCHES	ZMRP =	375.0000 IN. ZO		
SCALE =	.3600				

PARAMETRIC DATA

ALPHA =	.000	ELEVON =	.000
AILRON =	.000	BDFLAP =	.000
SPDBRK =	25.000	RUDDER =	.000

RUN NO. 16/ 0 GRADIENT INTERVAL = -5.00/ 5.00

Q	BETA	DP/Q61	DP/Q63	DP/Q62	DP/Q64	DP/Q67	ALPHA
19.200	-13.000	.74745	-1.42585	1.62144	-.98446	-.41058	-.03060
19.160	-10.000	.87632	-1.45226	1.54423	-.92293	-.27372	-.03680
19.070	-5.000	1.03096	-1.39945	1.41555	-1.16904	-.06843	-.05330
19.050	-2.000	1.10828	-1.39945	1.33833	-1.16904	.00000	-.06180
19.080	.000	1.15983	-1.42585	1.28686	-1.16904	.00000	-.06190
19.040	2.000	1.21138	-1.34664	1.26112	-1.23057	.13685	-.06270
19.130	5.000	1.23715	-1.24102	1.15817	-1.23057	.27372	-.05780
19.150	10.000	1.41757	-1.21462	1.00375	-1.23057	.34215	-.04250
19.110	15.000	1.52067	-1.10900	.82359	-1.23057	.47901	-.03380
19.040	20.000	1.57221	-.87135	.64343	-1.10751	.68429	-.03010
	GRADIENT	.02133	.01548	-.02485	-.00743	.03421	-.00042

RUN NO. 21/ 0 GRADIENT INTERVAL = -5.00/ 5.00

Q	BETA	DP/Q61	DP/Q63	DP/Q62	DP/Q64	DP/Q67	ALPHA
47.590	-13.000	.79219	-1.40182	1.52049	-.98242	-.43704	-.03590
47.590	-10.000	.89508	-1.46506	1.49994	-1.12978	-.32778	-.04110
47.630	-5.000	1.06998	-1.41236	1.34584	-1.17890	-.10926	-.05230
47.520	-2.000	1.13171	-1.42290	1.28420	-1.15434	-.08195	-.05830
47.490	.000	1.18315	-1.39128	1.21228	-1.22802	.08195	-.06020
47.480	2.000	1.22430	-1.35966	1.17119	-1.22802	.08195	-.06120
47.630	5.000	1.27574	-1.24372	1.07872	-1.25258	.21852	-.05130
47.510	10.000	1.45064	-1.19102	.93490	-1.25259	.38241	-.04400
47.500	15.000	1.53295	-1.05400	.76024	-1.22802	.60093	-.03150
47.680	20.000	1.59468	-.89580	.57532	-1.12978	.71019	-.02420
	GRADIENT	.02093	.01672	-.02692	-.00889	.03391	-.00001

RUN NO. 45/ 0 GRADIENT INTERVAL = -5.00/ 5.00

Q	BETA	DP/Q61	DP/Q63	DP/Q62	DP/Q64	DP/Q67	ALPHA
94.290	-13.000	.80593	-1.37964	1.55245	-1.01783	-.41414	-.03130
94.680	-10.000	.91512	-1.40095	1.52130	-1.16678	-.34512	-.03680
94.410	-5.000	1.02951	-1.37432	1.41226	-1.17920	-.20707	-.04540
94.780	-2.000	1.14391	-1.31572	1.28765	-1.26608	-.06902	-.05390
94.730	.000	1.19590	-1.32637	1.20458	-1.25367	.00000	-.05510
94.410	2.000	1.25830	-1.31039	1.13708	-1.25367	.08283	-.05100
94.180	5.000	1.29989	-1.27843	1.03324	-1.25367	.20707	-.04550
94.590	10.000	1.47668	-1.13994	.91901	-1.27850	.40034	-.03590
94.450	15.000	1.55987	-.96948	.75285	-1.21643	.51077	-.02520
92.340	20.000	1.53907	-.78837	.55037	-1.10472	.69024	-.02330
	GRADIENT	.02725	.00845	-.03787	-.00599	.04094	.00009

ARC40X80-462(OA100) OV101(DECREASING BETA) (INA01F) (16 MAR 82)

REFERENCE DATA

SREF =	2690.0000 SQ.FT.	XMRP =	1076.6800 IN. XO		
LREF =	474.8100 INCHES	YMRP =	.0000 IN. YO		
BREF =	936.6800 INCHES	ZMRP =	375.0000 IN. ZO		
SCALE =	.3600				

PARAMETRIC DATA

ALPHA =	.000	ELEVON =	.000
AILRON =	.000	BDFLAP =	.000
SPDBRK =	25.000	RUDDER =	.000

RUN NO. 22/ 0 GRADIENT INTERVAL = -5.00/ 5.00

Q	BETA	DP/Q61	DP/Q63	DP/Q62	DP/Q64	DP/Q67	ALPHA
47.510	-13.000	.78191	-1.40182	1.53076	-.98242	-.46436	-.03400
47.470	-10.000	.89508	-1.44398	1.46812	-1.10522	-.32778	-.04040
47.610	-5.000	1.05969	-1.44398	1.33555	-1.17890	-.10926	-.05330
47.600	-2.000	1.15228	-1.42290	1.27332	-1.17890	-.02732	-.05830
47.430	.000	1.18315	-1.34912	1.22255	-1.17890	.02732	-.05900
47.440	2.000	1.23459	-1.33858	1.15064	-1.22802	.13658	-.05780
47.550	5.000	1.27574	-1.30596	1.09927	-1.25258	.24584	-.05570
47.490	10.000	1.45064	-1.20156	.92462	-1.25258	.38241	-.04480
47.540	15.000	1.54324	-1.06454	.75024	-1.20346	.54630	-.03010
47.670	20.000	1.57410	-.89590	.56505	-1.15434	.71019	-.02510
	GRADIENT	.02146	.01472	-.02452	-.00805	.03626	-.00019

ARC40X80-462(OA100) OV101 (INA01G) (16 MAR 82)

REFERENCE DATA

SREF =	2690.0000 SQ.FT.	XMRP =	1076.6800 IN. XO		
LREF =	474.8100 INCHES	YMRP =	.0000 IN. YO		
BREF =	936.6800 INCHES	ZMRP =	375.0000 IN. ZO		
SCALE =	.3600				

PARAMETRIC DATA

ALPHA =	5.000	ELEVON =	.000
AILRON =	.000	BDFLAP =	.000
SPDBRK =	25.000	RUDDER =	.000

RUN NO. 17/ 0 GRADIENT INTERVAL = -5.00/ 5.00

Q	BETA	DP/Q61	DP/Q63	DP/Q62	DP/Q64	DP/Q67	ALPHA
19.180	-13.000	.71956	-1.00045	1.28310	-.18405	-.47761	5.15600
19.120	-10.000	.79666	-.97412	1.25744	-.42944	-.40938	5.15070
19.080	-5.000	.89946	-.97412	1.25744	-.55214	-.20469	5.13860
19.070	-2.000	1.00225	-.86881	1.18045	-.61349	.00000	5.13240
19.070	.000	1.10505	-.86881	1.15479	-.67484	-.06823	5.13300
19.060	2.000	1.07935	-.76350	1.10347	-.55214	.06823	5.13350
19.080	5.000	1.13074	-.73717	1.02648	-.73619	.13646	5.13660
19.070	10.000	1.23354	-.60553	.87251	-.73619	.27292	5.14540
19.020	15.000	1.18214	-.28960	.74420	-.79754	.61406	5.15250
19.010	20.000	1.23354	-.13164	.61589	-.73619	.75052	5.14760
	GRADIENT	.02260	.02406	-.02256	-.01375	.03176	-.00013

ARC40X80-462(OA100) OV101 (INA01G) (16 MAR 82)

REFERENCE DATA

SREF =	2690.0000 SQ.FT.	XMRP =	1076.6800 IN. XO		
LREF =	474.8100 INCHES	YMRP =	.0000 IN. YO		
BREF =	936.6800 INCHES	ZMRP =	375.0000 IN. ZO		
SCALE =	.3600				

PARAMETRIC DATA

ALPHA =	5.000	ELEVON =	.000
AILRON =	.000	BDFLAP =	.000
SPDBRK =	25.000	RUDDER =	.000

RUN NO. 23/ 0 GRADIENT INTERVAL = -5.00/ 5.00

Q	BETA	DP/Q61	DP/Q63	DP/Q62	DP/Q64	DP/Q67	ALPHA
47.780	-13.000	.75910	-.98786	1.20873	-.12244	-.40853	5.15350
47.770	-10.000	.86168	-.97735	1.21897	-.31835	-.29959	5.15150
47.550	-5.000	.95401	-.92480	1.17800	-.56324	-.13617	5.14320
47.550	-2.000	1.06684	-.88277	1.11654	-.61221	-.05447	5.13590
47.450	.000	1.10788	-.86175	1.10630	-.68568	.05447	5.13470
47.560	2.000	1.14891	-.83022	1.06532	-.68568	.10894	5.13660
47.430	5.000	1.18994	-.71462	.99362	-.75914	.24512	5.14390
47.670	10.000	1.24123	-.51495	.82972	-.83261	.40853	5.14810
47.470	15.000	1.25149	-.32578	.69656	-.80812	.59917	5.15440
47.450	20.000	1.23097	-.06305	.55315	-.78363	.76258	5.14970
	GRADIENT	.02317	.01993	-.01766	-.01942	.03850	.00008

ARC40X80-462(OA100) OV101 (INA01H) (16 MAR 82)

REFERENCE DATA

SREF =	2690.0000 SQ.FT.	XMRP =	1076.6800 IN. XO		
LREF =	474.8100 INCHES	YMRP =	.0000 IN. YO		
BREF =	936.6800 INCHES	ZMRP =	375.0000 IN. ZO		
SCALE =	.3600				

PARAMETRIC DATA

ALPHA =	10.000	ELEVON =	.000
AILRON =	.000	BDFLAP =	.000
SPDBRK =	25.000	RUDDER =	.000

RUN NO. 18/ 0 GRADIENT INTERVAL = -5.00/ 5.00

Q	BETA	DP/Q61	DP/Q63	DP/Q62	DP/Q64	DP/Q67	ALPHA
19.060	-13.000	.58935	-.55127	.92114	.48936	-.47622	10.35540
19.090	-10.000	.66622	-.52502	.97232	.24468	-.34015	10.35000
19.100	-5.000	.79434	-.44627	.94673	.24468	-.20409	10.34090
19.130	-2.000	.79434	-.31501	.89556	.24468	.00000	10.33590
19.050	.000	.81997	-.21001	.86997	.06117	.00000	10.33670
19.110	2.000	.84559	-.13126	.86997	.00000	.13606	10.33810
19.080	5.000	.84559	-.02625	.79321	-.12234	.20409	10.33800
19.110	10.000	.87121	.21001	.74203	-.24468	.40819	10.34840
19.050	15.000	.81997	.52502	.63968	-.30595	.54425	10.34820
19.040	20.000	.81997	.76128	.51175	-.36702	.74834	10.33850
	GRADIENT	.00619	.04254	-.01412	-.04008	.03988	-.00021

ARC40X80-462(0A100) 0V101 (INA01H) (16 MAR 82)

REFERENCE DATA

SREF =	2690.0000 SQ.FT.	XMRP =	1076.6800 IN. XO		
LREF =	474.8100 INCHES	YMRP =	.0000 IN. YO		
BREF =	936.6800 INCHES	ZMRP =	375.0000 IN. ZO		
SCALE =	.3500				

PARAMETRIC DATA

ALPHA =	10.000	ELEVON =	.000
AILRON =	.000	BDFLAP =	.000
SPDBRK =	25.000	RUDDER =	.000

RUN NO. 24/ 0 GRADIENT INTERVAL = -5.00/ 5.00

Q	BETA	DP/Q61	DP/Q63	DP/Q62	DP/Q64	DP/Q67	ALPHA
47.700	-13.000	.65460	-.53440	.84773	.56159	-.46164	10.35330
47.950	-10.000	.74666	-.51344	.83751	.43951	-.43449	10.35370
48.370	-5.000	.80803	-.34579	.89879	.14650	-.13578	10.34700
47.570	-2.000	.84894	-.22005	.79666	.02442	-.02716	10.33920
47.530	.000	.87962	-.22005	.80687	.00000	.08147	10.34220
47.440	2.000	.90008	-.12574	.79586	-.04093	.10862	10.34220
47.690	5.000	.92053	-.01048	.78644	-.19534	.27155	10.34330
47.390	10.000	.93076	.22005	.67410	-.31742	.40733	10.35110
47.510	15.000	.90008	.48201	.60260	-.39067	.62458	10.35440
47.500	20.000	.85917	.72301	.48982	-.43951	.78751	10.34690
	GRADIENT	.01146	.03216	-.00959	-.03199	.03880	-.00022

RUN NO. 46/ 0 GRADIENT INTERVAL = -5.00/ 5.00

Q	BETA	DP/Q61	DP/Q63	DP/Q62	DP/Q64	DP/Q67	ALPHA
94.480	-13.000	.66163	-.47659	.88779	.51826	-.49405	10.36180
94.340	-10.000	.72366	-.45541	.90844	.33317	-.37053	10.36090
94.410	-5.000	.81153	-.29854	.88263	.11106	-.20585	10.35270
94.550	-2.000	.85288	-.24359	.86715	-.01234	-.06862	10.34830
94.270	.000	.83220	-.15896	.84134	-.08638	.00000	10.34640
94.360	2.000	.86322	-.05295	.82069	-.12339	.06862	10.34690
94.430	5.000	.85805	.04236	.81037	-.23445	.20595	10.34930
94.550	10.000	.88339	.29125	.73295	-.37019	.42543	10.35430
94.610	15.000	.83220	.61427	.62455	-.41954	.60383	10.35440
94.360	20.000	.80636	.87375	.49035	-.41954	.76851	10.34210
	GRADIENT	.00437	.03579	-.00783	-.03361	.04022	-.00034

ARC40X80-462(OA100) OV101 (INA011) (16 MAR 82)

REFERENCE DATA

SREF =	2690.0000 SQ.FT.	XMRP =	1076.6800 IN.	XO	
LREF =	474.8100 INCHES	YMRP =	.0000 IN.	YO	
BREF =	936.6800 INCHES	ZMRP =	375.0000 IN.	ZO	
SCALE =	.3600				

PARAMETRIC DATA

ALPHA =	15.000	ELEVON =	.000
AILRON =	.000	BDFLAP =	.000
SPDBRK =	25.000	RUDDER =	.000

RUN NO. 19/ 0 GRADIENT INTERVAL = -5.00/ 5.00

Q	BETA	DP/Q61	DP/Q63	DP/Q62	DP/Q64	DP/Q67	ALPHA
19.000	-13.000	.43434	-.07852	.53577	1.21985	-.47483	15.56640
19.100	-10.000	.45989	-.05235	.56129	1.15886	-.33917	15.56950
19.000	-5.000	.51099	.15705	.53577	.91489	-.20350	15.55260
19.000	-2.000	.45939	.31410	.53577	.79291	-.06783	15.54840
18.980	.000	.45989	.47115	.51026	.67092	.06783	15.54310
19.070	2.000	.51099	.44497	.53577	.60993	.13567	15.54750
18.980	10.000	.48544	.81142	.51026	.36596	.40700	15.56530
19.000	15.000	.43434	1.23021	.45924	.18298	.67833	15.56340
18.930	20.000	.35769	1.43961	.38270	.12198	.88183	15.56490
	GRADIENT	-.00096	.04526	-.00119	-.04503	.09008	-.00095

RUN NO. 25/ 0 GRADIENT INTERVAL = -5.00/ 5.00

Q	BETA	DP/Q61	DP/Q63	DP/Q62	DP/Q64	DP/Q67	ALPHA
47.510	-13.000	.49972	-.07314	.40735	1.33903	-.56861	15.57760
47.800	-10.000	.52012	-.01045	.46846	1.11991	-.43322	15.57950
48.000	-5.000	.52012	.21941	.49901	.80342	-.21661	15.55820
48.090	-2.000	.52111	.32389	.51937	.73038	-.10831	15.55530
47.970	.000	.56091	.37613	.51937	.63299	-.02708	15.55490
47.910	2.000	.54051	.57464	.49882	.60965	.08123	15.55220
47.890	5.000	.55071	.68956	.48882	.41388	.18953	15.55430
47.470	10.000	.49972	1.01345	.46846	.19477	.43322	15.57390
47.450	15.000	.46913	1.25375	.41754	.07304	.64983	15.57670
47.650	20.000	.42833	1.48361	.37680	-.04869	.86645	15.56620
	GRADIENT	.00158	.04918	-.00193	-.03778	.04155	-.00044

ARC40X80-462(OA100) OV101 (INA01J) (16 MAR 82)

REFERENCE DATA

SREF =	2690.0000 SQ.FT.	XMRP =	1076.6800 IN.	XO	
LREF =	474.8100 INCHES	YMRP =	.0000 IN.	YO	
BREF =	936.6800 INCHES	ZMRP =	375.0000 IN.	ZO	
SCALE =	.3600				

PARAMETRIC DATA

ALPHA =	20.000	ELEVON =	.000
AILRON =	.000	BDFLAP =	.000
SPDBRK =	25.000	RUDDER =	.000

RUN NO. 20/ 0 GRADIENT INTERVAL = -5.00/ 5.00

Q	BETA	DP/Q61	DP/Q63	DP/Q62	DP/Q64	DP/Q67	ALPHA
19.180	-13.000	.17833	.44368	-.07632	1.88530	-.47346	20.81209
19.130	-10.000	.10190	.57418	.00000	1.70285	-.40582	20.80620
19.100	-5.000	.12739	.75687	.00000	1.39877	-.13527	20.80550
19.140	-2.000	.10190	.88736	.10176	1.27714	.13527	20.80289
19.220	.000	.05095	1.09616	.05088	1.21632	.06764	20.80119
19.130	2.000	.05095	1.14835	.10176	1.09469	.06764	20.80600
19.100	5.000	.05095	1.33105	.07032	.97306	.33819	20.80370
19.010	10.000	.00000	1.64423	.10176	.72979	.47346	20.80730
19.040	15.000	-.02548	1.82693	.10176	.48653	.74401	20.81580
19.000	20.000	-.17833	2.11402	.12720	.42571	.94692	20.80350
	GRADIENT	-.00835	.05850	.00658	-.04299	.03848	-.00005

RUN NO. 26/ 0 GRADIENT INTERVAL = -5.00/ 5.00

Q	BETA	DP/Q61	DP/Q63	DP/Q62	DP/Q64	DP/Q67	ALPHA
47.490	-13.000	.22371	.40629	-.03046	1.89347	-.56696	20.83099
47.730	-10.000	.19321	.57297	-.01015	1.77209	-.43197	20.82539
47.590	-5.000	.22371	.82299	-.02031	1.55362	-.24298	20.81549
47.600	-2.000	.15253	.97926	.09139	1.35941	-.08099	20.82300
47.560	.000	.17287	1.09385	.07108	1.28659	.02700	20.82379
47.630	2.000	.12202	1.19803	.10154	1.16521	.05400	20.82039
47.700	5.000	.12202	1.32304	.13201	1.09239	.24298	20.80719
47.640	10.000	.08135	1.65640	.18278	.72826	.45895	20.82129
47.620	15.000	-.05084	1.91684	.14216	.58261	.64795	20.82269
47.420	20.000	-.06101	2.09394	.18278	.33985	.89093	20.78960
	GRADIENT	-.00982	.05065	.01348	-.04646	.04655	-.00081

ARC40X80-462(0A100) 0V101 (INA01K) (16 MAR 82)

REFERENCE DATA

SREF =	2690.0000 SQ.FT.	XMRP =	1076.6800 IN.	XO	
LREF =	474.8100 INCHES	YMRP =	.0000 IN.	YO	
BREF =	936.6800 INCHES	ZMRP =	375.0000 IN.	ZO	
SCALE =	.3600				

PARAMETRIC DATA

ALPHA =	.000	BETA =	.000
AILRON =	.000	BDFLAP =	.000
SPDBRK =	25.000	RUDDER =	.000

RUN NO. 10/ 0 GRADIENT INTERVAL = -5.00/ 5.00

Q	ELEVON	BETA	DP/Q61	DP/Q63	DP/Q52	DP/Q64	DP/Q67	ALPHA
47.410	-36.343	.00000	1.16257	-1.34912	1.23283	-1.25258	.02732	-.36230
47.600	-31.143	.00000	1.18315	-1.32804	1.23283	-1.22802	-.02732	-.34870
47.670	-26.002	.00000	1.17266	-1.40182	1.23283	-1.27714	.05463	-.35020
47.550	-20.742	.00000	1.18315	-1.38074	1.24310	-1.27714	.00000	-.34420
47.580	-15.601	.00000	1.17285	-1.37020	1.24310	-1.25258	.00000	-.30020
47.670	-10.401	.00000	1.17286	-1.37020	1.23283	-1.25258	.05463	-.22370
47.780	-5.200	.00000	1.19344	-1.32804	1.23283	-1.27714	.00000	-.14100
47.640	-.060	.00000	1.19344	-1.34912	1.24310	-1.25259	.00000	-.06010
47.540	5.141	.00000	1.16257	-1.41236	1.23283	-1.27714	.02732	.01740
47.490	10.281	.00000	1.15228	-1.35956	1.23283	-1.20346	.00000	.09020
47.580	15.482	.00000	1.17286	-1.32804	1.23283	-1.17890	-.02732	.16370
47.470	20.682	.00000	1.15228	-1.31750	1.23283	-1.27714	.00000	.22960
	GRADIENT	.00000	.00000	.00000	.00000	.00000	.00000	.00000

ARC40X80-462(OA100) OV101 (INAOIL) (16 MAR 82)

REFERENCE DATA

SREF =	2690.0000 SQ.FT.	XMRP =	1076.6800 IN. XO		
LREF =	474.8100 INCHES	YMRP =	.0000 IN. YO		
BREF =	936.6800 INCHES	ZMRP =	375.0000 IN. ZO		
SCALE =	.3600				

PARAMETRIC DATA

ALPHA =	5.000	BETA =	.000
AILRON =	.000	BDFLAP =	.000
SPDBRK =	25.000	RUDDER =	.000

RUN NO. 11/ 0 GRADIENT INTERVAL = -5.00/ 5.00

Q	ELEVON	BETA	DP/Q61	DP/Q63	DP/Q62	DP/Q64	DP/Q67	ALPHA
47.520	-36.343	.00000	1.08736	-.87226	1.11654	-.80812	.02724	4.82560
47.610	-31.143	.00000	1.11813	-.89328	1.14727	-.78363	.05447	4.83820
47.540	-26.002	.00000	1.09762	-.87226	1.11654	-.80568	.02724	4.83150
47.510	-20.742	.00000	1.10799	-.85124	1.13703	-.73466	-.05447	4.84100
47.510	-15.601	.00000	1.10799	-.87226	1.13703	-.78363	.00000	4.89300
47.550	-10.401	.00000	1.10788	-.80379	1.13703	-.75914	.00000	4.96640
47.510	-5.260	.00000	1.09762	-.80920	1.13703	-.73465	.00000	5.05230
47.610	-.060	.00000	1.11813	-.85124	1.13703	-.68568	-.02724	5.13570
47.450	5.081	.00000	1.08735	-.87225	1.11654	-.71017	-.02724	5.21180
47.500	10.341	.00000	1.08735	-.85124	1.08581	-.66119	.02724	5.28770
47.710	15.482	.00000	1.08736	-.81971	1.11654	-.73466	.05447	5.36120
47.420	20.682	.00000	1.08736	-.84073	1.11654	-.68568	.05447	5.42780
	GRADIENT	.00000	.00000	.00000	.00000	.00000	.00000	.00000

ARC40X80-462(OA100) OV101 (INAOIM) (16 MAR 82)

REFERENCE DATA

SREF =	2690.0000 SQ.FT.	XMRP =	1076.6800 IN.	XO	
LREF =	474.8100 INCHES	YMRP =	.0000 IN.	YO	
BREF =	936.6800 INCHES	ZMRP =	375.0000 IN.	ZO	
SCALE =	.3600				

PARAMETRIC DATA

ALPHA =	10.000	BETA =	.000
AILRON =	.000	BDFLAP =	.000
SPDBRK =	25.000	RUDDER =	.000

RUN NO. 12/ 0 GRADIENT INTERVAL = -5.00/ 5.00

Q	ELEVON	BETA	DP/Q61	DP/Q63	DP/Q62	DP/Q64	DP/Q67	ALPHA
47.660	-36.343	.00000	.87962	-.26196	.81709	-.02442	.00000	10.01980
47.590	-31.143	.00000	.88385	-.24100	.84773	-.07325	.00000	10.03190
47.530	-26.002	.00000	.85917	-.23053	.82730	-.07325	.02716	10.02680
47.620	-20.802	.00000	.87962	-.22005	.82730	-.04883	.00000	10.03190
47.460	-15.601	.00000	.85917	-.20957	.81709	-.04883	-.05431	10.09800
47.530	-10.401	.00000	.84894	-.16766	.84773	-.07325	.00000	10.17700
47.500	-5.200	.00000	.86940	-.15718	.81709	-.02442	.02716	10.25980
47.500	-.060	.00000	.85917	-.24100	.81709	.00000	.02716	10.33930
47.350	5.141	.00000	.86940	-.24100	.82730	.00000	-.02716	10.41430
47.430	10.281	.00000	.85917	-.19909	.84773	-.04883	.00000	10.48700
47.460	15.541	.00000	.86940	-.27244	.78644	.04883	.02716	10.56190
47.380	20.622	.00000	.83871	-.16766	.78656	.04883	.00000	10.63890
	GRADIENT	.00000	.00000	.00000	.00000	.00000	.00000	.00000

ARC40X80-462(OA100) OV101(DECREASING ELEVON) (INA01N) (16 MAR 82)

REFERENCE DATA

SREF =	2690.0000 SQ.FT.	XMRP =	1076.6800 IN.	XO	
LREF =	474.8100 INCHES	YMRP =	.0000 IN.	YO	
BREF =	936.6800 INCHES	ZMRP =	375.0000 IN.	ZO	
SCALE =	.3600				

PARAMETRIC DATA

ALPHA =	10.000	BETA =	.000
AILRON =	.000	BDFLAP =	.000
SPDBRK =	25.000	RUDDER =	.000

RUN NO. 13/ 0 GRADIENT INTERVAL = -5.00/ 5.00

Q	ELEVON	BETA	DP/Q61	DP/Q63	DP/Q62	DP/Q64	DP/Q67	ALPHA
47.380	-35.343	.00000	.88985	-.27244	.80815	-.12209	.02716	10.01530
47.430	-31.143	.00000	.87962	-.25196	.84773	-.04883	.00000	10.02770
47.440	-25.942	.00000	.86985	-.26196	.82730	-.02442	.05431	10.02480
47.350	-20.742	.00000	.88085	-.30387	.84773	-.02442	-.02716	10.03260
47.340	-15.541	.00000	.85917	-.22005	.83751	-.09767	-.02716	10.09820
47.340	-10.461	.00000	.86940	-.24100	.81709	.00000	.00000	10.17660
47.260	-5.200	.00000	.87962	-.22005	.83751	-.12209	.00000	10.25610
47.300	.000	.00000	.84894	-.18261	.82730	-.02442	-.02716	10.33920
47.260	5.111	.00000	.84894	-.20957	.80687	.00000	.02716	10.41200
47.510	10.281	.00000	.85917	-.22005	.81709	-.02442	.02716	10.48960
47.530	15.541	.00000	.82848	-.17913	.82730	-.04883	.02716	10.56080
47.400	20.822	.00000	.83871	-.16766	.83751	-.02442	.00000	10.63970
	GRADIENT	.00000	.00000	.00000	.00000	.00000	.00000	.00000

ARC40X80-462(OA100) OV101

(INA010) (16 MAR 82)

REFERENCE DATA

SREF	=	2690.0000 SQ.FT.	XMRP	=	1076.6800 IN. XO
LREF	=	474.8100 INCHES	YMRP	=	.0000 IN. YO
BREF	=	936.6800 INCHES	ZMRP	=	375.0000 IN. ZO
SCALE	=	.3600			

PARAMETRIC DATA

ALPHA =	15.000	BETA =	.000
AILRON =	.000	BDFLAP =	.000
SPDBRK =	25.000	RUDDER =	.000

RUN NO. 27/ 0

GRADIENT INTERVAL = -5.00/ 5.00

Q	ELEVON	BETA	DP/Q61	DP/Q63	DP/Q62	DP/Q64	DP/Q57	ALPHA
47.630	-36.343	.00000	.60170	.38657	.56011	.63299	.02708	15.21490
47.880	-31.143	.00000	.59151	.40747	.56011	.60865	.00000	15.21480
47.570	-26.002	.00000	.56091	.43881	.52956	.68169	.02708	15.19620
47.550	-20.742	.00000	.58131	.40747	.53974	.60865	.02708	15.22920
47.520	-15.601	.00000	.58131	.41792	.54993	.63299	.00000	15.30240
47.720	-10.401	.00000	.56091	.43881	.51937	.68169	.02708	15.38470
47.490	-5.200	.00000	.61190	.39702	.52956	.63299	.02708	15.46640
47.560	.000	.00000	.56091	.45971	.50919	.70603	.02708	15.55290
47.560	5.141	.00000	.56091	.48060	.50919	.70603	.00000	15.62260
47.570	10.281	.00000	.57111	.51195	.49901	.70603	.02708	15.70160
47.790	15.482	.00000	.57111	.45971	.51937	.70603	.02708	15.78050
47.430	20.637	.00000	.53032	.50150	.48862	.75472	.05415	15.85410
	GRADIENT	.00000	.00000	.00000	.00000	.00000	.00000	.00000

ARC40X80-462(OA100) OV101 (INA01P) (16 MAR 82)

REFERENCE DATA

SREF =	2690.0000 SQ.FT.	XMRP =	1076.6800 IN.	XO	
LREF =	474.8100 INCHES	YMRP =	.0000 IN.	YO	
BREF =	936.6800 INCHES	ZMRP =	375.0000 IN.	ZO	
SCALE =	.3600				

PARAMETRIC DATA

ALPHA =	20.000	BETA =	.000
AILRON =	.000	BDFLAP =	.000
SPDBRK =	25.000	RUDDER =	.000

RUN NO. 28/ 0 GRADIENT INTERVAL = -5.00/ 5.00

Q	ELEVON	BETA	DP/Q61	DP/Q63	DP/Q62	DP/Q64	DP/Q67	ALPHA
47.610	-36.343	.00000	.19321	1.03134	.14216	1.23804	.02700	20.42749
47.620	-31.143	.00000	.22371	1.02093	.11170	1.28659	.05400	20.39299
47.580	-25.942	.00000	.24405	1.03134	.17262	1.16521	.05400	20.40489
47.700	-20.712	.00000	.17287	1.07301	.10154	1.26231	.02700	20.48399
47.670	-15.601	.00000	.19321	1.01051	.10154	1.28659	.00000	20.56470
47.810	-10.401	.00000	.17287	1.08343	.09139	1.28659	.00000	20.65359
47.510	-5.200	.00000	.16270	1.07301	.09139	1.28659	.02700	20.74120
47.560	-.030	.00000	.17287	1.02093	.11170	1.26231	.00000	20.82039
47.750	5.141	.00000	.18304	1.04176	.11170	1.23804	.02700	20.89789
47.560	10.341	.00000	.13219	1.12510	.08093	1.33514	.10799	20.97299
47.760	15.541	.00000	.20339	1.10427	.07109	1.31095	.00000	21.04719
47.650	20.682	.00000	.08135	1.14584	.10154	1.35941	.02700	21.11699
	GRADIENT	.00000	.00000	.00000	.00000	.00000	.00000	.00000

ARC40X80-462(OA100) OV101 (INA01Q) (16 MAR 82)

REFERENCE DATA

SREF =	2690.0000 SQ.FT.	XMRP =	1076.6800 IN.	XO	
LREF =	474.8100 INCHES	YMRP =	.0000 IN.	YO	
BREF =	936.6800 INCHES	ZMRP =	375.0000 IN.	ZO	
SCALE =	.3600				

PARAMETRIC DATA

ALPHA =	.000	BETA =	.000
ELEVON =	.000	BDFLAP =	.000
SPDBRK =	25.000	RUDDER =	.000

RUN NO. 29/ 0 GRADIENT INTERVAL = -5.00/ 5.00

Q	AILRON	BETA	DP/Q61	DP/Q63	DP/Q62	DP/Q64	DP/Q67	ALPHA
47.700	-.045	.00000	1.20372	-1.31750	1.26365	-1.20346	.08195	-.06100
47.690	2.570	.00000	1.19344	-1.34912	1.25338	-1.17890	.02732	-.05880
47.620	5.141	.00000	1.18315	-1.33858	1.26365	-1.15434	.05463	-.05880
47.590	7.711	.00000	1.18315	-1.34912	1.25338	-1.20346	.05463	-.05890
47.610	10.281	.00000	1.19344	-1.34912	1.26365	-1.20346	.02732	-.06270
47.630	15.541	.00000	1.17286	-1.33858	1.26365	-1.20346	.02732	-.06730
	GRADIENT	.00000	-.00393	-.01209	-.00393	.00939	-.02089	.00084

ARC40X80-462(OA100) OV101 (INA01R) (16 MAR 82)

REFERENCE DATA

SREF =	2690.0000 SQ.FT.	XMRP =	1076.6800 IN.	XO	
LREF =	474.8100 INCHES	YMRP =	.0000 IN.	YO	
BREF =	936.6800 INCHES	ZMRP =	375.0000 IN.	ZO	
SCALE =	.3600				

PARAMETRIC DATA

ALPHA =	5.000	BETA =	.000
ELEVON =	.000	BDFLAP =	.000
SPDBRK =	25.000	RUDDER =	.000

RUN NO. 30/ 0 GRADIENT INTERVAL = -5.00/ 5.00

Q	AILRON	BETA	DP/Q61	DP/Q63	DP/Q62	DP/Q64	DP/Q67	ALPHA
47.600	-.045	.00000	1.11813	-.85124	1.14727	-.63670	.02724	5.13420
47.660	2.570	.00000	1.11813	-.85124	1.13703	-.61221	.02724	5.13750
47.650	5.141	.00000	1.12839	-.79869	1.15751	-.63670	.02724	5.13710
47.570	7.741	.00000	1.10788	-.79869	1.15751	-.68568	.05447	5.13390
47.610	10.311	.00000	1.11813	-.78819	1.16776	-.58772	.02724	5.13260
47.570	15.541	.00000	1.12839	-.79969	1.11654	-.63670	.02724	5.13040
	GRADIENT	.00000	.00000	.00000	-.00392	.00936	.00000	.00126

ARC40X80-462(OA100) OV101 (INA01S) (16 MAR 82)

REFERENCE DATA

SREF =	2690.0000 SQ.FT.	XMRP =	1076.6800 IN.	XO	
LREF =	474.8100 INCHES	YMRP =	.0000 IN.	YO	
BREF =	936.6800 INCHES	ZMRP =	375.0000 IN.	ZO	
SCALE =	.3600				

PARAMETRIC DATA

ALPHA =	10.000	BETA =	.000
ELEVON =	.000	BDFLAP =	.000
SPDBRK =	25.000	RUDDER =	.000

RUN NO. 31/ 0 GRADIENT INTERVAL = -5.00/ 5.00

Q	AILRON	BETA	DP/Q61	DP/Q63	DP/Q62	DP/Q64	DP/Q67	ALPHA
47.670	-.060	.00000	.86940	-.17813	.89879	.00000	.02716	10.34030
47.530	2.570	.00000	.88985	-.15718	.86815	.00000	.02716	10.33860
47.690	5.141	.00000	.86940	-.18861	.87837	.04883	.05431	10.33620
47.590	7.711	.00000	.84894	-.13622	.85794	.04883	.05431	10.33440
47.650	10.281	.00000	.85917	-.16766	.86815	.00000	.02716	10.33390
47.710	15.541	.00000	.86940	-.13622	.87837	-.02442	.02716	10.33260
	GRADIENT	.00000	.00778	.00797	-.01165	.00000	.00000	-.00065

ARC40X80-462(OA100) OV101(DECREASING AILERON) (INA01T) (16 MAR 82)

REFERENCE DATA

SREF =	2690.0000 SQ.FT.	XMRP =	1076.6800 IN. XO		
LREF =	474.8100 INCHES	YMRP =	.0000 IN. YO		
BREF =	936.6800 INCHES	ZMRP =	375.0000 IN. ZO		
SCALE =	.3600				

PARAMETRIC DATA

ALPHA =	10.000	BETA =	.000
ELEVON =	.000	BDFLAP =	.000
SPDBRK =	25.000	RUDDER =	.000

RUN NO. 32/ 0 GRADIENT INTERVAL = -5.00/ 5.00

Q	AILRON	BETA	DP/Q61	DP/Q63	DP/Q62	DP/Q64	DP/Q67	ALPHA
47.600	.000	.00000	.87962	-.10478	.87837	.02442	.02716	10.34000
47.610	2.570	.00000	.87962	-.13622	.89879	-.02442	.05431	10.33880
47.690	5.141	.00000	.88985	-.20957	.87837	-.07325	.02716	10.33550
47.670	7.771	.00000	.85917	-.14670	.87837	.04883	.00000	10.33270
47.670	10.341	.00000	.87962	-.14670	.86815	.00000	.02716	10.33540
47.610	15.541	.00000	.88985	-.12574	.88958	.00000	.02716	10.33010
	GRADIENT	.00000	.00000	-.01223	.00795	-.01900	.01057	-.00047

ARC40X80-462(OA100) OV101 (INA01U) (16 MAR 82)

REFERENCE DATA

SREF =	2690.0000 SQ.FT.	XMRP =	1076.6800 IN. XO		
LREF =	474.8100 INCHES	YMRP =	.0000 IN. YO		
BREF =	936.6800 INCHES	ZMRP =	375.0000 IN. ZO		
SCALE =	.3600				

PARAMETRIC DATA

ALPHA =	15.000	BETA =	.000
ELEVON =	.000	BDFLAP =	.000
SPDBRK =	25.000	RUDDER =	.000

RUN NO. 33/ 0 GRADIENT INTERVAL = -5.00/ 5.00

Q	AILRON	BETA	DP/Q61	DP/Q63	DP/Q62	DP/Q64	DP/Q67	ALPHA
47.570	-.015	.00000	.56091	.40747	.54993	.65734	.02708	15.55000
47.700	2.570	.00000	.55071	.48060	.53974	.65734	.00000	15.55310
47.690	5.170	.00000	.57111	.45971	.56011	.70603	.05415	15.54670
47.620	7.711	.00000	.56091	.49105	.56011	.68169	.00000	15.54580
47.590	10.281	.00000	.56091	.44926	.53974	.68169	.02708	15.54490
47.490	15.527	.00000	.53032	.45971	.57029	.60865	.05415	15.53910
	GRADIENT	.00000	-.00395	.02829	-.00394	.00000	-.01048	.00120

ARC40X80-462(OA100) OV101 (INA01V) (16 MAR 82)

REFERENCE DATA

SREF =	2690.0000 SQ.FT.	XMRP =	1076.6800 IN.	XO	
LREF =	474.8100 INCHES	YMRP =	.0000 IN.	YO	
BREF =	936.6800 INCHES	ZMRP =	375.0000 IN.	ZO	
SCALE =	.3600				

PARAMETRIC DATA

ALPHA =	20.000	BETA =	.000
ELEVON =	.000	BDFLAP =	.000
SPDBRK =	25.000	RUDDER =	.000

RUN NO. 34/ 0 GRADIENT INTERVAL = -5.00/ 5.00

Q	AILRON	BETA	DP/Q61	DP/Q63	DP/Q62	DP/Q64	DP/Q67	ALPHA
47.650	.000	.00000	.16270	1.05218	.13201	1.26231	.00000	20.82100
47.580	2.570	.00000	.18304	1.06260	.18278	1.21376	.02700	20.82050
47.650	5.185	.00000	.15253	1.12510	.12185	1.31085	.02700	20.81780
47.670	7.711	.00000	.15253	1.09385	.16247	1.23804	.00000	20.81279
47.640	10.341	.00000	.15253	1.13552	.14216	1.28659	.05400	20.81310
47.430	15.541	.00000	.14236	1.15635	.10154	1.26231	.05400	20.80319
	GRADIENT	.00000	.00791	.00405	.01975	-.01889	.01050	-.00020

ARC40X80-462(OA100) OV101 (INA01W) (16 MAR 82)

REFERENCE DATA

SREF =	2690.0000 SQ.FT.	XMRP =	1076.6800 IN.	XO	
LREF =	474.8100 INCHES	YMRP =	.0000 IN.	YO	
BREF =	936.6800 INCHES	ZMRP =	375.0000 IN.	ZO	
SCALE =	.3600				

PARAMETRIC DATA

ALPHA =	.000	BETA =	.000
ELEVON =	10.000	BDFLAP =	.000
SPDBRK =	25.000	RUDDER =	.000

RUN NO. 50/ 0 GRADIENT INTERVAL = -5.00/ 5.00

Q	AILRON	BETA	DP/Q61	DP/Q63	DP/Q62	DP/Q64	DP/Q67	ALPHA
47.600	.064	.00000	1.19344	-1.29642	1.20201	-1.22802	.00000	.09040
47.580	2.544	.00000	1.19344	-1.28538	1.18146	-1.20346	.00000	.09080
47.740	5.068	.00000	1.18315	-1.25426	1.20201	-1.27714	-.02732	.09330
47.600	7.578	.00000	1.18315	-1.30696	1.22255	-1.22802	.00000	.09360
47.600	10.044	.00000	1.19344	-1.30696	1.21228	-1.20346	-.02732	.09000
47.740	12.896	.00000	1.20372	-1.29508	1.21228	-1.25258	.02732	.07980
	GRADIENT	.00000	-.00000	.00425	-.00829	.00990	.00000	.00016

ARC40X80-462(OA100) OV101 (INA01X) (16 MAR 82)

REFERENCE DATA

SREF =	2690.0000 SQ.FT.	XMRP =	1076.6800 IN. XO		
LREF =	474.8100 INCHES	YMRP =	.0000 IN. YO		
BREF =	936.6800 INCHES	ZMRP =	375.0000 IN. ZO		
SCALE =	.3600				

PARAMETRIC DATA

ALPHA =	5.000	BETA =	.000
ELEVON =	10.000	BDFLAP =	.000
SPDBRK =	25.000	RUDDER =	.000

RUN NO. 51/ 0 GRADIENT INTERVAL = -5.00/ 5.00

Q	AILRON	BETA	DP/Q61	DP/Q63	DP/Q62	DP/Q64	DP/Q67	ALPHA
47.550	.049	.00000	1.10788	-.78819	1.09605	-.71017	.00000	5.28440
47.650	2.544	.00000	1.09762	-.79869	1.09605	-.71017	-.02724	5.28230
47.560	5.068	.00000	1.08736	-.78919	1.10630	-.73466	.02724	5.28750
47.540	7.578	.00000	1.07710	-.75866	1.10630	-.71017	.02724	5.28690
47.710	10.028	.00000	1.08736	-.74815	1.11654	-.73466	.00000	5.28360
47.480	12.896	.00000	1.08736	-.76717	1.09605	-.71017	.00000	5.27420
	GRADIENT	.00000	-.00411	-.00421	-.00000	.00000	-.01092	-.00084

ARC40X80-462(OA100) OV101 (INA01Y) (16 MAR 82)

REFERENCE DATA

SREF =	2690.0000 SQ.FT.	XMRP =	1076.6800 IN. XO		
LREF =	474.8100 INCHES	YMRP =	.0000 IN. YO		
BREF =	936.6800 INCHES	ZMRP =	375.0000 IN. ZO		
SCALE =	.3600				

PARAMETRIC DATA

ALPHA =	10.000	BETA =	.000
ELEVON =	10.000	BDFLAP =	.000
SPDBRK =	25.000	RUDDER =	.000

RUN NO. 52/ 0 GRADIENT INTERVAL = -5.00/ 5.00

Q	AILRON	BETA	DP/Q61	DP/Q63	DP/Q62	DP/Q64	DP/Q67	ALPHA
47.580	.049	.00000	.81825	-.12574	.83751	.00000	.00000	10.48720
47.430	2.544	.00000	.81825	-.12574	.83751	-.09767	.00000	10.48710
47.430	5.024	.00000	.85917	-.16766	.82730	-.07325	.00000	10.48660
47.400	7.578	.00000	.85917	-.19909	.84773	-.09767	.00000	10.48810
47.480	10.028	.00000	.81825	-.12574	.83751	-.07325	.00000	10.48780
47.370	12.896	.00000	.84894	-.17813	.80687	.00000	.00000	10.48680
	GRADIENT	.00000	-.00000	.00000	-.00000	-.03915	.00000	-.00004

ARC40X80-462(OA100) OV101 (INA01Z) (16 MAR 82)

REFERENCE DATA

SREF = 2690.0000 SQ.FT. XMRP = 1076.6800 IN. XO
LREF = 474.8100 INCHES YMRP = .0000 IN. YO
BREF = 936.6800 INCHES ZMRP = 375.0000 IN. ZO
SCALE = .3600

PARAMETRIC DATA

ALPHA = 15.000 BETA = .000
ELEVON = 10.000 BDFLAP = .000
SPDBRK = 25.000 RUDDER = .000

RUN NO. 53/ 0 GRADIENT INTERVAL = -5.00/ 5.00

Q	AILRON	BETA	DP/Q61	DP/Q63	DP/Q62	DP/Q64	DP/Q67	ALPHA
47.600	.050	.00000	-1.37678	1.34778	.51937	.70603	.00000	15.70420
47.750	2.559	.00000	-1.32579	1.31644	.52956	.60865	.02708	15.70020
47.780	5.068	.00000	-1.30539	1.28510	.49901	.63299	.00000	15.69900
47.690	7.564	.00000	-1.25440	1.24331	.50919	.55996	.02708	15.70020
47.700	10.043	.00000	-1.21361	1.22241	.51937	.65734	.00000	15.70130
47.670	12.896	.00000	-1.20341	1.17017	.50919	.70603	.05415	15.69340
	GRADIENT	.00000	.02032	-.01249	.00406	-.03881	.01079	-.00159

ARC40X80-462(OA100) OV101 (INA02A) (16 MAR 82)

REFERENCE DATA

SREF = 2690.0000 SQ.FT. XMRP = 1076.6800 IN. XO
LREF = 474.8100 INCHES YMRP = .0000 IN. YO
BREF = 936.6800 INCHES ZMRP = 375.0000 IN. ZO
SCALE = .3600

PARAMETRIC DATA

ALPHA = 20.000 BETA = .000
ELEVON = 10.000 BDFLAP = .000
SPDBRK = 25.000 RUDDER = .000

RUN NO. 54/ 0 GRADIENT INTERVAL = -5.00/ 5.00

Q	AILRON	BETA	DP/Q61	DP/Q63	DP/Q62	DP/Q64	DP/Q67	ALPHA
47.540	.034	.00000	-1.30160	1.30220	.07108	1.31086	.00000	20.97739
47.680	2.559	.00000	-1.28127	1.27095	.05077	1.31086	.00000	20.97490
47.590	5.039	.00000	-1.27110	1.17719	.09139	1.21376	-.02700	20.97249
47.620	7.563	.00000	-1.27110	1.09385	.06093	1.31086	.00000	20.96439
47.530	10.043	.00000	-1.26093	1.13552	.12185	1.21376	.00000	20.96399
47.520	12.896	.00000	-1.24059	1.07301	.09139	1.28659	.00000	20.95059
	GRADIENT	.00000	.00805	-.01238	-.00804	-.00000	.00000	-.00099

ARC40X80-462(OA100) OV101

(INA02B) (16 MAR 82)

REFERENCE DATA

SREF =	2690.0000 SQ.FT.	XMRP =	1076.6800 IN. XO		
LREF =	474.8100 INCHES	YMRP =	.0000 IN. YO		
BREF =	936.6800 INCHES	ZMRP =	375.0000 IN. ZO		
SCALE =	.3600				

PARAMETRIC DATA

ALPHA =	.000	BETA =	.000
ELEVON =	-10.000	BOFLAP =	.000
SPDBRK =	25.000	RUDDER =	.000

RUN NO. 55/ 0 GRADIENT INTERVAL = -5.00/ 5.00

Q	AILRON	BETA	DP/Q61	DP/Q63	DP/Q62	DP/Q64	DP/Q67	ALPHA
47.620	-.078	.00000	-.92594	.98022	1.19173	-1.27714	.00000	-.21900
47.760	2.460	.00000	-.93623	.94860	1.19173	-1.25258	-.05463	-.22190
47.760	4.985	.00000	-.94652	.98022	1.19173	-1.25258	.02732	-.21680
47.580	7.465	.00000	-.94652	.95914	1.19173	-1.27714	.02732	-.21810
47.590	10.020	.00000	-.93623	.95914	1.19173	-1.25258	.02732	-.20960
47.380	15.069	.00000	-.92594	.93806	1.18146	-1.25258	.00000	-.17790
	GRADIENT	.00000	-.00406	-.00001	.00000	.00485	.00537	.00043

ARC40X80-462(OA100) OV101

(INA02C) (16 MAR 82)

REFERENCE DATA

SREF =	2690.0000 SQ.FT.	XMRP =	1076.6800 IN. XO		
LREF =	474.8100 INCHES	YMRP =	.0000 IN. YO		
BREF =	936.6800 INCHES	ZMRP =	375.0000 IN. ZO		
SCALE =	.3600				

PARAMETRIC DATA

ALPHA =	5.000	BETA =	.000
ELEVON =	-10.000	BOFLAP =	.000
SPDBRK =	25.000	RUDDER =	.000

RUN NO. 56/ 0 GRADIENT INTERVAL = -5.00/ 5.00

Q	AILRON	BETA	DP/Q61	DP/Q63	DP/Q62	DP/Q64	DP/Q67	ALPHA
47.640	-.034	.00000	-.74884	.73564	1.11654	-.73466	.00000	4.97260
47.660	2.461	.00000	-.72833	.73534	1.12678	-.80812	.00000	4.97170
47.670	4.985	.00000	-.73859	.73564	1.09505	-.66119	.00000	4.97540
47.670	7.480	.00000	-.72833	.72513	1.11654	-.66119	.00000	4.97780
47.570	10.020	.00000	-.70781	.70411	1.09605	-.66119	.02724	4.98020
47.320	15.054	.00000	-.71807	.70411	1.10630	-.73466	.02724	5.01310
	GRADIENT	.00000	.00203	.00000	-.00410	.01472	.00000	.00056

ARC40X80-462(OA100) OV101 (INA02D) (16 MAR 82)

REFERENCE DATA

SREF = 2690.0000 SQ.FT. XMRP = 1076.6800 IN. XO
LREF = 474.8100 INCHES YMRP = .0000 IN. YO
BREF = 936.6800 INCHES ZMRP = 375.0000 IN. ZO
SCALE = .3600

PARAMETRIC DATA

ALPHA = 10.000 BETA = .000
ELEVON = -10.000 BDFLAP = .000
SPDBRK = 25.000 RUDDER = .000

RUN NO. 57/ 0 GRADIENT INTERVAL = -5.00/ 5.00

Q	AILRON	BETA	DP/Q61	DP/Q63	DP/Q62	DP/Q64	DP/Q67	ALPHA
47.760	-.064	.00000	.82848	-.12574	.83751	-.04883	-.05431	10.17740
47.770	2.461	.00000	.82848	-.15718	.82730	-.02442	-.08147	10.17930
47.800	4.956	.00000	.82848	-.17813	.80687	-.02442	.00000	10.18250
47.880	7.495	.00000	.82848	-.10478	.82730	-.07325	-.02716	10.18790
47.690	10.020	.00000	.84894	-.19909	.83751	-.07325	-.02716	10.18750
47.640	15.039	.00000	.83871	-.13322	.85794	-.07325	-.05431	10.21370
	GRADIENT	.00000	.00000	-.01044	-.00610	.00487	.01078	.00102

ARC40X80-462(OA100) OV101 (INA02E) (16 MAR 82)

REFERENCE DATA

SREF = 2690.0000 SQ.FT. XMRP = 1076.6800 IN. XO
LREF = 474.8100 INCHES YMRP = .0000 IN. YO
BREF = 936.6800 INCHES ZMRP = 375.0000 IN. ZO
SCALE = .3600

PARAMETRIC DATA

ALPHA = 15.000 BETA = .000
ELEVON = -10.000 BDFLAP = .000
SPDBRK = 25.000 RUDDER = .000

RUN NO. 58/ 0 GRADIENT INTERVAL = -5.00/ 5.00

Q	AILRON	BETA	DP/Q61	DP/Q63	DP/Q62	DP/Q64	DP/Q67	ALPHA
47.510	-.064	.00000	.50992	.48060	.50919	.58430	-.05415	15.39270
47.450	2.461	.00000	.53032	.49105	.52956	.59430	-.08123	15.38990
47.560	4.971	.00000	.49972	.47016	.51937	.58430	-.05415	15.39340
47.500	7.465	.00000	.55071	.42837	.47864	.60865	-.05415	15.39760
47.370	10.020	.00000	.52012	.52240	.50919	.60865	-.08123	15.39600
47.570	15.055	.00000	.50992	.52240	.56011	.48692	-.02708	15.39770
	GRADIENT	.00000	-.00202	-.00207	.00203	.00000	-.00001	.00014

ARC40X80-462(OA100) OV101 (INA02F) (16 MAR 82)

REFERENCE DATA

SREF =	2690.0000 SQ.FT.	XMRP =	1076.6800 IN.	XO	
LREF =	474.8100 INCHES	YMRP =	.0000 IN.	YO	
BREF =	936.6800 INCHES	ZMRP =	375.0000 IN.	ZO	
SCALE =	.3600				

PARAMETRIC DATA

ALPHA =	20.000	BETA =	.000
ELEVON =	-10.000	BDFLAP =	.000
SPDBRK =	25.000	RUDDER =	.000

RUN NO. 59/ 0 GRADIENT INTERVAL = -5.00/ 5.00

Q	AILRON	BETA	DP/Q61	DP/Q63	DP/Q62	DP/Q64	DP/Q67	ALPHA
45.310	-.064	.00000	.10169	1.05218	.08123	1.14094	-.05400	20.65880
47.090	2.461	.00000	.12202	1.10427	.13201	1.21376	-.05400	20.65709
47.600	4.971	.00000	.13219	1.09385	.13201	1.18949	-.02700	20.65230
47.390	7.480	.00000	.11186	1.09385	.13201	1.16521	-.08099	20.65919
47.470	10.020	.00000	.09152	1.11468	.11170	1.21376	-.05400	20.65590
47.360	15.010	.00000	.11186	1.12510	.11170	1.23804	-.05400	20.65459
	GRADIENT	.00000	.00606	.00829	.01010	.00966	.00536	-.00129

ARC40X80-462(OA100) OV101 (INA02G) (16 MAR 82)

REFERENCE DATA

SREF =	2690.0000 SQ.FT.	XMRP =	1076.6800 IN.	XO	
LREF =	474.8100 INCHES	YMRP =	.0000 IN.	YO	
BREF =	936.6800 INCHES	ZMRP =	375.0000 IN.	ZO	
SCALE =	.3600				

PARAMETRIC DATA

ALPHA =	.000	BETA =	.000
ELEVON =	-20.000	BDFLAP =	.000
SPDBRK =	25.000	RUDDER =	.000

RUN NO. 70/ 0 GRADIENT INTERVAL = -5.00/ 5.00

Q	AILRON	BETA	DP/Q61	DP/Q63	DP/Q62	DP/Q64	DP/Q67	ALPHA
48.060	-.053	.00000	1.22430	-1.33858	1.20201	-1.30170	.02732	-.34040
47.800	2.441	.00000	1.21401	-1.30696	1.19173	-1.25258	.02732	-.33890
47.850	4.966	.00000	1.19344	-1.33858	1.20201	-1.15434	.05463	-.32630
47.690	7.475	.00000	1.21401	-1.29642	1.20201	-1.22802	.02732	-.30830
47.660	10.000	.00000	1.21401	-1.26480	1.20201	-1.17890	.00000	-.28860
47.530	15.005	.00000	1.19344	-1.27534	1.20201	-1.25258	.02732	-.25800
	GRADIENT	.00000	-.00615	-.00003	.00001	.02938	.00545	.00281

ARC40X80-462(0A100) OV101 (INA02H) (16 MAR 82)

REFERENCE DATA

SREF = 2690.0000 SQ.FT. XMRP = 1076.6800 IN. XO
LREF = 474.8100 INCHES YMRP = .0000 IN. YO
BREF = 936.6800 INCHES ZMRP = 375.0000 IN. ZO
SCALE = .3600

PARAMETRIC DATA

ALPHA = 5.000 BETA = .000
ELEVON = -20.000 BDFLAP = .000
SPDBRK = 25.000 RUDDER = .000

RUN NO. 71/ 0 GRADIENT INTERVAL = -5.00/ 5.00

Q	AILRON	BETA	DP/Q61	DP/Q63	DP/Q62	DP/Q64	DP/Q67	ALPHA
47.420	-.068	.00000	1.09762	-.79869	1.08581	-.68568	.02724	4.84390
47.380	2.456	.00000	1.10788	-.78819	1.10630	-.73466	.00000	4.85130
47.560	4.966	.00000	1.09762	-.75666	1.11654	-.75914	.02724	4.86170
47.530	7.476	.00000	1.08736	-.79869	1.09605	-.63670	.02724	4.87510
47.490	9.986	.00000	1.09762	-.77768	1.08581	-.75914	.02724	4.89760
47.450	15.020	.00000	1.09762	-.80920	1.08581	-.73466	.02724	4.93140
	GRADIENT	.00000	.00000	.00835	.00611	-.01460	-.00001	.00354

ARC40X80-462(0A100) OV101 (INA02I) (16 MAR 82)

REFERENCE DATA

SREF = 2690.0000 SQ.FT. XMRP = 1076.6800 IN. XO
LREF = 474.8100 INCHES YMRP = .0000 IN. YO
BREF = 936.6800 INCHES ZMRP = 375.0000 IN. ZO
SCALE = .3600

PARAMETRIC DATA

ALPHA = 10.000 BETA = .000
ELEVON = -20.000 BDFLAP = .000
SPDBRK = 25.000 RUDDER = .000

RUN NO. 72/ 0 GRADIENT INTERVAL = -5.00/ 5.00

Q	AILRON	BETA	DP/Q61	DP/Q63	DP/Q62	DP/Q64	DP/Q67	ALPHA
47.650	-.053	.00000	.82848	-.13622	.83751	-.07325	.00000	10.03710
47.620	2.442	.00000	.84894	-.14670	.83751	-.07325	.02716	10.03800
47.580	5.408	.00000	.83871	-.17813	.86815	-.07325	.02716	10.07030
47.500	7.491	.00000	.84894	-.16766	.84773	-.12209	.02716	10.07050
47.460	10.000	.00000	.81825	-.11526	.84773	-.09767	.02716	10.09890
47.370	15.035	.00000	.86940	-.16766	.85794	-.04883	.02716	10.13050
	GRADIENT	.00000	.00820	-.00420	.00000	-.00000	.01089	.00036

ARC40X80-462(OA100) OV101 (INA02J) (16 MAR 82)

REFERENCE DATA

SREF =	2690.0000 SQ.FT.	XMRP =	1076.6800 IN. XO		
LREF =	474.8100 INCHES	YMRP =	.0000 IN. YO		
BREF =	936.6800 INCHES	ZMRP =	375.0000 IN. ZO		
SCALE =	.3600				

PARAMETRIC DATA

ALPHA =	15.000	BETA =	.000
ELEVON =	-20.000	BDFLAP =	.000
SPDBRK =	25.000	RUDDER =	.000

RUN NO. 73/ 0 GRADIENT INTERVAL = -5.00/ 5.00

Q	AILRON	BETA	DP/Q61	DP/Q63	DP/Q62	DP/Q64	DP/Q67	ALPHA
47.540	-.053	.00000	.53032	.48060	.56011	.48692	.02708	15.23020
47.580	2.456	.00000	.55071	.48060	.51937	.60865	.00000	15.22850
47.480	4.966	.00000	.53032	.51195	.53974	.53561	.00000	15.23270
47.420	7.491	.00000	.53032	.49105	.57029	.53561	-.02708	15.26340
47.350	9.970	.00000	.52012	.48060	.50919	.65734	.02708	15.28240
47.430	15.020	.00000	.54051	.49105	.52956	.53561	.00000	15.33470
	GRADIENT	.00000	-.00000	.00625	-.00406	.00970	-.00539	.00050

ARC40X80-462(OA100) OV101 (INA02K) (16 MAR 82)

REFERENCE DATA

SREF =	2690.0000 SQ.FT.	XMRP =	1076.6800 IN. XO		
LREF =	474.8100 INCHES	YMRP =	.0000 IN. YO		
BREF =	936.6800 INCHES	ZMRP =	375.0000 IN. ZO		
SCALE =	.3600				

PARAMETRIC DATA

ALPHA =	20.000	BETA =	.000
ELEVON =	-20.000	BDFLAP =	.000
SPDBRK =	25.000	RUDDER =	.000

RUN NO. 74/ 0 GRADIENT INTERVAL = -5.00/ 5.00

Q	AILRON	BETA	DP/Q61	DP/Q63	DP/Q62	DP/Q64	DP/Q67	ALPHA
47.470	-.068	.00000	.19321	1.05218	.16247	1.21376	.00000	20.48309
47.470	2.456	.00000	.16270	1.06260	.18278	1.14094	.02700	20.48579
47.410	4.981	.00000	.15253	1.10427	.15231	1.11666	.02700	20.48569
47.390	7.461	.00000	.18304	1.02093	.16247	1.14094	.02700	20.48810
47.330	9.986	.00000	.15253	1.05218	.16247	1.14094	.02700	20.49449
47.780	15.020	.00000	.14236	1.09385	.15231	1.16521	.02700	20.56299
	GRADIENT	.00000	-.00806	.01032	-.00201	-.01923	.00535	.00051

ARC40X80-462(OA100) OV101 (INA02L) (16 MAR 82)

REFERENCE DATA

SREF =	2690.0000 SQ.FT.	XMRP =	1076.6800 IN.	XO	
LREF =	474.8100 INCHES	YMRP =	.0000 IN.	YO	
BREF =	936.6800 INCHES	ZMRP =	375.0000 IN.	ZO	
SCALE =	.3600				

PARAMETRIC DATA

ALPHA =	.000	BETA =	5.000
ELEVON =	.000	BDFLAP =	.000
SPDBRK =	25.000	RUDDER =	.000

RUN NO. 60/ 0 GRADIENT INTERVAL = -5.00/ 5.00

Q	AILRON	BETA	DP/Q61	DP/Q63	DP/Q62	DP/Q64	DP/Q67	ALPHA
47.680	.000	5.00000	1.24488	-1.18048	1.07872	-1.30170	.19121	-.04990
47.880	2.524	5.00000	1.27574	-1.23318	1.07872	-1.30170	.21852	-.05140
47.850	5.005	5.00000	1.29632	-1.23318	1.08900	-1.32626	.21852	-.05250
47.800	7.514	5.00000	1.32718	-1.19102	1.07872	-1.30170	.21852	-.05330
47.730	10.024	5.00000	1.30661	-1.24372	1.07872	-1.30170	.24584	-.05380
47.790	15.088	5.00000	1.29632	-1.20156	1.09927	-1.30170	.19121	-.05320
	GRADIENT	.00000	.01222	-.02088	.00000	.00000	.01082	-.00059

ARC40X80-462(OA100) OV101 (INA02M) (16 MAR 82)

REFERENCE DATA

SREF =	2690.0000 SQ.FT.	XMRP =	1076.6800 IN.	XO	
LREF =	474.8100 INCHES	YMRP =	.0000 IN.	YO	
BREF =	936.6800 INCHES	ZMRP =	375.0000 IN.	ZO	
SCALE =	.3600				

PARAMETRIC DATA

ALPHA =	5.000	BETA =	5.000
ELEVON =	.000	BDFLAP =	.000
SPDBRK =	25.000	RUDDER =	.000

RUN NO. 61/ 0 GRADIENT INTERVAL = -5.00/ 5.00

Q	AILRON	BETA	DP/Q61	DP/Q63	DP/Q62	DP/Q64	DP/Q67	ALPHA
47.920	.000	5.00000	1.18994	-.60953	1.00386	-.85710	.24512	5.14540
47.840	2.510	5.00000	1.17968	-.64106	.99362	-.78363	.19064	5.14770
47.740	4.990	5.00000	1.18994	-.64106	.99362	-.73466	.21788	5.14580
47.700	7.514	5.00000	1.18994	-.62004	.99362	-.80812	.21788	5.14660
47.820	10.009	5.00000	1.18994	-.65157	1.00386	-.75914	.21788	5.14540
47.620	15.058	5.00000	1.18994	-.62004	.97313	-.80812	.24512	5.14370
	GRADIENT	-.00000	-.00001	-.00633	-.00206	.02455	-.00549	.00008

ARC40X80-462(OA100) OV101 (INA02N) (16 MAR 82)

REFERENCE DATA

SREF =	2690.0000 SQ.FT.	XMRP =	1076.6800 IN.	XO	
LREF =	474.8100 INCHES	YMRP =	.0000 IN.	YO	
BREF =	936.6800 INCHES	ZMRP =	375.0000 IN.	ZO	
SCALE =	.3600				

PARAMETRIC DATA

ALPHA =	10.000	BETA =	5.000
ELEVON =	.000	BDFLAP =	.000
SPDBRK =	25.000	RUDDER =	.000

RUN NO. 62/ 0 GRADIENT INTERVAL = -5.00/ 5.00

Q	AILRON	BETA	DP/Q61	DP/Q63	DP/Q62	DP/Q64	DP/Q67	ALPHA
47.830	.000	5.00000	.85917	.08383	.78644	-.21975	.24440	10.34720
47.820	2.495	5.00000	.84894	.08383	.79666	-.24417	.24440	10.34480
47.780	5.005	5.00000	.83871	.05239	.80687	-.24417	.21724	10.34240
47.670	7.499	5.00000	.84894	.09431	.78644	-.24417	.27155	10.34300
47.670	10.024	5.00000	.86940	.05239	.78644	-.29300	.27155	10.34630
47.800	15.088	5.00000	.87962	.04191	.78644	-.19534	.24440	10.34780
	GRADIENT	.00000	-.00410	.00000	.00409	-.00979	.00000	-.00096

ARC40X80-462(OA100) OV101 (INA020) (16 MAR 82)

REFERENCE DATA

SREF =	2690.0000 SQ.FT.	XMRP =	1076.6800 IN.	XO	
LREF =	474.8100 INCHES	YMRP =	.0000 IN.	YO	
BREF =	936.6800 INCHES	ZMRP =	375.0000 IN.	ZO	
SCALE =	.3600				

PARAMETRIC DATA

ALPHA =	15.000	BETA =	5.000
ELEVON =	.000	BDFLAP =	.000
SPDBRK =	25.000	RUDDER =	.000

RUN NO. 63/ 0 GRADIENT INTERVAL = -5.00/ 5.00

Q	AILRON	BETA	DP/Q61	DP/Q63	DP/Q62	DP/Q64	DP/Q67	ALPHA
47.700	.000	5.00000	.52012	.72091	.49901	.36519	.21661	15.55740
47.800	2.524	5.00000	.47932	.79404	.48882	.43823	.24369	15.55920
47.750	5.005	5.00000	.52012	.82539	.48882	.36519	.21661	15.55860
47.700	7.499	5.00000	.56091	.74180	.50919	.34084	.27076	15.55630
47.770	10.024	5.00000	.50992	.78360	.48882	.34084	.24369	15.56090
47.900	15.058	5.00000	.52012	.78360	.51937	.34084	.18953	15.55820
	GRADIENT	.00000	-.01616	.02897	-.00403	.02893	.01073	.00071

ARC40X80-462(OA100) OV101 (INA02P) (16 MAR 82)

REFERENCE DATA

SREF =	2690.0000 SQ.FT.	XMRP =	1076.6800 IN.	XO	
LREF =	474.8100 INCHES	YMRP =	.0000 IN.	YO	
BREF =	936.6800 INCHES	ZMRP =	375.0000 IN.	ZO	
SCALE =	.3600				

PARAMETRIC DATA

ALPHA =	20.000	BETA =	5.000
ELEVON =	.000	BDFLAP =	.000
SPDBRK =	25.000	RUDDER =	.000

RUN NO. 64/ 0 GRADIENT INTERVAL = -5.00/ 5.00

Q	AILRON	BETA	DP/Q61	DP/Q63	DP/Q62	DP/Q64	DP/Q67	ALPHA
47.710	.000	5.00000	.05084	1.43763	.12185	.99529	.26998	20.81099
48.030	2.524	5.00000	.08135	1.41679	.13201	.94674	.21598	20.81099
47.850	5.020	5.00000	.05084	1.41679	.11170	.89818	.18898	20.81439
47.840	7.499	5.00000	.01017	1.44805	.10154	1.01956	.26998	20.81369
47.810	10.009	5.00000	.10169	1.40638	.14216	.84963	.24298	20.81110
47.700	15.073	5.00000	.08135	1.38471	.13201	.94674	.24298	20.80440
	GRADIENT	.00000	.01208	-.00826	.00402	-.01923	-.02139	.00000

ARC40X80-462(OA100) OV101 (INA02Q) (16 MAR 82)

REFERENCE DATA

SREF =	2690.0000 SQ.FT.	XMRP =	1076.6800 IN.	XO	
LREF =	474.8100 INCHES	YMRP =	.0000 IN.	YO	
BREF =	936.6800 INCHES	ZMRP =	375.0000 IN.	ZO	
SCALE =	.3600				

PARAMETRIC DATA

ALPHA =	.000	BETA =	5.000
ELEVON =	10.000	BDFLAP =	.000
SPDBRK =	25.000	RUDDER =	.000

RUN NO. 65/ 0 GRADIENT INTERVAL = -5.00/ 5.00

Q	AILRON	BETA	DP/Q61	DP/Q63	DP/Q62	DP/Q64	DP/Q67	ALPHA
47.570	.035	5.00000	1.28603	-1.18048	1.07872	-1.22802	.21852	.09770
47.800	2.559	5.00000	1.28603	-1.14886	1.08900	-1.22802	.16389	.09610
47.770	5.068	5.00000	1.29632	-1.25426	1.08900	-1.25258	.24584	.09620
47.740	7.533	5.00000	1.30661	-1.19102	1.06845	-1.20346	.21852	.09890
47.730	10.043	5.00000	1.29632	-1.18048	1.08900	-1.30170	.19121	.09560
47.770	12.896	5.00000	1.28603	-1.24372	1.07872	-1.32626	.21852	.08890
	GRADIENT	.00000	-.00000	.01253	.00407	.00000	-.02165	-.00063

ARC40X80-462(OA100) OV101 (INA02R) (16 MAR 82)

REFERENCE DATA

SREF =	2690.0000 SQ.FT.	XMRP =	1076.6800 IN.	XO	
LREF =	474.8100 INCHES	YMRP =	.0000 IN.	YO	
BREF =	936.6800 INCHES	ZMRP =	375.0000 IN.	ZO	
SCALE =	.3600				

PARAMETRIC DATA

ALPHA =	5.000	BETA =	5.000
ELEVON =	10.000	BDFLAP =	.000
SPDBRK =	25.000	RUDDER =	.000

RUN NO. 66/ 0 GRADIENT INTERVAL = -5.00/ 5.00

Q	AILRON	BETA	DP/Q61	DP/Q63	DP/Q62	DP/Q64	DP/Q67	ALPHA
47.850	.049	5.00000	1.15917	-.54648	1.01410	-.80812	.24512	5.29310
47.690	2.559	5.00000	1.17968	-.57800	1.00386	-.80812	.19064	5.29330
47.780	5.024	5.00000	1.16943	-.55698	1.00386	-.78363	.21788	5.29510
47.750	7.518	5.00000	1.17968	-.62004	1.00386	-.80812	.24512	5.29330
47.710	10.043	5.00000	1.16943	-.60953	1.01410	-.75914	.27235	5.29450
47.610	12.896	5.00000	1.16943	-.54648	.99362	-.78363	.19064	5.29640
	GRADIENT	.00000	.00817	-.01256	-.00408	.00000	-.02171	.00008

ARC40X80-462(OA100) OV101 (INA02S) (16 MAR 82)

REFERENCE DATA

SREF =	2690.0000 SQ.FT.	XMRP =	1076.6800 IN.	XO	
LREF =	474.8100 INCHES	YMRP =	.0000 IN.	YO	
BREF =	936.6800 INCHES	ZMRP =	375.0000 IN.	ZO	
SCALE =	.3600				

PARAMETRIC DATA

ALPHA =	10.000	BETA =	5.000
ELEVON =	10.000	BDFLAP =	.000
SPDBRK =	25.000	RUDDER =	.000

RUN NO. 67/ 0 GRADIENT INTERVAL = -5.00/ 5.00

Q	AILRON	BETA	DP/Q61	DP/Q63	DP/Q62	DP/Q64	DP/Q67	ALPHA
47.830	.049	5.00000	.88985	.04191	.80687	-.17092	.24440	10.49490
47.440	2.559	5.00000	.83871	.06287	.78644	-.17092	.24440	10.49380
47.780	5.066	5.00000	.87962	.09431	.78644	-.21975	.27155	10.49550
47.740	7.578	5.00000	.85917	.11526	.79666	-.19534	.27155	10.49660
47.710	10.043	5.00000	.86940	.02096	.81709	-.19534	.27155	10.49480
47.810	12.896	5.00000	.84894	.10478	.76602	-.17092	.24440	10.49630
	GRADIENT	.00000	-.02038	.00835	-.00814	.00000	.00000	-.00044

ARC40X80-462(OA100) OV101 (INA02T) (16 MAR 82)

REFERENCE DATA

SREF =	2690.0000 SQ.FT.	XMRP =	1076.6800 IN. XO		
LREF =	474.8100 INCHES	YMRP =	.0000 IN. YO		
BREF =	936.6800 INCHES	ZMRP =	375.0000 IN. ZO		
SCALE =	.3600				

PARAMETRIC DATA

ALPHA =	15.000	BETA =	5.000
ELEVON =	10.000	BDFLAP =	.000
SPDBRK =	25.000	RUDDER =	.000

RUN NO. 68/ 0 GRADIENT INTERVAL = -5.00/ 5.00

Q	AILRON	BETA	DP/Q61	DP/Q63	DP/Q62	DP/Q64	DP/Q67	ALPHA
47.580	.049	5.00000	.50992	.73136	.50919	.41388	.18953	15.70980
47.690	2.543	5.00000	.47932	.77315	.48901	.38953	.21661	15.71140
47.710	5.038	5.00000	.52012	.76270	.51937	.41388	.24369	15.71090
47.740	7.534	5.00000	.48952	.81494	.52956	.38953	.24369	15.71150
47.700	10.050	5.00000	.48972	.79404	.53974	.36519	.24369	15.71250
47.800	12.896	5.00000	.48972	.80449	.50919	.38953	.21661	15.70700
	GRADIENT	.00000	-.01227	.01676	-.00408	-.00976	.01086	.00064

ARC40X80-462(OA100) OV101 (INA02U) (16 MAR 82)

REFERENCE DATA

SREF =	2690.0000 SQ.FT.	XMRP =	1076.6800 IN. XO		
LREF =	474.8100 INCHES	YMRP =	.0000 IN. YO		
BREF =	936.6800 INCHES	ZMRP =	375.0000 IN. ZO		
SCALE =	.3600				

PARAMETRIC DATA

ALPHA =	20.000	BETA =	5.000
ELEVON =	10.000	BDFLAP =	.000
SPDBRK =	25.000	RUDDER =	.000

RUN NO. 69/ 0 GRADIENT INTERVAL = -5.00/ 5.00

Q	AILRON	BETA	DP/Q61	DP/Q63	DP/Q62	DP/Q64	DP/Q67	ALPHA
47.550	.064	5.00000	.09152	1.43763	.09139	1.01956	.24298	20.96309
47.680	2.559	5.00000	.04068	1.45847	.15231	.97101	.24298	20.96408
47.610	5.054	5.00000	.09152	1.39596	.16247	.99529	.21598	20.95999
47.460	7.534	5.00000	.09152	1.39596	.15231	1.01956	.24298	20.96539
47.300	10.058	5.00000	.02034	1.44805	.14216	.97101	.21598	20.95909
47.320	12.696	5.00000	.11186	1.38554	.17262	.97101	.26998	20.94559
	GRADIENT	.00000	-.02039	.00836	.02443	-.01947	-.00000	.00072

ARC40X80-462(OA100) OV101 (INA02V) (16 MAR 82)

REFERENCE DATA

SREF =	2690.0000 SQ.FT.	XMRP =	1076.6800 IN. XO		
LREF =	474.8100 INCHES	YMRP =	.0000 IN. YO		
BREF =	936.6800 INCHES	ZMRP =	375.0000 IN. ZO		
SCALE =	.3600				

PARAMETRIC DATA

ALPHA =	.000	BETA =	10.000
ELEVON =	.000	BDFLAP =	.000
SPDBRK =	25.000	RUDDER =	.000

RUN NO. 75/ 0 GRADIENT INTERVAL = -5.00/ 5.00

Q	AILRON	BETA	DP/Q61	DP/Q63	DP/Q62	DP/Q64	DP/Q67	ALPHA
47.400	.000	10.00000	1.48151	-1.12778	.91435	-1.25258	.35509	-.04110
47.360	2.524	10.00000	1.46093	-1.16994	.91435	-1.27714	.38241	-.04090
47.470	5.005	10.00000	1.47122	-1.13832	.91435	-1.27714	.38241	-.03870
47.420	7.514	10.00000	1.46093	-1.14886	.90407	-1.22802	.35509	-.03860
47.490	10.009	10.00000	1.46093	-1.12778	.91435	-1.25258	.38241	-.03640
47.360	15.058	10.00000	1.45064	-1.08562	.91435	-1.30170	.35509	-.03750
	GRADIENT	.00000	-.00815	-.01670	.00000	-.00973	.01082	.00008

ARC40X80-462(OA100) OV101 (INA02W) (16 MAR 82)

REFERENCE DATA

SREF =	2690.0000 SQ.FT.	XMRP =	1076.6800 IN. XO		
LREF =	474.8100 INCHES	YMRP =	.0000 IN. YO		
BREF =	936.6800 INCHES	ZMRP =	375.0000 IN. ZO		
SCALE =	.3600				

PARAMETRIC DATA

ALPHA =	5.000	BETA =	10.000
ELEVON =	.000	BDFLAP =	.000
SPDBRK =	25.000	RUDDER =	.000

RUN NO. 76/ 0 GRADIENT INTERVAL = -5.00/ 5.00

Q	AILRON	BETA	DP/Q61	DP/Q63	DP/Q62	DP/Q64	DP/Q67	ALPHA
47.750	.000	10.00000	1.23097	-.42036	.83997	-.83261	.40853	5.14960
47.750	2.509	10.00000	1.21046	-.47291	.82972	-.75914	.38129	5.15250
47.660	4.990	10.00000	1.21046	-.44138	.82972	-.80812	.38129	5.15210
47.580	7.514	10.00000	1.20020	-.43087	.82972	-.80812	.38129	5.15420
47.440	10.024	10.00000	1.21046	-.44138	.82972	-.71017	.38129	5.15550
47.440	15.058	10.00000	1.22072	-.40986	.81948	-.73466	.38129	5.15870
	GRADIENT	.00000	-.00412	-.00424	-.00206	.00495	-.00547	.00050

ARC40X80-462(OA100) OV101 (INA02X) (16 MAR 82)

REFERENCE DATA

SREF =	2690.0000 SQ.FT.	XMRP =	1076.6800 IN.	XO	
LREF =	474.8100 INCHES	YMRP =	.0000 IN.	YO	
BREF =	936.6800 INCHES	ZMRP =	375.0000 IN.	ZO	
SCALE =	.3600				

PARAMETRIC DATA

ALPHA =	10.000	BETA =	10.000
ELEVON =	.000	BDFLAP =	.000
SPDBRK =	25.000	RUDDER =	.000

RUN NO. 77/ 0 GRADIENT INTERVAL = -5.00/ 5.00

Q	AILRON	BETA	DP/Q61	DP/Q53	DP/Q62	DP/Q64	DP/Q67	ALPHA
47.680	.000	10.00000	.88985	.32483	.69452	-.29300	.40733	10.35210
47.630	2.509	10.00000	.91031	.26196	.69452	-.29300	.43449	10.35130
47.600	5.019	10.00000	.87962	.29340	.69452	-.31742	.38018	10.34970
47.450	7.529	10.00000	.85917	.29340	.69452	-.31742	.35302	10.35210
47.390	10.024	10.00000	.87962	.25148	.70474	-.31742	.40733	10.35430
47.370	15.058	10.00000	.90008	.30387	.67410	-.29300	.43449	10.36380
	GRADIENT	.00000	.00815	-.02506	.00000	.00000	.01082	-.00032

ARC40X80-462(OA100) OV101 (INA02Y) (16 MAR 82)

REFERENCE DATA

SREF =	2690.0000 SQ.FT.	XMRP =	1076.6800 IN.	XO	
LREF =	474.8100 INCHES	YMRP =	.0000 IN.	YO	
BREF =	936.6800 INCHES	ZMRP =	375.0000 IN.	ZO	
SCALE =	.3600				

PARAMETRIC DATA

ALPHA =	15.000	BETA =	10.000
ELEVON =	.000	BDFLAP =	.000
SPDBRK =	25.000	RUDDER =	.000

RUN NO. 78/ 0 GRADIENT INTERVAL = -5.00/ 5.00

Q	AILRON	BETA	DP/Q61	DP/Q63	DP/Q62	DP/Q64	DP/Q67	ALPHA
47.490	.000	10.00000	.44873	1.05524	.45827	.21911	.43322	15.57450
47.420	2.481	10.00000	.45893	1.02390	.45827	.24346	.40615	15.57630
47.490	5.005	10.00000	.41813	1.05524	.42772	.21911	.37907	15.57790
47.420	7.514	10.00000	.47932	1.02390	.45827	.19477	.43322	15.57640
47.270	10.024	10.00000	.42833	1.03435	.46646	.21911	.43322	15.57920
47.500	15.088	10.00000	.44873	1.06569	.43790	.21911	.37907	15.58190
	GRADIENT	.00000	.00411	-.01263	.00000	.00981	-.01091	.00073

ARC40X80-462(OA100) OV101 (INA02Z) (16 MAR 82)

REFERENCE DATA

SREF =	2690.0000 SQ.FT.	XMRP =	1076.6800 IN. XO		
LREF =	474.8100 INCHES	YMRP =	.0000 IN. YO		
BREF =	936.6800 INCHES	ZMRP =	375.0000 IN. ZO		
SCALE =	.3600				

PARAMETRIC DATA

ALPHA =	20.000	BETA =	10.000
ELEVON =	.000	BDFLAP =	.000
SPDBRK =	25.000	RUDDER =	.000

RUN NO. 79/ 0 GRADIENT INTERVAL = -5.00/ 5.00

Q	AILRON	BETA	DP/Q61	DP/Q63	DP/Q62	DP/Q64	DP/Q67	ALPHA
47.610	.000	10.00000	.00000	1.60431	.12185	.77681	.48595	20.82259
47.510	2.510	10.00000	-.04068	1.66632	.17262	.67971	.40497	20.82199
47.470	5.020	10.00000	-.04068	1.64598	.12185	.72826	.43197	20.82559
47.420	7.514	10.00000	.03051	1.54191	.12185	.72826	.40497	20.82520
47.380	10.009	10.00000	-.01017	1.67724	.12185	.70398	.45896	20.82790
47.730	15.073	10.00000	.04068	1.67724	.12185	.72826	.40497	20.82548
	GRADIENT	.00000	-.01621	.02490	.02023	-.03869	-.03227	-.00024

ARC40X80-462(OA100) OV101 (INA03A) (16 MAR 82)

REFERENCE DATA

SREF =	2690.0000 SQ.FT.	XMRP =	1076.6800 IN. XO		
LREF =	474.8100 INCHES	YMRP =	.0000 IN. YO		
BREF =	936.6800 INCHES	ZMRP =	375.0000 IN. ZO		
SCALE =	.3600				

PARAMETRIC DATA

ALPHA =	.000	BETA =	10.000
ELEVON =	10.000	BDFLAP =	.000
SPDBRK =	25.000	RUDDER =	.000

RUN NO. 80/ 0 GRADIENT INTERVAL = -5.00/ 5.00

Q	AILRON	BETA	DP/Q61	DP/Q63	DP/Q62	DP/Q64	DP/Q67	ALPHA
47.370	.035	10.00000	1.41978	-1.09616	.90407	-1.25258	.35509	.10890
47.290	2.559	10.00000	1.41978	-1.15940	.89380	-1.22802	.35509	.10520
47.470	5.053	10.00000	1.44036	-1.14886	.90407	-1.25259	.35509	.10540
47.510	7.533	10.00000	1.44036	-1.09616	.91435	-1.25258	.32778	.10220
47.370	10.058	10.00000	1.43007	-1.15940	.90407	-1.25258	.35509	.10200
47.570	12.896	10.00000	1.43007	-1.07508	.89380	-1.27714	.32778	.09530
	GRADIENT	.00000	-.00000	-.02506	-.00407	.00973	-.00000	-.00147

ARC40X80-462(OA100) OV101 (INA03B) (16 MAR 82)

REFERENCE DATA

SREF =	2690.0000 SQ.FT.	XMRP =	1076.6800 IN. XO		
LREF =	474.8100 INCHES	YMRP =	.0000 IN. YO		
BREF =	936.6800 INCHES	ZMRP =	375.0000 IN. ZO		
SCALE =	.3600				

PARAMETRIC DATA

ALPHA =	5.000	BETA =	10.000
ELEVON =	10.000	BDFLAP =	.000
SPDBRK =	25.000	RUDDER =	.000

RUN NO. 81/ 0 GRADIENT INTERVAL = -5.00/ 5.00

Q	AILRON	BETA	DP/Q61	DP/Q63	DP/Q62	DP/Q64	DP/Q67	ALPHA
47.580	.010	10.00000	1.18994	-.36782	.81948	-.68568	.38129	5.30290
47.460	2.529	10.00000	1.20020	-.45189	.81948	-.78363	.38129	5.29670
47.450	5.054	10.00000	1.20020	-.45189	.81948	-.75914	.35406	5.29710
47.340	7.548	10.00000	1.18994	-.42036	.80923	-.78363	.38129	5.29960
47.720	10.043	10.00000	1.20020	-.44138	.81948	-.75914	.38129	5.30020
47.370	12.896	10.00000	1.14891	-.35731	.81948	-.80812	.38129	5.30320
	GRADIENT	.00000	.00407	-.03338	-.00000	-.03889	.00000	-.00246

ARC40X80-462(OA100) OV101 (INA03C) (16 MAR 82)

REFERENCE DATA

SREF =	2690.0000 SQ.FT.	XMRP =	1076.6800 IN. XO		
LREF =	474.8100 INCHES	YMRP =	.0000 IN. YO		
BREF =	936.6800 INCHES	ZMRP =	375.0000 IN. ZO		
SCALE =	.3600				

PARAMETRIC DATA

ALPHA =	10.000	BETA =	10.000
ELEVON =	10.000	BDFLAP =	.000
SPDBRK =	25.000	RUDDER =	.000

RUN NO. 82/ 0 GRADIENT INTERVAL = -5.00/ 5.00

Q	AILRON	BETA	DP/Q61	DP/Q63	DP/Q62	DP/Q64	DP/Q67	ALPHA
47.560	.064	10.00000	.81825	.34579	.68431	-.26859	.38018	10.50020
47.530	2.543	10.00000	.83871	.34579	.68431	-.29300	.38018	10.49990
47.500	5.053	10.00000	.84894	.32483	.68431	-.26859	.38018	10.50610
47.540	7.563	10.00000	.84894	.32483	.68431	-.26859	.40733	10.50840
47.370	10.043	10.00000	.81825	.33531	.68431	-.34184	.40733	10.50960
47.080	12.836	10.00000	.80803	.36675	.67410	-.31742	.43449	10.51190
	GRADIENT	.00000	.00825	.00000	-.00000	-.00985	.00000	-.00012

ARC40X80-462(OA100) OV101 (INA03D) (16 MAR 82)

REFERENCE DATA

SREF =	2690.0000 SQ.FT.	XMRP =	1076.6800 IN.	XO	
LREF =	474.8100 INCHES	YMRP =	.0000 IN.	YO	
BREF =	936.6800 INCHES	ZMRP =	375.0000 IN.	ZO	
SCALE =	.3600				

PARAMETRIC DATA

ALPHA =	15.000	BETA =	10.000
ELEVON =	10.000	BDFLAP =	.000
SPDBRK =	25.000	RUDDER =	.000

RUN NO. 83/ 0 GRADIENT INTERVAL = -5.00/ 5.00

Q	AILRON	BETA	DP/Q61	DP/Q63	DP/Q62	DP/Q64	DP/Q67	ALPHA
47.350	.049	10.00000	.43853	1.02390	.45827	.21911	.40615	15.73260
47.310	2.543	10.00000	.41813	1.03435	.43790	.24346	.40615	15.73400
47.290	5.039	10.00000	.41813	1.08559	.40735	.24346	.37907	15.73690
47.380	7.549	10.00000	.45893	.98211	.45827	.17042	.43322	15.73080
47.350	10.028	10.00000	.43853	.99255	.46846	.26780	.40615	15.73340
47.360	12.898	10.00000	.45893	1.02390	.41754	.24346	.40615	15.73140
	GRADIENT	.00000	-.00818	.00419	-.00817	.00976	-.00000	.00056

ARC40X80-462(OA100) OV101 (INA03E) (16 MAR 82)

REFERENCE DATA

SREF =	2690.0000 SQ.FT.	XMRP =	1076.6800 IN.	XO	
LREF =	474.8100 INCHES	YMRP =	.0000 IN.	YO	
BREF =	936.6800 INCHES	ZMRP =	375.0000 IN.	ZO	
SCALE =	.3600				

PARAMETRIC DATA

ALPHA =	20.000	BETA =	10.000
ELEVON =	10.000	BDFLAP =	.000
SPDBRK =	25.000	RUDDER =	.000

RUN NO. 84/ 0 GRADIENT INTERVAL = -5.00/ 5.00

Q	AILRON	BETA	DP/Q61	DP/Q63	DP/Q62	DP/Q64	DP/Q67	ALPHA
47.920	.035	10.00000	.00000	1.65640	.13201	.72826	.43197	20.98369
47.790	2.559	10.00000	-.02034	1.67724	.13201	.77681	.45896	20.98430
47.750	5.038	10.00000	-.01017	1.75016	.13201	.75253	.43197	20.99329
47.640	7.548	10.00000	.01017	1.58348	.10154	.70398	.45896	20.98200
47.520	10.058	10.00000	-.01017	1.68765	.10154	.82536	.43197	20.97629
47.560	12.896	10.00000	.01017	1.63556	.08123	.75253	.45896	20.97119
	GRADIENT	.00000	-.00806	.00826	.00000	.01924	.01070	.00024

ARC40X80-462(OA100) OV101 (INA03F) (16 MAR 82)

REFERENCE DATA

SREF =	2690.0000 SQ.FT.	XMRP =	1076.6800 IN.	XO	
LREF =	474.8100 INCHES	YMRP =	.0000 IN.	YO	
BREF =	936.6800 INCHES	ZMRP =	375.0000 IN.	ZO	
SCALE =	.3600				

PARAMETRIC DATA

ALPHA =	.000	BETA =	.000
ELEVON =	.000	AILRON =	.000
SPDBRK =	25.000	RUDDER =	.000

RUN NO. 35/ 0 GRADIENT INTERVAL = -5.00/ 5.00

Q	BDFLAP	BETA	DP/Q61	DP/Q63	DP/Q62	DP/Q64	DP/Q67	ALPHA
47.610	-11.543	.00000	1.18315	-1.38074	1.21228	-1.22802	.00000	-.07780
47.740	-.201	.00000	1.18315	-1.39128	1.20201	-1.20346	.00000	-.06050
47.830	.000	.00000	1.19344	-1.35966	1.22255	-1.25258	.02732	-.06130
47.860	16.360	.00000	1.18315	-1.35966	1.22255	-1.25258	-.02732	-.02330
47.800	22.684	.00000	1.20372	-1.32604	1.21228	-1.22802	-.02732	-.00560
	GRADIENT	.00000	.05126	.15752	.10232	-.24469	.13607	-.00399

ARC40X80-462(OA100) OV101 (INA03G) (16 MAR 82)

REFERENCE DATA

SREF =	2690.0000 SQ.FT.	XMRP =	1076.6800 IN.	XO	
LREF =	474.8100 INCHES	YMRP =	.0000 IN.	YO	
BREF =	936.6800 INCHES	ZMRP =	375.0000 IN.	ZO	
SCALE =	.3600				

PARAMETRIC DATA

ALPHA =	5.000	BETA =	.000
ELEVON =	.000	AILRON =	.000
SPDBRK =	25.000	RUDDER =	.000

RUN NO. 36/ 0 GRADIENT INTERVAL = -5.00/ 5.00

Q	BDFLAP	BETA	DP/Q61	DP/Q63	DP/Q62	DP/Q64	DP/Q67	ALPHA
47.580	-11.543	.00000	1.10788	-.85124	1.09605	-.71017	.02724	5.11250
47.730	-.201	.00000	1.09762	-.87226	1.09605	-.63670	.00000	5.13280
47.630	16.561	.00000	1.11813	-.85124	1.11654	-.66119	.02724	5.17840
47.510	22.684	.00000	1.11813	-.88277	1.08581	-.63670	.00000	5.19520
	GRADIENT	.00000	.00000	.00000	.00000	.00000	.00000	.00000

ARC40X80-462(OA100) OV101 (INA03H) (16 MAR 82)

REFERENCE DATA

SREF =	2690.0000 SQ.FT.	XMRP =	1076.6800 IN. XO		
LREF =	474.8100 INCHES	YMRP =	.0000 IN. YO		
BREF =	936.6800 INCHES	ZMRP =	375.0000 IN. ZO		
SCALE =	.3600				

PARAMETRIC DATA

ALPHA =	10.000	BETA =	.000
ELEVON =	.000	AILRON =	.000
SPDBRK =	25.000	RUDDER =	.000

RUN NO. 37/ 0 GRADIENT INTERVAL = -5.00/ 5.00

Q	BDFLAP	BETA	DP/Q61	DP/Q63	DP/Q62	DP/Q64	DP/Q67	ALPHA
47.700	-11.543	.00000	.86940	-.18861	.81709	-.04883	-.02716	10.31710
47.570	-.100	.00000	.83871	-.17813	.83751	-.02442	-.02716	10.33980
47.350	16.561	.00000	.85917	-.19909	.80687	.00000	-.02716	10.37830
47.070	22.694	.00000	.85917	-.29340	.81709	.00000	-.02716	10.39540
	GRADIENT	.00000	.00000	.00000	.00000	.00000	.00000	.00000

ARC40X80-462(OA100) OV101(DECREASING BDFLAP) (INA03I) (16 MAR 82)

REFERENCE DATA

SREF =	2690.0000 SQ.FT.	XMRP =	1076.6800 IN. XO		
LREF =	474.8100 INCHES	YMRP =	.0000 IN. YO		
BREF =	936.6800 INCHES	ZMRP =	375.0000 IN. ZO		
SCALE =	.3600				

PARAMETRIC DATA

ALPHA =	10.000	BETA =	.000
ELEVON =	.000	AILRON =	.000
SPDBRK =	25.000	RUDDER =	.000

RUN NO. 38/ 0 GRADIENT INTERVAL = -5.00/ 5.00

Q	BDFLAP	BETA	DP/Q61	DP/Q63	DP/Q62	DP/Q64	DP/Q67	ALPHA
47.810	-11.543	.00000	.86940	-.17813	.83751	-.02442	-.02716	10.31770
47.910	-.100	.00000	.88985	-.24100	.81709	-.04883	-.05431	10.33760
47.740	16.461	.00000	.86940	-.20957	.80697	-.02442	-.02716	10.37720
47.360	22.583	.00000	.86940	-.19909	.78644	.00000	-.05431	10.39500
	GRADIENT	.00000	.00000	.00000	.00000	.00000	.00000	.00000

ARC40X80-462(OA100) OV101 (INA03J) (16 MAR 82)

REFERENCE DATA

SREF =	2690.0000 SQ.FT.	XMRP =	1076.6800 IN.	XO
LREF =	474.8100 INCHES	YMRP =	.0000 IN.	YO
BREF =	936.6800 INCHES	ZMRP =	375.0000 IN.	ZO
SCALE =	.3600			

PARAMETRIC DATA

ALPHA =	15.000	BETA =	.000
ELEVON =	.000	AILRON =	.000
SPDBRK =	25.000	RUDDER =	.000

RUN NO. 39/ 0 GRADIENT INTERVAL = -5.00/ 5.00

Q	BDFLAP	BETA	DP/Q61	DP/Q63	DP/Q62	DP/Q64	DP/Q67	ALPHA
47.330	-11.543	.00000	.56091	.41792	.52956	.58430	-.02708	15.52380
47.320	-.201	.00000	.57111	.42837	.47864	.60865	-.05415	15.55310
47.410	16.360	.00000	.55071	.45971	.46846	.70603	-.05415	15.58980
47.490	22.684	.00000	.56091	.38657	.44809	.73038	-.02708	15.60380
	GRADIENT	.00000	.00000	.00000	.00000	.00000	.00000	.00000

ARC40X80-462(OA100) OV101 (INA03K) (16 MAR 82)

REFERENCE DATA

SREF =	2690.0000 SQ.FT.	XMRP =	1076.6800 IN.	XO
LREF =	474.8100 INCHES	YMRP =	.0000 IN.	YO
BREF =	936.6800 INCHES	ZMRP =	375.0000 IN.	ZO
SCALE =	.3600			

PARAMETRIC DATA

ALPHA =	20.000	BETA =	.000
ELEVON =	.000	AILRON =	.000
SPDBRK =	25.000	RUDDER =	.000

RUN NO. 40/ 0 GRADIENT INTERVAL = -5.00/ 5.00

Q	BDFLAP	BETA	DP/Q61	DP/Q63	DP/Q62	DP/Q64	DP/Q67	ALPHA
47.330	-11.543	.00000	.11186	1.07301	.04062	1.23804	-.08099	20.80109
47.120	-.100	.00000	.16270	1.03134	.05077	1.23804	-.02700	20.81999
47.470	16.461	.00000	.17287	1.05218	.04062	1.31086	.05400	20.85300
47.930	22.684	.00000	.12202	1.07301	.08123	1.23804	-.02700	20.95309
	GRADIENT	.00000	.00000	.00000	.00000	.00000	.00000	.00000

ARC40X80-462(OA100) OV101 (INA03L) (16 MAR 82)

REFERENCE DATA

SREF =	2690.0000 SQ.FT.	XMRP =	1076.6800 IN.	XO	
LREF =	474.8100 INCHES	YMRP =	.0000 IN.	YO	
BREF =	936.6800 INCHES	ZMRP =	375.0000 IN.	ZO	
SCALE =	.3600				

PARAMETRIC DATA

ALPHA =	.000	BETA =	.000
ELEVON =	.000	AILRON =	.000
BDFLAP =	.000	RUDDER =	.000

RUN NO. 41/ 0 GRADIENT INTERVAL = -5.00/ 5.00

Q	SPDBRK	BETA	DP/Q61	DP/Q63	DP/Q62	DP/Q64	DP/Q67	ALPHA
47.750	.000	.00000	1.19344	-1.35966	1.19173	-1.22802	-.02732	-.05120
47.510	25.180	.00000	1.20372	-1.42290	1.18146	-1.22802	-.05463	-.06290
47.510	55.459	.00000	1.20372	-1.35966	1.19173	-1.25258	.00000	-.07720
47.360	87.628	.00000	1.20372	-1.32804	1.19173	-1.22802	-.02732	-.09460
	GRADIENT	.00000	.00000	.00000	.00000	.00000	.00000	.00000

ARC40X80-462(OA100) OV101 (INA03M) (16 MAR 82)

REFERENCE DATA

SREF =	2690.0000 SQ.FT.	XMRP =	1076.6800 IN.	XO	
LREF =	474.8100 INCHES	YMRP =	.0000 IN.	YO	
BREF =	936.6800 INCHES	ZMRP =	375.0000 IN.	ZO	
SCALE =	.3600				

PARAMETRIC DATA

ALPHA =	5.000	BETA =	.000
ELEVON =	.000	AILRON =	.000
BDFLAP =	.000	RUDDER =	.000

RUN NO. 42/ 0 GRADIENT INTERVAL = -5.00/ 5.00

Q	SPDBRK	BETA	DP/Q61	DP/Q63	DP/Q62	DP/Q64	DP/Q67	ALPHA
47.450	-.039	.00000	1.12839	-.83022	1.07557	-.68568	-.02724	5.14040
47.560	25.179	.00000	1.10788	-.85124	1.08581	-.71017	.00000	5.13500
47.560	55.459	.00000	1.11813	-.87226	1.09605	-.73466	.00000	5.11380
47.540	87.629	.00000	1.12839	-.85124	1.09605	-.73466	-.02724	5.09300
	GRADIENT	.00000	.00000	.00000	.00000	.00000	.00000	.00000

ARC40X80-462(OA100) OV101 (INA03N) (16 MAR 82)

REFERENCE DATA

SREF =	2690.0000 SQ.FT.	XMRP =	1076.6800 IN.	XO	
LREF =	474.8100 INCHES	YMRP =	.0000 IN.	YO	
BREF =	936.6800 INCHES	ZMRP =	375.0000 IN.	ZO	
SCALE =	.3600				

PARAMETRIC DATA

ALPHA =	10.000	BETA =	.000
ELEVON =	.000	AILRON =	.000
BDFLAP =	.000	RUDDER =	.000

RUN NO. 43/ 0 GRADIENT INTERVAL = -5.00/ 5.00

Q	SPDBRK	BETA	DP/Q61	DP/Q63	DP/Q62	DP/Q64	DP/Q67	ALPHA
47.640	.039	.00000	.87962	-.18851	.82730	-.07325	-.02716	10.34760
47.530	25.141	.00000	.86940	-.18861	.78644	-.02442	-.02716	10.34110
47.100	55.545	.00000	.85917	-.22005	.79666	-.07325	.00000	10.32230
47.680	87.677	.00000	.86940	-.20957	.81709	-.07325	.00000	10.30180
	GRADIENT	.00000	.00000	.00000	.00000	.00000	.00000	.00000

ARC40X80-462(OA100) OV101(DECREASING SPDBRK) (INA030) (16 MAR 82)

REFERENCE DATA

SREF =	2690.0000 SQ.FT.	XMRP =	1076.6800 IN.	XO	
LREF =	474.8100 INCHES	YMRP =	.0000 IN.	YO	
BREF =	936.6800 INCHES	ZMRP =	375.0000 IN.	ZO	
SCALE =	.3600				

PARAMETRIC DATA

ALPHA =	10.000	BETA =	.000
ELEVON =	.000	AILRON =	.000
BDFLAP =	.000	RUDDER =	.000

RUN NO. 44/ 0 GRADIENT INTERVAL = -5.00/ 5.00

Q	SPDBRK	BETA	DP/Q61	DP/Q63	DP/Q62	DP/Q64	DP/Q67	ALPHA
47.660	.079	.00000	.90008	-.25148	.79666	.04883	-.02716	10.34800
47.720	25.139	.00000	.89995	-.23053	.80687	.00000	.00000	10.34010
47.360	55.545	.00000	.88985	-.19909	.80687	-.04883	-.02716	10.32200
47.610	87.677	.00000	.87962	-.18861	.82730	-.07325	-.05431	10.30160
	GRADIENT	.00000	.00000	.00000	.00000	.00000	.00000	.00000

ARC40X80-462(OA100) OV101 (INA03P) (16 MAR 82)

REFERENCE DATA

SREF =	2690.0000 SQ.FT.	XMRP =	1076.6800 IN.	XO	
LREF =	474.8100 INCHES	YMRP =	.0000 IN.	YO	
BREF =	936.6800 INCHES	ZMRP =	375.0000 IN.	ZO	
SCALE =	.3600				

PARAMETRIC DATA

ALPHA =	15.000	BETA =	.000
ELEVON =	.000	AILRON =	.000
BDFLAP =	.000	RUDDER =	.000

RUN NO. 48/ 0 GRADIENT INTERVAL = -5.00/ 5.00

Q	SPDBRK	BETA	DP/Q61	DP/Q63	DP/Q62	DP/Q64	DP/Q67	ALPHA
47.660	-.079	.00000	.50992	.52240	.53974	.53561	.02708	15.56060
47.500	25.100	.00000	.54051	.48060	.53974	.53561	.02708	15.55070
47.520	55.329	.00000	.53032	.48060	.50919	.58430	.05415	15.53670
47.460	87.629	.00000	.47932	.50150	.54993	.53561	.02708	15.51420
	GRADIENT	.00000	.00000	.00000	.00000	.00000	.00000	.00000

ARC40X80-462(OA100) OV101 (INA03Q) (16 MAR 82)

REFERENCE DATA

SREF =	2690.0000 SQ.FT.	XMRP =	1076.6800 IN.	XO	
LREF =	474.8100 INCHES	YMRP =	.0000 IN.	YO	
BREF =	936.6800 INCHES	ZMRP =	375.0000 IN.	ZO	
SCALE =	.3600				

PARAMETRIC DATA

ALPHA =	20.000	BETA =	.000
ELEVON =	.000	AILRON =	.000
BDFLAP =	.000	RUDDER =	.000

RUN NO. 49/ 0 GRADIENT INTERVAL = -5.00/ 5.00

Q	SPDBRK	BETA	DP/Q61	DP/Q63	DP/Q62	DP/Q64	DP/Q67	ALPHA
47.680	.040	.00000	.12202	1.06260	.17262	1.18949	.00000	20.82759
47.550	25.100	.00000	.10169	1.06260	.10154	1.21376	-.02700	20.82480
47.520	55.415	.00000	.16270	1.03134	.11170	1.18949	.00000	20.80269
	GRADIENT	.00000	.00000	.00000	.00000	.00000	.00000	.00000

ARC40X80-462(OA100) OV101(RCS PORTS CLOSED) (INA03R) (16 MAR 82)

REFERENCE DATA

SREF =	2690.0000 SQ.FT.	XMRP =	1076.6800 IN. XO		
LREF =	474.8100 INCHES	YMRP =	.0000 IN. YO		
BREF =	936.6800 INCHES	ZMRP =	375.0000 IN. ZO		
SCALE =	.3600				

PARAMETRIC DATA

BETA =	.000	ELEVON =	.000
AILRON =	.000	BDFLAP =	.000
SPDBRK =	25.000	RUDDER =	.000

RUN NO. 101/ 0 GRADIENT INTERVAL = -5.00/ 5.00

Q	ALPHA	BETA	DP/Q61	DP/Q63	DP/Q62	DP/Q64	DP/Q67
47.490	-5.240	.00000	1.27960	-1.92393	1.25828	-1.87209	.00000
47.690	-2.649	.00000	1.23641	-1.58333	1.25522	-1.57418	.02736
47.600	-.056	.00000	1.18315	-1.29642	1.21228	-1.25258	.02732
47.720	2.541	.00000	1.18141	-1.04193	1.17973	-1.03003	.00000
47.640	5.139	.00000	1.11813	-.80920	1.09605	-.75914	.00000
47.650	7.739	.00000	.99358	-.44074	1.01262	-.41570	.00000
47.600	10.342	.00000	.84894	-.13622	.82730	.00000	.00000
47.730	12.941	.00000	.70471	.16741	.72411	.19505	.02712
47.580	15.556	.00000	.49972	.50150	.50919	.55996	-.02708
47.500	18.180	.00000	.33606	.82419	.30507	.92380	-.02704
47.570	20.826	.00000	.11186	1.12510	.09139	1.18949	-.02700
46.010	26.006	.00000	-.39529	1.71393	-.42524	1.76696	-.02692
	GRADIENT	.00000	-.01059	.10432	-.01455	.10484	-.00527

ARC40X80-462(OA100) OV101(RCS PORTS CLOSED) (INA03S) (16 MAR 82)

REFERENCE DATA

SREF =	2690.0000 SQ.FT.	XMRP =	1076.6800 IN. XO		
LREF =	474.8100 INCHES	YMRP =	.0000 IN. YO		
BREF =	936.6800 INCHES	ZMRP =	375.0000 IN. ZO		
SCALE =	.3600				

PARAMETRIC DATA

ALPHA =	.000	ELEVON =	.000
AILRON =	.000	BDFLAP =	.000
SPDBRK =	25.000	RUDDER =	.000

RUN NO. 102/ 0 GRADIENT INTERVAL = -5.00/ 5.00

Q	BETA	DP/Q61	DP/Q63	DP/Q62	DP/Q64	DP/Q67	ALPHA
47.510	-13.000	.81277	-1.37020	1.53076	-1.05610	-.46436	-.03430
47.670	-10.000	.91555	-1.41236	1.48967	-1.12978	-.32778	-.03790
47.610	-5.000	1.05969	-1.38074	1.34594	-1.27714	-.16369	-.04830
47.630	-2.000	1.13171	-1.29642	1.27392	-1.25258	-.10926	-.05370
47.730	.000	1.19344	-1.31750	1.21229	-1.22802	.00000	-.05820
47.580	2.000	1.24468	-1.27534	1.15054	-1.27714	.08195	-.05560
47.730	5.000	1.32718	-1.21210	1.08800	-1.30170	.13658	-.05050
47.630	10.000	1.48151	-1.18048	.93490	-1.25258	.35509	-.04280
47.590	15.000	1.54324	-1.02238	.74997	-1.25258	.51899	-.03150
47.660	20.000	1.56381	-.79050	.55477	-1.17890	.65556	-.02170
	GRADIENT	.02696	.01526	-.02639	-.00296	.03250	-.00026

ARC40X80-462(OA100) OV101(RCS PORTS CLOSED) (INA03T) (16 MAR 82)

REFERENCE DATA

SREF =	2690.0000 SQ.FT.	XMRP =	1076.6800 IN. XO		
LREF =	474.8100 INCHES	YMRP =	.0000 IN. YO		
BREF =	936.6800 INCHES	ZMRP =	375.0000 IN. ZO		
SCALE =	.3600				

PARAMETRIC DATA

ALPHA =	5.000	ELEVON =	.000
AILRON =	.000	BDFLAP =	.000
SPDBRK =	25.000	RUDDER =	.000

RUN NO. 103/ 0 GRADIENT INTERVAL = -5.00/ 5.00

Q	BETA	DP/Q61	DP/Q63	DP/Q62	DP/Q64	DP/Q67	ALPHA
47.560	-13.000	.74884	-.91430	1.25995	-.36733	-.49023	5.15850
47.650	-10.000	.85142	-.93531	1.22822	-.48977	-.32692	5.15620
47.600	-5.000	.97452	-.88277	1.17800	-.63670	-.16341	5.14610
47.660	-2.000	1.06694	-.84073	1.16776	-.75914	-.02724	5.13950
47.650	.000	1.10788	-.75566	1.10930	-.66119	.02724	5.14090
47.620	2.000	1.14891	-.76717	1.09581	-.78363	.10894	5.13740
47.710	5.000	1.17958	-.66208	.97313	-.73465	.21788	5.14340
47.750	10.000	1.21046	-.45189	.85021	-.83261	.38129	5.14940
47.650	15.000	1.25143	-.24171	.70690	-.85710	.54470	5.15490
47.600	20.000	1.23097	-.03153	.55315	-.75914	.68088	5.14970
	GRADIENT	.02052	.02156	-.02049	-.00929	.03757	-.00031

ARC40X80-462(OA100) OV101(RCS PORTS CLOSED) (INA03U) (16 MAR 82)

REFERENCE DATA

SREF =	2690.0000 SQ.FT.	XMRP =	1076.6800 IN. XO		
LREF =	474.8100 INCHES	YMRP =	.0000 IN. YO		
BREF =	936.6800 INCHES	ZMRP =	375.0000 IN. ZO		
SCALE =	.3600				

PARAMETRIC DATA

ALPHA =	10.000	ELEVON =	.000
AILRON =	.000	BDFLAP =	.000
SPDBRK =	25.000	RUDDER =	.000

RUN NO. 104/ 0 GRADIENT INTERVAL = -5.00/ 5.00

Q	BETA	DP/Q61	DP/Q63	DP/Q62	DP/Q64	DP/Q67	ALPHA
47.610	-13.000	.65460	-.48201	.93965	.36626	-.43449	10.35620
47.590	-10.000	.69551	-.47153	.93955	.31742	-.38018	10.35530
47.560	-5.000	.77734	-.35627	.86915	.09767	-.16293	10.34610
47.520	-2.000	.80803	-.27244	.82730	.09767	-.08147	10.34310
47.450	.000	.82848	-.17813	.81709	-.07325	-.02716	10.34350
47.610	2.000	.84894	-.08383	.81709	-.12209	.08147	10.34430
47.660	5.000	.84894	.09431	.77823	-.19534	.21724	10.34630
47.470	10.000	.36940	.27244	.70474	-.34184	.40733	10.35090
47.600	15.000	.84894	.50297	.61281	-.41509	.59742	10.35330
47.630	20.000	.77734	.80684	.49025	-.43951	.76036	10.34310
	GRADIENT	.00758	.04535	-.00828	-.03284	.03839	.00006

ARC40X80-462(0A100) OV101(RCS PORTS CLOSED) (INA03V) (16 MAR 82)

REFERENCE DATA

SREF =	2690.0000 SQ.FT.	XMRP =	1076.6800 IN. XO		
LREF =	474.8100 INCHES	YMRP =	.0000 IN. YO		
BREF =	936.6800 INCHES	ZMRP =	375.0000 IN. ZO		
SCALE =	.3600				

PARAMETRIC DATA

ALPHA =	15.000	ELEVON =	.000
AILRON =	.000	BDFLAP =	.000
SPDBRK =	25.000	RUDDER =	.000

RUN NO. 105/ 0 GRADIENT INTERVAL = -5.00/ 5.00

Q	BETA	DP/Q61	DP/Q63	DP/Q62	DP/Q64	DP/Q67	ALPHA
47.610	-13.000	.46913	-.05224	.47854	1.26599	-.51445	15.57470
47.680	-10.000	.47932	.08358	.50919	1.07122	-.40615	15.58040
47.610	-5.000	.50992	.24030	.52956	.75472	-.16246	15.55980
47.520	-2.000	.54051	.33433	.52956	.63299	-.08123	15.55560
47.510	.000	.52012	.47016	.51937	.53561	.00000	15.55590
47.690	2.000	.52012	.58508	.51937	.36519	.08123	15.55470
47.650	5.000	.52012	.74180	.50919	.36519	.21661	15.55750
47.640	10.000	.47932	1.01345	.48892	.19477	.43322	15.57710
47.540	15.000	.40794	1.31644	.41754	.04869	.64983	15.58260
47.330	20.000	.31615	1.55674	.37680	-.09738	.83937	15.56830
	GRADIENT	.00018	.05188	-.00211	-.04282	.03828	-.00023

ARC40X80-462(0A100) OV101(RCS PORTS CLOSED) (INA03W) (16 MAR 82)

REFERENCE DATA

SREF =	2690.0000 SQ.FT.	XMRP =	1076.6800 IN. XO		
LREF =	474.8100 INCHES	YMRP =	.0000 IN. YO		
BREF =	936.6800 INCHES	ZMRP =	375.0000 IN. ZO		
SCALE =	.3600				

PARAMETRIC DATA

ALPHA =	20.000	ELEVON =	.000
AILRON =	.000	BDFLAP =	.000
SPDBRK =	25.000	RUDDER =	.000

RUN NO. 106/ 0 GRADIENT INTERVAL = -5.00/ 5.00

Q	BETA	DP/Q61	DP/Q63	DP/Q62	DP/Q64	DP/Q67	ALPHA
47.510	-13.000	.16270	.45837	-.05077	1.91775	-.53996	20.83679
47.660	-10.000	.17287	.57297	.04062	1.67499	-.43197	20.83179
47.540	-5.000	.13219	.83341	.08123	1.43224	-.21598	20.81670
47.630	-2.000	.10169	1.01051	.08123	1.31086	-.08099	20.82199
47.540	.000	.10169	1.11468	.08123	1.18949	.00000	20.82419
47.670	2.000	.09152	1.20844	.11170	1.06811	.08099	20.81960
47.760	5.000	.03051	1.37512	.11170	.99529	.24298	20.80379
47.800	10.000	-.04068	1.64598	.17262	.67971	.43197	20.82329
47.650	15.000	-.11186	1.94809	.18278	.48550	.62095	20.82309
47.520	20.000	-.22371	2.19812	.13201	.31558	.83693	20.80010
	GRADIENT	-.00912	.05352	.00368	-.04604	.04515	-.00120

ARC40X80-462(OA100) OV101 (INA03X) (15 APR 82)

REFERENCE DATA

SREF =	2690.0000 SQ.FT.	XMRP =	1076.6800 IN.	XO	
LREF =	474.8100 INCHES	YMRP =	.0000 IN.	YO	
BREF =	936.6800 INCHES	ZMRP =	375.0000 IN.	ZO	
SCALE =	.3600				

PARAMETRIC DATA

BETA =	.000	ELEVON =	.000
AILRON =	.000	BDFLAP =	.000

RUN NO. 88/ 0 GRADIENT INTERVAL = -5.00/ 5.00

Q	ALPHA	BETA	DP/Q61	DP/Q63	DP/Q62	DP/Q64	DP/Q67
47.710	-.075	.00000	1.18315	-1.29642	1.22255	-1.27714	.05463
47.670	10.320	.00000	.84894	-.18851	.85794	-.02442	.02716
47.790	15.535	.00000	.49972	.49105	.51937	.58430	.02708
	GRADIENT	.00000	.00000	.00000	.00000	.00000	.00000

ARC40X80-462(OA100) OV101 (INA03Y) (16 MAR 82)

REFERENCE DATA

SREF =	2690.0000 SQ.FT.	XMRP =	1076.6800 IN.	XO	
LREF =	474.8100 INCHES	YMRP =	.0000 IN.	YO	
BREF =	936.6800 INCHES	ZMRP =	375.0000 IN.	ZO	
SCALE =	.3600				

PARAMETRIC DATA

BETA =	.000	ELEVON =	.000
AILRON =	.000	BDFLAP =	.000
SPDBRK =	55.000	RUDDER =	-15.000

RUN NO. 89/ 0 GRADIENT INTERVAL = -5.00/ 5.00

Q	ALPHA	BETA	DP/Q61	DP/Q63	DP/Q62	DP/Q64	DP/Q67
47.690	-.072	.00000	1.17286	-1.26480	1.20201	-1.22802	.05463
47.740	10.326	.00000	.82848	-.15718	.83751	.00000	.05431
47.760	15.535	.00000	.52012	.49105	.52956	.58430	.02708
47.760	20.801	.00000	.10169	1.09385	.11170	1.23804	.05400
	GRADIENT	.00000	.00000	.00000	.00000	.00000	.00000

ARC40X80-462(OA100) OV101 (INA03Z) (16 MAR 82)

REFERENCE DATA

SREF =	2690.0000 SQ.FT.	XMRP =	1076.6800 IN.	XO	
LREF =	474.8100 INCHES	YMRP =	.0000 IN.	YO	
BREF =	936.6800 INCHES	ZMRP =	375.0000 IN.	ZO	
SCALE =	.3600				

PARAMETRIC DATA

BETA =	.000	ELEVON =	.000
AILRON =	.000	BDFLAP =	.000
SPDBRK =	55.000	RUDDER =	.000

RUN NO. 90/ 0 GRADIENT INTERVAL = -5.00/ 5.00

Q	ALPHA	BETA	DP/Q61	DP/Q63	DP/Q62	DP/Q64	DP/Q67
47.790	-.073	.00000	1.18315	-1.31750	1.23283	-1.30170	.05463
47.600	5.118	.00000	1.10788	-.79869	1.11654	-.73466	.05447
47.860	10.323	.00000	.83871	-.14670	.85794	-.02442	.05431
47.710	15.537	.00000	.54051	.51195	.53974	.60865	.02708
	GRADIENT	.00000	.00000	.00000	.00000	.00000	.00000

ARC40X80-462(OA100) OV101 (INA04A) (16 MAR 82)

REFERENCE DATA

SREF =	2690.0000 SQ.FT.	XMRP =	1076.6800 IN.	XO	
LREF =	474.8100 INCHES	YMRP =	.0000 IN.	YO	
BREF =	936.6800 INCHES	ZMRP =	375.0000 IN.	ZO	
SCALE =	.3600				

PARAMETRIC DATA

BETA =	.000	ELEVON =	.000
AILRON =	.000	BDFLAP =	.000
SPDBRK =	55.000	RUDDER =	5.000

RUN NO. 91/ 0 GRADIENT INTERVAL = -5.00/ 5.00

Q	ALPHA	BETA	DP/Q61	DP/Q63	DP/Q62	DP/Q64	DP/Q67
47.650	-.074	.00000	1.18315	-1.31750	1.22255	-1.20346	.05463
47.790	5.119	.00000	1.11813	-.78819	1.13703	-.71017	.05447
47.710	10.321	.00000	.84894	-.16766	.83751	.02442	.08147
47.710	15.535	.00000	.54051	.51195	.48882	.60865	.05415
47.720	20.804	.00000	.13219	1.12510	.14216	1.14094	.02700
	GRADIENT	.00000	.00000	.00000	.00000	.00000	.00000

ARC40X80-462(OA100) OV101

(INA04B) (16 MAR 82)

REFERENCE DATA

SREF =	2690.0000 SQ.FT.	XMRP =	1076.6800 IN.	XO	
LREF =	474.8100 INCHES	YMRP =	.0000 IN.	YO	
BREF =	936.6800 INCHES	ZMRP =	375.0000 IN.	ZO	
SCALE =	.3600				

PARAMETRIC DATA

BETA =	.000	ELEVON =	.000
AILRON =	.000	BDFLAP =	.000
SPDBRK =	55.000	RUDDER =	10.000

RUN NO. 92/ 0

GRADIENT INTERVAL = -5.00/ 5.00

Q	ALPHA	BETA	DP/Q61	DP/Q63	DP/Q62	DP/Q64	DP/Q67
47.670	-.074	.00000	1.20372	-1.28588	1.23283	-1.17890	.05463
47.690	5.119	.00000	1.07710	-.76717	1.10630	-.63670	.05447
47.570	10.324	.00000	.83871	-.15718	.83751	.02442	.02716
47.720	15.537	.00000	.50992	.50150	.53974	.53561	.02708
47.780	20.801	.00000	.12202	1.13552	.13201	1.16521	.02700
	GRADIENT	.00000	.00000	.00000	.00000	.00000	.00000

ARC40X80-462(OA100) OV101

(INA04C) (16 MAR 82)

REFERENCE DATA

SREF =	2690.0000 SQ.FT.	XMRP =	1076.6800 IN.	XO	
LREF =	474.8100 INCHES	YMRP =	.0000 IN.	YO	
BREF =	936.6800 INCHES	ZMRP =	375.0000 IN.	ZO	
SCALE =	.3600				

PARAMETRIC DATA

BETA =	.000	ELEVON =	.000
AILRON =	.000	BDFLAP =	.000
SPDBRK =	55.000	RUDDER =	15.000

RUN NO. 93/ 0

GRADIENT INTERVAL = -5.00/ 5.00

Q	ALPHA	BETA	DP/Q61	DP/Q63	DP/Q62	DP/Q64	DP/Q67
47.680	-.073	.00000	1.17296	-1.31750	1.23283	-1.25258	.05463
47.710	5.118	.00000	1.10788	-.77768	1.12678	-.73466	.05447
47.630	10.324	.00000	.80803	-.11526	.88958	-.07325	.05431
47.710	15.539	.00000	.50992	.57464	.53974	.65734	.02708
47.670	20.802	.00000	.11186	1.10427	.12185	1.21376	.05400
	GRADIENT	.00000	.00000	.00000	.00000	.00000	.00000

ARC40X80-462(OA100) OV101 (INA04D) (15 APR 82)

REFERENCE DATA

SREF =	2690.0000 SQ.FT.	XMRP =	1076.6800 IN.	XO	
LREF =	474.8100 INCHES	YMRP =	.0000 IN.	YO	
BREF =	936.6800 INCHES	ZMRP =	375.0000 IN.	ZO	
SCALE =	.3600				

PARAMETRIC DATA

BETA =	.000	ELEVON =	.000
AILRON =	.000	BDFLAP =	.000
SPDBRK =	48.000	RUDDER =	19.500

RUN NO. 94/ 0 GRADIENT INTERVAL = -5.00/ 5.00

Q	ALPHA	BETA	DP/Q61	DP/Q63	DP/Q62	DP/Q64	DP/Q67
47.870	-.072	.00000	1.18315	-1.31750	1.25338	-1.26258	.05463
47.720	5.119	.00000	1.08736	-.74615	1.15751	-.69568	.08171
47.720	10.322	.00000	.82848	-.12574	.86815	-.04883	.05431
47.720	15.534	.00000	.50992	.49105	.52956	.58430	.05415
47.660	20.004	.00000	.15253	1.08343	.13201	1.23804	.05400
	GRADIENT	.00000	.00000	.00000	.00000	.00000	.00000

ARC40X80-462(OA100) OV101 (INA04E) (16 MAR 82)

REFERENCE DATA

SREF =	2690.0000 SQ.FT.	XMRP =	1076.6800 IN.	XO	
LREF =	474.8100 INCHES	YMRP =	.0000 IN.	YO	
BREF =	936.6800 INCHES	ZMRP =	375.0000 IN.	ZO	
SCALE =	.3600				

PARAMETRIC DATA

BETA =	5.000	ELEVON =	.000
AILRON =	.000	BDFLAP =	.000
SPDBRK =	55.000	RUDDER =	.000

RUN NO. 95/ 0 GRADIENT INTERVAL = -5.00/ 5.00

Q	ALPHA	BETA	DP/Q61	DP/Q63	DP/Q62	DP/Q64	DP/Q67
47.660	-.070	5.00000	1.28603	-1.22264	1.08900	-1.30170	.21852
47.740	5.125	5.00000	1.16943	-.58851	.98337	-.75914	.21788
47.800	10.327	5.00000	.84894	.03144	.78644	-.24417	.21724
47.730	15.538	5.00000	.50992	.77315	.50919	.38953	.21661
47.720	20.789	5.00000	.03051	1.39596	.13201	.97101	.24298
	GRADIENT	.00000	.00000	.00000	.00000	.00000	.00000

ARC40X80-462(OA100) OV101 (INA04F) (16 MAR 82)

REFERENCE DATA

SREF =	2690.0000 SQ.FT.	XMRP =	1076.6800 IN. XO		
LREF =	474.8100 INCHES	YMRP =	.0000 IN. YO		
BREF =	936.6800 INCHES	ZMRP =	375.0000 IN. ZO		
SCALE =	.3600				

PARAMETRIC DATA

BETA =	5.000	ELEVON =	.000
AILRON =	.000	BDFLAP =	.000
SPDBRK =	55.000	RUDDER =	5.000

RUN NO. 96/ 0 GRADIENT INTERVAL = -5.00/ 5.00

Q	ALPHA	BETA	DP/Q61	DP/Q63	DP/Q62	DP/Q64	DP/Q67
47.710	-.070	5.00000	1.29632	-1.14866	1.10954	-1.30170	.16389
47.690	5.123	5.00000	1.16943	-.64106	1.00386	-.75914	.21788
47.710	10.328	5.00000	.85917	.06287	.80687	-.14650	.21724
47.530	20.790	5.00000	.02034	1.35429	.14216	1.01956	.21598
	GRADIENT	.00000	.00000	.00000	.00000	.00000	.00000

ARC40X80-462(OA100) OV101 (INA04G) (16 MAR 82)

REFERENCE DATA

SREF =	2690.0000 SQ.FT.	XMRP =	1076.6800 IN. XO		
LREF =	474.8100 INCHES	YMRP =	.0000 IN. YO		
BREF =	936.6800 INCHES	ZMRP =	375.0000 IN. ZO		
SCALE =	.3600				

PARAMETRIC DATA

BETA =	5.000	ELEVON =	.000
AILRON =	.000	BDFLAP =	.000
SPDBRK =	55.000	RUDDER =	10.000

RUN NO. 97/ 0 GRADIENT INTERVAL = -5.00/ 5.00

Q	ALPHA	BETA	DP/Q61	DP/Q63	DP/Q62	DP/Q64	DP/Q67
47.610	-.071	5.00000	1.29632	-1.27534	1.06845	-1.25258	.21852
47.710	5.122	5.00000	1.18994	-.67259	.98337	-.75914	.16341
47.700	10.324	5.00000	.84894	.09431	.82730	-.21975	.21724
47.650	15.535	5.00000	.55071	.70001	.49901	.36519	.21661
47.590	20.784	5.00000	.06101	1.35429	.18278	.89818	.21598
	GRADIENT	.00000	.00000	.00000	.00000	.00000	.00000

ARC40X80-462(OA100) OV101 (INA04H) (16 MAR 82)

REFERENCE DATA

SREF =	2690.0000 SQ.FT.	XMRP =	1076.6800 IN.	XO	
LREF =	474.8100 INCHES	YMRP =	.0000 IN.	YO	
BREF =	936.6900 INCHES	ZMRP =	375.0000 IN.	ZO	
SCALE =	.3600				

PARAMETRIC DATA

BETA =	5.000	ELEVON =	.000
AILRON =	.000	BDFLAP =	.000
SPDBRK =	55.000	RUDDER =	15.000

RUN NO. 98/ 0 GRADIENT INTERVAL = -5.00/ 5.00

Q	ALPHA	BETA	DP/Q61	DP/Q63	DP/Q62	DP/Q64	DP/Q67
47.610	-.072	5.00000	1.29632	-1.19102	1.09927	-1.22802	.21852
47.660	5.123	5.00000	1.15917	-.60953	1.00386	-.78363	.16341
47.620	10.325	5.00000	.86940	.04191	.80687	-.24417	.21724
47.620	15.537	5.00000	.50992	.74180	.48982	.41389	.24369
47.590	20.783	5.00000	.07118	1.38554	.16247	.89818	.24298
	GRADIENT	.00000	.00000	.00000	.00000	.00000	.00000

ARC40X80-462(OA100) OV101 (INA04I) (15 APR 82)

REFERENCE DATA

SREF =	2690.0000 SQ.FT.	XMRP =	1076.6800 IN.	XO	
LREF =	474.8100 INCHES	YMRP =	.0000 IN.	YO	
BREF =	936.6800 INCHES	ZMRP =	375.0000 IN.	ZO	
SCALE =	.3600				

PARAMETRIC DATA

BETA =	5.000	ELEVON =	.000
AILRON =	.000	BDFLAP =	.000
SPDBRK =	48.000	RUDDER =	19.500

RUN NO. 99/ 0 GRADIENT INTERVAL = -5.00/ 5.00

Q	ALPHA	BETA	DP/Q61	DP/Q63	DP/Q62	DP/Q64	DP/Q67
47.690	-.073	5.00000	1.28603	-1.22264	1.07872	-1.25258	.24584
47.690	5.122	5.00000	1.15917	-.59302	.98337	-.73466	.21788
47.750	10.321	5.00000	.84894	.08383	.79666	-.19534	.19009
47.610	15.534	5.00000	.50992	.74180	.48882	.41388	.21661
47.600	20.780	5.00000	.08135	1.39595	.20308	.89818	.24298
	GRADIENT	.00000	.00000	.00000	.00000	.00000	.00000

ARC40X80-462(OA100) OV101 (INA04J) (16 MAR 82)

REFERENCE DATA

SREF =	2690.0000 SQ.FT.	XMRP =	1076.6800 IN. XO		
LREF =	474.8100 INCHES	YMRP =	.0000 IN. YO		
BREF =	936.6800 INCHES	ZMRP =	375.0000 IN. ZO		
SCALE =	.3600				

PARAMETRIC DATA

BETA =	.000	ELEVON =	.000
AILRON =	.000	BDFLAP =	.000
SPDBRK =	25.000	RUDDER =	-22.500

RUN NO. 86/ 0 GRADIENT INTERVAL = -5.00/ 5.00

Q	ALPHA	BETA	DP/Q61	DP/Q63	DP/Q62	DP/Q64	DP/Q67
47.740	-.064	.00000	1.18315	-1.33858	1.20201	-1.27714	.05463
47.680	5.131	.00000	1.06684	-.73564	1.10630	-.73466	.02724
47.780	10.334	.00000	.82848	-.12574	.85794	-.07325	.02716
47.680	15.544	.00000	.49972	.49105	.53974	.55996	.00000
47.710	20.747	.00000	.11186	1.08343	.10154	1.18949	.00000
	GRADIENT	.00000	.00000	.00000	.00000	.00000	.00000

ARC40X80-462(OA100) OV101 (INA04K) (16 MAR 82)

REFERENCE DATA

SREF =	2690.0000 SQ.FT.	XMRP =	1076.6800 IN. XO		
LREF =	474.8100 INCHES	YMRP =	.0000 IN. YO		
BREF =	936.6800 INCHES	ZMRP =	375.0000 IN. ZO		
SCALE =	.3600				

PARAMETRIC DATA

BETA =	.000	ELEVON =	.000
AILRON =	.000	BDFLAP =	.000
SPDBRK =	25.000	RUDDER =	-15.000

RUN NO. 87/ 0 GRADIENT INTERVAL = -5.00/ 5.00

Q	ALPHA	BETA	DP/Q61	DP/Q63	DP/Q62	DP/Q64	DP/Q67
47.720	-.058	.00000	1.19344	-1.34912	1.20201	-1.17890	.05463
47.690	5.133	.00000	1.09762	-.80920	1.10630	-.73466	.02724
47.830	10.338	.00000	.83871	-.16766	.83751	-.07325	.02716
47.580	15.548	.00000	.50992	.48060	.53974	.51127	.02708
47.630	20.754	.00000	.12202	1.08343	.10154	1.23804	.02700
	GRADIENT	.00000	.00000	.00000	.00000	.00000	.00000

ARC40X80-462(OA100) OV101+NOSE GEAR (INA04L) (15 APR 82)

REFERENCE DATA

SREF =	2690.0000 SQ.FT.	XMRP =	1076.6800 IN. XO		
LREF =	474.8100 INCHES	YMRP =	.0000 IN. YO		
BREF =	936.6800 INCHES	ZMRP =	375.0000 IN. ZO		
SCALE =	.3600				

PARAMETRIC DATA

BETA =	.000	ELEVON =	.000
AILRON =	.000	BDFLAP =	.000
SPDBRK =	20.000	RUDDER =	3.000

RUN NO. 108/ 0 GRADIENT INTERVAL = -5.00/ 5.00

Q	ALPHA	BETA	DP/Q61	DP/Q53	DP/Q62	DP/Q64	DP/Q67
47.700	-.058	.00000	1.24498	-1.27534	1.25339	-1.22802	.08195
47.560	5.139	.00000	1.11813	-.72513	1.12678	-.71017	.02724
47.530	10.342	.00000	.83871	-.09431	.81709	.02442	.02716
47.540	15.549	.00000	.52012	.53284	.52956	.60865	.02708
47.590	20.797	.00000	.06101	1.15635	.03046	1.21376	.02700
	GRADIENT	.00000	.00000	.00000	.00000	.00000	.00000

ARC40X80-462(OA100) OV101+NOSE GEAR (INA04M) (15 APR 82)

REFERENCE DATA

SREF =	2690.0000 SQ.FT.	XMRP =	1076.6800 IN. XO		
LREF =	474.8100 INCHES	YMRP =	.0000 IN. YO		
BREF =	936.6800 INCHES	ZMRP =	375.0000 IN. ZO		
SCALE =	.3600				

PARAMETRIC DATA

BETA =	5.000	ELEVON =	.000
AILRON =	.000	BDFLAP =	.000
SPDBRK =	20.000	RUDDER =	3.000

RUN NO. 109/ 0 GRADIENT INTERVAL = -5.00/ 5.00

Q	ALPHA	BETA	DP/Q61	DP/Q53	DP/Q62	DP/Q64	DP/Q67
47.500	-.051	5.00000	1.36834	-1.18994	1.07872	-1.20346	.19121
47.670	5.143	5.00000	1.20020	-.55598	1.00386	-.71017	.24512
47.630	10.340	5.00000	.88985	.14670	.78544	-.14650	.24440
47.390	15.550	5.00000	.45893	.86718	.48882	.38953	.21661
47.870	20.795	5.00000	-.01017	1.43763	.09139	.99529	.24298
	GRADIENT	.00000	.00000	.00000	.00000	.00000	.00000

ARC40X80-462(OA100) OV101+NOSE GEAR (INA04N) (15 APR 82)

REFERENCE DATA

SREF =	2690.0000 SQ.FT.	XMRP =	1076.6800 IN. XO		
LREF =	474.8100 INCHES	YMRP =	.0000 IN. YO		
BREF =	936.6800 INCHES	ZMRP =	375.0000 IN. ZO		
SCALE =	.3600				

PARAMETRIC DATA

BETA =	10.000	ELEVON =	.000
AILRON =	.000	BDFLAP =	.000
SPDBRK =	36.500	RUDDER =	-5.500

RUN NO. 110/ 0 GRADIENT INTERVAL = -5.00/ 5.00

Q	ALPHA	BETA	DP/Q61	DP/Q63	DP/Q62	DP/Q64	DP/Q67
47.530	-.041	10.00000	1.54324	-1.10670	.92462	-1.20346	.38241
47.710	5.146	10.00000	1.26175	-.43097	.83997	-.73466	.40853
47.580	10.344	10.00000	.94099	.24100	.68431	-.24417	.43449
47.720	15.577	10.00000	.44873	1.11793	.43790	.26780	.43322
47.750	20.816	10.00000	-.06101	1.57306	.14216	.77681	.48596
	GRADIENT	.00000	.00000	.00000	.00000	.00000	.00000

ARC40X80-462(OA100) OV101+NOSE GEAR(FTP OFF) (INA040) (16 MAR 82)

REFERENCE DATA

SREF =	2690.0000 SQ.FT.	XMRP =	1076.6800 IN. XO		
LREF =	474.8100 INCHES	YMRP =	.0000 IN. YO		
BREF =	936.6800 INCHES	ZMRP =	375.0000 IN. ZO		
SCALE =	.3600				

PARAMETRIC DATA

BETA =	.000	ELEVON =	.000
AILRON =	.000	BDFLAP =	.000
SPDBRK =	25.000	RUDDER =	.000

RUN NO. 111/ 0 GRADIENT INTERVAL = -5.00/ 5.00

Q	ALPHA	BETA	DP/Q61	DP/Q63	DP/Q62	DP/Q64	DP/Q67
47.460	-.059	.00000	1.24488	-1.24372	1.24310	-1.17890	.00000
47.410	5.135	.00000	1.11813	-.77768	1.12678	-.71017	.02724
47.690	10.339	.00000	.82948	-.06287	.83751	.07325	.02716
47.610	15.549	.00000	.54051	.49105	.47864	.63299	.02708
47.740	20.797	.00000	.08135	1.18761	.02031	1.28659	.00000
	GRADIENT	.00000	.00000	.00000	.00000	.00000	.00000

ARC40X80-462(OA100) OV101+NOSE GEAR(FTP OFF) (INA04P) (16 MAR 82)

REFERENCE DATA

SREF =	2690.0000 SQ.FT.	XMRP =	1076.6800 IN.	XO	
LREF =	474.8100 INCHES	YMRP =	.0000 IN.	YO	
BREF =	936.6800 INCHES	ZMRP =	375.0000 IN.	ZO	
SCALE =	.3600				

PARAMETRIC DATA

BETA =	5.000	ELEVON =	.000
AILRON =	.000	BDFLAP =	.000
SPDBRK =	25.000	RUDDER =	.000

RUN NO. 112/ 0 GRADIENT INTERVAL = -5.00/ 5.00

Q	ALPHA	BETA	DP/Q61	DP/Q63	DP/Q62	DP/Q64	DP/Q67
47.670	-.054	5.00000	1.38891	-1.22254	1.09827	-1.22802	.21852
47.530	5.142	5.00000	1.18994	-.56749	1.01410	-.63670	.21788
47.610	10.342	5.00000	.85917	.14679	.76602	-.12209	.24440
47.670	15.546	5.00000	.46913	.80449	.46892	.46257	.21661
47.620	20.797	5.00000	-.02034	1.39596	.11170	.94674	.21598
	GRADIENT	.00000	.00000	.00000	.00000	.00000	.00000

ARC40X80-462(OA100) OV101+NOSE GEAR(FTP OFF) (INA04Q) (16 MAR 82)

REFERENCE DATA

SREF =	2690.0000 SQ.FT.	XMRP =	1076.6800 IN.	XO	
LREF =	474.8100 INCHES	YMRP =	.0000 IN.	YO	
BREF =	936.6800 INCHES	ZMRP =	375.0000 IN.	ZO	
SCALE =	.3600				

PARAMETRIC DATA

BETA =	10.000	ELEVON =	.000
AILRON =	.000	BDFLAP =	.000
SPDBRK =	25.000	RUDDER =	.000

RUN NO. 113/ 0 GRADIENT INTERVAL = -5.00/ 5.00

Q	ALPHA	BETA	DP/Q61	DP/Q63	DP/Q62	DP/Q64	DP/Q67
47.710	-.041	10.00000	1.51237	-1.05400	.94517	-1.10522	.38241
47.530	5.145	10.00000	1.24123	-.40936	.87070	-.66119	.38129
47.670	10.345	10.00000	.90008	.33531	.66388	-.24417	.40733
47.560	15.574	10.00000	.45893	1.01345	.45827	.24346	.40615
47.500	20.818	10.00000	-.08135	1.63556	.08123	.80108	.43197
	GRADIENT	.00000	.00000	.00000	.00000	.00000	.00000

ARC40X80-462(OA100) OV101(FTP OFF) (INA04R) (16 MAR 82)

REFERENCE DATA

SREF =	2690.0000 SQ.FT.	XMRP =	1076.6800 IN. XO		
LREF =	474.8100 INCHES	YMRP =	.0000 IN. YO		
BREF =	936.6800 INCHES	ZMRP =	375.0000 IN. ZO		
SCALE =	.3600				

PARAMETRIC DATA

BETA =	.000	ELEVON =	.000
AILRON =	.000	BDFLAP =	.000
SPDBRK =	25.000	RUDDER =	.000

RUN NO. 115/ 0 GRADIENT INTERVAL = -5.00/ 5.00

Q	ALPHA	BETA	DP/Q61	DP/Q63	DP/Q62	DP/Q64	DP/Q67
47.390	-.065	.00000	1.19344	-1.28598	1.22255	-1.30170	.02732
47.850	5.135	.00000	1.10788	-.83022	1.12678	-.73466	.02724
47.660	10.337	.00000	.87952	-.17813	.85794	-.07325	.02716
47.250	15.545	.00000	.53032	.45971	.52956	.55996	.02708
47.360	20.815	.00000	.15253	1.05218	.14216	1.16521	.00000
	GRADIENT	.00000	.00000	.00000	.00000	.00000	.00000

ARC40X80-462(OA100) OV101(FTP OFF) (INA04S) (16 MAR 82)

REFERENCE DATA

SREF =	2690.0000 SQ.FT.	XMRP =	1076.6800 IN. XO		
LREF =	474.8100 INCHES	YMRP =	.0000 IN. YO		
BREF =	936.6800 INCHES	ZMRP =	375.0000 IN. ZO		
SCALE =	.3600				

PARAMETRIC DATA

BETA =	.000	ELEVON =	.000
AILRON =	.000	BDFLAP =	.000
SPDBRK =	25.000	RUDDER =	5.000

RUN NO. 114/ 0 GRADIENT INTERVAL = -5.00/ 5.00

Q	ALPHA	BETA	DP/Q61	DP/Q63	DP/Q62	DP/Q64	DP/Q67
47.190	-.061	.00000	1.16257	-1.32804	1.21228	-1.25258	.05463
47.530	5.135	.00000	1.09762	-.72513	1.08581	-.66119	.02724
47.510	10.334	.00000	.85917	-.16766	.85794	-.12209	.02716
47.530	15.546	.00000	.50992	.52240	.51937	.60865	.02708
47.480	20.816	.00000	.12202	1.04176	.11170	1.21376	.00000
	GRADIENT	.00000	.00000	.00000	.00000	.00000	.00000

ARC40X80-462(OA100) OV101(FTP OFF) (INA04T) (16 MAR 82)

REFERENCE DATA

SREF =	2690.0000 SQ.FT.	XMRP =	1076.6800 IN. XO		
LREF =	474.8100 INCHES	YMRP =	.0000 IN. YO		
BREF =	936.6800 INCHES	ZMRP =	375.0000 IN. ZO		
SCALE =	.3600				

PARAMETRIC DATA

BETA =	.000	ELEVON =	.000
AILRON =	.000	BDFLAP =	.000
SPDBRK =	25.000	RUDDER =	10.000

RUN NO. 116/ 0 GRADIENT INTERVAL = -5.00/ 5.00

Q	ALPHA	BETA	DP/Q61	DP/Q63	DP/Q62	DP/Q64	DP/Q67
47.580	-.062	.00000	1.18315	-1.34912	1.21228	-1.25258	.02732
47.680	5.131	.00000	1.10788	-.79869	1.12678	-.73466	.02724
47.500	10.332	.00000	.85917	-.14670	.82730	-.07325	.02716
47.710	15.543	.00000	.55071	.45971	.51937	.55996	.05415
47.370	20.815	.00000	.15253	1.01051	.08123	1.26231	.02700
	GRADIENT	.00000	.00000	.00000	.00000	.00000	.00000

ARC40X80-462(OA100) OV101(FTP OFF) (INA04U) (16 MAR 82)

REFERENCE DATA

SREF =	2690.0000 SQ.FT.	XMRP =	1076.6800 IN. XO		
LREF =	474.8100 INCHES	YMRP =	.0000 IN. YO		
BREF =	936.6800 INCHES	ZMRP =	375.0000 IN. ZO		
SCALE =	.3600				

PARAMETRIC DATA

BETA =	.000	ELEVON =	.000
AILRON =	.000	BDFLAP =	.000
SPDBRK =	25.000	RUDDER =	15.000

RUN NO. 117/ 0 GRADIENT INTERVAL = -5.00/ 5.00

Q	ALPHA	BETA	DP/Q61	DP/Q63	DP/Q62	DP/Q64	DP/Q67
47.680	-.065	.00000	1.20372	-1.35966	1.21228	-1.17890	.02732
48.020	5.131	.00000	1.11813	-.83022	1.11654	-.75914	.02724
47.660	10.329	.00000	.85917	-.13622	.85794	-.04883	.02716
47.470	15.544	.00000	.50992	.48050	.52956	.51127	.02708
47.650	20.806	.00000	.11186	1.09385	.08123	1.26231	.05400
	GRADIENT	.00000	.00000	.00000	.00000	.00000	.00000

ARC40X80-462(OA100) OV101(FTP OFF) (INA04V) (16 MAR 82)

REFERENCE DATA

SREF =	2690.0000 SQ.FT.	XMRP =	1076.6800 IN. XO		
LREF =	474.8100 INCHES	YMRP =	.0000 IN. YO		
BREF =	936.6800 INCHES	ZMRP =	375.0000 IN. ZO		
SCALE =	.3600				

PARAMETRIC DATA

BETA =	.000	ELEVON =	.000
AILRON =	.000	BDFLAP =	.000
SPDBRK =	25.000	RUDDER =	22.500

RUN NO. 118/ 0 GRADIENT INTERVAL = -5.00/ 5.00

Q	ALPHA	BETA	DP/Q61	DP/Q63	DP/Q62	DP/Q64	DP/Q67
47.560	-.067	.00000	1.19344	-1.32604	1.22255	-1.17890	.02732
47.610	5.125	.00000	1.09762	-.80920	1.11654	-.71017	.02724
47.540	10.330	.00000	.83971	-.14670	.85794	-.07325	.02716
47.740	15.540	.00000	.52012	.49105	.53974	.55996	.05415
47.530	20.806	.00000	.09152	1.10427	.09139	1.21376	.00000
	GRADIENT	.00000	.00000	.00000	.00000	.00000	.00000

ARC40X80-462(OA100) OV101(FTP OFF) (INA04W) (16 MAR 82)

REFERENCE DATA

SREF =	2690.0000 SQ.FT.	XMRP =	1076.6800 IN. XO		
LREF =	474.8100 INCHES	YMRP =	.0000 IN. YO		
BREF =	936.6800 INCHES	ZMRP =	375.0000 IN. ZO		
SCALE =	.3600				

PARAMETRIC DATA

BETA =	5.000	ELEVON =	.000
AILRON =	.000	BDFLAP =	.000
SPDBRK =	25.000	RUDDER =	.000

RUN NO. 119/ 0 GRADIENT INTERVAL = -5.00/ 5.00

Q	ALPHA	BETA	DP/Q61	DP/Q63	DP/Q62	DP/Q64	DP/Q67
47.790	-.054	5.00000	1.32718	-1.16994	1.11982	-1.35083	.24584
47.230	5.137	5.00000	1.15917	-.54648	.98337	-.78363	.21788
47.200	10.342	5.00000	.84894	.04191	.77623	-.17092	.27155
47.330	15.548	5.00000	.48952	.76270	.52956	.34084	.24369
47.770	20.799	5.00000	.02034	1.42721	.10154	.94674	.21598
	GRADIENT	.00000	.00000	.00000	.00000	.00000	.00000

ARC40X80-462(OA100) OV101(FTP OFF) (INA04X) (16 MAR 82)

REFERENCE DATA

SREF =	2690.0000 SQ.FT.	XMRP =	1076.6800 IN. XO		
LREF =	474.8100 INCHES	YMRP =	.0000 IN. YO		
BREF =	936.6800 INCHES	ZMRP =	375.0000 IN. ZO		
SCALE =	.3600				

PARAMETRIC DATA

BETA =	5.000	ELEVON =	.000
AILRON =	.000	BDFLAP =	.000
SPDBRK =	25.000	RUDDER =	5.000

RUN NO. 120/ 0 GRADIENT INTERVAL = -5.00/ 5.00

Q	ALPHA	BETA	DP/Q61	DP/Q63	DP/Q62	DP/Q64	DP/Q67
47.850	-.057	5.00000	1.31690	-1.23318	1.08900	-1.30170	.19121
47.610	5.138	5.00000	1.14891	-.63055	1.00386	-.78353	.19064
47.510	10.337	5.00000	.80803	.04191	.77623	-.17092	.24440
47.350	15.547	5.00000	.54051	.62688	.51937	.36519	.21661
47.530	20.801	5.00000	.04068	1.38554	.12185	.97101	.24298
	GRADIENT	.00000	.00000	.00000	.00000	.00000	.00000

ARC40X80-462(OA100) OV101(FTP OFF) (INA04Y) (16 MAR 82)

REFERENCE DATA

SREF =	2690.0000 SQ.FT.	XMRP =	1076.6800 IN. XO		
LREF =	474.8100 INCHES	YMRP =	.0000 IN. YO		
BREF =	936.6800 INCHES	ZMRP =	375.0000 IN. ZO		
SCALE =	.3600				

PARAMETRIC DATA

BETA =	5.000	ELEVON =	.000
AILRON =	.000	BDFLAP =	.000
SPDBRK =	25.000	RUDDER =	10.000

RUN NO. 121/ 0 GRADIENT INTERVAL = -5.00/ 5.00

Q	ALPHA	BETA	DP/Q61	DP/Q63	DP/Q62	DP/Q64	DP/Q67
47.500	-.059	5.00000	1.30661	-1.26480	1.07872	-1.27714	.19121
47.460	5.138	5.00000	1.17968	-.70411	.97313	-.78363	.19064
47.440	10.331	5.00000	.86940	-.02096	.77623	-.21975	.21724
47.390	15.542	5.00000	.50992	.71046	.51937	.29215	.21661
47.640	20.796	5.00000	.08135	1.34387	.10154	1.01956	.24298
	GRADIENT	.00000	.00000	.00000	.00000	.00000	.00000

ARC40X80-462(OA100) OV101(FTP OFF) (INA04Z) (16 MAR 82)

REFERENCE DATA

SREF =	2690.0000 SQ.FT.	XMRP =	1076.6800 IN.	XO	
LREF =	474.8100 INCHES	YMRP =	.0000 IN.	YO	
BREF =	936.6800 INCHES	ZMRP =	375.0000 IN.	ZO	
SCALE =	.3600				

PARAMETRIC DATA

BETA =	5.000	ELEVON =	.000
AILRON =	.000	BDFLAP =	.000
SPDBRK =	25.000	RUDDER =	15.000

RUN NO. 122/ 0 GRADIENT INTERVAL = -5.00/ 5.00

Q	ALPHA	BETA	DP/Q61	DP/Q63	DP/Q62	DP/Q64	DP/Q67
47.240	-.059	5.00000	1.31690	-1.22264	1.08900	-1.25258	.21852
47.510	5.131	5.00000	1.17968	-.69360	1.00386	-.80812	.21788
47.360	10.331	5.00000	.91031	-.01048	.77623	-.19534	.21724
47.540	15.545	5.00000	.50992	.74180	.47864	.34084	.21661
47.560	20.799	5.00000	.03051	1.42721	.17262	.94674	.24298
	GRADIENT	.00000	.00000	.00000	.00000	.00000	.00000

ARC40X80-462(OA100) OV101(FTP OFF) (INA05A) (16 MAR 82)

REFERENCE DATA

SREF =	2690.0000 SQ.FT.	XMRP =	1076.6800 IN.	XO	
LREF =	474.8100 INCHES	YMRP =	.0000 IN.	YO	
BREF =	936.6800 INCHES	ZMRP =	375.0000 IN.	ZO	
SCALE =	.3600				

PARAMETRIC DATA

BETA =	5.000	ELEVON =	.000
AILRON =	.000	BDFLAP =	.000
SPDBRK =	25.000	RUDDER =	22.500

RUN NO. 123/ 0 GRADIENT INTERVAL = -5.00/ 5.00

Q	ALPHA	BETA	DP/Q61	DP/Q63	DP/Q62	DP/Q64	DP/Q67
47.490	-.069	5.00000	1.33747	-1.28588	1.09927	-1.27714	.21852
47.630	5.129	5.00000	1.17968	-.65157	1.02435	-.78363	.21788
47.560	10.328	5.00000	.90008	.00000	.80687	-.17092	.21724
47.570	15.536	5.00000	.54051	.65822	.48882	.43823	.24369
47.670	20.792	5.00000	.08135	1.33345	.10154	1.01956	.24298
	GRADIENT	.00000	.00000	.00000	.00000	.00000	.00000

ARC40X80-462(OA100) OV101(FTP OFF) (INA05B) (16 MAR 82)

REFERENCE DATA

SREF =	2690.0000 SQ.FT.	XMRP =	1076.6800 IN. XO		
LREF =	474.8100 INCHES	YMRP =	.0000 IN. YO		
BREF =	936.6800 INCHES	ZMRP =	375.0000 IN. ZO		
SCALE =	.3600				

PARAMETRIC DATA

BETA =	10.000	ELEVON =	.000
AILRON =	.000	BDFLAP =	.000
SPDBRK =	25.000	RUDDER =	.000

RUN NO. 124/ 0 GRADIENT INTERVAL = -5.00/ 5.00

Q	ALPHA	BETA	DP/Q61	DP/Q63	DP/Q62	DP/Q64	DP/Q67
47.470	-.042	10.00000	1.46093	-1.10670	.94517	-1.25258	.40973
47.540	5.146	10.00000	1.18994	-.46240	.83997	-.73466	.40853
47.480	10.343	10.00000	.88985	.25148	.74559	-.34184	.40733
47.480	15.573	10.00000	.46913	1.00300	.45827	.21911	.46030
47.560	20.820	10.00000	.07118	1.62515	.17262	.75253	.45896
	GRADIENT	.00000	.00000	.00000	.00000	.00000	.00000

ARC40X80-462(OA100) OV101(FTP OFF) (INA05C) (16 MAR 82)

REFERENCE DATA

SREF =	2690.0000 SQ.FT.	XMRP =	1076.6800 IN. XO		
LREF =	474.8100 INCHES	YMRP =	.0000 IN. YO		
BREF =	936.6800 INCHES	ZMRP =	375.0000 IN. ZO		
SCALE =	.3600				

PARAMETRIC DATA

BETA =	10.000	ELEVON =	.000
AILRON =	.000	BDFLAP =	.000
SPDBRK =	25.000	RUDDER =	5.000

RUN NO. 125/ 0 GRADIENT INTERVAL = -5.00/ 5.00

Q	ALPHA	BETA	DP/Q61	DP/Q63	DP/Q62	DP/Q64	DP/Q67
47.480	-.044	10.00000	1.46093	-1.13832	.94517	-1.25258	.40973
47.500	5.145	10.00000	1.20020	-.49393	.86045	-.80812	.43576
47.380	10.345	10.00000	.88985	.27244	.69452	-.26859	.43449
47.500	15.568	10.00000	.43853	1.05524	.50919	.24346	.46030
47.380	20.824	10.00000	.05084	1.64598	.12185	.70398	.43197
	GRADIENT	.00000	.00000	.00000	.00000	.00000	.00000

ARC40X80-462(OA100) OV101(FTP OFF) (INA05D) (16 MAR 82)

REFERENCE DATA

SREF =	2690.0000 SQ.FT.	XMRP =	1076.6800 IN. XO		
LREF =	474.8100 INCHES	YMRP =	.0000 IN. YO		
BREF =	936.6800 INCHES	ZMRP =	375.0000 IN. ZO		
SCALE =	.3600				

PARAMETRIC DATA

BETA =	10.000	ELEVON =	.000
AILRON =	.000	BDFLAP =	.000
SPDBRK =	25.000	RUDDER =	10.000

RUN NO. 126/ 0 GRADIENT INTERVAL = -5.00/ 5.00

Q	ALPHA	BETA	DP/Q61	DP/Q63	DP/Q62	DP/Q64	DP/Q67
47.500	-.047	10.00000	1.45064	-1.10670	.95544	-1.25258	.40973
47.460	5.143	10.00000	1.22072	-.47291	.83997	-.78363	.40853
47.430	10.341	10.00000	.87962	.32483	.59452	-.29300	.46164
47.520	15.569	10.00000	.53032	.96121	.46846	.24346	.46030
47.540	20.821	10.00000	.05084	1.64598	.17262	.72826	.51296
	GRADIENT	.00000	.00000	.00000	.00000	.00000	.00000

ARC40X80-462(OA100) OV101(FTP OFF) (INA05E) (16 MAR 82)

REFERENCE DATA

SREF =	2690.0000 SQ.FT.	XMRP =	1076.6800 IN. XO		
LREF =	474.8100 INCHES	YMRP =	.0000 IN. YO		
BREF =	936.6800 INCHES	ZMRP =	375.0000 IN. ZO		
SCALE =	.3600				

PARAMETRIC DATA

BETA =	10.000	ELEVON =	.000
AILRON =	.000	BDFLAP =	.000
SPDBRK =	25.000	RUDDER =	15.000

RUN NO. 127/ 0 GRADIENT INTERVAL = -5.00/ 5.00

Q	ALPHA	BETA	DP/Q61	DP/Q63	DP/Q62	DP/Q64	DP/Q67
47.540	-.046	10.00000	1.46093	-1.16994	.95544	-1.25258	.43704
47.480	5.142	10.00000	1.21046	-.40986	.83997	-.78363	.43576
47.470	10.340	10.00000	.90008	.26196	.73538	-.29300	.43449
47.540	15.567	10.00000	.48952	1.00300	.48882	.21911	.46030
47.630	20.816	10.00000	.04068	1.64598	.16247	.65543	.45896
	GRADIENT	.00000	.00000	.00000	.00000	.00000	.00000

ARC40X80-462(OA100) OV101(FTP OFF) (INA05F) (16 MAR 82)

REFERENCE DATA

SREF =	2690.0000 SQ.FT.	XMRP =	1076.6800 IN. XO		
LREF =	474.8100 INCHES	YMRP =	.0000 IN. YO		
BREF =	936.6800 INCHES	ZMRP =	375.0000 IN. ZO		
SCALE =	.3600				

PARAMETRIC DATA

BETA =	10.000	ELEVON =	.000
AILRON =	.000	BDFLAP =	.000
SPDBRK =	25.000	RUDDER =	22.500

RUN NO. 128/ 0 GRADIENT INTERVAL = -5.00/ 5.00

Q	ALPHA	BETA	DP/Q61	DP/Q63	DP/Q62	DP/Q64	DP/Q67
47.670	-.050	10.00000	1.45064	-1.09616	.95544	-1.30170	.40973
47.620	5.140	10.00000	1.22072	-.40986	.83997	-.78363	.40853
47.640	10.336	10.00000	.91031	.22005	.73538	-.36626	.46164
47.690	15.561	10.00000	.48952	1.04479	.46846	.17042	.43322
47.600	20.816	10.00000	.03051	1.61473	.13201	.82536	.51296
	GRADIENT	.00000	.00000	.00000	.00000	.00000	.00000

ARC40X80-462(OA100) OV101(ADS OFF) (INA05G) (16 MAR 82)

REFERENCE DATA

SREF =	2690.0000 SQ.FT.	XMRP =	1076.6800 IN. XO		
LREF =	474.8100 INCHES	YMRP =	.0000 IN. YO		
BREF =	936.6800 INCHES	ZMRP =	375.0000 IN. ZO		
SCALE =	.3600				

PARAMETRIC DATA

BETA =	.000	ELEVON =	.000
AILRON =	.000	BDFLAP =	.000
SPDBRK =	87.000	RUDDER =	.000

RUN NO. 129/ 0 GRADIENT INTERVAL = -5.00/ 5.00

Q	ALPHA	BETA	DP/Q61	DP/Q63	DP/Q62	DP/Q64	DP/Q67
47.710	-.096	.00000	.00000	.01054	-.01027	.00000	.02732
47.550	5.092	.00000	-.01026	.00000	.01024	.02449	.00000
47.900	10.298	.00000	-.01023	.00000	.01021	.00000	.00000
47.460	15.507	.00000	-.03060	.00000	.01018	-.02435	.00000
47.690	20.773	.00000	-.03051	.00000	.01015	-.02428	-.02700
	GRADIENT	.00000	.00000	.00000	.00000	.00000	.00000

ARC40X80-462(0A100) OV101(ADS OFF) (INA05H) (15 APR 82)

REFERENCE DATA

SREF =	2690.0000 SQ.FT.	XMRP =	1076.6800 IN.	XO	
LREF =	474.8100 INCHES	YMRP =	.0000 IN.	YO	
BREF =	936.6800 INCHES	ZMRP =	375.0000 IN.	ZO	
SCALE =	.3600				

PARAMETRIC DATA

BETA =	.000	ELEVON =	.000
AILRON =	.000	BDFLAP =	.000
SPDBRK =	84.500	RUDDER =	3.500

RUN NO. 130/ 0 GRADIENT INTERVAL = -5.00/ 5.00

Q	ALPHA	BETA	DP/Q61	DP/Q63	DP/Q62	DP/Q64	DP/Q67
47.410	-.095	.00000	-.01029	.02108	.00000	.00000	.00000
47.580	5.091	.00000	-.01026	.00000	.00000	.00000	.00000
47.720	10.298	.00000	-.02046	.00000	.01021	.00000	.00000
47.330	15.509	.00000	-.02040	.01045	.01018	.00000	.02708
47.700	20.773	.00000	-.02034	.01042	.00000	.00000	.00000
	GRADIENT	.00000	.00000	.00000	.00000	.00000	.00000

ARC40X80-462(0A100) OV101(ADS OFF) (INA05I) (15 APR 82)

REFERENCE DATA

SREF =	2690.0000 SQ.FT.	XMRP =	1076.6800 IN.	XO	
LREF =	474.8100 INCHES	YMRP =	.0000 IN.	YO	
BREF =	936.6800 INCHES	ZMRP =	375.0000 IN.	ZO	
SCALE =	.3600				

PARAMETRIC DATA

BETA =	.000	ELEVON =	.000
AILRON =	.000	BDFLAP =	.000
SPDBRK =	80.000	RUDDER =	5.500

RUN NO. 131/ 0 GRADIENT INTERVAL = -5.00/ 5.00

Q	ALPHA	BETA	DP/Q61	DP/Q63	DP/Q62	DP/Q64	DP/Q67
47.640	-.095	.00000	-.01029	.01054	.00000	.02456	.00000
47.560	5.091	.00000	-.01026	.02102	.00000	.00000	.00000
47.370	10.296	.00000	-.02046	.00000	.00000	-.02442	.00000
47.640	15.503	.00000	-.04079	.00000	.01018	.00000	.02708
47.580	20.758	.00000	-.03051	.00000	.01015	.00000	.00000
	GRADIENT	.00000	.00000	.00000	.00000	.00000	.00000

ARC40X80-462(OA100) OV101(ADS OFF) (INA05J) (15 APR 82)

REFERENCE DATA

SREF =	2690.0000 SQ.FT.	XMRP =	1076.6800 IN. XO		
LREF =	474.8100 INCHES	YMRP =	.0000 IN. YO		
BREF =	936.6800 INCHES	ZMRP =	375.0000 IN. ZO		
SCALE =	.3600				

PARAMETRIC DATA

BETA =	.000	ELEVON =	.000
AILRON =	.000	BDFLAP =	.000
SPDBRK =	78.500	RUDDER =	6.000

RUN NO. 132/ 0 GRADIENT INTERVAL = -5.00/ 5.00

Q	ALPHA	BETA	DP/Q61	DP/Q63	DP/Q62	DP/Q64	DP/Q67
47.510	-.098	.00000	.00000	.01054	.00000	-.02456	.00000
47.620	5.091	.00000	-.01026	.00000	-.01024	-.02449	.02724
47.760	10.298	.00000	-.02046	.00000	.00000	-.02442	.00000
47.780	15.506	.00000	-.02040	.00000	.01018	.00000	.00000
47.810	20.777	.00000	-.04068	.00000	-.01015	.00000	.02700
	GRADIENT	.00000	.00000	.00000	.00000	.00000	.00000

ARC40X80-462(OA100) OV101(ADS OFF) (INA05K) (16 MAR 82)

REFERENCE DATA

SREF =	2690.0000 SQ.FT.	XMRP =	1076.6800 IN. XO		
LREF =	474.8100 INCHES	YMRP =	.0000 IN. YO		
BREF =	936.6800 INCHES	ZMRP =	375.0000 IN. ZO		
SCALE =	.3600				

PARAMETRIC DATA

BETA =	5.000	ELEVON =	.000
AILRON =	.000	BDFLAP =	.000
SPDBRK =	87.000	RUDDER =	.000

RUN NO. 133/ 0 GRADIENT INTERVAL = -5.00/ 5.00

Q	ALPHA	BETA	DP/Q61	DP/Q63	DP/Q62	DP/Q64	DP/Q67
47.730	-.095	5.00000	.00000	.01054	.00000	-.02456	.19121
47.660	5.099	5.00000	-.01026	.00000	.01024	.00000	.21788
47.700	10.298	5.00000	-.02046	.01048	.00000	.00000	.21724
47.620	15.505	5.00000	-.02040	.00000	.02037	-.02435	.24369
47.490	20.756	5.00000	-.03051	.00000	.01015	.00000	.21598
	GRADIENT	.00000	.00000	.00000	.00000	.00000	.00000

ARC40X80-462(OA100) OV101(ADS OFF) (INA05L) (15 APR 82)

REFERENCE DATA

SREF =	2690.0000 SQ.FT.	XMRP =	1076.6800 IN.	XO	
LREF =	474.8100 INCHES	YMRP =	.0000 IN.	YO	
BREF =	936.6800 INCHES	ZMRP =	375.0000 IN.	ZO	
SCALE =	.3600				

PARAMETRIC DATA

BETA =	5.000	ELEVON =	.000
AILRON =	.000	BDFLAP =	.000
SPDBRK =	84.500	RUDDER =	3.500

RUN NO. 134/ 0 GRADIENT INTERVAL = -5.00/ 5.00

Q	ALPHA	BETA	DP/Q61	DP/Q63	DP/Q62	DP/Q64	DP/Q67
47.590	-.091	5.00000	-.01029	.01054	.01027	.00000	.19121
47.640	5.094	5.00000	.00000	.00000	.01024	.00000	.19064
47.660	10.298	5.00000	-.01023	.01048	.02043	.00000	.27155
47.490	15.508	5.00000	-.02040	.01045	.01018	.00000	.21661
47.850	20.751	5.00000	-.02034	.01042	.02031	.00000	.26998
	GRADIENT	.00000	.00000	.00000	.00000	.00000	.00000

ARC40X80-462(OA100) OV101(ADS OFF) (INA05M) (15 APR 82)

REFERENCE DATA

SREF =	2690.0000 SQ.FT.	XMRP =	1076.6800 IN.	XO	
LREF =	474.8100 INCHES	YMRP =	.0000 IN.	YO	
BREF =	936.6800 INCHES	ZMRP =	375.0000 IN.	ZO	
SCALE =	.3600				

PARAMETRIC DATA

BETA =	5.000	ELEVON =	.000
AILRON =	.000	BDFLAP =	.000
SPDBRK =	80.000	RUDDER =	5.500

RUN NO. 135/ 0 GRADIENT INTERVAL = -5.00/ 5.00

Q	ALPHA	BETA	DP/Q61	DP/Q63	DP/Q62	DP/Q64	DP/Q67
47.760	-.097	5.00000	-.01029	.02108	.02055	.00000	.19121
47.690	5.094	5.00000	.00000	.01051	.02049	.02449	.21788
47.450	10.299	5.00000	-.01023	.01048	.02043	.00000	.21724
47.500	15.507	5.00000	-.03060	.02090	.02037	.00000	.24369
47.670	20.759	5.00000	-.04068	.01042	.03046	-.02428	.24298
	GRADIENT	.00000	.00000	.00000	.00000	.00000	.00000

ARC40X80-462(0A100) OV101(ADS OFF) (INA05N) (15 APR 82)

REFERENCE DATA

SREF =	2690.0000 SQ.FT.	XMRP =	1076.6800 IN. XO		
LREF =	474.8100 INCHES	YMRP =	.0000 IN. YO		
BREF =	936.6800 INCHES	ZMRP =	375.0000 IN. ZO		
SCALE =	.3600				

PARAMETRIC DATA

BETA =	5.000	ELEVON =	.000
AILRON =	.000	BDFLAP =	.000
SPDBRK =	78.500	RUDDER =	6.000

RUN NO. 136/ 0 GRADIENT INTERVAL = -5.00/ 5.00

Q	ALPHA	BETA	DP/Q61	DP/Q63	DP/Q62	DP/Q64	DP/Q67
47.760	-.094	5.00000	-.01029	.02108	.02055	.02456	.19121
47.380	5.095	5.00000	-.01026	.01051	.02049	.00000	.21788
47.450	10.299	5.00000	.00000	.01048	.02043	.00000	.21724
47.670	15.508	5.00000	-.01020	.02090	.02037	.02435	.21661
47.530	20.755	5.00000	-.02034	.01042	.02031	-.04855	.21598
	GRADIENT	.00000	.00000	.00000	.00000	.00000	.00000

ARC40X80-462(0A100) OV101(ADS OFF) (INA050) (16 MAR 82)

REFERENCE DATA

SREF =	2690.0000 SQ.FT.	XMRP =	1076.6800 IN. XO		
LREF =	474.8100 INCHES	YMRP =	.0000 IN. YO		
BREF =	936.6800 INCHES	ZMRP =	375.0000 IN. ZO		
SCALE =	.3600				

PARAMETRIC DATA

BETA =	10.000	ELEVON =	.000
AILRON =	.000	BDFLAP =	.000
SPDBRK =	87.000	RUDDER =	.000

RUN NO. 137/ 0 GRADIENT INTERVAL = -5.00/ 5.00

Q	ALPHA	BETA	DP/Q61	DP/Q63	DP/Q62	DP/Q64	DP/Q67
47.810	-.077	10.00000	.02058	-.01054	.00000	.00000	.38241
47.530	5.108	10.00000	-.01026	.00000	.00000	.00000	.40853
47.750	10.306	10.00000	-.02046	-.01048	.01021	.00000	.43449
47.630	15.529	10.00000	-.02040	-.01045	.01018	.00000	.46030
47.330	20.781	10.00000	-.03051	-.02084	.01015	-.02428	.48596
	GRADIENT	.00000	.00000	.00000	.00000	.00000	.00000

ARC40X80-462(0A100) OV101(ADS OFF) (INA05P) (15 APR 82)

REFERENCE DATA

SREF =	2690.0000 SQ.FT.	XMRP =	1076.6800 IN. XO		
LREF =	474.8100 INCHES	YMRP =	.0000 IN. YO		
BREF =	936.6800 INCHES	ZMRP =	375.0000 IN. ZO		
SCALE =	.3600				

PARAMETRIC DATA

BETA =	10.000	ELEVON =	.000
AILRON =	.000	BDFLAP =	.000
SPDBRK =	84.500	RUDDER =	3.500

RUN NO. 138/ 0 GRADIENT INTERVAL = -5.00/ 5.00

Q	ALPHA	BETA	DP/Q61	DP/Q63	DP/Q62	DP/Q64	DP/Q67
47.520	-.078	10.00000	-.02058	-.01054	.01027	.00000	.40973
47.860	5.110	10.00000	-.01026	-.01051	.01024	.00000	.43576
47.790	10.307	10.00000	-.01023	-.01048	.01021	-.04883	.46164
47.490	15.529	10.00000	-.03060	-.01045	.02037	-.02435	.46030
47.890	20.777	10.00000	-.03051	-.02064	.02031	-.02428	.45896
	GRADIENT	.00000	.00000	.00000	.00000	.00000	.00000

ARC40X80-462(0A100) OV101(ADS OFF) (INA05Q) (15 APR 82)

REFERENCE DATA

SREF =	2690.0000 SQ.FT.	XMRP =	1076.6800 IN. XO		
LREF =	474.8100 INCHES	YMRP =	.0000 IN. YO		
BREF =	936.6800 INCHES	ZMRP =	375.0000 IN. ZO		
SCALE =	.3600				

PARAMETRIC DATA

BETA =	10.000	ELEVON =	.000
AILRON =	.000	BDFLAP =	.000
SPDBRK =	80.000	RUDDER =	5.500

RUN NO. 139/ 0 GRADIENT INTERVAL = -5.00/ 5.00

Q	ALPHA	BETA	DP/Q61	DP/Q63	DP/Q62	DP/Q64	DP/Q67
47.450	-.080	10.00000	.00000	-.01054	.02055	.02456	.43704
47.430	5.109	10.00000	-.01026	-.01051	.01024	.00000	.40853
47.410	10.307	10.00000	-.01023	-.01048	.01021	.00000	.46164
47.370	15.529	10.00000	-.03060	.01045	.02037	-.02435	.46030
47.210	20.780	10.00000	-.02034	-.01042	.00000	-.02428	.48596
	GRADIENT	.00000	.00000	.00000	.00000	.00000	.00000

ARC40X80-462(OA100) OV101(ADS OFF) (INA05R) (15 APR 82)

REFERENCE DATA

SREF =	2690.0000 SQ.FT.	XMRP =	1076.6800 IN. XO		
LREF =	474.8100 INCHES	YMRP =	.0000 IN. YO		
BREF =	936.6800 INCHES	ZMRP =	375.0000 IN. ZO		
SCALE =	.3600				

PARAMETRIC DATA

BETA =	10.000	ELEVON =	.000
AILRON =	.000	BDFLAP =	.000
SPDBRK =	78.500	RUDDER =	6.000

RUN NO. 140/ 0 GRADIENT INTERVAL = -5.00/ 5.00

Q	ALPHA	BETA	DP/Q61	DP/Q63	DP/Q62	DP/Q64	DP/Q67
47.560	-.078	10.00000	.00000	.01054	.00000	.00000	.43704
47.130	5.110	10.00000	-.01026	-.01051	.01024	.00000	.43576
47.600	10.309	10.00000	.00000	-.02096	.02043	.00000	.48880
47.540	15.526	10.00000	-.02040	-.02090	.02037	-.02435	.48738
47.910	20.778	10.00000	-.02034	-.01042	.03046	-.02428	.48596
	GRADIENT	.00000	.00000	.00000	.00000	.00000	.00000

ARC40X80-462(OA100) OV101(ADS OFF) (INA05S) (15 APR 82)

REFERENCE DATA

SREF =	2690.0000 SQ.FT.	XMRP =	1076.6800 IN. XO		
LREF =	474.8100 INCHES	YMRP =	.0000 IN. YO		
BREF =	936.6800 INCHES	ZMRP =	375.0000 IN. ZO		
SCALE =	.3600				

PARAMETRIC DATA

ALPHA =	10.000	BETA =	.000
ELEVON =	.000	AILRON =	.000
BDFLAP =	.000	SPDBRK =	25.000

RUN NO. 141/ 0 GRADIENT INTERVAL = -5.00/ 5.00

Q	RUDDER	BETA	DP/Q61	DP/Q63	DP/Q62	DP/Q64	DP/Q67	ALPHA
47.240	-22.907	.00000	.00000	-.01048	.02043	.00000	.05431	10.32800
47.740	-15.162	.00000	.00000	-.01048	.02043	.00000	.02716	10.33170
47.530	-10.072	.00000	-.01023	-.01048	.03064	.00000	.02716	10.33640
47.600	-5.054	.00000	-.01023	.00000	.02043	.00000	.08147	10.33540
47.530	.043	.00000	-.01023	.01048	.03064	.00000	.05431	10.33540
47.640	5.082	.00000	-.01023	-.01048	.02043	.00000	.05431	10.33550
47.570	10.140	.00000	.00000	.00000	.02043	.00000	.05431	10.33360
47.570	14.990	.00000	-.02045	-.01048	.02043	.00000	.05431	10.33310
47.430	22.915	.00000	-.01023	.00000	.02043	.00000	.05431	10.32910
	GRADIENT	.00000	.00000	.00000	.00000	.00000	.00000	.00000

ARC40X80-462(OA100) OV101(ADS OFF) (INA05T) (15 APR 82)

REFERENCE DATA

SREF =	2690.0000 SQ.FT.	XMRP =	1076.6800 IN. XO		
LREF =	474.8100 INCHES	YMRP =	.0000 IN. YO		
BREF =	936.6800 INCHES	ZMRP =	375.0000 IN. ZO		
SCALE =	.3600				

PARAMETRIC DATA

BETA =	5.000	ELEVON =	.000
AILRON =	.000	BDFLAP =	.000
SPDBRK =	.000	RUDDER =	.000

RUN NO. 142/ 0 GRADIENT INTERVAL = -5.00/ 5.00

Q	ALPHA	BETA	DP/Q61	DP/Q63	DP/Q62	DP/Q64	DP/Q67
47.510	5.150	5.00000	-.05109	-.05234	-.05101	.00000	.00000
47.650	10.351	5.00000	.00000	-.05219	-.05087	.00000	.13524
47.420	15.552	5.00000	-.10158	-.05203	-.05072	-.24250	.26970
47.540	20.810	5.00000	-.05064	-.05188	.00000	.00000	.13446
	GRADIENT	.00000	.00000	.00000	.00000	.00000	.00000

ARC40X80-462(OA100) OV101(ADS OFF) (INA05U) (16 MAR 82)

REFERENCE DATA

SREF =	2690.0000 SQ.FT.	XMRP =	1076.6800 IN. XO		
LREF =	474.8100 INCHES	YMRP =	.0000 IN. YO		
BREF =	936.6800 INCHES	ZMRP =	375.0000 IN. ZO		
SCALE =	.3600				

PARAMETRIC DATA

BETA =	10.000	ELEVON =	.000
AILRON =	.000	BDFLAP =	.000
SPDBRK =	.000	RUDDER =	.000

RUN NO. 143/ 0 GRADIENT INTERVAL = -5.00/ 5.00

Q	ALPHA	BETA	DP/Q61	DP/Q63	DP/Q62	DP/Q64	DP/Q67
47.620	-.035	10.00000	.05124	-.05249	-.05116	-.24463	.81620
47.660	5.154	10.00000	-.05109	.00000	-.05101	.00000	.94945
47.870	10.354	10.00000	.00000	-.10437	-.05087	.00000	1.08193
47.280	15.576	10.00000	-.05079	-.10407	-.05072	-.12125	1.21364
47.740	20.824	10.00000	-.05064	-.15565	.00000	.00000	1.34460
	GRADIENT	.00000	.00000	.00000	.00000	.00000	.00000

ARC40X80-462(OA100) OV101(ADS OFF) (INA05V) (16 MAR 82)

REFERENCE DATA

SREF =	2690.0000 SQ.FT.	XMRP =	1076.6800 IN. XO		
LREF =	474.8100 INCHES	YMRP =	.0000 IN. YO		
BREF =	936.6800 INCHES	ZMRP =	375.0000 IN. ZO		
SCALE =	.3600				

PARAMETRIC DATA

BETA =	10.000	ELEVON =	.000
AILRON =	.000	BDFLAP =	.000
SPDBRK =	25.000	RUDDER =	.000

RUN NO. 144/ 0 GRADIENT INTERVAL = -5.00/ 5.00

Q	ALPHA	BETA	DP/Q61	DP/Q63	DP/Q62	DP/Q64	DP/Q67
47.650	-.044	10.00000	-.05124	.05249	-.05116	.00000	.68017
47.530	5.147	10.00000	.00000	-.10467	-.05101	.00000	1.08509
47.640	10.349	10.00000	-.05094	-.05219	-.05087	.00000	1.08193
47.920	15.574	10.00000	-.10158	.00000	.00000	.00000	1.21364
47.210	20.816	10.00000	-.10129	-.05188	.00000	.00000	1.34460
	GRADIENT	.00000	.00000	.00000	.00000	.00000	.00000

ARC40X80-462(OA100) OV101+NOSE GEAR(ADS OFF) (INA05W) (16 MAR 82)

REFERENCE DATA

SREF =	2690.0000 SQ.FT.	XMRP =	1076.6800 IN. XO		
LREF =	474.8100 INCHES	YMRP =	.0000 IN. YO		
BREF =	936.6800 INCHES	ZMRP =	375.0000 IN. ZO		
SCALE =	.3600				

PARAMETRIC DATA

BETA =	.000	ELEVON =	.000
AILRON =	.000	BDFLAP =	.000
SPDBRK =	87.000	RUDDER =	.000

RUN NO. 145/ 0 GRADIENT INTERVAL = -5.00/ 5.00

Q	ALPHA	BETA	DP/Q61	DP/Q63	DP/Q62	DP/Q64	DP/Q67
47.450	-.089	.00000	-.02058	.00000	-.01027	-.02456	-.02732
47.710	5.097	.00000	-.01026	-.02102	.00000	.00000	.00000
47.790	10.302	.00000	-.02046	-.02096	.00000	.00000	.00000
47.640	15.510	.00000	-.02040	-.02090	.01018	-.02435	.00000
47.680	20.754	.00000	-.04068	-.02084	.01015	-.02428	.00000
	GRADIENT	.00000	.00000	.00000	.00000	.00000	.00000

ARC40X80-462(OA100) OV101+NOSE GEAR(ADS OFF) (INA05X) (16 MAR 82)

REFERENCE DATA

SREF =	2690.0000 SQ.FT.	XMRP =	1076.6800 IN.	XO	
LREF =	474.8100 INCHES	YMRP =	.0000 IN.	YO	
BREF =	936.6800 INCHES	ZMRP =	375.0000 IN.	ZO	
SCALE =	.3600				

PARAMETRIC DATA

BETA =	5.000	ELEVON =	.000
AILRON =	.000	BDFLAP =	.000
SPDBRK =	87.000	RUDDER =	.000

RUN NO. 146/ 0 GRADIENT INTERVAL = -5.00/ 5.00

Q	ALPHA	BETA	DP/Q61	DP/Q63	DP/Q62	DP/Q64	DP/Q67
47.630	-.087	5.00000	.00000	.00000	.00000	.00000	.16389
47.570	5.102	5.00000	-.01026	-.02102	.00000	.00000	.16341
47.600	10.304	5.00000	-.01023	-.02096	.00000	.00000	.19009
47.600	15.506	5.00000	-.01020	-.02090	-.01018	-.02435	.18953
47.810	20.751	5.00000	-.02034	-.03125	.01015	-.02428	.16199
	GRADIENT	.00000	.00000	.00000	.00000	.00000	.00000

ARC40X80-462(OA100) OV101+NOSE GEAR(ADS OFF) (INA05Y) (16 MAR 82)

REFERENCE DATA

SREF =	2690.0000 SQ.FT.	XMRP =	1076.6800 IN.	XO	
LREF =	474.8100 INCHES	YMRP =	.0000 IN.	YO	
BREF =	936.6800 INCHES	ZMRP =	375.0000 IN.	ZO	
SCALE =	.3600				

PARAMETRIC DATA

BETA =	10.000	ELEVON =	.000
AILRON =	.000	BDFLAP =	.000
SPDBRK =	87.000	RUDDER =	.000

RUN NO. 147/ 0 GRADIENT INTERVAL = -5.00/ 5.00

Q	ALPHA	BETA	DP/Q61	DP/Q63	DP/Q62	DP/Q64	DP/Q67
47.690	-.073	10.00000	.00000	-.01054	.00000	.00000	.32778
47.470	5.110	10.00000	-.02052	-.01051	.00000	.00000	.32682
47.620	10.303	10.00000	-.01023	-.02096	.00000	.00000	.39018
47.590	15.537	10.00000	-.01020	.00000	.00000	.02435	.35199
47.460	20.779	10.00000	-.03051	-.02084	.01015	-.02428	.37797
	GRADIENT	.00000	.00000	.00000	.00000	.00000	.00000

ARC40X80-462(OA100) OV101+NOSE GEAR(FTP,ADS OFF) (INA05Z) (16 MAR 82)

REFERENCE DATA

SREF =	2690.0000 SQ.FT.	XMRP =	1076.6800 IN.	XO	
LREF =	474.8100 INCHES	YMRP =	.0000 IN.	YO	
BREF =	936.6800 INCHES	ZMRP =	375.0000 IN.	ZO	
SCALE =	.3600				

PARAMETRIC DATA

BETA =	.000	ELEVON =	.000
AILRON =	.000	BDFLAP =	.000
SPDBRK =	.000	RUDDER =	.000

RUN NO. 148/ 0 GRADIENT INTERVAL = -5.00/ 5.00

Q	ALPHA	BETA	DP/Q61	DP/Q63	DP/Q62	DP/Q64	DP/Q67
47.710	-.050	.00000	.00000	.00000	.00000	-.02456	.00000
47.510	5.148	.00000	-.01026	-.01051	.00000	.00000	.00000
47.730	10.347	.00000	-.02048	-.01048	.01021	.00000	.02716
47.530	15.559	.00000	-.02040	-.01045	.00000	-.02435	.00000
47.600	20.802	.00000	-.03051	-.01042	.02031	-.02428	.02700
	GRADIENT	.00000	.00000	.00000	.00000	.00000	.00000

ARC40X80-462(OA100) OV101+NOSE GEAR(FTP,ADS OFF) (INA06A) (16 MAR 82)

REFERENCE DATA

SREF =	2690.0000 SQ.FT.	XMRP =	1076.6800 IN.	XO	
LREF =	474.8100 INCHES	YMRP =	.0000 IN.	YO	
BREF =	936.6800 INCHES	ZMRP =	375.0000 IN.	ZO	
SCALE =	.3600				

PARAMETRIC DATA

BETA =	5.000	ELEVON =	.000
AILRON =	.000	BDFLAP =	.000
SPDBRK =	.000	RUDDER =	.000

RUN NO. 149/ 0 GRADIENT INTERVAL = -5.00/ 5.00

Q	ALPHA	BETA	DP/Q61	DP/Q63	DP/Q62	DP/Q64	DP/Q67
47.470	-.047	5.00000	.00000	.00000	.01027	.02456	.21852
47.600	5.147	5.00000	.00000	.00000	.00000	.00000	.21788
47.470	10.342	5.00000	-.01023	.00000	.00000	.02442	.21724
47.480	15.552	5.00000	-.02040	.00000	.01018	.00000	.21661
47.520	20.802	5.00000	-.02034	.01042	.01015	.00000	.24298
	GRADIENT	.00000	.00000	.00000	.00000	.00000	.00000

ARC40X80-462(OA100) OV101+NOSE GEAR(FTP,ADS OFF) (INA06B) (16 MAR 82)

REFERENCE DATA

SREF =	2690.0000 SQ.FT.	XMRP =	1076.6800 IN. XO		
LREF =	474.8100 INCHES	YMRP =	.0000 IN. YO		
BREF =	936.6800 INCHES	ZMRP =	375.0000 IN. ZO		
SCALE =	.3600				

PARAMETRIC DATA

BETA =	10.000	ELEVON =	.000
AILRON =	.000	BDFLAP =	.000
SPDBRK =	.000	RUDDER =	.000

RUN NO. 150/ 0 GRADIENT INTERVAL = -5.00/ 5.00

Q	ALPHA	BETA	DP/Q61	DP/Q63	DP/Q62	DP/Q64	DP/Q67
47.500	-.037	10.00000	.00000	.01054	.00000	.02456	.38241
47.210	5.149	10.00000	.00000	.00000	.00000	.02449	.40853
47.360	10.344	10.00000	-.01023	.00000	.00000	.00000	.43449
47.620	15.575	10.00000	-.01020	.01045	.01018	.02435	.40615
47.570	20.823	10.00000	-.03051	.00000	.02031	.02428	.43197
	GRADIENT	.00000	.00000	.00000	.00000	.00000	.00000

ARC40X80-462(OA100) OV101(FTP AND ADS OFF) (INA06C) (16 MAR 82)

REFERENCE DATA

SREF =	2690.0000 SQ.FT.	XMRP =	1076.6800 IN. XO		
LREF =	474.8100 INCHES	YMRP =	.0000 IN. YO		
BREF =	936.6800 INCHES	ZMRP =	375.0000 IN. ZO		
SCALE =	.3600				

PARAMETRIC DATA

BETA =	.000	ELEVON =	.000
AILRON =	.000	BDFLAP =	.000
SPDBRK =	.000	RUDDER =	.000

RUN NO. 151/ 0 GRADIENT INTERVAL = -5.00/ 5.00

Q	ALPHA	BETA	DP/Q61	DP/Q63	DP/Q62	DP/Q64	DP/Q67
47.680	-.056	.00000	-.01029	.00000	.00000	.00000	.02732
47.610	5.140	.00000	-.02052	.00000	.01024	.00000	.02724
47.670	10.340	.00000	-.01023	.00000	.01021	.00000	.05431
47.610	15.551	.00000	-.02040	.00000	.01018	.00000	.02708
47.690	20.824	.00000	-.03051	.00000	.01015	.00000	.02700
	GRADIENT	.00000	.00000	.00000	.00000	.00000	.00000

ARC40X80-462(OA100) OV101(FTP AND ADS OFF) (INA06D) (16 MAR 82)

REFERENCE DATA

SREF =	2690.0000 SQ.FT.	XMRP =	1076.6800 IN. XO		
LREF =	474.8100 INCHES	YMRP =	.0000 IN. YO		
BREF =	936.6800 INCHES	ZMRP =	375.0000 IN. ZO		
SCALE =	.3600				

PARAMETRIC DATA

BETA =	.000	ELEVON =	.000
AILRON =	.000	BDFLAP =	.000
SPDBRK =	.000	RUDDER =	5.000

RUN NO. 152/ 0 GRADIENT INTERVAL = -5.00/ 5.00

Q	ALPHA	BETA	DP/Q61	DP/Q63	DP/Q62	DP/Q64	DP/Q67
47.560	-.057	.00000	.01029	.01054	.00000	.00000	.05463
47.720	5.140	.00000	-.01026	.00000	.00000	.00000	.02724
47.480	10.340	.00000	-.01023	.00000	.00000	.00000	.05431
47.580	15.556	.00000	-.03060	.00000	.01018	.00000	.02708
47.660	20.824	.00000	-.02034	.00000	.01015	-.02428	.05400
	GRADIENT	.00000	.00000	.00000	.00000	.00000	.00000

ARC40X80-462(OA100) OV101(FTP AND ADS OFF) (INA06E) (16 MAR 82)

REFERENCE DATA

SREF =	2690.0000 SQ.FT.	XMRP =	1076.6800 IN. XO		
LREF =	474.8100 INCHES	YMRP =	.0000 IN. YO		
BREF =	936.6800 INCHES	ZMRP =	375.0000 IN. ZO		
SCALE =	.3600				

PARAMETRIC DATA

BETA =	.000	ELEVON =	.000
AILRON =	.000	BDFLAP =	.000
SPDBRK =	.000	RUDDER =	10.000

RUN NO. 153/ 0 GRADIENT INTERVAL = -5.00/ 5.00

Q	ALPHA	BETA	DP/Q61	DP/Q63	DP/Q62	DP/Q64	DP/Q67
47.620	-.054	.00000	-.01029	.00000	-.01027	.00000	.02732
47.720	5.139	.00000	-.01026	.01051	-.01024	-.02449	.02724
47.540	10.338	.00000	.00000	-.01048	-.01021	-.02442	.00000
47.750	15.553	.00000	-.03060	-.01045	.00000	-.02435	.02708
47.610	20.822	.00000	-.03051	.00000	.00000	-.02428	.00000
	GRADIENT	.00000	.00000	.00000	.00000	.00000	.00000

ARC40X80-462(OA100) OV101(FTP AND ADS OFF) (INA06F) (16 MAR 82)

REFERENCE DATA

SREF =	2690.0000 SQ.FT.	XMRP =	1076.6800 IN.	XO	
LREF =	474.8100 INCHES	YMRP =	.0000 IN.	YO	
BREF =	936.6800 INCHES	ZMRP =	375.0000 IN.	ZO	
SCALE =	.3600				

PARAMETRIC DATA

BETA =	.000	ELEVON =	.000
AILRON =	.000	BDFLAP =	.000
SPDBRK =	.000	RUDDER =	15.000

RUN NO. 154/ 0 GRADIENT INTERVAL = -5.00/ 5.00

Q	ALPHA	BETA	DP/Q61	DP/Q63	DP/Q62	DP/Q64	DP/Q67
47.520	-.056	.00000	.00000	.00000	-.02055	.00000	.00000
47.620	5.138	.00000	-.01026	.00000	-.01024	-.02449	.02724
47.750	10.338	.00000	-.03068	.01048	.00000	.00000	.02716
47.570	15.550	.00000	-.02040	.00000	.00000	-.04869	.00000
47.610	20.822	.00000	-.04068	.00000	.00000	-.02428	.00000
	GRADIENT	.00000	.00000	.00000	.00000	.00000	.00000

ARC40X80-462(OA100) OV101(FTP AND ADS OFF) (INA06G) (15 APR 82)

REFERENCE DATA

SREF =	2690.0000 SQ.FT.	XMRP =	1076.6800 IN.	XO	
LREF =	474.8100 INCHES	YMRP =	.0000 IN.	YO	
BREF =	936.6800 INCHES	ZMRP =	375.0000 IN.	ZO	
SCALE =	.3600				

PARAMETRIC DATA

BETA =	.000	ELEVON =	.000
AILRON =	.000	BDFLAP =	.000
SPDBRK =	.000	RUDDER =	20.500

RUN NO. 155/ 0 GRADIENT INTERVAL = -5.00/ 5.00

Q	ALPHA	BETA	DP/Q61	DP/Q63	DP/Q62	DP/Q64	DP/Q67
47.510	-.061	.00000	.01029	.00000	-.01027	-.02456	.02732
47.600	5.135	.00000	-.01026	.01051	.00000	.00000	.00000
47.580	10.335	.00000	-.03068	.00000	.01021	-.02442	.02716
47.680	15.550	.00000	-.03060	.00000	.00000	-.04869	.02708
47.440	20.819	.00000	-.03051	.00000	.00000	-.02428	.02700
	GRADIENT	.00000	.00000	.00000	.00000	.00000	.00000

ARC40X80-462(OA100) OV101(FTP AND ADS OFF) (INA06H) (16 MAR 82)

REFERENCE DATA

SREF =	2690.0000 SQ.FT.	XMRP =	1076.6800 IN.	XO	
LREF =	474.8100 INCHES	YMRP =	.0000 IN.	YO	
BREF =	936.6800 INCHES	ZMRP =	375.0000 IN.	ZO	
SCALE =	.3600				

PARAMETRIC DATA

BETA =	5.000	ELEVON =	.000
AILRON =	.000	BDFLAP =	.000
SPDBRK =	.000	RUDDER =	.000

RUN NO. 156/ 0 GRADIENT INTERVAL = -5.00/ 5.00

Q	ALPHA	BETA	DP/Q61	DP/Q63	DP/Q62	DP/Q64	DP/Q67
47.640	-.047	5.00000	-.01029	.00000	.00000	-.02456	.19121
47.700	5.147	5.00000	-.03077	.01051	.00000	-.02449	.19064
47.530	10.343	5.00000	-.01023	.00000	-.01021	.00000	.21724
47.460	15.556	5.00000	-.03060	.01045	.00000	-.02435	.21661
47.670	20.810	5.00000	-.04068	.00000	.00000	-.02428	.24298
	GRADIENT	.00000	.00000	.00000	.00000	.00000	.00000

ARC40X80-462(OA100) OV101(FTP AND ADS OFF) (INA06I) (16 MAR 82)

REFERENCE DATA

SREF =	2690.0000 SQ.FT.	XMRP =	1076.6800 IN.	XO	
LREF =	474.8100 INCHES	YMRP =	.0000 IN.	YO	
BREF =	936.6800 INCHES	ZMRP =	375.0000 IN.	ZO	
SCALE =	.3600				

PARAMETRIC DATA

BETA =	5.000	ELEVON =	.000
AILRON =	.000	BDFLAP =	.000
SPDBRK =	.000	RUDDER =	5.000

RUN NO. 157/ 0 GRADIENT INTERVAL = -5.00/ 5.00

Q	ALPHA	BETA	DP/Q61	DP/Q63	DP/Q62	DP/Q64	DP/Q67
47.530	-.050	5.00000	-.01029	.01054	.00000	.00000	.21852
47.550	5.145	5.00000	-.01029	.00000	.00000	.00000	.21852
47.470	10.342	5.00000	-.01023	.01048	-.02043	.00000	.21724
47.480	15.554	5.00000	-.02040	.00000	.01018	-.04869	.21661
47.650	20.806	5.00000	-.03051	.00000	.01015	-.02428	.24298
	GRADIENT	.00000	.00000	.00000	.00000	.00000	.00000

ARC40X80-462(0A100) OVI01(FTP AND ADS OFF) (INA06J) (16 MAR 82)

REFERENCE DATA

SREF =	2690.0000 SQ.FT.	XMRP =	1076.6800 IN.	XO	
LREF =	474.8100 INCHES	YMRP =	.0000 IN.	YO	
BREF =	936.6800 INCHES	ZMRP =	375.0000 IN.	ZO	
SCALE =	.3600				

PARAMETRIC DATA

BETA =	5.000	ELEVON =	.000
AILRON =	.000	BDFLAP =	.000
SPDBRK =	.000	RUDDER =	10.000

RUN NO. 158/ 0 GRADIENT INTERVAL = -5.00/ 5.00

Q	ALPHA	BETA	DP/Q61	DP/Q63	DP/Q62	DP/Q64	DP/Q67
47.460	-.051	5.00000	-.01029	.01054	.01027	.02456	.19121
47.530	5.145	5.00000	-.01026	.01051	.00000	-.02449	.21788
47.310	10.341	5.00000	-.01023	.01048	.01021	-.02442	.24440
47.450	15.583	5.00000	-.02040	.01045	.01018	-.02435	.24369
47.870	20.783	5.00000	-.02034	.00000	.01015	-.02428	.21598
	GRADIENT	.00000	.00000	.00000	.00000	.00000	.00000

ARC40X80-462(0A100) OVI01(FTP AND ADS OFF) (INA06K) (16 MAR 82)

REFERENCE DATA

SREF =	2690.0000 SQ.FT.	XMRP =	1076.6800 IN.	XO	
LREF =	474.8100 INCHES	YMRP =	.0000 IN.	YO	
BREF =	936.6800 INCHES	ZMRP =	375.0000 IN.	ZO	
SCALE =	.3600				

PARAMETRIC DATA

BETA =	5.000	ELEVON =	.000
AILRON =	.000	BDFLAP =	.000
SPDBRK =	.000	RUDDER =	15.000

RUN NO. 159/ 0 GRADIENT INTERVAL = -5.00/ 5.00

Q	ALPHA	BETA	DP/Q61	DP/Q63	DP/Q62	DP/Q64	DP/Q67
47.480	-.055	5.00000	.00000	.03162	.01027	.00000	.24584
47.690	5.140	5.00000	-.01026	.01051	.00000	-.02449	.21788
47.600	10.326	5.00000	-.03068	.02096	.01021	-.02442	.21724
47.680	15.549	5.00000	-.02040	.01045	.02037	-.02435	.24369
47.830	20.785	5.00000	-.04068	.01042	.02031	-.02428	.24298
	GRADIENT	.00000	.00000	.00000	.00000	.00000	.00000

ARC40X80-462(OA100) OV101(FTP AND ADS OFF) (INA06L) (15 APR 82)

REFERENCE DATA

SREF =	2690.0000 SQ.FT.	XMRP =	1076.6800 IN. XO		
LREF =	474.8100 INCHES	YMRP =	.0000 IN. YO		
BREF =	936.6800 INCHES	ZMRP =	375.0000 IN. ZO		
SCALE =	.3600				

PARAMETRIC DATA

BETA =	5.000	ELEVON =	.000
AILRON =	.000	BDFLAP =	.000
SPDBRK =	.000	RUDDER =	20.500

RUN NO. 160/ 0 GRADIENT INTERVAL = -5.00/ 5.00

Q	ALPHA	BETA	DP/Q61	DP/Q63	DP/Q62	DP/Q64	DP/Q67
47.360	-.050	5.00000	.00000	.01054	.01027	.00000	.19121
47.530	5.141	5.00000	-.01026	.01051	.01024	.00000	.19064
47.680	10.336	5.00000	-.02046	.01048	.01021	.00000	.21724
47.630	15.547	5.00000	-.03060	.01045	.02037	-.02435	.27076
47.440	20.800	5.00000	-.03051	.01042	.02031	-.02428	.24298
	GRADIENT	.00000	.00000	.00000	.00000	.00000	.00000

ARC40X80-462(OA100) OV101(ADS OFF) (INA06M) (16 MAR 82)

REFERENCE DATA

SREF =	2690.0000 SQ.FT.	XMRP =	1076.6800 IN. XO		
LREF =	474.8100 INCHES	YMRP =	.0000 IN. YO		
BREF =	936.6800 INCHES	ZMRP =	375.0000 IN. ZO		
SCALE =	.3600				

PARAMETRIC DATA

BETA =	10.000	ELEVON =	.000
AILRON =	.000	BDFLAP =	.000
SPDBRK =	.000	RUDDER =	.000

RUN NO. 161/ 0 GRADIENT INTERVAL = -5.00/ 5.00

Q	ALPHA	BETA	DP/Q61	DP/Q63	DP/Q62	DP/Q64	DP/Q67
47.610	-.038	10.00000	.01029	.00000	.00000	.02456	.40973
47.540	5.151	10.00000	.00000	.00000	.00000	.02449	.40853
47.550	10.352	10.00000	-.01023	-.01048	.00000	.00000	.43449
47.970	15.573	10.00000	-.02040	.00000	.00000	.02435	.46030
47.730	20.823	10.00000	-.01017	-.02084	.00000	.00000	.45896
	GRADIENT	.00000	.00000	.00000	.00000	.00000	.00000

ARC40X80-462(OA100) OV101(ADS OFF) (INA06N) (16 MAR 82)

REFERENCE DATA

SREF =	2690.0000 SQ.FT.	XMRP =	1076.6800 IN. XO		
LREF =	474.8100 INCHES	YMRP =	.0000 IN. YO		
BREF =	936.6800 INCHES	ZMRP =	375.0000 IN. ZO		
SCALE =	.3600				

PARAMETRIC DATA

BETA =	10.000	ELEVON =	.000
AILRON =	.000	BDFLAP =	.000
SPDBRK =	.000	RUDDER =	5.000

RUN NO. 162/ 0 GRADIENT INTERVAL = -5.00/ 5.00

Q	ALPHA	BETA	DP/Q61	DP/Q63	DP/Q62	DP/Q64	DP/Q67
47.570	-.037	10.00000	.00000	.00000	.00000	.02456	.35509
47.700	5.151	10.00000	-.01026	.00000	.00000	.02449	.40853
47.440	10.349	10.00000	-.01023	-.01048	.00000	.00000	.43449
47.630	15.572	10.00000	-.03060	.00000	.00000	.02435	.46030
47.520	20.823	10.00000	-.03051	-.01042	.00000	.02428	.42556
	GRADIENT	.00000	.00000	.00000	.00000	.00000	.00000

ARC40X80-462(OA100) OV101(ADS OFF) (INA060) (16 MAR 82)

REFERENCE DATA

SREF =	2690.0000 SQ.FT.	XMRP =	1076.6800 IN. XO		
LREF =	474.8100 INCHES	YMRP =	.0000 IN. YO		
BREF =	936.6800 INCHES	ZMRP =	375.0000 IN. ZO		
SCALE =	.3600				

PARAMETRIC DATA

BETA =	10.000	ELEVON =	.000
AILRON =	.000	BDFLAP =	.000
SPDBRK =	.000	RUDDER =	10.000

RUN NO. 163/ 0 GRADIENT INTERVAL = -5.00/ 5.00

Q	ALPHA	BETA	DP/Q61	DP/Q63	DP/Q62	DP/Q64	DP/Q67
47.640	5.150	10.00000	.01026	.00000	.00000	.02449	.40853
47.480	10.348	10.00000	-.01023	.00000	.00000	.02442	.43449
47.500	15.575	10.00000	-.03060	.00000	.00000	.00000	.43322
47.740	20.820	10.00000	-.02034	-.01042	.00000	-.02428	.51296
	GRADIENT	.00000	.00000	.00000	.00000	.00000	.00000

ARC40X80-462(OA100) OV101(ADS OFF) (INA06P) (16 MAR 82)

REFERENCE DATA

SREF = 2690.0000 SQ.FT. XMRP = 1076.6800 IN. XO
LREF = 474.8100 INCHES YMRP = .0000 IN. YO
BREF = 936.6800 INCHES ZMRP = 375.0000 IN. ZO
SCALE = .3600

PARAMETRIC DATA

BETA = 10.000 ELEVON = .000
AILRON = .000 BDFLAP = .000
SPDBRK = .000 RUDDER = 15.000

RUN NO. 164/ 0 GRADIENT INTERVAL = -5.00/ 5.00

Q	ALPHA	BETA	DP/Q61	DP/Q63	DP/Q62	DP/Q64	DP/Q67
47.630	-.040	10.00000	.00000	.00000	.00000	.02456	.40973
47.450	5.148	10.00000	.01026	.00000	.00000	.02449	.40853
47.590	10.346	10.00000	-.02046	-.01048	.00000	.00000	.43449
47.510	15.566	10.00000	-.03060	-.01045	.00000	.02435	.48738
47.820	20.818	10.00000	-.01017	-.01042	.00000	.02428	.51296
	GRADIENT	.00000	.00000	.00000	.00000	.00000	.00000

ARC40X80-462(OA100) OV101(ADS OFF) (INA06Q) (15 APR 82)

REFERENCE DATA

SREF = 2690.0000 SQ.FT. XMRP = 1076.6800 IN. XO
LREF = 474.8100 INCHES YMRP = .0000 IN. YO
BREF = 936.6800 INCHES ZMRP = 375.0000 IN. ZO
SCALE = .3600

PARAMETRIC DATA

BETA = 10.000 ELEVON = .000
AILRON = .000 BDFLAP = .000
SPDBRK = .000 RUDDER = 20.500

RUN NO. 165/ 0 GRADIENT INTERVAL = -5.00/ 5.00

Q	ALPHA	BETA	DP/Q61	DP/Q63	DP/Q62	DP/Q64	DP/Q67
47.640	-.043	10.00000	.00000	.00000	.00000	.02456	.38241
47.600	5.147	10.00000	.00000	-.01051	.01024	.02449	.40853
47.570	10.342	10.00000	-.02046	-.01048	.00000	.00000	.43449
47.760	15.561	10.00000	-.02040	.00000	.00000	.02435	.46030
47.670	20.817	10.00000	-.04068	-.01042	.02031	.00000	.48596
	GRADIENT	.00000	.00000	.00000	.00000	.00000	.00000

ARC40X80-462(OA100) OV101(ADS OFF) (INA06R) (16 MAR 82)

REFERENCE DATA

SREF =	2690.0000 SQ.FT.	XMRP =	1076.6800 IN. XO		
LREF =	474.8100 INCHES	YMRP =	.0000 IN. YO		
BREF =	936.6800 INCHES	ZMRP =	375.0000 IN. ZO		
SCALE =	.3600				

PARAMETRIC DATA

BETA =	.000	ELEVON =	.000
AILRON =	.000	BDFLAP =	.000
SPDBRK =	25.000	RUDDER =	.000

RUN NO. 167/ 0 GRADIENT INTERVAL = -5.00/ 5.00

Q	ALPHA	BETA	DP/Q61	DP/Q63	DP/Q62	DP/Q64	DP/Q67
47.470	-5.243	.00000	.02064	.00000	.00000	.00000	.05479
47.570	-2.651	.00000	.02061	.00000	.00000	.00000	.02736
47.600	-.058	.00000	.00000	.00000	.00000	.00000	.02732
47.550	2.540	.00000	-.01027	.00000	.02052	-.02452	.02728
47.580	5.139	.00000	.00000	.00000	.00000	.00000	.02724
47.810	7.739	.00000	-.01024	.00000	.01023	.00000	.02720
47.630	10.342	.00000	-.01023	.00000	.00000	-.02442	.02716
47.580	11.379	.00000	-.01022	.00000	.00000	.00000	.02714
47.690	12.421	.00000	-.01022	-.01047	.01020	.02439	.02712
47.670	13.462	.00000	-.01021	-.01046	.00000	.00000	.02711
47.600	14.505	.00000	-.02041	-.01045	.01019	.00000	.02709
47.680	15.549	.00000	-.02040	.01045	.00000	.00000	.02708
47.520	16.601	.00000	-.02038	-.01044	.02036	-.02433	.02706
47.620	17.651	.00000	-.03056	.01044	-.01017	-.02432	.00000
47.520	18.708	.00000	-.03054	-.01043	.00000	-.02430	.02703
47.490	19.768	.00000	-.02035	-.01042	.01016	-.02429	.00000
47.660	20.817	.00000	-.03051	-.01042	.01015	-.02428	.00000
	GRADIENT	.00000	-.00595	.00000	.00395	-.00473	-.00002

ARC40X80-462(OA100) OV101(ADS OFF) (INA06S) (15 APR 82)

REFERENCE DATA

SREF =	2690.0000 SQ.FT.	XMRP =	1076.6800 IN. XO		
LREF =	474.8100 INCHES	YMRP =	.0000 IN. YO		
BREF =	936.6800 INCHES	ZMRP =	375.0000 IN. ZO		
SCALE =	.3600				

PARAMETRIC DATA

BETA =	-5.000	ELEVON =	.000
AILRON =	.000	BDFLAP =	.000
SPDBRK =	25.000	RUDDER =	.000

RUN NO. 47/ 0 GRADIENT INTERVAL = -5.00/ 5.00

Q	ALPHA	BETA	DP/Q61	DP/Q63	DP/Q62	DP/Q64	DP/Q67
94.360	-5.233	-5.00000	1.09515	-1.86992	1.43729	-1.73047	-.13846
94.320	-2.640	-5.00000	1.08311	-1.61641	1.38836	-1.47929	-.15208
94.430	-.047	-5.00000	1.04511	-1.41160	1.37592	-1.25367	-.13805
94.430	2.550	-5.00000	.99165	-1.09570	1.32723	-.96675	-.16541
94.430	5.148	-5.00000	.97982	-.87633	1.23726	-.63117	-.16517
94.320	7.747	-5.00000	.92143	-.62048	1.04418	-.23480	-.19241
94.550	10.348	-5.00000	.81670	-.33891	.89812	.08638	-.20585
94.320	11.396	-5.00000	.73356	-.23815	.82537	.22198	-.17830
94.410	12.437	-5.00000	.70215	-.12165	.76302	.43138	-.19190
94.660	13.479	-5.00000	.64498	-.00529	.68528	.55430	-.21919
94.570	14.522	-5.00000	.59819	.11623	.59219	.71401	-.20537
94.550	15.570	-5.00000	.52569	.24288	.55067	.81202	-.20525
94.360	16.617	-5.00000	.46372	.35882	.45777	.94680	-.20513
94.270	17.676	-5.00000	.37579	.50101	.35983	1.08142	-.19134
94.500	18.727	-5.00000	.33955	.59558	.29797	1.19133	-.20489
94.570	19.777	-5.00000	.25195	.69532	.21051	1.27655	-.21842
94.590	20.820	-5.00000	.16444	.80020	.09750	1.41074	-.20465
94.340	21.861	-5.00000	.09758	.93127	.00000	1.52026	-.21816
	GRADIENT	-.00000	-.01762	.10034	-.01178	.09876	-.00257

ARC40X80-462(OA100) OV101(ADS OFF) (INA06T) (15 APR 82)

REFERENCE DATA

SREF =	2690.0000 SQ.FT.	XMRP =	1076.6800 IN. XO		
LREF =	474.8100 INCHES	YMRP =	.0000 IN. YO		
BREF =	936.6800 INCHES	ZMRP =	375.0000 IN. ZO		
SCALE =	.3600				

PARAMETRIC DATA

BETA =	2.000	ELEVON =	.000
AILRON =	.000	BDFLAP =	.000
SPDBRK =	25.000	RUDDER =	.000

RUN NO. 168/ 0 GRADIENT INTERVAL = -5.00/ 5.00

Q	ALPHA	BETA	DP/Q61	DP/Q63	DP/Q62	DP/Q64	DP/Q67
47.490	-5.236	2.00000	.00000	.00000	.01030	.00000	.10958
47.640	-2.648	2.00000	.00000	.00000	.00000	.00000	.08207
47.650	-.056	2.00000	.00000	.01054	.00000	.00000	.05463
47.620	2.539	2.00000	.00000	.00000	.00000	.00000	.08183
47.610	5.139	2.00000	-.02058	.00000	.00000	.00000	.08195
47.580	7.739	2.00000	.00000	-.01049	.00000	.00000	.08159
47.630	10.339	2.00000	-.01023	-.01048	-.01021	-.02442	.05431
47.580	11.332	2.00000	-.02044	-.01047	.00000	-.02440	.08142
47.620	12.421	2.00000	-.01022	-.01047	.01020	-.02439	.08137
47.510	13.462	2.00000	-.02042	.01046	.00000	-.02437	.05422
47.530	14.509	2.00000	-.02041	.00000	.01019	-.04872	.08128
47.560	15.551	2.00000	-.02040	.00000	-.01018	-.02435	.05415
47.730	16.598	2.00000	-.03058	-.01044	.00000	-.02433	.08118
47.530	17.653	2.00000	-.02037	-.01044	.01017	-.04864	.08113
47.600	18.709	2.00000	-.03054	-.02086	.00000	-.02430	.08109
47.740	19.762	2.00000	-.02035	-.01042	.00000	.00000	.08104
47.450	20.817	2.00000	-.02034	-.01042	-.01015	-.02428	.05400
	GRADIENT	.00000	.00000	-.00000	.00000	.00000	-.00004

ARC40X80-462(OA100) OV101(ADS OFF) (INA06U) (16 MAR 82)

REFERENCE DATA

SREF =	2690.0000 SQ.FT.	XMRP =	1076.6800 IN. XO		
LREF =	474.8100 INCHES	YMRP =	.0000 IN. YO		
BREF =	936.6800 INCHES	ZMRP =	375.0000 IN. ZO		
SCALE =	.3600				

PARAMETRIC DATA

BETA =	10.000	ELEVON =	.000
AILRON =	.000	BDFLAP =	.000
SPDBRK =	25.000	RUDDER =	.000

RUN NO. 169/ 0 GRADIENT INTERVAL = -5.00/ 5.00

Q	ALPHA	BETA	DP/Q61	DP/Q63	DP/Q62	DP/Q64	DP/Q67
47.530	-5.219	10.00000	.02064	.00000	.00000	-.02463	.32875
47.640	-2.630	10.00000	.00000	.00000	.00000	.00000	.32826
47.640	-.041	10.00000	.00000	.00000	-.01027	.00000	.32778
47.710	2.553	10.00000	.00000	.00000	-.01026	.00000	.35458
47.620	5.146	10.00000	-.01026	.00000	-.01024	.00000	.35406
47.620	7.650	10.00000	-.01024	.00000	.00000	.00000	.38073
47.620	10.348	10.00000	-.01023	.01048	-.01021	.00000	.43449
47.740	11.389	10.00000	-.01022	-.01047	.00000	-.02440	.40710
47.600	12.433	10.00000	-.01022	-.01047	-.01020	-.02439	.37973
47.480	13.480	10.00000	-.02042	-.01046	-.01020	-.02437	.40662
47.500	14.523	10.00000	-.02041	-.01045	-.01019	.00000	.40638
47.620	15.575	10.00000	-.03060	-.01045	-.02037	-.02435	.40615
47.600	16.625	10.00000	-.02038	-.01044	.00000	-.02433	.43297
47.500	17.671	10.00000	-.03056	-.01044	.00000	.00000	.43272
47.550	18.721	10.00000	-.03054	-.01043	-.01017	-.02430	.43247
47.530	19.768	10.00000	-.02035	-.02085	.00000	-.02429	.43222
47.670	20.819	10.00000	-.02034	-.02084	-.01015	-.02428	.40497
	GRADIENT	-.00000	.00000	.00000	-.00198	.00000	.00508

ARC40X80-462(OA100) OV101(ADS OFF) (INA06V) (15 APR 82)

REFERENCE DATA

SREF =	2690.0000 SQ.FT.	XMRP =	1076.6800 IN. XO		
LREF =	474.8100 INCHES	YMRP =	.0000 IN. YO		
BREF =	936.6800 INCHES	ZMRP =	375.0000 IN. ZO		
SCALE =	.3600				

PARAMETRIC DATA

BETA =	10.000	ELEVON =	.000
AILRON =	.000	BDFLAP =	.000
SPDBRK =	55.000	RUDDER =	.000

RUN NO. 166/ 0 GRADIENT INTERVAL = -5.00/ 5.00

Q	ALPHA	BETA	DP/Q61	DP/Q63	DP/Q62	DP/Q64	DP/Q67
47.850	-.063	10.00000	.00000	.00000	.00000	.02456	.38241
47.460	5.129	10.00000	.00000	.00000	.00000	.02449	.40853
47.510	10.327	10.00000	-.01023	.00000	.00000	.00000	.43449
47.600	15.553	10.00000	-.01020	.00000	.00000	.02435	.43322
47.540	20.804	10.00000	-.03051	.01042	.01015	.00000	.48596
	GRADIENT	.00000	.00000	.00000	.00000	.00000	.00000

ARC40X80-462(OA100) OV101(ADS OFF) (INA06W) (15 APR 82)

REFERENCE DATA

SREF =	2690.0000 SQ.FT.	XMRP =	1076.6800 IN. XO		
LREF =	474.8100 INCHES	YMRP =	.0000 IN. YO		
BREF =	936.6800 INCHES	ZMRP =	375.0000 IN. ZO		
SCALE =	.3600				

PARAMETRIC DATA

BETA =	.000	ELEVON =	.000
AILRON =	10.000	BDFLAP =	.000
SPDBRK =	25.000	RUDDER =	.000

RUN NO. 170/ 0 GRADIENT INTERVAL = -5.00/ 5.00

Q	ALPHA	BETA	DP/Q61	DP/Q63	DP/Q62	DP/Q64	DP/Q67
47.520	-5.246	.00000	.00000	.00000	.01030	.00000	.02740
47.570	-2.655	.00000	.00000	.02111	.00000	.00000	.00000
47.500	-.063	.00000	.00000	.00000	.01027	.00000	.02732
47.400	2.538	.00000	.01027	.01052	.00000	.00000	.02728
47.470	5.136	.00000	.00000	.00000	.00000	.00000	.02724
47.370	7.735	.00000	.00000	.00000	.01023	.00000	.02720
47.510	10.336	.00000	.00000	.00000	.00000	.00000	.00000
47.670	12.934	.00000	-.01021	.01046	.01020	-.02438	.02712
47.560	15.548	.00000	-.03060	.01045	.01018	-.04869	.00000
47.370	18.171	.00000	-.02037	.00000	.01017	.00000	.00000
47.610	20.811	.00000	-.02034	-.01042	.01015	-.02428	.00000
47.440	25.982	.00000	-.03042	-.01039	.01012	.00000	.00000
	GRADIENT	.00000	.00198	-.00204	-.00000	.00000	.00525

ARC40X80-462(OA100) OV101(ADS OFF) (INA06X) (16 MAR 82)

REFERENCE DATA

SREF =	2690.0000 SQ.FT.	XMRP =	1076.6800 IN. XO		
LREF =	474.8100 INCHES	YMRP =	.0000 IN. YO		
BREF =	936.6800 INCHES	ZMRP =	375.0000 IN. ZO		
SCALE =	.3600				

PARAMETRIC DATA

ALPHA =	10.000	ELEVON =	.000
AILRON =	10.000	BDFLAP =	.000
SPDBRK =	25.000	RUDDER =	.000

RUN NO. 171/ 0 GRADIENT INTERVAL = -5.00/ 5.00

Q	BETA	DP/Q61	DP/Q63	DP/Q62	DP/Q64	DP/Q67	ALPHA
47.650	-13.000	-.01023	.00000	.00000	.00000	-.46164	10.34100
47.520	-10.000	-.01023	.00000	.00000	-.02442	-.38018	10.33820
47.410	-2.000	-.01028	.00000	.00000	.00000	-.05460	10.33620
47.410	.000	.00000	.00000	.00000	.00000	.00000	10.33440
47.600	5.000	-.01029	.00000	.01028	.00000	.21865	10.34450
47.380	10.000	-.01028	.00000	.00000	.00000	.43678	10.35610
47.390	15.000	.00000	.00000	.00000	.00000	.62788	10.36440
47.200	20.000	.00000	.00000	.02054	.00000	.84627	10.34170
	GRADIENT	-.00040	.00000	.00158	.00000	.03994	.00135

ARC40X80-462(OA100) OV101+TUFTS (ADS OFF) (INA06Y) (16 MAR 82)

REFERENCE DATA

SREF =	2690.0000 SQ.FT.	XMRP =	1076.6800 IN.	XO	
LREF =	474.8100 INCHES	YMRP =	.0000 IN.	YO	
BREF =	936.6800 INCHES	ZMRP =	375.0000 IN.	ZO	
SCALE =	.3600				

PARAMETRIC DATA

BETA =	.000	ELEVON =	.000
AILRON =	.000	BDFLAP =	.000
SPDBRK =	55.000	RUDDER =	.000

RUN NO. 172/ 0 GRADIENT INTERVAL = -5.00/ 5.00

Q	ALPHA	BETA	DP/Q61	DP/Q63	DP/Q62	DP/Q64	DP/Q67
9.590	-.074	.00000	.00000	.05249	-.05116	.00000	.00000
9.630	5.120	.00000	-.05109	.00000	.00000	.00000	.00000
9.660	10.325	.00000	-.05094	.00000	.00000	.00000	.13524
9.630	15.532	.00000	-.10158	.00000	.00000	.00000	.00000
9.490	20.764	.00000	-.10129	-.05188	.00000	.00000	.13446
	GRADIENT	.00000	.00000	.00000	.00000	.00000	.00000

RUN NO. 173/ 0 GRADIENT INTERVAL = -5.00/ 5.00

Q	ALPHA	BETA	DP/Q61	DP/Q63	DP/Q62	DP/Q64	DP/Q67
19.020	-.074	.00000	.00000	.02640	.00000	.00000	.06843
19.040	5.117	.00000	.00000	.02633	.00000	.00000	.06823
19.090	10.324	.00000	-.02562	.02625	.00000	.00000	.00000
19.080	15.531	.00000	-.05110	.00000	.00000	.00000	.06783
19.090	20.782	.00000	-.05095	.00000	.02544	.00000	.06764
	GRADIENT	.00000	.00000	.00000	.00000	.00000	.00000

RUN NO. 174/ 0 GRADIENT INTERVAL = -5.00/ 5.00

Q	ALPHA	BETA	DP/Q61	DP/Q63	DP/Q62	DP/Q64	DP/Q67
47.410	-5.253	.00000	.00000	.01057	.00000	.02463	.02740
47.630	-2.664	.00000	.00000	.02111	.00000	.00000	.02736
47.490	-.074	.00000	.00000	.02108	.01027	.02456	.02732
47.330	2.522	.00000	.00000	.01052	.01026	.00000	.02728
47.640	5.119	.00000	.00000	.01051	.01024	.02449	.05447
47.460	7.720	.00000	-.01024	.02099	.01023	.02445	.00000
47.660	10.323	.00000	-.01023	.01048	.01021	.02442	-.02716
47.580	12.922	.00000	-.01021	.01046	.01020	.00000	.02712
47.590	15.533	.00000	.00000	.01045	.01018	.00000	.00000
47.610	18.150	.00000	.00000	.01043	.02034	.00000	.02704
47.580	20.791	.00000	-.01017	.02084	.01015	.02428	.00000
47.190	25.987	.00000	-.04056	.02077	.01012	.00000	.00000
	GRADIENT	.00000	.00000	-.00204	.00198	-.00000	-.00002

ARC40X80-462(OA100) OV101+TUFTS (ADS OFF) (INA06Z) (16 MAR 82)

REFERENCE DATA

SREF =	2690.0000 SQ.FT.	XMRP =	1076.6800 IN. XO		
LREF =	474.8100 INCHES	YMRP =	.0000 IN. YO		
BREF =	936.6800 INCHES	ZMRP =	375.0000 IN. ZO		
SCALE =	.3600				

PARAMETRIC DATA

BETA =	5.000	ELEVON =	.000
AILRON =	.000	BDFLAP =	.000
SPDBRK =	55.000	RUDDER =	.000

RUN NO. 175/ 0 GRADIENT INTERVAL = -5.00/ 5.00

Q	ALPHA	BETA	DP/Q61	DP/Q63	DP/Q62	DP/Q64	DP/Q67
47.750	-5.249	5.00000	.00000	.01057	.03091	-.02463	.19177
47.650	-2.660	5.00000	.01030	.01056	.02058	.00000	.19149
47.580	-.070	5.00000	.00000	.00000	.02055	.00000	.19121
47.400	2.526	5.00000	.00000	.00000	.01026	.00000	.16365
47.470	5.122	5.00000	.00000	.00000	.02049	.00000	.19064
47.640	7.725	5.00000	-.01024	.01049	.00000	.02445	.21756
47.450	10.326	5.00000	-.02046	.00000	.02043	-.02442	.21724
47.530	12.928	5.00000	.00000	.02093	.02040	-.02438	.18981
47.690	15.537	5.00000	-.03060	-.01045	.02037	-.02435	.18953
47.480	18.155	5.00000	-.02037	.00000	.02034	.00000	.21630
47.590	20.788	5.00000	-.02034	.00000	.01015	.00000	.21598
47.360	25.983	5.00000	-.03042	-.01039	.02025	-.02420	.24228
	GRADIENT	.00000	-.00199	-.00203	-.00199	.00000	-.00537

ARC40X80-462(OA100) OV101 (INA07A) (16 APR 82)

REFERENCE DATA

SREF =	2690.0000 SQ.FT.	XMRP =	1076.6800 IN. XO		
LREF =	474.8100 INCHES	YMRP =	.0000 IN. YO		
BREF =	936.6800 INCHES	ZMRP =	375.0000 IN. ZO		
SCALE =	.3600				

PARAMETRIC DATA

BETA =	5.000	ELEVON =	.000
AILRON =	.000	BDFLAP =	.000
SPDBRK =	25.000	RUDDER =	.000

RUN NO. 176/ 0 GRADIENT INTERVAL = -5.00/ 5.00

Q	ALPHA	BETA	DP/Q61	DP/Q63	DP/Q62	DP/Q64	DP/Q67
94.180	-.048	5.00000	1.31838	-1.15846	1.04071	-1.18179	.19369
94.280	5.145	5.00000	1.20895	-.65130	.98868	-.72151	.19369
94.750	10.344	5.00000	.90150	.02669	.81176	-.16172	.20753
94.370	15.559	5.00000	.54194	.74739	.49434	.42295	.19369
94.330	20.825	5.00000	.07816	1.37733	.11448	.93299	.19369
	GRADIENT	.00000	.00000	.00000	.00000	.00000	.00000

ARC40X80-462(OA100) OV101 (INA07B) (16 MAR 82)

REFERENCE DATA

SREF =	2690.0000 SQ.FT.	XMRP =	1076.6800 IN.	XO	
LREF =	474.8100 INCHES	YMRP =	.0000 IN.	YO	
BREF =	936.6800 INCHES	ZMRP =	375.0000 IN.	ZO	
SCALE =	.3600				

PARAMETRIC DATA

BETA =	.000	ELEVON =	.000
AILRON =	.000	BDFLAP =	.000
SPDBRK =	25.000	RUDDER =	.000

RUN NO. 177/ 0 GRADIENT INTERVAL = -5.00/ 5.00

Q	ALPHA	BETA	DP/Q61	DP/Q63	DP/Q62	DP/Q64	DP/Q67
94.560	-5.240	.00000	1.25064	-1.87915	1.26967	-1.70426	.01384
94.350	-2.649	.00000	1.22979	-1.56418	1.23324	-1.40570	.01384
94.170	-.056	.00000	1.18811	-1.29192	1.20722	-1.19423	.00000
94.450	2.541	.00000	1.17768	-1.09439	1.20202	-.93299	.01384
94.510	5.138	.00000	1.13078	-.80612	1.12917	-.70907	.02767
94.320	7.738	.00000	1.01614	-.45911	1.00949	-.33588	.02767
94.710	10.348	.00000	.84939	-.09075	.84298	-.01244	.00000
94.310	12.946	.00000	.69827	.17617	.69207	.24880	.00000
94.310	15.557	.00000	.56800	.48580	.53597	.52247	-.01384
94.550	18.382	.00000	.35435	.84882	.30181	.89567	-.01384
	GRADIENT	.00000	-.01004	.09051	-.00601	.09108	.00000

ARC40X80-462(OA100) OV101 (INA07C) (16 MAR 82)

REFERENCE DATA

SREF =	2690.0000 SQ.FT.	XMRP =	1076.6800 IN.	XO	
LREF =	474.8100 INCHES	YMRP =	.0000 IN.	YO	
BREF =	936.6900 INCHES	ZMRP =	375.0000 IN.	ZO	
SCALE =	.3600				

PARAMETRIC DATA

BETA =	-5.000	ELEVON =	.000
AILRON =	.000	BDFLAP =	.000
SPDBRK =	25.000	RUDDER =	.000

RUN NO. 178/ 0 GRADIENT INTERVAL = -5.00/ 5.00

Q	ALPHA	BETA	DP/Q61	DP/Q63	DP/Q62	DP/Q64	DP/Q67
94.190	-5.234	-5.00000	1.06825	-1.88983	1.41537	-1.62962	-.13835
94.480	-2.643	-5.00000	1.07868	-1.62824	1.39455	-1.39326	-.12451
94.510	-.049	-5.00000	1.05262	-1.36132	1.33211	-1.13203	-.13835
94.470	2.548	-5.00000	1.00051	-1.07304	1.31130	-.82103	-.16602
94.270	5.145	-5.00000	.98488	-.85416	1.22284	-.57223	-.17986
94.160	7.746	-5.00000	.93277	-.61927	1.05112	-.21148	-.17986
94.150	10.349	-5.00000	.80770	-.32565	.90542	.12440	-.20753
94.370	12.957	-5.00000	.67222	-.01068	.71809	.44783	-.17986
94.300	15.565	-5.00000	.52631	.28294	.50474	.74639	-.20753
94.200	18.196	-5.00000	.36477	.53919	.31221	1.13203	-.23520
94.170	20.818	-5.00000	.17196	.83815	.10928	1.39326	-.22136
	GRADIENT	-.00000	-.01506	.10698	-.01604	.11025	-.00800

ARC40X80-462(OA100) OV101 (INA07D) (16 MAR 82)

REFERENCE DATA

SREF =	2690.0000 SQ.FT.	XMRP =	1076.6800 IN. XO		
LREF =	474.8100 INCHES	YMRP =	.0000 IN. YO		
BREF =	936.6800 INCHES	ZMRP =	375.0000 IN. ZO		
SCALE =	.3600				

PARAMETRIC DATA

BETA =	-10.000	ELEVON =	.000
AILRON =	.000	BDFLAP =	.000
SPDBRK =	25.000	RUDDER =	.000

RUN NO. 179/ 0 GRADIENT INTERVAL = -5.00/ 5.00

Q	ALPHA	BETA	DP/Q61	DP/Q63	DP/Q62	DP/Q64	DP/Q67
94.250	-5.223	-10.00000	.89629	-1.82577	1.61310	-1.56742	-.31821
94.150	-2.632	-10.00000	.90671	-1.61757	1.59229	-1.40570	-.30437
94.300	-.039	-10.00000	.92756	-1.32929	1.50903	-1.09471	-.31821
94.240	2.556	-10.00000	.88587	-1.16379	1.41016	-.75883	-.34588
94.350	5.153	-10.00000	.84418	-.87018	1.24885	-.36076	-.35971
94.130	7.751	-10.00000	.80249	-.71002	1.07714	-.04976	-.35971
94.300	10.357	-10.00000	.73475	-.45911	.91583	.28612	-.37355
94.440	12.965	-10.00000	.62011	-.19219	.69207	.65931	-.40122
94.390	15.580	-10.00000	.50547	.04271	.45791	1.03251	-.40122
94.270	18.201	-10.00000	.36998	.31497	.27579	1.38082	-.41505
94.070	20.817	-10.00000	.19281	.59791	.03642	1.53010	-.44272
	GRADIENT	-.00000	-.00402	.08747	-.03511	.12469	-.00800

ARC40X80-462(OA100) OV101+NOSE GEAR (INA07E) (16 MAR 82)

REFERENCE DATA

SREF =	2690.0000 SQ.FT.	XMRP =	1076.6800 IN. XO		
LREF =	474.8100 INCHES	YMRP =	.0000 IN. YO		
BREF =	936.6800 INCHES	ZMRP =	375.0000 IN. ZO		
SCALE =	.3600				

PARAMETRIC DATA

BETA =	5.000	ELEVON =	.000
AILRON =	.000	BDFLAP =	.000
SPDBRK =	25.000	RUDDER =	.000

RUN NO. 180/ 0 GRADIENT INTERVAL = -5.00/ 5.00

Q	ALPHA	BETA	DP/Q61	DP/Q63	DP/Q62	DP/Q64	DP/Q67
94.090	-.048	5.00000	1.37570	-1.20650	1.06153	-1.09471	.19369
94.500	10.345	5.00000	.89108	.12279	.78053	-.16172	.22136
94.420	15.558	5.00000	.50547	.77942	.46312	.48515	.15219
94.220	20.813	5.00000	-.01563	1.40937	.11968	.97031	.20753
	GRADIENT	.00000	.00000	.00000	.00000	.00000	.00000

ARC40X80-462(OA100) OV101+NOSE GEAR (INA07F) (16 MAR 82)

REFERENCE DATA

SREF = 2690.0000 SQ.FT. XMRP = 1076.6800 IN. XO
LREF = 474.8100 INCHES YMRP = .0000 IN. YO
BREF = 936.6800 INCHES ZMRP = 375.0000 IN. ZO
SCALE = .3600

PARAMETRIC DATA

BETA = .000 ELEVON = .000
AILRON = .000 BDFLAP = .000
SPDBRK = 25.000 RUDDER = .000

RUN NO. 181/ 0 GRADIENT INTERVAL = -5.00/ 5.00

Q	ALPHA	BETA	DP/Q61	DP/Q63	DP/Q62	DP/Q64	DP/Q67
94.260	-5.240	.00000	1.30796	-1.77772	1.31130	-1.61718	.02767
94.390	-2.648	.00000	1.27669	-1.49478	1.29007	-1.38082	.01384
94.370	-.055	.00000	1.24543	-1.28658	1.26967	-1.11959	.01384
93.980	2.539	.00000	1.20895	-1.03033	1.22804	-.88323	.01384
94.500	5.138	.00000	1.13600	-.75273	1.11356	-.55979	.01384
94.490	7.739	.00000	1.01614	-.41640	1.02510	-.28612	.01384
94.370	10.347	.00000	.84418	-.09609	.82216	-.01244	.01384
94.240	12.946	.00000	.69306	.26159	.67126	.34832	.00000
94.570	15.556	.00000	.55236	.58190	.53076	.58467	-.01384
94.140	20.804	.00000	.13027	1.15312	.04683	1.15691	.01384
	GRADIENT	.00000	-.01306	.08954	-.01003	.09592	-.00000

ARC40X80-462(OA100) OV101+NOSE GEAR (INA07G) (16 MAR 82)

REFERENCE DATA

SREF = 2690.0000 SQ.FT. XMRP = 1076.6800 IN. XO
LREF = 474.8100 INCHES YMRP = .0000 IN. YO
BREF = 936.6800 INCHES ZMRP = 375.0000 IN. ZO
SCALE = .3600

PARAMETRIC DATA

BETA = -5.000 ELEVON = .000
AILRON = .000 BDFLAP = .000
SPDBRK = 25.000 RUDDER = .000

RUN NO. 182/ 0 GRADIENT INTERVAL = -5.00/ 5.00

Q	ALPHA	BETA	DP/Q61	DP/Q63	DP/Q62	DP/Q64	DP/Q67
94.590	-.048	-5.00000	1.05783	-1.26523	1.38415	-1.10715	-.19369
94.180	5.147	-5.00000	1.00051	-.79010	1.22284	-.53491	-.17986
94.460	10.351	-5.00000	.79728	-.22956	.88460	.12440	-.22136
94.200	15.563	-5.00000	.51589	.33633	.44230	.90811	-.22136
94.470	20.815	-5.00000	.13549	.88085	-.00520	1.46790	-.19369
	GRADIENT	.00000	.00000	.00000	.00000	.00000	.00000

ARC40X80-462(OA100) OV101+NOSE GEAR (INA07H) (16 MAR 82)

REFERENCE DATA

SREF =	2690.0000 SQ.FT.	XMRP =	1076.6800 IN.	XO	
LREF =	474.8100 INCHES	YMRP =	.0000 IN.	YO	
BREF =	936.6800 INCHES	ZMRP =	375.0000 IN.	ZO	
SCALE =	.3600				

PARAMETRIC DATA

BETA =	-10.000	ELEVON =	.000
AILRON =	.000	BDFLAP =	.000
SPDBRK =	25.000	RUDDER =	.000

RUN NO. 183/ 0 GRADIENT INTERVAL = -5.00/ 5.00

Q	ALPHA	BETA	DP/Q61	DP/Q63	DP/Q62	DP/Q64	DP/Q67
94.280	-.035	-10.00000	.93277	-1.25455	1.55586	-1.00763	-.33204
94.380	5.152	-10.00000	.85460	-.77942	1.28007	-.38564	-.34588
94.250	10.356	-10.00000	.69827	-.30963	.91583	.39808	-.37355
94.220	15.581	-10.00000	.46999	.17083	.47352	1.04495	-.37355
94.530	20.834	-10.00000	.15633	.69934	-.06765	1.59230	-.41505
	GRADIENT	.00000	.00000	.00000	.00000	.00000	.00000

ARC40X80-462(OA100) OV101(FTP OFF) (INA07I) (16 MAR 82)

REFERENCE DATA

SREF =	2690.0000 SQ.FT.	XMRP =	1076.6800 IN.	XO	
LREF =	474.8100 INCHES	YMRP =	.0000 IN.	YO	
BREF =	936.6800 INCHES	ZMRP =	375.0000 IN.	ZO	
SCALE =	.3600				

PARAMETRIC DATA

BETA =	5.000	ELEVON =	.000
AILRON =	.000	BDFLAP =	.000
SPDBRK =	25.000	RUDDER =	.000

RUN NO. 184/ 0 GRADIENT INTERVAL = -5.00/ 5.00

Q	ALPHA	BETA	DP/Q61	DP/Q63	DP/Q62	DP/Q64	DP/Q67
94.150	-.052	5.00000	1.35486	-1.23319	1.03030	-1.25642	.20753
94.290	5.140	5.00000	1.18290	-.60325	.98347	-.74639	.19369
94.410	10.342	5.00000	.88587	.03737	.78053	-.18660	.22136
94.530	15.560	5.00000	.50547	.83815	.49434	.38564	.22136
94.310	20.818	5.00000	.09901	1.36132	.16651	.87079	.24903
	GRADIENT	.00000	.00000	.00000	.00000	.00000	.00000

ARC40X80-462(OA100) OV101(FTP OFF) (INA07J) (16 MAR 82)

REFERENCE DATA

SREF =	2630.0000 SQ.FT.	XMRP =	1076.6800 IN. XO		
LREF =	474.8100 INCHES	YMRP =	.0000 IN. YO		
BREF =	936.6800 INCHES	ZMRP =	375.0000 IN. ZO		
SCALE =	.3600				

PARAMETRIC DATA

BETA =	.000	ELEVON =	.000
AILRON =	.000	BDFLAP =	.000
SPDBRK =	25.000	RUDDER =	.000

RUN NO. 185/ 0 GRADIENT INTERVAL = -5.00/ 5.00

Q	ALPHA	BETA	DP/Q61	DP/Q63	DP/Q62	DP/Q64	DP/Q67
94.060	-5.240	.00000	1.26627	-1.79374	1.23324	-1.70426	.01384
94.520	-2.649	.00000	1.23501	-1.50546	1.21243	-1.43058	.01384
94.500	-.060	.00000	1.20374	-1.27056	1.19161	-1.19423	.01384
93.980	2.537	.00000	1.18290	-1.06236	1.17600	-.99519	.00000
94.070	5.133	.00000	1.11515	-.80612	1.12917	-.75883	.01384
93.670	7.736	.00000	.99530	-.46979	1.00949	-.39808	.01384
94.470	10.340	.00000	.87545	-.19219	.84818	-.13684	.00000
94.200	12.941	.00000	.72954	.18151	.68687	.18660	-.01384
95.730	15.555	.00000	.56279	.49114	.55678	.57223	.01384
94.370	18.182	.00000	.36477	.84348	.31742	.85835	.00000
	GRADIENT	.00000	-.01005	.08544	-.00702	.08395	-.00267

ARC40X80-462(OA100) OV101(FTP OFF) (INA07K) (16 MAR 82)

REFERENCE DATA

SREF =	2690.0000 SQ.FT.	XMRP =	1076.6800 IN. XO		
LREF =	474.8100 INCHES	YMRP =	.0000 IN. YO		
BREF =	936.6800 INCHES	ZMRP =	375.0000 IN. ZO		
SCALE =	.3600				

PARAMETRIC DATA

BETA =	-5.000	ELEVON =	.000
AILRON =	.000	BDFLAP =	.000
SPDBRK =	25.000	RUDDER =	.000

RUN NO. 186/ 0 GRADIENT INTERVAL = -5.00/ 5.00

Q	ALPHA	BETA	DP/Q61	DP/Q63	DP/Q62	DP/Q64	DP/Q67
94.190	-.053	-5.00000	1.03178	-1.39869	1.36333	-1.18179	-.16602
93.830	5.144	-5.00000	.97446	-.89153	1.19161	-.58467	-.17986
93.970	10.346	-5.00000	.80249	-.34700	.84298	.11196	-.17986
94.430	15.562	-5.00000	.54715	.24023	.52556	.68419	-.22136
94.150	20.819	-5.00000	.20844	.84348	.11448	1.36838	-.24903
	GRADIENT	.00000	.00000	.00000	.00000	.00000	.00000

ARC40X80-462(OA100) OV101(FTP OFF) (INA07L) (16 MAR 82)

REFERENCE DATA

SREF =	2690.0000 SQ.FT.	XMRP =	1076.6800 IN. XO		
LREF =	474.8100 INCHES	YMRP =	.0000 IN. YO		
BREF =	936.6800 INCHES	ZMRP =	375.0000 IN. ZO		
SCALE =	.3600				

PARAMETRIC DATA

BETA =	-10.000	ELEVON =	.000
AILRON =	.000	BDFLAP =	.000
SPDBRK =	25.000	RUDDER =	.000

RUN NO. 187/ 0 GRADIENT INTERVAL = -5.00/ 5.00

Q	ALPHA	BETA	DP/Q61	DP/Q63	DP/Q62	DP/Q64	DP/Q67
94.450	-.040	-10.00000	.91192	-1.39335	1.47781	-1.05739	-.31821
94.330	5.151	-10.00000	.82334	-.88085	1.22804	-.33588	-.37355
94.270	10.353	-10.00000	.72954	-.45911	.88460	.33588	-.35971
94.200	20.827	-10.00000	.19281	.60325	.05204	1.61718	-.42889
	GRADIENT	.00000	.00000	.00000	.00000	.00000	.00000

ARC40X80-462(OA100) OV101(FTP OFF) (INA07M) (16 MAR 82)

REFERENCE DATA

SREF =	2690.0000 SQ.FT.	XMRP =	1076.6800 IN. XO		
LREF =	474.8100 INCHES	YMRP =	.0000 IN. YO		
BREF =	936.6800 INCHES	ZMRP =	375.0000 IN. ZO		
SCALE =	.3600				

PARAMETRIC DATA

BETA =	.000	ELEVON =	.000
AILRON =	.000	BDFLAP =	.000
SPDBRK =	55.000	RUDDER =	.000

RUN NO. 188/ 0 GRADIENT INTERVAL = -5.00/ 5.00

Q	ALPHA	BETA	DP/Q61	DP/Q63	DP/Q62	DP/Q64	DP/Q67
94.160	-.073	.00000	1.17247	-1.31327	1.19682	-1.20667	.02767
94.210	5.117	.00000	1.13078	-.77942	1.10836	-.75883	.01384
94.200	10.325	.00000	.85981	-.17083	.87420	-.14928	.00000
94.330	15.539	.00000	.54715	.46979	.51515	.58467	.00000
	GRADIENT	.00000	.00000	.00000	.00000	.00000	.00000

ARC40X80-462(OA100) OV101(FTP OFF) (INA07N) (16 MAR 82)

REFERENCE DATA

SREF =	2690.0000 SQ.FT.	XMRP =	1076.6800 IN. XO		
LREF =	474.8100 INCHES	YMRP =	.0000 IN. YO		
BREF =	936.6800 INCHES	ZMRP =	375.0000 IN. ZO		
SCALE =	.3600				

PARAMETRIC DATA

ALPHA =	10.000	ELEVON =	10.000
AILRON =	.000	BDFLAP =	22.000
SPDBRK =	25.000	RUDDER =	.000

RUN NO. 189/ 0 GRADIENT INTERVAL = -5.00/ 5.00

Q	BETA	DP/Q61	DP/Q63	DP/Q62	DP/Q64	DP/Q67	ALPHA
47.640	-10.000	.71867	-.43124	.84067	.41665	-.35435	10.55350
47.530	-5.000	.78027	-.34709	.86117	.07353	-.16355	10.53930
47.240	-2.000	.82134	-.24191	.84067	-.02451	-.05452	10.53680
47.530	.000	.80080	-.09466	.78941	.00000	.02726	10.53670
47.480	2.000	.85214	-.03155	.82017	-.14705	.08177	10.53580
47.380	5.000	.87267	.04207	.76890	-.19607	.19080	10.53490
47.450	10.000	.85214	.35761	.71764	-.36764	.38161	10.54590
47.380	20.000	.79054	.92558	.48210	-.36764	.76322	10.53400
	GRADIENT	.00903	.04080	-.00866	-.02747	.03525	-.00041

ARC40X80-462(OA100) OV101(FTP OFF) (INA070) (16 MAR 82)

REFERENCE DATA

SREF =	2690.0000 SQ.FT.	XMRP =	1076.6800 IN. XO		
LREF =	474.8100 INCHES	YMRP =	.0000 IN. YO		
BREF =	936.6800 INCHES	ZMRP =	375.0000 IN. ZO		
SCALE =	.3600				

PARAMETRIC DATA

ALPHA =	10.000	ELEVON =	10.000
AILRON =	.000	BDFLAP =	-11.700
SPDBRK =	25.000	RUDDER =	.000

RUN NO. 190/ 0 GRADIENT INTERVAL = -5.00/ 5.00

Q	BETA	DP/Q61	DP/Q63	DP/Q62	DP/Q64	DP/Q67	ALPHA
47.640	-10.000	.70840	-.46279	.89193	.24509	-.38161	10.48410
47.550	-5.000	.82134	-.38916	.86117	.07353	-.21806	10.47300
47.650	-2.000	.78027	-.19984	.89193	-.07353	-.05452	10.46590
47.360	.000	.85214	-.17890	.84067	-.09804	.00000	10.46350
47.420	2.000	.86240	-.09466	.82017	-.17156	.08177	10.46720
47.500	5.000	.87267	-.02104	.78941	-.24509	.21806	10.47040
47.490	15.000	.85214	.53642	.59462	-.41665	.59967	10.48130
47.330	20.000	.77000	.88351	.48165	-.36764	.76322	10.46300
	GRADIENT	.00726	.03536	-.00866	-.03085	.04230	-.00018

ARC40X80-462(OA100) OV101 (INA07P) (16 MAR 82)

REFERENCE DATA

SREF =	2690.0000 SQ.FT.	XMRP =	1076.6800 IN. XO		
LREF =	474.8100 INCHES	YMRP =	.0000 IN. YO		
BREF =	936.6800 INCHES	ZMRP =	375.0000 IN. ZO		
SCALE =	.3600				

PARAMETRIC DATA

ALPHA =	10.000	ELEVON =	.000
AILRON =	.000	BDFLAP =	.000
SPDBRK =	.000	RUDDER =	.000

RUN NO. 85/ 0 GRADIENT INTERVAL = -5.00/ 5.00

Q	BETA	DP/Q61	DP/Q63	DP/Q62	DP/Q64	DP/Q67	ALPHA
47.990	-13.000	.65460	-.47153	.89879	.46392	-.46164	10.36050
47.900	-10.000	.70574	-.44009	.83858	.31742	-.38018	10.35670
47.590	-5.000	.80803	-.36675	.83751	.12209	-.16293	10.35060
47.840	-2.000	.80803	-.20957	.86315	.00000	-.02716	10.34730
47.790	.000	.84894	-.20957	.80687	.02442	.02716	10.34500
47.800	2.000	.83871	-.04191	.81709	-.09767	.10862	10.34700
47.750	5.000	.86940	.04191	.76602	-.14650	.21724	10.34890
47.630	10.000	.83871	.28292	.69452	-.29300	.40733	10.35780
47.530	15.000	.83871	.56584	.59239	-.41509	.59742	10.35930
	GRADIENT	.00635	.04101	-.00792	-.02652	.03746	-.00016

ARC40X80-462(OA100) OV101 (INA07Q) (16 MAR 82)

REFERENCE DATA

SREF =	2690.0000 SQ.FT.	XMRP =	1076.6800 IN. XO		
LREF =	474.8100 INCHES	YMRP =	.0000 IN. YO		
BREF =	936.6800 INCHES	ZMRP =	375.0000 IN. ZO		
SCALE =	.3600				

PARAMETRIC DATA

ALPHA =	10.000	ELEVON =	.000
AILRON =	.000	BDFLAP =	.000
SPDBRK =	55.000	RUDDER =	.000

RUN NO. 100/ 0 GRADIENT INTERVAL = -5.00/ 5.00

Q	BETA	DP/Q61	DP/Q63	DP/Q62	DP/Q64	DP/Q67	ALPHA
47.610	-13.000	.66483	-.51344	.92943	.46392	-.46164	10.34010
47.820	-10.000	.71597	-.37722	.93965	.26859	-.38018	10.33610
47.670	-5.000	.77734	-.26196	.92943	.02442	-.16293	10.32700
47.670	-2.000	.81825	-.18951	.89858	.00000	-.05431	10.32420
47.600	.000	.83871	-.15718	.84773	-.02442	.02716	10.32430
47.560	2.000	.84894	-.07335	.84773	-.12209	.10862	10.32280
47.750	5.000	.85917	.04191	.79686	-.19534	.21724	10.32720
47.670	10.000	.84894	.38770	.71495	-.31742	.40733	10.33270
47.610	15.000	.84894	.59727	.64345	-.38626	.59742	15.34150
47.680	20.000	.79780	.90115	.52089	-.39067	.78751	15.33100
	GRADIENT	.00811	.03017	-.01285	-.02315	.03839	-.00003