NASA
National Aeronautics and
Space Administration

Lyndon B. Johnson Space Center
Houston, Texas 77058

DMS-DR-2466

NASA-CR 167,663

Volume 1 of 2

RESULTS OF INVESTIGATIONS OF THE 0.010-SCALE ØV-102 CONFIGURATION SPACE SHUTTLE VEHICLE ORBITER MODEL 72-Ø IN THE NASA/LANGLEY RESEARCH CENTER 20-INCH MACH 6 TUNNEL (OA257)

SPACE SHUTTLE AEROTHERMODYNAMIC DATA REPORT

Data Management SERVICES

HUNTSVILLE ELECTRONICS DIVISION CHRYSLER CORPORATION

July 1983

DMS-DR-2466

NASA-CR 167,663

Volume 1 of 2

RESULTS OF INVESTIGATIONS OF THE 0.010-SCALE ØV-102 CONFIGURATION SPACE SHUTTLE VEHICLE ORBITER MODEL 72-Ø IN THE NASA/LANGLEY RESEARCH CENTER 20-INCH MACH 6 TUNNEL (OA257)

by

M. E. Nichols
Rockwell International
Space Transportation & Systems Division

Prepared under NASA Contract Number NAS9-16283

by

Data Management Services
Chrysler Huntsville Electronics Division
Michoud Engineering Office
New Orleans, Louisiana 70189

for

Systems Engineering Division

Johnson Space Center
National Aeronautics and Space Administration
Houston, Texas

WIND TUNNEL TEST SPECIFICS:

Test Number:	LaRC 20HT6-6559
NASA Series Number:	OA257
Model Number:	72-Ø
Test Dates:	10 Mar. 1981 thru 20 Apr. 1981
Occupancy Hours:	372

FACILITY COORDINATOR:

Bernard Spencer, Jr.
Langley Research Center
Mail Stop 365
Langley Station
Hampton, VA 23665

Phone (804) 827-3911

TEST DIRECTOR:

J. M. Underwood
NASA Johnson Space Center
Mail Code ET3
Houston, TX 77058

Phone (713) 487-4228

PROJECT ENGINEERS:

M. E. Nichols
R. H. Spangler
Rockwell International
Space Transportation & Systems Div.
12214 Lakewood Blvd.
Downey, CA 90241
Mail Code AC07

Phone (213) 922-5353

A. C. Mansfield
Rockwell International
Southern Regional Office
3322 Memorial Parkway
Suite 143
Huntsville, AL 35801

Phone (205) 882-2200

R. L. Calloway
G. C. Ashby, Jr.
Langley Research Center
HSAD Bldg. 1247B
Mail Stop 163A
Hampton, VA 23665

Phone (804) 827-2484

DATA MANAGEMENT SERVICES:

Prepared by: Liaison - S. R. Houlihan
Operations - G. W. Klug

Approved: J. L. Glynn, Manager
Data Operations

Concurrence: N. D. Kemp, Manager
Data Management Services

Chrysler Corporation Huntsville Electronics Division/Michoud Engineering Office assumes no responsibility for the data presented other than display characteristics.

RESULTS OF INVESTIGATIONS OF THE 0.010 SCALE ØV-102 CONFIGURATION SPACE SHUTTLE VEHICLE ORBITER MODEL 72-Ø IN THE NASA/LANGLEY RESEARCH CENTER 20-INCH MACH 6 TUNNEL (OA257)

by

M. E. Nichols
Rockwell International
Space Transportation & Systems Division

ABSTRACT

The 0.010 Scale SSV Orbiter Configuration ØV-102 Model 72-Ø was tested in the NASA/Langley Research Center 20-Inch Mach 6 facility from 10 March 1981 to 20 April 1981. During the 372 occupancy hours a total of 254 test runs were obtained, following approximately 13 days of special balance checkloadings, model modifications and preparations, tunnel rework, and installation of the model. Other tests in this series include OA258, OA259, LA141, and LA144. (References 6-9).

Six-component vehicle force and moment data, base and sting-cavity pressure data, and special thermocouple data were acquired from the model. All test runs were nominal Mach 6 blowdowns. Reynolds number varied between 2.0×10^6/ft and 8.9×10^6/ft. Lateral-directional stability runs were conducted in both continuous and point-pause sweep modes for both pitch and yaw. Angle-of-attack range was -5° to $+40^\circ$; angle-of-sideslip range was -5° to $+5^\circ$. Speedbrake and aileron settings were also variables.

Diagnostic configuration buildup studies and several oilflow runs were conducted. Additionally, numerous tunnel operation, flow angularity, aero-hysteresis, data repeatability, and thermal-effects tests were made at the discretion of the test team.

(THIS PAGE INTENTIONALLY LEFT BLANK)

TABLE OF CONTENTS

	Page
ABSTRACT	iii
INDEX OF MODEL FIGURES	2
INTRODUCTION	3
NOMENCLATURE	4
CONFIGURATIONS INVESTIGATED	8
INSTRUMENTATION	12
TEST FACILITY DESCRIPTION	14
TEST PROCEDURES	17
DATA REDUCTION	19
REMARKS	20
REFERENCES	21
TABLES	
I. TEST CONDITIONS	22
II. DATA SET/RUN NUMBER COLLATION SUMMARY	23
III. MODEL DIMENSIONAL DATA	37
IV. CONTROL SURFACE BRACKET DEFLECTION VALUES	43
V. CONSTANTS	44
VI. ESTIMATED UNCERTAINTIES FOR OA257, OA258, OA259	45
VII. LOAD UNCERTAINTY COMPARISONS	46
FIGURES	
MODEL	47
APPENDIX	
TABULATED SOURCE DATA	56
Volume 1 - Pages 1 - 538	
Volume 2 - Pages 539 - 1080	

INDEX OF MODEL FIGURES

Figure	Title	Page
1.	Axis Systems and Sign Conventions	
	a. Axis Systems	47
	b. Rudder/Speedbrake Deflections	48
	c. Body Flap and Elevon Deflections	49
2.	Model Sketches	
	a. Orbiter Configuration	50
	b. Primary Model Installation	51
	c. Secondary Model Installation	52
	d. Base and Sting Cavity Pressure Tap Locations	53
	e. LaRC 20 Inch M 6 Facility	54
3.	Model Photograph	
	Model 72-Ø Installation (Side View)	55

INTRODUCTION

The 0.010 scale ØV-102 Configuration SSV Orbiter Model 72-Ø was employed in test OA257 at the NASA/Langley Research Center 20-Inch Mach 6 blowdown facility between 10 March 1981 and 20 April 1981. Of 374 recorded runs, 254 were data-acquiring runs completed in approximately 372 occupancy hours. This test was one of a series of tests primarily intended to investigate Mach 6 to 8 lateral-directional stability and non-linearities. Other tests in this series include OA258, OA259, LA141, and LA144. (References 6-9, respectively). However, the test also evolved toward several other purposes, including: a study of tunnel-to-tunnel repeatability for Mach 6, a GRTLS trajectory verification test at low Reynolds numbers, a continued study of data uncertainties for hypersonic tests in general, and a diagnostic configuration-buildup test.

Model scaling, model wall temperatures, tunnel noise levels, and overall balance accuracies were all specific factors for comparison of data from this test to data from the aforementioned earlier tests.

This report contains the post-test force and moment data, base and sting-cavity pressure data and special temperature data obtained during OA257 with Model 72-Ø.

NOMENCLATURE

SYMBOL	MNEMONIC	DEFINITION
A	AF	axial force, orbiter main balance
	BIASS1	pound output of gages corrected for bias - side force
	BIASS2	pound output of gages corrected for bias - side force
	BIASRM	pound output of gages corrected for bias-rolling moment
C_A	CA	axial force coefficient, total orbiter including base, with sting-cavity correction
C_{A_B}	CAB	orbiter base axial force coefficient
C_{A_C}	CAC	adjusted sting-cavity pressure axial force coefficient
C_{A_F}	CAF	orbiter forebody axial force coefficient
CA_u	CAU	uncorrected orbiter balance axial force coefficient
C_ℓ (BODY)	CBL	orbiter body axis rolling moment coefficient
C_D	CD	orbiter drag coefficient
C_L	CL	orbiter lift coefficient
C_m	CLM	orbiter pitching moment coefficient
C_{m_u}	CMU	uncorrected orbiter pitching moment coefficient
C_N	CN	orbiter normal force coefficient
C_{N_u}	CNU	uncorrected orbiter normal force coefficient
CONF	CONF	configuration, numbers 00 through 32
CPB_A	CPBA	average orbiter base pressure coefficient

NOMENCLATURE (Continued)

SYMBOL	MNEMONIC	DEFINITION
CPB_{1-3}	CPB1,2,3	individual orbiter base pressure coefficients
C_Y	CY	orbiter side force coefficient
	FF	floor filler segment
	GRTLS	glide return to launch site abort mission
	LAMDAV	sweep angle of vertical tail, degrees
L/D	L/D	orbiter lift to drag ratio
M	MACH	Mach number, v/a
N	NF	orbiter normal force
$P_{B1,2,3}$	PB1,2,3	orbiter base pressure coefficients
P_{T_C}	PCEIL	tunnel ceiling static pressure
P_{T_F}	PFLOOR	tunnel floor static pressure
m	PM	orbiter pitching moment
P_{SC}	PSC	sting cavity pressure coefficient
P_t	PT	tunnel stagnation pressure, psfa
P_{t1}	PT1	tunnel total pressure upstream of the normal shock
P_{t2}	PT2	tunnel total pressure downstream of the normal shock

NOMENCLATURE (Continued)

SYMBOL	MNEMONIC	DEFINITION
P	P1	tunnel static pressure, psfa
q	Q,Q(PSF)	freestream dynamic pressure
ℓ	RM	orbiter rolling moment
RN/L	RN/L,RN	unit Reynolds number, million per foot
	S-DIR	sweep direction; 1 = increasing, 2 = decreasing
	S-MODE	sweep mode; 1 = pitch-pause, 2 = continuous
Y	SF	orbiter side force
T_{BF}	TBF	bodyflap mounting plate inner-surface temperature
T_{SB}	TSB	speedbrake panel L.H. leeside temperature
	TS	freestream static temperature, ^{o}F
T_t	TT	tunnel stagnation temperature, ^{o}F
	YP	flag indicating yaw plate in = 0, out = 1
n	YM	orbiter yawing moment
X_{CP}	XCP	longitudinal location of the orbiter center of pressure in percent of body length
	1S	flag indiating 1" spacer in = 1, out = 0
α	ALPHA	orbiter angle of attack
β	BETA	orbiter angle of sideslip
δa	AILRON	aileron deflection $(\delta e_L - \delta e_R)/2$
δe	ELEVON	elevon deflection $(\delta e_L + \delta e_R)/2$
δ_{e_L}	ELEV-L	left elevon deflection angle
δ_{e_R}	ELEV-R	right elevon deflection angle
δBF	BDFLAP	body flap deflection angle

NOMENCLATURE (Concluded)

SYMBOL	MNEMONIC	DEFINITION
δ_R	RUDDER	rudder deflection angle
δ_{SB}	SPDBRK	speedbrake deflection angle
ϕ	PHI	model roll angle

CONFIGURATIONS INVESTIGATED

The SSV Orbiter Model 72-Ø is a 0.010 scale representation of the ØV-102 configuration. A primary requirement for its use in this lateral-directional stability test was that it exhibit a high degree of symmetry. Toward this end, the model was subjected to an extensive series of modifications, recontourings, and Cordax-machine measurements. These resulted in what has since been referred to as "medium fidelity" to the ØV102 configuration defined by the 14414.1 C/C design trajectory OML lines, except in the fuselage/elevon gaps, where 14414.1 C/D lines were used. The model's conformance to these specifications was established by the percentage of "control point" measurements within certain tolerances:

76% within ±1 inch full-scale

44% within ±1/2 inch full-scale

Further details of the model dimensional verification can be found in Reference 1.

The Orbiter model was of a blended wing/body design with a double delta planform ($81^{\circ}/45^{\circ}$ leading edge) wing of 12 percent thickness and full-span elevons with gaps between the outboard and inboard panels and between the inboard panels and the fuselage. A single centerline vertical tail with rudder/speedbrake capability was mounted between the Orbiter Maneuvering System (OMS) pods on the aft fuselage, and a bodyflap was fitted to the lower trailing edge of the fuselage. The Main Propulsion System (MPS) nozzles were simulated, but were trimmed to clear the sting support through the base. The OMS nozzles and all Reaction Control System (RCS) thruster ports in the forward fuselage and OMS pods were simulated.

Fuselage Outer Mold Line (OML) penetrations and protuberances which were simulated include:

- Recessed windshields
- Simulated forward and aft RCS nozzles
- Star-tracker door recesses

The upper surface flipper door panels which blend the wing to the elevon at all deflections were not simulated. A smooth fairing between wing and elevon upper surfaces approximated the flipper door panels.

The Orbiter is constructed primarily of 7076-T6 aluminum, with Armco 17-4 CRES used in certain control surface brackets, the right wing attachment bracket, the balance wing attachment and the nose attachment sleeve.

The mid/aft upper fuselage was fabricated from a single block with a longitudinal bore, into which the balance adaptor(s) can be inserted. The OMS pods and vertical tail are in turn attached to this block. The nose/forward fuselage is fabricated as a detachable separate block. Another separate plate-like aft/lower fuselage cover provides the attachment points for the bodyflap, which was fixed at zero degrees deflection.

The vertical tail and OMS pods were independently removable as required for the several configuration buildup diagnostic runs. Offblocks were

also provided for these components when removed.

Control surface deflections were set manually with their respective brackets and blocks. Bodyflap and rudder settings remained at 0° (nominal) throughout the test; elevons/ailerons and speedbrake were varied. Table IV indicates the measured deflection values for all available approved control surface settings for this test.

The model was sting-mounted through its base surface and was supported on the NASA/LaRC 1.25 inch #2029 force and moment balance, as shown in Figure 2b. A 1.25-inch diameter straight sting (facility-owned) was supported by the tunnel's No. 2 struthead, using an extender-adaptor for additional strength.

The following nomenclature, illustrated in Figure 2a was used to designate model components:

Symbol	Description
$^{*}B_{75}$	ØV-102 fuselage, including forward RCS nozzle recesses
$^{*}C_{16}$	Canopy, including recessed windshield panels
$^{*}E_{64}$	Elevons, including elevon/elevon and elevon/fuselage gaps
$^{*}F_{16}$	Bodyflap
$^{*}M_{52}$	OMS pods

CONFIGURATIONS INVESTIGATED (Concluded)

Symbol	Description
N_{108}	Main propulsion system nozzles (inner surfaces cut away for sting clearance)
N_{110}	OMS nozzles
N_{111}	Aft RCS thruster nozzle ports
R_{20}	Rudder, incorporating left and right speedbrake panels
V_{27}	Vertical tail
$^{*}W_{131}$	ØV-102 wing

*See Table III for additional descriptive information.

INSTRUMENTATION

Model instrumentation for test OA257 consisted of the LaRC 6 Component #2029 balance; 3 base pressures and 1 sting-cavity pressure, measured by external transducers through hardline tubing; and 2 model-structure monitoring thermocouples.

In addition to standard scheduled balance calibrations, the #2029 balance was subjected to extensive pre-test checkloadings, both in the laboratory and in the test configuration at the tunnel. The balance calibration body and the model itself (with its loading/leveling block) were used for loading points. Furthermore, numerous rechecks were made on the balance at specified intervals during the test to assure that balance accuracy had remained consistent.

Besides the regular tunnel Mach probe and the system pressure and temperature instrumentation for flow parameters, two (2) test-section boundary-layer sensing static pressures were also installed 1/2 way thru the test. One each was installed in the ceiling and floor, at approximately the model's station in the tunnel. These were monitored to determine the onset of boundary-layer separation due to tunnel unstart conditions and/or shock impingement.

The two (2) model-structure monitoring thermocouples were installed to provide primarily qualitative links to the variations of the balance data observed as a function of model exposure to the tunnel flow.

One thermocouple was located in the model above the bodyflap attachment

plate (on centerline at approximately station X_o = 1387), and one was located on the simulated center (upper) MPS nozzle gimbal heat-shield surface.

TEST FACILITY DESCRIPTION

The Langley 20-Inch Mach 6 tunnel is a blowdown type with air as the test medium. Figure 2e schematically shows the general arrangement of this facility in which heat transfer, pressure, and force tests are conducted. The test Mach number is achieved with a fixed-geometry two-dimensional contoured nozzle (side walls are parallel) forming a throat section of 0.86 by 50.80 cm (0.339 by 20.0 in) and a test section of 52.00 by 50.80 cm (20.5 by 20.0 in). The nozzle length from the throat to the tunnel window centerline measures 2.27 m (89.37 in).

Models can be mounted either in a fixed position on the tunnel floor or on injection systems at the bottom of the tunnel test section. The opening in the bottom of the test section measures approximately 132 by 40 cm (52.0 by 15.7 in) for the lower injection system which includes a remote-controlled sting-support system capable of moving the model (up to 122 cm (48 in) long) during wind-on operation, through a basic angle-of-attack range from -5° to 55° and a basic sideslip angle range from $+1/2^{\circ}$ to -10°. Injection can be adjusted to complement a given test type.

A reference Mach number is obtained from a pitot probe injected from the upper wall of the test section as shown in Figure 2e.

One hundred analog channels and seven digital channels of data can be recorded on a central data recording complex.

The tunnel has a movable second minimum and exhausts either into the atmosphere with the aid of an annular air ejector or into a 18.3 m (60 ft) dia vacuum sphere or this sphere plus a 12.5 m (41 ft) dia sphere. The tunnel can exhaust to the vacuum spheres and through the ejector simultaneously. This mode of operation is frequently used with force tests to reduce starting and unstarting loads. Tunnel operating conditions are as follows:

Stagnation pressure	0.34 MN/m^2 to 3.62 MN/m^2 (50 to 525 psia)
Stagnation temperature	450°K to 560°K (810° to 1018°R)
Reynolds number	2.3 x 10^6/m to 29.5 x 10^6/m
.....	(0.7 x 10^6/ft to 9.0 x 10^6/ft)
Dynamic pressure	3.35 kN/m^2 to 57.8 kN/m^2 (0.5 to 8.7 psia)
Running time (maximum):	
With 1 sphere	1 min (18.3 m (60 ft) dia)
With 2 spheres	1.5 min (18.3 m and 12.5 m (60 ft and 41 ft) dia)
With ejector	20 min
Tunnel mass flow (maximum)	27 kg/sec (60 lbm/sec)
Ejector mass flow	60 to 80 kg/sec (133 to 177 lbm/sec)

Tunnel air, heated by gas or electric heaters, is supplied from a 4.1 MN/m^2 (600 psia) reservoir with a storage capacity of 1195 m^3 (58,500 kg) (42,200 ft^3 (129,000 lbm)). Air for this reservoir is transferred from a 21.0 MN/m^2 (3000 psia) tank field and/or a 34.9 MN/m^2 (5000 psia) tank field with a combined storage capacity of 8920 m^3 (297,000 kg) (31,500 ft^3 (655,000 lbm)). This combination can supply air to the tunnel and ejector at a maximum combined rate of 127 kg/sec (280 lbm/sec). An activated alumina dryer provides a dewpoint temperature at 233°K (419°R) at a pressure of 4.1 MN/m^2 (600 psia).

TEST PROCEDURES

The standard tunnel pitch and yaw mechanisms were employed in this test, with certain modifications and procedural improvements. Pitch and yaw attitudes were computed from a Kearfott potentiometer and newly installed linear potentiometer assemblies, respectively. In addition, real-time use was made of the estimated attitudes obtained from the facility's standard prism-reflection optical system, in spite of its inherent inaccuracies in high sting-deflection situations.

The pitch-sweep sector was found to be too fast and to have too much vibration for continuous mode data acquisition, but the yaw-sweep turntable was smooth and slow enough for such continuous recording throughout most of the test. Post-run data thinning was accomplished by the data processing personnel to reduce the 20 frame per second acquisition to approximately $0.1^{\circ}\beta$ increments.

Pitch limits were generally $-15^{\circ}\alpha$ to $+45^{\circ}\alpha$ for pitch-sweep runs, not using the $+4^{\circ}\beta$ yaw-offset plate. However, due to the run duration limits of this blowdown facility (especially at low Reynolds numbers), most data runs were conducted as multiple 15° or 20° sweeps between $0^{\circ}\alpha$ and $+40^{\circ}\alpha$. Yaw was generally set at $-0.5^{\circ}\beta$, $0^{\circ}\beta$, or $+0.5\beta$ for these sweeps.

Yaw limits were generally $-6^{\circ}\beta$ to $+4.5^{\circ}\beta$ for yaw-sweep runs, using the $+4^{\circ}\beta$ yaw-offset plate; most data was taken in continuous sweep mode between $-4^{\circ}\beta$ and $+4^{\circ}\beta$ at angles of attack between $+10^{\circ}$ and $+40^{\circ}$.

The true test Mach number was determined by means of an overhead-mounted injectable Mach probe, used at the beginning and end of each blowdown (run). Desired Reynolds number was set by variation of operating total pressure, total temperature, or both.

Schlieren photography, using the existing facility hardware was obtained both in Polaroid and Varitron (still negative) modes. The Polaroid schlierens and the test section surface pressures were employed to determine boundary layer separation on the tunnel walls and, in turn, potential tunnel unstart conditions.

Numerous upright, inverted, and $\phi = 90^{\circ}$ runs were made with the model to examine flow-tare conditions. Various sweep-speed and sweep-mode checkruns were also conducted to determine the optimum pitch and yaw system operations.

Configuration buildup diagnostic runs were made using OMS off, VT off, and OMS and VT off configurations of Model 72-Ø.

Additionally, four special runs were dedicated to aero-hysteresis and model temperature history studies. No significant aero-hysteresis effects were observed; but "hot wall" or model-deformation effects were present to compare to similar aero-coefficient variations with model temperature noted in test ØA259. However, no specific procedural change to compensate for these effects could be worked in this facility during test ØA257.

DATA REDUCTION

Force and moment balance data were converted to standard coefficient form in both body and stability axes. Base and sting-cavity pressures were initially converted to their respective pressure coefficients before application to longitudinal corrections. (See Table V for Moment Reference Center (MRC) and Balance Reference Center (BRC) locations). Only P_{B_1} and P_{B_2} were actually employed in the base corrections, however; P_{B_3} was maintained as an active back-up base pressure surface.

The two model thermocouples provided comparative model "structural" temperature data. These data are presented in temperature form for primarily qualitative analysis, as they do not represent either aero-thermal or pure model skin temperature conditions.

The test-section ceiling and floor static pressures, also considered to be of only qualitative value, are presented in their simple pressure form.

Although sting-cavity corrections were applied to all three longitudinal body-axis coefficients (and also into the stability-axis data), a base pressure "correction" (to a "forebody" coefficient) was used only on axial-force data as follows.

$$CPBA = \frac{CPB1+CPB2}{2}$$

$$CAC = (CPBA-CPC)\ AC/_{SW}$$

$$CA = CAU-CAC$$

$$CAB = -(CPBA)\ AB/_{SW}$$

$$CAF = CA-CAB$$

REMARKS

Runs 8A through 8H were Mach-probe calibration, flow-blockage measurement, and tunnel-unstart checkout runs. These runs delineated the test-condition limits for Model 72-Ø in the LaRC 20 inch Mach 6 tunnel.

Runs 18 through 21, 25, 26, 55, and 65 were air-off experimental runs to examine continuous and point-pause sweep characteristics and to practice methods and timing for data point acquisition.

Due to extensive damage caused by an underground facility steampipe failure, the inter-building datalink for the Beckman data acquisition system was out of service between March 28 and April 5, 1981. Therefore, Runs 190 through 226 were recorded using a temporary, localized HP-9845 system. However, continuing difficulties in the post-test data reduction of these runs have necessitated their deletion from presentation in this report. Nevertheless, sufficient repeat runs were conducted after the Beckman system datalink was repaired to cover those run schedule sections originally acquired with the HP-9845.

Runs 224 and 338 were special thermal-history and "hot-model" investigations, while Runs 176 and 177 were aero-hysteresis examinations with continuous-sweep yaw polars.

Runs after #374 were conducted by LaRC for its own "in-house" studies of low Reynolds number effects on component buildups and for additional oilflow studies at Mach 6.

Load uncertainties and comparisons for tests OA257, OA258, and OA259 are presented in Tables VI and VII.

REFERENCES

1. Rockwell International, I.L., SAS/AERO/81-213, "Model Design Dimensional Verification (MDDV) of the 0.01-Scale Orbiter Wind Tunnel Model 72-Ø," March 10, 1981.

2. Rockwell International, Report, SOD80-0473-A, "Pretest Information for Lateral/Directional Stability Wind Tunnel Test ØA257 of the 0.010-Scale Orbiter Vehicle Model 72-Ø in the NASA/Langley Research Center 20-Inch Mach 6 Facility," Feb. 12, 1981.

3. NASA, Tech. Memo., 74026, "Force Testing Manual for the Langley 20-Inch Mach 6 Tunnel," July 1977.

4. Rockwell International, Report, STS81-0348, "Pretest Information for the 0.010-Scale SSV Orbiter Vehicle Model 72-Ø in the AEDC VKF B Hypersonic Wind Tunnel, Test ØA259," Jan. 5, 1981.

5. Rockwell International, Report, SOD80-0439, "Pretest Information for the 0.020-Scale SSV Orbiter Vehicle Model 106-Ø in the AEDC VKF B Hypersonic Wind Tunnel, Test ØA258," Oct. 1980.

6. NASA-CR-167,659, DMS-DR-2491, "Results of Investigations of the 0.020-Scale OV-102 Configuration Space Shuttle Vehicle Orbiter Model 106-0 in the USAF/AEDC VKF Tunnel B (OA258)"

7. NASA-CR 167,665, DMS-DR-2493, "Results of Investigations of the 0.010-Scale OV-102 Configuration Space Shuttle Vehicle Orbiter Model 72-0 in the NASA/AEDC VKF Tunnel B (OA259)"

8. NASA-CR-160,825, DMS-DR-2477, "Results of Investigation on an 0.004-Scale 140C Modified Configuration Space Shuttle Vehicle Orbiter Model (74-0) in the NASA/Langley Research Center 20-Inch Mach 6 Tunnel (LA141)"

9. DMS-DR-2484, LA144 (LTV HSWT 742). Not yet published.

TABLE I

TEST : ØA257

DATE : 5-21-81

TEST CONDITIONS

MACH NUMBER	REYNOLDS NUMBER (per ft.)	DYNAMIC PRESSURE (pounds/sq. inch)	STAGNATION TEMPERATURE (degrees Fahrenheit)
6.0	2.0×10^6	2.4	500
6.0	4.4×10^6	4.0	400
6.0	7.6×10^6	7.2	400
6.0	8.9×10^6	8.3	400

BALANCE UTILIZED: LaRC 2029

	CAPACITY:	ACCURACY:	COEFFICIENT TOLERANCE:
NF	300 lbs	±0.500 lbs	see Table VI
SF	50 lbs	±0.640 lbs	↓
AF	75 lbs	±0.150 lbs	↓
PM	350 in-lbs	±0.770 in-lbs	↓
RM	50 in-lbs	±0.250 in-lbs	↓
YM	75 in-lbs	±0.390 in-lbs	↓

COMMENTS:

TABLE II

SHEET 1 of 14 JEV

TEST: ØA257 (20"M6-6559)

DATA SET RUN NUMBER COLLATION SUMMARY

DATE: 7/2/81 (REV. 2)

DATA SET IDENTIFIER	CONFIGURATION	PARAMETERS α	β	Φ	δ_{SB}	δ_A	δ_e	M	YP	IS	FF		MODE	SWEEP	REYNOLDS NUMBER × 10^{-6} 0.0	2.7	4.4	7.6	FIRST RUN NUMBER
R7E001	ØV-102 (FSB)*	A	0	0	86.6	0	0	6.0	ØUT	ØUT	ØUT		1	2			24		
002		I	0										1	2		45	49	52	
003		J	0										1	2		46	29	53	
004		K	0										1	2		47	30	54	
005		J	-.5										1	2			31		
006		K	.5										1	2			32		
007		J	-.5										1	2			33		
008		K	.5										1	2			34		
009		L	0								IN		1	2			51		
010		15	N_1						IN		ØUT		2	1			83		
110		15	N_2										2	1			2083		
011		17.5	N_1										2	1			82		
111		17.5	N_2										2	1			2082		
012		20	N_1										2	1			81		
112		20	N_2										2	1			2081		
013		22.5	N_1										2	1			80		
113		22.5	N_2										2	1			2080		

*FSB = FAIRED (ØA259) L.H. SPEEDBRAKE

YP = YAW PLATE
IS = 1" SPACER
FF = FLOOR FILLER SEGMENT

α OR β SCHEDULES: SEE SHEET (14) FOR SCHEDULES

MODE = 1 - PITCH PAUSE ; 2 - CONTINUOUS
SWEEP = 1 - INCREASING ; 2 - DECREASING

NASA-MSFC-MAF

TABLE II (Continued)

TEST: ØA257 (20" MG-6559)

DATA SET RUN NUMBER COLLATION SUMMARY

DATE: 7/2/81 (REV. 2)

DATA SET IDENTIFIER	CONFIGURATION	α	β	Φ	δ_{SB}	δ_A	δ_e	M	YP	IS	FF	MODE	SWEEP	REYNOLDS NUMBER × 10^{-6} 0.0	2.2	4.4	7.6
RTE 014	ØV-102 (FSB)*	25	N_1	0	86.6	0	0	6.0	IN	ØUT	ØUT	2	1			77	
114		25	N_2									2	1			2077	
015		25	Φ									1	1			78	
016		27.5	N_1									2	1			79	
116		27.5	N_2									2	1			2079	
017		30	N_1									2	1			88	
117		30	N_2									2	1			2088	
018		32.5	N_1									2	1			91	
118		32.5	N_2									2	1			2091	
019		30	N_1							IN		2	1			94	
119		30	N_2									2	1			2094	
020		32.5	N_1									2	1			95	
120		32.5	N_2									2	1			2095	
021		35	N_1									2	1			96	
121		35	N_2									2	1			2096	
022		37.5	N_1									2	1			97	
122		37.5	N_2									2	1			2097	
023		40	N_1									2	1			98	
123		40	N_2									2	1			2098	

TEST RUN NUMBER

*(FSB) = FAIRED (ØA259) L.H. SPEED BRAKE

YP = YAW PLATE
IS = 1" SPACER
FF = FLOOR FILLER SEGMENT

α OR β SCHEDULES — SEE SHEET (14) FOR SCHEDULES

MODE = 1 - PITCH PAUSE; 2 - CONTINUOUS
SWEEP = 1 - INCREASING; 2 - DECREASING

NASA-MSFC-MAF

TABLE II (Continued)

SHEET 3 of 14 JEV

TEST: ØA257 (20" MG-6559)

DATA SET · RUN NUMBER COLLATION SUMMARY

DATE: 7/2/81 (REV. 2)

DATA SET IDENTIFIER	CONFIGURATION	α	β	Φ	δ_{SB}	δ_A	δ_e	M	YP	IS	FF	MODE	SWEEP	REYNOLDS NUMBER × 10^{-6} 0.0	2.2	4.4	7.6
R7E 024	ØV-102	A	0	0	86.6	0	0	6.0	ØUT	ØUT	ØUT	1	2			68	
025		A	0							IN		1	2		129	121	123
026		J	0									1	2			184	
027		K	0									1	2			186	
028		U	0									1	2				308
029		U	0			+3						1	2				310
030		U	0			+5						1	2				312
031		J	-.5			0						1	2		131	187	124
032		K	-.5									1	2		132		125
033		J	.5									1	2		133		126
034		K	.5									1	2		134		127
035		J	0		0							1	2		252	249	246
036		K	0									1	2		253	250	247
037		J	-.5									1	2		259		255
038		K	-.5									1	2		260		256
039		J	.5									1	2		261		257
040		K	.5									1	2		262		258
041		U	0									1	2		320	323	314

TEST RUN NUMBER

YP = YAW PLATE
IS = 1" SPACER
FF = FLOOR FILLER SEGMENT

α OR β SCHEDULES — SEE SHEET (14) FOR SCHEDULES

MODE = 1 - PITCH PAUSE ; 2 - CONTINUOUS
SWEEP = 1 - INCREASING ; 2 - DECREASING

NASA-MSFC-MAF

TABLE II (Continued)

SHEET 4 of 14 REV

TEST: QA257 (26" M6-655) | DATA SET RUN NUMBER COLLATION SUMMARY | DATE: 7/2/81 (REV. 2)

DATA SET IDENTIFIER	CONFIGURATION	PARAMETERS α	β	Φ	δ_{SB}	δ_A	δ_e	M	YP	IS	FF	MODE	SWEEP	REYNOLDS NUMBER × 10^{-6} 0.0	2.2	4.4	7.6	TEST RUN NUMBERS
RTE 042	ΦV-102	U	-.5	0	0	0	0	6.0	ΦUT	IN	ΦUT	1	2		321		316	
043		U	.5		0							1	2		319		317	
044	(PREHEAT TO 185°)	Z	0		86.6				↓			1	2		338			
045		A	0						IN			1	2			** 99		
046		0	N_1									2	1			179		
146		0	N_2									2	1			2179		
047		5	N_1									2	1			180		
147		5	N_2									2	1			2180		
048		10	N_1									2	1			181		
148		10	N_2									2	1			2181		
049		12.5	N_1									2	1			182		
149		12.5	N_2									2	1			2182		
050		15	N_1									2	1		* 148		112	
150		15	N_2									2	1		* 2148		2112	
051		17.5	N_1									2	1		* 147		111	RN= 8.8
151		17.5	N_2									2	1		* 2147		2111	
052		20	N_1									2	1		* 146		106	
152		20	N_2									2	1		* 2146		2106	

YP = YAW PLATE
IS = 1" SPACER
FF = FLOOR FILLER SEGMENT

α OR β SCHEDULES: SEE SHEET (14) FOR SCHEDULES

MODE = 1 - PITCH PAUSE ; 2 - CONTINUOUS
SWEEP = 1 - INCREASING ; 2 - DECREASING

** BETA VARIES SLIGHTLY (.00572° → -.74053)
* BETA SCHEDULE RANGE ~ ±2.5°

NASA-MSFC-MAF

TABLE II (Continued)

SHEET 5 of 14 JEV

TEST: ØA257 (20"MG-6559)

DATA SET RUN NUMBER COLLATION SUMMARY

DATE: 7/2/81 (REV. 2)

DATA SET IDENTIFIER	CONFIGURATION	PARAMETERS α	β	Φ	δ_{SB}	δ_A	δ_C	M	YP	IS	FF	MODE	SWEEP	REYNOLDS NUMBER × 10^{-6} 0.0	2.2	4.4	7.6
RTE 053	ØV-102	20	R_1	0	86.6	0	0	6.0	IN	IN	ØUT	2	1			177	
153		20	R_2									2	1			2177	
054		20	R_3									2	2			1177	
154		20	R_4									2	2			3177	
055		22.5	N_1									2	1		*145		105
155		22.5	N_2									2	1		*2145		2105
056		25	N_1									2	1		*144		102
156		25	N_2									2	1		*2144		2102
057		27.5	N_1									2	1		*143		103
157		27.5	N_2									2	1		*2143		2103
058		30	N_1									2	1		*142	109	104
158		30	N_2									2	1		*2142	2109	2104
059		32.5	N_1									2	1		*149		113
159		32.5	N_2									2	1		*2149		2113
060		35	N_1									2	1		*153		114
160		35	N_2									2	1		*2153		2114
061		37.5	N_1									2	1		*154		115
161		37.5	N_2									2	1		*2154		2115

RUN NUMBER

YP = YAW PLATE
IS = 1" SPACER
FF = FLOOR FILLER SEGMENT

α OR β SCHEDULES — SEE SHEET 14 FOR SCHEDULES

MODE = 1 - PITCH PAUSE; 2 - CONTINUOUS
SWEEP = 1 - INCREASING; 2 - DECREASING

* BETA SCHEDULE RANGE ~±2.5°

NASA-MSFC-MAF

TABLE II (Continued)

SHEET 6 of 14 REV

TEST: ØA257 (20" MG-6559)

DATA SET RUN NUMBER COLLATION SUMMARY

DATE: 7/2/81 (REV. 2)

DATA SET IDENTIFIER	CONFIGURATION	α	β	Φ	δ_{SB}	δ_A	δ_e	M	YP	IS	FF	MODE	SWEEP	REYNOLDS NUMBER × 10^{-6} 0.0	2.2	4.4	7.6
RTE 062	ØV-102	40	N_1	0	86.6	0	0	6.0	IN	IN	ØUT	2	1		*155		116
162		40	N_2									2	1		*2155		2116
063		40	R_1									2	1			176	
163		40	R_2									2	1			2176	
064		40	R_3									2	2			1176	
164		40	R_4									2	2			3176	
065		10	N_1		0							2	1		291		277
165		10	N_2									2	1		2291		2277
066		12.5	N_1									2	1		290		276
166		12.5	N_2									2	1		2290		2276
067		15	N_1									2	1		289		275
167		15	N_2									2	1		2289		2275
068		17.5	N_1									2	1		288		270
168		17.5	N_2									2	1		2288		2270
069		20	N_1									2	1		284		269
169		20	N_2									2	1		2284		2269
070		22.5	N_1									2	1		282		268
170		22.5	N_2									2	1		2282		2268

TEST RUN NUMBER

YP = YAW PLATE
IS = 1" SPACER
FF = FLOOR FILLER SEGMENT

α OR β SCHEDULES: SEE SHEET 14 FOR SCHEDULES

MODE = 1 - PITCH PAUSE ; 2 - CONTINUOUS
SWEEP = 1 - INCREASING ; 2 - DECREASING

* BETA SCHEDULE RANGE ~ ± 2.5°

NASA-MSFC-MAF

TABLE II (Continued)

SHEET 7 of 14 JEV

TEST: ØA257 (26" MG-6559)

DATA SET RUN NUMBER COLLATION SUMMARY

DATE: 7/2/81 (REV. 2)

DATA SET IDENTIFIER	CONFIGURATION	α	β	Ø	δ_{SB}	δ_A	δ_e	M	YP	IS	FF	MODE	SWEEP	REYNOLDS NUMBER × 10^{-6} 0.0	2.2	4.4	7.6
RTE 071	ØV-102	25	N_1	0	0	0	0	6.0	IN	IN	ØUT	2	1		281	234	267
171		25	N_2									2	1		2281	2234	2267
072		27.5	N_1									2	1		280		266
172		27.5	N_2									2	1		2280		2266
073		30	N_1									2	1		279		265
173		30	N_2									2	1		2279		2265
074		32.5	N_1									2	1		296		271
174		32.5	N_2									2	1		2296		2271
075		35	N_1									2	1		293		272
175		35	N_2									2	1		2293		2272
076		37.5	N_1									2	1		294		273
176		37.5	N_2									2	1		2294		2273
077		40	N_1									2	1		295		274
177		40	N_2									2	1		2295		2274
078	ØV102 less ØMS	V	0		86.6				ØUT			1	2				335
079		W	0									1	2				333
080		X	-.5									1	2				332
081		X	.5									1	2				331

α OR β SCHEDULES: SEE SHEET (14) FOR SCHEDULES

YP = YAW PLATE
IS = 1" SPACER
FF = FLOOR FILLER SEGMENT
MODE = 1 - PITCH PAUSE ; 2 - CONTINUOUS
SWEEP = 1 - INCREASING ; 2 - DECREASING

TEST RUN NUMBER

NASA-MSFC-MAF

TABLE II (Continued)

SHEET 8 of 14 REV

TEST: OA 257 (20" NG-6559)

DATA SET RUN NUMBER COLLATION SUMMARY

DATE: 7/2/81 (REV. 2)

DATA SET IDENTIFIER	CONFIGURATION	PARAMETERS α	β	Φ	δ_{SB}	δ_A	δ_e	M	YP	IS	FF	MODE	SWEEP	REYNOLDS NUMBER × 10^{-6} 0.0	2.2	4.4	7.6	TEST RUN NUMBER
R7E 082	ΦV-102 less ΦMS	V	0	0	0	0	0	6.0	ΦUT	IN	ΦUT	1	2				327	
083		W	0									1	2				325	
084		X	-.5									1	2				328	
085		X	.5									1	2				329	
086		15	N_1		86.6				IN			2	1				340	
186		15	N_2									2	1				2340	
087		20	N_1									2	1				341	
187		20	N_2									2	1				2341	
088		20	Y_1									2	1		386			
089		20	Y_2									2	2		1386			
090		25	N_1									2	1				342	
190		25	N_2									2	1				2342	
091		25	Y_1									2	1		387			
092		25	Y_2									2	2		1387			
093		30	N_1									2	1				343	
193		30	N_2									2	1				2343	
094		15	N_1		0							2	1				346	
194		15	N_2		0							2	1				2346	

YP = YAW PLATE
IS = 1" SPACER
FF = FLOOR FILLER SEGMENT

α OR β SCHEDULES: SEE SHEET (14) FOR SCHEDULES

MODE = 1 - PITCH PAUSE ; 2 - CONTINUOUS
SWEEP = 1 - INCREASING ; 2 - DECREASING

NASA-MSFC-MAF

TABLE II (Continued)

SHEET 9 OF 14 JEV

TEST: ØA257 (28" MG-655J)

DATA SET RUN NUMBER COLLATION SUMMARY

DATE: 7/2/81 (REV. 2)

DATA SET IDENTIFIER	CONFIGURATION	PARAMETERS α	β	Φ	δ_{SB}	δ_A	δ_C	M	YP	IS	FF	MODE	SWEEP	REYNOLDS NUMBER × 10^{-6} 0.0	2.2	4.4	7.6
RTE 095	ØV-102	20	N_1	0	0	0	0	6.0	IN	IN	ØUT	2	1				347
195		20	N_2									2	1				2347
096		20	Y_1									2	1		382		
097		20	Y_2									2	2		1382		
098		25	N_1									2	1				348
198		25	N_2									2	1				2348
099		25	Y_1									2	1		384		
0A1		25	Y_2									2	2		1384		
0A2		30	N_1									2	1				349
1A2		30	N_2									2	1				2349
0A3	ØV102 less ØMS & VT	V	0		—				ØUT			1	2				359
0A4		W	0		—							1	2				358
0A5		X	-.5		—							1	2				360
0A6		X	.5		—							1	2				361
0A7		15	N_1		—				IN			2	1				352
1A7		15	N_2		—							2	1				2352
0A8		20	N_1		—							2	1				353
1A8		20	N_2		—							2	1				2353

TEST RUN NUMBER

YP = YAW PLATE
IS = 1" SPACER
FF = FLOOR FILLER SEGMENT

α OR β SCHEDULES — SEE SHEET (14) FOR SCHEDULES

MODE = 1 - PITCH PAUSE ; 2 - CONTINUOUS
SWEEP = 1 - INCREASING ; 2 - DECREASING

NASA-MSFC-MAF

TABLE II (Continued)

TEST: ØA 257 (28" M6-6559)

DATA SET RUN NUMBER COLLATION SUMMARY

DATE: 7/2/81 (REV. 2)

DATA SET IDENTIFIER	CONFIGURATION	PARAMETERS α	β	Ø	δ_{SB}	δ_A	δ_C	M	YP	IS	FF	MODE	SWEEP	REYNOLDS NUMBER × 10^{-6} 0.0	2.2	4.4	7.6
R7E 0A9	ØV-102 less ØMS & VT	20	Y_1	0	—	0	0	6.0	IN	IN	ØUT	2	1		379		
0B1		20	Y_2		—							2	2		1379		
0B2		25	N_1		—							2	1				354
1B2		25	N_2		—							2	1				2354
0B3		25	Y_1		—							2	1		380		
0B4		25	Y_2		—							2	2		1380		
0B5		30	N_1		—							2	1				356
1B5		30	N_2		—							2	1				2356
0B6	ØV102 less VT	V	0		—				ØUT			1	2				365
0B7		W	0		—							1	2				364
0B8		X	-.5		—							1	2				366
0B9		X	.5		—							1	2				367
0C1		15	N_1		—				IN			2	1				374
1C1		15	N_2		—							2	1				2374
0C2		20	N_1		—							2	1				370
1C2		20	N_2		—							2	1				2370
0C3		20	Y_1		—							2	1		376		
0C4		20	Y_2		—							2	2		1376		

YP = YAW PLATE
IS = 1" SPACER
FF = FLOOR FILLER SEGMENT

α OR β SCHEDULES — SEE SHEET (14) FOR SCHEDULES

MODE = 1 - PITCH PAUSE ; 2 - CONTINUOUS
SWEEP = 1 - INCREASING ; 2 - DECREASING

NASA-MSFC-MAF

TABLE II (Continued)

TEST: OA 257 (20" MG-6559)

DATA SET RUN NUMBER COLLATION SUMMARY

DATE: 7/2/81 (REV. 2)

DATA SET IDENTIFIER	CONFIGURATION	PARAMETERS													REYNOLDS NUMBER × 10^{-6}			
		α	β	ϕ	δ_{SB}	δ_A	δ_e	M	YP	IS	FF		MODE	SWEEP	0.0	2.2	4.4	7.6
R7E OC5	ΦV-102 less V.T.	25	N_1	0	—	0	0	6.0	IN	IN	ΦUT		2	1				371
1C5		25	N_2		—								2	1				2371
OC6		25	Y_1		—								2	1		377		
OC7		25	Y_2		—								2	2		1377		
OC8		30	N_1		—								2	1				372
1C8		30	N_2		—								2	1				2372
OC9	ΦV-102 (FSB)	M	O	180	86.6				ΦUT	ΦUT			1	2		59	61	63
OD1	ΦV-102	P	O	270					IN	IN			1	2		168	160	164
OD2		O	Q	270									1	1		169	161	165
OD3		4.5	Q	270									1	1		170	162	166

TEST RUN NUMBER

YP = YAW PLATE
IS = 1" SPACER
FF = FLOOR FILLER SEGMENT

α OR β SCHEDULES — SEE SHEET (4) FOR SCHEDULES

MODE = 1 - PITCH PAUSE ; 2 - CONTINUOUS
SWEEP = 1 - INCREASING ; 2 - DECREASING

NASA-MSFC-MAF

TABLE II (Continued)

— REPEAT DATA —

SHEET 12 of 14

TEST: OA257 (20" MC-6559)

DATA SET RUN NUMBER COLLATION SUMMARY

DATE: 7/2/81 (REV. 2)

DATA SET IDENTIFIER	CONFIGURATION	PARAMETERS α	β	Φ	δ_{SP}	δ_A	δ_C	M	YP	IS	FF	MODE	SWEEP	REYNOLDS NUMBER × 10^{-6} 0.0	2.2	4.4	7.6
R7E 425	ΦV-102	A	0	0	86.6	0	0	6.0	ΦUT	IN	ΦUT	1	2			136	
525		A	0									1	2			229	
625		A	0									1	2			306	
445		A	0						IN			1	2			108	
545		A	0									1	2			157	
645		A	0									1	2			174	
458		30	N_1									2	1			118	
A58			N_2									2	1			2118	
558			N_1									2	1			139	
B58			N_2									2	1			2139	
658			N_1									2	1			151	
C58			N_2									2	1			2151	
758			N_1									2	1			175	
D58			N_2									2	1			2175	
858			N_1									2	1			231	
E58			N_2									2	1			2231	
958			N_1									2	1			301	
F58			N_2									2	1			2301	

TEST RUN NUMBER

YP = YAW PLATE
IS = 1" SPACER
FF = FLOOR FILLER SEGMENT

α OR β SCHEDULES — SEE SHEET 14 FOR SCHEDULES

MODE = 1 - PITCH PAUSE ; 2 - CONTINUOUS
SWEEP = 1 - INCREASING ; 2 - DECREASING

NASA-MSFC-MAF

TABLE II (Continued)

— REPEAT DATA —

SHEET 13 of 14

TEST: ØA257 (26"M6-6559)

DATA SET RUN NUMBER COLLATION SUMMARY

DATE: 7/2/81 (REV. 2)

DATA SET IDENTIFIER	CONFIGURATION	PARAMETERS α	β	Ø	δ_{SB}	δ_A	δ_e	M	YP	IS	FF	MODE	SWEEP	REYNOLDS NUMBER × 10^{-6} 0.0	2.2	4.4	7.6
R7E 471	ØV-102	25	N_1	0	0	0	0	6.0	IN	IN	ØUT	2	1		237		239
A71		25	N_2	↓	↓	↓	↓	↓	↓	↓	↓	2	1		2237		2239
473		30	N_1	↓	↓	↓	↓	↓	↓	↓	↓	2	1				240
A73		30	N_2	↓	↓	↓	↓	↓	↓	↓	↓	2	1				2240
573		30	N_1	↓	↓	↓	↓	↓	↓	↓	↓	2	1				286
B73		30	N_2	↓	↓	↓	↓	↓	↓	↓	↓	2	1				2286
673		30	N_1	↓	↓	↓	↓	↓	↓	↓	↓	2	1				298
C73		30	N_2	↓	↓	↓	↓	↓	↓	↓	↓	2	1				2298

YP = YAW PLATE
IS = 1" SPACER
FF = FLOOR FILLER SEGMENT

α OR β SCHEDULES — SEE SHEET (14) FOR SCHEDULES

MODE = 1 - PITCH PAUSE ; 2 - CONTINUOUS
SWEEP = 1 - INCREASING ; 2 - DECREASING

NASA-MSFC-MAF

TABLE II (Concluded)

DATA SET RUN NUMBER COLLATION SUMMARY

Coefficient Schedules

Dataset 1st Character	1st Indep Variable	2nd Indep Variable	Dependent Variables									
R	RN/L	ALPHA/BETA	BETA/ALPHA	CN	CA	CLM	CY	CYN	CBL	CL	CD	L/D
S	RN/L	ALPHA/BETA	BETA/ALPHA	MACH	PHI	Q	BP1	BP2	BP3	PT1	PT2	PSC
T	RN/L	ALPHA/BETA	BETA/ALPHA	P1	TS	TT	TBF	TSB	PFLOOR		PCEIL	RN

α Schedules:

Pitch-Pause

$A = 40^\circ$ to 0°, $\Delta\alpha = 5^\circ$
$I = 20^\circ$ to 0°, $\Delta\alpha = 1.0^\circ$
$J = 30^\circ$ to 15°, $\Delta\alpha = 1.0^\circ$
$K = 40^\circ$ to 25°, $\Delta\alpha = 1.0^\circ$
$L = 25^\circ$ to 0°, $\Delta\alpha = 1.0^\circ$
$M = 15^\circ$ to 0°, $\Delta\alpha = 1.0^\circ$
$P = 4^\circ$ to -5°, $\Delta\alpha = 0.5^\circ$
$U = 40^\circ$ to 15°, $\Delta\alpha = 2.5^\circ$
$V = 25^\circ$ to 0°, $\Delta\alpha = 1.0^\circ$
$W = 40^\circ$ to 15°, $\Delta\alpha = 1.0^\circ$
$X = 40^\circ$ to 0°, $\Delta\alpha = 1.25^\circ$
$Z = 40^\circ$ to 10°, $\Delta\alpha = 1.0^\circ$

β Schedules:

Pitch-Pause

$\phi = -4.0^\circ$ to 4.0°, $\Delta\beta = 0.5^\circ$
$Q = -5.0^\circ$ to 5.0°, $\Delta\beta = 0.5^\circ$

Continuous (β Sweeps)

$N_1 = -4.0$ to 4.0 (odd points; $\beta_1, \beta_3, \beta_5$, etc.)
$N_2 = -4.0$ to 4.0 (even points; $\beta_2, \beta_4, \beta_6$, etc.)
$R_1 = -3.0$ to 3.0 (odd points)
$R_2 = -3.0$ to 3.0 (even points)
$R_3 = 3.0$ to -3.0 (odd points)
$R_4 = 3.0$ to -3.0 (even points)
$Y_1 = -2.0$ to 2.0
$Y_2 = 2.0$ to -2.0

TABLE III

MODEL DIMENSIONAL DATA

MODEL COMPONENT : BODY - B_{75}

GENERAL DESCRIPTION : Orbiter Vehicle 102-OML Baseline

MODEL SCALE: 0.0100

DRAWING NUMBER : VL70-000003C VC70-000002B

DIMENSIONS :	FULL SCALE	MODEL SCALE
Ref. Length (OML: Fwd Sta. X_o=235), In.	1293.3	12.933
(IML: Fwd Sta. X_o=238), In.	1290.3	12.903
Max Width (@ X_o = 1528.3), In.	264.0	2.640
Max Depth (@ X_o = 1464), In.	250.0	2.500
Fineness Ratio	4.899	4.899
Area		
Max. Cross-Sectional, ft^2	340.885	0.03409
Planform		
Wetted		
Base		

DMS 014

TABLE III (Continued)

MODEL DIMENSIONAL DATA

MODEL COMPONENT : CANOPY - C_{16}

GENERAL DESCRIPTION : OV-102 Orbiter Canopy

MODEL SCALE: 0.0100

DRAWING NUMBER : DCD V70-30-950-01 (VC70-000002B)

DIMENSIONS :	FULL SCALE	MODEL SCALE
Length, in (X_o 432.0798 to X_o 670)	237.920	2.379
Max Width, in (@ X_o 594)	194.067	1.941
Max Depth, in. (@ X_o 492)	59.790	0.598
Fineness Ratio (length/max width)	1.226	1.226
Area		
Max. Cross-Sectional @ X_o 520	ft^2 45.66	0.004566
Planform		
Wetted		
Base		

DMS 014

TABLE III (Continued)

MODEL DIMENSIONAL DATA

MODEL COMPONENT : ELEVON - E_{64}

GENERAL DESCRIPTION : Elevon for OV-102 configuration. Hingeline at X_o = 1387, elevon split line X_o = 312.5, 6.0" tips with 8° beveled edges, and centerbodies same as E63 but includes bevel Tip.

MODEL SCALE: 0.0100

DRAWING NUMBER : VC70-000002B

DIMENSIONS	FULL SCALE	MODEL SCALE
Ref. Area - Ft^2	210.00	0.02100
Area - Ft^2	206.57	0.02066
Span (equivalent), In	346.44	3.464
Inb'd equivalent chord, In	116.500	1.165
Outb'd equivalent chord, In	55.219	0.552
Ratio movable surface chord/ total surface chord		
At Inb'd equiv. chord	.2137	.2137
At Outb'd equiv. chord	0.3999	0.3999
Sweep Back Angles, degrees		
Leading Edge	0.0	0.0
Trailing Edge	-10.056	-10.056
Hingeline	0.0	0.0
Area Moment (Product of area)	1540.74	0.001541
Mean Aerodynamic Chord, In.	89.50	0.0895
Hingeline dihedral (origin at Z_o = 261.3509), deg.	5.229	5.229

MODEL DIMENSIONAL DATA

MODEL COMPONENT : BODYFLAP - F_{16}

GENERAL DESCRIPTION : Orbiter OV-102 Baseline OML at X_o = 1532, X_o = 287

MODEL SCALE: 0.0100

DRAWING NUMBER : VC72-000003C VC70-000002B

DIMENSIONS :	FULL SCALE	MODEL SCALE
Length (X_o = 1525.5 to X_o = 1613), In	87.50	0.875
Max Width (@ L.E., X_o = 1525.5), In	256.00	2.560
Max Depth (X_o = 1532), In.	19.798	0.198
Fineness Ratio		
Areas - Ft^2		
Max. Cross-Sectional (@ H.L.)	35.196	0.003520
Planform	135.75	0.013575
Wetted		
Base (X_o - 1613)	4.89	0.000489

TABLE III (Continued)

MODEL DIMENSIONAL DATA

MODEL COMPONENT : OMS POD - M_{52}

GENERAL DESCRIPTION : OV-102 Baseline Same as M_{18}

MODEL SCALE: 0.0100

DRAWING NUMBER : VC70-000003C, VC70-000002B

DIMENSIONS :	FULL SCALE	MODEL SCALE
Length, (OMS FWD Sta X_o = 1311.0), In. includes DCS Package	258.64	2.586
Max Width (@ X_o = 1511), In.	135.55	1.356
Max Depth (@ X_o = 1511), In.	74.36	0.744
Fineness Ratio	1.475	1.475
Area		
Max. Cross-Sectional, ft^2	59.091	0.005909
Planform		
Wetted		
Base		

OMS 014

TABLE III (Concluded)

MODEL COMPONENT: WING-W131

GENERAL DESCRIPTION: OV-102 OML Configuration

NOTE: Includes Wing ELevon Stubs. Dihedral angle is along trailing edge of wing. Geometric Twist = 0°

MODEL SCALE: 0.0100

TEST NO: _____ DWG. NO.: VC70-000002B

DIMENSIONS:	FULL-SCALE	MODEL SCALE
TOTAL DATA		
Area (Theo.) Ft^2 Planform	2690.0	0.26900
Span (Theo.) In.	936.68	9.367
Aspect Ratio	2.265	2.265
Rate of Taper	1.177	1.177
Taper Ratio	0.200	0.200
Dihedral Angle, degrees	3.500	3.500
Incidence Angle, degrees	0.500	0.500
Aerodynamic Twist, degrees		
Sweep Back Angles, degrees		
Leading Edge	45.000	45.000
Trailing Edge	-10.056	-10.056
0.25 Element Line	35.209	35.209
Chords:		
Root (Theo) B.P.0.0.	689.24	6.892
Tip, (Theo) B.P. 468.34	137.85	1.379
MAC	474.81	4.748
Fus. Sta. of .25 MAC	1136.83	11.368
W.P. of .25 MAC	290.58	2.906
B.L. of .25 MAC	182.13	1.821
EXPOSED DATA		
Area (Theo.) Ft^2	1721.60	0.17216
Span, (Theo.) In, BP111.8	713.003	7.130
Aspect Ratio	2.051	2.051
Taper Ratio	0.193	0.193
Chords		
Root BP111.8	557.56	5.576
Tip 1.00 $\frac{b}{2}$	137.85	1.379
MAC	389.92	3.899
Fus. Sta. of .25 MAC	1187.71	11.877
W.P. of .25 MAC	295.27	2.953
B.L. of .25 MAC	254.23	2.542
Airfoil Section (Rockwell Mod NASA) XX-64		
Root $\frac{t}{c}$ =	0.1137	0.1137
Tip $\frac{t}{c}$ =	0.120	0.120
Data for (1) of (2) Sides		
Leading Edge Cuff		
Planform Area Ft^2	145.4	0.1454
Leading Edge Intersects Fus M.L. @ Sta.	427.75	4.278
Leading Edge Intersects Wing @ Sta.	1084.00	10.840

TABLE IV

CONTROL SURFACE BRACKET DEFLECTION VALUES

δ_{SB}/δ_R	δ_e/δ_a
$0.09^\circ/-0.16^\circ$	$\equiv 0.00^\circ/0.00^\circ$
$23.87^\circ/-0.39^\circ$	$-0.02^\circ/+3.04^\circ$
$54.28^\circ/+0.19^\circ$	$-0.02^\circ/+5.29^\circ$
$68.61^\circ/+0.53^\circ$	N/A
$86.60^\circ/-0.18^\circ$	N/A

TABLE V

CONSTANTS

SYMBOL	DEFINITION	F.S. VALUE	M.S. VALUE
AB	Fuselage Base Area	436.7 ft^2	0.04367 ft^2
AC	Fuselage Sting-Cavity Area	167.0 ft^2	0.01670 ft^2
SW(SREF)	Wing Reference Area	2690.0 ft^2	0.26900 ft^2
LB(LREF)	Body Reference Length	1290.3 in	12.903 in
MRC			
X_o		1076.7 in	10.767 in
Y_o		0.0 in	0.000 in
Z_o		375.0 in	3.750 in
BRC			
X_o		1076.6 in	10.766 in
Y_o		-0.1 in	-0.001 in
Z_o		390.0 in	3.900 in

TABLE VI

ESTIMATED UNCERTAINTIES

M_∞	Balance #	RN/L	U/u	C_N	C_{AT}	C_m	C_ℓ	C_n	C_Y
OA258 2% MODEL AEDC									
6.0	-073	0.96	U	0.0276	0.0025	0.0048	0.00045	0.00088	0.0039
			u	0.0128	0.0015	0.0017	0.00016	0.00059	0.0038
6.0	-073	2.20	U	0.0137	0.0012	0.0022	0.00035	0.00038	0.0017
			u	0.0054	0.0064	0.0007	0.00013	0.00025	0.0016
6.0	-073	3.83	U	0.0139	0.0011	0.0017	0.00035	0.00024	0.0010
			u	0.0032	0.0004	0.0004	0.00004	0.00015	0.0009
6.0	-072	3.83	U	0.0209	0.0016	0.0036	0.00072	0.00037	0.0019
			u	0.0037	0.0013	0.0030	0.00040	0.00024	0.0018
8.0	-073	0.96	U	0.0277	0.0022	0.0047	0.00039	0.00087	0.0039
			u	0.0112	0.0013	0.0015	0.00014	0.00053	0.0034
8.0	-073	2.20	U	0.0189	0.0014	0.0021	0.00033	0.00035	0.0015
			u	0.0049	0.0006	0.0007	0.00006	0.00023	0.0014
8.0	-073	2.92	U	0.0190	0.0014	0.0019	0.00037	0.00026	0.0012
			u	0.0037	0.0004	0.0005	0.00005	0.00017	0.0011
OA259 1% MODEL AEDC									
6.0	-074	2.00	U	0.0069	0.0017	0.0023	0.00070	0.00041	0.0015
			u	0.0036	0.0014	0.0008	0.00012	0.00028	0.0012
6.0	-074	4.40	U	0.0130	0.0016	0.0018	0.00020	0.00034	0.0022
			u	0.0017	0.0007	0.0004	0.00006	0.00013	0.0006
OA257 1% MODEL LaRC									
6.0	2029	2.00	u	0.0054	0.0016	0.00175	0.00029	0.00045	0.0069
6.0	2029	4.40	u	0.0032	0.0010	0.0011	0.00017	0.00027	0.0041
6.0	2029	7.60	u	0.0019	0.0006	0.0006	0.00010	0.00016	0.0024

U - Uncertainty includes tunnel parameters

u - Uncertainty of balance coefficients only

TABLE VII

LOAD UNCERTAINTY COMPARISONS

Balance # & TEST		F_N	F_A	m	ℓ	n	F_Y
-072 OA258	P	0.782	0.261	6.135	1.184	1.170	0.293
	B	-0.107	0.163	2.425	-1.152	-0.002	0.354
	U	1.671	0.685	14.695	3.893	2.346	0.940
	LOAD	1500	300	7575	800	5050	1000
-073 OA258	P	0.754	0.094	0.638	0.117	0.644	0.204
	B	-0.123	-0.002	0.838	0.033	-0.163	-0.089
	U	1.631	0.190	2.114	0.387	1.445	0.497
	LOAD	700	150	3640	300	3640	700
-074 OA259	P	0.125	0.045	0.126	0.037	0.084	0.038
	B	0.000	0.008	0.011	-0.002	0.015	-0.012
	U	0.250	0.098	0.263	0.076	0.183	0.088
	LOAD	200	50	680	100	680	200
2029 OA257	Δ	0.500	0.150	0.770	0.250	0.390*	0.640*
	LOAD	300	75	350	50	75	50

P - Precision Index
B - Bias
U - Uncertainty
Δ - Error between Applied and Calculated Load

* Large errors due to slippage between cal body and balance

Notes:

1. Positive directions of force coefficients, moment coefficients, and angles are indicated by arrows
2. For clarity, origins of wind and stability axes have been displaced from the center of gravity

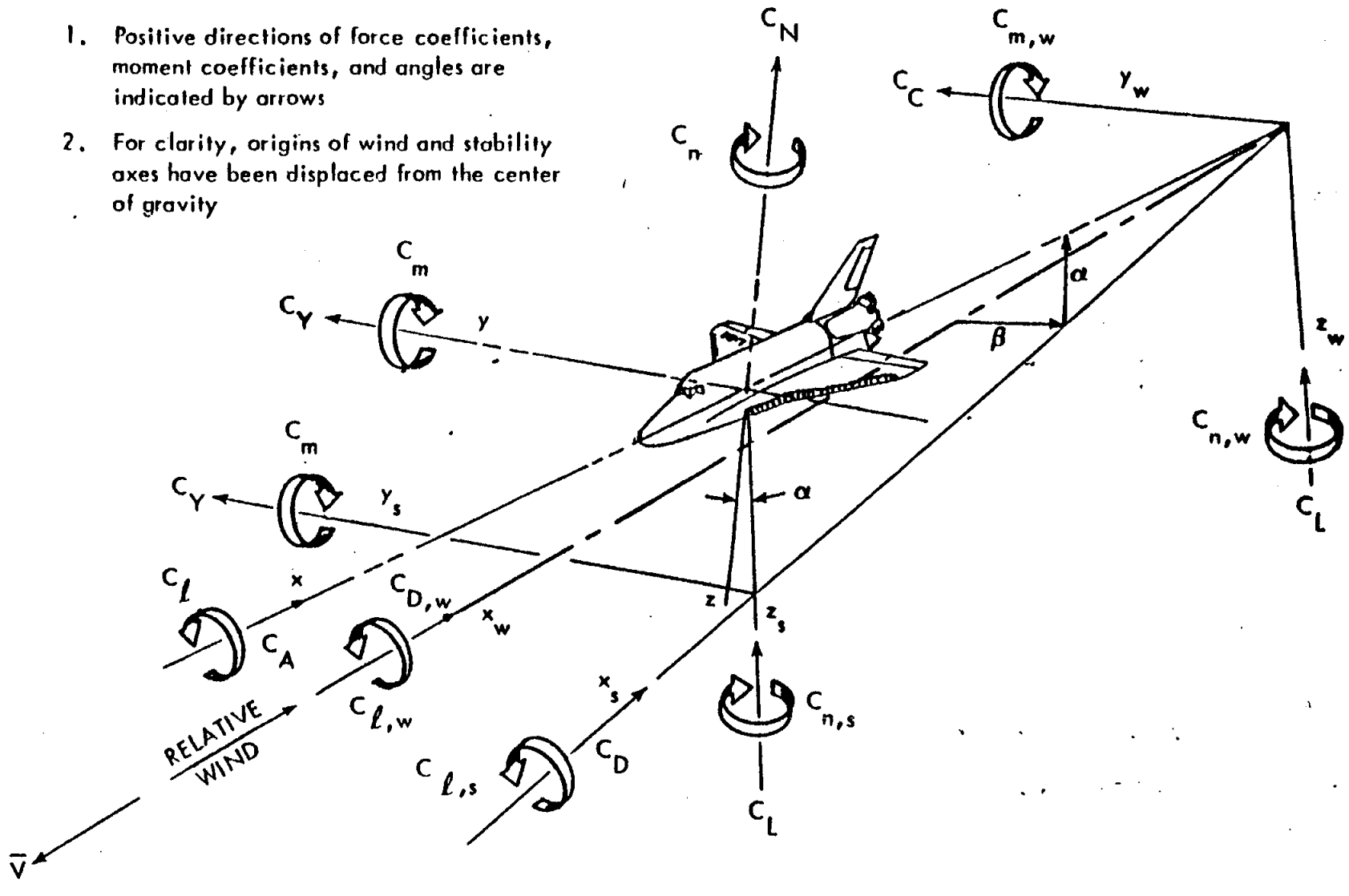

a. Axis Systems

Figure 1. Axis Systems and Sign Conventions

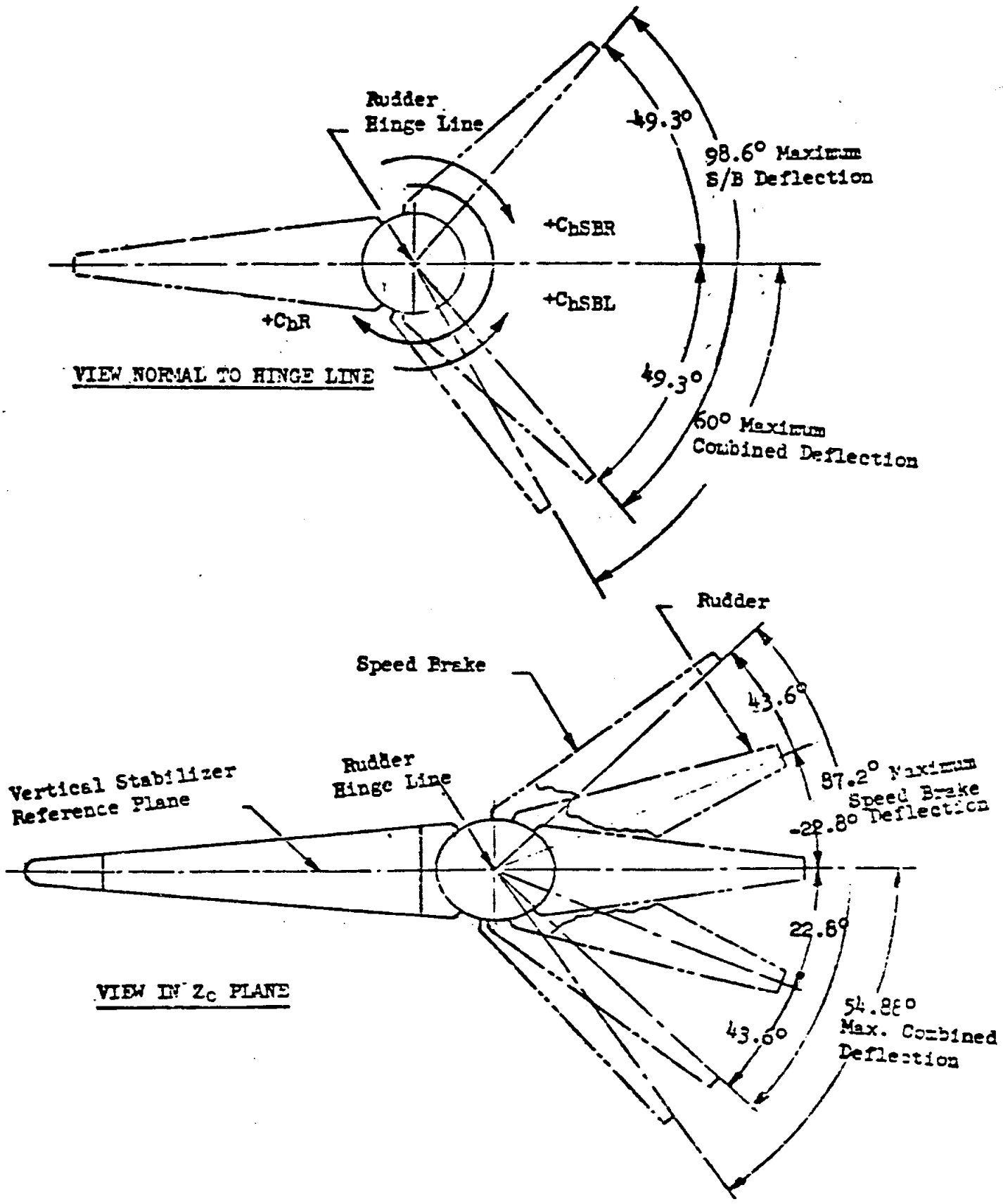

b. Rudder/Speedbrake Deflections

Figure 1 (Continued)

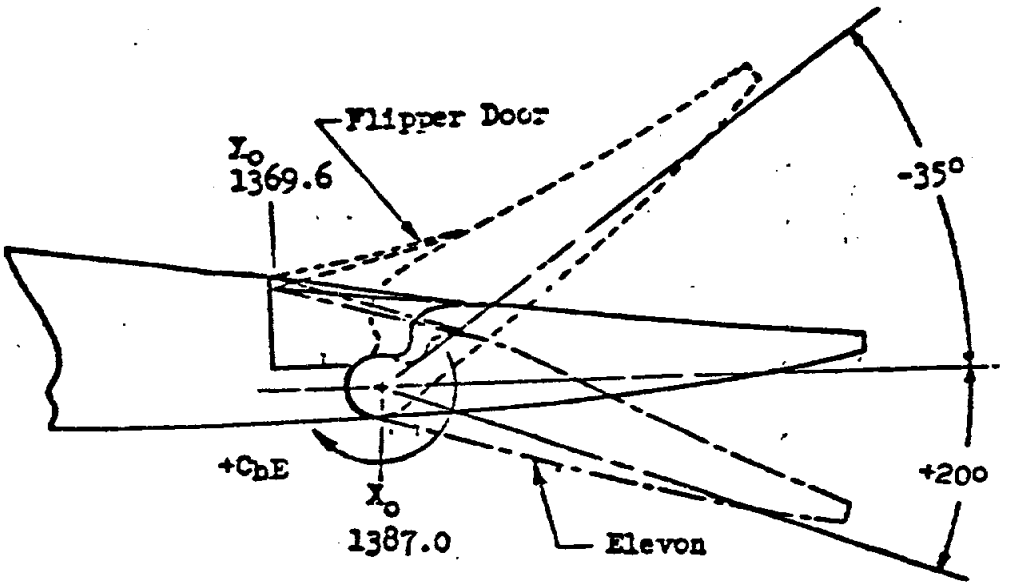

ELEVON DEFLECTIONS

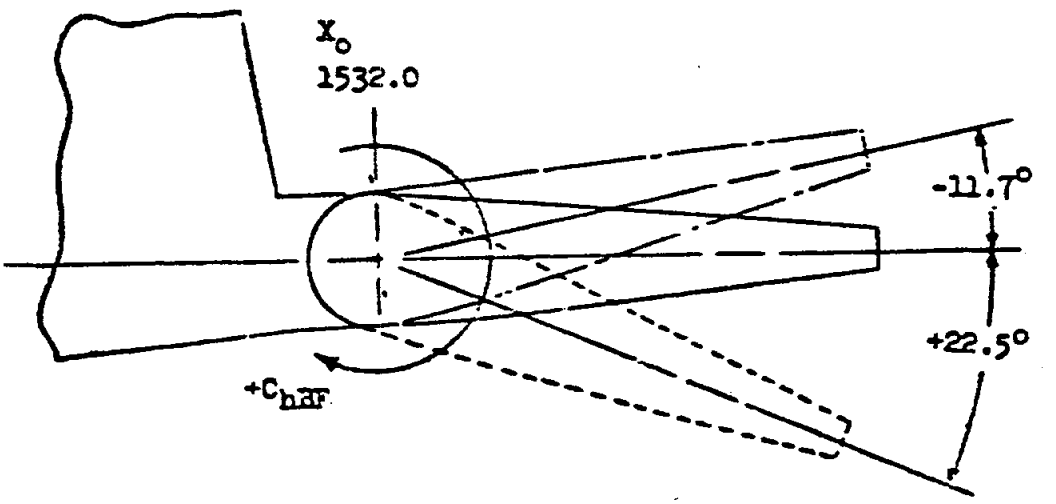

BODY FLAP DEFLECTIONS

c. Body Flap and Elevon Deflections

Figure 1 (Concluded)

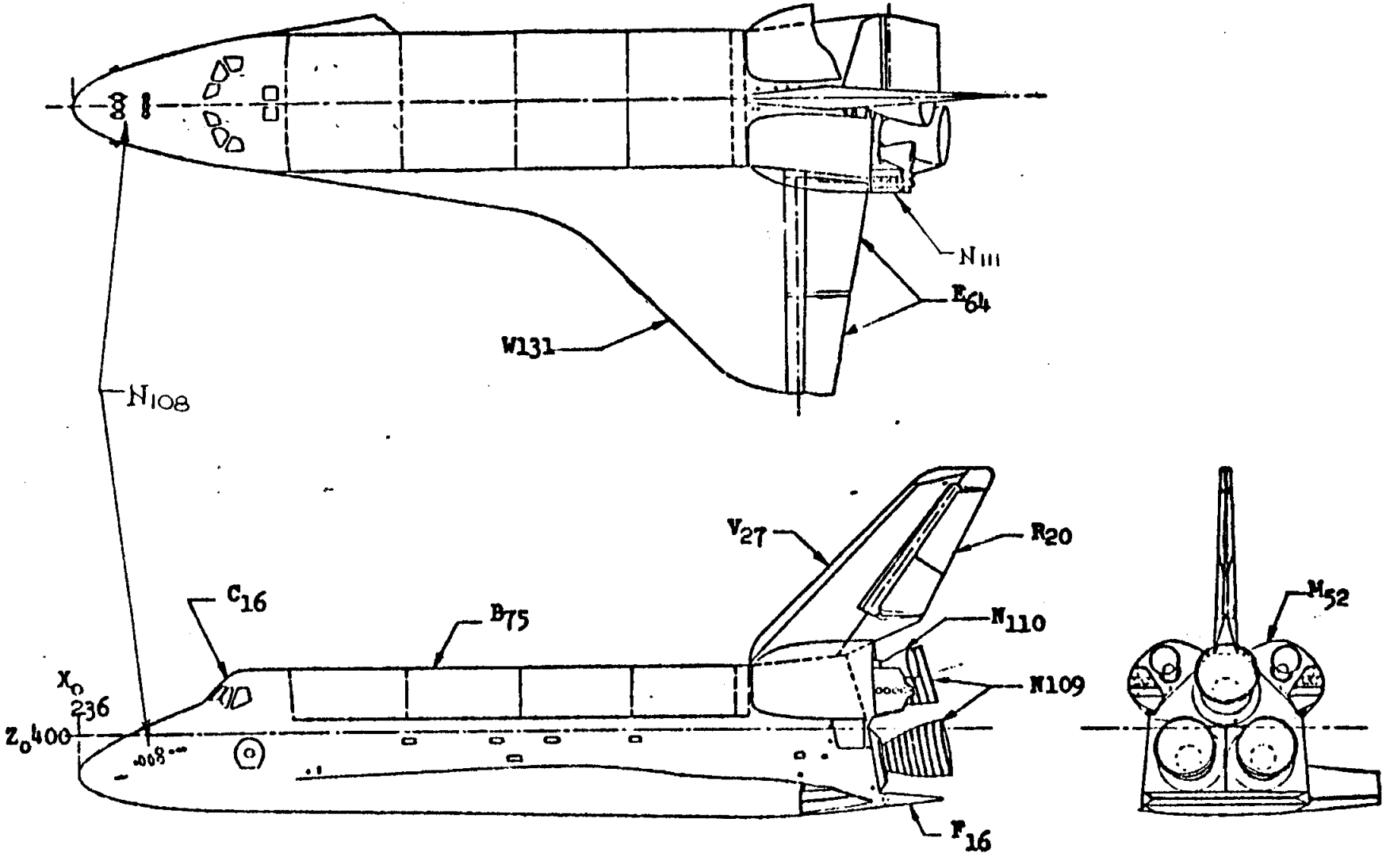

a. Orbiter Configuration

Figure 2. Model Sketches

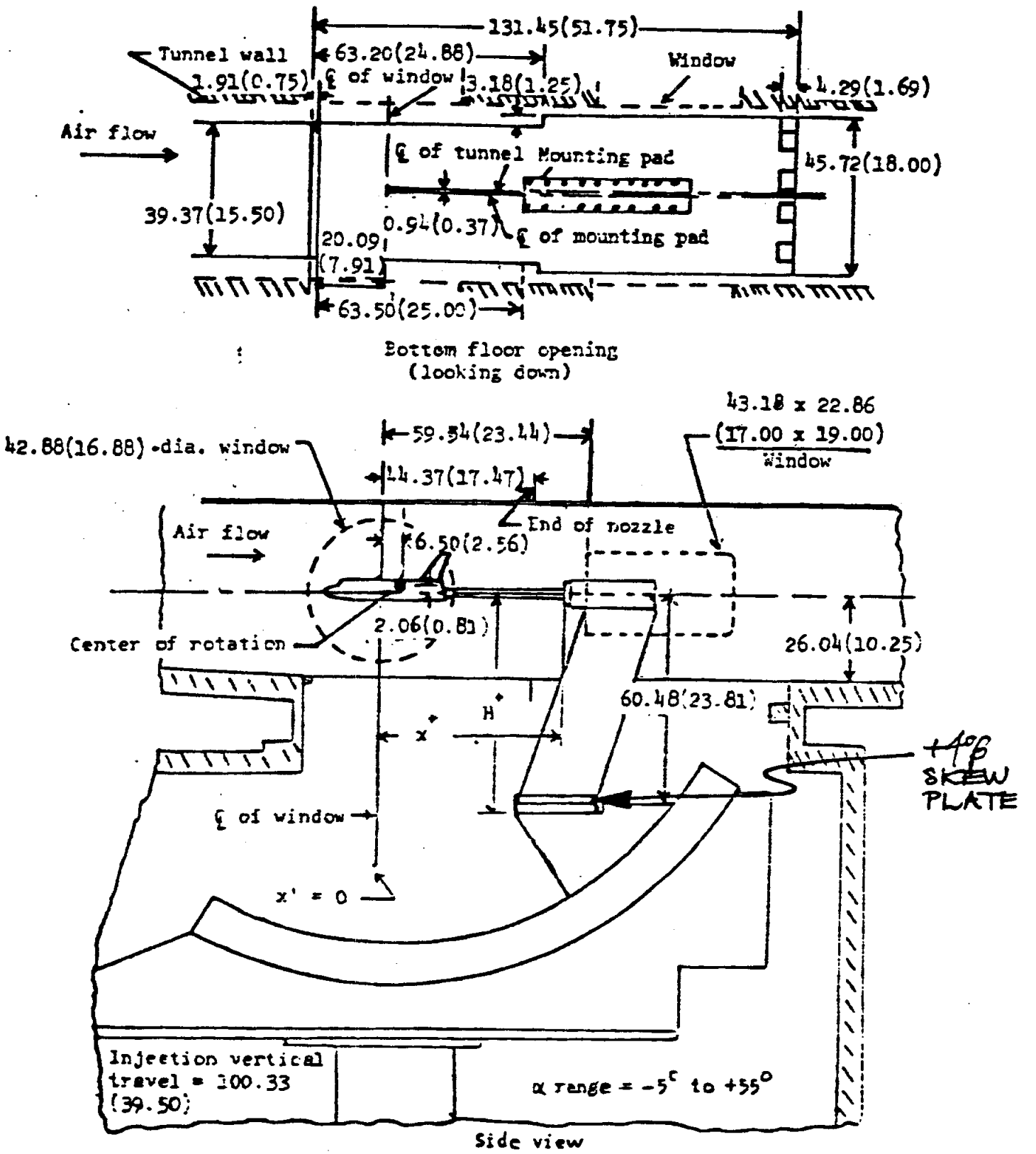

b. Primary Model Installation

Figure 2 (Continued)

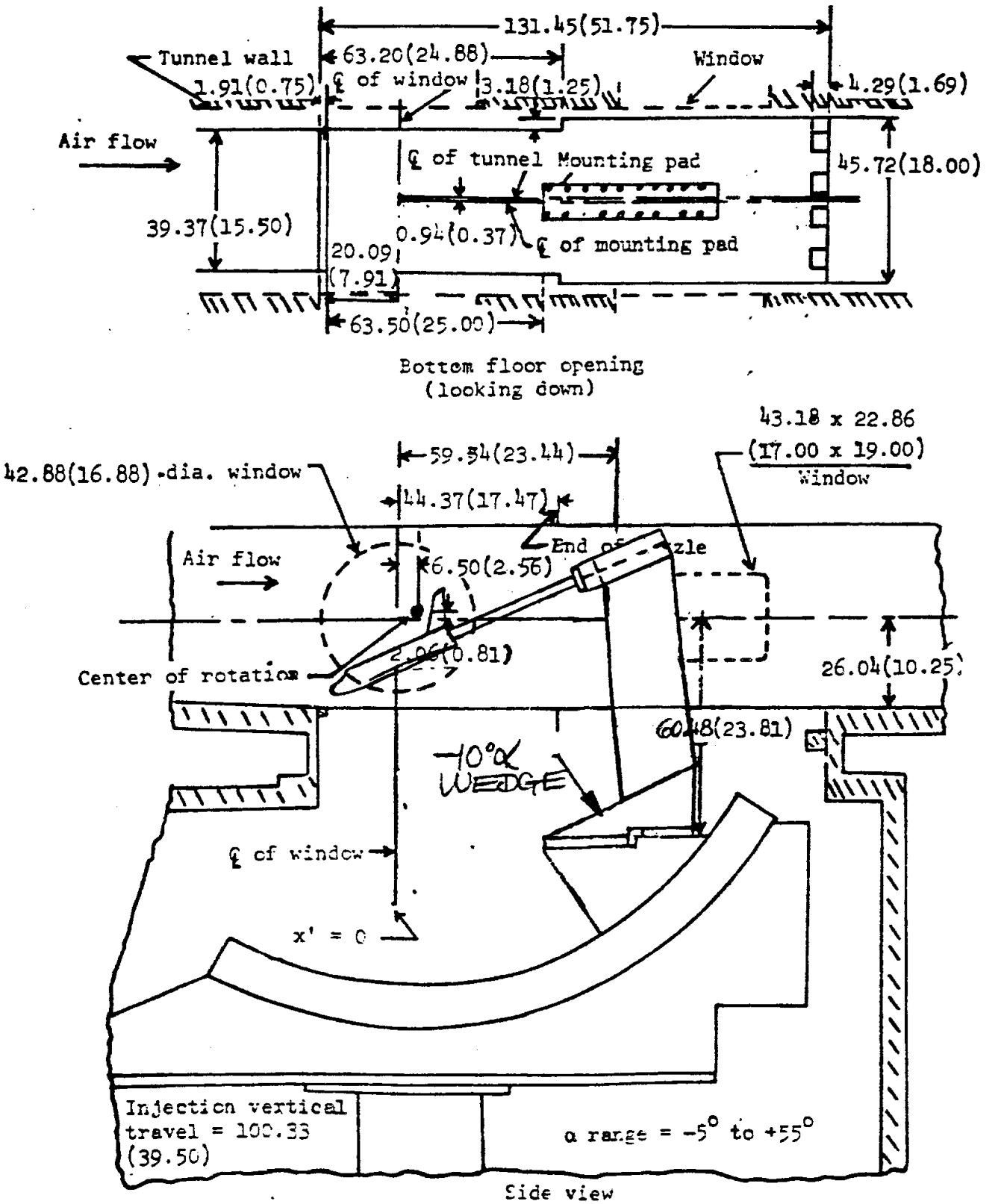

c. Secondary Model Installation

Figure 2 (Continued)

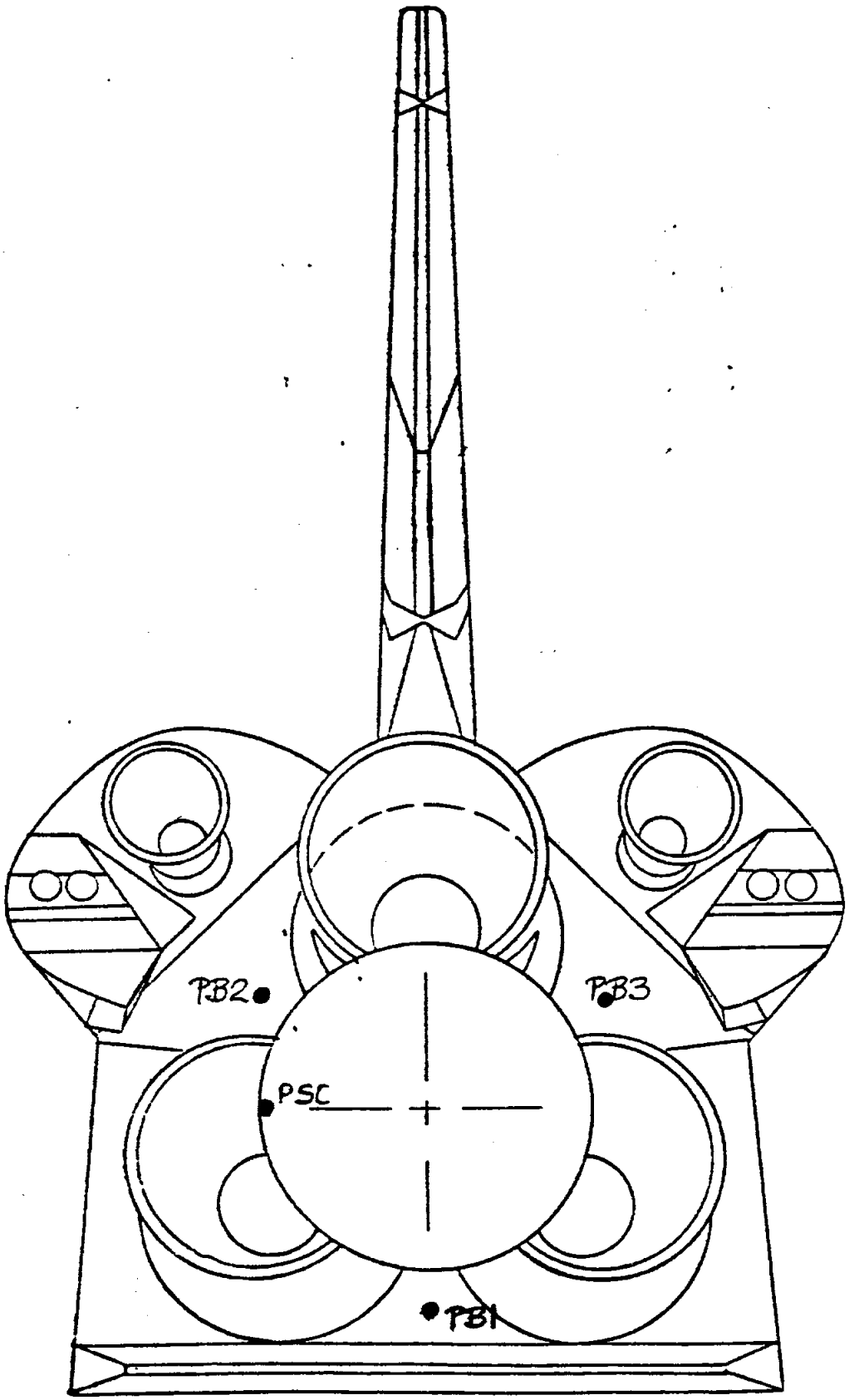

d. Base and Sting Cavity Pressure Tap Locations

Figure 2 (Continued)

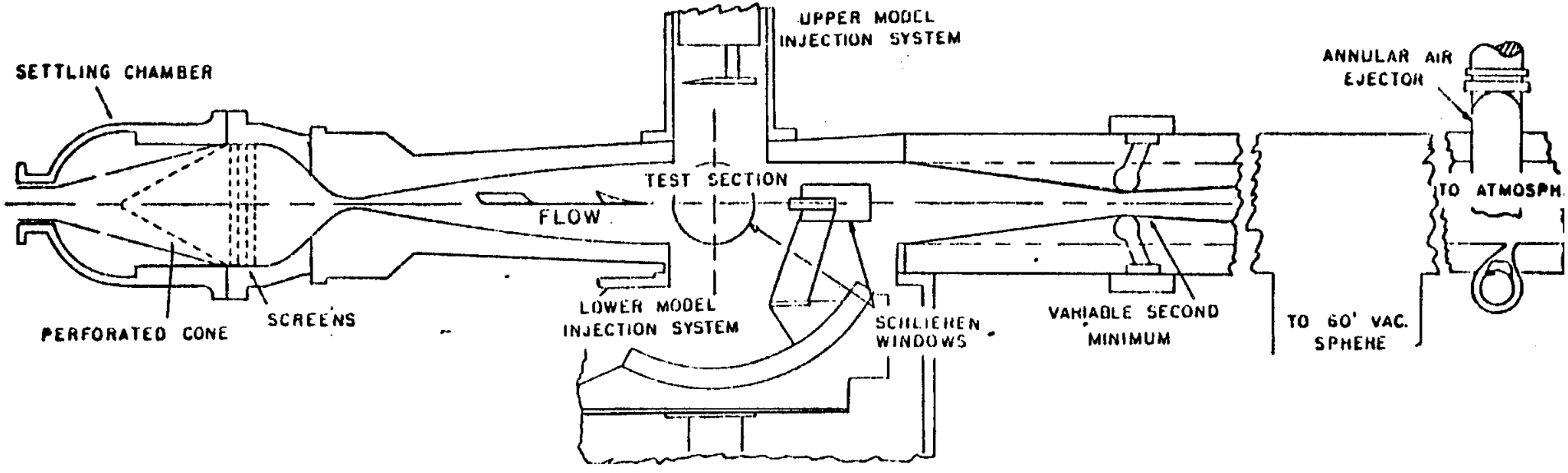

e. LaRC 20 Inch M 6 Facility

Figure 2 (Concluded)

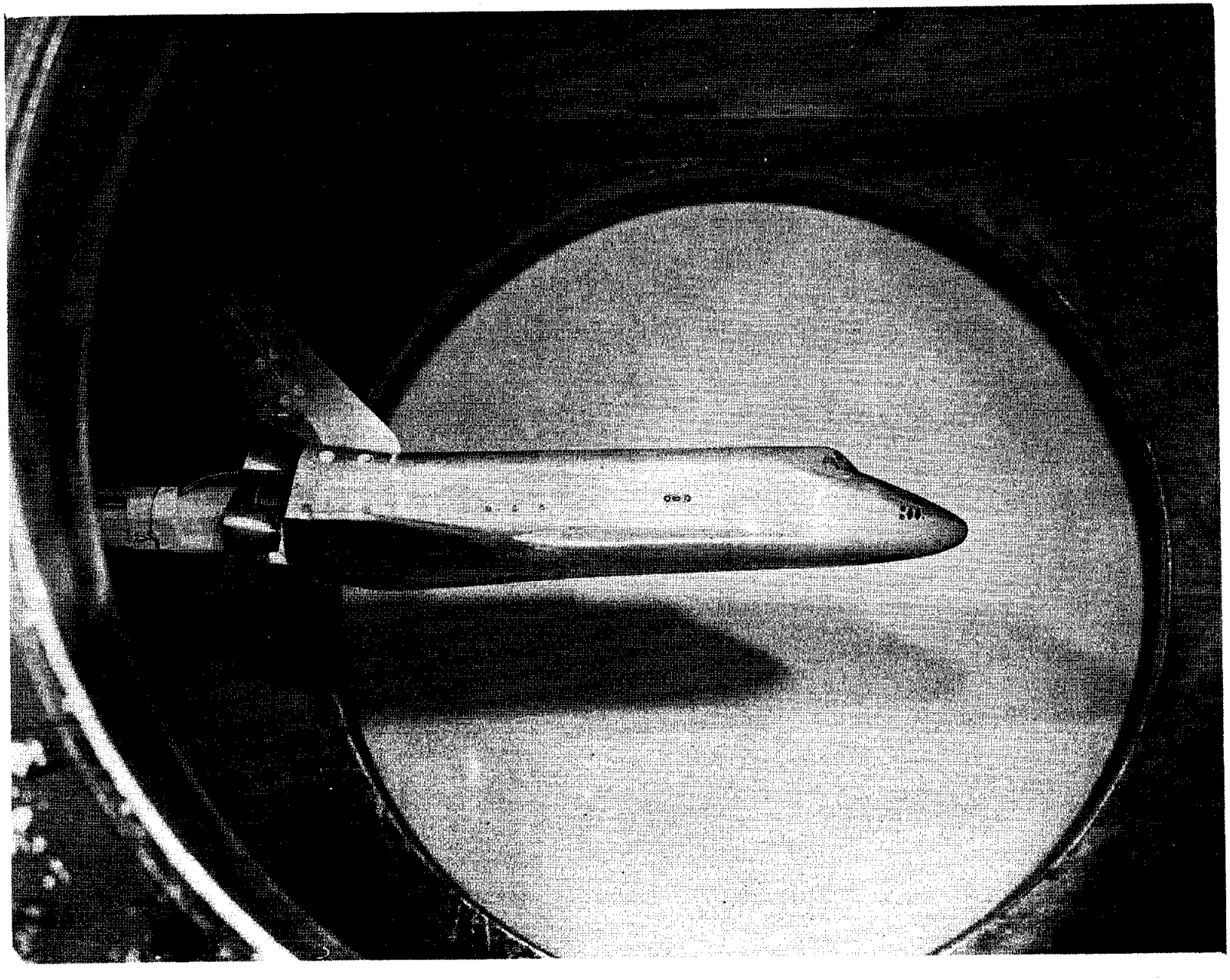

Figure 3. Model Photograph

Model 72-Ø Installation (Side View)

Appendix

Tabulated Source Data

Dataset 1st Character		Dependent Variables								
R	BETA/ALPHA	CN	CA	CLM	CY	CYN	CBL	CL	CD	L/D
S	BETA/ALPHA	MACH	PHI	Q	BP1	BP2	BP3	PT1	PT2	PSC
T	BETA/ALPHA	P1	TS	TT	TBF	TSB	PFLOOR	PCEIL	RN	

	Page No.
Volume 1	
Datasets R7E001-R7EC73	1 - 360
Datasets S7E001-S7E166	361 - 538
Volume 2	
Datasets S7E067-S7EC73	539 - 720
Datasets T7E001-T7EC73	721 -1080

OA257 (LARC 20-M6-6559) OV102 W/(FSB) (R7E001) (10 JUL 81)

REFERENCE DATA

SREF = 2690.0000 SQ.FT. XMRP = 1076.6800 IN. XO
LREF = 474.8100 INCHES YMRP = .0000 IN. YO
BREF = 936.6800 INCHES ZMRP = 375.0000 IN. ZO
SCALE = .0100

PARAMETRIC DATA

BETA = .000 PHI = .000
SFDBRK = 86.600 AILRON = .000
YP = .000 1S = .000
ELEVON = .000 MACH = 6.000
S-MODE = 1.000 S-DIR = 2.000

RUN NO. 24/ 0 RN/L = 4.45 GRADIENT INTERVAL = 23.00/ 25.00

RN/L	ALPHA	BETA	CN	CA	CLM	CY	CYN	CBL	CL	CD	L/D
4.398	-.320	.06122	-.06832	.10157	-.00178	.00134	.00015	.00001	-.06775	.10195	-.66457
4.448	-.036	.00486	-.06798	.10296	-.00182	.00203	.00009	.00005	-.06791	.10300	-.65934
4.417	-.010	.06060	-.06852	.10131	-.00177	.00169	.00018	.00005	-.06850	.10132	-.67607
4.497	.124	.00510	-.06707	.10206	-.00161	.00204	.00023	.00001	-.06729	.10191	-.66025
4.514	5.065	.06367	.02760	.08814	.00394	.00056	.00040	.00002	.01971	.09023	.21843
4.539	9.389	.05841	.13621	.07989	.00795	.00054	.00028	.00013	.12135	.10104	1.20100
4.520	14.180	.05822	.26739	.07022	.00380	.00007	.00026	.00023	.24205	.13358	1.81200
4.465	19.304	.05886	.43461	.06630	.00274	-.00031	.00023	.00027	.38826	.20625	1.88250
4.434	24.367	.06638	.62161	.06279	-.00313	-.00127	.00034	.00010	.54033	.31366	1.72270
4.418	29.329	.06599	.82616	.06203	-.01112	-.00132	.00043	.00007	.68988	.45875	1.50380
4.392	33.198	.05657	.99301	.06162	-.02050	-.00022	.00009	.00037	.79720	.59527	1.33920
4.383	38.179	.05392	1.21680	.05893	-.03612	.00056	.00007	.00060	.92011	.79849	1.15230
4.372	38.578	.00564	1.23620	.06034	-.03788	.00131	.00045	.00088	.92878	.81804	1.13540
	GRADIENT	.00000	.00000	.00000	.00000	.00000	.00000	.00000	.00000	.00000	.00000

OA257 (LARC 20-M6-6559) OV102 W/(FSB) (R7E002) (10 JUL 81)

REFERENCE DATA

SREF = 2690.0000 SQ.FT. XMRP = 1076.6800 IN. XO
LREF = 474.8100 INCHES YMRP = .0000 IN. YO
BREF = 936.6800 INCHES ZMRP = 375.0000 IN. ZO
SCALE = .0100

PARAMETRIC DATA

BETA = .000 PHI = .000
SPDBRK = 86.600 AILRON = .000
YP = .000 1S = .000
ELEVON = .000 MACH = 6.000
S-MODE = 1.000 S-DIR = 2.000

RUN NO. 45/ 0 RN/L = 2.76 GRADIENT INTERVAL = .00/ 6.00

RN/L	ALPHA	BETA	CN	CA	CLM	CY	CYN	CBL	CL	CD	L/D
2.730	-.379	.03457	-.06354	.10088	-.00474	.00135	.00006	.00009	-.06287	.10130	-.62063
2.724	-.143	.04311	-.06842	.10117	-.00328	.00136	.00018	.00003	-.06816	.10134	-.67263
2.741	1.887	.03369	-.02452	.09476	-.00193	.00128	.00033	.00003	-.02763	.09390	-.29420
2.774	4.018	.02968	.01486	.09079	.00173	.00003	.00060	-.00007	.00846	.09161	.09240
2.777	5.931	.03210	.05586	.08605	.00404	-.00030	.00056	-.00009	.04667	.09137	.51082
2.792	8.346	.03395	.10964	.08264	.00673	.00048	.00043	.00004	.09648	.09768	.98769
2.799	10.724	.03214	.16608	.07771	.00617	.00019	.00045	.00007	.14872	.10726	1.38660
2.784	12.547	.03181	.21703	.07340	.00377	-.00056	.00071	-.00003	.19590	.11879	1.64910
2.766	13.976	.03109	.26343	.07155	.00298	.00026	.00045	.00014	.23835	.13305	1.79140
2.769	15.452	.03411	.30253	.06890	.00202	-.00005	.00023	.00018	.27324	.14701	1.85860
2.748	17.253	.03513	.36443	.06822	.00209	.00003	.00020	.00025	.32779	.17324	1.89210
2.741	19.891	.04593	.45150	.06758	.00256	-.00023	.00031	.00020	.40157	.21716	1.84920
	GRADIENT	-.00042	.01985	-.00215	.00148	-.00039	.00006	-.00003	.01834	-.00063	.19872

RUN NO. 49/ 0 RN/L = 4.39 GRADIENT INTERVAL = .00/ 6.00

RN/L	ALPHA	BETA	CN	CA	CLM	CY	CYN	CBL	CL	CD	L/D
4.338	-.279	.01231	-.06783	.10016	-.00243	.00114	.00020	.00002	-.06734	.10048	-.67017
4.372	-.264	.01237	-.06814	.10039	-.00216	.00114	.00019	.00001	-.06768	.10071	-.67203
4.467	-.094	.00147	-.06695	.10113	-.00185	.00101	.00020	-.00008	-.06678	.10124	-.65963
4.365	.393	.00468	-.05592	.09829	-.00178	.00090	.00020	-.00001	-.05660	.09790	-.57808
4.398	2.162	.00451	-.02301	.09314	-.00035	.00089	.00023	-.00002	-.02651	.09221	-.28745
4.389	3.936	.01087	.01027	.08942	.00261	.00078	.00036	.00001	.00410	.08991	.04562
4.395	5.564	.00508	.04376	.08616	.00482	.00006	.00048	-.00005	.03520	.09000	.39115
4.377	7.012	.00262	.07469	.08382	.00667	.00006	.00056	-.00008	.06390	.09231	.69218
4.388	8.174	.00697	.09981	.08159	.00763	.00039	.00043	-.00000	.08720	.09495	.91834
4.401	9.493	.00028	.13543	.07906	.00743	.00012	.00026	.00007	.12054	.10031	1.20160
4.396	10.598	.00384	.16272	.07681	.00689	-.00005	.00037	.00005	.14581	.10543	1.38300
4.391	11.878	.00179	.19739	.07400	.00572	-.00046	.00047	.00003	.17793	.11305	1.57390
4.393	13.298	.00542	.23712	.07142	.00437	-.00015	.00030	.00014	.21434	.12405	1.72790
4.388	14.495	.01349	.27353	.06956	.00355	.00003	.00024	.00017	.24742	.13581	1.82170
4.363	15.754	.00374	.31130	.06856	.00378	-.00012	.00006	.00027	.28099	.15050	1.86710
4.378	17.189	.01039	.35482	.06727	.00343	.00040	.00019	.00023	.31909	.16913	1.88670
4.363	18.375	.00189	.39382	.06637	.00283	-.00014	.00022	.00022	.35282	.18713	1.88540
4.453	19.637	.00554	.43731	.06546	.00207	-.00022	.00030	.00018	.38988	.20861	1.86900
	GRADIENT	.00046	.01922	-.00232	.00132	-.00015	.00006	-.00001	.01769	-.00152	.18729

OA257 (LARC 20-M6-6559) OV102 W/(FSB) (R7E002) (10 JUL 81)

REFERENCE DATA

SREF = 2690.0000 SQ.FT. XMRP = 1076.6800 IN. XO
LREF = 474.8100 INCHES YMRP = .0000 IN. YO
BREF = 936.6800 INCHES ZMRP = 375.0000 IN. ZO
SCALE = .0100

PARAMETRIC DATA

BETA = .000 PHI = .000
SPDBRK = 86.600 AILRON = .000
YP = .000 1S = .000
ELEVON = .000 MACH = 6.000
S-MODE = 1.000 S-DIR = 2.000

RUN NO. 52/ 0 RN/L = 7.48 GRADIENT INTERVAL = .00/ 6.00

RN/L	ALPHA	BETA	CN	CA	CLM	CY	CYN	CBL	CL	CD	L/D
7.398	-.280	-.00471	-.07439	.10317	-.00094	.00127	.00030	-.00004	-.07388	.10353	-.71365
7.267	-.240	-.00284	-.07028	.10183	-.00142	.00115	.00025	-.00000	-.06985	.10213	-.68394
7.349	1.395	-.00283	-.03917	.09639	-.00097	.00088	.00030	-.00002	-.04150	.09540	-.43501
7.520	3.447	.00003	.00047	.09096	.00115	.00056	.00027	.00003	-.00500	.09083	-.05509
7.392	5.262	.00425	.03743	.08704	.00377	.00061	.00045	-.00000	.02929	.09010	.32511
7.443	7.163	.00140	.08161	.08413	.00662	-.00005	.00048	-.00004	.07048	.09364	.75265
7.641	8.817	.00541	.11997	.08149	.00804	.00024	.00040	.00003	.10606	.09892	1.07220
7.738	10.518	.00075	.16377	.07776	.00736	.00001	.00032	.00009	.14682	.10634	1.38070
7.655	11.987	-.00147	.20362	.07478	.00626	.00014	.00052	.00006	.18365	.11544	1.59090
7.560	13.853	.00365	.25816	.07162	.00510	.00021	.00029	.00018	.23351	.13135	1.77780
7.551	15.234	.00323	.30051	.06950	.00427	.00016	.00014	.00027	.27169	.14602	1.86060
7.571	16.541	.00303	.34030	.06816	.00345	.00019	.00026	.00024	.30681	.16222	1.89130
7.588	17.708	.00505	.37784	.06712	.00307	.00003	.00030	.00022	.33952	.17886	1.89820
7.570	18.469	.00261	.40063	.06656	.00275	.00059	.00033	.00024	.35891	.19005	1.88850
	GRADIENT	.00182	.01980	-.00242	.00122	-.00007	.00004	.00000	.01830	-.00139	.19633

OA257 (LARC 20-M6-6559) OV102 W/(FSB) (R7E003) (10 JUL 81)

REFERENCE DATA

SREF = 2690.0000 SQ.FT. XMRP = 1076.6800 IN. XO
LREF = 474.8100 INCHES YMRP = .0000 IN. YO
BREF = 936.6800 INCHES ZMRP = 375.0000 IN. ZO
SCALE = .0100

PARAMETRIC DATA

BETA = .000 PHI = .000
SPDBRK = 86.600 AILRON = .000
YP = .000 1S = .000
ELEVON = .000 MACH = 6.000
S-MODE = 1.000 S-DIR = 2.000

RUN NO. 46/ 0 RN/L = 2.72 GRADIENT INTERVAL = 23.00/ 25.00

RN/L	ALPHA	BETA	CN	CA	CLM	CY	CYN	CBL	CL	CD	L/D
2.689	14.763	.00656	.28437	.06996	.00222	.00029	.00035	.00018	.25716	.14012	1.83530
2.759	14.971	.00888	.28342	.06968	.00237	-.00031	.00038	.00015	.25580	.14053	1.82020
2.696	15.809	.01374	.31681	.06899	.00183	.00032	.00029	.00024	.28604	.15269	1.87330
2.697	17.055	.00401	.35561	.06809	.00151	.00035	.00021	.00024	.32000	.16940	1.88910
2.697	18.477	.01130	.40300	.06793	.00302	.00017	.00015	.00024	.36070	.19214	1.87720
2.701	19.747	.00262	.44633	.06718	.00187	.00039	.00032	.00021	.39738	.21403	1.85660
2.712	21.058	.00665	.49484	.06607	.00051	-.00008	.00042	.00015	.43806	.23946	1.82930
2.719	22.188	.00345	.53537	.06441	-.00082	-.00033	.00054	.00003	.47140	.26182	1.80050
2.710	23.455	.00995	.58227	.06377	-.00260	-.00043	.00071	-.00004	.50877	.29026	1.75280
2.709	24.392	.00618	.62053	.06363	-.00298	-.00077	.00072	-.00004	.53887	.31422	1.71500
2.738	25.548	.01009	.66988	.06311	-.00437	-.00077	.00075	-.00002	.57716	.34584	1.66890
2.733	26.507	.00453	.70195	.06279	-.00551	-.00042	.00054	.00012	.60014	.36948	1.62430
2.751	28.091	.01225	.76717	.06249	-.00757	.00018	.00050	.00011	.64738	.41637	1.55480
2.753	29.765	.00662	.83718	.06289	-.00976	-.00072	.00059	-.00002	.69551	.47020	1.47920
	GRADIENT	-.00402	.04083	-.00014	-.00041	-.00036	.00001	.00000	.03212	.02557	-.04034

OA257 (LARC 20-M6-6559) OV102 W/(FSB) (R7E003) (10 JUL 81)

REFERENCE DATA

SREF = 2690.0000 SQ.FT. XMRP = 1076.6800 IN. XO
LREF = 474.8100 INCHES YMRP = .0000 IN. YO
BREF = 936.6800 INCHES ZMRP = 375.0000 IN. ZO
SCALE = .0100

PARAMETRIC DATA

BETA = .000 PHI = .000
SPDBRK = 86.600 AILRON = .000
YP = .000 IS = .000
ELEVON = .000 MACH = 6.000
S-MODE = 1.000 S-DIR = 2.000

RUN NO. 29/ O RN/L = 4.51 GRADIENT INTERVAL = 23.00/ 25.00

RN/L	ALPHA	BETA	CN	CA	CLM	CY	CYN	CBL	CL	CD	L/D
4.426	13.912	-.04176	.28734	.06738	.00323	.00032	.00026	.00021	.26271	.13449	1.95340
4.438	14.239	-.03816	.00231	.00004	-.00022	.00047	-.00005	.00003	.00223	.00061	3.65000
4.431	14.572	-.03942	.27946	.06936	.00284	.00016	.00024	.00028	.25301	.13744	1.84080
4.424	14.594	-.03055	.27914	.06938	.00295	.00034	.00021	.00028	.25265	.13748	1.83770
4.643	15.241	-.04028	.30246	.06967	.00423	.00042	.00015	.00040	.27351	.14672	1.86410
4.440	15.434	-.03974	.30491	.06878	.00331	.00001	.00015	.00035	.27561	.14745	1.86920
4.633	15.566	-.04049	.30194	.06939	.00418	.00047	.00018	.00043	.27224	.14787	1.84100
4.427	16.323	-.03980	.33225	.06799	.00314	.00026	.00010	.00043	.29975	.15863	1.88960
4.440	17.614	-.03046	.37486	.06682	.00297	-.00016	.00013	.00037	.33707	.17713	1.90300
4.438	18.465	-.03654	.40398	.06674	.00296	-.00056	.00024	.00036	.36204	.19125	1.89310
4.468	19.824	-.04049	.45056	.06526	.00159	-.00019	.00033	.00032	.40173	.21419	1.87560
4.493	20.921	-.04146	.49006	.06445	.00059	-.00023	.00015	.00038	.43474	.23520	1.84840
4.513	22.077	-.04128	.53380	.06398	-.00036	-.00001	.00026	.00035	.47061	.25992	1.81060
4.534	23.132	-.03509	.57273	.06339	-.00167	-.00014	.00025	.00040	.50178	.28329	1.77120
4.553	23.978	-.03953	.60474	.06296	-.00278	-.00061	.00043	.00026	.52696	.30328	1.73750
4.590	24.846	-.04182	.63828	.06260	-.00402	-.00062	.00049	.00030	.55290	.32500	1.70120
4.625	25.512	-.03188	.66356	.06207	-.00481	-.00084	.00055	.00025	.57213	.34181	1.67380
4.572	26.288	-.04052	.69544	.06210	-.00559	-.00031	.00037	.00036	.59601	.36367	1.63890
4.547	27.200	-.03992	.73211	.06193	-.00722	-.00042	.00028	.00042	.62284	.38972	1.59820
4.530	28.420	-.04080	.78373	.06213	-.00946	-.00040	.00045	.00038	.65970	.42764	1.54270
4.508	29.582	-.04163	.83191	.06209	-.01160	-.00101	.00075	.00009	.69282	.46469	1.49090
	GRADIENT	-.00392	.03825	-.00046	-.00137	-.00028	.00014	-.00006	.02983	.02434	-.04084

OA257 (LARC 20-M6-6559) OV102 W/(FSB) (R7E003) (10 JUL 81)

REFERENCE DATA

SREF = 2690.0000 SQ.FT. XMRP = 1076.6800 IN. XO
LREF = 474.8100 INCHES YMRP = .0000 IN. YO
BREF = 936.6800 INCHES ZMRP = 375.0000 IN. ZO
SCALE = .0100

PARAMETRIC DATA

BETA = .000 PHI = .000
SPDBRK = 86.600 AILRON = .000
YP = .000 1S = .000
ELEVON = .000 MACH = 6.000
S-MODE = 1.000 S-DIR = 2.000

RUN NO. 53/ O RN/L = 7.44 GRADIENT INTERVAL = 23.00/ 25.00

RN/L	ALPHA	BETA	CN	CA	CLM	CY	CYN	CBL	CL	CD	L/D
7.411	14.317	.00997	.27639	.07057	.00467	.00036	.00013	.00026	.25035	.13672	1.83110
7.576	15.340	.00799	.29845	.06981	.00486	.00008	.00018	.00025	.26935	.14628	1.84130
7.502	15.364	.01488	.29973	.06980	.00469	.00015	.00018	.00025	.27052	.14672	1.84370
7.400	15.977	.00762	.32844	.06840	.00384	.00010	.00011	.00026	.29692	.15616	1.90140
7.371	17.339	.00782	.37268	.06736	.00335	-.00001	.00023	.00024	.33567	.17537	1.91410
7.372	18.397	.00627	.40852	.06644	.00270	.00008	.00016	.00025	.36668	.19197	1.91010
7.476	19.822	.00735	.45634	.06523	.00150	.00030	.00021	.00023	.40718	.21611	1.88420
7.444	20.849	.00963	.49441	.06478	.00075	.00025	.00019	.00023	.43898	.23650	1.85610
7.394	22.269	.00687	.54726	.06396	-.00123	.00040	.00014	.00029	.48220	.26658	1.80880
7.384	23.681	.01090	.59990	.06339	-.00286	.00012	-.00003	.00032	.52392	.29900	1.75230
7.366	24.844	.00996	.64603	.06326	-.00433	-.00014	.00014	.00025	.55966	.32884	1.70190
7.471	26.290	.00919	.70480	.06290	-.00664	-.00037	.00027	.00019	.60404	.36856	1.63890
7.510	27.486	.00876	.75228	.06223	-.00879	-.00041	.00033	.00012	.63865	.40240	1.58710
7.495	29.210	.01328	.82434	.06220	-.01209	-.00090	.00061	-.00006	.68916	.45658	1.50940
	GRADIENT	-.00081	.03967	-.00011	-.00127	-.00022	.00014	-.00006	.03073	.02566	-.04334

OA257 (LARC 20-M6-6559) OV102 W/(FSB) (R7E004) (10 JUL 81)

REFERENCE DATA

SREF = 2690.0000 SQ.FT. XMRP =. 1076.6800 IN. XO
LREF = 474.8100 INCHES YMRP = .0000 IN. YO
BREF = 936.6800 INCHES ZMRP = 375.0000 IN. ZO
SCALE = .0100

PARAMETRIC DATA

BETA = .000 PHI = .000
SPDBRK = 86.600 AILRON = .000
YP = .000 1S = .000
ELEVON = .000 MACH = 6.000
S-MODE = 1.000 S-DIR = 2.000

RUN NO. 47/ O RN/L = 2.71 GRADIENT INTERVAL = 23.00/ 25.00

RN/L	ALPHA	BETA	CN	CA	CLM	CY	CYN	CBL	CL	CD	L/D
2.631	19.514	.04738	.44304	.06685	.00199	.00071	.00029	.00022	.39526	.21100	1.87320
2.717	19.879	.04589	.44392	.06603	.00225	-.00007	.00030	.00019	.39502	.21304	1.85420
2.638	21.116	.04833	.49769	.06488	-.00022	.00004	.00045	.00013	.44090	.23982	1.83850
2.664	22.427	.04615	.54686	.06402	-.00165	-.00016	.00055	.00002	.48108	.26781	1.79640
2.674	23.724	.04599	.59826	.06328	-.00292	-.00063	.00071	-.00005	.52224	.29863	1.74880
2.676	25.128	.05072	.64886	.06225	-.00433	-.00054	.00077	-.00004	.56102	.33189	1.69040
2.695	26.290	.04509	.69767	.06195	-.00577	-.00030	.00061	.00006	.59807	.36455	1.64060
2.702	27.496	.04825	.74664	.06192	-.00734	.00021	.00046	.00014	.63371	.39964	1.58570
2.713	28.451	.04627	.78739	.06248	-.00807	.00016	.00046	.00008	.66252	.43005	1.54060
2.725	29.704	.05102	.83653	.06205	-.01054	.00006	.00057	-.00004	.69586	.46841	1.48560
2.722	30.783	.04148	.88596	.06244	-.01240	.00029	.00038	.00003	.72918	.50707	1.43800
2.727	31.903	.03606	.93488	.06160	-.01552	.00032	.00020	.00019	.76111	.54636	1.39310
2.734	32.914	.03374	.97894	.06108	-.01841	.00074	.00022	.00032	.78861	.58321	1.35220
2.742	34.055	.03455	1.03140	.06060	-.02189	.00102	.00023	.00035	.82059	.62778	1.30710
2.775	35.240	.03582	1.08260	.06039	-.02495	.00059	.00022	.00038	.84936	.67399	1.26020
2.770	36.426	.03355	1.13910	.05990	-.02880	.00071	.00030	.00037	.88101	.72459	1.21590
2.747	37.577	.03513	1.18850	.05917	-.03277	.00074	.00045	.00032	.90586	.77171	1.17380
2.705	39.364	.03393	1.26930	.05861	-.03796	.00060	.00057	.00041	.94416	.85036	1.11030
	GRADIENT	.00000	.00000	.00000	.00000	.00000	.00000	.00000	.00000	.00000	.00000

OA257 (LARC 20-M6-6559) OV102 W/(FSB) (R7E004) (10 JUL 81)

REFERENCE DATA

SREF = 2690.0000 SQ.FT. XMRP = 1076.6800 IN. XO
LREF = 474.8100 INCHES YMRP = .0000 IN. YO
BREF = 936.6800 INCHES ZMRP = 375.0000 IN. ZO
SCALE = .0100

PARAMETRIC DATA

BETA = .000 PHI = .000
SPDBRK = 86.600 AILRON = .000
YP = .000 1S = .000
ELEVON = .000 MACH = 6.000
S-MODE = 1.000 S-DIR = 2.000

RUN NO. 30/ 0 RN/L = 4.52 GRADIENT INTERVAL = 23.00/ 25.00

RN/L	ALPHA	BETA	CN	CA	CLM	CY	CYN	CBL	CL	CD	L/D
4.406	13.501	-.00001	.00404	.00091	-.00059	.00087	-.00001	.00003	.00372	.00183	2.03550
4.406	14.469	.01024	.27799	.06985	.00263	.00035	.00023	.00026	.25172	.13709	1.83620
4.568	14.934	.00063	.28391	.06977	.00353	-.00002	.00024	.00026	.25634	.14058	1.82350
4.553	14.950	-.00102	.28347	.06993	.00308	-.00014	.00020	.00025	.25583	.14069	1.81840
4.430	20.262	.00235	.40565	.06548	.00247	-.00072	.00008	.00029	.35787	.20191	1.77240
4.421	24.469	-.00024	.62787	.06260	-.00403	-.00077	.00058	.00015	.54555	.31703	1.72080
4.434	25.296	.00708	.66131	.06251	-.00479	-.00064	.00049	.00021	.57119	.33908	1.68450
4.445	26.371	.00069	.70295	.06207	-.00651	-.00011	.00027	.00034	.60223	.36785	1.63720
4.455	27.653	.00163	.75699	.06190	-.00887	-.00020	.00030	.00032	.64179	.40616	1.58020
4.481	28.487	.00186	.79245	.06221	-.01040	-.00033	.00048	.00021	.66683	.43264	1.54130
4.511	29.231	.00933	.82393	.06207	-.01189	-.00069	.00065	.00003	.68871	.45651	1.50860
4.519	30.193	.00128	.86292	.06213	-.01369	-.00081	.00070	.00002	.71460	.48768	1.46530
4.575	30.747	.00794	.88656	.06194	-.01532	-.00049	.00050	.00019	.73027	.50649	1.44180
4.610	31.696	-.00117	.92823	.06185	-.01731	.00024	.00017	.00039	.75729	.54033	1.40150
4.635	32.946	-.00186	.98279	.06164	-.02094	.00065	.00022	.00042	.79122	.58621	1.34970
4.639	33.693	.00845	1.01630	.06152	-.02306	.00019	.00025	.00038	.81145	.61497	1.31950
4.633	34.637	.00039	1.05740	.06096	-.02620	.00035	.00024	.00044	.83531	.65112	1.28290
4.616	35.645	-.00184	1.10310	.06042	-.02925	.00050	.00026	.00045	.86121	.69193	1.24460
4.632	36.635	.00904	1.14770	.06021	-.03235	.00077	.00023	.00056	.88508	.73319	1.20720
4.589	37.935	.00148	1.20620	.05984	-.03698	.00072	.00037	.00049	.91455	.78871	1.15950
4.557	39.080	.00272	1.20840	.05898	-.03690	.00062	.00035	.00045	.90085	.80756	1.11550
4.541	39.273	.00967	1.26710	.05938	-.04164	.00035	.00042	.00051	.94336	.84808	1.11240
	GRADIENT	.00000	.00000	.00000	.00000	.00000	.00000	.00000	.00000	.00000	.00000

OA257 (LARC 20-M6-6559) OV102 W/(FSB) (R7E004) (10 JUL 81)

REFERENCE DATA

SREF = 2690.0000 SQ.FT. XMRP = 1076.6800 IN. XO
LREF = 474.8100 INCHES YMRP = .0000 IN. YO
BREF = 936.6800 INCHES ZMRP = 375.0000 IN. ZO
SCALE = .0100

PARAMETRIC DATA

BETA = .000 PHI = .000
SPDBRK = 86.600 AILRON = .000
YP = .000 1S = .000
ELEVON = .000 MACH = 6.000
S-MODE = 1.000 S-DIR = 2.000

RUN NO. 54/ 0 RN/L = 7.36 GRADIENT INTERVAL = 23.00/ 25.00

RN/L	ALPHA	BETA	CN	CA	CLM	CY	CYN	CBL	CL	CD	L/D
7.346	24.023	.01167	.61615	.06274	-.00330	.00006	.00001	.00028	.53724	.30814	1.74350
7.564	24.282	.01648	.61706	.06334	-.00363	-.00007	.00006	.00033	.53643	.31149	1.72220
7.537	24.311	.01175	.61832	.06354	-.00353	.00020	.00008	.00037	.53733	.31246	1.71970
7.367	24.986	.00889	.65447	.06250	-.00463	-.00023	.00017	.00019	.56682	.33309	1.70170
7.375	25.600	.01364	.68052	.06239	-.00543	.00004	.00025	.00018	.58676	.35031	1.67500
7.331	26.900	.01161	.73255	.06197	-.00786	-.00020	.00019	.00021	.62525	.38669	1.61690
7.227	27.936	.01003	.77734	.06157	-.00970	-.00015	.00025	.00013	.65792	.41856	1.57190
7.340	28.642	.00863	.80604	.06171	-.01097	-.00060	.00040	.00001	.67783	.44052	1.53870
7.341	29.280	.01966	.83458	.06174	-.01230	-.00073	.00053	-.00007	.69776	.46203	1.51020
7.316	30.473	.00473	.88524	.06216	-.01491	-.00078	.00043	-.00008	.73144	.50250	1.45560
7.282	31.297	.00668	.92076	.06174	-.01671	-.00017	.00018	.00011	.75471	.53107	1.42110
7.284	32.701	.00733	.98286	.06148	-.02051	.00017	.00003	.00027	.79386	.58273	1.36230
7.421	33.956	.01377	1.03970	.06179	-.02384	.00014	.00011	.00020	.82790	.63199	1.31000
7.400	35.076	.00608	1.08860	.06143	-.02729	.00008	.00009	.00025	.85560	.67585	1.26600
7.362	36.206	.00519	1.14030	.06132	-.03092	.00037	.00014	.00029	.88389	.72304	1.22250
7.327	37.619	.00492	1.20290	.06038	-.03609	.00066	.00011	.00047	.91598	.78210	1.17120
7.314	39.067	.00238	1.26970	.06063	-.04095	.00082	.00016	.00048	.94762	.84730	1.11840
	GRADIENT	-.00435	.04362	-.00056	-.00142	-.00033	.00015	-.00013	.03431	.02725	-.03906

OA257 (LARC 20-M6-6559) OV102 W/(FSB) (R7E005) (10 JUL 81)

REFERENCE DATA

SREF = 2690.0000 SQ.FT. XMRP = 1076.6800 IN. XO
LREF = 474.8100 INCHES YMRP = .0000 IN. YO
BREF = 936.6800 INCHES ZMRP = 375.0000 IN. ZO
SCALE = .0100

PARAMETRIC DATA

BETA = -.500 PHI = .000
SPDBRK = 86.600 AILRON = .000
YP = .000 1S = .000
ELEVON = .000 MACH = 6.000
S-MODE = 1.000 S-DIR = 2.000

RUN NO. 31/ 0 RN/L = 4.40 GRADIENT INTERVAL = 23.00/ 25.00

RN/L	ALPHA	BETA	CN	CA	CLM	CY	CYN	CBL	CL	CD	L/D
4.205	14.522	-.51252	.28657	.05905	.00296	.00393	.00056	.00074	.26260	.12902	2.03540
4.198	14.586	-.50331	.28667	.05894	.00280	.00380	.00055	.00075	.26259	.12923	2.03190
4.561	14.830	-.51352	.27958	.05830	.00376	.00353	.00058	.00073	.25534	.12791	1.99620
4.481	14.911	-.50801	.29692	.05855	.00434	.00282	.00065	.00069	.27185	.13298	2.04430
4.619	15.006	-.50990	-.00198	-.01179	-.00033	.00000	-.00001	.00001	.00114	-.01191	-.09551
4.221	15.040	-.50390	.30013	.05865	.00280	.00350	.00053	.00078	.27462	.13453	2.04140
4.249	16.159	-.51519	.33477	.05766	.00289	.00405	.00047	.00092	.30550	.14855	2.05660
4.264	17.460	-.51519	.37736	.05691	.00309	.00384	.00052	.00091	.34290	.16751	2.04710
4.294	18.303	-.51307	.40599	.05619	.00279	.00346	.00058	.00091	.36780	.18084	2.03380
4.299	18.932	-.51427	.42780	.05548	.00225	.00346	.00081	.00083	.38666	.19128	2.02150
4.334	20.069	-.51568	.46792	.05467	.00119	.00271	.00086	.00074	.42075	.21191	1.98550
4.319	21.647	-.50738	.52569	.05317	-.00089	.00260	.00103	.00070	.46900	.24334	1.92730
4.315	22.802	-.51471	.56809	.05250	-.00201	.00284	.00106	.00072	.50335	.26855	1.87430
4.344	24.285	-.51438	.62608	.05181	-.00400	.00267	.00105	.00077	.54937	.30472	1.80290
4.482	25.554	-.50256	.67341	.05137	-.00565	.00290	.00080	.00092	.58538	.33683	1.73790
4.395	26.448	-.51348	.71032	.05095	-.00650	.00308	.00081	.00094	.61328	.36199	1.69420
4.572	27.270	-.51433	.74233	.05103	-.00799	.00288	.00079	.00100	.63645	.38548	1.65100
4.551	28.711	-.51696	.79686	.05067	-.01017	.00270	.00118	.00084	.67455	.42724	1.57890
4.700	30.239	-.51783	.86260	.05077	-.01397	.00226	.00141	.00069	.71966	.47827	1.50470
	GRADIENT	.00000	.00000	.00000	.00000	.00000	.00000	.00000	.00000	.00000	.00000

OA257 (LARC 20-M6-6559) OV102 W/(FSB) (R7E006) (15 JUL 81)

REFERENCE DATA

SREF = 2690.0000 SQ.FT. XMRP = 1076.6800 IN. XO
LREF = 474.8100 INCHES YMRP = .0000 IN. YO
BREF = 936.6800 INCHES ZMRP = 375.0000 IN. ZO
SCALE = .0100

PARAMETRIC DATA

BETA = -.500 PHI = .000
SPDBRK = 86.600 AILRON = .000
YP = .000 1S = .000
ELEVON = .000 MACH = 6.000
S-MODE = 1.000 S-DIR = 2.000

RUN NO. 32/ 0 RN/L = 4.24 GRADIENT INTERVAL = 23.00/ 25.00

RN/L	ALPHA	BETA	CN	CA	CLM	CY	CYN	CBL	CL	CD	L/D
4.324	14.457	-.48827	.27789	.06978	.00320	.00426	.00056	.00082	.25167	.13695	1.83770
4.462	14.810	-.50116	.27905	.06954	.00381	.00401	.00059	.00079	.25201	.13855	1.81880
4.469	15.367	-.50234	.29649	.06935	.00387	.00367	.00069	.00074	.26751	.14544	1.83930
4.332	24.450	-.50070	.62663	.06254	-.00400	.00329	.00095	.00087	.54455	.31630	1.72170
4.346	25.209	-.50087	.65736	.06224	-.00480	.00353	.00094	.00090	.56825	.33629	1.68980
4.366	26.332	-.49051	.70139	.06195	-.00644	.00350	.00088	.00102	.60113	.36663	1.63960
4.402	27.644	-.50059	.75653	.06189	-.00877	.00340	.00094	.00099	.64145	.40584	1.58060
4.442	28.718	-.49909	.80102	.06184	-.01085	.00251	.00123	.00083	.67278	.43912	1.53210
4.467	29.578	-.50248	.83738	.06190	-.01271	.00272	.00147	.00067	.69770	.46717	1.49350
4.478	30.581	-.50357	.87976	.06176	-.01496	.00290	.00127	.00080	.72597	.50075	1.44980
4.474	31.565	-.49757	.92336	.06160	-.01753	.00376	.00090	.00113	.75450	.53583	1.40810
4.470	32.326	-.50320	.95508	.06122	-.01966	.00411	.00076	.00120	.77432	.56245	1.37670
4.463	33.347	-.49197	.99921	.06099	-.02256	.00423	.00069	.00131	.80116	.60023	1.33480
4.461	34.367	-.50193	1.04630	.06098	-.02566	.00434	.00069	.00138	.82924	.64097	1.29370
4.548	35.339	-.49196	1.09000	.06057	-.02875	.00434	.00069	.00147	.85411	.67986	1.25630
4.567	36.359	-.49847	1.13500	.06016	-.03184	.00497	.00069	.00159	.87838	.72132	1.21770
4.587	37.145	-.49325	1.17040	.05966	-.03452	.00482	.00070	.00165	.89693	.75430	1.18910
4.560	38.349	-.50196	1.22470	.05911	-.03872	.00429	.00080	.00169	.92378	.80622	1.14580
4.622	39.314	-.50303	1.26860	.05909	-.04191	.00438	.00101	.00161	.94405	.84946	1.11130
	GRADIENT	.00000	.00000	.00000	.00000	.00000	.00000	.00000	.00000	.00000	.00000

OA257 (LARC 20-M6-6559) OV102 W/(FSB) (R7E007) (10 JUL 81)

REFERENCE DATA

SREF = 2690.0000 SQ.FT. XMRP = 1076.6800 IN. XO
LREF = 474.8100 INCHES YMRP = .0000 IN. YO
BREF = 936.6800 INCHES ZMRP = 375.0000 IN. ZO
SCALE = .0100

PARAMETRIC DATA

BETA = .500 PHI = .000
SPDBRK = 86.600 AILRON = .000
YP = .000 1S = .000
ELEVON = .000 MACH = 6.000
S-MODE = 1.000 S-DIR = 2.000

RUN NO. 33/ 0 RN/L = 4.52 GRADIENT INTERVAL = 23.00/ 25.00

RN/L	ALPHA	BETA	CN	CA	CLM	CY	CYN	CBL	CL	CD	L/D
4.387	14.556	.48305	.27849	.06953	.00277	-.00401	-.00022	-.00038	.25208	.13729	1.83610
4.394	14.585	.48797	.27903	.06943	.00287	-.00401	-.00021	-.00040	.25256	.13746	1.83740
4.433	15.259	.48546	.29981	.06881	.00301	-.00383	-.00033	-.00034	.27113	.14528	1.86620
4.496	15.406	.49393	.29730	.06917	.00382	-.00373	-.00043	-.00027	.26824	.14566	1.84150
4.452	15.783	.49437	.31579	.06845	.00336	-.00378	-.00032	-.00033	.28527	.15176	1.87970
4.482	16.746	.48560	.34571	.06766	.00297	-.00382	-.00036	-.00035	.31156	.16440	1.89510
4.503	17.463	.48518	.36912	.06728	.00305	-.00359	-.00033	-.00038	.33192	.17494	1.89730
4.543	18.654	.48668	.40915	.06619	.00247	-.00357	-.00042	-.00032	.36648	.19358	1.89320
4.567	19.307	.49389	.43108	.06549	.00163	-.00337	-.00051	-.00030	.38518	.20433	1.88510
4.574	19.976	.48799	.45511	.06517	.00114	-.00356	-.00066	-.00028	.40546	.21673	1.87080
4.597	20.832	.49624	.48389	.06450	.00045	-.00308	-.00064	-.00023	.42932	.23237	1.84760
4.609	21.622	.48922	.51202	.06385	-.00033	-.00316	-.00080	-.00019	.45246	.24802	1.82430
4.635	22.373	.48953	.54029	.06320	-.00122	-.00308	-.00087	-.00015	.47556	.26409	1.80080
4.621	23.630	.49668	.58758	.06270	-.00273	-.00305	-.00074	-.00021	.51318	.29296	1.75170
4.597	24.432	.48832	.61781	.06235	-.00377	-.00364	-.00056	-.00034	.53669	.31230	1.71850
4.574	25.307	.49560	.65484	.06235	-.00503	-.00407	-.00035	-.00050	.56535	.33629	1.68110
4.531	26.089	.48472	.68573	.06193	-.00621	-.00431	-.00033	-.00058	.58862	.35719	1.64790
4.517	27.140	.49073	.72962	.06201	-.00796	-.00409	-.00040	-.00059	.62100	.38800	1.60050
4.479	27.671	.48854	.75205	.06219	-.00852	-.00409	-.00038	-.00061	.63716	.40432	1.57590
4.483	28.793	.49198	.79702	.06164	-.01052	-.00391	-.00052	-.00062	.66880	.43790	1.52730
	GRADIENT	-.01042	.03769	-.00043	-.00130	-.00073	.00023	-.00016	.02931	.02411	-.04139

OA257 (LARC 20-M6-6559) OV102 W/(FSB) (R7E008) (10 JUL 81)

REFERENCE DATA

SREF = 2690.0000 SQ.FT. XMRP = 1076.6800 IN. XO
LREF = 474.8100 INCHES YMRP = .0000 IN. YO
BREF = 936.6800 INCHES ZMRP = 375.0000 IN. ZO
SCALE = .0100

PARAMETRIC DATA

BETA = .500 PHI = .000
SPDBRK = 86.600 AILRON = .000
YP = .000 1S = .000
ELEVON = .000 MACH = 6.000
S-MODE = 1.000 S-DIR = 2.000

RUN NO. 34/ 0 RN/L = 4.50 GRADIENT INTERVAL = 23.00/ 25.00

RN/L	ALPHA	BETA	CN	CA	CLM	CY	CYN	CBL	CL	CD	L/D
4.431	14.483	.50735	.27868	.06979	.00296	-.00362	-.00019	-.00035	.25237	.13727	1.83850
4.418	14.499	.50553	.27887	.06964	.00292	-.00376	-.00019	-.00035	.25255	.13723	1.84030
4.452	14.945	.50975	.28280	.06956	.00373	-.00402	-.00019	-.00041	.25530	.14014	1.82180
4.422	23.189	.50407	.57741	.06303	-.00269	-.00285	-.00091	-.00018	.50594	.28530	1.77340
4.421	23.952	.49968	.60720	.06285	-.00348	-.00308	-.00060	-.00036	.52940	.30394	1.74180
4.437	24.516	.50656	.62939	.06273	-.00389	-.00360	-.00048	-.00045	.54662	.31824	1.71760
4.437	25.586	.50170	.67177	.06220	-.00555	-.00385	-.00026	-.00058	.57904	.34621	1.67250
4.444	26.446	.50288	.70498	.06190	-.00664	-.00400	-.00046	-.00054	.60363	.36939	1.63410
4.463	27.030	.50833	.72992	.06166	-.00779	-.00374	-.00042	-.00058	.62218	.38664	1.60920
4.472	28.161	.50267	.77424	.06133	-.01008	-.00340	-.00057	-.00049	.65365	.41947	1.55830
4.512	29.121	.50294	.81669	.06160	-.01171	-.00332	-.00064	-.00052	.68348	.45126	1.51460
4.544	29.665	.50344	.84026	.06170	-.01287	-.00330	-.00055	-.00052	.69960	.46948	1.49020
4.551	30.732	.50175	.88431	.06157	-.01511	-.00332	-.00042	-.00064	.72866	.50483	1.44340
4.551	31.259	.49966	.90640	.06162	-.01622	-.00323	-.00042	-.00065	.74285	.52300	1.42030
4.568	32.368	.50750	.95443	.06156	-.01899	-.00320	-.00042	-.00062	.77318	.56296	1.37340
4.586	33.312	.49810	.99526	.06131	-.02181	-.00326	-.00033	-.00076	.79806	.59784	1.33490
4.579	34.428	.49996	1.04740	.06085	-.02548	-.00313	-.00035	-.00063	.82950	.64234	1.29140
4.553	35.611	.50120	1.10360	.06074	-.02929	-.00312	-.00042	-.00062	.86183	.69198	1.24550
4.529	36.688	.50757	1.14880	.06023	-.03291	-.00296	-.00034	-.00069	.88521	.73464	1.20500
4.634	38.019	.50188	1.20800	.05969	-.03714	-.00320	-.00034	-.00072	.91487	.79103	1.15660
4.587	39.299	.50803	1.26750	.05920	-.04218	-.00257	-.00033	-.00059	.94336	.84859	1.11170
	GRADIENT	.00144	.03916	-.00022	-.00091	-.00055	.00033	-.00020	.03066	.02480	-.04201

OA257 (LARC 20-M6-6559) OV102 W/(FSB)FLR FILL.IN (R7E009) (10 JUL 81)

REFERENCE DATA

SREF =	2690.0000 SQ.FT.	XMRP =	1076.6800 IN. XO		
LREF =	474.8100 INCHES	YMRP =	.0000 IN. YO		
BREF =	936.6800 INCHES	ZMRP =	375.0000 IN. ZO		
SCALE =	.0100				

PARAMETRIC DATA

BETA =	.000	PHI =	.000
SPDBRK =	86.600	AILRON =	.000
YP =	.000	1S =	.000
ELEVON =	.000	MACH =	6.000
S-MODE =	1.000	S-DIR =	2.000

RUN NO. 51/ O RN/L = 4.31 GRADIENT INTERVAL = 23.00/ 25.00

RN/L	ALPHA	BETA	CN	CA	CLM	CY	CYN	CBL	CL	CD	L/D
4.346	-.253	.00539	-.06871	.10065	-.00245	.00115	.00019	.00002	-.06827	.10095	-.67624
4.332	-.241	.00129	-.06725	.10103	-.00258	.00121	.00020	.00003	-.06682	.10131	-.65955
4.549	-.018	-.00061	-.06938	.10086	-.00210	.00089	.00024	-.00007	-.06935	.10088	-.68744
4.332	.929	.00067	-.04748	.09731	-.00174	.00083	.00022	-.00002	-.04905	.09653	-.50818
4.318	2.759	-.00279	-.01249	.09280	.00022	.00072	.00033	-.00002	-.01694	.09209	-.18396
4.316	4.432	.00496	.02023	.08993	.00320	.00041	.00044	-.00001	.01322	.09123	.14493
4.319	6.013	-.00094	.05478	.08697	.00547	-.00006	.00053	-.00006	.04537	.09223	.49188
4.317	7.946	.00242	.09933	.08406	.00738	.00048	.00053	-.00005	.08675	.09699	.89450
4.322	9.674	-.00576	.14205	.08113	.00755	.00032	.00025	.00009	.12640	.10384	1.21720
4.347	11.131	.00213	.18219	.07762	.00619	-.00030	.00040	.00006	.16378	.11134	1.47100
4.367	12.272	-.00352	.21579	.07572	.00534	-.00047	.00037	.00010	.19476	.11986	1.62500
4.357	13.709	.00183	.26163	.07350	.00409	.00021	.00034	.00016	.23676	.13341	1.77460
4.345	15.057	-.00620	.30274	.07156	.00298	.00002	.00021	.00022	.27376	.14775	1.85290
4.327	16.341	.00336	.34852	.07112	.00332	.00015	.00008	.00031	.31443	.16630	1.89070
4.283	17.683	-.00630	.39487	.07030	.00299	.00014	.00021	.00026	.35487	.18691	1.89850
4.222	19.086	-.00731	.44841	.06976	.00232	-.00019	.00029	.00022	.40095	.21255	1.88640
4.211	20.313	-.00500	.49543	.06896	.00112	-.00013	.00022	.00021	.44067	.23666	1.86210
4.185	21.444	.00051	.54020	.06856	-.00008	-.00044	.00019	.00021	.47774	.26131	1.82820
4.207	22.936	.00236	.60172	.06828	-.00174	-.00011	.00034	.00020	.52754	.29738	1.77400
	GRADIENT	.00000	.00000	.00000	.00000	.00000	.00000	.00000	.00000	.00000	.00000

OA257 (LARC 20-M6-6559) OV102 W/(FSB) (R7E010) (10 JUL 81)

REFERENCE DATA

SREF = 2690.0000 SQ.FT. XMRP = 1076.6800 IN. XO
LREF = 474.8100 INCHES YMRP = .0000 IN. YO
BREF = 936.6800 INCHES ZMRP = 375.0000 IN. ZO
SCALE = .0100

PARAMETRIC DATA

ALPHA = 15.000 PHI = .000
SPDBRK = 86.600 AILRON = .000
YP = 1.000 1S = .000
ELEVON = .000 MACH = 6.000
S-MODE = 2.000 S-DIR = 1.000

RUN NO. 83/ O RN/L = 4.53 GRADIENT INTERVAL = -.60/ .60

RN/L	BETA	ALPHA	CN	CA	CLM	CY	CYN	CBL	CL	CD	L/D
4.513	-4.144	14.55800	.27404	.07053	.00328	.04431	.00126	.00673	.24752	.13715	1.80470
4.521	-4.000	14.56800	.27457	.07053	.00344	.04276	.00122	.00654	.24800	.13732	1.80600
4.525	-3.800	14.56900	.27458	.07053	.00368	.04063	.00115	.00625	.24801	.13733	1.80590
4.531	-3.600	14.57300	.27479	.07043	.00398	.03858	.00108	.00596	.24823	.13730	1.80790
4.524	-3.400	14.56900	.27490	.07048	.00407	.03659	.00100	.00570	.24833	.13736	1.80780
4.518	-3.200	14.57900	.27453	.07037	.00416	.03447	.00091	.00543	.24797	.13721	1.80730
4.511	-3.000	14.57600	.27450	.07030	.00423	.03241	.00085	.00514	.24797	.13711	1.80850
4.508	-2.800	14.57900	.27484	.07033	.00434	.03042	.00078	.00485	.24829	.13725	1.80900
4.514	-2.600	14.58400	.27507	.07034	.00450	.02804	.00069	.00457	.24849	.13733	1.80950
4.516	-2.400	14.58400	.27506	.07043	.00455	.02609	.00067	.00424	.24846	.13742	1.80800
4.508	-2.200	14.58900	.27526	.07052	.00485	.02390	.00063	.00392	.24862	.13758	1.80710
4.511	-2.000	14.59000	.27538	.07058	.00497	.02175	.00062	.00361	.24872	.13768	1.80650
4.520	-1.800	14.59700	.27556	.07069	.00514	.01953	.00061	.00325	.24885	.13785	1.80520
4.526	-1.600	14.60100	.27576	.07074	.00521	.01732	.00065	.00290	.24902	.13798	1.80480
4.533	-1.400	14.60300	.27576	.07070	.00512	.01500	.00071	.00249	.24903	.13794	1.80530
4.534	-1.200	14.60900	.27624	.07056	.00506	.01265	.00078	.00212	.24951	.13795	1.80880
4.530	-1.000	14.61000	.27619	.07049	.00471	.01041	.00080	.00175	.24948	.13787	1.80950
4.526	-.800	14.61300	.27667	.07026	.00452	.00823	.00085	.00139	.25000	.13779	1.81440
4.527	-.600	14.61600	.27656	.07009	.00425	.00613	.00082	.00106	.24992	.13761	1.81610
4.521	-.400	14.61900	.27662	.06987	.00376	.00429	.00073	.00075	.25003	.13742	1.81940
4.522	-.200	14.62500	.27738	.06958	.00339	.00246	.00056	.00049	.25082	.13736	1.82600
4.532	.000	14.62700	.27723	.06946	.00307	.00062	.00039	.00021	.25071	.13721	1.82720
4.538	.200	14.63800	.27746	.06942	.00298	-.00111	.00018	-.00004	.25091	.13728	1.82770
4.540	.400	14.63500	.27753	.06949	.00309	-.00286	-.00001	-.00029	.25097	.13735	1.82720
4.535	.600	14.64700	.27799	.06965	.00328	-.00461	-.00019	-.00054	.25135	.13768	1.82560
4.532	.800	14.64700	.27727	.06979	.00364	-.00633	-.00031	-.00080	.25061	.13763	1.82090
4.526	1.000	14.65200	.27764	.07010	.00385	-.00836	-.00043	-.00110	.25088	.13805	1.81740
4.521	1.200	14.65900	.27753	.07020	.00406	-.01045	-.00047	-.00143	.25073	.13815	1.81490
4.528	1.400	14.66100	.27739	.07025	.00407	-.01265	-.00044	-.00179	.25058	.13817	1.81350
4.530	1.600	14.66600	.27747	.07030	.00421	-.01502	-.00042	-.00214	.25063	.13827	1.81270
4.536	1.800	14.66600	.27775	.07039	.00429	-.01734	-.00035	-.00254	.25087	.13842	1.81240
4.536	2.000	14.67400	.27769	.07032	.00415	-.01954	-.00022	-.00294	.25082	.13837	1.81270
4.533	2.200	14.67800	.27783	.07019	.00421	-.02196	-.00018	-.00331	.25098	.13830	1.81480
4.533	2.400	14.68000	.27741	.07012	.00398	-.02412	-.00017	-.00367	.25058	.13814	1.81400
4.529	2.600	14.68400	.27813	.06996	.00391	-.02635	-.00019	-.00399	.25131	.13818	1.81870
4.540	2.800	14.68600	.27826	.06992	.00364	-.02856	-.00022	-.00433	.25145	.13818	1.81970
4.539	3.000	14.69100	.27819	.06992	.00348	-.03054	-.00021	-.00464	.25137	.13818	1.81910
4.539	3.200	14.69400	.27845	.06990	.00334	-.03304	-.00028	-.00497	.25161	.13825	1.82000
4.531	3.400	14.69800	.27850	.06996	.00330	-.03502	-.00028	-.00529	.25164	.13834	1.81900
4.534	3.600	14.70100	.27823	.07008	.00331	-.03722	-.00031	-.00560	.25134	.13839	1.81610
4.535	3.800	14.70500	.27847	.07016	.00312	-.03950	-.00034	-.00591	.25154	.13855	1.81550
4.542	4.000	14.70800	.27876	.07017	.00300	-.04168	-.00033	-.00622	.25181	.13865	1.81620

OA257 (LARC 20-M6-6559) OV102 W/(FSB) (R7E010) (10 JUL 81)

REFERENCE DATA

SREF =	2690.0000 SQ.FT.	XMRP =	1076.6800 IN. XO				
LREF =	474.8100 INCHES	YMRP =	.0000 IN. YO				
BREF =	936.6800 INCHES	ZMRP =	375.0000 IN. ZO				
SCALE =	.0100						

PARAMETRIC DATA

ALPHA =	15.000	PHI =	.000
SPDBRK =	86.600	AILRON =	.000
YP =	1.000	1S =	.000
ELEVON =	.000	MACH =	6.000
S-MODE =	2.000	S-DIR =	1.000

RUN NO. 83/ 0 RN/L = 4.53 GRADIENT INTERVAL = -.60/ .60

RN/L	BETA	ALPHA	CN	CA	CLM	CY	CYN	CBL	CL	CD	L/D
4.554	4.200	14.71200	.27884	.07017	.00274	-.04399	-.00038	-.00654	.25188	.13868	1.81630
	GRADIENT	.02464	.00111	-.00040	-.00084	-.00894	-.00087	-.00133	.00112	-.00000	.00818

OA257 (LARC 20-M6-6559) OV102 W/(FSB) (R7E110) (10 JUL 81)

REFERENCE DATA

SREF = 2690.0000 SQ.FT. XMRP = 1076.6800 IN. XO
LREF = 474.8100 INCHES YMRP = .0000 IN. YO
BREF = 936.6800 INCHES ZMRP = 375.0000 IN. ZO
SCALE = .0100

PARAMETRIC DATA

ALPHA = 15.000 PHI = .000
SPDBRK = 86.600 AILRON = .000
YP = 1.000 1S = .000
ELEVON = .000 MACH = 6.000
S-MODE = 2.000 S-DIR = 1.000

RUN NO. 2083/ 0 RN/L = 4.53 GRADIENT INTERVAL = -.60/ .60

RN/L	BETA	ALPHA	CN	CA	CLM	CY	CYN	CBL	CL	CD	L/D
4.516	-4.100	14.56700	.27471	.07047	.00331	.04399	.00126	.00669	.24816	.13729	1.80750
4.523	-3.900	14.56700	.27465	.07046	.00354	.04164	.00118	.00640	.24810	.13727	1.80740
4.532	-3.700	14.57200	.27464	.07052	.00385	.03959	.00111	.00610	.24807	.13735	1.80610
4.527	-3.500	14.57000	.27506	.07046	.00406	.03755	.00105	.00583	.24849	.13739	1.80870
4.521	-3.300	14.57400	.27496	.07042	.00414	.03558	.00095	.00557	.24839	.13734	1.80860
4.514	-3.100	14.57800	.27472	.07029	.00424	.03351	.00088	.00529	.24818	.13718	1.80920
4.508	-2.900	14.57500	.27456	.07026	.00425	.03141	.00082	.00499	.24804	.13708	1.80940
4.511	-2.700	14.58400	.27500	.07028	.00443	.02928	.00075	.00472	.24845	.13726	1.81000
4.516	-2.500	14.58200	.27506	.07040	.00452	.02702	.00068	.00440	.24847	.13738	1.80870
4.513	-2.300	14.58600	.27518	.07043	.00468	.02497	.00066	.00409	.24857	.13746	1.80840
4.507	-2.100	14.59100	.27532	.07055	.00488	.02283	.00063	.00378	.24867	.13763	1.80680
4.517	-1.900	14.59300	.27515	.07071	.00500	.02056	.00060	.00343	.24846	.13775	1.80370
4.523	-1.700	14.59900	.27574	.07070	.00521	.01846	.00063	.00308	.24902	.13792	1.80560
4.530	-1.500	14.60200	.27567	.07071	.00520	.01618	.00066	.00270	.24894	.13792	1.80500
4.536	-1.300	14.60800	.27605	.07059	.00503	.01376	.00075	.00230	.24932	.13792	1.80770
4.531	-1.100	14.60800	.27581	.07046	.00490	.01159	.00080	.00195	.24912	.13774	1.80860
4.527	-.900	14.61200	.27686	.07036	.00462	.00932	.00082	.00157	.25015	.13793	1.81360
4.526	-.700	14.61500	.27657	.07017	.00445	.00711	.00084	.00122	.24992	.13768	1.81520
4.525	-.500	14.61700	.27712	.07000	.00399	.00519	.00078	.00089	.25049	.13767	1.81950
4.520	-.300	14.62500	.27723	.06963	.00351	.00343	.00067	.00062	.25067	.13737	1.82470
4.528	-.100	14.62400	.27727	.06952	.00321	.00148	.00048	.00035	.25074	.13727	1.82660
4.534	.100	14.63400	.27748	.06940	.00301	-.00027	.00027	.00009	.25095	.13726	1.82830
4.539	.300	14.63600	.27744	.06946	.00305	-.00189	.00010	-.00017	.25088	.13731	1.82720
4.538	.500	14.63700	.27765	.06959	.00315	-.00388	-.00013	-.00043	.25105	.13750	1.82590
4.533	.700	14.64700	.27783	.06973	.00345	-.00542	-.00022	-.00067	.25117	.13771	1.82390
4.530	.900	14.64500	.27740	.07001	.00374	-.00730	-.00037	-.00095	.25069	.13787	1.81830
4.523	1.100	14.65600	.27777	.07011	.00399	-.00942	-.00046	-.00126	.25099	.13811	1.81730
4.525	1.300	14.66000	.27722	.07022	.00409	-.01147	-.00045	-.00161	.25042	.13809	1.81350
4.530	1.500	14.66400	.27723	.07027	.00414	-.01384	-.00041	-.00197	.25041	.13816	1.81240
4.532	1.700	14.66600	.27765	.07037	.00430	-.01617	-.00039	-.00233	.25078	.13837	1.81240
4.537	1.900	14.67000	.27777	.07042	.00424	-.01837	-.00028	-.00274	.25088	.13847	1.81180
4.535	2.100	14.67600	.27777	.07022	.00419	-.02068	-.00019	-.00312	.25092	.13831	1.81420
4.532	2.300	14.67900	.27750	.07021	.00408	-.02311	-.00018	-.00349	.25065	.13823	1.81330
4.530	2.500	14.68200	.27802	.07004	.00396	-.02521	-.00018	-.00383	.25119	.13822	1.81730
4.533	2.700	14.68500	.27819	.06991	.00383	-.02743	-.00021	-.00415	.25138	.13816	1.81960
4.541	2.900	14.68900	.27877	.06992	.00349	-.02956	-.00022	-.00448	.25193	.13833	1.82120
4.539	3.100	14.69200	.27791	.06985	.00343	-.03181	-.00027	-.00480	.25111	.13805	1.81900
4.535	3.300	14.69600	.27845	.06999	.00325	-.03396	-.00027	-.00513	.25158	.13834	1.81860
4.530	3.500	14.69900	.27834	.06999	.00332	-.03616	-.00030	-.00545	.25147	.13832	1.81800
4.536	3.700	14.70200	.27832	.07011	.00323	-.03836	-.00034	-.00576	.25142	.13845	1.81600
4.537	3.900	14.70700	.27897	.07013	.00311	-.04052	-.00033	-.00606	.25203	.13866	1.81760
4.548	4.100	14.71000	.27847	.07014	.00292	-.04289	-.00036	-.00639	.25154	.13855	1.81550

OA257 (LARC 20-M6-6559) OV102 W/(FSB) (R7E110) (10 JUL 81)

REFERENCE DATA

SREF =	2690.0000 SQ.FT.	XMRP =	1076.6800 IN. XO		
LREF =	474.8100 INCHES	YMRP =	.0000 IN. YO		
BREF =	936.6800 INCHES	ZMRP =	375.0000 IN. ZO		
SCALE =	.0100				

PARAMETRIC DATA

ALPHA =	15.000	PHI =	.000
SPDBRK =	86.600	AILRON =	.000
YP =	1.000	1S =	.000
ELEVON =	.000	MACH =	6.000
S-MODE =	2.000	S-DIR =	1.000

RUN NO. 2083/ 0 RN/L = 4.53 GRADIENT INTERVAL = -.60/ .60

RN/L	BETA	ALPHA	CN	CA	CLM	CY	CYN	CBL	CL	CD	L/D
4.557	4.248	14.71300	.27926	.07020	.00268	-.04443	-.00038	-.00661	.25227	.13882	1.81720
	GRADIENT	.02043	.00050	-.00038	-.00083	-.00901	-.00092	-.00132	.00052	-.00015	.00589

OA257 (LARC 20-M6-6559) OV102 W/(FSB) (R7E011) (10 JUL 81)

REFERENCE DATA

SREF = 2690.0000 SQ.FT. XMRP = 1076.6800 IN. XO
LREF = 474.8100 INCHES YMRP = .0000 IN. YO
BREF = 936.6800 INCHES ZMRP = 375.0000 IN. ZO
SCALE = .0100

PARAMETRIC DATA

ALPHA = 17.500 PHI = .000
SPDBRK = 86.600 AILRON = .000
YP = 1.000 1S = .000
ELEVON = .000 MACH = 6.000
S-MODE = 2.000 S-DIR = 1.000

RUN NO. 82/ 0 RN/L = 4.45 GRADIENT INTERVAL = -.60/ .60

RN/L	BETA	ALPHA	CN	CA	CLM	CY	CYN	CBL	CL	CD	L/D
4.536	-4.249	17.07600	.35564	.06775	.00107	.04137	.00266	.00677	.32007	.16919	1.89170
4.552	-4.100	17.08700	.35570	.06765	.00107	.04011	.00260	.00659	.32012	.16917	1.89220
4.550	-3.900	17.09000	.35621	.06748	.00123	.03804	.00252	.00627	.32065	.16918	1.89530
4.563	-3.700	17.09000	.35629	.06741	.00125	.03591	.00247	.00593	.32075	.16914	1.89630
4.569	-3.500	17.09500	.35647	.06739	.00131	.03365	.00243	.00559	.32091	.16920	1.89660
4.564	-3.300	17.09600	.35661	.06732	.00141	.03154	.00240	.00525	.32107	.16918	1.89780
4.569	-3.100	17.09600	.35699	.06740	.00151	.02922	.00236	.00487	.32140	.16937	1.89770
4.563	-2.900	17.10100	.35625	.06744	.00169	.02717	.00235	.00452	.32066	.16921	1.89500
4.551	-2.700	17.10100	.35698	.06752	.00185	.02518	.00233	.00416	.32134	.16950	1.89580
4.525	-2.500	17.10400	.35673	.06768	.00204	.02294	.00226	.00381	.32105	.16960	1.89300
4.492	-2.300	17.10300	.35676	.06787	.00239	.02097	.00221	.00350	.32102	.16979	1.89070
4.462	-2.100	17.10400	.35705	.06817	.00259	.01898	.00209	.00317	.32121	.17017	1.88750
4.446	-1.900	17.11000	.35700	.06826	.00285	.01699	.00194	.00289	.32112	.17027	1.88590
4.454	-1.700	17.11200	.35694	.06834	.00291	.01514	.00174	.00259	.32103	.17035	1.88460
4.453	-1.500	17.11800	.35735	.06836	.00296	.01340	.00155	.00233	.32140	.17052	1.88480
4.473	-1.300	17.12400	.35763	.06831	.00296	.01155	.00135	.00207	.32166	.17058	1.88570
4.500	-1.100	17.13200	.35776	.06823	.00279	.00960	.00118	.00177	.32178	.17059	1.88630
4.517	-.900	17.13700	.35761	.06810	.00275	.00781	.00101	.00146	.32167	.17045	1.88720
4.538	-.700	17.14100	.35787	.06801	.00261	.00597	.00080	.00119	.32193	.17046	1.88860
4.542	-.500	17.14800	.35851	.06793	.00259	.00436	.00061	.00093	.32255	.17061	1.89060
4.532	-.300	17.14900	.35835	.06785	.00252	.00258	.00043	.00062	.32241	.17050	1.89100
4.512	-.100	17.15100	.35800	.06783	.00240	.00097	.00030	.00032	.32208	.17038	1.89040
4.493	.100	17.15300	.35831	.06780	.00244	-.00097	.00014	.00001	.32238	.17046	1.89120
4.472	.300	17.15300	.35828	.06792	.00234	-.00284	-.00008	-.00030	.32231	.17057	1.88960
4.445	.500	17.15800	.35888	.06807	.00247	-.00439	-.00029	-.00057	.32283	.17092	1.88880
4.422	.700	17.15700	.35915	.06819	.00262	-.00609	-.00050	-.00084	.32305	.17110	1.88810
4.406	.900	17.16100	.35911	.06832	.00269	-.00791	-.00074	-.00109	.32296	.17124	1.88600
4.390	1.100	17.16400	.35859	.06832	.00269	-.00967	-.00092	-.00138	.32245	.17110	1.88460
4.384	1.300	17.16900	.35947	.06835	.00256	-.01163	-.00115	-.00167	.32328	.17142	1.88590
4.376	1.500	17.17400	.35992	.06829	.00251	-.01339	-.00132	-.00195	.32371	.17152	1.88740
4.373	1.700	17.17600	.35965	.06829	.00237	-.01525	-.00150	-.00226	.32344	.17145	1.88650
4.366	1.900	17.18100	.35971	.06815	.00226	-.01730	-.00161	-.00259	.32353	.17137	1.88790
4.363	2.100	17.18400	.35961	.06814	.00207	-.01950	-.00169	-.00292	.32342	.17134	1.88760
4.356	2.300	17.18700	.35970	.06805	.00187	-.02147	-.00169	-.00327	.32353	.17130	1.88870
4.348	2.500	17.19300	.35989	.06793	.00174	-.02393	-.00170	-.00366	.32373	.17127	1.89020
4.347	2.700	17.19600	.36026	.06793	.00144	-.02600	-.00166	-.00404	.32407	.17139	1.89080
4.337	2.900	17.20000	.35996	.06785	.00122	-.02822	-.00168	-.00439	.32379	.17126	1.89070
4.334	3.100	17.20300	.36082	.06775	.00109	-.03038	-.00175	-.00474	.32464	.17143	1.89360
4.329	3.300	17.20800	.36091	.06774	.00094	-.03239	-.00177	-.00508	.32472	.17148	1.89360
4.324	3.500	17.21200	.36064	.06781	.00091	-.03457	-.00182	-.00546	.32443	.17149	1.89180
4.322	3.700	17.21500	.36087	.06794	.00070	-.03664	-.00188	-.00580	.32459	.17170	1.89050
4.326	3.900	17.22400	.36118	.06799	.00071	-.03879	-.00198	-.00613	.32485	.17189	1.88990

OA257 (LARC 20-M6-6559) OV102 W/(FSB) (R7E011) (10 JUL 81)

REFERENCE DATA

SREF =	2690.0000 SQ.FT.	XMRP =	1076.6800 IN. XO		
LREF =	474.8100 INCHES	YMRP =	.0000 IN. YO		
BREF =	936.6800 INCHES	ZMRP =	375.0000 IN. ZO		
SCALE =	.0100				

PARAMETRIC DATA

ALPHA =	17.500	PHI =	.000
SPDBRK =	86.600	AILRON =	.000
YP =	1.000	1S =	.000
ELEVON =	.000	MACH =	6.000
S-MODE =	2.000	S-DIR =	1.000

RUN NO. 82/ O RN/L = 4.45 GRADIENT INTERVAL = -.60/ .60

RN/L	BETA	ALPHA	CN	CA	CLM	CY	CYN	CBL	CL	CD	L/D
4.326	4.100	17.22400	.36154	.06810	.00063	-.04087	-.00208	-.00643	.32516	.17210	1.88940
4.322	4.229	17.22600	.36163	.06820	.00070	-.04212	-.00216	-.00662	.32521	.17223	1.88820
	GRADIENT	.00914	.00028	.00013	-.00015	-.00885	-.00089	-.00151	.00020	.00026	-.00177

OA257 (LARC 20-M6-6559) OV102 W/(FSB) (R7E111) (10 JUL 81)

REFERENCE DATA

SREF = 2690.0000 SQ.FT. XMRP = 1076.6800 IN. XO
LREF = 474.8100 INCHES YMRP = .0000 IN. YO
BREF = 936.6800 INCHES ZMRP = 375.0000 IN. ZO
SCALE = .0100

PARAMETRIC DATA

ALPHA = 17.500 PHI = .000
SPDBRK = 86.600 AILRON = .000
YP = 1.000 1S = .000
ELEVON = .000 MACH = 6.000
S-MODE = 2.000 S-DIR = 1.000

RUN NO. 2082/ 0 RN/L = 4.45 GRADIENT INTERVAL = -.60/ .60

RN/L	BETA	ALPHA	CN	CA	CLM	CY	CYN	CBL	CL	CD	L/D
4.550	-4.200	17.07800	.35613	.06769	.00108	.04101	.00263	.00674	.32055	.16929	1.89350
4.549	-4.000	17.08800	.35596	.06764	.00118	.03905	.00256	.00644	.32037	.16925	1.89280
4.550	-3.800	17.09200	.35608	.06739	.00123	.03699	.00250	.00610	.32054	.16907	1.89600
4.569	-3.600	17.08800	.35697	.06740	.00124	.03475	.00245	.00575	.32141	.16932	1.89820
4.565	-3.400	17.09900	.35640	.06732	.00138	.03260	.00241	.00543	.32085	.16914	1.89700
4.567	-3.200	17.09500	.35661	.06739	.00145	.03041	.00238	.00506	.32105	.16924	1.89700
4.565	-3.000	17.09900	.35676	.06748	.00153	.02819	.00236	.00470	.32115	.16939	1.89590
4.558	-2.800	17.10200	.35672	.06746	.00183	.02615	.00234	.00434	.32111	.16938	1.89580
4.541	-2.600	17.10100	.35672	.06759	.00188	.02405	.00230	.00398	.32107	.16950	1.89430
4.508	-2.400	17.10400	.35707	.06777	.00222	.02199	.00224	.00366	.32134	.16979	1.89250
4.478	-2.200	17.10500	.35662	.06800	.00252	.01991	.00215	.00333	.32085	.16988	1.88860
4.447	-2.000	17.10700	.35651	.06824	.00271	.01809	.00204	.00303	.32066	.17009	1.88520
4.449	-1.800	17.11100	.35675	.06830	.00290	.01603	.00183	.00275	.32086	.17025	1.88470
4.451	-1.600	17.11600	.35759	.06837	.00292	.01429	.00164	.00246	.32163	.17058	1.88550
4.461	-1.400	17.12100	.35725	.06831	.00293	.01243	.00144	.00220	.32131	.17046	1.88500
4.488	-1.200	17.12600	.35742	.06825	.00284	.01058	.00126	.00191	.32147	.17047	1.88580
4.509	-1.000	17.13500	.35861	.06821	.00282	.00874	.00110	.00161	.32260	.17084	1.88820
4.526	-.800	17.13900	.35798	.06806	.00269	.00681	.00090	.00133	.32203	.17053	1.88840
4.543	-.600	17.14300	.35791	.06801	.00262	.00520	.00072	.00105	.32196	.17049	1.88840
4.539	-.400	17.14800	.35848	.06786	.00257	.00345	.00051	.00077	.32253	.17054	1.89130
4.522	-.200	17.14900	.35875	.06789	.00243	.00173	.00036	.00048	.32278	.17065	1.89140
4.499	.000	17.15300	.35851	.06786	.00246	-.00003	.00023	.00015	.32255	.17057	1.89090
4.485	.200	17.15200	.35852	.06785	.00240	-.00197	.00002	-.00016	.32256	.17056	1.89110
4.458	.400	17.15600	.35804	.06798	.00239	-.00364	-.00018	-.00043	.32206	.17057	1.88810
4.432	.600	17.15800	.35902	.06814	.00259	-.00517	-.00040	-.00070	.32294	.17102	1.88830
4.414	.800	17.15800	.35905	.06831	.00264	-.00708	-.00064	-.00097	.32292	.17119	1.88630
4.397	1.000	17.16300	.35865	.06825	.00271	-.00879	-.00082	-.00124	.32254	.17105	1.88560
4.388	1.200	17.16600	.35872	.06835	.00264	-.01064	-.00103	-.00153	.32256	.17118	1.88430
4.379	1.400	17.17100	.35949	.06838	.00253	-.01250	-.00124	-.00181	.32328	.17146	1.88550
4.375	1.600	17.17500	.35958	.06826	.00245	-.01431	-.00142	-.00210	.32338	.17140	1.88670
4.369	1.800	17.17900	.35982	.06827	.00229	-.01621	-.00156	-.00243	.32361	.17150	1.88700
4.364	2.000	17.18300	.36001	.06816	.00216	-.01847	-.00166	-.00276	.32380	.17147	1.88840
4.360	2.200	17.18400	.35990	.06816	.00194	-.02045	-.00171	-.00309	.32370	.17145	1.88800
4.352	2.400	17.19100	.35968	.06800	.00178	-.02273	-.00169	-.00346	.32352	.17127	1.88890
4.347	2.600	17.19400	.36020	.06794	.00162	-.02498	-.00167	-.00385	.32402	.17138	1.89060
4.342	2.800	17.19700	.36020	.06785	.00135	-.02701	-.00166	-.00422	.32403	.17131	1.89140
4.334	3.000	17.20100	.36019	.06779	.00117	-.02937	-.00172	-.00456	.32403	.17127	1.89190
4.333	3.200	17.20500	.36068	.06774	.00097	-.03142	-.00178	-.00492	.32451	.17140	1.89330
4.326	3.400	17.21300	.36075	.06773	.00094	-.03352	-.00179	-.00528	.32455	.17146	1.89290
4.323	3.600	17.21200	.36048	.06789	.00080	-.03555	-.00185	-.00564	.32424	.17152	1.89050
4.324	3.800	17.22100	.36119	.06797	.00071	-.03778	-.00193	-.00596	.32488	.17185	1.89050
4.326	4.000	17.22100	.36101	.06802	.00067	-.03987	-.00201	-.00631	.32468	.17185	1.88930

OA257 (LARC 20-M6-6559) OV102 W/(FSB) (R7E111) (10 JUL 81)

REFERENCE DATA

SREF =	2690.0000 SQ.FT.	XMRP =	1076.6800 IN. XO		
LREF =	474.8100 INCHES	YMRP =	.0000 IN. YO		
BREF =	936.6800 INCHES	ZMRP =	375.0000 IN. ZO		
SCALE =	.0100				

PARAMETRIC DATA

ALPHA =	17.500	PHI =	.000
SPDBRK =	86.600	AILRON =	.000
YP =	1.000	1S =	.000
ELEVON =	.000	MACH =	6.000
S-MODE =	2.000	S-DIR =	1.000

RUN NO. 2082/ 0 RN/L = 4.45 GRADIENT INTERVAL = -.60/ .60

RN/L	BETA	ALPHA	CN	CA	CLM	CY	CYN	CBL	CL	CD	L/D
4.323	4.200	17.22500	.36132	.06818	.00059	-.04183	-.00214	-.00659	.32492	.17212	1.88780
	GRADIENT	.01143	.00040	.00010	-.00009	-.00875	-.00090	-.00148	.00032	.00028	-.00125

OA257 (LARC 20-M6-6559) OV102 W/(FSB) (R7E012) (10 JUL 81)

REFERENCE DATA

SREF = 2690.0000 SQ.FT. XMRP = 1076.6800 IN. XO
LREF = 474.8100 INCHES YMRP = .0000 IN. YO
BREF = 936.6800 INCHES ZMRP = 375.0000 IN. ZO
SCALE = .0100

PARAMETRIC DATA

ALPHA = 20.000 PHI = .000
SPDBRK = 86.600 AILRON = .000
YP = 1.000 1S = .000
ELEVON = .000 MACH = 6.000
S-MODE = 2.000 S-DIR = 1.000

RUN NO. 81/ 0 RN/L = 4.46 GRADIENT INTERVAL = -.60/ .60

RN/L	BETA	ALPHA	CN	CA	CLM	CY	CYN	CBL	CL	CD	L/D
4.440	-4.424	19.35700	.43172	.06532	.00028	.04196	.00361	.00738	.38566	.20473	1.88380
4.441	-4.300	19.36900	.43158	.06523	.00045	.04082	.00352	.00722	.38552	.20467	1.88370
4.449	-4.100	19.36700	.43186	.06497	.00048	.03875	.00337	.00690	.38588	.20451	1.88690
4.465	-3.900	19.37200	.43204	.06470	.00046	.03679	.00323	.00657	.38612	.20435	1.88950
4.460	-3.700	19.37400	.43199	.06464	.00065	.03470	.00316	.00623	.38608	.20428	1.89000
4.452	-3.500	19.37600	.43218	.06461	.00066	.03247	.00308	.00584	.38627	.20434	1.89040
4.447	-3.300	19.38400	.43168	.06451	.00079	.03049	.00303	.00550	.38580	.20413	1.89000
4.452	-3.100	19.38400	.43241	.06449	.00086	.02846	.00295	.00514	.38650	.20435	1.89130
4.455	-2.900	19.38900	.43275	.06454	.00091	.02638	.00292	.00474	.38678	.20454	1.89090
4.452	-2.700	19.39500	.43260	.06453	.00111	.02431	.00291	.00434	.38662	.20453	1.89040
4.448	-2.500	19.39200	.43278	.06468	.00117	.02212	.00288	.00394	.38675	.20471	1.88930
4.450	-2.300	19.40500	.43288	.06483	.00144	.01998	.00287	.00352	.38675	.20496	1.88700
4.447	-2.100	19.40700	.43253	.06493	.00152	.01797	.00283	.00315	.38638	.20496	1.88520
4.452	-1.900	19.41300	.43360	.06501	.00167	.01580	.00273	.00277	.38735	.20543	1.88550
4.458	-1.700	19.41900	.43325	.06512	.00182	.01402	.00261	.00246	.38695	.20546	1.88330
4.459	-1.500	19.42000	.43354	.06530	.00187	.01229	.00237	.00218	.38717	.20573	1.88190
4.459	-1.300	19.43200	.43380	.06531	.00198	.01046	.00213	.00189	.38736	.20591	1.88120
4.457	-1.100	19.43400	.43448	.06544	.00207	.00885	.00192	.00161	.38795	.20627	1.88080
4.460	-.900	19.43700	.43439	.06549	.00203	.00708	.00164	.00134	.38784	.20631	1.87990
4.460	-.700	19.44500	.43488	.06547	.00215	.00534	.00139	.00107	.38828	.20651	1.88020
4.462	-.500	19.44700	.43485	.06553	.00204	.00395	.00111	.00081	.38823	.20657	1.87940
4.458	-.300	19.45600	.43472	.06543	.00203	.00224	.00080	.00057	.38811	.20649	1.87960
4.459	-.100	19.45800	.43497	.06541	.00198	.00069	.00054	.00029	.38834	.20657	1.87990
4.471	.100	19.46400	.43585	.06545	.00184	-.00101	.00023	.00003	.38913	.20694	1.88040
4.471	.300	19.47100	.43551	.06533	.00179	-.00248	-.00012	-.00020	.38883	.20676	1.88050
4.475	.500	19.47300	.43536	.06538	.00179	-.00392	-.00046	-.00045	.38866	.20678	1.87960
4.475	.700	19.48200	.43546	.06538	.00184	-.00530	-.00081	-.00066	.38872	.20687	1.87910
4.472	.900	19.48300	.43567	.06537	.00182	-.00699	-.00116	-.00086	.38892	.20694	1.87940
4.472	1.100	19.48700	.43586	.06535	.00163	-.00855	-.00142	-.00113	.38909	.20700	1.87960
4.475	1.300	19.49700	.43611	.06524	.00152	-.01037	-.00170	-.00140	.38933	.20705	1.88030
4.468	1.500	19.49600	.43594	.06511	.00135	-.01186	-.00198	-.00164	.38922	.20687	1.88150
4.462	1.700	19.50500	.43629	.06496	.00116	-.01358	-.00226	-.00190	.38956	.20691	1.88280
4.466	1.900	19.50800	.43619	.06486	.00104	-.01557	-.00247	-.00223	.38949	.20679	1.88350
4.466	2.100	19.51000	.43653	.06482	.00091	-.01734	-.00259	-.00256	.38982	.20688	1.88420
4.474	2.300	19.52400	.43683	.06473	.00081	-.01945	-.00269	-.00294	.39008	.20700	1.88450
4.482	2.500	19.52100	.43675	.06470	.00058	-.02157	-.00274	-.00334	.39003	.20692	1.88490
4.473	2.700	19.53100	.43731	.06467	.00057	-.02367	-.00277	-.00373	.39053	.20715	1.88520
4.467	2.900	19.53300	.43736	.06466	.00048	-.02582	-.00279	-.00412	.39057	.20717	1.88530
4.458	3.100	19.53500	.43723	.06463	.00029	-.02800	-.00285	-.00451	.39045	.20711	1.88520
4.450	3.300	19.54600	.43744	.06471	.00030	-.02995	-.00287	-.00488	.39058	.20733	1.88390
4.448	3.500	19.54300	.43736	.06485	.00012	-.03208	-.00294	-.00527	.39047	.20742	1.88250
4.445	3.700	19.55400	.43714	.06496	.00009	-.03424	-.00301	-.00564	.39019	.20752	1.88030

OA257 (LARC 20-M6-6559) OV102 W/(FSB) (R7E012) (10 JUL 81)

REFERENCE DATA

SREF =	2690.0000 SQ.FT.	XMRP =	1076.6800 IN. XO		
LREF =	474.8100 INCHES	YMRP =	.0000 IN. YO		
BREF =	936.6800 INCHES	ZMRP =	375.0000 IN. ZO		
SCALE =	.0100				

PARAMETRIC DATA

ALPHA =	20.000	PHI =	.000
SPDBRK =	86.600	AILRON =	.000
YP =	1.000	1S =	.000
ELEVON =	.000	MACH =	6.000
S-MODE =	2.000	S-DIR =	1.000

RUN NO. 81/ 0 RN/L = 4.46 GRADIENT INTERVAL = -.60/ .60

RN/L	BETA	ALPHA	CN	CA	CLM	CY	CYN	CBL	CL	CD	L/D
4.446	3.900	19.55700	.43762	.06508	.00007	-.03639	-.00308	-.00601	.39058	.20781	1.87950
4.447	4.100	19.56100	.43814	.06530	-.00006	-.03855	-.00315	-.00638	.39099	.20822	1.87770
	GRADIENT	.02586	.00083	-.00014	-.00030	-.00788	-.00157	-.00126	.00073	.00032	.00060

OA257 (LARC 20-M6-6559) OV102 W/(FSB) (R7E112) (10 JUL 81)

REFERENCE DATA

SREF = 2690.0000 SQ.FT. XMRP = 1076.6800 IN. XO
LREF = 474.8100 INCHES YMRP = .0000 IN. YO
BREF = 936.6800 INCHES ZMRP = 375.0000 IN. ZO
SCALE = .0100

PARAMETRIC DATA

ALPHA = 20.000 PHI = .000
SPDBRK = 86.600 AILRON = .000
YP = 1.000 1S = .000
ELEVON = .000 MACH = 6.000
S-MODE = 2.000 S-DIR = 1.000

RUN NO. 2081/ 0 RN/L = 4.46 GRADIENT INTERVAL = -.60/ .60

RN/L	BETA	ALPHA	CN	CA	CLM	CY	CYN	CBL	CL	CD	L/D
4.439	-4.400	19.35400	.43139	.06534	.00027	.04181	.00359	.00737	.38536	.20461	1.88340
4.443	-4.200	19.37000	.43163	.06506	.00048	.03984	.00345	.00705	.38562	.20453	1.88530
4.456	-4.000	19.36800	.43238	.06489	.00042	.03772	.00329	.00674	.38639	.20461	1.88850
4.464	-3.800	19.37600	.43202	.06473	.00063	.03577	.00317	.00640	.38608	.20439	1.88890
4.456	-3.600	19.37300	.43181	.06463	.00071	.03359	.00313	.00602	.38592	.20421	1.88980
4.449	-3.400	19.37900	.43202	.06459	.00075	.03145	.00305	.00567	.38611	.20428	1.89010
4.448	-3.200	19.38400	.43221	.06445	.00083	.02952	.00300	.00531	.38632	.20425	1.89140
4.455	-3.000	19.38600	.43259	.06451	.00088	.02742	.00293	.00494	.38665	.20444	1.89120
4.454	-2.800	19.39300	.43272	.06456	.00101	.02534	.00291	.00455	.38673	.20457	1.89040
4.449	-2.600	19.39600	.43237	.06462	.00110	.02321	.00288	.00415	.38637	.20454	1.88900
4.448	-2.400	19.39800	.43248	.06478	.00131	.02110	.00287	.00372	.38642	.20474	1.88730
4.449	-2.200	19.40800	.43280	.06487	.00152	.01894	.00285	.00334	.38665	.20500	1.88610
4.450	-2.000	19.41000	.43303	.06498	.00157	.01695	.00279	.00296	.38683	.20520	1.88520
4.453	-1.800	19.41800	.43376	.06516	.00177	.01488	.00266	.00261	.38742	.20566	1.88390
4.459	-1.600	19.42100	.43360	.06524	.00188	.01318	.00250	.00232	.38724	.20570	1.88250
4.458	-1.400	19.42400	.43372	.06530	.00192	.01135	.00225	.00203	.38732	.20582	1.88190
4.457	-1.200	19.43400	.43401	.06540	.00203	.00964	.00202	.00176	.38752	.20607	1.88050
4.459	-1.000	19.43300	.43449	.06544	.00203	.00799	.00179	.00147	.38796	.20626	1.88090
4.460	-.800	19.44400	.43432	.06552	.00208	.00614	.00150	.00121	.38774	.20636	1.87900
4.463	-.600	19.44600	.43476	.06547	.00211	.00464	.00124	.00095	.38817	.20648	1.87990
4.459	-.400	19.45000	.43475	.06549	.00197	.00317	.00096	.00068	.38813	.20652	1.87940
4.458	-.200	19.45700	.43465	.06542	.00203	.00146	.00068	.00044	.38804	.20647	1.87940
4.465	.000	19.46100	.43514	.06539	.00193	-.00016	.00040	.00015	.38850	.20663	1.88020
4.473	.200	19.46600	.43519	.06533	.00179	-.00170	.00004	-.00007	.38854	.20663	1.88040
4.472	.400	19.47100	.43536	.06534	.00180	-.00321	-.00028	-.00033	.38868	.20672	1.88030
4.477	.600	19.47600	.43575	.06536	.00176	-.00457	-.00064	-.00055	.38902	.20691	1.88010
4.472	.800	19.48600	.43562	.06540	.00182	-.00616	-.00100	-.00075	.38886	.20696	1.87890
4.473	1.000	19.48500	.43577	.06531	.00165	-.00774	-.00128	-.00099	.38903	.20693	1.88000
4.476	1.200	19.49200	.43608	.06528	.00154	-.00942	-.00155	-.00126	.38931	.20705	1.88020
4.471	1.400	19.49600	.43596	.06520	.00146	-.01118	-.00185	-.00152	.38920	.20696	1.88060
4.464	1.600	19.49700	.43600	.06508	.00120	-.01265	-.00213	-.00176	.38928	.20687	1.88180
4.462	1.800	19.50900	.43663	.06493	.00113	-.01463	-.00237	-.00205	.38988	.20702	1.88330
4.465	2.000	19.50900	.43632	.06482	.00094	-.01646	-.00253	-.00240	.38963	.20681	1.88400
4.467	2.200	19.51800	.43662	.06477	.00082	-.01836	-.00266	-.00274	.38989	.20693	1.88420
4.481	2.400	19.52200	.43667	.06469	.00072	-.02049	-.00270	-.00314	.38995	.20689	1.88480
4.478	2.600	19.52200	.43745	.06472	.00057	-.02263	-.00276	-.00354	.39068	.20718	1.88570
4.471	2.800	19.53500	.43692	.06467	.00053	-.02467	-.00278	-.00392	.39015	.20705	1.88440
4.463	3.000	19.53300	.43752	.06461	.00038	-.02693	-.00282	-.00431	.39074	.20717	1.88610
4.454	3.200	19.54100	.43733	.06468	.00026	-.02903	-.00286	-.00470	.39051	.20723	1.88440
4.448	3.400	19.54500	.43706	.06474	.00024	-.03100	-.00292	-.00507	.39022	.20722	1.88310
4.448	3.600	19.54700	.43779	.06491	.00013	-.03317	-.00299	-.00544	.39084	.20765	1.88220
4.444	3.800	19.55700	.43736	.06504	.00009	-.03531	-.00304	-.00583	.39035	.20769	1.87950

OA257 (LARC 20-M6-6559) OV102 W/(FSB) (R7E112) (10 JUL 81)

REFERENCE DATA

SREF =	2690.0000 SQ.FT.	XMRP =	1076.6800 IN. XO		
LREF =	474.8100 INCHES	YMRP =	.0000 IN. YO		
BREF =	936.6800 INCHES	ZMRP =	375.0000 IN. ZO		
SCALE =	.0100				

PARAMETRIC DATA

ALPHA =	20.000	PHI =	.000
SPDBRK =	86.600	AILRON =	.000
YP =	1.000	1S =	.000
ELEVON =	.000	MACH =	6.000
S-MODE =	2.000	S-DIR =	1.000

RUN NO. 2081/ O RN/L = 4.46 GRADIENT INTERVAL = -.60/ .60

RN/L	BETA	ALPHA	CN	CA	CLM	CY	CYN	CBL	CL	CD	L/D
4.449	4.000	19.55600	.43764	.06517	.00000	-.03743	-.00312	-.00618	.39058	.20790	1.87870
4.447	4.114	19.56200	.43823	.06532	-.00007	-.03871	-.00315	-.00640	.39107	.20828	1.87760
	GRADIENT	.02518	.00084	-.00013	-.00029	-.00778	-.00156	-.00126	.00074	.00033	.00061

OA257 (LARC 20-M6-6559) OV102 W/(FSB) (R7E013) (10 JUL 81)

REFERENCE DATA

SREF = 2690.0000 SQ.FT. XMRP = 1076.6800 IN. XO
LREF = 474.8100 INCHES YMRP = .0000 IN. YO
BREF = 936.6800 INCHES ZMRP = 375.0000 IN. ZO
SCALE = .0100

PARAMETRIC DATA

ALPHA = 22.500 PHI = .000
SPDBRK = 86.600 AILRON = .000
YP = 1.000 1S = .000
ELEVON = .000 MACH = 6.000
S-MODE = 2.000 S-DIR = 1.000

RUN NO. 80/ 0 RN/L = 4.48 GRADIENT INTERVAL = -.60/ .60

RN/L	BETA	ALPHA	CN	CA	CLM	CY	CYN	CBL	CL	CD	L/D
4.487	-4.325	21.93900	.52713	.06424	-.00138	.03847	.00467	.00721	.46495	.25653	1.81250
4.475	-4.200	21.95400	.52763	.06419	-.00144	.03739	.00453	.00707	.46537	.25679	1.81230
4.483	-4.000	21.96300	.52767	.06401	-.00133	.03561	.00427	.00678	.46544	.25672	1.81300
4.484	-3.800	21.96100	.52792	.06390	-.00141	.03364	.00400	.00647	.46572	.25669	1.81430
4.478	-3.600	21.97300	.52819	.06376	-.00137	.03201	.00380	.00615	.46597	.25675	1.81490
4.482	-3.400	21.97800	.52879	.06364	-.00130	.03011	.00357	.00583	.46654	.25691	1.81590
4.485	-3.200	21.97900	.52894	.06355	-.00139	.02839	.00337	.00550	.46671	.25690	1.81670
4.477	-3.000	21.99100	.52898	.06346	-.00119	.02650	.00321	.00513	.46673	.25692	1.81670
4.476	-2.800	21.99000	.52894	.06337	-.00122	.02456	.00307	.00478	.46673	.25683	1.81730
4.479	-2.600	21.99600	.52897	.06339	-.00110	.02253	.00295	.00437	.46673	.25689	1.81680
4.480	-2.400	22.00500	.52968	.06343	-.00093	.02059	.00289	.00397	.46732	.25727	1.81640
4.482	-2.200	22.00500	.52962	.06340	-.00082	.01846	.00284	.00358	.46728	.25723	1.81660
4.493	-2.000	22.01700	.52994	.06335	-.00076	.01650	.00278	.00316	.46754	.25739	1.81650
4.490	-1.800	22.02300	.53003	.06346	-.00063	.01450	.00267	.00278	.46756	.25758	1.81520
4.491	-1.600	22.02700	.52968	.06359	-.00058	.01253	.00252	.00238	.46716	.25761	1.81350
4.489	-1.400	22.03600	.53093	.06364	-.00044	.01080	.00234	.00204	.46826	.25819	1.81360
4.477	-1.200	22.03600	.53077	.06374	-.00047	.00906	.00215	.00169	.46808	.25822	1.81270
4.475	-1.000	22.04400	.53083	.06381	-.00047	.00734	.00190	.00138	.46808	.25838	1.81160
4.467	-.800	22.05100	.53102	.06373	-.00047	.00568	.00165	.00109	.46826	.25843	1.81200
4.466	-.600	22.05300	.53107	.06374	-.00063	.00413	.00134	.00082	.46828	.25848	1.81170
4.463	-.400	22.06200	.53155	.06362	-.00065	.00260	.00100	.00055	.46873	.25861	1.81250
4.466	-.200	22.06500	.53192	.06364	-.00070	.00111	.00063	.00030	.46905	.25880	1.81240
4.468	.000	22.07000	.53211	.06368	-.00089	-.00028	.00020	.00008	.46919	.25895	1.81190
4.480	.200	22.08000	.53228	.06364	-.00089	-.00158	-.00028	-.00009	.46931	.25906	1.81160
4.482	.400	22.08000	.53191	.06363	-.00098	-.00271	-.00074	-.00027	.46898	.25891	1.81140
4.481	.600	22.08900	.53219	.06350	-.00100	-.00418	-.00113	-.00050	.46925	.25896	1.81200
4.493	.800	22.09300	.53268	.06349	-.00102	-.00561	-.00148	-.00077	.46969	.25917	1.81230
4.489	1.000	22.09600	.53268	.06351	-.00115	-.00725	-.00180	-.00102	.46967	.25922	1.81180
4.480	1.200	22.10400	.53303	.06347	-.00116	-.00881	-.00209	-.00126	.46997	.25938	1.81190
4.480	1.400	22.10900	.53241	.06341	-.00116	-.01058	-.00226	-.00164	.46939	.25914	1.81140
4.485	1.600	22.11300	.53301	.06351	-.00124	-.01246	-.00242	-.00201	.46989	.25948	1.81090
4.479	1.800	22.12200	.53306	.06340	-.00124	-.01442	-.00254	-.00237	.46995	.25947	1.81120
4.478	2.000	22.12400	.53323	.06348	-.00142	-.01655	-.00268	-.00277	.47006	.25963	1.81050
4.484	2.200	22.13200	.53394	.06350	-.00153	-.01854	-.00272	-.00323	.47067	.25998	1.81040
4.474	2.400	22.13600	.53391	.06352	-.00170	-.02055	-.00280	-.00362	.47062	.26003	1.80990
4.477	2.600	22.14000	.53399	.06354	-.00183	-.02258	-.00294	-.00400	.47067	.26010	1.80960
4.476	2.800	22.15000	.53397	.06359	-.00179	-.02456	-.00307	-.00436	.47059	.26022	1.80840
4.488	3.000	22.15200	.53437	.06372	-.00202	-.02638	-.00319	-.00475	.47090	.26051	1.80760
4.489	3.200	22.16100	.53462	.06371	-.00208	-.02832	-.00333	-.00513	.47109	.26067	1.80730
4.475	3.400	22.16300	.53434	.06378	-.00209	-.03027	-.00350	-.00548	.47080	.26065	1.80630
4.467	3.600	22.16400	.53464	.06395	-.00215	-.03205	-.00368	-.00584	.47100	.26093	1.80510
4.464	3.800	22.17500	.53538	.06395	-.00222	-.03410	-.00385	-.00619	.47165	.26129	1.80510

OA257 (LARC 20-M6-6559) OV102 W/(FSB) (R7E013) (10 JUL 81)

REFERENCE DATA

SREF =	2690.0000 SQ.FT.	XMRP =	1076.6800 IN. XO		
LREF =	474.8100 INCHES	YMRP =	.0000 IN. YO		
BREF =	936.6800 INCHES	ZMRP =	375.0000 IN. ZO		
SCALE =	.0100				

PARAMETRIC DATA

ALPHA =	22.500	PHI =	.000
SPDBRK =	86.600	AILRON =	.000
YP =	1.000	1S =	.000
ELEVON =	.000	MACH =	6.000
S-MODE =	2.000	S-DIR =	1.000

RUN NO. 80/ 0 RN/L = 4.48 GRADIENT INTERVAL = -.60/ .60

RN/L	BETA	ALPHA	CN	CA	CLM	CY	CYN	CBL	CL	CD	L/D
4.460	3.957	22.17700	.53427	.06403	-.00221	-.03544	-.00398	-.00645	.47058	.26096	1.80330
	GRADIENT	.02839	.00079	-.00013	-.00035	-.00683	-.00211	-.00107	.00066	.00041	-.00037

OA257 (LARC 20-M6-6559) OV102 W/(FSB) (R7E113) (10 JUL 81)

REFERENCE DATA

SREF = 2690.0000 SQ.FT. XMRP = 1076.6800 IN. XO
LREF = 474.8100 INCHES YMRP = .0000 IN. YO
BREF = 936.6800 INCHES ZMRP = 375.0000 IN. ZO
SCALE = .0100

PARAMETRIC DATA

ALPHA = 22.500 PHI = .000
SPDBRK = 86.600 AILRON = .000
YP = 1.000 1S = .000
ELEVON = .000 MACH = 6.000
S-MODE = 2.000 S-DIR = 1.000

RUN NO. 2080/ 0 RN/L = 4.48 GRADIENT INTERVAL = -.60/ .60

RN/L	BETA	ALPHA	CN	CA	CLM	CY	CYN	CBL	CL	CD	L/D
4.478	-4.300	21.94300	.52703	.06423	-.00132	.03817	.00465	.00719	.46485	.25652	1.81210
4.479	-4.100	21.95900	.52751	.06407	-.00134	.03661	.00440	.00692	.46528	.25668	1.81270
4.486	-3.900	21.96100	.52786	.06394	-.00132	.03455	.00412	.00662	.46565	.25671	1.81390
4.479	-3.700	21.96500	.52784	.06389	-.00144	.03286	.00390	.00631	.46563	.25669	1.81400
4.480	-3.500	21.97700	.52875	.06369	-.00137	.03106	.00369	.00599	.46650	.25694	1.81560
4.485	-3.300	21.97700	.52865	.06365	-.00132	.02921	.00345	.00566	.46642	.25686	1.81580
4.483	-3.100	21.98500	.52879	.06356	-.00126	.02745	.00328	.00534	.46655	.25690	1.81600
4.474	-2.900	21.99200	.52870	.06342	-.00121	.02556	.00314	.00495	.46649	.25679	1.81660
4.478	-2.700	21.99000	.52918	.06338	-.00119	.02346	.00300	.00457	.46695	.25692	1.81750
4.482	-2.500	22.00300	.52930	.06335	-.00098	.02157	.00294	.00416	.46702	.25704	1.81690
4.481	-2.300	22.00600	.52956	.06333	-.00082	.01958	.00288	.00378	.46725	.25714	1.81710
4.490	-2.100	22.01000	.53007	.06342	-.00080	.01740	.00279	.00336	.46767	.25745	1.81650
4.490	-1.900	22.02100	.52987	.06337	-.00067	.01551	.00273	.00298	.46745	.25743	1.81590
4.492	-1.700	22.02100	.53010	.06354	-.00059	.01344	.00260	.00258	.46760	.25766	1.81480
4.490	-1.500	22.03200	.53050	.06359	-.00052	.01176	.00246	.00222	.46790	.25794	1.81400
4.482	-1.300	22.03700	.53046	.06368	-.00042	.00995	.00225	.00186	.46781	.25806	1.81280
4.477	-1.100	22.03900	.53079	.06377	-.00048	.00815	.00201	.00155	.46807	.25828	1.81230
4.471	-.900	22.04800	.53138	.06378	-.00044	.00657	.00178	.00124	.46858	.25859	1.81200
4.465	-.700	22.05000	.53093	.06374	-.00056	.00484	.00150	.00094	.46816	.25840	1.81180
4.463	-.500	22.05600	.53137	.06364	-.00070	.00338	.00119	.00066	.46858	.25852	1.81260
4.466	-.300	22.06400	.53184	.06360	-.00065	.00190	.00082	.00044	.46900	.25872	1.81280
4.466	-.100	22.06600	.53207	.06369	-.00083	.00040	.00044	.00016	.46917	.25891	1.81210
4.471	.100	22.07700	.53239	.06366	-.00090	-.00093	-.00003	-.00001	.46942	.25910	1.81180
4.482	.300	22.07900	.53219	.06358	-.00087	-.00214	-.00050	-.00018	.46926	.25896	1.81210
4.482	.500	22.08300	.53248	.06356	-.00099	-.00339	-.00093	-.00038	.46952	.25909	1.81220
4.486	.700	22.09400	.53275	.06349	-.00100	-.00493	-.00132	-.00062	.46975	.25920	1.81230
4.495	.900	22.09400	.53253	.06348	-.00108	-.00642	-.00163	-.00091	.46955	.25912	1.81210
4.485	1.100	22.10100	.53270	.06351	-.00113	-.00803	-.00196	-.00114	.46966	.25927	1.81150
4.478	1.300	22.10800	.53291	.06344	-.00117	-.00972	-.00219	-.00146	.46985	.25934	1.81170
4.484	1.500	22.11100	.53281	.06345	-.00124	-.01148	-.00234	-.00181	.46974	.25933	1.81130
4.481	1.700	22.11900	.53308	.06348	-.00120	-.01343	-.00248	-.00217	.46994	.25953	1.81080
4.478	1.900	22.12300	.53278	.06344	-.00130	-.01546	-.00262	-.00256	.46966	.25941	1.81050
4.480	2.100	22.12900	.53384	.06354	-.00148	-.01754	-.00272	-.00300	.47058	.25995	1.81030
4.480	2.300	22.13600	.53376	.06351	-.00160	-.01951	-.00275	-.00342	.47049	.25995	1.80990
4.475	2.500	22.13700	.53381	.06354	-.00181	-.02162	-.00288	-.00382	.47052	.26001	1.80960
4.478	2.700	22.14600	.53406	.06355	-.00183	-.02354	-.00300	-.00417	.47071	.26018	1.80910
4.479	2.900	22.14900	.53399	.06361	-.00190	-.02552	-.00314	-.00454	.47060	.26024	1.80830
4.492	3.100	22.15600	.53467	.06370	-.00209	-.02733	-.00325	-.00495	.47117	.26063	1.80780
4.482	3.300	22.16300	.53432	.06372	-.00208	-.02933	-.00344	-.00530	.47080	.26058	1.80670
4.470	3.500	22.16400	.53464	.06383	-.00215	-.03111	-.00357	-.00567	.47106	.26081	1.80620
4.467	3.700	22.17000	.53507	.06394	-.00219	-.03309	-.00378	-.00599	.47138	.26112	1.80520
4.462	3.900	22.17500	.53456	.06400	-.00221	-.03491	-.00394	-.00634	.47087	.26103	1.80390
	GRADIENT	.02729	.00099	-.00007	-.00031	-.00676	-.00215	-.00104	.00082	.00054	-.00063

OA257 (LARC 20-M6-6559) DV102 W/(FSB) (R7E014) (10 JUL 81)

REFERENCE DATA

SREF = 2690.0000 SQ.FT. XMRP = 1076.6800 IN. XO
LREF = 474.8100 INCHES YMRP = .0000 IN. YO
BREF = 936.6800 INCHES ZMRP = 375.0000 IN. ZO
SCALE = .0100

PARAMETRIC DATA

ALPHA = 25.000 PHI = .000
SPDBRK = 86.600 AILRON = .000
YP = 1.000 1S = .000
ELEVON = .000 MACH = 6.000
S-MODE = 2.000 S-DIR = 1.000

RUN NO. 77/ 0 RN/L = 4.42 GRADIENT INTERVAL = -.60/ .60

RN/L	BETA	ALPHA	CN	CA	CLM	CY	CYN	CBL	CL	CD	L/D
4.467	-4.182	24.24000	.61764	.06471	-.00316	.03532	.00541	.00732	.53662	.31258	1.71680
4.455	-4.000	24.25300	.61755	.06456	-.00309	.03377	.00516	.00699	.53653	.31253	1.71670
4.445	-3.800	24.24900	.61775	.06447	-.00315	.03206	.00493	.00663	.53677	.31250	1.71770
4.436	-3.600	24.25800	.61769	.06422	-.00322	.03026	.00466	.00631	.53677	.31233	1.71860
4.432	-3.400	24.26200	.61837	.06419	-.00313	.02863	.00438	.00598	.53737	.31262	1.71890
4.428	-3.200	24.26100	.61821	.06414	-.00323	.02697	.00409	.00564	.53726	.31249	1.71930
4.422	-3.000	24.27000	.61888	.06399	-.00321	.02530	.00382	.00533	.53788	.31272	1.72000
4.419	-2.800	24.27700	.61922	.06395	-.00316	.02353	.00353	.00501	.53817	.31289	1.72000
4.414	-2.600	24.27500	.61882	.06385	-.00341	.02177	.00328	.00465	.53786	.31262	1.72050
4.410	-2.400	24.28600	.61914	.06377	-.00324	.02031	.00303	.00433	.53812	.31278	1.72050
4.410	-2.200	24.29200	.61930	.06368	-.00320	.01841	.00280	.00397	.53827	.31282	1.72070
4.418	-2.000	24.29300	.61995	.06370	-.00321	.01676	.00257	.00364	.53884	.31311	1.72090
4.416	-1.800	24.30300	.62015	.06361	-.00310	.01496	.00240	.00326	.53902	.31320	1.72100
4.424	-1.600	24.30800	.62034	.06355	-.00300	.01313	.00221	.00287	.53919	.31328	1.72110
4.432	-1.400	24.31000	.62044	.06348	-.00313	.01132	.00202	.00247	.53930	.31327	1.72150
4.432	-1.200	24.32400	.62066	.06347	-.00306	.00960	.00180	.00213	.53942	.31349	1.72070
4.431	-1.000	24.32600	.62079	.06339	-.00306	.00773	.00160	.00180	.53956	.31348	1.72120
4.434	-.800	24.33000	.62093	.06337	-.00310	.00590	.00142	.00142	.53968	.31356	1.72120
4.434	-.600	24.34000	.62155	.06325	-.00318	.00413	.00126	.00105	.54024	.31379	1.72170
4.432	-.400	24.34700	.62175	.06316	-.00322	.00220	.00109	.00066	.54042	.31387	1.72180
4.429	-.200	24.34600	.62209	.06317	-.00346	.00066	.00094	.00026	.54073	.31400	1.72200
4.426	.000	24.35700	.62247	.06307	-.00352	-.00104	.00061	.00002	.54105	.31418	1.72210
4.425	.200	24.36300	.62236	.06315	-.00350	-.00238	.00014	-.00022	.54090	.31425	1.72120
4.420	.400	24.36300	.62258	.06328	-.00360	-.00363	-.00036	-.00043	.54103	.31447	1.72050
4.417	.600	24.37700	.62279	.06330	-.00345	-.00495	-.00068	-.00070	.54114	.31471	1.71950
4.415	.800	24.38100	.62292	.06330	-.00350	-.00650	-.00109	-.00097	.54124	.31479	1.71940
4.411	1.000	24.38200	.62280	.06337	-.00368	-.00798	-.00139	-.00126	.54110	.31482	1.71870
4.413	1.200	24.39500	.62372	.06335	-.00365	-.00969	-.00166	-.00157	.54187	.31530	1.71860
4.420	1.400	24.40100	.62406	.06346	-.00358	-.01151	-.00187	-.00193	.54210	.31560	1.71770
4.428	1.600	24.40200	.62430	.06356	-.00368	-.01335	-.00207	-.00233	.54228	.31580	1.71720
4.423	1.800	24.41200	.62440	.06354	-.00343	-.01508	-.00228	-.00265	.54232	.31592	1.71660
4.420	2.000	24.41900	.62465	.06362	-.00344	-.01685	-.00253	-.00298	.54247	.31616	1.71580
4.426	2.200	24.41800	.62491	.06372	-.00349	-.01856	-.00279	-.00333	.54268	.31635	1.71540
4.417	2.400	24.43100	.62474	.06375	-.00345	-.02032	-.00304	-.00370	.54244	.31644	1.71420
4.409	2.600	24.43700	.62501	.06379	-.00339	-.02192	-.00328	-.00407	.54263	.31664	1.71380
4.413	2.800	24.43600	.62540	.06402	-.00340	-.02374	-.00357	-.00439	.54290	.31700	1.71260
4.414	3.000	24.44800	.62571	.06403	-.00336	-.02550	-.00379	-.00477	.54311	.31726	1.71190
4.414	3.200	24.45100	.62586	.06410	-.00346	-.02739	-.00401	-.00515	.54319	.31741	1.71130
4.410	3.400	24.45300	.62572	.06424	-.00345	-.02911	-.00426	-.00546	.54300	.31749	1.71030
4.402	3.600	24.46300	.62575	.06429	-.00347	-.03086	-.00449	-.00582	.54295	.31765	1.70930
4.392	3.800	24.46700	.62521	.06435	-.00344	-.03284	-.00467	-.00626	.54242	.31751	1.70830
4.389	4.000	24.46800	.62551	.06449	-.00354	-.03448	-.00488	-.00662	.54263	.31777	1.70760

OA257 (LARC 20-M6-6559) OV102 W/(FSB) (R7E014) (10 JUL 81)

REFERENCE DATA

SREF =	2690.0000 SQ.FT.	XMRP =	1076.6800 IN. XO		
LREF =	474.8100 INCHES	YMRP =	.0000 IN. YO		
BREF =	936.6800 INCHES	ZMRP =	375.0000 IN. ZO		
SCALE =	.0100				

PARAMETRIC DATA

ALPHA =	25.000	PHI =	.000
SPDBRK =	86.600	AILRON =	.000
YP =	1.000	1S =	.000
ELEVON =	.000	MACH =	6.000
S-MODE =	2.000	S-DIR =	1.000

RUN NO. 77/ 0 RN/L = 4.42 GRADIENT INTERVAL = -.60/ .60

RN/L	BETA	ALPHA	CN	CA	CLM	CY	CYN	CBL	CL	CD	L/D
4.383	4.200	24.48100	.62549	.06458	-.00353	-.03633	-.00508	-.00703	.54250	.31797	1.70610
4.379	4.381	24.47200	.62460	.06456	-.00369	-.03782	-.00530	-.00733	.54174	.31750	1.70620
	GRADIENT	.02857	.00101	.00007	-.00028	-.00749	-.00170	-.00141	.00073	.00075	-.00179

OA257 (LARC 20-M6-6559) OV102 W/(FSB) (R7E114) (10 JUL 81)

REFERENCE DATA

SREF = 2690.0000 SQ.FT. XMRP = 1076.6800 IN. XO
LREF = 474.8100 INCHES YMRP = .0000 IN. YO
BREF = 936.6800 INCHES ZMRP = 375.0000 IN. ZO
SCALE = .0100

PARAMETRIC DATA

ALPHA = 25.000 PHI = .000
SPDBRK = 86.600 AILRON = .000
YP = 1.000 1S = .000
ELEVON = .000 MACH = 6.000
S-MODE = 2.000 S-DIR = 1.000

RUN NO. 2077/ 0 RN/L = 4.42 GRADIENT INTERVAL = -.60/ .60

RN/L	BETA	ALPHA	CN	CA	CLM	CY	CYN	CBL	CL	CD	L/D
4.460	-4.100	24.25300	.61749	.06461	-.00316	.03474	.00534	.00715	.53645	.31255	1.71640
4.452	-3.900	24.25100	.61779	.06464	-.00309	.03293	.00506	.00680	.53673	.31268	1.71650
4.439	-3.700	24.25100	.61763	.06433	-.00321	.03110	.00479	.00646	.53670	.31234	1.71830
4.435	-3.500	24.26400	.61831	.06421	-.00315	.02943	.00453	.00613	.53730	.31262	1.71870
4.431	-3.300	24.26000	.61827	.06419	-.00317	.02780	.00424	.00581	.53730	.31256	1.71900
4.424	-3.100	24.26400	.61864	.06411	-.00328	.02618	.00397	.00549	.53764	.31268	1.71950
4.420	-2.900	24.27600	.61928	.06406	-.00323	.02448	.00369	.00516	.53818	.31300	1.71940
4.416	-2.700	24.27600	.61917	.06388	-.00326	.02260	.00340	.00482	.53816	.31279	1.72050
4.411	-2.500	24.27900	.61895	.06383	-.00331	.02104	.00316	.00448	.53796	.31268	1.72050
4.410	-2.300	24.29100	.61937	.06372	-.00322	.01943	.00291	.00415	.53832	.31287	1.72060
4.413	-2.100	24.29100	.61949	.06367	-.00324	.01758	.00268	.00382	.53846	.31287	1.72100
4.418	-1.900	24.29800	.62035	.06365	-.00320	.01595	.00247	.00347	.53921	.31327	1.72120
4.419	-1.700	24.31000	.62046	.06359	-.00301	.01396	.00229	.00307	.53927	.31338	1.72080
4.431	-1.500	24.31000	.62033	.06351	-.00307	.01228	.00210	.00269	.53918	.31325	1.72120
4.430	-1.300	24.31600	.62062	.06349	-.00318	.01038	.00191	.00229	.53942	.31342	1.72110
4.431	-1.100	24.32900	.62060	.06333	-.00302	.00875	.00170	.00196	.53940	.31338	1.72120
4.433	-.900	24.32900	.62110	.06338	-.00299	.00676	.00150	.00159	.53983	.31363	1.72130
4.436	-.700	24.33200	.62129	.06331	-.00321	.00507	.00134	.00124	.54002	.31368	1.72160
4.431	-.500	24.34700	.62160	.06316	-.00319	.00307	.00117	.00084	.54028	.31381	1.72170
4.432	-.300	24.34600	.62191	.06321	-.00334	.00147	.00104	.00047	.54055	.31396	1.72170
4.426	-.100	24.35100	.62256	.06314	-.00352	-.00034	.00077	.00012	.54114	.31422	1.72210
4.427	.100	24.36300	.62239	.06307	-.00354	-.00164	.00041	-.00011	.54095	.31420	1.72170
4.422	.300	24.36200	.62240	.06320	-.00358	-.00307	-.00012	-.00032	.54091	.31431	1.72090
4.420	.500	24.36700	.62278	.06335	-.00349	-.00432	-.00053	-.00057	.54116	.31465	1.71990
4.417	.700	24.38300	.62329	.06328	-.00347	-.00582	-.00091	-.00084	.54157	.31495	1.71960
4.412	.900	24.38100	.62298	.06333	-.00363	-.00720	-.00125	-.00109	.54128	.31485	1.71920
4.410	1.100	24.38700	.62323	.06336	-.00372	-.00877	-.00151	-.00143	.54146	.31504	1.71870
4.420	1.300	24.40000	.62381	.06334	-.00360	-.01062	-.00178	-.00174	.54193	.31538	1.71840
4.423	1.500	24.39900	.62425	.06356	-.00355	-.01246	-.00195	-.00212	.54224	.31575	1.71730
4.427	1.700	24.40300	.62436	.06360	-.00350	-.01408	-.00219	-.00244	.54231	.31587	1.71690
4.419	1.900	24.41800	.62464	.06357	-.00342	-.01607	-.00240	-.00284	.54249	.31610	1.71620
4.423	2.100	24.41800	.62462	.06368	-.00343	-.01771	-.00266	-.00314	.54243	.31619	1.71550
4.423	2.300	24.42300	.62504	.06376	-.00342	-.01937	-.00293	-.00353	.54275	.31649	1.71490
4.410	2.500	24.43300	.62514	.06381	-.00347	-.02118	-.00316	-.00392	.54276	.31668	1.71390
4.411	2.700	24.43600	.62516	.06390	-.00336	-.02279	-.00343	-.00422	.54273	.31679	1.71320
4.414	2.900	24.44100	.62571	.06401	-.00344	-.02465	-.00367	-.00459	.54316	.31717	1.71250
4.417	3.100	24.45200	.62581	.06405	-.00336	-.02646	-.00391	-.00494	.54317	.31735	1.71160
4.411	3.300	24.45300	.62609	.06416	-.00346	-.02826	-.00413	-.00532	.54337	.31757	1.71100
4.405	3.500	24.45500	.62582	.06425	-.00349	-.02998	-.00438	-.00565	.54308	.31757	1.71010
4.397	3.700	24.46700	.62542	.06431	-.00344	-.03182	-.00458	-.00605	.54262	.31756	1.70870
4.391	3.900	24.46800	.62522	.06442	-.00343	-.03370	-.00477	-.00644	.54239	.31760	1.70780
4.387	4.100	24.47400	.62565	.06454	-.00349	-.03538	-.00500	-.00681	.54270	.31794	1.70690

OA257 (LARC 20-M6-6559) OV102 W/(FSB) (R7E114) (10 JUL 81)

REFERENCE DATA

SREF = 2690.0000 SQ.FT. XMRP = 1076.6800 IN. XO
LREF = 474.8100 INCHES YMRP = .0000 IN. YO
BREF = 936.6800 INCHES ZMRP = 375.0000 IN. ZO
SCALE = .0100

PARAMETRIC DATA

ALPHA = 25.000 PHI = .000
SPDBRK = 86.600 AILRON = .000
YP = 1.000 1S = .000
ELEVON = .000 MACH = 6.000
S-MODE = 2.000 S-DIR = 1.000

RUN NO. 2077/ 0 RN/L = 4.42 GRADIENT INTERVAL = -.60/ .60

RN/L	BETA	ALPHA	CN	CA	CLM	CY	CYN	CBL	CL	CD	L/D
4.380	4.300	24.48300	.62534	.06462	-.00352	-.03723	-.00520	-.00720	.54233	.31797	1.70560
	GRADIENT	.02286	.00103	.00012	-.00032	-.00741	-.00176	-.00138	.00076	.00075	-.00169

OA257 (LARC 20-M6-6559) OV102 W/(FSB) (R7E015) (10 JUL 81)

REFERENCE DATA

SREF = 2690.0000 SQ.FT. XMRP = 1076.6800 IN. XO
LREF = 474.8100 INCHES YMRP = .0000 IN. YO
BREF = 936.6800 INCHES ZMRP = 375.0000 IN. ZO
SCALE = .0100

PARAMETRIC DATA

ALPHA = 25.000 PHI = .000
SPDBRK = 86.600 AILRON = .000
YP = 1.000 1S = .000
ELEVON = .000 MACH = 6.000
S-MODE = 1.000 S-DIR = 1.000

RUN NO. 78/ 0 RN/L = 4.46 GRADIENT INTERVAL = -.60/ .60

RN/L	BETA	ALPHA	CN	CA	CLM	CY	CYN	CBL	CL	CD	L/D
4.500	-4.649	24.16600	.61401	.06469	-.00283	.03889	.00584	.00785	.53372	.31039	1.71950
4.499	-4.595	24.17600	.61451	.06447	-.00282	.03893	.00584	.00781	.53421	.31049	1.72060
4.536	-4.164	24.18500	.61536	.06418	-.00308	.03497	.00527	.00712	.53506	.31065	1.72240
4.521	-3.636	24.21400	.61676	.06404	-.00281	.02998	.00456	.00614	.53623	.31137	1.72220
4.534	-3.162	24.22100	.61742	.06382	-.00308	.02621	.00388	.00539	.53688	.31151	1.72350
4.506	-2.650	24.23500	.61774	.06328	-.00330	.02184	.00319	.00460	.53733	.31127	1.72630
4.496	-2.170	24.24800	.61871	.06344	-.00301	.01806	.00270	.00374	.53807	.31194	1.72490
4.471	-1.721	24.25400	.61848	.06302	-.00298	.01387	.00224	.00292	.53800	.31152	1.72700
4.463	-1.183	24.26800	.62027	.06300	-.00313	.00921	.00167	.00198	.53956	.31238	1.72730
4.437	-.707	24.29100	.61996	.06276	-.00318	.00467	.00129	.00103	.53925	.31224	1.72700
4.604	-.321	24.30100	.61694	.06292	-.00302	.00096	.00088	.00029	.53638	.31124	1.72340
4.330	-.308	24.12300	.61184	.06268	-.00330	.00103	.00087	.00025	.53279	.30727	1.73390
4.426	-.282	24.29000	.62094	.06295	-.00343	.00116	.00092	.00029	.54008	.31281	1.72650
4.400	.292	24.30100	.62101	.06281	-.00357	-.00277	-.00037	-.00041	.54014	.31281	1.72670
4.403	.819	24.32500	.62230	.06332	-.00348	-.00671	-.00131	-.00114	.54097	.31403	1.72270
4.376	1.461	24.33600	.62138	.06314	-.00352	-.01233	-.00204	-.00223	.54015	.31360	1.72240
4.400	1.990	24.35600	.62248	.06336	-.00366	-.01688	-.00261	-.00314	.54095	.31443	1.72040
4.366	2.275	24.35800	.62233	.06353	-.00341	-.01933	-.00298	-.00367	.54073	.31454	1.71910
	GRADIENT	.10733	.00783	-.00006	-.00057	-.00638	-.00211	-.00115	.00659	.00416	-.00198

OA257 (LARC 20-M6-6559) OV102 W/(FSB) (R7E016) (10 JUL 81)

REFERENCE DATA

SREF = 2690.0000 SQ.FT. XMRP = 1076.6800 IN. XO
LREF = 474.8100 INCHES YMRP = .0000 IN. YO
BREF = 936.6800 INCHES ZMRP = 375.0000 IN. ZO
SCALE = .0100

PARAMETRIC DATA

ALPHA = 27.500 PHI = .000
SPDBRK = 86.600 AILRON = .000
YP = 1.000 1S = .000
ELEVON = .000 MACH = 6.000
S-MODE = 2.000 S-DIR = 1.000

RUN NO. 79/ 0 RN/L = 4.46 GRADIENT INTERVAL = -.60/ .60

RN/L	BETA	ALPHA	CN	CA	CLM	CY	CYN	CBL	CL	CD	L/D
4.484	-4.097	27.05600	.72865	.06377	-.00713	.03286	.00606	.00708	.61990	.38823	1.59680
4.501	-3.900	27.06800	.72961	.06367	-.00711	.03117	.00579	.00674	.62072	.38870	1.59690
4.499	-3.700	27.06000	.72972	.06360	-.00724	.02940	.00552	.00638	.62091	.38860	1.59780
4.497	-3.500	27.06700	.73019	.06358	-.00728	.02767	.00525	.00604	.62129	.38887	1.59770
4.496	-3.300	27.07600	.73055	.06351	-.00722	.02602	.00500	.00566	.62158	.38907	1.59760
4.493	-3.100	27.07100	.73048	.06348	-.00723	.02419	.00472	.00533	.62156	.38896	1.59800
4.485	-2.900	27.08000	.73065	.06348	-.00730	.02260	.00447	.00496	.62165	.38915	1.59750
4.483	-2.700	27.08800	.73138	.06344	-.00720	.02088	.00420	.00459	.62226	.38952	1.59750
4.488	-2.500	27.09100	.73190	.06344	-.00727	.01914	.00394	.00423	.62271	.38979	1.59760
4.486	-2.300	27.10400	.73231	.06332	-.00720	.01758	.00366	.00388	.62304	.39001	1.59750
4.480	-2.100	27.10900	.73236	.06317	-.00714	.01589	.00340	.00354	.62312	.38996	1.59790
4.480	-1.900	27.11200	.73246	.06301	-.00714	.01427	.00310	.00321	.62326	.38989	1.59850
4.477	-1.700	27.12400	.73286	.06295	-.00705	.01265	.00281	.00286	.62356	.39015	1.59830
4.479	-1.500	27.12600	.73311	.06284	-.00704	.01107	.00250	.00254	.62382	.39018	1.59880
4.473	-1.300	27.12800	.73318	.06280	-.00718	.00959	.00219	.00222	.62389	.39021	1.59890
4.464	-1.100	27.14200	.73387	.06256	-.00721	.00800	.00188	.00185	.62451	.39046	1.59940
4.476	-.900	27.14700	.73403	.06245	-.00745	.00660	.00153	.00155	.62468	.39048	1.59980
4.471	-.700	27.14900	.73428	.06233	-.00747	.00492	.00128	.00120	.62493	.39052	1.60030
4.464	-.500	27.16200	.73444	.06220	-.00751	.00335	.00101	.00087	.62505	.39062	1.60010
4.470	-.300	27.16000	.73461	.06218	-.00760	.00169	.00072	.00049	.62523	.39066	1.60050
4.458	-.100	27.16900	.73524	.06220	-.00766	.00014	.00042	.00019	.62572	.39107	1.60000
4.453	.100	27.18100	.73533	.06224	-.00775	-.00150	.00013	-.00018	.62570	.39126	1.59920
4.451	.300	27.18000	.73556	.06231	-.00781	-.00289	-.00016	-.00052	.62588	.39142	1.59900
4.448	.500	27.19100	.73618	.06225	-.00801	-.00448	-.00047	-.00086	.62637	.39177	1.59880
4.443	.700	27.19800	.73624	.06234	-.00796	-.00597	-.00078	-.00121	.62634	.39197	1.59790
4.446	.900	27.20100	.73630	.06243	-.00811	-.00750	-.00113	-.00153	.62633	.39210	1.59740
4.454	1.100	27.21200	.73684	.06248	-.00805	-.00901	-.00145	-.00188	.62672	.39251	1.59670
4.465	1.300	27.21700	.73728	.06255	-.00796	-.01054	-.00177	-.00220	.62704	.39283	1.59620
4.457	1.500	27.22000	.73691	.06269	-.00791	-.01200	-.00210	-.00253	.62663	.39282	1.59520
4.444	1.700	27.23200	.73715	.06273	-.00782	-.01363	-.00240	-.00287	.62674	.39310	1.59440
4.448	1.900	27.23600	.73757	.06282	-.00782	-.01526	-.00271	-.00321	.62704	.39341	1.59390
4.443	2.100	27.23900	.73761	.06294	-.00788	-.01689	-.00299	-.00359	.62701	.39357	1.59310
4.429	2.300	27.25400	.73779	.06295	-.00785	-.01855	-.00327	-.00396	.62706	.39382	1.59230
4.433	2.500	27.25300	.73755	.06294	-.00785	-.02033	-.00359	-.00431	.62685	.39369	1.59220
4.424	2.700	27.26000	.73767	.06296	-.00793	-.02196	-.00386	-.00469	.62691	.39383	1.59180
4.419	2.900	27.27200	.73802	.06302	-.00785	-.02371	-.00416	-.00503	.62711	.39419	1.59090
4.419	3.100	27.27000	.73751	.06301	-.00791	-.02543	-.00442	-.00540	.62667	.39393	1.59080
4.419	3.300	27.27800	.73836	.06311	-.00794	-.02738	-.00466	-.00576	.62733	.39449	1.59020
4.422	3.500	27.29400	.73842	.06313	-.00802	-.02922	-.00488	-.00616	.62726	.39471	1.58920
4.423	3.698	27.28500	.73828	.06320	-.00796	-.03081	-.00516	-.00648	.62716	.39461	1.58930
	GRADIENT	.03100	.00166	.00010	-.00046	-.00779	-.00148	-.00172	.00122	.00117	-.00169

OA257 (LARC 20-M6-6559) OV102 W/(FSB) (R7E116) (10 JUL 81)

REFERENCE DATA

SREF = 2690.0000 SQ.FT. XMRP = 1076.6800 IN. XO
LREF = 474.8100 INCHES YMRP = .0000 IN. YO
BREF = 936.6800 INCHES ZMRP = 375.0000 IN. ZO
SCALE = .0100

PARAMETRIC DATA

ALPHA = 27.500 PHI = .000
SPDBRK = 86.600 AILRON = .000
YP = 1.000 1S = .000
ELEVON = .000 MACH = 6.000
S-MODE = 2.000 S-DIR = 1.000

RUN NO. 2079/ O RN/L = 4.46 GRADIENT INTERVAL = -.60/ .60

RN/L	BETA	ALPHA	CN	CA	CLM	CY	CYN	CBL	CL	CD	L/D
4.499	-4.000	27.06100	.72905	.06376	-.00720	.03216	.00595	.00694	.62023	.38844	1.59670
4.504	-3.800	27.06500	.72964	.06359	-.00713	.03023	.00565	.00657	.62081	.38861	1.59750
4.498	-3.600	27.06000	.73002	.06365	-.00731	.02852	.00538	.00620	.62115	.38879	1.59770
4.497	-3.400	27.07300	.73054	.06350	-.00726	.02684	.00513	.00584	.62160	.38902	1.59780
4.495	-3.200	27.07300	.73065	.06349	-.00719	.02509	.00486	.00550	.62169	.38907	1.59790
4.488	-3.000	27.07400	.73060	.06351	-.00730	.02338	.00459	.00513	.62163	.38908	1.59770
4.481	-2.800	27.09200	.73129	.06343	-.00722	.02176	.00435	.00476	.62216	.38951	1.59730
4.485	-2.600	27.09100	.73168	.06344	-.00727	.01998	.00407	.00440	.62251	.38969	1.59750
4.487	-2.400	27.09600	.73188	.06337	-.00729	.01838	.00381	.00406	.62269	.38977	1.59760
4.484	-2.200	27.11000	.73229	.06323	-.00716	.01676	.00354	.00372	.62303	.38999	1.59760
4.479	-2.000	27.10900	.73238	.06311	-.00714	.01501	.00323	.00338	.62317	.38991	1.59820
4.479	-1.800	27.11400	.73268	.06296	-.00714	.01346	.00294	.00304	.62346	.38997	1.59870
4.477	-1.600	27.12700	.73315	.06291	-.00704	.01183	.00266	.00270	.62382	.39028	1.59840
4.478	-1.400	27.12500	.73315	.06279	-.00710	.01031	.00234	.00238	.62388	.39016	1.59910
4.467	-1.200	27.13500	.73337	.06270	-.00723	.00883	.00204	.00204	.62406	.39028	1.59900
4.468	-1.000	27.14500	.73378	.06251	-.00727	.00733	.00171	.00172	.62443	.39040	1.59950
4.474	-.800	27.14500	.73420	.06238	-.00745	.00583	.00139	.00137	.62487	.39049	1.60020
4.468	-.600	27.15700	.73419	.06230	-.00749	.00417	.00114	.00105	.62482	.39054	1.59990
4.466	-.400	27.16400	.73468	.06217	-.00753	.00255	.00086	.00069	.62526	.39073	1.60030
4.466	-.200	27.16300	.73503	.06220	-.00768	.00090	.00056	.00033	.62557	.39089	1.60040
4.455	.000	27.17700	.73509	.06218	-.00776	-.00067	.00030	-.00002	.62554	.39105	1.59960
4.451	.200	27.18200	.73546	.06228	-.00777	-.00223	-.00002	-.00035	.62579	.39137	1.59900
4.451	.400	27.18300	.73594	.06228	-.00797	-.00363	-.00031	-.00069	.62620	.39161	1.59900
4.444	.600	27.19700	.73627	.06230	-.00799	-.00525	-.00064	-.00102	.62639	.39193	1.59820
4.442	.800	27.19800	.73622	.06234	-.00800	-.00674	-.00096	-.00136	.62633	.39195	1.59800
4.452	1.000	27.20500	.73674	.06243	-.00808	-.00825	-.00130	-.00171	.62670	.39235	1.59730
4.458	1.200	27.21800	.73726	.06254	-.00805	-.00980	-.00161	-.00205	.62702	.39282	1.59620
4.463	1.400	27.21800	.73688	.06258	-.00794	-.01129	-.00192	-.00238	.62666	.39268	1.59590
4.451	1.600	27.22500	.73711	.06266	-.00789	-.01283	-.00226	-.00268	.62679	.39294	1.59510
4.443	1.800	27.23900	.73765	.06280	-.00781	-.01443	-.00255	-.00303	.62711	.39347	1.59380
4.450	2.000	27.23800	.73757	.06288	-.00786	-.01608	-.00285	-.00341	.62701	.39348	1.59350
4.432	2.200	27.24400	.73757	.06295	-.00790	-.01771	-.00312	-.00379	.62693	.39361	1.59280
4.436	2.400	27.25500	.73789	.06297	-.00785	-.01943	-.00342	-.00414	.62713	.39389	1.59210
4.428	2.600	27.25600	.73758	.06295	-.00792	-.02116	-.00374	-.00448	.62686	.39374	1.59200
4.421	2.800	27.26700	.73789	.06301	-.00787	-.02276	-.00399	-.00486	.62704	.39406	1.59120
4.419	3.000	27.27200	.73783	.06301	-.00784	-.02458	-.00429	-.00519	.62694	.39409	1.59090
4.417	3.200	27.27300	.73798	.06306	-.00795	-.02641	-.00455	-.00558	.62705	.39421	1.59060
4.423	3.400	27.28900	.73825	.06307	-.00801	-.02832	-.00476	-.00597	.62717	.39452	1.58970
4.421	3.600	27.29300	.73835	.06318	-.00797	-.03007	-.00503	-.00632	.62718	.39471	1.58900
	GRADIENT	.03161	.00164	.00006	-.00044	-.00781	-.00148	-.00172	.00122	.00114	-.00162

OA257 (LARC 20-M6-6559) OV102 W/(FSB) (R7E017) (10 JUL 81)

REFERENCE DATA

SREF = 2690.0000 SQ.FT. XMRP = 1076.6800 IN. XO
LREF = 474.8100 INCHES YMRP = .0000 IN. YO
BREF = 936.6800 INCHES ZMRP = 375.0000 IN. ZO
SCALE = .0100

PARAMETRIC DATA

ALPHA = 30.000 PHI = .000
SPDBRK = 86.600 AILRON = .000
YP = 1.000 1S = .000
ELEVON = .000 MACH = 6.000
S-MODE = 2.000 S-DIR = 1.000

RUN NO. 88/ 0 RN/L = 4.54 GRADIENT INTERVAL = -.60/ .60

RN/L	BETA	ALPHA	CN	CA	CLM	CY	CYN	CBL	CL	CD	L/D
4.578	-4.545	29.04700	.81547	.06321	-.01120	.03655	.00609	.00836	.68221	.45119	1.51200
4.578	-4.400	29.05500	.81672	.06328	-.01137	.03527	.00588	.00807	.68320	.45196	1.51160
4.571	-4.200	29.06400	.81597	.06321	-.01137	.03349	.00561	.00765	.68252	.45163	1.51120
4.573	-4.000	29.06400	.81649	.06310	-.01144	.03156	.00543	.00718	.68302	.45179	1.51180
4.569	-3.800	29.07300	.81743	.06307	-.01150	.02965	.00523	.00675	.68379	.45233	1.51170
4.567	-3.600	29.07600	.81752	.06304	-.01148	.02778	.00504	.00632	.68386	.45238	1.51170
4.570	-3.400	29.08300	.81819	.06297	-.01149	.02589	.00485	.00590	.68442	.45273	1.51180
4.566	-3.200	29.09200	.81814	.06298	-.01142	.02409	.00467	.00543	.68430	.45282	1.51120
4.565	-3.000	29.09500	.81890	.06298	-.01163	.02226	.00444	.00504	.68494	.45323	1.51120
4.567	-2.800	29.10600	.81928	.06289	-.01144	.02049	.00426	.00465	.68523	.45346	1.51110
4.573	-2.600	29.11200	.82001	.06298	-.01149	.01859	.00405	.00419	.68578	.45397	1.51060
4.575	-2.400	29.12000	.82030	.06294	-.01148	.01685	.00383	.00379	.68599	.45418	1.51040
4.573	-2.200	29.12700	.82078	.06288	-.01150	.01508	.00358	.00340	.68638	.45444	1.51040
4.573	-2.000	29.13500	.82156	.06288	-.01155	.01332	.00336	.00295	.68700	.45492	1.51010
4.565	-1.800	29.14100	.82139	.06285	-.01142	.01174	.00309	.00261	.68682	.45487	1.50990
4.565	-1.600	29.14500	.82133	.06282	-.01160	.01011	.00283	.00224	.68674	.45487	1.50980
4.566	-1.400	29.15700	.82220	.06264	-.01157	.00833	.00261	.00185	.68750	.45528	1.51000
4.567	-1.200	29.16100	.82236	.06248	-.01172	.00664	.00234	.00147	.68768	.45527	1.51050
4.562	-1.000	29.17200	.82237	.06237	-.01181	.00506	.00206	.00112	.68766	.45531	1.51030
4.552	-.800	29.17500	.82281	.06224	-.01189	.00359	.00174	.00077	.68809	.45545	1.51080
4.546	-.600	29.18200	.82288	.06212	-.01198	.00218	.00132	.00048	.68814	.45547	1.51090
4.546	-.400	29.19000	.82326	.06201	-.01202	.00072	.00093	.00017	.68847	.45564	1.51100
4.542	-.200	29.19300	.82356	.06199	-.01209	-.00076	.00055	-.00019	.68872	.45581	1.51100
4.528	.000	29.20600	.82434	.06181	-.01210	-.00219	.00016	-.00049	.68938	.45619	1.51120
4.540	.200	29.20500	.82428	.06186	-.01216	-.00334	-.00032	-.00075	.68931	.45620	1.51100
4.544	.400	29.21900	.82475	.06199	-.01205	-.00421	-.00101	-.00090	.68955	.45670	1.50980
4.538	.600	29.21900	.82454	.06205	-.01211	-.00570	-.00138	-.00119	.68933	.45665	1.50950
4.533	.800	29.22900	.82515	.06218	-.01212	-.00721	-.00167	-.00156	.68972	.45719	1.50860
4.526	1.000	29.23400	.82501	.06223	-.01198	-.00881	-.00196	-.00197	.68954	.45722	1.50810
4.516	1.200	29.23700	.82490	.06227	-.01218	-.01049	-.00216	-.00239	.68940	.45724	1.50770
4.512	1.400	29.24800	.82523	.06222	-.01213	-.01233	-.00240	-.00278	.68962	.45749	1.50740
4.506	1.600	29.24900	.82536	.06229	-.01222	-.01418	-.00266	-.00322	.68969	.45762	1.50710
4.499	1.800	29.26400	.82558	.06239	-.01220	-.01589	-.00288	-.00362	.68972	.45799	1.50590
4.501	2.000	29.26200	.82575	.06243	-.01220	-.01765	-.00313	-.00405	.68986	.45810	1.50590
4.506	2.200	29.27600	.82601	.06247	-.01227	-.01940	-.00338	-.00444	.68996	.45842	1.50510
4.503	2.400	29.27700	.82545	.06246	-.01225	-.02116	-.00364	-.00487	.68947	.45815	1.50490
4.498	2.600	29.28500	.82555	.06249	-.01222	-.02274	-.00390	-.00524	.68948	.45832	1.50430
4.491	2.800	29.29200	.82565	.06256	-.01224	-.02451	-.00414	-.00562	.68947	.45853	1.50370
4.498	3.000	29.29600	.82652	.06266	-.01217	-.02640	-.00442	-.00601	.69015	.45908	1.50330
4.501	3.200	29.31300	.82601	.06271	-.01224	-.02812	-.00467	-.00640	.68954	.45908	1.50200
4.496	3.400	29.31000	.82650	.06278	-.01224	-.03003	-.00490	-.00685	.68996	.45934	1.50210
4.494	3.600	29.32300	.82598	.06281	-.01227	-.03188	-.00511	-.00728	.68939	.45927	1.50110

OA257 (LARC 20-M6-6559) OV102 W/(FSB) (R7E017) (10 JUL 81)

REFERENCE DATA

SREF =	2690.0000 SQ.FT.	XMRP =	1076.6800 IN. XO		
LREF =	474.8100 INCHES	YMRP =	.0000 IN. YO		
BREF =	936.6800 INCHES	ZMRP =	375.0000 IN. ZO		
SCALE =	.0100				

PARAMETRIC DATA

ALPHA =	30.000	PHI =	.000
SPDBRK =	86.600	AILRON =	.000
YP =	1.000	1S =	.000
ELEVON =	.000	MACH =	6.000
S-MODE =	2.000	S-DIR =	1.000

RUN NO. 88/ 0 RN/L = 4.54 GRADIENT INTERVAL = -.60/ .60

RN/L	BETA	ALPHA	CN	CA	CLM	CY	CYN	CBL	CL	CD	L/D
4.492	3.755	29.32000	.82615	.06308	-.01207	-.03367	-.00532	-.00761	.68943	.45956	1.50020
	GRADIENT	.03232	.00155	-.00007	-.00010	-.00644	-.00230	-.00138	.00113	.00108	-.00118

OA257 (LARC 20-M6-6559) OV102 W/(FSB) (R7E117) (10 JUL 81)

REFERENCE DATA

SREF = 2690.0000 SQ.FT. XMRP = 1076.6800 IN. XO
LREF = 474.8100 INCHES YMRP = .0000 IN. YO
BREF = 936.6800 INCHES ZMRP = 375.0000 IN. ZO
SCALE = .0100

PARAMETRIC DATA

ALPHA = 30.000 PHI = .000
SPDBRK = 86.600 AILRON = .000
YP = 1.000 1S = .000
ELEVON = .000 MACH = 6.000
S-MODE = 2.000 S-DIR = 1.000

RUN NO. 2088/ O RN/L = 4.54 GRADIENT INTERVAL = -.60/ .60

RN/L	BETA	ALPHA	CN	CA	CLM	CY	CYN	CBL	CL	CD	L/D
4.580	-4.500	29.04800	.81611	.06331	-.01128	.03604	.00601	.00826	.68271	.45161	1.51170
4.576	-4.300	29.06200	.81625	.06319	-.01134	.03435	.00574	.00786	.68279	.45173	1.51150
4.569	-4.100	29.06300	.81637	.06318	-.01141	.03259	.00552	.00741	.68289	.45179	1.51150
4.574	-3.900	29.06800	.81734	.06305	-.01156	.03052	.00533	.00696	.68375	.45222	1.51200
4.566	-3.700	29.07600	.81717	.06294	-.01149	.02870	.00514	.00654	.68360	.45213	1.51200
4.568	-3.500	29.07600	.81786	.06301	-.01145	.02681	.00494	.00609	.68417	.45253	1.51190
4.570	-3.300	29.08800	.81794	.06297	-.01146	.02494	.00476	.00569	.68416	.45267	1.51140
4.565	-3.100	29.09200	.81876	.06292	-.01146	.02313	.00456	.00523	.68487	.45308	1.51160
4.568	-2.900	29.10400	.81904	.06290	-.01146	.02142	.00437	.00485	.68504	.45334	1.51110
4.567	-2.700	29.10900	.81923	.06290	-.01137	.01952	.00417	.00441	.68516	.45349	1.51090
4.575	-2.500	29.11500	.82026	.06298	-.01152	.01772	.00394	.00397	.68597	.45413	1.51050
4.575	-2.300	29.12400	.82041	.06287	-.01144	.01592	.00370	.00360	.68608	.45423	1.51040
4.574	-2.100	29.13000	.82072	.06289	-.01151	.01425	.00347	.00319	.68630	.45445	1.51020
4.570	-1.900	29.14000	.82212	.06289	-.01150	.01254	.00322	.00278	.68744	.45526	1.51000
4.564	-1.700	29.14100	.82084	.06289	-.01155	.01092	.00295	.00242	.68632	.45464	1.50960
4.564	-1.500	29.15300	.82218	.06276	-.01153	.00926	.00275	.00204	.68745	.45533	1.50980
4.567	-1.300	29.15800	.82186	.06260	-.01163	.00748	.00248	.00166	.68722	.45509	1.51010
4.564	-1.100	29.16400	.82243	.06241	-.01181	.00584	.00219	.00129	.68776	.45528	1.51060
4.557	-.900	29.17500	.82238	.06226	-.01184	.00437	.00190	.00095	.68770	.45525	1.51060
4.549	-.700	29.17700	.82261	.06223	-.01196	.00288	.00154	.00062	.68790	.45536	1.51070
4.546	-.500	29.18900	.82324	.06204	-.01203	.00150	.00113	.00033	.68844	.45566	1.51090
4.545	-.300	29.19100	.82294	.06200	-.01201	-.00004	.00072	.00002	.68819	.45549	1.51090
4.534	-.100	29.20000	.82384	.06192	-.01208	-.00150	.00036	-.00036	.68894	.45597	1.51090
4.531	.100	29.20400	.82392	.06183	-.01212	-.00285	-.00008	-.00061	.68902	.45598	1.51110
4.545	.300	29.21100	.82478	.06195	-.01217	-.00371	-.00068	-.00084	.68966	.45659	1.51050
4.541	.500	29.22000	.82467	.06202	-.01208	-.00495	-.00122	-.00101	.68946	.45670	1.50970
4.537	.700	29.22000	.82430	.06214	-.01214	-.00643	-.00153	-.00139	.68908	.45663	1.50900
4.530	.900	29.23500	.82557	.06220	-.01205	-.00800	-.00181	-.00176	.69004	.45748	1.50830
4.521	1.100	29.23400	.82499	.06225	-.01208	-.00964	-.00207	-.00216	.68951	.45722	1.50800
4.514	1.300	29.24500	.82506	.06224	-.01213	-.01141	-.00227	-.00260	.68949	.45738	1.50750
4.508	1.500	29.25000	.82559	.06228	-.01215	-.01328	-.00253	-.00299	.68990	.45774	1.50720
4.502	1.700	29.25500	.82484	.06232	-.01226	-.01501	-.00276	-.00343	.68918	.45747	1.50650
4.501	1.900	29.26300	.82574	.06240	-.01213	-.01680	-.00302	-.00384	.68986	.45808	1.50600
4.501	2.100	29.26600	.82603	.06249	-.01225	-.01850	-.00324	-.00425	.69004	.45833	1.50550
4.506	2.300	29.28100	.82569	.06244	-.01226	-.02025	-.00350	-.00465	.68965	.45830	1.50480
4.500	2.500	29.28000	.82561	.06249	-.01226	-.02194	-.00377	-.00504	.68957	.45829	1.50460
4.494	2.700	29.29100	.82584	.06256	-.01223	-.02367	-.00403	-.00543	.68965	.45861	1.50380
4.495	2.900	29.29300	.82607	.06258	-.01222	-.02545	-.00427	-.00582	.68982	.45875	1.50370
4.501	3.100	29.30400	.82631	.06270	-.01219	-.02722	-.00454	-.00620	.68989	.45910	1.50270
4.496	3.300	29.31300	.82666	.06270	-.01217	-.02909	-.00476	-.00664	.69011	.45938	1.50230
4.496	3.500	29.31400	.82592	.06276	-.01230	-.03098	-.00500	-.00707	.68944	.45909	1.50180
4.492	3.700	29.32700	.82616	.06284	-.01218	-.03283	-.00522	-.00750	.68950	.45943	1.50080
	GRADIENT	.03129	.00182	-.00005	-.00011	-.00637	-.00234	-.00136	.00137	.00122	-.00100

OA257 (LARC 20-M6-6559) OV102 W/(FSB) (R7E018) (10 JUL 81)

REFERENCE DATA

SREF = 2690.0000 SQ.FT. XMRP = 1076.6800 IN. XO
LREF = 474.8100 INCHES YMRP = .0000 IN. YO
BREF = 936.6800 INCHES ZMRP = 375.0000 IN. ZO
SCALE = .0100

PARAMETRIC DATA

ALPHA = 32.500 PHI = .000
SPDBRK = 86.600 AILRON = .000
YP = 1.000 1S = .000
ELEVON = .000 MACH = 6.000
S-MODE = 2.000 S-DIR = 1.000

RUN NO. 91/ 0 RN/L = 4.53 GRADIENT INTERVAL = -.60/ .60

RN/L	BETA	ALPHA	CN	CA	CLM	CY	CYN	CBL	CL	CD	L/D
4.424	-4.261	31.80500	.93757	.06246	-.01787	.03672	.00528	.00944	.76387	.54721	1.39590
4.440	-4.100	31.83000	.93806	.06240	-.01778	.03531	.00504	.00908	.76408	.54775	1.39500
4.465	-3.900	31.83300	.93853	.06231	-.01782	.03353	.00478	.00872	.76450	.54796	1.39520
4.480	-3.700	31.83400	.93876	.06220	-.01786	.03160	.00453	.00827	.76475	.54801	1.39550
4.473	-3.500	31.83900	.93900	.06210	-.01807	.02991	.00432	.00778	.76495	.54812	1.39560
4.466	-3.300	31.85100	.93947	.06198	-.01812	.02815	.00411	.00730	.76530	.54843	1.39540
4.505	-3.100	31.86600	.94009	.06186	-.01799	.02640	.00385	.00689	.76575	.54885	1.39520
4.524	-2.900	31.86900	.94074	.06182	-.01803	.02463	.00362	.00640	.76630	.54919	1.39530
4.527	-2.700	31.87100	.94054	.06168	-.01820	.02297	.00338	.00600	.76617	.54899	1.39560
4.527	-2.500	31.88400	.94165	.06173	-.01823	.02129	.00320	.00546	.76697	.54980	1.39500
4.525	-2.300	31.90400	.94213	.06160	-.01829	.01944	.00298	.00509	.76725	.55020	1.39450
4.543	-2.100	31.90500	.94244	.06158	-.01823	.01763	.00277	.00462	.76752	.55036	1.39460
4.541	-1.900	31.90700	.94255	.06160	-.01835	.01585	.00259	.00410	.76758	.55047	1.39440
4.518	-1.700	31.91500	.94292	.06155	-.01855	.01421	.00240	.00361	.76784	.55073	1.39420
4.521	-1.500	31.93400	.94360	.06152	-.01840	.01244	.00216	.00322	.76825	.55132	1.39350
4.531	-1.300	31.94000	.94365	.06153	-.01829	.01077	.00188	.00281	.76823	.55143	1.39320
4.543	-1.100	31.94200	.94397	.06154	-.01846	.00923	.00161	.00242	.76848	.55164	1.39310
4.554	-.900	31.95000	.94417	.06156	-.01836	.00754	.00132	.00201	.76856	.55187	1.39270
4.552	-.700	31.96900	.94426	.06153	-.01830	.00591	.00109	.00150	.76847	.55215	1.39180
4.551	-.500	31.97400	.94464	.06159	-.01822	.00428	.00081	.00112	.76871	.55247	1.39140
4.542	-.300	31.97200	.94410	.06156	-.01821	.00266	.00054	.00065	.76829	.55213	1.39150
4.533	-.100	31.97700	.94423	.06165	-.01814	.00115	.00025	.00028	.76830	.55234	1.39100
4.530	.100	31.99000	.94414	.06153	-.01820	-.00034	-.00003	-.00012	.76817	.55236	1.39070
4.531	.300	31.99900	.94453	.06142	-.01824	-.00209	-.00031	-.00048	.76848	.55260	1.39070
4.534	.500	31.99900	.94483	.06145	-.01816	-.00374	-.00056	-.00100	.76871	.55279	1.39060
4.540	.700	32.00400	.94511	.06145	-.01839	-.00532	-.00082	-.00134	.76890	.55299	1.39040
4.552	.900	32.01600	.94583	.06143	-.01831	-.00702	-.00110	-.00181	.76940	.55353	1.39000
4.559	1.100	32.02900	.94593	.06133	-.01831	-.00861	-.00134	-.00218	.76941	.55366	1.38970
4.564	1.300	32.02900	.94553	.06140	-.01828	-.01033	-.00157	-.00265	.76903	.55352	1.38940
4.568	1.500	32.03200	.94519	.06133	-.01838	-.01210	-.00181	-.00308	.76877	.55331	1.38940
4.568	1.700	32.04300	.94594	.06138	-.01852	-.01372	-.00206	-.00354	.76926	.55390	1.38880
4.579	1.900	32.05600	.94605	.06134	-.01850	-.01560	-.00227	-.00409	.76925	.55410	1.38830
4.573	2.100	32.05900	.94627	.06134	-.01851	-.01736	-.00250	-.00449	.76941	.55426	1.38820
4.563	2.300	32.06000	.94606	.06139	-.01855	-.01916	-.00269	-.00505	.76919	.55421	1.38790
4.564	2.500	32.07300	.94615	.06137	-.01858	-.02089	-.00297	-.00543	.76916	.55441	1.38740
4.570	2.700	32.08400	.94628	.06128	-.01864	-.02252	-.00323	-.00584	.76921	.55455	1.38710
4.561	2.900	32.08700	.94605	.06138	-.01867	-.02433	-.00350	-.00632	.76893	.55454	1.38660
4.558	3.050	32.08800	.94594	.06157	-.01892	-.02587	-.00373	-.00665	.76873	.55466	1.38600
	GRADIENT	.03129	.00031	-.00017	.00001	-.00797	-.00138	-.00205	.00006	.00043	-.00096

OA257 (LARC 20-M6-6559) OV102 W/(FSB) (R7E118) (10 JUL 81)

REFERENCE DATA

SREF = 2690.0000 SQ.FT. XMRP = 1076.6800 IN. XO
LREF = 474.8100 INCHES YMRP = .0000 IN. YO
BREF = 936.6800 INCHES ZMRP = 375.0000 IN. ZO
SCALE = .0100

PARAMETRIC DATA

ALPHA = 32.500 PHI = .000
SPDBRK = 86.600 AILRON = .000
YP = 1.000 1S = .000
ELEVON = .000 MACH = 6.000
S-MODE = 2.000 S-DIR = 1.000

RUN NO. 2091/ 0 RN/L = 4.53 GRADIENT INTERVAL = -.60/ .60

RN/L	BETA	ALPHA	CN	CA	CLM	CY	CYN	CBL	CL	CD	L/D
4.435	-4.200	31.82000	.93806	.06249	-.01772	.03627	.00520	.00932	.76413	.54769	1.39520
4.452	-4.000	31.83200	.93851	.06233	-.01774	.03439	.00492	.00889	.76448	.54796	1.39510
4.474	-3.800	31.83300	.93888	.06230	-.01792	.03259	.00466	.00848	.76480	.54814	1.39530
4.479	-3.600	31.83500	.93850	.06212	-.01793	.03067	.00441	.00803	.76455	.54782	1.39560
4.466	-3.400	31.84400	.93926	.06206	-.01817	.02908	.00423	.00751	.76515	.54827	1.39560
4.482	-3.200	31.86400	.94006	.06194	-.01797	.02724	.00398	.00708	.76570	.54886	1.39510
4.518	-3.000	31.86900	.94058	.06184	-.01800	.02554	.00374	.00663	.76614	.54912	1.39520
4.524	-2.800	31.86900	.94070	.06179	-.01811	.02381	.00350	.00620	.76627	.54915	1.39540
4.531	-2.600	31.87600	.94134	.06166	-.01827	.02204	.00328	.00572	.76682	.54947	1.39560
4.522	-2.400	31.89700	.94186	.06166	-.01813	.02031	.00310	.00524	.76706	.55002	1.39460
4.531	-2.200	31.90300	.94246	.06159	-.01829	.01853	.00288	.00484	.76754	.55037	1.39460
4.551	-2.000	31.90500	.94244	.06162	-.01823	.01674	.00268	.00437	.76750	.55040	1.39440
4.528	-1.800	31.90900	.94276	.06160	-.01856	.01497	.00250	.00385	.76773	.55061	1.39430
4.516	-1.600	31.92400	.94323	.06152	-.01850	.01337	.00229	.00344	.76803	.55100	1.39390
4.525	-1.400	31.94000	.94377	.06154	-.01831	.01162	.00203	.00303	.76833	.55150	1.39310
4.536	-1.200	31.94000	.94388	.06156	-.01838	.01001	.00175	.00260	.76841	.55158	1.39310
4.550	-1.000	31.94300	.94388	.06152	-.01839	.00837	.00145	.00223	.76840	.55160	1.39300
4.553	-.800	31.96000	.94422	.06153	-.01835	.00677	.00121	.00177	.76852	.55200	1.39220
4.553	-.600	31.97500	.94492	.06156	-.01821	.00506	.00095	.00133	.76896	.55260	1.39150
4.548	-.400	31.97300	.94431	.06152	-.01825	.00346	.00066	.00092	.76848	.55222	1.39160
4.537	-.200	31.97300	.94405	.06160	-.01820	.00188	.00040	.00048	.76821	.55215	1.39130
4.531	.000	31.98100	.94447	.06165	-.01819	.00039	.00011	.00005	.76847	.55253	1.39080
4.530	.200	31.99500	.94453	.06150	-.01824	-.00121	-.00016	-.00030	.76846	.55261	1.39060
4.531	.400	32.00000	.94469	.06143	-.01818	-.00291	-.00045	-.00073	.76859	.55271	1.39060
4.536	.600	32.00100	.94493	.06146	-.01824	-.00451	-.00069	-.00117	.76877	.55287	1.39050
4.546	.800	32.00800	.94563	.06145	-.01836	-.00609	-.00096	-.00154	.76930	.55333	1.39030
4.557	1.000	32.02300	.94579	.06134	-.01832	-.00781	-.00122	-.00200	.76934	.55353	1.38990
4.561	1.200	32.02900	.94579	.06141	-.01835	-.00945	-.00147	-.00241	.76925	.55366	1.38940
4.567	1.400	32.03000	.94515	.06132	-.01828	-.01122	-.00169	-.00287	.76875	.55326	1.38950
4.566	1.600	32.03600	.94569	.06139	-.01848	-.01296	-.00194	-.00333	.76912	.55368	1.38910
4.578	1.800	32.05100	.94590	.06136	-.01852	-.01461	-.00218	-.00376	.76916	.55398	1.38840
4.574	2.000	32.06200	.94623	.06129	-.01845	-.01651	-.00240	-.00426	.76937	.55424	1.38820
4.568	2.200	32.06100	.94620	.06135	-.01850	-.01831	-.00258	-.00484	.76933	.55425	1.38800
4.561	2.400	32.06400	.94596	.06134	-.01858	-.01998	-.00283	-.00522	.76910	.55416	1.38790
4.568	2.600	32.07900	.94602	.06133	-.01863	-.02177	-.00311	-.00563	.76901	.55438	1.38710
4.566	2.800	32.08800	.94646	.06141	-.01869	-.02352	-.00336	-.00612	.76924	.55481	1.38650
4.562	3.000	32.08500	.94608	.06143	-.01871	-.02514	-.00362	-.00655	.76894	.55458	1.38650
	GRADIENT	.02750	.00023	-.00010	-.00000	-.00795	-.00137	-.00207	-.00002	.00040	-.00102

OA257 (LARC 20-M6-6559) OV102 W/(FSB) (R7E019) (10 JUL 81)

REFERENCE DATA

SREF = 2690.0000 SQ.FT. XMRP = 1076.6800 IN. XO
LREF = 474.8100 INCHES YMRP = .0000 IN. YO
BREF = 936.6800 INCHES ZMRP = 375.0000 IN. ZO
SCALE = .0100

PARAMETRIC DATA

ALPHA = 30.000 PHI = .000
SPDBRK = 86.600 AILRON = .000
YP = 1.000 1S = 1.000
ELEVON = .000 MACH = 6.000
S-MODE = 2.000 S-DIR = 1.000

RUN NO. 94/ 0 RN/L = 4.35 GRADIENT INTERVAL = -.60/ .60

RN/L	BETA	ALPHA	CN	CA	CLM	CY	CYN	CBL	CL	CD	L/D
4.414	-4.669	29.21400	.82212	.06298	-.01082	.03690	.00610	.00871	.68681	.45623	1.50540
4.410	-4.500	29.21900	.82165	.06293	-.01093	.03535	.00586	.00842	.68639	.45601	1.50520
4.414	-4.300	29.22700	.82285	.06289	-.01100	.03359	.00560	.00803	.68739	.45665	1.50530
4.413	-4.100	29.22500	.82292	.06275	-.01110	.03158	.00544	.00755	.68754	.45654	1.50600
4.417	-3.900	29.23500	.82392	.06275	-.01111	.02961	.00528	.00701	.68832	.45715	1.50570
4.407	-3.700	29.24100	.82390	.06263	-.01102	.02775	.00508	.00660	.68832	.45711	1.50580
4.406	-3.500	29.24200	.82436	.06268	-.01101	.02582	.00488	.00620	.68869	.45740	1.50570
4.404	-3.300	29.25900	.82541	.06255	-.01102	.02397	.00472	.00572	.68953	.45800	1.50550
4.396	-3.100	29.25600	.82515	.06250	-.01099	.02199	.00450	.00527	.68935	.45780	1.50580
4.390	-2.900	29.26600	.82561	.06244	-.01105	.02027	.00431	.00491	.68970	.45808	1.50560
4.388	-2.700	29.27700	.82628	.06240	-.01101	.01851	.00413	.00448	.69023	.45850	1.50540
4.394	-2.500	29.27800	.82666	.06247	-.01085	.01656	.00389	.00401	.69050	.45877	1.50510
4.389	-2.300	29.29300	.82726	.06242	-.01102	.01482	.00369	.00354	.69093	.45919	1.50470
4.375	-2.100	29.29600	.82743	.06240	-.01096	.01310	.00349	.00312	.69107	.45930	1.50460
4.369	-1.900	29.29900	.82807	.06243	-.01103	.01123	.00330	.00269	.69159	.45968	1.50450
4.368	-1.700	29.31400	.82877	.06228	-.01098	.00946	.00303	.00238	.69215	.46007	1.50440
4.379	-1.500	29.31500	.82938	.06225	-.01104	.00773	.00275	.00200	.69270	.46035	1.50470
4.381	-1.300	29.32600	.82957	.06211	-.01119	.00615	.00248	.00163	.69284	.46045	1.50470
4.384	-1.100	29.33300	.82992	.06203	-.01120	.00449	.00221	.00123	.69312	.46065	1.50470
4.378	-.900	29.33200	.83013	.06190	-.01126	.00293	.00189	.00090	.69339	.46062	1.50530
4.367	-.700	29.35100	.83090	.06176	-.01129	.00144	.00157	.00050	.69396	.46111	1.50500
4.351	-.500	29.34900	.83082	.06169	-.01132	.00008	.00117	.00028	.69395	.46098	1.50540
4.336	-.300	29.35200	.83097	.06164	-.01136	-.00146	.00083	-.00014	.69407	.46105	1.50540
4.322	-.100	29.36600	.83139	.06158	-.01122	-.00291	.00044	-.00043	.69437	.46137	1.50500
4.320	.100	29.36500	.83128	.06146	-.01148	-.00410	-.00005	-.00062	.69433	.46120	1.50550
4.310	.300	29.37800	.83164	.06149	-.01139	-.00490	-.00080	-.00082	.69453	.46156	1.50470
4.307	.500	29.38300	.83212	.06159	-.01128	-.00615	-.00129	-.00106	.69486	.46194	1.50420
4.301	.700	29.38400	.83244	.06170	-.01147	-.00756	-.00163	-.00133	.69507	.46222	1.50380
4.295	.900	29.39900	.83250	.06181	-.01135	-.00925	-.00190	-.00173	.69495	.46252	1.50250
4.290	1.100	29.39600	.83264	.06180	-.01138	-.01093	-.00215	-.00213	.69510	.46254	1.50280
4.280	1.300	29.40800	.83331	.06178	-.01156	-.01294	-.00231	-.00265	.69560	.46299	1.50240
4.281	1.500	29.41500	.83376	.06180	-.01146	-.01466	-.00252	-.00308	.69592	.46333	1.50200
4.274	1.700	29.41200	.83344	.06190	-.01158	-.01652	-.00272	-.00355	.69562	.46320	1.50180
4.273	1.900	29.43100	.83390	.06190	-.01152	-.01827	-.00295	-.00392	.69587	.46367	1.50080
4.284	2.100	29.43200	.83394	.06191	-.01158	-.02018	-.00322	-.00436	.69589	.46370	1.50070
4.293	2.300	29.44100	.83425	.06198	-.01168	-.02181	-.00345	-.00476	.69606	.46402	1.50000
4.293	2.500	29.45300	.83428	.06196	-.01163	-.02353	-.00370	-.00514	.69600	.46417	1.49940
4.303	2.700	29.45400	.83455	.06213	-.01162	-.02515	-.00401	-.00551	.69613	.46447	1.49880
4.322	2.820	29.46600	.83504	.06212	-.01160	-.02632	-.00414	-.00578	.69647	.46484	1.49830
	GRADIENT	.03529	.00120	-.00016	-.00002	-.00609	-.00253	-.00127	.00084	.00088	-.00109

OA257 (LARC 20-M6-6559) OV102 W/(FSB) (R7E119) (10 JUL 81)

REFERENCE DATA

SREF = 2690.0000 SQ.FT. XMRP = 1076.6800 IN. XO
LREF = 474.8100 INCHES YMRP = .0000 IN. YO
BREF = 936.6800 INCHES ZMRP = 375.0000 IN. ZO
SCALE = .0100

PARAMETRIC DATA

ALPHA = 30.000 PHI = .000
SPDBRK = 86.600 AILRON = .000
YP = 1.000 1S = 1.000
ELEVON = .000 MACH = 6.000
S-MODE = 2.000 S-DIR = 1.000

RUN NO. 2094/ 0 RN/L = 4.35 GRADIENT INTERVAL = -.60/ .60

RN/L	BETA	ALPHA	CN	CA	CLM	CY	CYN	CBL	CL	CD	L/D
4.412	-4.600	29.21300	.82188	.06301	-.01088	.03621	.00601	.00854	.68659	.45612	1.50530
4.411	-4.400	29.22600	.82240	.06289	-.01101	.03442	.00571	.00825	.68701	.45642	1.50520
4.411	-4.200	29.22500	.82287	.06280	-.01104	.03262	.00553	.00780	.68746	.45657	1.50570
4.416	-4.000	29.22900	.82336	.06275	-.01104	.03061	.00535	.00728	.68789	.45680	1.50590
4.412	-3.800	29.24200	.82408	.06265	-.01106	.02866	.00519	.00680	.68846	.45722	1.50570
4.406	-3.600	29.24000	.82390	.06268	-.01097	.02673	.00498	.00638	.68831	.45714	1.50570
4.407	-3.400	29.25000	.82498	.06265	-.01110	.02487	.00479	.00594	.68918	.45777	1.50550
4.401	-3.200	29.25900	.82503	.06249	-.01099	.02295	.00461	.00547	.68923	.45776	1.50560
4.392	-3.000	29.26000	.82553	.06249	-.01108	.02112	.00440	.00511	.68966	.45801	1.50580
4.387	-2.800	29.27200	.82589	.06241	-.01103	.01941	.00422	.00467	.68992	.45827	1.50550
4.391	-2.600	29.27600	.82625	.06241	-.01086	.01743	.00401	.00422	.69019	.45850	1.50530
4.394	-2.400	29.28400	.82700	.06253	-.01097	.01565	.00379	.00377	.69073	.45905	1.50470
4.381	-2.200	29.29700	.82754	.06237	-.01095	.01394	.00359	.00335	.69117	.45934	1.50470
4.371	-2.000	29.29600	.82739	.06243	-.01102	.01218	.00341	.00290	.69103	.45930	1.50450
4.369	-1.800	29.31000	.82858	.06237	-.01091	.01033	.00315	.00257	.69198	.45999	1.50430
4.372	-1.600	29.31600	.82904	.06226	-.01095	.00858	.00288	.00221	.69238	.46021	1.50450
4.383	-1.400	29.31700	.82959	.06219	-.01113	.00689	.00263	.00179	.69289	.46043	1.50490
4.382	-1.200	29.33300	.82973	.06203	-.01120	.00529	.00234	.00145	.69297	.46054	1.50470
4.384	-1.000	29.33200	.82992	.06197	-.01129	.00376	.00206	.00108	.69316	.46058	1.50500
4.372	-.800	29.33900	.83053	.06183	-.01131	.00221	.00174	.00073	.69371	.46084	1.50530
4.358	-.600	29.34900	.83078	.06178	-.01133	.00071	.00136	.00037	.69387	.46104	1.50500
4.344	-.400	29.34700	.83065	.06164	-.01140	-.00073	.00100	.00005	.69384	.46083	1.50560
4.326	-.200	29.36300	.83135	.06161	-.01126	-.00221	.00064	-.00029	.69434	.46134	1.50510
4.321	.000	29.36300	.83117	.06152	-.01124	-.00356	.00021	-.00053	.69422	.46118	1.50530
4.316	.200	29.36800	.83171	.06146	-.01141	-.00456	-.00041	-.00078	.69468	.46145	1.50540
4.307	.400	29.38200	.83171	.06150	-.01130	-.00547	-.00110	-.00090	.69455	.46165	1.50450
4.305	.600	29.38400	.83251	.06171	-.01136	-.00685	-.00147	-.00120	.69513	.46225	1.50380
4.296	.800	29.39300	.83250	.06175	-.01145	-.00840	-.00177	-.00154	.69503	.46239	1.50310
4.292	1.000	29.39800	.83294	.06182	-.01135	-.01008	-.00202	-.00193	.69533	.46273	1.50270
4.284	1.200	29.39900	.83275	.06179	-.01157	-.01197	-.00223	-.00241	.69518	.46262	1.50270
4.282	1.400	29.41600	.83367	.06177	-.01150	-.01378	-.00240	-.00286	.69585	.46327	1.50200
4.279	1.600	29.41300	.83357	.06184	-.01146	-.01563	-.00263	-.00329	.69575	.46323	1.50200
4.272	1.800	29.42400	.83351	.06186	-.01151	-.01735	-.00286	-.00365	.69560	.46337	1.50120
4.278	2.000	29.43300	.83405	.06186	-.01159	-.01928	-.00308	-.00417	.69600	.46373	1.50090
4.291	2.200	29.43100	.83402	.06196	-.01171	-.02097	-.00333	-.00457	.69595	.46378	1.50060
4.292	2.400	29.44900	.83430	.06201	-.01166	-.02270	-.00357	-.00496	.69601	.46418	1.49940
4.298	2.600	29.45300	.83422	.06201	-.01156	-.02435	-.00385	-.00535	.69591	.46420	1.49920
4.317	2.800	29.46400	.83512	.06220	-.01164	-.02610	-.00413	-.00572	.69651	.46493	1.49810
	GRADIENT	.03214	.00137	-.00011	-.00001	-.00616	-.00245	-.00127	.00099	.00096	-.00098

OA257 (LARC 20-M6-6559) OV102 W/(FSB) (R7E020) (10 JUL 81)

REFERENCE DATA

SREF = 2690.0000 SQ.FT. XMRP = 1076.6800 IN. XO
LREF = 474.8100 INCHES YMRP = .0000 IN. YO
BREF = 936.6800 INCHES ZMRP = 375.0000 IN. ZO
SCALE = .0100

PARAMETRIC DATA

ALPHA = 32.500 PHI = .000
SPDBRK = 86.600 AILRON = .000
YP = 1.000 1S = 1.000
ELEVON = .000 MACH = 6.000
S-MODE = 2.000 S-DIR = 1.000

RUN NO. 95/ 0 RN/L = 4.40 GRADIENT INTERVAL = -.60/ .60

RN/L	BETA	ALPHA	CN	CA	CLM	CY	CYN	CBL	CL	CD	L/D
4.505	-4.953	31.61900	.92359	.06358	-.01616	.04016	.00603	.01018	.75316	.53834	1.39900
4.498	-4.800	31.62400	.92417	.06352	-.01613	.03877	.00581	.00981	.75363	.53867	1.39910
4.492	-4.600	31.62600	.92424	.06344	-.01628	.03709	.00547	.00944	.75371	.53867	1.39920
4.485	-4.400	31.62500	.92467	.06337	-.01624	.03527	.00519	.00902	.75412	.53882	1.39960
4.472	-4.200	31.64000	.92542	.06323	-.01628	.03345	.00496	.00853	.75470	.53929	1.39940
4.466	-4.000	31.63600	.92505	.06318	-.01642	.03164	.00468	.00812	.75445	.53900	1.39970
4.459	-3.800	31.64900	.92678	.06313	-.01634	.02992	.00445	.00768	.75582	.54003	1.39960
4.460	-3.600	31.65400	.92672	.06308	-.01644	.02803	.00424	.00715	.75576	.54002	1.39950
4.446	-3.400	31.66000	.92714	.06300	-.01648	.02626	.00406	.00671	.75610	.54026	1.39950
4.440	-3.200	31.66900	.92772	.06300	-.01644	.02443	.00383	.00627	.75650	.54069	1.39910
4.431	-3.000	31.67000	.92765	.06302	-.01653	.02264	.00365	.00578	.75643	.54067	1.39910
4.421	-2.800	31.68300	.92903	.06297	-.01654	.02088	.00346	.00535	.75750	.54154	1.39880
4.422	-2.600	31.68600	.92908	.06299	-.01650	.01901	.00323	.00490	.75751	.54161	1.39860
4.421	-2.400	31.69700	.92997	.06290	-.01657	.01713	.00307	.00437	.75820	.54215	1.39850
4.418	-2.200	31.70100	.92979	.06283	-.01663	.01543	.00287	.00396	.75806	.54205	1.39850
4.416	-2.000	31.70500	.93046	.06284	-.01676	.01371	.00262	.00350	.75858	.54246	1.39840
4.410	-1.800	31.72200	.93102	.06277	-.01675	.01200	.00235	.00310	.75894	.54292	1.39790
4.404	-1.600	31.72000	.93137	.06277	-.01674	.01043	.00209	.00270	.75925	.54308	1.39800
4.396	-1.400	31.73300	.93155	.06266	-.01672	.00886	.00181	.00229	.75933	.54326	1.39770
4.399	-1.200	31.73600	.93187	.06267	-.01676	.00719	.00155	.00187	.75957	.54347	1.39760
4.400	-1.000	31.74200	.93230	.06272	-.01683	.00558	.00126	.00147	.75985	.54382	1.39720
4.390	-.800	31.75800	.93269	.06262	-.01681	.00392	.00096	.00107	.76009	.54415	1.39680
4.378	-.600	31.75500	.93242	.06273	-.01673	.00223	.00067	.00065	.75983	.54406	1.39660
4.366	-.400	31.77200	.93310	.06270	-.01672	.00079	.00040	.00025	.76026	.54463	1.39590
4.365	-.200	31.77400	.93342	.06270	-.01667	-.00071	.00003	-.00005	.76052	.54481	1.39590
4.360	.000	31.78100	.93380	.06264	-.01692	-.00231	-.00022	-.00052	.76080	.54507	1.39580
4.354	.200	31.79200	.93357	.06263	-.01684	-.00384	-.00049	-.00086	.76051	.54507	1.39530
4.347	.400	31.79000	.93359	.06262	-.01697	-.00551	-.00077	-.00126	.76054	.54505	1.39540
4.341	.600	31.80800	.93403	.06262	-.01688	-.00713	-.00108	-.00160	.76075	.54552	1.39450
4.336	.800	31.80400	.93377	.06265	-.01697	-.00882	-.00132	-.00208	.76055	.54536	1.39460
4.337	1.000	31.81700	.93453	.06270	-.01705	-.01057	-.00156	-.00252	.76105	.54598	1.39390
4.344	1.200	31.82500	.93464	.06270	-.01707	-.01234	-.00177	-.00297	.76107	.54614	1.39350
4.346	1.400	31.82600	.93461	.06276	-.01709	-.01412	-.00203	-.00344	.76100	.54618	1.39330
4.342	1.600	31.84200	.93527	.06286	-.01695	-.01590	-.00226	-.00384	.76135	.54683	1.39230
4.334	1.800	31.84100	.93530	.06291	-.01702	-.01766	-.00251	-.00429	.76137	.54687	1.39220
4.323	2.000	31.85600	.93495	.06294	-.01694	-.01940	-.00275	-.00473	.76091	.54690	1.39130
4.318	2.200	31.85500	.93498	.06298	-.01695	-.02129	-.00301	-.00518	.76091	.54695	1.39120
4.308	2.400	31.86200	.93528	.06297	-.01712	-.02297	-.00320	-.00572	.76111	.54719	1.39090
4.299	2.600	31.87100	.93497	.06292	-.01695	-.02479	-.00344	-.00612	.76080	.54710	1.39060
	GRADIENT	.03804	.00106	-.00010	-.00020	-.00782	-.00144	-.00189	.00059	.00098	-.00141

OA257 (LARC 20-M6-6559) OV102 W/(FSB) (R7E120) (10 JUL 81)

REFERENCE DATA

SREF = 2690.0000 SQ.FT. XMRP = 1076.6800 IN. XO
LREF = 474.8100 INCHES YMRP = .0000 IN. YO
BREF = 936.6800 INCHES ZMRP = 375.0000 IN. ZO
SCALE = .0100

PARAMETRIC DATA

ALPHA = 32.500 PHI = .000
SPDBRK = 86.600 AILRON = .000
YP = 1.000 1S = 1.000
ELEVON = .000 MACH = 6.000
S-MODE = 2.000 S-DIR = 1.000

RUN NO. 2095/ 0 RN/L = 4.39 GRADIENT INTERVAL = -.60/ .60

RN/L	BETA	ALPHA	CN	CA	CLM	CY	CYN	CBL	CL	CD	L/D
4.505	-4.900	31.61300	.92381	.06363	-.01618	.03959	.00594	.01008	.75338	.53843	1.39920
4.492	-4.700	31.62800	.92424	.06349	-.01620	.03796	.00566	.00961	.75366	.53874	1.39890
4.490	-4.500	31.62300	.92505	.06343	-.01621	.03619	.00532	.00923	.75444	.53904	1.39960
4.477	-4.300	31.63400	.92498	.06328	-.01630	.03437	.00507	.00875	.75435	.53903	1.39950
4.468	-4.100	31.63700	.92562	.06324	-.01621	.03250	.00482	.00833	.75489	.53936	1.39960
4.462	-3.900	31.64200	.92577	.06316	-.01638	.03080	.00458	.00788	.75501	.53943	1.39960
4.462	-3.700	31.65500	.92658	.06308	-.01640	.02898	.00435	.00745	.75563	.53996	1.39940
4.453	-3.500	31.65500	.92700	.06306	-.01648	.02713	.00416	.00691	.75600	.54016	1.39960
4.443	-3.300	31.66900	.92724	.06295	-.01650	.02535	.00394	.00650	.75612	.54039	1.39920
4.435	-3.100	31.66800	.92790	.06301	-.01638	.02357	.00375	.00602	.75666	.54077	1.39920
4.428	-2.900	31.67600	.92828	.06298	-.01659	.02182	.00355	.00559	.75692	.54105	1.39900
4.420	-2.700	31.68600	.92902	.06296	-.01648	.01997	.00335	.00512	.75748	.54155	1.39870
4.424	-2.500	31.69000	.92932	.06295	-.01655	.01806	.00314	.00461	.75769	.54176	1.39860
4.418	-2.300	31.70300	.93004	.06282	-.01660	.01625	.00297	.00423	.75825	.54220	1.39850
4.415	-2.100	31.70400	.93027	.06281	-.01663	.01455	.00276	.00373	.75844	.54233	1.39850
4.412	-1.900	31.71300	.93087	.06286	-.01668	.01291	.00249	.00332	.75884	.54280	1.39800
4.407	-1.700	31.72000	.93109	.06274	-.01674	.01126	.00222	.00288	.75902	.54291	1.39810
4.400	-1.500	31.72300	.93174	.06271	-.01677	.00965	.00195	.00248	.75956	.54327	1.39810
4.395	-1.300	31.74100	.93193	.06263	-.01680	.00798	.00167	.00206	.75961	.54353	1.39760
4.399	-1.100	31.73900	.93170	.06277	-.01685	.00630	.00139	.00167	.75935	.54350	1.39720
4.395	-.900	31.75400	.93257	.06268	-.01676	.00482	.00111	.00128	.75999	.54408	1.39680
4.384	-.700	31.75500	.93237	.06267	-.01675	.00304	.00081	.00084	.75982	.54398	1.39680
4.371	-.500	31.76000	.93252	.06273	-.01676	.00150	.00053	.00043	.75987	.54418	1.39640
4.365	-.300	31.77500	.93337	.06267	-.01674	.00010	.00022	.00016	.76048	.54478	1.39590
4.365	-.100	31.77300	.93309	.06264	-.01687	-.00153	-.00010	-.00030	.76028	.54457	1.39610
4.355	.100	31.79100	.93370	.06266	-.01686	-.00308	-.00035	-.00069	.76061	.54516	1.39520
4.352	.300	31.78800	.93356	.06262	-.01692	-.00472	-.00063	-.00108	.76054	.54501	1.39550
4.342	.500	31.79800	.93423	.06262	-.01700	-.00633	-.00090	-.00147	.76102	.54549	1.39510
4.338	.700	31.81000	.93436	.06262	-.01686	-.00805	-.00119	-.00191	.76101	.54572	1.39450
4.335	.900	31.80900	.93431	.06267	-.01701	-.00968	-.00144	-.00230	.76095	.54573	1.39440
4.341	1.100	31.82500	.93473	.06268	-.01704	-.01147	-.00166	-.00274	.76116	.54616	1.39370
4.344	1.300	31.82200	.93450	.06271	-.01707	-.01329	-.00191	-.00324	.76096	.54603	1.39360
4.344	1.500	31.83900	.93552	.06279	-.01709	-.01506	-.00212	-.00369	.76164	.54686	1.39270
4.338	1.700	31.84200	.93506	.06284	-.01700	-.01671	-.00239	-.00404	.76119	.54669	1.39240
4.328	1.900	31.84800	.93530	.06291	-.01700	-.01849	-.00263	-.00453	.76130	.54697	1.39190
4.319	2.100	31.85800	.93491	.06292	-.01696	-.02035	-.00286	-.00496	.76087	.54690	1.39120
4.314	2.300	31.85800	.93491	.06299	-.01707	-.02206	-.00311	-.00543	.76083	.54696	1.39100
4.303	2.500	31.87100	.93524	.06294	-.01706	-.02386	-.00332	-.00593	.76101	.54727	1.39060
4.294	2.655	31.86400	.93477	.06305	-.01718	-.02520	-.00350	-.00627	.76061	.54702	1.39050
	GRADIENT	.03529	.00139	-.00010	-.00024	-.00788	-.00142	-.00194	.00089	.00112	-.00123

OA257 (LARC 20-M6-6559) OV102 W/(FSB) (R7E021) (10 JUL 81)

REFERENCE DATA

SREF = 2690.0000 SQ.FT. XMRP = 1076.6800 IN. XO
LREF = 474.8100 INCHES YMRP = .0000 IN. YO
BREF = 936.6800 INCHES ZMRP = 375.0000 IN. ZO
SCALE = .0100

PARAMETRIC DATA

ALPHA = 35.000 PHI = .000
SPDBRK = 86.600 AILRON = .000
YP = 1.000 1S = 1.000
ELEVON = .000 MACH = 6.000
S-MODE = 2.000 S-DIR = 1.000

RUN NO. 96/ 0 RN/L = 4.47 GRADIENT INTERVAL = -.60/ .60

RN/L	BETA	ALPHA	CN	CA	CLM	CY	CYN	CBL	CL	CD	L/D
4.532	-4.807	34.13800	1.03600	.06231	-.02354	.03816	.00652	.01048	.82255	.63300	1.29950
4.532	-4.700	34.14700	1.03650	.06226	-.02363	.03743	.00640	.01021	.82286	.63334	1.29920
4.536	-4.500	34.15200	1.03720	.06218	-.02390	.03584	.00608	.00986	.82341	.63372	1.29930
4.545	-4.300	34.16300	1.03750	.06213	-.02377	.03412	.00578	.00941	.82360	.63404	1.29900
4.542	-4.100	34.16300	1.03810	.06214	-.02386	.03238	.00546	.00896	.82406	.63435	1.29910
4.534	-3.900	34.18000	1.03890	.06205	-.02393	.03085	.00514	.00858	.82457	.63496	1.29860
4.536	-3.700	34.17800	1.03930	.06203	-.02392	.02917	.00481	.00813	.82493	.63514	1.29880
4.527	-3.500	34.18500	1.04010	.06199	-.02401	.02757	.00448	.00771	.82558	.63569	1.29870
4.502	-3.300	34.18900	1.04030	.06196	-.02386	.02613	.00417	.00731	.82573	.63584	1.29860
4.490	-3.100	34.18900	1.04070	.06203	-.02395	.02457	.00385	.00695	.82603	.63614	1.29850
4.481	-2.900	34.20600	1.04200	.06197	-.02390	.02305	.00356	.00649	.82692	.63703	1.29810
4.474	-2.700	34.20200	1.04210	.06206	-.02391	.02137	.00329	.00606	.82701	.63711	1.29810
4.470	-2.500	34.21400	1.04310	.06208	-.02396	.01959	.00305	.00556	.82765	.63784	1.29760
4.459	-2.300	34.21900	1.04360	.06210	-.02395	.01783	.00285	.00505	.82804	.63824	1.29740
4.447	-2.100	34.22500	1.04430	.06209	-.02411	.01614	.00262	.00457	.82852	.63870	1.29720
4.442	-1.900	34.23500	1.04450	.06209	-.02399	.01440	.00239	.00416	.82857	.63895	1.29680
4.450	-1.700	34.23700	1.04490	.06207	-.02407	.01267	.00214	.00362	.82890	.63917	1.29680
4.449	-1.500	34.25300	1.04560	.06211	-.02416	.01099	.00190	.00315	.82928	.63984	1.29610
4.440	-1.300	34.25400	1.04580	.06210	-.02406	.00930	.00167	.00265	.82947	.63998	1.29610
4.439	-1.100	34.26600	1.04590	.06205	-.02413	.00773	.00138	.00228	.82939	.64013	1.29570
4.444	-.900	34.27500	1.04620	.06195	-.02420	.00606	.00115	.00180	.82965	.64038	1.29560
4.444	-.700	34.27600	1.04660	.06200	-.02426	.00442	.00088	.00135	.82994	.64068	1.29540
4.441	-.500	34.29500	1.04730	.06196	-.02426	.00279	.00066	.00082	.83030	.64129	1.29470
4.436	-.300	34.29500	1.04730	.06192	-.02428	.00105	.00042	.00039	.83033	.64125	1.29490
4.441	-.100	34.31100	1.04790	.06189	-.02441	-.00051	.00015	.00002	.83069	.64183	1.29430
4.442	.100	34.31500	1.04780	.06184	-.02440	-.00229	-.00008	-.00051	.83060	.64180	1.29420
4.455	.300	34.32000	1.04790	.06181	-.02438	-.00394	-.00035	-.00099	.83060	.64187	1.29400
4.455	.500	34.33500	1.04820	.06183	-.02435	-.00564	-.00062	-.00148	.83066	.64227	1.29330
4.453	.700	34.33600	1.04790	.06186	-.02419	-.00715	-.00089	-.00185	.83041	.64215	1.29320
4.455	.900	34.35500	1.04860	.06175	-.02421	-.00885	-.00114	-.00233	.83079	.64270	1.29270
4.450	1.100	34.35300	1.04830	.06173	-.02418	-.01053	-.00142	-.00279	.83062	.64251	1.29280
4.444	1.300	34.36400	1.04800	.06174	-.02431	-.01209	-.00165	-.00321	.83025	.64251	1.29220
4.455	1.500	34.37400	1.04880	.06173	-.02419	-.01383	-.00190	-.00370	.83077	.64307	1.29190
4.459	1.700	34.37400	1.04910	.06185	-.02428	-.01556	-.00211	-.00421	.83094	.64335	1.29160
4.458	1.900	34.39600	1.04900	.06178	-.02423	-.01742	-.00230	-.00472	.83070	.64357	1.29080
4.462	2.100	34.39500	1.04880	.06172	-.02430	-.01926	-.00249	-.00522	.83054	.64337	1.29090
4.462	2.300	34.41000	1.04970	.06179	-.02431	-.02105	-.00269	-.00576	.83111	.64419	1.29020
4.466	2.500	34.41300	1.04910	.06175	-.02426	-.02288	-.00293	-.00627	.83064	.64387	1.29010
4.459	2.700	34.42100	1.04870	.06164	-.02436	-.02454	-.00324	-.00668	.83023	.64366	1.28990
	GRADIENT	.03986	.00089	-.00014	-.00010	-.00842	-.00128	-.00231	.00036	.00096	-.00140

OA257 (LARC 20-M6-6559) OV102 W/(FSB) (R7E121) (10 JUL 81)

REFERENCE DATA

SREF = 2690.0000 SQ.FT. XMRP = 1076.6800 IN. XO
LREF = 474.8100 INCHES YMRP = .0000 IN. YO
BREF = 936.6800 INCHES ZMRP = 375.0000 IN. ZO
SCALE = .0100

PARAMETRIC DATA

ALPHA = 35.000 PHI = .000
SPDBRK = 86.600 AILRON = .000
YP = 1.000 1S = 1.000
ELEVON = .000 MACH = 6.000
S-MODE = 2.000 S-DIR = 1.000

RUN NO. 2096/ 0 RN/L = 4.47 GRADIENT INTERVAL = -.60/ .60

RN/L	BETA	ALPHA	CN	CA	CLM	CY	CYN	CBL	CL	CD	L/D
4.532	-4.800	34.14300	1.03610	.06233	-.02351	.03818	.00652	.01047	.82252	.63309	1.29920
4.534	-4.600	34.14600	1.03620	.06223	-.02372	.03665	.00625	.01006	.82267	.63314	1.29940
4.540	-4.400	34.15900	1.03740	.06217	-.02384	.03486	.00591	.00964	.82349	.63392	1.29900
4.545	-4.200	34.16200	1.03790	.06212	-.02375	.03323	.00561	.00916	.82389	.63420	1.29910
4.537	-4.000	34.16900	1.03820	.06212	-.02390	.03165	.00530	.00877	.82413	.63452	1.29880
4.537	-3.800	34.18100	1.03960	.06205	-.02393	.02996	.00499	.00835	.82519	.63542	1.29870
4.536	-3.600	34.17700	1.03950	.06200	-.02392	.02833	.00465	.00794	.82518	.63525	1.29900
4.515	-3.400	34.19000	1.04050	.06197	-.02387	.02691	.00433	.00752	.82584	.63596	1.29860
4.493	-3.200	34.18700	1.04020	.06193	-.02392	.02534	.00401	.00712	.82562	.63570	1.29880
4.487	-3.000	34.19900	1.04170	.06204	-.02394	.02376	.00371	.00668	.82671	.63682	1.29820
4.476	-2.800	34.20600	1.04210	.06205	-.02390	.02222	.00343	.00629	.82696	.63716	1.29790
4.472	-2.600	34.20500	1.04270	.06199	-.02410	.02050	.00315	.00584	.82746	.63741	1.29820
4.461	-2.400	34.21900	1.04350	.06207	-.02392	.01859	.00294	.00529	.82796	.63815	1.29740
4.455	-2.200	34.22000	1.04400	.06212	-.02402	.01699	.00274	.00479	.82830	.63847	1.29730
4.441	-2.000	34.23300	1.04420	.06207	-.02410	.01527	.00251	.00438	.82836	.63873	1.29690
4.446	-1.800	34.23600	1.04460	.06204	-.02396	.01363	.00227	.00387	.82873	.63901	1.29690
4.448	-1.600	34.24300	1.04520	.06212	-.02412	.01181	.00202	.00338	.82904	.63947	1.29640
4.446	-1.400	34.25600	1.04570	.06208	-.02414	.01017	.00178	.00292	.82935	.63993	1.29600
4.437	-1.200	34.25600	1.04580	.06212	-.02407	.00852	.00154	.00242	.82940	.63999	1.29590
4.442	-1.000	34.27400	1.04620	.06200	-.02414	.00687	.00126	.00205	.82960	.64039	1.29550
4.445	-.800	34.27400	1.04600	.06201	-.02426	.00527	.00101	.00160	.82948	.64032	1.29540
4.443	-.600	34.28600	1.04670	.06197	-.02428	.00359	.00077	.00106	.82992	.64083	1.29510
4.439	-.400	34.29600	1.04720	.06190	-.02424	.00191	.00054	.00061	.83027	.64122	1.29480
4.436	-.200	34.29900	1.04750	.06192	-.02428	.00031	.00031	.00019	.83048	.64145	1.29470
4.444	.000	34.31800	1.04740	.06178	-.02441	-.00138	.00002	-.00020	.83023	.64153	1.29410
4.448	.200	34.31500	1.04770	.06185	-.02438	-.00309	-.00021	-.00074	.83048	.64171	1.29420
4.457	.400	34.33200	1.04820	.06182	-.02437	-.00483	-.00048	-.00124	.83076	.64225	1.29350
4.452	.600	34.33300	1.04820	.06186	-.02426	-.00639	-.00075	-.00168	.83069	.64228	1.29330
4.456	.800	34.34200	1.04810	.06181	-.02422	-.00794	-.00102	-.00207	.83057	.64232	1.29310
4.451	1.000	34.35500	1.04820	.06177	-.02419	-.00965	-.00128	-.00254	.83052	.64254	1.29260
4.447	1.200	34.35400	1.04820	.06178	-.02422	-.01130	-.00153	-.00301	.83049	.64251	1.29260
4.448	1.400	34.37300	1.04820	.06173	-.02432	-.01288	-.00178	-.00340	.83031	.64274	1.29180
4.457	1.600	34.37300	1.04850	.06174	-.02413	-.01476	-.00203	-.00396	.83058	.64294	1.29180
4.459	1.800	34.38700	1.04930	.06183	-.02425	-.01646	-.00223	-.00446	.83102	.64366	1.29110
4.461	2.000	34.39600	1.04910	.06174	-.02427	-.01835	-.00240	-.00495	.83080	.64361	1.29090
4.460	2.200	34.39900	1.04930	.06177	-.02429	-.02022	-.00258	-.00557	.83093	.64380	1.29070
4.464	2.400	34.41600	1.04940	.06172	-.02426	-.02208	-.00282	-.00604	.83083	.64403	1.29000
4.464	2.600	34.41300	1.04900	.06179	-.02438	-.02365	-.00304	-.00653	.83047	.64382	1.28990
4.459	2.710	34.42300	1.04850	.06160	-.02437	-.02464	-.00326	-.00669	.83009	.64354	1.28990
	GRADIENT	.04089	.00120	-.00010	-.00006	-.00836	-.00127	-.00230	.00059	.00119	-.00152

OA257 (LARC 20-M6-6559) OV102 W/(FSB) (R7E022) (10 JUL 81)

REFERENCE DATA

SREF = 2690.0000 SQ.FT. XMRP = 1076.6800 IN. XO
LREF = 474.8100 INCHES YMRP = .0000 IN. YO
BREF = 936.6800 INCHES ZMRP = 375.0000 IN. ZO
SCALE = .0100

PARAMETRIC DATA

ALPHA = 37.500 PHI = .000
SPDBRK = 86.600 AILRON = .000
YP = 1.000 1S = 1.000
ELEVON = .000 MACH = 6.000
S-MODE = 2.000 S-DIR = 1.000

RUN NO. 97/ 0 RN/L = 4.54 GRADIENT INTERVAL = -.60/ .60

RN/L	BETA	ALPHA	CN	CA	CLM	CY	CYN	CBL	CL	CD	L/D
4.636	-4.920	36.66400	1.14680	.06143	-.03070	.03765	.00704	.01094	.88325	.73408	1.20320
4.633	-4.800	36.68600	1.14750	.06133	-.03087	.03681	.00684	.01072	.88356	.73474	1.20260
4.626	-4.600	36.67900	1.14810	.06136	-.03091	.03517	.00653	.01020	.88413	.73502	1.20290
4.611	-4.400	36.69200	1.14880	.06124	-.03089	.03364	.00617	.00985	.88455	.73552	1.20260
4.603	-4.200	36.68700	1.14870	.06117	-.03100	.03212	.00581	.00949	.88459	.73534	1.20300
4.593	-4.000	36.70300	1.14970	.06104	-.03109	.03067	.00547	.00908	.88526	.73607	1.20270
4.588	-3.800	36.70200	1.15020	.06113	-.03123	.02900	.00511	.00867	.88564	.73643	1.20260
4.584	-3.600	36.71700	1.15120	.06121	-.03118	.02753	.00475	.00825	.88621	.73733	1.20190
4.579	-3.400	36.71800	1.15170	.06118	-.03119	.02588	.00443	.00779	.88661	.73761	1.20200
4.564	-3.200	36.72600	1.15220	.06111	-.03131	.02444	.00410	.00744	.88696	.73799	1.20190
4.553	-3.000	36.73200	1.15250	.06104	-.03137	.02285	.00382	.00687	.88717	.73821	1.20180
4.554	-2.800	36.74200	1.15400	.06107	-.03156	.02120	.00348	.00644	.88818	.73925	1.20150
4.560	-2.600	36.75200	1.15470	.06096	-.03150	.01969	.00318	.00601	.88868	.73974	1.20130
4.556	-2.400	36.75400	1.15480	.06096	-.03165	.01799	.00286	.00564	.88875	.73984	1.20130
4.545	-2.200	36.77000	1.15530	.06093	-.03169	.01651	.00264	.00516	.88894	.74035	1.20070
4.543	-2.000	36.76800	1.15540	.06091	-.03191	.01483	.00237	.00466	.88913	.74042	1.20080
4.539	-1.800	36.78700	1.15670	.06086	-.03198	.01323	.00214	.00414	.88993	.74142	1.20030
4.543	-1.600	36.78100	1.15720	.06088	-.03212	.01157	.00187	.00360	.89035	.74163	1.20050
4.529	-1.400	36.80000	1.15770	.06079	-.03218	.00995	.00161	.00317	.89060	.74217	1.20000
4.522	-1.200	36.79500	1.15800	.06080	-.03218	.00841	.00140	.00259	.89087	.74227	1.20020
4.532	-1.000	36.81500	1.15900	.06070	-.03216	.00665	.00113	.00208	.89149	.74312	1.19970
4.531	-.800	36.81500	1.15820	.06068	-.03219	.00498	.00088	.00160	.89089	.74262	1.19970
4.521	-.600	36.83300	1.15940	.06063	-.03226	.00327	.00063	.00106	.89166	.74358	1.19910
4.516	-.400	36.83300	1.15930	.06058	-.03222	.00149	.00040	.00054	.89160	.74350	1.19920
4.514	-.200	36.84900	1.15990	.06058	-.03235	-.00000	.00014	.00014	.89186	.74409	1.19860
4.519	.000	36.85200	1.15970	.06049	-.03235	-.00169	-.00011	-.00037	.89170	.74393	1.19860
4.516	.200	36.86400	1.16020	.06044	-.03230	-.00334	-.00036	-.00082	.89195	.74435	1.19830
4.511	.400	36.87200	1.16000	.06042	-.03234	-.00523	-.00057	-.00146	.89170	.74436	1.19790
4.506	.600	36.87800	1.16100	.06050	-.03237	-.00685	-.00079	-.00199	.89236	.74510	1.19760
4.510	.800	36.89200	1.16140	.06046	-.03219	-.00860	-.00102	-.00246	.89257	.74557	1.19720
4.515	1.000	36.89600	1.16130	.06045	-.03231	-.01029	-.00121	-.00307	.89239	.74552	1.19700
4.524	1.200	36.91100	1.16150	.06052	-.03223	-.01209	-.00146	-.00353	.89235	.74596	1.19630
4.519	1.400	36.91500	1.16160	.06058	-.03226	-.01371	-.00166	-.00409	.89232	.74609	1.19600
4.512	1.600	36.92900	1.16160	.06054	-.03221	-.01546	-.00193	-.00454	.89222	.74634	1.19550
4.508	1.800	36.92600	1.16170	.06052	-.03235	-.01708	-.00219	-.00506	.89229	.74629	1.19560
4.504	2.000	36.94800	1.16140	.06043	-.03219	-.01864	-.00246	-.00556	.89181	.74638	1.19480
4.503	2.200	36.94500	1.16170	.06054	-.03219	-.02024	-.00279	-.00600	.89208	.74663	1.19480
4.503	2.400	36.96400	1.16200	.06047	-.03220	-.02181	-.00310	-.00647	.89208	.74704	1.19420
4.502	2.543	36.95500	1.16150	.06056	-.03216	-.02277	-.00336	-.00673	.89172	.74666	1.19430
	GRADIENT	.04071	.00116	-.00015	-.00009	-.00842	-.00120	-.00252	.00043	.00117	-.00132

OA257 (LARC 20-M6-6559) OV102 W/(FSB) (R7E122) (10 JUL 81)

REFERENCE DATA

SREF = 2690.0000 SQ.FT. XMRP = 1076.6800 IN. XO
LREF = 474.8100 INCHES YMRP = .0000 IN. YO
BREF = 936.6800 INCHES ZMRP = 375.0000 IN. ZO
SCALE = .0100

PARAMETRIC DATA

ALPHA = 37.500 PHI = .000
SPDBRK = 86.600 AILRON = .000
YP = 1.000 1S = 1.000
ELEVON = .000 MACH = 6.000
S-MODE = 2.000 S-DIR = 1.000

RUN NO. 2097/ 0 RN/L = 4.54 GRADIENT INTERVAL = -.60/ .60

RN/L	BETA	ALPHA	CN	CA	CLM	CY	CYN	CBL	CL	CD	L/D
4.636	-4.900	36.67000	1.14700	.06134	-.03085	.03754	.00701	.01088	.88335	.73418	1.20320
4.630	-4.700	36.68200	1.14810	.06132	-.03082	.03595	.00669	.01045	.88407	.73499	1.20280
4.617	-4.500	36.68600	1.14820	.06128	-.03095	.03443	.00635	.01004	.88414	.73510	1.20270
4.608	-4.300	36.69000	1.14890	.06124	-.03091	.03296	.00600	.00970	.88467	.73553	1.20280
4.598	-4.100	36.69000	1.14930	.06120	-.03102	.03139	.00565	.00929	.88501	.73574	1.20290
4.590	-3.900	36.70400	1.15010	.06109	-.03116	.02981	.00530	.00887	.88553	.73636	1.20260
4.586	-3.700	36.70700	1.15060	.06122	-.03123	.02822	.00493	.00842	.88588	.73684	1.20230
4.582	-3.500	36.72100	1.15140	.06114	-.03112	.02676	.00459	.00806	.88633	.73742	1.20190
4.572	-3.300	36.71600	1.15190	.06115	-.03125	.02514	.00427	.00761	.88683	.73770	1.20220
4.558	-3.100	36.73600	1.15310	.06107	-.03142	.02365	.00397	.00716	.88758	.73866	1.20160
4.552	-2.900	36.73000	1.15250	.06102	-.03148	.02205	.00364	.00668	.88722	.73817	1.20190
4.558	-2.700	36.75200	1.15470	.06098	-.03153	.02046	.00333	.00623	.88869	.73979	1.20130
4.559	-2.500	36.75000	1.15490	.06097	-.03159	.01881	.00304	.00581	.88885	.73983	1.20140
4.549	-2.300	36.76700	1.15530	.06097	-.03154	.01715	.00273	.00534	.88900	.74038	1.20070
4.544	-2.100	36.76600	1.15490	.06091	-.03194	.01563	.00251	.00489	.88869	.74004	1.20090
4.540	-1.900	36.78000	1.15610	.06087	-.03194	.01406	.00226	.00442	.88955	.74099	1.20050
4.540	-1.700	36.78000	1.15640	.06088	-.03199	.01238	.00201	.00387	.88978	.74116	1.20050
4.537	-1.500	36.79000	1.15740	.06079	-.03215	.01076	.00175	.00337	.89045	.74182	1.20040
4.523	-1.300	36.79500	1.15780	.06079	-.03228	.00915	.00150	.00288	.89070	.74213	1.20020
4.525	-1.100	36.80400	1.15820	.06077	-.03223	.00756	.00125	.00235	.89093	.74250	1.19990
4.534	-.900	36.81700	1.15870	.06067	-.03216	.00579	.00100	.00183	.89124	.74293	1.19960
4.526	-.700	36.82100	1.15880	.06060	-.03225	.00418	.00075	.00138	.89130	.74299	1.19960
4.519	-.500	36.83500	1.15920	.06062	-.03218	.00242	.00052	.00081	.89147	.74351	1.19900
4.514	-.300	36.83800	1.15960	.06059	-.03230	.00080	.00027	.00035	.89174	.74372	1.19900
4.516	-.100	36.85400	1.15980	.06054	-.03228	-.00081	.00002	-.00010	.89174	.74408	1.19840
4.518	.100	36.85200	1.15990	.06054	-.03242	-.00253	-.00024	-.00064	.89182	.74409	1.19850
4.514	.300	36.87000	1.16000	.06042	-.03221	-.00431	-.00048	-.00111	.89174	.74434	1.19800
4.508	.500	36.86900	1.16030	.06047	-.03237	-.00602	-.00069	-.00170	.89197	.74455	1.19800
4.507	.700	36.88900	1.16120	.06043	-.03229	-.00771	-.00090	-.00223	.89242	.74534	1.19730
4.511	.900	36.89100	1.16140	.06046	-.03226	-.00951	-.00112	-.00278	.89254	.74551	1.19720
4.521	1.100	36.91300	1.16180	.06046	-.03228	-.01130	-.00133	-.00334	.89262	.74612	1.19640
4.525	1.300	36.90900	1.16150	.06061	-.03223	-.01291	-.00157	-.00381	.89232	.74599	1.19620
4.514	1.500	36.92600	1.16180	.06055	-.03231	-.01458	-.00179	-.00432	.89239	.74639	1.19560
4.511	1.700	36.92700	1.16130	.06055	-.03225	-.01631	-.00205	-.00480	.89197	.74612	1.19550
4.505	1.900	36.94500	1.16210	.06053	-.03229	-.01789	-.00232	-.00531	.89237	.74684	1.19490
4.503	2.100	36.94400	1.16180	.06047	-.03211	-.01955	-.00263	-.00577	.89216	.74658	1.19500
4.504	2.300	36.95600	1.16210	.06047	-.03226	-.02104	-.00293	-.00624	.89230	.74699	1.19450
4.502	2.500	36.95900	1.16170	.06054	-.03202	-.02259	-.00329	-.00666	.89187	.74684	1.19420
	GRADIENT	.03771	.00097	-.00018	-.00012	-.00847	-.00122	-.00250	.00037	.00101	-.00113

OA257 (LARC 20-M6-6559) OV102 W/(FSB) (R7E023) (10 JUL 81)

REFERENCE DATA

SREF = 2690.0000 SQ.FT. XMRP = 1076.6800 IN. XO
LREF = 474.8100 INCHES YMRP = .0000 IN. YO
BREF = 936.6800 INCHES ZMRP = 375.0000 IN. ZO
SCALE = .0100

PARAMETRIC DATA

ALPHA = 40.000 PHI = .000
SPDBRK = 86.600 AILRON = .000
YP = 1.000 1S = 1.000
ELEVON = .000 MACH = 6.000
S-MODE = 2.000 S-DIR = 1.000

RUN NO. 98/ 0 RN/L = 4.39 GRADIENT INTERVAL = -.60/ .60

RN/L	BETA	ALPHA	CN	CA	CLM	CY	CYN	CBL	CL	CD	L/D
4.437	-5.064	39.00700	1.25010	.05852	-.03841	.03862	.00780	.01190	.93459	.83232	1.12290
4.429	-4.900	39.01100	1.25070	.05863	-.03845	.03768	.00759	.01149	.93492	.83284	1.12260
4.430	-4.700	39.02200	1.25210	.05851	-.03867	.03596	.00724	.01102	.93595	.83381	1.12250
4.449	-4.500	39.02200	1.25360	.05855	-.03895	.03431	.00693	.01045	.93706	.83478	1.12250
4.451	-4.300	39.03600	1.25400	.05841	-.03908	.03283	.00663	.01002	.93729	.83517	1.12230
4.448	-4.100	39.03700	1.25500	.05845	-.03929	.03113	.00629	.00956	.93800	.83585	1.12220
4.436	-3.900	39.05400	1.25570	.05823	-.03942	.02966	.00601	.00913	.93845	.83639	1.12200
4.432	-3.700	39.05700	1.25590	.05812	-.03982	.02796	.00570	.00866	.93861	.83646	1.12210
4.431	-3.500	39.07400	1.25800	.05812	-.03985	.02640	.00546	.00810	.93995	.83804	1.12160
4.432	-3.300	39.07000	1.25730	.05804	-.04024	.02482	.00521	.00762	.93958	.83751	1.12190
4.436	-3.100	39.09200	1.25950	.05806	-.04029	.02318	.00494	.00709	.94093	.83928	1.12110
4.437	-2.900	39.09000	1.25920	.05806	-.04054	.02162	.00463	.00661	.94070	.83901	1.12120
4.431	-2.700	39.11100	1.26040	.05806	-.04051	.01998	.00431	.00614	.94139	.84016	1.12050
4.419	-2.500	39.10300	1.25990	.05812	-.04069	.01849	.00397	.00566	.94103	.83975	1.12060
4.407	-2.300	39.12400	1.26080	.05806	-.04043	.01698	.00359	.00525	.94143	.84059	1.12000
4.398	-2.100	39.11600	1.26060	.05817	-.04053	.01560	.00321	.00489	.94140	.84046	1.12010
4.396	-1.900	39.13600	1.26250	.05816	-.04055	.01405	.00287	.00438	.94258	.84197	1.11950
4.396	-1.700	39.13800	1.26220	.05822	-.04054	.01267	.00252	.00394	.94221	.84181	1.11930
4.384	-1.500	39.15200	1.26290	.05825	-.04039	.01115	.00219	.00348	.94257	.84253	1.11870
4.377	-1.300	39.15200	1.26310	.05829	-.04052	.00978	.00182	.00307	.94273	.84273	1.11870
4.366	-1.100	39.16600	1.26300	.05822	-.04021	.00823	.00146	.00261	.94248	.84283	1.11820
4.359	-.900	39.16600	1.26310	.05829	-.04026	.00673	.00111	.00205	.94248	.84292	1.11810
4.355	-.700	39.18300	1.26410	.05836	-.04015	.00545	.00070	.00163	.94299	.84390	1.11740
4.355	-.500	39.18400	1.26400	.05831	-.04013	.00421	.00029	.00121	.94289	.84378	1.11750
4.351	-.300	39.19800	1.26460	.05834	-.04008	.00299	-.00009	.00072	.94317	.84446	1.11690
4.361	-.100	39.20100	1.26440	.05831	-.04012	.00154	-.00052	.00032	.94300	.84438	1.11680
4.358	.100	39.21700	1.26500	.05825	-.04002	.00017	-.00084	-.00018	.94323	.84493	1.11630
4.352	.300	39.22000	1.26490	.05819	-.04002	-.00135	-.00118	-.00062	.94315	.84488	1.11630
4.354	.500	39.23500	1.26560	.05820	-.04012	-.00280	-.00148	-.00113	.94345	.84556	1.11580
4.366	.700	39.23600	1.26470	.05822	-.04016	-.00428	-.00177	-.00165	.94277	.84505	1.11560
4.359	.900	39.25100	1.26560	.05823	-.04007	-.00590	-.00204	-.00228	.94320	.84585	1.11510
4.352	1.100	39.25600	1.26550	.05841	-.03982	-.00745	-.00230	-.00279	.94294	.84602	1.11460
4.339	1.300	39.26600	1.26570	.05853	-.03985	-.00903	-.00252	-.00339	.94287	.84641	1.11400
4.336	1.500	39.27400	1.26550	.05877	-.03962	-.01075	-.00279	-.00393	.94246	.84658	1.11330
4.338	1.700	39.28900	1.26590	.05886	-.03969	-.01233	-.00305	-.00444	.94246	.84716	1.11250
4.343	1.900	39.29000	1.26560	.05900	-.03949	-.01396	-.00329	-.00498	.94215	.84708	1.11220
4.344	2.100	39.30200	1.26590	.05912	-.03943	-.01557	-.00355	-.00552	.94212	.84758	1.11150
4.335	2.300	39.31000	1.26550	.05908	-.03920	-.01717	-.00383	-.00602	.94170	.84740	1.11130
4.329	2.500	39.31900	1.26540	.05890	-.03915	-.01877	-.00410	-.00649	.94163	.84737	1.11120
	GRADIENT	.04814	.00136	-.00015	.00005	-.00706	-.00179	-.00231	.00042	.00153	-.00154

OA257 (LARC 20-M6-6559) OV102 W/(FSB) (R7E123) (10 JUL 81)

REFERENCE DATA

SREF = 2690.0000 SQ.FT. XMRP = 1076.6800 IN. XO
LREF = 474.8100 INCHES YMRP = .0000 IN. YO
BREF = 936.6800 INCHES ZMRP = 375.0000 IN. ZO
SCALE = .0100

PARAMETRIC DATA

ALPHA = 40.000 PHI = .000
SPDBRK = 86.600 AILRON = .000
YP = 1.000 1S = 1.000
ELEVON = .000 MACH = 6.000
S-MODE = 2.000 S-DIR = 1.000

RUN NO. 2098/ 0 RN/L = 4.39 GRADIENT INTERVAL = -.60/ .60

RN/L	BETA	ALPHA	CN	CA	CLM	CY	CYN	CBL	CL	CD	L/D
4.431	-5.000	39.00000	1.25010	.05867	-.03827	.03832	.00776	.01175	.93459	.83231	1.12290
4.427	-4.800	39.01700	1.25180	.05857	-.03850	.03681	.00741	.01123	.93571	.83357	1.12250
4.441	-4.600	39.01800	1.25230	.05854	-.03884	.03511	.00708	.01078	.93613	.83389	1.12260
4.453	-4.400	39.03500	1.25380	.05852	-.03880	.03365	.00681	.01025	.93705	.83508	1.12210
4.451	-4.200	39.03200	1.25400	.05838	-.03914	.03195	.00646	.00981	.93733	.83506	1.12250
4.441	-4.000	39.05100	1.25550	.05833	-.03931	.03041	.00615	.00933	.93829	.83630	1.12200
4.434	-3.800	39.05300	1.25540	.05816	-.03963	.02881	.00583	.00893	.93822	.83610	1.12210
4.430	-3.600	39.06800	1.25700	.05816	-.03988	.02717	.00558	.00838	.93925	.83736	1.12170
4.431	-3.400	39.07000	1.25750	.05805	-.03982	.02568	.00533	.00795	.93972	.83766	1.12180
4.433	-3.200	39.08500	1.25850	.05809	-.04028	.02400	.00508	.00737	.94022	.83852	1.12130
4.440	-3.000	39.09000	1.25890	.05806	-.04029	.02245	.00479	.00687	.94053	.83886	1.12120
4.435	-2.800	39.10200	1.26010	.05804	-.04058	.02075	.00448	.00640	.94122	.83976	1.12080
4.425	-2.600	39.10700	1.26030	.05812	-.04047	.01920	.00416	.00586	.94128	.84005	1.12050
4.412	-2.400	39.11800	1.26150	.05818	-.04041	.01772	.00376	.00548	.94206	.84107	1.12010
4.401	-2.200	39.12200	1.26060	.05805	-.04052	.01623	.00341	.00505	.94135	.84043	1.12010
4.397	-2.000	39.12500	1.26170	.05818	-.04066	.01484	.00305	.00461	.94207	.84127	1.11980
4.398	-1.800	39.13600	1.26200	.05816	-.04048	.01334	.00269	.00416	.94217	.84166	1.11940
4.388	-1.600	39.14500	1.26300	.05827	-.04053	.01190	.00235	.00371	.94278	.84252	1.11900
4.380	-1.400	39.15500	1.26340	.05831	-.04046	.01043	.00201	.00324	.94284	.84292	1.11850
4.371	-1.200	39.15600	1.26290	.05828	-.04044	.00903	.00164	.00284	.94252	.84265	1.11850
4.362	-1.000	39.16800	1.26270	.05821	-.04020	.00746	.00128	.00236	.94224	.84267	1.11820
4.356	-.800	39.17300	1.26360	.05839	-.04027	.00611	.00092	.00181	.94272	.84344	1.11770
4.355	-.600	39.18500	1.26430	.05832	-.04023	.00485	.00052	.00143	.94315	.84405	1.11740
4.354	-.400	39.18500	1.26400	.05834	-.04004	.00359	.00009	.00098	.94290	.84388	1.11730
4.352	-.200	39.20200	1.26500	.05834	-.04003	.00227	-.00031	.00053	.94336	.84473	1.11680
4.363	.000	39.20600	1.26450	.05833	-.04007	.00085	-.00067	.00004	.94298	.84452	1.11660
4.353	.200	39.21900	1.26460	.05819	-.03998	-.00050	-.00102	-.00039	.94292	.84466	1.11630
4.353	.400	39.22300	1.26500	.05824	-.04011	-.00209	-.00134	-.00090	.94317	.84503	1.11610
4.360	.600	39.23900	1.26510	.05819	-.04009	-.00355	-.00163	-.00135	.94304	.84532	1.11560
4.366	.800	39.24100	1.26520	.05829	-.04015	-.00508	-.00191	-.00201	.94301	.84550	1.11530
4.354	1.000	39.26300	1.26620	.05835	-.03995	-.00667	-.00220	-.00251	.94346	.84655	1.11450
4.344	1.200	39.25400	1.26620	.05856	-.03992	-.00827	-.00241	-.00310	.94339	.84653	1.11440
4.338	1.400	39.27400	1.26550	.05863	-.03965	-.00987	-.00264	-.00365	.94258	.84651	1.11350
4.337	1.600	39.27500	1.26540	.05884	-.03970	-.01150	-.00293	-.00415	.94236	.84663	1.11310
4.338	1.800	39.29700	1.26610	.05892	-.03954	-.01315	-.00317	-.00472	.94250	.84749	1.11210
4.347	2.000	39.29100	1.26570	.05908	-.03952	-.01481	-.00342	-.00527	.94218	.84727	1.11200
4.340	2.200	39.31300	1.26590	.05912	-.03930	-.01638	-.00370	-.00577	.94197	.84776	1.11110
4.332	2.400	39.30800	1.26530	.05904	-.03924	-.01797	-.00395	-.00625	.94163	.84724	1.11140
4.333	2.528	39.32000	1.26520	.05882	-.03922	-.01894	-.00410	-.00660	.94153	.84721	1.11130
	GRADIENT	.04554	.00071	-.00014	.00006	-.00703	-.00179	-.00233	-.00004	.00108	-.00148

OA257 (LARC 20-M6-6559) OV102 (R7E024) (10 JUL 81)

REFERENCE DATA

SREF = 2690.0000 SQ.FT. XMRP = 1076.6800 IN. XO
LREF = 474.8100 INCHES YMRP = .0000 IN. YO
BREF = 936.6800 INCHES ZMRP = 375.0000 IN. ZO
SCALE = .0100

PARAMETRIC DATA

BETA = .000 PHI = .000
SPDBRK = 86.600 AILRON = .000
YP = .000 1S = .000
ELEVON = .000 MACH = 6.000
S-MODE = 1.000 S-DIR = 2.000

RUN NO. 68/ O RN/L = 4.45 GRADIENT INTERVAL = 23.00/ 25.00

RN/L	ALPHA	BETA	CN	CA	CLM	CY	CYN	CBL	CL	CD	L/D
4.358	-.229	-.00446	-.06579	.10076	-.00228	.00131	.00014	.00006	-.06539	.10103	-.64728
4.587	-.115	-.00882	-.06955	.10132	-.00218	.00116	.00022	-.00004	-.06935	.10146	-.68348
4.387	-.104	.00010	-.07265	.10184	-.00182	.00133	.00020	-.00004	-.07247	.10197	-.71066
4.352	4.117	-.00556	.01692	.08943	.00275	-.00031	.00033	-.00003	.01045	.09041	.11559
4.364	8.410	.00330	.11333	.08154	.00770	-.00067	.00026	-.00007	.10019	.09724	1.03030
4.365	10.981	-.00330	.18176	.07571	.00604	-.00107	.00028	-.00003	.16401	.10895	1.50540
4.360	13.943	.00374	.26690	.07021	.00344	-.00117	.00011	-.00002	.24212	.13245	1.82800
4.373	15.487	-.00472	.31428	.06914	.00382	-.00106	-.00000	.00005	.28441	.15055	1.88910
4.384	17.349	-.00727	.37443	.06749	.00352	-.00132	-.00003	.00003	.33727	.17608	1.91550
4.394	19.456	-.00988	.44602	.06571	.00198	-.00143	-.00008	-.00002	.39866	.21052	1.89370
4.422	21.242	.00015	.51124	.06456	.00040	-.00128	-.00031	.00007	.45311	.24540	1.84650
4.458	23.080	-.00722	.58180	.06325	-.00204	-.00173	-.00033	-.00004	.51044	.28626	1.78310
4.462	24.812	-.00805	.64659	.06239	-.00416	-.00226	.00012	-.00030	.56072	.32797	1.70970
4.493	26.445	-.00653	.71185	.06224	-.00635	-.00239	-.00014	-.00022	.60965	.37274	1.63560
4.544	27.964	-.00915	.77548	.06164	-.00936	-.00213	-.00008	-.00034	.65603	.41808	1.56920
4.532	29.466	-.00496	.83905	.06157	-.01232	-.00253	-.00004	-.00045	.70023	.46634	1.50150
4.539	30.848	-.00541	.89854	.06207	-.01493	-.00198	-.00027	-.00032	.73960	.51402	1.43880
4.540	32.346	-.00299	.96318	.06179	-.01877	-.00151	-.00027	-.00029	.78066	.56753	1.37550
4.537	34.164	.00469	1.04430	.06089	-.02459	-.00177	-.00018	-.00042	.82991	.63682	1.30320
4.510	36.591	-.00084	1.15220	.06023	-.03239	-.00171	-.00030	-.00033	.88920	.73517	1.20950
4.497	39.111	.00897	1.27050	.05971	-.04110	-.00179	-.00027	-.00041	.94815	.84779	1.11840
	GRADIENT	-.00048	.03741	-.00050	-.00122	-.00031	.00026	-.00015	.02903	.02408	-.04238

OA257 (LARC 20-M6-6559) OV102 (R7E025) (10 JUL 81)

REFERENCE DATA

SREF = 2690.0000 SQ.FT. XMRP = 1076.6800 IN. XO
LREF = 474.8100 INCHES YMRP = .0000 IN. YO
BREF = 936.6800 INCHES ZMRP = 375.0000 IN. ZO
SCALE = .0100

PARAMETRIC DATA

BETA = .000 PHI = .000
SPDBRK = 86.600 AILRON = .000
YP = .000 1S = 1.000
ELEVON = .000 MACH = 6.000
S-MODE = 1.000 S-DIR = 2.000

RUN NO. 129/ O RN/L = 2.23 GRADIENT INTERVAL = 23.00/ 25.00

RN/L	ALPHA	BETA	CN	CA	CLM	CY	CYN	CBL	CL	CD	L/D
2.168	-.503	-.02674	-.06710	.10157	-.00596	.00221	.00005	.00017	-.06621	.10215	-.64817
2.422	-.132	-.02360	-.06263	.10141	-.00406	.00172	.00009	.00010	-.06240	.10156	-.61441
2.184	3.599	-.02112	-.00844	.09333	-.00077	.00116	.00068	-.00002	-.01428	.09262	-.15422
2.186	7.082	-.02636	.07961	.08551	.00552	.00025	.00066	-.00005	.06846	.09467	.72309
2.184	9.685	-.02429	.13941	.08102	.00663	.00087	.00051	.00003	.12379	.10332	1.19820
2.186	15.294	-.01768	.27328	.07047	.00298	.00048	.00042	.00014	.24502	.14006	1.74940
2.188	19.387	-.02527	.45068	.06865	.00355	.00062	.00028	.00023	.40234	.21435	1.87700
2.203	20.169	-.02333	.44953	.06733	.00332	.00062	.00030	.00020	.39875	.21820	1.82750
2.218	21.861	-.02405	.52698	.06572	.00104	.00028	.00060	.00001	.46461	.25722	1.80630
2.216	23.764	-.01990	.60472	.06435	-.00122	-.00045	.00072	-.00012	.52752	.30258	1.74340
2.210	25.933	-.02544	.68609	.06324	-.00345	-.00036	.00057	-.00004	.58935	.35692	1.65120
2.233	27.742	-.02277	.76294	.06349	-.00481	.00147	-.00005	.00015	.64569	.41133	1.56970
2.238	29.472	-.02287	.84387	.06378	-.00801	.00091	.00011	-.00003	.70329	.47071	1.49410
2.231	31.608	-.01736	.94273	.06301	-.01358	.00166	.00012	-.00020	.76985	.54776	1.40550
2.243	33.291	-.02118	1.01770	.06223	-.01860	.00184	.00003	-.00004	.81654	.61062	1.33720
2.248	33.829	-.02245	1.02130	.06158	-.01841	.00212	.00006	-.00004	.81414	.61973	1.31370
2.263	35.943	-.01498	1.10100	.06060	-.02365	.00208	-.00009	.00007	.85577	.69531	1.23080
2.277	38.267	-.01846	1.22570	.06067	-.03264	.00194	-.00024	.00025	.92478	.80675	1.14630
2.304	39.465	-.01653	1.29770	.06030	-.03796	.00110	-.00003	.00021	.96353	.87140	1.10570
	GRADIENT	.00000	.00000	.00000	.00000	.00000	.00000	.00000	.00000	.00000	.00000

RUN NO. 121/ O RN/L = 4.43 GRADIENT INTERVAL = 23.00/ 25.00

RN/L	ALPHA	BETA	CN	CA	CLM	CY	CYN	CBL	CL	CD	L/D
4.474	-.242	-.01229	-.06516	.09999	-.00225	.00194	.00014	.00011	-.06474	.10027	-.64569
4.472	-.003	.00864	-.06426	.10047	-.00216	.00148	.00025	.00007	-.06426	.10047	-.63955
4.463	.581	-.00746	-.05039	.09796	-.00142	.00180	.00020	.00011	-.05138	.09744	-.52730
4.450	3.884	-.01044	.01187	.08984	.00244	.00077	.00025	.00006	.00576	.09044	.06367
4.440	7.096	-.01163	.08398	.08392	.00720	.00035	.00055	-.00002	.07297	.09365	.77919
4.435	10.510	-.01032	.16162	.07703	.00710	.00026	.00035	.00009	.14486	.10522	1.37680
4.433	13.875	-.00466	.25889	.07058	.00387	-.00000	.00029	.00015	.23441	.13060	1.79480
4.432	17.086	-.01081	.35585	.06779	.00349	.00062	.00019	.00028	.32022	.16935	1.89100
4.413	21.252	-.01256	.49065	.06436	.00144	.00041	.00020	.00024	.43395	.23783	1.82460
4.399	25.039	-.01161	.65245	.06257	-.00353	-.00073	.00047	.00001	.56465	.33283	1.69650
4.375	27.555	-.01035	.75725	.06207	-.00767	.00018	.00003	.00012	.64265	.40533	1.58550
4.368	30.603	.00015	.88712	.06230	-.01301	.00112	-.00008	.00008	.73185	.50524	1.44850
4.379	32.226	.00207	.95492	.06137	-.01745	.00109	-.00026	.00017	.77508	.56114	1.38130
4.395	36.588	.00665	1.15240	.06122	-.03135	.00164	-.00008	.00002	.88886	.73608	1.20760
4.471	39.250	.00110	1.27430	.06039	-.04000	.00201	-.00024	.00032	.94862	.85304	1.11200
	GRADIENT	.00000	.00000	.00000	.00000	.00000	.00000	.00000	.00000	.00000	.00000

OA257 (LARC 20-M6-6559) OV102 (R7E025) (10 JUL 81)

REFERENCE DATA

SREF =	2690.0000 SQ.FT.	XMRP =	1076.6800 IN. XO		
LREF =	474.8100 INCHES	YMRP =	.0000 IN. YO		
BREF =	936.6800 INCHES	ZMRP =	375.0000 IN. ZO		
SCALE =	.0100				

PARAMETRIC DATA

BETA =	.000	PHI =	.000
SPDBRK =	86.600	AILRON =	.000
YP =	.000	1S =	1.000
ELEVON =	.000	MACH =	6.000
S-MODE =	1.000	S-DIR =	2.000

RUN NO. 123/ 0 RN/L = 7.51 GRADIENT INTERVAL = 23.00/ 25.00

RN/L	ALPHA	BETA	CN	CA	CLM	CY	CYN	CBL	CL	CD	L/D
7.383	-.310	-.09271	-.06640	.10127	-.00131	.00141	.00020	.00007	-.06585	.10163	-.64799
7.387	-.292	-.08459	-.06547	.10117	-.00117	.00134	.00020	.00006	-.06496	.10151	-.63992
7.538	-.144	-.05898	-.06695	.10129	-.00117	.00118	.00026	.00002	-.06670	.10146	-.65737
7.424	2.333	-.09033	-.01828	.09352	.00000	.00119	.00031	.00005	-.02207	.09270	-.23810
7.519	4.910	-.09011	.03578	.08730	.00357	.00042	.00045	.00008	.02818	.09004	.31295
7.520	7.761	-.08875	.09847	.08295	.00793	-.00001	.00051	-.00002	.08636	.09548	.90448
7.518	10.729	-.09133	.17221	.07670	.00757	-.00011	.00039	.00006	.15492	.10742	1.44220
7.552	13.137	-.08962	.24191	.07216	.00532	.00009	.00038	.00013	.21918	.12525	1.75000
7.517	15.281	-.08788	.30630	.06913	.00440	.00019	.00018	.00025	.27725	.14741	1.88090
7.519	18.093	-.08403	.40309	.06642	.00329	.00003	.00023	.00019	.36253	.18832	1.92510
7.531	21.025	-.07545	.50219	.06568	.00044	.00025	.00013	.00025	.44520	.24148	1.84360
7.535	23.197	-.07362	.58976	.06451	-.00201	-.00008	-.00011	.00024	.51667	.29160	1.77190
7.501	26.776	-.07367	.71922	.06374	-.00622	-.00062	.00012	.00001	.61338	.38092	1.61030
7.541	29.064	-.07005	.82069	.06361	-.01010	-.00076	.00031	-.00018	.68644	.45428	1.51100
7.579	31.578	-.07474	.93323	.06345	-.01568	.00088	-.00031	.00019	.76182	.54274	1.40360
7.519	34.355	-.06557	1.03190	.06263	-.02234	.00054	-.00015	.00005	.81656	.63404	1.28790
7.510	36.146	-.06496	1.13200	.06199	-.02929	.00018	-.00002	-.00007	.87753	.71775	1.22260
7.508	39.086	-.05484	1.27040	.06056	-.04037	.00150	-.00058	.00026	.94789	.84797	1.11780
	GRADIENT	.00000	.00000	.00000	.00000	.00000	.00000	.00000	.00000	.00000	.00000

OA257 (LARC 20-M6-6559) OV102 (R7E026) (10 JUL 81)

REFERENCE DATA

SREF = 2690.0000 SQ.FT. XMRP = 1076.6800 IN. XO
LREF = 474.8100 INCHES YMRP = .0000 IN. YO
BREF = 936.6800 INCHES ZMRP = 375.0000 IN. ZO
SCALE = .0100

PARAMETRIC DATA

BETA = .000 PHI = .000
SPDBRK = 86.600 AILRON = .000
YP = .000 1S = 1.000
ELEVON = .000 MACH = 6.000
S-MODE = 1.000 S-DIR = 2.000

RUN NO. 184/ 0 RN/L = 4.43 GRADIENT INTERVAL = 23.00/ 25.00

RN/L	ALPHA	BETA	CN	CA	CLM	CY	CYN	CBL	CL	CD	L/D
4.417	14.352	-.01189	.27253	.06939	.00337	.00146	.00037	.00035	.24682	.13478	1.83130
4.419	14.366	-.01254	.27138	.06917	.00304	.00169	.00043	.00035	.24574	.13434	1.82910
4.446	14.637	-.00125	.27568	.06975	.00398	.00123	.00048	.00029	.24910	.13715	1.81630
4.406	14.859	-.01324	.28299	.06865	.00284	.00156	.00041	.00037	.25592	.13892	1.84220
4.388	15.380	-.01240	.30349	.06840	.00343	.00201	.00035	.00048	.27448	.14644	1.87440
4.391	15.767	-.01107	.31509	.06830	.00357	.00200	.00029	.00051	.28467	.15135	1.88090
4.365	16.277	-.01338	.33148	.06797	.00349	.00176	.00023	.00053	.29915	.15815	1.89150
4.362	16.613	-.01248	.34096	.06761	.00357	.00176	.00025	.00053	.30740	.16227	1.89440
4.357	17.157	-.01184	.35993	.06721	.00322	.00189	.00029	.00049	.32409	.17040	1.90200
4.365	17.540	-.00710	.37016	.06668	.00315	.00182	.00035	.00047	.33286	.17514	1.90050
4.375	17.861	-.01085	.38238	.06691	.00337	.00121	.00026	.00047	.34343	.18096	1.89780
4.373	18.308	-.01268	.39551	.06667	.00306	.00194	.00043	.00045	.35454	.18753	1.89060
4.390	18.873	-.01269	.41443	.06606	.00255	.00126	.00040	.00044	.37078	.19656	1.88630
4.405	19.311	-.00683	.42875	.06595	.00214	.00112	.00046	.00043	.38282	.20403	1.87630
4.382	19.815	-.01479	.45021	.06569	.00164	.00155	.00055	.00039	.40128	.21442	1.87150
4.406	20.294	-.00587	.46679	.06558	.00115	.00111	.00047	.00043	.41507	.22341	1.85790
4.450	20.696	-.00706	.47788	.06516	.00080	.00153	.00059	.00044	.42401	.22984	1.84480
4.480	21.109	-.00723	.49573	.06475	.00032	.00109	.00053	.00043	.43914	.23894	1.83790
4.499	21.607	-.00140	.51271	.06470	-.00032	.00093	.00059	.00038	.45286	.24895	1.81910
4.483	22.067	-.00185	.52920	.06446	-.00081	.00074	.00054	.00037	.46622	.25855	1.80320
4.469	22.363	-.00718	.54349	.06436	-.00120	.00088	.00057	.00038	.47813	.26630	1.79540
4.451	22.696	-.00799	.55157	.06410	-.00142	.00134	.00063	.00039	.48413	.27196	1.78020
4.459	23.162	-.00730	.57149	.06388	-.00213	.00096	.00058	.00042	.50030	.28351	1.76470
4.443	23.720	-.00247	.59269	.06372	-.00264	.00069	.00067	.00037	.51699	.29675	1.74220
4.454	24.003	-.00753	.60346	.06347	-.00300	.00069	.00069	.00033	.52546	.30346	1.73160
4.433	24.481	-.00860	.62184	.06315	-.00386	.00042	.00077	.00028	.53977	.31515	1.71270
4.411	24.879	-.00786	.63762	.06323	-.00408	.00062	.00078	.00032	.55184	.32561	1.69480
4.399	25.248	-.00068	.65289	.06297	-.00446	.00080	.00071	.00029	.56366	.33543	1.68040
4.442	25.779	-.00567	.67332	.06290	-.00504	.00058	.00057	.00034	.57895	.34947	1.65660
4.493	26.239	-.00159	.69058	.06291	-.00557	.00077	.00050	.00044	.59160	.36175	1.63540
4.498	27.025	-.00176	.72293	.06266	-.00669	.00094	.00050	.00044	.61552	.38431	1.60160
4.476	27.507	-.00265	.74066	.06255	-.00759	.00079	.00051	.00040	.62805	.39756	1.57980
4.478	28.261	-.00324	.76394	.06239	-.00847	.00053	.00050	.00037	.64334	.41667	1.54400
4.463	29.067	-.00370	.78783	.06196	-.00976	.00037	.00063	.00023	.65850	.43691	1.50720
4.445	29.414	-.00487	.82261	.06240	-.01119	.00036	.00086	.00010	.68592	.45836	1.49650
	GRADIENT	-.00147	.03847	-.00044	-.00122	-.00023	.00012	-.00007	.03000	.02445	-.04036

OA257 (LARC 20-M6-6559) OV102 (R7E027) (10 JUL 81)

REFERENCE DATA

SREF = 2690.0000 SQ.FT. XMRP = 1076.6800 IN. XO
LREF = 474.8100 INCHES YMRP = .0000 IN. YO
BREF = 936.6800 INCHES ZMRP = 375.0000 IN. ZO
SCALE = .0100

PARAMETRIC DATA

BETA = .000 PHI = .000
SPDBRK = 86.600 AILRON = .000
YP = .000 1S = 1.000
ELEVON = .000 MACH = 6.000
S-MODE = 1.000 S-DIR = 2.000

RUN NO. 186/ 0 RN/L = 4.46 GRADIENT INTERVAL = 23.00/ 25.00

RN/L	ALPHA	BETA	CN	CA	CLM	CY	CYN	CBL	CL	CD	L/D
4.428	24.101	-.02414	.61133	.06343	-.00340	.00086	.00078	.00033	.53214	.30753	1.73040
4.346	24.420	-.00686	.61765	.06364	-.00310	.00038	.00082	.00020	.53608	.31329	1.71110
4.442	24.776	-.02295	.62796	.06277	-.00381	.00076	.00077	.00032	.54385	.32015	1.69870
4.453	25.548	-.02136	.65875	.06270	-.00446	.00072	.00067	.00037	.56730	.34066	1.66530
4.446	26.438	-.01482	.69496	.06221	-.00587	.00102	.00051	.00050	.59458	.36512	1.62850
4.449	27.310	-.01564	.73497	.06212	-.00746	.00119	.00044	.00049	.62454	.39241	1.59160
4.452	28.162	-.02054	.77274	.06212	-.00888	.00095	.00048	.00043	.65194	.41947	1.55420
4.461	28.941	-.02095	.80272	.06232	-.01006	.00072	.00062	.00039	.67232	.44298	1.51770
4.465	29.304	-.02190	.82343	.06234	-.01087	.00057	.00064	.00024	.68755	.45739	1.50320
4.472	29.462	-.02259	.82077	.06205	-.01089	.00097	.00069	.00036	.68411	.45772	1.49460
4.486	30.234	-.01606	.85408	.06214	-.01258	.00064	.00066	.00022	.70661	.48374	1.46070
4.483	30.811	-.01968	.88446	.06244	-.01340	.00106	.00050	.00035	.72766	.50665	1.43620
4.496	31.540	-.02001	.91583	.06231	-.01517	.00159	.00026	.00061	.74795	.53217	1.40550
4.495	32.286	-.02073	.94737	.06147	-.01758	.00188	.00015	.00070	.76806	.55800	1.37650
4.475	33.025	-.01339	.98089	.06141	-.01967	.00218	.00021	.00069	.78894	.58607	1.34620
4.468	33.666	-.01470	1.00800	.06107	-.02116	.00190	.00014	.00074	.80509	.60962	1.32060
4.465	34.507	-.01305	1.04710	.06066	-.02432	.00214	.00017	.00065	.82855	.64320	1.28820
4.443	35.056	-.01277	1.06950	.06032	-.02584	.00194	.00016	.00069	.84084	.66367	1.26700
4.420	35.504	-.00458	1.09270	.06022	-.02733	.00190	.00012	.00073	.85458	.68362	1.25010
4.432	36.158	-.01076	1.11680	.05977	-.02943	.00192	.00017	.00070	.86647	.70721	1.22520
4.462	36.486	-.01125	1.13340	.05991	-.03030	.00227	.00019	.00073	.87562	.72211	1.21260
4.482	36.856	-.01040	1.15010	.05983	-.03147	.00227	.00022	.00073	.88432	.73768	1.19880
4.541	37.256	-.00943	1.16610	.05959	-.03309	.00161	.00016	.00074	.89204	.75333	1.18410
4.539	37.682	-.00873	1.18580	.05938	-.03460	.00183	.00017	.00082	.90212	.77183	1.16880
4.511	38.055	-.01004	1.20050	.05917	-.03577	.00192	.00022	.00084	.90882	.78659	1.15540
4.477	38.726	-.00546	1.23240	.05889	-.03827	.00188	.00032	.00079	.92462	.81694	1.13180
4.459	39.195	-.00208	1.26130	.05847	-.04040	.00159	.00031	.00086	.94053	.84239	1.11650
	GRADIENT	.00087	.02472	-.00100	-.00063	-.00012	-.00002	.00000	.01743	.01871	-.04674

OA257 (LARC 20-M6-6559) OV102 (R7E028) (10 JUL 81)

REFERENCE DATA

SREF = 2690.0000 SQ.FT. XMRP = 1076.6800 IN. XO
LREF = 474.8100 INCHES YMRP = .0000 IN. YO
BREF = 936.6800 INCHES ZMRP = 375.0000 IN. ZO
SCALE = .0100

PARAMETRIC DATA

BETA = .000 PHI = .000
SPDBRK = 86.600 AILRON = .000
YP = .000 1S = 1.000
ELEVON = .000 MACH = 6.000
S-MODE = 1.000 S-DIR = 2.000

RUN NO. 308/ O RN/L = 7.31 GRADIENT INTERVAL = 23.00/ 25.00

RN/L	ALPHA	BETA	CN	CA	CLM	CY	CYN	CBL	CL	CD	L/D
7.213	14.409	-.08117	.27786	.06999	.00501	.00183	.00028	.00050	.25170	.13693	1.83820
7.202	14.509	-.08353	.27750	.06999	.00498	.00163	.00026	.00050	.25112	.13728	1.82930
7.358	14.706	-.06277	.28058	.07029	.00506	.00152	.00030	.00041	.25355	.13922	1.82120
7.229	16.777	-.08384	.35191	.06757	.00348	.00145	.00034	.00046	.31743	.16627	1.90910
7.356	19.461	-.08360	.44138	.06566	.00204	.00156	.00029	.00048	.39429	.20896	1.88690
7.335	21.811	-.07990	.52543	.06427	-.00005	.00135	.00027	.00048	.46393	.25489	1.82010
7.365	24.134	-.08059	.61448	.06339	-.00243	.00129	.00025	.00053	.53485	.30910	1.73030
7.418	26.727	-.08109	.72071	.06269	-.00616	.00100	.00027	.00047	.61551	.38012	1.61920
7.357	29.229	-.08321	.82672	.06343	-.01092	.00023	.00070	.00011	.69048	.45905	1.50420
7.317	32.132	-.07429	.94912	.06331	-.01701	.00111	.00041	.00037	.77006	.55842	1.37900
7.331	34.189	-.07261	1.03860	.06285	-.02248	.00124	.00043	.00043	.82378	.63558	1.29610
7.294	37.119	-.07197	1.17160	.06163	-.03217	.00160	.00017	.00065	.89700	.75615	1.18630
7.227	39.200	-.06148	1.26770	.06064	-.04016	.00195	.00017	.00083	.94409	.84823	1.11300
	GRADIENT	.00000	.00000	.00000	.00000	.00000	.00000	.00000	.00000	.00000	.00000

OA257 (LARC 20-M6-6559) OV102 (R7E029) (10 JUL 81)

REFERENCE DATA

SREF = 2690.0000 SQ.FT. XMRP = 1076.6800 IN. XO
LREF = 474.8100 INCHES YMRP = .0000 IN. YO
BREF = 936.6800 INCHES ZMRP = 375.0000 IN. ZO
SCALE = .0100

PARAMETRIC DATA

BETA = .000 PHI = .000
SPDBRK = 86.600 AILRON = 3.000
YP = .000 1S = 1.000
ELEVON = .000 MACH = 6.000
S-MODE = 1.000 S-DIR = 2.000

RUN NO. 310/ 0 RN/L = 7.53 GRADIENT INTERVAL = 23.00/ 25.00

RN/L	ALPHA	BETA	CN	CA	CLM	CY	CYN	CBL	CL	CD	L/D
7.482	14.394	-.03120	.27855	.07043	.00460	.00205	.00000	.00216	.25230	.13746	1.83540
7.454	14.441	-.03071	.27847	.07035	.00474	.00196	-.00003	.00212	.25213	.13758	1.83260
7.623	14.744	-.00670	.28087	.07047	.00475	.00153	-.00005	.00213	.25369	.13963	1.81690
7.571	14.757	-.00822	.28209	.07052	.00450	.00139	-.00007	.00210	.25482	.14004	1.81960
7.478	16.271	-.02960	.33670	.06816	.00340	.00184	-.00001	.00235	.30412	.15977	1.90350
7.544	17.782	-.03066	.38593	.06713	.00255	.00174	.00002	.00255	.34699	.18179	1.90880
7.509	19.321	-.02984	.43674	.06605	.00172	.00176	-.00018	.00273	.39029	.20683	1.88700
7.527	21.174	-.02857	.50483	.06490	.00030	.00175	-.00020	.00299	.44730	.24286	1.84180
7.547	22.734	-.02747	.56242	.06418	-.00125	.00206	-.00039	.00330	.49392	.27655	1.78600
7.532	24.178	-.02574	.61772	.06371	-.00270	.00166	-.00049	.00353	.53743	.31112	1.72740
7.571	25.994	-.02633	.68872	.06331	-.00499	.00151	-.00040	.00365	.59131	.35875	1.64820
7.582	27.623	-.02628	.75779	.06325	-.00788	.00123	-.00046	.00386	.64208	.40739	1.57610
7.546	29.046	-.02652	.81485	.06381	-.01027	.00082	-.00023	.00380	.68138	.45140	1.50950
7.549	31.103	-.01998	.89369	.06375	-.01408	.00077	-.00028	.00400	.73228	.51625	1.41850
7.519	32.515	-.01536	.96500	.06361	-.01768	.00165	-.00067	.00452	.77954	.57236	1.36200
7.511	34.303	-.01506	1.03880	.06351	-.02223	.00175	-.00073	.00478	.82233	.63790	1.28910
7.525	36.196	-.01304	1.12900	.06290	-.02835	.00168	-.00097	.00513	.87398	.71751	1.21810
7.482	37.590	-.01255	1.19020	.06211	-.03365	.00156	-.00101	.00529	.90523	.77525	1.16770
7.487	39.039	-.00438	1.26040	.06143	-.03930	.00192	-.00100	.00558	.94031	.84160	1.11730
	GRADIENT	.00000	.00000	.00000	.00000	.00000	.00000	.00000	.00000	.00000	.00000

OA257 (LARC 20-M6-6559) OV102 (R7E030) (10 JUL 81)

REFERENCE DATA

SREF = 2690.0000 SQ.FT. XMRP = 1076.6800 IN. XO
LREF = 474.8100 INCHES YMRP = .0000 IN. YO
BREF = 936.6800 INCHES ZMRP = 375.0000 IN. ZO
SCALE = .0100

PARAMETRIC DATA

BETA = .000 PHI = .000
SPDBRK = 86.600 AILRON = 5.000
YP = .000 1S = 1.000
ELEVON = .000 MACH = 6.000
S-MODE = 1.000 S-DIR = 2.000

RUN NO. 312/ O RN/L = 7.58 GRADIENT INTERVAL = 23.00/ 25.00

RN/L	ALPHA	BETA	CN	CA	CLM	CY	CYN	CBL	CL	CD	L/D
7.545	14.386	-.04272	.28110	.07066	.00359	.00184	-.00021	.00321	.25473	.13828	1.84210
7.576	14.430	-.04364	.28117	.07070	.00339	.00187	-.00022	.00321	.25468	.13854	1.83840
7.479	14.703	-.01135	.28162	.07098	.00374	.00158	-.00020	.00321	.25439	.14013	1.81540
7.533	16.150	-.04378	.32767	.06891	.00231	.00184	-.00020	.00349	.29557	.15733	1.87860
7.562	17.459	-.04338	.37200	.06789	.00161	.00191	-.00026	.00374	.33450	.17637	1.89650
7.522	18.619	-.04102	.41448	.06703	.00095	.00204	-.00043	.00403	.37138	.19586	1.89620
7.532	19.243	-.04165	.43496	.06658	.00061	.00241	-.00044	.00414	.38871	.20621	1.88500
7.546	20.529	-.04075	.48112	.06595	-.00060	.00204	-.00057	.00441	.42744	.23048	1.85460
7.527	21.787	-.03926	.52684	.06520	-.00172	.00245	-.00071	.00475	.46501	.25609	1.81580
7.514	23.094	-.03748	.57339	.06456	-.00314	.00274	-.00097	.00508	.50211	.28430	1.76620
7.552	24.410	-.03717	.62152	.06434	-.00477	.00278	-.00102	.00538	.53937	.31544	1.70990
7.557	25.713	-.03651	.67561	.06402	-.00611	.00271	-.00097	.00563	.58093	.35080	1.65600
7.560	26.702	-.01857	.72014	.06381	-.00781	.00242	-.00113	.00590	.61467	.38060	1.61500
7.545	28.023	-.00494	.77386	.06402	-.01020	.00214	-.00105	.00603	.65305	.42009	1.55460
7.570	29.939	-.02835	.85084	.06463	-.01368	.00191	-.00083	.00616	.70504	.48065	1.46690
7.610	31.533	-.02430	.91385	.06454	-.01669	.00226	-.00116	.00659	.74515	.53295	1.39820
7.615	32.927	-.02307	.97531	.06435	-.02072	.00261	-.00151	.00706	.78366	.58416	1.34150
7.677	34.346	-.02143	1.04840	.06447	-.02518	.00280	-.00163	.00741	.82924	.64474	1.28620
7.686	35.445	-.02157	1.09810	.06419	-.02873	.00282	-.00175	.00758	.85733	.68907	1.24420
7.719	36.294	-.01988	1.13700	.06380	-.03179	.00273	-.00182	.00778	.87867	.72447	1.21290
7.700	37.522	-.01061	1.18890	.06329	-.03620	.00273	-.00188	.00803	.90438	.77431	1.16800
7.673	39.032	-.01012	1.26160	.06258	-.04191	.00308	-.00192	.00839	.94056	.84307	1.11560
	GRADIENT	.00024	.03657	-.00017	-.00124	.00003	-.00004	.00023	.02831	.02366	-.04278

OA257 (LARC 20-M6-6559) OV102 (R7E031) (10 JUL 81)

REFERENCE DATA

SREF = 2690.0000 SQ.FT. XMRP = 1076.6800 IN. XO
LREF = 474.8100 INCHES YMRP = .0000 IN. YO
BREF = 936.6800 INCHES ZMRP = 375.0000 IN. ZO
SCALE = .0100

PARAMETRIC DATA

BETA = -.500 PHI = .000
SPDBRK = 86.600 AILRON = .000
YP = .000 1S = 1.000
ELEVON = .000 MACH = 6.000
S-MODE = 1.000 S-DIR = 2.000

RUN NO. 131/ 0 RN/L = 2.34 GRADIENT INTERVAL = 23.00/ 25.00

RN/L	ALPHA	BETA	CN	CA	CLM	CY	CYN	CBL	CL	CD	L/D
2.311	-.458	-.43948	-.06123	.10029	-.00491	.00858	-.00016	.00046	-.06043	.10077	-.59966
2.303	14.440	-.39569	.28453	.06998	.00224	.00479	.00073	.00073	.25809	.13872	1.86050
2.303	15.544	-.39080	.31596	.06912	.00220	.00457	.00082	.00075	.28588	.15126	1.88990
2.308	16.608	-.38980	.35050	.06853	.00217	.00363	.00074	.00080	.31629	.16585	1.90710
2.310	17.229	-.38591	.36893	.06846	.00347	.00445	.00088	.00082	.33210	.17466	1.90140
2.329	18.323	-.39197	.40491	.06782	.00320	.00391	.00104	.00074	.36306	.19168	1.89410
2.337	19.199	-.39211	.43582	.06703	.00288	.00347	.00119	.00061	.38953	.20662	1.88520
2.340	20.090	-.39387	.46674	.06636	.00200	.00359	.00140	.00056	.41555	.22264	1.86650
2.354	21.227	-.38086	.50531	.06524	.00092	.00333	.00144	.00052	.44741	.24376	1.83550
2.385	22.542	-.38486	.54982	.06388	-.00061	.00308	.00148	.00046	.48332	.26978	1.79150
2.393	23.314	-.38648	.58665	.06343	-.00157	.00312	.00137	.00064	.51365	.29042	1.76860
2.378	24.166	-.38628	.61955	.06300	-.00163	.00329	.00129	.00072	.53947	.31112	1.73400
2.374	25.151	-.38509	.65544	.06266	-.00305	.00322	.00127	.00067	.56667	.33528	1.69010
2.349	26.289	-.37764	.70100	.06239	-.00381	.00327	.00113	.00072	.60086	.36642	1.63980
2.341	27.862	-.38634	.74149	.06163	-.00493	.00372	.00098	.00077	.62673	.40101	1.56290
2.329	28.473	-.38657	.78616	.06214	-.00663	.00431	.00094	.00073	.66144	.42942	1.54030
2.326	29.354	-.38733	.83130	.06275	-.00822	.00417	.00091	.00070	.69380	.46220	1.50110
2.293	29.436	-.39861	.83259	.06317	-.00787	.00464	.00095	.00074	.69406	.46419	1.49520
	GRADIENT	.00024	.03861	-.00050	-.00007	.00019	-.00009	.00010	.03030	.02430	-.04061

OA257 (LARC 20-M6-6559) OV102 (R7E031) (10 JUL 81)

REFERENCE DATA

SREF = 2690.0000 SQ.FT. XMRP = 1076.6800 IN. XO
LREF = 474.8100 INCHES YMRP = .0000 IN. YO
BREF = 936.6800 INCHES ZMRP = 375.0000 IN. ZO
SCALE = .0100

PARAMETRIC DATA

BETA = -.500 PHI = .000
SPDBRK = 86.600 AILRON = .000
YP = .000 1S = 1.000
ELEVON = .000 MACH = 6.000
S-MODE = 1.000 S-DIR = 2.000

RUN NO. 187/ 0 RN/L = 4.50 GRADIENT INTERVAL = 23.00/ 25.00

RN/L	ALPHA	BETA	CN	CA	CLM	CY	CYN	CBL	CL	CD	L/D
4.475	14.192	-.52191	.26889	.06985	.00433	.00555	.00074	.00092	.24356	.13364	1.82250
4.485	14.271	-.52408	.26672	.06971	.00430	.00560	.00076	.00091	.24131	.13330	1.81020
4.467	14.461	-.52249	.27415	.06977	.00424	.00538	.00070	.00092	.24804	.13602	1.82350
4.473	14.600	-.50886	.27230	.07001	.00478	.00509	.00083	.00090	.24587	.13639	1.80270
4.431	14.927	-.52392	.28738	.06917	.00412	.00504	.00070	.00098	.25986	.14086	1.84480
4.411	15.528	-.51678	.30924	.06880	.00436	.00529	.00081	.00101	.27953	.14908	1.87500
4.466	16.143	-.52342	.32730	.06794	.00379	.00567	.00065	.00110	.29550	.15626	1.89110
4.496	16.786	-.52285	.34514	.06755	.00389	.00531	.00062	.00114	.31093	.16434	1.89200
4.492	17.451	-.52373	.36488	.06707	.00372	.00544	.00076	.00109	.32797	.17341	1.89130
4.476	18.304	-.52325	.39234	.06661	.00350	.00517	.00092	.00105	.35158	.18645	1.88560
4.492	19.000	-.51703	.41611	.06594	.00272	.00504	.00109	.00097	.37197	.19782	1.88030
4.496	19.817	-.52522	.44102	.06565	.00211	.00423	.00114	.00093	.39265	.21127	1.85850
4.502	20.372	-.52578	.47334	.06533	.00133	.00469	.00133	.00090	.42099	.22601	1.86270
4.489	20.908	-.52508	.48603	.06504	.00094	.00433	.00129	.00088	.43081	.23420	1.83950
4.481	21.408	-.52464	.50624	.06488	.00044	.00453	.00135	.00089	.44763	.24519	1.82570
4.480	21.972	-.52501	.52676	.06423	-.00039	.00409	.00134	.00088	.46447	.25665	1.80970
4.471	22.512	-.52088	.54349	.06420	-.00068	.00401	.00135	.00091	.47750	.26740	1.78570
4.463	23.047	-.52078	.56743	.06372	-.00174	.00398	.00135	.00091	.49719	.28078	1.77070
4.478	23.672	-.52066	.59110	.06358	-.00220	.00412	.00130	.00101	.51583	.29556	1.74530
4.512	24.320	-.51954	.61552	.06333	-.00298	.00424	.00125	.00097	.53482	.31120	1.71860
4.525	25.028	-.51889	.63823	.06306	-.00346	.00418	.00114	.00105	.55162	.32715	1.68620
4.592	25.799	-.51682	.66840	.06280	-.00470	.00444	.00105	.00111	.57444	.34745	1.65330
4.573	26.568	-.51281	.70295	.06261	-.00580	.00434	.00109	.00109	.60072	.37040	1.62180
4.562	27.238	-.51201	.73190	.06263	-.00698	.00430	.00115	.00114	.62207	.39067	1.59230
4.557	27.996	-.50792	.76153	.06222	-.00822	.00392	.00124	.00110	.64321	.41240	1.55970
4.544	28.712	-.50682	.79074	.06236	-.00919	.00353	.00151	.00090	.66356	.43457	1.52690
4.515	29.110	-.51316	.81388	.06271	-.01006	.00315	.00168	.00080	.68057	.45072	1.50990
	GRADIENT	.00098	.03778	-.00031	-.00097	.00020	-.00007	.00004	.02956	.02390	-.04093

OA257 (LARC 20-M6-6559) OV102 (R7E031) (10 JUL 81)

REFERENCE DATA

SREF = 2690.0000 SQ.FT. XMRP = 1076.6800 IN. XO
LREF = 474.8100 INCHES YMRP = .0000 IN. YO
BREF = 936.6800 INCHES ZMRP = 375.0000 IN. ZO
SCALE = .0100

PARAMETRIC DATA

BETA = -.500 PHI = .000
SPDBRK = 86.600 AILRON = .000
YP = .000 1S = 1.000
ELEVON = .000 MACH = 6.000
S-MODE = 1.000 S-DIR = 2.000

RUN NO. 124/ 0 RN/L = 7.51 GRADIENT INTERVAL = 23.00/ 25.00

RN/L	ALPHA	BETA	CN	CA	CLM	CY	CYN	CBL	CL	CD	L/D
7.502	14.080	-.45408	.27453	.07075	.00527	.00449	.00038	.00094	.24907	.13541	1.83930
7.529	14.423	-.46614	.27779	.07074	.00566	.00468	.00045	.00091	.25141	.13770	1.82580
7.550	14.435	-.45862	.27750	.07073	.00566	.00449	.00043	.00092	.25110	.13767	1.82390
7.460	15.288	-.44030	.30170	.06949	.00495	.00461	.00038	.00097	.27270	.14659	1.86040
7.467	16.239	-.43667	.33539	.06838	.00417	.00446	.00046	.00096	.30289	.15944	1.89970
7.469	16.982	-.44224	.36439	.06753	.00370	.00406	.00051	.00093	.32878	.17101	1.92250
7.483	17.926	-.44206	.39090	.06689	.00329	.00400	.00061	.00093	.35134	.18396	1.90990
7.497	18.552	-.43566	.41555	.06686	.00236	.00413	.00065	.00091	.37269	.19560	1.90540
7.534	19.554	-.44246	.45016	.06677	.00152	.00390	.00068	.00091	.40185	.21359	1.88140
7.562	20.750	-.44270	.48637	.06608	.00063	.00375	.00075	.00089	.43141	.23411	1.84280
7.503	21.513	-.43602	.52329	.06543	-.00038	.00337	.00077	.00084	.46284	.25277	1.83110
7.493	22.365	-.43962	.55382	.06509	-.00113	.00351	.00071	.00085	.48739	.27093	1.79900
7.509	23.438	-.44025	.58473	.06462	-.00204	.00334	.00071	.00086	.51079	.29186	1.75010
7.535	24.509	-.44062	.63050	.06421	-.00353	.00299	.00083	.00078	.54706	.31998	1.70970
7.528	25.294	-.43333	.66401	.06420	-.00468	.00281	.00084	.00075	.57292	.34176	1.67640
7.485	26.062	-.44022	.69407	.06394	-.00564	.00293	.00082	.00082	.59541	.36237	1.64310
7.475	26.754	-.43312	.72730	.06383	-.00688	.00281	.00085	.00081	.62071	.38439	1.61480
7.546	27.806	-.43036	.75863	.06360	-.00839	.00264	.00102	.00066	.64137	.41014	1.56380
7.592	29.026	-.42054	.82184	.06373	-.01068	.00229	.00123	.00046	.68769	.45450	1.51310
	GRADIENT	-.00035	.04274	-.00038	-.00139	-.00033	.00011	-.00007	.03387	.02626	-.03772

OA257 (LARC 20-M6-6559) OV102 (R7E032) (10 JUL 81)

REFERENCE DATA

SREF = 2690.0000 SQ.FT. XMRP = 1076.6800 IN. XO
LREF = 474.8100 INCHES YMRP = .0000 IN. YO
BREF = 936.6800 INCHES ZMRP = 375.0000 IN. ZO
SCALE = .0100

PARAMETRIC DATA

BETA = -.500 PHI = .000
SPDBRK = 86.600 AILRON = .000
YP = .000 1S = 1.000
ELEVON = .000 MACH = 6.000
S-MODE = 1.000 S-DIR = 2.000

RUN NO. 132/ 0 RN/L = 2.28 GRADIENT INTERVAL = 23.00/ 25.00

RN/L	ALPHA	BETA	CN	CA	CLM	CY	CYN	CBL	CL	CD	L/D
2.250	24.157	-.42705	.62287	.06254	-.00220	.00346	.00131	.00072	.54272	.31197	1.73970
2.264	24.168	-.42818	.62295	.06232	-.00239	.00366	.00131	.00069	.54283	.31191	1.74040
2.268	24.855	-.47724	.64889	.06228	-.00285	.00362	.00141	.00075	.56261	.32925	1.70870
2.262	25.623	-.47776	.67960	.06216	-.00311	.00425	.00145	.00081	.58589	.34994	1.67430
2.265	26.549	-.47102	.71513	.06192	-.00454	.00410	.00125	.00082	.61204	.37503	1.63200
2.260	27.509	-.47664	.75542	.06234	-.00491	.00445	.00108	.00089	.64122	.40421	1.58630
2.269	28.452	-.47480	.79601	.06230	-.00665	.00487	.00105	.00081	.67019	.43401	1.54420
2.275	29.371	-.47288	.83477	.06210	-.00852	.00531	.00100	.00082	.69701	.46354	1.50370
2.259	30.489	-.47251	.88173	.06228	-.01050	.00592	.00079	.00092	.72821	.50104	1.45340
2.255	31.601	-.46645	.93015	.06125	-.01390	.00593	.00078	.00096	.76014	.53956	1.40880
2.297	32.865	-.46581	.98485	.06060	-.01708	.00618	.00049	.00116	.79435	.58533	1.35710
2.314	33.892	-.46083	1.02780	.06006	-.02040	.00601	.00053	.00122	.81966	.62299	1.31570
2.282	35.023	-.46011	1.08130	.05997	-.02352	.00624	.00063	.00127	.85108	.66968	1.27090
2.267	36.074	-.44870	1.12780	.05918	-.02703	.00592	.00058	.00128	.87669	.71190	1.23150
2.307	36.911	-.45477	1.16730	.05953	-.02934	.00578	.00065	.00133	.89759	.74865	1.19890
2.313	37.968	-.44790	1.21470	.05940	-.03278	.00544	.00077	.00132	.92106	.79414	1.15980
2.304	39.393	-.42735	1.27870	.05888	-.03739	.00516	.00101	.00138	.95087	.85704	1.10950
	GRADIENT	-.07166	.03751	-.00022	-.00080	.00008	.00014	.00007	.02864	.02499	-.04525

RUN NO. 125/ 0 RN/L = 7.48 GRADIENT INTERVAL = 23.00/ 25.00

RN/L	ALPHA	BETA	CN	CA	CLM	CY	CYN	CBL	CL	CD	L/D
7.375	23.807	-.50000	.61723	.06447	-.00316	.00327	.00083	.00083	.53869	.30814	1.74820
7.504	24.063	-.50000	.62025	.06492	-.00369	.00253	.00074	.00069	.53988	.31218	1.72940
7.446	24.162	-.50000	.61715	.06427	-.00289	.00251	.00069	.00070	.53677	.31125	1.72460
7.479	25.847	-.50000	.68717	.06394	-.00514	.00223	.00068	.00071	.59056	.35712	1.65360
7.491	27.620	-.50000	.75762	.06358	-.00771	.00233	.00079	.00064	.64180	.40757	1.57470
7.476	29.659	-.50000	.84339	.06374	-.01081	.00212	.00094	.00045	.70135	.47273	1.48360
7.529	31.407	-.50000	.92398	.06357	-.01492	.00344	.00029	.00093	.75548	.53575	1.41010
7.500	32.821	-.50000	.99395	.06323	-.01922	.00384	.00018	.00104	.80102	.59187	1.35340
7.503	34.383	-.50000	1.05470	.06255	-.02340	.00390	.00029	.00095	.83509	.64721	1.29030
7.503	36.620	-.50000	1.12210	.06151	-.02858	.00343	.00037	.00089	.86388	.71869	1.20200
7.477	37.763	-.50000	1.21190	.06092	-.03515	.00410	.00039	.00093	.92074	.79030	1.16500
7.520	38.878	-.50000	1.26400	.06030	-.03957	.00411	.00008	.00122	.94614	.84030	1.12600
	GRADIENT	.00000	.00217	-.00012	.00018	-.00228	-.00041	-.00041	-.00341	.01017	-.06788

OA257 (LARC 20-M6-6559) OV102 (R7E033) (10 JUL 81)

REFERENCE DATA

SREF = 2690.0000 SQ.FT. XMRP = 1076.6800 IN. XO
LREF = 474.8100 INCHES YMRP = .0000 IN. YO
BREF = 936.6800 INCHES ZMRP = 375.0000 IN. ZO
SCALE = .0100

PARAMETRIC DATA

BETA = .500 PHI = .000
SPDBRK = 86.600 AILRON = .000
YP = .000 1S = 1.000
ELEVON = .000 MACH = 6.000
S-MODE = 1.000 S-DIR = 2.000

RUN NO. 133/ 0 RN/L = 2.28 GRADIENT INTERVAL = 23.00/ 25.00

RN/L	ALPHA	BETA	CN	CA	CLM	CY	CYN	CBL	CL	CD	L/D
2.265	14.468	.49092	.28126	.06938	.00212	-.00404	-.00022	-.00047	.25501	.13745	1.85530
2.274	15.613	.54147	.31444	.06888	.00241	-.00405	-.00043	-.00047	.28430	.15096	1.88320
2.271	16.809	.54255	.35074	.06797	.00288	-.00347	-.00088	-.00027	.31610	.16649	1.89860
2.276	18.146	.54198	.38974	.06725	.00322	-.00366	-.00069	-.00046	.34942	.18529	1.88580
2.276	18.882	.54160	.41887	.06679	.00289	-.00360	-.00089	-.00041	.37471	.19874	1.88540
2.277	19.757	.54262	.44553	.06597	.00240	-.00324	-.00098	-.00037	.39701	.21269	1.86660
2.271	20.686	.54173	.47975	.06513	.00160	-.00269	-.00115	-.00028	.42582	.23040	1.84820
2.273	21.557	.54843	.51337	.06408	.00022	-.00292	-.00133	-.00032	.45392	.24822	1.82870
2.277	22.482	.54189	.55248	.06344	-.00068	-.00291	-.00117	-.00041	.48623	.26989	1.80160
2.273	23.386	.54148	.58452	.06321	-.00127	-.00276	-.00109	-.00046	.51142	.29003	1.76330
2.274	23.983	.54112	.60283	.06286	-.00155	-.00307	-.00091	-.00059	.52523	.30246	1.73650
2.273	24.632	.54591	.63463	.06270	-.00281	-.00374	-.00072	-.00072	.55075	.32150	1.71300
2.273	25.677	.54195	.67518	.06259	-.00302	-.00329	-.00084	-.00069	.58138	.34896	1.66600
2.270	26.158	.54266	.69351	.06250	-.00374	-.00320	-.00108	-.00070	.59493	.36183	1.64420
2.292	27.346	.54184	.74212	.06239	-.00473	-.00246	-.00130	-.00065	.63052	.39632	1.59100
2.288	28.300	.54063	.78332	.06225	-.00630	-.00263	-.00121	-.00085	.66019	.42617	1.54910
2.302	28.853	.54102	.80810	.06205	-.00801	-.00277	-.00099	-.00099	.67783	.44431	1.52560
2.298	29.658	.54033	.84097	.06222	-.00944	-.00295	-.00074	-.00122	.70000	.47020	1.48870
2.295	29.671	.54531	.84202	.06224	-.00900	-.00283	-.00077	-.00120	.70081	.47089	1.48830
	GRADIENT	.00361	.04034	-.00040	-.00125	-.00079	.00030	-.00021	.03168	.02532	-.04031

OA257 (LARC 20-M6-6559) OV102 (R7E033) (10 JUL 81)

REFERENCE DATA

SREF = 2690.0000 SQ.FT. XMRP = 1076.6800 IN. XO
LREF = 474.8100 INCHES YMRP = .0000 IN. YO
BREF = 936.6800 INCHES ZMRP = 375.0000 IN. ZO
SCALE = .0100

PARAMETRIC DATA

BETA = .500 PHI = .000
SPDBRK = 86.600 AILRON = .000
YP = .000 1S = 1.000
ELEVON = .000 MACH = 6.000
S-MODE = 1.000 S-DIR = 2.000

RUN NO. 126/ O RN/L = 7.49 GRADIENT INTERVAL = 23.00/ 25.00

RN/L	ALPHA	BETA	CN	CA	CLM	CY	CYN	CBL	CL	CD	L/D
7.446	14.381	.41687	.28437	.07066	.00479	-.00497	-.00017	-.00056	.25791	.13907	1.85450
7.519	14.393	.41733	.28552	.07062	.00476	-.00505	-.00019	-.00057	.25901	.13938	1.85840
7.508	14.539	.45972	.28305	.07073	.00496	-.00525	-.00010	-.00066	.25622	.13952	1.83640
7.493	14.799	.41672	.29270	.07011	.00455	-.00504	-.00013	-.00059	.26508	.14255	1.85950
7.499	15.626	.42261	.31861	.06910	.00410	-.00512	-.00011	-.00063	.28822	.15236	1.89160
7.539	16.339	.42541	.34513	.06814	.00364	-.00509	-.00009	-.00066	.31202	.16248	1.92030
7.514	17.070	.42730	.36819	.06771	.00335	-.00517	-.00017	-.00065	.33210	.17280	1.92180
7.500	18.286	.42729	.40832	.06692	.00289	-.00462	-.00030	-.00064	.36670	.19166	1.91330
7.500	19.107	.42721	.43767	.06641	.00223	-.00480	-.00048	-.00060	.39182	.20602	1.90190
7.465	20.175	.43676	.47238	.06586	.00131	-.00438	-.00065	-.00055	.42068	.22473	1.87190
7.518	20.826	.44064	.49831	.06599	.00044	-.00427	-.00076	-.00054	.44229	.23884	1.85180
7.515	21.552	.43899	.52472	.06553	-.00025	-.00413	-.00084	-.00052	.46396	.25370	1.82880
7.501	22.319	.44364	.55147	.06508	-.00090	-.00413	-.00092	-.00054	.48544	.26963	1.80040
7.455	23.628	.44568	.59530	.06461	-.00199	-.00390	-.00101	-.00052	.51950	.29778	1.74460
7.468	24.841	.43981	.64885	.06407	-.00395	-.00419	-.00097	-.00062	.56190	.33073	1.69900
7.442	25.815	.43851	.68863	.06419	-.00518	-.00462	-.00075	-.00083	.59196	.35766	1.65510
7.443	26.731	.43727	.72110	.06425	-.00658	-.00483	-.00069	-.00092	.61513	.38174	1.61140
7.528	28.003	.43699	.77869	.06405	-.00875	-.00452	-.00072	-.00095	.65745	.42216	1.55730
7.531	28.758	.44161	.81393	.06389	-.01031	-.00460	-.00078	-.00097	.68280	.44759	1.52550
7.515	29.166	.44651	.83000	.06421	-.01095	-.00443	-.00071	-.00104	.69347	.46056	1.50570
	GRADIENT	-.00484	.04415	-.00044	-.00162	-.00024	.00003	-.00008	.03495	.02716	-.03759

OA257 (LARC 20-M6-6559) OV102 (R7E034) (10 JUL 81)

REFERENCE DATA

SREF = 2690.0000 SQ.FT. XMRP = 1076.6800 IN. XO
LREF = 474.8100 INCHES YMRP = .0000 IN. YO
BREF = 936.6800 INCHES ZMRP = 375.0000 IN. ZO
SCALE = .0100

PARAMETRIC DATA

BETA = .500 PHI = .000
SPDBRK = 86.600 AILRON = .000
YP = .000 1S = 1.000
ELEVON = .000 MACH = 6.000
S-MODE = 1.000 S-DIR = 2.000

RUN NO. 134/ 0 RN/L = 2.28 GRADIENT INTERVAL = 23.00/ 25.00

RN/L	ALPHA	BETA	CN	CA	CLM	CY	CYN	CBL	CL	CD	L/D
2.249	24.563	.57268	.64529	.06359	-.00272	-.00341	-.00077	-.00069	.56046	.32608	1.71880
2.255	25.729	.57693	.67773	.06323	-.00323	-.00316	-.00092	-.00065	.58309	.35117	1.66040
2.252	26.610	.57246	.72283	.06326	-.00419	-.00250	-.00124	-.00063	.61793	.38033	1.62470
2.266	27.364	.57028	.75335	.06292	-.00518	-.00204	-.00129	-.00065	.64013	.40215	1.59170
2.266	28.529	.57099	.80005	.06262	-.00688	-.00241	-.00113	-.00089	.67300	.43712	1.53960
2.275	29.465	.57703	.84508	.06304	-.00860	-.00260	-.00079	-.00113	.70477	.47057	1.49770
2.265	30.500	.56947	.88282	.06244	-.01032	-.00255	-.00062	-.00131	.72898	.50187	1.45250
2.265	31.476	.56937	.92743	.06234	-.01319	-.00264	-.00058	-.00143	.75841	.53743	1.41120
2.269	32.390	.57034	.96635	.06195	-.01535	-.00247	-.00062	-.00144	.78282	.56997	1.37340
2.270	32.921	.57550	.98968	.06142	-.01738	-.00243	-.00069	-.00145	.79738	.58943	1.35280
2.268	33.923	.57828	1.03030	.06072	-.02014	-.00228	-.00066	-.00144	.82105	.62539	1.31290
2.262	34.489	.58054	1.05820	.06075	-.02191	-.00222	-.00078	-.00137	.83782	.64928	1.29040
2.285	35.498	.59225	1.09870	.06048	-.02475	-.00198	-.00109	-.00124	.85939	.68725	1.25050
2.310	36.602	.58858	1.14730	.06029	-.02806	-.00174	-.00125	-.00112	.88507	.73245	1.20840
2.316	37.492	.58945	1.18960	.05996	-.03091	-.00171	-.00123	-.00108	.90739	.77165	1.17590
2.324	38.603	.59776	1.23620	.05893	-.03516	-.00162	-.00104	-.00102	.92930	.81734	1.13700
2.329	39.621	.59150	1.28680	.05893	-.03906	-.00181	-.00092	-.00095	.95366	.86602	1.10120
2.319	39.646	.58909	1.28800	.05881	-.03933	-.00144	-.00085	-.00093	.95428	.86711	1.10050
	GRADIENT	.00000	.00000	.00000	.00000	.00000	.00000	.00000	.00000	.00000	.00000

OA257 (LARC 20-M6-6559) OV102 (R7E034) (10 JUL 81)

REFERENCE DATA

SREF = 2690.0000 SQ.FT. XMRP = 1076.6800 IN. XO
LREF = 474.8100 INCHES YMRP = .0000 IN. YO
BREF = 936.6800 INCHES ZMRP = 375.0000 IN. ZO
SCALE = .0100

PARAMETRIC DATA

BETA = .500 PHI = .000
SPDBRK = 86.600 AILRON = .000
YP = .000 1S = 1.000
ELEVON = .000 MACH = 6.000
S-MODE = 1.000 S-DIR = 2.000

RUN NO. 127/ 0 RN/L = 7.60 GRADIENT INTERVAL = 23.00/ 25.00

RN/L	ALPHA	BETA	CN	CA	CLM	CY	CYN	CBL	CL	CD	L/D
7.583	24.261	.39646	.63258	.06429	-.00351	-.00432	-.00098	-.00068	.55029	.31853	1.72760
7.584	24.277	.39704	.63246	.06427	-.00341	-.00440	-.00102	-.00067	.55011	.31863	1.72650
7.549	24.374	.41867	.62871	.06476	-.00382	-.00459	-.00107	-.00067	.54595	.31845	1.71440
7.574	24.386	.42023	.62942	.06450	-.00382	-.00452	-.00103	-.00064	.54663	.31863	1.71560
7.628	25.317	.39553	.66283	.06426	-.00452	-.00470	-.00091	-.00083	.57169	.34153	1.67390
7.616	26.215	.39473	.70139	.06411	-.00577	-.00504	-.00076	-.00097	.60093	.36735	1.63580
7.607	26.956	.40055	.73206	.06401	-.00668	-.00494	-.00077	-.00100	.62351	.38891	1.60320
7.581	27.736	.39850	.76034	.06390	-.00777	-.00472	-.00083	-.00099	.64324	.41042	1.56730
7.579	28.858	.39614	.79665	.06346	-.00930	-.00484	-.00101	-.00097	.66709	.44008	1.51580
7.579	29.755	.39417	.84905	.06381	-.01129	-.00468	-.00083	-.00113	.70543	.47678	1.47960
7.601	30.749	.39756	.88271	.06363	-.01321	-.00420	-.00088	-.00113	.72608	.50599	1.43500
7.593	31.887	.40596	.93029	.06335	-.01607	-.00387	-.00114	-.00097	.75644	.54521	1.38740
7.606	32.849	.40641	.98179	.06315	-.01903	-.00400	-.00106	-.00106	.79056	.58559	1.35000
7.620	33.652	.41181	1.01620	.06285	-.02125	-.00389	-.00091	-.00118	.81110	.61545	1.31790
7.615	34.982	.41120	1.06950	.06247	-.02463	-.00432	-.00076	-.00133	.84045	.66433	1.26510
7.619	35.775	.41880	1.11130	.06220	-.02742	-.00453	-.00081	-.00138	.86522	.70010	1.23590
7.606	36.635	.41384	1.13640	.06174	-.02930	-.00412	-.00079	-.00138	.87504	.72763	1.20260
7.587	37.699	.41547	1.18800	.06132	-.03334	-.00378	-.00085	-.00142	.90244	.77497	1.16450
7.594	38.589	.41449	1.23380	.06100	-.03704	-.00351	-.00105	-.00140	.92631	.81721	1.13350
7.599	39.120	.41541	1.27290	.06047	-.04032	-.00299	-.00129	-.00124	.94940	.85005	1.11690
	GRADIENT	.20202	-.03034	.00297	-.00313	-.00176	-.00044	.00014	-.03433	-.00017	-.10660

OA257 (LARC 20-M6-6559) OV102 (R7E035) (10 JUL 81)

REFERENCE DATA

SREF = 2690.0000 SQ.FT. XMRP = 1076.6800 IN. XO
LREF = 474.8100 INCHES YMRP = .0000 IN. YO
BREF = 936.6800 INCHES ZMRP = 375.0000 IN. ZO
SCALE = .0100

PARAMETRIC DATA

BETA = .000 PHI = .000
SPDBRK = .000 AILRON = .000
YP = .000 1S = 1.000
ELEVON = .000 MACH = 6.000
S-MODE = 1.000 S-DIR = 2.000

RUN NO. 252/ 0 RN/L = 2.26 GRADIENT INTERVAL = 23.00/ 25.00

RN/L	ALPHA	BETA	CN	CA	CLM	CY	CYN	CBL	CL	CD	L/D
2.241	14.590	-.19768	.29201	.06391	-.00879	.00229	.00081	.00043	.26649	.13540	1.96820
2.243	14.610	-.19789	.29039	.06359	-.00876	.00239	.00085	.00043	.26495	.13478	1.96580
2.302	14.967	-.18363	.29504	.06365	-.00835	.00197	.00084	.00045	.26859	.13769	1.95070
2.246	15.171	-.19751	.30225	.06330	-.00827	.00217	.00079	.00045	.27515	.14019	1.96270
2.240	16.043	-.19744	.33185	.06314	-.00744	.00234	.00074	.00052	.30147	.15240	1.97820
2.242	16.813	-.19715	.35769	.06312	-.00684	.00220	.00068	.00058	.32415	.16388	1.97790
2.239	17.273	-.19719	.37488	.06332	-.00624	.00227	.00069	.00059	.33917	.17178	1.97450
2.242	18.806	-.19716	.41582	.06284	-.00519	.00222	.00070	.00064	.37337	.19353	1.92930
2.242	19.919	-.19682	.45054	.06246	-.00497	.00197	.00066	.00067	.40231	.21221	1.89580
2.260	21.094	-.19683	.50316	.06247	-.00500	.00199	.00066	.00068	.44696	.23938	1.86720
2.251	22.098	-.19681	.53845	.06195	-.00518	.00202	.00066	.00063	.47560	.25996	1.82950
2.253	22.949	-.19645	.57274	.06181	-.00560	.00216	.00083	.00064	.50331	.28023	1.79600
2.262	23.855	-.19676	.60544	.06163	-.00596	.00201	.00066	.00072	.52880	.30122	1.75550
2.254	24.840	-.19680	.64637	.06177	-.00652	.00215	.00065	.00080	.56062	.32759	1.71140
2.267	25.975	-.19603	.69599	.06180	-.00824	.00237	.00068	.00085	.59862	.36039	1.66100
2.279	26.902	-.19690	.73178	.06151	-.00986	.00199	.00073	.00077	.62475	.38596	1.61870
2.303	27.803	-.19744	.77077	.06167	-.01122	.00170	.00097	.00063	.65303	.41406	1.57710
2.299	28.925	-.19652	.81926	.06172	-.01267	.00152	.00105	.00053	.68720	.45028	1.52620
2.315	29.481	-.19791	.84363	.06194	-.01403	.00172	.00112	.00050	.70391	.46910	1.50050
	GRADIENT	-.00004	.04155	.00014	-.00057	.00015	-.00001	.00007	.03230	.02677	-.04477

OA257 (LARC 20-M6-6559) OV102 (R7E035) (10 JUL 81)

REFERENCE DATA

SREF = 2690.0000 SQ.FT. XMRP = 1076.6800 IN. XO
LREF = 474.8100 INCHES YMRP = .0000 IN. YO
BREF = 936.6800 INCHES ZMRP = 375.0000 IN. ZO
SCALE = .0100

PARAMETRIC DATA

BETA = .000 PHI = .000
SPDBRK = .000 AILRON = .000
YP = .000 1S = 1.000
ELEVON = .000 MACH = 6.000
S-MODE = 1.000 S-DIR = 2.000

RUN NO. 249/ O RN/L = 4.43 GRADIENT INTERVAL = 23.00/ 25.00

RN/L	ALPHA	BETA	CN	CA	CLM	CY	CYN	CBL	CL	CD	L/D
4.310	14.458	-.20904	.28399	.06141	-.00895	.00133	.00057	.00032	.25966	.13037	1.99170
4.365	14.507	-.20936	.28396	.06128	-.00905	.00139	.00061	.00030	.25956	.13046	1.98960
4.587	14.769	-.19559	.28593	.06151	-.00889	.00108	.00068	.00029	.26080	.13237	1.97030
4.326	15.430	-.20931	.30819	.06133	-.00795	.00151	.00057	.00033	.28076	.14112	1.98950
4.330	16.119	-.20860	.33055	.06137	-.00739	.00137	.00048	.00042	.30052	.15073	1.99380
4.316	16.726	-.20850	.34819	.06113	-.00716	.00152	.00043	.00049	.31587	.15875	1.98970
4.318	17.607	-.20854	.37762	.06076	-.00686	.00170	.00040	.00049	.34155	.17213	1.98420
4.317	18.293	-.20884	.40199	.06080	-.00648	.00166	.00047	.00045	.36260	.18390	1.97170
4.366	19.088	-.20830	.42649	.06054	-.00638	.00137	.00043	.00045	.38324	.19668	1.94860
4.382	20.153	-.20860	.46420	.06053	-.00651	.00148	.00046	.00044	.41493	.21675	1.91440
4.377	20.940	-.20741	.49223	.06063	-.00661	.00120	.00049	.00046	.43805	.23254	1.88380
4.402	21.687	-.20631	.52004	.06065	-.00677	.00109	.00050	.00041	.46082	.24852	1.85420
4.441	22.856	-.20369	.55886	.06073	-.00686	.00143	.00049	.00048	.49139	.27304	1.79970
4.469	23.696	-.20376	.59152	.06075	-.00769	.00090	.00044	.00043	.51724	.29335	1.76320
4.499	24.469	-.20407	.62114	.06069	-.00820	.00096	.00049	.00044	.54021	.31252	1.72850
4.507	25.081	-.20307	.64620	.06094	-.00862	.00092	.00050	.00048	.55944	.32911	1.69980
4.514	26.186	-.20373	.68940	.06089	-.00977	.00084	.00046	.00050	.59177	.35886	1.64900
4.537	27.008	-.20361	.71895	.06065	-.01070	.00096	.00041	.00055	.61300	.38053	1.61090
4.577	28.588	-.20254	.76127	.06024	-.01216	.00088	.00042	.00053	.63964	.41716	1.53330
4.575	29.267	-.20321	.82009	.06090	-.01450	.00067	.00060	.00041	.68563	.45405	1.51000
	GRADIENT	-.00040	.03832	-.00007	-.00066	.00008	.00006	.00002	.02972	.02480	-.04489

OA257 (LARC 20-M6-6559) OV102 (R7E035) (10 JUL 81)

REFERENCE DATA

SREF = 2690.0000 SQ.FT. XMRP = 1076.6800 IN. XO
LREF = 474.8100 INCHES YMRP = .0000 IN. YO
BREF = 936.6800 INCHES ZMRP = 375.0000 IN. ZO
SCALE = .0100

PARAMETRIC DATA

BETA = .000 PHI = .000
SPDBRK = .000 AILRON = .000
YP = .000 1S = 1.000
ELEVON = .000 MACH = 6.000
S-MODE = 1.000 S-DIR = 2.000

RUN NO. 246/ 0 RN/L = 7.54 GRADIENT INTERVAL = 23.00/ 25.00

RN/L	ALPHA	BETA	CN	CA	CLM	CY	CYN	CBL	CL	CD	L/D
7.529	14.249	-.04472	.28080	.06072	-.00993	.00104	.00050	.00030	.25722	.12797	2.00990
7.586	14.272	-.04428	.28106	.06083	-.00997	.00088	.00048	.00029	.25739	.12824	2.00710
7.557	14.533	-.01764	.28396	.06107	-.01008	.00061	.00046	.00025	.25955	.13037	1.99090
7.563	14.973	-.04200	.30106	.06058	-.00931	.00117	.00050	.00032	.27519	.13631	2.01880
7.536	15.724	-.03818	.32341	.06046	-.00883	.00107	.00043	.00033	.29492	.14584	2.02210
7.526	16.424	-.03951	.34656	.06032	-.00868	.00085	.00041	.00035	.31536	.15584	2.02360
7.503	17.324	-.03991	.37383	.06020	-.00818	.00068	.00039	.00037	.33894	.16879	2.00810
7.493	18.285	-.04175	.40508	.06004	-.00780	.00101	.00041	.00035	.36579	.18410	1.98700
7.504	19.518	-.04050	.44670	.05989	-.00744	.00077	.00033	.00036	.40102	.20570	1.94960
7.574	20.743	-.04192	.49055	.05973	-.00742	.00089	.00035	.00036	.43760	.22960	1.90590
7.540	21.393	-.04177	.51551	.05996	-.00750	.00085	.00035	.00037	.45812	.24387	1.87850
7.567	22.282	-.04219	.54700	.05994	-.00773	.00093	.00038	.00034	.48342	.26287	1.83900
7.538	23.077	-.03477	.57714	.06019	-.00801	.00088	.00034	.00035	.50736	.28159	1.80180
7.560	23.678	-.03235	.60033	.06025	-.00812	.00081	.00031	.00037	.52559	.29627	1.77410
7.543	24.295	-.03155	.62322	.06027	-.00846	.00074	.00035	.00034	.54323	.31135	1.74480
7.558	24.947	-.02974	.64827	.06054	-.00923	.00069	.00038	.00032	.56225	.32832	1.71250
7.570	25.836	-.02963	.68543	.06138	-.01013	.00055	.00041	.00033	.59017	.35395	1.66740
7.532	26.148	-.03158	.69775	.06158	-.01053	.00043	.00043	.00028	.59920	.36277	1.65170
7.519	26.958	-.03211	.72688	.06169	-.01147	.00062	.00045	.00033	.61993	.38451	1.61220
7.528	27.880	-.02856	.76062	.06175	-.01276	.00063	.00051	.00026	.64346	.41027	1.56840
7.605	29.007	-.02898	.81681	.06156	-.01509	.00024	.00064	.00013	.68450	.44992	1.52140
	GRADIENT	.00255	.03794	.00017	-.00065	-.00011	.00003	-.00002	.02927	.02494	-.04774

OA257 (LARC 20-M6-6559) OV102 (R7E036) (10 JUL 81)

REFERENCE DATA

SREF =	2690.0000 SQ.FT.	XMRP =	1076.6800 IN.	XO	
LREF =	474.8100 INCHES	YMRP =	.0000 IN.	YO	
BREF =	936.6800 INCHES	ZMRP =	375.0000 IN.	ZO	
SCALE =	.0100				

PARAMETRIC DATA

BETA =	.000	PHI =	.000
SPDBRK =	.000	AILRON =	.000
YP =	.000	1S =	1.000
ELEVON =	.000	MACH =	6.000
S-MODE =	1.000	S-DIR =	2.000

RUN NO. 253/ O RN/L = 2.23 GRADIENT INTERVAL = 23.00/ 25.00

RN/L	ALPHA	BETA	CN	CA	CLM	CY	CYN	CBL	CL	CD	L/D
2.245	24.431	-.07552	.63494	.06167	-.00653	.00113	.00032	.00050	.55257	.31876	1.73350
2.234	24.489	-.07586	.63565	.06121	-.00658	.00132	.00039	.00050	.55310	.31919	1.73280
2.177	24.643	-.01215	.63550	.06109	-.00651	.00007	.00037	.00034	.55215	.32050	1.72280
2.226	25.533	-.07659	.67201	.06128	-.00766	.00115	.00034	.00052	.57996	.34494	1.68130
2.240	26.150	-.07556	.69904	.06136	-.00869	.00111	.00034	.00048	.60045	.36315	1.65340
2.240	26.558	-.07359	.72293	.06148	-.00888	.00100	.00038	.00048	.61916	.37823	1.63700
2.233	28.063	-.07590	.76768	.06072	-.01117	.00089	.00052	.00033	.64886	.41473	1.56450
2.228	28.503	-.07397	.80683	.06172	-.01257	.00083	.00055	.00033	.67959	.43926	1.54710
2.220	29.580	-.07364	.84319	.06158	-.01370	.00091	.00043	.00035	.70289	.46978	1.49620
2.232	30.600	-.07582	.88810	.06176	-.01611	.00131	.00042	.00036	.73299	.50525	1.45080
2.229	31.458	-.07367	.92837	.06202	-.01773	.00147	.00033	.00039	.75955	.53739	1.41340
2.244	32.470	-.06860	.96990	.06158	-.01975	.00149	.00031	.00040	.78522	.57265	1.37120
2.229	33.427	-.06953	1.00640	.06155	-.02181	.00164	.00026	.00053	.80604	.60578	1.33060
2.229	34.148	-.06854	1.05020	.06166	-.02391	.00176	.00024	.00064	.83454	.64055	1.30280
2.251	34.259	-.06865	1.04860	.06168	-.02408	.00187	.00025	.00057	.83191	.64126	1.29730
2.235	35.387	-.06854	1.09810	.06138	-.02673	.00179	.00024	.00059	.85966	.68593	1.25330
2.240	36.208	-.06861	1.13650	.06181	-.02946	.00162	.00031	.00063	.88052	.72125	1.22080
2.229	36.825	-.06955	1.16190	.06129	-.03126	.00147	.00033	.00063	.89335	.74547	1.19840
2.227	37.563	-.06363	1.20090	.06116	-.03360	.00151	.00034	.00066	.91461	.78057	1.17170
2.236	38.205	-.06452	1.23150	.06127	-.03608	.00136	.00035	.00073	.92981	.80978	1.14820
2.236	38.529	-.06475	1.25230	.06160	-.03708	.00152	.00040	.00072	.94128	.82826	1.13650
2.219	39.258	-.06318	1.28880	.06173	-.03962	.00167	.00054	.00081	.95889	.86339	1.11060
	GRADIENT	.32250	.00188	-.00236	.00017	-.00562	.00017	-.00079	-.00282	.00828	-.05344

OA257 (LARC 20-M6-6559) OV102 (R7E036) (10 JUL 81)

REFERENCE DATA

SREF = 2690.0000 SQ.FT. XMRP = 1076.6800 IN. XO
LREF = 474.8100 INCHES YMRP = .0000 IN. YO
BREF = 936.6800 INCHES ZMRP = 375.0000 IN. ZO
SCALE = .0100

PARAMETRIC DATA

BETA = .000 PHI = .000
SPDBRK = .000 AILRON = .000
YP = .000 1S = 1.000
ELEVON = .000 MACH = 6.000
S-MODE = 1.000 S-DIR = 2.000

RUN NO. 250/ 0 RN/L = 4.54 GRADIENT INTERVAL = 23.00/ 25.00

RN/L	ALPHA	BETA	CN	CA	CLM	CY	CYN	CBL	CL	CD	L/D
4.448	24.345	-.18174	.61739	.06020	-.00830	.00133	.00053	.00049	.53768	.30935	1.73810
4.453	24.387	-.18170	.61785	.06040	-.00822	.00133	.00052	.00057	.53778	.31012	1.73410
4.530	24.591	-.16565	.62073	.06044	-.00830	.00099	.00055	.00041	.53928	.31326	1.72150
4.464	25.355	-.18180	.64553	.05991	-.00873	.00134	.00054	.00048	.55769	.33057	1.68710
4.464	26.438	-.18045	.69549	.06042	-.00986	.00151	.00045	.00059	.59586	.36376	1.63810
4.474	27.592	-.18092	.74369	.06028	-.01183	.00125	.00041	.00056	.63119	.39788	1.58640
4.468	28.254	-.18051	.77217	.06017	-.01302	.00137	.00050	.00051	.65169	.41854	1.55710
4.526	29.468	-.18197	.82373	.06018	-.01524	.00130	.00060	.00046	.68756	.45762	1.50250
4.607	30.788	-.18164	.87571	.05989	-.01757	.00145	.00050	.00055	.72163	.49970	1.44410
4.576	31.401	-.18144	.90018	.06024	-.01870	.00170	.00042	.00067	.73695	.52044	1.41600
4.580	32.609	-.17994	.95466	.06019	-.02127	.00186	.00029	.00073	.77173	.56517	1.36550
4.587	33.558	-.17397	.99489	.06004	-.02386	.00189	.00030	.00071	.79588	.59998	1.32650
4.573	34.588	-.17368	1.03990	.06025	-.02635	.00170	.00029	.00083	.82189	.63991	1.28440
4.586	35.712	-.17336	1.09150	.06017	-.02950	.00149	.00028	.00078	.85114	.68597	1.24080
4.613	36.847	-.17096	1.14130	.05966	-.03287	.00216	.00026	.00092	.87757	.73218	1.19860
4.615	37.462	-.17031	1.17060	.05983	-.03490	.00167	.00024	.00087	.89275	.75946	1.17550
4.584	37.928	-.17072	1.20220	.05962	-.03704	.00195	.00027	.00101	.91164	.78599	1.15990
4.594	39.165	-.16458	1.24610	.05929	-.04047	.00186	.00026	.00110	.92867	.83293	1.11490
	GRADIENT	.06964	.01373	.00073	-.00015	-.00151	.00012	-.00047	.00677	.01574	-.06566

RUN NO. 247/ 0 RN/L = 7.44 GRADIENT INTERVAL = 23.00/ 25.00

RN/L	ALPHA	BETA	CN	CA	CLM	CY	CYN	CBL	CL	CD	L/D
7.420	24.101	.00989	.61888	.06015	-.00825	.00025	.00017	.00025	.54036	.30763	1.75650
7.471	24.356	.03087	.62239	.06048	-.00879	-.00007	.00024	.00019	.54205	.31178	1.73860
7.527	24.369	.02878	.62310	.06050	-.00880	-.00001	.00023	.00023	.54262	.31221	1.73800
7.439	27.051	.00983	.73008	.06010	-.01054	.00038	.00016	.00028	.62288	.38555	1.61550
7.427	28.033	.00984	.76754	.06009	-.01213	.00010	.00022	.00019	.64925	.41377	1.56910
7.380	29.292	.00923	.82553	.06006	-.01461	-.00014	.00034	.00006	.69058	.45628	1.51350
7.403	30.408	.00854	.87561	.06042	-.01666	.00020	.00036	.00006	.72458	.49530	1.46290
7.346	31.483	.00990	.92321	.06088	-.01893	.00061	.00023	.00019	.75551	.53406	1.41460
7.383	32.432	.00849	.96506	.06073	-.02128	.00070	.00026	.00025	.78196	.56882	1.37470
7.421	33.111	.00901	.99018	.06062	-.02271	.00064	.00021	.00027	.79627	.59168	1.34580
7.455	34.461	.02065	1.05300	.06117	-.02643	.00054	.00016	.00027	.83364	.64629	1.28990
7.458	35.570	.01955	1.10380	.06110	-.02981	.00055	.00017	.00028	.86229	.69178	1.24650
7.438	36.736	.01967	1.15580	.06110	-.03319	.00048	.00017	.00033	.88970	.74027	1.20190
7.429	37.421	.02070	1.18650	.06102	-.03517	.00036	.00020	.00031	.90522	.76944	1.17650
7.553	38.303	.01895	1.22520	.06074	-.03817	.00036	.00029	.00039	.92382	.80706	1.14470
7.486	38.984	.01925	1.25690	.06060	-.04069	.00052	.00035	.00042	.93891	.83786	1.12060
	GRADIENT	.07581	.01487	.00130	-.00209	-.00110	.00023	-.00018	.00762	.01673	-.06954

OA257 (LARC 20-M6-6559) OV102 (R7E037) (10 JUL 81)

REFERENCE DATA

SREF = 2690.0000 SQ.FT. XMRP = 1076.6800 IN. XO
LREF = 474.8100 INCHES YMRP = .0000 IN. YO
BREF = 936.6800 INCHES ZMRP = 375.0000 IN. ZO
SCALE = .0100

PARAMETRIC DATA

BETA = -.500 PHI = .000
SPDBRK = .000 AILRON = .000
YP = .000 1S = 1.000
ELEVON = .000 MACH = 6.000
S-MODE = 1.000 S-DIR = 2.000

RUN NO. 259/ 0 RN/L = 2.31 GRADIENT INTERVAL = 23.00/ 25.00

RN/L	ALPHA	BETA	CN	CA	CLM	CY	CYN	CBL	CL	CD	L/D
2.301	14.554	-.58640	.29044	.06341	-.00853	.00434	.00127	.00069	.26518	.13436	1.97370
2.283	14.597	-.58590	.29064	.06332	-.00846	.00473	.00133	.00071	.26530	.13452	1.97220
2.316	14.806	-.59564	.29000	.06372	-.00821	.00439	.00136	.00071	.26409	.13571	1.94590
2.290	15.812	-.58576	.32257	.06343	-.00749	.00468	.00131	.00078	.29309	.14892	1.96810
2.294	16.915	-.58618	.35788	.06319	-.00668	.00444	.00120	.00085	.32401	.16458	1.96870
2.288	18.037	-.58558	.39658	.06340	-.00565	.00486	.00124	.00101	.35746	.18308	1.95240
2.293	18.712	-.58552	.41763	.06275	-.00547	.00492	.00122	.00099	.37542	.19341	1.94100
2.301	19.556	-.58518	.44765	.06282	-.00507	.00467	.00118	.00109	.40081	.20903	1.91740
2.294	20.208	-.58610	.46978	.06235	-.00514	.00465	.00117	.00109	.41932	.22079	1.89920
2.303	21.138	-.58376	.50115	.06215	-.00487	.00461	.00109	.00109	.44502	.23869	1.86440
2.323	22.157	-.58467	.54114	.06178	-.00538	.00433	.00113	.00110	.47788	.26131	1.82880
2.313	23.423	-.58567	.58582	.06130	-.00584	.00425	.00117	.00116	.51318	.28911	1.77500
2.309	24.195	-.58534	.61894	.06163	-.00625	.00441	.00105	.00128	.53931	.30989	1.74040
2.317	24.894	-.58467	.64820	.06187	-.00669	.00466	.00111	.00132	.56194	.32897	1.70820
2.333	25.494	-.58355	.66961	.06195	-.00718	.00453	.00111	.00128	.57775	.34412	1.67890
2.335	26.108	-.58538	.69337	.06160	-.00846	.00428	.00112	.00129	.59552	.36044	1.65220
2.320	27.134	-.58564	.73596	.06137	-.00983	.00381	.00132	.00116	.62697	.39027	1.60650
2.331	27.825	-.57922	.76578	.06206	-.01061	.00356	.00157	.00115	.64827	.41233	1.57220
2.313	28.682	-.57932	.80085	.06160	-.01226	.00339	.00166	.00102	.67302	.43840	1.53520
2.307	29.374	-.57864	.84033	.06244	-.01338	.00384	.00169	.00107	.70167	.46661	1.50380
	GRADIENT	.00068	.04242	.00039	-.00057	.00027	-.00005	.00011	.03316	.02709	-.04540

OA257 (LARC 20-M6-6559) OV102 (R7E037) (10 JUL 81)

REFERENCE DATA

SREF = 2690.0000 SQ.FT. XMRP = 1076.6800 IN. XO
LREF = 474.8100 INCHES YMRP = .0000 IN. YO
BREF = 936.6800 INCHES ZMRP = 375.0000 IN. ZO
SCALE = .0100

PARAMETRIC DATA

BETA = -.500 PHI = .000
SPDBRK = .000 AILRON = .000
YP = .000 1S = 1.000
ELEVON = .000 MACH = 6.000
S-MODE = 1.000 S-DIR = 2.000

RUN NO. 255/ 0 RN/L = 7.51 GRADIENT INTERVAL = 23.00/ 25.00

RN/L	ALPHA	BETA	CN	CA	CLM	CY	CYN	CBL	CL	CD	L/D
7.330	14.457	-.48848	.28583	.06078	-.00966	.00475	.00113	.00085	.26161	.13022	2.00900
7.301	14.502	-.48687	.28549	.06061	-.00975	.00492	.00115	.00083	.26122	.13017	2.00680
7.626	14.633	-.44326	.28624	.06078	-.01005	.00420	.00106	.00076	.26160	.13112	1.99510
7.324	15.155	-.48438	.30481	.06061	-.00921	.00496	.00109	.00091	.27836	.13819	2.01430
7.327	15.832	-.48399	.32471	.06051	-.00868	.00496	.00105	.00093	.29589	.14680	2.01560
7.337	16.753	-.48404	.35298	.06026	-.00837	.00459	.00104	.00098	.32063	.15945	2.01080
7.362	17.595	-.48484	.38021	.06029	-.00806	.00485	.00107	.00100	.34419	.17241	1.99640
7.447	18.387	-.48490	.40666	.05998	-.00774	.00473	.00109	.00103	.36698	.18519	1.98170
7.439	19.243	-.48362	.43590	.06005	-.00733	.00481	.00106	.00103	.39176	.20036	1.95530
7.462	19.881	-.48454	.45792	.05991	-.00742	.00454	.00100	.00105	.41026	.21206	1.93470
7.519	20.667	-.48368	.48436	.05978	-.00734	.00456	.00100	.00108	.43209	.22688	1.90450
7.543	21.343	-.48331	.50961	.05991	-.00751	.00439	.00100	.00111	.45285	.24128	1.87690
7.512	22.115	-.48283	.53471	.05974	-.00751	.00460	.00103	.00112	.47288	.25665	1.84250
7.495	23.161	-.48433	.57412	.05992	-.00790	.00443	.00103	.00115	.50428	.28090	1.79520
7.460	24.061	-.48318	.61421	.06034	-.00858	.00423	.00107	.00112	.53624	.30551	1.75520
7.440	24.171	-.47814	.61312	.06019	-.00858	.00417	.00108	.00114	.53472	.30597	1.74760
7.538	25.050	-.47736	.64971	.06093	-.00939	.00427	.00118	.00114	.56280	.33029	1.70400
7.561	25.756	-.47406	.67834	.06123	-.00995	.00431	.00116	.00114	.58434	.34991	1.67000
7.609	26.337	-.47245	.69968	.06120	-.01083	.00423	.00112	.00121	.59991	.36525	1.64240
7.668	27.017	-.47198	.72777	.06134	-.01165	.00404	.00111	.00119	.62048	.38523	1.61070
7.679	27.886	-.47415	.76488	.06128	-.01326	.00416	.00135	.00109	.64740	.41191	1.57170
7.693	28.618	-.47289	.79611	.06144	-.01443	.00383	.00140	.00104	.66943	.43523	1.53810
7.734	28.972	-.47452	.81501	.06145	-.01526	.00391	.00146	.00099	.68325	.44854	1.52330
	GRADIENT	.00426	.04090	.00035	-.00071	-.00025	.00005	-.00002	.03221	.02580	-.04609

OA257 (LARC 20-M6-6559) OV102 (R7E038) (10 JUL 81)

REFERENCE DATA

SREF = 2690.0000 SQ.FT. XMRP = 1076.6800 IN. XO
LREF = 474.8100 INCHES YMRP = .0000 IN. YO
BREF = 936.6800 INCHES ZMRP = 375.0000 IN. ZO
SCALE = .0100

PARAMETRIC DATA

BETA = -.500 PHI = .000
SPDBRK = .000 AILRON = .000
YP = .000 1S = 1.000
ELEVON = .000 MACH = 6.000
S-MODE = 1.000 S-DIR = 2.000

RUN NO. 260/ 0 RN/L = 2.25 GRADIENT INTERVAL = 23.00/ 25.00

RN/L	ALPHA	BETA	CN	CA	CLM	CY	CYN	CBL	CL	CD	L/D
2.226	24.388	-.63347	.64352	.06215	-.00733	.00508	.00105	.00134	.56043	.32232	1.73870
2.229	24.564	-.63487	.64077	.06203	-.00705	.00528	.00114	.00136	.55699	.32279	1.72560
2.291	24.615	-.55902	.63479	.06173	-.00726	.00392	.00101	.00117	.55139	.32052	1.72030
2.218	25.422	-.55521	.67176	.06154	-.00774	.00464	.00098	.00120	.58029	.34395	1.68710
2.219	26.257	-.55521	.70676	.06136	-.00932	.00417	.00110	.00118	.60669	.36770	1.65000
2.212	27.189	-.55569	.74620	.06193	-.01025	.00380	.00135	.00105	.63545	.39604	1.60450
2.219	28.212	-.55615	.78977	.06203	-.01180	.00381	.00152	.00100	.66662	.42802	1.55750
2.212	29.216	-.55476	.82600	.06190	-.01317	.00355	.00146	.00099	.69071	.45720	1.51070
2.227	30.057	-.55493	.86522	.06195	-.01488	.00408	.00142	.00102	.71784	.48697	1.47410
2.228	30.851	-.55534	.89566	.06199	-.01647	.00421	.00120	.00107	.73714	.51251	1.43830
2.237	31.666	-.54955	.94032	.06268	-.01805	.00473	.00117	.00124	.76742	.54698	1.40300
2.237	32.680	-.54842	.98033	.06257	-.02036	.00484	.00112	.00136	.79136	.58199	1.35970
2.250	33.539	-.54799	1.01610	.06206	-.02248	.00478	.00101	.00151	.81266	.61314	1.32540
2.247	34.474	-.54380	1.06060	.06190	-.02506	.00471	.00097	.00165	.83933	.65138	1.28850
2.256	35.245	-.54378	1.09750	.06176	-.02728	.00511	.00089	.00174	.86067	.68376	1.25870
2.252	36.248	-.54459	1.14020	.06209	-.02985	.00493	.00088	.00180	.88285	.72427	1.21890
2.268	37.100	-.54475	1.17790	.06202	-.03193	.00515	.00091	.00180	.90209	.76001	1.18690
2.284	37.827	-.54465	1.21370	.06172	-.03492	.00499	.00090	.00191	.92077	.79306	1.16100
2.310	38.691	-.54502	1.25510	.06147	-.03775	.00482	.00107	.00195	.94125	.83258	1.13050
2.316	39.242	-.54410	1.28170	.06136	-.03974	.00475	.00112	.00196	.95382	.85830	1.11130
	GRADIENT	.24102	-.03255	-.00158	.00063	-.00347	-.00003	-.00049	-.03455	-.00519	-.07930

OA257 (LARC 20-M6-6559) OV102 (R7E038) (10 JUL 81)

REFERENCE DATA

SREF = 2690.0000 SQ.FT. XMRP = 1076.6800 IN. XO
LREF = 474.8100 INCHES YMRP = .0000 IN. YO
BREF = 936.6800 INCHES ZMRP = 375.0000 IN. ZO
SCALE = .0100

PARAMETRIC DATA

BETA = -.500 PHI = .000
SPDBRK = .000 AILRON = .000
YP = .000 1S = 1.000
ELEVON = .000 MACH = 6.000
S-MODE = 1.000 S-DIR = 2.000

RUN NO. 256/ 0 RN/L = 7.50 GRADIENT INTERVAL = 23.00/ 25.00

RN/L	ALPHA	BETA	CN	CA	CLM	CY	CYN	CBL	CL	CD	L/D
7.290	24.165	-.44873	.62180	.06015	-.00829	.00405	.00097	.00103	.54269	.30942	1.75390
7.358	24.217	-.44925	.62247	.06015	-.00831	.00412	.00100	.00104	.54302	.31019	1.75060
7.380	24.714	-.44908	.64145	.05999	-.00882	.00402	.00100	.00104	.55761	.32268	1.72810
7.400	25.315	-.44188	.66373	.06004	-.00909	.00401	.00098	.00106	.57431	.33808	1.69870
7.420	25.866	-.43945	.68515	.05994	-.00955	.00391	.00096	.00109	.59036	.35285	1.67310
7.418	26.475	-.43891	.70952	.06004	-.01029	.00395	.00090	.00113	.60835	.37006	1.64390
7.432	27.565	-.43818	.75467	.06014	-.01178	.00384	.00097	.00105	.64118	.40254	1.59280
7.473	28.165	-.43803	.78096	.05992	-.01285	.00347	.00103	.00099	.66020	.42145	1.56650
7.494	28.868	-.43730	.80987	.06005	-.01399	.00331	.00110	.00092	.68023	.44359	1.53350
7.493	29.784	-.43815	.84658	.06012	-.01541	.00327	.00111	.00091	.70489	.47269	1.49120
7.511	30.755	-.43975	.88561	.06107	-.01718	.00401	.00115	.00098	.72982	.50536	1.44420
7.487	31.243	-.43817	.90995	.06117	-.01854	.00388	.00101	.00109	.74625	.52426	1.42340
7.538	32.295	-.43771	.95722	.06132	-.02096	.00411	.00092	.00122	.77638	.56327	1.37840
7.552	33.028	-.43579	.99023	.06126	-.02279	.00402	.00095	.00123	.79682	.59108	1.34810
7.573	33.977	-.42840	1.03430	.06137	-.02527	.00420	.00100	.00129	.82339	.62890	1.30930
7.553	34.577	-.42663	1.05900	.06143	-.02675	.00391	.00098	.00129	.83711	.65159	1.28470
7.556	34.904	-.42788	1.07440	.06128	-.02795	.00397	.00101	.00129	.84604	.66502	1.27220
7.532	35.700	-.40651	1.10620	.06138	-.03000	.00351	.00096	.00131	.86250	.69536	1.24040
7.592	36.529	-.40776	1.14510	.06105	-.03269	.00381	.00104	.00132	.88384	.73068	1.20960
7.651	37.239	-.40802	1.17460	.06115	-.03450	.00399	.00105	.00141	.89809	.75946	1.18250
7.634	38.277	-.40659	1.22300	.06082	-.03822	.00365	.00097	.00146	.92239	.80533	1.14530
7.606	38.914	-.39403	1.25260	.06091	-.04039	.00393	.00097	.00155	.93635	.83419	1.12250
	GRADIENT	-.00024	.03676	-.00030	-.00100	-.00010	.00004	.00000	.02805	.02455	-.04630

OA257 (LARC 20-M6-6559) OV102 (R7E039) (10 JUL 81)

REFERENCE DATA

SREF = 2690.0000 SQ.FT. XMRP = 1076.6800 IN. XO
LREF = 474.8100 INCHES YMRP = .0000 IN. YO
BREF = 936.6800 INCHES ZMRP = 375.0000 IN. ZO
SCALE = .0100

PARAMETRIC DATA

BETA = .500 PHI = .000
SPDBRK = .000 AILRON = .000
YP = .000 1S = 1.000
ELEVON = .000 MACH = 6.000
S-MODE = 1.000 S-DIR = 2.000

RUN NO. 261/ 0 RN/L = 2.26 GRADIENT INTERVAL = 23.00/ 25.00

RN/L	ALPHA	BETA	CN	CA	CLM	CY	CYN	CBL	CL	CD	L/D
2.270	14.361	.43429	.28070	.06405	-.00910	-.00308	-.00049	-.00016	.25604	.13167	1.94460
2.260	14.384	.43410	.28175	.06369	-.00894	-.00299	-.00045	-.00017	.25709	.13168	1.95240
2.267	14.860	.43397	.29112	.06398	-.00834	-.00330	-.00035	-.00018	.26498	.13650	1.94120
2.256	15.282	.43349	.30544	.06392	-.00795	-.00254	-.00037	-.00014	.27779	.14217	1.95400
2.268	16.130	.43576	.33034	.06337	-.00718	-.00314	-.00063	-.00017	.29973	.15265	1.96350
2.256	17.001	.43482	.35879	.06358	-.00615	-.00258	-.00077	-.00007	.32452	.16571	1.95840
2.260	18.098	.43521	.39319	.06290	-.00562	-.00286	-.00053	-.00022	.35420	.18193	1.94690
2.274	19.062	.43357	.42644	.06257	-.00555	-.00232	-.00046	-.00026	.38262	.19841	1.92840
2.270	19.849	.43426	.45265	.06294	-.00488	-.00294	-.00054	-.00019	.40439	.21290	1.89940
2.258	20.488	.43429	.47779	.06250	-.00525	-.00289	-.00056	-.00023	.42569	.22578	1.88540
2.266	21.277	.43333	.50589	.06245	-.00498	-.00282	-.00060	-.00025	.44874	.24177	1.85610
2.264	22.091	.43477	.53352	.06185	-.00532	-.00296	-.00071	-.00026	.47109	.25796	1.82630
2.254	23.035	.43423	.57112	.06204	-.00535	-.00251	-.00065	-.00030	.50131	.28057	1.78680
2.266	23.739	.43629	.59916	.06177	-.00608	-.00287	-.00060	-.00033	.52360	.29775	1.75850
2.272	24.511	.43813	.62929	.06174	-.00603	-.00302	-.00052	-.00037	.54696	.31726	1.72400
2.261	25.206	.43822	.65874	.06195	-.00662	-.00315	-.00053	-.00038	.56963	.33660	1.69230
2.249	25.749	.43996	.68099	.06146	-.00789	-.00330	-.00042	-.00044	.58667	.35120	1.67050
2.256	26.314	.44002	.70444	.06152	-.00840	-.00314	-.00048	-.00049	.60418	.36742	1.64440
2.263	27.334	.44436	.74462	.06140	-.00993	-.00319	-.00059	-.00051	.63329	.39645	1.59740
2.252	28.285	.44428	.78489	.06187	-.01104	-.00264	-.00070	-.00048	.66186	.42641	1.55220
2.248	29.016	.44444	.82059	.06188	-.01283	-.00280	-.00072	-.00055	.68758	.45214	1.52070
2.246	29.569	.44454	.84231	.06203	-.01347	-.00244	-.00051	-.00064	.70199	.46961	1.49480
	GRADIENT	.00264	.03940	-.00020	-.00045	-.00034	.00009	-.00005	.03092	.02486	-.04258

OA257 (LARC 20-M6-6559) OV102 (R7E039) (10 JUL 81)

REFERENCE DATA

SREF =	2690.0000 SQ.FT.	XMRP =	1076.6800 IN. XO		
LREF =	474.8100 INCHES	YMRP =	.0000 IN. YO		
BREF =	936.6800 INCHES	ZMRP =	375.0000 IN. ZO		
SCALE =	.0100				

PARAMETRIC DATA

BETA =	.500	PHI =	.000
SPDBRK =	.000	AILRON =	.000
YP =	.000	1S =	1.000
ELEVON =	.000	MACH =	6.000
S-MODE =	1.000	S-DIR =	2.000

RUN NO. 257/ O RN/L = 7.57 GRADIENT INTERVAL = 23.00/ 25.00

RN/L	ALPHA	BETA	CN	CA	CLM	CY	CYN	CBL	CL	CD	L/D
7.358	14.078	.62161	.27471	.06110	-.01014	-.00380	-.00034	-.00032	.25159	.12609	1.99530
7.475	14.538	.63012	.28293	.06094	-.00987	-.00387	-.00026	-.00037	.25858	.13001	1.98890
7.464	14.706	.62051	.29183	.06084	-.00968	-.00391	-.00040	-.00035	.26683	.13293	2.00720
7.454	15.621	.62244	.31757	.06050	-.00891	-.00381	-.00042	-.00035	.28955	.14378	2.01390
7.445	16.543	.62306	.34596	.06024	-.00843	-.00393	-.00047	-.00034	.31448	.15625	2.01270
7.466	17.738	.62283	.38606	.06029	-.00791	-.00373	-.00049	-.00037	.34934	.17504	1.99570
7.515	18.472	.62255	.40958	.06003	-.00768	-.00361	-.00048	-.00040	.36946	.18671	1.97870
7.535	19.449	.62125	.44254	.06011	-.00745	-.00321	-.00043	-.00042	.39727	.20402	1.94720
7.528	20.111	.62046	.46681	.06021	-.00726	-.00318	-.00047	-.00043	.41765	.21705	1.92420
7.524	20.873	.62219	.49072	.05989	-.00737	-.00349	-.00060	-.00048	.43717	.23080	1.89410
7.527	21.908	.62150	.52448	.05998	-.00760	-.00314	-.00061	-.00049	.46422	.25134	1.84700
7.590	22.747	.62299	.56414	.06020	-.00792	-.00329	-.00064	-.00050	.49699	.27365	1.81620
7.723	23.550	.62655	.59181	.06092	-.00862	-.00331	-.00058	-.00057	.51818	.29230	1.77280
7.697	24.066	.63205	.61331	.06108	-.00897	-.00345	-.00061	-.00057	.53509	.30587	1.74940
7.711	24.542	.63271	.63035	.06118	-.00925	-.00340	-.00059	-.00059	.54799	.31748	1.72610
7.720	25.124	.63313	.65232	.06128	-.00972	-.00354	-.00061	-.00063	.56459	.33244	1.69830
7.698	25.802	.63304	.67884	.06129	-.01034	-.00363	-.00059	-.00063	.58448	.35065	1.66690
7.756	26.471	.63506	.70453	.06151	-.01093	-.00372	-.00057	-.00069	.60325	.36910	1.63440
7.714	27.569	.63299	.74897	.06159	-.01240	-.00370	-.00058	-.00072	.63542	.40124	1.58370
7.659	28.585	.63268	.79180	.06180	-.01398	-.00385	-.00054	-.00083	.66571	.43311	1.53700
7.651	29.174	.63169	.82047	.06196	-.01546	-.00368	-.00046	-.00085	.68619	.45404	1.51130
	GRADIENT	.00627	.03889	.00026	-.00064	-.00009	-.00001	-.00003	.03009	.02539	-.04704

OA257 (LARC 20-M6-6559) OV102 (R7E040) (10 JUL 81)

REFERENCE DATA

SREF = 2690.0000 SQ.FT. XMRP = 1076.6800 IN. XO
LREF = 474.8100 INCHES YMRP = .0000 IN. YO
BREF = 936.6800 INCHES ZMRP = 375.0000 IN. ZO
SCALE = .0100

PARAMETRIC DATA

BETA = .500 PHI = .000
SPDBRK = .000 AILRON = .000
YP = .000 1S = 1.000
ELEVON = .000 MACH = 6.000
S-MODE = 1.000 S-DIR = 2.000

RUN NO. 262/ 0 RN/L = 2.26 GRADIENT INTERVAL = 23.00/ 25.00

RN/L	ALPHA	BETA	CN	CA	CLM	CY	CYN	CBL	CL	CD	L/D
2.277	24.252	.43277	.62974	.06196	-.00704	-.00299	-.00071	-.00043	.54871	.31516	1.74110
2.262	24.341	.43163	.62709	.06160	-.00673	-.00280	-.00071	-.00043	.54595	.31459	1.73550
2.261	24.499	.48297	.62962	.06146	-.00682	-.00360	-.00071	-.00054	.54745	.31702	1.72690
2.254	24.876	.43199	.65069	.06158	-.00783	-.00314	-.00075	-.00044	.56442	.32957	1.71260
2.251	25.541	.43197	.67599	.06101	-.00828	-.00336	-.00071	-.00054	.58363	.34650	1.68430
2.254	26.167	.43228	.69913	.06128	-.00895	-.00369	-.00074	-.00055	.60045	.36331	1.65270
2.253	26.790	.43291	.72986	.06114	-.01002	-.00306	-.00077	-.00061	.62397	.38354	1.62690
2.261	27.877	.43168	.76884	.06058	-.01156	-.00290	-.00107	-.00059	.65130	.41304	1.57680
2.254	28.760	.43227	.80385	.06076	-.01290	-.00276	-.00097	-.00060	.67545	.44003	1.53500
2.261	29.619	.43258	.84937	.06156	-.01414	-.00253	-.00081	-.00069	.70797	.47329	1.49580
2.262	30.121	.43282	.87172	.06157	-.01563	-.00278	-.00084	-.00072	.72311	.49071	1.47360
2.264	31.021	.43231	.90666	.06202	-.01693	-.00244	-.00076	-.00072	.74503	.52039	1.43170
2.261	31.980	.43276	.94753	.06201	-.01860	-.00278	-.00085	-.00075	.77088	.55444	1.39040
2.273	32.490	.43390	.97209	.06176	-.02039	-.00282	-.00089	-.00075	.78677	.57425	1.37010
2.268	33.076	.43352	.99630	.06189	-.02119	-.00256	-.00083	-.00071	.80107	.59559	1.34500
2.265	33.653	.43266	1.02110	.06181	-.02297	-.00281	-.00084	-.00071	.81569	.61728	1.32140
2.267	34.493	.43216	1.06250	.06172	-.02521	-.00248	-.00074	-.00082	.84076	.65258	1.28840
2.268	34.963	.44232	1.08210	.06174	-.02619	-.00269	-.00077	-.00080	.85143	.67069	1.26950
2.271	35.631	.44343	1.11130	.06176	-.02808	-.00293	-.00077	-.00082	.86727	.69759	1.24320
2.266	36.181	.44335	1.13840	.06148	-.03021	-.00279	-.00078	-.00082	.88260	.72168	1.22300
2.261	37.166	.44327	1.17850	.06178	-.03231	-.00285	-.00076	-.00083	.90183	.76120	1.18470
2.264	37.863	.45330	1.20760	.06145	-.03453	-.00312	-.00074	-.00088	.91563	.78968	1.15950
2.250	38.785	.45370	1.25330	.06139	-.03742	-.00269	-.00063	-.00077	.93852	.83293	1.12680
2.260	39.380	.45153	1.28970	.06121	-.04049	-.00247	-.00063	-.00071	.95803	.86555	1.10680
	GRADIENT	.00098	.03705	-.00042	-.00152	-.00039	-.00008	-.00001	.02826	.02471	-.04473

OA257 (LARC 20-M6-6559) OV102 (R7E040) (10 JUL 81)

REFERENCE DATA

SREF = 2690.0000 SQ.FT. XMRP = 1076.6800 IN. XO
LREF = 474.8100 INCHES YMRP = .0000 IN. YO
BREF = 936.6800 INCHES ZMRP = 375.0000 IN. ZO
SCALE = .0100

PARAMETRIC DATA

BETA = .500 PHI = .000
SPDBRK = .000 AILRON = .000
YP = .000 1S = 1.000
ELEVON = .000 MACH = 6.000
S-MODE = 1.000 S-DIR = 2.000

RUN NO. 258/ 0 RN/L = 7.57 GRADIENT INTERVAL = 23.00/ 25.00

RN/L	ALPHA	BETA	CN	CA	CLM	CY	CYN	CBL	CL	CD	L/D
7.518	23.922	.48297	.61267	.06122	-.00850	-.00376	-.00082	-.00065	.53522	.30439	1.75830
7.541	24.000	.48119	.61234	.06108	-.00838	-.00355	-.00078	-.00066	.53456	.30486	1.75350
7.478	24.178	.48119	.61511	.06160	-.00893	-.00390	-.00060	-.00069	.53592	.30813	1.73920
7.531	24.894	.48181	.64520	.06126	-.00887	-.00367	-.00083	-.00067	.55946	.32716	1.71010
7.509	25.734	.48255	.67196	.06110	-.00948	-.00403	-.00085	-.00073	.57879	.34681	1.66890
7.508	26.772	.48256	.71634	.06127	-.01059	-.00379	-.00080	-.00077	.61195	.37737	1.62160
7.474	27.644	.48335	.75640	.06137	-.01176	-.00403	-.00086	-.00085	.64158	.40532	1.58290
7.506	28.402	.48186	.78720	.06133	-.01280	-.00405	-.00079	-.00092	.66327	.42838	1.54830
7.529	28.781	.48176	.80786	.06136	-.01368	-.00413	-.00077	-.00091	.67851	.44274	1.53250
7.474	29.824	.48076	.84598	.06167	-.01540	-.00422	-.00067	-.00100	.70327	.47424	1.48300
7.556	30.815	.48070	.88590	.06140	-.01739	-.00390	-.00072	-.00102	.72938	.50655	1.43990
7.546	31.558	.48120	.91874	.06155	-.01887	-.00365	-.00085	-.00093	.75066	.53328	1.40760
7.579	32.503	.48131	.95884	.06145	-.02107	-.00344	-.00093	-.00091	.77563	.56706	1.36780
7.634	33.206	.48189	.99549	.06149	-.02313	-.00328	-.00091	-.00091	.79926	.59663	1.33960
7.623	33.962	.48798	1.02800	.06154	-.02510	-.00365	-.00098	-.00091	.81826	.62532	1.30850
7.653	34.690	.49152	1.05900	.06149	-.02700	-.00363	-.00094	-.00090	.83573	.65326	1.27930
7.685	35.242	.49217	1.08520	.06158	-.02860	-.00350	-.00093	-.00091	.85078	.67649	1.25760
7.649	35.867	.49183	1.11220	.06142	-.03045	-.00359	-.00089	-.00096	.86529	.70141	1.23360
7.701	36.687	.49081	1.14760	.06123	-.03284	-.00374	-.00086	-.00103	.88366	.73471	1.20270
7.695	37.440	.49002	1.18300	.06110	-.03538	-.00385	-.00076	-.00108	.90211	.76767	1.17510
7.636	38.336	.50038	1.21830	.06102	-.03777	-.00387	-.00058	-.00111	.91775	.80353	1.14210
7.646	38.927	.49768	1.25180	.06068	-.04047	-.00384	-.00050	-.00108	.93568	.83372	1.12230
	GRADIENT	-.00031	.03544	.00005	-.00041	.00003	-.00006	-.00002	.02672	.02427	-.04843

OA257 (LARC 20-M6-6559) OV102 (R7E041) (10 JUL 81)

REFERENCE DATA

SREF = 2690.0000 SQ.FT. XMRP = 1076.6800 IN. XO
LREF = 474.8100 INCHES YMRP = .0000 IN. YO
BREF = 936.6800 INCHES ZMRP = 375.0000 IN. ZO
SCALE = .0100

PARAMETRIC DATA

BETA = .000 PHI = .000
SPDBRK = .000 AILRON = .000
YP = .000 1S = 1.000
ELEVON = .000 MACH = 6.000
S-MODE = 1.000 S-DIR = 2.000

RUN NO. 320/ 0 RN/L = 2.26 GRADIENT INTERVAL = 23.00/ 25.00

RN/L	ALPHA	BETA	CN	CA	CLM	CY	CYN	CBL	CL	CD	L/D
2.284	14.630	-.04375	.29168	.06364	-.00805	.00170	.00049	.00033	.26615	.13525	1.96790
2.263	14.839	-.04334	.28882	.06304	-.00812	.00141	.00043	.00033	.26304	.13490	1.94990
2.314	14.989	-.02249	.29375	.06286	-.00741	.00093	.00055	.00031	.26750	.13670	1.95690
2.274	16.240	-.04239	.33009	.06274	-.00709	.00166	.00040	.00032	.29937	.15255	1.96250
2.267	17.209	-.04360	.35781	.06241	-.00626	.00212	.00037	.00038	.32332	.16548	1.95390
2.265	18.164	-.04254	.39111	.06203	-.00530	.00187	.00041	.00037	.35228	.18086	1.94790
2.264	18.953	-.04210	.41701	.06195	-.00454	.00153	.00035	.00040	.37428	.19403	1.92900
2.252	19.672	-.04282	.45101	.06220	-.00442	.00129	.00032	.00035	.40375	.21039	1.91910
2.252	20.695	-.04152	.48585	.06174	-.00436	.00104	.00028	.00038	.43268	.22945	1.88580
2.251	21.650	-.04324	.51945	.06148	-.00465	.00167	.00038	.00037	.46012	.24878	1.84950
2.247	22.822	-.04299	.56481	.06115	-.00438	.00141	.00036	.00036	.49688	.27544	1.80390
2.238	23.947	-.04213	.60925	.06094	-.00269	.00172	.00034	.00046	.53207	.30299	1.75610
2.245	24.669	-.04280	.63619	.06054	-.00603	.00160	.00027	.00048	.55286	.32054	1.72470
2.240	25.535	-.04199	.67055	.06021	-.00615	.00163	.00033	.00049	.57910	.34338	1.68640
2.234	26.482	-.04218	.70789	.06041	-.00787	.00177	.00036	.00045	.60667	.36973	1.64080
2.242	27.624	-.03723	.75560	.06040	-.00994	.00160	.00042	.00037	.64146	.40386	1.58830
2.235	28.596	-.03751	.79671	.06059	-.01129	.00162	.00051	.00035	.67052	.43453	1.54310
2.244	29.565	-.03767	.83961	.06097	-.01317	.00215	.00046	.00032	.70020	.46731	1.49840
2.250	30.901	-.03687	.89775	.06115	-.01505	.00177	.00028	.00042	.73891	.51352	1.43890
2.248	31.948	-.03477	.93542	.06122	-.01753	.00200	.00020	.00042	.76133	.54692	1.39200
2.259	33.014	-.03216	.98717	.06137	-.02005	.00252	.00023	.00054	.79435	.58931	1.34790
2.264	33.760	-.03322	1.02570	.06137	-.02231	.00285	.00019	.00066	.81861	.62100	1.31820
2.261	34.535	-.03312	1.06050	.06100	-.02334	.00289	.00015	.00073	.83900	.65143	1.28790
2.259	35.413	-.03199	1.09970	.06114	-.02584	.00273	.00015	.00072	.86086	.68709	1.25290
2.268	36.288	-.03292	1.12960	.06074	-.02794	.00267	.00014	.00077	.87456	.71750	1.21890
2.255	37.228	-.02800	1.18180	.06070	-.03166	.00290	.00013	.00081	.90429	.76332	1.18470
2.271	38.408	-.02812	1.23230	.06058	-.03504	.00300	.00016	.00084	.92802	.81306	1.14140
2.291	39.004	-.02653	1.28570	.06055	-.03898	.00301	.00031	.00078	.96101	.85626	1.12230
	GRADIENT	-.00093	.03731	-.00055	-.00464	-.00017	-.00010	.00003	.02879	.02431	-.04349

OA257 (LARC 20-M6-6559) OV102 (R7E041) (10 JUL 81)

REFERENCE DATA

SREF = 2690.0000 SQ.FT. XMRP = 1076.6800 IN. XO
LREF = 474.8100 INCHES YMRP = .0000 IN. YO
BREF = 936.6800 INCHES ZMRP = 375.0000 IN. ZO
SCALE = .0100

PARAMETRIC DATA

BETA = .000 PHI = .000
SPDBRK = .000 AILRON = .000
YP = .000 1S = 1.000
ELEVON = .000 MACH = 6.000
S-MODE = 1.000 S-DIR = 2.000

RUN NO. 323/ 0 RN/L = 4.44 GRADIENT INTERVAL = 23.00/ 25.00

RN/L	ALPHA	BETA	CN	CA	CLM	CY	CYN	CBL	CL	CD	L/D
4.457	-.213	-.03704	-.05427	.08165	-.02685	.00233	.00055	-.00008	-.05396	.08185	-.65928
4.299	-.200	-.02392	-.05624	.08263	-.02753	.00188	.00062	-.00019	-.05595	.08282	-.67556
4.468	5.438	-.03616	.05276	.06850	-.01871	.00152	.00057	.00006	.04603	.07319	.62892
4.441	10.383	-.03540	.16837	.06279	-.01271	.00130	.00050	.00022	.15429	.09210	1.67520
4.431	14.750	-.03429	.28505	.06052	-.00879	.00119	.00052	.00032	.26024	.13109	1.98520
4.422	19.607	-.03392	.44011	.05964	-.00591	.00113	.00031	.00043	.39458	.20386	1.93550
4.468	24.362	-.02365	.61611	.05964	-.00762	.00130	.00041	.00046	.53665	.30848	1.73970
4.599	29.514	-.02478	.82326	.05936	-.01455	.00115	.00048	.00042	.68718	.45723	1.50290
4.539	34.377	-.02312	1.03350	.05914	-.02494	.00208	.00019	.00062	.81959	.63236	1.29610
4.448	39.316	-.02060	1.25390	.05882	-.04004	.00237	.00006	.00098	.93281	.83997	1.11050
	GRADIENT	.00000	.00000	.00000	.00000	.00000	.00000	.00000	.00000	.00000	.00000

OA257 (LARC 20-M6-6559) OV102 (R7E041) (10 JUL 81)

REFERENCE DATA

SREF = 2690.0000 SQ.FT. XMRP = 1076.6800 IN. XO
LREF = 474.8100 INCHES YMRP = .0000 IN. YO
BREF = 936.6800 INCHES ZMRP = 375.0000 IN. ZO
SCALE = .0100

PARAMETRIC DATA

BETA = .000 PHI = .000
SPDBRK = .000 AILRON = .000
YP = .000 1S = 1.000
ELEVON = .000 MACH = 6.000
S-MODE = 1.000 S-DIR = 2.000

RUN NO. 314/ 0 RN/L = 7.56 GRADIENT INTERVAL = 23.00/ 25.00

RN/L	ALPHA	BETA	CN	CA	CLM	CY	CYN	CBL	CL	CD	L/D
7.406	14.356	-.02690	.28456	.06087	-.00960	.00129	.00046	.00042	.26058	.12952	2.01180
7.486	14.435	-.02617	.28521	.06078	-.00941	.00106	.00043	.00040	.26106	.12996	2.00870
7.497	14.688	.00575	.28880	.06151	-.01016	.00075	.00038	.00034	.26377	.13273	1.98730
7.534	14.706	.00507	.28797	.06086	-.00954	.00084	.00043	.00031	.26309	.13197	1.99360
7.459	15.640	-.02676	.32256	.06044	-.00847	.00142	.00042	.00046	.29433	.14516	2.02750
7.477	17.072	-.02683	.36905	.06016	-.00768	.00137	.00044	.00048	.33512	.16586	2.02050
7.497	18.219	-.02863	.40642	.05995	-.00722	.00169	.00046	.00048	.36731	.18401	1.99610
7.542	19.198	-.02679	.43982	.05989	-.00706	.00135	.00033	.00048	.39567	.20119	1.96670
7.542	20.379	-.02679	.48034	.05972	-.00672	.00159	.00040	.00050	.42948	.22325	1.92380
7.566	21.566	-.01782	.52169	.05967	-.00664	.00172	.00037	.00051	.46324	.24725	1.87360
7.540	23.274	-.01647	.58591	.05956	-.00724	.00145	.00029	.00050	.51470	.28623	1.79820
7.512	24.340	-.01638	.62685	.05969	-.00767	.00172	.00034	.00052	.54653	.31275	1.74750
7.525	25.368	-.01549	.66712	.05977	-.00863	.00128	.00023	.00056	.57718	.33983	1.69840
7.580	26.876	-.01606	.72873	.06026	-.01025	.00160	.00022	.00052	.62277	.38318	1.62530
7.538	28.100	-.01519	.78020	.06113	-.01217	.00121	.00033	.00040	.65945	.42140	1.56490
7.507	29.033	-.01617	.81920	.06125	-.01373	.00136	.00042	.00032	.68654	.45112	1.52190
7.529	29.611	-.01238	.84185	.06123	-.01475	.00143	.00043	.00030	.70165	.46919	1.49550
7.596	30.807	-.01401	.89438	.06110	-.01703	.00136	.00029	.00033	.73689	.51053	1.44340
7.653	32.036	-.01620	.94764	.06110	-.01983	.00229	.00023	.00050	.77092	.55447	1.39040
7.630	33.181	-.01500	.99755	.06098	-.02281	.00185	.00020	.00046	.80152	.59698	1.34260
7.624	34.181	-.01679	1.04220	.06101	-.02557	.00218	.00023	.00050	.82793	.63599	1.30180
7.695	35.273	-.01519	1.09140	.06096	-.02835	.00205	.00019	.00055	.85586	.68004	1.25850
7.704	36.432	-.00561	1.14320	.06084	-.03211	.00229	.00019	.00057	.88365	.72785	1.21400
7.736	37.659	-.00644	1.19510	.06060	-.03566	.00224	.00019	.00058	.90912	.77816	1.16830
7.658	39.048	-.00533	1.26520	.06031	-.04059	.00229	.00030	.00056	.94458	.84387	1.11930
	GRADIENT	.00008	.03841	.00012	-.00041	.00026	.00004	.00002	.02986	.02488	-.04756

OA257 (LARC 20-M6-6559) OV102 (R7E042) (10 JUL 81)

REFERENCE DATA

SREF = 2690.0000 SQ.FT. XMRP = 1076.6800 IN. XO
LREF = 474.8100 INCHES YMRP = .0000 IN. YO
BREF = 936.6800 INCHES ZMRP = 375.0000 IN. ZO
SCALE = .0100

PARAMETRIC DATA

BETA = -.500 PHI = .000
SPDBRK = .000 AILRON = .000
YP = .000 1S = 1.000
ELEVON = .000 MACH = 6.000
S-MODE = 1.000 S-DIR = 2.000

RUN NO. 321/ 0 RN/L = 2.26 GRADIENT INTERVAL = 23.00/ 25.00

RN/L	ALPHA	BETA	CN	CA	CLM	CY	CYN	CBL	CL	CD	L/D
2.253	14.604	-.52597	.29026	.06345	-.00886	.00613	.00139	.00076	.26488	.13459	1.96810
2.249	14.701	-.53121	.28965	.06302	-.00855	.00564	.00128	.00076	.26417	.13446	1.96460
2.304	14.950	-.51263	.29207	.06286	-.00825	.00531	.00141	.00078	.26597	.13608	1.95440
2.248	15.963	-.52563	.32729	.06304	-.00772	.00617	.00130	.00083	.29734	.15062	1.97400
2.255	16.708	-.52506	.34964	.06257	-.00691	.00566	.00125	.00090	.31689	.16045	1.97500
2.248	17.515	-.52562	.37688	.06247	-.00575	.00641	.00127	.00101	.34061	.17300	1.96890
2.250	18.161	-.52552	.39949	.06244	-.00547	.00637	.00125	.00107	.36013	.18385	1.95880
2.246	18.966	-.52447	.42589	.06216	-.00489	.00554	.00112	.00108	.38257	.19720	1.94000
2.250	19.656	-.52614	.44923	.06223	-.00500	.00628	.00118	.00110	.40212	.20971	1.91750
2.262	20.608	-.52418	.47609	.06150	-.00477	.00566	.00103	.00115	.42398	.22513	1.88330
2.246	21.452	-.52506	.51211	.06104	-.00471	.00629	.00118	.00113	.45431	.24410	1.86110
2.240	22.459	-.52368	.54964	.06094	-.00535	.00563	.00122	.00115	.48467	.26629	1.82010
2.247	23.479	-.52527	.58824	.06069	-.00575	.00619	.00130	.00121	.51535	.29003	1.77690
2.265	24.595	-.52461	.63130	.06036	-.00638	.00629	.00109	.00136	.54890	.31764	1.72810
2.247	25.379	-.52458	.66436	.06011	-.00689	.00633	.00109	.00138	.57448	.33906	1.69430
2.249	26.460	-.52458	.70485	.06033	-.00862	.00565	.00125	.00132	.60414	.36807	1.64130
2.254	27.545	-.52519	.74340	.06026	-.00980	.00546	.00152	.00123	.63126	.39722	1.58920
2.245	28.603	-.52629	.79171	.06065	-.01184	.00529	.00162	.00116	.66606	.43226	1.54090
2.249	29.755	-.52535	.84308	.06091	-.01411	.00570	.00157	.00117	.70170	.47130	1.48890
2.244	30.759	-.52512	.88553	.06107	-.01541	.00624	.00141	.00133	.72973	.50537	1.44400
2.249	31.663	-.52479	.93117	.06125	-.01734	.00657	.00125	.00145	.76042	.54092	1.40580
2.255	32.370	-.52438	.96285	.06147	-.01922	.00643	.00116	.00152	.78032	.56741	1.37520
2.248	33.127	-.52054	.99583	.06149	-.02063	.00696	.00112	.00173	.80037	.59571	1.34360
2.239	33.870	-.51716	1.02880	.06114	-.02199	.00683	.00103	.00181	.82018	.62416	1.31410
2.248	34.563	-.51860	1.06240	.06121	-.02435	.00745	.00108	.00194	.84019	.65313	1.28640
2.248	35.505	-.51819	1.10230	.06105	-.02685	.00728	.00100	.00205	.86187	.68987	1.24930
2.250	36.499	-.51713	1.14780	.06114	-.03008	.00720	.00102	.00205	.88634	.73189	1.21100
2.259	37.465	-.51819	1.19300	.06094	-.03309	.00720	.00107	.00208	.90986	.77407	1.17540
2.251	38.330	-.51812	1.23110	.06065	-.03555	.00700	.00110	.00209	.92810	.81107	1.14430
2.284	39.419	-.51863	1.28760	.06030	-.03952	.00697	.00131	.00210	.95644	.86421	1.10670
	GRADIENT	.00059	.03858	-.00029	-.00056	.00008	-.00019	.00013	.03006	.02474	-.04373

OA257 (LARC 20-M6-6559) OV102 (R7E042) (10 JUL 81)

REFERENCE DATA

SREF = 2690.0000 SQ.FT. XMRP = 1076.6800 IN. XO
LREF = 474.8100 INCHES YMRP = .0000 IN. YO
BREF = 936.6800 INCHES ZMRP = 375.0000 IN. ZO
SCALE = .0100

PARAMETRIC DATA

BETA = -.500 PHI = .000
SPDBRK = .000 AILRON = .000
YP = .000 1S = 1.000
ELEVON = .000 MACH = 6.000
S-MODE = 1.000 S-DIR = 2.000

RUN NO. 316/ 0 RN/L = 7.62 GRADIENT INTERVAL = 23.00/ 25.00

RN/L	ALPHA	BETA	CN	CA	CLM	CY	CYN	CBL	CL	CD	L/D
7.459	14.432	-.51044	.28653	.06058	-.00937	.00557	.00122	.00090	.26239	.13008	2.01720
7.468	14.450	-.51110	.28686	.06063	-.00953	.00545	.00120	.00089	.26266	.13030	2.01580
7.774	14.673	-.49456	.28788	.06096	-.00979	.00524	.00113	.00085	.26305	.13190	1.99440
7.490	15.687	-.51281	.31672	.06031	-.00858	.00582	.00110	.00101	.28862	.14370	2.00860
7.516	16.774	-.51297	.35527	.06008	-.00809	.00582	.00113	.00103	.32281	.16006	2.01680
7.556	18.057	-.51206	.38952	.05986	-.00741	.00553	.00108	.00106	.35178	.17765	1.98020
7.587	19.212	-.51153	.43739	.05968	-.00701	.00574	.00110	.00110	.39339	.20028	1.96410
7.583	20.466	-.50996	.48261	.05965	-.00679	.00592	.00113	.00118	.43129	.22463	1.92000
7.590	21.753	-.50967	.52711	.05943	-.00682	.00594	.00110	.00122	.46755	.25056	1.86600
7.572	22.808	-.50853	.56285	.05935	-.00702	.00572	.00104	.00122	.49583	.27289	1.81690
7.577	24.325	-.50836	.62306	.05949	-.00786	.00544	.00111	.00125	.54325	.31086	1.74760
7.578	25.990	-.50950	.69050	.06078	-.00956	.00573	.00109	.00134	.59404	.35721	1.66300
7.637	27.131	-.50790	.73433	.06088	-.01077	.00559	.00105	.00136	.62577	.38905	1.60840
7.617	28.289	-.51020	.78561	.06077	-.01274	.00534	.00129	.00120	.66298	.42583	1.55690
7.645	29.197	-.50697	.82474	.06087	-.01421	.00474	.00129	.00106	.69026	.45546	1.51550
7.645	30.181	-.50906	.86544	.06109	-.01604	.00547	.00128	.00114	.71741	.48789	1.47040
7.658	31.089	-.50790	.90660	.06115	-.01812	.00552	.00115	.00121	.74480	.52052	1.43090
7.740	31.885	-.50673	.93496	.06107	-.01929	.00577	.00108	.00128	.76162	.54572	1.39560
7.729	33.320	-.50683	1.00310	.06099	-.02342	.00565	.00103	.00142	.80473	.60200	1.33680
7.700	34.712	-.50284	1.06440	.06105	-.02673	.00569	.00106	.00141	.84020	.65633	1.28020
7.676	35.871	-.50301	1.11860	.06095	-.03043	.00563	.00100	.00144	.87070	.70482	1.23540
7.735	36.746	-.50086	1.15640	.06080	-.03266	.00554	.00101	.00155	.89025	.74057	1.20210
7.705	38.859	-.49680	1.25650	.06032	-.04005	.00631	.00103	.00178	.94055	.83529	1.12600
	GRADIENT	.00000	.00000	.00000	.00000	.00000	.00000	.00000	.00000	.00000	.00000

OA257 (LARC 20-M6-6559) OV102 (R7E043) (10 JUL 81)

REFERENCE DATA

SREF = 2690.0000 SQ.FT. XMRP = 1076.6800 IN. XO
LREF = 474.8100 INCHES YMRP = .0000 IN. YO
BREF = 936.6800 INCHES ZMRP = 375.0000 IN. ZO
SCALE = .0100

PARAMETRIC DATA

BETA = .500 PHI = .000
SPDBRK = .000 AILRON = .000
YP = .000 1S = 1.000
ELEVON = .000 MACH = 6.000
S-MODE = 1.000 S-DIR = 2.000

RUN NO. 319/ 0 RN/L = 2.28 GRADIENT INTERVAL = 23.00/ 25.00

RN/L	ALPHA	BETA	CN	CA	CLM	CY	CYN	CBL	CL	CD	L/D
2.294	14.408	.48154	.28415	.06351	-.00806	-.00203	-.00030	-.00001	.25941	.13222	1.96190
2.291	14.496	.48231	.28480	.06328	-.00766	-.00192	-.00026	-.00004	.25989	.13255	1.96070
2.307	14.983	.50346	.29731	.06317	-.00723	-.00266	-.00018	-.00009	.27087	.13789	1.96450
2.324	15.053	.50346	.29781	.06327	-.00792	-.00256	-.00020	-.00008	.27116	.13844	1.95860
2.285	15.436	.48302	.31414	.06324	-.00741	-.00225	-.00040	-.00007	.28598	.14457	1.97810
2.283	16.285	.48328	.33821	.06270	-.00592	-.00238	-.00046	-.00004	.30706	.15502	1.98070
2.266	17.592	.48236	.37292	.06244	-.00531	-.00174	-.00063	.00002	.33660	.17223	1.95440
2.269	18.581	.48239	.41383	.06224	-.00466	-.00172	-.00034	-.00012	.37243	.19086	1.95130
2.268	19.836	.48254	.45650	.06204	-.00404	-.00189	-.00036	-.00016	.40837	.21326	1.91480
2.262	21.088	.48155	.49918	.06176	-.00397	-.00166	-.00042	-.00012	.44353	.23724	1.86960
2.263	22.295	.48353	.54398	.06137	-.00367	-.00162	-.00043	-.00017	.48003	.26316	1.82410
2.275	23.406	.48161	.58633	.06124	-.00488	-.00139	-.00051	-.00017	.51375	.28912	1.77690
2.260	24.441	.48171	.63059	.06080	-.00568	-.00185	-.00045	-.00023	.54893	.31626	1.73570
2.272	25.088	.48226	.65558	.06052	-.00531	-.00181	-.00032	-.00026	.56807	.33278	1.70710
2.262	26.192	.48146	.69861	.06006	-.00682	-.00207	-.00033	-.00028	.60036	.36225	1.65730
2.271	27.741	.48840	.74394	.05978	-.00871	-.00153	-.00044	-.00034	.63061	.39919	1.57970
2.279	28.888	.49165	.80857	.06057	-.01071	-.00163	-.00052	-.00033	.67870	.44365	1.52980
2.281	29.708	.49179	.83984	.06086	-.01285	-.00178	-.00054	-.00042	.69929	.46906	1.49080
2.278	30.570	.49256	.87810	.06078	-.01386	-.00154	-.00052	-.00043	.72514	.49892	1.45340
2.282	31.844	.49231	.93613	.06110	-.01654	-.00122	-.00052	-.00040	.76298	.54582	1.39790
2.283	33.003	.49258	.98932	.06139	-.01937	-.00132	-.00060	-.00034	.79625	.59035	1.34880
2.297	33.802	.49158	1.02660	.06112	-.02218	-.00127	-.00062	-.00036	.81903	.62189	1.31700
2.299	34.520	.49917	1.05690	.06127	-.02334	-.00103	-.00054	-.00033	.83608	.64941	1.28740
2.280	35.607	.50210	1.10870	.06091	-.02622	-.00112	-.00051	-.00035	.86591	.69500	1.24590
2.296	36.905	.50086	1.14620	.06072	-.02884	-.00087	-.00049	-.00037	.88010	.73687	1.19440
2.305	38.128	.50213	1.22210	.06049	-.03341	-.00129	-.00051	-.00043	.92396	.80211	1.15190
2.297	39.319	.50283	1.28240	.06024	-.03805	-.00099	-.00047	-.00043	.95397	.85921	1.11030
	GRADIENT	.00010	.04276	-.00043	-.00077	-.00045	.00006	-.00006	.03399	.02622	-.03981

OA257 (LARC 20-M6-6559) DV102 (R7E043) (10 JUL 81)

REFERENCE DATA

SREF = 2690.0000 SQ.FT. XMRP = 1076.6800 IN. XO
LREF = 474.8100 INCHES YMRP = .0000 IN. YO
BREF = 936.6800 INCHES ZMRP = 375.0000 IN. ZO
SCALE = .0100

PARAMETRIC DATA

BETA = .500 PHI = .000
SPDBRK = .000 AILRON = .000
YP = .000 1S = 1.000
ELEVON = .000 MACH = 6.000
S-MODE = 1.000 S-DIR = 2.000

RUN NO. 317/ 0 RN/L = 7.52 GRADIENT INTERVAL = 23.00/ 25.00

RN/L	ALPHA	BETA	CN	CA	CLM	CY	CYN	CBL	CL	CD	L/D
7.337	14.345	.55604	.28310	.06054	-.00957	-.00286	-.00018	-.00014	.25927	.12880	2.01300
7.363	14.429	.55449	.28337	.06059	-.00956	-.00238	-.00011	-.00014	.25934	.12928	2.00590
7.550	14.613	.59639	.28627	.06071	-.00969	-.00320	-.00014	-.00028	.26169	.13097	1.99810
7.412	16.412	.55664	.33946	.05999	-.00815	-.00287	-.00024	-.00015	.30868	.15346	2.01140
7.431	17.522	.55558	.37829	.05979	-.00733	-.00251	-.00020	-.00015	.34274	.17091	2.00540
7.415	18.378	.56313	.40669	.05975	-.00727	-.00255	-.00026	-.00018	.36711	.18493	1.98520
7.361	19.351	.56628	.44003	.05965	-.00694	-.00250	-.00030	-.00022	.39541	.20208	1.95670
7.410	21.029	.56615	.49897	.05956	-.00662	-.00237	-.00032	-.00025	.44436	.23464	1.89380
7.419	22.098	.56690	.53806	.05950	-.00691	-.00236	-.00041	-.00025	.47615	.25754	1.84890
7.456	23.196	.56738	.57847	.05959	-.00701	-.00206	-.00042	-.00024	.50824	.28262	1.79830
7.447	24.185	.56645	.61798	.06049	-.00794	-.00209	-.00043	-.00027	.53895	.30836	1.74780
7.492	25.421	.57368	.66670	.06069	-.00885	-.00230	-.00041	-.00037	.57609	.34100	1.68940
7.498	26.350	.57397	.70191	.06080	-.00992	-.00232	-.00045	-.00040	.60199	.36602	1.64470
7.442	27.275	.57435	.74287	.06088	-.01105	-.00204	-.00045	-.00041	.63238	.39454	1.60280
7.446	28.316	.57643	.78593	.06088	-.01260	-.00211	-.00046	-.00047	.66301	.42639	1.55490
7.587	29.278	.57519	.82837	.06083	-.01444	-.00234	-.00037	-.00057	.69280	.45817	1.51210
7.645	30.847	.57666	.89618	.06091	-.01737	-.00212	-.00048	-.00062	.73817	.51180	1.44230
7.671	31.982	.57729	.94690	.06100	-.02001	-.00189	-.00061	-.00055	.77086	.55328	1.39330
7.730	32.883	.57702	.98040	.06098	-.02161	-.00174	-.00061	-.00052	.79022	.58349	1.35430
7.677	34.131	.57754	1.04020	.06101	-.02550	-.00147	-.00063	-.00050	.82678	.63414	1.30380
7.682	34.856	.58770	1.07090	.06095	-.02717	-.00155	-.00065	-.00054	.84393	.66205	1.27470
7.704	36.498	.58707	1.14470	.06072	-.03204	-.00138	-.00062	-.00055	.88406	.72965	1.21160
7.668	37.876	.58587	1.20680	.06046	-.03645	-.00129	-.00051	-.00059	.91550	.78867	1.16080
7.643	38.964	.58524	1.26330	.06019	-.04079	-.00173	-.00034	-.00077	.94440	.84118	1.12270
	GRADIENT	-.00094	.03995	.00091	-.00094	-.00003	-.00001	-.00002	.03105	.02603	-.05106

OA257 (LARC 20-M6-6559) OV102 (PRE-HEAT TO 185F) (R7E044) (10 JUL 81)

REFERENCE DATA

SREF = 2690.0000 SQ.FT. XMRP = 1076.6800 IN. XO
LREF = 474.8100 INCHES YMRP = .0000 IN. YO
BREF = 936.6800 INCHES ZMRP = 375.0000 IN. ZO
SCALE = .0100

PARAMETRIC DATA

BETA = .000 PHI = .000
SPDBRK = 86.600 AILRON = .000
YP = .000 1S = 1.000
ELEVON = .000 MACH = 6.000
S-MODE = 1.000 S-DIR = 2.000

RUN NO. 338/ 0 RN/L = 2.26 GRADIENT INTERVAL = 23.00/ 25.00

RN/L	ALPHA	BETA	CN	CA	CLM	CY	CYN	CBL	CL	CD	L/D
2.249	9.703	-.03117	.14624	.07786	.00541	.00107	.00044	.00020	.13103	.10139	1.29240
2.244	9.719	-.03242	.14683	.07786	.00575	.00126	.00047	.00023	.13158	.10154	1.29590
2.246	9.980	-.02059	.14722	.07869	.00582	.00058	.00036	.00022	.13136	.10302	1.27510
2.237	10.639	-.03045	.16910	.07559	.00504	.00034	.00038	.00021	.15224	.10550	1.44290
2.238	11.590	-.02923	.19577	.07331	.00448	.00028	.00063	.00017	.17705	.11115	1.59290
2.244	12.691	-.02732	.22788	.07173	.00304	.00023	.00067	.00018	.20655	.12004	1.72060
2.242	13.563	-.02480	.25537	.07065	.00272	.00020	.00052	.00026	.23168	.12857	1.80200
2.242	14.566	-.02551	.28164	.06868	.00178	.00037	.00040	.00035	.25532	.13731	1.85940
2.240	15.551	-.02456	.31329	.06801	.00183	.00052	.00038	.00037	.28358	.14951	1.89680
2.238	16.623	-.02649	.34775	.06734	.00175	.00068	.00033	.00040	.31395	.16401	1.91420
2.230	17.802	-.02448	.38559	.06700	.00220	.00093	.00027	.00047	.34664	.18168	1.90800
2.244	18.720	-.02346	.41609	.06688	.00336	.00037	.00039	.00040	.37261	.19688	1.89260
2.244	19.732	-.02048	.45081	.06606	.00304	.00021	.00043	.00035	.40203	.21439	1.87520
2.259	20.457	-.02077	.48834	.06542	.00143	-.00048	.00067	.00025	.43468	.23197	1.87390
2.284	21.885	-.02255	.53306	.06469	.00025	-.00037	.00089	.00010	.47053	.25873	1.81860
2.299	22.810	-.02173	.56619	.06401	-.00058	-.00034	.00094	.00012	.49710	.27850	1.78490
2.311	23.658	-.02059	.59770	.06356	-.00135	-.00028	.00088	.00018	.52196	.29806	1.75120
2.290	24.700	-.02124	.63879	.06304	-.00199	-.00034	.00079	.00019	.55400	.32420	1.70880
2.304	29.685	-.02085	.84495	.06301	-.00884	.00111	.00038	.00034	.70285	.47318	1.48540
2.289	34.697	-.02060	1.05870	.06121	-.02234	.00166	.00021	.00059	.83562	.65299	1.27970
2.289	39.534	-.02113	1.29550	.05894	-.03925	.00165	.00044	.00058	.96162	.87007	1.10520
	GRADIENT	-.00062	.03943	-.00050	-.00061	-.00005	-.00009	.00001	.03075	.02509	-.04069

OA257 (LARC 20-M6-6559) OV102 (R7E045) (10 JUL 81)

REFERENCE DATA

SREF = 2690.0000 SQ.FT. XMRP = 1076.6800 IN. XO
LREF = 474.8100 INCHES YMRP = .0000 IN. YO
BREF = 936.6800 INCHES ZMRP = 375.0000 IN. ZO
SCALE = .0100

PARAMETRIC DATA

BETA = .000 PHI = .000
SPDBRK = 86.600 AILRON = .000
YP = 1.000 1S = 1.000
ELEVON = .000 MACH = 6.000
S-MODE = 1.000 S-DIR = 2.000

RUN NO. 99/ O RN/L = 4.47 GRADIENT INTERVAL = 23.00/ 25.00

RN/L	ALPHA	BETA	CN	CA	CLM	CY	CYN	CBL	CL	CD	L/D
4.476	-.369	-.06674	-.06605	.10052	-.00236	.00077	.00015	.00007	-.06540	.10094	-.64785
4.441	-.191	-.05861	-.06728	.10110	-.00214	.00026	.00025	-.00001	-.06694	.10132	-.66066
4.472	4.641	.00572	.02910	.08796	.00389	-.00147	.00061	-.00023	.02189	.09002	.24315
4.462	9.548	-.07899	.14176	.07897	.00747	-.00054	.00034	-.00003	.12670	.10139	1.24970
4.412	14.421	-.13902	.27840	.06906	.00343	-.00037	.00031	.00005	.25243	.13621	1.85320
4.400	19.253	-.18427	.43371	.06534	.00273	-.00035	.00032	.00003	.38791	.20470	1.89500
4.454	24.234	-.29445	.61742	.06235	-.00291	-.00005	.00054	.00006	.53742	.31028	1.73200
4.512	29.302	-.42147	.82341	.06179	-.01051	.00110	.00041	.00037	.68782	.45687	1.50550
4.521	34.265	-.66010	1.04030	.05983	-.02426	.00383	.00062	.00099	.82606	.63516	1.30060
4.570	39.224	-.74053	1.26250	.06103	-.04036	.00481	.00062	.00150	.93945	.84563	1.11090
	GRADIENT	.00000	.00000	.00000	.00000	.00000	.00000	.00000	.00000	.00000	.00000

OA257 (LARC 20-M6-6559) OV102 (R7E046) (10 JUL 81)

REFERENCE DATA

SREF = 2690.0000 SQ.FT. XMRP = 1076.6800 IN. XO
LREF = 474.8100 INCHES YMRP = .0000 IN. YO
BREF = 936.6800 INCHES ZMRP = 375.0000 IN. ZO
SCALE = .0100

PARAMETRIC DATA

ALPHA = .000 PHI = .000
SPDBRK = 86.600 AILRON = .000
YP = 1.000 1S = 1.000
ELEVON = .000 MACH = 6.000
S-MODE = 2.000 S-DIR = 1.000

RUN NO. 179/ 0 RN/L = 4.47 GRADIENT INTERVAL = -.60/ .60

RN/L	BETA	ALPHA	CN	CA	CLM	CY	CYN	CBL	CL	CD	L/D
4.442	-4.002	-.23361	-.06890	.10322	-.00017	.05753	-.00235	.00314	-.06848	.10350	-.66160
4.441	-3.900	-.23099	-.06988	.10316	-.00016	.05607	-.00227	.00305	-.06946	.10344	-.67151
4.441	-3.700	-.23174	-.06955	.10301	-.00010	.05325	-.00218	.00291	-.06913	.10329	-.66930
4.446	-3.500	-.23405	-.06920	.10296	-.00019	.05060	-.00206	.00275	-.06878	.10325	-.66621
4.454	-3.300	-.23748	-.06963	.10281	-.00021	.04781	-.00197	.00261	-.06920	.10310	-.67122
4.458	-3.100	-.23657	-.06880	.10276	-.00037	.04502	-.00189	.00244	-.06838	.10304	-.66360
4.453	-2.900	-.23659	-.06949	.10256	-.00044	.04244	-.00180	.00231	-.06906	.10285	-.67152
4.455	-2.700	-.23750	-.06899	.10253	-.00066	.03976	-.00171	.00215	-.06856	.10282	-.66681
4.457	-2.500	-.23807	-.06898	.10239	-.00078	.03705	-.00164	.00201	-.06855	.10268	-.66767
4.453	-2.300	-.23467	-.06868	.10226	-.00077	.03432	-.00152	.00188	-.06826	.10254	-.66567
4.448	-2.100	-.23621	-.06944	.10217	-.00091	.03147	-.00135	.00170	-.06902	.10245	-.67365
4.448	-1.900	-.23724	-.06867	.10190	-.00107	.02840	-.00119	.00153	-.06825	.10218	-.66794
4.459	-1.700	-.23844	-.06858	.10163	-.00123	.02549	-.00099	.00134	-.06816	.10191	-.66882
4.470	-1.500	-.23674	-.06851	.10143	-.00132	.02259	-.00081	.00117	-.06809	.10172	-.66940
4.464	-1.300	-.23765	-.06818	.10131	-.00146	.01974	-.00062	.00098	-.06776	.10160	-.66698
4.461	-1.100	-.23440	-.06768	.10114	-.00151	.01684	-.00044	.00082	-.06726	.10141	-.66323
4.466	-.900	-.23535	-.06771	.10094	-.00171	.01398	-.00029	.00064	-.06730	.10121	-.66490
4.463	-.700	-.23431	-.06769	.10080	-.00174	.01127	-.00019	.00051	-.06728	.10107	-.66564
4.464	-.500	-.23507	-.06817	.10058	-.00202	.00855	-.00010	.00038	-.06776	.10086	-.67178
4.459	-.300	-.23541	-.06798	.10048	-.00228	.00596	-.00002	.00026	-.06756	.10076	-.67051
4.470	-.100	-.23512	-.06702	.10011	-.00262	.00310	.00007	.00012	-.06661	.10039	-.66350
4.475	.100	-.23589	-.06731	.09999	-.00282	.00026	.00019	-.00004	-.06690	.10027	-.66717
4.473	.300	-.23636	-.06742	.09992	-.00294	-.00256	.00035	-.00019	-.06701	.10020	-.66876
4.471	.500	-.23562	-.06753	.10004	-.00295	-.00539	.00050	-.00037	-.06712	.10032	-.66905
4.479	.700	-.23618	-.06751	.10012	-.00284	-.00835	.00066	-.00053	-.06710	.10040	-.66835
4.488	.900	-.23621	-.06682	.10028	-.00267	-.01123	.00083	-.00072	-.06640	.10055	-.66039
4.482	1.100	-.23453	-.06747	.10053	-.00229	-.01416	.00101	-.00088	-.06706	.10081	-.66525
4.486	1.300	-.23400	-.06767	.10087	-.00200	-.01708	.00117	-.00105	-.06726	.10115	-.66494
4.488	1.500	-.23476	-.06762	.10100	-.00180	-.01985	.00133	-.00119	-.06721	.10127	-.66364
4.505	1.700	-.23208	-.06839	.10116	-.00159	-.02298	.00152	-.00136	-.06799	.10144	-.67020
4.496	1.900	-.23391	-.06796	.10133	-.00145	-.02583	.00173	-.00155	-.06755	.10160	-.66480
4.490	2.100	-.23408	-.06875	.10136	-.00136	-.02896	.00195	-.00173	-.06833	.10164	-.67227
4.488	2.300	-.23204	-.06815	.10143	-.00132	-.03180	.00219	-.00195	-.06773	.10171	-.66598
4.486	2.500	-.23160	-.06795	.10150	-.00117	-.03487	.00239	-.00213	-.06754	.10177	-.66359
4.480	2.700	-.23306	-.06844	.10166	-.00101	-.03763	.00260	-.00232	-.06803	.10194	-.66728
4.483	2.900	-.23283	-.06845	.10181	-.00078	-.04045	.00268	-.00246	-.06804	.10209	-.66644
4.487	3.100	-.23230	-.06830	.10205	-.00077	-.04310	.00275	-.00262	-.06789	.10233	-.66345
4.485	3.300	-.23056	-.06863	.10216	-.00061	-.04581	.00283	-.00275	-.06822	.10243	-.66598
4.485	3.500	-.22958	-.06908	.10231	-.00065	-.04866	.00293	-.00292	-.06867	.10258	-.66941
4.484	3.700	-.23115	-.06911	.10241	-.00057	-.05148	.00305	-.00309	-.06870	.10269	-.66898
4.492	3.900	-.23275	-.06919	.10243	-.00061	-.05423	.00316	-.00325	-.06878	.10271	-.66962
4.480	4.100	-.22771	-.06821	.10247	-.00060	-.05699	.00327	-.00339	-.06780	.10274	-.65998

OA257 (LARC 20-M6-6559) OV102 (R7E046) (10 JUL 81)

REFERENCE DATA

SREF =	2690.0000 SQ.FT.	XMRP =	1076.6800 IN. XO		
LREF =	474.8100 INCHES	YMRP =	.0000 IN. YO		
BREF =	936.6800 INCHES	ZMRP =	375.0000 IN. ZO		
SCALE =	.0100				

PARAMETRIC DATA

ALPHA =	.000	PHI =	.000
SPDBRK =	86.600	AILRON =	.000
YP =	1.000	1S =	1.000
ELEVON =	.000	MACH =	6.000
S-MODE =	2.000	S-DIR =	1.000

RUN NO. 179/ 0 RN/L = 4.47 GRADIENT INTERVAL = -.60/ .60

RN/L	BETA	ALPHA	CN	CA	CLM	CY	CYN	CBL	CL	CD	L/D
4.474	4.254	-.23420	-.06849	.10247	-.00061	-.05923	.00336	-.00351	-.06807	.10275	-.66254
	GRADIENT	-.00091	.00065	-.00064	-.00098	-.01401	.00060	-.00075	.00065	-.00064	.00218

OA257 (LARC 20-M6-6559) OV102 (R7E146) (10 JUL 81)

REFERENCE DATA

SREF = 2690.0000 SQ.FT. XMRP = 1076.6800 IN. XO
LREF = 474.8100 INCHES YMRP = .0000 IN. YO
BREF = 936.6800 INCHES ZMRP = 375.0000 IN. ZO
SCALE = .0100

PARAMETRIC DATA

ALPHA = .000 PHI = .000
SPDBRK = 86.600 AILRON = .000
YP = 1.000 1S = 1.000
ELEVON = .000 MACH = 6.000
S-MODE = 2.000 S-DIR = 1.000

RUN NO. 2179/ 0 RN/L = 4.47 GRADIENT INTERVAL = -.60/ .60

RN/L	BETA	ALPHA	CN	CA	CLM	CY	CYN	CBL	CL	CD	L/D
4.442	-4.000	-.23335	-.06885	.10322	-.00017	.05751	-.00234	.00314	-.06842	.10350	-.66110
4.439	-3.800	-.23165	-.06956	.10304	-.00010	.05470	-.00223	.00299	-.06914	.10332	-.66914
4.444	-3.600	-.23304	-.06968	.10299	-.00018	.05191	-.00212	.00282	-.06926	.10328	-.67061
4.447	-3.400	-.23680	-.06939	.10291	-.00017	.04928	-.00201	.00267	-.06896	.10319	-.66830
4.460	-3.200	-.23670	-.06892	.10284	-.00030	.04640	-.00192	.00253	-.06850	.10312	-.66423
4.454	-3.000	-.23796	-.06957	.10269	-.00040	.04375	-.00184	.00237	-.06915	.10298	-.67145
4.453	-2.800	-.23556	-.06907	.10246	-.00059	.04098	-.00176	.00223	-.06865	.10275	-.66818
4.455	-2.600	-.23698	-.06921	.10241	-.00070	.03844	-.00169	.00208	-.06878	.10270	-.66979
4.456	-2.400	-.23570	-.06926	.10230	-.00076	.03572	-.00158	.00195	-.06884	.10258	-.67112
4.451	-2.200	-.23735	-.06920	.10223	-.00086	.03282	-.00144	.00179	-.06877	.10251	-.67085
4.445	-2.000	-.23685	-.06926	.10206	-.00098	.02997	-.00126	.00162	-.06884	.10234	-.67267
4.454	-1.800	-.23590	-.06840	.10179	-.00114	.02695	-.00110	.00142	-.06798	.10207	-.66597
4.463	-1.600	-.23476	-.06913	.10152	-.00131	.02403	-.00090	.00125	-.06871	.10181	-.67491
4.467	-1.400	-.23751	-.06812	.10138	-.00142	.02116	-.00071	.00107	-.06770	.10167	-.66587
4.461	-1.200	-.23769	-.06742	.10126	-.00147	.01827	-.00053	.00090	-.06700	.10154	-.65978
4.464	-1.000	-.23418	-.06826	.10102	-.00160	.01539	-.00038	.00073	-.06785	.10130	-.66980
4.463	-.800	-.23864	-.06814	.10090	-.00174	.01267	-.00023	.00058	-.06772	.10118	-.66931
4.465	-.600	-.23517	-.06785	.10068	-.00187	.00985	-.00014	.00044	-.06744	.10096	-.66795
4.461	-.400	-.23549	-.06827	.10056	-.00218	.00731	-.00007	.00032	-.06785	.10084	-.67287
4.464	-.200	-.23460	-.06696	.10025	-.00240	.00453	.00000	.00019	-.06655	.10053	-.66206
4.475	.000	-.23533	-.06691	.10008	-.00276	.00177	.00015	.00003	-.06650	.10036	-.66261
4.473	.200	-.23641	-.06767	.09992	-.00287	-.00118	.00027	-.00011	-.06725	.10020	-.67119
4.473	.400	-.23718	-.06727	.09996	-.00295	-.00393	.00042	-.00028	-.06686	.10024	-.66697
4.472	.600	-.23662	-.06763	.10006	-.00292	-.00694	.00058	-.00044	-.06722	.10034	-.66991
4.485	.800	-.23492	-.06684	.10022	-.00277	-.00980	.00076	-.00062	-.06642	.10049	-.66098
4.485	1.000	-.23571	-.06747	.10039	-.00246	-.01267	.00093	-.00080	-.06706	.10066	-.66617
4.484	1.200	-.23490	-.06747	.10072	-.00215	-.01560	.00110	-.00096	-.06705	.10100	-.66394
4.484	1.400	-.23384	-.06783	.10094	-.00189	-.01839	.00124	-.00113	-.06742	.10122	-.66605
4.499	1.600	-.23460	-.06838	.10110	-.00167	-.02144	.00142	-.00127	-.06797	.10138	-.67042
4.503	1.800	-.23137	-.06779	.10127	-.00153	-.02442	.00162	-.00146	-.06738	.10155	-.66353
4.492	2.000	-.23253	-.06823	.10131	-.00139	-.02731	.00184	-.00164	-.06782	.10158	-.66759
4.490	2.200	-.23379	-.06769	.10144	-.00140	-.03035	.00208	-.00184	-.06728	.10172	-.66142
4.488	2.400	-.23253	-.06872	.10145	-.00124	-.03335	.00230	-.00204	-.06830	.10173	-.67143
4.483	2.600	-.23105	-.06847	.10155	-.00113	-.03627	.00251	-.00223	-.06806	.10183	-.66841
4.480	2.800	-.23160	-.06827	.10169	-.00091	-.03903	.00265	-.00239	-.06786	.10197	-.66552
4.487	3.000	-.23383	-.06893	.10195	-.00079	-.04181	.00271	-.00254	-.06852	.10223	-.67023
4.485	3.200	-.23116	-.06875	.10209	-.00069	-.04442	.00279	-.00269	-.06833	.10237	-.66754
4.487	3.400	-.22872	-.06820	.10222	-.00062	-.04727	.00288	-.00283	-.06779	.10249	-.66147
4.482	3.600	-.22916	-.06869	.10238	-.00057	-.05008	.00299	-.00301	-.06828	.10265	-.66512
4.492	3.800	-.23253	-.06882	.10238	-.00061	-.05294	.00310	-.00316	-.06840	.10266	-.66629
4.487	4.000	-.23406	-.06861	.10257	-.00053	-.05557	.00322	-.00333	-.06819	.10285	-.66302
4.476	4.200	-.22710	-.06857	.10248	-.00064	-.05838	.00334	-.00348	-.06816	.10275	-.66333
	GRADIENT	-.00170	.00035	-.00060	-.00092	-.01403	.00061	-.00074	.00035	-.00061	-.00057

OA257 (LARC 20-M6-6559) OV102 (R7E047) (10 JUL 81)

REFERENCE DATA

SREF = 2690.0000 SQ.FT. XMRP = 1076.6800 IN. XO
LREF = 474.8100 INCHES YMRP = .0000 IN. YO
BREF = 936.6800 INCHES ZMRP = 375.0000 IN. ZO
SCALE = .0100

PARAMETRIC DATA

ALPHA = 5.000 PHI = .000
SPDBRK = 86.600 AILRON = .000
YP = 1.000 1S = 1.000
ELEVON = .000 MACH = 6.000
S-MODE = 2.000 S-DIR = 1.000

RUN NO. 180/ 0 RN/L = 4.48 GRADIENT INTERVAL = -.60/ .60

RN/L	BETA	ALPHA	CN	CA	CLM	CY	CYN	CBL	CL	CD	L/D
4.481	-4.096	4.71260	.02533	.08941	.00335	.05531	-.00259	.00519	.01790	.09119	.19626
4.475	-3.900	4.71340	.02488	.08932	.00346	.05239	-.00239	.00492	.01746	.09106	.19170
4.468	-3.700	4.71530	.02499	.08928	.00363	.04946	-.00219	.00466	.01756	.09103	.19292
4.473	-3.500	4.71680	.02555	.08919	.00367	.04683	-.00205	.00442	.01813	.09099	.19928
4.471	-3.300	4.71570	.02482	.08909	.00373	.04420	-.00194	.00419	.01741	.09082	.19169
4.476	-3.100	4.71320	.02522	.08906	.00382	.04154	-.00186	.00395	.01782	.09083	.19619
4.480	-2.900	4.71630	.02497	.08898	.00380	.03918	-.00175	.00373	.01757	.09073	.19366
4.481	-2.700	4.71760	.02571	.08884	.00368	.03657	-.00164	.00350	.01831	.09065	.20203
4.473	-2.500	4.71930	.02588	.08859	.00353	.03397	-.00154	.00325	.01850	.09042	.20463
4.484	-2.300	4.72060	.02557	.08836	.00331	.03139	-.00141	.00300	.01821	.09016	.20202
4.487	-2.100	4.72200	.02526	.08822	.00312	.02880	-.00125	.00274	.01791	.09000	.19895
4.495	-1.900	4.72190	.02542	.08804	.00302	.02588	-.00109	.00248	.01809	.08983	.20131
4.498	-1.700	4.72490	.02594	.08787	.00286	.02320	-.00091	.00221	.01862	.08970	.20752
4.492	-1.500	4.72460	.02555	.08776	.00284	.02044	-.00076	.00198	.01824	.08956	.20360
4.484	-1.300	4.72740	.02651	.08768	.00275	.01799	-.00061	.00174	.01919	.08957	.21428
4.479	-1.100	4.72810	.02610	.08767	.00286	.01538	-.00048	.00150	.01878	.08952	.20980
4.485	-.900	4.72810	.02587	.08762	.00290	.01273	-.00033	.00123	.01856	.08945	.20750
4.492	-.700	4.73190	.02567	.08762	.00319	.01017	-.00018	.00099	.01836	.08943	.20524
4.491	-.500	4.73260	.02512	.08769	.00329	.00748	-.00005	.00073	.01780	.08947	.19893
4.486	-.300	4.73360	.02478	.08768	.00343	.00480	.00012	.00047	.01746	.08943	.19522
4.482	-.100	4.73550	.02538	.08776	.00345	.00219	.00029	.00019	.01805	.08955	.20156
4.483	.100	4.73640	.02515	.08772	.00347	-.00062	.00047	-.00012	.01782	.08950	.19909
4.488	.300	4.73770	.02571	.08776	.00343	-.00335	.00069	-.00042	.01837	.08959	.20507
4.481	.500	4.73810	.02483	.08774	.00336	-.00606	.00092	-.00072	.01750	.08949	.19548
4.480	.700	4.73980	.02563	.08769	.00318	-.00881	.00113	-.00100	.01829	.08951	.20438
4.482	.900	4.74110	.02591	.08765	.00312	-.01150	.00131	-.00126	.01857	.08949	.20751
4.482	1.100	4.74150	.02526	.08766	.00304	-.01423	.00152	-.00154	.01793	.08945	.20042
4.482	1.300	4.74480	.02648	.08774	.00287	-.01688	.00171	-.00182	.01913	.08963	.21342
4.487	1.500	4.74610	.02643	.08764	.00276	-.01958	.00189	-.00208	.01909	.08953	.21324
4.487	1.700	4.74550	.02638	.08767	.00275	-.02235	.00209	-.00236	.01904	.08955	.21255
4.489	1.900	4.74790	.02617	.08782	.00285	-.02503	.00225	-.00261	.01881	.08968	.20970
4.487	2.100	4.74910	.02671	.08798	.00300	-.02760	.00240	-.00287	.01933	.08989	.21504
4.492	2.300	4.74900	.02575	.08809	.00317	-.03040	.00254	-.00312	.01837	.08992	.20430
4.494	2.500	4.75390	.02690	.08825	.00334	-.03298	.00269	-.00338	.01949	.09018	.21614
4.492	2.700	4.75490	.02631	.08846	.00352	-.03560	.00281	-.00362	.01889	.09033	.20906
4.499	2.900	4.75630	.02665	.08872	.00367	-.03832	.00293	-.00387	.01920	.09062	.21187
4.496	3.100	4.75720	.02655	.08886	.00380	-.04092	.00304	-.00409	.01909	.09075	.21029
4.488	3.300	4.75650	.02629	.08898	.00377	-.04351	.00315	-.00433	.01882	.09086	.20716
4.476	3.500	4.76300	.02600	.08913	.00383	-.04607	.00329	-.00456	.01851	.09098	.20348
4.470	3.700	4.76200	.02632	.08919	.00377	-.04873	.00340	-.00480	.01882	.09107	.20669
4.473	3.900	4.76610	.02667	.08932	.00369	-.05125	.00351	-.00503	.01916	.09123	.21002
4.461	4.100	4.76850	.02675	.08936	.00367	-.05418	.00366	-.00528	.01923	.09128	.21065

OA257 (LARC 20-M6-6559) OV102 (R7E047) (10 JUL 81)

REFERENCE DATA

SREF =	2690.0000 SQ.FT.	XMRP =	1076.6800 IN. XO		
LREF =	474.8100 INCHES	YMRP =	.0000 IN. YO		
BREF =	936.6800 INCHES	ZMRP =	375.0000 IN. ZO		
SCALE =	.0100				

PARAMETRIC DATA

ALPHA =	5.000	PHI =	.000
SPDBRK =	86.600	AILRON =	.000
YP =	1.000	1S =	1.000
ELEVON =	.000	MACH =	6.000
S-MODE =	2.000	S-DIR =	1.000

RUN NO. 180/ 0 RN/L = 4.48 GRADIENT INTERVAL = -.60/ .60

RN/L	BETA	ALPHA	CN	CA	CLM	CY	CYN	CBL	CL	CD	L/D
4.454	4.249	4.76260	.02747	.08953	.00360	-.05632	.00381	-.00547	.01994	.09150	.21797
	GRADIENT	.00581	.00016	.00006	.00006	-.01356	.00097	-.00147	.00014	.00008	.00140

OA257 (LARC 20-M6-6559) OV102 (R7E147) (10 JUL 81)

REFERENCE DATA

SREF = 2690.0000 SQ.FT. XMRP = 1076.6800 IN. XO
LREF = 474.8100 INCHES YMRP = .0000 IN. YO
BREF = 936.6800 INCHES ZMRP = 375.0000 IN. ZO
SCALE = .0100

PARAMETRIC DATA

ALPHA = 5.000 PHI = .000
SPDBRK = 86.600 AILRON = .000
YP = 1.000 1S = 1.000
ELEVON = .000 MACH = 6.000
S-MODE = 2.000 S-DIR = 1.000

RUN NO. 2180/ 0 RN/L = 4.48 GRADIENT INTERVAL = -.60/ .60

RN/L	BETA	ALPHA	CN	CA	CLM	CY	CYN	CBL	CL	CD	L/D
4.477	-4.000	4.71910	.02525	.08933	.00345	.05387	-.00251	.00507	.01782	.09110	.19556
4.471	-3.800	4.71550	.02542	.08927	.00352	.05091	-.00227	.00478	.01799	.09106	.19756
4.470	-3.600	4.71450	.02495	.08924	.00372	.04820	-.00212	.00454	.01753	.09099	.19266
4.471	-3.400	4.71600	.02435	.08913	.00369	.04554	-.00199	.00430	.01694	.09083	.18652
4.473	-3.200	4.71490	.02507	.08905	.00383	.04294	-.00189	.00408	.01767	.09081	.19457
4.479	-3.000	4.71500	.02497	.08903	.00382	.04030	-.00181	.00384	.01757	.09078	.19351
4.482	-2.800	4.71700	.02553	.08889	.00377	.03793	-.00169	.00362	.01814	.09069	.19997
4.477	-2.600	4.71630	.02541	.08871	.00355	.03531	-.00160	.00337	.01803	.09050	.19925
4.476	-2.400	4.72230	.02564	.08846	.00344	.03269	-.00148	.00313	.01827	.09027	.20238
4.488	-2.200	4.72090	.02568	.08831	.00320	.03011	-.00133	.00287	.01833	.09013	.20335
4.490	-2.000	4.72400	.02562	.08809	.00306	.02733	-.00117	.00261	.01828	.08990	.20335
4.501	-1.800	4.72170	.02496	.08791	.00287	.02453	-.00100	.00235	.01763	.08967	.19664
4.495	-1.600	4.72620	.02623	.08778	.00284	.02176	-.00083	.00209	.01891	.08964	.21091
4.488	-1.400	4.72480	.02598	.08776	.00279	.01921	-.00069	.00186	.01867	.08960	.20830
4.479	-1.200	4.72800	.02632	.08764	.00280	.01668	-.00053	.00162	.01901	.08951	.21238
4.481	-1.000	4.72890	.02629	.08759	.00290	.01405	-.00041	.00138	.01898	.08946	.21219
4.488	-.800	4.73100	.02566	.08759	.00305	.01136	-.00028	.00111	.01835	.08941	.20516
4.494	-.600	4.73230	.02550	.08767	.00323	.00887	-.00011	.00087	.01818	.08948	.20315
4.487	-.400	4.73350	.02528	.08772	.00336	.00606	.00002	.00060	.01795	.08950	.20056
4.484	-.200	4.73480	.02525	.08772	.00349	.00355	.00019	.00034	.01792	.08950	.20020
4.481	.000	4.73580	.02518	.08778	.00344	.00085	.00038	.00003	.01784	.08955	.19923
4.485	.200	4.73690	.02579	.08778	.00349	-.00197	.00057	-.00027	.01845	.08961	.20590
4.485	.400	4.73830	.02557	.08775	.00337	-.00475	.00080	-.00057	.01824	.08956	.20361
4.480	.600	4.73910	.02531	.08769	.00330	-.00742	.00103	-.00086	.01798	.08949	.20089
4.481	.800	4.74060	.02587	.08767	.00317	-.01011	.00123	-.00113	.01854	.08951	.20712
4.482	1.000	4.74260	.02595	.08766	.00309	-.01291	.00141	-.00140	.01861	.08950	.20798
4.482	1.200	4.74220	.02564	.08771	.00298	-.01543	.00160	-.00168	.01830	.08953	.20440
4.485	1.400	4.74490	.02582	.08766	.00283	-.01824	.00179	-.00194	.01848	.08950	.20648
4.488	1.600	4.74450	.02603	.08763	.00274	-.02095	.00200	-.00223	.01869	.08948	.20884
4.487	1.800	4.74720	.02638	.08773	.00282	-.02373	.00217	-.00248	.01903	.08962	.21235
4.489	2.000	4.74680	.02576	.08783	.00288	-.02627	.00233	-.00273	.01841	.08967	.20529
4.487	2.200	4.75050	.02621	.08801	.00310	-.02905	.00247	-.00299	.01883	.08988	.20950
4.494	2.400	4.74990	.02596	.08817	.00320	-.03165	.00262	-.00325	.01857	.09001	.20625
4.492	2.600	4.75460	.02626	.08837	.00350	-.03440	.00275	-.00350	.01885	.09025	.20883
4.497	2.800	4.75340	.02607	.08861	.00359	-.03702	.00288	-.00375	.01864	.09047	.20600
4.496	3.000	4.75850	.02600	.08880	.00376	-.03968	.00298	-.00398	.01855	.09065	.20460
4.495	3.200	4.75800	.02616	.08892	.00380	-.04217	.00308	-.00420	.01869	.09078	.20589
4.479	3.400	4.76260	.02645	.08900	.00379	-.04483	.00322	-.00445	.01897	.09089	.20869
4.474	3.600	4.76050	.02593	.08916	.00383	-.04738	.00334	-.00468	.01844	.09101	.20263
4.465	3.800	4.76150	.02646	.08925	.00379	-.05019	.00344	-.00492	.01896	.09114	.20803
4.472	4.000	4.76710	.02628	.08930	.00371	-.05290	.00359	-.00516	.01877	.09117	.20587
4.460	4.200	4.76910	.02732	.08946	.00362	-.05556	.00377	-.00542	.01978	.09142	.21638
	GRADIENT	.00573	.00010	.00003	.00004	-.01357	.00096	-.00145	.00009	.00004	.00090

OA257 (LARC 20-M6-6559) OV102 (R7E048) (10 JUL 81)

REFERENCE DATA

SREF = 2690.0000 SQ.FT. XMRP = 1076.6800 IN. XO
LREF = 474.8100 INCHES YMRP = .0000 IN. YO
BREF = 936.6800 INCHES ZMRP = 375.0000 IN. ZO
SCALE = .0100

PARAMETRIC DATA

ALPHA = 10.000 PHI = .000
SPDBRK = 86.600 AILRON = .000
YP = 1.000 1S = 1.000
ELEVON = .000 MACH = 6.000
S-MODE = 2.000 S-DIR = 1.000

RUN NO. 181/ 0 RN/L = 4.50 GRADIENT INTERVAL = -.60/ .60

RN/L	BETA	ALPHA	CN	CA	CLM	CY	CYN	CBL	CL	CD	L/D
4.609	-4.226	9.72740	.13906	.07893	.00627	.05254	-.00219	.00694	.12372	.10129	1.22140
4.618	-4.100	9.73320	.13778	.07880	.00631	.05092	-.00215	.00677	.12247	.10096	1.21310
4.615	-3.900	9.73400	.13760	.07879	.00644	.04854	-.00207	.00647	.12229	.10092	1.21180
4.605	-3.700	9.73180	.13833	.07880	.00662	.04604	-.00198	.00616	.12302	.10105	1.21740
4.596	-3.500	9.73120	.13873	.07875	.00677	.04355	-.00185	.00582	.12342	.10106	1.22120
4.588	-3.300	9.73320	.13817	.07877	.00694	.04079	-.00168	.00548	.12286	.10099	1.21650
4.582	-3.100	9.73290	.13843	.07878	.00707	.03841	-.00150	.00511	.12312	.10105	1.21840
4.574	-2.900	9.73750	.13864	.07879	.00728	.03571	-.00132	.00475	.12332	.10111	1.21960
4.560	-2.700	9.73820	.13865	.07887	.00739	.03330	-.00114	.00438	.12331	.10119	1.21860
4.529	-2.500	9.74310	.13856	.07880	.00757	.03082	-.00094	.00403	.12323	.10112	1.21870
4.497	-2.300	9.74140	.13878	.07893	.00765	.02817	-.00078	.00366	.12342	.10128	1.21870
4.469	-2.100	9.74790	.13868	.07895	.00776	.02547	-.00063	.00329	.12331	.10129	1.21730
4.458	-1.900	9.74560	.13824	.07896	.00782	.02272	-.00043	.00291	.12288	.10122	1.21400
4.474	-1.700	9.75220	.13896	.07893	.00794	.02028	-.00022	.00256	.12358	.10133	1.21960
4.519	-1.500	9.75590	.13914	.07891	.00790	.01763	-.00004	.00221	.12375	.10135	1.22110
4.560	-1.300	9.76350	.13901	.07883	.00796	.01507	.00016	.00184	.12363	.10126	1.22090
4.590	-1.100	9.76470	.13874	.07866	.00790	.01250	.00031	.00151	.12339	.10105	1.22110
4.609	-.900	9.77010	.13912	.07854	.00783	.01013	.00044	.00118	.12378	.10101	1.22540
4.600	-.700	9.77040	.13897	.07839	.00774	.00763	.00053	.00087	.12366	.10083	1.22630
4.581	-.500	9.77070	.13932	.07827	.00769	.00539	.00058	.00059	.12401	.10078	1.23050
4.548	-.300	9.77450	.13971	.07826	.00770	.00333	.00054	.00035	.12440	.10084	1.23360
4.522	-.100	9.77600	.13937	.07824	.00760	.00116	.00042	.00011	.12407	.10077	1.23110
4.492	.100	9.77850	.13883	.07818	.00746	-.00057	.00034	-.00010	.12353	.10062	1.22770
4.468	.300	9.77760	.13997	.07829	.00728	-.00262	.00023	-.00033	.12464	.10092	1.23500
4.441	.500	9.78120	.13978	.07828	.00735	-.00458	.00018	-.00055	.12445	.10089	1.23350
4.428	.700	9.78020	.13983	.07834	.00724	-.00691	.00015	-.00083	.12449	.10096	1.23310
4.409	.900	9.78640	.14006	.07835	.00726	-.00919	.00021	-.00109	.12471	.10102	1.23450
4.396	1.100	9.78570	.14097	.07852	.00719	-.01138	.00027	-.00138	.12557	.10134	1.23910
4.386	1.300	9.78770	.13946	.07859	.00734	-.01385	.00036	-.00168	.12407	.10115	1.22660
4.387	1.500	9.78870	.14000	.07878	.00740	-.01644	.00051	-.00203	.12457	.10143	1.22800
4.400	1.700	9.79520	.13896	.07882	.00737	-.01894	.00071	-.00238	.12353	.10131	1.21920
4.418	1.900	9.79640	.14000	.07875	.00724	-.02147	.00093	-.00273	.12456	.10142	1.22820
4.434	2.100	9.80180	.13999	.07872	.00710	-.02421	.00111	-.00309	.12455	.10141	1.22820
4.440	2.300	9.80350	.13934	.07856	.00688	-.02663	.00125	-.00342	.12393	.10114	1.22520
4.443	2.500	9.80830	.14052	.07849	.00669	-.02942	.00143	-.00381	.12509	.10128	1.23510
4.450	2.700	9.81010	.14045	.07844	.00666	-.03218	.00168	-.00420	.12503	.10122	1.23520
4.454	2.900	9.81100	.13974	.07848	.00659	-.03474	.00192	-.00459	.12432	.10114	1.22910
4.449	3.100	9.81390	.14054	.07845	.00655	-.03760	.00213	-.00498	.12511	.10126	1.23550
4.444	3.300	9.81610	.14006	.07844	.00636	-.04003	.00235	-.00536	.12463	.10117	1.23190
4.443	3.500	9.81940	.14134	.07834	.00624	-.04273	.00252	-.00572	.12591	.10130	1.24300
4.444	3.700	9.81880	.14078	.07832	.00599	-.04537	.00265	-.00609	.12536	.10119	1.23890
4.431	3.900	9.81840	.14073	.07841	.00596	-.04777	.00279	-.00639	.12529	.10126	1.23740

OA257 (LARC 20-M6-6559) OV102 (R7E048) (10 JUL 81)

REFERENCE DATA

SREF =	2690.0000 SQ.FT.	XMRP =	1076.6800 IN. XO		
LREF =	474.8100 INCHES	YMRP =	.0000 IN. YO		
BREF =	936.6800 INCHES	ZMRP =	375.0000 IN. ZO		
SCALE =	.0100				

PARAMETRIC DATA

ALPHA =	10.000	PHI =	.000
SPDBRK =	86.600	AILRON =	.000
YP =	1.000	1S =	1.000
ELEVON =	.000	MACH =	6.000
S-MODE =	2.000	S-DIR =	1.000

RUN NO. 181/ 0 RN/L = 4.50 GRADIENT INTERVAL = -.60/ .60

RN/L	BETA	ALPHA	CN	CA	CLM	CY	CYN	CBL	CL	CD	L/D
4.388	4.100	9.82290	.14075	.07842	.00588	-.05020	.00289	-.00670	.12530	.10128	1.23720
	GRADIENT	.00919	.00036	.00001	-.00044	-.00992	-.00043	-.00114	.00034	.00009	.00226

OA257 (LARC 20-M6-6559) OV102 (R7E148) (10 JUL 81)

REFERENCE DATA

SREF = 2690.0000 SQ.FT. XMRP = 1076.6800 IN. XO
LREF = 474.8100 INCHES YMRP = .0000 IN. YO
BREF = 936.6800 INCHES ZMRP = 375.0000 IN. ZO
SCALE = .0100

PARAMETRIC DATA

ALPHA = 10.000 PHI = .000
SPDBRK = 86.600 AILRON = .000
YP = 1.000 1S = 1.000
ELEVON = .000 MACH = 6.000
S-MODE = 2.000 S-DIR = 1.000

RUN NO. 2181/ O RN/L = 4.49 GRADIENT INTERVAL = -.60/ .60

RN/L	BETA	ALPHA	CN	CA	CLM	CY	CYN	CBL	CL	CD	L/D
4.612	-4.200	9.72970	.13855	.07889	.00625	.05221	-.00219	.00691	.12322	.10117	1.21800
4.621	-4.000	9.73410	.13769	.07882	.00634	.04972	-.00212	.00661	.12238	.10097	1.21210
4.609	-3.800	9.73500	.13776	.07878	.00654	.04729	-.00203	.00632	.12245	.10094	1.21310
4.602	-3.600	9.73160	.13859	.07884	.00670	.04481	-.00192	.00599	.12327	.10113	1.21890
4.592	-3.400	9.73270	.13805	.07876	.00688	.04215	-.00177	.00565	.12275	.10096	1.21580
4.586	-3.200	9.73350	.13797	.07875	.00699	.03954	-.00160	.00529	.12267	.10094	1.21530
4.580	-3.000	9.73750	.13744	.07879	.00721	.03705	-.00141	.00493	.12213	.10090	1.21040
4.568	-2.800	9.73780	.13800	.07880	.00741	.03456	-.00122	.00457	.12268	.10101	1.21460
4.546	-2.600	9.74050	.13868	.07886	.00750	.03209	-.00104	.00421	.12334	.10119	1.21890
4.513	-2.400	9.74310	.13839	.07883	.00766	.02951	-.00087	.00385	.12306	.10111	1.21700
4.481	-2.200	9.74310	.13778	.07886	.00771	.02686	-.00068	.00347	.12245	.10104	1.21190
4.460	-2.000	9.74680	.13838	.07885	.00779	.02417	-.00053	.00311	.12304	.10114	1.21650
4.462	-1.800	9.74750	.13857	.07897	.00788	.02135	-.00035	.00273	.12320	.10129	1.21620
4.495	-1.600	9.75570	.13886	.07889	.00793	.01908	-.00011	.00238	.12349	.10127	1.21930
4.544	-1.400	9.75650	.13922	.07890	.00794	.01630	.00005	.00201	.12383	.10135	1.22190
4.574	-1.200	9.76510	.13921	.07874	.00795	.01372	.00022	.00168	.12384	.10121	1.22360
4.604	-1.000	9.76600	.13865	.07859	.00783	.01137	.00038	.00134	.12331	.10097	1.22120
4.607	-.800	9.77320	.14000	.07844	.00783	.00894	.00050	.00103	.12465	.10107	1.23330
4.594	-.600	9.77140	.13948	.07834	.00769	.00637	.00056	.00074	.12416	.10088	1.23070
4.563	-.400	9.77370	.13942	.07828	.00771	.00453	.00059	.00046	.12411	.10081	1.23110
4.535	-.200	9.77390	.13932	.07827	.00763	.00211	.00047	.00022	.12401	.10078	1.23050
4.507	.000	9.78020	.13946	.07821	.00757	.00037	.00040	.00000	.12414	.10076	1.23200
4.480	.200	9.77790	.14048	.07827	.00747	-.00160	.00027	-.00020	.12515	.10099	1.23920
4.456	.400	9.78100	.13993	.07828	.00731	-.00354	.00021	-.00044	.12459	.10091	1.23470
4.432	.600	9.78030	.13985	.07830	.00730	-.00567	.00018	-.00069	.12452	.10092	1.23380
4.421	.800	9.78340	.14024	.07834	.00724	-.00811	.00017	-.00097	.12489	.10103	1.23620
4.400	1.000	9.78500	.14026	.07840	.00724	-.01023	.00023	-.00122	.12490	.10110	1.23540
4.390	1.200	9.78660	.13961	.07855	.00725	-.01256	.00031	-.00154	.12422	.10113	1.22830
4.385	1.400	9.78810	.13932	.07867	.00740	-.01511	.00043	-.00185	.12392	.10121	1.22440
4.391	1.600	9.79160	.14071	.07882	.00737	-.01769	.00061	-.00221	.12525	.10160	1.23280
4.407	1.800	9.79730	.13957	.07881	.00729	-.02014	.00082	-.00255	.12412	.10141	1.22390
4.429	2.000	9.79810	.14062	.07877	.00713	-.02281	.00103	-.00291	.12516	.10156	1.23250
4.437	2.200	9.80350	.13994	.07861	.00701	-.02550	.00119	-.00326	.12451	.10129	1.22930
4.442	2.400	9.80370	.13978	.07848	.00672	-.02804	.00135	-.00362	.12438	.10114	1.22970
4.447	2.600	9.80980	.14082	.07845	.00666	-.03083	.00156	-.00400	.12539	.10129	1.23790
4.453	2.800	9.80900	.14046	.07853	.00663	-.03345	.00180	-.00440	.12503	.10131	1.23410
4.453	3.000	9.81270	.13914	.07840	.00657	-.03616	.00203	-.00478	.12375	.10096	1.22560
4.445	3.200	9.81530	.14097	.07847	.00644	-.03878	.00225	-.00518	.12553	.10135	1.23850
4.444	3.400	9.81820	.13980	.07837	.00629	-.04141	.00245	-.00555	.12438	.10106	1.23080
4.445	3.600	9.81940	.14111	.07834	.00610	-.04407	.00259	-.00590	.12569	.10125	1.24130
4.440	3.800	9.82090	.14063	.07835	.00599	-.04660	.00273	-.00623	.12521	.10119	1.23730
4.411	4.000	9.82710	.14120	.07839	.00596	-.04909	.00284	-.00655	.12575	.10134	1.24090

OA257 (LARC 20-M6-6559) OV102 (R7E148) (10 JUL 81)

REFERENCE DATA

SREF =	2690.0000 SQ.FT.	XMRP =	1076.6800 IN. XO		
LREF =	474.8100 INCHES	YMRP =	.0000 IN. YO		
BREF =	936.6800 INCHES	ZMRP =	375.0000 IN. ZO		
SCALE =	.0100				

PARAMETRIC DATA

ALPHA =	10.000	PHI =	.000
SPDBRK =	86.600	AILRON =	.000
YP =	1.000	1S =	1.000
ELEVON =	.000	MACH =	6.000
S-MODE =	2.000	S-DIR =	1.000

RUN NO. 2181/ 0 RN/L = 4.49 GRADIENT INTERVAL = -.60/ .60

RN/L	BETA	ALPHA	CN	CA	CLM	CY	CYN	CBL	CL	CD	L/D
4.380	4.135	9.82050	.14103	.07842	.00585	-.05060	.00292	-.00675	.12559	.10133	1.23940
	GRADIENT	.00809	.00059	-.00002	-.00038	-.01000	-.00038	-.00116	.00057	.00009	.00450

OA257 (LARC 20-M6-6559) OV102 (R7E049) (10 JUL 81)

REFERENCE DATA

SREF = 2690.0000 SQ.FT. XMRP = 1076.6800 IN. XO
LREF = 474.8100 INCHES YMRP = .0000 IN. YO
BREF = 936.6800 INCHES ZMRP = 375.0000 IN. ZO
SCALE = .0100

PARAMETRIC DATA

ALPHA = 12.500 PHI = .000
SPDBRK = 86.600 AILRON = .000
YP = 1.000 1S = 1.000
ELEVON = .000 MACH = 6.000
S-MODE = 2.000 S-DIR = 1.000

RUN NO. 182/ 0 RN/L = 4.43 GRADIENT INTERVAL = -.60/ .60

RN/L	BETA	ALPHA	CN	CA	CLM	CY	CYN	CBL	CL	CD	L/D
4.447	-4.164	12.19600	.20710	.07346	.00468	.04719	-.00060	.00679	.18691	.11556	1.61740
4.441	-4.000	12.20400	.20720	.07355	.00500	.04528	-.00057	.00653	.18697	.11569	1.61610
4.445	-3.800	12.20300	.20719	.07365	.00514	.04297	-.00055	.00620	.18694	.11578	1.61460
4.447	-3.600	12.20400	.20646	.07363	.00543	.04063	-.00049	.00588	.18623	.11561	1.61090
4.453	-3.400	12.20800	.20709	.07368	.00563	.03836	-.00045	.00554	.18683	.11581	1.61330
4.452	-3.200	12.21100	.20648	.07378	.00600	.03606	-.00040	.00522	.18620	.11578	1.60830
4.449	-3.000	12.21300	.20688	.07389	.00619	.03376	-.00035	.00488	.18657	.11598	1.60870
4.444	-2.800	12.21700	.20674	.07379	.00644	.03134	-.00024	.00452	.18644	.11587	1.60900
4.439	-2.600	12.21900	.20666	.07375	.00635	.02896	-.00017	.00415	.18637	.11581	1.60930
4.432	-2.400	12.22400	.20709	.07366	.00647	.02664	-.00004	.00380	.18680	.11584	1.61260
4.432	-2.200	12.22600	.20712	.07366	.00645	.02404	.00004	.00345	.18683	.11585	1.61270
4.432	-2.000	12.22900	.20743	.07363	.00648	.02156	.00015	.00308	.18713	.11589	1.61460
4.437	-1.800	12.23300	.20792	.07360	.00636	.01905	.00029	.00270	.18761	.11598	1.61760
4.433	-1.600	12.23600	.20797	.07353	.00634	.01686	.00043	.00236	.18766	.11594	1.61870
4.429	-1.400	12.24000	.20840	.07341	.00621	.01436	.00052	.00202	.18810	.11593	1.62260
4.424	-1.200	12.24400	.20874	.07333	.00621	.01197	.00064	.00167	.18844	.11593	1.62550
4.435	-1.000	12.24500	.20888	.07336	.00610	.00958	.00072	.00134	.18857	.11600	1.62570
4.433	-.800	12.25200	.20891	.07323	.00609	.00731	.00076	.00102	.18861	.11590	1.62730
4.432	-.600	12.25100	.20825	.07315	.00585	.00512	.00077	.00071	.18799	.11567	1.62510
4.432	-.400	12.25600	.20890	.07308	.00564	.00307	.00069	.00044	.18863	.11576	1.62940
4.431	-.200	12.25700	.20832	.07297	.00542	.00113	.00058	.00019	.18808	.11553	1.62790
4.425	.000	12.26300	.20955	.07301	.00529	-.00057	.00046	-.00006	.18926	.11586	1.63360
4.430	.200	12.26200	.20956	.07311	.00533	-.00262	.00028	-.00029	.18926	.11595	1.63220
4.428	.400	12.27000	.21011	.07313	.00542	-.00433	.00012	-.00051	.18977	.11611	1.63440
4.425	.600	12.27000	.21005	.07331	.00548	-.00616	.00001	-.00074	.18967	.11628	1.63120
4.421	.800	12.27400	.20864	.07341	.00563	-.00819	-.00005	-.00101	.18826	.11608	1.62180
4.422	1.000	12.27400	.20876	.07355	.00579	-.01046	-.00006	-.00130	.18835	.11625	1.62020
4.418	1.200	12.28200	.20973	.07364	.00575	-.01246	-.00003	-.00160	.18927	.11656	1.62370
4.421	1.400	12.28300	.20915	.07360	.00571	-.01493	-.00003	-.00192	.18870	.11641	1.62100
4.418	1.600	12.28600	.20954	.07356	.00558	-.01718	.00004	-.00226	.18909	.11646	1.62360
4.418	1.800	12.28800	.21003	.07351	.00559	-.01948	.00015	-.00260	.18957	.11653	1.62680
4.415	2.000	12.29300	.20935	.07352	.00550	-.02202	.00024	-.00296	.18889	.11641	1.62260
4.415	2.200	12.29500	.20978	.07346	.00548	-.02454	.00039	-.00332	.18933	.11645	1.62590
4.414	2.400	12.30100	.21016	.07339	.00546	-.02698	.00051	-.00370	.18970	.11648	1.62860
4.414	2.600	12.30100	.20907	.07346	.00552	-.02949	.00068	-.00408	.18862	.11631	1.62170
4.411	2.800	12.30600	.21043	.07356	.00549	-.03212	.00083	-.00446	.18991	.11672	1.62700
4.415	3.000	12.30900	.20981	.07349	.00535	-.03458	.00098	-.00486	.18933	.11652	1.62480
4.411	3.200	12.31000	.21005	.07354	.00524	-.03696	.00110	-.00523	.18954	.11664	1.62510
4.411	3.400	12.31300	.20995	.07353	.00511	-.03955	.00119	-.00558	.18944	.11661	1.62460
4.408	3.600	12.31600	.20991	.07349	.00492	-.04167	.00127	-.00591	.18940	.11657	1.62470
4.402	3.800	12.31900	.20953	.07349	.00477	-.04428	.00132	-.00626	.18903	.11650	1.62260
4.388	4.000	12.32000	.21089	.07365	.00458	-.04646	.00136	-.00658	.19031	.11695	1.62730
	GRADIENT	.01607	.00162	.00013	-.00029	-.00935	-.00067	-.00120	.00152	.00053	.00582

OA257 (LARC 20-M6-6559) OV102 (R7E149) (10 JUL 81)

REFERENCE DATA

SREF = 2690.0000 SQ.FT. XMRP = 1076.6800 IN. XO
LREF = 474.8100 INCHES YMRP = .0000 IN. YO
BREF = 936.6800 INCHES ZMRP = 375.0000 IN. ZO
SCALE = .0100

PARAMETRIC DATA

ALPHA = 12.500 PHI = .000
SPDBRK = 86.600 AILRON = .000
YP = 1.000 1S = 1.000
ELEVON = .000 MACH = 6.000
S-MODE = 2.000 S-DIR = 1.000

RUN NO. 2182/ O RN/L = 4.43 GRADIENT INTERVAL = -.60/ .60

RN/L	BETA	ALPHA	CN	CA	CLM	CY	CYN	CBL	CL	CD	L/D
4.443	-4.100	12.20400	.20632	.07353	.00482	.04648	-.00058	.00668	.18611	.11548	1.61160
4.443	-3.900	12.20300	.20732	.07354	.00502	.04413	-.00056	.00636	.18709	.11570	1.61700
4.447	-3.700	12.20600	.20775	.07362	.00528	.04177	-.00052	.00604	.18749	.11588	1.61800
4.450	-3.500	12.20600	.20703	.07365	.00551	.03952	-.00046	.00571	.18678	.11576	1.61350
4.452	-3.300	12.21000	.20708	.07375	.00583	.03727	-.00041	.00538	.18680	.11587	1.61210
4.450	-3.100	12.21200	.20644	.07380	.00611	.03488	-.00038	.00505	.18616	.11580	1.60760
4.448	-2.900	12.21600	.20738	.07383	.00632	.03255	-.00029	.00469	.18706	.11605	1.61200
4.441	-2.700	12.21900	.20675	.07378	.00646	.03014	-.00019	.00433	.18646	.11587	1.60920
4.435	-2.500	12.22200	.20694	.07371	.00643	.02784	-.00011	.00398	.18665	.11584	1.61120
4.432	-2.300	12.22500	.20707	.07365	.00647	.02530	-.00001	.00362	.18678	.11583	1.61250
4.432	-2.100	12.22800	.20795	.07369	.00650	.02280	.00010	.00327	.18762	.11607	1.61650
4.434	-1.900	12.23100	.20795	.07356	.00647	.02032	.00022	.00289	.18764	.11594	1.61840
4.436	-1.700	12.23500	.20808	.07361	.00634	.01800	.00037	.00253	.18776	.11604	1.61810
4.431	-1.500	12.23900	.20836	.07346	.00628	.01561	.00047	.00220	.18805	.11595	1.62180
4.425	-1.300	12.24000	.20815	.07342	.00617	.01317	.00058	.00184	.18786	.11588	1.62110
4.429	-1.100	12.24300	.20873	.07336	.00619	.01078	.00068	.00151	.18842	.11595	1.62500
4.435	-.900	12.24800	.20883	.07332	.00604	.00849	.00075	.00118	.18852	.11595	1.62590
4.433	-.700	12.25000	.20794	.07324	.00601	.00613	.00077	.00086	.18767	.11569	1.62210
4.433	-.500	12.25200	.20893	.07317	.00574	.00409	.00074	.00058	.18864	.11584	1.62840
4.431	-.300	12.25500	.20810	.07300	.00563	.00209	.00064	.00031	.18787	.11551	1.62640
4.428	-.100	12.25900	.20843	.07303	.00531	.00027	.00052	.00005	.18817	.11562	1.62740
4.427	.100	12.26300	.20983	.07306	.00531	-.00166	.00036	-.00018	.18953	.11597	1.63430
4.430	.300	12.26500	.20969	.07310	.00532	-.00342	.00018	-.00039	.18937	.11597	1.63290
4.426	.500	12.27200	.20985	.07326	.00547	-.00528	.00006	-.00062	.18948	.11619	1.63080
4.424	.700	12.27100	.20957	.07332	.00550	-.00715	-.00002	-.00088	.18920	.11619	1.62830
4.421	.900	12.27500	.20845	.07349	.00574	-.00931	-.00007	-.00114	.18806	.11612	1.61950
4.421	1.100	12.27800	.21012	.07359	.00576	-.01141	-.00007	-.00143	.18966	.11659	1.62680
4.418	1.300	12.28400	.20949	.07359	.00579	-.01371	-.00004	-.00176	.18904	.11648	1.62300
4.422	1.500	12.28400	.20971	.07360	.00563	-.01606	-.00000	-.00209	.18925	.11653	1.62400
4.417	1.700	12.28900	.20913	.07348	.00557	-.01828	.00010	-.00243	.18870	.11631	1.62240
4.420	1.900	12.29000	.20936	.07350	.00545	-.02076	.00019	-.00277	.18892	.11638	1.62320
4.413	2.100	12.29500	.20919	.07345	.00547	-.02328	.00032	-.00314	.18875	.11631	1.62290
4.417	2.300	12.29500	.20976	.07344	.00542	-.02568	.00045	-.00350	.18932	.11642	1.62610
4.412	2.500	12.30300	.20991	.07343	.00547	-.02831	.00058	-.00389	.18944	.11647	1.62650
4.414	2.700	12.30100	.21005	.07347	.00548	-.03070	.00076	-.00428	.18957	.11653	1.62670
4.413	2.900	12.30800	.20971	.07349	.00541	-.03340	.00089	-.00466	.18923	.11651	1.62410
4.415	3.100	12.30800	.20909	.07352	.00525	-.03579	.00103	-.00505	.18861	.11640	1.62030
4.407	3.300	12.31700	.21015	.07352	.00518	-.03824	.00116	-.00539	.18963	.11666	1.62550
4.412	3.500	12.31500	.21009	.07354	.00500	-.04066	.00124	-.00576	.18957	.11666	1.62500
4.405	3.700	12.32000	.20931	.07343	.00486	-.04308	.00132	-.00610	.18882	.11640	1.62210
4.396	3.900	12.31600	.20961	.07353	.00472	-.04535	.00136	-.00641	.18911	.11655	1.62250
4.386	4.039	12.32400	.21075	.07352	.00458	-.04717	.00134	-.00665	.19020	.11681	1.62830
	GRADIENT	.01914	.00154	.00011	-.00033	-.00933	-.00070	-.00119	.00144	.00050	.00549

OA257 (LARC 20-M6-6559) OV102 (R7E050) (10 JUL 81)

REFERENCE DATA

SREF = 2690.0000 SQ.FT. XMRP = 1076.6800 IN. XO
LREF = 474.8100 INCHES YMRP = .0000 IN. YO
BREF = 936.6800 INCHES ZMRP = 375.0000 IN. ZO
SCALE = .0100

PARAMETRIC DATA

ALPHA = 15.000 PHI = .000
SPDBRK = 86.600 AILRON = .000
YP = 1.000 1S = 1.000
ELEVON = .000 MACH = 6.000
S-MODE = 2.000 S-DIR = 1.000

RUN NO. 148/ 0 RN/L = 2.26 GRADIENT INTERVAL = -.60/ .60

RN/L	BETA	ALPHA	CN	CA	CLM	CY	CYN	CBL	CL	CD	L/D
2.293	-2.278	14.80500	.28965	.06990	-.00149	.02524	.00188	.00345	.26217	.14159	1.85160
2.296	-2.100	14.80700	.28582	.06986	-.00136	.02321	.00190	.00312	.25847	.14059	1.83850
2.297	-1.900	14.81100	.28556	.06992	-.00127	.02099	.00192	.00276	.25820	.14060	1.83640
2.289	-1.700	14.81300	.28632	.07019	-.00092	.01866	.00193	.00241	.25886	.14105	1.83510
2.286	-1.500	14.82300	.28712	.07128	.00108	.01724	.00137	.00240	.25933	.14237	1.82160
2.281	-1.300	14.82000	.28440	.07164	.00129	.01510	.00134	.00206	.25662	.14200	1.80710
2.276	-1.100	14.82900	.28746	.07165	.00129	.01298	.00127	.00170	.25954	.14283	1.81720
2.278	-.900	14.83100	.28776	.07158	.00112	.01102	.00121	.00137	.25985	.14286	1.81890
2.274	-.700	14.83200	.28769	.07130	.00066	.00893	.00111	.00107	.25986	.14257	1.82260
2.265	-.500	14.83700	.28604	.07125	.00041	.00689	.00105	.00076	.25826	.14212	1.81720
2.259	-.300	14.83900	.28948	.07131	.00011	.00500	.00098	.00047	.26156	.14307	1.82820
2.254	-.100	14.84500	.28727	.07132	-.00011	.00315	.00083	.00020	.25941	.14254	1.81990
2.253	.100	14.84900	.28897	.07134	-.00033	.00155	.00063	-.00003	.26104	.14301	1.82520
2.246	.300	14.85000	.28874	.07140	-.00041	-.00042	.00036	-.00028	.26080	.14301	1.82360
2.243	.500	14.85700	.28686	.07150	-.00022	-.00194	.00016	-.00051	.25893	.14266	1.81500
2.239	.700	14.86100	.28919	.07160	-.00014	-.00385	-.00004	-.00077	.26116	.14338	1.82140
2.235	.900	14.86300	.28879	.07175	.00020	-.00580	-.00015	-.00107	.26073	.14343	1.81780
2.232	1.100	14.87000	.28872	.07184	.00037	-.00806	-.00021	-.00140	.26061	.14352	1.81580
2.238	1.300	14.87100	.28916	.07200	.00044	-.00984	-.00032	-.00169	.26100	.14380	1.81500
2.240	1.500	14.87500	.28786	.07208	.00079	-.01176	-.00050	-.00193	.25971	.14356	1.80910
2.240	1.700	14.88100	.28821	.07196	.00048	-.01377	-.00065	-.00221	.26006	.14357	1.81140
2.240	1.900	14.88000	.28767	.07137	.00002	-.01566	-.00083	-.00250	.25970	.14285	1.81790
2.240	2.100	14.88500	.28989	.07001	-.00225	-.01700	-.00142	-.00249	.26218	.14213	1.84470
2.238	2.300	14.88500	.28772	.06995	-.00266	-.01923	-.00147	-.00284	.26010	.14151	1.83800
2.236	2.500	14.89000	.29076	.06976	-.00272	-.02170	-.00138	-.00323	.26307	.14213	1.85080
2.243	2.672	14.89100	.28909	.06962	-.00280	-.02350	-.00134	-.00358	.26148	.14158	1.84690
	GRADIENT	.01957	.00051	.00022	-.00070	-.00885	-.00093	-.00126	.00039	.00043	-.00279

OA257 (LARC 20-M6-6559) OV102 (R7E050) (10 JUL 81)

REFERENCE DATA

SREF = 2690.0000 SQ.FT. XMRP = 1076.6800 IN. XO
LREF = 474.8100 INCHES YMRP = .0000 IN. YO
BREF = 936.6800 INCHES ZMRP = 375.0000 IN. ZO
SCALE = .0100

PARAMETRIC DATA

ALPHA = 15.000 PHI = .000
SPDBRK = 86.600 AILRON = .000
YP = 1.000 1S = 1.000
ELEVON = .000 MACH = 6.000
S-MODE = 2.000 S-DIR = 1.000

RUN NO. 112/ 0 RN/L = 7.43 GRADIENT INTERVAL = -.60/ .60

RN/L	BETA	ALPHA	CN	CA	CLM	CY	CYN	CBL	CL	CD	L/D
7.458	-4.426	14.37300	.27989	.07075	.00259	.04570	.00169	.00686	.25357	.13802	1.83720
7.435	-4.300	14.38400	.27970	.07071	.00277	.04443	.00164	.00668	.25337	.13798	1.83630
7.452	-4.100	14.38000	.27982	.07067	.00293	.04224	.00152	.00641	.25351	.13794	1.83780
7.447	-3.900	14.38400	.27976	.07067	.00320	.04015	.00139	.00616	.25344	.13795	1.83710
7.461	-3.700	14.39000	.27986	.07071	.00348	.03814	.00130	.00589	.25351	.13805	1.83640
7.459	-3.500	14.39400	.27966	.07077	.00378	.03597	.00117	.00562	.25329	.13807	1.83450
7.462	-3.300	14.39600	.27966	.07090	.00404	.03389	.00109	.00535	.25325	.13820	1.83250
7.460	-3.100	14.40300	.27958	.07095	.00435	.03176	.00103	.00505	.25315	.13826	1.83090
7.474	-2.900	14.40800	.27955	.07108	.00465	.02953	.00095	.00476	.25307	.13841	1.82850
7.471	-2.700	14.41100	.27949	.07117	.00492	.02749	.00089	.00446	.25298	.13849	1.82680
7.466	-2.500	14.41800	.27960	.07125	.00515	.02532	.00085	.00415	.25305	.13862	1.82550
7.466	-2.300	14.41700	.27946	.07127	.00536	.02315	.00081	.00384	.25291	.13860	1.82480
7.479	-2.100	14.42600	.27953	.07131	.00557	.02099	.00083	.00349	.25296	.13870	1.82370
7.478	-1.900	14.42800	.27953	.07142	.00572	.01873	.00081	.00316	.25292	.13882	1.82200
7.486	-1.700	14.43500	.27969	.07140	.00581	.01646	.00081	.00280	.25306	.13886	1.82240
7.503	-1.500	14.43600	.27973	.07137	.00584	.01430	.00078	.00248	.25311	.13886	1.82280
7.487	-1.300	14.44500	.27965	.07131	.00584	.01232	.00076	.00214	.25302	.13882	1.82270
7.476	-1.100	14.44300	.27972	.07110	.00568	.01014	.00069	.00180	.25315	.13862	1.82620
7.458	-.900	14.44900	.27979	.07090	.00554	.00822	.00063	.00147	.25325	.13847	1.82890
7.466	-.700	14.44900	.28007	.07064	.00535	.00625	.00053	.00115	.25359	.13829	1.83380
7.452	-.500	14.45500	.28027	.07050	.00514	.00430	.00042	.00083	.25380	.13823	1.83610
7.475	-.300	14.45800	.28018	.07040	.00495	.00235	.00029	.00054	.25374	.13812	1.83710
7.480	-.100	14.46400	.28058	.07035	.00492	.00038	.00019	.00023	.25411	.13820	1.83870
7.458	.100	14.46400	.28053	.07033	.00481	-.00169	.00008	-.00008	.25407	.13817	1.83890
7.437	.300	14.46800	.28059	.07033	.00477	-.00364	-.00000	-.00041	.25412	.13821	1.83870
7.450	.500	14.47200	.28049	.07047	.00484	-.00555	-.00006	-.00071	.25398	.13833	1.83610
7.429	.700	14.47500	.28060	.07063	.00492	-.00770	-.00015	-.00102	.25404	.13853	1.83390
7.417	.900	14.47600	.28054	.07077	.00501	-.00958	-.00024	-.00135	.25395	.13865	1.83160
7.400	1.100	14.48100	.28069	.07090	.00514	-.01167	-.00033	-.00168	.25404	.13883	1.82990
7.388	1.300	14.48200	.28060	.07104	.00513	-.01368	-.00034	-.00202	.25392	.13896	1.82740
7.379	1.500	14.48600	.28079	.07103	.00514	-.01588	-.00031	-.00237	.25409	.13901	1.82780
7.360	1.700	14.48700	.28102	.07107	.00502	-.01821	-.00030	-.00274	.25431	.13911	1.82810
7.368	1.900	14.49300	.28119	.07107	.00502	-.02042	-.00027	-.00310	.25445	.13918	1.82820
7.356	2.100	14.49400	.28143	.07110	.00491	-.02275	-.00021	-.00348	.25467	.13928	1.82850
7.355	2.300	14.49900	.28139	.07107	.00478	-.02502	-.00016	-.00384	.25464	.13926	1.82860
7.362	2.500	14.50200	.28134	.07099	.00454	-.02726	-.00012	-.00419	.25460	.13918	1.82930
7.348	2.700	14.50400	.28177	.07093	.00432	-.02970	-.00014	-.00455	.25502	.13924	1.83150
7.347	2.900	14.50700	.28172	.07090	.00397	-.03173	-.00016	-.00487	.25498	.13921	1.83160
7.346	3.100	14.51000	.28211	.07077	.00376	-.03390	-.00020	-.00516	.25538	.13920	1.83470
7.341	3.300	14.51200	.28229	.07077	.00335	-.03596	-.00026	-.00546	.25555	.13925	1.83530
7.328	3.500	14.51500	.28258	.07073	.00318	-.03815	-.00032	-.00576	.25583	.13930	1.83660
7.330	3.700	14.51800	.28282	.07076	.00292	-.04027	-.00041	-.00605	.25605	.13940	1.83680

OA257 (LARC 20-M6-6559) OV102 (R7E050) (10 JUL 81)

REFERENCE DATA

SREF =	2690.0000 SQ.FT.	XMRP =	1076.6800 IN. XO		
LREF =	474.8100 INCHES	YMRP =	.0000 IN. YO		
BREF =	936.6800 INCHES	ZMRP =	375.0000 IN. ZO		
SCALE =	.0100				

PARAMETRIC DATA

ALPHA =	15.000	PHI =	.000
SPDBRK =	86.600	AILRON =	.000
YP =	1.000	1S =	1.000
ELEVON =	.000	MACH =	6.000
S-MODE =	2.000	S-DIR =	1.000

RUN NO. 112/ 0 RN/L = 7.43 GRADIENT INTERVAL = -.60/ .60

RN/L	BETA	ALPHA	CN	CA	CLM	CY	CYN	CBL	CL	CD	L/D
7.335	3.847	14.51400	.28254	.07076	.00278	-.04173	-.00046	-.00625	.25579	.13931	1.83610
	GRADIENT	.01643	.00033	-.00005	-.00031	-.00989	-.00048	-.00155	.00029	.00011	.00071

OA257 (LARC 20-M6-6559) OV102 (R7E150) (10 JUL 81)

REFERENCE DATA

SREF = 2690.0000 SQ.FT. XMRP = 1076.6800 IN. XO
LREF = 474.8100 INCHES YMRP = .0000 IN. YO
BREF = 936.6800 INCHES ZMRP = 375.0000 IN. ZO
SCALE = .0100

PARAMETRIC DATA

ALPHA = 15.000 PHI = .000
SPDBRK = 86.600 AILRON = .000
YP = 1.000 1S = 1.000
ELEVON = .000 MACH = 6.000
S-MODE = 2.000 S-DIR = 1.000

RUN NO. 2148/ 0 RN/L = 2.26 GRADIENT INTERVAL = -.60/ .60

RN/L	BETA	ALPHA	CN	CA	CLM	CY	CYN	CBL	CL	CD	L/D
2.294	-2.200	14.80800	.28706	.06985	-.00142	.02433	.00189	.00330	.25967	.14090	1.84300
2.298	-2.000	14.80600	.28723	.06988	-.00142	.02201	.00191	.00294	.25984	.14097	1.84320
2.293	-1.800	14.81500	.28715	.07000	-.00102	.01983	.00192	.00259	.25970	.14109	1.84060
2.287	-1.600	14.81800	.28585	.07091	.00022	.01808	.00163	.00243	.25821	.14166	1.82270
2.284	-1.400	14.82100	.28597	.07146	.00117	.01612	.00134	.00224	.25818	.14224	1.81510
2.276	-1.200	14.82700	.28576	.07159	.00139	.01408	.00130	.00189	.25793	.14234	1.81210
2.278	-1.000	14.82800	.28741	.07170	.00118	.01195	.00124	.00152	.25949	.14286	1.81630
2.277	-.800	14.83300	.28805	.07137	.00104	.01001	.00116	.00122	.26018	.14273	1.82280
2.270	-.600	14.83700	.28815	.07130	.00053	.00803	.00108	.00090	.26028	.14271	1.82380
2.262	-.400	14.84000	.28871	.07127	.00024	.00590	.00100	.00060	.26083	.14284	1.82600
2.255	-.200	14.84500	.28740	.07135	.00001	.00405	.00092	.00033	.25953	.14260	1.82000
2.255	.000	14.84500	.28877	.07135	-.00025	.00234	.00073	.00008	.26085	.14295	1.82470
2.249	.200	14.85000	.28693	.07135	-.00031	.00055	.00049	-.00015	.25907	.14250	1.81800
2.242	.400	14.85700	.28966	.07153	-.00028	-.00106	.00025	-.00039	.26163	.14341	1.82430
2.242	.600	14.85700	.28882	.07157	-.00024	-.00290	.00004	-.00063	.26081	.14323	1.82090
2.236	.800	14.86300	.28824	.07166	.00009	-.00481	-.00012	-.00091	.26022	.14320	1.81710
2.233	1.000	14.86400	.28933	.07183	.00022	-.00680	-.00016	-.00123	.26122	.14365	1.81840
2.234	1.200	14.87300	.28927	.07191	.00047	-.00897	-.00027	-.00156	.26112	.14375	1.81650
2.239	1.400	14.87500	.28839	.07200	.00061	-.01072	-.00041	-.00181	.26025	.14362	1.81210
2.241	1.600	14.87600	.28971	.07213	.00066	-.01285	-.00058	-.00208	.26148	.14409	1.81460
2.239	1.800	14.88200	.28860	.07163	.00019	-.01464	-.00075	-.00235	.26052	.14335	1.81740
2.240	2.000	14.88500	.28908	.07107	-.00059	-.01649	-.00089	-.00262	.26112	.14294	1.82680
2.239	2.200	14.88500	.28885	.06993	-.00248	-.01819	-.00152	-.00264	.26119	.14178	1.84220
2.237	2.400	14.88900	.28877	.06980	-.00270	-.02038	-.00143	-.00303	.26114	.14166	1.84350
2.241	2.600	14.89100	.29020	.06978	-.00291	-.02295	-.00136	-.00344	.26252	.14201	1.84860
	GRADIENT	.01768	.00061	.00024	-.00066	-.00897	-.00090	-.00126	.00049	.00046	-.00252

OA257 (LARC 20-M6-6559) OV102 (R7E150) (10 JUL 81)

REFERENCE DATA

SREF = 2690.0000 SQ.FT. XMRP = 1076.6800 IN. XO
LREF = 474.8100 INCHES YMRP = .0000 IN. YO
BREF = 936.6800 INCHES ZMRP = 375.0000 IN. ZO
SCALE = .0100

PARAMETRIC DATA

ALPHA = 15.000 PHI = .000
SPDBRK = 86.600 AILRON = .000
YP = 1.000 1S = 1.000
ELEVON = .000 MACH = 6.000
S-MODE = 2.000 S-DIR = 1.000

RUN NO. 2112/ 0 RN/L = 7.43 GRADIENT INTERVAL = -.60/ .60

RN/L	BETA	ALPHA	CN	CA	CLM	CY	CYN	CBL	CL	CD	L/D
7.445	-4.400	14.37700	.27973	.07066	.00262	.04540	.00169	.00681	.25342	.13790	1.83760
7.445	-4.200	14.37900	.27970	.07070	.00287	.04335	.00158	.00655	.25338	.13794	1.83680
7.446	-4.000	14.38200	.27960	.07063	.00308	.04117	.00146	.00629	.25329	.13787	1.83720
7.458	-3.800	14.38600	.27982	.07068	.00332	.03919	.00135	.00602	.25348	.13799	1.83700
7.459	-3.600	14.39300	.27977	.07073	.00361	.03705	.00123	.00576	.25341	.13805	1.83560
7.463	-3.400	14.39500	.27952	.07080	.00387	.03492	.00112	.00549	.25315	.13807	1.83350
7.458	-3.200	14.40200	.27972	.07091	.00419	.03289	.00106	.00520	.25329	.13825	1.83210
7.473	-3.000	14.40300	.27942	.07107	.00449	.03062	.00099	.00490	.25296	.13834	1.82860
7.470	-2.800	14.41200	.27960	.07112	.00480	.02851	.00092	.00461	.25311	.13847	1.82790
7.472	-2.600	14.41100	.27945	.07122	.00503	.02642	.00087	.00431	.25293	.13853	1.82580
7.464	-2.400	14.42000	.27964	.07124	.00526	.02422	.00083	.00400	.25309	.13863	1.82560
7.478	-2.200	14.41900	.27935	.07130	.00544	.02203	.00081	.00366	.25279	.13862	1.82360
7.472	-2.000	14.42700	.27942	.07138	.00565	.01985	.00082	.00333	.25283	.13875	1.82220
7.485	-1.800	14.42900	.27958	.07139	.00574	.01763	.00082	.00298	.25297	.13881	1.82240
7.492	-1.600	14.44000	.27976	.07142	.00585	.01530	.00080	.00264	.25311	.13892	1.82190
7.503	-1.400	14.43600	.27987	.07127	.00585	.01338	.00077	.00230	.25327	.13879	1.82480
7.480	-1.200	14.44700	.27971	.07118	.00582	.01123	.00073	.00197	.25311	.13871	1.82470
7.469	-1.000	14.44600	.27984	.07098	.00561	.00912	.00066	.00162	.25329	.13854	1.82820
7.460	-.800	14.44900	.27998	.07074	.00545	.00727	.00059	.00131	.25347	.13836	1.83190
7.461	-.600	14.45100	.28020	.07059	.00523	.00527	.00048	.00099	.25372	.13828	1.83480
7.466	-.400	14.45900	.28038	.07042	.00507	.00326	.00035	.00070	.25391	.13819	1.83740
7.474	-.200	14.45700	.28026	.07039	.00493	.00139	.00026	.00038	.25381	.13813	1.83750
7.474	.000	14.46500	.28066	.07033	.00492	-.00064	.00014	.00008	.25420	.13821	1.83930
7.443	.200	14.46600	.28047	.07031	.00477	-.00267	.00003	-.00024	.25402	.13814	1.83880
7.448	.400	14.47100	.28070	.07041	.00480	-.00462	-.00003	-.00056	.25420	.13832	1.83780
7.433	.600	14.47200	.28055	.07055	.00485	-.00660	-.00010	-.00086	.25402	.13842	1.83520
7.424	.800	14.47600	.28035	.07066	.00495	-.00868	-.00021	-.00118	.25378	.13849	1.83250
7.408	1.000	14.47700	.28061	.07085	.00506	-.01055	-.00029	-.00151	.25398	.13875	1.83050
7.394	1.200	14.48200	.28068	.07097	.00517	-.01271	-.00034	-.00185	.25402	.13891	1.82870
7.384	1.400	14.48500	.28070	.07103	.00514	-.01474	-.00034	-.00220	.25401	.13898	1.82770
7.360	1.600	14.48600	.28062	.07105	.00506	-.01705	-.00031	-.00256	.25393	.13898	1.82700
7.367	1.800	14.49000	.28103	.07107	.00500	-.01933	-.00028	-.00292	.25431	.13913	1.82790
7.360	2.000	14.49200	.28110	.07111	.00498	-.02153	-.00023	-.00329	.25436	.13919	1.82750
7.353	2.200	14.49700	.28139	.07110	.00484	-.02391	-.00018	-.00365	.25464	.13927	1.82830
7.361	2.400	14.50000	.28131	.07099	.00467	-.02619	-.00015	-.00402	.25457	.13916	1.82930
7.354	2.600	14.50400	.28157	.07097	.00444	-.02848	-.00013	-.00438	.25482	.13922	1.83030
7.346	2.800	14.50500	.28180	.07091	.00418	-.03071	-.00015	-.00471	.25506	.13923	1.83190
7.349	3.000	14.50900	.28190	.07085	.00385	-.03285	-.00019	-.00501	.25516	.13921	1.83280
7.351	3.200	14.51100	.28214	.07080	.00351	-.03495	-.00023	-.00531	.25539	.13924	1.83430
7.334	3.400	14.51300	.28249	.07076	.00326	-.03708	-.00030	-.00561	.25574	.13930	1.83590
7.327	3.600	14.51600	.28284	.07075	.00303	-.03922	-.00036	-.00591	.25608	.13939	1.83720
7.334	3.800	14.51900	.28272	.07077	.00285	-.04133	-.00045	-.00619	.25595	.13939	1.83610
	GRADIENT	.01714	.00034	-.00004	-.00033	-.00989	-.00049	-.00155	.00030	.00012	.00059

OA257 (LARC 20-M6-6559) DV102 (R7E051) (10 JUL 81)

REFERENCE DATA

SREF = 2690.0000 SQ.FT. XMRP = 1076.6800 IN. XO
LREF = 474.8100 INCHES YMRP = .0000 IN. YO
BREF = 936.6800 INCHES ZMRP = 375.0000 IN. ZO
SCALE = .0100

PARAMETRIC DATA

ALPHA = 17.500 PHI = .000
SPDBRK = 86.600 AILRON = .000
YP = 1.000 1S = 1.000
ELEVON = .000 MACH = 6.000
S-MODE = 2.000 S-DIR = 1.000

RUN NO. 147/ O RN/L = 2.32 GRADIENT INTERVAL = -.60/ .60

RN/L	BETA	ALPHA	CN	CA	CLM	CY	CYN	CBL	CL	CD	L/D
2.355	-2.325	17.16600	.36247	.06644	-.00022	.02238	.00318	.00332	.32672	.17046	1.91670
2.359	-2.200	17.16700	.36341	.06642	-.00014	.02089	.00317	.00307	.32762	.17073	1.91890
2.355	-2.000	17.17000	.36256	.06647	-.00000	.01857	.00311	.00270	.32678	.17054	1.91620
2.353	-1.800	17.17200	.36231	.06675	.00028	.01652	.00305	.00235	.32645	.17074	1.91190
2.351	-1.600	17.18100	.36331	.06703	.00053	.01436	.00294	.00201	.32729	.17136	1.91000
2.346	-1.400	17.18300	.36414	.06725	.00072	.01238	.00287	.00169	.32802	.17182	1.90900
2.339	-1.200	17.18600	.36247	.06747	.00104	.01029	.00277	.00137	.32635	.17155	1.90230
2.336	-1.000	17.19500	.36307	.06768	.00122	.00835	.00267	.00105	.32684	.17199	1.90040
2.332	-.800	17.19800	.36492	.06907	.00343	.00821	.00135	.00142	.32818	.17388	1.88740
2.325	-.600	17.20500	.36419	.06914	.00346	.00665	.00113	.00116	.32744	.17377	1.88430
2.322	-.400	17.20500	.36270	.06924	.00346	.00483	.00095	.00089	.32599	.17342	1.87980
2.321	-.200	17.21100	.36460	.06870	.00231	.00298	.00073	.00060	.32795	.17351	1.89010
2.318	.000	17.21500	.36426	.06858	.00192	.00153	.00049	.00034	.32764	.17332	1.89040
2.313	.200	17.21800	.36611	.06864	.00199	-.00024	.00014	.00010	.32938	.17393	1.89370
2.311	.400	17.22400	.36397	.06866	.00211	-.00161	-.00017	-.00012	.32731	.17336	1.88810
2.307	.600	17.22800	.36506	.06890	.00266	-.00287	-.00064	-.00023	.32828	.17393	1.88740
2.303	.800	17.23100	.36450	.06899	.00284	-.00462	-.00099	-.00047	.32770	.17387	1.88480
2.297	1.000	17.23900	.36342	.06944	.00344	-.00685	-.00090	-.00096	.32652	.17402	1.87630
2.293	1.200	17.23900	.36515	.06946	.00335	-.00859	-.00122	-.00119	.32816	.17456	1.87990
2.290	1.400	17.24700	.36614	.06929	.00338	-.01018	-.00151	-.00141	.32913	.17474	1.88360
2.290	1.600	17.25000	.36598	.06932	.00328	-.01192	-.00171	-.00168	.32896	.17472	1.88270
2.289	1.800	17.25100	.36494	.06858	.00222	-.01376	-.00208	-.00185	.32818	.17372	1.88920
2.288	2.000	17.25300	.36409	.06705	-.00040	-.01462	-.00299	-.00170	.32782	.17202	1.90570
2.292	2.200	17.25800	.36522	.06699	-.00071	-.01690	-.00299	-.00209	.32890	.17232	1.90860
2.294	2.400	17.26400	.36612	.06678	-.00081	-.01926	-.00298	-.00249	.32981	.17243	1.91270
2.294	2.600	17.26700	.36563	.06665	-.00096	-.02154	-.00293	-.00290	.32937	.17217	1.91310
	GRADIENT	.02036	.00119	-.00034	-.00096	-.00798	-.00145	-.00119	.00118	.00014	.00527

OA257 (LARC 20-M6-6559) OV102 (R7E051) (10 JUL 81)

REFERENCE DATA

SREF = 2690.0000 SQ.FT. XMRP = 1076.6800 IN. XO
LREF = 474.8100 INCHES YMRP = .0000 IN. YO
BREF = 936.6800 INCHES ZMRP = 375.0000 IN. ZO
SCALE = .0100

PARAMETRIC DATA

ALPHA = 17.500 PHI = .000
SPDBRK = 86.600 AILRON = .000
YP = 1.000 1S = 1.000
ELEVON = .000 MACH = 6.000
S-MODE = 2.000 S-DIR = 1.000

RUN NO. 111/ O RN/L = 7.40 GRADIENT INTERVAL = -.60/ .60

RN/L	BETA	ALPHA	CN	CA	CLM	CY	CYN	CBL	CL	CD	L/D
7.419	-4.327	16.93800	.36149	.06775	.00083	.04280	.00304	.00700	.32607	.17012	1.91670
7.432	-4.200	16.94500	.36130	.06768	.00081	.04143	.00300	.00680	.32589	.17004	1.91650
7.416	-4.000	16.94600	.36135	.06761	.00096	.03908	.00292	.00645	.32596	.16999	1.91750
7.409	-3.800	16.94900	.36166	.06761	.00104	.03697	.00284	.00611	.32624	.17010	1.91790
7.405	-3.600	16.95300	.36151	.06758	.00120	.03487	.00277	.00578	.32610	.17005	1.91760
7.424	-3.400	16.96000	.36163	.06763	.00147	.03272	.00267	.00546	.32617	.17018	1.91670
7.430	-3.200	16.96800	.36158	.06766	.00168	.03057	.00262	.00512	.32609	.17024	1.91550
7.416	-3.000	16.96900	.36160	.06770	.00191	.02843	.00259	.00477	.32610	.17029	1.91500
7.418	-2.800	16.97600	.36155	.06775	.00220	.02624	.00252	.00444	.32602	.17036	1.91370
7.441	-2.600	16.98200	.36152	.06793	.00246	.02422	.00248	.00411	.32592	.17055	1.91090
7.428	-2.400	16.98800	.36163	.06804	.00283	.02225	.00240	.00380	.32597	.17073	1.90930
7.432	-2.200	16.99000	.36144	.06820	.00313	.02023	.00228	.00348	.32573	.17084	1.90670
7.436	-2.000	16.99800	.36161	.06831	.00351	.01823	.00214	.00316	.32584	.17104	1.90500
7.454	-1.800	17.00000	.36160	.06832	.00365	.01629	.00192	.00289	.32583	.17106	1.90480
7.470	-1.600	17.00600	.36163	.06835	.00390	.01447	.00171	.00260	.32582	.17113	1.90400
7.469	-1.400	17.00900	.36159	.06834	.00396	.01263	.00152	.00230	.32578	.17112	1.90380
7.439	-1.200	17.01800	.36170	.06815	.00402	.01079	.00130	.00202	.32592	.17103	1.90560
7.441	-1.000	17.01900	.36161	.06806	.00395	.00908	.00108	.00174	.32585	.17091	1.90650
7.445	-.800	17.02500	.36187	.06790	.00388	.00730	.00085	.00146	.32614	.17088	1.90860
7.451	-.600	17.02800	.36211	.06773	.00371	.00556	.00067	.00116	.32640	.17081	1.91090
7.437	-.400	17.03200	.36224	.06754	.00366	.00367	.00053	.00082	.32657	.17068	1.91330
7.446	-.200	17.03600	.36228	.06749	.00356	.00169	.00039	.00049	.32661	.17066	1.91380
7.439	.000	17.04600	.36247	.06747	.00358	-.00026	.00027	.00014	.32677	.17076	1.91370
7.446	.200	17.04300	.36236	.06747	.00352	-.00203	.00011	-.00016	.32667	.17071	1.91360
7.440	.400	17.05100	.36239	.06753	.00362	-.00387	-.00006	-.00047	.32666	.17083	1.91220
7.455	.600	17.05200	.36256	.06765	.00369	-.00572	-.00022	-.00078	.32678	.17099	1.91110
7.449	.800	17.06100	.36266	.06775	.00380	-.00753	-.00044	-.00106	.32682	.17117	1.90940
7.448	1.000	17.06000	.36261	.06790	.00387	-.00926	-.00069	-.00134	.32673	.17129	1.90750
7.408	1.200	17.06700	.36275	.06801	.00387	-.01103	-.00091	-.00163	.32682	.17147	1.90590
7.408	1.400	17.06500	.36277	.06806	.00380	-.01286	-.00111	-.00191	.32682	.17152	1.90540
7.386	1.600	17.07300	.36284	.06808	.00368	-.01454	-.00127	-.00219	.32686	.17161	1.90460
7.381	1.800	17.07200	.36313	.06806	.00359	-.01663	-.00145	-.00251	.32714	.17166	1.90570
7.366	2.000	17.07800	.36311	.06802	.00343	-.01850	-.00154	-.00282	.32712	.17166	1.90570
7.333	2.200	17.07400	.36304	.06792	.00317	-.02062	-.00163	-.00316	.32709	.17152	1.90710
7.340	2.400	17.07800	.36352	.06777	.00285	-.02266	-.00171	-.00352	.32759	.17154	1.90980
7.322	2.600	17.07800	.36364	.06762	.00252	-.02479	-.00175	-.00390	.32775	.17143	1.91180
7.298	2.800	17.08600	.36373	.06756	.00229	-.02711	-.00179	-.00428	.32783	.17145	1.91210
7.303	3.000	17.08600	.36392	.06755	.00203	-.02925	-.00180	-.00464	.32801	.17150	1.91270
7.288	3.200	17.09400	.36428	.06748	.00180	-.03141	-.00180	-.00500	.32835	.17158	1.91370
7.279	3.400	17.09400	.36420	.06746	.00153	-.03360	-.00185	-.00535	.32828	.17154	1.91380
7.293	3.600	17.10100	.36446	.06740	.00132	-.03558	-.00191	-.00567	.32853	.17159	1.91460
7.283	3.790	17.09800	.36455	.06748	.00112	-.03755	-.00204	-.00594	.32860	.17167	1.91410
	GRADIENT	.02089	.00031	-.00005	-.00004	-.00940	-.00074	-.00162	.00025	.00016	-.00032

OA257 (LARC 20-M6-6559) OV102 (R7E151) (10 JUL 81)

REFERENCE DATA

SREF = 2690.0000 SQ.FT. XMRP = 1076.6800 IN. XO
LREF = 474.8100 INCHES YMRP = .0000 IN. YO
BREF = 936.6800 INCHES ZMRP = 375.0000 IN. ZO
SCALE = .0100

PARAMETRIC DATA

ALPHA = 17.500 PHI = .000
SPDBRK = 86.600 AILRON = .000
YP = 1.000 1S = 1.000
ELEVON = .000 MACH = 6.000
S-MODE = 2.000 S-DIR = 1.000

RUN NO. 2147/ O RN/L = 2.32 GRADIENT INTERVAL = -.60/ .60

RN/L	BETA	ALPHA	CN	CA	CLM	CY	CYN	CBL	CL	CD	L/D
2.356	-2.300	17.16600	.36267	.06644	-.00021	.02208	.00318	.00327	.32690	.17052	1.91710
2.359	-2.100	17.16600	.36371	.06645	-.00009	.01970	.00315	.00289	.32790	.17084	1.91930
2.353	-1.900	17.17300	.36268	.06657	.00021	.01748	.00310	.00253	.32686	.17069	1.91490
2.353	-1.700	17.17700	.36281	.06701	.00036	.01554	.00302	.00219	.32684	.17116	1.90950
2.349	-1.500	17.17900	.36317	.06713	.00059	.01335	.00292	.00186	.32714	.17140	1.90860
2.341	-1.300	17.18600	.36283	.06737	.00088	.01133	.00282	.00153	.32672	.17157	1.90430
2.338	-1.100	17.18800	.36382	.06770	.00108	.00938	.00271	.00121	.32756	.17219	1.90240
2.333	-.900	17.19600	.36445	.06858	.00267	.00849	.00194	.00132	.32788	.17326	1.89250
2.328	-.700	17.20200	.36514	.06911	.00337	.00745	.00125	.00129	.32836	.17400	1.88710
2.324	-.500	17.20300	.36405	.06917	.00345	.00571	.00103	.00103	.32730	.17375	1.88380
2.321	-.300	17.21100	.36388	.06919	.00339	.00391	.00084	.00074	.32712	.17376	1.88260
2.320	-.100	17.21000	.36516	.06855	.00193	.00228	.00061	.00046	.32853	.17352	1.89330
2.315	.100	17.21700	.36474	.06853	.00203	.00063	.00031	.00022	.32811	.17342	1.89200
2.311	.300	17.22100	.36521	.06870	.00207	-.00086	-.00003	-.00000	.32850	.17374	1.89070
2.309	.500	17.22400	.36491	.06879	.00239	-.00226	-.00039	-.00017	.32817	.17376	1.88860
2.305	.700	17.23400	.36644	.06886	.00274	-.00380	-.00085	-.00034	.32958	.17433	1.89060
2.300	.900	17.23200	.36507	.06931	.00335	-.00581	-.00088	-.00078	.32815	.17435	1.88210
2.295	1.100	17.24000	.36499	.06948	.00349	-.00782	-.00102	-.00109	.32800	.17453	1.87930
2.291	1.300	17.24300	.36512	.06938	.00331	-.00924	-.00138	-.00128	.32815	.17449	1.88050
2.291	1.500	17.24600	.36495	.06935	.00328	-.01115	-.00161	-.00157	.32798	.17443	1.88030
2.290	1.700	17.25300	.36497	.06917	.00308	-.01302	-.00179	-.00183	.32803	.17430	1.88200
2.288	1.900	17.25000	.36410	.06752	.00034	-.01389	-.00272	-.00167	.32770	.17245	1.90030
2.290	2.100	17.25500	.36426	.06701	-.00055	-.01588	-.00300	-.00189	.32799	.17204	1.90650
2.294	2.300	17.26100	.36532	.06694	-.00080	-.01801	-.00299	-.00229	.32900	.17232	1.90920
2.294	2.500	17.26200	.36506	.06670	-.00098	-.02040	-.00297	-.00269	.32882	.17202	1.91160
2.293	2.647	17.26900	.36601	.06670	-.00087	-.02205	-.00293	-.00299	.32971	.17234	1.91320
	GRADIENT	.02029	.00112	-.00048	-.00131	-.00798	-.00143	-.00121	.00115	-.00002	.00671

OA257 (LARC 20-M6-6559) OV102 (R7E151) (10 JUL 81)

REFERENCE DATA

SREF = 2690.0000 SQ.FT. XMRP = 1076.6800 IN. XO
LREF = 474.8100 INCHES YMRP = .0000 IN. YO
BREF = 936.6800 INCHES ZMRP = 375.0000 IN. ZO
SCALE = .0100

PARAMETRIC DATA

ALPHA = 17.500 PHI = .000
SPDBRK = 86.600 AILRON = .000
YP = 1.000 1S = 1.000
ELEVON = .000 MACH = 6.000
S-MODE = 2.000 S-DIR = 1.000

RUN NO. 2111/ 0 RN/L = 7.40 GRADIENT INTERVAL = -.60/ .60

RN/L	BETA	ALPHA	CN	CA	CLM	CY	CYN	CBL	CL	CD	L/D
7.438	-4.300	16.93900	.36112	.06775	.00075	.04247	.00302	.00698	.32571	.17002	1.91570
7.424	-4.100	16.94700	.36142	.06765	.00088	.04020	.00297	.00661	.32601	.17006	1.91700
7.403	-3.900	16.94400	.36133	.06763	.00099	.03806	.00290	.00628	.32594	.17000	1.91730
7.406	-3.700	16.95400	.36150	.06754	.00112	.03588	.00280	.00595	.32609	.17002	1.91790
7.417	-3.500	16.95200	.36148	.06764	.00132	.03378	.00272	.00562	.32605	.17009	1.91690
7.427	-3.300	16.96600	.36167	.06760	.00158	.03166	.00264	.00530	.32621	.17020	1.91660
7.424	-3.100	16.96600	.36155	.06769	.00183	.02953	.00262	.00494	.32607	.17025	1.91520
7.414	-2.900	16.97400	.36153	.06774	.00207	.02732	.00255	.00460	.32600	.17033	1.91390
7.435	-2.700	16.97800	.36161	.06785	.00229	.02525	.00250	.00428	.32604	.17048	1.91250
7.431	-2.500	16.98600	.36169	.06797	.00267	.02322	.00245	.00395	.32605	.17067	1.91040
7.434	-2.300	16.98800	.36152	.06809	.00298	.02125	.00235	.00364	.32585	.17074	1.90840
7.426	-2.100	16.99400	.36159	.06827	.00332	.01925	.00222	.00333	.32585	.17097	1.90580
7.449	-1.900	16.99800	.36145	.06834	.00360	.01720	.00204	.00303	.32568	.17102	1.90440
7.459	-1.700	17.00400	.36164	.06838	.00379	.01543	.00181	.00275	.32583	.17114	1.90390
7.472	-1.500	17.00800	.36154	.06832	.00394	.01350	.00161	.00245	.32574	.17109	1.90390
7.458	-1.300	17.01300	.36159	.06820	.00398	.01176	.00142	.00216	.32581	.17102	1.90510
7.437	-1.100	17.01700	.36168	.06815	.00400	.00986	.00119	.00188	.32590	.17101	1.90580
7.444	-.900	17.02200	.36196	.06801	.00394	.00822	.00096	.00160	.32620	.17099	1.90770
7.449	-.700	17.02600	.36195	.06781	.00381	.00644	.00075	.00131	.32623	.17082	1.90980
7.445	-.500	17.03100	.36210	.06763	.00365	.00462	.00059	.00099	.32641	.17071	1.91200
7.446	-.300	17.03500	.36223	.06751	.00365	.00268	.00046	.00065	.32656	.17066	1.91350
7.441	-.100	17.03700	.36227	.06750	.00353	.00075	.00034	.00032	.32660	.17068	1.91350
7.439	.100	17.04400	.36258	.06747	.00360	-.00119	.00019	-.00001	.32688	.17078	1.91410
7.447	.300	17.04800	.36239	.06749	.00354	-.00295	.00003	-.00031	.32668	.17077	1.91300
7.443	.500	17.05000	.36241	.06761	.00365	-.00481	-.00014	-.00062	.32666	.17090	1.91150
7.453	.700	17.05400	.36272	.06771	.00375	-.00665	-.00032	-.00093	.32691	.17111	1.91050
7.452	.900	17.06100	.36276	.06787	.00388	-.00836	-.00055	-.00120	.32688	.17132	1.90810
7.422	1.100	17.06100	.36272	.06796	.00385	-.01010	-.00079	-.00148	.32682	.17139	1.90680
7.411	1.300	17.06800	.36276	.06803	.00386	-.01196	-.00102	-.00176	.32682	.17150	1.90560
7.391	1.500	17.06800	.36273	.06806	.00375	-.01366	-.00119	-.00204	.32677	.17153	1.90500
7.393	1.700	17.07300	.36301	.06806	.00363	-.01559	-.00137	-.00234	.32704	.17163	1.90540
7.374	1.900	17.07000	.36313	.06806	.00347	-.01760	-.00151	-.00268	.32715	.17166	1.90580
7.345	2.100	17.07600	.36314	.06797	.00334	-.01953	-.00158	-.00299	.32717	.17161	1.90650
7.337	2.300	17.07400	.36330	.06787	.00299	-.02163	-.00168	-.00334	.32736	.17154	1.90830
7.340	2.500	17.08300	.36375	.06771	.00274	-.02374	-.00173	-.00371	.32781	.17158	1.91050
7.301	2.700	17.07900	.36365	.06758	.00236	-.02596	-.00178	-.00408	.32776	.17140	1.91230
7.298	2.900	17.08700	.36379	.06752	.00215	-.02821	-.00180	-.00447	.32789	.17144	1.91260
7.302	3.100	17.08800	.36415	.06752	.00186	-.03033	-.00180	-.00482	.32823	.17154	1.91340
7.279	3.300	17.09400	.36428	.06746	.00173	-.03253	-.00183	-.00517	.32835	.17156	1.91400
7.284	3.500	17.09400	.36428	.06745	.00143	-.03456	-.00186	-.00553	.32837	.17155	1.91410
7.287	3.700	17.10200	.36466	.06743	.00126	-.03666	-.00198	-.00583	.32871	.17169	1.91460
	GRADIENT	.02014	.00033	-.00002	-.00004	-.00943	-.00073	-.00161	.00027	.00020	-.00049

OA257 (LARC 20-M6-6559) OV102 (R7E052) (10 JUL 81)

REFERENCE DATA

SREF = 2690.0000 SQ.FT. XMRP = 1076.6800 IN. XO
LREF = 474.8100 INCHES YMRP = .0000 IN. YO
BREF = 936.6800 INCHES ZMRP = 375.0000 IN. ZO
SCALE = .0100

PARAMETRIC DATA

ALPHA = 20.000 PHI = .000
SPDBRK = 86.600 AILRON = .000
YP = 1.000 1S = 1.000
ELEVON = .000 MACH = 6.000
S-MODE = 2.000 S-DIR = 1.000

RUN NO. 146/ O RN/L = 2.28 GRADIENT INTERVAL = -.60/ .60

RN/L	BETA	ALPHA	CN	CA	CLM	CY	CYN	CBL	CL	CD	L/D
2.274	-2.390	19.77000	.45418	.06533	-.00104	.02028	.00424	.00310	.40531	.21511	1.88420
2.270	-2.200	19.77500	.45386	.06521	-.00104	.01816	.00425	.00269	.40503	.21492	1.88450
2.269	-2.000	19.78000	.45433	.06531	-.00107	.01604	.00422	.00225	.40543	.21520	1.88390
2.267	-1.800	19.78400	.45494	.06536	-.00092	.01403	.00415	.00186	.40596	.21549	1.88390
2.268	-1.600	19.79000	.45645	.06541	-.00092	.01202	.00406	.00149	.40734	.21609	1.88510
2.272	-1.400	19.79400	.45532	.06542	-.00081	.01012	.00391	.00117	.40626	.21575	1.88300
2.275	-1.200	19.80300	.45638	.06552	-.00057	.00838	.00363	.00089	.40719	.21626	1.88280
2.278	-1.000	19.80500	.45569	.06560	-.00044	.00685	.00332	.00065	.40651	.21612	1.88100
2.279	-.800	19.81200	.45619	.06568	-.00007	.00528	.00297	.00045	.40692	.21641	1.88040
2.283	-.600	19.82100	.45666	.06696	.00212	.00481	.00181	.00078	.40690	.21783	1.86800
2.280	-.400	19.82200	.45598	.06707	.00222	.00332	.00142	.00057	.40622	.21772	1.86580
2.281	-.200	19.82900	.45675	.06725	.00239	.00186	.00095	.00038	.40686	.21821	1.86450
2.281	.000	19.83300	.45738	.06743	.00244	.00057	.00053	.00020	.40738	.21861	1.86350
2.277	.200	19.83900	.45725	.06738	.00243	-.00075	.00008	.00002	.40724	.21856	1.86330
2.273	.400	19.84700	.45731	.06727	.00236	-.00199	-.00041	-.00016	.40730	.21853	1.86380
2.274	.600	19.84600	.45647	.06724	.00224	-.00332	-.00084	-.00036	.40654	.21821	1.86300
2.273	.800	19.85600	.45803	.06704	.00209	-.00469	-.00129	-.00052	.40803	.21863	1.86630
2.277	1.000	19.85900	.45970	.06665	.00161	-.00571	-.00199	-.00057	.40972	.21885	1.87210
2.282	1.200	19.86200	.45833	.06664	.00143	-.00725	-.00239	-.00076	.40843	.21840	1.87010
2.282	1.400	19.86900	.45863	.06648	.00125	-.00897	-.00264	-.00104	.40873	.21840	1.87150
2.280	1.600	19.87000	.45842	.06639	.00103	-.01097	-.00285	-.00138	.40856	.21825	1.87200
2.280	1.800	19.87800	.45733	.06631	.00096	-.01283	-.00297	-.00170	.40753	.21786	1.87060
2.282	2.000	19.88300	.45862	.06622	.00071	-.01484	-.00306	-.00209	.40876	.21825	1.87290
2.286	2.200	19.88600	.45834	.06613	.00046	-.01704	-.00316	-.00247	.40852	.21809	1.87310
2.285	2.400	19.89500	.45883	.06552	-.00069	-.01832	-.00380	-.00245	.40914	.21775	1.87890
2.284	2.571	19.89100	.45872	.06551	-.00085	-.02016	-.00390	-.00278	.40906	.21767	1.87930
	GRADIENT	.02411	.00046	.00025	.00012	-.00672	-.00223	-.00094	.00026	.00056	-.00361

OA257 (LARC 20-M6-6559) OV102 (R7E052) (10 JUL 81)

REFERENCE DATA

SREF = 2690.0000 SQ.FT. XMRP = 1076.6800 IN. XO
LREF = 474.8100 INCHES YMRP = .0000 IN. YO
BREF = 936.6800 INCHES ZMRP = 375.0000 IN. ZO
SCALE = .0100

PARAMETRIC DATA

ALPHA = 20.000 PHI = .000
SPDBRK = 86.600 AILRON = .000
YP = 1.000 1S = 1.000
ELEVON = .000 MACH = 6.000
S-MODE = 2.000 S-DIR = 1.000

RUN NO. 106/ 0 RN/L = 7.48 GRADIENT INTERVAL = -.60/ .60

RN/L	BETA	ALPHA	CN	CA	CLM	CY	CYN	CBL	CL	CD	L/D
7.507	-4.435	19.20300	.43631	.06594	-.00076	.03932	.00383	.00691	.39034	.20578	1.89690
7.513	-4.300	19.21600	.43691	.06587	-.00067	.03798	.00372	.00671	.39088	.20600	1.89750
7.505	-4.100	19.21300	.43694	.06576	-.00061	.03602	.00356	.00639	.39096	.20588	1.89890
7.511	-3.900	19.22000	.43721	.06561	-.00042	.03393	.00345	.00606	.39124	.20588	1.90030
7.521	-3.700	19.22400	.43724	.06562	-.00012	.03190	.00334	.00572	.39125	.20593	1.90000
7.520	-3.500	19.23000	.43725	.06556	.00007	.02972	.00325	.00536	.39127	.20591	1.90020
7.526	-3.300	19.23500	.43756	.06550	.00026	.02777	.00322	.00499	.39155	.20599	1.90080
7.535	-3.100	19.24100	.43719	.06551	.00043	.02556	.00320	.00460	.39118	.20593	1.89960
7.517	-2.900	19.24200	.43732	.06558	.00068	.02346	.00317	.00419	.39128	.20604	1.89900
7.498	-2.700	19.24400	.43719	.06556	.00093	.02143	.00314	.00382	.39115	.20598	1.89890
7.485	-2.500	19.24600	.43730	.06571	.00121	.01926	.00305	.00344	.39121	.20618	1.89740
7.488	-2.300	19.25600	.43705	.06583	.00147	.01720	.00295	.00306	.39088	.20628	1.89490
7.484	-2.100	19.25800	.43724	.06594	.00171	.01538	.00280	.00272	.39102	.20646	1.89390
7.483	-1.900	19.26700	.43734	.06595	.00189	.01357	.00257	.00241	.39108	.20657	1.89320
7.501	-1.700	19.27100	.43741	.06595	.00197	.01179	.00229	.00212	.39114	.20661	1.89310
7.494	-1.500	19.27600	.43750	.06591	.00217	.01030	.00199	.00188	.39122	.20664	1.89320
7.499	-1.300	19.28100	.43746	.06592	.00230	.00873	.00165	.00162	.39116	.20667	1.89260
7.498	-1.100	19.28900	.43765	.06587	.00241	.00711	.00133	.00138	.39133	.20674	1.89280
7.488	-.900	19.29100	.43809	.06582	.00244	.00556	.00102	.00112	.39175	.20686	1.89380
7.467	-.700	19.29500	.43789	.06575	.00243	.00398	.00073	.00085	.39157	.20675	1.89390
7.478	-.500	19.29800	.43800	.06571	.00238	.00231	.00050	.00055	.39168	.20676	1.89430
7.479	-.300	19.31000	.43852	.06568	.00237	.00049	.00027	.00024	.39213	.20700	1.89440
7.484	-.100	19.31100	.43862	.06571	.00235	-.00116	.00005	-.00008	.39221	.20706	1.89420
7.469	.100	19.31600	.43864	.06574	.00238	-.00302	-.00019	-.00037	.39220	.20713	1.89350
7.475	.300	19.31800	.43892	.06584	.00233	-.00453	-.00046	-.00063	.39242	.20734	1.89270
7.475	.500	19.33200	.43905	.06587	.00239	-.00629	-.00077	-.00090	.39249	.20750	1.89150
7.462	.700	19.32800	.43905	.06588	.00229	-.00777	-.00107	-.00116	.39250	.20748	1.89170
7.469	.900	19.33900	.43952	.06579	.00219	-.00937	-.00139	-.00141	.39294	.20763	1.89250
7.469	1.100	19.33900	.43949	.06585	.00203	-.01105	-.00169	-.00169	.39289	.20768	1.89180
7.467	1.300	19.34600	.43974	.06569	.00193	-.01262	-.00196	-.00196	.39315	.20766	1.89320
7.467	1.500	19.34500	.43991	.06569	.00173	-.01446	-.00219	-.00225	.39331	.20770	1.89370
7.475	1.700	19.35800	.43993	.06558	.00166	-.01632	-.00237	-.00256	.39332	.20770	1.89370
7.475	1.900	19.35700	.44024	.06553	.00145	-.01818	-.00252	-.00290	.39363	.20775	1.89480
7.478	2.100	19.36600	.44040	.06539	.00123	-.02036	-.00266	-.00326	.39379	.20773	1.89570
7.471	2.300	19.36700	.44082	.06537	.00096	-.02238	-.00273	-.00365	.39420	.20785	1.89650
7.465	2.500	19.37300	.44104	.06531	.00077	-.02442	-.00275	-.00404	.39440	.20791	1.89700
7.465	2.700	19.37600	.44136	.06536	.00054	-.02665	-.00279	-.00445	.39467	.20808	1.89670
7.488	2.900	19.38400	.44154	.06537	.00036	-.02874	-.00284	-.00482	.39481	.20821	1.89620
7.475	3.100	19.38400	.44177	.06542	.00009	-.03085	-.00291	-.00520	.39501	.20833	1.89600
7.459	3.300	19.39000	.44177	.06544	-.00005	-.03288	-.00301	-.00557	.39499	.20839	1.89540
7.452	3.500	19.39200	.44189	.06553	-.00026	-.03484	-.00312	-.00591	.39506	.20853	1.89450
7.414	3.700	19.39000	.44241	.06566	-.00039	-.03691	-.00329	-.00622	.39551	.20882	1.89410

OA257 (LARC 20-M6-6559) OV102 (R7E052) (10 JUL 81)

REFERENCE DATA

SREF = 2690.0000 SQ.FT. XMRP = 1076.6800 IN. XO
LREF = 474.8100 INCHES YMRP = .0000 IN. YO
BREF = 936.6800 INCHES ZMRP = 375.0000 IN. ZO
SCALE = .0100

PARAMETRIC DATA

ALPHA = 20.000 PHI = .000
SPDBRK = 86.600 AILRON = .000
YP = 1.000 1S = 1.000
ELEVON = .000 MACH = 6.000
S-MODE = 2.000 S-DIR = 1.000

RUN NO. 106/ 0 RN/L = 7.48 GRADIENT INTERVAL = -.60/ .60

RN/L	BETA	ALPHA	CN	CA	CLM	CY	CYN	CBL	CL	CD	L/D
7.400	3.838	19.38800	.44220	.06567	-.00043	-.03819	-.00340	-.00643	.39532	.20874	1.89390
	GRADIENT	.02843	.00092	.00019	-.00001	-.00856	-.00125	-.00144	.00070	.00068	-.00283

OA257 (LARC 20-M6-6559) OV102 (R7E052) (10 JUL 81)

REFERENCE DATA

SREF = 2690.0000 SQ.FT. XMRP = 1076.6800 IN. XO
LREF = 474.8100 INCHES YMRP = .0000 IN. YO
BREF = 936.6800 INCHES ZMRP = 375.0000 IN. ZO
SCALE = .0100

PARAMETRIC DATA

ALPHA = 20.000 PHI = .000
SPDBRK = 86.600 AILRON = .000
YP = 1.000 1S = 1.000
ELEVON = .000 MACH = 6.000
S-MODE = 2.000 S-DIR = 1.000

RUN NO. 303/ 0 RN/L = 8.68 GRADIENT INTERVAL = -.60/ .60

RN/L	BETA	ALPHA	CN	CA	CLM	CY	CYN	CBL	CL	CD	L/D
8.792	-4.331	19.13200	.43877	.06586	-.00083	.04482	.00443	.00774	.39294	.20603	1.90720
8.793	-4.200	19.13900	.43875	.06570	-.00065	.04338	.00430	.00753	.39295	.20592	1.90830
8.801	-4.000	19.13800	.43870	.06560	-.00057	.04127	.00408	.00724	.39295	.20579	1.90950
8.797	-3.800	19.14100	.43856	.06551	-.00045	.03927	.00387	.00693	.39283	.20568	1.90990
8.761	-3.600	19.14400	.43858	.06538	-.00037	.03716	.00367	.00660	.39288	.20560	1.91090
8.728	-3.400	19.14700	.43872	.06535	-.00033	.03503	.00353	.00624	.39302	.20564	1.91120
8.711	-3.200	19.15200	.43912	.06531	-.00027	.03270	.00342	.00586	.39339	.20576	1.91190
8.698	-3.000	19.15400	.43898	.06533	-.00010	.03049	.00332	.00547	.39324	.20575	1.91130
8.683	-2.800	19.15800	.43938	.06546	.00021	.02825	.00325	.00507	.39357	.20603	1.91030
8.666	-2.600	19.16200	.43930	.06545	.00041	.02597	.00321	.00465	.39348	.20602	1.90990
8.665	-2.400	19.16600	.43926	.06556	.00062	.02369	.00317	.00422	.39339	.20615	1.90830
8.651	-2.200	19.17300	.43921	.06562	.00080	.02131	.00316	.00377	.39330	.20622	1.90720
8.624	-2.000	19.17900	.43939	.06572	.00100	.01913	.00313	.00336	.39341	.20642	1.90590
8.615	-1.800	19.18200	.43946	.06581	.00122	.01700	.00303	.00296	.39344	.20654	1.90490
8.607	-1.600	19.18600	.44019	.06585	.00146	.01484	.00281	.00259	.39409	.20686	1.90520
8.608	-1.400	19.19300	.43964	.06587	.00170	.01302	.00253	.00229	.39354	.20674	1.90360
8.600	-1.200	19.19800	.43978	.06595	.00179	.01120	.00219	.00202	.39364	.20689	1.90260
8.606	-1.000	19.20100	.43970	.06602	.00192	.00967	.00183	.00177	.39353	.20696	1.90150
8.616	-.800	19.20800	.43963	.06598	.00198	.00786	.00141	.00150	.39345	.20694	1.90130
8.611	-.600	19.21300	.43993	.06595	.00197	.00623	.00107	.00123	.39372	.20704	1.90160
8.619	-.400	19.21800	.44026	.06596	.00194	.00430	.00077	.00090	.39402	.20720	1.90160
8.613	-.200	19.22100	.44049	.06586	.00197	.00239	.00053	.00056	.39425	.20721	1.90270
8.618	.000	19.22900	.44078	.06578	.00202	.00046	.00032	.00020	.39452	.20728	1.90330
8.617	.200	19.23300	.44070	.06578	.00197	-.00147	.00010	-.00014	.39443	.20728	1.90290
8.631	.400	19.23700	.44085	.06583	.00196	-.00341	-.00017	-.00046	.39455	.20740	1.90230
8.627	.600	19.24100	.44099	.06588	.00190	-.00518	-.00048	-.00075	.39465	.20753	1.90160
8.635	.800	19.24900	.44124	.06588	.00172	-.00693	-.00084	-.00102	.39486	.20766	1.90140
8.641	1.000	19.25400	.44163	.06587	.00156	-.00864	-.00123	-.00129	.39521	.20782	1.90170
8.640	1.200	19.25600	.44213	.06582	.00130	-.01049	-.00161	-.00156	.39569	.20795	1.90280
8.667	1.400	19.26600	.44281	.06589	.00097	-.01209	-.00193	-.00184	.39627	.20831	1.90230
8.671	1.600	19.26900	.44322	.06593	.00065	-.01386	-.00226	-.00210	.39663	.20850	1.90230
8.700	1.800	19.27200	.44331	.06591	.00033	-.01589	-.00254	-.00241	.39672	.20853	1.90240
8.705	2.000	19.27700	.44365	.06584	.00007	-.01787	-.00270	-.00277	.39704	.20861	1.90320
8.701	2.200	19.28700	.44411	.06576	-.00017	-.01999	-.00280	-.00317	.39747	.20876	1.90390
8.708	2.400	19.29300	.44435	.06577	-.00030	-.02243	-.00287	-.00359	.39767	.20888	1.90380
8.716	2.600	19.29500	.44457	.06575	-.00033	-.02471	-.00291	-.00402	.39787	.20896	1.90410
8.716	2.800	19.30100	.44478	.06582	-.00030	-.02706	-.00294	-.00446	.39803	.20913	1.90330
8.722	3.000	19.30800	.44498	.06593	-.00024	-.02941	-.00301	-.00486	.39815	.20935	1.90180
8.744	3.200	19.31100	.44485	.06601	-.00037	-.03164	-.00310	-.00526	.39800	.20940	1.90060
8.741	3.400	19.31500	.44504	.06608	-.00049	-.03371	-.00323	-.00562	.39814	.20956	1.89980
8.750	3.600	19.32300	.44528	.06620	-.00057	-.03585	-.00340	-.00598	.39829	.20982	1.89830
	GRADIENT	.02393	.00082	-.00009	-.00003	-.00955	-.00124	-.00168	.00072	.00035	.00029

OA257 (LARC 20-M6-6559) OV102 (R7E152) (10 JUL 81)

REFERENCE DATA

SREF = 2690.0000 SQ.FT. XMRP = 1076.6800 IN. XO
LREF = 474.8100 INCHES YMRP = .0000 IN. YO
BREF = 936.6800 INCHES ZMRP = 375.0000 IN. ZO
SCALE = .0100

PARAMETRIC DATA

ALPHA = 20.000 PHI = .000
SPDBRK = 86.600 AILRON = .000
YP = 1.000 1S = 1.000
ELEVON = .000 MACH = 6.000
S-MODE = 2.000 S-DIR = 1.000

RUN NO. 2146/ O RN/L = 2.28 GRADIENT INTERVAL = -.60/ .60

RN/L	BETA	ALPHA	CN	CA	CLM	CY	CYN	CBL	CL	CD	L/D
2.272	-2.300	19.77300	.45524	.06529	-.00114	.01924	.00422	.00290	.40631	.21544	1.88590
2.269	-2.100	19.77600	.45407	.06519	-.00111	.01713	.00425	.00247	.40524	.21498	1.88500
2.267	-1.900	19.78200	.45442	.06529	-.00097	.01502	.00418	.00206	.40551	.21524	1.88400
2.267	-1.700	19.78700	.45516	.06534	-.00097	.01306	.00413	.00166	.40617	.21556	1.88420
2.270	-1.500	19.79300	.45481	.06541	-.00087	.01115	.00396	.00134	.40579	.21555	1.88260
2.273	-1.300	19.79800	.45636	.06548	-.00080	.00933	.00379	.00103	.40721	.21618	1.88360
2.277	-1.100	19.80300	.45518	.06560	-.00056	.00760	.00348	.00077	.40604	.21592	1.88050
2.278	-.900	19.80900	.45608	.06557	-.00024	.00613	.00316	.00055	.40687	.21625	1.88150
2.282	-.700	19.81300	.45668	.06631	.00092	.00491	.00243	.00060	.40717	.21718	1.87480
2.281	-.500	19.82200	.45630	.06701	.00222	.00413	.00164	.00066	.40654	.21778	1.86680
2.279	-.300	19.82700	.45673	.06719	.00227	.00256	.00118	.00047	.40687	.21812	1.86540
2.282	-.100	19.82900	.45692	.06740	.00243	.00119	.00072	.00029	.40697	.21840	1.86340
2.279	.100	19.83900	.45578	.06740	.00250	-.00012	.00030	.00010	.40586	.21808	1.86100
2.275	.300	19.84000	.45686	.06736	.00237	-.00138	-.00017	-.00007	.40688	.21842	1.86280
2.272	.500	19.84900	.45698	.06720	.00232	-.00274	-.00064	-.00025	.40701	.21837	1.86390
2.274	.700	19.85200	.45762	.06722	.00219	-.00395	-.00103	-.00045	.40759	.21863	1.86430
2.275	.900	19.85200	.45623	.06690	.00180	-.00531	-.00157	-.00058	.40640	.21785	1.86540
2.279	1.100	19.86500	.45739	.06655	.00158	-.00658	-.00225	-.00066	.40756	.21802	1.86940
2.283	1.300	19.86200	.45822	.06664	.00132	-.00799	-.00254	-.00089	.40832	.21836	1.86990
2.280	1.500	19.87000	.45878	.06640	.00118	-.01005	-.00276	-.00121	.40890	.21838	1.87240
2.280	1.700	19.87600	.45794	.06633	.00098	-.01182	-.00292	-.00154	.40811	.21807	1.87140
2.282	1.900	19.87700	.45749	.06635	.00089	-.01389	-.00301	-.00191	.40768	.21795	1.87050
2.283	2.100	19.88600	.45834	.06613	.00070	-.01592	-.00311	-.00229	.40852	.21809	1.87320
2.286	2.300	19.89100	.45834	.06595	.00013	-.01784	-.00328	-.00257	.40856	.21795	1.87450
2.283	2.500	19.89400	.45903	.06556	-.00084	-.01936	-.00390	-.00262	.40933	.21785	1.87890
	GRADIENT	.02629	.00038	.00021	.00012	-.00678	-.00227	-.00091	.00018	.00050	-.00353

OA257 (LARC 20-M6-6559) OV102 (R7E152) (10 JUL 81)

REFERENCE DATA

SREF = 2690.0000 SQ.FT. XMRP = 1076.6800 IN. XO
LREF = 474.8100 INCHES YMRP = .0000 IN. YO
BREF = 936.6800 INCHES ZMRP = 375.0000 IN. ZO
SCALE = .0100

PARAMETRIC DATA

ALPHA = 20.000 PHI = .000
SPDBRK = 86.600 AILRON = .000
YP = 1.000 1S = 1.000
ELEVON = .000 MACH = 6.000
S-MODE = 2.000 S-DIR = 1.000

RUN NO. 2106/ 0 RN/L = 7.48 GRADIENT INTERVAL = -.60/ .60

RN/L	BETA	ALPHA	CN	CA	CLM	CY	CYN	CBL	CL	CD	L/D
7.509	-4.400	19.20700	.43681	.06597	-.00078	.03896	.00379	.00686	.39079	.20600	1.89710
7.507	-4.200	19.21400	.43686	.06579	-.00062	.03700	.00363	.00656	.39088	.20589	1.89850
7.505	-4.000	19.21500	.43717	.06570	-.00052	.03500	.00350	.00623	.39119	.20592	1.89970
7.513	-3.800	19.22100	.43708	.06563	-.00024	.03290	.00338	.00589	.39111	.20587	1.89980
7.527	-3.600	19.22700	.43733	.06562	-.00001	.03089	.00330	.00554	.39133	.20597	1.89990
7.521	-3.400	19.23200	.43719	.06554	.00019	.02869	.00324	.00517	.39120	.20589	1.90010
7.532	-3.200	19.23700	.43706	.06553	.00032	.02668	.00322	.00478	.39106	.20587	1.89950
7.529	-3.000	19.24200	.43726	.06554	.00055	.02451	.00318	.00440	.39124	.20598	1.89940
7.507	-2.800	19.24300	.43717	.06558	.00078	.02241	.00315	.00400	.39113	.20600	1.89870
7.487	-2.600	19.24500	.43725	.06564	.00109	.02030	.00309	.00363	.39117	.20610	1.89800
7.490	-2.400	19.25100	.43704	.06579	.00132	.01834	.00302	.00325	.39091	.20621	1.89570
7.483	-2.200	19.25600	.43722	.06590	.00162	.01624	.00289	.00288	.39102	.20640	1.89450
7.484	-2.000	19.26400	.43744	.06597	.00177	.01451	.00270	.00257	.39118	.20660	1.89340
7.490	-1.800	19.26800	.43718	.06596	.00191	.01264	.00244	.00226	.39093	.20653	1.89280
7.503	-1.600	19.27600	.43776	.06593	.00204	.01103	.00214	.00200	.39146	.20675	1.89340
7.497	-1.400	19.27900	.43750	.06589	.00229	.00949	.00182	.00175	.39121	.20664	1.89320
7.496	-1.200	19.28500	.43778	.06593	.00236	.00794	.00150	.00150	.39144	.20681	1.89280
7.491	-1.000	19.28800	.43753	.06584	.00242	.00630	.00116	.00125	.39123	.20666	1.89300
7.477	-.800	19.29500	.43802	.06580	.00246	.00477	.00087	.00099	.39168	.20684	1.89370
7.467	-.600	19.29700	.43795	.06570	.00244	.00315	.00060	.00071	.39164	.20674	1.89440
7.476	-.400	19.30400	.43833	.06570	.00239	.00136	.00037	.00040	.39197	.20690	1.89440
7.485	-.200	19.30900	.43861	.06568	.00239	-.00033	.00016	.00008	.39222	.20701	1.89470
7.479	.000	19.31500	.43871	.06571	.00233	-.00210	-.00008	-.00022	.39228	.20712	1.89400
7.466	.200	19.31600	.43879	.06580	.00237	-.00387	-.00033	-.00051	.39232	.20724	1.89310
7.480	.400	19.32800	.43906	.06588	.00237	-.00531	-.00059	-.00076	.39251	.20748	1.89180
7.466	.600	19.32800	.43916	.06588	.00231	-.00706	-.00093	-.00103	.39260	.20751	1.89200
7.468	.800	19.33700	.43937	.06583	.00221	-.00852	-.00121	-.00129	.39279	.20760	1.89200
7.466	1.000	19.33600	.43953	.06580	.00213	-.01022	-.00155	-.00155	.39295	.20762	1.89260
7.473	1.200	19.34800	.43990	.06577	.00198	-.01183	-.00182	-.00183	.39327	.20779	1.89260
7.464	1.400	19.34300	.43961	.06570	.00185	-.01352	-.00208	-.00209	.39303	.20760	1.89320
7.473	1.600	19.35300	.43997	.06559	.00173	-.01537	-.00229	-.00240	.39338	.20768	1.89410
7.482	1.800	19.35700	.44023	.06557	.00156	-.01730	-.00246	-.00272	.39361	.20778	1.89430
7.471	2.000	19.36400	.44031	.06546	.00133	-.01919	-.00258	-.00307	.39370	.20775	1.89510
7.479	2.200	19.36500	.44063	.06538	.00109	-.02132	-.00268	-.00345	.39402	.20778	1.89630
7.469	2.400	19.37400	.44094	.06529	.00086	-.02341	-.00273	-.00384	.39431	.20786	1.89700
7.466	2.600	19.37200	.44119	.06534	.00069	-.02553	-.00277	-.00426	.39454	.20798	1.89700
7.475	2.800	19.38300	.44158	.06537	.00046	-.02772	-.00281	-.00463	.39486	.20822	1.89630
7.490	3.000	19.38400	.44192	.06537	.00022	-.02981	-.00288	-.00501	.39518	.20833	1.89680
7.468	3.200	19.39100	.44191	.06544	.00003	-.03185	-.00295	-.00538	.39512	.20845	1.89550
7.456	3.400	19.38800	.44185	.06550	-.00015	-.03379	-.00306	-.00574	.39505	.20846	1.89510
7.445	3.600	19.39600	.44222	.06557	-.00031	-.03591	-.00319	-.00608	.39534	.20871	1.89420
7.403	3.800	19.40000	.44266	.06569	-.00044	-.03784	-.00336	-.00637	.39571	.20899	1.89340
	GRADIENT	.02643	.00094	.00018	-.00008	-.00849	-.00125	-.00145	.00073	.00066	-.00250

OA257 (LARC 20-M6-6559) OV102 (R7E152) (10 JUL 81)

REFERENCE DATA

SREF = 2690.0000 SQ.FT. XMRP = 1076.6800 IN. XO
LREF = 474.8100 INCHES YMRP = .0000 IN. YO
BREF = 936.6800 INCHES ZMRP = 375.0000 IN. ZO
SCALE = .0100

PARAMETRIC DATA

ALPHA = 20.000 PHI = .000
SPDBRK = 86.600 AILRON = .000
YP = 1.000 1S = 1.000
ELEVON = .000 MACH = 6.000
S-MODE = 2.000 S-DIR = 1.000

RUN NO. 2303/ O RN/L = 8.68 GRADIENT INTERVAL = -.60/ .60

RN/L	BETA	ALPHA	CN	CA	CLM	CY	CYN	CBL	CL	CD	L/D
8.792	-4.300	19.13600	.43879	.06583	-.00079	.04450	.00441	.00769	.39297	.20603	1.90730
8.794	-4.100	19.14100	.43881	.06563	-.00059	.04230	.00419	.00738	.39304	.20588	1.90910
8.808	-3.900	19.13900	.43867	.06554	-.00049	.04030	.00398	.00708	.39293	.20574	1.90980
8.776	-3.700	19.14200	.43860	.06546	-.00038	.03826	.00376	.00677	.39289	.20566	1.91040
8.743	-3.500	19.14600	.43866	.06536	-.00036	.03612	.00360	.00642	.39296	.20561	1.91120
8.720	-3.300	19.15000	.43892	.06533	-.00028	.03386	.00347	.00604	.39320	.20570	1.91150
8.700	-3.100	19.15200	.43917	.06534	-.00019	.03158	.00336	.00567	.39343	.20581	1.91160
8.696	-2.900	19.15700	.43932	.06536	.00006	.02941	.00329	.00527	.39354	.20591	1.91130
8.674	-2.700	19.16100	.43946	.06544	.00035	.02707	.00323	.00485	.39364	.20605	1.91030
8.665	-2.500	19.16300	.43916	.06551	.00047	.02489	.00320	.00444	.39332	.20603	1.90900
8.659	-2.300	19.16900	.43924	.06561	.00073	.02252	.00317	.00400	.39334	.20620	1.90750
8.632	-2.100	19.17500	.43925	.06564	.00089	.02014	.00314	.00357	.39332	.20627	1.90680
8.615	-1.900	19.18100	.43938	.06576	.00114	.01806	.00309	.00316	.39338	.20647	1.90530
8.618	-1.700	19.18300	.43952	.06582	.00132	.01590	.00293	.00276	.39349	.20659	1.90470
8.606	-1.500	19.19000	.43964	.06588	.00157	.01384	.00268	.00244	.39355	.20674	1.90360
8.597	-1.300	19.19500	.43969	.06588	.00177	.01211	.00237	.00215	.39359	.20678	1.90340
8.601	-1.100	19.19600	.43964	.06600	.00185	.01047	.00200	.00188	.39350	.20689	1.90200
8.612	-.900	19.20400	.43969	.06600	.00195	.00874	.00161	.00163	.39351	.20695	1.90150
8.618	-.700	19.21100	.43978	.06597	.00194	.00704	.00122	.00137	.39359	.20701	1.90130
8.604	-.500	19.21400	.44011	.06600	.00203	.00527	.00092	.00107	.39387	.20717	1.90120
8.618	-.300	19.22000	.44033	.06593	.00194	.00343	.00066	.00074	.39409	.20720	1.90190
8.619	-.100	19.22600	.44059	.06581	.00198	.00141	.00042	.00038	.39435	.20723	1.90290
8.611	.100	19.23100	.44084	.06579	.00204	-.00048	.00023	.00003	.39457	.20732	1.90320
8.628	.300	19.23400	.44089	.06579	.00194	-.00244	-.00002	-.00030	.39461	.20736	1.90300
8.623	.500	19.23800	.44088	.06585	.00190	-.00433	-.00033	-.00061	.39457	.20744	1.90200
8.637	.700	19.24600	.44099	.06585	.00180	-.00600	-.00064	-.00089	.39464	.20753	1.90160
8.636	.900	19.25100	.44148	.06588	.00167	-.00783	-.00104	-.00116	.39507	.20775	1.90160
8.645	1.100	19.25500	.44183	.06584	.00146	-.00955	-.00141	-.00143	.39540	.20786	1.90230
8.657	1.300	19.26300	.44244	.06584	.00114	-.01128	-.00176	-.00170	.39595	.20812	1.90250
8.659	1.500	19.26600	.44295	.06593	.00084	-.01301	-.00210	-.00197	.39639	.20839	1.90210
8.696	1.700	19.27000	.44324	.06591	.00050	-.01488	-.00243	-.00225	.39665	.20850	1.90240
8.694	1.900	19.27400	.44345	.06587	.00017	-.01684	-.00261	-.00259	.39685	.20855	1.90290
8.708	2.100	19.28300	.44376	.06577	-.00004	-.01897	-.00277	-.00296	.39715	.20863	1.90360
8.710	2.300	19.29000	.44420	.06577	-.00022	-.02114	-.00283	-.00338	.39754	.20882	1.90370
8.717	2.500	19.29300	.44454	.06575	-.00037	-.02365	-.00290	-.00381	.39785	.20893	1.90420
8.716	2.700	19.30100	.44480	.06575	-.00036	-.02587	-.00293	-.00424	.39807	.20908	1.90390
8.710	2.900	19.30600	.44483	.06590	-.00028	-.02822	-.00296	-.00467	.39803	.20926	1.90210
8.736	3.100	19.30900	.44487	.06595	-.00036	-.03062	-.00306	-.00507	.39804	.20934	1.90140
8.746	3.300	19.31200	.44496	.06604	-.00041	-.03254	-.00315	-.00543	.39809	.20948	1.90040
8.745	3.500	19.32000	.44510	.06615	-.00053	-.03485	-.00331	-.00581	.39815	.20969	1.89880
8.751	3.604	19.32300	.44529	.06621	-.00057	-.03589	-.00340	-.00599	.39830	.20982	1.89820
	GRADIENT	.02386	.00083	-.00017	-.00008	-.00964	-.00121	-.00170	.00075	.00027	.00109

OA257 (LARC 20-M6-6559) OV102 (R7E053) (10 JUL 81)

REFERENCE DATA

SREF = 2690.0000 SQ.FT. XMRP = 1076.6800 IN. XO
LREF = 474.8100 INCHES YMRP = .0000 IN. YO
BREF = 936.6800 INCHES ZMRP = 375.0000 IN. ZO
SCALE = .0100

PARAMETRIC DATA

ALPHA = 20.000 PHI = .000
SPDBRK = 86.600 AILRON = .000
YP = 1.000 1S = 1.000
ELEVON = .000 MACH = 6.000
S-MODE = 2.000 S-DIR = 1.000

RUN NO. 177/ 0 RN/L = 4.45 GRADIENT INTERVAL = -.60/ .60

RN/L	BETA	ALPHA	CN	CA	CLM	CY	CYN	CBL	CL	CD	L/D
4.491	-3.288	19.58900	.44229	.06448	.00065	.03060	.00297	.00550	.39508	.20904	1.89000
4.498	-3.100	19.59700	.44275	.06451	.00080	.02851	.00293	.00512	.39547	.20927	1.88980
4.492	-2.900	19.60200	.44274	.06447	.00088	.02655	.00288	.00472	.39545	.20927	1.88970
4.486	-2.700	19.60500	.44335	.06449	.00098	.02432	.00283	.00435	.39601	.20951	1.89020
4.485	-2.500	19.60700	.44335	.06458	.00110	.02231	.00282	.00396	.39598	.20961	1.88910
4.484	-2.300	19.61800	.44327	.06471	.00126	.02010	.00281	.00353	.39582	.20978	1.88680
4.483	-2.100	19.61800	.44360	.06484	.00132	.01792	.00276	.00315	.39608	.21001	1.88600
4.480	-1.900	19.62700	.44347	.06501	.00141	.01612	.00269	.00278	.39587	.21019	1.88340
4.483	-1.700	19.62900	.44474	.06523	.00160	.01422	.00257	.00245	.39698	.21084	1.88290
4.477	-1.500	19.63200	.44381	.06539	.00157	.01241	.00238	.00214	.39604	.21070	1.87970
4.470	-1.300	19.64000	.44439	.06551	.00164	.01050	.00214	.00185	.39652	.21106	1.87870
4.470	-1.100	19.64200	.44468	.06562	.00162	.00885	.00193	.00155	.39675	.21128	1.87790
4.468	-.900	19.65500	.44453	.06562	.00166	.00716	.00168	.00131	.39656	.21131	1.87670
4.476	-.700	19.65400	.44438	.06572	.00167	.00543	.00138	.00103	.39639	.21135	1.87550
4.463	-.500	19.66100	.44507	.06573	.00171	.00408	.00108	.00080	.39700	.21164	1.87580
4.454	-.300	19.66600	.44490	.06562	.00168	.00231	.00076	.00055	.39687	.21151	1.87630
4.452	-.100	19.66900	.44568	.06555	.00165	.00097	.00041	.00033	.39761	.21174	1.87780
4.447	.100	19.67900	.44555	.06546	.00166	-.00060	.00009	.00009	.39749	.21168	1.87780
4.446	.300	19.68000	.44599	.06546	.00173	-.00233	-.00027	-.00016	.39790	.21183	1.87840
4.441	.500	19.68900	.44585	.06544	.00176	-.00359	-.00062	-.00038	.39774	.21183	1.87760
4.438	.700	19.69000	.44609	.06535	.00170	-.00519	-.00099	-.00061	.39798	.21183	1.87880
4.437	.900	19.69500	.44581	.06536	.00162	-.00668	-.00131	-.00085	.39770	.21177	1.87800
4.426	1.100	19.70200	.44619	.06526	.00161	-.00840	-.00158	-.00110	.39806	.21186	1.87890
4.424	1.300	19.70200	.44621	.06523	.00144	-.00988	-.00185	-.00133	.39810	.21184	1.87920
4.422	1.500	19.71100	.44621	.06496	.00132	-.01170	-.00223	-.00155	.39815	.21165	1.88110
4.417	1.700	19.71300	.44660	.06474	.00120	-.01329	-.00244	-.00182	.39859	.21158	1.88380
4.409	1.900	19.71900	.44659	.06467	.00109	-.01528	-.00264	-.00217	.39858	.21156	1.88400
4.403	2.100	19.72400	.44693	.06458	.00098	-.01718	-.00280	-.00250	.39891	.21162	1.88500
4.398	2.300	19.72900	.44715	.06458	.00092	-.01901	-.00291	-.00285	.39911	.21173	1.88500
4.392	2.500	19.73500	.44721	.06447	.00092	-.02138	-.00297	-.00326	.39917	.21170	1.88560
4.392	2.700	19.73600	.44695	.06444	.00072	-.02316	-.00300	-.00365	.39894	.21158	1.88550
4.391	2.900	19.74400	.44749	.06437	.00064	-.02553	-.00305	-.00405	.39944	.21175	1.88630
	GRADIENT	.02743	.00101	-.00028	.00006	-.00769	-.00170	-.00118	.00095	.00026	.00219

OA257 (LARC 20-M6-6559) OV102 (R7E153) (10 JUL 81)

REFERENCE DATA

SREF = 2690.0000 SQ.FT. XMRP = 1076.6800 IN. XO
LREF = 474.8100 INCHES YMRP = .0000 IN. YO
BREF = 936.6800 INCHES ZMRP = 375.0000 IN. ZO
SCALE = .0100

PARAMETRIC DATA

ALPHA = 20.000 PHI = .000
SPDBRK = 86.600 AILRON = .000
YP = 1.000 1S = 1.000
ELEVON = .000 MACH = 6.000
S-MODE = 2.000 S-DIR = 1.000

RUN NO. 2177/ 0 RN/L = 4.45 GRADIENT INTERVAL = -.60/ .60

RN/L	BETA	ALPHA	CN	CA	CLM	CY	CYN	CBL	CL	CD	L/D
4.496	-3.200	19.60000	.44271	.06445	.00079	.02958	.00296	.00531	.39544	.20922	1.89010
4.497	-3.000	19.59800	.44282	.06449	.00074	.02751	.00289	.00493	.39554	.20928	1.89000
4.488	-2.800	19.60600	.44302	.06444	.00097	.02545	.00285	.00453	.39571	.20936	1.89010
4.484	-2.600	19.60600	.44324	.06448	.00104	.02350	.00286	.00415	.39590	.20947	1.89000
4.485	-2.400	19.61400	.44342	.06463	.00119	.02113	.00281	.00374	.39599	.20973	1.88810
4.485	-2.200	19.61900	.44355	.06480	.00134	.01901	.00279	.00334	.39604	.20996	1.88620
4.480	-2.000	19.62100	.44332	.06495	.00129	.01699	.00274	.00294	.39577	.21004	1.88430
4.481	-1.800	19.63200	.44364	.06509	.00151	.01522	.00264	.00261	.39598	.21036	1.88240
4.482	-1.600	19.62700	.44331	.06526	.00155	.01325	.00249	.00228	.39563	.21038	1.88060
4.472	-1.400	19.63900	.44371	.06544	.00161	.01144	.00227	.00198	.39590	.21076	1.87840
4.471	-1.200	19.64000	.44453	.06556	.00163	.00963	.00203	.00171	.39663	.21116	1.87840
4.467	-1.000	19.64600	.44519	.06555	.00163	.00810	.00181	.00142	.39723	.21142	1.87890
4.475	-.800	19.65400	.44491	.06566	.00171	.00613	.00151	.00116	.39690	.21148	1.87680
4.469	-.600	19.65600	.44485	.06575	.00167	.00490	.00124	.00091	.39681	.21155	1.87570
4.458	-.400	19.66600	.44527	.06566	.00170	.00307	.00092	.00067	.39720	.21168	1.87640
4.453	-.200	19.66500	.44479	.06557	.00162	.00154	.00057	.00044	.39678	.21143	1.87670
4.448	.000	19.67500	.44534	.06550	.00162	.00023	.00028	.00021	.39729	.21161	1.87750
4.449	.200	19.68100	.44642	.06545	.00174	-.00146	-.00010	-.00002	.39830	.21197	1.87900
4.441	.400	19.68300	.44587	.06547	.00175	-.00295	-.00045	-.00026	.39777	.21183	1.87780
4.442	.600	19.69000	.44550	.06538	.00174	-.00437	-.00080	-.00050	.39742	.21166	1.87760
4.437	.800	19.69200	.44628	.06541	.00165	-.00602	-.00118	-.00071	.39813	.21197	1.87830
4.433	1.000	19.70000	.44652	.06533	.00164	-.00747	-.00142	-.00098	.39836	.21203	1.87880
4.424	1.200	19.70100	.44562	.06529	.00154	-.00922	-.00171	-.00122	.39753	.21169	1.87780
4.424	1.400	19.70800	.44679	.06513	.00136	-.01069	-.00201	-.00144	.39866	.21198	1.88070
4.418	1.600	19.71300	.44677	.06486	.00127	-.01253	-.00233	-.00169	.39871	.21176	1.88290
4.414	1.800	19.71400	.44614	.06472	.00109	-.01419	-.00254	-.00197	.39815	.21142	1.88320
4.404	2.000	19.72400	.44736	.06461	.00105	-.01632	-.00274	-.00232	.39931	.21180	1.88530
4.402	2.200	19.72600	.44683	.06458	.00090	-.01812	-.00286	-.00267	.39882	.21160	1.88480
4.395	2.400	19.73500	.44714	.06454	.00095	-.02016	-.00293	-.00306	.39908	.21174	1.88480
4.392	2.600	19.73400	.44666	.06444	.00082	-.02230	-.00299	-.00346	.39867	.21147	1.88520
4.391	2.800	19.74100	.44731	.06448	.00074	-.02433	-.00302	-.00386	.39924	.21178	1.88520
4.390	2.942	19.74500	.44741	.06441	.00062	-.02607	-.00307	-.00413	.39935	.21178	1.88570
	GRADIENT	.02714	.00085	-.00028	.00007	-.00765	-.00170	-.00117	.00080	.00021	.00193

OA257 (LARC 20-M6-6559) OV102 (R7E054) (10 JUL 81)

REFERENCE DATA

SREF = 2690.0000 SQ.FT. XMRP = 1076.6800 IN. XO
LREF = 474.8100 INCHES YMRP = .0000 IN. YO
BREF = 936.6800 INCHES ZMRP = 375.0000 IN. ZO
SCALE = .0100

PARAMETRIC DATA

ALPHA = 20.000 PHI = .000
SPDBRK = 86.600 AILRON = .000
YP = 1.000 1S = 1.000
ELEVON = .000 MACH = 6.000
S-MODE = 2.000 S-DIR = 2.000

RUN NO. 1177/ 0 RN/L = 4.34 GRADIENT INTERVAL = -.60/ .60

RN/L	BETA	ALPHA	CN	CA	CLM	CY	CYN	CBL	CL	CD	L/D
4.302	-3.336	19.58800	.44463	.06469	.00072	.03108	.00303	.00556	.39721	.21002	1.89130
4.301	-3.200	19.58300	.44534	.06468	.00077	.02971	.00298	.00535	.39790	.21020	1.89290
4.297	-3.000	19.59200	.44416	.06465	.00093	.02754	.00291	.00494	.39676	.20984	1.89080
4.297	-2.800	19.59300	.44528	.06457	.00094	.02549	.00289	.00454	.39784	.21015	1.89310
4.300	-2.600	19.59900	.44521	.06463	.00109	.02341	.00287	.00415	.39774	.21023	1.89190
4.304	-2.400	19.60500	.44560	.06478	.00122	.02117	.00283	.00375	.39803	.21054	1.89050
4.303	-2.200	19.60800	.44566	.06490	.00142	.01906	.00282	.00336	.39804	.21069	1.88920
4.307	-2.000	19.61700	.44540	.06505	.00144	.01707	.00278	.00293	.39771	.21080	1.88660
4.310	-1.800	19.61800	.44558	.06513	.00155	.01506	.00264	.00258	.39785	.21095	1.88600
4.313	-1.600	19.62600	.44565	.06526	.00162	.01323	.00250	.00227	.39784	.21116	1.88410
4.318	-1.400	19.62700	.44617	.06551	.00161	.01150	.00227	.00196	.39824	.21157	1.88230
4.314	-1.200	19.63500	.44617	.06561	.00172	.00971	.00205	.00170	.39818	.21172	1.88070
4.321	-1.000	19.64000	.44607	.06573	.00166	.00799	.00179	.00143	.39802	.21184	1.87890
4.320	-.800	19.64300	.44640	.06574	.00168	.00623	.00152	.00116	.39833	.21197	1.87920
4.320	-.600	19.65300	.44623	.06570	.00176	.00483	.00122	.00093	.39813	.21195	1.87840
4.323	-.400	19.65300	.44707	.06571	.00167	.00320	.00089	.00067	.39893	.21224	1.87960
4.329	-.200	19.66200	.44730	.06564	.00173	.00167	.00055	.00042	.39913	.21232	1.87990
4.334	.000	19.66400	.44612	.06554	.00162	.00005	.00020	.00021	.39805	.21185	1.87900
4.340	.200	19.67000	.44678	.06542	.00173	-.00136	-.00015	-.00002	.39869	.21200	1.88060
4.344	.400	19.67400	.44680	.06545	.00164	-.00285	-.00052	-.00026	.39868	.21205	1.88010
4.343	.600	19.68400	.44728	.06543	.00174	-.00432	-.00088	-.00047	.39910	.21227	1.88020
4.352	.800	19.69000	.44686	.06536	.00167	-.00584	-.00120	-.00073	.39871	.21210	1.87980
4.364	1.000	19.69100	.44697	.06529	.00160	-.00752	-.00151	-.00096	.39883	.21208	1.88060
4.370	1.200	19.70200	.44719	.06516	.00157	-.00903	-.00178	-.00118	.39904	.21210	1.88130
4.383	1.400	19.70000	.44740	.06502	.00120	-.01073	-.00211	-.00143	.39929	.21203	1.88320
4.383	1.600	19.71000	.44777	.06481	.00114	-.01254	-.00243	-.00166	.39968	.21203	1.88500
4.383	1.800	19.71500	.44775	.06475	.00104	-.01430	-.00261	-.00200	.39966	.21200	1.88520
4.385	2.000	19.71900	.44731	.06457	.00107	-.01617	-.00276	-.00230	.39929	.21171	1.88610
4.382	2.200	19.72400	.44734	.06452	.00092	-.01812	-.00288	-.00267	.39932	.21171	1.88620
4.379	2.400	19.72800	.44680	.06445	.00097	-.02010	-.00297	-.00303	.39882	.21149	1.88580
4.377	2.600	19.73700	.44725	.06448	.00090	-.02218	-.00299	-.00345	.39920	.21173	1.88540
4.381	2.800	19.73300	.44744	.06445	.00071	-.02433	-.00303	-.00386	.39940	.21173	1.88630
4.392	2.942	19.73900	.44710	.06442	.00057	-.02587	-.00306	-.00412	.39907	.21163	1.88560
	GRADIENT	.02554	.00037	-.00028	-.00002	-.00760	-.00175	-.00116	.00035	.00005	.00127

OA257 (LARC 20-M6-6559) OV102 (R7E154) (10 JUL 81)

REFERENCE DATA

SREF = 2690.0000 SQ.FT. XMRP = 1076.6800 IN. XO
LREF = 474.8100 INCHES YMRP = .0000 IN. YO
BREF = 936.6800 INCHES ZMRP = 375.0000 IN. ZO
SCALE = .0100

PARAMETRIC DATA

ALPHA = 20.000 PHI = .000
SPDBRK = 86.600 AILRON = .000
YP = 1.000 1S = 1.000
ELEVON = .000 MACH = 6.000
S-MODE = 2.000 S-DIR = 2.000

RUN NO. 3177/ O RN/L = 4.34 GRADIENT INTERVAL = -.60/ .60

RN/L	BETA	ALPHA	CN	CA	CLM	CY	CYN	CBL	CL	CD	L/D
4.301	-3.300	19.58200	.44449	.06466	.00068	.03066	.00301	.00549	.39711	.20989	1.89200
4.296	-3.100	19.58500	.44503	.06463	.00083	.02870	.00296	.00515	.39762	.21006	1.89290
4.297	-2.900	19.59300	.44504	.06465	.00092	.02652	.00290	.00473	.39759	.21015	1.89200
4.298	-2.700	19.59600	.44549	.06461	.00107	.02438	.00288	.00434	.39802	.21027	1.89280
4.303	-2.500	19.60400	.44499	.06471	.00113	.02234	.00285	.00394	.39748	.21026	1.89050
4.304	-2.300	19.60500	.44599	.06484	.00131	.02011	.00281	.00354	.39838	.21073	1.89050
4.303	-2.100	19.61500	.44580	.06495	.00142	.01810	.00280	.00314	.39813	.21083	1.88830
4.310	-1.900	19.61400	.44513	.06510	.00148	.01604	.00271	.00275	.39745	.21074	1.88590
4.311	-1.700	19.62200	.44562	.06518	.00165	.01413	.00258	.00242	.39786	.21104	1.88520
4.316	-1.500	19.62900	.44618	.06539	.00163	.01231	.00240	.00211	.39829	.21147	1.88340
4.315	-1.300	19.62900	.44595	.06550	.00168	.01057	.00217	.00185	.39803	.21150	1.88190
4.319	-1.100	19.64200	.44642	.06564	.00173	.00882	.00192	.00156	.39838	.21188	1.88020
4.322	-.900	19.63900	.44663	.06573	.00164	.00711	.00165	.00129	.39855	.21202	1.87980
4.319	-.700	19.64900	.44644	.06572	.00178	.00555	.00137	.00105	.39834	.21202	1.87880
4.321	-.500	19.65100	.44607	.06577	.00166	.00398	.00104	.00080	.39797	.21195	1.87760
4.325	-.300	19.65900	.44728	.06565	.00169	.00240	.00073	.00055	.39912	.21230	1.88000
4.331	-.100	19.66300	.44706	.06558	.00167	.00087	.00036	.00032	.39892	.21219	1.88000
4.338	.100	19.66500	.44676	.06554	.00169	-.00065	.00004	.00010	.39865	.21207	1.87980
4.342	.300	19.67700	.44719	.06541	.00171	-.00211	-.00032	-.00014	.39905	.21217	1.88080
4.343	.500	19.67500	.44678	.06544	.00166	-.00362	-.00072	-.00036	.39866	.21204	1.88010
4.345	.700	19.68700	.44728	.06537	.00174	-.00503	-.00106	-.00061	.39911	.21223	1.88060
4.359	.900	19.68800	.44658	.06539	.00165	-.00661	-.00135	-.00084	.39844	.21202	1.87930
4.368	1.100	19.69600	.44698	.06526	.00159	-.00834	-.00166	-.00107	.39884	.21208	1.88060
4.374	1.300	19.70200	.44742	.06509	.00138	-.00987	-.00192	-.00132	.39929	.21212	1.88230
4.388	1.500	19.70700	.44795	.06489	.00117	-.01168	-.00229	-.00154	.39983	.21215	1.88470
4.380	1.700	19.71400	.44804	.06476	.00112	-.01334	-.00252	-.00182	.39994	.21210	1.88560
4.386	1.900	19.71200	.44664	.06468	.00104	-.01526	-.00269	-.00215	.39865	.21154	1.88450
4.384	2.100	19.72300	.44701	.06458	.00097	-.01714	-.00283	-.00247	.39899	.21165	1.88520
4.380	2.300	19.72300	.44703	.06451	.00085	-.01909	-.00293	-.00284	.39904	.21158	1.88600
4.378	2.500	19.73300	.44700	.06447	.00096	-.02116	-.00298	-.00323	.39898	.21160	1.88550
4.377	2.700	19.73400	.44758	.06444	.00076	-.02320	-.00300	-.00366	.39953	.21178	1.88650
4.386	2.900	19.74100	.44788	.06440	.00066	-.02556	-.00306	-.00404	.39981	.21189	1.88690
	GRADIENT	.02514	.00043	-.00035	.00001	-.00758	-.00176	-.00115	.00042	-.00001	.00210

REFERENCE DATA

SREF = 2690.0000 SQ.FT. XMRP = 1076.6800 IN. XO
LREF = 474.8100 INCHES YMRP = .0000 IN. YO
BREF = 936.6800 INCHES ZMRP = 375.0000 IN. ZO
SCALE = .0100

PARAMETRIC DATA

ALPHA = 22.500 PHI = .000
SPDBRK = 86.600 AILRON = .000
YP = 1.000 1S = 1.000
ELEVON = .000 MACH = 6.000
S-MODE = 2.000 S-DIR = 1.000

RUN NO. 145/ 0 RN/L = 2.27 GRADIENT INTERVAL = -.60/ .60

RN/L	BETA	ALPHA	CN	CA	CLM	CY	CYN	CBL	CL	CD	L/D
2.294	-2.451	22.16600	.54380	.06524	-.00059	.02075	.00411	.00358	.47900	.26559	1.80350
2.291	-2.300	22.17200	.54312	.06507	-.00065	.01923	.00407	.00326	.47840	.26523	1.80370
2.292	-2.100	22.17400	.54275	.06485	-.00069	.01724	.00397	.00286	.47813	.26490	1.80490
2.291	-1.900	22.18300	.54232	.06479	-.00069	.01523	.00382	.00247	.47772	.26476	1.80440
2.294	-1.700	22.18600	.54193	.06460	-.00097	.01341	.00365	.00210	.47741	.26446	1.80530
2.291	-1.500	22.19200	.54424	.06453	-.00106	.01168	.00341	.00177	.47955	.26532	1.80740
2.285	-1.300	22.19800	.54440	.06447	-.00110	.00981	.00321	.00144	.47969	.26538	1.80760
2.277	-1.100	22.19800	.54356	.06437	-.00122	.00811	.00291	.00116	.47895	.26496	1.80760
2.267	-.900	22.20900	.54482	.06469	-.00040	.00722	.00220	.00123	.47995	.26583	1.80550
2.264	-.700	22.21300	.54537	.06487	-.00043	.00545	.00194	.00094	.48037	.26623	1.80430
2.262	-.500	22.21500	.54380	.06492	-.00039	.00369	.00173	.00062	.47889	.26570	1.80240
2.258	-.300	22.22100	.54449	.06484	-.00043	.00203	.00145	.00031	.47953	.26594	1.80310
2.256	-.100	22.22700	.54510	.06501	-.00040	.00051	.00107	.00007	.48001	.26638	1.80190
2.255	.100	22.23800	.54567	.06510	-.00029	-.00050	.00045	-.00004	.48045	.26677	1.80100
2.258	.300	22.23800	.54441	.06511	-.00023	-.00138	-.00024	-.00017	.47928	.26631	1.79970
2.255	.500	22.24300	.54558	.06494	-.00033	-.00248	-.00082	-.00033	.48040	.26663	1.80180
2.254	.700	22.25100	.54521	.06490	-.00047	-.00361	-.00137	-.00046	.48003	.26652	1.80110
2.257	.900	22.25500	.54549	.06474	-.00055	-.00493	-.00189	-.00063	.48034	.26651	1.80240
2.257	1.100	22.26200	.54609	.06474	-.00035	-.00660	-.00221	-.00090	.48086	.26680	1.80230
2.254	1.300	22.26700	.54629	.06473	-.00057	-.00834	-.00244	-.00118	.48103	.26690	1.80230
2.257	1.500	22.27200	.54542	.06471	-.00058	-.01014	-.00269	-.00149	.48020	.26660	1.80120
2.256	1.700	22.28000	.54673	.06469	-.00058	-.01195	-.00289	-.00181	.48138	.26715	1.80190
2.250	1.900	22.27900	.54496	.06488	-.00059	-.01380	-.00306	-.00216	.47968	.26665	1.79890
2.247	2.100	22.29200	.54773	.06491	-.00065	-.01579	-.00329	-.00250	.48218	.26783	1.80030
2.251	2.300	22.29400	.54625	.06482	-.00087	-.01747	-.00345	-.00287	.48083	.26720	1.79950
2.255	2.500	22.29500	.54353	.06535	-.00075	-.01882	-.00404	-.00296	.47810	.26667	1.79280
	GRADIENT	.02886	.00132	.00014	.00014	-.00601	-.00264	-.00090	.00103	.00088	-.00201

OA257 (LARC 20-M6-6559) OV102 (R7E055) (10 JUL 81)

REFERENCE DATA

SREF = 2690.0000 SQ.FT. XMRP = 1076.6800 IN. XO
LREF = 474.8100 INCHES YMRP = .0000 IN. YO
BREF = 936.6800 INCHES ZMRP = 375.0000 IN. ZO
SCALE = .0100

PARAMETRIC DATA

ALPHA = 22.500 PHI = .000
SPDBRK = 86.600 AILRON = .000
YP = 1.000 1S = 1.000
ELEVON = .000 MACH = 6.000
S-MODE = 2.000 S-DIR = 1.000

RUN NO. 105/ 0 RN/L = 7.47 GRADIENT INTERVAL = -.60/ .60

RN/L	BETA	ALPHA	CN	CA	CLM	CY	CYN	CBL	CL	CD	L/D
7.515	-4.452	21.53100	.51999	.06562	-.00166	.03783	.00508	.00712	.45963	.25187	1.82480
7.489	-4.300	21.54000	.51980	.06558	-.00171	.03653	.00491	.00687	.45942	.25184	1.82420
7.485	-4.100	21.53500	.52030	.06549	-.00166	.03461	.00469	.00652	.45994	.25190	1.82590
7.465	-3.900	21.53800	.52045	.06539	-.00166	.03277	.00446	.00619	.46010	.25189	1.82660
7.449	-3.700	21.53800	.52059	.06540	-.00159	.03090	.00423	.00585	.46023	.25195	1.82670
7.453	-3.500	21.54500	.52092	.06536	-.00153	.02908	.00404	.00551	.46052	.25210	1.82670
7.465	-3.300	21.54700	.52123	.06534	-.00146	.02706	.00383	.00517	.46081	.25221	1.82710
7.462	-3.100	21.55800	.52156	.06535	-.00136	.02535	.00369	.00480	.46106	.25242	1.82660
7.460	-2.900	21.55800	.52144	.06530	-.00128	.02337	.00352	.00442	.46097	.25233	1.82680
7.449	-2.700	21.56600	.52173	.06530	-.00117	.02148	.00338	.00406	.46120	.25250	1.82660
7.452	-2.500	21.56900	.52162	.06522	-.00101	.01962	.00326	.00368	.46112	.25241	1.82680
7.468	-2.300	21.58000	.52197	.06530	-.00086	.01749	.00313	.00329	.46136	.25270	1.82570
7.474	-2.100	21.58400	.52189	.06508	-.00061	.01556	.00297	.00291	.46136	.25250	1.82720
7.469	-1.900	21.59400	.52207	.06491	-.00045	.01364	.00280	.00256	.46154	.25249	1.82790
7.478	-1.700	21.59700	.52213	.06492	-.00041	.01185	.00258	.00224	.46158	.25254	1.82770
7.488	-1.500	21.61000	.52269	.06485	-.00027	.01016	.00231	.00196	.46207	.25280	1.82780
7.490	-1.300	21.61000	.52233	.06465	-.00013	.00861	.00198	.00170	.46181	.25247	1.82910
7.488	-1.100	21.62500	.52247	.06461	-.00003	.00701	.00164	.00143	.46188	.25261	1.82850
7.502	-.900	21.62800	.52283	.06459	.00002	.00553	.00130	.00116	.46221	.25274	1.82880
7.495	-.700	21.64100	.52281	.06451	.00004	.00410	.00096	.00089	.46217	.25277	1.82840
7.499	-.500	21.64100	.52270	.06439	.00002	.00259	.00061	.00063	.46211	.25262	1.82920
7.503	-.300	21.65200	.52386	.06448	.00006	.00099	.00025	.00035	.46311	.25321	1.82890
7.499	-.100	21.65100	.52305	.06431	.00016	-.00041	-.00002	.00003	.46242	.25275	1.82960
7.491	.100	21.66000	.52330	.06429	.00020	-.00209	-.00031	-.00023	.46262	.25290	1.82930
7.492	.300	21.66300	.52325	.06424	.00027	-.00359	-.00062	-.00047	.46257	.25287	1.82930
7.473	.500	21.66900	.52327	.06425	.00029	-.00498	-.00098	-.00072	.46256	.25293	1.82880
7.464	.700	21.66800	.52319	.06418	.00021	-.00657	-.00138	-.00096	.46253	.25282	1.82950
7.435	.900	21.67600	.52376	.06418	.00006	-.00811	-.00173	-.00123	.46302	.25309	1.82950
7.432	1.100	21.67400	.52348	.06416	-.00001	-.00971	-.00204	-.00152	.46277	.25296	1.82940
7.430	1.300	21.68500	.52394	.06413	-.00007	-.01129	-.00233	-.00181	.46317	.25318	1.82940
7.431	1.500	21.68300	.52362	.06406	-.00013	-.01303	-.00255	-.00213	.46290	.25299	1.82970
7.438	1.700	21.69400	.52411	.06412	-.00026	-.01484	-.00276	-.00249	.46328	.25332	1.82890
7.438	1.900	21.69400	.52445	.06407	-.00042	-.01683	-.00293	-.00285	.46362	.25340	1.82960
7.449	2.100	21.70500	.52472	.06404	-.00054	-.01880	-.00309	-.00324	.46384	.25355	1.82930
7.448	2.300	21.70500	.52492	.06398	-.00073	-.02067	-.00318	-.00363	.46404	.25358	1.83000
7.467	2.500	21.71800	.52546	.06403	-.00089	-.02281	-.00332	-.00402	.46446	.25392	1.82910
7.471	2.700	21.71800	.52520	.06401	-.00108	-.02470	-.00342	-.00441	.46423	.25381	1.82900
7.463	2.900	21.72900	.52533	.06411	-.00123	-.02671	-.00358	-.00479	.46427	.25404	1.82760
7.483	3.100	21.72900	.52615	.06421	-.00133	-.02862	-.00373	-.00518	.46499	.25444	1.82750
7.476	3.300	21.74200	.52617	.06433	-.00148	-.03044	-.00388	-.00555	.46491	.25466	1.82560
7.478	3.500	21.73900	.52560	.06442	-.00165	-.03228	-.00410	-.00589	.46436	.25450	1.82460
7.472	3.700	21.75200	.52670	.06461	-.00166	-.03422	-.00428	-.00625	.46525	.25520	1.82310

OA257 (LARC 20-M6-6559) OV102 (R7E055) (10 JUL 81)

REFERENCE DATA

SREF =	2690.0000 SQ.FT.	XMRP =	1076.6800 IN. XO		
LREF =	474.8100 INCHES	YMRP =	.0000 IN. YO		
BREF =	936.6800 INCHES	ZMRP =	375.0000 IN. ZO		
SCALE =	.0100				

PARAMETRIC DATA

ALPHA =	22.500	PHI =	.000
SPDBRK =	86.600	AILRON =	.000
YP =	1.000	1S =	1.000
ELEVON =	.000	MACH =	6.000
S-MODE =	2.000	S-DIR =	1.000

RUN NO. 105/ 0 RN/L = 7.47 GRADIENT INTERVAL = -.60/ .60

RN/L	BETA	ALPHA	CN	CA	CLM	CY	CYN	CBL	CL	CD	L/D
7.475	3.900	21.74600	.52636	.06475	-.00182	-.03603	-.00448	-.00655	.46491	.25515	1.82210
	GRADIENT	.02600	.00018	-.00020	.00029	-.00761	-.00155	-.00135	.00012	.00010	-.00016

OA257 (LARC 20-M6-6559) OV102 (R7E155) (10 JUL 81)

REFERENCE DATA

SREF = 2690.0000 SQ.FT. XMRP = 1076.6800 IN. XO
LREF = 474.8100 INCHES YMRP = .0000 IN. YO
BREF = 936.6800 INCHES ZMRP = 375.0000 IN. ZO
SCALE = .0100

PARAMETRIC DATA

ALPHA = 22.500 PHI = .000
SPDBRK = 86.600 AILRON = .000
YP = 1.000 1S = 1.000
ELEVON = .000 MACH = 6.000
S-MODE = 2.000 S-DIR = 1.000

RUN NO. 2145/ 0 RN/L = 2.27 GRADIENT INTERVAL = -.60/ .60

RN/L	BETA	ALPHA	CN	CA	CLM	CY	CYN	CBL	CL	CD	L/D
2.292	-2.400	22.16700	.54290	.06516	-.00066	.02027	.00410	.00347	.47819	.26518	1.80320
2.291	-2.200	22.17500	.54075	.06479	-.00062	.01815	.00401	.00306	.47630	.26410	1.80350
2.292	-2.000	22.17700	.54238	.06491	-.00082	.01634	.00393	.00267	.47775	.26484	1.80390
2.293	-1.800	22.18300	.54272	.06471	-.00080	.01429	.00374	.00229	.47812	.26483	1.80540
2.293	-1.600	22.19100	.54219	.06456	-.00106	.01254	.00356	.00194	.47765	.26456	1.80550
2.289	-1.400	22.19100	.54290	.06453	-.00118	.01089	.00331	.00159	.47831	.26480	1.80630
2.280	-1.200	22.20100	.54420	.06434	-.00122	.00890	.00310	.00127	.47954	.26520	1.80820
2.272	-1.000	22.20400	.54425	.06454	-.00080	.00772	.00253	.00121	.47951	.26542	1.80660
2.265	-.800	22.20900	.54449	.06475	-.00042	.00632	.00206	.00108	.47962	.26576	1.80470
2.264	-.600	22.21800	.54531	.06487	-.00038	.00454	.00182	.00078	.48029	.26625	1.80390
2.260	-.400	22.21700	.54554	.06488	-.00050	.00283	.00161	.00048	.48050	.26635	1.80410
2.256	-.200	22.22900	.54542	.06489	-.00038	.00127	.00128	.00019	.48034	.26640	1.80300
2.255	.000	22.23200	.54547	.06503	-.00043	-.00006	.00078	-.00001	.48031	.26658	1.80180
2.257	.200	22.23600	.54563	.06518	-.00022	-.00093	.00010	-.00009	.48039	.26682	1.80050
2.256	.400	22.24400	.54487	.06501	-.00023	-.00194	-.00054	-.00026	.47971	.26643	1.80050
2.255	.600	22.24500	.54558	.06498	-.00045	-.00306	-.00111	-.00040	.48037	.26668	1.80130
2.255	.800	22.25400	.54606	.06479	-.00048	-.00431	-.00165	-.00053	.48085	.26676	1.80250
2.258	1.000	22.25900	.54503	.06468	-.00050	-.00567	-.00206	-.00076	.47991	.26632	1.80200
2.256	1.200	22.26400	.54664	.06487	-.00042	-.00751	-.00231	-.00106	.48131	.26715	1.80170
2.253	1.400	22.27200	.54580	.06458	-.00059	-.00923	-.00257	-.00134	.48061	.26662	1.80260
2.259	1.600	22.27500	.54597	.06474	-.00060	-.01107	-.00279	-.00164	.48069	.26686	1.80130
2.253	1.800	22.27800	.54530	.06476	-.00059	-.01293	-.00298	-.00199	.48005	.26665	1.80030
2.247	2.000	22.28900	.54741	.06499	-.00062	-.01475	-.00316	-.00233	.48187	.26775	1.79970
2.249	2.200	22.29100	.54645	.06491	-.00072	-.01667	-.00336	-.00269	.48100	.26733	1.79930
2.252	2.400	22.29800	.54656	.06503	-.00081	-.01814	-.00379	-.00287	.48102	.26755	1.79790
2.255	2.508	22.29500	.54313	.06537	-.00075	-.01888	-.00404	-.00297	.47772	.26654	1.79230
	GRADIENT	.02536	-.00006	.00016	.00008	-.00617	-.00255	-.00095	-.00023	.00033	-.00313

OA257 (LARC 20-M6-6559) OV102 (R7E155) (10 JUL 81)

REFERENCE DATA

SREF = 2690.0000 SQ.FT. XMRP = 1076.6800 IN. XO
LREF = 474.8100 INCHES YMRP = .0000 IN. YO
BREF = 936.6800 INCHES ZMRP = 375.0000 IN. ZO
SCALE = .0100

PARAMETRIC DATA

ALPHA = 22.500 PHI = .000
SPDBRK = 86.600 AILRON = .000
YP = 1.000 1S = 1.000
ELEVON = .000 MACH = 6.000
S-MODE = 2.000 S-DIR = 1.000

RUN NO. 2105/ 0 RN/L = 7.47 GRADIENT INTERVAL = -.60/ .60

RN/L	BETA	ALPHA	CN	CA	CLM	CY	CYN	CBL	CL	CD	L/D
7.508	-4.400	21.53200	.51985	.06556	-.00172	.03743	.00502	.00704	.45951	.25178	1.82510
7.473	-4.200	21.53500	.52005	.06547	-.00170	.03561	.00479	.00670	.45971	.25180	1.82570
7.486	-4.000	21.53700	.52074	.06544	-.00167	.03367	.00456	.00635	.46036	.25203	1.82660
7.450	-3.800	21.54000	.52049	.06540	-.00161	.03186	.00434	.00602	.46013	.25193	1.82640
7.454	-3.600	21.53800	.52067	.06541	-.00156	.02997	.00413	.00568	.46030	.25199	1.82660
7.457	-3.400	21.54800	.52091	.06535	-.00150	.02815	.00394	.00534	.46050	.25211	1.82660
7.468	-3.200	21.55200	.52146	.06540	-.00144	.02620	.00374	.00499	.46098	.25239	1.82650
7.465	-3.000	21.56000	.52156	.06531	-.00131	.02437	.00360	.00463	.46107	.25240	1.82670
7.450	-2.800	21.56000	.52166	.06529	-.00127	.02235	.00344	.00424	.46117	.25242	1.82700
7.449	-2.600	21.56700	.52162	.06525	-.00108	.02060	.00332	.00387	.46112	.25243	1.82670
7.462	-2.400	21.57200	.52178	.06526	-.00094	.01858	.00319	.00350	.46124	.25253	1.82650
7.467	-2.200	21.58300	.52229	.06517	-.00070	.01646	.00306	.00310	.46169	.25273	1.82690
7.474	-2.000	21.58800	.52194	.06501	-.00055	.01463	.00290	.00272	.46141	.25249	1.82740
7.471	-1.800	21.59600	.52202	.06491	-.00042	.01266	.00269	.00239	.46148	.25249	1.82780
7.488	-1.600	21.60300	.52229	.06490	-.00036	.01104	.00244	.00210	.46171	.25264	1.82760
7.487	-1.400	21.61200	.52258	.06480	-.00022	.00940	.00216	.00183	.46197	.25272	1.82800
7.487	-1.200	21.61600	.52226	.06467	-.00012	.00788	.00184	.00157	.46171	.25251	1.82850
7.494	-1.000	21.62900	.52275	.06459	.00005	.00629	.00147	.00129	.46214	.25273	1.82860
7.502	-.800	21.63400	.52295	.06460	.00000	.00482	.00112	.00103	.46229	.25285	1.82830
7.492	-.600	21.64200	.52287	.06441	.00006	.00337	.00079	.00076	.46226	.25271	1.82920
7.501	-.400	21.64300	.52321	.06440	.00006	.00184	.00043	.00049	.46257	.25284	1.82950
7.503	-.200	21.65300	.52316	.06437	.00014	.00024	.00011	.00019	.46249	.25286	1.82900
7.496	.000	21.65400	.52298	.06434	.00017	-.00114	-.00016	-.00009	.46234	.25278	1.82900
7.493	.200	21.66200	.52332	.06426	.00023	-.00291	-.00047	-.00035	.46264	.25290	1.82940
7.482	.400	21.66300	.52309	.06428	.00029	-.00429	-.00079	-.00060	.46242	.25284	1.82890
7.471	.600	21.67300	.52307	.06420	.00028	-.00568	-.00116	-.00084	.46239	.25283	1.82880
7.448	.800	21.66800	.52360	.06420	.00009	-.00739	-.00157	-.00110	.46290	.25299	1.82970
7.427	1.000	21.67700	.52350	.06416	.00006	-.00886	-.00187	-.00138	.46278	.25299	1.82930
7.433	1.200	21.67900	.52350	.06417	-.00008	-.01052	-.00219	-.00167	.46276	.25302	1.82900
7.427	1.400	21.68500	.52408	.06411	-.00005	-.01212	-.00244	-.00197	.46330	.25322	1.82960
7.437	1.600	21.68600	.52424	.06414	-.00019	-.01394	-.00268	-.00232	.46343	.25332	1.82950
7.434	1.800	21.69500	.52445	.06405	-.00030	-.01582	-.00285	-.00266	.46363	.25338	1.82970
7.452	2.000	21.70000	.52473	.06408	-.00049	-.01779	-.00302	-.00305	.46385	.25355	1.82940
7.446	2.200	21.70500	.52490	.06401	-.00062	-.01975	-.00315	-.00344	.46402	.25359	1.82980
7.458	2.400	21.71300	.52503	.06405	-.00083	-.02177	-.00324	-.00382	.46408	.25374	1.82900
7.467	2.600	21.72200	.52486	.06401	-.00093	-.02379	-.00336	-.00422	.46390	.25372	1.82840
7.464	2.800	21.72400	.52527	.06408	-.00119	-.02567	-.00350	-.00460	.46424	.25395	1.82810
7.480	3.000	21.73000	.52554	.06414	-.00127	-.02768	-.00365	-.00498	.46445	.25416	1.82740
7.478	3.200	21.73500	.52605	.06430	-.00141	-.02955	-.00380	-.00537	.46484	.25453	1.82630
7.479	3.400	21.74300	.52595	.06435	-.00148	-.03139	-.00398	-.00572	.46470	.25460	1.82520
7.469	3.600	21.74400	.52609	.06455	-.00162	-.03317	-.00419	-.00607	.46474	.25485	1.82360
7.469	3.800	21.74900	.52613	.06461	-.00173	-.03519	-.00438	-.00640	.46474	.25496	1.82280

OA257 (LARC 20-M6-6559) OV102 (R7E155) (10 JUL 81)

REFERENCE DATA

SREF =	2690.0000 SQ.FT.	XMRP =	1076.6800 IN. XO		
LREF =	474.8100 INCHES	YMRP =	.0000 IN. YO		
BREF =	936.6800 INCHES	ZMRP =	375.0000 IN. ZO		
SCALE =	.0100				

PARAMETRIC DATA

ALPHA =	22.500	PHI =	.000
SPDBRK =	86.600	AILRON =	.000
YP =	1.000	1S =	1.000
ELEVON =	.000	MACH =	6.000
S-MODE =	2.000	S-DIR =	1.000

RUN NO. 2105/ 0 RN/L = 7.47 GRADIENT INTERVAL = -.60/ .60

RN/L	BETA	ALPHA	CN	CA	CLM	CY	CYN	CBL	CL	CD	L/D
7.478	3.949	21.75100	.52680	.06477	-.00186	-.03641	-.00451	-.00661	.46529	.25537	1.82200
	GRADIENT	.02536	.00009	-.00018	.00021	-.00760	-.00158	-.00134	.00004	.00007	-.00036

OA257 (LARC 20-M6-6559) OV102 (R7E056) (10 JUL 81)

REFERENCE DATA

SREF = 2690.0000 SQ.FT. XMRP = 1076.6800 IN. XO
LREF = 474.8100 INCHES YMRP = .0000 IN. YO
BREF = 936.6800 INCHES ZMRP = 375.0000 IN. ZO
SCALE = .0100

PARAMETRIC DATA

ALPHA = 25.000 PHI = .000
SPDBRK = 86.600 AILRON = .000
YP = 1.000 1S = 1.000
ELEVON = .000 MACH = 6.000
S-MODE = 2.000 S-DIR = 1.000

RUN NO. 144/ O RN/L = 2.27 GRADIENT INTERVAL = -.60/ .60

RN/L	BETA	ALPHA	CN	CA	CLM	CY	CYN	CBL	CL	CD	L/D
2.271	-2.470	24.67200	.64084	.06467	-.00216	.02150	.00403	.00451	.55534	.32627	1.70210
2.269	-2.300	24.67300	.64159	.06471	-.00214	.01992	.00375	.00421	.55600	.32664	1.70220
2.267	-2.100	24.68700	.64112	.06420	-.00267	.01854	.00351	.00385	.55571	.32609	1.70410
2.266	-1.900	24.68500	.64284	.06406	-.00297	.01674	.00325	.00347	.55734	.32667	1.70610
2.267	-1.700	24.69600	.64248	.06378	-.00299	.01503	.00303	.00309	.55707	.32638	1.70680
2.271	-1.500	24.70400	.64062	.06375	-.00303	.01337	.00283	.00272	.55534	.32565	1.70530
2.271	-1.300	24.70300	.64345	.06366	-.00302	.01158	.00259	.00235	.55796	.32674	1.70770
2.270	-1.100	24.71600	.64394	.06351	-.00301	.00982	.00232	.00200	.55840	.32694	1.70800
2.272	-.900	24.71900	.64322	.06360	-.00284	.00835	.00198	.00172	.55769	.32675	1.70680
2.269	-.700	24.72400	.64464	.06370	-.00281	.00656	.00176	.00138	.55890	.32748	1.70670
2.271	-.500	24.73800	.64386	.06347	-.00270	.00475	.00158	.00098	.55821	.32708	1.70660
2.273	-.300	24.73600	.64370	.06360	-.00274	.00288	.00139	.00058	.55803	.32712	1.70590
2.274	-.100	24.74600	.64409	.06347	-.00270	.00124	.00118	.00024	.55838	.32725	1.70630
2.269	.100	24.75000	.64376	.06359	-.00273	-.00019	.00084	-.00006	.55800	.32727	1.70500
2.267	.300	24.75300	.64193	.06375	-.00263	-.00150	.00039	-.00031	.55625	.32668	1.70280
2.267	.500	24.76600	.64387	.06365	-.00280	-.00274	-.00015	-.00051	.55798	.32753	1.70360
2.269	.700	24.76700	.64411	.06363	-.00295	-.00389	-.00070	-.00074	.55821	.32762	1.70380
2.265	.900	24.77400	.64599	.06374	-.00290	-.00505	-.00123	-.00097	.55983	.32857	1.70380
2.263	1.100	24.78300	.64420	.06371	-.00279	-.00609	-.00178	-.00118	.55816	.32788	1.70230
2.264	1.300	24.78300	.64431	.06395	-.00270	-.00729	-.00227	-.00144	.55817	.32814	1.70100
2.265	1.500	24.79500	.64542	.06404	-.00247	-.00879	-.00262	-.00174	.55906	.32882	1.70020
2.270	1.700	24.80000	.64607	.06418	-.00233	-.01049	-.00289	-.00209	.55957	.32926	1.69950
2.273	1.900	24.80000	.64476	.06430	-.00222	-.01211	-.00315	-.00243	.55833	.32881	1.69800
2.269	2.100	24.81700	.64624	.06449	-.00208	-.01375	-.00340	-.00280	.55949	.32978	1.69660
2.265	2.300	24.81800	.64586	.06478	-.00205	-.01536	-.00366	-.00316	.55902	.32989	1.69460
2.261	2.488	24.82700	.64613	.06497	-.00185	-.01697	-.00391	-.00349	.55913	.33026	1.69300
	GRADIENT	.02786	-.00080	.00021	-.00003	-.00743	-.00171	-.00149	-.00098	.00014	-.00366

OA257 (LARC 20-M6-6559) OV102 (R7E056) (10 JUL 81)

REFERENCE DATA

SREF = 2690.0000 SQ.FT. XMRP = 1076.6800 IN. XO
LREF = 474.8100 INCHES YMRP = .0000 IN. YO
BREF = 936.6800 INCHES ZMRP = 375.0000 IN. ZO
SCALE = .0100

PARAMETRIC DATA

ALPHA = 25.000 PHI = .000
SPDBRK = 86.600 AILRON = .000
YP = 1.000 1S = 1.000
ELEVON = .000 MACH = 6.000
S-MODE = 2.000 S-DIR = 1.000

RUN NO. 102/ 0 RN/L = 7.40 GRADIENT INTERVAL = -.60/ .60

RN/L	BETA	ALPHA	CN	CA	CLM	CY	CYN	CBL	CL	CD	L/D
7.508	-4.415	23.98900	.61335	.06507	-.00311	.03660	.00615	.00745	.53391	.30881	1.72890
7.506	-4.300	24.00100	.61338	.06498	-.00322	.03553	.00598	.00729	.53391	.30886	1.72860
7.541	-4.100	24.00200	.61351	.06488	-.00324	.03377	.00570	.00697	.53407	.30882	1.72940
7.527	-3.900	24.00700	.61395	.06479	-.00324	.03202	.00541	.00664	.53448	.30897	1.72990
7.508	-3.700	24.00300	.61385	.06469	-.00333	.03033	.00511	.00633	.53445	.30880	1.73080
7.497	-3.500	24.01500	.61464	.06459	-.00337	.02879	.00484	.00600	.53515	.30914	1.73110
7.493	-3.300	24.01700	.61450	.06452	-.00338	.02711	.00454	.00569	.53504	.30904	1.73130
7.483	-3.100	24.02400	.61505	.06448	-.00347	.02543	.00426	.00538	.53552	.30929	1.73140
7.486	-2.900	24.02500	.61508	.06436	-.00347	.02359	.00396	.00504	.53559	.30920	1.73210
7.464	-2.700	24.03300	.61535	.06437	-.00346	.02206	.00368	.00471	.53579	.30939	1.73170
7.451	-2.500	24.03700	.61561	.06439	-.00339	.02036	.00340	.00437	.53600	.30955	1.73150
7.434	-2.300	24.03800	.61602	.06441	-.00347	.01868	.00310	.00403	.53636	.30975	1.73160
7.429	-2.100	24.04000	.61586	.06435	-.00341	.01696	.00282	.00369	.53623	.30965	1.73170
7.417	-1.900	24.04500	.61604	.06430	-.00345	.01526	.00257	.00332	.53638	.30973	1.73180
7.395	-1.700	24.04700	.61641	.06432	-.00345	.01349	.00231	.00298	.53670	.30992	1.73180
7.392	-1.500	24.05300	.61673	.06430	-.00341	.01173	.00206	.00261	.53697	.31009	1.73170
7.367	-1.300	24.06000	.61666	.06424	-.00338	.00998	.00182	.00223	.53690	.31007	1.73150
7.360	-1.100	24.05800	.61666	.06418	-.00344	.00829	.00162	.00185	.53693	.30999	1.73210
7.357	-.900	24.07100	.61698	.06408	-.00337	.00659	.00139	.00151	.53719	.31015	1.73200
7.358	-.700	24.06900	.61684	.06405	-.00333	.00485	.00113	.00117	.53708	.31005	1.73220
7.350	-.500	24.08400	.61718	.06393	-.00323	.00329	.00084	.00086	.53736	.31022	1.73220
7.345	-.300	24.08100	.61675	.06390	-.00313	.00171	.00047	.00053	.53701	.30998	1.73240
7.342	-.100	24.09400	.61711	.06394	-.00296	.00023	.00009	.00024	.53724	.31030	1.73140
7.341	.100	24.09200	.61710	.06405	-.00289	-.00117	-.00030	-.00002	.53720	.31037	1.73080
7.338	.300	24.10600	.61761	.06414	-.00278	-.00249	-.00068	-.00029	.53756	.31079	1.72970
7.344	.500	24.10600	.61743	.06428	-.00274	-.00398	-.00104	-.00058	.53733	.31085	1.72860
7.338	.700	24.12000	.61793	.06432	-.00280	-.00546	-.00134	-.00091	.53770	.31122	1.72770
7.355	.900	24.12300	.61804	.06438	-.00293	-.00705	-.00164	-.00123	.53775	.31135	1.72720
7.363	1.100	24.13600	.61882	.06453	-.00298	-.00869	-.00190	-.00157	.53834	.31192	1.72590
7.370	1.300	24.13800	.61881	.06457	-.00305	-.01043	-.00215	-.00192	.53829	.31198	1.72540
7.371	1.500	24.15000	.61951	.06464	-.00305	-.01203	-.00238	-.00230	.53885	.31244	1.72460
7.379	1.700	24.15200	.61903	.06467	-.00308	-.01378	-.00263	-.00262	.53838	.31230	1.72390
7.382	1.900	24.16100	.61979	.06478	-.00313	-.01544	-.00286	-.00299	.53898	.31279	1.72310
7.389	2.100	24.16600	.61984	.06479	-.00314	-.01720	-.00312	-.00336	.53900	.31287	1.72280
7.378	2.300	24.17000	.61975	.06480	-.00322	-.01889	-.00338	-.00372	.53889	.31287	1.72240
7.377	2.500	24.17700	.61984	.06481	-.00319	-.02058	-.00364	-.00409	.53893	.31299	1.72190
7.379	2.700	24.18200	.62014	.06492	-.00323	-.02237	-.00391	-.00445	.53913	.31325	1.72110
7.369	2.900	24.18600	.62003	.06494	-.00321	-.02403	-.00417	-.00477	.53900	.31327	1.72060
7.358	3.100	24.19100	.61995	.06498	-.00322	-.02570	-.00446	-.00510	.53889	.31332	1.71990
7.365	3.300	24.20100	.61981	.06505	-.00311	-.02739	-.00472	-.00540	.53867	.31341	1.71870
7.375	3.500	24.20500	.62021	.06512	-.00319	-.02911	-.00495	-.00574	.53898	.31369	1.71820
7.364	3.700	24.21100	.62006	.06515	-.00315	-.03100	-.00520	-.00609	.53880	.31371	1.71750

OA257 (LARC 20-M6-6559) OV102 (R7E056) (10 JUL 81)

REFERENCE DATA

SREF =	2690.0000 SQ.FT.	XMRP =	1076.6800 IN. XO				
LREF =	474.8100 INCHES	YMRP =	.0000 IN. YO				
BREF =	936.6800 INCHES	ZMRP =	375.0000 IN. ZO				
SCALE =	.0100						

PARAMETRIC DATA

ALPHA =	25.000	PHI =	.000
SPDBRK =	86.600	AILRON =	.000
YP =	1.000	1S =	1.000
ELEVON =	.000	MACH =	6.000
S-MODE =	2.000	S-DIR =	1.000

RUN NO. 102/ 0 RN/L = 7.40 GRADIENT INTERVAL = -.60/ .60

RN/L	BETA	ALPHA	CN	CA	CLM	CY	CYN	CBL	CL	CD	L/D
7.365	3.900	24.21000	.61996	.06523	-.00317	-.03267	-.00543	-.00642	.53868	.31373	1.71700
	GRADIENT	.02614	.00055	.00037	.00051	-.00719	-.00189	-.00141	.00021	.00081	-.00381

OA257 (LARC 20-M6-6559) OV102 (R7E156) (10 JUL 81)

REFERENCE DATA

SREF = 2690.0000 SQ.FT. XMRP = 1076.6800 IN. XO
LREF = 474.8100 INCHES YMRP = .0000 IN. YO
BREF = 936.6800 INCHES ZMRP = 375.0000 IN. ZO
SCALE = .0100

PARAMETRIC DATA

ALPHA = 25.000 PHI = .000
SPDBRK = 86.600 AILRON = .000
YP = 1.000 1S = 1.000
ELEVON = .000 MACH = 6.000
S-MODE = 2.000 S-DIR = 1.000

RUN NO. 2144/ 0 RN/L = 2.27 GRADIENT INTERVAL = -.60/ .60

RN/L	BETA	ALPHA	CN	CA	CLM	CY	CYN	CBL	CL	CD	L/D
2.270	-2.400	24.67500	.64023	.06460	-.00211	.02082	.00393	.00440	.55480	.32597	1.70200
2.268	-2.200	24.67700	.64213	.06431	-.00272	.01930	.00363	.00402	.55663	.32652	1.70470
2.266	-2.000	24.68500	.64214	.06416	-.00275	.01765	.00338	.00367	.55667	.32647	1.70510
2.265	-1.800	24.69600	.64248	.06386	-.00299	.01593	.00313	.00327	.55703	.32644	1.70640
2.270	-1.600	24.69500	.64225	.06382	-.00304	.01413	.00291	.00291	.55685	.32630	1.70650
2.271	-1.400	24.70900	.64269	.06377	-.00289	.01242	.00268	.00254	.55719	.32658	1.70610
2.269	-1.200	24.70800	.64272	.06359	-.00306	.01062	.00244	.00216	.55730	.32642	1.70730
2.272	-1.000	24.71400	.64321	.06347	-.00304	.00907	.00215	.00186	.55776	.32658	1.70790
2.271	-.800	24.72600	.64361	.06358	-.00277	.00753	.00188	.00156	.55801	.32696	1.70660
2.270	-.600	24.72300	.64211	.06359	-.00291	.00569	.00166	.00118	.55666	.32631	1.70590
2.273	-.400	24.73600	.64306	.06345	-.00268	.00385	.00148	.00078	.55750	.32671	1.70640
2.274	-.200	24.74300	.64444	.06354	-.00273	.00205	.00129	.00041	.55868	.32744	1.70620
2.272	.000	24.74100	.64456	.06352	-.00275	.00052	.00103	.00008	.55881	.32745	1.70660
2.266	.200	24.75600	.64379	.06363	-.00262	-.00095	.00062	-.00018	.55799	.32737	1.70450
2.267	.400	24.76000	.64472	.06371	-.00280	-.00211	.00012	-.00041	.55877	.32787	1.70420
2.269	.600	24.76500	.64403	.06365	-.00288	-.00328	-.00043	-.00062	.55814	.32758	1.70380
2.267	.800	24.77500	.64490	.06362	-.00294	-.00445	-.00098	-.00084	.55889	.32802	1.70380
2.265	1.000	24.77400	.64699	.06383	-.00283	-.00556	-.00150	-.00107	.56070	.32907	1.70390
2.263	1.200	24.78600	.64524	.06384	-.00274	-.00664	-.00202	-.00129	.55904	.32846	1.70200
2.263	1.400	24.79200	.64562	.06392	-.00260	-.00803	-.00248	-.00158	.55932	.32875	1.70130
2.267	1.600	24.79300	.64649	.06415	-.00240	-.00963	-.00274	-.00192	.56000	.32933	1.70040
2.273	1.800	24.80700	.64625	.06408	-.00220	-.01115	-.00299	-.00225	.55973	.32930	1.69980
2.270	2.000	24.80700	.64530	.06430	-.00223	-.01294	-.00328	-.00263	.55878	.32910	1.69790
2.268	2.200	24.81400	.64643	.06464	-.00210	-.01457	-.00354	-.00298	.55962	.32996	1.69600
2.262	2.400	24.82700	.64668	.06492	-.00195	-.01625	-.00379	-.00333	.55966	.33045	1.69360
	GRADIENT	.03339	.00151	.00014	-.00001	-.00747	-.00173	-.00149	.00112	.00108	-.00221

OA257 (LARC 20-M6-6559) OV102 (R7E156) (10 JUL 81)

REFERENCE DATA

SREF = 2690.0000 SQ.FT. XMRP = 1076.6800 IN. XO
LREF = 474.8100 INCHES YMRP = .0000 IN. YO
BREF = 936.6800 INCHES ZMRP = 375.0000 IN. ZO
SCALE = .0100

PARAMETRIC DATA

ALPHA = 25.000 PHI = .000
SPDBRK = 86.600 AILRON = .000
YP = 1.000 1S = 1.000
ELEVON = .000 MACH = 6.000
S-MODE = 2.000 S-DIR = 1.000

RUN NO. 2102/ 0 RN/L = 7.40 GRADIENT INTERVAL = -.60/ .60

RN/L	BETA	ALPHA	CN	CA	CLM	CY	CYN	CBL	CL	CD	L/D
7.513	-4.400	23.99000	.61326	.06504	-.00315	.03643	.00613	.00743	.53384	.30876	1.72900
7.520	-4.200	24.00400	.61337	.06492	-.00321	.03469	.00585	.00714	.53391	.30881	1.72890
7.546	-4.000	24.00200	.61384	.06483	-.00323	.03283	.00554	.00681	.53439	.30892	1.72990
7.512	-3.800	24.00800	.61386	.06472	-.00328	.03109	.00526	.00648	.53442	.30888	1.73020
7.505	-3.600	24.00700	.61401	.06464	-.00334	.02965	.00499	.00617	.53459	.30887	1.73080
7.495	-3.400	24.01600	.61449	.06457	-.00334	.02792	.00468	.00585	.53502	.30908	1.73100
7.488	-3.200	24.01800	.61474	.06452	-.00345	.02628	.00438	.00553	.53525	.30915	1.73140
7.487	-3.000	24.02800	.61514	.06441	-.00345	.02447	.00411	.00521	.53561	.30930	1.73170
7.477	-2.800	24.02600	.61516	.06440	-.00352	.02283	.00383	.00487	.53565	.30928	1.73190
7.456	-2.600	24.03600	.61556	.06439	-.00345	.02122	.00355	.00453	.53595	.30953	1.73150
7.437	-2.400	24.03200	.61554	.06443	-.00343	.01954	.00324	.00419	.53595	.30952	1.73150
7.435	-2.200	24.04200	.61601	.06435	-.00346	.01779	.00295	.00386	.53635	.30973	1.73170
7.423	-2.000	24.03900	.61599	.06436	-.00347	.01613	.00270	.00351	.53635	.30971	1.73180
7.401	-1.800	24.04700	.61625	.06430	-.00345	.01440	.00243	.00315	.53657	.30983	1.73180
7.394	-1.600	24.04900	.61628	.06431	-.00345	.01252	.00217	.00281	.53658	.30987	1.73160
7.382	-1.400	24.06000	.61666	.06429	-.00342	.01097	.00195	.00243	.53688	.31011	1.73120
7.360	-1.200	24.05300	.61662	.06424	-.00339	.00908	.00170	.00204	.53689	.30998	1.73200
7.359	-1.000	24.06800	.61693	.06414	-.00340	.00743	.00150	.00166	.53714	.31016	1.73180
7.359	-.800	24.07000	.61695	.06407	-.00333	.00571	.00127	.00134	.53717	.31012	1.73210
7.352	-.600	24.07800	.61693	.06408	-.00330	.00409	.00099	.00101	.53711	.31020	1.73150
7.349	-.400	24.08200	.61694	.06394	-.00316	.00252	.00066	.00070	.53715	.31012	1.73210
7.340	-.200	24.08600	.61708	.06394	-.00307	.00100	.00028	.00038	.53726	.31020	1.73200
7.341	.000	24.09400	.61696	.06399	-.00293	-.00047	-.00011	.00012	.53708	.31028	1.73100
7.339	.200	24.09700	.61743	.06413	-.00286	-.00185	-.00049	-.00015	.53745	.31062	1.73020
7.340	.400	24.10600	.61770	.06420	-.00275	-.00324	-.00086	-.00045	.53761	.31089	1.72930
7.340	.600	24.11100	.61776	.06427	-.00277	-.00468	-.00120	-.00072	.53761	.31103	1.72850
7.347	.800	24.12300	.61797	.06433	-.00284	-.00624	-.00149	-.00106	.53771	.31127	1.72750
7.360	1.000	24.12700	.61825	.06445	-.00299	-.00783	-.00177	-.00139	.53789	.31154	1.72660
7.370	1.200	24.14000	.61887	.06453	-.00301	-.00956	-.00202	-.00174	.53835	.31198	1.72560
7.370	1.400	24.14100	.61918	.06459	-.00303	-.01122	-.00227	-.00212	.53861	.31218	1.72530
7.379	1.600	24.15300	.61953	.06468	-.00309	-.01293	-.00250	-.00246	.53883	.31251	1.72420
7.378	1.800	24.15400	.61936	.06472	-.00312	-.01462	-.00275	-.00281	.53865	.31249	1.72370
7.386	2.000	24.16700	.61990	.06477	-.00313	-.01633	-.00299	-.00318	.53905	.31288	1.72290
7.387	2.200	24.16500	.61974	.06479	-.00315	-.01803	-.00327	-.00355	.53891	.31282	1.72280
7.377	2.400	24.17800	.62023	.06484	-.00319	-.01972	-.00350	-.00391	.53926	.31318	1.72190
7.385	2.600	24.17700	.61991	.06489	-.00321	-.02154	-.00378	-.00427	.53896	.31308	1.72150
7.372	2.800	24.18700	.62014	.06491	-.00318	-.02321	-.00404	-.00461	.53910	.31329	1.72080
7.368	3.000	24.18600	.61983	.06498	-.00324	-.02486	-.00430	-.00494	.53880	.31322	1.72020
7.358	3.200	24.20000	.62027	.06506	-.00315	-.02659	-.00458	-.00525	.53909	.31361	1.71900
7.375	3.400	24.19800	.61996	.06505	-.00315	-.02823	-.00484	-.00556	.53882	.31345	1.71900
7.368	3.600	24.21000	.62012	.06512	-.00319	-.03008	-.00508	-.00592	.53887	.31369	1.71790
7.365	3.800	24.20800	.61980	.06517	-.00317	-.03184	-.00531	-.00625	.53857	.31359	1.71740

OA257 (LARC 20-M6-6559) OV102 (R7E156) (10 JUL 81)

REFERENCE DATA

SREF =	2690.0000 SQ.FT.	XMRP =	1076.6800 IN. XO		
LREF =	474.8100 INCHES	YMRP =	.0000 IN. YO		
BREF =	936.6800 INCHES	ZMRP =	375.0000 IN. ZO		
SCALE =	.0100				

PARAMETRIC DATA

ALPHA =	25.000	PHI =	.000
SPDBRK =	86.600	AILRON =	.000
YP =	1.000	1S =	1.000
ELEVON =	.000	MACH =	6.000
S-MODE =	2.000	S-DIR =	1.000

RUN NO. 2102/ 0 RN/L = 7.40 GRADIENT INTERVAL = -.60/ .60

RN/L	BETA	ALPHA	CN	CA	CLM	CY	CYN	CBL	CL	CD	L/D
7.363	3.971	24.20800	.62005	.06521	-.00311	-.03337	-.00553	-.00653	.53879	.31373	1.71740
	GRADIENT	.02821	.00078	.00023	.00047	-.00726	-.00185	-.00143	.00047	.00079	-.00293

OA257 (LARC 20-M6-6559) OV102 (R7E057) (10 JUL 81)

REFERENCE DATA

SREF = 2690.0000 SQ.FT. XMRP = 1076.6800 IN. XO
LREF = 474.8100 INCHES YMRP = .0000 IN. YO
BREF = 936.6800 INCHES ZMRP = 375.0000 IN. ZO
SCALE = .0100

PARAMETRIC DATA

ALPHA = 27.500 PHI = .000
SPDBRK = 86.600 AILRON = .000
YP = 1.000 1S = 1.000
ELEVON = .000 MACH = 6.000
S-MODE = 2.000 S-DIR = 1.000

RUN NO. 143/ O RN/L = 2.26 GRADIENT INTERVAL = -.60/ .60

RN/L	BETA	ALPHA	CN	CA	CLM	CY	CYN	CBL	CL	CD	L/D
2.278	-2.581	27.01100	.73602	.06436	-.00457	.02133	.00472	.00464	.62651	.39161	1.59980
2.279	-2.400	27.01600	.73727	.06446	-.00460	.01970	.00449	.00429	.62754	.39233	1.59950
2.272	-2.200	27.02000	.73612	.06424	-.00480	.01800	.00423	.00390	.62659	.39164	1.59990
2.269	-2.000	27.03000	.73629	.06405	-.00479	.01625	.00393	.00354	.62675	.39167	1.60020
2.265	-1.800	27.03100	.73768	.06397	-.00489	.01453	.00371	.00313	.62803	.39224	1.60120
2.262	-1.600	27.03800	.73652	.06378	-.00486	.01270	.00347	.00276	.62703	.39161	1.60110
2.265	-1.400	27.04900	.73731	.06369	-.00493	.01120	.00324	.00237	.62770	.39201	1.60120
2.263	-1.200	27.05100	.73779	.06365	-.00499	.00957	.00294	.00202	.62813	.39222	1.60150
2.261	-1.000	27.06000	.73992	.06353	-.00492	.00796	.00262	.00168	.63002	.39319	1.60240
2.259	-.800	27.06700	.74030	.06339	-.00512	.00666	.00225	.00139	.63037	.39331	1.60270
2.259	-.600	27.07100	.73888	.06326	-.00510	.00529	.00181	.00111	.62914	.39259	1.60250
2.257	-.400	27.08000	.73941	.06335	-.00517	.00412	.00130	.00085	.62951	.39302	1.60170
2.259	-.200	27.08400	.73988	.06334	-.00524	.00292	.00080	.00060	.62991	.39327	1.60170
2.259	.000	27.08900	.74036	.06327	-.00511	.00183	.00033	.00034	.63033	.39347	1.60200
2.256	.200	27.10200	.74047	.06337	-.00533	.00072	-.00012	.00006	.63029	.39375	1.60070
2.257	.400	27.10300	.74019	.06324	-.00536	-.00068	-.00057	-.00027	.63010	.39353	1.60110
2.262	.600	27.11300	.74107	.06335	-.00517	-.00208	-.00100	-.00057	.63076	.39413	1.60040
2.265	.800	27.12300	.74312	.06352	-.00516	-.00328	-.00148	-.00083	.63244	.39533	1.59980
2.264	1.000	27.12400	.74077	.06352	-.00515	-.00473	-.00191	-.00112	.63034	.39427	1.59880
2.262	1.200	27.13500	.74109	.06361	-.00509	-.00618	-.00227	-.00144	.63051	.39462	1.59780
2.260	1.400	27.14200	.74097	.06362	-.00520	-.00767	-.00258	-.00176	.63035	.39464	1.59730
2.259	1.600	27.14400	.74276	.06379	-.00532	-.00938	-.00286	-.00213	.63185	.39563	1.59710
2.258	1.800	27.15600	.74048	.06366	-.00534	-.01114	-.00309	-.00254	.62980	.39461	1.59600
2.256	2.000	27.16000	.74226	.06377	-.00541	-.01286	-.00330	-.00298	.63130	.39556	1.59600
2.256	2.200	27.16500	.74270	.06382	-.00538	-.01476	-.00351	-.00340	.63164	.39586	1.59560
2.255	2.382	27.17400	.73992	.06380	-.00533	-.01626	-.00373	-.00377	.62911	.39468	1.59400
	GRADIENT	.03393	.00156	.00001	-.00012	-.00606	-.00234	-.00140	.00115	.00109	-.00152

OA257 (LARC 20-M6-6559) OV102 (R7E057) (10 JUL 81)

REFERENCE DATA

SREF = 2690.0000 SQ.FT. XMRP = 1076.6800 IN. XO
LREF = 474.8100 INCHES YMRP = .0000 IN. YO
BREF = 936.6800 INCHES ZMRP = 375.0000 IN. ZO
SCALE = .0100

PARAMETRIC DATA

ALPHA = 27.500 PHI = .000
SPDBRK = 86.600 AILRON = .000
YP = 1.000 1S = 1.000
ELEVON = .000 MACH = 6.000
S-MODE = 2.000 S-DIR = 1.000

RUN NO. 103/ 0 RN/L = 7.40 GRADIENT INTERVAL = -.60/ .60

RN/L	BETA	ALPHA	CN	CA	CLM	CY	CYN	CBL	CL	CD	L/D
7.437	-4.814	26.67800	.72109	.06572	-.00574	.03811	.00700	.00839	.61482	.38247	1.60750
7.438	-4.700	26.68600	.72096	.06561	-.00576	.03714	.00685	.00820	.61470	.38241	1.60740
7.453	-4.500	26.68800	.72161	.06553	-.00584	.03535	.00658	.00784	.61530	.38266	1.60800
7.443	-4.300	26.69200	.72223	.06543	-.00586	.03352	.00631	.00746	.61587	.38288	1.60850
7.436	-4.100	26.69500	.72262	.06534	-.00599	.03185	.00601	.00710	.61625	.38300	1.60900
7.440	-3.900	26.70300	.72271	.06509	-.00605	.03015	.00573	.00673	.61638	.38291	1.60970
7.435	-3.700	26.70600	.72352	.06506	-.00612	.02851	.00547	.00637	.61710	.38328	1.61000
7.433	-3.500	26.71600	.72349	.06486	-.00626	.02693	.00520	.00606	.61709	.38320	1.61040
7.440	-3.300	26.71900	.72416	.06482	-.00634	.02515	.00494	.00566	.61769	.38350	1.61070
7.430	-3.100	26.72700	.72443	.06469	-.00636	.02340	.00467	.00530	.61794	.38359	1.61090
7.422	-2.900	26.72900	.72466	.06455	-.00646	.02168	.00441	.00492	.61819	.38359	1.61160
7.411	-2.700	26.74100	.72483	.06444	-.00651	.02014	.00415	.00458	.61832	.38369	1.61150
7.415	-2.500	26.74200	.72538	.06432	-.00659	.01841	.00388	.00418	.61885	.38385	1.61220
7.409	-2.300	26.75400	.72571	.06412	-.00668	.01672	.00358	.00386	.61916	.38394	1.61260
7.421	-2.100	26.75700	.72611	.06397	-.00673	.01520	.00329	.00349	.61956	.38402	1.61330
7.415	-1.900	26.77000	.72648	.06384	-.00678	.01362	.00299	.00313	.61986	.38421	1.61340
7.419	-1.700	26.76800	.72649	.06373	-.00685	.01196	.00267	.00279	.61994	.38410	1.61400
7.418	-1.500	26.78300	.72716	.06359	-.00684	.01056	.00239	.00245	.62050	.38443	1.61410
7.439	-1.300	26.78600	.72680	.06351	-.00694	.00895	.00206	.00212	.62019	.38423	1.61410
7.434	-1.100	26.80200	.72744	.06348	-.00683	.00750	.00177	.00176	.62066	.38467	1.61350
7.446	-.900	26.80200	.72727	.06342	-.00684	.00599	.00146	.00144	.62055	.38454	1.61370
7.442	-.700	26.81300	.72773	.06347	-.00671	.00448	.00112	.00111	.62085	.38491	1.61300
7.429	-.500	26.81200	.72752	.06352	-.00662	.00303	.00078	.00077	.62066	.38485	1.61270
7.423	-.300	26.82300	.72776	.06359	-.00665	.00151	.00045	.00044	.62076	.38513	1.61180
7.439	-.100	26.82500	.72809	.06364	-.00649	-.00019	.00015	.00009	.62102	.38536	1.61160
7.416	.100	26.83100	.72806	.06370	-.00649	-.00172	-.00012	-.00032	.62092	.38547	1.61080
7.407	.300	26.83600	.72825	.06383	-.00633	-.00325	-.00042	-.00065	.62100	.38572	1.61000
7.387	.500	26.84300	.72865	.06402	-.00626	-.00476	-.00075	-.00100	.62123	.38614	1.60880
7.380	.700	26.84700	.72823	.06403	-.00628	-.00627	-.00108	-.00134	.62082	.38601	1.60830
7.359	.900	26.84600	.72871	.06415	-.00630	-.00786	-.00139	-.00170	.62121	.38631	1.60800
7.350	1.100	26.84900	.72888	.06415	-.00628	-.00934	-.00171	-.00202	.62134	.38642	1.60790
7.350	1.300	26.85600	.72917	.06424	-.00634	-.01080	-.00205	-.00234	.62151	.38671	1.60720
7.343	1.500	26.86200	.72943	.06428	-.00629	-.01239	-.00238	-.00270	.62168	.38693	1.60670
7.349	1.700	26.86400	.72971	.06444	-.00633	-.01383	-.00270	-.00302	.62185	.38722	1.60590
7.341	1.900	26.87400	.72955	.06449	-.00621	-.01545	-.00302	-.00337	.62162	.38730	1.60500
7.345	2.100	26.87800	.72955	.06460	-.00621	-.01694	-.00334	-.00370	.62154	.38744	1.60420
7.335	2.300	26.88900	.72965	.06470	-.00616	-.01858	-.00367	-.00406	.62150	.38770	1.60300
7.340	2.500	26.89100	.72956	.06473	-.00615	-.02023	-.00396	-.00443	.62140	.38770	1.60280
7.336	2.700	26.90300	.72979	.06491	-.00598	-.02177	-.00433	-.00475	.62143	.38811	1.60120
7.338	2.900	26.90300	.72949	.06489	-.00613	-.02356	-.00459	-.00513	.62118	.38795	1.60120
7.330	3.100	26.91400	.72971	.06483	-.00625	-.02523	-.00488	-.00551	.62132	.38812	1.60090
7.319	3.300	26.91200	.72944	.06486	-.00633	-.02685	-.00520	-.00589	.62109	.38799	1.60080

OA257 (LARC 20-M6-6559) OV102 (R7E057) (10 JUL 81)

REFERENCE DATA

SREF =	2690.0000 SQ.FT.	XMRP =	1076.6800 IN. XO		
LREF =	474.8100 INCHES	YMRP =	.0000 IN. YO		
BREF =	936.6800 INCHES	ZMRP =	375.0000 IN. ZO		
SCALE =	.0100				

PARAMETRIC DATA

ALPHA =	27.500	PHI =	.000
SPDBRK =	86.600	AILRON =	.000
YP =	1.000	1S =	1.000
ELEVON =	.000	MACH =	6.000
S-MODE =	2.000	S-DIR =	1.000

RUN NO. 103/ O RN/L = 7.40 GRADIENT INTERVAL = -.60/ .60

RN/L	BETA	ALPHA	CN	CA	CLM	CY	CYN	CBL	CL	CD	L/D
7.321	3.500	26.92500	.72965	.06485	-.00627	-.02850	-.00549	-.00623	.62119	.38823	1.60010
7.327	3.700	26.91800	.72943	.06489	-.00632	-.03015	-.00579	-.00656	.62103	.38809	1.60020
	GRADIENT	.02857	.00101	.00047	.00040	-.00782	-.00150	-.00179	.00050	.00119	-.00367

OA257 (LARC 20-M6-6559) OV102 (R7E157) (10 JUL 81)

REFERENCE DATA

SREF = 2690.0000 SQ.FT. XMRP = 1076.6800 IN. XO
LREF = 474.8100 INCHES YMRP = .0000 IN. YO
BREF = 936.6800 INCHES ZMRP = 375.0000 IN. ZO
SCALE = .0100

PARAMETRIC DATA

ALPHA = 27.500 PHI = .000
SPDBRK = 86.600 AILRON = .000
YP = 1.000 1S = 1.000
ELEVON = .000 MACH = 6.000
S-MODE = 2.000 S-DIR = 1.000

RUN NO. 2143/ 0 RN/L = 2.26 GRADIENT INTERVAL = -.60/ .60

RN/L	BETA	ALPHA	CN	CA	CLM	CY	CYN	CBL	CL	CD	L/D
2.280	-2.500	27.01000	.73705	.06442	-.00454	.02058	.00464	.00448	.62740	.39212	1.60000
2.275	-2.300	27.02100	.73642	.06426	-.00466	.01886	.00437	.00409	.62683	.39182	1.59980
2.271	-2.100	27.02300	.73564	.06420	-.00485	.01711	.00408	.00371	.62615	.39144	1.59960
2.268	-1.900	27.02900	.73707	.06404	-.00486	.01530	.00380	.00334	.62746	.39199	1.60070
2.262	-1.700	27.04300	.73855	.06394	-.00482	.01377	.00363	.00296	.62873	.39273	1.60090
2.264	-1.500	27.04300	.73795	.06384	-.00497	.01191	.00333	.00256	.62824	.39237	1.60110
2.265	-1.300	27.05000	.73749	.06366	-.00490	.01031	.00309	.00220	.62786	.39208	1.60140
2.261	-1.100	27.05700	.73820	.06352	-.00503	.00878	.00280	.00183	.62851	.39236	1.60190
2.260	-.900	27.06100	.73979	.06344	-.00510	.00729	.00245	.00153	.62994	.39306	1.60270
2.259	-.700	27.07000	.73834	.06330	-.00508	.00594	.00204	.00125	.62865	.39237	1.60220
2.257	-.500	27.07600	.73964	.06340	-.00516	.00476	.00157	.00098	.62972	.39312	1.60190
2.258	-.300	27.07900	.73972	.06328	-.00520	.00344	.00105	.00073	.62983	.39308	1.60230
2.259	-.100	27.09500	.74200	.06329	-.00508	.00243	.00058	.00047	.63174	.39430	1.60220
2.258	.100	27.09400	.74130	.06319	-.00530	.00120	.00009	.00020	.63117	.39388	1.60240
2.256	.300	27.10200	.74055	.06331	-.00525	.00001	-.00033	-.00009	.63039	.39373	1.60110
2.259	.500	27.10900	.74023	.06326	-.00531	-.00135	-.00079	-.00042	.63008	.39363	1.60070
2.265	.700	27.11300	.74221	.06348	-.00513	-.00263	-.00122	-.00070	.63172	.39477	1.60020
2.265	.900	27.12600	.74198	.06351	-.00500	-.00397	-.00170	-.00095	.63141	.39483	1.59920
2.263	1.100	27.13200	.74094	.06356	-.00514	-.00539	-.00208	-.00128	.63042	.39447	1.59820
2.260	1.300	27.13300	.74142	.06375	-.00518	-.00692	-.00243	-.00159	.63076	.39487	1.59740
2.259	1.500	27.14600	.74162	.06369	-.00521	-.00855	-.00272	-.00194	.63087	.39505	1.59700
2.258	1.700	27.14700	.74174	.06364	-.00534	-.01013	-.00296	-.00234	.63099	.39507	1.59720
2.258	1.900	27.15500	.74120	.06374	-.00532	-.01201	-.00320	-.00276	.63041	.39500	1.59600
2.255	2.100	27.16600	.74205	.06376	-.00537	-.01384	-.00341	-.00319	.63109	.39552	1.59560
2.256	2.300	27.16600	.74187	.06384	-.00554	-.01558	-.00363	-.00362	.63089	.39552	1.59510
	GRADIENT	.03329	.00068	-.00010	-.00016	-.00601	-.00234	-.00139	.00042	.00058	-.00134

OA257 (LARC 20-M6-6559) OV102 (R7E157) (10 JUL 81)

REFERENCE DATA

SREF = 2690.0000 SQ.FT. XMRP = 1076.6800 IN. XO
LREF = 474.8100 INCHES YMRP = .0000 IN. YO
BREF = 936.6800 INCHES ZMRP = 375.0000 IN. ZO
SCALE = .0100

PARAMETRIC DATA

ALPHA = 27.500 PHI = .000
SPDBRK = 86.600 AILRON = .000
YP = 1.000 1S = 1.000
ELEVON = .000 MACH = 6.000
S-MODE = 2.000 S-DIR = 1.000

RUN NO. 2103/ 0 RN/L = 7.40 GRADIENT INTERVAL = -.60/ .60

RN/L	BETA	ALPHA	CN	CA	CLM	CY	CYN	CBL	CL	CD	L/D
7.435	-4.800	26.68200	.72107	.06570	-.00574	.03798	.00698	.00837	.61478	.38250	1.60730
7.448	-4.600	26.68400	.72123	.06560	-.00582	.03629	.00673	.00802	.61496	.38250	1.60770
7.449	-4.400	26.69400	.72186	.06549	-.00583	.03436	.00644	.00764	.61551	.38279	1.60800
7.442	-4.200	26.69000	.72207	.06533	-.00594	.03270	.00616	.00728	.61578	.38270	1.60900
7.442	-4.000	26.70300	.72283	.06520	-.00603	.03105	.00588	.00692	.61643	.38307	1.60920
7.438	-3.800	26.70000	.72331	.06509	-.00608	.02930	.00559	.00655	.61693	.38315	1.61020
7.434	-3.600	26.71500	.72347	.06493	-.00620	.02771	.00533	.00621	.61705	.38324	1.61010
7.436	-3.400	26.71700	.72389	.06485	-.00631	.02599	.00506	.00586	.61745	.38337	1.61060
7.436	-3.200	26.73000	.72443	.06474	-.00636	.02433	.00482	.00550	.61789	.38366	1.61050
7.426	-3.000	26.72600	.72450	.06465	-.00636	.02258	.00455	.00511	.61802	.38358	1.61120
7.416	-2.800	26.73800	.72493	.06450	-.00645	.02088	.00428	.00475	.61840	.38376	1.61140
7.412	-2.600	26.74100	.72508	.06437	-.00655	.01933	.00402	.00440	.61856	.38374	1.61190
7.413	-2.400	26.74900	.72561	.06421	-.00661	.01747	.00372	.00400	.61906	.38392	1.61250
7.413	-2.200	26.75100	.72568	.06406	-.00669	.01595	.00344	.00367	.61918	.38385	1.61310
7.419	-2.000	26.76400	.72612	.06393	-.00677	.01447	.00314	.00332	.61954	.38406	1.61310
7.415	-1.800	26.76800	.72654	.06378	-.00678	.01272	.00283	.00296	.61995	.38417	1.61370
7.418	-1.600	26.77600	.72660	.06366	-.00687	.01128	.00253	.00263	.62001	.38417	1.61390
7.426	-1.400	26.78400	.72699	.06356	-.00686	.00975	.00222	.00228	.62035	.38433	1.61410
7.437	-1.200	26.79300	.72716	.06348	-.00689	.00819	.00192	.00194	.62048	.38444	1.61400
7.440	-1.000	26.79900	.72747	.06344	-.00683	.00675	.00161	.00160	.62073	.38462	1.61390
7.448	-.800	26.80500	.72741	.06344	-.00678	.00523	.00129	.00128	.62063	.38465	1.61350
7.436	-.600	26.81600	.72790	.06351	-.00664	.00374	.00095	.00093	.62097	.38505	1.61270
7.422	-.400	26.81300	.72759	.06353	-.00668	.00234	.00063	.00061	.62070	.38491	1.61260
7.431	-.200	26.82900	.72789	.06359	-.00655	.00069	.00030	.00028	.62084	.38526	1.61150
7.427	.000	26.82600	.72783	.06366	-.00652	-.00095	.00002	-.00011	.62077	.38527	1.61130
7.411	.200	26.83800	.72821	.06377	-.00640	-.00245	-.00026	-.00048	.62099	.38567	1.61020
7.396	.400	26.83600	.72854	.06394	-.00627	-.00404	-.00059	-.00083	.62121	.38595	1.60960
7.383	.600	26.84600	.72852	.06401	-.00630	-.00543	-.00091	-.00115	.62109	.38611	1.60860
7.373	.800	26.84300	.72849	.06405	-.00632	-.00703	-.00123	-.00153	.62107	.38610	1.60860
7.348	1.000	26.85100	.72877	.06412	-.00627	-.00864	-.00156	-.00186	.62124	.38636	1.60790
7.354	1.200	26.85200	.72886	.06421	-.00634	-.01007	-.00188	-.00218	.62126	.38650	1.60740
7.342	1.400	26.86200	.72945	.06424	-.00631	-.01158	-.00221	-.00252	.62171	.38691	1.60690
7.344	1.600	26.85900	.72875	.06435	-.00632	-.01305	-.00254	-.00284	.62106	.38666	1.60620
7.345	1.800	26.87300	.72958	.06445	-.00625	-.01461	-.00286	-.00319	.62166	.38727	1.60520
7.346	2.000	26.87500	.72954	.06455	-.00620	-.01622	-.00319	-.00354	.62156	.38737	1.60460
7.338	2.200	26.88600	.72981	.06467	-.00618	-.01777	-.00351	-.00387	.62168	.38771	1.60350
7.339	2.400	26.88700	.72962	.06470	-.00612	-.01936	-.00381	-.00424	.62149	.38766	1.60320
7.337	2.600	26.89500	.72996	.06479	-.00607	-.02106	-.00413	-.00461	.62169	.38799	1.60240
7.340	2.800	26.90100	.72954	.06488	-.00610	-.02264	-.00446	-.00493	.62125	.38793	1.60140
7.334	3.000	26.90900	.72971	.06485	-.00622	-.02442	-.00473	-.00532	.62135	.38808	1.60110
7.324	3.200	26.91200	.72932	.06485	-.00627	-.02608	-.00504	-.00570	.62098	.38794	1.60070
7.316	3.400	26.91700	.72952	.06484	-.00637	-.02765	-.00534	-.00607	.62113	.38807	1.60050

OA257 (LARC 20-M6-6559) OV102 (R7E157) (10 JUL 81)

REFERENCE DATA

SREF = 2690.0000 SQ.FT. XMRP = 1076.6800 IN. XO
LREF = 474.8100 INCHES YMRP = .0000 IN. YO
BREF = 936.6800 INCHES ZMRP = 375.0000 IN. ZO
SCALE = .0100

PARAMETRIC DATA

ALPHA = 27.500 PHI = .000
SPDBRK = 86.600 AILRON = .000
YP = 1.000 1S = 1.000
ELEVON = .000 MACH = 6.000
S-MODE = 2.000 S-DIR = 1.000

RUN NO. 2103/ 0 RN/L = 7.40 GRADIENT INTERVAL = -.60/ .60

RN/L	BETA	ALPHA	CN	CA	CLM	CY	CYN	CBL	CL	CD	L/D
7.322	3.600	26.92100	.72943	.06487	-.00630	-.02934	-.00563	-.00642	.62101	.38810	1.60010
7.333	3.737	26.91500	.72944	.06490	-.00635	-.03051	-.00584	-.00664	.62104	.38807	1.60030
	GRADIENT	.02589	.00073	.00045	.00036	-.00776	-.00153	-.00177	.00027	.00101	-.00350

OA257 (LARC 20-M6-6559) OV102 (R7E058) (10 JUL 81)

REFERENCE DATA

SREF = 2690.0000 SQ.FT. XMRP = 1076.6800 IN. XO
LREF = 474.8100 INCHES YMRP = .0000 IN. YO
BREF = 936.6800 INCHES ZMRP = 375.0000 IN. ZO
SCALE = .0100

PARAMETRIC DATA

ALPHA = 30.000 PHI = .000
SPDBRK = 86.600 AILRON = .000
YP = 1.000 1S = 1.000
ELEVON = .000 MACH = 6.000
S-MODE = 2.000 S-DIR = 1.000

RUN NO. 142/ O RN/L = 2.32 GRADIENT INTERVAL = -.60/ .60

RN/L	BETA	ALPHA	CN	CA	CLM	CY	CYN	CBL	CL	CD	L/D
2.313	-2.656	29.41500	.83778	.06248	-.00862	.02319	.00424	.00533	.69909	.46588	1.50060
2.320	-2.500	29.41300	.83720	.06229	-.00889	.02178	.00407	.00494	.69870	.46542	1.50120
2.321	-2.300	29.42200	.83774	.06249	-.00870	.01997	.00387	.00448	.69900	.46596	1.50010
2.320	-2.100	29.43300	.83906	.06252	-.00865	.01845	.00361	.00408	.70004	.46677	1.49970
2.321	-1.900	29.43200	.83853	.06260	-.00863	.01688	.00325	.00370	.69954	.46657	1.49930
2.320	-1.700	29.44500	.83988	.06269	-.00842	.01551	.00288	.00335	.70057	.46748	1.49860
2.322	-1.500	29.45400	.84002	.06282	-.00845	.01403	.00255	.00297	.70055	.46776	1.49770
2.329	-1.300	29.45500	.83915	.06283	-.00847	.01216	.00227	.00253	.69978	.46735	1.49730
2.324	-1.100	29.46800	.84000	.06290	-.00838	.01054	.00207	.00207	.70039	.46799	1.49660
2.326	-.900	29.47500	.83985	.06297	-.00837	.00896	.00183	.00167	.70016	.46806	1.49590
2.337	-.700	29.47900	.84073	.06300	-.00836	.00736	.00150	.00130	.70089	.46857	1.49580
2.333	-.500	29.49000	.84127	.06299	-.00824	.00575	.00118	.00094	.70127	.46896	1.49540
2.329	-.300	29.49700	.84214	.06309	-.00817	.00431	.00088	.00056	.70192	.46956	1.49480
2.328	-.100	29.50100	.84093	.06292	-.00824	.00275	.00055	.00021	.70091	.46887	1.49490
2.325	.100	29.51400	.84112	.06258	-.00848	.00139	.00018	-.00014	.70114	.46883	1.49550
2.322	.300	29.51600	.84079	.06276	-.00870	-.00002	-.00019	-.00048	.70075	.46885	1.49460
2.323	.500	29.52200	.84077	.06255	-.00882	-.00154	-.00053	-.00086	.70079	.46873	1.49510
2.326	.700	29.53200	.84154	.06238	-.00895	-.00297	-.00090	-.00123	.70146	.46908	1.49540
2.323	.900	29.53300	.84157	.06225	-.00904	-.00439	-.00123	-.00157	.70154	.46900	1.49580
2.322	1.100	29.54400	.84300	.06206	-.00916	-.00588	-.00161	-.00192	.70279	.46966	1.49640
2.323	1.300	29.55200	.84237	.06199	-.00927	-.00741	-.00198	-.00227	.70221	.46939	1.49600
2.321	1.500	29.55100	.84233	.06215	-.00933	-.00900	-.00227	-.00267	.70210	.46951	1.49540
2.316	1.700	29.56300	.84116	.06218	-.00924	-.01083	-.00243	-.00317	.70098	.46910	1.49430
2.312	1.900	29.57100	.84199	.06226	-.00923	-.01238	-.00272	-.00357	.70159	.46968	1.49370
2.314	2.100	29.57200	.84194	.06243	-.00916	-.01402	-.00305	-.00396	.70146	.46981	1.49310
2.313	2.300	29.58500	.84157	.06251	-.00917	-.01563	-.00335	-.00435	.70099	.46985	1.49190
	GRADIENT	.03286	-.00091	-.00050	-.00068	-.00726	-.00173	-.00178	-.00081	-.00047	-.00021

OA257 (LARC 20-M6-6559) OV102 (R7E058) (10 JUL 81)

REFERENCE DATA

SREF = 2690.0000 SQ.FT. XMRP = 1076.6800 IN. XO
LREF = 474.8100 INCHES YMRP = .0000 IN. YO
BREF = 936.6800 INCHES ZMRP = 375.0000 IN. ZO
SCALE = .0100

PARAMETRIC DATA

ALPHA = 30.000 PHI = .000
SPDBRK = 86.600 AILRON = .000
YP = 1.000 1S = 1.000
ELEVON = .000 MACH = 6.000
S-MODE = 2.000 S-DIR = 1.000

RUN NO. 109/ 0 RN/L = 4.36 GRADIENT INTERVAL = -.60/ .60

RN/L	BETA	ALPHA	CN	CA	CLM	CY	CYN	CBL	CL	CD	L/D
4.443	-4.645	29.23900	.81643	.06214	-.01041	.03743	.00603	.00907	.68206	.45301	1.50560
4.440	-4.500	29.24800	.81639	.06210	-.01028	.03626	.00584	.00878	.68197	.45307	1.50520
4.442	-4.300	29.24500	.81705	.06212	-.01049	.03459	.00550	.00841	.68256	.45337	1.50550
4.433	-4.100	29.25200	.81720	.06198	-.01040	.03272	.00527	.00797	.68270	.45340	1.50570
4.429	-3.900	29.25200	.81790	.06193	-.01051	.03092	.00507	.00748	.68334	.45370	1.50610
4.420	-3.700	29.26600	.81855	.06185	-.01043	.02915	.00487	.00702	.68384	.45411	1.50590
4.418	-3.500	29.26500	.81893	.06189	-.01055	.02741	.00468	.00658	.68416	.45432	1.50590
4.421	-3.300	29.28000	.81962	.06179	-.01049	.02556	.00451	.00610	.68468	.45475	1.50560
4.414	-3.100	29.27900	.81979	.06182	-.01046	.02379	.00434	.00566	.68482	.45485	1.50560
4.402	-2.900	29.29100	.82064	.06182	-.01045	.02207	.00417	.00518	.68548	.45541	1.50520
4.389	-2.700	29.29200	.82088	.06183	-.01048	.02016	.00397	.00475	.68567	.45554	1.50520
4.383	-2.500	29.30000	.82169	.06178	-.01046	.01842	.00377	.00430	.68633	.45600	1.50510
4.378	-2.300	29.30500	.82221	.06183	-.01040	.01663	.00355	.00390	.68672	.45635	1.50480
4.373	-2.100	29.31500	.82237	.06186	-.01045	.01489	.00331	.00344	.68677	.45659	1.50410
4.368	-1.900	29.32500	.82322	.06189	-.01035	.01320	.00308	.00302	.68742	.45715	1.50370
4.366	-1.700	29.32800	.82355	.06197	-.01046	.01150	.00290	.00262	.68764	.45741	1.50340
4.363	-1.500	29.33800	.82377	.06188	-.01047	.00981	.00264	.00223	.68779	.45756	1.50320
4.368	-1.300	29.33800	.82478	.06197	-.01047	.00829	.00234	.00186	.68864	.45814	1.50310
4.372	-1.100	29.35300	.82525	.06198	-.01043	.00680	.00202	.00152	.68892	.45855	1.50240
4.369	-.900	29.35400	.82533	.06204	-.01038	.00531	.00169	.00115	.68896	.45865	1.50210
4.362	-.700	29.36600	.82564	.06198	-.01046	.00397	.00132	.00085	.68916	.45889	1.50180
4.356	-.500	29.36500	.82612	.06196	-.01065	.00253	.00091	.00054	.68959	.45910	1.50200
4.351	-.300	29.38200	.82698	.06194	-.01060	.00108	.00055	.00021	.69021	.45971	1.50140
4.349	-.100	29.38300	.82698	.06197	-.01067	-.00033	.00018	-.00010	.69019	.45975	1.50120
4.348	.100	29.39500	.82752	.06184	-.01083	-.00162	-.00025	-.00038	.69062	.46005	1.50120
4.345	.300	29.39700	.82737	.06189	-.01086	-.00247	-.00091	-.00051	.69046	.46004	1.50090
4.348	.500	29.40600	.82784	.06191	-.01089	-.00344	-.00155	-.00070	.69079	.46040	1.50040
4.346	.700	29.41200	.82830	.06186	-.01092	-.00495	-.00186	-.00102	.69116	.46066	1.50040
4.338	.900	29.41600	.82829	.06189	-.01112	-.00654	-.00208	-.00145	.69111	.46072	1.50010
4.336	1.100	29.43000	.82851	.06186	-.01109	-.00815	-.00229	-.00185	.69120	.46097	1.49950
4.331	1.300	29.42800	.82872	.06190	-.01129	-.01009	-.00243	-.00234	.69138	.46109	1.49950
4.328	1.500	29.44300	.82906	.06186	-.01120	-.01190	-.00259	-.00281	.69157	.46140	1.49890
4.322	1.700	29.43900	.82860	.06186	-.01136	-.01383	-.00277	-.00327	.69121	.46112	1.49900
4.325	1.900	29.45600	.82917	.06184	-.01146	-.01567	-.00296	-.00377	.69158	.46159	1.49830
4.320	2.100	29.45300	.82891	.06192	-.01141	-.01747	-.00321	-.00418	.69134	.46150	1.49800
4.309	2.300	29.46700	.82936	.06190	-.01138	-.01905	-.00346	-.00460	.69163	.46187	1.49750
4.311	2.500	29.46300	.82899	.06200	-.01139	-.02077	-.00375	-.00498	.69128	.46173	1.49720
4.304	2.700	29.48000	.82931	.06200	-.01129	-.02251	-.00400	-.00544	.69142	.46209	1.49630
4.309	2.900	29.48000	.82883	.06211	-.01133	-.02419	-.00425	-.00584	.69096	.46195	1.49580
4.302	3.100	29.49200	.82888	.06219	-.01114	-.02595	-.00448	-.00626	.69086	.46219	1.49480
4.300	3.300	29.49300	.82886	.06231	-.01111	-.02778	-.00472	-.00666	.69078	.46229	1.49420
4.294	3.500	29.49900	.82892	.06240	-.01114	-.02960	-.00493	-.00715	.69073	.46247	1.49360
	GRADIENT	.03743	.00147	-.00008	-.00030	-.00597	-.00244	-.00123	.00103	.00111	-.00136

OA257 (LARC 20-M6-6559) OV102 (R7E058) (10 JUL 81)

REFERENCE DATA

SREF = 2690.0000 SQ.FT. XMRP = 1076.6800 IN. XO
LREF = 474.8100 INCHES YMRP = .0000 IN. YO
BREF = 936.6800 INCHES ZMRP = 375.0000 IN. ZO
SCALE = .0100

PARAMETRIC DATA

ALPHA = 30.000 PHI = .000
SPDBRK = 86.600 AILRON = .000
YP = 1.000 1S = 1.000
ELEVON = .000 MACH = 6.000
S-MODE = 2.000 S-DIR = 1.000

RUN NO. 104/ 0 RN/L = 7.44 GRADIENT INTERVAL = -.60/ .60

RN/L	BETA	ALPHA	CN	CA	CLM	CY	CYN	CBL	CL	CD	L/D
7.479	-4.784	29.22200	.82485	.06500	-.01061	.03898	.00660	.00929	.68814	.45942	1.49780
7.488	-4.600	29.23200	.82557	.06492	-.01064	.03741	.00636	.00890	.68873	.45982	1.49780
7.511	-4.400	29.24400	.82624	.06482	-.01071	.03570	.00613	.00852	.68926	.46020	1.49770
7.498	-4.200	29.24400	.82634	.06477	-.01078	.03383	.00592	.00808	.68938	.46021	1.49800
7.484	-4.000	29.25800	.82687	.06470	-.01076	.03201	.00573	.00762	.68977	.46057	1.49760
7.485	-3.800	29.25900	.82757	.06461	-.01081	.03017	.00548	.00720	.69041	.46085	1.49810
7.466	-3.600	29.26900	.82777	.06451	-.01075	.02848	.00524	.00677	.69055	.46098	1.49800
7.446	-3.400	29.26600	.82803	.06446	-.01074	.02665	.00501	.00634	.69082	.46103	1.49840
7.430	-3.200	29.27500	.82867	.06439	-.01070	.02489	.00476	.00590	.69135	.46138	1.49840
7.406	-3.000	29.27400	.82889	.06435	-.01072	.02321	.00453	.00549	.69156	.46145	1.49870
7.399	-2.800	29.27700	.82923	.06430	-.01071	.02166	.00429	.00508	.69187	.46160	1.49890
7.403	-2.600	29.28700	.82959	.06425	-.01049	.01991	.00405	.00464	.69212	.46186	1.49850
7.396	-2.400	29.29700	.83023	.06425	-.01051	.01818	.00381	.00421	.69260	.46230	1.49810
7.393	-2.200	29.30200	.83031	.06418	-.01050	.01640	.00358	.00379	.69266	.46234	1.49820
7.390	-2.000	29.30700	.83054	.06415	-.01048	.01470	.00335	.00335	.69284	.46249	1.49810
7.404	-1.800	29.32400	.83157	.06412	-.01043	.01302	.00313	.00294	.69362	.46315	1.49760
7.406	-1.600	29.32500	.83177	.06407	-.01055	.01138	.00289	.00257	.69380	.46322	1.49780
7.404	-1.400	29.33400	.83218	.06402	-.01056	.00969	.00261	.00219	.69411	.46350	1.49760
7.411	-1.200	29.34100	.83256	.06401	-.01056	.00808	.00234	.00179	.69439	.46377	1.49730
7.404	-1.000	29.35300	.83302	.06399	-.01052	.00657	.00200	.00145	.69471	.46411	1.49690
7.404	-.800	29.35200	.83295	.06397	-.01056	.00511	.00167	.00109	.69466	.46405	1.49700
7.393	-.600	29.36800	.83370	.06395	-.01052	.00363	.00132	.00076	.69519	.46459	1.49630
7.391	-.400	29.36400	.83359	.06397	-.01060	.00214	.00096	.00042	.69512	.46450	1.49650
7.409	-.200	29.38400	.83407	.06392	-.01056	.00065	.00060	.00008	.69540	.46494	1.49570
7.410	.000	29.38400	.83421	.06395	-.01066	-.00076	.00025	-.00024	.69551	.46503	1.49560
7.412	.200	29.40100	.83491	.06394	-.01058	-.00209	-.00015	-.00054	.69599	.46558	1.49490
7.438	.400	29.40800	.83506	.06392	-.01061	-.00353	-.00060	-.00082	.69608	.46572	1.49460
7.438	.600	29.42100	.83562	.06393	-.01058	-.00473	-.00102	-.00111	.69646	.46616	1.49400
7.438	.800	29.42000	.83544	.06402	-.01059	-.00612	-.00146	-.00140	.69626	.46614	1.49370
7.436	1.000	29.43400	.83566	.06407	-.01062	-.00738	-.00192	-.00167	.69631	.46646	1.49280
7.454	1.200	29.43600	.83569	.06413	-.01064	-.00887	-.00226	-.00201	.69628	.46655	1.49240
7.455	1.400	29.45100	.83571	.06421	-.01071	-.01039	-.00259	-.00237	.69615	.46682	1.49130
7.464	1.600	29.45200	.83626	.06432	-.01072	-.01216	-.00283	-.00278	.69656	.46719	1.49100
7.483	1.800	29.47000	.83666	.06439	-.01082	-.01391	-.00303	-.00321	.69673	.46766	1.48980
7.488	2.000	29.47000	.83675	.06443	-.01096	-.01571	-.00324	-.00364	.69679	.46775	1.48970
7.487	2.200	29.48500	.83700	.06441	-.01097	-.01750	-.00346	-.00408	.69690	.46803	1.48900
7.496	2.400	29.48000	.83675	.06452	-.01101	-.01929	-.00364	-.00452	.69666	.46795	1.48880
7.486	2.600	29.49300	.83738	.06456	-.01103	-.02113	-.00388	-.00495	.69708	.46845	1.48810
7.483	2.800	29.49300	.83676	.06460	-.01098	-.02287	-.00412	-.00537	.69652	.46819	1.48770
7.485	3.000	29.51100	.83778	.06435	-.01131	-.02469	-.00437	-.00576	.69738	.46869	1.48800
7.494	3.200	29.51200	.83775	.06428	-.01139	-.02642	-.00464	-.00617	.69739	.46862	1.48820
7.482	3.400	29.52300	.83793	.06433	-.01139	-.02814	-.00490	-.00659	.69743	.46889	1.48740

OA257 (LARC 20-M6-6559) OV102 (R7E058) (10 JUL 81)

REFERENCE DATA

SREF =	2690.0000 SQ.FT.	XMRP =	1076.6800 IN. XO		
LREF =	474.8100 INCHES	YMRP =	.0000 IN. YO		
BREF =	936.6800 INCHES	ZMRP =	375.0000 IN. ZO		
SCALE =	.0100				

PARAMETRIC DATA

ALPHA =	30.000	PHI =	.000
SPDBRK =	86.600	AILRON =	.000
YP =	1.000	1S =	1.000
ELEVON =	.000	MACH =	6.000
S-MODE =	2.000	S-DIR =	1.000

RUN NO. 104/ O RN/L = 7.44 GRADIENT INTERVAL = -.60/ .60

RN/L	BETA	ALPHA	CN	CA	CLM	CY	CYN	CBL	CL	CD	L/D
7.488	3.600	29.52000	.83742	.06439	-.01139	-.02987	-.00520	-.00701	.69699	.46864	1.48720
	GRADIENT	.04714	.00170	-.00002	-.00004	-.00700	-.00194	-.00156	.00113	.00139	-.00205

OA257 (LARC 20-M6-6559) OV102 (R7E158) (10 JUL 81)

REFERENCE DATA

SREF = 2690.0000 SQ.FT. XMRP = 1076.6800 IN. XO
LREF = 474.8100 INCHES YMRP = .0000 IN. YO
BREF = 936.6800 INCHES ZMRP = 375.0000 IN. ZO
SCALE = .0100

PARAMETRIC DATA

ALPHA = 30.000 PHI = .000
SPDBRK = 86.600 AILRON = .000
YP = 1.000 1S = 1.000
ELEVON = .000 MACH = 6.000
S-MODE = 2.000 S-DIR = 1.000

RUN NO. 2142/ 0 RN/L = 2.32 GRADIENT INTERVAL = -.60/ .60

RN/L	BETA	ALPHA	CN	CA	CLM	CY	CYN	CBL	CL	CD	L/D
2.316	-2.600	29.41100	.83728	.06241	-.00873	.02269	.00417	.00520	.69872	.46553	1.50090
2.320	-2.400	29.42300	.83897	.06233	-.00885	.02092	.00402	.00470	.70014	.46644	1.50100
2.320	-2.200	29.42300	.83984	.06253	-.00866	.01925	.00375	.00427	.70080	.46704	1.50050
2.321	-2.000	29.43300	.83808	.06257	-.00859	.01765	.00343	.00388	.69917	.46633	1.49930
2.321	-1.800	29.44100	.83925	.06261	-.00852	.01619	.00307	.00353	.70010	.46703	1.49910
2.321	-1.600	29.44600	.84050	.06277	-.00849	.01470	.00270	.00315	.70107	.46786	1.49850
2.327	-1.400	29.45800	.83996	.06283	-.00840	.01306	.00241	.00274	.70047	.46779	1.49740
2.326	-1.200	29.46200	.83932	.06282	-.00853	.01144	.00218	.00229	.69988	.46752	1.49700
2.325	-1.000	29.46900	.83964	.06300	-.00833	.00969	.00196	.00186	.70002	.46791	1.49610
2.329	-.800	29.47900	.84065	.06301	-.00832	.00816	.00166	.00149	.70081	.46854	1.49570
2.336	-.600	29.48500	.83983	.06297	-.00839	.00669	.00133	.00112	.70007	.46817	1.49530
2.330	-.400	29.49000	.84127	.06304	-.00817	.00498	.00102	.00074	.70125	.46900	1.49520
2.328	-.200	29.50300	.84139	.06299	-.00816	.00353	.00071	.00038	.70127	.46918	1.49470
2.327	.000	29.50700	.84042	.06279	-.00846	.00209	.00035	.00003	.70048	.46858	1.49490
2.324	.200	29.51300	.84130	.06270	-.00855	.00059	.00001	-.00032	.70125	.46900	1.49520
2.322	.400	29.52300	.84124	.06269	-.00878	-.00077	-.00036	-.00067	.70112	.46909	1.49460
2.324	.600	29.52500	.84116	.06242	-.00895	-.00216	-.00070	-.00106	.70117	.46884	1.49550
2.326	.800	29.53200	.84121	.06234	-.00904	-.00374	-.00109	-.00141	.70118	.46889	1.49540
2.321	1.000	29.54600	.84154	.06214	-.00910	-.00528	-.00141	-.00176	.70146	.46905	1.49550
2.324	1.200	29.54400	.84245	.06204	-.00932	-.00662	-.00178	-.00210	.70232	.46938	1.49630
2.322	1.400	29.55300	.84218	.06207	-.00930	-.00821	-.00215	-.00246	.70200	.46938	1.49560
2.319	1.600	29.56100	.84215	.06222	-.00924	-.00993	-.00230	-.00293	.70184	.46959	1.49460
2.314	1.800	29.56000	.84150	.06217	-.00935	-.01172	-.00258	-.00338	.70131	.46921	1.49460
2.311	2.000	29.57300	.84126	.06226	-.00910	-.01317	-.00290	-.00376	.70094	.46934	1.49350
2.315	2.200	29.58100	.84240	.06242	-.00912	-.01482	-.00323	-.00415	.70179	.47013	1.49280
2.313	2.304	29.58500	.84151	.06251	-.00917	-.01566	-.00335	-.00436	.70094	.46983	1.49190
	GRADIENT	.03500	.00069	-.00047	-.00059	-.00732	-.00171	-.00179	.00054	.00036	-.00002

OA257 (LARC 20-M6-6559) OV102 (R7E158) (10 JUL 81)

REFERENCE DATA

SREF = 2690.0000 SQ.FT. XMRP = 1076.6800 IN. XO
LREF = 474.8100 INCHES YMRP = .0000 IN. YO
BREF = 936.6800 INCHES ZMRP = 375.0000 IN. ZO
SCALE = .0100

PARAMETRIC DATA

ALPHA = 30.000 PHI = .000
SPDBRK = 86.600 AILRON = .000
YP = 1.000 1S = 1.000
ELEVON = .000 MACH = 6.000
S-MODE = 2.000 S-DIR = 1.000

RUN NO. 2109/ 0 RN/L = 4.36 GRADIENT INTERVAL = -.60/ .60

RN/L	BETA	ALPHA	CN	CA	CLM	CY	CYN	CBL	CL	CD	L/D
4.443	-4.600	29.24200	.81682	.06220	-.01040	.03714	.00600	.00894	.68233	.45330	1.50530
4.440	-4.400	29.24300	.81655	.06211	-.01041	.03547	.00566	.00862	.68214	.45309	1.50550
4.437	-4.200	29.25200	.81702	.06209	-.01038	.03365	.00539	.00819	.68249	.45341	1.50520
4.431	-4.000	29.25200	.81733	.06190	-.01044	.03186	.00517	.00775	.68286	.45340	1.50610
4.425	-3.800	29.26000	.81841	.06193	-.01048	.03004	.00497	.00726	.68372	.45404	1.50590
4.418	-3.600	29.26600	.81869	.06188	-.01046	.02826	.00477	.00680	.68394	.45420	1.50580
4.419	-3.400	29.27200	.81906	.06182	-.01052	.02646	.00460	.00634	.68424	.45440	1.50580
4.419	-3.200	29.27800	.81959	.06177	-.01040	.02468	.00444	.00589	.68469	.45469	1.50580
4.409	-3.000	29.28400	.82033	.06177	-.01048	.02290	.00426	.00540	.68529	.45513	1.50570
4.394	-2.800	29.29300	.82062	.06182	-.01044	.02110	.00407	.00496	.68543	.45543	1.50500
4.388	-2.600	29.29300	.82103	.06179	-.01051	.01936	.00387	.00453	.68581	.45560	1.50530
4.379	-2.400	29.30700	.82213	.06177	-.01046	.01754	.00367	.00411	.68667	.45629	1.50490
4.376	-2.200	29.30700	.82204	.06186	-.01048	.01584	.00344	.00366	.68655	.45632	1.50450
4.370	-2.000	29.32400	.82273	.06187	-.01042	.01400	.00321	.00321	.68701	.45688	1.50370
4.368	-1.800	29.32400	.82337	.06198	-.01036	.01234	.00297	.00282	.68752	.45728	1.50350
4.362	-1.600	29.33800	.82361	.06184	-.01049	.01063	.00280	.00241	.68769	.45744	1.50330
4.366	-1.400	29.33500	.82433	.06195	-.01047	.00916	.00250	.00209	.68827	.45785	1.50330
4.370	-1.200	29.34900	.82512	.06198	-.01050	.00756	.00218	.00168	.68884	.45844	1.50260
4.371	-1.000	29.35100	.82520	.06202	-.01037	.00602	.00185	.00134	.68886	.45854	1.50230
4.366	-.800	29.36100	.82560	.06199	-.01040	.00470	.00152	.00097	.68916	.45883	1.50200
4.359	-.600	29.36900	.82619	.06190	-.01049	.00325	.00112	.00071	.68965	.45914	1.50200
4.353	-.400	29.37100	.82664	.06195	-.01059	.00192	.00072	.00039	.69000	.45943	1.50180
4.350	-.200	29.38300	.82712	.06194	-.01059	.00037	.00037	.00006	.69033	.45980	1.50140
4.348	.000	29.38500	.82702	.06194	-.01082	-.00097	-.00002	-.00026	.69023	.45977	1.50120
4.345	.200	29.39900	.82763	.06178	-.01079	-.00214	-.00052	-.00045	.69072	.46009	1.50130
4.346	.400	29.39500	.82757	.06196	-.01094	-.00287	-.00129	-.00056	.69062	.46018	1.50070
4.346	.600	29.41500	.82808	.06186	-.01086	-.00414	-.00171	-.00086	.69095	.46058	1.50020
4.342	.800	29.41100	.82819	.06189	-.01108	-.00578	-.00198	-.00124	.69106	.46061	1.50030
4.337	1.000	29.42600	.82844	.06187	-.01108	-.00724	-.00217	-.00163	.69116	.46090	1.49960
4.334	1.200	29.42500	.82841	.06189	-.01119	-.00916	-.00238	-.00209	.69114	.46090	1.49960
4.329	1.400	29.43800	.82907	.06184	-.01126	-.01103	-.00251	-.00257	.69163	.46133	1.49920
4.325	1.600	29.43900	.82857	.06187	-.01130	-.01283	-.00267	-.00305	.69117	.46112	1.49890
4.323	1.800	29.44900	.82906	.06188	-.01139	-.01471	-.00288	-.00350	.69152	.46148	1.49850
4.324	2.000	29.45300	.82890	.06189	-.01139	-.01655	-.00307	-.00401	.69134	.46147	1.49810
4.314	2.200	29.45600	.82915	.06188	-.01145	-.01828	-.00333	-.00442	.69154	.46161	1.49810
4.310	2.400	29.46800	.82912	.06193	-.01137	-.01994	-.00361	-.00478	.69139	.46179	1.49720
4.307	2.600	29.46900	.82928	.06196	-.01136	-.02165	-.00387	-.00523	.69151	.46191	1.49710
4.303	2.800	29.48200	.82910	.06202	-.01125	-.02322	-.00414	-.00557	.69122	.46203	1.49610
4.306	3.000	29.48200	.82889	.06217	-.01128	-.02511	-.00436	-.00607	.69097	.46205	1.49540
4.300	3.200	29.49500	.82901	.06220	-.01113	-.02683	-.00459	-.00645	.69094	.46231	1.49450
4.300	3.400	29.49000	.82872	.06236	-.01119	-.02869	-.00481	-.00694	.69066	.46223	1.49420
4.292	3.537	29.49800	.82873	.06233	-.01106	-.02986	-.00499	-.00717	.69062	.46232	1.49380
	GRADIENT	.03607	.00144	-.00005	-.00036	-.00612	-.00239	-.00127	.00099	.00109	-.00138

OA257 (LARC 20-M6-6559) OV102 (R7E158) (10 JUL 81)

REFERENCE DATA

SREF = 2690.0000 SQ.FT. XMRP = 1076.6800 IN. XO
LREF = 474.8100 INCHES YMRP = .0000 IN. YO
BREF = 936.6800 INCHES ZMRP = 375.0000 IN. ZO
SCALE = .0100

PARAMETRIC DATA

ALPHA = 30.000 PHI = .000
SPDBRK = 86.600 AILRON = .000
YP = 1.000 1S = 1.000
ELEVON = .000 MACH = 6.000
S-MODE = 2.000 S-DIR = 1.000

RUN NO. 2104/ O RN/L = 7.44 GRADIENT INTERVAL = -.60/ .60

RN/L	BETA	ALPHA	CN	CA	CLM	CY	CYN	CBL	CL	CD	L/D
7.492	-4.700	29.23800	.82569	.06499	-.01061	.03835	.00650	.00913	.68876	.46001	1.49730
7.497	-4.500	29.23600	.82591	.06486	-.01067	.03652	.00624	.00871	.68902	.45998	1.49800
7.509	-4.300	29.24700	.82623	.06477	-.01074	.03478	.00602	.00831	.68927	.46019	1.49780
7.489	-4.100	29.24600	.82678	.06476	-.01079	.03290	.00582	.00784	.68974	.46044	1.49800
7.482	-3.900	29.26200	.82747	.06465	-.01074	.03107	.00560	.00740	.69027	.46087	1.49770
7.481	-3.700	29.26100	.82773	.06457	-.01080	.02926	.00534	.00698	.69055	.46092	1.49820
7.455	-3.500	29.27100	.82812	.06448	-.01075	.02760	.00513	.00658	.69086	.46114	1.49810
7.443	-3.300	29.26700	.82840	.06445	-.01072	.02573	.00489	.00611	.69114	.46121	1.49850
7.414	-3.100	29.27800	.82867	.06437	-.01069	.02409	.00465	.00570	.69133	.46140	1.49830
7.396	-2.900	29.27000	.82868	.06434	-.01072	.02242	.00441	.00528	.69142	.46129	1.49890
7.404	-2.700	29.28600	.82958	.06430	-.01059	.02079	.00416	.00487	.69209	.46189	1.49840
7.396	-2.500	29.28800	.82992	.06428	-.01049	.01901	.00393	.00441	.69239	.46206	1.49850
7.393	-2.300	29.30400	.83026	.06420	-.01045	.01731	.00370	.00400	.69260	.46235	1.49800
7.401	-2.100	29.30400	.83050	.06417	-.01052	.01555	.00348	.00359	.69282	.46245	1.49820
7.391	-1.900	29.31900	.83151	.06416	-.01044	.01390	.00325	.00315	.69358	.46311	1.49760
7.410	-1.700	29.32100	.83119	.06411	-.01049	.01219	.00302	.00277	.69332	.46293	1.49770
7.401	-1.500	29.33200	.83183	.06408	-.01058	.01053	.00275	.00239	.69379	.46335	1.49730
7.409	-1.300	29.33300	.83212	.06401	-.01058	.00886	.00247	.00198	.69408	.46344	1.49770
7.406	-1.100	29.34800	.83296	.06399	-.01060	.00734	.00216	.00162	.69469	.46402	1.49710
7.406	-.900	29.35300	.83298	.06400	-.01055	.00580	.00184	.00126	.69466	.46410	1.49680
7.398	-.700	29.36600	.83376	.06400	-.01047	.00437	.00149	.00092	.69524	.46464	1.49630
7.390	-.500	29.36400	.83339	.06394	-.01055	.00290	.00114	.00060	.69497	.46439	1.49650
7.403	-.300	29.37700	.83416	.06397	-.01057	.00137	.00077	.00025	.69551	.46494	1.49590
7.407	-.100	29.38200	.83420	.06396	-.01055	-.00009	.00043	-.00009	.69551	.46502	1.49570
7.415	.100	29.39500	.83468	.06395	-.01062	-.00144	.00004	-.00039	.69583	.46541	1.49510
7.426	.300	29.40400	.83494	.06392	-.01061	-.00279	-.00038	-.00067	.69601	.46561	1.49480
7.436	.500	29.41300	.83537	.06393	-.01063	-.00416	-.00081	-.00097	.69629	.46594	1.49440
7.441	.700	29.42000	.83545	.06396	-.01051	-.00547	-.00123	-.00128	.69630	.46609	1.49390
7.437	.900	29.42700	.83558	.06406	-.01066	-.00670	-.00171	-.00153	.69631	.46633	1.49320
7.444	1.100	29.43100	.83566	.06408	-.01062	-.00814	-.00208	-.00185	.69633	.46643	1.49290
7.455	1.300	29.44200	.83583	.06419	-.01067	-.00960	-.00244	-.00218	.69634	.46674	1.49190
7.462	1.500	29.45200	.83621	.06425	-.01071	-.01126	-.00272	-.00256	.69655	.46710	1.49120
7.469	1.700	29.45900	.83644	.06439	-.01076	-.01301	-.00295	-.00299	.69663	.46743	1.49040
7.486	1.900	29.47200	.83654	.06436	-.01086	-.01475	-.00314	-.00342	.69662	.46760	1.48980
7.486	2.100	29.47400	.83677	.06441	-.01101	-.01658	-.00335	-.00386	.69678	.46779	1.48950
7.492	2.300	29.48300	.83689	.06446	-.01096	-.01839	-.00356	-.00430	.69680	.46799	1.48890
7.489	2.500	29.48500	.83701	.06457	-.01107	-.02020	-.00375	-.00475	.69683	.46818	1.48840
7.484	2.700	29.49400	.83693	.06457	-.01095	-.02197	-.00399	-.00516	.69668	.46825	1.48780
7.483	2.900	29.50000	.83742	.06466	-.01105	-.02372	-.00425	-.00560	.69702	.46864	1.48730
7.484	3.100	29.51300	.83784	.06428	-.01135	-.02557	-.00451	-.00596	.69746	.46868	1.48810
7.491	3.300	29.51600	.83761	.06430	-.01142	-.02726	-.00477	-.00638	.69723	.46861	1.48790
7.479	3.500	29.52100	.83753	.06433	-.01140	-.02900	-.00505	-.00681	.69709	.46867	1.48740

OA257 (LARC 20-M6-6559) OV102 (R7E158) (10 JUL 81)

REFERENCE DATA

SREF =	2690.0000 SQ.FT.	XMRP =	1076.6800 IN. XO		
LREF =	474.8100 INCHES	YMRP =	.0000 IN. YO		
BREF =	936.6800 INCHES	ZMRP =	375.0000 IN. ZO		
SCALE =	.0100				

PARAMETRIC DATA

ALPHA =	30.000	PHI =	.000
SPDBRK =	86.600	AILRON =	.000
YP =	1.000	1S =	1.000
ELEVON =	.000	MACH =	6.000
S-MODE =	2.000	S-DIR =	1.000

RUN NO: 2104/ 0 RN/L = 7.44 GRADIENT INTERVAL = -.60/ .60

RN/L	BETA	ALPHA	CN	CA	CLM	CY	CYN	CBL	CL	CD	L/D
7.494	3.643	29.52000	.83779	.06443	-.01134	-.03034	-.00529	-.00714	.69728	.46887	1.48720
	GRADIENT	.04843	.00182	-.00003	-.00008	-.00702	-.00194	-.00156	.00120	.00145	-.00206

OA257 (LARC 20-M6-6559) OV102 (R7E059) (10 JUL 81)

REFERENCE DATA

SREF = 2690.0000 SQ.FT. XMRP = 1076.6800 IN. XO
LREF = 474.8100 INCHES YMRP = .0000 IN. YO
BREF = 936.6800 INCHES ZMRP = 375.0000 IN. ZO
SCALE = .0100

PARAMETRIC DATA

ALPHA = 32.500 PHI = .000
SPDBRK = 86.600 AILRON = .000
YP = 1.000 1S = 1.000
ELEVON = .000 MACH = 6.000
S-MODE = 2.000 S-DIR = 1.000

RUN NO. 149/ 0 RN/L = 2.27 GRADIENT INTERVAL = -.60/ .60

RN/L	BETA	ALPHA	CN	CA	CLM	CY	CYN	CBL	CL	CD	L/D
2.264	-2.699	31.86000	.94437	.06207	-.01396	.02679	.00289	.00684	.76933	.55120	1.39570
2.267	-2.500	31.86400	.94493	.06205	-.01396	.02492	.00263	.00638	.76978	.55153	1.39570
2.262	-2.300	31.88200	.94582	.06203	-.01407	.02318	.00242	.00587	.77037	.55222	1.39500
2.262	-2.100	31.88200	.94670	.06197	-.01429	.02129	.00225	.00534	.77114	.55264	1.39540
2.261	-1.900	31.89300	.94742	.06191	-.01426	.01957	.00209	.00485	.77168	.55313	1.39510
2.261	-1.700	31.90100	.94752	.06175	-.01452	.01774	.00191	.00434	.77178	.55314	1.39530
2.263	-1.500	31.90300	.94707	.06178	-.01470	.01596	.00173	.00381	.77137	.55296	1.39500
2.266	-1.300	31.91700	.94983	.06183	-.01476	.01425	.00158	.00330	.77354	.55465	1.39470
2.269	-1.100	31.92000	.94882	.06172	-.01490	.01251	.00139	.00279	.77271	.55405	1.39470
2.275	-.900	31.92900	.94928	.06170	-.01497	.01074	.00119	.00230	.77302	.55441	1.39430
2.272	-.700	31.93800	.94927	.06169	-.01502	.00901	.00100	.00177	.77294	.55451	1.39390
2.270	-.500	31.94100	.95160	.06189	-.01500	.00730	.00080	.00128	.77478	.55596	1.39360
2.265	-.300	31.95700	.95063	.06191	-.01490	.00558	.00057	.00078	.77379	.55568	1.39250
2.265	-.100	31.95700	.94990	.06189	-.01484	.00395	.00038	.00032	.77318	.55528	1.39240
2.269	.100	31.96500	.95017	.06199	-.01475	.00228	.00015	-.00014	.77327	.55561	1.39180
2.272	.300	31.97900	.95042	.06200	-.01468	.00061	-.00008	-.00058	.77335	.55594	1.39110
2.267	.500	31.97600	.95218	.06209	-.01485	-.00113	-.00036	-.00101	.77482	.55692	1.39130
2.263	.700	31.99200	.95149	.06202	-.01470	-.00289	-.00052	-.00147	.77412	.55670	1.39060
2.262	.900	31.99900	.95143	.06209	-.01466	-.00457	-.00076	-.00191	.77396	.55683	1.38990
2.262	1.100	32.00000	.95170	.06210	-.01458	-.00633	-.00105	-.00233	.77418	.55698	1.38990
2.261	1.300	32.01700	.95147	.06195	-.01455	-.00785	-.00136	-.00276	.77391	.55696	1.38950
2.263	1.500	32.01900	.95219	.06209	-.01452	-.00944	-.00168	-.00317	.77442	.55750	1.38910
2.261	1.700	32.02900	.95180	.06202	-.01446	-.01109	-.00196	-.00362	.77403	.55736	1.38870
2.260	1.900	32.03900	.95239	.06203	-.01444	-.01265	-.00228	-.00404	.77442	.55782	1.38830
2.266	2.100	32.04400	.95328	.06212	-.01450	-.01422	-.00262	-.00447	.77508	.55843	1.38800
2.264	2.231	32.05600	.95336	.06199	-.01450	-.01532	-.00281	-.00475	.77510	.55853	1.38780
	GRADIENT	.03557	.00036	.00019	.00021	-.00839	-.00115	-.00228	-.00015	.00084	-.00233

OA257 (LARC 20-M6-6559) DV102 (R7E059) (10 JUL 81)

REFERENCE DATA

SREF = 2690.0000 SQ.FT. XMRP = 1076.6800 IN. XO
LREF = 474.8100 INCHES YMRP = .0000 IN. YO
BREF = 936.6800 INCHES ZMRP = 375.0000 IN. ZO
SCALE = .0100

PARAMETRIC DATA

ALPHA = 32.500 PHI = .000
SPDBRK = 86.600 AILRON = .000
YP = 1.000 1S = 1.000
ELEVON = .000 MACH = 6.000
S-MODE = 2.000 S-DIR = 1.000

RUN NO. 113/ 0 RN/L = 7.60 GRADIENT INTERVAL = -.60/ .60

RN/L	BETA	ALPHA	CN	CA	CLM	CY	CYN	CBL	CL	CD	L/D
7.584	-4.739	31.40900	.92437	.06364	-.01645	.03945	.00576	.01018	.75576	.53604	1.40990
7.599	-4.600	31.40900	.92463	.06367	-.01650	.03824	.00556	.00990	.75596	.53620	1.40980
7.617	-4.400	31.42200	.92504	.06365	-.01643	.03646	.00525	.00948	.75620	.53656	1.40930
7.618	-4.200	31.42400	.92516	.06355	-.01640	.03487	.00496	.00905	.75633	.53658	1.40950
7.626	-4.000	31.43700	.92606	.06351	-.01645	.03317	.00466	.00862	.75700	.53719	1.40920
7.626	-3.800	31.44500	.92668	.06345	-.01645	.03154	.00440	.00819	.75750	.53756	1.40910
7.621	-3.600	31.45000	.92712	.06340	-.01640	.02975	.00417	.00774	.75784	.53782	1.40910
7.624	-3.400	31.46300	.92760	.06331	-.01643	.02808	.00395	.00728	.75818	.53817	1.40880
7.627	-3.200	31.46800	.92785	.06328	-.01645	.02624	.00374	.00681	.75835	.53834	1.40870
7.631	-3.000	31.48400	.92882	.06326	-.01641	.02453	.00355	.00635	.75904	.53904	1.40810
7.643	-2.800	31.48800	.92911	.06328	-.01638	.02267	.00337	.00586	.75925	.53926	1.40800
7.642	-2.600	31.49900	.92941	.06324	-.01629	.02096	.00319	.00537	.75942	.53953	1.40750
7.646	-2.400	31.50100	.92971	.06330	-.01618	.01915	.00300	.00489	.75963	.53975	1.40740
7.657	-2.200	31.52100	.93039	.06332	-.01608	.01739	.00278	.00443	.76000	.54040	1.40640
7.649	-2.000	31.51700	.93066	.06334	-.01600	.01567	.00256	.00396	.76026	.54050	1.40660
7.664	-1.800	31.53700	.93131	.06337	-.01578	.01401	.00232	.00354	.76061	.54113	1.40560
7.631	-1.600	31.53400	.93148	.06347	-.01576	.01239	.00206	.00311	.76073	.54127	1.40550
7.621	-1.400	31.54400	.93163	.06346	-.01562	.01074	.00181	.00267	.76077	.54148	1.40500
7.613	-1.200	31.54500	.93223	.06349	-.01562	.00906	.00151	.00227	.76126	.54182	1.40500
7.604	-1.000	31.55300	.93188	.06347	-.01557	.00763	.00123	.00189	.76089	.54173	1.40460
7.604	-.800	31.55900	.93257	.06350	-.01554	.00601	.00088	.00149	.76141	.54219	1.40430
7.578	-.600	31.56200	.93252	.06347	-.01551	.00438	.00054	.00110	.76136	.54218	1.40430
7.571	-.400	31.56900	.93295	.06343	-.01551	.00291	.00026	.00069	.76168	.54246	1.40410
7.559	-.200	31.57200	.93314	.06345	-.01563	.00133	-.00005	.00029	.76180	.54262	1.40390
7.561	.000	31.58500	.93339	.06341	-.01563	-.00022	-.00035	-.00011	.76192	.54289	1.40350
7.569	.200	31.59000	.93376	.06341	-.01575	-.00172	-.00062	-.00053	.76218	.54316	1.40320
7.576	.400	31.60400	.93392	.06335	-.01587	-.00336	-.00090	-.00095	.76222	.54336	1.40280
7.583	.600	31.60400	.93403	.06336	-.01596	-.00501	-.00113	-.00141	.76230	.54344	1.40270
7.589	.800	31.62700	.93487	.06334	-.01589	-.00687	-.00137	-.00190	.76281	.54417	1.40180
7.590	1.000	31.62100	.93500	.06329	-.01605	-.00848	-.00163	-.00233	.76299	.54412	1.40230
7.580	1.200	31.64000	.93529	.06323	-.01611	-.01019	-.00191	-.00279	.76310	.54447	1.40160
7.580	1.400	31.63800	.93514	.06319	-.01626	-.01185	-.00215	-.00322	.76301	.54432	1.40180
7.569	1.600	31.64700	.93553	.06321	-.01629	-.01370	-.00236	-.00368	.76325	.54466	1.40130
7.606	1.800	31.65500	.93525	.06324	-.01629	-.01538	-.00260	-.00413	.76292	.54465	1.40080
7.589	2.000	31.66500	.93539	.06327	-.01624	-.01721	-.00285	-.00459	.76293	.54489	1.40020
7.576	2.200	31.66900	.93553	.06332	-.01622	-.01880	-.00312	-.00504	.76298	.54506	1.39980
7.563	2.400	31.67200	.93488	.06330	-.01620	-.02051	-.00338	-.00548	.76242	.54474	1.39960
7.529	2.600	31.67400	.93546	.06340	-.01625	-.02222	-.00361	-.00594	.76283	.54515	1.39930
7.522	2.800	31.67000	.93526	.06343	-.01622	-.02390	-.00387	-.00635	.76268	.54503	1.39930
	GRADIENT	.03821	.00127	-.00009	-.00040	-.00782	-.00141	-.00208	.00076	.00109	-.00145

OA257 (LARC 20-M6-6559) OV102 (R7E159) (10 JUL 81)

REFERENCE DATA

SREF = 2690.0000 SQ.FT. XMRP = 1076.6800 IN. XO
LREF = 474.8100 INCHES YMRP = .0000 IN. YO
BREF = 936.6800 INCHES ZMRP = 375.0000 IN. ZO
SCALE = .0100

PARAMETRIC DATA

ALPHA = 32.500 PHI = .000
SPDBRK = 86.600 AILRON = .000
YP = 1.000 1S = 1.000
ELEVON = .000 MACH = 6.000
S-MODE = 2.000 S-DIR = 1.000

RUN NO. 2149/ O RN/L = 2.27 GRADIENT INTERVAL = -.60/ .60

RN/L	BETA	ALPHA	CN	CA	CLM	CY	CYN	CBL	CL	CD	L/D
2.268	-2.600	31.86800	.94569	.06212	-.01387	.02580	.00273	.00663	.77034	.55205	1.39540
2.264	-2.400	31.87100	.94542	.06207	-.01403	.02415	.00253	.00613	.77012	.55189	1.39540
2.262	-2.200	31.88000	.94726	.06201	-.01416	.02222	.00233	.00560	.77162	.55294	1.39550
2.261	-2.000	31.89300	.94620	.06185	-.01431	.02036	.00217	.00510	.77068	.55242	1.39510
2.261	-1.800	31.89300	.94770	.06196	-.01446	.01863	.00201	.00460	.77190	.55330	1.39510
2.262	-1.600	31.90500	.94786	.06177	-.01453	.01688	.00182	.00407	.77202	.55339	1.39510
2.264	-1.400	31.90900	.94768	.06174	-.01473	.01513	.00164	.00356	.77183	.55333	1.39490
2.269	-1.200	31.91500	.94877	.06179	-.01485	.01337	.00148	.00303	.77269	.55403	1.39470
2.272	-1.000	31.92900	.94884	.06172	-.01492	.01163	.00129	.00255	.77264	.55420	1.39420
2.275	-.800	31.92900	.94884	.06171	-.01503	.00989	.00110	.00204	.77264	.55419	1.39420
2.271	-.600	31.94000	.94909	.06175	-.01494	.00814	.00089	.00153	.77274	.55449	1.39360
2.268	-.400	31.95100	.95145	.06186	-.01493	.00655	.00072	.00103	.77456	.55600	1.39310
2.266	-.200	31.95300	.95007	.06195	-.01489	.00473	.00048	.00054	.77333	.55537	1.39250
2.265	.000	31.96400	.94957	.06197	-.01475	.00310	.00026	.00009	.77279	.55526	1.39170
2.271	.200	31.97000	.95190	.06203	-.01476	.00156	.00003	-.00036	.77467	.55664	1.39170
2.271	.400	31.98000	.95076	.06202	-.01470	-.00029	-.00023	-.00078	.77362	.55615	1.39100
2.264	.600	31.98700	.95090	.06195	-.01482	-.00196	-.00044	-.00125	.77370	.55627	1.39090
2.263	.800	31.99200	.95217	.06207	-.01473	-.00377	-.00063	-.00168	.77467	.55710	1.39050
2.262	1.000	32.00500	.95175	.06208	-.01449	-.00551	-.00090	-.00213	.77418	.55707	1.38970
2.261	1.200	32.00700	.95097	.06194	-.01473	-.00702	-.00120	-.00256	.77358	.55656	1.38990
2.262	1.400	32.01600	.95157	.06204	-.01448	-.00867	-.00152	-.00296	.77394	.55708	1.38930
2.261	1.600	32.02900	.95131	.06201	-.01449	-.01026	-.00182	-.00340	.77361	.55710	1.38860
2.261	1.800	32.03000	.95333	.06204	-.01463	-.01175	-.00212	-.00382	.77530	.55820	1.38890
2.264	2.000	32.04200	.95099	.06198	-.01445	-.01347	-.00245	-.00426	.77323	.55708	1.38800
2.265	2.200	32.05100	.95369	.06204	-.01452	-.01502	-.00277	-.00467	.77540	.55868	1.38790
	GRADIENT	.03857	.00105	.00018	.00017	-.00842	-.00113	-.00229	.00042	.00123	-.00234

OA257 (LARC 20-M6-6559) OV102 (R7E159) (10 JUL 81)

REFERENCE DATA

SREF = 2690.0000 SQ.FT. XMRP = 1076.6800 IN. XO
LREF = 474.8100 INCHES YMRP = .0000 IN. YO
BREF = 936.6800 INCHES ZMRP = 375.0000 IN. ZO
SCALE = .0100

PARAMETRIC DATA

ALPHA = 32.500 PHI = .000
SPDBRK = 86.600 AILRON = .000
YP = 1.000 1S = 1.000
ELEVON = .000 MACH = 6.000
S-MODE = 2.000 S-DIR = 1.000

RUN NO. 2113/ O RN/L = 7.60 GRADIENT INTERVAL = -.60/ .60

RN/L	BETA	ALPHA	CN	CA	CLM	CY	CYN	CBL	CL	CD	L/D
7.595	-4.700	31.40500	.92357	.06365	-.01648	.03907	.00570	.01011	.75510	.53558	1.40990
7.609	-4.500	31.42100	.92490	.06364	-.01642	.03735	.00541	.00969	.75609	.53647	1.40940
7.622	-4.300	31.41900	.92514	.06362	-.01643	.03571	.00510	.00926	.75633	.53655	1.40960
7.618	-4.100	31.43600	.92593	.06353	-.01643	.03396	.00479	.00884	.75689	.53712	1.40920
7.629	-3.900	31.43600	.92614	.06349	-.01647	.03235	.00452	.00841	.75710	.53719	1.40940
7.624	-3.700	31.45500	.92705	.06342	-.01643	.03065	.00428	.00798	.75773	.53786	1.40880
7.622	-3.500	31.45200	.92726	.06337	-.01644	.02888	.00405	.00750	.75796	.53788	1.40910
7.622	-3.300	31.46800	.92773	.06327	-.01640	.02719	.00384	.00705	.75826	.53826	1.40870
7.625	-3.100	31.46900	.92811	.06332	-.01641	.02543	.00364	.00658	.75855	.53852	1.40860
7.631	-2.900	31.48900	.92877	.06325	-.01636	.02365	.00346	.00611	.75896	.53906	1.40790
7.642	-2.700	31.48900	.92913	.06328	-.01632	.02180	.00327	.00562	.75925	.53928	1.40790
7.644	-2.500	31.50200	.92955	.06325	-.01620	.02009	.00310	.00514	.75950	.53964	1.40740
7.654	-2.300	31.51300	.93020	.06332	-.01614	.01826	.00289	.00467	.75992	.54020	1.40670
7.658	-2.100	31.52100	.93051	.06333	-.01599	.01652	.00267	.00419	.76010	.54047	1.40640
7.656	-1.900	31.53100	.93113	.06337	-.01592	.01482	.00243	.00374	.76051	.54096	1.40590
7.650	-1.700	31.53500	.93090	.06342	-.01572	.01314	.00219	.00332	.76025	.54093	1.40550
7.624	-1.500	31.54100	.93152	.06347	-.01566	.01165	.00195	.00289	.76069	.54139	1.40510
7.620	-1.300	31.54200	.93177	.06347	-.01563	.00989	.00167	.00247	.76090	.54152	1.40510
7.605	-1.100	31.55200	.93235	.06350	-.01557	.00832	.00136	.00208	.76129	.54199	1.40460
7.605	-.900	31.55000	.93194	.06348	-.01552	.00688	.00106	.00170	.76097	.54172	1.40470
7.594	-.700	31.56600	.93254	.06350	-.01546	.00517	.00072	.00130	.76131	.54227	1.40390
7.576	-.500	31.56100	.93280	.06346	-.01552	.00370	.00040	.00090	.76160	.54230	1.40440
7.558	-.300	31.57300	.93301	.06341	-.01555	.00209	.00011	.00049	.76170	.54254	1.40400
7.566	-.100	31.57500	.93314	.06340	-.01570	.00061	-.00019	.00010	.76179	.54262	1.40390
7.562	.100	31.58800	.93362	.06341	-.01569	-.00093	-.00048	-.00033	.76207	.54306	1.40330
7.574	.300	31.59400	.93363	.06337	-.01581	-.00254	-.00078	-.00073	.76205	.54310	1.40310
7.579	.500	31.60800	.93392	.06335	-.01590	-.00422	-.00102	-.00118	.76217	.54343	1.40250
7.588	.700	31.61500	.93507	.06338	-.01593	-.00597	-.00125	-.00166	.76307	.54415	1.40230
7.587	.900	31.62300	.93481	.06332	-.01592	-.00771	-.00149	-.00211	.76281	.54407	1.40200
7.588	1.100	31.63100	.93496	.06326	-.01606	-.00927	-.00176	-.00257	.76288	.54420	1.40180
7.581	1.300	31.63700	.93519	.06320	-.01621	-.01102	-.00203	-.00301	.76306	.54435	1.40180
7.568	1.500	31.64500	.93530	.06320	-.01625	-.01276	-.00226	-.00345	.76307	.54452	1.40140
7.592	1.700	31.64900	.93532	.06322	-.01631	-.01457	-.00249	-.00391	.76304	.54459	1.40110
7.596	1.900	31.66500	.93559	.06325	-.01625	-.01628	-.00271	-.00437	.76311	.54497	1.40030
7.587	2.100	31.66400	.93529	.06331	-.01622	-.01802	-.00299	-.00482	.76284	.54485	1.40010
7.569	2.300	31.67900	.93540	.06330	-.01621	-.01966	-.00325	-.00525	.76279	.54510	1.39940
7.543	2.500	31.66600	.93472	.06335	-.01623	-.02138	-.00350	-.00571	.76230	.54462	1.39970
7.526	2.700	31.67800	.93540	.06340	-.01618	-.02309	-.00373	-.00615	.76274	.54518	1.39910
7.495	2.857	31.67100	.93558	.06344	-.01616	-.02450	-.00397	-.00646	.76295	.54520	1.39940
	GRADIENT	.04443	.00113	-.00009	-.00039	-.00786	-.00143	-.00207	.00060	.00111	-.00183

OA257 (LARC 20-M6-6559) OV102 (R7E060) (10 JUL 81)

REFERENCE DATA

SREF = 2690.0000 SQ.FT. XMRP = 1076.6800 IN. XO
LREF = 474.8100 INCHES YMRP = .0000 IN. YO
BREF = 936.6800 INCHES ZMRP = 375.0000 IN. ZO
SCALE = .0100

PARAMETRIC DATA

ALPHA = 35.000 PHI = .000
SPDBRK = 86.600 AILRON = .000
YP = 1.000 1S = 1.000
ELEVON = .000 MACH = 6.000
S-MODE = 2.000 S-DIR = 1.000

RUN NO. 153/ O RN/L = 2.28 GRADIENT INTERVAL = -.60/ .60

RN/L	BETA	ALPHA	CN	CA	CLM	CY	CYN	CBL	CL	CD	L/D
2.300	-3.159	34.38400	1.04470	.06054	-.02063	.02872	.00414	.00777	.82797	.63993	1.29380
2.300	-3.000	34.39600	1.04500	.06044	-.02063	.02751	.00391	.00744	.82811	.64019	1.29350
2.301	-2.800	34.39700	1.04570	.06035	-.02089	.02601	.00360	.00696	.82876	.64054	1.29390
2.294	-2.600	34.40800	1.04580	.06022	-.02103	.02439	.00332	.00648	.82878	.64064	1.29370
2.288	-2.400	34.41600	1.04660	.06014	-.02117	.02279	.00305	.00601	.82938	.64112	1.29360
2.287	-2.200	34.42000	1.04690	.06010	-.02134	.02129	.00281	.00549	.82964	.64134	1.29360
2.286	-2.000	34.43900	1.04740	.05992	-.02136	.01965	.00253	.00504	.82997	.64177	1.29320
2.283	-1.800	34.43400	1.04780	.05990	-.02165	.01795	.00224	.00457	.83032	.64189	1.29360
2.285	-1.600	34.44800	1.04830	.05970	-.02145	.01642	.00196	.00410	.83074	.64224	1.29350
2.283	-1.400	34.45200	1.04870	.05971	-.02158	.01477	.00169	.00365	.83100	.64252	1.29330
2.276	-1.200	34.45900	1.04910	.05980	-.02177	.01313	.00145	.00319	.83119	.64291	1.29290
2.272	-1.000	34.47600	1.04920	.05969	-.02173	.01144	.00124	.00270	.83111	.64311	1.29230
2.276	-.800	34.47400	1.04930	.05972	-.02190	.00971	.00104	.00222	.83121	.64316	1.29240
2.278	-.600	34.48900	1.05000	.05969	-.02181	.00810	.00081	.00173	.83162	.64374	1.29190
2.278	-.400	34.49300	1.04990	.05971	-.02187	.00651	.00054	.00128	.83148	.64377	1.29160
2.278	-.200	34.50100	1.05080	.05969	-.02192	.00494	.00027	.00082	.83216	.64439	1.29140
2.280	.000	34.51400	1.05060	.05973	-.02165	.00337	.00004	.00032	.83187	.64452	1.29070
2.282	.200	34.51500	1.05080	.05974	-.02173	.00162	-.00021	-.00020	.83200	.64465	1.29060
2.275	.400	34.53200	1.05110	.05983	-.02158	.00002	-.00045	-.00072	.83200	.64512	1.28970
2.274	.600	34.53100	1.05150	.05995	-.02149	-.00176	-.00071	-.00120	.83228	.64544	1.28950
2.269	.800	34.54400	1.05200	.06016	-.02140	-.00319	-.00095	-.00167	.83240	.64606	1.28840
2.265	1.000	34.55100	1.05160	.06026	-.02133	-.00485	-.00121	-.00216	.83191	.64601	1.28780
2.260	1.200	34.55600	1.05260	.06054	-.02126	-.00656	-.00147	-.00267	.83252	.64687	1.28700
2.258	1.400	34.57400	1.05180	.06065	-.02102	-.00818	-.00170	-.00316	.83162	.64679	1.28580
2.260	1.600	34.56900	1.05210	.06088	-.02094	-.00981	-.00196	-.00363	.83178	.64708	1.28540
2.261	1.797	34.58700	1.05290	.06091	-.02072	-.01128	-.00225	-.00408	.83224	.64782	1.28470
	GRADIENT	.03893	.00123	.00019	.00030	-.00820	-.00126	-.00247	.00051	.00144	-.00211

OA257 (LARC 20-M6-6559) DV102 (R7E060) (10 JUL 81)

REFERENCE DATA

SREF = 2690.0000 SQ.FT. XMRP = 1076.6800 IN. XO
LREF = 474.8100 INCHES YMRP = .0000 IN. YO
BREF = 936.6800 INCHES ZMRP = 375.0000 IN. ZO
SCALE = .0100

PARAMETRIC DATA

ALPHA = 35.000 PHI = .000
SPDBRK = 86.600 AILRON = .000
YP = 1.000 1S = 1.000
ELEVON = .000 MACH = 6.000
S-MODE = 2.000 S-DIR = 1.000

RUN NO. 114/ 0 RN/L = 7.56 GRADIENT INTERVAL = -.60/ .60

RN/L	BETA	ALPHA	CN	CA	CLM	CY	CYN	CBL	CL	CD	L/D
7.587	-4.973	33.84800	1.02950	.06262	-.02258	.03975	.00679	.01088	.82012	.62542	1.31130
7.592	-4.800	33.86100	1.03010	.06250	-.02273	.03829	.00653	.01050	.82060	.62588	1.31110
7.596	-4.600	33.85900	1.03090	.06245	-.02277	.03669	.00622	.01006	.82127	.62623	1.31140
7.593	-4.400	33.87500	1.03140	.06237	-.02284	.03504	.00590	.00963	.82157	.62666	1.31100
7.601	-4.200	33.87400	1.03190	.06230	-.02292	.03344	.00556	.00922	.82203	.62688	1.31130
7.602	-4.000	33.89100	1.03280	.06220	-.02289	.03188	.00523	.00880	.82267	.62755	1.31090
7.601	-3.800	33.89500	1.03340	.06219	-.02299	.03040	.00490	.00839	.82310	.62792	1.31080
7.631	-3.600	33.91000	1.03410	.06215	-.02295	.02875	.00456	.00798	.82354	.62850	1.31030
7.644	-3.400	33.92100	1.03490	.06215	-.02297	.02735	.00418	.00760	.82406	.62908	1.30990
7.639	-3.200	33.92400	1.03500	.06214	-.02287	.02597	.00384	.00721	.82413	.62919	1.30980
7.645	-3.000	33.94100	1.03580	.06216	-.02288	.02431	.00350	.00680	.82459	.62989	1.30910
7.643	-2.800	33.94200	1.03580	.06223	-.02276	.02286	.00320	.00637	.82460	.63000	1.30890
7.626	-2.600	33.95200	1.03640	.06230	-.02265	.02127	.00289	.00593	.82490	.63051	1.30830
7.620	-2.400	33.95300	1.03720	.06252	-.02245	.01969	.00261	.00552	.82547	.63118	1.30780
7.618	-2.200	33.96500	1.03740	.06254	-.02233	.01800	.00235	.00504	.82549	.63149	1.30720
7.595	-2.000	33.96400	1.03750	.06259	-.02231	.01632	.00209	.00455	.82548	.63151	1.30720
7.580	-1.800	33.97000	1.03780	.06259	-.02217	.01468	.00180	.00408	.82570	.63179	1.30690
7.551	-1.600	33.97700	1.03870	.06266	-.02209	.01306	.00153	.00361	.82636	.63246	1.30660
7.570	-1.400	33.98300	1.03820	.06265	-.02210	.01143	.00127	.00316	.82589	.63226	1.30620
7.532	-1.200	33.99000	1.03850	.06267	-.02201	.00977	.00103	.00269	.82605	.63255	1.30590
7.531	-1.000	33.99000	1.03920	.06270	-.02201	.00809	.00082	.00221	.82657	.63294	1.30590
7.535	-.800	34.00900	1.03960	.06268	-.02192	.00637	.00061	.00170	.82670	.63341	1.30520
7.532	-.600	34.00600	1.03950	.06267	-.02203	.00468	.00040	.00121	.82671	.63334	1.30530
7.538	-.400	34.02700	1.04050	.06267	-.02204	.00290	.00021	.00071	.82726	.63417	1.30450
7.530	-.200	34.02900	1.04080	.06271	-.02206	.00127	.00002	.00019	.82750	.63444	1.30430
7.535	.000	34.03800	1.04090	.06263	-.02215	-.00041	-.00020	-.00026	.82747	.63451	1.30410
7.538	.200	34.04500	1.04120	.06263	-.02220	-.00207	-.00045	-.00073	.82771	.63482	1.30390
7.566	.400	34.05100	1.04170	.06266	-.02226	-.00371	-.00070	-.00117	.82798	.63517	1.30350
7.568	.600	34.06600	1.04210	.06265	-.02228	-.00531	-.00098	-.00164	.82814	.63561	1.30290
7.542	.800	34.06200	1.04160	.06267	-.02239	-.00682	-.00126	-.00207	.82776	.63530	1.30300
7.513	1.000	34.07600	1.04190	.06270	-.02233	-.00838	-.00159	-.00251	.82787	.63571	1.30230
7.508	1.200	34.07600	1.04200	.06280	-.02231	-.00997	-.00191	-.00295	.82788	.63584	1.30200
7.488	1.400	34.08300	1.04240	.06281	-.02225	-.01163	-.00222	-.00338	.82811	.63615	1.30180
7.480	1.600	34.08000	1.04170	.06279	-.02231	-.01317	-.00250	-.00384	.82765	.63574	1.30190
7.463	1.800	34.09000	1.04190	.06282	-.02220	-.01483	-.00279	-.00430	.82765	.63600	1.30130
7.455	2.000	34.10100	1.04210	.06289	-.02224	-.01654	-.00309	-.00478	.82764	.63632	1.30070
7.450	2.200	34.10200	1.04200	.06285	-.02226	-.01814	-.00341	-.00520	.82755	.63623	1.30070
7.464	2.400	34.12000	1.04240	.06284	-.02222	-.01970	-.00370	-.00562	.82771	.63675	1.29990
7.478	2.600	34.12400	1.04260	.06289	-.02225	-.02127	-.00401	-.00609	.82780	.63695	1.29960
7.450	2.768	34.11800	1.04230	.06302	-.02234	-.02264	-.00429	-.00643	.82759	.63682	1.29960
	GRADIENT	.04357	.00189	-.00003	-.00024	-.00831	-.00115	-.00237	.00106	.00164	-.00171

OA257 (LARC 20-M6-6559) OV102 (R7E160) (10 JUL 81)

REFERENCE DATA

SREF = 2690.0000 SQ.FT. XMRP = 1076.6800 IN. XO
LREF = 474.8100 INCHES YMRP = .0000 IN. YO
BREF = 936.6800 INCHES ZMRP = 375.0000 IN. ZO
SCALE = .0100

PARAMETRIC DATA

ALPHA = 35.000 PHI = .000
SPDBRK = 86.600 AILRON = .000
YP = 1.000 1S = 1.000
ELEVON = .000 MACH = 6.000
S-MODE = 2.000 S-DIR = 1.000

RUN NO. 2153/ O RN/L = 2.28 GRADIENT INTERVAL = -.60/ .60

RN/L	BETA	ALPHA	CN	CA	CLM	CY	CYN	CBL	CL	CD	L/D
2.300	-3.100	34.38900	1.04470	.06049	-.02059	.02823	.00405	.00765	.82791	.63996	1.29370
2.301	-2.900	34.39600	1.04480	.06035	-.02081	.02679	.00374	.00722	.82806	.64005	1.29380
2.299	-2.700	34.40000	1.04520	.06024	-.02104	.02511	.00344	.00671	.82835	.64020	1.29390
2.290	-2.500	34.41700	1.04590	.06018	-.02104	.02363	.00319	.00625	.82882	.64082	1.29340
2.287	-2.300	34.41600	1.04660	.06008	-.02124	.02205	.00292	.00575	.82941	.64107	1.29380
2.287	-2.100	34.42900	1.04760	.05995	-.02147	.02041	.00265	.00528	.83015	.64173	1.29360
2.284	-1.900	34.43300	1.04740	.05993	-.02150	.01879	.00238	.00480	.82998	.64167	1.29350
2.286	-1.700	34.43900	1.04800	.05982	-.02160	.01723	.00210	.00432	.83051	.64203	1.29360
2.284	-1.500	34.45200	1.04850	.05974	-.02153	.01560	.00183	.00388	.83081	.64243	1.29320
2.280	-1.300	34.45300	1.04830	.05978	-.02168	.01395	.00155	.00341	.83058	.64234	1.29310
2.273	-1.100	34.47100	1.04920	.05964	-.02176	.01227	.00135	.00292	.83119	.64298	1.29270
2.274	-.900	34.47400	1.04910	.05967	-.02177	.01055	.00113	.00246	.83109	.64302	1.29250
2.277	-.700	34.47900	1.04940	.05970	-.02184	.00893	.00094	.00196	.83122	.64325	1.29220
2.278	-.500	34.49300	1.05020	.05967	-.02183	.00733	.00066	.00153	.83177	.64391	1.29170
2.278	-.300	34.49400	1.05080	.05979	-.02203	.00564	.00041	.00105	.83223	.64439	1.29150
2.279	-.100	34.51300	1.05080	.05967	-.02173	.00421	.00016	.00056	.83205	.64453	1.29090
2.282	.100	34.51100	1.05050	.05979	-.02172	.00248	-.00010	.00006	.83171	.64442	1.29060
2.278	.300	34.52500	1.05100	.05975	-.02178	.00094	-.00033	-.00046	.83203	.64490	1.29020
2.276	.500	34.53300	1.05160	.05989	-.02156	-.00099	-.00059	-.00097	.83235	.64548	1.28950
2.271	.700	34.53300	1.05160	.06012	-.02154	-.00243	-.00082	-.00145	.83224	.64568	1.28890
2.268	.900	34.55200	1.05170	.06023	-.02130	-.00410	-.00109	-.00190	.83203	.64608	1.28780
2.263	1.100	34.55000	1.05190	.06042	-.02144	-.00570	-.00134	-.00241	.83213	.64632	1.28750
2.258	1.300	34.56800	1.05160	.06050	-.02109	-.00731	-.00159	-.00290	.83161	.64649	1.28630
2.259	1.500	34.57000	1.05210	.06075	-.02096	-.00895	-.00183	-.00339	.83188	.64702	1.28570
2.260	1.700	34.57800	1.05180	.06095	-.02089	-.01053	-.00208	-.00387	.83140	.64710	1.28480
	GRADIENT	.04157	.00104	.00016	.00030	-.00820	-.00125	-.00250	.00028	.00132	-.00217

OA257 (LARC 20-M6-6559) OV102 (R7E160) (10 JUL 81)

REFERENCE DATA

SREF = 2690.0000 SQ.FT. XMRP = 1076.6800 IN. XO
LREF = 474.8100 INCHES YMRP = .0000 IN. YO
BREF = 936.6800 INCHES ZMRP = 375.0000 IN. ZO
SCALE = .0100

PARAMETRIC DATA

ALPHA = 35.000 PHI = .000
SPDBRK = 86.600 AILRON = .000
YP = 1.000 1S = 1.000
ELEVON = .000 MACH = 6.000
S-MODE = 2.000 S-DIR = 1.000

RUN NO. 2114/ O RN/L = 7.56 GRADIENT INTERVAL = -.60/ .60

RN/L	BETA	ALPHA	CN	CA	CLM	CY	CYN	CBL	CL	CD	L/D
7.593	-4.900	33.85000	1.02930	.06253	-.02268	.03913	.00668	.01071	.82000	.62527	1.31140
7.592	-4.700	33.86000	1.03000	.06246	-.02276	.03747	.00637	.01028	.82052	.62575	1.31120
7.601	-4.500	33.86900	1.03150	.06240	-.02280	.03581	.00604	.00984	.82167	.62665	1.31120
7.599	-4.300	33.87300	1.03180	.06229	-.02286	.03418	.00573	.00943	.82195	.62680	1.31130
7.605	-4.100	33.88800	1.03240	.06226	-.02294	.03274	.00541	.00900	.82231	.62730	1.31090
7.598	-3.900	33.88800	1.03270	.06218	-.02295	.03106	.00506	.00859	.82260	.62741	1.31110
7.619	-3.700	33.90800	1.03390	.06216	-.02298	.02966	.00474	.00819	.82340	.62835	1.31040
7.638	-3.500	33.91000	1.03450	.06214	-.02298	.02799	.00435	.00779	.82390	.62873	1.31040
7.646	-3.300	33.92900	1.03500	.06210	-.02295	.02669	.00402	.00741	.82413	.62924	1.30970
7.638	-3.100	33.93000	1.03540	.06214	-.02291	.02511	.00368	.00699	.82438	.62948	1.30960
7.651	-2.900	33.94500	1.03600	.06219	-.02281	.02360	.00335	.00659	.82471	.63010	1.30890
7.629	-2.700	33.94600	1.03620	.06228	-.02273	.02201	.00303	.00614	.82482	.63030	1.30860
7.618	-2.500	33.95100	1.03670	.06238	-.02256	.02048	.00275	.00572	.82512	.63072	1.30820
7.615	-2.300	33.96100	1.03750	.06254	-.02244	.01886	.00248	.00527	.82556	.63144	1.30740
7.613	-2.100	33.96300	1.03680	.06254	-.02229	.01713	.00222	.00479	.82501	.63110	1.30720
7.585	-1.900	33.97000	1.03800	.06258	-.02224	.01550	.00194	.00433	.82588	.63190	1.30700
7.567	-1.700	33.96900	1.03810	.06265	-.02211	.01390	.00167	.00385	.82594	.63200	1.30690
7.561	-1.500	33.98400	1.03880	.06265	-.02205	.01217	.00139	.00338	.82632	.63259	1.30620
7.550	-1.300	33.98300	1.03860	.06267	-.02203	.01060	.00115	.00292	.82622	.63251	1.30620
7.525	-1.100	33.98900	1.03870	.06264	-.02194	.00894	.00093	.00245	.82626	.63263	1.30610
7.542	-.900	34.00000	1.03950	.06272	-.02199	.00722	.00071	.00196	.82672	.63330	1.30540
7.531	-.700	34.00700	1.03990	.06268	-.02194	.00550	.00051	.00146	.82698	.63357	1.30530
7.535	-.500	34.02200	1.04040	.06271	-.02206	.00377	.00031	.00094	.82721	.63407	1.30460
7.533	-.300	34.02300	1.04010	.06269	-.02199	.00207	.00011	.00043	.82694	.63391	1.30450
7.529	-.100	34.03700	1.04120	.06268	-.02209	.00046	-.00009	-.00003	.82777	.63476	1.30410
7.535	.100	34.03600	1.04090	.06263	-.02222	-.00128	-.00032	-.00049	.82754	.63452	1.30420
7.552	.300	34.05200	1.04160	.06262	-.02221	-.00293	-.00057	-.00095	.82792	.63512	1.30360
7.574	.500	34.05600	1.04220	.06263	-.02232	-.00454	-.00083	-.00141	.82839	.63554	1.30340
7.549	.700	34.06300	1.04160	.06264	-.02227	-.00608	-.00113	-.00185	.82784	.63532	1.30300
7.528	.900	34.06800	1.04190	.06268	-.02240	-.00759	-.00142	-.00228	.82800	.63558	1.30270
7.510	1.100	34.07500	1.04180	.06275	-.02234	-.00918	-.00175	-.00273	.82781	.63570	1.30220
7.494	1.300	34.08500	1.04190	.06282	-.02224	-.01081	-.00206	-.00317	.82769	.63593	1.30150
7.495	1.500	34.08000	1.04190	.06280	-.02226	-.01240	-.00237	-.00360	.82773	.63582	1.30180
7.471	1.700	34.09100	1.04220	.06278	-.02226	-.01400	-.00265	-.00408	.82792	.63616	1.30140
7.454	1.900	34.09000	1.04180	.06284	-.02222	-.01570	-.00292	-.00454	.82756	.63597	1.30130
7.455	2.100	34.10400	1.04170	.06287	-.02221	-.01730	-.00324	-.00499	.82730	.63612	1.30050
7.457	2.300	34.11000	1.04230	.06289	-.02228	-.01889	-.00356	-.00541	.82774	.63660	1.30030
7.473	2.500	34.12300	1.04260	.06285	-.02224	-.02049	-.00386	-.00585	.82786	.63692	1.29980
7.473	2.700	34.13200	1.04250	.06293	-.02222	-.02209	-.00417	-.00629	.82764	.63707	1.29910
	GRADIENT	.03657	.00189	-.00009	-.00030	-.00833	-.00114	-.00233	.00123	.00153	-.00123

OA257 (LARC 20-M6-6559) OV102 (R7E061) (10 JUL 81)

REFERENCE DATA

SREF = 2690.0000 SQ.FT. XMRP = 1076.6800 IN. XO
LREF = 474.8100 INCHES YMRP = .0000 IN. YO
BREF = 936.6800 INCHES ZMRP = 375.0000 IN. ZO
SCALE = .0100

PARAMETRIC DATA

ALPHA = 37.500 PHI = .000
SPDBRK = 86.600 AILRON = .000
YP = 1.000 1S = 1.000
ELEVON = .000 MACH = 6.000
S-MODE = 2.000 S-DIR = 1.000

RUN NO. 154/ 0 RN/L = 2.31 GRADIENT INTERVAL = -.60/ .60

RN/L	BETA	ALPHA	CN	CA	CLM	CY	CYN	CBL	CL	CD	L/D
2.299	-3.244	36.73300	1.14910	.05931	-.02786	.02738	.00512	.00767	.88542	.73476	1.20500
2.298	-3.100	36.72900	1.14830	.05940	-.02800	.02641	.00492	.00731	.88484	.73435	1.20490
2.297	-2.900	36.74900	1.14910	.05925	-.02807	.02465	.00462	.00685	.88526	.73497	1.20450
2.300	-2.700	36.75100	1.14960	.05923	-.02828	.02303	.00432	.00638	.88568	.73532	1.20450
2.302	-2.500	36.76000	1.15160	.05927	-.02840	.02152	.00401	.00594	.88716	.73671	1.20420
2.305	-2.300	36.77100	1.15110	.05917	-.02839	.02005	.00367	.00549	.88667	.73647	1.20390
2.304	-2.100	36.77600	1.15140	.05921	-.02855	.01846	.00335	.00506	.88678	.73673	1.20370
2.305	-1.900	36.79200	1.15360	.05914	-.02857	.01696	.00305	.00462	.88840	.73825	1.20340
2.309	-1.700	36.79300	1.15240	.05921	-.02877	.01547	.00269	.00419	.88740	.73762	1.20300
2.307	-1.500	36.80800	1.15270	.05915	-.02873	.01398	.00236	.00375	.88749	.73801	1.20260
2.307	-1.300	36.81000	1.15310	.05920	-.02877	.01243	.00201	.00333	.88771	.73828	1.20240
2.303	-1.100	36.82500	1.15420	.05917	-.02883	.01095	.00166	.00286	.88841	.73913	1.20200
2.302	-.900	36.83000	1.15430	.05917	-.02879	.00947	.00138	.00241	.88847	.73932	1.20170
2.309	-.700	36.83800	1.15450	.05924	-.02883	.00803	.00103	.00192	.88846	.73960	1.20130
2.314	-.500	36.85200	1.15520	.05912	-.02885	.00664	.00069	.00149	.88890	.74012	1.20100
2.307	-.300	36.85000	1.15580	.05932	-.02896	.00519	.00030	.00105	.88930	.74064	1.20070
2.304	-.100	36.87100	1.15590	.05928	-.02892	.00391	-.00003	.00061	.88918	.74101	1.20000
2.306	.100	36.86900	1.15580	.05925	-.02905	.00252	-.00040	.00016	.88914	.74088	1.20010
2.302	.300	36.88600	1.15690	.05922	-.02898	.00105	-.00071	-.00030	.88978	.74176	1.19960
2.307	.500	36.88700	1.15660	.05938	-.02892	-.00052	-.00105	-.00079	.88945	.74173	1.19910
2.308	.700	36.89900	1.15720	.05955	-.02896	-.00194	-.00133	-.00127	.88965	.74241	1.19830
2.306	.900	36.90900	1.15670	.05948	-.02893	-.00358	-.00159	-.00176	.88916	.74222	1.19800
2.308	1.100	36.91300	1.15700	.05963	-.02899	-.00519	-.00184	-.00230	.88926	.74258	1.19750
2.309	1.300	36.92800	1.15770	.05962	-.02880	-.00684	-.00209	-.00283	.88965	.74324	1.19700
2.317	1.500	36.92800	1.15710	.05979	-.02885	-.00860	-.00226	-.00337	.88908	.74300	1.19660
2.316	1.700	36.95300	1.15860	.05984	-.02862	-.01045	-.00241	-.00399	.88987	.74429	1.19560
	GRADIENT	.04014	.00146	.00014	-.00008	-.00708	-.00173	-.00227	.00059	.00161	-.00181

OA257 (LARC 20-M6-6559) OV102 (R7E061) (10 JUL 81)

REFERENCE DATA

SREF = 2690.0000 SQ.FT. XMRP = 1076.6800 IN. XO
LREF = 474.8100 INCHES YMRP = .0000 IN. YO
BREF = 936.6800 INCHES ZMRP = 375.0000 IN. ZO
SCALE = .0100

PARAMETRIC DATA

ALPHA = 37.500 PHI = .000
SPDBRK = 86.600 AILRON = .000
YP = 1.000 1S = 1.000
ELEVON = .000 MACH = 6.000
S-MODE = 2.000 S-DIR = 1.000

RUN NO. 115/ 0 RN/L = 7.52 GRADIENT INTERVAL = -.60/ .60

RN/L	BETA	ALPHA	CN	CA	CLM	CY	CYN	CBL	CL	CD	L/D
7.576	-4.943	36.36200	1.14260	.06110	-.03035	.03864	.00767	.01118	.88385	.72661	1.21640
7.583	-4.800	36.36400	1.14240	.06104	-.03048	.03740	.00742	.01084	.88377	.72653	1.21640
7.591	-4.600	36.37400	1.14300	.06110	-.03035	.03587	.00697	.01041	.88408	.72707	1.21590
7.593	-4.400	36.38100	1.14360	.06100	-.03051	.03429	.00670	.00995	.88453	.72744	1.21590
7.574	-4.200	36.38400	1.14440	.06095	-.03049	.03266	.00637	.00951	.88515	.72791	1.21600
7.561	-4.000	36.39500	1.14480	.06107	-.03031	.03151	.00584	.00916	.88530	.72845	1.21530
7.564	-3.800	36.39400	1.14560	.06108	-.03035	.03002	.00541	.00879	.88592	.72889	1.21540
7.547	-3.600	36.40800	1.14630	.06108	-.03027	.02867	.00502	.00840	.88628	.72951	1.21490
7.543	-3.400	36.40200	1.14630	.06115	-.03023	.02736	.00459	.00804	.88637	.72951	1.21500
7.540	-3.200	36.42000	1.14750	.06114	-.03020	.02593	.00418	.00768	.88706	.73047	1.21440
7.524	-3.000	36.41900	1.14800	.06115	-.03020	.02453	.00376	.00731	.88746	.73075	1.21440
7.527	-2.800	36.43500	1.14840	.06111	-.03024	.02313	.00337	.00694	.88764	.73122	1.21390
7.532	-2.600	36.43900	1.14900	.06119	-.03029	.02175	.00302	.00652	.88802	.73169	1.21370
7.532	-2.400	36.44900	1.14940	.06114	-.03028	.02022	.00267	.00608	.88828	.73207	1.21340
7.526	-2.200	36.46000	1.15030	.06117	-.03024	.01878	.00236	.00559	.88878	.73276	1.21290
7.534	-2.000	36.46600	1.15020	.06100	-.03038	.01702	.00212	.00506	.88878	.73271	1.21300
7.538	-1.800	36.48300	1.15120	.06099	-.03053	.01554	.00189	.00459	.88932	.73352	1.21240
7.544	-1.600	36.48000	1.15070	.06099	-.03051	.01388	.00162	.00408	.88900	.73321	1.21250
7.553	-1.400	36.50100	1.15210	.06113	-.03038	.01219	.00138	.00355	.88972	.73444	1.21140
7.586	-1.200	36.51000	1.15240	.06111	-.03039	.01035	.00122	.00297	.88989	.73474	1.21120
7.560	-1.000	36.52000	1.15230	.06107	-.03047	.00863	.00103	.00243	.88966	.73479	1.21080
7.565	-.800	36.52500	1.15300	.06113	-.03048	.00682	.00079	.00188	.89018	.73537	1.21050
7.551	-.600	36.53200	1.15360	.06113	-.03042	.00514	.00057	.00133	.89060	.73585	1.21030
7.536	-.400	36.53500	1.15330	.06119	-.03040	.00347	.00035	.00079	.89027	.73576	1.21000
7.504	-.200	36.53100	1.15340	.06130	-.03031	.00173	.00011	.00026	.89028	.73581	1.20990
7.486	.000	36.54200	1.15390	.06139	-.03023	.00011	-.00012	-.00023	.89055	.73639	1.20930
7.465	.200	36.53600	1.15350	.06144	-.03011	-.00153	-.00039	-.00075	.89023	.73605	1.20950
7.463	.400	36.55300	1.15430	.06158	-.02995	-.00318	-.00065	-.00125	.89062	.73695	1.20850
7.473	.600	36.55500	1.15360	.06163	-.02994	-.00469	-.00094	-.00168	.88999	.73662	1.20820
7.475	.800	36.56800	1.15460	.06172	-.02980	-.00621	-.00123	-.00217	.89056	.73745	1.20760
7.464	1.000	36.56900	1.15440	.06181	-.02973	-.00777	-.00152	-.00266	.89036	.73745	1.20730
7.463	1.200	36.58700	1.15460	.06185	-.02961	-.00928	-.00187	-.00311	.89025	.73787	1.20650
7.459	1.400	36.59200	1.15450	.06189	-.02962	-.01072	-.00221	-.00353	.89004	.73789	1.20620
7.464	1.600	36.59700	1.15450	.06188	-.02953	-.01220	-.00257	-.00398	.88997	.73796	1.20600
7.466	1.800	36.61500	1.15490	.06190	-.02961	-.01361	-.00293	-.00437	.89010	.73854	1.20520
7.473	2.000	36.61200	1.15450	.06190	-.02958	-.01508	-.00330	-.00481	.88979	.73823	1.20530
7.469	2.200	36.62900	1.15460	.06193	-.02954	-.01649	-.00366	-.00522	.88965	.73857	1.20460
7.476	2.400	36.62800	1.15460	.06196	-.02957	-.01801	-.00402	-.00566	.88964	.73860	1.20450
7.470	2.600	36.64300	1.15450	.06197	-.02949	-.01950	-.00439	-.00609	.88938	.73878	1.20390
7.472	2.744	36.64300	1.15520	.06203	-.02955	-.02057	-.00464	-.00639	.88984	.73921	1.20380
	GRADIENT	.01964	.00038	.00043	.00045	-.00822	-.00126	-.00252	-.00021	.00088	-.00173

OA257 (LARC 20-M6-6559) OV102 (R7E161) (10 JUL 81)

REFERENCE DATA

SREF = 2690.0000 SQ.FT. XMRP = 1076.6800 IN. XO
LREF = 474.8100 INCHES YMRP = .0000 IN. YO
BREF = 936.6800 INCHES ZMRP = 375.0000 IN. ZO
SCALE = .0100

PARAMETRIC DATA

ALPHA = 37.500 PHI = .000
SPDBRK = 86.600 AILRON = .000
YP = 1.000 1S = 1.000
ELEVON = .000 MACH = 6.000
S-MODE = 2.000 S-DIR = 1.000

RUN NO. 2154/ 0 RN/L = 2.31 GRADIENT INTERVAL = -.60/ .60

RN/L	BETA	ALPHA	CN	CA	CLM	CY	CYN	CBL	CL	CD	L/D
2.298	-3.200	36.73100	1.14870	.05939	-.02790	.02710	.00506	.00756	.88514	.73461	1.20490
2.298	-3.000	36.73700	1.14840	.05934	-.02805	.02558	.00478	.00708	.88486	.73448	1.20470
2.296	-2.800	36.75500	1.15020	.05929	-.02820	.02385	.00448	.00661	.88608	.73577	1.20430
2.301	-2.600	36.75100	1.15070	.05926	-.02839	.02231	.00417	.00616	.88652	.73598	1.20460
2.303	-2.400	36.77200	1.15110	.05921	-.02831	.02077	.00384	.00572	.88665	.73653	1.20380
2.305	-2.200	36.77100	1.15080	.05920	-.02856	.01923	.00352	.00527	.88644	.73633	1.20390
2.304	-2.000	36.79000	1.15180	.05915	-.02860	.01782	.00320	.00484	.88696	.73716	1.20320
2.309	-1.800	36.79100	1.15210	.05918	-.02865	.01619	.00284	.00441	.88718	.73738	1.20310
2.307	-1.600	36.79900	1.15240	.05919	-.02876	.01474	.00252	.00396	.88734	.73772	1.20280
2.308	-1.400	36.81000	1.15320	.05917	-.02869	.01316	.00218	.00354	.88786	.73836	1.20250
2.305	-1.200	36.81500	1.15380	.05922	-.02890	.01173	.00185	.00312	.88823	.73881	1.20220
2.303	-1.000	36.83300	1.15420	.05925	-.02875	.01015	.00153	.00263	.88833	.73936	1.20150
2.305	-.800	36.83100	1.15450	.05921	-.02883	.00868	.00120	.00217	.88858	.73946	1.20170
2.314	-.600	36.84700	1.15440	.05921	-.02883	.00734	.00087	.00171	.88825	.73963	1.20090
2.310	-.400	36.85100	1.15490	.05922	-.02885	.00585	.00050	.00127	.88865	.74005	1.20080
2.305	-.200	36.86400	1.15620	.05926	-.02892	.00460	.00015	.00083	.88948	.74103	1.20030
2.305	.000	36.86700	1.15500	.05924	-.02896	.00318	-.00023	.00039	.88851	.74035	1.20010
2.304	.200	36.87500	1.15650	.05921	-.02909	.00178	-.00056	-.00006	.88965	.74137	1.20000
2.302	.400	36.89000	1.15700	.05935	-.02890	.00023	-.00089	-.00055	.88971	.74197	1.19910
2.309	.600	36.89000	1.15620	.05948	-.02899	-.00118	-.00118	-.00103	.88902	.74161	1.19880
2.306	.800	36.90900	1.15710	.05948	-.02891	-.00278	-.00147	-.00151	.88952	.74248	1.19800
2.308	1.000	36.90900	1.15650	.05952	-.02899	-.00442	-.00171	-.00203	.88901	.74214	1.19790
2.307	1.200	36.92800	1.15680	.05968	-.02896	-.00604	-.00196	-.00256	.88887	.74274	1.19680
2.315	1.400	36.92600	1.15760	.05973	-.02883	-.00778	-.00218	-.00310	.88951	.74323	1.19680
2.316	1.600	36.94000	1.15780	.05975	-.02873	-.00951	-.00233	-.00367	.88945	.74353	1.19620
2.316	1.704	36.95300	1.15860	.05985	-.02862	-.01049	-.00242	-.00401	.88985	.74430	1.19550
	GRADIENT	.03893	.00177	.00018	-.00014	-.00707	-.00172	-.00227	.00082	.00181	-.00179

OA257 (LARC 20-M6-6559) OV102 (R7E161) (10 JUL 81)

REFERENCE DATA

SREF = 2690.0000 SQ.FT. XMRP = 1076.6800 IN. XO
LREF = 474.8100 INCHES YMRP = .0000 IN. YO
BREF = 936.6800 INCHES ZMRP = 375.0000 IN. ZO
SCALE = .0100

PARAMETRIC DATA

ALPHA = 37.500 PHI = .000
SPDBRK = 86.600 AILRON = .000
YP = 1.000 1S = 1.000
ELEVON = .000 MACH = 6.000
S-MODE = 2.000 S-DIR = 1.000

RUN NO. 2115/ 0 RN/L = 7.52 GRADIENT INTERVAL = -.60/ .60

RN/L	BETA	ALPHA	CN	CA	CLM	CY	CYN	CBL	CL	CD	L/D
7.582	-4.900	36.36000	1.14140	.06103	-.03036	.03818	.00759	.01107	.88302	.72587	1.21650
7.593	-4.700	36.37600	1.14310	.06107	-.03045	.03663	.00722	.01062	.88413	.72712	1.21590
7.593	-4.500	36.37100	1.14340	.06111	-.03044	.03508	.00682	.01018	.88440	.72724	1.21610
7.583	-4.300	36.38800	1.14430	.06098	-.03047	.03347	.00654	.00972	.88500	.72793	1.21580
7.573	-4.100	36.38600	1.14440	.06100	-.03044	.03205	.00613	.00933	.88512	.72800	1.21580
7.554	-3.900	36.39600	1.14540	.06109	-.03032	.03083	.00563	.00898	.88577	.72883	1.21530
7.557	-3.700	36.39700	1.14560	.06109	-.03037	.02934	.00519	.00861	.88588	.72894	1.21530
7.546	-3.500	36.40200	1.14610	.06106	-.03021	.02802	.00482	.00822	.88623	.72929	1.21520
7.540	-3.300	36.41400	1.14730	.06118	-.03025	.02667	.00438	.00787	.88701	.73032	1.21460
7.533	-3.100	36.41700	1.14740	.06115	-.03020	.02526	.00398	.00750	.88701	.73034	1.21450
7.523	-2.900	36.43400	1.14850	.06114	-.03019	.02381	.00357	.00711	.88771	.73127	1.21390
7.532	-2.700	36.43300	1.14850	.06116	-.03026	.02239	.00318	.00672	.88772	.73129	1.21390
7.531	-2.500	36.44900	1.14930	.06116	-.03028	.02104	.00284	.00630	.88818	.73203	1.21330
7.528	-2.300	36.45000	1.14960	.06116	-.03026	.01950	.00250	.00584	.88835	.73217	1.21330
7.532	-2.100	36.46900	1.15040	.06105	-.03028	.01784	.00222	.00533	.88888	.73290	1.21280
7.535	-1.900	36.47300	1.15090	.06102	-.03047	.01634	.00199	.00484	.88924	.73324	1.21280
7.547	-1.700	36.48700	1.15110	.06092	-.03056	.01466	.00175	.00433	.88929	.73349	1.21240
7.541	-1.500	36.49200	1.15180	.06111	-.03040	.01308	.00149	.00382	.88965	.73412	1.21190
7.575	-1.300	36.50300	1.15180	.06113	-.03040	.01125	.00130	.00327	.88947	.73430	1.21130
7.577	-1.100	36.52100	1.15260	.06110	-.03042	.00946	.00112	.00268	.88992	.73504	1.21070
7.560	-.900	36.51500	1.15280	.06110	-.03053	.00778	.00091	.00218	.89014	.73504	1.21100
7.551	-.700	36.53100	1.15340	.06115	-.03042	.00601	.00068	.00159	.89040	.73571	1.21030
7.555	-.500	36.53100	1.15300	.06115	-.03042	.00428	.00045	.00105	.89006	.73545	1.21020
7.517	-.300	36.53800	1.15360	.06126	-.03033	.00259	.00024	.00052	.89038	.73601	1.20970
7.493	-.100	36.53100	1.15340	.06135	-.03028	.00096	.00000	.00000	.89028	.73587	1.20980
7.473	.100	36.54100	1.15360	.06140	-.03013	-.00068	-.00025	-.00050	.89025	.73615	1.20930
7.461	.300	36.54100	1.15390	.06156	-.03010	-.00232	-.00052	-.00098	.89045	.73650	1.20900
7.468	.500	36.55500	1.15390	.06157	-.02996	-.00393	-.00079	-.00147	.89023	.73671	1.20840
7.471	.700	36.56300	1.15430	.06169	-.02986	-.00548	-.00109	-.00193	.89035	.73714	1.20780
7.478	.900	36.56300	1.15370	.06174	-.02973	-.00697	-.00136	-.00240	.88990	.73687	1.20770
7.459	1.100	36.58600	1.15490	.06188	-.02965	-.00854	-.00169	-.00289	.89049	.73806	1.20650
7.464	1.300	36.58500	1.15420	.06185	-.02962	-.01001	-.00203	-.00333	.88997	.73761	1.20650
7.458	1.500	36.60000	1.15460	.06189	-.02954	-.01148	-.00239	-.00376	.89004	.73808	1.20590
7.469	1.700	36.60100	1.15420	.06188	-.02964	-.01283	-.00273	-.00417	.88969	.73786	1.20580
7.473	1.900	36.61900	1.15470	.06193	-.02952	-.01435	-.00311	-.00458	.88983	.73847	1.20500
7.471	2.100	36.61900	1.15470	.06196	-.02955	-.01577	-.00348	-.00502	.88981	.73847	1.20490
7.474	2.300	36.62800	1.15450	.06194	-.02958	-.01723	-.00385	-.00543	.88954	.73848	1.20460
7.473	2.500	36.64000	1.15490	.06198	-.02954	-.01874	-.00420	-.00588	.88973	.73899	1.20400
7.470	2.700	36.63400	1.15460	.06201	-.02954	-.02027	-.00458	-.00632	.88949	.73869	1.20410
	GRADIENT	.01986	.00080	.00044	.00045	-.00820	-.00125	-.00252	.00015	.00115	-.00166

OA257 (LARC 20-M6-6559) OV102 (R7E062) (10 JUL 81)

REFERENCE DATA

SREF = 2690.0000 SQ.FT. XMRP = 1076.6800 IN. XO
LREF = 474.8100 INCHES YMRP = .0000 IN. YO
BREF = 936.6800 INCHES ZMRP = 375.0000 IN. ZO
SCALE = .0100

PARAMETRIC DATA

ALPHA = 40.000 PHI = .000
SPDBRK = 86.600 AILRON = .000
YP = 1.000 1S = 1.000
ELEVON = .000 MACH = 6.000
S-MODE = 2.000 S-DIR = 1.000

RUN NO. 155/ 0 RN/L = 2.23 GRADIENT INTERVAL = -.60/ .60

RN/L	BETA	ALPHA	CN	CA	CLM	CY	CYN	CBL	CL	CD	L/D
2.237	-3.296	39.22900	1.26220	.05851	-.03653	.02691	.00583	.00808	.94073	.84356	1.11520
2.236	-3.100	39.22800	1.26190	.05852	-.03660	.02538	.00553	.00763	.94054	.84339	1.11520
2.230	-2.900	39.24800	1.26250	.05846	-.03667	.02387	.00522	.00716	.94072	.84405	1.11450
2.233	-2.700	39.24600	1.26420	.05853	-.03681	.02219	.00485	.00668	.94198	.84510	1.11460
2.232	-2.500	39.26600	1.26460	.05842	-.03678	.02070	.00454	.00620	.94213	.84564	1.11410
2.233	-2.300	39.26300	1.26510	.05842	-.03703	.01913	.00419	.00576	.94248	.84587	1.11420
2.234	-2.100	39.28400	1.26590	.05838	-.03687	.01774	.00389	.00529	.94286	.84669	1.11360
2.236	-1.900	39.28200	1.26580	.05833	-.03702	.01609	.00350	.00482	.94283	.84656	1.11370
2.239	-1.700	39.30400	1.26640	.05826	-.03709	.01476	.00318	.00434	.94306	.84729	1.11300
2.244	-1.500	39.30300	1.26650	.05842	-.03703	.01319	.00283	.00388	.94306	.84746	1.11280
2.244	-1.300	39.32000	1.26780	.05841	-.03710	.01178	.00249	.00343	.94379	.84853	1.11230
2.239	-1.100	39.32100	1.26830	.05843	-.03714	.01027	.00215	.00297	.94415	.84889	1.11220
2.235	-.900	39.33600	1.26860	.05834	-.03734	.00888	.00181	.00246	.94424	.84927	1.11180
2.237	-.700	39.34100	1.26830	.05829	-.03712	.00745	.00144	.00200	.94397	.84914	1.11170
2.238	-.500	39.35000	1.26930	.05844	-.03729	.00598	.00108	.00152	.94447	.84999	1.11120
2.238	-.300	39.36400	1.26920	.05832	-.03719	.00457	.00077	.00108	.94425	.85005	1.11080
2.232	-.100	39.36900	1.26940	.05835	-.03736	.00318	.00041	.00063	.94436	.85033	1.11060
2.226	.100	39.38100	1.27020	.05820	-.03741	.00185	.00005	.00019	.94486	.85088	1.11050
2.226	.300	39.38700	1.27090	.05824	-.03803	.00058	-.00034	-.00027	.94533	.85150	1.11020
2.227	.500	39.40100	1.27090	.05834	-.03798	-.00055	-.00082	-.00071	.94501	.85175	1.10950
2.228	.700	39.40300	1.27230	.05847	-.03819	-.00175	-.00125	-.00119	.94601	.85282	1.10930
2.230	.900	39.41700	1.26990	.05848	-.03804	-.00306	-.00162	-.00165	.94392	.85152	1.10850
2.230	1.100	39.41800	1.27200	.05867	-.03816	-.00450	-.00199	-.00215	.94544	.85303	1.10830
2.233	1.300	39.44000	1.27160	.05860	-.03798	-.00591	-.00233	-.00264	.94484	.85308	1.10760
2.233	1.500	39.43800	1.27060	.05869	-.03811	-.00747	-.00268	-.00315	.94405	.85248	1.10740
2.230	1.646	39.46000	1.27290	.05863	-.03800	-.00861	-.00291	-.00353	.94548	.85422	1.10680
	GRADIENT	.04800	.00199	-.00013	-.00086	-.00657	-.00189	-.00224	.00092	.00196	-.00149

OA257 (LARC 20-M6-6559) OV102 (R7E062) (10 JUL 81)

REFERENCE DATA

SREF = 2690.0000 SQ.FT. XMRP = 1076.6800 IN. XO
LREF = 474.8100 INCHES YMRP = .0000 IN. YO
BREF = 936.6800 INCHES ZMRP = 375.0000 IN. ZO
SCALE = .0100

PARAMETRIC DATA

ALPHA = 40.000 PHI = .000
SPDBRK = 86.600 AILRON = .000
YP = 1.000 1S = 1.000
ELEVON = .000 MACH = 6.000
S-MODE = 2.000 S-DIR = 1.000

RUN NO. 116/ 0 RN/L = 7.41 GRADIENT INTERVAL = -.60/ .60

RN/L	BETA	ALPHA	CN	CA	CLM	CY	CYN	CBL	CL	CD	L/D
7.434	-5.333	38.82200	1.25240	.05994	-.03873	.03859	.00833	.01188	.93819	.83186	1.12780
7.429	-5.200	38.82500	1.25270	.05991	-.03879	.03750	.00811	.01159	.93836	.83202	1.12780
7.416	-5.000	38.84000	1.25390	.05987	-.03880	.03598	.00776	.01113	.93913	.83302	1.12740
7.418	-4.800	38.84300	1.25520	.05992	-.03878	.03438	.00738	.01065	.94005	.83390	1.12730
7.404	-4.600	38.85200	1.25580	.05987	-.03881	.03299	.00699	.01025	.94042	.83441	1.12700
7.404	-4.400	38.86000	1.25640	.05984	-.03887	.03164	.00660	.00982	.94079	.83488	1.12690
7.413	-4.200	38.87600	1.25790	.05985	-.03887	.03005	.00624	.00938	.94172	.83610	1.12630
7.416	-4.000	38.88700	1.25880	.05976	-.03907	.02855	.00588	.00893	.94230	.83676	1.12610
7.405	-3.800	38.88700	1.25890	.05965	-.03910	.02707	.00553	.00847	.94248	.83676	1.12630
7.399	-3.600	38.90500	1.26020	.05961	-.03933	.02549	.00521	.00800	.94327	.83786	1.12580
7.394	-3.400	38.90400	1.26070	.05956	-.03950	.02390	.00490	.00751	.94368	.83810	1.12600
7.412	-3.200	38.92900	1.26200	.05951	-.03962	.02241	.00456	.00709	.94434	.83927	1.12520
7.402	-3.000	38.93100	1.26190	.05954	-.03963	.02102	.00422	.00662	.94426	.83930	1.12510
7.395	-2.800	38.94600	1.26290	.05951	-.03963	.01953	.00385	.00616	.94478	.84010	1.12460
7.391	-2.600	38.95100	1.26360	.05949	-.03971	.01806	.00348	.00571	.94528	.84065	1.12450
7.409	-2.400	38.97000	1.26400	.05947	-.03962	.01656	.00312	.00525	.94534	.84119	1.12380
7.427	-2.200	38.98300	1.26490	.05945	-.03980	.01509	.00279	.00482	.94582	.84191	1.12340
7.443	-2.000	38.99200	1.26490	.05947	-.03974	.01358	.00243	.00439	.94570	.84211	1.12300
7.438	-1.800	39.00900	1.26580	.05944	-.03980	.01210	.00207	.00392	.94618	.84293	1.12250
7.441	-1.600	39.00700	1.26600	.05948	-.03972	.01060	.00173	.00346	.94630	.84304	1.12250
7.436	-1.400	39.03300	1.26680	.05955	-.03963	.00919	.00144	.00298	.94650	.84402	1.12140
7.430	-1.200	39.02900	1.26710	.05960	-.03963	.00765	.00111	.00249	.94674	.84418	1.12150
7.422	-1.000	39.04300	1.26690	.05969	-.03938	.00625	.00075	.00199	.94639	.84440	1.12080
7.411	-.800	39.04400	1.26720	.05984	-.03931	.00503	.00037	.00149	.94653	.84473	1.12050
7.419	-.600	39.06000	1.26780	.05990	-.03921	.00368	-.00006	.00104	.94670	.84540	1.11980
7.429	-.400	39.06700	1.26790	.06002	-.03915	.00239	-.00048	.00057	.94658	.84567	1.11930
7.423	-.200	39.08200	1.26800	.06007	-.03914	.00092	-.00081	.00005	.94644	.84605	1.11870
7.427	.000	39.09500	1.26890	.06013	-.03911	-.00063	-.00113	-.00044	.94685	.84682	1.11810
7.411	.200	39.09100	1.26900	.06020	-.03903	-.00225	-.00140	-.00100	.94694	.84687	1.11820
7.421	.400	39.11500	1.26930	.06028	-.03897	-.00390	-.00164	-.00151	.94681	.84754	1.11710
7.411	.600	39.10900	1.26890	.06040	-.03886	-.00546	-.00190	-.00206	.94649	.84728	1.11710
7.406	.800	39.12600	1.26950	.06046	-.03884	-.00706	-.00219	-.00255	.94666	.84798	1.11640
7.402	1.000	39.13000	1.26960	.06058	-.03871	-.00864	-.00245	-.00307	.94660	.84819	1.11600
7.378	1.200	39.13100	1.26890	.06065	-.03849	-.01020	-.00274	-.00359	.94601	.84784	1.11580
7.375	1.400	39.13600	1.26900	.06083	-.03841	-.01181	-.00303	-.00410	.94594	.84815	1.11530
7.377	1.600	39.14300	1.26920	.06095	-.03822	-.01340	-.00332	-.00463	.94587	.84843	1.11480
7.383	1.800	39.16300	1.26920	.06100	-.03806	-.01490	-.00359	-.00513	.94554	.84883	1.11390
7.385	2.000	39.16200	1.26890	.06113	-.03801	-.01648	-.00390	-.00562	.94529	.84875	1.11380
7.393	2.200	39.18200	1.26990	.06118	-.03791	-.01806	-.00422	-.00612	.94573	.84975	1.11300
7.379	2.394	39.17600	1.26850	.06089	-.03763	-.01958	-.00443	-.00665	.94488	.84851	1.11360
	GRADIENT	.04500	.00127	.00038	.00027	-.00771	-.00150	-.00259	.00006	.00182	-.00232

OA257 (LARC 20-M6-6559) OV102 (R7E162) (10 JUL 81)

REFERENCE DATA

SREF = 2690.0000 SQ.FT. XMRP = 1076.6800 IN. XO
LREF = 474.8100 INCHES YMRP = .0000 IN. YO
BREF = 936.6800 INCHES ZMRP = 375.0000 IN. ZO
SCALE = .0100

PARAMETRIC DATA

ALPHA = 40.000 PHI = .000
SPDBRK = 86.600 AILRON = .000
YP = 1.000 1S = 1.000
ELEVON = .000 MACH = 6.000
S-MODE = 2.000 S-DIR = 1.000

RUN NO. 2155/ 0 RN/L = 2.23 GRADIENT INTERVAL = -.60/ .60

RN/L	BETA	ALPHA	CN	CA	CLM	CY	CYN	CBL	CL	CD	L/D
2.237	-3.200	39.22600	1.26180	.05846	-.03654	.02622	.00570	.00786	.94049	.84322	1.11540
2.232	-3.000	39.23700	1.26310	.05855	-.03662	.02469	.00538	.00741	.94131	.84431	1.11490
2.232	-2.800	39.24600	1.26290	.05841	-.03673	.02300	.00503	.00691	.94106	.84419	1.11470
2.233	-2.600	39.25500	1.26330	.05842	-.03687	.02148	.00469	.00646	.94129	.84465	1.11440
2.232	-2.400	39.26700	1.26500	.05843	-.03684	.01989	.00437	.00599	.94236	.84588	1.11410
2.233	-2.200	39.27300	1.26500	.05842	-.03694	.01849	.00403	.00552	.94232	.84599	1.11390
2.234	-2.000	39.28400	1.26500	.05827	-.03688	.01690	.00369	.00506	.94228	.84607	1.11370
2.239	-1.800	39.28600	1.26550	.05833	-.03705	.01546	.00335	.00457	.94252	.84643	1.11350
2.242	-1.600	39.30500	1.26780	.05826	-.03703	.01391	.00302	.00410	.94409	.84817	1.11310
2.244	-1.400	39.30700	1.26730	.05842	-.03714	.01250	.00266	.00366	.94362	.84802	1.11270
2.242	-1.200	39.32600	1.26820	.05837	-.03714	.01104	.00232	.00320	.94403	.84886	1.11210
2.236	-1.000	39.32100	1.26890	.05838	-.03726	.00956	.00195	.00272	.94464	.84924	1.11230
2.236	-.800	39.34500	1.26810	.05834	-.03716	.00812	.00163	.00223	.94371	.84909	1.11140
2.238	-.600	39.34200	1.26850	.05837	-.03722	.00673	.00127	.00175	.94399	.84929	1.11150
2.238	-.400	39.36300	1.26920	.05838	-.03719	.00534	.00093	.00131	.94428	.85012	1.11080
2.236	-.200	39.36300	1.26980	.05831	-.03724	.00386	.00059	.00086	.94472	.85042	1.11090
2.228	.000	39.38300	1.26930	.05830	-.03732	.00256	.00023	.00040	.94405	.85042	1.11010
2.226	.200	39.37800	1.27030	.05829	-.03791	.00114	-.00013	-.00002	.94492	.85099	1.11040
2.226	.400	39.40000	1.27160	.05830	-.03801	-.00004	-.00060	-.00051	.94559	.85215	1.10960
2.228	.600	39.39700	1.27030	.05842	-.03810	-.00112	-.00104	-.00094	.94453	.85137	1.10940
2.229	.800	39.41600	1.27060	.05846	-.03801	-.00243	-.00144	-.00142	.94446	.85191	1.10860
2.231	1.000	39.41600	1.27010	.05858	-.03805	-.00381	-.00180	-.00190	.94406	.85171	1.10840
2.232	1.200	39.43300	1.27150	.05872	-.03805	-.00520	-.00216	-.00239	.94480	.85301	1.10760
2.233	1.400	39.43500	1.27250	.05873	-.03806	-.00673	-.00253	-.00291	.94554	.85367	1.10760
2.230	1.600	39.45300	1.27230	.05864	-.03805	-.00816	-.00283	-.00341	.94512	.85372	1.10710
	GRADIENT	.04536	.00191	-.00001	-.00088	-.00661	-.00192	-.00225	.00079	.00194	-.00164

OA257 (LARC 20-M6-6559) OV102 (R7E162) (10 JUL 81)

REFERENCE DATA

SREF = 2690.0000 SQ.FT. XMRP = 1076.6800 IN. XO
LREF = 474.8100 INCHES YMRP = .0000 IN. YO
BREF = 936.6800 INCHES ZMRP = 375.0000 IN. ZO
SCALE = .0100

PARAMETRIC DATA

ALPHA = 40.000 PHI = .000
SPDBRK = 86.600 AILRON = .000
YP = 1.000 1S = 1.000
ELEVON = .000 MACH = 6.000
S-MODE = 2.000 S-DIR = 1.000

RUN NO. 2116/ 0 RN/L = 7.41 GRADIENT INTERVAL = -.60/ .60

RN/L	BETA	ALPHA	CN	CA	CLM	CY	CYN	CBL	CL	CD	L/D
7.443	-5.300	38.83100	1.25280	.05990	-.03869	.03830	.00829	.01183	.93841	.83222	1.12760
7.414	-5.100	38.83100	1.25420	.05994	-.03883	.03680	.00794	.01135	.93943	.83312	1.12760
7.410	-4.900	38.83600	1.25460	.05991	-.03873	.03519	.00759	.01088	.93969	.83340	1.12750
7.413	-4.700	38.85300	1.25530	.05985	-.03884	.03363	.00718	.01043	.94006	.83411	1.12700
7.408	-4.500	38.85200	1.25590	.05988	-.03888	.03233	.00682	.01003	.94048	.83446	1.12710
7.391	-4.300	38.86700	1.25720	.05981	-.03891	.03091	.00641	.00962	.94135	.83549	1.12670
7.421	-4.100	38.87300	1.25780	.05979	-.03902	.02930	.00606	.00914	.94169	.83592	1.12650
7.410	-3.900	38.89100	1.25880	.05971	-.03907	.02781	.00570	.00872	.94228	.83680	1.12600
7.398	-3.700	38.89300	1.25980	.05966	-.03924	.02633	.00539	.00822	.94311	.83745	1.12620
7.393	-3.500	38.90500	1.26020	.05951	-.03938	.02468	.00505	.00776	.94327	.83774	1.12600
7.404	-3.300	38.91900	1.26150	.05956	-.03958	.02319	.00472	.00731	.94410	.83886	1.12540
7.410	-3.100	38.92900	1.26180	.05951	-.03959	.02175	.00439	.00687	.94420	.83918	1.12510
7.393	-2.900	38.94000	1.26260	.05952	-.03961	.02028	.00403	.00639	.94466	.83986	1.12480
7.394	-2.700	38.94500	1.26270	.05951	-.03965	.01876	.00366	.00594	.94469	.84002	1.12460
7.402	-2.500	38.96400	1.26410	.05949	-.03970	.01729	.00330	.00549	.94547	.84116	1.12400
7.417	-2.300	38.97100	1.26410	.05944	-.03979	.01581	.00295	.00504	.94539	.84123	1.12380
7.442	-2.100	38.99600	1.26530	.05945	-.03975	.01429	.00261	.00462	.94595	.84240	1.12290
7.442	-1.900	38.99600	1.26530	.05945	-.03977	.01285	.00225	.00415	.94595	.84240	1.12290
7.437	-1.700	39.01200	1.26600	.05945	-.03973	.01140	.00191	.00370	.94626	.84311	1.12230
7.440	-1.500	39.01800	1.26650	.05955	-.03969	.00988	.00158	.00322	.94653	.84362	1.12200
7.428	-1.300	39.02700	1.26650	.05958	-.03958	.00841	.00126	.00274	.94635	.84378	1.12160
7.432	-1.100	39.03800	1.26710	.05964	-.03952	.00692	.00093	.00223	.94660	.84435	1.12110
7.411	-.900	39.04000	1.26680	.05975	-.03934	.00564	.00056	.00174	.94631	.84434	1.12080
7.414	-.700	39.05900	1.26750	.05986	-.03927	.00439	.00017	.00127	.94649	.84515	1.11990
7.429	-.500	39.06000	1.26790	.05993	-.03917	.00303	-.00027	.00081	.94671	.84546	1.11980
7.423	-.300	39.08300	1.26810	.06000	-.03916	.00163	-.00065	.00032	.94655	.84607	1.11880
7.425	-.100	39.08400	1.26850	.06009	-.03920	.00017	-.00096	-.00019	.94672	.84637	1.11860
7.420	.100	39.09600	1.26880	.06016	-.03901	-.00149	-.00128	-.00071	.94678	.84684	1.11800
7.423	.300	39.09900	1.26920	.06029	-.03908	-.00303	-.00151	-.00127	.94694	.84723	1.11770
7.416	.500	39.10900	1.26890	.06033	-.03890	-.00469	-.00177	-.00179	.94658	.84726	1.11720
7.401	.700	39.11900	1.26940	.06043	-.03884	-.00624	-.00203	-.00231	.94670	.84778	1.11670
7.411	.900	39.12200	1.26910	.06047	-.03877	-.00787	-.00233	-.00281	.94642	.84767	1.11650
7.399	1.100	39.13700	1.26940	.06059	-.03860	-.00942	-.00261	-.00332	.94636	.84821	1.11570
7.371	1.300	39.12700	1.26880	.06074	-.03850	-.01101	-.00288	-.00384	.94598	.84780	1.11580
7.378	1.500	39.14400	1.26920	.06088	-.03826	-.01261	-.00317	-.00436	.94588	.84841	1.11490
7.383	1.700	39.14900	1.26940	.06099	-.03816	-.01416	-.00346	-.00488	.94595	.84875	1.11450
7.384	1.900	39.16500	1.26930	.06106	-.03802	-.01573	-.00375	-.00537	.94554	.84896	1.11380
7.384	2.100	39.17000	1.26960	.06112	-.03794	-.01724	-.00405	-.00587	.94565	.84928	1.11350
7.406	2.300	39.17900	1.26900	.06106	-.03777	-.01883	-.00433	-.00636	.94514	.84903	1.11320
	GRADIENT	.04357	.00123	.00042	.00025	-.00775	-.00148	-.00261	.00008	.00185	-.00241

OA257 (LARC 20-M6-6559) OV102 (R7E063) (10 JUL 81)

REFERENCE DATA

SREF = 2690.0000 SQ.FT. XMRP = 1076.6800 IN. XO
LREF = 474.8100 INCHES YMRP = .0000 IN. YO
BREF = 936.6800 INCHES ZMRP = 375.0000 IN. ZO
SCALE = .0100

PARAMETRIC DATA

ALPHA = 40.000 PHI = .000
SPDBRK = 86.600 AILRON = .000
YP = 1.000 1S = 1.000
ELEVON = .000 MACH = 6.000
S-MODE = 2.000 S-DIR = 1.000

RUN NO. 176/ 0 RN/L = 4.40 GRADIENT INTERVAL = -.60/ .60

RN/L	BETA	ALPHA	CN	CA	CLM	CY	CYN	CBL	CL	CD	L/D
4.426	-3.904	39.17700	1.26230	.05929	-.03946	.03068	.00624	.00982	.94104	.84335	1.11580
4.420	-3.800	39.17700	1.26160	.05924	-.03963	.02988	.00611	.00958	.94054	.84287	1.11590
4.419	-3.600	39.18500	1.26310	.05915	-.03979	.02825	.00578	.00907	.94169	.84391	1.11590
4.417	-3.400	39.19700	1.26420	.05905	-.04005	.02675	.00550	.00861	.94243	.84475	1.11560
4.420	-3.200	39.19900	1.26460	.05900	-.04030	.02513	.00520	.00814	.94269	.84494	1.11570
4.422	-3.000	39.21500	1.26540	.05894	-.04042	.02356	.00490	.00763	.94316	.84570	1.11520
4.430	-2.800	39.22500	1.26630	.05881	-.04061	.02197	.00460	.00715	.94374	.84631	1.11510
4.433	-2.600	39.22500	1.26700	.05881	-.04085	.02037	.00428	.00666	.94430	.84677	1.11520
4.437	-2.400	39.24100	1.26810	.05869	-.04105	.01886	.00394	.00622	.94499	.84763	1.11490
4.444	-2.200	39.25200	1.26840	.05856	-.04113	.01742	.00366	.00572	.94518	.84793	1.11470
4.435	-2.000	39.25200	1.26910	.05854	-.04136	.01598	.00329	.00527	.94571	.84834	1.11480
4.428	-1.800	39.27300	1.27000	.05853	-.04133	.01451	.00291	.00485	.94610	.84923	1.11410
4.427	-1.600	39.27900	1.27000	.05844	-.04121	.01297	.00255	.00437	.94607	.84925	1.11400
4.419	-1.400	39.27700	1.27020	.05850	-.04131	.01154	.00219	.00389	.94624	.84943	1.11400
4.408	-1.200	39.30000	1.27140	.05847	-.04137	.01008	.00186	.00339	.94680	.85050	1.11320
4.406	-1.000	39.30500	1.27160	.05843	-.04118	.00856	.00150	.00301	.94694	.85073	1.11310
4.401	-.800	39.30800	1.27170	.05855	-.04123	.00700	.00122	.00239	.94690	.85092	1.11280
4.402	-.600	39.32700	1.27240	.05857	-.04123	.00545	.00091	.00193	.94711	.85166	1.11210
4.398	-.400	39.33300	1.27280	.05861	-.04126	.00402	.00059	.00142	.94729	.85204	1.11180
4.396	-.200	39.33400	1.27250	.05861	-.04131	.00278	.00015	.00101	.94706	.85188	1.11170
4.395	.000	39.35500	1.27380	.05862	-.04112	.00143	-.00029	.00054	.94776	.85306	1.11100
4.390	.200	39.35500	1.27360	.05863	-.04115	.00010	-.00071	.00008	.94758	.85292	1.11100
4.389	.400	39.36600	1.27430	.05876	-.04127	-.00128	-.00106	-.00038	.94787	.85365	1.11040
4.388	.600	39.38500	1.27500	.05871	-.04116	-.00278	-.00142	-.00086	.94823	.85443	1.10980
4.389	.800	39.38300	1.27460	.05875	-.04117	-.00430	-.00175	-.00135	.94788	.85415	1.10970
4.388	1.000	39.39100	1.27500	.05882	-.04126	-.00573	-.00209	-.00182	.94806	.85459	1.10940
4.384	1.200	39.41300	1.27590	.05879	-.04114	-.00722	-.00240	-.00236	.94839	.85546	1.10860
4.382	1.400	39.40800	1.27510	.05894	-.04101	-.00877	-.00274	-.00283	.94782	.85504	1.10850
4.372	1.600	39.41300	1.27560	.05896	-.04091	-.01020	-.00309	-.00335	.94805	.85540	1.10830
4.339	1.800	39.41800	1.27520	.05900	-.04053	-.01166	-.00347	-.00383	.94764	.85526	1.10800
4.313	2.000	39.43000	1.27460	.05891	-.04035	-.01314	-.00379	-.00427	.94710	.85506	1.10760
4.308	2.200	39.43400	1.27500	.05875	-.04018	-.01459	-.00403	-.00486	.94744	.85526	1.10780
	GRADIENT	.04661	.00212	.00013	.00007	-.00678	-.00199	-.00230	.00090	.00224	-.00186

OA257 (LARC 20-M6-6559) OV102 (R7E163) (10 JUL 81)

REFERENCE DATA

SREF = 2690.0000 SQ.FT. XMRP = 1076.6800 IN. XO
LREF = 474.8100 INCHES YMRP = .0000 IN. YO
BREF = 936.6800 INCHES ZMRP = 375.0000 IN. ZO
SCALE = .0100

PARAMETRIC DATA

ALPHA = 40.000 PHI = .000
SPDBRK = 86.600 AILRON = .000
YP = 1.000 1S = 1.000
ELEVON = .000 MACH = 6.000
S-MODE = 2.000 S-DIR = 1.000

RUN NO. 2176/ 0 RN/L = 4.40 GRADIENT INTERVAL = -.60/ .60

RN/L	BETA	ALPHA	CN	CA	CLM	CY	CYN	CBL	CL	CD	L/D
4.426	-3.900	39.17700	1.26230	.05929	-.03947	.03065	.00624	.00981	.94108	.84338	1.11580
4.420	-3.700	39.17500	1.26230	.05924	-.03974	.02907	.00593	.00931	.94113	.84331	1.11600
4.417	-3.500	39.19500	1.26360	.05908	-.03991	.02747	.00565	.00884	.94194	.84432	1.11560
4.419	-3.300	39.19600	1.26450	.05903	-.04004	.02596	.00536	.00837	.94266	.84489	1.11570
4.420	-3.100	39.20100	1.26570	.05892	-.04048	.02433	.00505	.00787	.94360	.84564	1.11580
4.424	-2.900	39.22400	1.26610	.05887	-.04048	.02271	.00477	.00738	.94359	.84621	1.11510
4.434	-2.700	39.22500	1.26660	.05878	-.04076	.02117	.00445	.00688	.94400	.84648	1.11520
4.433	-2.500	39.23000	1.26720	.05877	-.04099	.01958	.00411	.00643	.94443	.84696	1.11510
4.444	-2.300	39.24800	1.26800	.05864	-.04112	.01815	.00382	.00593	.94489	.84767	1.11470
4.438	-2.100	39.25200	1.26870	.05852	-.04120	.01667	.00348	.00550	.94543	.84805	1.11480
4.433	-1.900	39.26200	1.27000	.05859	-.04130	.01522	.00312	.00503	.94621	.84909	1.11440
4.428	-1.700	39.27900	1.27040	.05842	-.04136	.01369	.00274	.00458	.94636	.84950	1.11400
4.424	-1.500	39.27800	1.27010	.05847	-.04130	.01226	.00238	.00411	.94613	.84933	1.11400
4.413	-1.300	39.28600	1.27060	.05848	-.04137	.01082	.00203	.00365	.94643	.84980	1.11370
4.407	-1.100	39.30700	1.27160	.05841	-.04114	.00931	.00167	.00318	.94693	.85073	1.11310
4.405	-.900	39.30400	1.27130	.05850	-.04128	.00774	.00135	.00268	.94670	.85057	1.11300
4.400	-.700	39.31500	1.27240	.05856	-.04123	.00621	.00107	.00216	.94731	.85146	1.11260
4.401	-.500	39.33400	1.27300	.05863	-.04113	.00467	.00075	.00167	.94746	.85222	1.11170
4.397	-.300	39.33300	1.27240	.05862	-.04124	.00340	.00039	.00121	.94699	.85180	1.11170
4.397	-.100	39.34400	1.27320	.05865	-.04119	.00210	-.00007	.00078	.94748	.85255	1.11130
4.393	.100	39.35800	1.27360	.05860	-.04119	.00073	-.00050	.00032	.94759	.85297	1.11090
4.389	.300	39.35600	1.27300	.05870	-.04129	-.00054	-.00088	-.00018	.94708	.85263	1.11080
4.388	.500	39.37400	1.27460	.05872	-.04113	-.00204	-.00126	-.00059	.94805	.85398	1.11020
4.389	.700	39.38600	1.27490	.05867	-.04121	-.00353	-.00158	-.00111	.94811	.85430	1.10980
4.389	.900	39.38500	1.27480	.05872	-.04129	-.00505	-.00191	-.00159	.94804	.85428	1.10970
4.384	1.100	39.40500	1.27580	.05888	-.04114	-.00650	-.00226	-.00211	.94839	.85534	1.10880
4.385	1.300	39.41200	1.27550	.05882	-.04109	-.00799	-.00256	-.00260	.94813	.85526	1.10860
4.382	1.500	39.40600	1.27560	.05891	-.04107	-.00945	-.00290	-.00309	.94818	.85525	1.10870
4.355	1.700	39.42100	1.27570	.05893	-.04073	-.01094	-.00328	-.00357	.94805	.85561	1.10800
4.324	1.900	39.41500	1.27470	.05895	-.04049	-.01236	-.00364	-.00400	.94732	.85487	1.10810
4.311	2.100	39.42300	1.27450	.05887	-.04029	-.01393	-.00393	-.00454	.94713	.85482	1.10800
4.307	2.259	39.42600	1.27460	.05876	-.04022	-.01520	-.00414	-.00504	.94724	.85486	1.10810
	GRADIENT	.04043	.00146	.00009	-.00002	-.00668	-.00203	-.00228	.00048	.00167	-.00151

OA257 (LARC 20-M6-6559) OV102 (R7E064) (10 JUL 81)

REFERENCE DATA

SREF = 2690.0000 SQ.FT. XMRP = 1076.6800 IN. XO
LREF = 474.8100 INCHES YMRP = .0000 IN. YO
BREF = 936.6800 INCHES ZMRP = 375.0000 IN. ZO
SCALE = .0100

PARAMETRIC DATA

ALPHA = 40.000 PHI = .000
SPDBRK = 86.600 AILRON = .000
YP = 1.000 1S = 1.000
ELEVON = .000 MACH = 6.000
S-MODE = 2.000 S-DIR = 2.000

RUN NO. 1176/ 0 RN/L = 4.33 GRADIENT INTERVAL = -.60/ .60

RN/L	BETA	ALPHA	CN	CA	CLM	CY	CYN	CBL	CL	CD	L/D
4.338	-4.086	39.15700	1.26360	.05936	-.03992	.03216	.00646	.01020	.94236	.84395	1.11660
4.333	-3.900	39.17700	1.26520	.05925	-.03999	.03078	.00620	.00977	.94337	.84518	1.11620
4.336	-3.700	39.17800	1.26520	.05922	-.04022	.02919	.00589	.00935	.94334	.84517	1.11620
4.341	-3.500	39.18600	1.26580	.05907	-.04032	.02756	.00560	.00884	.94382	.84558	1.11620
4.343	-3.300	39.20200	1.26680	.05897	-.04060	.02601	.00534	.00836	.94438	.84637	1.11580
4.343	-3.100	39.20600	1.26770	.05885	-.04086	.02437	.00502	.00784	.94514	.84696	1.11590
4.346	-2.900	39.21300	1.26810	.05878	-.04103	.02279	.00473	.00735	.94538	.84725	1.11580
4.344	-2.700	39.23100	1.26880	.05868	-.04112	.02118	.00443	.00683	.94572	.84793	1.11530
4.349	-2.500	39.23400	1.27010	.05864	-.04136	.01968	.00409	.00639	.94671	.84876	1.11540
4.353	-2.300	39.24000	1.27020	.05858	-.04146	.01813	.00377	.00587	.94668	.84884	1.11530
4.353	-2.100	39.25800	1.27080	.05836	-.04156	.01661	.00340	.00544	.94707	.84939	1.11500
4.351	-1.900	39.26000	1.27130	.05848	-.04180	.01516	.00304	.00498	.94732	.84979	1.11480
4.353	-1.700	39.26500	1.27150	.05850	-.04160	.01368	.00268	.00452	.94739	.85003	1.11450
4.353	-1.500	39.28700	1.27250	.05849	-.04169	.01231	.00233	.00409	.94784	.85101	1.11380
4.353	-1.300	39.28900	1.27270	.05854	-.04155	.01080	.00196	.00363	.94793	.85121	1.11360
4.354	-1.100	39.29500	1.27290	.05851	-.04155	.00929	.00162	.00315	.94806	.85145	1.11350
4.351	-.900	39.31300	1.27350	.05848	-.04151	.00765	.00131	.00264	.94825	.85206	1.11290
4.348	-.700	39.31400	1.27340	.05864	-.04150	.00624	.00103	.00212	.94806	.85214	1.11260
4.348	-.500	39.32200	1.27360	.05861	-.04143	.00465	.00069	.00161	.94809	.85236	1.11230
4.346	-.300	39.33600	1.27400	.05857	-.04133	.00349	.00028	.00118	.94827	.85288	1.11180
4.348	-.100	39.33300	1.27430	.05861	-.04151	.00209	-.00016	.00075	.94847	.85299	1.11190
4.345	.100	39.34700	1.27500	.05867	-.04128	.00091	-.00061	.00031	.94876	.85373	1.11130
4.332	.300	39.36000	1.27500	.05863	-.04139	-.00054	-.00099	-.00015	.94861	.85393	1.11090
4.314	.500	39.35300	1.27460	.05875	-.04139	-.00193	-.00132	-.00067	.94837	.85367	1.11090
4.305	.700	39.36500	1.27510	.05879	-.04120	-.00330	-.00169	-.00108	.94853	.85422	1.11040
4.302	.900	39.37700	1.27540	.05887	-.04114	-.00485	-.00201	-.00163	.94849	.85462	1.10980
4.296	1.100	39.37100	1.27520	.05891	-.04121	-.00627	-.00233	-.00212	.94842	.85445	1.11000
4.306	1.300	39.39100	1.27600	.05891	-.04106	-.00789	-.00267	-.00262	.94877	.85529	1.10930
4.299	1.500	39.40000	1.27630	.05904	-.04103	-.00940	-.00299	-.00311	.94874	.85570	1.10870
4.292	1.700	39.39700	1.27530	.05910	-.04078	-.01083	-.00336	-.00355	.94800	.85509	1.10860
4.290	1.900	39.41900	1.27530	.05901	-.04051	-.01231	-.00367	-.00409	.94773	.85539	1.10790
4.293	2.100	39.41100	1.27450	.05896	-.04041	-.01381	-.00395	-.00460	.94729	.85473	1.10830
4.303	2.259	39.42500	1.27460	.05877	-.04016	-.01510	-.00413	-.00501	.94727	.85486	1.10810
	GRADIENT	.03443	.00124	.00014	.00004	-.00659	-.00205	-.00226	.00039	.00149	-.00147

DA257 (LARC 20-M6-6559) OV102 (R7E164) (10 JUL 81)

REFERENCE DATA

SREF = 2690.0000 SQ.FT. XMRP = 1076.6800 IN. XO
LREF = 474.8100 INCHES YMRP = .0000 IN. YO
BREF = 936.6800 INCHES ZMRP = 375.0000 IN. ZO
SCALE = .0100

PARAMETRIC DATA

ALPHA = 40.000 PHI = .000
SPDBRK = 86.600 AILRON = .000
YP = 1.000 1S = 1.000
ELEVON = .000 MACH = 6.000
S-MODE = 2.000 S-DIR = 2.000

RUN NO. 3176/ 0 RN/L = 4.33 GRADIENT INTERVAL = -.60/ .60

RN/L	BETA	ALPHA	CN	CA	CLM	CY	CYN	CBL	CL	CD	L/D
4.334	-4.000	39.16500	1.26440	.05930	-.03983	.03149	.00632	.01003	.94287	.84452	1.11650
4.335	-3.800	39.18000	1.26510	.05924	-.04009	.02999	.00605	.00955	.94327	.84518	1.11610
4.340	-3.600	39.17800	1.26510	.05912	-.04028	.02839	.00574	.00910	.94337	.84505	1.11640
4.342	-3.400	39.19400	1.26640	.05905	-.04039	.02676	.00546	.00861	.94412	.84605	1.11590
4.342	-3.200	39.20800	1.26750	.05892	-.04069	.02521	.00520	.00812	.94486	.84688	1.11570
4.345	-3.000	39.20600	1.26690	.05881	-.04092	.02358	.00488	.00758	.94449	.84638	1.11590
4.344	-2.800	39.22300	1.26850	.05872	-.04097	.02200	.00458	.00707	.94560	.84764	1.11560
4.345	-2.600	39.23600	1.26950	.05866	-.04125	.02042	.00425	.00661	.94618	.84840	1.11530
4.353	-2.400	39.23300	1.26970	.05854	-.04161	.01883	.00391	.00613	.94648	.84841	1.11560
4.355	-2.200	39.24900	1.27000	.05842	-.04154	.01739	.00358	.00567	.94649	.84874	1.11520
4.352	-2.000	39.26000	1.27110	.05845	-.04162	.01588	.00323	.00521	.94718	.84964	1.11480
4.351	-1.800	39.26100	1.27140	.05842	-.04180	.01447	.00288	.00476	.94741	.84982	1.11480
4.354	-1.600	39.27800	1.27220	.05841	-.04163	.01294	.00250	.00430	.94783	.85064	1.11430
4.353	-1.400	39.29000	1.27300	.05847	-.04159	.01156	.00214	.00388	.94820	.85136	1.11380
4.355	-1.200	39.28900	1.27270	.05851	-.04163	.01002	.00179	.00338	.94799	.85122	1.11370
4.353	-1.000	39.30500	1.27300	.05847	-.04148	.00851	.00147	.00289	.94801	.85164	1.11320
4.347	-.800	39.31500	1.27370	.05860	-.04148	.00695	.00116	.00239	.94832	.85235	1.11260
4.349	-.600	39.31500	1.27390	.05859	-.04150	.00546	.00088	.00187	.94850	.85248	1.11260
4.345	-.400	39.33100	1.27360	.05860	-.04132	.00404	.00051	.00137	.94795	.85251	1.11200
4.348	-.200	39.33800	1.27460	.05861	-.04135	.00276	.00005	.00095	.94866	.85330	1.11180
4.348	.000	39.33800	1.27420	.05858	-.04143	.00156	-.00038	.00053	.94840	.85305	1.11180
4.338	.200	39.35400	1.27500	.05862	-.04131	.00018	-.00081	.00009	.94871	.85383	1.11110
4.323	.400	39.35700	1.27500	.05867	-.04137	-.00124	-.00118	-.00041	.94867	.85393	1.11090
4.308	.600	39.35700	1.27470	.05881	-.04121	-.00262	-.00150	-.00090	.94832	.85383	1.11070
4.303	.800	39.37300	1.27530	.05883	-.04111	-.00407	-.00187	-.00132	.94853	.85448	1.11010
4.299	1.000	39.37200	1.27530	.05893	-.04115	-.00551	-.00218	-.00184	.94848	.85455	1.10990
4.301	1.200	39.38000	1.27520	.05893	-.04104	-.00704	-.00250	-.00234	.94830	.85464	1.10960
4.307	1.400	39.39700	1.27630	.05899	-.04110	-.00864	-.00284	-.00287	.94887	.85565	1.10890
4.293	1.600	39.39200	1.27530	.05908	-.04085	-.01008	-.00319	-.00334	.94810	.85500	1.10890
4.290	1.800	39.41000	1.27490	.05908	-.04061	-.01159	-.00352	-.00383	.94749	.85501	1.10820
4.292	2.000	39.41700	1.27550	.05907	-.04045	-.01315	-.00383	-.00433	.94788	.85554	1.10790
4.295	2.200	39.41900	1.27440	.05885	-.04012	-.01468	-.00407	-.00489	.94716	.85472	1.10820
	GRADIENT	.03464	.00100	.00014	.00015	-.00667	-.00203	-.00227	.00017	.00133	-.00154

OA257 (LARC 20-M6-6559) OV102 (R7E065) (10 JUL 81)

REFERENCE DATA

SREF = 2690.0000 SQ.FT. XMRP = 1076.6800 IN. XO
LREF = 474.8100 INCHES YMRP = .0000 IN. YO
BREF = 936.6800 INCHES ZMRP = 375.0000 IN. ZO
SCALE = .0100

PARAMETRIC DATA

ALPHA = 10.000 PHI = .000
SPDBRK = .000 AILRON = .000
YP = 1.000 1S = 1.000
ELEVON = .000 MACH = 6.000
S-MODE = 2.000 S-DIR = 1.000

RUN NO. 291/ 0 RN/L = 2.31 GRADIENT INTERVAL = -.60/ .60

RN/L	BETA	ALPHA	CN	CA	CLM	CY	CYN	CBL	CL	CD	L/D
2.302	-4.124	9.71980	.15421	.06634	-.01453	.04021	.00497	.00339	.14080	.09142	1.54020
2.298	-4.000	9.72980	.15362	.06626	-.01457	.03897	.00486	.00328	.14022	.09127	1.53630
2.301	-3.800	9.72490	.15408	.06610	-.01450	.03693	.00463	.00311	.14070	.09118	1.54310
2.307	-3.600	9.72470	.15455	.06613	-.01452	.03495	.00447	.00295	.14116	.09128	1.54640
2.309	-3.400	9.72660	.15377	.06605	-.01449	.03298	.00426	.00278	.14040	.09108	1.54150
2.310	-3.200	9.72660	.15536	.06593	-.01442	.03101	.00406	.00262	.14199	.09123	1.55630
2.306	-3.000	9.73020	.15488	.06589	-.01451	.02907	.00387	.00244	.14151	.09112	1.55300
2.304	-2.800	9.73260	.15365	.06577	-.01447	.02716	.00365	.00228	.14032	.09079	1.54540
2.299	-2.600	9.73230	.15455	.06565	-.01453	.02524	.00342	.00211	.14123	.09083	1.55480
2.303	-2.400	9.73380	.15433	.06554	-.01448	.02330	.00320	.00193	.14103	.09069	1.55510
2.308	-2.200	9.74090	.15489	.06553	-.01456	.02138	.00297	.00176	.14157	.09080	1.55920
2.308	-2.000	9.74130	.15525	.06553	-.01449	.01940	.00277	.00159	.14193	.09086	1.56210
2.309	-1.800	9.74440	.15480	.06552	-.01446	.01747	.00256	.00142	.14148	.09077	1.55870
2.311	-1.600	9.75010	.15650	.06552	-.01452	.01556	.00237	.00125	.14315	.09108	1.57170
2.310	-1.400	9.75050	.15575	.06552	-.01446	.01365	.00214	.00110	.14241	.09095	1.56580
2.306	-1.200	9.75250	.15469	.06549	-.01454	.01175	.00190	.00094	.14136	.09075	1.55780
2.311	-1.000	9.75700	.15585	.06556	-.01446	.00983	.00170	.00078	.14249	.09102	1.56540
2.314	-.800	9.75770	.15539	.06562	-.01443	.00795	.00147	.00062	.14202	.09101	1.56050
2.310	-.600	9.76100	.15473	.06561	-.01441	.00609	.00126	.00046	.14136	.09090	1.55520
2.310	-.400	9.76280	.15564	.06562	-.01444	.00420	.00101	.00030	.14226	.09106	1.56220
2.312	-.200	9.76480	.15437	.06567	-.01435	.00244	.00080	.00015	.14099	.09090	1.55110
2.311	.000	9.76820	.15540	.06576	-.01430	.00071	.00056	.00001	.14199	.09118	1.55730
2.309	.200	9.76940	.15486	.06576	-.01433	-.00121	.00029	-.00013	.14145	.09108	1.55300
2.307	.400	9.77400	.15565	.06581	-.01434	-.00299	.00002	-.00028	.14222	.09128	1.55810
2.309	.600	9.77570	.15599	.06584	-.01450	-.00474	-.00024	-.00041	.14255	.09137	1.56010
2.307	.800	9.77690	.15523	.06579	-.01445	-.00659	-.00051	-.00054	.14180	.09120	1.55490
2.311	1.000	9.78050	.15617	.06584	-.01457	-.00843	-.00082	-.00069	.14272	.09142	1.56120
2.315	1.200	9.78260	.15580	.06583	-.01462	-.01029	-.00104	-.00084	.14235	.09134	1.55840
2.313	1.400	9.78410	.15631	.06581	-.01470	-.01220	-.00125	-.00101	.14285	.09141	1.56270
2.311	1.600	9.78810	.15685	.06571	-.01471	-.01415	-.00144	-.00118	.14339	.09142	1.56840
2.309	1.800	9.79040	.15735	.06569	-.01478	-.01601	-.00163	-.00135	.14389	.09149	1.57280
2.307	2.000	9.79420	.15573	.06558	-.01482	-.01803	-.00183	-.00155	.14231	.09112	1.56170
2.308	2.200	9.79640	.15621	.06564	-.01478	-.01999	-.00203	-.00173	.14276	.09127	1.56420
2.308	2.400	9.80120	.15668	.06567	-.01470	-.02191	-.00223	-.00188	.14322	.09138	1.56720
2.311	2.600	9.80420	.15654	.06568	-.01462	-.02394	-.00246	-.00205	.14307	.09138	1.56560
2.317	2.800	9.80940	.15586	.06576	-.01463	-.02587	-.00265	-.00224	.14237	.09135	1.55850
2.318	3.000	9.81110	.15454	.06579	-.01454	-.02782	-.00286	-.00242	.14107	.09117	1.54730
2.316	3.200	9.81430	.15560	.06592	-.01452	-.02986	-.00310	-.00260	.14209	.09148	1.55320
2.313	3.400	9.81840	.15556	.06594	-.01456	-.03174	-.00329	-.00277	.14203	.09150	1.55230
	GRADIENT	.01270	.00077	.00020	-.00001	-.00902	-.00124	-.00073	.00071	.00036	.00150

OA257 (LARC 20-M6-6559) OV102 (R7E065) (10 JUL 81)

REFERENCE DATA

SREF = 2690.0000 SQ.FT. XMRP = 1076.6800 IN. XO
LREF = 474.8100 INCHES YMRP = .0000 IN. YO
BREF = 936.6800 INCHES ZMRP = 375.0000 IN. ZO
SCALE = .0100

PARAMETRIC DATA

ALPHA = 10.000 PHI = .000
SPDBRK = .000 AILRON = .000
YP = 1.000 1S = 1.000
ELEVON = .000 MACH = 6.000
S-MODE = 2.000 S-DIR = 1.000

RUN NO. 277/ 0 RN/L = 7.63 GRADIENT INTERVAL = -.60/ .60

RN/L	BETA	ALPHA	CN	CA	CLM	CY	CYN	CBL	CL	CD	L/D
7.645	-4.508	9.67710	.15130	.06364	-.01535	.04208	.00502	.00365	.13845	.08816	1.57030
7.647	-4.400	9.68520	.15151	.06358	-.01531	.04105	.00493	.00357	.13865	.08816	1.57270
7.644	-4.200	9.68370	.15135	.06350	-.01523	.03892	.00474	.00341	.13851	.08805	1.57300
7.632	-4.000	9.68350	.15139	.06335	-.01514	.03701	.00458	.00325	.13858	.08792	1.57630
7.632	-3.800	9.68470	.15156	.06323	-.01508	.03504	.00438	.00310	.13876	.08783	1.57990
7.639	-3.600	9.68560	.15145	.06317	-.01501	.03312	.00420	.00293	.13866	.08775	1.58020
7.647	-3.400	9.68710	.15170	.06308	-.01493	.03112	.00401	.00276	.13892	.08770	1.58400
7.661	-3.200	9.68790	.15173	.06299	-.01486	.02910	.00383	.00259	.13897	.08762	1.58600
7.648	-3.000	9.69080	.15178	.06294	-.01485	.02730	.00369	.00241	.13902	.08759	1.58710
7.660	-2.800	9.69390	.15196	.06284	-.01480	.02528	.00349	.00224	.13921	.08753	1.59050
7.657	-2.600	9.69560	.15198	.06279	-.01479	.02334	.00332	.00206	.13923	.08749	1.59150
7.654	-2.400	9.69960	.15201	.06269	-.01472	.02155	.00315	.00189	.13927	.08740	1.59350
7.653	-2.200	9.70330	.15172	.06261	-.01466	.01970	.00295	.00172	.13900	.08729	1.59250
7.643	-2.000	9.70850	.15206	.06251	-.01461	.01775	.00273	.00156	.13934	.08726	1.59680
7.637	-1.800	9.71120	.15179	.06243	-.01458	.01596	.00254	.00140	.13908	.08714	1.59600
7.638	-1.600	9.71120	.15188	.06238	-.01450	.01412	.00233	.00124	.13918	.08710	1.59780
7.652	-1.400	9.71510	.15214	.06229	-.01446	.01234	.00213	.00107	.13945	.08707	1.60160
7.656	-1.200	9.71630	.15228	.06227	-.01438	.01039	.00188	.00090	.13958	.08708	1.60290
7.645	-1.000	9.71670	.15223	.06224	-.01433	.00863	.00167	.00076	.13954	.08704	1.60320
7.651	-.800	9.72100	.15258	.06226	-.01429	.00689	.00140	.00061	.13988	.08713	1.60530
7.640	-.600	9.72200	.15208	.06229	-.01424	.00510	.00115	.00047	.13937	.08707	1.60060
7.632	-.400	9.72500	.15239	.06232	-.01418	.00340	.00091	.00032	.13967	.08717	1.60230
7.628	-.200	9.72840	.15220	.06221	-.01410	.00159	.00066	.00017	.13950	.08704	1.60270
7.612	.000	9.73240	.15252	.06224	-.01405	-.00028	.00041	.00002	.13981	.08712	1.60470
7.601	.200	9.73350	.15276	.06222	-.01405	-.00199	.00018	-.00013	.14004	.08715	1.60700
7.604	.400	9.73440	.15234	.06220	-.01405	-.00392	-.00009	-.00028	.13963	.08706	1.60380
7.612	.600	9.73560	.15279	.06218	-.01410	-.00562	-.00033	-.00044	.14008	.08712	1.60790
7.624	.800	9.73900	.15287	.06223	-.01417	-.00725	-.00055	-.00058	.14014	.08719	1.60720
7.615	1.000	9.73910	.15309	.06222	-.01425	-.00903	-.00081	-.00071	.14036	.08722	1.60920
7.645	1.200	9.74110	.15327	.06224	-.01441	-.01079	-.00105	-.00085	.14053	.08728	1.61020
7.643	1.400	9.74440	.15322	.06227	-.01448	-.01260	-.00128	-.00100	.14047	.08731	1.60890
7.630	1.600	9.74670	.15325	.06232	-.01452	-.01446	-.00148	-.00115	.14049	.08737	1.60800
7.627	1.800	9.75340	.15359	.06241	-.01459	-.01641	-.00170	-.00131	.14080	.08752	1.60870
7.612	2.000	9.75440	.15348	.06244	-.01466	-.01817	-.00189	-.00146	.14068	.08754	1.60710
7.611	2.200	9.75470	.15357	.06252	-.01467	-.02006	-.00209	-.00162	.14076	.08763	1.60620
7.626	2.400	9.75890	.15343	.06262	-.01479	-.02213	-.00231	-.00181	.14060	.08772	1.60270
7.607	2.600	9.76090	.15372	.06268	-.01488	-.02398	-.00248	-.00199	.14087	.08783	1.60380
7.600	2.800	9.76180	.15357	.06275	-.01498	-.02596	-.00267	-.00218	.14071	.08788	1.60110
7.593	3.000	9.76490	.15392	.06282	-.01502	-.02797	-.00286	-.00236	.14103	.08801	1.60240
7.590	3.200	9.76810	.15374	.06293	-.01503	-.02979	-.00302	-.00254	.14083	.08810	1.59850
7.573	3.400	9.77280	.15378	.06298	-.01509	-.03182	-.00320	-.00273	.14086	.08817	1.59760
7.575	3.600	9.77620	.15411	.06309	-.01509	-.03377	-.00336	-.00291	.14116	.08834	1.59790

OA257 (LARC 20-M6-6559) OV102 (R7E065) (10 JUL 81)

REFERENCE DATA

SREF =	2690.0000 SQ.FT.	XMRP =	1076.6800 IN. XO		
LREF =	474.8100 INCHES	YMRP =	.0000 IN. YO		
BREF =	936.6800 INCHES	ZMRP =	375.0000 IN. ZO		
SCALE =	.0100				

PARAMETRIC DATA

ALPHA =	10.000	PHI =	.000
SPDBRK =	.000	AILRON =	.000
YP =	1.000	1S =	1.000
ELEVON =	.000	MACH =	6.000
S-MODE =	2.000	S-DIR =	1.000

RUN NO. 277/ 0 RN/L = 7.63 GRADIENT INTERVAL = -.60/ .60

RN/L	BETA	ALPHA	CN	CA	CLM	CY	CYN	CBL	CL	CD	L/D
7.568	3.800	9.77660	.15372	.06310	-.01512	-.03534	-.00348	-.00306	.14077	.08829	1.59450
7.580	4.000	9.77570	.15392	.06321	-.01517	-.03784	-.00369	-.00327	.14096	.08843	1.59410
	GRADIENT	.01155	.00046	-.00010	.00013	-.00899	-.00124	-.00076	.00046	.00001	.00521

OA257 (LARC 20-M6-6559) OV102 (R7E165) (10 JUL 81)

REFERENCE DATA

SREF = 2690.0000 SQ.FT. XMRP = 1076.6800 IN. XO
LREF = 474.8100 INCHES YMRP = .0000 IN. YO
BREF = 936.6800 INCHES ZMRP = 375.0000 IN. ZO
SCALE = .0100

PARAMETRIC DATA

ALPHA = 10.000 PHI = .000
SPDBRK = .000 AILRON = .000
YP = 1.000 1S = 1.000
ELEVON = .000 MACH = 6.000
S-MODE = 2.000 S-DIR = 1.000

RUN NO. 2291/ 0 RN/L = 2.31 GRADIENT INTERVAL = -.60/ .60

RN/L	BETA	ALPHA	CN	CA	CLM	CY	CYN	CBL	CL	CD	L/D
2.301	-4.100	9.72210	.15410	.06630	-.01450	.03994	.00496	.00338	.14069	.09137	1.53970
2.298	-3.900	9.72640	.15312	.06617	-.01451	.03795	.00476	.00320	.13974	.09109	1.53410
2.306	-3.700	9.72470	.15418	.06617	-.01453	.03592	.00454	.00303	.14079	.09127	1.54250
2.307	-3.500	9.72580	.15463	.06600	-.01436	.03394	.00436	.00287	.14126	.09117	1.54930
2.310	-3.300	9.72940	.15444	.06595	-.01454	.03207	.00420	.00270	.14108	.09110	1.54860
2.307	-3.100	9.72740	.15359	.06595	-.01451	.03008	.00397	.00253	.14024	.09096	1.54180
2.306	-2.900	9.72970	.15372	.06583	-.01446	.02815	.00376	.00236	.14038	.09086	1.54510
2.301	-2.700	9.73140	.15402	.06566	-.01451	.02612	.00353	.00220	.14071	.09075	1.55040
2.300	-2.500	9.73390	.15518	.06555	-.01448	.02426	.00332	.00203	.14186	.09084	1.56150
2.307	-2.300	9.73530	.15434	.06551	-.01452	.02236	.00309	.00185	.14104	.09066	1.55570
2.308	-2.100	9.74160	.15487	.06545	-.01456	.02038	.00288	.00167	.14156	.09071	1.56060
2.309	-1.900	9.74360	.15459	.06554	-.01451	.01845	.00268	.00150	.14127	.09076	1.55660
2.309	-1.700	9.74830	.15493	.06547	-.01444	.01652	.00246	.00133	.14160	.09075	1.56030
2.312	-1.500	9.74910	.15560	.06551	-.01444	.01465	.00225	.00118	.14226	.09091	1.56480
2.308	-1.300	9.75110	.15577	.06554	-.01441	.01269	.00201	.00102	.14242	.09098	1.56540
2.307	-1.100	9.75430	.15483	.06545	-.01443	.01077	.00180	.00086	.14151	.09074	1.55940
2.315	-.900	9.75580	.15522	.06564	-.01437	.00889	.00160	.00070	.14185	.09100	1.55890
2.311	-.700	9.75990	.15502	.06562	-.01452	.00703	.00135	.00054	.14166	.09095	1.55760
2.309	-.500	9.76300	.15596	.06561	-.01440	.00508	.00114	.00038	.14257	.09110	1.56500
2.312	-.300	9.76390	.15548	.06573	-.01434	.00338	.00089	.00023	.14208	.09115	1.55880
2.312	-.100	9.76500	.15472	.06576	-.01427	.00161	.00067	.00009	.14132	.09104	1.55220
2.310	.100	9.76960	.15528	.06580	-.01436	-.00029	.00042	-.00007	.14186	.09120	1.55560
2.307	.300	9.77250	.15534	.06583	-.01434	-.00213	.00016	-.00022	.14191	.09125	1.55530
2.310	.500	9.77460	.15566	.06591	-.01433	-.00386	-.00011	-.00034	.14221	.09138	1.55630
2.309	.700	9.77550	.15570	.06585	-.01444	-.00561	-.00037	-.00048	.14226	.09133	1.55760
2.308	.900	9.77930	.15610	.06579	-.01453	-.00755	-.00066	-.00062	.14265	.09135	1.56160
2.314	1.100	9.78310	.15663	.06580	-.01457	-.00932	-.00092	-.00076	.14317	.09146	1.56540
2.315	1.300	9.78340	.15545	.06584	-.01470	-.01122	-.00115	-.00092	.14200	.09130	1.55530
2.311	1.500	9.78630	.15616	.06573	-.01459	-.01327	-.00136	-.00110	.14272	.09132	1.56280
2.310	1.700	9.79000	.15733	.06567	-.01475	-.01511	-.00154	-.00126	.14388	.09147	1.57300
2.309	1.900	9.79270	.15725	.06564	-.01478	-.01698	-.00171	-.00146	.14380	.09143	1.57280
2.307	2.100	9.79480	.15665	.06565	-.01473	-.01901	-.00192	-.00164	.14320	.09134	1.56780
2.309	2.300	9.79930	.15645	.06557	-.01483	-.02091	-.00213	-.00180	.14301	.09124	1.56740
2.308	2.500	9.80340	.15690	.06567	-.01472	-.02289	-.00233	-.00197	.14343	.09143	1.56870
2.316	2.700	9.80710	.15668	.06572	-.01465	-.02490	-.00255	-.00215	.14320	.09145	1.56590
2.318	2.900	9.80760	.15591	.06578	-.01457	-.02686	-.00276	-.00234	.14242	.09138	1.55860
2.317	3.100	9.81390	.15583	.06589	-.01458	-.02884	-.00296	-.00251	.14232	.09149	1.55560
2.314	3.300	9.81740	.15647	.06586	-.01449	-.03077	-.00319	-.00269	.14295	.09157	1.56110
2.314	3.493	9.81640	.15570	.06593	-.01455	-.03239	-.00338	-.00281	.14218	.09151	1.55380
	GRADIENT	.01263	-.00019	.00026	.00004	-.00902	-.00124	-.00073	-.00025	.00026	-.00723

OA257 (LARC 20-M6-6559) OV102 (R7E165) (10 JUL 81)

REFERENCE DATA

SREF = 2690.0000 SQ.FT. XMRP = 1076.6800 IN. XO
LREF = 474.8100 INCHES YMRP = .0000 IN. YO
BREF = 936.6800 INCHES ZMRP = 375.0000 IN. ZO
SCALE = .0100

PARAMETRIC DATA

ALPHA = 10.000 PHI = .000
SPDBRK = .000 AILRON = .000
YP = 1.000 1S = 1.000
ELEVON = .000 MACH = 6.000
S-MODE = 2.000 S-DIR = 1.000

RUN NO. 2277/ 0 RN/L = 7.63 GRADIENT INTERVAL = -.60/ .60

RN/L	BETA	ALPHA	CN	CA	CLM	CY	CYN	CBL	CL	CD	L/D
7.643	-4.500	9.67750	.15129	.06364	-.01533	.04199	.00501	.00365	.13844	.08816	1.57030
7.640	-4.300	9.68280	.15102	.06354	-.01525	.03993	.00484	.00348	.13818	.08803	1.56960
7.645	-4.100	9.68330	.15132	.06342	-.01519	.03800	.00466	.00333	.13849	.08797	1.57430
7.623	-3.900	9.68090	.15160	.06331	-.01508	.03608	.00449	.00318	.13879	.08790	1.57890
7.628	-3.700	9.68630	.15140	.06319	-.01505	.03404	.00429	.00302	.13861	.08776	1.57940
7.640	-3.500	9.68470	.15143	.06314	-.01497	.03217	.00412	.00285	.13865	.08772	1.58070
7.664	-3.300	9.68610	.15160	.06303	-.01488	.03016	.00393	.00268	.13883	.08764	1.58420
7.654	-3.100	9.69000	.15179	.06294	-.01487	.02815	.00374	.00250	.13903	.08759	1.58710
7.657	-2.900	9.69220	.15179	.06292	-.01483	.02631	.00359	.00233	.13903	.08757	1.58750
7.663	-2.700	9.69520	.15197	.06283	-.01481	.02428	.00341	.00215	.13922	.08753	1.59060
7.657	-2.500	9.69680	.15197	.06274	-.01476	.02242	.00324	.00197	.13923	.08744	1.59240
7.653	-2.300	9.70450	.15180	.06266	-.01471	.02058	.00305	.00181	.13907	.08735	1.59200
7.652	-2.100	9.70600	.15197	.06259	-.01463	.01868	.00284	.00164	.13924	.08731	1.59470
7.638	-1.900	9.71060	.15205	.06247	-.01460	.01692	.00266	.00149	.13933	.08722	1.59740
7.637	-1.700	9.71290	.15157	.06241	-.01453	.01501	.00245	.00133	.13886	.08709	1.59450
7.651	-1.500	9.71480	.15209	.06231	-.01448	.01321	.00222	.00115	.13940	.08708	1.60070
7.656	-1.300	9.71810	.15212	.06227	-.01442	.01135	.00201	.00099	.13943	.08706	1.60150
7.652	-1.100	9.71530	.15248	.06229	-.01437	.00951	.00178	.00083	.13978	.08713	1.60430
7.641	-.900	9.71800	.15224	.06224	-.01429	.00777	.00156	.00068	.13955	.08704	1.60320
7.653	-.700	9.72060	.15229	.06224	-.01427	.00601	.00129	.00054	.13959	.08706	1.60340
7.627	-.500	9.72430	.15236	.06231	-.01421	.00424	.00104	.00040	.13964	.08715	1.60240
7.637	-.300	9.72910	.15257	.06230	-.01414	.00248	.00078	.00025	.13985	.08719	1.60400
7.617	-.100	9.73010	.15237	.06229	-.01409	.00069	.00055	.00010	.13965	.08714	1.60260
7.603	.100	9.73350	.15261	.06218	-.01404	-.00115	.00029	-.00006	.13990	.08709	1.60650
7.616	.300	9.73540	.15295	.06219	-.01402	-.00297	.00004	-.00021	.14023	.08716	1.60880
7.602	.500	9.73740	.15261	.06221	-.01407	-.00481	-.00022	-.00036	.13989	.08712	1.60570
7.625	.700	9.73710	.15286	.06220	-.01414	-.00638	-.00044	-.00051	.14014	.08716	1.60790
7.619	.900	9.73710	.15317	.06220	-.01420	-.00823	-.00069	-.00064	.14044	.08721	1.61040
7.626	1.100	9.73850	.15278	.06224	-.01432	-.00986	-.00092	-.00078	.14005	.08719	1.60630
7.637	1.300	9.74350	.15337	.06228	-.01442	-.01166	-.00115	-.00092	.14062	.08734	1.61000
7.643	1.500	9.74560	.15322	.06228	-.01452	-.01349	-.00138	-.00107	.14046	.08732	1.60860
7.626	1.700	9.75130	.15325	.06235	-.01457	-.01538	-.00158	-.00123	.14048	.08741	1.60720
7.620	1.900	9.75310	.15332	.06239	-.01463	-.01731	-.00180	-.00139	.14053	.08746	1.60670
7.607	2.100	9.75450	.15333	.06248	-.01467	-.01913	-.00200	-.00154	.14053	.08755	1.60510
7.615	2.300	9.76030	.15359	.06256	-.01476	-.02106	-.00221	-.00172	.14076	.08769	1.60520
7.619	2.500	9.76200	.15372	.06264	-.01483	-.02305	-.00241	-.00190	.14088	.08780	1.60450
7.603	2.700	9.76210	.15349	.06271	-.01489	-.02488	-.00257	-.00208	.14063	.08783	1.60120
7.599	2.900	9.76320	.15342	.06280	-.01501	-.02700	-.00277	-.00227	.14055	.08790	1.59890
7.592	3.100	9.76580	.15399	.06287	-.01502	-.02880	-.00292	-.00246	.14109	.08808	1.60180
7.577	3.300	9.77040	.15337	.06297	-.01509	-.03086	-.00312	-.00264	.14046	.08808	1.59470
7.573	3.500	9.77430	.15408	.06304	-.01508	-.03278	-.00329	-.00281	.14115	.08828	1.59890
7.576	3.700	9.77730	.15393	.06302	-.01507	-.03460	-.00342	-.00299	.14099	.08824	1.59780

OA257 (LARC 20-M6-6559) OV102 (R7E165) (10 JUL 81)

REFERENCE DATA

SREF =	2690.0000 SQ.FT.	XMRP =	1076.6800 IN. XO		
LREF =	474.8100 INCHES	YMRP =	.0000 IN. YO		
BREF =	936.6800 INCHES	ZMRP =	375.0000 IN. ZO		
SCALE =	.0100				

PARAMETRIC DATA

ALPHA =	10.000	PHI =	.000
SPDBRK =	.000	AILRON =	.000
YP =	1.000	1S =	1.000
ELEVON =	.000	MACH =	6.000
S-MODE =	2.000	S-DIR =	1.000

RUN NO. 2277/ O RN/L = 7.63 GRADIENT INTERVAL = -.60/ .60

RN/L	BETA	ALPHA	CN	CA	CLM	CY	CYN	CBL	CL	CD	L/D
7.568	3.900	9.77620	.15382	.06316	-.01517	-.03681	-.00361	-.00318	.14086	.08836	1.59410
7.570	4.100	9.77110	.15401	.06312	-.01522	-.03866	-.00377	-.00335	.14106	.08834	1.59670
	GRADIENT	.01254	.00038	-.00013	.00016	-.00906	-.00125	-.00076	.00038	-.00004	.00497

OA257 (LARC 20-M6-6559) OV102 (R7E066) (10 JUL 81)

REFERENCE DATA

SREF = 2690.0000 SQ.FT. XMRP = 1076.6800 IN. XO
LREF = 474.8100 INCHES YMRP = .0000 IN. YO
BREF = 936.6800 INCHES ZMRP = 375.0000 IN. ZO
SCALE = .0100

PARAMETRIC DATA

ALPHA = 12.500 PHI = .000
SPDBRK = .000 AILRON = .000
YP = 1.000 1S = 1.000
ELEVON = .000 MACH = 6.000
S-MODE = 2.000 S-DIR = 1.000

RUN NO. 290/ 0 RN/L = 2.30 GRADIENT INTERVAL = -.60/ .60

RN/L	BETA	ALPHA	CN	CA	CLM	CY	CYN	CBL	CL	CD	L/D
2.313	-4.109	12.20600	.21695	.06406	-.01179	.03791	.00524	.00405	.19850	.10848	1.82980
2.311	-4.000	12.21700	.21760	.06407	-.01174	.03681	.00513	.00394	.19911	.10866	1.83240
2.314	-3.800	12.21200	.21748	.06398	-.01170	.03498	.00494	.00376	.19903	.10854	1.83370
2.318	-3.600	12.21200	.21676	.06384	-.01168	.03307	.00474	.00356	.19835	.10825	1.83240
2.316	-3.400	12.21800	.21716	.06379	-.01166	.03096	.00452	.00336	.19874	.10830	1.83500
2.314	-3.200	12.21900	.21749	.06369	-.01170	.02910	.00434	.00316	.19908	.10828	1.83860
2.316	-3.000	12.22000	.21779	.06365	-.01162	.02711	.00413	.00296	.19939	.10830	1.84100
2.315	-2.800	12.22100	.21735	.06349	-.01158	.02523	.00393	.00276	.19898	.10806	1.84150
2.320	-2.600	12.22800	.21772	.06353	-.01164	.02323	.00367	.00254	.19933	.10820	1.84210
2.323	-2.400	12.23000	.21813	.06351	-.01157	.02155	.00350	.00232	.19972	.10827	1.84460
2.324	-2.200	12.23300	.21840	.06351	-.01168	.01957	.00328	.00211	.19998	.10834	1.84590
2.321	-2.000	12.23600	.21862	.06341	-.01172	.01759	.00307	.00190	.20021	.10831	1.84860
2.323	-1.800	12.23900	.21838	.06349	-.01168	.01576	.00285	.00169	.19996	.10834	1.84560
2.314	-1.600	12.23800	.21937	.06346	-.01176	.01382	.00267	.00147	.20094	.10852	1.85150
2.307	-1.400	12.24200	.21924	.06344	-.01179	.01188	.00245	.00126	.20080	.10849	1.85090
2.305	-1.200	12.24200	.21822	.06349	-.01168	.00999	.00224	.00105	.19980	.10832	1.84450
2.306	-1.000	12.24800	.21922	.06351	-.01170	.00813	.00200	.00086	.20075	.10857	1.84910
2.301	-.800	12.24900	.21831	.06360	-.01170	.00639	.00177	.00067	.19985	.10847	1.84250
2.301	-.600	12.25500	.21986	.06370	-.01149	.00466	.00147	.00049	.20133	.10892	1.84850
2.302	-.400	12.25800	.21869	.06383	-.01151	.00308	.00115	.00032	.20015	.10881	1.83960
2.297	-.200	12.26000	.21939	.06388	-.01132	.00145	.00087	.00015	.20082	.10901	1.84230
2.286	.000	12.26500	.21909	.06385	-.01134	-.00028	.00056	-.00003	.20053	.10894	1.84070
2.279	.200	12.26700	.21977	.06402	-.01132	-.00161	.00027	-.00019	.20115	.10925	1.84120
2.280	.400	12.27200	.21988	.06398	-.01135	-.00339	-.00010	-.00034	.20126	.10925	1.84210
2.276	.600	12.27500	.22007	.06383	-.01139	-.00487	-.00045	-.00050	.20147	.10915	1.84570
2.276	.800	12.27700	.22007	.06385	-.01142	-.00639	-.00077	-.00068	.20146	.10918	1.84520
2.279	1.000	12.28000	.22052	.06388	-.01149	-.00840	-.00109	-.00085	.20189	.10932	1.84680
2.282	1.200	12.28300	.22064	.06388	-.01154	-.00991	-.00136	-.00104	.20200	.10936	1.84710
2.283	1.400	12.28600	.22080	.06393	-.01164	-.01176	-.00164	-.00124	.20214	.10945	1.84690
2.282	1.600	12.28800	.22169	.06397	-.01175	-.01365	-.00190	-.00143	.20299	.10969	1.85070
2.278	1.800	12.28700	.22069	.06408	-.01170	-.01543	-.00209	-.00164	.20200	.10958	1.84340
2.274	2.000	12.29100	.22109	.06394	-.01178	-.01739	-.00232	-.00183	.20242	.10953	1.84800
2.273	2.200	12.29500	.22162	.06394	-.01178	-.01939	-.00251	-.00202	.20293	.10966	1.85040
2.278	2.400	12.29900	.22044	.06392	-.01170	-.02130	-.00272	-.00224	.20177	.10941	1.84410
2.283	2.600	12.30200	.22120	.06406	-.01156	-.02319	-.00292	-.00246	.20248	.10971	1.84550
2.290	2.800	12.30700	.22120	.06405	-.01154	-.02534	-.00315	-.00268	.20247	.10972	1.84520
2.295	3.000	12.31300	.22144	.06401	-.01153	-.02711	-.00332	-.00289	.20269	.10976	1.84660
2.299	3.200	12.31600	.22050	.06395	-.01149	-.02904	-.00354	-.00309	.20179	.10951	1.84260
2.295	3.361	12.31800	.22121	.06426	-.01154	-.03077	-.00376	-.00327	.20241	.10997	1.84060
	GRADIENT	.01696	.00061	.00015	.00011	-.00796	-.00158	-.00082	.00053	.00032	-.00080

OA257 (LARC 20-M6-6559) OV102 (R7E066) (10 JUL 81)

REFERENCE DATA

SREF = 2690.0000 SQ.FT. XMRP = 1076.6800 IN. XO
LREF = 474.8100 INCHES YMRP = .0000 IN. YO
BREF = 936.6800 INCHES ZMRP = 375.0000 IN. ZO
SCALE = .0100

PARAMETRIC DATA

ALPHA = 12.500 PHI = .000
SPDBRK = .000 AILRON = .000
YP = 1.000 1S = 1.000
ELEVON = .000 MACH = 6.000
S-MODE = 2.000 S-DIR = 1.000

RUN NO. 276/ O RN/L = 7.53 GRADIENT INTERVAL = -.60/ .60

RN/L	BETA	ALPHA	CN	CA	CLM	CY	CYN	CBL	CL	CD	L/D
7.590	-4.202	12.12400	.21585	.06163	-.01301	.03934	.00513	.00436	.19810	.10559	1.87600
7.584	-4.100	12.13300	.21608	.06155	-.01297	.03843	.00503	.00425	.19831	.10559	1.87810
7.583	-3.900	12.13300	.21609	.06141	-.01291	.03645	.00482	.00406	.19836	.10546	1.88090
7.593	-3.700	12.13700	.21623	.06129	-.01284	.03459	.00459	.00387	.19851	.10538	1.88370
7.579	-3.500	12.13700	.21608	.06119	-.01276	.03281	.00440	.00368	.19839	.10526	1.88470
7.578	-3.300	12.13800	.21642	.06103	-.01274	.03081	.00420	.00346	.19875	.10517	1.88980
7.570	-3.100	12.14200	.21645	.06090	-.01262	.02895	.00401	.00326	.19880	.10506	1.89230
7.570	-2.900	12.14400	.21652	.06075	-.01258	.02698	.00381	.00305	.19889	.10494	1.89520
7.567	-2.700	12.14700	.21665	.06065	-.01254	.02516	.00364	.00284	.19904	.10488	1.89780
7.569	-2.500	12.15000	.21680	.06054	-.01248	.02327	.00346	.00263	.19920	.10481	1.90050
7.570	-2.300	12.15600	.21681	.06043	-.01244	.02128	.00325	.00240	.19923	.10473	1.90240
7.583	-2.100	12.15700	.21717	.06042	-.01241	.01946	.00307	.00219	.19958	.10480	1.90430
7.577	-1.900	12.16000	.21699	.06039	-.01235	.01767	.00291	.00198	.19940	.10474	1.90370
7.549	-1.700	12.16700	.21699	.06038	-.01228	.01579	.00275	.00177	.19939	.10476	1.90340
7.531	-1.500	12.16900	.21735	.06032	-.01224	.01389	.00253	.00157	.19975	.10478	1.90640
7.517	-1.300	12.17100	.21717	.06028	-.01219	.01204	.00233	.00136	.19958	.10471	1.90600
7.512	-1.100	12.17400	.21708	.06027	-.01210	.01020	.00210	.00116	.19949	.10470	1.90540
7.508	-.900	12.17600	.21746	.06025	-.01203	.00841	.00188	.00097	.19986	.10476	1.90780
7.500	-.700	12.17900	.21705	.06025	-.01198	.00677	.00168	.00078	.19946	.10468	1.90530
7.497	-.500	12.18000	.21715	.06027	-.01194	.00493	.00141	.00058	.19954	.10473	1.90530
7.495	-.300	12.18200	.21709	.06033	-.01190	.00327	.00114	.00039	.19947	.10478	1.90360
7.501	-.100	12.18800	.21693	.06040	-.01185	.00170	.00086	.00022	.19929	.10484	1.90090
7.506	.100	12.19200	.21760	.06042	-.01190	.00000	.00054	.00005	.19993	.10501	1.90400
7.495	.300	12.19700	.21782	.06044	-.01186	-.00156	.00023	-.00011	.20013	.10510	1.90430
7.487	.500	12.19900	.21789	.06042	-.01181	-.00313	-.00009	-.00028	.20020	.10510	1.90490
7.465	.700	12.20400	.21750	.06037	-.01180	-.00475	-.00040	-.00045	.19982	.10498	1.90340
7.474	.900	12.20800	.21798	.06030	-.01190	-.00635	-.00068	-.00061	.20029	.10503	1.90690
7.477	1.100	12.21000	.21795	.06029	-.01198	-.00798	-.00094	-.00079	.20027	.10502	1.90690
7.482	1.300	12.21300	.21794	.06028	-.01203	-.00976	-.00122	-.00098	.20026	.10502	1.90690
7.485	1.500	12.21200	.21799	.06029	-.01210	-.01139	-.00145	-.00117	.20030	.10503	1.90700
7.503	1.700	12.21700	.21824	.06029	-.01215	-.01327	-.00170	-.00136	.20054	.10511	1.90790
7.500	1.900	12.22100	.21867	.06033	-.01225	-.01505	-.00192	-.00155	.20094	.10525	1.90920
7.507	2.100	12.22300	.21875	.06035	-.01230	-.01686	-.00214	-.00176	.20102	.10530	1.90900
7.512	2.300	12.22600	.21890	.06043	-.01244	-.01868	-.00234	-.00196	.20114	.10541	1.90810
7.528	2.500	12.22800	.21864	.06048	-.01253	-.02057	-.00254	-.00218	.20087	.10542	1.90540
7.537	2.700	12.23500	.21895	.06052	-.01257	-.02259	-.00272	-.00240	.20115	.10554	1.90590
7.523	2.900	12.23900	.21889	.06050	-.01261	-.02448	-.00287	-.00262	.20109	.10553	1.90550
7.512	3.100	12.24100	.21917	.06062	-.01263	-.02639	-.00305	-.00285	.20134	.10572	1.90450
7.500	3.300	12.24400	.21927	.06077	-.01268	-.02835	-.00321	-.00307	.20139	.10589	1.90200
7.490	3.500	12.24600	.21922	.06084	-.01276	-.03026	-.00341	-.00329	.20133	.10595	1.90010
7.495	3.700	12.24700	.21935	.06099	-.01279	-.03216	-.00358	-.00350	.20142	.10613	1.89770
7.514	3.900	12.25000	.21947	.06116	-.01280	-.03413	-.00380	-.00371	.20150	.10633	1.89500

OA257 (LARC 20-M6-6559) OV102 (R7E066) (10 JUL 81)

REFERENCE DATA

SREF = 2690.0000 SQ.FT. XMRP = 1076.6800 IN. XO
LREF = 474.8100 INCHES YMRP = .0000 IN. YO
BREF = 936.6800 INCHES ZMRP = 375.0000 IN. ZO
SCALE = .0100

PARAMETRIC DATA

ALPHA = 12.500 PHI = .000
SPDBRK = .000 AILRON = .000
YP = 1.000 1S = 1.000
ELEVON = .000 MACH = 6.000
S-MODE = 2.000 S-DIR = 1.000

RUN NO. 276/ 0 RN/L = 7.53 GRADIENT INTERVAL = -.60/ .60

RN/L	BETA	ALPHA	CN	CA	CLM	CY	CYN	CBL	CL	CD	L/D
7.499	4.100	12.25200	.21961	.06128	-.01285	-.03601	-.00397	-.00392	.20161	.10649	1.89320
7.505	4.218	12.24800	.21932	.06138	-.01287	-.03705	-.00407	-.00404	.20131	.10651	1.89010
	GRADIENT	.02057	.00094	.00016	.00011	-.00806	-.00151	-.00085	.00085	.00043	.00046

OA257 (LARC 20-M6-6559) OV102 (R7E166) (10 JUL 81)

REFERENCE DATA

SREF = 2690.0000 SQ.FT. XMRP = 1076.6800 IN. XO
LREF = 474.8100 INCHES YMRP = .0000 IN. YO
BREF = 936.6800 INCHES ZMRP = 375.0000 IN. ZO
SCALE = .0100

PARAMETRIC DATA

ALPHA = 12.500 PHI = .000
SPDBRK = .000 AILRON = .000
YP = 1.000 1S = 1.000
ELEVON = .000 MACH = 6.000
S-MODE = 2.000 S-DIR = 1.000

RUN NO. 2290/ 0 RN/L = 2.30 GRADIENT INTERVAL = -.60/ .60

RN/L	BETA	ALPHA	CN	CA	CLM	CY	CYN	CBL	CL	CD	L/D
2.312	-4.100	12.20700	.21698	.06407	-.01176	.03780	.00523	.00404	.19853	.10850	1.82970
2.312	-3.900	12.21500	.21684	.06407	-.01170	.03592	.00504	.00384	.19837	.10849	1.82840
2.316	-3.700	12.21300	.21769	.06397	-.01169	.03391	.00482	.00366	.19923	.10857	1.83500
2.316	-3.500	12.21500	.21703	.06383	-.01163	.03198	.00462	.00345	.19861	.10831	1.83380
2.315	-3.300	12.21900	.21787	.06370	-.01171	.03005	.00442	.00327	.19946	.10837	1.84060
2.316	-3.100	12.22100	.21755	.06380	-.01167	.02811	.00424	.00306	.19912	.10840	1.83690
2.315	-2.900	12.22100	.21772	.06354	-.01158	.02612	.00401	.00287	.19934	.10819	1.84250
2.316	-2.700	12.22400	.21668	.06350	-.01160	.02427	.00381	.00265	.19832	.10794	1.83740
2.323	-2.500	12.23000	.21875	.06356	-.01165	.02232	.00359	.00242	.20032	.10845	1.84710
2.325	-2.300	12.23200	.21787	.06347	-.01165	.02058	.00338	.00222	.19948	.10819	1.84380
2.322	-2.100	12.23100	.21808	.06336	-.01163	.01857	.00318	.00201	.19970	.10812	1.84700
2.322	-1.900	12.23800	.21909	.06346	-.01173	.01674	.00296	.00180	.20066	.10846	1.85010
2.320	-1.700	12.24100	.21854	.06341	-.01171	.01479	.00275	.00158	.20013	.10831	1.84780
2.310	-1.500	12.23900	.21854	.06351	-.01175	.01282	.00256	.00136	.20011	.10839	1.84620
2.306	-1.300	12.24200	.21850	.06346	-.01178	.01094	.00234	.00115	.20007	.10835	1.84650
2.307	-1.100	12.24400	.21845	.06353	-.01173	.00907	.00213	.00096	.20001	.10841	1.84490
2.304	-.900	12.24800	.21925	.06350	-.01169	.00733	.00189	.00077	.20079	.10857	1.84940
2.300	-.700	12.25300	.21897	.06363	-.01160	.00555	.00163	.00058	.20048	.10866	1.84510
2.301	-.500	12.25600	.21880	.06372	-.01152	.00380	.00131	.00040	.20029	.10871	1.84240
2.302	-.300	12.25800	.21893	.06387	-.01138	.00234	.00099	.00023	.20038	.10890	1.84010
2.291	-.100	12.26300	.21880	.06381	-.01135	.00058	.00071	.00006	.20026	.10883	1.84020
2.282	.100	12.26500	.21912	.06389	-.01128	-.00097	.00042	-.00012	.20055	.10898	1.84020
2.280	.300	12.27000	.21924	.06400	-.01135	-.00244	.00008	-.00026	.20063	.10913	1.83830
2.278	.500	12.27300	.22016	.06392	-.01136	-.00417	-.00030	-.00042	.20154	.10926	1.84460
2.275	.700	12.27500	.22004	.06389	-.01136	-.00567	-.00061	-.00058	.20143	.10921	1.84440
2.278	.900	12.27800	.22031	.06390	-.01146	-.00739	-.00092	-.00077	.20168	.10928	1.84550
2.280	1.100	12.28100	.22020	.06387	-.01150	-.00909	-.00123	-.00094	.20158	.10925	1.84510
2.282	1.300	12.28400	.22075	.06388	-.01154	-.01087	-.00149	-.00115	.20210	.10939	1.84760
2.282	1.500	12.28500	.22133	.06399	-.01171	-.01270	-.00174	-.00134	.20265	.10962	1.84870
2.280	1.700	12.28600	.22175	.06404	-.01171	-.01452	-.00198	-.00153	.20304	.10976	1.84980
2.276	1.900	12.29100	.22064	.06400	-.01169	-.01645	-.00220	-.00174	.20196	.10950	1.84430
2.273	2.100	12.29400	.22174	.06393	-.01175	-.01836	-.00241	-.00192	.20305	.10968	1.85130
2.275	2.300	12.29700	.22094	.06398	-.01174	-.02036	-.00262	-.00214	.20224	.10957	1.84580
2.280	2.500	12.30000	.22120	.06397	-.01164	-.02224	-.00283	-.00235	.20250	.10963	1.84720
2.287	2.700	12.30400	.22120	.06401	-.01155	-.02418	-.00301	-.00257	.20247	.10968	1.84610
2.293	2.900	12.31100	.22070	.06393	-.01155	-.02619	-.00323	-.00278	.20200	.10952	1.84450
2.298	3.100	12.31400	.22084	.06401	-.01152	-.02804	-.00343	-.00299	.20211	.10963	1.84350
2.297	3.300	12.31900	.22069	.06410	-.01154	-.02999	-.00367	-.00320	.20194	.10971	1.84060
	GRADIENT	.01757	.00115	.00021	.00014	-.00796	-.00158	-.00082	.00104	.00051	.00080

OA257 (LARC 20-M6-6559) OV102 (R7E166) (10 JUL 81)

REFERENCE DATA

SREF = 2690.0000 SQ.FT. XMRP = 1076.6800 IN. XO
LREF = 474.8100 INCHES YMRP = .0000 IN. YO
BREF = 936.6800 INCHES ZMRP = 375.0000 IN. ZO
SCALE = .0100

PARAMETRIC DATA

ALPHA = 12.500 PHI = .000
SPDBRK = .000 AILRON = .000
YP = 1.000 1S = 1.000
ELEVON = .000 MACH = 6.000
S-MODE = 2.000 S-DIR = 1.000

RUN NO. 2276/ O RN/L = 7.53 GRADIENT INTERVAL = -.60/ .60

RN/L	BETA	ALPHA	CN	CA	CLM	CY	CYN	CBL	CL	CD	L/D
7.590	-4.200	12.12400	.21586	.06163	-.01301	.03933	.00513	.00436	.19810	.10559	1.87600
7.591	-4.000	12.13200	.21554	.06145	-.01293	.03747	.00492	.00416	.19781	.10538	1.87710
7.587	-3.800	12.13700	.21630	.06134	-.01286	.03543	.00469	.00396	.19857	.10544	1.88320
7.585	-3.600	12.13800	.21623	.06126	-.01282	.03374	.00449	.00378	.19851	.10536	1.88420
7.586	-3.400	12.13700	.21617	.06107	-.01277	.03180	.00430	.00357	.19850	.10515	1.88770
7.573	-3.200	12.13900	.21635	.06096	-.01269	.02983	.00410	.00337	.19869	.10509	1.89060
7.572	-3.000	12.14400	.21637	.06082	-.01264	.02799	.00391	.00316	.19874	.10498	1.89310
7.568	-2.800	12.14500	.21651	.06069	-.01257	.02604	.00372	.00295	.19889	.10488	1.89640
7.562	-2.600	12.14800	.21676	.06061	-.01250	.02420	.00354	.00273	.19915	.10487	1.89900
7.577	-2.400	12.15200	.21678	.06050	-.01249	.02232	.00335	.00251	.19918	.10478	1.90100
7.575	-2.200	12.15400	.21659	.06047	-.01242	.02037	.00316	.00229	.19900	.10471	1.90040
7.582	-2.000	12.16000	.21696	.06038	-.01240	.01857	.00299	.00208	.19938	.10472	1.90380
7.560	-1.800	12.16400	.21665	.06040	-.01234	.01673	.00284	.00187	.19906	.10469	1.90140
7.535	-1.600	12.16800	.21723	.06036	-.01226	.01482	.00265	.00167	.19963	.10479	1.90510
7.518	-1.400	12.16900	.21674	.06026	-.01219	.01298	.00244	.00146	.19917	.10460	1.90410
7.512	-1.200	12.17400	.21735	.06029	-.01216	.01118	.00223	.00126	.19975	.10477	1.90660
7.516	-1.000	12.17400	.21700	.06025	-.01211	.00930	.00200	.00107	.19942	.10466	1.90540
7.501	-.800	12.17700	.21729	.06025	-.01201	.00756	.00177	.00087	.19969	.10473	1.90670
7.499	-.600	12.17900	.21702	.06024	-.01196	.00585	.00155	.00068	.19942	.10466	1.90540
7.497	-.400	12.18200	.21701	.06032	-.01191	.00405	.00127	.00049	.19939	.10475	1.90340
7.491	-.200	12.18600	.21712	.06039	-.01187	.00247	.00100	.00030	.19949	.10486	1.90240
7.499	.000	12.19000	.21710	.06037	-.01185	.00085	.00070	.00013	.19946	.10485	1.90230
7.501	.200	12.19400	.21758	.06041	-.01187	-.00082	.00038	-.00002	.19991	.10501	1.90380
7.492	.400	12.19900	.21779	.06045	-.01182	-.00236	.00006	-.00020	.20010	.10510	1.90380
7.481	.600	12.20000	.21766	.06037	-.01182	-.00386	-.00023	-.00036	.19998	.10501	1.90440
7.464	.800	12.20400	.21800	.06035	-.01184	-.00554	-.00054	-.00053	.20032	.10507	1.90640
7.478	1.000	12.20800	.21780	.06031	-.01191	-.00715	-.00082	-.00069	.20012	.10500	1.90590
7.493	1.200	12.21100	.21811	.06027	-.01202	-.00879	-.00108	-.00088	.20042	.10504	1.90800
7.481	1.400	12.21100	.21770	.06028	-.01207	-.01063	-.00135	-.00107	.20003	.10496	1.90570
7.494	1.600	12.21600	.21821	.06030	-.01213	-.01232	-.00157	-.00127	.20051	.10511	1.90760
7.504	1.800	12.22000	.21851	.06031	-.01218	-.01419	-.00182	-.00146	.20079	.10520	1.90870
7.503	2.000	12.22100	.21838	.06035	-.01230	-.01594	-.00202	-.00166	.20066	.10521	1.90730
7.508	2.200	12.22300	.21873	.06036	-.01235	-.01785	-.00225	-.00187	.20100	.10530	1.90880
7.512	2.400	12.22600	.21862	.06047	-.01246	-.01960	-.00244	-.00207	.20085	.10540	1.90570
7.539	2.600	12.23100	.21852	.06050	-.01256	-.02161	-.00263	-.00229	.20075	.10542	1.90430
7.531	2.800	12.23700	.21906	.06049	-.01260	-.02350	-.00279	-.00251	.20126	.10555	1.90680
7.513	3.000	12.24000	.21908	.06058	-.01264	-.02544	-.00296	-.00273	.20126	.10565	1.90500
7.502	3.200	12.24200	.21909	.06067	-.01264	-.02742	-.00312	-.00296	.20124	.10575	1.90310
7.497	3.400	12.24500	.21933	.06081	-.01276	-.02925	-.00331	-.00317	.20144	.10594	1.90150
7.483	3.600	12.24600	.21937	.06092	-.01276	-.03130	-.00350	-.00339	.20146	.10606	1.89940
7.508	3.800	12.24900	.21932	.06106	-.01281	-.03313	-.00370	-.00360	.20137	.10620	1.89610
7.516	4.000	12.25100	.21964	.06118	-.01281	-.03492	-.00387	-.00381	.20166	.10639	1.89550

OA257 (LARC 20-M6-6559) DV102 (R7E166) (10 JUL 81)

REFERENCE DATA

SREF =	2690.0000 SQ.FT.	XMRP =	1076.6800 IN. XO		
LREF =	474.8100 INCHES	YMRP =	.0000 IN. YO		
BREF =	936.6800 INCHES	ZMRP =	375.0000 IN. ZO		
SCALE =	.0100				

PARAMETRIC DATA

ALPHA =	12.500	PHI =	.000
SPDBRK =	.000	AILRON =	.000
YP =	1.000	1S =	1.000
ELEVON =	.000	MACH =	6.000
S-MODE =	2.000	S-DIR =	1.000

RUN NO. 2276/ O RN/L = 7.53 GRADIENT INTERVAL = -.60/ .60

RN/L	BETA	ALPHA	CN	CA	CLM	CY	CYN	CBL	CL	CD	L/D
7.504	4.200	12.24900	.21928	.06136	-.01287	-.03692	-.00406	-.00402	.20127	.10648	1.89020
	GRADIENT	.01875	.00070	.00012	.00011	-.00808	-.00150	-.00086	.00063	.00034	-.00014

OA257 (LARC 20-M6-6559) OV102 (R7E067) (10 JUL 81)

REFERENCE DATA

SREF = 2690.0000 SQ.FT. XMRP = 1076.6800 IN. XO
LREF = 474.8100 INCHES YMRP = .0000 IN. YO
BREF = 936.6800 INCHES ZMRP = 375.0000 IN. ZO
SCALE = .0100

PARAMETRIC DATA

ALPHA = 15.000 PHI = .000
SPDBRK = .000 AILRON = .000
YP = 1.000 1S = 1.000
ELEVON = .000 MACH = 6.000
S-MODE = 2.000 S-DIR = 1.000

RUN NO. 289/ O RN/L = 2.24 GRADIENT INTERVAL = -.60/ .60

RN/L	BETA	ALPHA	CN	CA	CLM	CY	CYN	CBL	CL	CD	L/D
2.237	-4.287	14.57600	.28972	.06423	-.00873	.03883	.00575	.00496	.26423	.13508	1.95610
2.234	-4.100	14.58500	.28995	.06418	-.00867	.03693	.00555	.00475	.26444	.13512	1.95710
2.234	-3.900	14.58400	.29068	.06400	-.00854	.03496	.00531	.00453	.26520	.13513	1.96260
2.231	-3.700	14.58900	.29108	.06395	-.00851	.03315	.00512	.00430	.26558	.13521	1.96430
2.230	-3.500	14.58900	.29145	.06398	-.00847	.03123	.00490	.00408	.26594	.13533	1.96510
2.233	-3.300	14.58900	.29051	.06392	-.00846	.02924	.00466	.00387	.26505	.13503	1.96280
2.235	-3.100	14.59200	.29112	.06392	-.00841	.02739	.00444	.00364	.26562	.13520	1.96460
2.236	-2.900	14.59600	.29156	.06390	-.00837	.02558	.00419	.00342	.26605	.13531	1.96610
2.237	-2.700	14.60000	.29163	.06380	-.00835	.02372	.00397	.00320	.26613	.13525	1.96770
2.231	-2.500	14.60300	.29220	.06387	-.00834	.02186	.00371	.00294	.26666	.13547	1.96830
2.230	-2.300	14.60700	.29161	.06381	-.00831	.02013	.00348	.00271	.26610	.13529	1.96690
2.233	-2.100	14.61000	.29242	.06379	-.00825	.01823	.00323	.00246	.26687	.13549	1.96970
2.239	-1.900	14.61400	.29198	.06382	-.00837	.01649	.00302	.00219	.26643	.13542	1.96740
2.234	-1.700	14.61900	.29298	.06371	-.00848	.01461	.00276	.00195	.26742	.13559	1.97230
2.231	-1.500	14.62100	.29283	.06377	-.00844	.01272	.00253	.00169	.26725	.13562	1.97050
2.228	-1.300	14.62700	.29237	.06380	-.00849	.01093	.00230	.00144	.26679	.13556	1.96810
2.225	-1.100	14.63100	.29297	.06386	-.00845	.00898	.00208	.00120	.26734	.13579	1.96880
2.224	-.900	14.63600	.29312	.06388	-.00844	.00727	.00186	.00096	.26747	.13588	1.96850
2.229	-.700	14.64100	.29293	.06388	-.00853	.00539	.00158	.00071	.26728	.13585	1.96750
2.233	-.500	14.64500	.29381	.06392	-.00852	.00383	.00130	.00051	.26810	.13612	1.96960
2.241	-.300	14.65100	.29271	.06385	-.00847	.00219	.00098	.00032	.26704	.13580	1.96640
2.241	-.100	14.65500	.29365	.06392	-.00854	.00076	.00063	.00014	.26793	.13614	1.96810
2.235	.100	14.66000	.29441	.06399	-.00853	-.00073	.00026	-.00003	.26863	.13642	1.96920
2.233	.300	14.66200	.29419	.06400	-.00848	-.00223	-.00013	-.00018	.26841	.13639	1.96800
2.236	.500	14.66700	.29423	.06393	-.00850	-.00385	-.00048	-.00037	.26845	.13635	1.96890
2.239	.700	14.67100	.29452	.06400	-.00837	-.00550	-.00079	-.00057	.26871	.13650	1.96860
2.243	.900	14.67400	.29425	.06392	-.00841	-.00720	-.00107	-.00080	.26846	.13637	1.96860
2.247	1.100	14.67700	.29428	.06390	-.00848	-.00894	-.00133	-.00106	.26849	.13638	1.96870
2.248	1.300	14.68100	.29512	.06387	-.00848	-.01095	-.00160	-.00131	.26930	.13658	1.97170
2.244	1.500	14.68500	.29508	.06380	-.00844	-.01258	-.00183	-.00155	.26927	.13652	1.97240
2.240	1.700	14.68800	.29445	.06382	-.00844	-.01442	-.00208	-.00177	.26865	.13640	1.96960
2.235	1.900	14.69000	.29416	.06382	-.00845	-.01623	-.00233	-.00202	.26836	.13633	1.96850
2.231	2.100	14.69500	.29484	.06379	-.00843	-.01798	-.00257	-.00225	.26901	.13650	1.97080
2.230	2.300	14.69900	.29466	.06382	-.00841	-.01985	-.00279	-.00252	.26882	.13650	1.96940
2.233	2.500	14.70300	.29497	.06382	-.00842	-.02176	-.00303	-.00277	.26911	.13659	1.97020
2.237	2.700	14.70600	.29448	.06380	-.00829	-.02367	-.00326	-.00303	.26864	.13647	1.96850
2.239	2.900	14.71000	.29500	.06389	-.00845	-.02553	-.00348	-.00328	.26911	.13670	1.96860
2.240	3.100	14.71400	.29497	.06388	-.00843	-.02742	-.00370	-.00354	.26907	.13670	1.96830
2.245	3.300	14.71700	.29513	.06394	-.00850	-.02913	-.00392	-.00376	.26920	.13682	1.96760
2.246	3.500	14.72000	.29438	.06389	-.00873	-.02951	-.00395	-.00383	.26849	.13659	1.96560
	GRADIENT	.02114	.00104	.00009	.00001	-.00759	-.00180	-.00086	.00094	.00046	.00034

OA257 (LARC 20-M6-6559) OV102 (R7E067) (10 JUL 81)

REFERENCE DATA

SREF = 2690.0000 SQ.FT. XMRP = 1076.6800 IN. XO
LREF = 474.8100 INCHES YMRP = .0000 IN. YO
BREF = 936.6800 INCHES ZMRP = 375.0000 IN. ZO
SCALE = .0100

PARAMETRIC DATA

ALPHA = 15.000 PHI = .000
SPDBRK = .000 AILRON = .000
YP = 1.000 1S = 1.000
ELEVON = .000 MACH = 6.000
S-MODE = 2.000 S-DIR = 1.000

RUN NO. 275/ O RN/L = 7.58 GRADIENT INTERVAL = -.60/ .60

RN/L	BETA	ALPHA	CN	CA	CLM	CY	CYN	CBL	CL	CD	L/D
7.629	-4.313	14.33100	.27792	.06133	-.01096	.03749	.00574	.00481	.25409	.12821	1.98180
7.642	-4.200	14.34000	.27796	.06127	-.01091	.03632	.00559	.00468	.25412	.12820	1.98220
7.646	-4.000	14.34100	.27883	.06116	-.01089	.03456	.00538	.00446	.25499	.12832	1.98720
7.646	-3.800	14.34100	.27860	.06105	-.01086	.03270	.00514	.00424	.25480	.12816	1.98820
7.647	-3.600	14.34600	.27896	.06096	-.01085	.03100	.00491	.00404	.25516	.12818	1.99070
7.630	-3.400	14.34600	.27855	.06087	-.01077	.02908	.00466	.00383	.25479	.12799	1.99070
7.634	-3.200	14.35000	.27908	.06083	-.01072	.02733	.00443	.00361	.25529	.12810	1.99300
7.630	-3.000	14.35500	.27930	.06075	-.01069	.02550	.00417	.00339	.25552	.12810	1.99470
7.641	-2.800	14.35700	.27944	.06067	-.01065	.02377	.00393	.00318	.25567	.12807	1.99630
7.638	-2.600	14.36100	.27977	.06056	-.01064	.02193	.00366	.00297	.25601	.12806	1.99920
7.640	-2.400	14.36200	.27970	.06050	-.01061	.02023	.00341	.00277	.25595	.12799	1.99980
7.652	-2.200	14.36700	.27958	.06043	-.01058	.01843	.00314	.00255	.25584	.12791	2.00010
7.654	-2.000	14.37200	.28006	.06038	-.01053	.01683	.00290	.00234	.25631	.12801	2.00230
7.646	-1.800	14.37700	.28013	.06031	-.01045	.01497	.00264	.00213	.25639	.12798	2.00340
7.647	-1.600	14.38200	.28012	.06023	-.01035	.01320	.00241	.00191	.25638	.12792	2.00430
7.637	-1.400	14.38600	.28012	.06018	-.01031	.01146	.00217	.00168	.25638	.12789	2.00480
7.607	-1.200	14.38800	.28035	.06017	-.01023	.00957	.00192	.00144	.25660	.12795	2.00550
7.602	-1.000	14.39000	.28013	.06020	-.01015	.00795	.00169	.00121	.25638	.12793	2.00410
7.606	-.800	14.39300	.28020	.06016	-.01012	.00622	.00142	.00099	.25645	.12792	2.00480
7.598	-.600	14.39800	.28004	.06016	-.01007	.00461	.00113	.00077	.25628	.12790	2.00380
7.598	-.400	14.40000	.28003	.06009	-.01009	.00294	.00083	.00055	.25629	.12784	2.00480
7.586	-.200	14.40400	.28029	.06013	-.01008	.00140	.00056	.00034	.25652	.12796	2.00470
7.577	.000	14.40600	.28011	.06009	-.01015	-.00026	.00028	.00010	.25635	.12789	2.00440
7.551	.200	14.40800	.28036	.06017	-.01017	-.00207	-.00004	-.00013	.25657	.12804	2.00380
7.540	.400	14.40900	.28101	.06016	-.01021	-.00373	-.00033	-.00035	.25720	.12820	2.00630
7.522	.600	14.41100	.28027	.06018	-.01023	-.00532	-.00060	-.00056	.25647	.12804	2.00310
7.518	.800	14.41500	.28094	.06029	-.01025	-.00689	-.00091	-.00076	.25708	.12833	2.00330
7.535	1.000	14.42400	.28115	.06019	-.01029	-.00843	-.00117	-.00097	.25729	.12833	2.00490
7.525	1.200	14.42600	.28120	.06023	-.01031	-.01020	-.00147	-.00119	.25733	.12839	2.00430
7.501	1.400	14.43100	.28144	.06017	-.01037	-.01197	-.00169	-.00143	.25757	.12842	2.00570
7.513	1.600	14.43200	.28167	.06017	-.01045	-.01379	-.00193	-.00166	.25779	.12847	2.00650
7.509	1.800	14.43700	.28160	.06013	-.01050	-.01540	-.00213	-.00189	.25771	.12844	2.00650
7.520	2.000	14.44200	.28213	.06012	-.01052	-.01734	-.00236	-.00213	.25822	.12858	2.00820
7.514	2.200	14.44500	.28212	.06021	-.01053	-.01914	-.00259	-.00236	.25818	.12868	2.00630
7.524	2.400	14.44900	.28199	.06026	-.01054	-.02086	-.00282	-.00260	.25803	.12871	2.00470
7.530	2.600	14.45100	.28219	.06031	-.01057	-.02276	-.00307	-.00284	.25821	.12883	2.00430
7.529	2.800	14.45600	.28227	.06046	-.01060	-.02454	-.00329	-.00308	.25824	.12901	2.00170
7.531	3.000	14.45900	.28217	.06048	-.01063	-.02630	-.00352	-.00332	.25813	.12902	2.00070
7.529	3.200	14.46300	.28231	.06059	-.01068	-.02823	-.00378	-.00355	.25823	.12918	1.99900
7.529	3.400	14.46700	.28251	.06067	-.01071	-.02983	-.00400	-.00375	.25840	.12932	1.99810
7.538	3.600	14.47000	.28262	.06079	-.01075	-.03180	-.00423	-.00401	.25846	.12948	1.99620
7.539	3.800	14.47500	.28267	.06080	-.01072	-.03366	-.00444	-.00424	.25850	.12952	1.99580

OA257 (LARC 20-M6-6559) OV102 (R7E067) (10 JUL 81)

REFERENCE DATA

SREF =	2690.0000 SQ.FT.	XMRP =	1076.6800 IN. XO		
LREF =	474.8100 INCHES	YMRP =	.0000 IN. YO		
BREF =	936.6800 INCHES	ZMRP =	375.0000 IN. ZO		
SCALE =	.0100				

PARAMETRIC DATA

ALPHA =	15.000	PHI =	.000
SPDBRK =	.000	AILRON =	.000
YP =	1.000	1S =	1.000
ELEVON =	.000	MACH =	6.000
S-MODE =	2.000	S-DIR =	1.000

RUN NO. 275/ 0 RN/L = 7.58 GRADIENT INTERVAL = -.60/ .60

RN/L	BETA	ALPHA	CN	CA	CLM	CY	CYN	CBL	CL	CD	L/D
7.513	4.000	14.47400	.28203	.06086	-.01073	-.03553	-.00466	-.00447	.25787	.12942	1.99250
	GRADIENT	.01089	.00049	.00005	-.00014	-.00832	-.00145	-.00112	.00044	.00022	.00000

OA257 (LARC 20-M6-6559) OV102 (R7E167) (10 JUL 81)

REFERENCE DATA

SREF = 2690.0000 SQ.FT. XMRP = 1076.6800 IN. XO
LREF = 474.8100 INCHES YMRP = .0000 IN. YO
BREF = 936.6800 INCHES ZMRP = 375.0000 IN. ZO
SCALE = .0100

PARAMETRIC DATA

ALPHA = 15.000 PHI = .000
SPDBRK = .000 AILRON = .000
YP = 1.000 1S = 1.000
ELEVON = .000 MACH = 6.000
S-MODE = 2.000 S-DIR = 1.000

RUN NO. 2289/ 0 RN/L = 2.24 GRADIENT INTERVAL = -.60/ .60

RN/L	BETA	ALPHA	CN	CA	CLM	CY	CYN	CBL	CL	CD	L/D
2.236	-4.200	14.58800	.29131	.06426	-.00871	.03794	.00568	.00487	.26573	.13556	1.96030
2.234	-4.000	14.58600	.29016	.06415	-.00858	.03592	.00542	.00463	.26465	.13515	1.95820
2.233	-3.800	14.58600	.29233	.06401	-.00854	.03405	.00522	.00443	.26679	.13557	1.96800
2.229	-3.600	14.58700	.29167	.06398	-.00852	.03222	.00501	.00419	.26616	.13537	1.96610
2.231	-3.400	14.58800	.29054	.06398	-.00850	.03027	.00478	.00398	.26506	.13509	1.96200
2.236	-3.200	14.59200	.29180	.06401	-.00850	.02840	.00455	.00376	.26626	.13547	1.96550
2.234	-3.000	14.59500	.29140	.06379	-.00842	.02646	.00430	.00354	.26592	.13515	1.96750
2.238	-2.800	14.59600	.29129	.06384	-.00840	.02473	.00409	.00332	.26580	.13519	1.96610
2.235	-2.600	14.60200	.29213	.06383	-.00829	.02268	.00382	.00307	.26661	.13541	1.96890
2.230	-2.400	14.60500	.29191	.06380	-.00829	.02104	.00358	.00283	.26639	.13535	1.96820
2.232	-2.200	14.60800	.29145	.06380	-.00841	.01916	.00335	.00259	.26594	.13524	1.96650
2.235	-2.000	14.61200	.29209	.06375	-.00834	.01736	.00312	.00233	.26656	.13538	1.96900
2.238	-1.800	14.61700	.29268	.06385	-.00836	.01556	.00292	.00207	.26710	.13564	1.96910
2.232	-1.600	14.61900	.29283	.06378	-.00840	.01361	.00265	.00182	.26725	.13563	1.97040
2.228	-1.400	14.62200	.29236	.06378	-.00852	.01183	.00243	.00157	.26679	.13551	1.96880
2.227	-1.200	14.63100	.29262	.06375	-.00848	.00992	.00222	.00133	.26703	.13559	1.96930
2.223	-1.000	14.63300	.29329	.06379	-.00848	.00812	.00197	.00109	.26766	.13581	1.97080
2.226	-.800	14.63800	.29285	.06387	-.00853	.00643	.00174	.00083	.26720	.13581	1.96750
2.232	-.600	14.64100	.29365	.06387	-.00852	.00461	.00146	.00061	.26797	.13602	1.97010
2.236	-.400	14.64700	.29335	.06381	-.00854	.00303	.00115	.00040	.26768	.13592	1.96940
2.243	-.200	14.65200	.29297	.06389	-.00853	.00152	.00082	.00022	.26729	.13591	1.96660
2.239	.000	14.65800	.29379	.06392	-.00849	-.00006	.00043	.00006	.26805	.13618	1.96840
2.233	.200	14.66200	.29425	.06400	-.00846	-.00147	.00006	-.00010	.26847	.13639	1.96830
2.234	.400	14.66300	.29406	.06402	-.00851	-.00299	-.00031	-.00027	.26828	.13637	1.96730
2.239	.600	14.66900	.29409	.06395	-.00850	-.00465	-.00065	-.00046	.26831	.13634	1.96790
2.240	.800	14.67200	.29420	.06398	-.00842	-.00634	-.00093	-.00069	.26840	.13641	1.96760
2.246	1.000	14.67500	.29364	.06390	-.00847	-.00805	-.00120	-.00093	.26787	.13620	1.96670
2.248	1.200	14.67900	.29554	.06390	-.00850	-.00998	-.00148	-.00118	.26970	.13671	1.97270
2.247	1.400	14.68200	.29473	.06383	-.00848	-.01159	-.00169	-.00142	.26893	.13645	1.97090
2.242	1.600	14.68700	.29546	.06397	-.00848	-.01342	-.00196	-.00168	.26958	.13679	1.97080
2.237	1.800	14.69000	.29466	.06377	-.00839	-.01530	-.00219	-.00189	.26886	.13641	1.97100
2.233	2.000	14.69400	.29509	.06381	-.00835	-.01714	-.00245	-.00213	.26925	.13658	1.97140
2.230	2.200	14.69700	.29476	.06380	-.00840	-.01894	-.00268	-.00238	.26893	.13649	1.97030
2.232	2.400	14.70100	.29488	.06366	-.00845	-.02086	-.00290	-.00265	.26908	.13641	1.97260
2.235	2.600	14.70500	.29583	.06382	-.00840	-.02272	-.00312	-.00290	.26994	.13682	1.97290
2.237	2.800	14.70800	.29443	.06392	-.00842	-.02465	-.00337	-.00317	.26856	.13657	1.96640
2.239	3.000	14.71300	.29547	.06398	-.00844	-.02644	-.00360	-.00341	.26953	.13693	1.96850
2.242	3.200	14.71500	.29495	.06391	-.00843	-.02848	-.00382	-.00367	.26904	.13673	1.96760
2.246	3.400	14.71900	.29481	.06392	-.00861	-.02936	-.00394	-.00380	.26890	.13672	1.96670
2.246	3.568	14.72100	.29410	.06387	-.00881	-.02961	-.00395	-.00385	.26821	.13651	1.96480
	GRADIENT	.02250	.00072	.00014	.00004	-.00765	-.00178	-.00087	.00061	.00042	-.00162

OA257 (LARC 20-M6-6559) OV102 (R7E167) (10 JUL 81)

REFERENCE DATA

SREF = 2690.0000 SQ.FT. XMRP = 1076.6800 IN. XO
LREF = 474.8100 INCHES YMRP = .0000 IN. YO
BREF = 936.6800 INCHES ZMRP = 375.0000 IN. ZO
SCALE = .0100

PARAMETRIC DATA

ALPHA = 15.000 PHI = .000
SPDBRK = .000 AILRON = .000
YP = 1.000 1S = 1.000
ELEVON = .000 MACH = 6.000
S-MODE = 2.000 S-DIR = 1.000

RUN NO. 2275/ 0 RN/L = 7.58 GRADIENT INTERVAL = -.60/ .60

RN/L	BETA	ALPHA	CN	CA	CLM	CY	CYN	CBL	CL	CD	L/D
7.633	-4.300	14.33400	.27802	.06134	-.01096	.03736	.00572	.00480	.25417	.12826	1.98170
7.630	-4.100	14.34100	.27845	.06114	-.01092	.03544	.00549	.00457	.25463	.12821	1.98610
7.651	-3.900	14.34100	.27878	.06111	-.01085	.03364	.00527	.00435	.25496	.12826	1.98790
7.649	-3.700	14.34200	.27862	.06102	-.01085	.03183	.00502	.00414	.25482	.12813	1.98880
7.644	-3.500	14.34600	.27853	.06095	-.01079	.03004	.00478	.00393	.25474	.12807	1.98910
7.631	-3.300	14.34800	.27868	.06086	-.01077	.02820	.00454	.00372	.25491	.12802	1.99120
7.625	-3.100	14.35200	.27920	.06080	-.01068	.02645	.00430	.00350	.25542	.12811	1.99380
7.638	-2.900	14.35700	.27955	.06072	-.01065	.02461	.00405	.00329	.25576	.12814	1.99600
7.637	-2.700	14.35900	.27914	.06063	-.01066	.02283	.00380	.00307	.25538	.12796	1.99570
7.639	-2.500	14.36000	.27957	.06055	-.01063	.02103	.00354	.00287	.25582	.12799	1.99870
7.644	-2.300	14.36500	.27975	.06044	-.01061	.01936	.00328	.00266	.25601	.12796	2.00070
7.654	-2.100	14.37100	.27989	.06045	-.01058	.01761	.00302	.00244	.25613	.12802	2.00060
7.653	-1.900	14.37300	.27985	.06036	-.01052	.01594	.00277	.00224	.25611	.12794	2.00180
7.655	-1.700	14.38000	.28001	.06029	-.01040	.01403	.00251	.00203	.25626	.12794	2.00300
7.642	-1.500	14.38400	.28007	.06025	-.01033	.01231	.00229	.00180	.25632	.12794	2.00350
7.620	-1.300	14.38700	.28020	.06016	-.01026	.01051	.00205	.00156	.25647	.12789	2.00540
7.610	-1.100	14.38800	.27999	.06019	-.01019	.00872	.00180	.00132	.25626	.12787	2.00400
7.598	-.900	14.39300	.28015	.06017	-.01011	.00706	.00156	.00110	.25640	.12793	2.00430
7.601	-.700	14.39500	.28007	.06015	-.01010	.00541	.00127	.00087	.25633	.12788	2.00440
7.598	-.500	14.39800	.28021	.06008	-.01008	.00375	.00099	.00066	.25646	.12787	2.00560
7.590	-.300	14.40200	.28011	.06011	-.01005	.00219	.00069	.00045	.25636	.12789	2.00450
7.590	-.100	14.40500	.28058	.06016	-.01011	.00054	.00041	.00021	.25680	.12807	2.00520
7.562	.100	14.40700	.28045	.06013	-.01016	-.00118	.00012	-.00002	.25666	.12802	2.00490
7.547	.300	14.40800	.28055	.06014	-.01021	-.00288	-.00018	-.00024	.25676	.12806	2.00490
7.526	.500	14.41000	.28068	.06017	-.01022	-.00452	-.00046	-.00046	.25687	.12813	2.00480
7.508	.700	14.41300	.28064	.06027	-.01024	-.00608	-.00076	-.00066	.25681	.12823	2.00270
7.541	.900	14.41800	.28107	.06032	-.01025	-.00766	-.00103	-.00087	.25720	.12841	2.00300
7.518	1.100	14.42200	.28107	.06027	-.01031	-.00937	-.00133	-.00108	.25720	.12838	2.00350
7.520	1.300	14.42900	.28111	.06020	-.01033	-.01110	-.00159	-.00131	.25724	.12835	2.00410
7.498	1.500	14.43200	.28136	.06019	-.01041	-.01288	-.00181	-.00154	.25748	.12841	2.00510
7.510	1.700	14.43300	.28146	.06014	-.01047	-.01458	-.00203	-.00178	.25759	.12839	2.00630
7.518	1.900	14.43900	.28149	.06011	-.01052	-.01641	-.00225	-.00201	.25761	.12840	2.00630
7.509	2.100	14.44200	.28178	.06017	-.01054	-.01821	-.00247	-.00225	.25787	.12854	2.00620
7.524	2.300	14.44500	.28184	.06021	-.01054	-.01999	-.00270	-.00248	.25791	.12861	2.00540
7.521	2.500	14.44900	.28185	.06032	-.01055	-.02173	-.00294	-.00272	.25789	.12874	2.00320
7.530	2.700	14.45200	.28211	.06039	-.01057	-.02375	-.00319	-.00296	.25811	.12889	2.00260
7.528	2.900	14.45700	.28231	.06048	-.01063	-.02538	-.00340	-.00320	.25828	.12905	2.00140
7.528	3.100	14.46000	.28246	.06053	-.01064	-.02735	-.00365	-.00343	.25840	.12914	2.00080
7.529	3.300	14.46800	.28260	.06064	-.01070	-.02903	-.00389	-.00366	.25848	.12932	1.99880
7.529	3.500	14.46600	.28209	.06070	-.01073	-.03080	-.00411	-.00389	.25798	.12925	1.99600
7.542	3.700	14.47100	.28228	.06082	-.01075	-.03276	-.00434	-.00413	.25812	.12943	1.99430
7.528	3.900	14.47600	.28224	.06085	-.01075	-.03474	-.00456	-.00437	.25807	.12947	1.99320

OA257 (LARC 20-M6-6559) OV102 (R7E167) (10 JUL 81)

REFERENCE DATA

SREF =	2690.0000 SQ.FT.	XMRP =	1076.6800 IN. XO		
LREF =	474.8100 INCHES	YMRP =	.0000 IN. YO		
BREF =	936.6800 INCHES	ZMRP =	375.0000 IN. ZO		
SCALE =	.0100				

PARAMETRIC DATA

ALPHA =	15.000	PHI =	.000
SPDBRK =	.000	AILRON =	.000
YP =	1.000	1S =	1.000
ELEVON =	.000	MACH =	6.000
S-MODE =	2.000	S-DIR =	1.000

RUN NO. 2275/ 0 RN/L = 7.58 GRADIENT INTERVAL = -.60/ .60

RN/L	BETA	ALPHA	CN	CA	CLM	CY	CYN	CBL	CL	CD	L/D
7.495	4.043	14.47000	.28260	.06088	-.01077	-.03609	-.00471	-.00451	.25842	.12956	1.99460
	GRADIENT	.01143	.00051	.00008	-.00017	-.00833	-.00145	-.00113	.00044	.00025	-.00044

OA257 (LARC 20-M6-6559) OV102 (R7E068) (10 JUL 81)

REFERENCE DATA

SREF = 2690.0000 SQ.FT. XMRP = 1076.6800 IN. XO
LREF = 474.8100 INCHES YMRP = .0000 IN. YO
BREF = 936.6800 INCHES ZMRP = 375.0000 IN. ZO
SCALE = .0100

PARAMETRIC DATA

ALPHA = 17.500 PHI = .000
SPDBRK = .000 AILRON = .000
YP = 1.000 1S = 1.000
ELEVON = .000 MACH = 6.000
S-MODE = 2.000 S-DIR = 1.000

RUN NO. 288/ 0 RN/L = 2.28 GRADIENT INTERVAL = -.60/ .60

RN/L	BETA	ALPHA	CN	CA	CLM	CY	CYN	CBL	CL	CD	L/D
2.274	-4.357	17.08500	.36633	.06303	-.00670	.03775	.00628	.00566	.33164	.16787	1.97560
2.276	-4.200	17.09400	.36681	.06304	-.00670	.03626	.00610	.00548	.33208	.16807	1.97580
2.275	-4.000	17.09300	.36707	.06306	-.00663	.03442	.00586	.00522	.33232	.16816	1.97620
2.280	-3.800	17.09500	.36702	.06288	-.00646	.03256	.00560	.00500	.33232	.16799	1.97820
2.280	-3.600	17.09600	.36664	.06281	-.00646	.03083	.00531	.00476	.33197	.16782	1.97810
2.277	-3.400	17.09900	.36665	.06277	-.00642	.02891	.00502	.00452	.33198	.16780	1.97840
2.272	-3.200	17.10200	.36701	.06275	-.00636	.02722	.00475	.00426	.33233	.16790	1.97930
2.273	-3.000	17.10500	.36688	.06280	-.00630	.02542	.00448	.00401	.33218	.16793	1.97810
2.273	-2.800	17.11100	.36760	.06275	-.00631	.02371	.00416	.00379	.33287	.16813	1.97990
2.273	-2.600	17.11500	.36777	.06273	-.00633	.02186	.00384	.00353	.33302	.16818	1.98020
2.280	-2.400	17.11400	.36714	.06278	-.00627	.02016	.00357	.00328	.33241	.16804	1.97810
2.283	-2.200	17.11900	.36731	.06277	-.00634	.01849	.00331	.00303	.33255	.16811	1.97820
2.278	-2.000	17.12200	.36786	.06286	-.00639	.01665	.00300	.00278	.33304	.16838	1.97800
2.275	-1.800	17.12600	.36817	.06285	-.00629	.01492	.00276	.00250	.33334	.16848	1.97860
2.274	-1.600	17.12900	.36926	.06291	-.00627	.01309	.00251	.00223	.33435	.16887	1.97990
2.278	-1.400	17.13400	.36855	.06290	-.00635	.01128	.00229	.00193	.33366	.16869	1.97800
2.279	-1.200	17.14100	.36885	.06293	-.00630	.00941	.00206	.00162	.33392	.16884	1.97770
2.272	-1.000	17.14300	.36913	.06300	-.00642	.00763	.00178	.00134	.33417	.16900	1.97730
2.274	-.800	17.14300	.36954	.06307	-.00645	.00594	.00149	.00108	.33453	.16920	1.97710
2.275	-.600	17.15000	.36921	.06324	-.00632	.00435	.00121	.00083	.33414	.16930	1.97370
2.282	-.400	17.15200	.36894	.06334	-.00647	.00274	.00089	.00056	.33386	.16933	1.97160
2.283	-.200	17.15700	.36935	.06329	-.00650	.00126	.00052	.00035	.33424	.16942	1.97280
2.279	.000	17.16200	.36939	.06332	-.00645	-.00012	.00014	.00014	.33426	.16950	1.97210
2.277	.200	17.16600	.36928	.06332	-.00649	-.00165	-.00024	-.00007	.33414	.16949	1.97140
2.273	.400	17.17300	.37006	.06315	-.00632	-.00308	-.00069	-.00024	.33492	.16959	1.97480
2.272	.600	17.17600	.37007	.06313	-.00633	-.00477	-.00095	-.00053	.33492	.16960	1.97470
2.274	.800	17.18300	.37048	.06310	-.00639	-.00653	-.00117	-.00086	.33530	.16973	1.97550
2.281	1.000	17.18500	.37105	.06309	-.00636	-.00845	-.00145	-.00115	.33585	.16990	1.97670
2.286	1.200	17.19000	.37110	.06302	-.00641	-.01012	-.00167	-.00146	.33590	.16988	1.97730
2.285	1.400	17.19300	.37072	.06295	-.00643	-.01211	-.00190	-.00173	.33554	.16972	1.97700
2.283	1.600	17.20100	.37137	.06293	-.00646	-.01382	-.00211	-.00201	.33614	.16994	1.97800
2.286	1.800	17.20400	.37036	.06294	-.00638	-.01562	-.00243	-.00228	.33518	.16967	1.97550
2.292	2.000	17.20900	.37052	.06289	-.00639	-.01734	-.00271	-.00252	.33533	.16970	1.97600
2.289	2.200	17.21400	.37123	.06287	-.00640	-.01921	-.00295	-.00279	.33600	.16992	1.97740
2.287	2.400	17.22000	.37036	.06293	-.00637	-.02110	-.00320	-.00307	.33513	.16975	1.97430
2.284	2.600	17.22400	.37112	.06292	-.00638	-.02278	-.00346	-.00337	.33584	.16999	1.97570
2.287	2.800	17.22900	.37145	.06295	-.00644	-.02470	-.00373	-.00366	.33614	.17014	1.97560
2.292	3.000	17.23600	.37170	.06304	-.00646	-.02652	-.00395	-.00394	.33633	.17035	1.97440
2.292	3.200	17.24000	.37159	.06305	-.00652	-.02831	-.00419	-.00420	.33621	.17035	1.97370
2.289	3.400	17.24300	.37204	.06316	-.00651	-.02991	-.00442	-.00443	.33659	.17060	1.97300
2.283	3.600	17.24900	.37203	.06321	-.00658	-.03147	-.00466	-.00467	.33656	.17069	1.97180
2.280	3.736	17.25700	.37308	.06350	-.00627	-.03180	-.00468	-.00474	.33744	.17132	1.96970
	GRADIENT	.02304	.00085	-.00012	.00005	-.00748	-.00186	-.00109	.00078	.00027	.00143

OA257 (LARC 20-M6-6559) OV102 (R7E068) (10 JUL 81)

REFERENCE DATA

SREF = 2690.0000 SQ.FT. XMRP = 1076.6800 IN. XO
LREF = 474.8100 INCHES YMRP = .0000 IN. YO
BREF = 936.6800 INCHES ZMRP = 375.0000 IN. ZO
SCALE = .0100

PARAMETRIC DATA

ALPHA = 17.500 PHI = .000
SPDBRK = .000 AILRON = .000
YP = 1.000 1S = 1.000
ELEVON = .000 MACH = 6.000
S-MODE = 2.000 S-DIR = 1.000

RUN NO. 270/ 0 RN/L = 7.57 GRADIENT INTERVAL = -.60/ .60

RN/L	BETA	ALPHA	CN	CA	CLM	CY	CYN	CBL	CL	CD	L/D
7.586	-4.359	16.79800	.35320	.06068	-.00904	.03676	.00603	.00556	.32059	.16017	2.00160
7.600	-4.200	16.80700	.35295	.06058	-.00902	.03528	.00585	.00536	.32036	.16005	2.00170
7.611	-4.000	16.80600	.35321	.06046	-.00893	.03355	.00562	.00510	.32065	.16000	2.00400
7.591	-3.800	16.80800	.35363	.06035	-.00894	.03176	.00537	.00487	.32107	.16003	2.00630
7.593	-3.600	16.81300	.35385	.06029	-.00892	.03003	.00510	.00464	.32129	.16006	2.00730
7.610	-3.400	16.81500	.35387	.06018	-.00893	.02824	.00484	.00439	.32133	.15997	2.00870
7.605	-3.200	16.81700	.35398	.06009	-.00891	.02642	.00457	.00413	.32145	.15993	2.00990
7.604	-3.000	16.82100	.35436	.06005	-.00896	.02472	.00431	.00389	.32182	.16003	2.01100
7.611	-2.800	16.82200	.35453	.05997	-.00892	.02293	.00404	.00363	.32200	.16000	2.01260
7.617	-2.600	16.82900	.35490	.05993	-.00890	.02118	.00377	.00338	.32234	.16011	2.01320
7.592	-2.400	16.83400	.35496	.05980	-.00892	.01954	.00349	.00313	.32243	.16003	2.01480
7.596	-2.200	16.83800	.35537	.05975	-.00887	.01785	.00320	.00289	.32283	.16013	2.01610
7.578	-2.000	16.84100	.35480	.05972	-.00884	.01616	.00294	.00263	.32228	.15995	2.01490
7.583	-1.800	16.84600	.35502	.05967	-.00874	.01436	.00265	.00237	.32249	.15999	2.01570
7.566	-1.600	16.84800	.35569	.05975	-.00860	.01277	.00241	.00212	.32311	.16027	2.01600
7.571	-1.400	16.85000	.35540	.05968	-.00854	.01098	.00213	.00185	.32284	.16014	2.01600
7.575	-1.200	16.85900	.35554	.05975	-.00846	.00932	.00187	.00159	.32293	.16029	2.01460
7.573	-1.000	16.86300	.35556	.05968	-.00841	.00763	.00160	.00133	.32296	.16026	2.01520
7.579	-.800	16.86700	.35585	.05968	-.00835	.00609	.00132	.00110	.32322	.16037	2.01550
7.567	-.600	16.87300	.35595	.05968	-.00833	.00444	.00101	.00087	.32330	.16042	2.01530
7.567	-.400	16.87900	.35604	.05965	-.00833	.00274	.00070	.00063	.32338	.16046	2.01540
7.574	-.200	16.88300	.35597	.05958	-.00834	.00109	.00041	.00038	.32332	.16039	2.01590
7.578	.000	16.88800	.35655	.05956	-.00832	-.00050	.00012	.00013	.32387	.16057	2.01700
7.567	.200	16.89400	.35631	.05965	-.00834	-.00205	-.00017	-.00011	.32360	.16062	2.01470
7.573	.400	16.89800	.35681	.05965	-.00831	-.00380	-.00049	-.00035	.32406	.16078	2.01550
7.558	.600	16.89800	.35679	.05963	-.00830	-.00530	-.00077	-.00058	.32405	.16076	2.01570
7.552	.800	16.90200	.35654	.05962	-.00836	-.00703	-.00105	-.00083	.32380	.16070	2.01490
7.538	1.000	16.90500	.35706	.05969	-.00839	-.00865	-.00132	-.00109	.32427	.16094	2.01480
7.536	1.200	16.90700	.35730	.05964	-.00850	-.01047	-.00158	-.00137	.32451	.16098	2.01590
7.555	1.400	16.91100	.35706	.05966	-.00847	-.01215	-.00183	-.00166	.32427	.16095	2.01470
7.543	1.600	16.91800	.35765	.05964	-.00852	-.01379	-.00206	-.00194	.32481	.16114	2.01570
7.544	1.800	16.92000	.35781	.05966	-.00852	-.01561	-.00230	-.00223	.32496	.16122	2.01570
7.533	2.000	16.92400	.35766	.05966	-.00854	-.01738	-.00255	-.00251	.32480	.16120	2.01500
7.545	2.200	16.92800	.35745	.05965	-.00859	-.01909	-.00281	-.00278	.32460	.16115	2.01430
7.551	2.400	16.93200	.35776	.05971	-.00863	-.02077	-.00306	-.00306	.32487	.16132	2.01380
7.550	2.600	16.93600	.35817	.05979	-.00864	-.02262	-.00332	-.00333	.32522	.16153	2.01330
7.533	2.800	16.93900	.35781	.05985	-.00867	-.02435	-.00355	-.00362	.32485	.16150	2.01150
7.534	3.000	16.94200	.35790	.05989	-.00869	-.02618	-.00377	-.00388	.32491	.16158	2.01080
7.533	3.200	16.94900	.35847	.06000	-.00869	-.02792	-.00400	-.00416	.32541	.16190	2.01000
7.531	3.400	16.95100	.35842	.06009	-.00875	-.02980	-.00425	-.00441	.32533	.16198	2.00850
7.537	3.600	16.95900	.35885	.06021	-.00877	-.03151	-.00449	-.00466	.32568	.16226	2.00710
7.541	3.800	16.96300	.35866	.06030	-.00872	-.03311	-.00472	-.00486	.32546	.16232	2.00500

OA257 (LARC 20-M6-6559) OV102 (R7E068) (10 JUL 81)

REFERENCE DATA

SREF =	2690.0000 SQ.FT.	XMRP =	1076.6800 IN. XO		
LREF =	474.8100 INCHES	YMRP =	.0000 IN. YO		
BREF =	936.6800 INCHES	ZMRP =	375.0000 IN. ZO		
SCALE =	.0100				

PARAMETRIC DATA

ALPHA =	17.500	PHI =	.000
SPDBRK =	.000	AILRON =	.000
YP =	1.000	1S =	1.000
ELEVON =	.000	MACH =	6.000
S-MODE =	2.000	S-DIR =	1.000

RUN NO. 270/ 0 RN/L = 7.57 GRADIENT INTERVAL = -.60/ .60

RN/L	BETA	ALPHA	CN	CA	CLM	CY	CYN	CBL	CL	CD	L/D
7.544	3.976	16.96100	.35869	.06038	-.00874	-.03479	-.00496	-.00512	.32547	.16239	2.00420
	GRADIENT	.02214	.00079	-.00002	.00003	-.00811	-.00148	-.00121	.00069	.00034	.00004

OA257 (LARC 20-M6-6559) OV102 (R7E168) (10 JUL 81)

REFERENCE DATA

SREF = 2690.0000 SQ.FT. XMRP = 1076.6800 IN. XO
LREF = 474.8100 INCHES YMRP = .0000 IN. YO
BREF = 936.6800 INCHES ZMRP = 375.0000 IN. ZO
SCALE = .0100

PARAMETRIC DATA

ALPHA = 17.500 PHI = .000
SPDBRK = .000 AILRON = .000
YP = 1.000 1S = 1.000
ELEVON = .000 MACH = 6.000
S-MODE = 2.000 S-DIR = 1.000

RUN NO. 2288/ 0 RN/L = 2.28 GRADIENT INTERVAL = -.60/ .60

RN/L	BETA	ALPHA	CN	CA	CLM	CY	CYN	CBL	CL	CD	L/D
2.276	-4.300	17.08900	.36636	.06311	-.00674	.03719	.00623	.00560	.33164	.16798	1.97430
2.274	-4.100	17.09200	.36641	.06305	-.00673	.03532	.00599	.00535	.33170	.16795	1.97490
2.279	-3.900	17.09300	.36707	.06299	-.00663	.03356	.00574	.00511	.33234	.16810	1.97700
2.280	-3.700	17.09700	.36664	.06285	-.00654	.03168	.00542	.00488	.33196	.16787	1.97750
2.280	-3.500	17.09600	.36670	.06281	-.00646	.02985	.00517	.00464	.33203	.16783	1.97840
2.274	-3.300	17.10200	.36731	.06286	-.00634	.02807	.00490	.00439	.33258	.16810	1.97850
2.272	-3.100	17.10400	.36696	.06276	-.00629	.02626	.00463	.00413	.33227	.16791	1.97880
2.273	-2.900	17.10800	.36683	.06276	-.00632	.02451	.00431	.00390	.33214	.16789	1.97830
2.272	-2.700	17.10700	.36722	.06268	-.00632	.02290	.00404	.00367	.33254	.16793	1.98030
2.275	-2.500	17.11500	.36783	.06277	-.00629	.02102	.00369	.00341	.33307	.16823	1.97980
2.283	-2.300	17.11800	.36754	.06279	-.00629	.01931	.00343	.00315	.33278	.16819	1.97870
2.280	-2.100	17.11900	.36752	.06284	-.00639	.01759	.00318	.00289	.33274	.16824	1.97780
2.276	-1.900	17.12300	.36839	.06289	-.00628	.01579	.00287	.00264	.33354	.16856	1.97880
2.275	-1.700	17.12700	.36726	.06289	-.00621	.01404	.00263	.00236	.33246	.16825	1.97590
2.274	-1.500	17.13200	.36884	.06287	-.00635	.01220	.00239	.00208	.33395	.16873	1.97920
2.281	-1.300	17.13600	.36939	.06292	-.00644	.01031	.00217	.00178	.33446	.16896	1.97950
2.275	-1.100	17.14100	.36900	.06294	-.00642	.00853	.00193	.00148	.33406	.16890	1.97790
2.273	-.900	17.14600	.36936	.06301	-.00635	.00682	.00164	.00121	.33437	.16910	1.97740
2.276	-.700	17.14900	.36908	.06313	-.00634	.00524	.00136	.00096	.33405	.16915	1.97490
2.277	-.500	17.15100	.36938	.06327	-.00635	.00348	.00104	.00070	.33430	.16938	1.97370
2.285	-.300	17.15500	.36939	.06335	-.00649	.00209	.00070	.00046	.33427	.16949	1.97220
2.280	-.100	17.15900	.36924	.06328	-.00648	.00049	.00034	.00024	.33413	.16940	1.97240
2.279	.100	17.16600	.36990	.06329	-.00660	-.00086	-.00005	.00004	.33474	.16964	1.97320
2.275	.300	17.17000	.36969	.06326	-.00634	-.00240	-.00048	-.00015	.33454	.16958	1.97280
2.272	.500	17.17700	.37023	.06328	-.00636	-.00388	-.00085	-.00037	.33503	.16979	1.97320
2.273	.700	17.18000	.37075	.06317	-.00635	-.00569	-.00103	-.00071	.33555	.16986	1.97540
2.276	.900	17.18400	.37050	.06306	-.00640	-.00751	-.00132	-.00100	.33533	.16971	1.97590
2.284	1.100	17.18800	.37065	.06302	-.00635	-.00936	-.00156	-.00130	.33547	.16974	1.97640
2.286	1.300	17.19200	.37130	.06295	-.00643	-.01103	-.00176	-.00160	.33610	.16988	1.97840
2.284	1.500	17.19600	.37118	.06293	-.00649	-.01297	-.00201	-.00187	.33598	.16985	1.97810
2.284	1.700	17.20300	.37098	.06291	-.00641	-.01475	-.00226	-.00216	.33577	.16982	1.97720
2.291	1.900	17.20800	.37040	.06288	-.00637	-.01650	-.00257	-.00241	.33522	.16965	1.97600
2.291	2.100	17.21400	.37080	.06291	-.00642	-.01830	-.00283	-.00266	.33557	.16983	1.97600
2.288	2.300	17.21700	.37113	.06291	-.00638	-.02010	-.00308	-.00294	.33588	.16994	1.97650
2.285	2.500	17.22300	.37029	.06297	-.00646	-.02188	-.00334	-.00322	.33504	.16979	1.97330
2.286	2.700	17.22800	.37194	.06297	-.00642	-.02377	-.00356	-.00351	.33661	.17030	1.97650
2.289	2.900	17.23300	.37140	.06297	-.00645	-.02563	-.00382	-.00380	.33607	.17018	1.97480
2.293	3.100	17.23800	.37170	.06304	-.00651	-.02741	-.00407	-.00407	.33632	.17036	1.97420
2.291	3.300	17.24200	.37128	.06314	-.00647	-.02915	-.00432	-.00433	.33588	.17035	1.97170
2.285	3.500	17.24600	.37205	.06313	-.00658	-.03088	-.00455	-.00458	.33661	.17060	1.97310
2.281	3.700	17.25500	.37280	.06342	-.00636	-.03171	-.00467	-.00473	.33721	.17115	1.97020
	GRADIENT	.02600	.00083	-.00003	.00004	-.00737	-.00191	-.00105	.00072	.00037	.00001

OA257 (LARC 20-M6-6559) OV102 (R7E168) (10 JUL 81)

REFERENCE DATA

SREF = 2690.0000 SQ.FT. XMRP = 1076.6800 IN. XO
LREF = 474.8100 INCHES YMRP = .0000 IN. YO
BREF = 936.6800 INCHES ZMRP = 375.0000 IN. ZO
SCALE = .0100

PARAMETRIC DATA

ALPHA = 17.500 PHI = .000
SPDBRK = .000 AILRON = .000
YP = 1.000 1S = 1.000
ELEVON = .000 MACH = 6.000
S-MODE = 2.000 S-DIR = 1.000

RUN NO. 2270/ 0 RN/L = 7.57 GRADIENT INTERVAL = -.60/ .60

RN/L	BETA	ALPHA	CN	CA	CLM	CY	CYN	CBL	CL	CD	L/D
7.591	-4.300	16.80600	.35304	.06061	-.00903	.03620	.00598	.00549	.32043	.16009	2.00160
7.611	-4.100	16.80700	.35281	.06055	-.00897	.03436	.00572	.00523	.32024	.15997	2.00180
7.595	-3.900	16.80700	.35338	.06043	-.00892	.03267	.00550	.00499	.32082	.16003	2.00480
7.591	-3.700	16.81200	.35380	.06030	-.00893	.03089	.00523	.00475	.32124	.16005	2.00720
7.606	-3.500	16.81400	.35378	.06025	-.00891	.02910	.00496	.00452	.32122	.16001	2.00760
7.607	-3.300	16.81700	.35395	.06014	-.00892	.02732	.00470	.00427	.32141	.15998	2.00910
7.599	-3.100	16.81700	.35414	.06007	-.00893	.02563	.00444	.00401	.32162	.15996	2.01060
7.606	-2.900	16.82100	.35461	.05998	-.00891	.02383	.00419	.00376	.32209	.16003	2.01270
7.619	-2.700	16.82500	.35475	.05994	-.00893	.02199	.00390	.00351	.32222	.16006	2.01310
7.611	-2.500	16.83000	.35459	.05985	-.00892	.02037	.00363	.00326	.32207	.15995	2.01360
7.585	-2.300	16.83200	.35520	.05978	-.00887	.01871	.00335	.00301	.32267	.16008	2.01570
7.590	-2.100	16.84000	.35503	.05970	-.00884	.01700	.00306	.00276	.32251	.15999	2.01590
7.579	-1.900	16.84400	.35516	.05968	-.00878	.01524	.00280	.00250	.32263	.16003	2.01610
7.569	-1.700	16.84600	.35554	.05973	-.00865	.01363	.00254	.00225	.32297	.16020	2.01610
7.575	-1.500	16.85000	.35590	.05974	-.00855	.01182	.00226	.00198	.32330	.16034	2.01640
7.573	-1.300	16.85500	.35573	.05971	-.00852	.01015	.00202	.00172	.32313	.16029	2.01590
7.575	-1.100	16.85900	.35531	.05972	-.00842	.00844	.00173	.00146	.32272	.16020	2.01450
7.576	-.900	16.86700	.35613	.05970	-.00841	.00686	.00145	.00122	.32349	.16047	2.01590
7.569	-.700	16.86800	.35594	.05967	-.00834	.00520	.00116	.00099	.32331	.16039	2.01580
7.571	-.500	16.87700	.35596	.05963	-.00833	.00357	.00085	.00075	.32331	.16040	2.01560
7.570	-.300	16.87900	.35594	.05957	-.00834	.00202	.00057	.00051	.32331	.16035	2.01620
7.582	-.100	16.88700	.35643	.05959	-.00831	.00021	.00026	.00025	.32375	.16056	2.01640
7.572	.100	16.89200	.35648	.05956	-.00834	-.00134	-.00003	.00001	.32379	.16056	2.01660
7.560	.300	16.89300	.35660	.05961	-.00829	-.00292	-.00032	-.00023	.32389	.16066	2.01600
7.573	.500	16.89700	.35657	.05964	-.00832	-.00459	-.00065	-.00047	.32384	.16070	2.01520
7.561	.700	16.89900	.35656	.05969	-.00833	-.00618	-.00091	-.00069	.32381	.16076	2.01430
7.538	.900	16.90300	.35712	.05967	-.00836	-.00785	-.00119	-.00096	.32435	.16092	2.01550
7.538	1.100	16.90500	.35698	.05967	-.00846	-.00952	-.00145	-.00123	.32421	.16090	2.01490
7.548	1.300	16.90900	.35692	.05968	-.00849	-.01129	-.00172	-.00151	.32413	.16091	2.01440
7.549	1.500	16.91600	.35750	.05966	-.00850	-.01299	-.00194	-.00180	.32467	.16110	2.01540
7.540	1.700	16.92100	.35771	.05964	-.00851	-.01464	-.00217	-.00209	.32486	.16117	2.01570
7.542	1.900	16.92200	.35772	.05966	-.00853	-.01647	-.00242	-.00237	.32487	.16120	2.01540
7.537	2.100	16.92600	.35770	.05967	-.00861	-.01826	-.00267	-.00265	.32484	.16122	2.01480
7.545	2.300	16.92900	.35778	.05969	-.00863	-.01990	-.00293	-.00292	.32490	.16129	2.01440
7.547	2.500	16.93400	.35803	.05976	-.00864	-.02164	-.00318	-.00320	.32510	.16145	2.01360
7.543	2.700	16.93500	.35810	.05981	-.00863	-.02354	-.00344	-.00347	.32515	.16153	2.01290
7.535	2.900	16.94100	.35795	.05986	-.00870	-.02525	-.00366	-.00375	.32498	.16156	2.01150
7.535	3.100	16.94700	.35842	.05992	-.00865	-.02704	-.00391	-.00402	.32539	.16179	2.01120
7.533	3.300	16.95000	.35852	.06004	-.00874	-.02881	-.00411	-.00429	.32544	.16196	2.00940
7.530	3.500	16.95600	.35842	.06012	-.00876	-.03074	-.00438	-.00453	.32530	.16204	2.00760
7.544	3.700	16.96100	.35916	.06021	-.00874	-.03240	-.00461	-.00477	.32597	.16237	2.00760
7.531	3.900	16.96400	.35854	.06038	-.00875	-.03413	-.00487	-.00504	.32532	.16237	2.00360
	GRADIENT	.02100	.00073	.00001	.00002	-.00817	-.00149	-.00122	.00063	.00035	-.00034

OA257 (LARC 20-M6-6559) OV102 (R7E069) (10 JUL 81)

REFERENCE DATA

SREF = 2690.0000 SQ.FT. XMRP = 1076.6800 IN. XO
LREF = 474.8100 INCHES YMRP = .0000 IN. YO
BREF = 936.6800 INCHES ZMRP = 375.0000 IN. ZO
SCALE = .0100

PARAMETRIC DATA

ALPHA = 20.000 PHI = .000
SPDBRK = .000 AILRON = .000
YP = 1.000 1S = 1.000
ELEVON = .000 MACH = 6.000
S-MODE = 2.000 S-DIR = 1.000

RUN NO. 284/ 0 RN/L = 2.26 GRADIENT INTERVAL = -.60/ .60

RN/L	BETA	ALPHA	CN	CA	CLM	CY	CYN	CBL	CL	CD	L/D
2.262	-4.354	19.48800	.44446	.06206	-.00619	.03686	.00662	.00628	.39830	.20678	1.92620
2.260	-4.200	19.49300	.44680	.06205	-.00617	.03548	.00636	.00609	.40049	.20759	1.92930
2.261	-4.000	19.49100	.44445	.06194	-.00606	.03379	.00608	.00581	.39832	.20668	1.92720
2.267	-3.800	19.49400	.44643	.06188	-.00605	.03207	.00575	.00554	.40019	.20731	1.93040
2.269	-3.600	19.49800	.44610	.06170	-.00600	.03027	.00543	.00526	.39993	.20706	1.93140
2.267	-3.400	19.50300	.44643	.06169	-.00595	.02861	.00518	.00497	.40022	.20719	1.93170
2.266	-3.200	19.50800	.44672	.06157	-.00581	.02678	.00490	.00468	.40051	.20721	1.93290
2.265	-3.000	19.51200	.44607	.06138	-.00579	.02509	.00458	.00443	.39995	.20684	1.93360
2.267	-2.800	19.51500	.44813	.06136	-.00575	.02337	.00429	.00415	.40188	.20754	1.93650
2.263	-2.600	19.51500	.44760	.06147	-.00585	.02168	.00398	.00386	.40135	.20746	1.93460
2.260	-2.400	19.51600	.44635	.06146	-.00595	.01994	.00369	.00358	.40017	.20704	1.93280
2.261	-2.200	19.52100	.44777	.06152	-.00581	.01819	.00343	.00329	.40147	.20761	1.93370
2.261	-2.000	19.53500	.44714	.06152	-.00571	.01650	.00314	.00301	.40083	.20750	1.93180
2.264	-1.800	19.54000	.44682	.06151	-.00573	.01481	.00287	.00273	.40052	.20741	1.93100
2.270	-1.600	19.54100	.44705	.06157	-.00567	.01289	.00256	.00242	.40071	.20756	1.93060
2.268	-1.400	19.54300	.44814	.06169	-.00573	.01130	.00228	.00212	.40169	.20805	1.93080
2.262	-1.200	19.54500	.44727	.06179	-.00581	.00957	.00196	.00182	.40082	.20786	1.92830
2.258	-1.000	19.55600	.44824	.06173	-.00571	.00787	.00170	.00153	.40172	.20821	1.92940
2.264	-.800	19.56300	.44757	.06172	-.00559	.00625	.00144	.00121	.40107	.20803	1.92800
2.265	-.600	19.56700	.44779	.06183	-.00548	.00434	.00115	.00091	.40122	.20823	1.92680
2.267	-.400	19.57100	.44772	.06189	-.00541	.00273	.00087	.00060	.40112	.20830	1.92570
2.270	-.200	19.57200	.44856	.06200	-.00547	.00115	.00050	.00034	.40188	.20868	1.92580
2.269	.000	19.58100	.44831	.06201	-.00550	-.00027	.00017	.00009	.40160	.20867	1.92460
2.265	.200	19.58700	.44875	.06196	-.00551	-.00169	-.00018	-.00013	.40202	.20881	1.92530
2.264	.400	19.59300	.44941	.06181	-.00553	-.00330	-.00056	-.00041	.40266	.20894	1.92720
2.266	.600	19.59700	.44948	.06177	-.00568	-.00492	-.00084	-.00070	.40273	.20894	1.92740
2.261	.800	19.60100	.44961	.06164	-.00569	-.00673	-.00112	-.00106	.40288	.20890	1.92850
2.260	1.000	19.60400	.44941	.06167	-.00581	-.00849	-.00140	-.00136	.40267	.20888	1.92780
2.261	1.200	19.61000	.45068	.06160	-.00597	-.01025	-.00168	-.00166	.40387	.20928	1.92980
2.260	1.400	19.61500	.44920	.06147	-.00588	-.01195	-.00197	-.00195	.40249	.20870	1.92860
2.261	1.600	19.62200	.44974	.06133	-.00584	-.01368	-.00226	-.00226	.40303	.20880	1.93020
2.258	1.800	19.62600	.45002	.06135	-.00583	-.01545	-.00256	-.00253	.40327	.20894	1.93010
2.259	2.000	19.62900	.44996	.06142	-.00583	-.01703	-.00284	-.00283	.40318	.20900	1.92910
2.257	2.200	19.63400	.45034	.06162	-.00588	-.01874	-.00319	-.00310	.40345	.20935	1.92720
2.254	2.400	19.63800	.44965	.06161	-.00592	-.02042	-.00352	-.00338	.40279	.20914	1.92600
2.251	2.600	19.64700	.45042	.06155	-.00598	-.02217	-.00381	-.00366	.40350	.20941	1.92680
2.251	2.800	19.65400	.45007	.06168	-.00596	-.02386	-.00411	-.00395	.40311	.20946	1.92450
2.253	3.000	19.65600	.45035	.06167	-.00595	-.02577	-.00444	-.00423	.40337	.20956	1.92490
2.253	3.200	19.65800	.44940	.06183	-.00602	-.02737	-.00475	-.00451	.40241	.20941	1.92170
2.252	3.400	19.66100	.45104	.06182	-.00623	-.02936	-.00506	-.00484	.40394	.20997	1.92380
2.254	3.600	19.66900	.45078	.06194	-.00632	-.03097	-.00535	-.00513	.40363	.21004	1.92160
2.261	3.800	19.67500	.45168	.06211	-.00625	-.03251	-.00562	-.00539	.40440	.21056	1.92060
	GRADIENT	.02661	.00154	-.00007	-.00016	-.00762	-.00170	-.00131	.00138	.00063	.00077

OA257 (LARC 20-M6-6559) OV102 (R7E069) (10 JUL 81)

REFERENCE DATA

SREF = 2690.0000 SQ.FT. XMRP = 1076.6800 IN. XO
LREF = 474.8100 INCHES YMRP = .0000 IN. YO
BREF = 936.6800 INCHES ZMRP = 375.0000 IN. ZO
SCALE = .0100

PARAMETRIC DATA

ALPHA = 20.000 PHI = .000
SPDBRK = .000 AILRON = .000
YP = 1.000 1S = 1.000
ELEVON = .000 MACH = 6.000
S-MODE = 2.000 S-DIR = 1.000

RUN NO. 269/ O RN/L = 7.62 GRADIENT INTERVAL = -.60/ .60

RN/L	BETA	ALPHA	CN	CA	CLM	CY	CYN	CBL	CL	CD	L/D
7.644	-4.510	19.23800	.43363	.06048	-.00828	.03681	.00653	.00637	.38949	.19998	1.94760
7.636	-4.400	19.24500	.43403	.06046	-.00827	.03589	.00639	.00623	.38984	.20014	1.94780
7.625	-4.200	19.24600	.43400	.06033	-.00825	.03417	.00610	.00595	.38986	.20001	1.94920
7.636	-4.000	19.24500	.43419	.06026	-.00820	.03246	.00578	.00571	.39007	.20000	1.95030
7.641	-3.800	19.24900	.43456	.06013	-.00819	.03088	.00551	.00545	.39045	.20003	1.95190
7.611	-3.600	19.25100	.43482	.05998	-.00824	.02908	.00524	.00517	.39073	.19999	1.95380
7.620	-3.400	19.25300	.43500	.05993	-.00820	.02731	.00495	.00488	.39091	.20002	1.95440
7.607	-3.200	19.25800	.43554	.05986	-.00819	.02570	.00468	.00461	.39143	.20016	1.95550
7.610	-3.000	19.26400	.43544	.05982	-.00815	.02395	.00443	.00432	.39133	.20013	1.95530
7.605	-2.800	19.27200	.43584	.05975	-.00812	.02220	.00415	.00402	.39170	.20025	1.95600
7.603	-2.600	19.27700	.43616	.05972	-.00805	.02058	.00390	.00374	.39199	.20036	1.95640
7.604	-2.400	19.28400	.43598	.05968	-.00798	.01889	.00363	.00344	.39181	.20031	1.95600
7.610	-2.200	19.28800	.43648	.05968	-.00797	.01717	.00335	.00315	.39226	.20051	1.95630
7.631	-2.000	19.29600	.43722	.05965	-.00799	.01546	.00306	.00287	.39295	.20078	1.95710
7.629	-1.800	19.29800	.43687	.05962	-.00792	.01377	.00276	.00256	.39262	.20065	1.95680
7.628	-1.600	19.30700	.43719	.05965	-.00783	.01211	.00249	.00225	.39288	.20085	1.95610
7.648	-1.400	19.31300	.43749	.05964	-.00780	.01043	.00220	.00196	.39314	.20098	1.95620
7.628	-1.200	19.31600	.43763	.05964	-.00773	.00886	.00190	.00166	.39326	.20104	1.95610
7.609	-1.000	19.31800	.43759	.05969	-.00771	.00719	.00158	.00139	.39320	.20109	1.95540
7.612	-.800	19.32300	.43757	.05967	-.00772	.00563	.00127	.00112	.39317	.20110	1.95510
7.633	-.600	19.32800	.43779	.05962	-.00774	.00407	.00095	.00087	.39338	.20116	1.95560
7.626	-.400	19.33300	.43811	.05964	-.00768	.00251	.00065	.00061	.39366	.20132	1.95540
7.617	-.200	19.33300	.43816	.05960	-.00770	.00090	.00036	.00034	.39372	.20130	1.95590
7.620	.000	19.33600	.43801	.05956	-.00770	-.00077	.00002	.00008	.39359	.20123	1.95590
7.613	.200	19.34200	.43860	.05963	-.00762	-.00229	-.00028	-.00019	.39409	.20152	1.95560
7.623	.400	19.34700	.43848	.05969	-.00752	-.00381	-.00059	-.00044	.39395	.20158	1.95420
7.614	.600	19.35400	.43830	.05970	-.00747	-.00545	-.00091	-.00071	.39374	.20158	1.95330
7.605	.800	19.35200	.43846	.05974	-.00753	-.00696	-.00123	-.00100	.39389	.20165	1.95330
7.600	1.000	19.35700	.43904	.05976	-.00749	-.00854	-.00156	-.00129	.39442	.20190	1.95350
7.605	1.200	19.36300	.43930	.05975	-.00754	-.01022	-.00185	-.00162	.39464	.20202	1.95340
7.610	1.400	19.36500	.43910	.05974	-.00762	-.01192	-.00211	-.00194	.39445	.20196	1.95310
7.611	1.600	19.37200	.43923	.05969	-.00764	-.01358	-.00236	-.00223	.39457	.20200	1.95330
7.621	1.800	19.38000	.43953	.05970	-.00772	-.01534	-.00264	-.00255	.39482	.20217	1.95290
7.614	2.000	19.38100	.43978	.05977	-.00777	-.01699	-.00290	-.00284	.39502	.20233	1.95240
7.627	2.200	19.38700	.43994	.05983	-.00779	-.01871	-.00316	-.00313	.39513	.20248	1.95150
7.625	2.400	19.39200	.44035	.05995	-.00785	-.02042	-.00345	-.00341	.39546	.20276	1.95050
7.634	2.600	19.39900	.44030	.06007	-.00794	-.02217	-.00368	-.00372	.39535	.20290	1.94850
7.647	2.800	19.40900	.44077	.06018	-.00801	-.02396	-.00392	-.00401	.39572	.20322	1.94720
7.633	3.000	19.41300	.44094	.06032	-.00797	-.02572	-.00417	-.00431	.39582	.20345	1.94550
7.631	3.200	19.41900	.44081	.06043	-.00799	-.02745	-.00442	-.00460	.39564	.20355	1.94370
7.649	3.400	19.42700	.44118	.06060	-.00796	-.02923	-.00469	-.00490	.39591	.20389	1.94180
7.646	3.600	19.42800	.44126	.06070	-.00798	-.03099	-.00496	-.00518	.39594	.20401	1.94080

OA257 (LARC 20-M6-6559) OV102 (R7E069) (10 JUL 81)

REFERENCE DATA

SREF = 2690.0000 SQ.FT. XMRP = 1076.6800 IN. XO
LREF = 474.8100 INCHES YMRP = .0000 IN. YO
BREF = 936.6800 INCHES ZMRP = 375.0000 IN. ZO
SCALE = .0100

PARAMETRIC DATA

ALPHA = 20.000 PHI = .000
SPDBRK = .000 AILRON = .000
YP = 1.000 1S = 1.000
ELEVON = .000 MACH = 6.000
S-MODE = 2.000 S-DIR = 1.000

RUN NO. 269/ 0 RN/L = 7.62 GRADIENT INTERVAL = -.60/ .60

RN/L	BETA	ALPHA	CN	CA	CLM	CY	CYN	CBL	CL	CD	L/D
7.643	3.800	19.43300	.44125	.06074	-.00798	-.03265	-.00523	-.00548	.39590	.20409	1.93980
7.663	3.915	19.42900	.44133	.06085	-.00796	-.03370	-.00542	-.00561	.39596	.20418	1.93920
	GRADIENT	.02054	.00048	.00007	.00021	-.00793	-.00156	-.00132	.00036	.00036	-.00171

OA257 (LARC 20-M6-6559) OV102 (R7E169) (10 JUL 81)

REFERENCE DATA

SREF = 2690.0000 SQ.FT. XMRP = 1076.6800 IN. XO
LREF = 474.8100 INCHES YMRP = .0000 IN. YO
BREF = 936.6800 INCHES ZMRP = 375.0000 IN. ZO
SCALE = .0100

PARAMETRIC DATA

ALPHA = 20.000 PHI = .000
SPDBRK = .000 AILRON = .000
YP = 1.000 1S = 1.000
ELEVON = .000 MACH = 6.000
S-MODE = 2.000 S-DIR = 1.000

RUN NO. 2284/ O RN/L = 2.26 GRADIENT INTERVAL = -.60/ .60

RN/L	BETA	ALPHA	CN	CA	CLM	CY	CYN	CBL	CL	CD	L/D
2.261	-4.300	19.49300	.44544	.06203	-.00617	.03641	.00653	.00621	.39921	.20712	1.92740
2.260	-4.100	19.49100	.44433	.06202	-.00605	.03464	.00621	.00595	.39818	.20672	1.92620
2.264	-3.900	19.49000	.44506	.06185	-.00600	.03288	.00591	.00567	.39892	.20680	1.92900
2.270	-3.700	19.49500	.44546	.06184	-.00606	.03115	.00558	.00541	.39928	.20696	1.92920
2.268	-3.500	19.49900	.44617	.06171	-.00597	.02944	.00531	.00510	.39999	.20710	1.93130
2.267	-3.300	19.50500	.44639	.06164	-.00588	.02766	.00504	.00483	.40019	.20714	1.93190
2.265	-3.100	19.50900	.44552	.06150	-.00578	.02580	.00473	.00454	.39941	.20676	1.93180
2.266	-2.900	19.51400	.44648	.06133	-.00577	.02425	.00446	.00429	.40034	.20695	1.93450
2.265	-2.700	19.51500	.44670	.06149	-.00580	.02248	.00412	.00401	.40050	.20718	1.93310
2.261	-2.500	19.51400	.44652	.06146	-.00588	.02084	.00386	.00372	.40034	.20708	1.93320
2.260	-2.300	19.51900	.44690	.06149	-.00590	.01907	.00355	.00343	.40067	.20727	1.93310
2.261	-2.100	19.53000	.44812	.06147	-.00583	.01737	.00328	.00315	.40179	.20774	1.93410
2.261	-1.900	19.53700	.44636	.06147	-.00572	.01567	.00303	.00286	.40011	.20720	1.93100
2.268	-1.700	19.53900	.44836	.06156	-.00575	.01389	.00272	.00258	.40195	.20797	1.93280
2.270	-1.500	19.54100	.44806	.06165	-.00566	.01213	.00242	.00227	.40163	.20797	1.93120
2.264	-1.300	19.54500	.44807	.06163	-.00575	.01039	.00213	.00197	.40163	.20798	1.93110
2.259	-1.100	19.54900	.44776	.06171	-.00577	.00878	.00184	.00167	.40131	.20798	1.92960
2.261	-.900	19.56100	.44770	.06173.	-.00562	.00702	.00156	.00138	.40120	.20806	1.92820
2.264	-.700	19.56700	.44964	.06183	-.00555	.00522	.00128	.00106	.40297	.20884	1.92950
2.266	-.500	19.56900	.44756	.06186	-.00547	.00347	.00100	.00075	.40098	.20820	1.92600
2.270	-.300	19.57200	.44869	.06194	-.00543	.00193	.00072	.00047	.40202	.20867	1.92660
2.269	-.100	19.57600	.44790	.06192	-.00545	.00045	.00037	.00021	.40126	.20842	1.92530
2.267	.100	19.58400	.44961	.06197	-.00550	-.00096	-.00002	-.00002	.40283	.20909	1.92660
2.263	.300	19.59000	.44872	.06181	-.00550	-.00250	-.00037	-.00026	.40202	.20869	1.92640
2.266	.500	19.59500	.44938	.06178	-.00562	-.00406	-.00070	-.00055	.40264	.20892	1.92730
2.263	.700	19.59800	.44883	.06162	-.00566	-.00578	-.00095	-.00088	.40216	.20860	1.92790
2.260	.900	19.60200	.44881	.06171	-.00569	-.00761	-.00124	-.00121	.40209	.20870	1.92660
2.260	1.100	19.60700	.44903	.06164	-.00592	-.00938	-.00155	-.00152	.40231	.20874	1.92730
2.260	1.300	19.61200	.44968	.06154	-.00590	-.01110	-.00182	-.00181	.40294	.20891	1.92880
2.261	1.500	19.62000	.44909	.06137	-.00590	-.01280	-.00211	-.00210	.40240	.20861	1.92900
2.259	1.700	19.62300	.44992	.06131	-.00581	-.01460	-.00241	-.00239	.40320	.20884	1.93060
2.260	1.900	19.62800	.45022	.06131	-.00581	-.01625	-.00270	-.00268	.40347	.20899	1.93060
2.259	2.100	19.63200	.44995	.06150	-.00588	-.01784	-.00302	-.00295	.40314	.20910	1.92800
2.255	2.300	19.63600	.45046	.06161	-.00592	-.01964	-.00335	-.00324	.40356	.20940	1.92720
2.253	2.500	19.64000	.44978	.06160	-.00596	-.02129	-.00369	-.00353	.40291	.20919	1.92600
2.251	2.700	19.65000	.44988	.06161	-.00597	-.02303	-.00396	-.00382	.40296	.20931	1.92520
2.252	2.900	19.65400	.44931	.06163	-.00590	-.02478	-.00425	-.00409	.40241	.20916	1.92390
2.254	3.100	19.65700	.44982	.06174	-.00594	-.02657	-.00460	-.00437	.40283	.20946	1.92320
2.252	3.300	19.65900	.45040	.06186	-.00613	-.02815	-.00488	-.00463	.40334	.20978	1.92270
2.252	3.500	19.66600	.45008	.06195	-.00632	-.02998	-.00519	-.00496	.40298	.20980	1.92080
2.255	3.700	19.67100	.44952	.06204	-.00629	-.03176	-.00550	-.00526	.40240	.20974	1.91860
2.263	3.827	19.67100	.45055	.06202	-.00618	-.03284	-.00566	-.00543	.40338	.21007	1.92030
	GRADIENT	.02743	.00156	-.00011	-.00014	-.00748	-.00174	-.00128	.00141	.00062	.00103

OA257 (LARC 20-M6-6559) OV102 (R7E169) (10 JUL 81)

REFERENCE DATA

SREF = 2690.0000 SQ.FT. XMRP = 1076.6800 IN. X0
LREF = 474.8100 INCHES YMRP = .0000 IN. Y0
BREF = 936.6800 INCHES ZMRP = 375.0000 IN. Z0
SCALE = .0100

PARAMETRIC DATA

ALPHA = 20.000 PHI = .000
SPDBRK = .000 AILRON = .000
YP = 1.000 1S = 1.000
ELEVON = .000 MACH = 6.000
S-MODE = 2.000 S-DIR = 1.000

RUN NO. 2269/ 0 RN/L = 7.62 GRADIENT INTERVAL = -.60/ .60

RN/L	BETA	ALPHA	CN	CA	CLM	CY	CYN	CBL	CL	CD	L/D
7.642	-4.500	19.23900	.43373	.06049	-.00827	.03673	.00652	.00636	.38957	.20003	1.94760
7.633	-4.300	19.24600	.43399	.06038	-.00826	.03506	.00625	.00609	.38984	.20006	1.94860
7.622	-4.100	19.24400	.43417	.06030	-.00823	.03329	.00594	.00583	.39003	.20003	1.94980
7.645	-3.900	19.24800	.43412	.06017	-.00818	.03166	.00565	.00558	.39002	.19991	1.95090
7.620	-3.700	19.25000	.43461	.06007	-.00822	.03004	.00539	.00531	.39051	.20000	1.95250
7.617	-3.500	19.25300	.43496	.05997	-.00822	.02822	.00510	.00503	.39086	.20004	1.95390
7.609	-3.300	19.25700	.43496	.05992	-.00822	.02651	.00481	.00474	.39087	.20002	1.95410
7.616	-3.100	19.26000	.43534	.05984	-.00816	.02483	.00456	.00446	.39124	.20008	1.95540
7.604	-2.900	19.26700	.43564	.05981	-.00816	.02301	.00427	.00417	.39150	.20021	1.95540
7.608	-2.700	19.27300	.43580	.05974	-.00814	.02138	.00403	.00389	.39165	.20024	1.95590
7.601	-2.500	19.27900	.43616	.05971	-.00801	.01972	.00376	.00359	.39198	.20037	1.95630
7.603	-2.300	19.28800	.43642	.05965	-.00796	.01807	.00349	.00330	.39222	.20046	1.95660
7.626	-2.100	19.29100	.43696	.05967	-.00798	.01635	.00320	.00301	.39272	.20068	1.95700
7.629	-1.900	19.29700	.43684	.05961	-.00796	.01459	.00291	.00271	.39260	.20062	1.95690
7.625	-1.700	19.30300	.43707	.05966	-.00786	.01300	.00263	.00241	.39278	.20079	1.95620
7.633	-1.500	19.30700	.43714	.05964	-.00780	.01128	.00234	.00211	.39284	.20082	1.95620
7.647	-1.300	19.31500	.43734	.05963	-.00777	.00963	.00206	.00181	.39300	.20093	1.95590
7.612	-1.100	19.31700	.43753	.05969	-.00771	.00796	.00174	.00152	.39316	.20106	1.95540
7.611	-.900	19.32100	.43801	.05969	-.00772	.00642	.00142	.00126	.39359	.20125	1.95570
7.620	-.700	19.32600	.43762	.05967	-.00772	.00491	.00112	.00099	.39321	.20114	1.95500
7.629	-.500	19.33100	.43813	.05963	-.00770	.00328	.00080	.00075	.39369	.20130	1.95580
7.627	-.300	19.33300	.43797	.05959	-.00770	.00168	.00051	.00048	.39354	.20123	1.95570
7.621	-.100	19.33500	.43824	.05959	-.00773	.00008	.00019	.00021	.39379	.20133	1.95600
7.612	.100	19.33900	.43837	.05958	-.00764	-.00153	-.00014	-.00005	.39390	.20139	1.95590
7.627	.300	19.34500	.43840	.05970	-.00755	-.00318	-.00045	-.00032	.39387	.20155	1.95420
7.623	.500	19.35200	.43872	.05971	-.00750	-.00455	-.00074	-.00058	.39414	.20172	1.95390
7.607	.700	19.35200	.43853	.05971	-.00750	-.00619	-.00108	-.00085	.39396	.20166	1.95360
7.600	.900	19.35500	.43859	.05977	-.00752	-.00776	-.00139	-.00115	.39399	.20175	1.95290
7.603	1.100	19.35900	.43895	.05977	-.00753	-.00939	-.00172	-.00145	.39432	.20190	1.95310
7.606	1.300	19.36400	.43916	.05974	-.00756	-.01114	-.00198	-.00178	.39451	.20197	1.95330
7.609	1.500	19.37000	.43912	.05968	-.00760	-.01271	-.00222	-.00209	.39447	.20195	1.95330
7.616	1.700	19.37500	.43946	.05969	-.00768	-.01447	-.00250	-.00238	.39477	.20210	1.95330
7.614	1.900	19.37800	.43920	.05973	-.00769	-.01626	-.00277	-.00269	.39450	.20207	1.95230
7.625	2.100	19.38500	.43983	.05981	-.00779	-.01779	-.00302	-.00298	.39505	.20240	1.95180
7.621	2.300	19.39000	.43991	.05993	-.00781	-.01955	-.00330	-.00327	.39506	.20258	1.95010
7.633	2.500	19.39600	.44031	.06000	-.00791	-.02134	-.00356	-.00356	.39540	.20281	1.94950
7.634	2.700	19.40400	.44055	.06012	-.00797	-.02298	-.00379	-.00387	.39555	.20307	1.94790
7.642	2.900	19.41100	.44077	.06025	-.00796	-.02488	-.00406	-.00416	.39569	.20332	1.94620
7.631	3.100	19.41600	.44065	.06036	-.00799	-.02660	-.00430	-.00447	.39553	.20341	1.94450
7.641	3.300	19.42200	.44087	.06052	-.00801	-.02841	-.00457	-.00476	.39566	.20367	1.94260
7.647	3.500	19.42900	.44123	.06064	-.00796	-.03015	-.00483	-.00504	.39593	.20396	1.94130
7.644	3.700	19.43000	.44144	.06074	-.00797	-.03180	-.00510	-.00532	.39609	.20413	1.94040

OA257 (LARC 20-M6-6559) OV102 (R7E169) (10 JUL 81)

REFERENCE DATA

SREF =	2690.0000 SQ.FT.	XMRP =	1076.6800 IN. XO		
LREF =	474.8100 INCHES	YMRP =	.0000 IN. YO		
BREF =	936.6800 INCHES	ZMRP =	375.0000 IN. ZO		
SCALE =	.0100				

PARAMETRIC DATA

ALPHA =	20.000	PHI =	.000
SPDBRK =	.000	AILRON =	.000
YP =	1.000	1S =	1.000
ELEVON =	.000	MACH =	6.000
S-MODE =	2.000	S-DIR =	1.000

RUN NO. 2269/ 0 RN/L = 7.62 GRADIENT INTERVAL = -.60/ .60

RN/L	BETA	ALPHA	CN	CA	CLM	CY	CYN	CBL	CL	CD	L/D
7.657	3.900	19.43200	.44165	.06090	-.00795	-.03358	-.00539	-.00558	.39623	.20436	1.93890
	GRADIENT	.02071	.00062	.00011	.00022	-.00791	-.00155	-.00133	.00048	.00045	-.00201

OA257 (LARC 20-M6-6559) OV102 (R7E070) (10 JUL 81)

REFERENCE DATA

SREF = 2690.0000 SQ.FT. XMRP = 1076.6800 IN. XO
LREF = 474.8100 INCHES YMRP = .0000 IN. YO
BREF = 936.6800 INCHES ZMRP = 375.0000 IN. ZO
SCALE = .0100

PARAMETRIC DATA

ALPHA = 22.500 PHI = .000
SPDBRK = .000 AILRON = .000
YP = 1.000 1S = 1.000
ELEVON = .000 MACH = 6.000
S-MODE = 2.000 S-DIR = 1.000

RUN NO. 282/ 0 RN/L = 2.29 GRADIENT INTERVAL = -.60/ .60

RN/L	BETA	ALPHA	CN	CA	CLM	CY	CYN	CBL	CL	CD	L/D
2.292	-4.415	22.20600	.54607	.06228	-.00597	.03580	.00737	.00702	.48203	.26404	1.82560
2.290	-4.300	22.21600	.54699	.06240	-.00612	.03476	.00718	.00685	.48280	.26458	1.82480
2.292	-4.100	22.21300	.54697	.06231	-.00608	.03309	.00685	.00655	.48282	.26447	1.82560
2.293	-3.900	22.22200	.54772	.06227	-.00606	.03151	.00652	.00626	.48349	.26479	1.82590
2.290	-3.700	22.23200	.54800	.06202	-.00597	.02983	.00618	.00598	.48380	.26475	1.82740
2.292	-3.500	22.23200	.54833	.06196	-.00594	.02818	.00578	.00570	.48413	.26482	1.82810
2.295	-3.300	22.23100	.54747	.06194	-.00588	.02658	.00542	.00539	.48334	.26446	1.82760
2.299	-3.100	22.23400	.54914	.06187	-.00592	.02488	.00508	.00508	.48489	.26506	1.82940
2.296	-2.900	22.23800	.54891	.06181	-.00593	.02340	.00473	.00479	.48469	.26495	1.82940
2.293	-2.700	22.24400	.54885	.06185	-.00586	.02189	.00438	.00449	.48459	.26502	1.82850
2.295	-2.500	22.25200	.54939	.06172	-.00573	.02033	.00401	.00419	.48510	.26517	1.82940
2.297	-2.300	22.25900	.54907	.06171	-.00562	.01867	.00370	.00389	.48478	.26510	1.82870
2.295	-2.100	22.26200	.55002	.06161	-.00567	.01697	.00339	.00357	.48568	.26539	1.83010
2.296	-1.900	22.26300	.54974	.06165	-.00548	.01520	.00312	.00322	.48541	.26533	1.82940
2.296	-1.700	22.26700	.55014	.06161	-.00558	.01347	.00284	.00289	.48577	.26547	1.82980
2.295	-1.500	22.27100	.55065	.06161	-.00553	.01172	.00256	.00254	.48622	.26570	1.82990
2.295	-1.300	22.28400	.55174	.06170	-.00553	.01000	.00227	.00218	.48714	.26631	1.82920
2.291	-1.100	22.29100	.55102	.06168	-.00547	.00828	.00201	.00184	.48645	.26608	1.82820
2.289	-.900	22.29600	.55103	.06161	-.00541	.00662	.00170	.00151	.48646	.26606	1.82840
2.289	-.700	22.29800	.55147	.06162	-.00542	.00493	.00139	.00117	.48685	.26626	1.82850
2.296	-.500	22.30200	.55205	.06190	-.00550	.00331	.00109	.00086	.48727	.26676	1.82660
2.297	-.300	22.30800	.55218	.06198	-.00552	.00172	.00076	.00053	.48732	.26695	1.82560
2.294	-.100	22.31400	.55150	.06208	-.00540	.00039	.00042	.00025	.48663	.26683	1.82380
2.292	.100	22.32400	.55219	.06207	-.00531	-.00119	-.00003	-.00001	.48723	.26716	1.82370
2.291	.300	22.33100	.55312	.06198	-.00530	-.00242	-.00044	-.00023	.48809	.26749	1.82470
2.293	.500	22.33300	.55214	.06197	-.00535	-.00366	-.00088	-.00045	.48718	.26714	1.82370
2.294	.700	22.33700	.55302	.06177	-.00556	-.00534	-.00124	-.00076	.48805	.26731	1.82580
2.293	.900	22.34100	.55271	.06174	-.00564	-.00702	-.00151	-.00112	.48776	.26720	1.82540
2.291	1.100	22.34500	.55307	.06175	-.00579	-.00889	-.00181	-.00147	.48807	.26738	1.82540
2.297	1.300	22.35400	.55332	.06173	-.00572	-.01048	-.00205	-.00181	.48826	.26753	1.82510
2.296	1.500	22.36200	.55390	.06175	-.00570	-.01231	-.00231	-.00213	.48875	.26784	1.82480
2.296	1.700	22.36600	.55324	.06176	-.00574	-.01401	-.00260	-.00246	.48812	.26763	1.82380
2.295	1.900	22.37000	.55362	.06177	-.00580	-.01576	-.00289	-.00279	.48844	.26783	1.82370
2.293	2.100	22.37100	.55303	.06184	-.00594	-.01742	-.00317	-.00313	.48788	.26767	1.82270
2.293	2.300	22.37600	.55383	.06178	-.00614	-.01907	-.00351	-.00346	.48861	.26797	1.82340
2.294	2.500	22.38500	.55459	.06194	-.00614	-.02069	-.00390	-.00378	.48921	.26847	1.82220
2.296	2.700	22.39300	.55394	.06193	-.00610	-.02232	-.00423	-.00409	.48857	.26830	1.82100
2.298	2.900	22.39700	.55345	.06194	-.00611	-.02380	-.00462	-.00437	.48810	.26815	1.82030
2.301	3.100	22.40200	.55476	.06200	-.00618	-.02551	-.00496	-.00471	.48926	.26875	1.82050
2.300	3.300	22.40600	.55460	.06215	-.00617	-.02723	-.00533	-.00504	.48904	.26885	1.81900
	GRADIENT	.03343	.00057	.00005	.00021	-.00699	-.00199	-.00129	.00035	.00055	-.00247

OA257 (LARC 20-M6-6559) OV102 (R7E070) (10 JUL 81)

REFERENCE DATA

SREF = 2690.0000 SQ.FT. XMRP = 1076.6800 IN. XO
LREF = 474.8100 INCHES YMRP = .0000 IN. YO
BREF = 936.6800 INCHES ZMRP = 375.0000 IN. ZO
SCALE = .0100

PARAMETRIC DATA

ALPHA = 22.500 PHI = .000
SPDBRK = .000 AILRON = .000
YP = 1.000 1S = 1.000
ELEVON = .000 MACH = 6.000
S-MODE = 2.000 S-DIR = 1.000

RUN NO. 268/ O RN/L = 7.66 GRADIENT INTERVAL = -.60/ .60

RN/L	BETA	ALPHA	CN	CA	CLM	CY	CYN	CBL	CL	CD	L/D
7.669	-4.653	21.72500	.52027	.06061	-.00855	.03758	.00738	.00725	.46088	.24889	1.85170
7.657	-4.500	21.73300	.52036	.06054	-.00850	.03625	.00714	.00700	.46095	.24892	1.85180
7.651	-4.300	21.73300	.52061	.06049	-.00835	.03459	.00681	.00673	.46121	.24896	1.85250
7.644	-4.100	21.73600	.52074	.06039	-.00831	.03304	.00649	.00645	.46135	.24895	1.85320
7.643	-3.900	21.74400	.52100	.06029	-.00825	.03139	.00614	.00617	.46159	.24901	1.85370
7.661	-3.700	21.75000	.52132	.06022	-.00816	.02980	.00581	.00588	.46190	.24911	1.85420
7.653	-3.500	21.75500	.52177	.06018	-.00810	.02808	.00553	.00557	.46230	.24928	1.85450
7.643	-3.300	21.75900	.52181	.06007	-.00811	.02646	.00522	.00526	.46236	.24922	1.85520
7.641	-3.100	21.76600	.52238	.06001	-.00808	.02479	.00490	.00495	.46289	.24944	1.85570
7.634	-2.900	21.77300	.52233	.05991	-.00809	.02319	.00460	.00463	.46285	.24939	1.85590
7.663	-2.700	21.78100	.52279	.05988	-.00804	.02153	.00431	.00431	.46325	.24959	1.85600
7.656	-2.500	21.78700	.52280	.05986	-.00803	.01980	.00401	.00399	.46325	.24962	1.85580
7.656	-2.300	21.79400	.52334	.05985	-.00805	.01823	.00377	.00370	.46371	.24988	1.85580
7.667	-2.100	21.79800	.52364	.05983	-.00810	.01649	.00349	.00340	.46398	.25000	1.85590
7.678	-1.900	21.80300	.52388	.05983	-.00805	.01488	.00322	.00307	.46419	.25013	1.85580
7.662	-1.700	21.80600	.52427	.05981	-.00801	.01315	.00292	.00273	.46454	.25027	1.85610
7.654	-1.500	21.80900	.52435	.05982	-.00804	.01152	.00259	.00241	.46459	.25034	1.85590
7.664	-1.300	21.81400	.52446	.05978	-.00800	.01001	.00227	.00209	.46469	.25039	1.85590
7.648	-1.100	21.82000	.52441	.05977	-.00801	.00833	.00194	.00179	.46462	.25041	1.85550
7.673	-.900	21.83000	.52490	.05978	-.00797	.00687	.00161	.00148	.46503	.25068	1.85500
7.671	-.700	21.83500	.52506	.05977	-.00792	.00527	.00128	.00119	.46517	.25077	1.85490
7.659	-.500	21.84000	.52501	.05979	-.00792	.00373	.00095	.00089	.46509	.25081	1.85430
7.675	-.300	21.84700	.52559	.05981	-.00792	.00224	.00064	.00059	.46559	.25110	1.85420
7.666	-.100	21.84800	.52576	.05980	-.00795	.00068	.00030	.00029	.46574	.25116	1.85430
7.678	.100	21.85700	.52597	.05976	-.00785	-.00092	-.00008	-.00001	.46592	.25128	1.85420
7.674	.300	21.85800	.52596	.05982	-.00784	-.00234	-.00039	-.00032	.46587	.25134	1.85360
7.682	.500	21.86500	.52606	.05981	-.00784	-.00385	-.00073	-.00060	.46594	.25142	1.85320
7.691	.700	21.86700	.52612	.05977	-.00783	-.00542	-.00107	-.00090	.46601	.25142	1.85350
7.696	.900	21.87400	.52652	.05970	-.00786	-.00688	-.00138	-.00120	.46637	.25157	1.85380
7.692	1.100	21.87700	.52594	.05964	-.00789	-.00855	-.00170	-.00152	.46584	.25132	1.85360
7.672	1.300	21.88100	.52606	.05964	-.00793	-.01009	-.00200	-.00184	.46593	.25140	1.85330
7.661	1.500	21.88500	.52611	.05967	-.00803	-.01168	-.00232	-.00214	.46596	.25148	1.85290
7.661	1.700	21.88800	.52625	.05970	-.00810	-.01334	-.00263	-.00245	.46607	.25158	1.85260
7.648	1.900	21.89100	.52705	.05978	-.00813	-.01500	-.00295	-.00275	.46676	.25198	1.85240
7.649	2.100	21.89600	.52671	.05976	-.00819	-.01659	-.00322	-.00306	.46643	.25188	1.85180
7.645	2.300	21.90300	.52729	.05982	-.00824	-.01838	-.00353	-.00337	.46692	.25220	1.85140
7.633	2.500	21.91000	.52740	.05985	-.00821	-.02000	-.00382	-.00369	.46697	.25233	1.85070
7.629	2.700	21.91400	.52740	.05989	-.00822	-.02177	-.00413	-.00400	.46694	.25240	1.85000
7.635	2.900	21.92300	.52732	.05991	-.00820	-.02337	-.00441	-.00432	.46682	.25246	1.84910
7.640	3.100	21.92800	.52755	.06011	-.00826	-.02509	-.00471	-.00464	.46694	.25277	1.84730
7.657	3.300	21.93500	.52837	.06043	-.00828	-.02677	-.00498	-.00494	.46755	.25344	1.84480
7.640	3.500	21.93900	.52867	.06079	-.00833	-.02831	-.00523	-.00524	.46767	.25391	1.84190

OA257 (LARC 20-M6-6559) OV102 (R7E070) (10 JUL 81)

REFERENCE DATA

SREF = 2690.0000 SQ.FT. XMRP = 1076.6800 IN. XO
LREF = 474.8100 INCHES YMRP = .0000 IN. YO
BREF = 936.6800 INCHES ZMRP = 375.0000 IN. ZO
SCALE = .0100

PARAMETRIC DATA

ALPHA = 22.500 PHI = .000
SPDBRK = .000 AILRON = .000
YP = 1.000 1S = 1.000
ELEVON = .000 MACH = 6.000
S-MODE = 2.000 S-DIR = 1.000

RUN NO. 268/ 0 RN/L = 7.66 GRADIENT INTERVAL = -.60/ .60

RN/L	BETA	ALPHA	CN	CA	CLM	CY	CYN	CBL	CL	CD	L/D
7.643	3.700	21.94400	.52865	.06097	-.00840	-.02975	-.00548	-.00548	.46757	.25411	1.84010
7.645	3.900	21.95000	.52904	.06116	-.00836	-.03179	-.00589	-.00582	.46783	.25448	1.83840
	GRADIENT	.02386	.00094	.00001	.00011	-.00760	-.00170	-.00149	.00075	.00056	-.00106

OA257 (LARC 20-M6-6559) OV102 (R7E170) (10 JUL 81)

REFERENCE DATA

SREF = 2690.0000 SQ.FT. XMRP = 1076.6800 IN. XO
LREF = 474.8100 INCHES YMRP = .0000 IN. YO
BREF = 936.6800 INCHES ZMRP = 375.0000 IN. ZO
SCALE = .0100

PARAMETRIC DATA

ALPHA = 22.500 PHI = .000
SPDBRK = .000 AILRON = .000
YP = 1.000 1S = 1.000
ELEVON = .000 MACH = 6.000
S-MODE = 2.000 S-DIR = 1.000

RUN NO. 2282/ O RN/L = 2.29 GRADIENT INTERVAL = -.60/ .60

RN/L	BETA	ALPHA	CN	CA	CLM	CY	CYN	CBL	CL	CD	L/D
2.291	-4.400	22.20400	.54703	.06232	-.00603	.03557	.00735	.00699	.48291	.26442	1.82630
2.290	-4.200	22.21500	.54671	.06231	-.00609	.03391	.00702	.00670	.48257	.26439	1.82520
2.294	-4.000	22.21500	.54745	.06219	-.00608	.03230	.00668	.00641	.48330	.26455	1.82680
2.292	-3.800	22.22500	.54822	.06212	-.00595	.03069	.00636	.00612	.48399	.26487	1.82730
2.289	-3.600	22.23200	.54789	.06195	-.00594	.02902	.00601	.00583	.48372	.26464	1.82780
2.293	-3.400	22.23000	.54865	.06193	-.00598	.02733	.00559	.00554	.48444	.26489	1.82880
2.297	-3.200	22.23300	.54809	.06183	-.00583	.02568	.00525	.00523	.48394	.26462	1.82880
2.297	-3.000	22.23600	.54937	.06191	-.00593	.02422	.00493	.00493	.48508	.26521	1.82910
2.294	-2.800	22.24100	.54859	.06189	-.00590	.02259	.00454	.00464	.48435	.26493	1.82820
2.293	-2.600	22.24800	.54850	.06172	-.00586	.02116	.00421	.00434	.48430	.26481	1.82890
2.296	-2.400	22.25500	.54903	.06172	-.00583	.01950	.00383	.00404	.48475	.26506	1.82880
2.296	-2.200	22.26100	.54978	.06161	-.00564	.01783	.00354	.00374	.48546	.26530	1.82990
2.293	-2.000	22.26400	.55079	.06157	-.00553	.01609	.00324	.00340	.48640	.26566	1.83090
2.297	-1.800	22.26400	.55000	.06160	-.00548	.01430	.00297	.00305	.48565	.26539	1.82990
2.295	-1.600	22.26900	.54986	.06164	-.00553	.01262	.00268	.00272	.48549	.26541	1.82920
2.296	-1.400	22.27600	.55116	.06164	-.00550	.01080	.00241	.00236	.48666	.26597	1.82980
2.293	-1.200	22.28700	.55110	.06173	-.00551	.00916	.00215	.00201	.48652	.26613	1.82810
2.289	-1.000	22.29400	.55125	.06171	-.00542	.00743	.00187	.00167	.48663	.26622	1.82790
2.289	-.800	22.29800	.55053	.06158	-.00543	.00576	.00154	.00133	.48600	.26586	1.82800
2.292	-.600	22.30000	.55151	.06180	-.00542	.00420	.00124	.00102	.48681	.26645	1.82700
2.298	-.400	22.30400	.55166	.06194	-.00552	.00249	.00094	.00070	.48688	.26667	1.82580
2.296	-.200	22.31000	.55130	.06198	-.00550	.00096	.00056	.00038	.48651	.26662	1.82470
2.293	.000	22.32000	.55219	.06204	-.00539	-.00045	.00020	.00011	.48726	.26710	1.82430
2.292	.200	22.33000	.55235	.06202	-.00527	-.00179	-.00022	-.00013	.48737	.26723	1.82380
2.292	.400	22.33200	.55361	.06206	-.00530	-.00301	-.00064	-.00032	.48851	.26776	1.82440
2.294	.600	22.33500	.55221	.06189	-.00542	-.00452	-.00109	-.00060	.48727	.26709	1.82430
2.293	.800	22.34000	.55235	.06180	-.00559	-.00615	-.00138	-.00095	.48740	.26711	1.82470
2.292	1.000	22.34300	.55311	.06172	-.00572	-.00793	-.00164	-.00130	.48812	.26735	1.82580
2.292	1.200	22.34800	.55210	.06174	-.00581	-.00969	-.00195	-.00163	.48716	.26704	1.82430
2.297	1.400	22.35800	.55240	.06170	-.00570	-.01143	-.00218	-.00196	.48740	.26719	1.82420
2.294	1.600	22.36500	.55364	.06180	-.00567	-.01309	-.00247	-.00230	.48848	.26782	1.82390
2.297	1.800	22.36800	.55358	.06168	-.00571	-.01491	-.00273	-.00261	.48846	.26771	1.82460
2.293	2.000	22.37100	.55316	.06178	-.00587	-.01660	-.00302	-.00297	.48802	.26766	1.82330
2.293	2.200	22.37400	.55379	.06182	-.00608	-.01832	-.00334	-.00331	.48857	.26797	1.82320
2.293	2.400	22.38000	.55422	.06184	-.00615	-.01990	-.00370	-.00362	.48893	.26820	1.82300
2.296	2.600	22.38800	.55419	.06189	-.00606	-.02149	-.00404	-.00393	.48885	.26830	1.82200
2.297	2.800	22.39700	.55404	.06191	-.00614	-.02303	-.00442	-.00423	.48866	.26835	1.82100
2.297	3.000	22.39900	.55382	.06203	-.00619	-.02464	-.00479	-.00455	.48840	.26839	1.81980
2.303	3.200	22.40400	.55424	.06205	-.00617	-.02645	-.00516	-.00487	.48876	.26861	1.81960
2.300	3.322	22.40700	.55494	.06218	-.00616	-.02739	-.00536	-.00508	.48934	.26902	1.81900
	GRADIENT	.03232	.00126	.00010	.00012	-.00712	-.00195	-.00132	.00098	.00084	-.00211

OA257 (LARC 20-M6-6559) OV102 (R7E170) (10 JUL 81)

REFERENCE DATA

SREF = 2690.0000 SQ.FT. XMRP = 1076.6800 IN. XO
LREF = 474.8100 INCHES YMRP = .0000 IN. YO
BREF = 936.6800 INCHES ZMRP = 375.0000 IN. ZO
SCALE = .0100

PARAMETRIC DATA

ALPHA = 22.500 PHI = .000
SPDBRK = .000 AILRON = .000
YP = 1.000 1S = 1.000
ELEVON = .000 MACH = 6.000
S-MODE = 2.000 S-DIR = 1.000

RUN NO. 2268/ 0 RN/L = 7.66 GRADIENT INTERVAL = -.60/ .60

RN/L	BETA	ALPHA	CN	CA	CLM	CY	CYN	CBL	CL	CD	L/D
7.666	-4.600	21.73100	.52029	.06059	-.00855	.03715	.00730	.00716	.46088	.24892	1.85150
7.646	-4.400	21.73100	.52030	.06053	-.00842	.03540	.00698	.00686	.46091	.24887	1.85200
7.651	-4.200	21.73700	.52082	.06042	-.00835	.03377	.00665	.00659	.46141	.24900	1.85300
7.640	-4.000	21.74000	.52100	.06037	-.00825	.03220	.00630	.00631	.46158	.24904	1.85340
7.650	-3.800	21.74700	.52115	.06022	-.00822	.03060	.00598	.00602	.46175	.24902	1.85420
7.653	-3.600	21.75100	.52169	.06019	-.00814	.02898	.00568	.00572	.46224	.24923	1.85470
7.655	-3.400	21.75700	.52146	.06009	-.00810	.02724	.00536	.00540	.46204	.24910	1.85480
7.636	-3.200	21.76400	.52223	.06005	-.00812	.02561	.00505	.00510	.46274	.24940	1.85540
7.636	-3.000	21.76700	.52224	.05999	-.00807	.02402	.00475	.00479	.46275	.24937	1.85570
7.651	-2.800	21.77600	.52266	.05989	-.00808	.02231	.00444	.00447	.46315	.24952	1.85610
7.665	-2.600	21.78400	.52293	.05987	-.00803	.02072	.00417	.00415	.46337	.24966	1.85600
7.654	-2.400	21.78800	.52340	.05987	-.00803	.01904	.00390	.00385	.46378	.24987	1.85610
7.659	-2.200	21.79600	.52352	.05981	-.00809	.01739	.00364	.00355	.46389	.24992	1.85620
7.675	-2.000	21.80400	.52398	.05980	-.00803	.01568	.00336	.00325	.46428	.25014	1.85610
7.677	-1.800	21.80300	.52407	.05979	-.00801	.01400	.00307	.00290	.46438	.25017	1.85630
7.658	-1.600	21.80900	.52441	.05982	-.00804	.01235	.00276	.00257	.46466	.25036	1.85600
7.651	-1.400	21.81200	.52458	.05976	-.00802	.01076	.00244	.00225	.46482	.25040	1.85630
7.668	-1.200	21.81900	.52461	.05978	-.00800	.00915	.00209	.00195	.46481	.25049	1.85560
7.647	-1.000	21.82400	.52523	.05981	-.00800	.00756	.00178	.00163	.46536	.25078	1.85570
7.681	-.800	21.83400	.52507	.05976	-.00793	.00612	.00144	.00134	.46518	.25076	1.85510
7.662	-.600	21.83600	.52522	.05978	-.00792	.00445	.00110	.00103	.46530	.25085	1.85490
7.665	-.400	21.84500	.52529	.05976	-.00793	.00295	.00079	.00074	.46533	.25093	1.85440
7.667	-.200	21.84800	.52562	.05978	-.00792	.00145	.00047	.00043	.46562	.25110	1.85440
7.680	.000	21.85200	.52563	.05976	-.00787	-.00012	.00010	.00015	.46561	.25111	1.85420
7.678	.200	21.85400	.52564	.05981	-.00785	-.00155	-.00023	-.00015	.46560	.25118	1.85360
7.676	.400	21.86200	.52609	.05982	-.00783	-.00312	-.00057	-.00047	.46598	.25142	1.85340
7.688	.600	21.86600	.52626	.05980	-.00786	-.00458	-.00089	-.00074	.46612	.25150	1.85340
7.694	.800	21.87100	.52619	.05973	-.00786	-.00618	-.00123	-.00105	.46606	.25145	1.85350
7.693	1.000	21.87700	.52627	.05967	-.00787	-.00773	-.00153	-.00137	.46614	.25147	1.85370
7.680	1.200	21.88100	.52596	.05962	-.00791	-.00935	-.00185	-.00168	.46586	.25133	1.85360
7.666	1.400	21.88200	.52607	.05966	-.00795	-.01086	-.00216	-.00198	.46593	.25143	1.85310
7.669	1.600	21.88500	.52673	.05968	-.00808	-.01253	-.00247	-.00230	.46653	.25171	1.85350
7.643	1.800	21.88800	.52655	.05973	-.00810	-.01416	-.00278	-.00260	.46633	.25172	1.85260
7.654	2.000	21.89700	.52692	.05978	-.00816	-.01577	-.00309	-.00290	.46661	.25198	1.85180
7.649	2.200	21.90200	.52716	.05978	-.00823	-.01751	-.00338	-.00322	.46681	.25210	1.85170
7.638	2.400	21.90600	.52729	.05982	-.00823	-.01916	-.00367	-.00353	.46690	.25223	1.85110
7.630	2.600	21.91200	.52732	.05985	-.00820	-.02092	-.00398	-.00383	.46689	.25231	1.85050
7.641	2.800	21.92000	.52744	.05992	-.00820	-.02257	-.00427	-.00416	.46695	.25248	1.84940
7.633	3.000	21.92500	.52763	.06002	-.00821	-.02420	-.00455	-.00448	.46706	.25269	1.84830
7.656	3.200	21.93200	.52830	.06029	-.00829	-.02593	-.00484	-.00479	.46754	.25325	1.84620
7.654	3.400	21.93800	.52862	.06058	-.00834	-.02758	-.00510	-.00510	.46770	.25369	1.84360
7.636	3.600	21.94100	.52861	.06090	-.00836	-.02920	-.00538	-.00538	.46757	.25400	1.84080

OA257 (LARC 20-M6-6559) OV102 (R7E170) (10 JUL 81)

REFERENCE DATA

SREF =	2690.0000 SQ.FT.	XMRP =	1076.6800 IN. XO		
LREF =	474.8100 INCHES	YMRP =	.0000 IN. YO		
BREF =	936.6800 INCHES	ZMRP =	375.0000 IN. ZO		
SCALE =	.0100				

PARAMETRIC DATA

ALPHA =	22.500	PHI =	.000
SPDBRK =	.000	AILRON =	.000
YP =	1.000	1S =	1.000
ELEVON =	.000	MACH =	6.000
S-MODE =	2.000	S-DIR =	1.000

RUN NO. 2268/ 0 RN/L = 7.66 GRADIENT INTERVAL = -.60/ .60

RN/L	BETA	ALPHA	CN	CA	CLM	CY	CYN	CBL	CL	CD	L/D
7.649	3.800	21.94900	.52899	.06109	-.00836	-.03099	-.00572	-.00569	.46781	.25439	1.83900
7.651	3.936	21.94500	.52882	.06123	-.00835	-.03211	-.00591	-.00586	.46762	.25442	1.83790
	GRADIENT	.02321	.00085	.00004	.00008	-.00754	-.00168	-.00149	.00067	.00054	-.00130

OA257 (LARC 20-M6-6559) DV102 (R7E071) (10 JUL 81)

REFERENCE DATA

SREF = 2690.0000 SQ.FT. XMRP = 1076.6800 IN. XO
LREF = 474.8100 INCHES YMRP = .0000 IN. YO
BREF = 936.6800 INCHES ZMRP = 375.0000 IN. ZO
SCALE = .0100

PARAMETRIC DATA

ALPHA = 25.000 PHI = .000
SPDBRK = .000 AILRON = .000
YP = 1.000 1S = 1.000
ELEVON = .000 MACH = 6.000
S-MODE = 2.000 S-DIR = 1.000

RUN NO. 281/ 0 RN/L = 2.23 GRADIENT INTERVAL = -.60/ .60

RN/L	BETA	ALPHA	CN	CA	CLM	CY	CYN	CBL	CL	CD	L/D
2.223	-4.576	24.43000	.62817	.06235	-.00678	.03652	.00796	.00782	.54614	.31657	1.72520
2.231	-4.400	24.44200	.63068	.06232	-.00682	.03488	.00769	.00751	.54837	.31770	1.72610
2.234	-4.200	24.43800	.63226	.06226	-.00682	.03320	.00742	.00714	.54986	.31826	1.72770
2.230	-4.000	24.43900	.62943	.06214	-.00687	.03147	.00707	.00681	.54733	.31699	1.72660
2.229	-3.800	24.44200	.63014	.06214	-.00691	.02985	.00673	.00648	.54795	.31731	1.72690
2.233	-3.600	24.45100	.63131	.06196	-.00690	.02818	.00636	.00614	.54904	.31771	1.72810
2.232	-3.400	24.46000	.63071	.06190	-.00677	.02653	.00602	.00582	.54848	.31749	1.72750
2.227	-3.200	24.46800	.63191	.06176	-.00675	.02493	.00564	.00550	.54958	.31794	1.72860
2.228	-3.000	24.46800	.63018	.06170	-.00669	.02337	.00528	.00518	.54803	.31717	1.72790
2.230	-2.800	24.47400	.63182	.06166	-.00666	.02181	.00490	.00484	.54951	.31787	1.72870
2.234	-2.600	24.47300	.63142	.06169	-.00668	.02026	.00454	.00452	.54913	.31773	1.72830
2.233	-2.400	24.47400	.63166	.06162	-.00671	.01871	.00418	.00419	.54938	.31776	1.72890
2.228	-2.200	24.48200	.63339	.06164	-.00665	.01724	.00381	.00387	.55090	.31858	1.72920
2.229	-2.000	24.49300	.63211	.06151	-.00652	.01556	.00347	.00354	.54973	.31803	1.72850
2.228	-1.800	24.50200	.63317	.06143	-.00650	.01411	.00312	.00320	.55068	.31849	1.72900
2.225	-1.600	24.50600	.63354	.06144	-.00644	.01245	.00274	.00289	.55098	.31869	1.72890
2.223	-1.400	24.51500	.63374	.06140	-.00648	.01090	.00234	.00256	.55113	.31883	1.72860
2.225	-1.200	24.51500	.63282	.06146	-.00654	.00945	.00198	.00224	.55027	.31850	1.72770
2.228	-1.000	24.51900	.63565	.06149	-.00657	.00785	.00164	.00189	.55281	.31973	1.72900
2.229	-.800	24.52500	.63491	.06154	-.00651	.00626	.00134	.00151	.55209	.31953	1.72780
2.228	-.600	24.53800	.63521	.06146	-.00645	.00460	.00107	.00116	.55231	.31971	1.72760
2.228	-.400	24.54500	.63386	.06139	-.00633	.00296	.00077	.00080	.55108	.31916	1.72670
2.232	-.200	24.55100	.63373	.06146	-.00610	.00142	.00044	.00048	.55089	.31922	1.72570
2.228	.000	24.55800	.63337	.06143	-.00596	-.00012	.00006	.00015	.55055	.31911	1.72520
2.227	.200	24.56200	.63598	.06158	-.00601	-.00166	-.00031	-.00016	.55284	.32037	1.72560
2.232	.400	24.56400	.63630	.06159	-.00623	-.00320	-.00066	-.00046	.55311	.32053	1.72560
2.234	.600	24.56800	.63625	.06149	-.00633	-.00460	-.00103	-.00080	.55309	.32046	1.72590
2.227	.800	24.57700	.63366	.06144	-.00649	-.00612	-.00135	-.00115	.55070	.31942	1.72400
2.227	1.000	24.58800	.63700	.06136	-.00661	-.00786	-.00166	-.00151	.55371	.32085	1.72580
2.224	1.200	24.59400	.63603	.06125	-.00675	-.00946	-.00197	-.00184	.55284	.32041	1.72540
2.221	1.400	24.59900	.63717	.06123	-.00670	-.01093	-.00237	-.00218	.55385	.32090	1.72590
2.223	1.600	24.60200	.63777	.06130	-.00683	-.01252	-.00273	-.00253	.55435	.32125	1.72560
2.225	1.800	24.60500	.63681	.06157	-.00690	-.01410	-.00315	-.00284	.55335	.32111	1.72320
2.225	2.000	24.60700	.63728	.06156	-.00712	-.01549	-.00351	-.00317	.55377	.32133	1.72340
2.222	2.200	24.61900	.63781	.06157	-.00723	-.01712	-.00387	-.00351	.55418	.32167	1.72280
2.219	2.400	24.62800	.63782	.06160	-.00715	-.01867	-.00423	-.00385	.55413	.32178	1.72210
2.216	2.600	24.63300	.63732	.06163	-.00701	-.02027	-.00460	-.00417	.55363	.32166	1.72120
2.214	2.800	24.63800	.63693	.06168	-.00706	-.02197	-.00496	-.00449	.55323	.32159	1.72030
2.214	3.000	24.64200	.63629	.06184	-.00709	-.02357	-.00532	-.00482	.55256	.32151	1.71870
2.218	3.200	24.64700	.63804	.06192	-.00729	-.02527	-.00566	-.00518	.55409	.32236	1.71890
	GRADIENT	.02482	.00183	.00011	.00012	-.00768	-.00177	-.00162	.00149	.00110	-.00132

OA257 (LARC 20-M6-6559) OV102 (R7E071) (10 JUL 81)

REFERENCE DATA

SREF = 2690.0000 SQ.FT. XMRP = 1076.6800 IN. XO
LREF = 474.8100 INCHES YMRP = .0000 IN. YO
BREF = 936.6800 INCHES ZMRP = 375.0000 IN. ZO
SCALE = .0100

PARAMETRIC DATA

ALPHA = 25.000 PHI = .000
SPDBRK = .000 AILRON = .000
YP = 1.000 1S = 1.000
ELEVON = .000 MACH = 6.000
S-MODE = 2.000 S-DIR = 1.000

RUN NO. 234/ 0 RN/L = 4.49 GRADIENT INTERVAL = -.60/ .60

RN/L	BETA	ALPHA	CN	CA	CLM	CY	CYN	CBL	CL	CD	L/D
4.550	-4.640	24.15100	.61746	.06111	-.00876	.03657	.00756	.00758	.53840	.30839	1.74580
4.544	-4.500	24.15600	.61768	.06104	-.00862	.03535	.00735	.00736	.53862	.30847	1.74610
4.543	-4.300	24.15700	.61812	.06097	-.00864	.03370	.00703	.00705	.53903	.30859	1.74680
4.544	-4.100	24.16300	.61866	.06095	-.00853	.03213	.00670	.00674	.53951	.30885	1.74690
4.543	-3.900	24.16800	.61854	.06083	-.00853	.03050	.00635	.00647	.53942	.30873	1.74720
4.546	-3.700	24.17500	.61908	.06077	-.00847	.02891	.00601	.00615	.53990	.30896	1.74750
4.549	-3.500	24.17900	.61889	.06061	-.00853	.02728	.00563	.00586	.53977	.30879	1.74800
4.539	-3.300	24.18900	.61912	.06056	-.00854	.02576	.00529	.00555	.53995	.30893	1.74780
4.524	-3.100	24.19100	.61968	.06054	-.00835	.02413	.00494	.00520	.54046	.30916	1.74820
4.531	-2.900	24.19600	.62027	.06052	-.00825	.02256	.00460	.00485	.54098	.30943	1.74830
4.522	-2.700	24.19800	.62034	.06045	-.00826	.02097	.00425	.00452	.54105	.30940	1.74870
4.529	-2.500	24.20000	.62066	.06048	-.00824	.01937	.00392	.00418	.54133	.30959	1.74850
4.509	-2.300	24.20300	.62076	.06045	-.00828	.01788	.00358	.00387	.54142	.30962	1.74860
4.491	-2.100	24.21000	.62115	.06045	-.00815	.01622	.00326	.00346	.54173	.30986	1.74830
4.482	-1.900	24.21300	.62098	.06038	-.00820	.01460	.00290	.00321	.54159	.30976	1.74840
4.476	-1.700	24.21900	.62118	.06044	-.00809	.01298	.00261	.00286	.54171	.30995	1.74770
4.486	-1.500	24.22600	.62158	.06043	-.00804	.01130	.00228	.00252	.54204	.31016	1.74760
4.479	-1.300	24.23100	.62164	.06038	-.00801	.00984	.00201	.00221	.54209	.31019	1.74760
4.470	-1.100	24.24200	.62156	.06049	-.00804	.00806	.00172	.00184	.54192	.31036	1.74610
4.468	-.900	24.25000	.62140	.06044	-.00804	.00645	.00145	.00151	.54174	.31033	1.74570
4.470	-.700	24.25500	.62212	.06052	-.00805	.00477	.00117	.00113	.54234	.31074	1.74530
4.471	-.500	24.26500	.62291	.06055	-.00801	.00299	.00091	.00073	.54300	.31120	1.74490
4.473	-.300	24.26700	.62284	.06065	-.00804	.00148	.00060	.00042	.54288	.31127	1.74410
4.471	-.100	24.27100	.62271	.06060	-.00792	.00009	.00021	.00012	.54276	.31121	1.74410
4.471	.100	24.27600	.62290	.06063	-.00796	-.00138	-.00022	-.00014	.54289	.31136	1.74360
4.477	.300	24.28100	.62269	.06059	-.00802	-.00267	-.00061	-.00038	.54269	.31128	1.74340
4.491	.500	24.28400	.62309	.06048	-.00797	-.00427	-.00093	-.00071	.54309	.31139	1.74410
4.482	.700	24.29100	.62309	.06043	-.00821	-.00568	-.00131	-.00097	.54307	.31141	1.74390
4.477	.900	24.29600	.62332	.06035	-.00824	-.00728	-.00165	-.00130	.54328	.31147	1.74420
4.487	1.100	24.30600	.62367	.06033	-.00828	-.00887	-.00195	-.00169	.54355	.31169	1.74390
4.485	1.300	24.31600	.62436	.06030	-.00844	-.01048	-.00226	-.00204	.54414	.31205	1.74380
4.490	1.500	24.32400	.62466	.06033	-.00832	-.01202	-.00261	-.00233	.54436	.31227	1.74320
4.497	1.700	24.33000	.62478	.06033	-.00843	-.01368	-.00292	-.00268	.54444	.31237	1.74290
4.477	1.900	24.33400	.62426	.06020	-.00864	-.01536	-.00325	-.00305	.54399	.31209	1.74310
4.464	2.100	24.34000	.62441	.06033	-.00858	-.01694	-.00358	-.00339	.54404	.31232	1.74200
4.454	2.300	24.34100	.62417	.06031	-.00869	-.01854	-.00392	-.00373	.54383	.31221	1.74190
4.453	2.500	24.34100	.62475	.06038	-.00866	-.02010	-.00430	-.00402	.54433	.31251	1.74180
4.448	2.700	24.34400	.62447	.06040	-.00870	-.02167	-.00464	-.00433	.54405	.31244	1.74130
4.454	2.900	24.35200	.62461	.06043	-.00867	-.02343	-.00501	-.00470	.54412	.31261	1.74060
4.443	3.100	24.35600	.62498	.06059	-.00880	-.02497	-.00529	-.00510	.54437	.31294	1.73950
4.447	3.300	24.36300	.62501	.06061	-.00864	-.02651	-.00564	-.00536	.54435	.31304	1.73890
	GRADIENT	.02029	.00009	-.00007	.00003	-.00718	-.00190	-.00141	.00000	.00016	-.00094

OA257 (LARC 20-M6-6559) OV102 (R7E071) (10 JUL 81)

REFERENCE DATA

SREF = 2690.0000 SQ.FT. XMRP = 1076.6800 IN. XO
LREF = 474.8100 INCHES YMRP = .0000 IN. YO
BREF = 936.6800 INCHES ZMRP = 375.0000 IN. ZO
SCALE = .0100

PARAMETRIC DATA

ALPHA = 25.000 PHI = .000
SPDBRK = .000 AILRON = .000
YP = 1.000 1S = 1.000
ELEVON = .000 MACH = 6.000
S-MODE = 2.000 S-DIR = 1.000

RUN NO. 267/ 0 RN/L = 7.63 GRADIENT INTERVAL = -.60/ .60

RN/L	BETA	ALPHA	CN	CA	CLM	CY	CYN	CBL	CL	CD	L/D
7.686	-4.602	24.14600	.61028	.06056	-.00949	.03516	.00777	.00746	.53211	.30490	1.74520
7.684	-4.500	24.15300	.61050	.06052	-.00947	.03430	.00761	.00728	.53229	.30502	1.74510
7.696	-4.300	24.15700	.61072	.06039	-.00944	.03262	.00729	.00698	.53253	.30503	1.74580
7.696	-4.100	24.16100	.61093	.06035	-.00938	.03113	.00696	.00667	.53271	.30511	1.74600
7.697	-3.900	24.16400	.61150	.06028	-.00933	.02951	.00659	.00637	.53324	.30532	1.74650
7.704	-3.700	24.17000	.61151	.06024	-.00934	.02803	.00624	.00607	.53324	.30534	1.74640
7.707	-3.500	24.18000	.61216	.06022	-.00930	.02654	.00586	.00575	.53379	.30568	1.74630
7.703	-3.300	24.18500	.61253	.06018	-.00930	.02493	.00549	.00545	.53411	.30584	1.74640
7.703	-3.100	24.18800	.61268	.06016	-.00926	.02348	.00513	.00514	.53424	.30591	1.74640
7.690	-2.900	24.19400	.61285	.06015	-.00922	.02188	.00482	.00481	.53436	.30604	1.74610
7.694	-2.700	24.19800	.61304	.06015	-.00921	.02032	.00446	.00451	.53452	.30614	1.74600
7.664	-2.500	24.20100	.61352	.06018	-.00915	.01888	.00411	.00418	.53493	.30640	1.74580
7.644	-2.300	24.20300	.61350	.06017	-.00915	.01733	.00375	.00387	.53491	.30640	1.74580
7.648	-2.100	24.21200	.61398	.06020	-.00905	.01575	.00342	.00355	.53528	.30670	1.74530
7.636	-1.900	24.21900	.61400	.06019	-.00902	.01430	.00309	.00320	.53526	.30677	1.74480
7.626	-1.700	24.22300	.61426	.06023	-.00897	.01259	.00274	.00286	.53547	.30695	1.74450
7.630	-1.500	24.23100	.61466	.06022	-.00900	.01097	.00246	.00250	.53579	.30718	1.74420
7.650	-1.300	24.23800	.61515	.06022	-.00896	.00940	.00218	.00217	.53620	.30744	1.74410
7.639	-1.100	24.24300	.61503	.06020	-.00894	.00779	.00185	.00183	.53607	.30743	1.74370
7.634	-.900	24.24900	.61545	.06023	-.00892	.00625	.00155	.00148	.53642	.30768	1.74340
7.636	-.700	24.25500	.61577	.06032	-.00881	.00468	.00122	.00113	.53663	.30795	1.74260
7.641	-.500	24.26100	.61589	.06029	-.00882	.00310	.00090	.00078	.53672	.30803	1.74240
7.645	-.300	24.27100	.61616	.06028	-.00874	.00156	.00053	.00045	.53692	.30823	1.74190
7.623	-.100	24.27500	.61639	.06026	-.00872	.00006	.00020	.00012	.53712	.30834	1.74200
7.648	.100	24.28200	.61644	.06019	-.00872	-.00139	-.00016	-.00018	.53715	.30837	1.74190
7.654	.300	24.29300	.61692	.06019	-.00867	-.00286	-.00054	-.00048	.53753	.30866	1.74150
7.643	.500	24.29800	.61683	.06011	-.00875	-.00431	-.00088	-.00078	.53745	.30860	1.74160
7.645	.700	24.30100	.61682	.06007	-.00881	-.00576	-.00123	-.00108	.53745	.30859	1.74160
7.629	.900	24.30800	.61718	.06004	-.00892	-.00725	-.00158	-.00140	.53775	.30877	1.74160
7.620	1.100	24.31200	.61726	.06001	-.00894	-.00876	-.00190	-.00173	.53781	.30882	1.74150
7.613	1.300	24.31500	.61752	.05998	-.00903	-.01032	-.00225	-.00206	.53804	.30892	1.74170
7.597	1.500	24.31800	.61752	.05999	-.00905	-.01183	-.00259	-.00238	.53803	.30896	1.74140
7.572	1.700	24.32100	.61738	.05999	-.00919	-.01337	-.00294	-.00271	.53788	.30893	1.74110
7.557	1.900	24.32500	.61778	.05999	-.00917	-.01488	-.00327	-.00303	.53823	.30914	1.74110
7.565	2.100	24.33100	.61774	.06001	-.00918	-.01652	-.00361	-.00336	.53815	.30920	1.74050
7.558	2.300	24.34000	.61782	.06003	-.00912	-.01812	-.00395	-.00370	.53817	.30932	1.73980
7.554	2.500	24.34500	.61798	.06007	-.00919	-.01972	-.00428	-.00404	.53826	.30947	1.73930
7.539	2.700	24.34700	.61815	.06010	-.00932	-.02141	-.00460	-.00437	.53840	.30959	1.73910
7.547	2.900	24.35300	.61829	.06012	-.00933	-.02296	-.00491	-.00469	.53848	.30973	1.73850
7.563	3.100	24.36300	.61839	.06016	-.00934	-.02457	-.00527	-.00502	.53851	.30990	1.73770
7.552	3.300	24.36700	.61869	.06023	-.00941	-.02619	-.00559	-.00535	.53873	.31013	1.73710
7.553	3.500	24.36800	.61844	.06029	-.00946	-.02784	-.00594	-.00570	.53847	.31008	1.73650

OA257 (LARC 20-M6-6559) OV102 (R7E071) (10 JUL 81)

REFERENCE DATA

SREF =	2690.0000 SQ.FT.	XMRP =	1076.6800 IN. XO		
LREF =	474.8100 INCHES	YMRP =	.0000 IN. YO		
BREF =	936.6800 INCHES	ZMRP =	375.0000 IN. ZO		
SCALE =	.0100				

PARAMETRIC DATA

ALPHA =	25.000	PHI =	.000
SPDBRK =	.000	AILRON =	.000
YP =	1.000	1S =	1.000
ELEVON =	.000	MACH =	6.000
S-MODE =	2.000	S-DIR =	1.000

RUN NO. 267/ 0 RN/L = 7.63 GRADIENT INTERVAL = -.60/ .60

RN/L	BETA	ALPHA	CN	CA	CLM	CY	CYN	CBL	CL	CD	L/D
7.560	3.700	24.37500	.61893	.06036	-.00951	-.02940	-.00624	-.00601	.53885	.31042	1.73590
	GRADIENT	.03686	.00100	-.00018	.00008	-.00739	-.00178	-.00156	.00079	.00060	-.00076

OA257 (LARC 20-M6-6559) OV102 (R7E171) (10 JUL 81)

REFERENCE DATA

SREF = 2690.0000 SQ.FT. XMRP = 1076.6800 IN. XO
LREF = 474.8100 INCHES YMRP = .0000 IN. YO
BREF = 936.6800 INCHES ZMRP = 375.0000 IN. ZO
SCALE = .0100

PARAMETRIC DATA

ALPHA = 25.000 PHI = .000
SPDBRK = .000 AILRON = .000
YP = 1.000 1S = 1.000
ELEVON = .000 MACH = 6.000
S-MODE = 2.000 S-DIR = 1.000

RUN NO. 2281/ 0 RN/L = 2.23 GRADIENT INTERVAL = -.60/ .60

RN/L	BETA	ALPHA	CN	CA	CLM	CY	CYN	CBL	CL	CD	L/D
2.230	-4.500	24.43700	.62923	.06236	-.00680	.03587	.00785	.00770	.54706	.31708	1.72530
2.232	-4.300	24.44100	.62926	.06222	-.00688	.03397	.00755	.00732	.54713	.31700	1.72600
2.233	-4.100	24.43700	.62957	.06216	-.00679	.03231	.00724	.00697	.54746	.31703	1.72680
2.229	-3.900	24.44000	.63043	.06211	-.00683	.03066	.00690	.00665	.54824	.31738	1.72740
2.231	-3.700	24.44800	.63020	.06199	-.00694	.02893	.00654	.00631	.54803	.31726	1.72740
2.233	-3.500	24.45800	.63082	.06194	-.00688	.02740	.00619	.00598	.54857	.31755	1.72750
2.229	-3.300	24.46100	.62995	.06180	-.00667	.02567	.00581	.00566	.54781	.31710	1.72760
2.227	-3.100	24.46800	.62916	.06174	-.00673	.02418	.00547	.00534	.54709	.31679	1.72700
2.229	-2.900	24.47300	.63257	.06170	-.00670	.02258	.00507	.00500	.55018	.31821	1.72900
2.233	-2.700	24.47100	.63114	.06172	-.00668	.02109	.00471	.00468	.54888	.31761	1.72820
2.234	-2.500	24.47200	.63053	.06156	-.00666	.01952	.00436	.00435	.54839	.31723	1.72870
2.231	-2.300	24.47800	.63194	.06161	-.00670	.01789	.00399	.00404	.54961	.31791	1.72880
2.229	-2.100	24.48600	.63301	.06158	-.00661	.01645	.00366	.00370	.55055	.31841	1.72910
2.228	-1.900	24.49700	.63290	.06152	-.00656	.01472	.00331	.00336	.55042	.31841	1.72870
2.227	-1.700	24.50600	.63388	.06154	-.00642	.01327	.00293	.00306	.55125	.31892	1.72850
2.222	-1.500	24.51100	.63343	.06146	-.00647	.01159	.00254	.00273	.55085	.31871	1.72840
2.223	-1.300	24.51100	.63428	.06144	-.00645	.01018	.00216	.00241	.55162	.31904	1.72900
2.226	-1.100	24.51700	.63338	.06154	-.00655	.00866	.00180	.00206	.55074	.31881	1.72750
2.228	-.900	24.52400	.63523	.06150	-.00659	.00717	.00149	.00170	.55240	.31962	1.72830
2.228	-.700	24.53100	.63522	.06147	-.00655	.00540	.00121	.00134	.55236	.31966	1.72800
2.227	-.500	24.54400	.63477	.06142	-.00636	.00373	.00092	.00099	.55190	.31954	1.72710
2.231	-.300	24.54900	.63365	.06143	-.00625	.00223	.00060	.00064	.55085	.31914	1.72600
2.230	-.100	24.55400	.63458	.06144	-.00604	.00056	.00024	.00032	.55166	.31959	1.72620
2.226	.100	24.55900	.63453	.06148	-.00597	-.00095	-.00013	-.00000	.55157	.31965	1.72550
2.229	.300	24.56100	.63527	.06157	-.00604	-.00238	-.00047	-.00031	.55220	.32005	1.72530
2.234	.500	24.56500	.63571	.06158	-.00620	-.00391	-.00086	-.00064	.55257	.32029	1.72520
2.230	.700	24.57300	.63609	.06144	-.00648	-.00539	-.00120	-.00097	.55293	.32040	1.72580
2.228	.900	24.58100	.63549	.06142	-.00659	-.00693	-.00146	-.00134	.55234	.32020	1.72500
2.226	1.100	24.59200	.63621	.06127	-.00667	-.00869	-.00182	-.00167	.55300	.32047	1.72560
2.224	1.300	24.59600	.63668	.06125	-.00666	-.01008	-.00217	-.00200	.55342	.32069	1.72570
2.221	1.500	24.59900	.63493	.06128	-.00677	-.01179	-.00256	-.00236	.55180	.32001	1.72430
2.224	1.700	24.60300	.63632	.06140	-.00681	-.01319	-.00292	-.00269	.55299	.32075	1.72400
2.226	1.900	24.60500	.63596	.06142	-.00705	-.01473	-.00333	-.00301	.55264	.32063	1.72360
2.223	2.100	24.61200	.63727	.06155	-.00716	-.01632	-.00370	-.00334	.55374	.32136	1.72310
2.220	2.300	24.62300	.63699	.06157	-.00712	-.01783	-.00403	-.00367	.55342	.32137	1.72200
2.218	2.500	24.63000	.63716	.06160	-.00709	-.01951	-.00442	-.00401	.55351	.32154	1.72150
2.215	2.700	24.63600	.63702	.06158	-.00709	-.02110	-.00479	-.00432	.55337	.32151	1.72110
2.213	2.900	24.64100	.63793	.06177	-.00711	-.02280	-.00514	-.00466	.55408	.32211	1.72010
2.217	3.100	24.64300	.63718	.06191	-.00715	-.02438	-.00546	-.00500	.55333	.32196	1.71860
2.217	3.269	24.64900	.63753	.06194	-.00730	-.02578	-.00576	-.00529	.55361	.32219	1.71830
	GRADIENT	.02086	.00136	.00018	.00021	-.00765	-.00178	-.00162	.00104	.00093	-.00176

OA257 (LARC 20-M6-6559) OV102 (R7E171) (10 JUL 81)

REFERENCE DATA

SREF = 2690.0000 SQ.FT. XMRP = 1076.6800 IN. XO
LREF = 474.8100 INCHES YMRP = .0000 IN. YO
BREF = 936.6800 INCHES ZMRP = 375.0000 IN. ZO
SCALE = .0100

PARAMETRIC DATA

ALPHA = 25.000 PHI = .000
SPDBRK = .000 AILRON = .000
YP = 1.000 1S = 1.000
ELEVON = .000 MACH = 6.000
S-MODE = 2.000 S-DIR = 1.000

RUN NO. 2234/ 0 RN/L = 4.49 GRADIENT INTERVAL = -.60/ .60

RN/L	BETA	ALPHA	CN	CA	CLM	CY	CYN	CBL	CL	CD	L/D
4.546	-4.600	24.15500	.61764	.06115	-.00865	.03616	.00751	.00751	.53854	.30853	1.74550
4.544	-4.400	24.15700	.61758	.06094	-.00862	.03447	.00718	.00721	.53856	.30834	1.74670
4.542	-4.200	24.16000	.61817	.06102	-.00852	.03300	.00688	.00690	.53904	.30868	1.74630
4.546	-4.000	24.16600	.61863	.06092	-.00853	.03129	.00651	.00664	.53948	.30884	1.74680
4.541	-3.800	24.17100	.61898	.06080	-.00848	.02973	.00620	.00625	.53982	.30892	1.74740
4.552	-3.600	24.17800	.61871	.06066	-.00855	.02803	.00579	.00604	.53959	.30875	1.74770
4.543	-3.400	24.18300	.61932	.06064	-.00851	.02656	.00548	.00568	.54013	.30902	1.74790
4.533	-3.200	24.18800	.61926	.06054	-.00851	.02494	.00510	.00539	.54009	.30896	1.74810
4.524	-3.000	24.19600	.61995	.06049	-.00834	.02332	.00477	.00503	.54069	.30927	1.74830
4.528	-2.800	24.19500	.62023	.06047	-.00829	.02176	.00442	.00470	.54096	.30936	1.74860
4.534	-2.600	24.19700	.62084	.06049	-.00815	.02017	.00409	.00434	.54151	.30964	1.74880
4.519	-2.400	24.20000	.62055	.06043	-.00833	.01868	.00374	.00405	.54125	.30950	1.74880
4.500	-2.200	24.20600	.62106	.06043	-.00820	.01709	.00341	.00369	.54168	.30976	1.74870
4.483	-2.000	24.21100	.62097	.06041	-.00817	.01543	.00309	.00333	.54158	.30976	1.74840
4.480	-1.800	24.21600	.62141	.06039	-.00823	.01378	.00273	.00304	.54195	.30997	1.74840
4.478	-1.600	24.22400	.62127	.06048	-.00809	.01216	.00244	.00270	.54175	.31006	1.74730
4.483	-1.400	24.23000	.62190	.06041	-.00802	.01046	.00214	.00232	.54232	.31032	1.74760
4.473	-1.200	24.23600	.62113	.06037	-.00811	.00901	.00186	.00207	.54160	.31002	1.74700
4.466	-1.000	24.24600	.62181	.06048	-.00804	.00719	.00159	.00164	.54213	.31050	1.74600
4.468	-.800	24.25400	.62151	.06045	-.00807	.00564	.00132	.00130	.54182	.31042	1.74540
4.471	-.600	24.25900	.62255	.06052	-.00807	.00390	.00104	.00095	.54271	.31096	1.74520
4.473	-.400	24.26800	.62302	.06058	-.00792	.00218	.00076	.00054	.54307	.31129	1.74460
4.472	-.200	24.27000	.62273	.06059	-.00797	.00075	.00040	.00027	.54279	.31120	1.74420
4.469	.000	24.27200	.62289	.06062	-.00800	-.00066	.00000	-.00000	.54291	.31131	1.74390
4.472	.200	24.27700	.62312	.06067	-.00796	-.00202	-.00043	-.00024	.54307	.31150	1.74340
4.485	.400	24.28200	.62284	.06053	-.00801	-.00342	-.00075	-.00054	.54285	.31130	1.74380
4.485	.600	24.28700	.62337	.06044	-.00808	-.00503	-.00113	-.00090	.54334	.31150	1.74430
4.477	.800	24.29300	.62301	.06043	-.00828	-.00644	-.00147	-.00114	.54298	.31139	1.74370
4.488	1.000	24.30100	.62352	.06030	-.00828	-.00806	-.00181	-.00151	.54346	.31156	1.74430
4.484	1.200	24.31300	.62421	.06027	-.00836	-.00960	-.00210	-.00184	.54403	.31192	1.74420
4.485	1.400	24.31900	.62475	.06035	-.00839	-.01131	-.00242	-.00223	.54445	.31228	1.74350
4.500	1.600	24.32700	.62476	.06034	-.00845	-.01281	-.00276	-.00253	.54443	.31235	1.74300
4.488	1.800	24.33200	.62442	.06022	-.00854	-.01453	-.00310	-.00282	.54414	.31214	1.74320
4.470	2.000	24.33700	.62444	.06023	-.00862	-.01618	-.00342	-.00321	.54413	.31221	1.74280
4.458	2.200	24.34000	.62386	.06031	-.00863	-.01768	-.00375	-.00353	.54356	.31207	1.74180
4.452	2.400	24.34200	.62450	.06032	-.00866	-.01934	-.00409	-.00392	.54412	.31237	1.74190
4.451	2.600	24.34100	.62453	.06035	-.00866	-.02086	-.00447	-.00417	.54414	.31240	1.74180
4.453	2.800	24.34800	.62459	.06038	-.00873	-.02251	-.00482	-.00447	.54414	.31251	1.74120
4.447	3.000	24.35200	.62496	.06050	-.00880	-.02418	-.00515	-.00490	.54440	.31282	1.74030
4.448	3.200	24.35800	.62489	.06063	-.00875	-.02577	-.00546	-.00522	.54426	.31296	1.73910
	GRADIENT	.02125	.00044	-.00004	-.00004	-.00728	-.00185	-.00147	.00031	.00035	-.00091

OA257 (LARC 20-M6-6559) OV102 (R7E171) (10 JUL 81)

REFERENCE DATA

SREF = 2690.0000 SQ.FT. XMRP = 1076.6800 IN. XO
LREF = 474.8100 INCHES YMRP = .0000 IN. YO
BREF = 936.6800 INCHES ZMRP = 375.0000 IN. ZO
SCALE = .0100

PARAMETRIC DATA

ALPHA = 25.000 PHI = .000
SPDBRK = .000 AILRON = .000
YP = 1.000 1S = 1.000
ELEVON = .000 MACH = 6.000
S-MODE = 2.000 S-DIR = 1.000

RUN NO. 2267/ O RN/L = 7.63 GRADIENT INTERVAL = -.60/ .60

RN/L	BETA	ALPHA	CN	CA	CLM	CY	CYN	CBL	CL	CD	L/D
7.685	-4.600	24.14600	.61027	.06056	-.00949	.03514	.00777	.00745	.53211	.30491	1.74510
7.701	-4.400	24.15500	.61058	.06047	-.00946	.03342	.00744	.00713	.53237	.30502	1.74530
7.699	-4.200	24.15800	.61102	.06039	-.00943	.03185	.00712	.00682	.53280	.30516	1.74590
7.697	-4.000	24.16300	.61140	.06033	-.00935	.03034	.00679	.00653	.53313	.30531	1.74620
7.700	-3.800	24.16600	.61152	.06026	-.00933	.02886	.00643	.00622	.53326	.30532	1.74660
7.702	-3.600	24.17400	.61157	.06022	-.00933	.02723	.00603	.00591	.53327	.30538	1.74620
7.696	-3.400	24.18300	.61237	.06023	-.00931	.02576	.00568	.00561	.53396	.30581	1.74600
7.700	-3.200	24.18600	.61235	.06015	-.00930	.02420	.00531	.00529	.53395	.30575	1.74640
7.703	-3.000	24.19300	.61301	.06016	-.00921	.02275	.00497	.00498	.53451	.30609	1.74620
7.689	-2.800	24.19200	.61300	.06015	-.00923	.02107	.00462	.00466	.53451	.30608	1.74630
7.679	-2.600	24.19800	.61323	.06017	-.00916	.01964	.00430	.00435	.53469	.30625	1.74590
7.657	-2.400	24.20400	.61346	.06014	-.00916	.01808	.00394	.00403	.53488	.30637	1.74590
7.644	-2.200	24.20700	.61405	.06021	-.00912	.01660	.00359	.00372	.53537	.30670	1.74560
7.645	-2.000	24.21700	.61408	.06021	-.00903	.01501	.00325	.00338	.53534	.30681	1.74490
7.628	-1.800	24.22100	.61429	.06021	-.00901	.01349	.00292	.00303	.53552	.30692	1.74480
7.623	-1.600	24.22600	.61439	.06021	-.00899	.01179	.00261	.00268	.53558	.30701	1.74450
7.644	-1.400	24.23400	.61478	.06023	-.00900	.01019	.00230	.00233	.53589	.30727	1.74400
7.645	-1.200	24.24000	.61501	.06022	-.00897	.00860	.00202	.00199	.53607	.30741	1.74380
7.634	-1.000	24.24600	.61527	.06021	-.00892	.00706	.00171	.00165	.53628	.30756	1.74360
7.634	-.800	24.25100	.61557	.06022	-.00892	.00547	.00139	.00130	.53651	.30775	1.74340
7.642	-.600	24.25900	.61588	.06031	-.00883	.00389	.00105	.00096	.53671	.30803	1.74240
7.639	-.400	24.26500	.61616	.06031	-.00879	.00231	.00073	.00062	.53694	.30820	1.74220
7.635	-.200	24.27200	.61604	.06025	-.00873	.00083	.00038	.00028	.53681	.30817	1.74200
7.636	.000	24.27900	.61627	.06024	-.00872	-.00065	.00001	-.00002	.53700	.30831	1.74170
7.643	.200	24.28500	.61676	.06017	-.00870	-.00215	-.00035	-.00033	.53744	.30851	1.74210
7.655	.400	24.29600	.61676	.06013	-.00869	-.00353	-.00070	-.00063	.53740	.30857	1.74160
7.637	.600	24.29900	.61672	.06008	-.00880	-.00507	-.00106	-.00092	.53736	.30853	1.74170
7.640	.800	24.30500	.61682	.06003	-.00889	-.00653	-.00140	-.00125	.53744	.30858	1.74170
7.626	1.000	24.31000	.61724	.06003	-.00893	-.00798	-.00173	-.00157	.53779	.30881	1.74150
7.610	1.200	24.31400	.61735	.05999	-.00901	-.00955	-.00208	-.00190	.53789	.30885	1.74160
7.609	1.400	24.31900	.61743	.05997	-.00899	-.01109	-.00242	-.00222	.53794	.30892	1.74140
7.585	1.600	24.32000	.61749	.06002	-.00914	-.01261	-.00277	-.00255	.53798	.30899	1.74110
7.557	1.800	24.32100	.61764	.06000	-.00917	-.01415	-.00311	-.00287	.53811	.30905	1.74120
7.558	2.000	24.32900	.61764	.05999	-.00913	-.01568	-.00343	-.00320	.53807	.30912	1.74070
7.571	2.200	24.33700	.61780	.06000	-.00916	-.01733	-.00379	-.00353	.53817	.30926	1.74020
7.552	2.400	24.34100	.61787	.06008	-.00918	-.01891	-.00412	-.00387	.53819	.30940	1.73940
7.551	2.600	24.34600	.61829	.06006	-.00929	-.02059	-.00443	-.00421	.53854	.30961	1.73940
7.538	2.800	24.34900	.61819	.06013	-.00933	-.02218	-.00476	-.00454	.53841	.30966	1.73870
7.562	3.000	24.35900	.61846	.06017	-.00932	-.02378	-.00509	-.00485	.53859	.30990	1.73800
7.547	3.200	24.36100	.61853	.06020	-.00935	-.02535	-.00543	-.00519	.53862	.30998	1.73760
7.553	3.400	24.36800	.61858	.06026	-.00947	-.02704	-.00577	-.00551	.53862	.31011	1.73680
7.553	3.600	24.36900	.61873	.06035	-.00950	-.02852	-.00607	-.00584	.53870	.31027	1.73620

OA257 (LARC 20-M6-6559) DV102 (R7E171) (10 JUL 81)

REFERENCE DATA

SREF =	2690.0000 SQ.FT.	XMRP =	1076.6800 IN. XO		
LREF =	474.8100 INCHES	YMRP =	.0000 IN. YO		
BREF =	936.6800 INCHES	ZMRP =	375.0000 IN. ZO		
SCALE =	.0100				

PARAMETRIC DATA

ALPHA =	25.000	PHI =	.000
SPDBRK =	.000	AILRON =	.000
YP =	1.000	1S =	1.000
ELEVON =	.000	MACH =	6.000
S-MODE =	2.000	S-DIR =	1.000

RUN NO. 2267/ O RN/L = 7.63 GRADIENT INTERVAL = -.60/ .60

RN/L	BETA	ALPHA	CN	CA	CLM	CY	CYN	CBL	CL	CD	L/D
7.576	3.800	24.37600	.61855	.06047	-.00958	-.03001	-.00635	-.00615	.53845	.31037	1.73480
	GRADIENT	.03482	.00079	-.00020	.00006	-.00742	-.00177	-.00156	.00063	.00046	-.00057

OA257 (LARC 20-M6-6559) OV102 (R7E072) (10 JUL 81)

REFERENCE DATA

SREF = 2690.0000 SQ.FT. XMRP = 1076.6800 IN. XO
LREF = 474.8100 INCHES YMRP = .0000 IN. YO
BREF = 936.6800 INCHES ZMRP = 375.0000 IN. ZO
SCALE = .0100

PARAMETRIC DATA

ALPHA = 27.500 PHI = .000
SPDBRK = .000 AILRON = .000
YP = 1.000 1S = 1.000
ELEVON = .000 MACH = 6.000
S-MODE = 2.000 S-DIR = 1.000

RUN NO. 280/ 0 RN/L = 2.24 GRADIENT INTERVAL = -.60/ .60

RN/L	BETA	ALPHA	CN	CA	CLM	CY	CYN	CBL	CL	CD	L/D
2.241	-4.439	26.94700	.73865	.06203	-.00988	.03541	.00833	.00822	.63034	.39003	1.61610
2.238	-4.300	26.95600	.73991	.06208	-.00996	.03431	.00810	.00798	.63138	.39075	1.61580
2.240	-4.100	26.95600	.73970	.06209	-.01010	.03263	.00772	.00761	.63119	.39065	1.61570
2.240	-3.900	26.96100	.73985	.06202	-.01011	.03108	.00737	.00724	.63132	.39071	1.61580
2.239	-3.700	26.96900	.74090	.06208	-.01025	.02943	.00704	.00685	.63218	.39133	1.61540
2.238	-3.500	26.97800	.74149	.06206	-.01024	.02778	.00672	.00646	.63265	.39168	1.61520
2.239	-3.300	26.98400	.74156	.06200	-.01028	.02602	.00637	.00609	.63270	.39173	1.61520
2.243	-3.100	26.99000	.74268	.06189	-.01031	.02445	.00601	.00573	.63371	.39220	1.61580
2.237	-2.900	26.99500	.74259	.06200	-.01030	.02292	.00564	.00536	.63353	.39232	1.61490
2.235	-2.700	26.99600	.74256	.06196	-.01032	.02126	.00530	.00497	.63352	.39227	1.61500
2.235	-2.500	26.99700	.74360	.06194	-.01034	.01958	.00495	.00459	.63446	.39275	1.61540
2.236	-2.300	27.00300	.74367	.06194	-.01043	.01797	.00460	.00423	.63447	.39284	1.61510
2.237	-2.100	27.00900	.74253	.06182	-.01060	.01647	.00431	.00384	.63348	.39229	1.61480
2.234	-1.900	27.02200	.74488	.06175	-.01053	.01467	.00397	.00346	.63551	.39343	1.61530
2.233	-1.700	27.03500	.74522	.06176	-.01050	.01310	.00364	.00309	.63572	.39373	1.61460
2.235	-1.500	27.04200	.74549	.06154	-.01042	.01149	.00329	.00273	.63601	.39375	1.61520
2.234	-1.300	27.04400	.74523	.06152	-.01039	.00984	.00294	.00237	.63577	.39363	1.61520
2.234	-1.100	27.04700	.74631	.06149	-.01043	.00828	.00256	.00203	.63673	.39412	1.61550
2.240	-.900	27.05100	.74749	.06145	-.01058	.00678	.00219	.00169	.63777	.39468	1.61590
2.240	-.700	27.05700	.74734	.06137	-.01057	.00528	.00181	.00137	.63763	.39460	1.61590
2.242	-.500	27.06500	.74767	.06128	-.01079	.00383	.00141	.00104	.63791	.39475	1.61600
2.240	-.300	27.07700	.74691	.06117	-.01064	.00249	.00100	.00072	.63720	.39445	1.61540
2.238	-.100	27.08700	.74832	.06103	-.01062	.00110	.00055	.00041	.63845	.39509	1.61600
2.238	.100	27.09200	.74751	.06089	-.01052	-.00028	.00013	.00006	.63776	.39464	1.61600
2.238	.300	27.10000	.74836	.06086	-.01028	-.00168	-.00029	-.00026	.63848	.39509	1.61600
2.239	.500	27.10100	.74733	.06081	-.01015	-.00304	-.00070	-.00061	.63757	.39458	1.61580
2.240	.700	27.10700	.75005	.06088	-.01009	-.00449	-.00112	-.00096	.63993	.39595	1.61620
2.239	.900	27.10800	.74859	.06091	-.01010	-.00588	-.00154	-.00129	.63860	.39532	1.61540
2.242	1.100	27.11500	.74729	.06091	-.01011	-.00745	-.00196	-.00161	.63740	.39481	1.61450
2.249	1.300	27.12700	.74899	.06103	-.00993	-.00886	-.00236	-.00192	.63877	.39583	1.61370
2.249	1.500	27.13800	.74823	.06092	-.00989	-.01036	-.00271	-.00226	.63807	.39551	1.61330
2.248	1.700	27.14400	.74765	.06100	-.00985	-.01183	-.00311	-.00260	.63748	.39538	1.61230
2.247	1.900	27.15100	.74954	.06104	-.00978	-.01356	-.00349	-.00293	.63909	.39636	1.61240
2.244	2.100	27.15500	.74880	.06099	-.00961	-.01518	-.00383	-.00333	.63843	.39602	1.61210
2.239	2.300	27.15700	.74944	.06120	-.00966	-.01680	-.00416	-.00370	.63889	.39653	1.61120
2.237	2.500	27.16000	.75006	.06128	-.00984	-.01860	-.00449	-.00409	.63938	.39692	1.61090
2.235	2.700	27.16600	.75017	.06140	-.00988	-.02011	-.00483	-.00450	.63938	.39713	1.61000
2.235	2.900	27.17700	.74977	.06135	-.00994	-.02176	-.00521	-.00488	.63898	.39702	1.60940
2.231	3.100	27.18600	.75053	.06150	-.00986	-.02338	-.00555	-.00523	.63952	.39761	1.60840
2.230	3.300	27.19200	.75078	.06158	-.00972	-.02504	-.00587	-.00563	.63966	.39786	1.60780
	GRADIENT	.03629	.00026	-.00049	.00062	-.00689	-.00212	-.00165	.00021	.00009	.00011

OA257 (LARC 20-M6-6559) OV102 (R7E072) (10 JUL 81)

REFERENCE DATA

SREF = 2690.0000 SQ.FT. XMRP = 1076.6800 IN. XO
LREF = 474.8100 INCHES YMRP = .0000 IN. YO
BREF = 936.6800 INCHES ZMRP = 375.0000 IN. ZO
SCALE = .0100

PARAMETRIC DATA

ALPHA = 27.500 PHI = .000
SPDBRK = .000 AILRON = .000
YP = 1.000 1S = 1.000
ELEVON = .000 MACH = 6.000
S-MODE = 2.000 S-DIR = 1.000

RUN NO. 266/ 0 RN/L = 7.66 GRADIENT INTERVAL = -.60/ .60

RN/L	BETA	ALPHA	CN	CA	CLM	CY	CYN	CBL	CL	CD	L/D
7.710	-4.483	26.51400	.70312	.06088	-.01150	.03397	.00789	.00782	.60199	.36836	1.63420
7.707	-4.300	26.51900	.70333	.06065	-.01148	.03252	.00760	.00750	.60225	.36830	1.63520
7.707	-4.100	26.52300	.70363	.06063	-.01141	.03091	.00727	.00714	.60250	.36846	1.63520
7.695	-3.900	26.52700	.70409	.06051	-.01144	.02933	.00693	.00680	.60294	.36860	1.63570
7.689	-3.700	26.53500	.70439	.06049	-.01141	.02780	.00658	.00647	.60316	.36880	1.63550
7.686	-3.500	26.54200	.70482	.06048	-.01138	.02622	.00623	.00612	.60351	.36906	1.63530
7.677	-3.300	26.54500	.70537	.06048	-.01138	.02471	.00588	.00579	.60398	.36934	1.63530
7.687	-3.100	26.55600	.70556	.06044	-.01137	.02322	.00552	.00544	.60409	.36951	1.63490
7.702	-2.900	26.56500	.70621	.06045	-.01134	.02167	.00516	.00510	.60462	.36989	1.63460
7.694	-2.700	26.57000	.70671	.06044	-.01129	.02011	.00482	.00475	.60504	.37016	1.63450
7.703	-2.500	26.57500	.70700	.06047	-.01133	.01865	.00448	.00441	.60525	.37037	1.63420
7.708	-2.300	26.58700	.70753	.06046	-.01126	.01712	.00414	.00406	.60565	.37073	1.63370
7.675	-2.100	26.59000	.70793	.06044	-.01121	.01566	.00380	.00374	.60600	.37093	1.63370
7.682	-1.900	26.59800	.70823	.06042	-.01120	.01408	.00344	.00341	.60622	.37112	1.63350
7.671	-1.700	26.60300	.70852	.06039	-.01115	.01263	.00308	.00308	.60647	.37128	1.63350
7.684	-1.500	26.61300	.70871	.06037	-.01113	.01105	.00272	.00273	.60658	.37145	1.63300
7.664	-1.300	26.61500	.70906	.06038	-.01106	.00960	.00237	.00240	.60687	.37164	1.63300
7.666	-1.100	26.62400	.70912	.06038	-.01097	.00813	.00200	.00208	.60687	.37177	1.63240
7.649	-.900	26.62600	.70922	.06040	-.01095	.00661	.00164	.00172	.60694	.37185	1.63220
7.650	-.700	26.63000	.70972	.06044	-.01090	.00514	.00127	.00139	.60734	.37214	1.63200
7.626	-.500	26.63400	.70961	.06041	-.01086	.00362	.00094	.00101	.60723	.37211	1.63190
7.627	-.300	26.64200	.71002	.06040	-.01083	.00206	.00060	.00065	.60755	.37236	1.63160
7.611	-.100	26.64600	.71027	.06043	-.01081	.00051	.00030	.00025	.60773	.37255	1.63130
7.601	.100	26.65100	.71040	.06038	-.01084	-.00099	-.00003	-.00010	.60784	.37262	1.63130
7.624	.300	26.66200	.71073	.06040	-.01087	-.00249	-.00037	-.00046	.60806	.37290	1.63060
7.610	.500	26.66800	.71080	.06042	-.01086	-.00390	-.00072	-.00079	.60807	.37300	1.63020
7.622	.700	26.67700	.71106	.06036	-.01089	-.00540	-.00109	-.00115	.60827	.37317	1.63000
7.621	.900	26.68400	.71129	.06036	-.01095	-.00684	-.00143	-.00149	.60843	.37335	1.62960
7.629	1.100	26.69300	.71146	.06034	-.01100	-.00833	-.00179	-.00184	.60853	.37351	1.62920
7.624	1.300	26.69200	.71149	.06032	-.01101	-.00977	-.00213	-.00218	.60857	.37349	1.62940
7.636	1.500	26.70200	.71221	.06035	-.01115	-.01130	-.00251	-.00252	.60914	.37395	1.62890
7.650	1.700	26.70600	.71215	.06030	-.01126	-.01279	-.00288	-.00286	.60908	.37392	1.62890
7.666	1.900	26.71600	.71220	.06030	-.01130	-.01426	-.00323	-.00318	.60906	.37404	1.62830
7.663	2.100	26.72000	.71248	.06030	-.01139	-.01590	-.00358	-.00353	.60929	.37421	1.62820
7.640	2.300	26.72200	.71262	.06034	-.01143	-.01739	-.00393	-.00390	.60938	.37434	1.62790
7.642	2.500	26.73200	.71272	.06032	-.01147	-.01894	-.00428	-.00424	.60941	.37446	1.62740
7.650	2.700	26.73400	.71297	.06035	-.01150	-.02052	-.00464	-.00459	.60961	.37463	1.62720
7.647	2.900	26.74100	.71285	.06031	-.01150	-.02206	-.00502	-.00497	.60947	.37462	1.62690
7.641	3.100	26.74700	.71286	.06033	-.01155	-.02353	-.00538	-.00532	.60943	.37470	1.62640
7.645	3.300	26.75300	.71258	.06045	-.01161	-.02513	-.00572	-.00568	.60910	.37474	1.62540
7.652	3.500	26.76100	.71308	.06068	-.01169	-.02656	-.00601	-.00601	.60939	.37526	1.62390
7.632	3.700	26.76600	.71340	.06101	-.01175	-.02820	-.00635	-.00637	.60948	.37575	1.62200
	GRADIENT	.03357	.00117	-.00000	-.00002	-.00754	-.00165	-.00181	.00083	.00088	-.00164

OA257 (LARC 20-M6-6559) OV102 (R7E172) (10 JUL 81)

REFERENCE DATA

SREF = 2690.0000 SQ.FT. XMRP = 1076.6800 IN. XO
LREF = 474.8100 INCHES YMRP = .0000 IN. YO
BREF = 936.6800 INCHES ZMRP = 375.0000 IN. ZO
SCALE = .0100

PARAMETRIC DATA

ALPHA = 27.500 PHI = .000
SPDBRK = .000 AILRON = .000
YP = 1.000 1S = 1.000
ELEVON = .000 MACH = 6.000
S-MODE = 2.000 S-DIR = 1.000

RUN NO. 2280/ 0 RN/L = 2.24 GRADIENT INTERVAL = -.60/ .60

RN/L	BETA	ALPHA	CN	CA	CLM	CY	CYN	CBL	CL	CD	L/D
2.241	-4.400	26.94900	.73794	.06212	-.00985	.03509	.00828	.00817	.62965	.38980	1.61530
2.238	-4.200	26.95500	.73962	.06212	-.01006	.03345	.00791	.00779	.63111	.39063	1.61560
2.241	-4.000	26.96100	.74060	.06205	-.01014	.03198	.00756	.00742	.63198	.39107	1.61600
2.239	-3.800	26.96200	.74078	.06208	-.01017	.03024	.00721	.00705	.63212	.39120	1.61580
2.239	-3.600	26.97400	.74102	.06206	-.01025	.02857	.00687	.00666	.63226	.39143	1.61520
2.238	-3.400	26.98100	.74256	.06200	-.01022	.02693	.00656	.00628	.63360	.39215	1.61570
2.242	-3.200	26.98700	.74142	.06199	-.01034	.02527	.00619	.00591	.63256	.39168	1.61500
2.240	-3.000	26.99300	.74147	.06195	-.01027	.02360	.00583	.00555	.63258	.39175	1.61470
2.235	-2.800	26.99400	.74199	.06195	-.01044	.02207	.00547	.00516	.63303	.39199	1.61490
2.236	-2.600	26.99800	.74338	.06197	-.01032	.02045	.00511	.00478	.63424	.39269	1.61510
2.236	-2.400	27.00000	.74420	.06194	-.01042	.01883	.00476	.00442	.63496	.39305	1.61550
2.237	-2.200	27.00900	.74349	.06192	-.01052	.01719	.00445	.00403	.63428	.39281	1.61470
2.235	-2.000	27.01400	.74443	.06177	-.01056	.01562	.00415	.00366	.63515	.39316	1.61550
2.234	-1.800	27.03000	.74468	.06172	-.01052	.01392	.00381	.00327	.63529	.39340	1.61490
2.235	-1.600	27.03700	.74467	.06162	-.01045	.01220	.00345	.00291	.63527	.39339	1.61490
2.234	-1.400	27.04500	.74568	.06149	-.01045	.01059	.00312	.00255	.63618	.39382	1.61540
2.234	-1.200	27.04300	.74659	.06150	-.01038	.00911	.00278	.00220	.63700	.39423	1.61580
2.237	-1.000	27.04700	.74675	.06147	-.01051	.00748	.00238	.00184	.63713	.39431	1.61580
2.240	-.800	27.05400	.74704	.06140	-.01060	.00596	.00200	.00153	.63737	.39445	1.61580
2.241	-.600	27.06000	.74751	.06140	-.01065	.00463	.00163	.00119	.63775	.39474	1.61560
2.242	-.400	27.06900	.74804	.06125	-.01071	.00311	.00119	.00088	.63822	.39495	1.61600
2.239	-.200	27.08200	.74657	.06105	-.01066	.00180	.00076	.00056	.63692	.39424	1.61560
2.238	.000	27.09000	.74792	.06093	-.01057	.00045	.00033	.00025	.63812	.39485	1.61610
2.238	.200	27.09600	.74770	.06085	-.01043	-.00095	-.00007	-.00010	.63791	.39474	1.61600
2.238	.400	27.10100	.74872	.06078	-.01020	-.00235	-.00049	-.00044	.63883	.39519	1.61650
2.241	.600	27.10200	.74822	.06085	-.01006	-.00374	-.00092	-.00079	.63834	.39504	1.61590
2.239	.800	27.10500	.74754	.06087	-.01008	-.00517	-.00133	-.00113	.63770	.39478	1.61530
2.240	1.000	27.11200	.74887	.06087	-.01009	-.00668	-.00176	-.00146	.63884	.39547	1.61540
2.245	1.200	27.12200	.74934	.06100	-.01005	-.00814	-.00215	-.00176	.63913	.39591	1.61440
2.250	1.400	27.13400	.74868	.06089	-.00992	-.00961	-.00254	-.00209	.63852	.39564	1.61390
2.247	1.600	27.14100	.74878	.06100	-.00987	-.01115	-.00292	-.00243	.63850	.39587	1.61290
2.248	1.800	27.14700	.74786	.06097	-.00977	-.01271	-.00330	-.00275	.63765	.39548	1.61240
2.245	2.000	27.15300	.74971	.06113	-.00973	-.01439	-.00368	-.00313	.63919	.39654	1.61190
2.241	2.200	27.15600	.74895	.06104	-.00968	-.01607	-.00402	-.00351	.63853	.39614	1.61190
2.238	2.400	27.15800	.74813	.06123	-.00977	-.01766	-.00433	-.00391	.63770	.39597	1.61050
2.236	2.600	27.16100	.75023	.06126	-.00988	-.01938	-.00469	-.00429	.63953	.39699	1.61100
2.236	2.800	27.17000	.75016	.06142	-.00987	-.02096	-.00503	-.00469	.63934	.39719	1.60960
2.234	3.000	27.18200	.75047	.06141	-.00987	-.02256	-.00539	-.00505	.63953	.39746	1.60900
2.229	3.200	27.18900	.74991	.06149	-.00982	-.02429	-.00572	-.00543	.63895	.39734	1.60810
2.230	3.314	27.19300	.75110	.06160	-.00969	-.02513	-.00589	-.00566	.63993	.39804	1.60770
	GRADIENT	.03643	.00083	-.00050	.00054	-.00693	-.00212	-.00164	.00071	.00034	.00041

OA257 (LARC 20-M6-6559) OV102 (R7E172) (10 JUL 81)

REFERENCE DATA

SREF = 2690.0000 SQ.FT. XMRP = 1076.6800 IN. XO
LREF = 474.8100 INCHES YMRP = .0000 IN. YO
BREF = 936.6800 INCHES ZMRP = 375.0000 IN. ZO
SCALE = .0100

PARAMETRIC DATA

ALPHA = 27.500 PHI = .000
SPDBRK = .000 AILRON = .000
YP = 1.000 1S = 1.000
ELEVON = .000 MACH = 6.000
S-MODE = 2.000 S-DIR = 1.000

RUN NO. 2266/ 0 RN/L = 7.66 GRADIENT INTERVAL = -.60/ .60

RN/L	BETA	ALPHA	CN	CA	CLM	CY	CYN	CBL	CL	CD	L/D
7.707	-4.400	26.51800	.70291	.06073	-.01155	.03325	.00776	.00768	.60184	.36817	1.63470
7.707	-4.200	26.52100	.70346	.06061	-.01146	.03176	.00745	.00732	.60237	.36835	1.63530
7.703	-4.000	26.52800	.70374	.06055	-.01141	.03014	.00711	.00697	.60260	.36849	1.63530
7.698	-3.800	26.53100	.70437	.06053	-.01144	.02852	.00675	.00664	.60316	.36879	1.63550
7.684	-3.600	26.53900	.70480	.06048	-.01139	.02702	.00640	.00630	.60351	.36901	1.63550
7.677	-3.400	26.54200	.70486	.06047	-.01135	.02546	.00605	.00595	.60355	.36906	1.63540
7.688	-3.200	26.55200	.70574	.06049	-.01137	.02396	.00569	.00561	.60427	.36958	1.63500
7.690	-3.000	26.55900	.70594	.06046	-.01137	.02242	.00533	.00528	.60441	.36971	1.63480
7.703	-2.800	26.56700	.70653	.06046	-.01132	.02090	.00499	.00493	.60489	.37006	1.63460
7.696	-2.600	26.57400	.70671	.06043	-.01136	.01938	.00465	.00458	.60502	.37019	1.63430
7.705	-2.400	26.58100	.70733	.06046	-.01125	.01788	.00432	.00423	.60551	.37057	1.63400
7.696	-2.200	26.58700	.70764	.06046	-.01122	.01643	.00397	.00391	.60575	.37078	1.63370
7.670	-2.000	26.59200	.70809	.06044	-.01122	.01486	.00362	.00357	.60613	.37102	1.63370
7.684	-1.800	26.60200	.70838	.06036	-.01117	.01333	.00326	.00325	.60637	.37117	1.63370
7.676	-1.600	26.60700	.70877	.06037	-.01112	.01187	.00290	.00290	.60667	.37142	1.63340
7.677	-1.400	26.61500	.70880	.06031	-.01111	.01031	.00255	.00257	.60667	.37146	1.63320
7.671	-1.200	26.62200	.70923	.06040	-.01102	.00891	.00218	.00224	.60697	.37180	1.63250
7.653	-1.000	26.62400	.70937	.06040	-.01094	.00735	.00181	.00190	.60708	.37189	1.63240
7.650	-.800	26.62700	.70956	.06043	-.01093	.00586	.00145	.00156	.60722	.37204	1.63210
7.646	-.600	26.63400	.70973	.06043	-.01085	.00439	.00111	.00120	.60733	.37218	1.63180
7.624	-.400	26.63600	.70993	.06042	-.01086	.00284	.00077	.00084	.60750	.37228	1.63180
7.621	-.200	26.64400	.71021	.06040	-.01078	.00129	.00044	.00045	.60770	.37248	1.63150
7.601	.000	26.64600	.71024	.06037	-.01083	-.00022	.00013	.00007	.60773	.37249	1.63150
7.614	.200	26.65700	.71068	.06037	-.01088	-.00173	-.00019	-.00029	.60806	.37280	1.63100
7.618	.400	26.66600	.71070	.06042	-.01080	-.00318	-.00054	-.00062	.60800	.37294	1.63030
7.616	.600	26.67100	.71103	.06040	-.01086	-.00464	-.00091	-.00095	.60827	.37313	1.63020
7.627	.800	26.68200	.71129	.06038	-.01093	-.00614	-.00126	-.00130	.60843	.37335	1.62970
7.625	1.000	26.68700	.71137	.06037	-.01098	-.00756	-.00161	-.00167	.60847	.37343	1.62940
7.634	1.200	26.69300	.71159	.06034	-.01106	-.00906	-.00197	-.00202	.60865	.37356	1.62930
7.619	1.400	26.69600	.71180	.06031	-.01109	-.01050	-.00232	-.00236	.60882	.37367	1.62930
7.649	1.600	26.70600	.71196	.06032	-.01121	-.01201	-.00269	-.00269	.60890	.37385	1.62870
7.660	1.800	26.71100	.71247	.06030	-.01130	-.01360	-.00306	-.00303	.60933	.37412	1.62870
7.662	2.000	26.71600	.71221	.06032	-.01134	-.01504	-.00340	-.00336	.60906	.37408	1.62820
7.654	2.200	26.72500	.71249	.06030	-.01143	-.01663	-.00375	-.00372	.60927	.37427	1.62790
7.641	2.400	26.72800	.71285	.06030	-.01146	-.01819	-.00411	-.00407	.60956	.37446	1.62780
7.640	2.600	26.73100	.71269	.06033	-.01150	-.01972	-.00445	-.00442	.60938	.37446	1.62740
7.650	2.800	26.73800	.71280	.06034	-.01151	-.02126	-.00482	-.00479	.60944	.37459	1.62700
7.643	3.000	26.74400	.71274	.06033	-.01153	-.02282	-.00521	-.00515	.60935	.37461	1.62660
7.649	3.200	26.75000	.71279	.06043	-.01155	-.02433	-.00555	-.00550	.60931	.37478	1.62580
7.649	3.400	26.75800	.71300	.06055	-.01164	-.02585	-.00587	-.00584	.60939	.37508	1.62470
7.637	3.600	26.76200	.71308	.06086	-.01169	-.02741	-.00619	-.00619	.60929	.37543	1.62290
7.654	3.797	26.76400	.71330	.06118	-.01176	-.02895	-.00650	-.00653	.60933	.37584	1.62130
	GRADIENT	.03286	.00106	-.00002	-.00001	-.00753	-.00166	-.00180	.00075	.00080	-.00148

OA257 (LARC 20-M6-6559) OV102 (R7E073) (10 JUL 81)

REFERENCE DATA

SREF = 2690.0000 SQ.FT. XMRP = 1076.6800 IN. XO
LREF = 474.8100 INCHES YMRP = .0000 IN. YO
BREF = 936.6800 INCHES ZMRP = 375.0000 IN. ZO
SCALE = .0100

PARAMETRIC DATA

ALPHA = 30.000 PHI = .000
SPDBRK = .000 AILRON = .000
YP = 1.000 1S = 1.000
ELEVON = .000 MACH = 6.000
S-MODE = 2.000 S-DIR = 1.000

RUN NO. 279/ 0 RN/L = 2.27 GRADIENT INTERVAL = -.60/ .60

RN/L	BETA	ALPHA	CN	CA	CLM	CY	CYN	CBL	CL	CD	L/D
2.268	-4.719	29.39700	.84064	.06275	-.01355	.03826	.00835	.00963	.70160	.46731	1.50140
2.278	-4.600	29.41200	.84167	.06286	-.01369	.03725	.00816	.00936	.70232	.46809	1.50040
2.279	-4.400	29.41700	.84284	.06287	-.01368	.03548	.00786	.00893	.70330	.46873	1.50040
2.278	-4.200	29.41500	.84256	.06277	-.01366	.03376	.00754	.00852	.70311	.46848	1.50080
2.274	-4.000	29.41800	.84382	.06280	-.01377	.03223	.00724	.00811	.70417	.46917	1.50090
2.267	-3.800	29.42300	.84389	.06274	-.01388	.03040	.00690	.00767	.70422	.46921	1.50090
2.263	-3.600	29.42700	.84506	.06273	-.01399	.02866	.00659	.00720	.70521	.46982	1.50100
2.266	-3.400	29.43200	.84460	.06265	-.01412	.02693	.00627	.00676	.70481	.46959	1.50090
2.264	-3.200	29.43900	.84432	.06264	-.01416	.02524	.00599	.00630	.70452	.46953	1.50050
2.266	-3.000	29.44700	.84640	.06245	-.01419	.02348	.00570	.00585	.70635	.47049	1.50130
2.272	-2.800	29.45800	.84635	.06239	-.01418	.02178	.00542	.00540	.70626	.47054	1.50090
2.274	-2.600	29.46900	.84728	.06228	-.01426	.02003	.00511	.00496	.70702	.47104	1.50100
2.276	-2.400	29.47200	.84753	.06214	-.01436	.01837	.00484	.00454	.70728	.47109	1.50140
2.274	-2.200	29.47800	.84859	.06208	-.01447	.01670	.00452	.00416	.70818	.47163	1.50160
2.272	-2.000	29.48100	.84937	.06199	-.01450	.01494	.00419	.00373	.70888	.47196	1.50200
2.278	-1.800	29.48800	.85018	.06189	-.01478	.01337	.00385	.00330	.70959	.47236	1.50220
2.282	-1.600	29.49100	.85088	.06188	-.01490	.01177	.00351	.00292	.71018	.47274	1.50230
2.276	-1.400	29.49700	.85053	.06186	-.01496	.01009	.00315	.00253	.70983	.47262	1.50190
2.270	-1.200	29.50400	.85070	.06186	-.01498	.00860	.00281	.00212	.70992	.47280	1.50150
2.266	-1.000	29.51400	.85077	.06175	-.01489	.00718	.00239	.00174	.70995	.47286	1.50140
2.267	-.800	29.53000	.85095	.06170	-.01484	.00555	.00199	.00136	.71000	.47310	1.50070
2.267	-.600	29.53800	.85107	.06164	-.01484	.00416	.00163	.00100	.71007	.47321	1.50050
2.267	-.400	29.54600	.85173	.06149	-.01484	.00269	.00120	.00064	.71064	.47350	1.50080
2.268	-.200	29.55400	.85284	.06157	-.01468	.00126	.00072	.00033	.71151	.47422	1.50040
2.270	.000	29.55800	.85298	.06156	-.01469	.00001	.00025	.00000	.71161	.47432	1.50030
2.269	.200	29.56300	.85261	.06154	-.01458	-.00135	-.00022	-.00033	.71125	.47419	1.49990
2.268	.400	29.56800	.85354	.06153	-.01461	-.00280	-.00065	-.00069	.71202	.47470	1.49990
2.270	.600	29.57600	.85372	.06154	-.01470	-.00408	-.00107	-.00104	.71210	.47490	1.49950
2.273	.800	29.57900	.85225	.06149	-.01464	-.00562	-.00158	-.00139	.71083	.47416	1.49910
2.270	1.000	29.59100	.85309	.06145	-.01462	-.00687	-.00202	-.00171	.71148	.47469	1.49880
2.271	1.200	29.60100	.85441	.06145	-.01449	-.00838	-.00242	-.00207	.71255	.47548	1.49860
2.270	1.400	29.60800	.85335	.06135	-.01447	-.00979	-.00282	-.00244	.71162	.47495	1.49830
2.272	1.600	29.61900	.85438	.06133	-.01447	-.01150	-.00322	-.00283	.71243	.47558	1.49800
2.278	1.800	29.62700	.85402	.06140	-.01435	-.01309	-.00359	-.00322	.71202	.47555	1.49730
2.285	2.000	29.62900	.85297	.06140	-.01444	-.01470	-.00391	-.00363	.71109	.47506	1.49680
2.278	2.200	29.63400	.85358	.06151	-.01417	-.01651	-.00422	-.00408	.71152	.47553	1.49630
2.282	2.400	29.64200	.85464	.06168	-.01410	-.01812	-.00453	-.00452	.71229	.47628	1.49550
2.285	2.600	29.64600	.85449	.06165	-.01402	-.01996	-.00483	-.00497	.71214	.47624	1.49540
2.284	2.800	29.65400	.85486	.06157	-.01392	-.02145	-.00508	-.00538	.71244	.47646	1.49530
2.281	3.000	29.66100	.85410	.06176	-.01378	-.02335	-.00540	-.00585	.71163	.47633	1.49400
2.277	3.200	29.67200	.85356	.06174	-.01365	-.02514	-.00572	-.00634	.71107	.47619	1.49330
2.276	3.400	29.68600	.85376	.06172	-.01348	-.02688	-.00602	-.00680	.71114	.47644	1.49260

OA257 (LARC 20-M6-6559) OV102 (R7E073) (10 JUL 81)

REFERENCE DATA

SREF = 2690.0000 SQ.FT. XMRP = 1076.6800 IN. XO
LREF = 474.8100 INCHES YMRP = .0000 IN. YO
BREF = 936.6800 INCHES ZMRP = 375.0000 IN. ZO
SCALE = .0100

PARAMETRIC DATA

ALPHA = 30.000 PHI = .000
SPDBRK = .000 AILRON = .000
YP = 1.000 1S = 1.000
ELEVON = .000 MACH = 6.000
S-MODE = 2.000 S-DIR = 1.000

RUN NO. 279/ 0 RN/L = 2.27 GRADIENT INTERVAL = -.60/ .60

RN/L	BETA	ALPHA	CN	CA	CLM	CY	CYN	CBL	CL	CD	L/D
2.276	3.600	29.68600	.85459	.06184	-.01351	-.02861	-.00632	-.00723	.71180	.47695	1.49240
	GRADIENT	.02982	.00203	-.00005	.00017	-.00684	-.00228	-.00168	.00153	.00133	-.00095

OA257 (LARC 20-M6-6559) OV102 (R7E073) (10 JUL 81)

REFERENCE DATA

SREF = 2690.0000 SQ.FT. XMRP = 1076.6800 IN. XO
LREF = 474.8100 INCHES YMRP = .0000 IN. YO
BREF = 936.6800 INCHES ZMRP = 375.0000 IN. ZO
SCALE = .0100

PARAMETRIC DATA

ALPHA = 30.000 PHI = .000
SPDBRK = .000 AILRON = .000
YP = 1.000 1S = 1.000
ELEVON = .000 MACH = 6.000
S-MODE = 2.000 S-DIR = 1.000

RUN NO. 265/ 0 RN/L = 7.70 GRADIENT INTERVAL = -.60/ .60

RN/L	BETA	ALPHA	CN	CA	CLM	CY	CYN	CBL	CL	CD	L/D
7.752	-4.648	28.98500	.80396	.06088	-.01507	.03619	.00798	.00902	.67376	.44284	1.52140
7.737	-4.500	28.99600	.80430	.06081	-.01507	.03507	.00779	.00872	.67401	.44307	1.52120
7.727	-4.300	28.99300	.80481	.06070	-.01506	.03344	.00747	.00832	.67453	.44319	1.52200
7.733	-4.100	28.99700	.80542	.06067	-.01498	.03194	.00714	.00797	.67504	.44350	1.52210
7.725	-3.900	29.00200	.80556	.06065	-.01502	.03029	.00683	.00756	.67514	.44362	1.52190
7.703	-3.700	29.00500	.80579	.06060	-.01507	.02859	.00649	.00715	.67534	.44371	1.52200
7.738	-3.500	29.01400	.80649	.06061	-.01505	.02695	.00617	.00677	.67588	.44417	1.52170
7.716	-3.300	29.02200	.80705	.06058	-.01496	.02540	.00586	.00636	.67632	.44452	1.52150
7.705	-3.100	29.03000	.80759	.06055	-.01497	.02379	.00554	.00597	.67674	.44484	1.52130
7.716	-2.900	29.04100	.80809	.06054	-.01491	.02215	.00523	.00557	.67710	.44521	1.52090
7.721	-2.700	29.05100	.80875	.06050	-.01486	.02056	.00492	.00516	.67762	.44561	1.52060
7.709	-2.500	29.05900	.80920	.06047	-.01497	.01898	.00461	.00475	.67797	.44590	1.52050
7.708	-2.300	29.06600	.80964	.06045	-.01500	.01753	.00431	.00436	.67830	.44617	1.52030
7.713	-2.100	29.07100	.80964	.06042	-.01502	.01583	.00398	.00391	.67828	.44620	1.52010
7.737	-1.900	29.08300	.81032	.06037	-.01499	.01418	.00366	.00355	.67880	.44664	1.51980
7.712	-1.700	29.08800	.81078	.06035	-.01494	.01269	.00335	.00316	.67918	.44689	1.51980
7.698	-1.500	29.08900	.81099	.06032	-.01503	.01108	.00302	.00274	.67937	.44699	1.51990
7.709	-1.300	29.09500	.81122	.06023	-.01501	.00961	.00269	.00238	.67957	.44710	1.52000
7.699	-1.100	29.09900	.81152	.06023	-.01501	.00802	.00235	.00197	.67980	.44729	1.51980
7.684	-.900	29.10200	.81181	.06022	-.01505	.00655	.00199	.00160	.68004	.44745	1.51980
7.707	-.700	29.10900	.81187	.06014	-.01508	.00509	.00164	.00123	.68008	.44749	1.51970
7.707	-.500	29.11800	.81203	.06006	-.01505	.00357	.00129	.00085	.68017	.44761	1.51960
7.707	-.300	29.12400	.81230	.06004	-.01496	.00214	.00093	.00049	.68038	.44779	1.51940
7.716	-.100	29.13600	.81287	.06003	-.01499	.00060	.00056	.00011	.68078	.44821	1.51890
7.684	.100	29.13900	.81288	.05999	-.01494	-.00093	.00017	-.00027	.68080	.44821	1.51890
7.704	.300	29.14900	.81319	.06000	-.01499	-.00228	-.00020	-.00062	.68098	.44850	1.51840
7.696	.500	29.16000	.81369	.06000	-.01494	-.00384	-.00061	-.00095	.68133	.44887	1.51790
7.695	.700	29.16900	.81360	.05998	-.01494	-.00520	-.00100	-.00129	.68119	.44891	1.51740
7.692	.900	29.17300	.81360	.05999	-.01499	-.00661	-.00142	-.00161	.68115	.44897	1.51710
7.693	1.100	29.18000	.81398	.06003	-.01496	-.00796	-.00182	-.00194	.68141	.44927	1.51670
7.680	1.300	29.18700	.81395	.06003	-.01498	-.00934	-.00219	-.00229	.68134	.44933	1.51630
7.659	1.500	29.19100	.81433	.06005	-.01500	-.01083	-.00259	-.00263	.68162	.44960	1.51610
7.662	1.700	29.19600	.81409	.06004	-.01505	-.01230	-.00296	-.00299	.68138	.44952	1.51580
7.663	1.900	29.19800	.81424	.06006	-.01509	-.01383	-.00333	-.00335	.68149	.44964	1.51560
7.674	2.100	29.19900	.81448	.06012	-.01515	-.01532	-.00368	-.00372	.68165	.44982	1.51540
7.648	2.300	29.20400	.81449	.06016	-.01520	-.01698	-.00399	-.00416	.68160	.44992	1.51500
7.660	2.500	29.21100	.81436	.06012	-.01519	-.01858	-.00434	-.00452	.68145	.44991	1.51470
7.652	2.700	29.21600	.81423	.06016	-.01519	-.02011	-.00467	-.00491	.68129	.44993	1.51420
7.660	2.900	29.22700	.81449	.06012	-.01525	-.02181	-.00499	-.00533	.68144	.45016	1.51380
7.660	3.100	29.23200	.81432	.06016	-.01531	-.02341	-.00530	-.00576	.68125	.45016	1.51330
7.686	3.295	29.23800	.81432	.06024	-.01539	-.02494	-.00557	-.00612	.68115	.45032	1.51260
	GRADIENT	.04114	.00157	-.00006	.00007	-.00741	-.00190	-.00181	.00109	.00120	-.00164

OA257 (LARC 20-M6-6559) OV102 (R7E173) (10 JUL 81)

REFERENCE DATA

SREF = 2690.0000 SQ.FT. XMRP = 1076.6800 IN. XO
LREF = 474.8100 INCHES YMRP = .0000 IN. YO
BREF = 936.6800 INCHES ZMRP = 375.0000 IN. ZO
SCALE = .0100

PARAMETRIC DATA

ALPHA = 30.000 PHI = .000
SPDBRK = .000 AILRON = .000
YP = 1.000 1S = 1.000
ELEVON = .000 MACH = 6.000
S-MODE = 2.000 S-DIR = 1.000

RUN NO. 2279/ 0 RN/L = 2.27 GRADIENT INTERVAL = -.60/ .60

RN/L	BETA	ALPHA	CN	CA	CLM	CY	CYN	CBL	CL	CD	L/D
2.271	-4.700	29.40200	.84054	.06280	-.01354	.03806	.00832	.00958	.70145	.46736	1.50090
2.278	-4.500	29.41400	.84249	.06288	-.01368	.03639	.00800	.00914	.70300	.46854	1.50040
2.278	-4.300	29.41500	.84258	.06278	-.01372	.03462	.00770	.00873	.70312	.46851	1.50080
2.277	-4.100	29.41800	.84408	.06281	-.01371	.03303	.00739	.00831	.70439	.46931	1.50090
2.270	-3.900	29.42000	.84335	.06270	-.01387	.03131	.00705	.00789	.70380	.46888	1.50100
2.264	-3.700	29.42500	.84430	.06270	-.01389	.02958	.00674	.00743	.70458	.46939	1.50100
2.265	-3.500	29.42900	.84399	.06263	-.01401	.02772	.00641	.00698	.70431	.46923	1.50100
2.265	-3.300	29.43700	.84572	.06261	-.01415	.02605	.00613	.00653	.70576	.47017	1.50110
2.264	-3.100	29.44300	.84671	.06261	-.01428	.02445	.00583	.00609	.70658	.47073	1.50100
2.269	-2.900	29.45000	.84535	.06240	-.01417	.02263	.00558	.00561	.70543	.46997	1.50100
2.274	-2.700	29.46100	.84664	.06234	-.01413	.02086	.00528	.00517	.70650	.47069	1.50100
2.276	-2.500	29.47000	.84781	.06221	-.01430	.01923	.00500	.00475	.70750	.47126	1.50130
2.276	-2.300	29.47600	.84951	.06212	-.01444	.01750	.00466	.00436	.70898	.47209	1.50180
2.273	-2.100	29.48000	.84871	.06208	-.01451	.01586	.00437	.00394	.70827	.47171	1.50150
2.273	-1.900	29.48400	.84917	.06195	-.01462	.01417	.00404	.00351	.70871	.47187	1.50190
2.282	-1.700	29.48900	.84903	.06197	-.01477	.01251	.00367	.00311	.70853	.47188	1.50150
2.280	-1.500	29.49400	.85019	.06188	-.01489	.01093	.00334	.00272	.70955	.47244	1.50190
2.273	-1.300	29.50000	.85039	.06180	-.01496	.00944	.00299	.00231	.70971	.47255	1.50190
2.268	-1.100	29.50700	.85149	.06181	-.01494	.00784	.00259	.00194	.71061	.47318	1.50180
2.265	-.900	29.52000	.85149	.06169	-.01489	.00638	.00220	.00155	.71056	.47324	1.50150
2.267	-.700	29.53500	.85141	.06165	-.01485	.00488	.00182	.00118	.71038	.47334	1.50080
2.267	-.500	29.54100	.85158	.06165	-.01484	.00337	.00142	.00081	.71047	.47351	1.50040
2.267	-.300	29.55000	.85333	.06161	-.01480	.00197	.00096	.00048	.71195	.47444	1.50060
2.270	-.100	29.55700	.85240	.06156	-.01470	.00060	.00049	.00016	.71110	.47403	1.50010
2.269	.100	29.56100	.85167	.06157	-.01463	-.00066	-.00000	-.00017	.71043	.47373	1.49970
2.268	.300	29.56600	.85292	.06153	-.01457	-.00207	-.00043	-.00051	.71150	.47437	1.49990
2.269	.500	29.57000	.85346	.06155	-.01459	-.00346	-.00088	-.00086	.71192	.47470	1.49970
2.272	.700	29.57500	.85234	.06149	-.01463	-.00486	-.00133	-.00121	.71093	.47416	1.49930
2.272	.900	29.58300	.85331	.06147	-.01461	-.00616	-.00179	-.00155	.71173	.47472	1.49930
2.271	1.100	29.59600	.85261	.06146	-.01460	-.00763	-.00222	-.00189	.71102	.47452	1.49840
2.270	1.300	29.60400	.85362	.06141	-.01447	-.00906	-.00262	-.00225	.71185	.47509	1.49840
2.270	1.500	29.61700	.85338	.06134	-.01443	-.01067	-.00305	-.00262	.71158	.47507	1.49780
2.274	1.700	29.62200	.85368	.06139	-.01442	-.01223	-.00341	-.00302	.71177	.47532	1.49750
2.285	1.900	29.62700	.85342	.06150	-.01433	-.01395	-.00377	-.00343	.71144	.47534	1.49670
2.281	2.100	29.63100	.85359	.06143	-.01424	-.01563	-.00406	-.00385	.71159	.47543	1.49670
2.279	2.300	29.63700	.85499	.06162	-.01414	-.01729	-.00438	-.00430	.71267	.47635	1.49610
2.285	2.500	29.64200	.85355	.06165	-.01407	-.01905	-.00467	-.00475	.71135	.47574	1.49530
2.285	2.700	29.64600	.85326	.06160	-.01394	-.02072	-.00496	-.00519	.71110	.47559	1.49520
2.282	2.900	29.65700	.85457	.06173	-.01392	-.02253	-.00526	-.00565	.71208	.47649	1.49440
2.280	3.100	29.66700	.85436	.06176	-.01375	-.02413	-.00554	-.00608	.71180	.47653	1.49370
2.276	3.300	29.67700	.85424	.06174	-.01349	-.02596	-.00586	-.00655	.71162	.47658	1.49320
2.275	3.500	29.69100	.85451	.06181	-.01344	-.02772	-.00616	-.00701	.71170	.47695	1.49220

OA257 (LARC 20-M6-6559) OV102 (R7E173) (10 JUL 81)

REFERENCE DATA

SREF =	2690.0000 SQ.FT.	XMRP =	1076.6800 IN. X0		
LREF =	474.8100 INCHES	YMRP =	.0000 IN. Y0		
BREF =	936.6800 INCHES	ZMRP =	375.0000 IN. Z0		
SCALE =	.0100				

PARAMETRIC DATA

ALPHA =	30.000	PHI =	.000
SPDBRK =	.000	AILRON =	.000
YP =	1.000	1S =	1.000
ELEVON =	.000	MACH =	6.000
S-MODE =	2.000	S-DIR =	1.000

RUN NO. 2279/ 0 RN/L = 2.27 GRADIENT INTERVAL = -.60/ .60

RN/L	BETA	ALPHA	CN	CA	CLM	CY	CYN	CBL	CL	CD	L/D
2.276	3.611	29.68700	.85373	.06177	-.01357	-.02867	-.00633	-.00724	.71108	.47647	1.49240
	GRADIENT	.02814	.00106	-.00010	.00029	-.00679	-.00231	-.00167	.00075	.00078	-.00086

OA257 (LARC 20-M6-6559) OV102 (R7E173) (10 JUL 81)

REFERENCE DATA

SREF = 2690.0000 SQ.FT. XMRP = 1076.6800 IN. XO
LREF = 474.8100 INCHES YMRP = .0000 IN. YO
BREF = 936.6800 INCHES ZMRP = 375.0000 IN. ZO
SCALE = .0100

PARAMETRIC DATA

ALPHA = 30.000 PHI = .000
SPDBRK = .000 AILRON = .000
YP = 1.000 1S = 1.000
ELEVON = .000 MACH = 6.000
S-MODE = 2.000 S-DIR = 1.000

RUN NO. 2265/ 0 RN/L = 7.70 GRADIENT INTERVAL = -.60/ .60

RN/L	BETA	ALPHA	CN	CA	CLM	CY	CYN	CBL	CL	CD	L/D
7.743	-4.600	28.98900	.80411	.06089	-.01502	.03595	.00795	.00893	.67385	.44297	1.52120
7.734	-4.400	28.99400	.80455	.06074	-.01503	.03424	.00762	.00852	.67427	.44311	1.52170
7.726	-4.200	28.99100	.80496	.06064	-.01511	.03266	.00730	.00814	.67470	.44319	1.52240
7.729	-4.000	29.00200	.80555	.06066	-.01495	.03108	.00698	.00775	.67512	.44361	1.52190
7.710	-3.800	29.00100	.80536	.06060	-.01505	.02943	.00666	.00736	.67500	.44346	1.52210
7.727	-3.600	29.01000	.80633	.06060	-.01507	.02774	.00633	.00696	.67578	.44403	1.52190
7.732	-3.400	29.01900	.80675	.06060	-.01499	.02616	.00602	.00657	.67607	.44435	1.52150
7.705	-3.200	29.02700	.80730	.06057	-.01497	.02456	.00569	.00616	.67650	.44468	1.52130
7.713	-3.000	29.03600	.80792	.06055	-.01493	.02298	.00539	.00576	.67699	.44508	1.52110
7.713	-2.800	29.04500	.80852	.06052	-.01491	.02142	.00508	.00538	.67745	.44545	1.52080
7.720	-2.600	29.05500	.80890	.06048	-.01492	.01970	.00475	.00497	.67773	.44571	1.52050
7.708	-2.400	29.06000	.80941	.06047	-.01499	.01827	.00446	.00456	.67814	.44601	1.52050
7.713	-2.200	29.07200	.80980	.06044	-.01500	.01672	.00415	.00416	.67841	.44631	1.52000
7.719	-2.000	29.07700	.81020	.06040	-.01501	.01501	.00382	.00373	.67874	.44653	1.52000
7.728	-1.800	29.08500	.81035	.06037	-.01497	.01346	.00351	.00335	.67882	.44667	1.51970
7.707	-1.600	29.08900	.81080	.06032	-.01501	.01186	.00318	.00294	.67921	.44690	1.51980
7.706	-1.400	29.09100	.81124	.06028	-.01503	.01034	.00285	.00256	.67959	.44710	1.52000
7.703	-1.200	29.09700	.81142	.06030	-.01496	.00882	.00250	.00217	.67970	.44727	1.51970
7.689	-1.000	29.10000	.81155	.06018	-.01504	.00730	.00218	.00178	.67984	.44727	1.52000
7.690	-.800	29.10400	.81174	.06018	-.01504	.00579	.00181	.00141	.67998	.44741	1.51980
7.710	-.600	29.11700	.81185	.06005	-.01506	.00434	.00147	.00105	.68003	.44751	1.51960
7.706	-.400	29.12000	.81227	.06006	-.01501	.00283	.00111	.00067	.68037	.44775	1.51950
7.703	-.200	29.12800	.81258	.06006	-.01500	.00139	.00075	.00029	.68058	.44801	1.51910
7.698	.000	29.13800	.81252	.06000	-.01500	-.00022	.00036	-.00009	.68048	.44803	1.51880
7.684	.200	29.14300	.81322	.06000	-.01493	-.00160	-.00001	-.00046	.68106	.44844	1.51870
7.692	.400	29.15200	.81305	.05996	-.01494	-.00308	-.00041	-.00077	.68085	.44844	1.51830
7.705	.600	29.16700	.81347	.05997	-.01495	-.00451	-.00081	-.00113	.68109	.44882	1.51750
7.688	.800	29.17100	.81357	.06000	-.01497	-.00593	-.00121	-.00147	.68114	.44894	1.51720
7.699	1.000	29.17700	.81380	.06001	-.01496	-.00726	-.00163	-.00178	.68129	.44912	1.51690
7.686	1.200	29.18300	.81405	.06003	-.01498	-.00867	-.00201	-.00212	.68146	.44934	1.51660
7.658	1.400	29.18500	.81394	.06002	-.01496	-.01007	-.00239	-.00246	.68134	.44931	1.51640
7.665	1.600	29.19400	.81409	.06004	-.01503	-.01162	-.00279	-.00281	.68139	.44950	1.51590
7.659	1.800	29.19900	.81420	.06005	-.01505	-.01302	-.00315	-.00317	.68144	.44962	1.51560
7.671	2.000	29.20100	.81436	.06009	-.01513	-.01459	-.00352	-.00353	.68155	.44976	1.51540
7.660	2.200	29.20100	.81448	.06015	-.01516	-.01612	-.00385	-.00393	.68163	.44987	1.51520
7.648	2.400	29.20600	.81446	.06012	-.01521	-.01779	-.00417	-.00434	.68158	.44990	1.51500
7.660	2.600	29.21600	.81435	.06013	-.01518	-.01935	-.00451	-.00471	.68140	.44996	1.51430
7.652	2.800	29.22100	.81434	.06011	-.01522	-.02097	-.00481	-.00513	.68137	.45000	1.51420
7.667	3.000	29.23000	.81446	.06008	-.01529	-.02263	-.00516	-.00554	.68142	.45014	1.51380
7.670	3.200	29.23600	.81457	.06023	-.01539	-.02425	-.00545	-.00596	.68139	.45039	1.51290
	GRADIENT		.04089	.00126	-.00009	.00010	-.00739	-.00190	-.00182	.00082	.00103	-.00162

OA257 (LARC 20-M6-6559) OV102 (R7E074) (10 JUL 81)

REFERENCE DATA

SREF = 2690.0000 SQ.FT. XMRP = 1076.6800 IN. XO
LREF = 474.8100 INCHES YMRP = .0000 IN. YO
BREF = 936.6800 INCHES ZMRP = 375.0000 IN. ZO
SCALE = .0100

PARAMETRIC DATA

ALPHA = 32.500 PHI = .000
SPDBRK = .000 AILRON = .000
YP = 1.000 1S = 1.000
ELEVON = .000 MACH = 6.000
S-MODE = 2.000 S-DIR = 1.000

RUN NO. 296/ O RN/L = 2.25 GRADIENT INTERVAL = -.60/ .60

RN/L	BETA	ALPHA	CN	CA	CLM	CY	CYN	CBL	CL	CD	L/D
2.255	-4.924	31.70500	.94216	.06389	-.01746	.04350	.00862	.01085	.76797	.54951	1.39760
2.258	-4.800	31.71500	.94146	.06380	-.01747	.04250	.00841	.01059	.76733	.54920	1.39720
2.254	-4.600	31.71800	.94223	.06372	-.01748	.04069	.00803	.01016	.76801	.54957	1.39750
2.251	-4.400	31.72000	.94257	.06373	-.01760	.03889	.00764	.00974	.76827	.54979	1.39740
2.249	-4.200	31.72600	.94277	.06350	-.01745	.03685	.00741	.00926	.76850	.54977	1.39780
2.248	-4.000	31.73200	.94360	.06343	-.01767	.03487	.00709	.00882	.76919	.55023	1.39790
2.254	-3.800	31.73800	.94469	.06335	-.01766	.03298	.00675	.00841	.77009	.55082	1.39810
2.258	-3.600	31.74300	.94505	.06337	-.01783	.03111	.00639	.00798	.77034	.55109	1.39790
2.255	-3.400	31.75100	.94622	.06331	-.01804	.02940	.00607	.00754	.77129	.55177	1.39790
2.253	-3.200	31.75800	.94708	.06320	-.01809	.02753	.00573	.00710	.77202	.55221	1.39810
2.254	-3.000	31.76200	.94713	.06317	-.01837	.02563	.00541	.00660	.77204	.55227	1.39790
2.261	-2.800	31.77000	.94791	.06313	-.01841	.02384	.00509	.00614	.77265	.55276	1.39780
2.257	-2.600	31.77600	.94875	.06298	-.01853	.02212	.00476	.00568	.77338	.55315	1.39820
2.253	-2.400	31.78400	.94965	.06292	-.01854	.02030	.00440	.00524	.77409	.55368	1.39810
2.253	-2.200	31.78800	.94982	.06286	-.01863	.01870	.00406	.00478	.77424	.55378	1.39810
2.256	-2.000	31.80000	.95038	.06295	-.01858	.01676	.00370	.00432	.77455	.55431	1.39730
2.253	-1.800	31.80600	.95167	.06286	-.01861	.01517	.00337	.00387	.77563	.55500	1.39750
2.251	-1.600	31.81500	.95124	.06285	-.01865	.01345	.00301	.00344	.77519	.55488	1.39700
2.246	-1.400	31.82100	.95178	.06269	-.01848	.01180	.00267	.00298	.77568	.55511	1.39730
2.247	-1.200	31.83000	.95300	.06270	-.01846	.01012	.00231	.00250	.77662	.55588	1.39710
2.246	-1.000	31.83900	.95237	.06263	-.01846	.00854	.00197	.00204	.77603	.55560	1.39670
2.246	-.800	31.84600	.95331	.06271	-.01852	.00687	.00160	.00160	.77672	.55628	1.39630
2.244	-.600	31.85300	.95405	.06252	-.01833	.00517	.00120	.00119	.77739	.55659	1.39670
2.245	-.400	31.86000	.95391	.06263	-.01840	.00349	.00083	.00077	.77714	.55671	1.39590
2.250	-.200	31.87000	.95426	.06259	-.01844	.00185	.00042	.00038	.77736	.55700	1.39560
2.251	.000	31.87700	.95411	.06253	-.01848	.00019	.00004	-.00003	.77719	.55697	1.39540
2.256	.200	31.88300	.95488	.06258	-.01840	-.00156	-.00036	-.00043	.77776	.55749	1.39510
2.261	.400	31.89200	.95435	.06253	-.01846	-.00327	-.00078	-.00084	.77725	.55729	1.39470
2.263	.600	31.89800	.95507	.06251	-.01835	-.00482	-.00114	-.00124	.77781	.55774	1.39460
2.263	.800	31.90700	.95518	.06234	-.01854	-.00653	-.00157	-.00165	.77792	.55777	1.39470
2.258	1.000	31.91300	.95556	.06233	-.01833	-.00818	-.00191	-.00206	.77818	.55804	1.39450
2.252	1.200	31.92100	.95579	.06229	-.01837	-.01001	-.00231	-.00250	.77832	.55825	1.39420
2.252	1.400	31.93000	.95584	.06219	-.01856	-.01165	-.00265	-.00296	.77833	.55830	1.39410
2.249	1.600	31.93600	.95633	.06216	-.01833	-.01333	-.00302	-.00341	.77870	.55862	1.39400
2.249	1.800	31.94200	.95605	.06221	-.01842	-.01513	-.00340	-.00389	.77838	.55859	1.39350
2.248	2.000	31.95000	.95637	.06215	-.01840	-.01687	-.00375	-.00433	.77860	.55883	1.39330
2.248	2.200	31.95900	.95666	.06207	-.01845	-.01874	-.00410	-.00482	.77880	.55904	1.39310
2.246	2.400	31.96400	.95651	.06215	-.01836	-.02050	-.00444	-.00530	.77859	.55909	1.39260
	GRADIENT	.03786	.00081	-.00004	-.00002	-.00837	-.00197	-.00202	.00034	.00091	-.00164

OA257 (LARC 20-M6-6559) OV102 (R7E074) (10 JUL 81)

REFERENCE DATA

SREF = 2690.0000 SQ.FT. XMRP = 1076.6800 IN. XO
LREF = 474.8100 INCHES YMRP = .0000 IN. YO
BREF = 936.6800 INCHES ZMRP = 375.0000 IN. ZO
SCALE = .0100

PARAMETRIC DATA

ALPHA = 32.500 PHI = .000
SPDBRK = .000 AILRON = .000
YP = 1.000 1S = 1.000
ELEVON = .000 MACH = 6.000
S-MODE = 2.000 S-DIR = 1.000

RUN NO. 271/ O RN/L = 7.64 GRADIENT INTERVAL = -.60/ .60

RN/L	BETA	ALPHA	CN	CA	CLM	CY	CYN	CBL	CL	CD	L/D
7.618	-4.809	31.40400	.90352	.06152	-.01832	.03696	.00801	.01014	.73911	.52331	1.41240
7.617	-4.700	31.41500	.90406	.06146	-.01828	.03615	.00781	.00992	.73951	.52368	1.41210
7.603	-4.500	31.42000	.90459	.06147	-.01829	.03452	.00744	.00952	.73990	.52403	1.41200
7.598	-4.300	31.42600	.90510	.06143	-.01832	.03300	.00709	.00911	.74031	.52434	1.41190
7.594	-4.100	31.43500	.90595	.06142	-.01824	.03137	.00672	.00867	.74094	.52489	1.41160
7.591	-3.900	31.44100	.90620	.06141	-.01833	.02978	.00638	.00827	.74112	.52510	1.41140
7.594	-3.700	31.44900	.90701	.06138	-.01831	.02816	.00603	.00784	.74175	.52558	1.41130
7.595	-3.500	31.45400	.90729	.06133	-.01833	.02658	.00569	.00742	.74197	.52576	1.41120
7.606	-3.300	31.46400	.90785	.06129	-.01838	.02504	.00538	.00699	.74237	.52614	1.41100
7.629	-3.100	31.47800	.90850	.06124	-.01844	.02338	.00506	.00655	.74283	.52661	1.41060
7.618	-2.900	31.48200	.90882	.06115	-.01852	.02184	.00478	.00608	.74311	.52676	1.41070
7.610	-2.700	31.48100	.90948	.06108	-.01854	.02014	.00447	.00565	.74372	.52704	1.41110
7.615	-2.500	31.49000	.90973	.06103	-.01852	.01866	.00421	.00519	.74388	.52724	1.41090
7.614	-2.300	31.49600	.91051	.06098	-.01859	.01705	.00393	.00474	.74451	.52768	1.41090
7.608	-2.100	31.50100	.91112	.06092	-.01864	.01538	.00364	.00427	.74502	.52801	1.41100
7.636	-1.900	31.51500	.91163	.06085	-.01868	.01377	.00332	.00382	.74536	.52840	1.41060
7.637	-1.700	31.52100	.91196	.06073	-.01876	.01232	.00300	.00342	.74565	.52855	1.41070
7.634	-1.500	31.52800	.91264	.06062	-.01880	.01080	.00266	.00300	.74622	.52890	1.41090
7.624	-1.300	31.53400	.91303	.06056	-.01879	.00935	.00232	.00260	.74653	.52913	1.41090
7.654	-1.100	31.54600	.91355	.06057	-.01883	.00776	.00194	.00217	.74686	.52956	1.41030
7.668	-.900	31.55800	.91379	.06051	-.01886	.00635	.00159	.00180	.74698	.52981	1.40990
7.659	-.700	31.56400	.91443	.06052	-.01887	.00491	.00122	.00139	.74747	.53023	1.40970
7.659	-.500	31.57000	.91536	.06050	-.01884	.00343	.00085	.00100	.74821	.53078	1.40970
7.661	-.300	31.58200	.91521	.06047	-.01884	.00197	.00049	.00060	.74798	.53083	1.40910
7.667	-.100	31.59200	.91555	.06048	-.01887	.00047	.00012	.00021	.74817	.53115	1.40860
7.660	.100	31.60600	.91636	.06051	-.01885	-.00091	-.00023	-.00019	.74873	.53177	1.40800
7.662	.300	31.61400	.91608	.06047	-.01888	-.00240	-.00059	-.00060	.74843	.53170	1.40760
7.652	.500	31.62100	.91701	.06054	-.01892	-.00390	-.00094	-.00100	.74912	.53234	1.40720
7.657	.700	31.63000	.91708	.06048	-.01898	-.00540	-.00129	-.00142	.74913	.53244	1.40700
7.663	.900	31.63800	.91745	.06051	-.01903	-.00700	-.00163	-.00185	.74935	.53277	1.40650
7.656	1.100	31.64600	.91742	.06059	-.01902	-.00846	-.00196	-.00226	.74922	.53292	1.40590
7.661	1.300	31.65200	.91731	.06061	-.01904	-.00986	-.00233	-.00264	.74905	.53296	1.40540
7.661	1.500	31.65600	.91754	.06063	-.01897	-.01156	-.00266	-.00309	.74920	.53315	1.40520
7.650	1.700	31.66500	.91821	.06072	-.01903	-.01314	-.00295	-.00353	.74964	.53369	1.40460
7.681	1.900	31.67300	.91849	.06073	-.01902	-.01484	-.00327	-.00400	.74980	.53396	1.40420
7.662	2.100	31.67400	.91803	.06076	-.01907	-.01640	-.00360	-.00445	.74938	.53375	1.40400
7.670	2.237	31.67500	.91814	.06073	-.01899	-.01754	-.00383	-.00475	.74948	.53380	1.40400
	GRADIENT	.05214	.00167	.00003	-.00007	-.00731	-.00179	-.00200	.00092	.00158	-.00251

OA257 (LARC 20-M6-6559) OV102 (R7E174) (10 JUL 81)

REFERENCE DATA

SREF = 2690.0000 SQ.FT. XMRP = 1076.6800 IN. XO
LREF = 474.8100 INCHES YMRP = .0000 IN. YO
BREF = 936.6800 INCHES ZMRP = 375.0000 IN. ZO
SCALE = .0100

PARAMETRIC DATA

ALPHA = 32.500 PHI = .000
SPDBRK = .000 AILRON = .000
YP = 1.000 1S = 1.000
ELEVON = .000 MACH = 6.000
S-MODE = 2.000 S-DIR = 1.000

RUN NO. 2296/ O RN/L = 2.25 GRADIENT INTERVAL = -.60/ .60

RN/L	BETA	ALPHA	CN	CA	CLM	CY	CYN	CBL	CL	CD	L/D
2.257	-4.900	31.70500	.94080	.06380	-.01747	.04341	.00859	.01080	.76687	.54871	1.39760
2.256	-4.700	31.71800	.94224	.06379	-.01741	.04165	.00820	.01038	.76797	.54964	1.39720
2.252	-4.500	31.72100	.94231	.06370	-.01753	.03985	.00784	.00996	.76806	.54964	1.39740
2.251	-4.300	31.72500	.94277	.06360	-.01771	.03803	.00750	.00953	.76845	.54985	1.39760
2.248	-4.100	31.72800	.94344	.06347	-.01762	.03584	.00725	.00904	.76907	.55013	1.39800
2.250	-3.900	31.73400	.94393	.06333	-.01769	.03402	.00692	.00862	.76950	.55035	1.39820
2.257	-3.700	31.74100	.94445	.06340	-.01772	.03211	.00657	.00819	.76984	.55078	1.39770
2.257	-3.500	31.74500	.94553	.06332	-.01802	.03023	.00622	.00777	.77076	.55133	1.39800
2.255	-3.300	31.75200	.94645	.06324	-.01809	.02853	.00588	.00733	.77152	.55185	1.39810
2.253	-3.100	31.76100	.94695	.06321	-.01830	.02661	.00557	.00685	.77187	.55220	1.39780
2.257	-2.900	31.76800	.94787	.06314	-.01835	.02473	.00528	.00635	.77262	.55272	1.39790
2.260	-2.700	31.77100	.94810	.06299	-.01843	.02300	.00493	.00590	.77287	.55275	1.39820
2.254	-2.500	31.78000	.94914	.06299	-.01856	.02119	.00458	.00545	.77367	.55343	1.39800
2.252	-2.300	31.78700	.94954	.06292	-.01851	.01949	.00423	.00501	.77397	.55367	1.39790
2.254	-2.100	31.79500	.95028	.06282	-.01868	.01776	.00388	.00455	.77458	.55408	1.39800
2.256	-1.900	31.80100	.95122	.06290	-.01855	.01597	.00352	.00410	.77528	.55472	1.39760
2.252	-1.700	31.81100	.95143	.06284	-.01868	.01427	.00318	.00365	.77540	.55491	1.39740
2.248	-1.500	31.81900	.95200	.06280	-.01858	.01267	.00285	.00321	.77582	.55529	1.39710
2.246	-1.300	31.82600	.95236	.06265	-.01854	.01104	.00250	.00273	.77614	.55544	1.39730
2.246	-1.100	31.83400	.95260	.06265	-.01835	.00931	.00213	.00227	.77627	.55568	1.39700
2.246	-.900	31.84300	.95236	.06263	-.01843	.00773	.00177	.00181	.77599	.55566	1.39650
2.245	-.700	31.84800	.95364	.06261	-.01839	.00612	.00141	.00140	.77703	.55639	1.39660
2.243	-.500	31.85600	.95422	.06264	-.01837	.00439	.00102	.00098	.77743	.55683	1.39620
2.248	-.300	31.86500	.95423	.06262	-.01848	.00268	.00063	.00057	.77736	.55694	1.39580
2.249	-.100	31.87200	.95440	.06265	-.01839	.00092	.00023	.00017	.77742	.55715	1.39540
2.254	.100	31.87800	.95410	.06263	-.01843	-.00064	-.00016	-.00022	.77712	.55706	1.39500
2.258	.300	31.88700	.95475	.06258	-.01847	-.00237	-.00055	-.00064	.77761	.55748	1.39490
2.262	.500	31.89600	.95484	.06250	-.01845	-.00407	-.00095	-.00104	.77764	.55758	1.39470
2.263	.700	31.90200	.95491	.06246	-.01841	-.00577	-.00136	-.00145	.77767	.55766	1.39450
2.262	.900	31.90900	.95562	.06239	-.01848	-.00736	-.00174	-.00185	.77824	.55807	1.39450
2.254	1.100	31.91600	.95538	.06232	-.01831	-.00908	-.00212	-.00228	.77800	.55799	1.39430
2.253	1.300	31.92400	.95608	.06217	-.01839	-.01077	-.00248	-.00274	.77860	.55833	1.39450
2.251	1.500	31.93200	.95597	.06215	-.01837	-.01256	-.00284	-.00317	.77843	.55837	1.39410
2.249	1.700	31.94100	.95664	.06218	-.01844	-.01424	-.00322	-.00365	.77890	.55887	1.39370
2.248	1.900	31.94600	.95676	.06212	-.01842	-.01604	-.00358	-.00411	.77898	.55895	1.39360
2.249	2.100	31.95700	.95633	.06206	-.01843	-.01781	-.00392	-.00456	.77854	.55883	1.39320
2.246	2.300	31.96300	.95629	.06222	-.01849	-.01957	-.00427	-.00507	.77837	.55901	1.39240
2.246	2.445	31.96700	.95665	.06216	-.01841	-.02083	-.00450	-.00540	.77867	.55921	1.39240
	GRADIENT	.03886	.00062	-.00012	-.00006	-.00843	-.00197	-.00202	.00021	.00075	-.00151

OA257 (LARC 20-M6-6559) OV102 (R7E174) (10 JUL 81)

REFERENCE DATA

SREF = 2690.0000 SQ.FT. XMRP = 1076.6800 IN. XO
LREF = 474.8100 INCHES YMRP = .0000 IN. YO
BREF = 936.6800 INCHES ZMRP = 375.0000 IN. ZO
SCALE = .0100

PARAMETRIC DATA

ALPHA = 32.500 PHI = .000
SPDBRK = .000 AILRON = .000
YP = 1.000 1S = 1.000
ELEVON = .000 MACH = 6.000
S-MODE = 2.000 S-DIR = 1.000

RUN NO. 2271/ 0 RN/L = 7.64 GRADIENT INTERVAL = -.60/ .60

RN/L	BETA	ALPHA	CN	CA	CLM	CY	CYN	CBL	CL	CD	L/D
7.618	-4.800	31.40600	.90357	.06151	-.01832	.03689	.00799	.01012	.73915	.52335	1.41240
7.616	-4.600	31.41800	.90456	.06146	-.01826	.03536	.00764	.00971	.73990	.52398	1.41210
7.599	-4.400	31.42100	.90476	.06147	-.01833	.03376	.00726	.00933	.74004	.52413	1.41190
7.595	-4.200	31.43100	.90558	.06145	-.01827	.03217	.00689	.00889	.74065	.52467	1.41170
7.588	-4.000	31.43800	.90550	.06139	-.01827	.03059	.00656	.00848	.74055	.52466	1.41150
7.596	-3.800	31.44500	.90632	.06136	-.01833	.02902	.00621	.00806	.74121	.52516	1.41140
7.592	-3.600	31.45200	.90697	.06136	-.01831	.02737	.00585	.00763	.74170	.52558	1.41120
7.597	-3.400	31.46000	.90786	.06132	-.01839	.02581	.00553	.00721	.74240	.52612	1.41110
7.621	-3.200	31.47300	.90845	.06127	-.01840	.02421	.00522	.00678	.74282	.52655	1.41070
7.621	-3.000	31.47900	.90891	.06124	-.01842	.02257	.00491	.00632	.74317	.52685	1.41060
7.614	-2.800	31.48200	.90883	.06111	-.01851	.02101	.00463	.00587	.74314	.52674	1.41080
7.611	-2.600	31.48300	.90996	.06106	-.01855	.01936	.00433	.00542	.74412	.52730	1.41120
7.612	-2.400	31.49100	.91026	.06099	-.01857	.01793	.00408	.00496	.74434	.52749	1.41110
7.611	-2.200	31.49800	.91080	.06095	-.01861	.01617	.00379	.00448	.74475	.52784	1.41100
7.626	-2.000	31.50800	.91138	.06085	-.01865	.01456	.00349	.00405	.74521	.52819	1.41090
7.636	-1.800	31.51700	.91161	.06078	-.01872	.01305	.00316	.00363	.74536	.52836	1.41070
7.634	-1.600	31.52400	.91213	.06065	-.01876	.01149	.00282	.00319	.74581	.52861	1.41090
7.628	-1.400	31.52900	.91216	.06058	-.01876	.01009	.00249	.00280	.74582	.52864	1.41080
7.639	-1.200	31.53800	.91335	.06058	-.01881	.00858	.00213	.00236	.74675	.52937	1.41060
7.666	-1.000	31.55500	.91442	.06054	-.01882	.00707	.00177	.00198	.74753	.53012	1.41010
7.654	-.800	31.56100	.91401	.06050	-.01888	.00563	.00140	.00160	.74715	.52996	1.40980
7.661	-.600	31.56700	.91492	.06049	-.01883	.00417	.00103	.00120	.74787	.53050	1.40980
7.660	-.400	31.57600	.91505	.06052	-.01889	.00272	.00067	.00080	.74789	.53071	1.40920
7.671	-.200	31.58800	.91567	.06050	-.01888	.00119	.00029	.00041	.74831	.53117	1.40880
7.659	.000	31.59800	.91583	.06046	-.01888	-.00020	-.00005	.00001	.74837	.53136	1.40840
7.673	.200	31.61200	.91617	.06051	-.01887	-.00167	-.00040	-.00039	.74851	.53176	1.40760
7.656	.400	31.61700	.91636	.06047	-.01890	-.00314	-.00077	-.00078	.74865	.53189	1.40750
7.648	.600	31.62200	.91684	.06050	-.01898	-.00468	-.00112	-.00122	.74899	.53223	1.40730
7.663	.800	31.63500	.91723	.06052	-.01899	-.00620	-.00145	-.00162	.74919	.53262	1.40660
7.654	1.000	31.63800	.91735	.06054	-.01909	-.00770	-.00179	-.00206	.74926	.53274	1.40640
7.663	1.200	31.64900	.91719	.06059	-.01903	-.00916	-.00214	-.00246	.74899	.53283	1.40570
7.665	1.400	31.65800	.91774	.06066	-.01894	-.01071	-.00250	-.00284	.74935	.53330	1.40510
7.649	1.600	31.65800	.91783	.06069	-.01899	-.01233	-.00279	-.00331	.74939	.53338	1.40500
7.665	1.800	31.66800	.91816	.06071	-.01905	-.01398	-.00310	-.00376	.74957	.53371	1.40450
7.677	2.000	31.67800	.91840	.06075	-.01904	-.01562	-.00343	-.00422	.74967	.53399	1.40390
7.664	2.200	31.67500	.91840	.06075	-.01907	-.01720	-.00377	-.00467	.74970	.53396	1.40400
	GRADIENT	.04839	.00159	-.00001	-.00008	-.00734	-.00179	-.00200	.00091	.00145	-.00216

OA257 (LARC 20-M6-6559) OV102 (R7E075) (10 JUL 81)

REFERENCE DATA

SREF = 2690.0000 SQ.FT. XMRP = 1076.6800 IN. XO
LREF = 474.8100 INCHES YMRP = .0000 IN. YO
BREF = 936.6800 INCHES ZMRP = 375.0000 IN. ZO
SCALE = .0100

PARAMETRIC DATA

ALPHA = 35.000 PHI = .000
SPDBRK = .000 AILRON = .000
YP = 1.000 1S = 1.000
ELEVON = .000 MACH = 6.000
S-MODE = 2.000 S-DIR = 1.000

RUN NO. 293/ O RN/L = 2.27 GRADIENT INTERVAL = -.60/ .60

RN/L	BETA	ALPHA	CN	CA	CLM	CY	CYN	CBL	CL	CD	L/D
2.266	-4.676	34.25600	1.05680	.06231	-.02410	.03528	.00904	.01028	.83838	.64635	1.29710
2.263	-4.500	34.27000	1.05630	.06209	-.02414	.03383	.00873	.00986	.83794	.64609	1.29690
2.262	-4.300	34.27500	1.05740	.06189	-.02428	.03226	.00839	.00943	.83891	.64664	1.29730
2.268	-4.100	34.27300	1.05760	.06190	-.02436	.03075	.00794	.00904	.83906	.64670	1.29740
2.276	-3.900	34.28000	1.05800	.06184	-.02436	.02926	.00749	.00863	.83940	.64703	1.29730
2.272	-3.700	34.28400	1.05970	.06192	-.02443	.02779	.00700	.00824	.84073	.64810	1.29720
2.273	-3.500	34.28800	1.05980	.06191	-.02452	.02646	.00652	.00786	.84076	.64820	1.29710
2.273	-3.300	34.29500	1.06040	.06193	-.02457	.02506	.00608	.00746	.84118	.64866	1.29680
2.270	-3.100	34.30500	1.06200	.06189	-.02466	.02372	.00560	.00704	.84236	.64964	1.29670
2.266	-2.900	34.31700	1.06200	.06186	-.02462	.02226	.00517	.00662	.84231	.64984	1.29620
2.263	-2.700	34.32700	1.06340	.06184	-.02458	.02089	.00474	.00619	.84332	.65074	1.29590
2.264	-2.500	34.33700	1.06350	.06190	-.02466	.01944	.00433	.00576	.84328	.65101	1.29530
2.264	-2.300	34.34500	1.06490	.06197	-.02472	.01802	.00394	.00534	.84429	.65197	1.29500
2.265	-2.100	34.35000	1.06600	.06192	-.02469	.01643	.00355	.00487	.84517	.65262	1.29510
2.261	-1.900	34.35300	1.06520	.06189	-.02478	.01490	.00316	.00440	.84451	.65221	1.29480
2.265	-1.700	34.35900	1.06640	.06190	-.02475	.01335	.00279	.00393	.84544	.65298	1.29470
2.271	-1.500	34.36700	1.06660	.06197	-.02496	.01185	.00244	.00349	.84547	.65325	1.29420
2.267	-1.300	34.37300	1.06700	.06196	-.02496	.01033	.00207	.00305	.84568	.65355	1.29400
2.266	-1.100	34.38100	1.06780	.06197	-.02495	.00876	.00171	.00258	.84627	.65413	1.29370
2.266	-.900	34.39700	1.06900	.06195	-.02496	.00727	.00136	.00211	.84708	.65501	1.29320
2.267	-.700	34.40900	1.06940	.06188	-.02487	.00575	.00102	.00165	.84730	.65535	1.29290
2.265	-.500	34.42000	1.06930	.06189	-.02482	.00414	.00068	.00116	.84711	.65550	1.29230
2.272	-.300	34.42800	1.06970	.06183	-.02484	.00264	.00031	.00071	.84736	.65576	1.29220
2.276	-.100	34.43300	1.06960	.06185	-.02482	.00093	-.00004	.00021	.84721	.65579	1.29190
2.270	.100	34.43700	1.07080	.06190	-.02486	-.00058	-.00037	-.00027	.84818	.65660	1.29180
2.265	.300	34.44300	1.07120	.06182	-.02497	-.00226	-.00072	-.00079	.84848	.65687	1.29170
2.268	.500	34.44900	1.07060	.06189	-.02510	-.00377	-.00103	-.00130	.84782	.65662	1.29120
2.269	.700	34.45700	1.07180	.06187	-.02511	-.00539	-.00138	-.00178	.84878	.65746	1.29100
2.269	.900	34.46800	1.07200	.06193	-.02520	-.00694	-.00170	-.00229	.84875	.65775	1.29040
2.272	1.100	34.48000	1.07200	.06177	-.02514	-.00847	-.00202	-.00278	.84867	.65778	1.29020
2.270	1.300	34.49400	1.07300	.06192	-.02509	-.01016	-.00241	-.00328	.84932	.65872	1.28940
2.268	1.500	34.50200	1.07250	.06182	-.02511	-.01166	-.00278	-.00376	.84882	.65845	1.28910
2.272	1.700	34.50900	1.07180	.06168	-.02507	-.01327	-.00314	-.00422	.84828	.65805	1.28910
2.277	1.900	34.51300	1.07270	.06166	-.02509	-.01478	-.00354	-.00470	.84895	.65858	1.28910
2.275	2.100	34.51700	1.07130	.06165	-.02511	-.01619	-.00394	-.00514	.84774	.65784	1.28870
2.270	2.300	34.52200	1.07300	.06172	-.02514	-.01764	-.00436	-.00560	.84906	.65892	1.28860
2.267	2.500	34.53100	1.07300	.06160	-.02515	-.01914	-.00480	-.00604	.84906	.65899	1.28840
2.265	2.634	34.53100	1.07050	.06155	-.02520	-.02002	-.00506	-.00632	.84704	.65755	1.28820
	GRADIENT	.02771	.00174	.00000	-.00026	-.00796	-.00172	-.00247	.00113	.00139	-.00101

OA257 (LARC 20-M6-6559) OV102 (R7E075) (10 JUL 81)

REFERENCE DATA

SREF = 2690.0000 SQ.FT. XMRP = 1076.6800 IN. XO
LREF = 474.8100 INCHES YMRP = .0000 IN. YO
BREF = 936.6800 INCHES ZMRP = 375.0000 IN. ZO
SCALE = .0100

PARAMETRIC DATA

ALPHA = 35.000 PHI = .000
SPDBRK = .000 AILRON = .000
YP = 1.000 1S = 1.000
ELEVON = .000 MACH = 6.000
S-MODE = 2.000 S-DIR = 1.000

RUN NO. 272/ 0 RN/L = 7.63 GRADIENT INTERVAL = -.60/ .60

RN/L	BETA	ALPHA	CN	CA	CLM	CY	CYN	CBL	CL	CD	L/D
7.613	-4.892	33.85400	1.00920	.06097	-.02384	.03686	.00846	.01091	.80415	.61285	1.31220
7.608	-4.700	33.86600	1.00980	.06092	-.02382	.03529	.00808	.01049	.80454	.61331	1.31180
7.623	-4.500	33.87100	1.01050	.06085	-.02391	.03375	.00769	.01011	.80515	.61372	1.31190
7.608	-4.300	33.87000	1.01070	.06069	-.02396	.03221	.00733	.00967	.80535	.61365	1.31240
7.612	-4.100	33.87700	1.01090	.06058	-.02398	.03073	.00697	.00926	.80555	.61380	1.31240
7.609	-3.900	33.88500	1.01200	.06049	-.02409	.02921	.00662	.00884	.80640	.61444	1.31240
7.636	-3.700	33.89900	1.01260	.06044	-.02413	.02763	.00624	.00839	.80678	.61493	1.31200
7.640	-3.500	33.90300	1.01310	.06036	-.02421	.02614	.00589	.00798	.80718	.61520	1.31210
7.648	-3.300	33.91300	1.01400	.06038	-.02417	.02471	.00557	.00751	.80785	.61588	1.31170
7.631	-3.100	33.92400	1.01510	.06033	-.02417	.02315	.00522	.00705	.80863	.61657	1.31150
7.633	-2.900	33.93400	1.01560	.06032	-.02432	.02168	.00488	.00661	.80896	.61700	1.31110
7.639	-2.700	33.94600	1.01700	.06034	-.02434	.02011	.00451	.00616	.80996	.61794	1.31070
7.644	-2.500	33.95700	1.01680	.06029	-.02432	.01865	.00417	.00570	.80972	.61795	1.31030
7.643	-2.300	33.96700	1.01780	.06027	-.02438	.01717	.00384	.00522	.81042	.61861	1.31010
7.633	-2.100	33.97800	1.01830	.06027	-.02449	.01554	.00353	.00476	.81078	.61912	1.30960
7.648	-1.900	33.98700	1.01840	.06023	-.02451	.01395	.00322	.00426	.81076	.61923	1.30930
7.663	-1.700	34.00000	1.01940	.06020	-.02451	.01232	.00291	.00376	.81146	.61995	1.30890
7.657	-1.500	34.00600	1.01980	.06022	-.02459	.01083	.00261	.00331	.81172	.62027	1.30870
7.652	-1.300	34.01100	1.02000	.06022	-.02461	.00939	.00227	.00286	.81179	.62044	1.30840
7.664	-1.100	34.01500	1.02060	.06020	-.02467	.00779	.00190	.00242	.81231	.62084	1.30840
7.659	-.900	34.01900	1.02070	.06020	-.02464	.00638	.00157	.00197	.81235	.62096	1.30820
7.651	-.700	34.02700	1.02160	.06021	-.02472	.00494	.00121	.00155	.81300	.62158	1.30800
7.640	-.500	34.02900	1.02170	.06024	-.02465	.00342	.00084	.00110	.81303	.62168	1.30780
7.638	-.300	34.03400	1.02210	.06021	-.02470	.00204	.00048	.00069	.81328	.62193	1.30770
7.620	-.100	34.03600	1.02210	.06023	-.02481	.00061	.00011	.00027	.81327	.62198	1.30760
7.614	.100	34.04200	1.02230	.06025	-.02477	-.00082	-.00026	-.00017	.81335	.62218	1.30730
7.607	.300	34.05000	1.02300	.06030	-.02475	-.00215	-.00063	-.00060	.81381	.62274	1.30680
7.596	.500	34.05500	1.02250	.06027	-.02481	-.00373	-.00102	-.00105	.81336	.62250	1.30660
7.598	.700	34.06000	1.02290	.06030	-.02489	-.00509	-.00137	-.00143	.81364	.62285	1.30630
7.586	.900	34.06600	1.02340	.06039	-.02488	-.00660	-.00174	-.00189	.81392	.62325	1.30590
7.610	1.100	34.07900	1.02360	.06037	-.02494	-.00801	-.00210	-.00230	.81401	.62358	1.30540
7.624	1.300	34.08800	1.02440	.06037	-.02492	-.00951	-.00244	-.00275	.81452	.62413	1.30500
7.619	1.500	34.09400	1.02440	.06041	-.02502	-.01108	-.00277	-.00322	.81449	.62428	1.30470
7.622	1.700	34.10400	1.02470	.06040	-.02499	-.01265	-.00307	-.00367	.81459	.62455	1.30430
7.636	1.900	34.11600	1.02480	.06049	-.02500	-.01431	-.00340	-.00419	.81449	.62485	1.30350
7.636	2.100	34.11900	1.02490	.06049	-.02501	-.01591	-.00371	-.00466	.81457	.62495	1.30340
	GRADIENT	.02629	.00099	.00007	-.00013	-.00711	-.00186	-.00215	.00047	.00096	-.00129

OA257 (LARC 20-M6-6559) OV102 (R7E175) (10 JUL 81)

REFERENCE DATA

SREF = 2690.0000 SQ.FT. XMRP = 1076.6800 IN. XO
LREF = 474.8100 INCHES YMRP = .0000 IN. YO
BREF = 936.6800 INCHES ZMRP = 375.0000 IN. ZO
SCALE = .0100

PARAMETRIC DATA

ALPHA = 35.000 PHI = .000
SPDBRK = .000 AILRON = .000
YP = 1.000 1S = 1.000
ELEVON = .000 MACH = 6.000
S-MODE = 2.000 S-DIR = 1.000

RUN NO. 2293/ 0 RN/L = 2.27 GRADIENT INTERVAL = -.60/ .60

RN/L	BETA	ALPHA	CN	CA	CLM	CY	CYN	CBL	CL	CD	L/D
2.264	-4.600	34.26600	1.05620	.06212	-.02409	.03469	.00891	.01010	.83789	.64601	1.29700
2.263	-4.400	34.27100	1.05760	.06205	-.02424	.03298	.00856	.00964	.83904	.64681	1.29720
2.265	-4.200	34.27300	1.05770	.06195	-.02431	.03146	.00817	.00923	.83915	.64682	1.29730
2.272	-4.000	34.27700	1.05840	.06189	-.02436	.03005	.00771	.00883	.83975	.64724	1.29740
2.275	-3.800	34.28100	1.05860	.06189	-.02440	.02849	.00723	.00843	.83984	.64740	1.29720
2.271	-3.600	34.28500	1.06060	.06191	-.02454	.02716	.00675	.00805	.84146	.64861	1.29730
2.274	-3.400	34.29000	1.06140	.06187	-.02452	.02576	.00629	.00766	.84203	.64907	1.29730
2.271	-3.200	34.29900	1.06090	.06190	-.02460	.02440	.00583	.00724	.84155	.64897	1.29670
2.267	-3.000	34.31000	1.06210	.06188	-.02463	.02302	.00537	.00683	.84239	.64977	1.29640
2.265	-2.800	34.32000	1.06240	.06180	-.02469	.02158	.00495	.00642	.84259	.65002	1.29620
2.263	-2.600	34.33200	1.06330	.06189	-.02462	.02012	.00453	.00597	.84318	.65081	1.29560
2.266	-2.400	34.34200	1.06410	.06189	-.02466	.01876	.00414	.00554	.84369	.65138	1.29520
2.265	-2.200	34.34700	1.06500	.06191	-.02470	.01721	.00374	.00511	.84439	.65200	1.29510
2.263	-2.000	34.35200	1.06530	.06188	-.02475	.01572	.00336	.00464	.84461	.65222	1.29500
2.262	-1.800	34.35800	1.06640	.06190	-.02474	.01414	.00298	.00416	.84538	.65291	1.29480
2.269	-1.600	34.36300	1.06700	.06192	-.02486	.01261	.00261	.00371	.84585	.65337	1.29460
2.270	-1.400	34.36700	1.06590	.06197	-.02490	.01106	.00225	.00328	.84486	.65285	1.29410
2.265	-1.200	34.37800	1.06760	.06192	-.02500	.00958	.00189	.00281	.84618	.65393	1.29400
2.266	-1.000	34.39000	1.06890	.06196	-.02500	.00808	.00154	.00235	.84707	.65487	1.29350
2.266	-.800	34.40300	1.06900	.06194	-.02491	.00644	.00119	.00188	.84704	.65512	1.29300
2.266	-.600	34.41700	1.07020	.06195	-.02480	.00496	.00086	.00142	.84785	.65600	1.29250
2.267	-.400	34.42300	1.06860	.06185	-.02487	.00330	.00048	.00093	.84650	.65509	1.29220
2.276	-.200	34.42900	1.06960	.06178	-.02485	.00181	.00014	.00046	.84729	.65570	1.29220
2.274	.000	34.43400	1.07010	.06183	-.02489	.00020	-.00021	-.00004	.84761	.65607	1.29200
2.266	.200	34.44000	1.07060	.06188	-.02487	-.00135	-.00054	-.00052	.84794	.65650	1.29160
2.267	.400	34.44400	1.07130	.06193	-.02507	-.00302	-.00088	-.00103	.84842	.65698	1.29140
2.269	.600	34.45300	1.07070	.06189	-.02512	-.00455	-.00120	-.00155	.84788	.65675	1.29100
2.269	.800	34.46000	1.07070	.06195	-.02515	-.00614	-.00153	-.00204	.84778	.65694	1.29050
2.270	1.000	34.47300	1.07150	.06191	-.02519	-.00767	-.00185	-.00254	.84831	.65753	1.29010
2.272	1.200	34.48700	1.07260	.06181	-.02508	-.00929	-.00220	-.00301	.84914	.65829	1.28990
2.269	1.400	34.49800	1.07290	.06182	-.02508	-.01092	-.00260	-.00352	.84918	.65859	1.28940
2.269	1.600	34.50600	1.07200	.06175	-.02507	-.01241	-.00295	-.00399	.84842	.65815	1.28910
2.275	1.800	34.51100	1.07260	.06160	-.02511	-.01400	-.00333	-.00447	.84894	.65846	1.28930
2.278	2.000	34.51700	1.07300	.06164	-.02506	-.01555	-.00373	-.00493	.84918	.65880	1.28900
2.272	2.200	34.51800	1.07230	.06169	-.02510	-.01693	-.00415	-.00538	.84857	.65848	1.28870
2.268	2.400	34.52700	1.07320	.06174	-.02514	-.01839	-.00459	-.00582	.84919	.65916	1.28830
2.266	2.600	34.53200	1.07160	.06162	-.02520	-.01981	-.00500	-.00625	.84784	.65819	1.28810
	GRADIENT	.02875	.00141	.00001	-.00025	-.00792	-.00171	-.00246	.00082	.00122	-.00120

OA257 (LARC 20-M6-6559) OV102 (R7E175) (10 JUL 81)

REFERENCE DATA

SREF = 2690.0000 SQ.FT. XMRP = 1076.6800 IN. XO
LREF = 474.8100 INCHES YMRP = .0000 IN. YO
BREF = 936.6800 INCHES ZMRP = 375.0000 IN. ZO
SCALE = .0100

PARAMETRIC DATA

ALPHA = 35.000 PHI = .000
SPDBRK = .000 AILRON = .000
YP = 1.000 1S = 1.000
ELEVON = .000 MACH = 6.000
S-MODE = 2.000 S-DIR = 1.000

RUN NO. 2272/ O RN/L = 7.63 GRADIENT INTERVAL = -.60/ .60

RN/L	BETA	ALPHA	CN	CA	CLM	CY	CYN	CBL	CL	CD	L/D
7.618	-4.800	33.86400	1.00950	.06093	-.02383	.03612	.00830	.01072	.80426	.61309	1.31180
7.608	-4.600	33.86400	1.00970	.06086	-.02391	.03454	.00789	.01030	.80453	.61319	1.31210
7.619	-4.400	33.87000	1.01020	.06078	-.02393	.03300	.00751	.00989	.80492	.61348	1.31210
7.609	-4.200	33.87100	1.01140	.06067	-.02399	.03149	.00715	.00946	.80594	.61406	1.31250
7.607	-4.000	33.88200	1.01150	.06050	-.02399	.02997	.00680	.00904	.80601	.61412	1.31250
7.632	-3.800	33.89500	1.01230	.06047	-.02409	.02841	.00643	.00861	.80659	.61475	1.31210
7.623	-3.600	33.90100	1.01290	.06044	-.02413	.02686	.00607	.00817	.80703	.61513	1.31200
7.652	-3.400	33.90800	1.01370	.06041	-.02414	.02541	.00572	.00773	.80762	.61565	1.31180
7.640	-3.200	33.91800	1.01500	.06038	-.02423	.02395	.00539	.00729	.80860	.61648	1.31160
7.622	-3.000	33.92600	1.01520	.06038	-.02426	.02245	.00505	.00684	.80867	.61670	1.31130
7.632	-2.800	33.93800	1.01570	.06030	-.02433	.02086	.00468	.00639	.80897	.61707	1.31100
7.645	-2.600	33.95500	1.01740	.06031	-.02430	.01939	.00435	.00593	.81023	.61828	1.31050
7.647	-2.400	33.96300	1.01770	.06031	-.02435	.01791	.00400	.00547	.81037	.61855	1.31010
7.629	-2.200	33.96800	1.01780	.06026	-.02438	.01634	.00368	.00498	.81045	.61865	1.31000
7.643	-2.000	33.98100	1.01840	.06028	-.02450	.01475	.00337	.00451	.81078	.61918	1.30940
7.665	-1.800	33.99400	1.01880	.06022	-.02452	.01312	.00307	.00401	.81102	.61954	1.30910
7.658	-1.600	34.00200	1.01960	.06025	-.02455	.01161	.00278	.00353	.81155	.62012	1.30870
7.656	-1.400	34.00800	1.01980	.06022	-.02459	.01009	.00244	.00309	.81172	.62032	1.30850
7.656	-1.200	34.01300	1.02040	.06020	-.02466	.00860	.00209	.00265	.81219	.62072	1.30850
7.667	-1.000	34.01600	1.02080	.06021	-.02466	.00708	.00173	.00220	.81247	.62099	1.30830
7.658	-.800	34.02500	1.02140	.06019	-.02463	.00564	.00140	.00176	.81283	.62141	1.30800
7.646	-.600	34.03000	1.02140	.06023	-.02466	.00414	.00103	.00133	.81277	.62153	1.30770
7.638	-.400	34.03400	1.02190	.06019	-.02473	.00276	.00066	.00090	.81313	.62181	1.30770
7.637	-.200	34.03300	1.02130	.06021	-.02473	.00133	.00030	.00048	.81267	.62149	1.30760
7.622	.000	34.03900	1.02270	.06025	-.02479	-.00011	-.00009	.00006	.81377	.62241	1.30740
7.606	.200	34.04700	1.02260	.06027	-.02475	-.00149	-.00045	-.00038	.81360	.62249	1.30700
7.609	.400	34.05400	1.02310	.06031	-.02481	-.00297	-.00083	-.00082	.81388	.62287	1.30670
7.595	.600	34.05800	1.02290	.06030	-.02487	-.00439	-.00120	-.00124	.81364	.62278	1.30650
7.594	.800	34.06500	1.02330	.06032	-.02493	-.00582	-.00156	-.00166	.81393	.62316	1.30610
7.597	1.000	34.07100	1.02350	.06039	-.02492	-.00726	-.00191	-.00208	.81398	.62341	1.30570
7.611	1.200	34.08300	1.02400	.06034	-.02494	-.00876	-.00227	-.00251	.81432	.62384	1.30530
7.627	1.400	34.09200	1.02350	.06037	-.02493	-.01032	-.00260	-.00298	.81381	.62371	1.30480
7.621	1.600	34.10100	1.02480	.06042	-.02495	-.01181	-.00292	-.00344	.81471	.62459	1.30440
7.628	1.800	34.11300	1.02490	.06046	-.02504	-.01352	-.00324	-.00394	.81468	.62486	1.30380
7.636	2.000	34.11900	1.02470	.06050	-.02505	-.01507	-.00355	-.00441	.81437	.62485	1.30330
7.615	2.186	34.12600	1.02530	.06042	-.02496	-.01657	-.00385	-.00487	.81483	.62520	1.30330
	GRADIENT	.02464	.00146	.00009	-.00014	-.00712	-.00186	-.00215	.00090	.00123	-.00111

OA257 (LARC 20-M6-6559) OV102 (R7E076) (10 JUL 81)

REFERENCE DATA

SREF = 2690.0000 SQ.FT. XMRP = 1076.6800 IN. XO
LREF = 474.8100 INCHES YMRP = .0000 IN. YO
BREF = 936.6800 INCHES ZMRP = 375.0000 IN. ZO
SCALE = .0100

PARAMETRIC DATA

ALPHA = 37.500 PHI = .000
SPDBRK = .000 AILRON = .000
YP = 1.000 1S = 1.000
ELEVON = .000 MACH = 6.000
S-MODE = 2.000 S-DIR = 1.000

RUN NO. 294/ 0 RN/L = 2.22 GRADIENT INTERVAL = -.60/ .60

RN/L	BETA	ALPHA	CN	CA	CLM	CY	CYN	CBL	CL	CD	L/D
2.232	-5.068	36.79200	1.16570	.06146	-.03169	.03776	.01007	.01179	.89672	.74740	1.19980
2.232	-4.900	36.80500	1.16720	.06140	-.03187	.03632	.00976	.01139	.89773	.74840	1.19950
2.224	-4.700	36.80700	1.16940	.06140	-.03195	.03486	.00934	.01093	.89947	.74975	1.19970
2.219	-4.500	36.81900	1.16980	.06127	-.03199	.03330	.00896	.01046	.89978	.75011	1.19950
2.216	-4.300	36.83300	1.17000	.06116	-.03204	.03172	.00857	.00999	.89977	.75033	1.19920
2.218	-4.100	36.84200	1.17100	.06114	-.03206	.03026	.00818	.00953	.90045	.75104	1.19890
2.220	-3.900	36.84600	1.17170	.06105	-.03208	.02867	.00771	.00908	.90104	.75150	1.19900
2.223	-3.700	36.84800	1.17290	.06100	-.03204	.02720	.00731	.00863	.90204	.75221	1.19920
2.220	-3.500	36.85200	1.17360	.06114	-.03217	.02575	.00687	.00821	.90243	.75279	1.19880
2.220	-3.300	36.85700	1.17430	.06102	-.03232	.02429	.00644	.00775	.90303	.75322	1.19890
2.219	-3.100	36.86400	1.17550	.06113	-.03232	.02288	.00600	.00730	.90378	.75411	1.19850
2.214	-2.900	36.87400	1.17390	.06104	-.03246	.02149	.00558	.00684	.90240	.75322	1.19810
2.214	-2.700	36.89200	1.17690	.06104	-.03232	.02006	.00515	.00639	.90459	.75532	1.19760
2.211	-2.500	36.90500	1.17720	.06107	-.03244	.01864	.00473	.00598	.90467	.75573	1.19710
2.210	-2.300	36.91000	1.17670	.06082	-.03248	.01721	.00429	.00553	.90431	.75527	1.19730
2.213	-2.100	36.91400	1.17730	.06085	-.03252	.01571	.00388	.00508	.90474	.75574	1.19720
2.220	-1.900	36.92100	1.17880	.06098	-.03255	.01422	.00345	.00458	.90575	.75684	1.19680
2.222	-1.700	36.92400	1.17810	.06096	-.03272	.01273	.00306	.00412	.90521	.75652	1.19660
2.221	-1.500	36.93400	1.18040	.06112	-.03277	.01140	.00268	.00365	.90678	.75813	1.19610
2.221	-1.300	36.94600	1.18010	.06105	-.03281	.00982	.00226	.00316	.90647	.75812	1.19570
2.219	-1.100	36.96200	1.18060	.06087	-.03288	.00849	.00184	.00270	.90672	.75850	1.19540
2.222	-.900	36.97300	1.18070	.06088	-.03282	.00699	.00142	.00224	.90665	.75874	1.19490
2.229	-.700	36.98400	1.18230	.06084	-.03280	.00550	.00104	.00176	.90786	.75987	1.19480
2.227	-.500	36.98600	1.18220	.06088	-.03286	.00395	.00069	.00123	.90772	.75988	1.19460
2.229	-.300	36.98900	1.18160	.06095	-.03292	.00244	.00035	.00070	.90711	.75957	1.19420
2.228	-.100	36.99700	1.18250	.06099	-.03304	.00088	.00003	.00016	.90770	.76030	1.19390
2.227	.100	37.00100	1.18160	.06099	-.03298	-.00065	-.00029	-.00038	.90692	.75982	1.19360
2.226	.300	37.01600	1.18390	.06099	-.03308	-.00222	-.00063	-.00094	.90860	.76145	1.19320
2.226	.500	37.02900	1.18340	.06095	-.03306	-.00375	-.00094	-.00148	.90807	.76134	1.19270
2.223	.700	37.04300	1.18460	.06094	-.03300	-.00544	-.00133	-.00198	.90883	.76226	1.19230
2.220	.900	37.04900	1.18530	.06091	-.03305	-.00688	-.00168	-.00246	.90931	.76276	1.19210
2.221	1.100	37.05300	1.18410	.06087	-.03305	-.00837	-.00211	-.00296	.90831	.76205	1.19190
2.222	1.300	37.05800	1.18580	.06088	-.03308	-.00980	-.00256	-.00344	.90959	.76316	1.19190
2.224	1.500	37.06400	1.18490	.06093	-.03318	-.01123	-.00296	-.00391	.90881	.76279	1.19140
2.226	1.700	37.07200	1.18490	.06094	-.03326	-.01259	-.00338	-.00440	.90866	.76288	1.19110
2.227	1.900	37.08500	1.18560	.06100	-.03335	-.01403	-.00382	-.00486	.90898	.76356	1.19050
2.226	2.100	37.10200	1.18600	.06100	-.03322	-.01563	-.00426	-.00535	.90915	.76411	1.18980
2.226	2.224	37.10500	1.18720	.06081	-.03325	-.01640	-.00454	-.00563	.91012	.76470	1.19020
	GRADIENT	.04286	.00171	.00007	-.00020	-.00772	-.00163	-.00272	.00078	.00178	-.00183

OA257 (LARC 20-M6-6559) OV102 (R7E076) (10 JUL 81)

REFERENCE DATA

SREF = 2690.0000 SQ.FT. XMRP = 1076.6800 IN. XO
LREF = 474.8100 INCHES YMRP = .0000 IN. YO
BREF = 936.6800 INCHES ZMRP = 375.0000 IN. ZO
SCALE = .0100

PARAMETRIC DATA

ALPHA = 37.500 PHI = .000
SPDBRK = .000 AILRON = .000
YP = 1.000 1S = 1.000
ELEVON = .000 MACH = 6.000
S-MODE = 2.000 S-DIR = 1.000

RUN NO. 273/ 0 RN/L = 7.66 GRADIENT INTERVAL = -.60/ .60

RN/L	BETA	ALPHA	CN	CA	CLM	CY	CYN	CBL	CL	CD	L/D
7.710	-5.109	36.37300	1.11790	.06055	-.03085	.03787	.00939	.01200	.86417	.71168	1.21430
7.718	-5.000	36.38100	1.11810	.06051	-.03085	.03705	.00923	.01175	.86427	.71190	1.21400
7.722	-4.800	36.38500	1.11900	.06048	-.03092	.03541	.00887	.01125	.86497	.71250	1.21400
7.730	-4.600	36.39600	1.12020	.06045	-.03097	.03384	.00853	.01079	.86584	.71335	1.21380
7.723	-4.400	36.40000	1.12050	.06045	-.03103	.03222	.00815	.01032	.86604	.71360	1.21360
7.741	-4.200	36.41500	1.12150	.06039	-.03114	.03082	.00779	.00987	.86669	.71437	1.21320
7.726	-4.000	36.41900	1.12190	.06029	-.03122	.02933	.00743	.00943	.86697	.71455	1.21330
7.735	-3.800	36.43000	1.12320	.06034	-.03116	.02779	.00702	.00896	.86789	.71558	1.21290
7.721	-3.600	36.43600	1.12430	.06028	-.03127	.02644	.00664	.00854	.86872	.71626	1.21290
7.713	-3.400	36.45100	1.12480	.06024	-.03124	.02503	.00626	.00811	.86896	.71674	1.21240
7.710	-3.200	36.46300	1.12580	.06018	-.03119	.02357	.00586	.00766	.86964	.71747	1.21210
7.683	-3.000	36.46800	1.12640	.06014	-.03134	.02224	.00546	.00726	.87013	.71788	1.21210
7.676	-2.800	36.47100	1.12660	.06011	-.03126	.02078	.00503	.00681	.87022	.71800	1.21200
7.662	-2.600	36.47900	1.12730	.06007	-.03128	.01945	.00466	.00637	.87075	.71854	1.21180
7.641	-2.400	36.48300	1.12760	.06003	-.03131	.01805	.00430	.00592	.87096	.71874	1.21180
7.626	-2.200	36.48500	1.12810	.06003	-.03138	.01663	.00389	.00549	.87133	.71907	1.21180
7.633	-2.000	36.49300	1.12870	.06002	-.03145	.01516	.00352	.00501	.87173	.71954	1.21150
7.601	-1.800	36.49300	1.12910	.06004	-.03145	.01368	.00317	.00451	.87203	.71979	1.21150
7.594	-1.600	36.50100	1.12920	.06000	-.03152	.01224	.00283	.00402	.87205	.71994	1.21130
7.602	-1.400	36.51200	1.13020	.06003	-.03154	.01077	.00252	.00357	.87267	.72070	1.21090
7.600	-1.200	36.52100	1.13070	.05999	-.03158	.00921	.00219	.00304	.87299	.72111	1.21060
7.614	-1.000	36.53300	1.13130	.05998	-.03156	.00767	.00186	.00256	.87332	.72167	1.21010
7.611	-.800	36.54400	1.13220	.06001	-.03161	.00624	.00154	.00207	.87384	.72235	1.20970
7.606	-.600	36.55500	1.13300	.06001	-.03160	.00478	.00119	.00160	.87442	.72303	1.20940
7.634	-.400	36.56900	1.13330	.06000	-.03166	.00333	.00084	.00111	.87445	.72340	1.20880
7.650	-.200	36.58300	1.13370	.05994	-.03168	.00182	.00047	.00064	.87460	.72378	1.20840
7.624	.000	36.59100	1.13430	.05995	-.03173	.00038	.00011	.00016	.87502	.72430	1.20810
7.624	.200	36.60400	1.13470	.05997	-.03173	-.00105	-.00027	-.00032	.87517	.72474	1.20760
7.645	.400	36.61500	1.13480	.05993	-.03174	-.00250	-.00065	-.00075	.87511	.72493	1.20720
7.636	.600	36.62000	1.13520	.05991	-.03178	-.00396	-.00101	-.00122	.87540	.72524	1.20700
7.635	.800	36.62800	1.13560	.05984	-.03182	-.00546	-.00135	-.00170	.87561	.72552	1.20690
7.639	1.000	36.63600	1.13560	.05984	-.03182	-.00692	-.00170	-.00218	.87556	.72567	1.20650
7.654	1.200	36.64100	1.13610	.05990	-.03185	-.00850	-.00205	-.00268	.87585	.72609	1.20630
7.675	1.400	36.65100	1.13620	.05989	-.03193	-.01004	-.00237	-.00316	.87582	.72630	1.20590
7.669	1.600	36.65600	1.13650	.05993	-.03197	-.01151	-.00268	-.00365	.87593	.72657	1.20560
7.661	1.800	36.66400	1.13620	.05990	-.03195	-.01307	-.00300	-.00421	.87562	.72649	1.20530
7.678	2.000	36.67100	1.13630	.05994	-.03203	-.01464	-.00334	-.00470	.87563	.72671	1.20490
7.700	2.132	36.67700	1.13690	.05991	-.03200	-.01558	-.00357	-.00502	.87599	.72710	1.20480
	GRADIENT	.05500	.00189	-.00008	-.00013	-.00728	-.00184	-.00234	.00086	.00190	-.00200

OA257 (LARC 20-M6-6559) OV102 (R7E176) (10 JUL 81)

REFERENCE DATA

SREF = 2690.0000 SQ.FT. XMRP = 1076.6800 IN. XO
LREF = 474.8100 INCHES YMRP = .0000 IN. YO
BREF = 936.6800 INCHES ZMRP = 375.0000 IN. ZO
SCALE = .0100

PARAMETRIC DATA

ALPHA = 37.500 PHI = .000
SPDBRK = .000 AILRON = .000
YP = 1.000 1S = 1.000
ELEVON = .000 MACH = 6.000
S-MODE = 2.000 S-DIR = 1.000

RUN NO. 2294/ O RN/L = 2.22 GRADIENT INTERVAL = -.60/ .60

RN/L	BETA	ALPHA	CN	CA	CLM	CY	CYN	CBL	CL	CD	L/D
2.233	-5.000	36.80100	1.16710	.06150	-.03184	.03712	.00995	.01163	.89771	.74842	1.19950
2.228	-4.800	36.80400	1.16820	.06138	-.03194	.03556	.00955	.01115	.89858	.74897	1.19970
2.221	-4.600	36.81200	1.16910	.06135	-.03200	.03399	.00916	.01068	.89921	.74962	1.19960
2.218	-4.400	36.82600	1.16960	.06128	-.03200	.03248	.00879	.01023	.89952	.75011	1.19920
2.218	-4.200	36.83700	1.17000	.06122	-.03207	.03091	.00835	.00975	.89970	.75047	1.19890
2.218	-4.000	36.84500	1.17070	.06109	-.03201	.02946	.00793	.00932	.90020	.75088	1.19890
2.221	-3.800	36.84800	1.17180	.06108	-.03213	.02793	.00752	.00885	.90110	.75160	1.19890
2.221	-3.600	36.85000	1.17270	.06109	-.03212	.02653	.00708	.00841	.90173	.75215	1.19890
2.220	-3.400	36.85400	1.17330	.06114	-.03222	.02504	.00665	.00798	.90213	.75262	1.19870
2.220	-3.200	36.86100	1.17450	.06100	-.03228	.02357	.00622	.00751	.90311	.75336	1.19880
2.216	-3.000	36.86900	1.17470	.06103	-.03236	.02218	.00580	.00708	.90316	.75364	1.19840
2.214	-2.800	36.88300	1.17480	.06108	-.03245	.02073	.00538	.00663	.90301	.75394	1.19770
2.212	-2.600	36.90000	1.17570	.06104	-.03242	.01937	.00496	.00618	.90352	.75470	1.19720
2.210	-2.400	36.90800	1.17710	.06092	-.03244	.01794	.00452	.00577	.90464	.75561	1.19720
2.211	-2.200	36.91400	1.17820	.06098	-.03246	.01643	.00409	.00530	.90537	.75638	1.19700
2.215	-2.000	36.91500	1.17780	.06097	-.03253	.01498	.00367	.00483	.90506	.75617	1.19690
2.222	-1.800	36.92000	1.17850	.06108	-.03266	.01348	.00326	.00435	.90549	.75676	1.19650
2.222	-1.600	36.93000	1.17990	.06100	-.03279	.01203	.00286	.00388	.90649	.75767	1.19640
2.220	-1.400	36.94100	1.18020	.06107	-.03273	.01068	.00249	.00341	.90657	.75809	1.19590
2.220	-1.200	36.95300	1.18080	.06095	-.03280	.00920	.00206	.00294	.90694	.75854	1.19560
2.219	-1.000	36.96900	1.18090	.06088	-.03278	.00771	.00162	.00247	.90689	.75882	1.19510
2.227	-.800	36.97700	1.18220	.06092	-.03281	.00627	.00123	.00201	.90777	.75974	1.19480
2.228	-.600	36.98400	1.18170	.06083	-.03279	.00473	.00087	.00150	.90737	.75950	1.19470
2.229	-.400	36.98900	1.18150	.06093	-.03278	.00323	.00053	.00096	.90706	.75953	1.19420
2.228	-.200	36.99300	1.18180	.06095	-.03298	.00159	.00017	.00044	.90728	.75982	1.19410
2.227	.000	37.00000	1.18270	.06099	-.03304	.00013	-.00013	-.00011	.90787	.76048	1.19380
2.226	.200	37.00800	1.18340	.06102	-.03310	-.00145	-.00047	-.00067	.90824	.76103	1.19340
2.226	.400	37.02600	1.18460	.06096	-.03302	-.00306	-.00078	-.00120	.90907	.76203	1.19300
2.225	.600	37.03800	1.18470	.06092	-.03299	-.00462	-.00115	-.00173	.90897	.76224	1.19250
2.221	.800	37.04600	1.18460	.06092	-.03297	-.00621	-.00149	-.00222	.90879	.76229	1.19220
2.219	1.000	37.05200	1.18540	.06088	-.03306	-.00759	-.00188	-.00271	.90935	.76281	1.19210
2.222	1.200	37.05400	1.18440	.06092	-.03308	-.00914	-.00233	-.00320	.90855	.76232	1.19180
2.222	1.400	37.06000	1.18580	.06099	-.03322	-.01052	-.00274	-.00368	.90954	.76332	1.19160
2.226	1.600	37.06700	1.18490	.06092	-.03327	-.01194	-.00317	-.00415	.90874	.76279	1.19130
2.227	1.800	37.07800	1.18500	.06104	-.03325	-.01329	-.00361	-.00464	.90858	.76312	1.19060
2.226	2.000	37.09300	1.18520	.06097	-.03331	-.01481	-.00403	-.00510	.90859	.76344	1.19010
2.226	2.200	37.10600	1.18700	.06087	-.03326	-.01625	-.00447	-.00558	.90995	.76466	1.19000
	GRADIENT	.04482	.00300	.00007	-.00021	-.00780	-.00166	-.00270	.00175	.00258	-.00173

OA257 (LARC 20-M6-6559) OV102 (R7E176) (10 JUL 81)

REFERENCE DATA

SREF = 2690.0000 SQ.FT. XMRP = 1076.6800 IN. XO
LREF = 474.8100 INCHES YMRP = .0000 IN. YO
BREF = 936.6800 INCHES ZMRP = 375.0000 IN. ZO
SCALE = .0100

PARAMETRIC DATA

ALPHA = 37.500 PHI = .000
SPDBRK = .000 AILRON = .000
YP = 1.000 1S = 1.000
ELEVON = .000 MACH = 6.000
S-MODE = 2.000 S-DIR = 1.000

RUN NO. 2273/ 0 RN/L = 7.66 GRADIENT INTERVAL = -.60/ .60

RN/L	BETA	ALPHA	CN	CA	CLM	CY	CYN	CBL	CL	CD	L/D
7.709	-5.100	36.37300	1.11800	.06053	-.03082	.03783	.00938	.01199	.86431	.71178	1.21430
7.725	-4.900	36.38300	1.11850	.06050	-.03087	.03619	.00904	.01150	.86455	.71217	1.21400
7.724	-4.700	36.39000	1.11940	.06050	-.03094	.03464	.00870	.01102	.86522	.71282	1.21380
7.722	-4.500	36.39400	1.12000	.06043	-.03103	.03308	.00834	.01056	.86566	.71316	1.21380
7.737	-4.300	36.40700	1.12120	.06042	-.03108	.03148	.00797	.01010	.86648	.71408	1.21340
7.734	-4.100	36.41900	1.12200	.06036	-.03118	.03011	.00762	.00964	.86706	.71470	1.21320
7.737	-3.900	36.42600	1.12320	.06033	-.03121	.02853	.00722	.00919	.86795	.71549	1.21310
7.725	-3.700	36.43400	1.12350	.06032	-.03125	.02710	.00683	.00875	.86807	.71576	1.21280
7.716	-3.500	36.44500	1.12410	.06025	-.03129	.02575	.00646	.00833	.86849	.71625	1.21260
7.714	-3.300	36.45600	1.12510	.06021	-.03121	.02428	.00606	.00789	.86913	.71695	1.21230
7.688	-3.100	36.46300	1.12550	.06011	-.03128	.02298	.00567	.00745	.86944	.71722	1.21220
7.681	-2.900	36.46900	1.12650	.06011	-.03125	.02147	.00524	.00703	.87015	.71789	1.21210
7.668	-2.700	36.47200	1.12670	.06008	-.03127	.02012	.00484	.00659	.87028	.71805	1.21200
7.658	-2.500	36.48300	1.12730	.06005	-.03125	.01873	.00446	.00614	.87066	.71854	1.21170
7.625	-2.300	36.48200	1.12790	.06003	-.03140	.01734	.00409	.00572	.87119	.71889	1.21190
7.638	-2.100	36.48900	1.12830	.05999	-.03142	.01592	.00371	.00526	.87146	.71921	1.21170
7.620	-1.900	36.49300	1.12900	.06001	-.03149	.01446	.00335	.00479	.87193	.71968	1.21160
7.599	-1.700	36.49900	1.12980	.06006	-.03142	.01288	.00299	.00426	.87246	.72026	1.21130
7.594	-1.500	36.50500	1.13020	.06003	-.03152	.01155	.00268	.00381	.87274	.72061	1.21110
7.606	-1.300	36.51600	1.13040	.05998	-.03153	.00996	.00235	.00331	.87280	.72083	1.21080
7.606	-1.100	36.52400	1.13140	.05997	-.03158	.00845	.00204	.00277	.87354	.72158	1.21060
7.612	-.900	36.54100	1.13180	.05999	-.03157	.00692	.00169	.00231	.87361	.72207	1.20990
7.612	-.700	36.54900	1.13190	.05999	-.03162	.00554	.00137	.00183	.87360	.72227	1.20950
7.617	-.500	36.55600	1.13310	.06000	-.03165	.00401	.00099	.00136	.87443	.72306	1.20930
7.651	-.300	36.57900	1.13360	.05998	-.03167	.00256	.00066	.00087	.87456	.72369	1.20850
7.632	-.100	36.58700	1.13390	.05998	-.03168	.00112	.00029	.00041	.87472	.72401	1.20820
7.625	.100	36.59800	1.13460	.05994	-.03172	-.00033	-.00008	-.00008	.87516	.72457	1.20780
7.639	.300	36.61100	1.13520	.05992	-.03177	-.00184	-.00047	-.00054	.87545	.72508	1.20740
7.640	.500	36.61700	1.13500	.05992	-.03180	-.00318	-.00082	-.00098	.87524	.72507	1.20710
7.635	.700	36.62300	1.13500	.05989	-.03182	-.00471	-.00119	-.00145	.87521	.72516	1.20690
7.639	.900	36.63100	1.13520	.05984	-.03185	-.00625	-.00153	-.00193	.87527	.72534	1.20670
7.640	1.100	36.63800	1.13600	.05987	-.03183	-.00766	-.00187	-.00241	.87580	.72593	1.20640
7.668	1.300	36.64700	1.13610	.05991	-.03194	-.00930	-.00223	-.00293	.87577	.72620	1.20600
7.673	1.500	36.65300	1.13600	.05992	-.03194	-.01074	-.00252	-.00341	.87559	.72622	1.20570
7.674	1.700	36.66400	1.13620	.05992	-.03200	-.01232	-.00285	-.00393	.87559	.72649	1.20520
7.661	1.900	36.66600	1.13670	.05996	-.03200	-.01387	-.00317	-.00446	.87598	.72687	1.20510
7.682	2.100	36.67200	1.13720	.05995	-.03206	-.01530	-.00351	-.00492	.87633	.72727	1.20500
	GRADIENT	.05886	.00214	-.00009	-.00015	-.00722	-.00183	-.00235	.00102	.00211	-.00210

OA257 (LARC 20-M6-6559) OV102 (R7E077) (10 JUL 81)

REFERENCE DATA

SREF = 2690.0000 SQ.FT. XMRP = 1076.6800 IN. XO
LREF = 474.8100 INCHES YMRP = .0000 IN. YO
BREF = 936.6800 INCHES ZMRP = 375.0000 IN. ZO
SCALE = .0100

PARAMETRIC DATA

ALPHA = 40.000 PHI = .000
SPDBRK = .000 AILRON = .000
YP = 1.000 1S = 1.000
ELEVON = .000 MACH = 6.000
S-MODE = 2.000 S-DIR = 1.000

RUN NO. 295/ 0 RN/L = 2.20 GRADIENT INTERVAL = -.60/ .60

RN/L	BETA	ALPHA	CN	CA	CLM	CY	CYN	CBL	CL	CD	L/D
2.208	-4.970	39.20000	1.28440	.06135	-.03927	.04129	.01031	.01232	.95655	.85932	1.11310
2.211	-4.800	39.20700	1.28430	.06121	-.03943	.03981	.00996	.01190	.95649	.85929	1.11310
2.213	-4.600	39.21600	1.28550	.06129	-.03949	.03815	.00954	.01144	.95725	.86027	1.11270
2.209	-4.400	39.22100	1.28650	.06129	-.03945	.03646	.00913	.01096	.95794	.86097	1.11260
2.203	-4.200	39.23300	1.28740	.06122	-.03951	.03475	.00870	.01048	.95851	.86170	1.11240
2.201	-4.000	39.23800	1.28750	.06112	-.03951	.03309	.00832	.00997	.95857	.86178	1.11230
2.198	-3.800	39.24400	1.28830	.06114	-.03950	.03128	.00791	.00950	.95908	.86238	1.11210
2.198	-3.600	39.25300	1.28900	.06106	-.03952	.02959	.00750	.00901	.95949	.86288	1.11200
2.196	-3.400	39.26500	1.28980	.06114	-.03950	.02791	.00712	.00854	.95992	.86368	1.11140
2.195	-3.200	39.27200	1.29060	.06101	-.03961	.02622	.00673	.00804	.96050	.86420	1.11140
2.195	-3.000	39.27800	1.29200	.06105	-.03973	.02465	.00631	.00755	.96144	.86518	1.11130
2.198	-2.800	39.28900	1.29250	.06097	-.03978	.02294	.00589	.00706	.96175	.86566	1.11100
2.197	-2.600	39.29400	1.29330	.06089	-.03985	.02143	.00548	.00657	.96230	.86614	1.11100
2.198	-2.400	39.30500	1.29430	.06093	-.03990	.01973	.00503	.00608	.96292	.86702	1.11060
2.200	-2.200	39.31500	1.29420	.06084	-.04007	.01821	.00462	.00558	.96273	.86704	1.11040
2.198	-2.000	39.32100	1.29580	.06096	-.04007	.01658	.00417	.00509	.96383	.86827	1.11010
2.197	-1.800	39.33100	1.29650	.06083	-.04011	.01500	.00374	.00461	.96428	.86878	1.10990
2.200	-1.600	39.34000	1.29650	.06090	-.04018	.01350	.00333	.00414	.96414	.86901	1.10950
2.204	-1.400	39.35200	1.29750	.06091	-.04030	.01192	.00289	.00363	.96466	.86979	1.10910
2.206	-1.200	39.36100	1.29810	.06089	-.04024	.01034	.00246	.00316	.96507	.87036	1.10880
2.202	-1.000	39.37000	1.29800	.06088	-.04046	.00893	.00207	.00264	.96479	.87039	1.10850
2.201	-.800	39.37900	1.29920	.06081	-.04039	.00731	.00165	.00213	.96563	.87125	1.10830
2.206	-.600	39.38600	1.29940	.06083	-.04050	.00569	.00123	.00161	.96570	.87155	1.10800
2.205	-.400	39.39800	1.29970	.06087	-.04047	.00418	.00082	.00110	.96571	.87195	1.10750
2.207	-.200	39.40400	1.30040	.06094	-.04050	.00251	.00041	.00059	.96612	.87258	1.10720
2.203	.000	39.41700	1.30100	.06101	-.04061	.00086	.00003	.00004	.96637	.87324	1.10660
2.204	.200	39.42100	1.30170	.06102	-.04063	-.00074	-.00036	-.00049	.96678	.87371	1.10650
2.201	.400	39.43400	1.30190	.06085	-.04068	-.00240	-.00074	-.00102	.96691	.87397	1.10630
2.200	.600	39.44300	1.30170	.06098	-.04078	-.00399	-.00111	-.00157	.96652	.87409	1.10570
2.196	.800	39.45300	1.30240	.06087	-.04091	-.00563	-.00148	-.00207	.96698	.87462	1.10560
2.195	1.000	39.45800	1.30260	.06092	-.04099	-.00731	-.00188	-.00261	.96704	.87488	1.10530
2.196	1.200	39.46800	1.30310	.06103	-.04083	-.00885	-.00228	-.00313	.96721	.87544	1.10480
2.194	1.400	39.48000	1.30330	.06094	-.04103	-.01041	-.00272	-.00363	.96716	.87566	1.10450
2.193	1.600	39.48500	1.30280	.06088	-.04090	-.01194	-.00315	-.00412	.96681	.87542	1.10440
2.192	1.800	39.49300	1.30330	.06097	-.04091	-.01361	-.00359	-.00460	.96694	.87590	1.10390
2.193	2.000	39.50800	1.30360	.06082	-.04057	-.01523	-.00404	-.00508	.96706	.87622	1.10370
2.193	2.167	39.50800	1.30320	.06046	-.04068	-.01645	-.00444	-.00544	.96697	.87570	1.10420
	GRADIENT	.04643	.00225	.00009	-.00025	-.00811	-.00195	-.00265	.00099	.00228	-.00179

OA257 (LARC 20-M6-6559) OV102 (R7E077) (10 JUL 81)

REFERENCE DATA

SREF = 2690.0000 SQ.FT. XMRP = 1076.6800 IN. XO
LREF = 474.8100 INCHES YMRP = .0000 IN. YO
BREF = 936.6800 INCHES ZMRP = 375.0000 IN. ZO
SCALE = .0100

PARAMETRIC DATA

ALPHA = 40.000 PHI = .000
SPDBRK = .000 AILRON = .000
YP = 1.000 1S = 1.000
ELEVON = .000 MACH = 6.000
S-MODE = 2.000 S-DIR = 1.000

RUN NO. 274/ 0 RN/L = 7.65 GRADIENT INTERVAL = -.60/ .60

RN/L	BETA	ALPHA	CN	CA	CLM	CY	CYN	CBL	CL	CD	L/D
7.794	-4.981	38.79400	1.22410	.05944	-.03864	.03496	.00932	.01187	.91682	.81324	1.12740
7.780	-4.800	38.79800	1.22470	.05942	-.03873	.03357	.00900	.01144	.91722	.81367	1.12730
7.759	-4.600	38.79600	1.22530	.05938	-.03883	.03217	.00863	.01097	.91774	.81396	1.12750
7.729	-4.400	38.79500	1.22590	.05938	-.03889	.03072	.00825	.01051	.91830	.81437	1.12760
7.708	-4.200	38.79900	1.22740	.05933	-.03900	.02927	.00786	.01004	.91941	.81532	1.12770
7.691	-4.000	38.80800	1.22810	.05931	-.03899	.02787	.00747	.00958	.91979	.81587	1.12740
7.686	-3.800	38.82600	1.22910	.05924	-.03902	.02638	.00709	.00910	.92040	.81674	1.12690
7.686	-3.600	38.84200	1.23000	.05919	-.03909	.02490	.00671	.00866	.92089	.81753	1.12640
7.668	-3.400	38.84900	1.23050	.05914	-.03914	.02357	.00632	.00821	.92120	.81791	1.12630
7.679	-3.200	38.86000	1.23160	.05912	-.03910	.02216	.00590	.00775	.92195	.81878	1.12600
7.675	-3.000	38.86200	1.23220	.05910	-.03918	.02082	.00548	.00734	.92236	.81913	1.12600
7.669	-2.800	38.86900	1.23330	.05909	-.03914	.01953	.00504	.00691	.92314	.81994	1.12590
7.676	-2.600	38.87700	1.23380	.05913	-.03920	.01825	.00459	.00649	.92338	.82041	1.12550
7.686	-2.400	38.88800	1.23400	.05907	-.03932	.01705	.00416	.00606	.92346	.82069	1.12520
7.672	-2.200	38.89400	1.23490	.05903	-.03928	.01573	.00370	.00560	.92405	.82129	1.12510
7.685	-2.000	38.90600	1.23590	.05905	-.03937	.01436	.00327	.00515	.92465	.82215	1.12470
7.689	-1.800	38.92200	1.23680	.05901	-.03942	.01305	.00284	.00470	.92514	.82292	1.12420
7.689	-1.600	38.94100	1.23720	.05898	-.03941	.01178	.00246	.00422	.92524	.82349	1.12360
7.700	-1.400	38.95800	1.23820	.05896	-.03949	.01028	.00208	.00371	.92573	.82434	1.12300
7.668	-1.200	38.95800	1.23810	.05894	-.03946	.00872	.00173	.00320	.92571	.82428	1.12310
7.640	-1.000	38.95100	1.23820	.05895	-.03955	.00733	.00142	.00269	.92584	.82421	1.12330
7.609	-.800	38.95200	1.23880	.05898	-.03958	.00579	.00112	.00213	.92629	.82464	1.12330
7.603	-.600	38.95300	1.23880	.05899	-.03948	.00421	.00080	.00158	.92629	.82467	1.12320
7.591	-.400	38.95700	1.23920	.05901	-.03954	.00267	.00053	.00102	.92654	.82505	1.12300
7.574	-.200	38.96300	1.23970	.05902	-.03950	.00099	.00026	.00041	.92679	.82541	1.12280
7.572	.000	38.97300	1.24030	.05899	-.03960	-.00060	.00001	-.00016	.92714	.82595	1.12250
7.588	.200	38.98600	1.24020	.05901	-.03954	-.00218	-.00027	-.00075	.92691	.82615	1.12200
7.554	.400	38.99300	1.24140	.05899	-.03967	-.00377	-.00055	-.00129	.92774	.82699	1.12180
7.550	.600	39.00900	1.24150	.05896	-.03961	-.00530	-.00087	-.00182	.92758	.82725	1.12130
7.553	.800	39.02000	1.24160	.05894	-.03962	-.00683	-.00121	-.00234	.92753	.82751	1.12090
7.559	1.000	39.03100	1.24230	.05893	-.03966	-.00824	-.00155	-.00286	.92790	.82810	1.12050
7.574	1.200	39.04200	1.24240	.05891	-.03974	-.00967	-.00194	-.00333	.92785	.82832	1.12020
7.585	1.400	39.04500	1.24270	.05888	-.03974	-.01109	-.00233	-.00380	.92807	.82855	1.12010
7.593	1.600	39.05100	1.24270	.05888	-.03973	-.01255	-.00271	-.00432	.92796	.82864	1.11990
7.594	1.800	39.05900	1.24240	.05886	-.03979	-.01392	-.00314	-.00479	.92766	.82860	1.11950
	GRADIENT	.04696	.00232	-.00002	-.00012	-.00796	-.00137	-.00286	.00114	.00221	-.00159

OA257 (LARC 20-M6-6559) OV102 (R7E177) (10 JUL 81)

REFERENCE DATA

SREF = 2690.0000 SQ.FT. XMRP = 1076.6800 IN. XO
LREF = 474.8100 INCHES YMRP = .0000 IN. YO
BREF = 936.6800 INCHES ZMRP = 375.0000 IN. ZO
SCALE = .0100

PARAMETRIC DATA

ALPHA = 40.000 PHI = .000
SPDBRK = .000 AILRON = .000
YP = 1.000 1S = 1.000
ELEVON = .000 MACH = 6.000
S-MODE = 2.000 S-DIR = 1.000

RUN NO. 2295/ 0 RN/L = 2.20 GRADIENT INTERVAL = -.60/ .60

RN/L	BETA	ALPHA	CN	CA	CLM	CY	CYN	CBL	CL	CD	L/D
2.210	-4.900	39.20600	1.28410	.06133	-.03928	.04071	.01018	.01214	.95629	.85923	1.11300
2.211	-4.700	39.21100	1.28510	.06126	-.03950	.03897	.00974	.01167	.95695	.85985	1.11290
2.213	-4.500	39.22000	1.28590	.06127	-.03941	.03733	.00933	.01121	.95747	.86054	1.11260
2.206	-4.300	39.22500	1.28680	.06124	-.03947	.03562	.00891	.01072	.95810	.86118	1.11250
2.202	-4.100	39.23500	1.28760	.06124	-.03955	.03392	.00850	.01023	.95863	.86187	1.11230
2.198	-3.900	39.24600	1.28900	.06108	-.03956	.03216	.00810	.00972	.95960	.86279	1.11220
2.197	-3.700	39.24900	1.28930	.06107	-.03952	.03041	.00771	.00926	.95978	.86300	1.11210
2.197	-3.500	39.25900	1.28950	.06098	-.03966	.02884	.00731	.00877	.95984	.86322	1.11190
2.195	-3.300	39.26800	1.29040	.06104	-.03957	.02714	.00691	.00829	.96042	.86404	1.11150
2.195	-3.100	39.27500	1.29110	.06104	-.03970	.02543	.00653	.00781	.96085	.86459	1.11130
2.196	-2.900	39.28200	1.29190	.06087	-.03983	.02373	.00612	.00731	.96148	.86510	1.11140
2.198	-2.700	39.29200	1.29280	.06103	-.03986	.02216	.00567	.00683	.96193	.86595	1.11080
2.198	-2.500	39.29900	1.29340	.06081	-.03993	.02052	.00526	.00631	.96238	.86627	1.11100
2.199	-2.300	39.30900	1.29420	.06093	-.04006	.01896	.00484	.00582	.96278	.86701	1.11050
2.199	-2.100	39.32200	1.29510	.06086	-.04004	.01733	.00440	.00535	.96334	.86778	1.11010
2.198	-1.900	39.32900	1.29620	.06088	-.04009	.01579	.00397	.00484	.96406	.86859	1.10990
2.198	-1.700	39.33500	1.29670	.06084	-.04016	.01422	.00354	.00438	.96437	.86896	1.10980
2.201	-1.500	39.34300	1.29700	.06099	-.04019	.01275	.00310	.00387	.96438	.86942	1.10920
2.206	-1.300	39.35500	1.29800	.06088	-.04025	.01107	.00269	.00339	.96504	.87017	1.10900
2.204	-1.100	39.36400	1.29790	.06094	-.04040	.00975	.00226	.00291	.96477	.87027	1.10860
2.200	-.900	39.37500	1.29930	.06089	-.04048	.00815	.00186	.00238	.96576	.87134	1.10840
2.205	-.700	39.38000	1.29910	.06084	-.04051	.00649	.00144	.00187	.96554	.87124	1.10820
2.205	-.500	39.39100	1.29990	.06098	-.04052	.00496	.00102	.00136	.96589	.87204	1.10760
2.207	-.300	39.40100	1.29950	.06085	-.04037	.00342	.00063	.00083	.96556	.87188	1.10740
2.205	-.100	39.40800	1.30050	.06097	-.04058	.00169	.00023	.00033	.96610	.87269	1.10700
2.204	.100	39.42000	1.30110	.06099	-.04054	.00016	-.00015	-.00023	.96635	.87329	1.10660
2.202	.300	39.43100	1.30180	.06102	-.04081	-.00153	-.00053	-.00078	.96676	.87400	1.10610
2.200	.500	39.43600	1.30190	.06095	-.04077	-.00316	-.00093	-.00129	.96679	.87407	1.10610
2.197	.700	39.44500	1.30210	.06092	-.04091	-.00484	-.00130	-.00182	.96684	.87435	1.10580
2.195	.900	39.45700	1.30200	.06090	-.04092	-.00643	-.00168	-.00234	.96659	.87446	1.10540
2.196	1.100	39.46400	1.30320	.06089	-.04101	-.00813	-.00208	-.00288	.96737	.87529	1.10520
2.194	1.300	39.47400	1.30280	.06090	-.04079	-.00960	-.00249	-.00338	.96693	.87524	1.10480
2.194	1.500	39.48500	1.30290	.06103	-.04099	-.01119	-.00295	-.00388	.96680	.87560	1.10420
2.194	1.700	39.49300	1.30330	.06091	-.04090	-.01280	-.00338	-.00435	.96701	.87588	1.10400
2.192	1.900	39.50100	1.30340	.06079	-.04090	-.01439	-.00380	-.00484	.96707	.87601	1.10400
2.195	2.100	39.51000	1.30300	.06073	-.04054	-.01587	-.00427	-.00530	.96663	.87583	1.10370
	GRADIENT	.04671	.00250	.00006	-.00036	-.00814	-.00194	-.00267	.00119	.00244	-.00169

OA257 (LARC 20-M6-6559) OV102 (R7E177) (10 JUL 81)

REFERENCE DATA

SREF = 2690.0000 SQ.FT. XMRP = 1076.6800 IN. XO
LREF = 474.8100 INCHES YMRP = .0000 IN. YO
BREF = 936.6800 INCHES ZMRP = 375.0000 IN. ZO
SCALE = .0100

PARAMETRIC DATA

ALPHA = 40.000 PHI = .000
SPDBRK = .000 AILRON = .000
YP = 1.000 1S = 1.000
ELEVON = .000 MACH = 6.000
S-MODE = 2.000 S-DIR = 1.000

RUN NO. 2274/ 0 RN/L = 7.65 GRADIENT INTERVAL = -.60/ .60

RN/L	BETA	ALPHA	CN	CA	CLM	CY	CYN	CBL	CL	CD	L/D
7.784	-4.900	38.79400	1.22420	.05942	-.03862	.03434	.00919	.01169	.91689	.81328	1.12740
7.776	-4.700	38.79600	1.22510	.05944	-.03882	.03291	.00881	.01121	.91756	.81389	1.12740
7.740	-4.500	38.79400	1.22540	.05937	-.03885	.03142	.00844	.01074	.91789	.81402	1.12760
7.720	-4.300	38.80100	1.22720	.05936	-.03891	.02993	.00803	.01027	.91922	.81527	1.12750
7.701	-4.100	38.80400	1.22800	.05931	-.03902	.02858	.00767	.00983	.91980	.81574	1.12760
7.682	-3.900	38.81500	1.22840	.05929	-.03903	.02714	.00729	.00933	.92001	.81619	1.12720
7.685	-3.700	38.83600	1.22950	.05918	-.03907	.02563	.00690	.00888	.92056	.81708	1.12660
7.679	-3.500	38.84500	1.23020	.05920	-.03906	.02424	.00652	.00843	.92097	.81769	1.12630
7.671	-3.300	38.85600	1.23150	.05911	-.03917	.02288	.00612	.00799	.92189	.81861	1.12620
7.672	-3.100	38.85900	1.23190	.05911	-.03919	.02150	.00569	.00755	.92220	.81895	1.12610
7.675	-2.900	38.86800	1.23280	.05908	-.03916	.02017	.00526	.00713	.92274	.81959	1.12590
7.670	-2.700	38.87100	1.23290	.05910	-.03916	.01884	.00481	.00669	.92282	.81977	1.12570
7.685	-2.500	38.88300	1.23390	.05911	-.03926	.01767	.00438	.00628	.92336	.82055	1.12530
7.679	-2.300	38.89000	1.23450	.05904	-.03928	.01632	.00393	.00583	.92381	.82101	1.12520
7.671	-2.100	38.89800	1.23500	.05906	-.03934	.01505	.00348	.00537	.92407	.82146	1.12490
7.693	-1.900	38.91500	1.23600	.05905	-.03941	.01371	.00305	.00492	.92461	.82237	1.12430
7.691	-1.700	38.93200	1.23720	.05900	-.03942	.01237	.00264	.00447	.92533	.82333	1.12390
7.691	-1.500	38.94800	1.23770	.05896	-.03947	.01105	.00227	.00398	.92554	.82390	1.12340
7.702	-1.300	38.96100	1.23810	.05892	-.03950	.00945	.00190	.00346	.92563	.82429	1.12290
7.649	-1.100	38.95300	1.23800	.05898	-.03951	.00803	.00156	.00294	.92568	.82419	1.12310
7.621	-.900	38.94900	1.23840	.05899	-.03951	.00661	.00128	.00241	.92606	.82439	1.12330
7.610	-.700	38.94900	1.23840	.05893	-.03951	.00497	.00094	.00186	.92605	.82432	1.12340
7.591	-.500	38.95400	1.23870	.05899	-.03950	.00346	.00066	.00130	.92617	.82463	1.12310
7.587	-.300	38.95900	1.23880	.05896	-.03952	.00184	.00040	.00073	.92624	.82480	1.12300
7.572	-.100	38.96800	1.24030	.05903	-.03954	.00020	.00014	.00012	.92717	.82588	1.12270
7.582	.100	38.98000	1.24080	.05903	-.03961	-.00141	-.00014	-.00046	.92744	.82644	1.12220
7.567	.300	38.98900	1.24090	.05899	-.03963	-.00295	-.00041	-.00102	.92736	.82656	1.12200
7.550	.500	38.99900	1.24130	.05898	-.03963	-.00456	-.00071	-.00157	.92753	.82698	1.12160
7.557	.700	39.01500	1.24140	.05895	-.03964	-.00603	-.00103	-.00207	.92742	.82729	1.12100
7.552	.900	39.02400	1.24220	.05894	-.03964	-.00754	-.00139	-.00260	.92791	.82791	1.12080
7.564	1.100	39.03600	1.24240	.05892	-.03967	-.00902	-.00176	-.00311	.92789	.82823	1.12030
7.577	1.300	39.03800	1.24220	.05890	-.03974	-.01040	-.00214	-.00356	.92777	.82814	1.12030
7.591	1.500	39.04900	1.24230	.05885	-.03973	-.01182	-.00251	-.00406	.92774	.82835	1.12000
7.603	1.700	39.06100	1.24290	.05891	-.03976	-.01319	-.00291	-.00456	.92799	.82897	1.11940
7.613	1.896	39.06600	1.24270	.05887	-.03985	-.01454	-.00335	-.00502	.92777	.82888	1.11930
	GRADIENT	.04671	.00283	.00000	-.00015	-.00801	-.00137	-.00289	.00149	.00251	-.00157

OA257 (LARC 20-M6-6559) OV102 LESS OMS PODS (R7E078) (10 JUL 81)

REFERENCE DATA

SREF = 2690.0000 SQ.FT. XMRP = 1076.6800 IN. XO
LREF = 474.8100 INCHES YMRP = .0000 IN. YO
BREF = 936.6800 INCHES ZMRP = 375.0000 IN. ZO
SCALE = .0100

PARAMETRIC DATA

BETA = .000 PHI = .000
SPDBRK = 86.600 AILRON = .000
YP = .000 1S = 1.000
ELEVON = .000 MACH = 6.000
S-MODE = 1.000 S-DIR = 2.000

RUN NO. 335/ 0 RN/L = 7.57 GRADIENT INTERVAL = 23.00/ 25.00

RN/L	ALPHA	BETA	CN	CA	CLM	CY	CYN	CBL	CL	CD	L/D
7.476	-.349	-.03736	-.05973	.09209	-.01108	.00292	.00014	.00015	-.05916	.09245	-.63995
7.508	-.297	-.03794	-.05992	.09204	-.01093	.00304	.00017	.00014	-.05944	.09235	-.64371
7.665	-.236	-.02581	-.06108	.09260	-.01052	.00229	.00020	.00008	-.06070	.09285	-.65372
7.514	1.079	-.03709	-.03761	.08868	-.00951	.00293	.00020	.00017	-.03927	.08795	-.44647
7.502	1.935	-.03737	-.02110	.08699	-.00797	.00267	.00019	.00019	-.02402	.08623	-.27857
7.566	2.947	-.03799	-.00574	.08555	-.00642	.00276	.00023	.00022	-.01013	.08514	-.11897
7.514	3.884	-.03501	.01357	.08411	-.00421	.00198	.00009	.00027	.00784	.08484	.09236
7.461	4.742	-.03593	.03013	.08298	-.00231	.00208	.00017	.00028	.02317	.08518	.27201
7.457	5.816	-.03569	.05299	.08160	.00049	.00201	.00016	.00030	.04445	.08655	.51360
7.525	6.694	-.03585	.07222	.08069	.00278	.00206	.00016	.00032	.06232	.08856	.70375
7.554	7.712	-.03605	.09514	.07961	.00517	.00201	.00019	.00032	.08359	.09166	.91197
7.539	8.637	-.03685	.11281	.07849	.00621	.00220	.00024	.00033	.09975	.09454	1.05510
7.556	9.518	-.03603	.13809	.07648	.00663	.00210	.00018	.00041	.12354	.09826	1.25720
7.622	10.709	-.03659	.16691	.07408	.00657	.00219	.00021	.00044	.15024	.10380	1.44730
7.592	11.530	-.03632	.19022	.07235	.00639	.00220	.00018	.00046	.17192	.10891	1.57850
7.613	12.650	-.03549	.22134	.07045	.00606	.00213	.00012	.00051	.20054	.11721	1.71090
7.644	13.617	-.03312	.25004	.06902	.00557	.00177	.00005	.00056	.22676	.12595	1.80040
7.648	14.617	-.03310	.27984	.06718	.00439	.00161	.00008	.00056	.25383	.13562	1.87160
7.576	15.484	-.03616	.30767	.06602	.00345	.00198	.00023	.00052	.27888	.14577	1.91320
7.569	16.681	-.03524	.34688	.06480	.00250	.00151	.00024	.00050	.31368	.16164	1.94060
7.595	17.714	-.03489	.38069	.06417	.00206	.00124	.00026	.00048	.34312	.17696	1.93900
7.602	18.565	-.03147	.40796	.06388	.00178	.00136	.00030	.00049	.36639	.19045	1.92380
7.657	19.411	-.02728	.43713	.06415	.00090	.00140	.00037	.00043	.39096	.20578	1.89990
7.635	20.629	-.02612	.48095	.06399	.00026	.00130	.00038	.00046	.42756	.22933	1.86440
7.660	21.698	-.02649	.51873	.06393	-.00046	.00159	.00037	.00044	.45834	.25118	1.82470
7.581	22.708	-.02460	.55521	.06388	-.00163	.00123	.00024	.00043	.48751	.27326	1.78400
7.583	23.703	-.02392	.59555	.06394	-.00262	.00154	.00021	.00052	.51961	.29795	1.74390
7.637	24.261	-.02487	.61972	.06397	-.00341	.00145	.00023	.00051	.53871	.31296	1.72130
	GRADIENT	-.00171	.04331	.00006	-.00141	-.00016	.00002	-.00002	.03423	.02690	-.04050

OA257 (LARC 20-M6-6559) OV102 LESS OMS PODS (R7E079) (10 JUL 81)

REFERENCE DATA

SREF =	2690.0000 SQ.FT.	XMRP =	1076.6800 IN. XO		
LREF =	474.8100 INCHES	YMRP =	.0000 IN. YO		
BREF =	936.6800 INCHES	ZMRP =	375.0000 IN. ZO		
SCALE =	.0100				

PARAMETRIC DATA

BETA =	.000	PHI =	.000
SPDBRK =	86.600	AILRON =	.000
YP =	.000	1S =	1.000
ELEVON =	.000	MACH =	6.000
S-MODE =	1.000	S-DIR =	2.000

RUN NO. 333/ 0 RN/L = 7.45 GRADIENT INTERVAL = 23.00/ 25.00

RN/L	ALPHA	BETA	CN	CA	CLM	CY	CYN	CBL	CL	CD	L/D
7.436	14.323	-.03731	.27588	.06760	.00451	.00225	.00009	.00063	.25059	.13375	1.87360
7.403	14.490	-.03745	.27586	.06735	.00450	.00229	.00009	.00061	.25024	.13423	1.86420
7.369	14.602	-.00650	.27732	.06795	.00495	.00211	.00023	.00056	.25124	.13567	1.85190
7.397	15.443	-.03767	.30607	.06594	.00364	.00239	.00021	.00061	.27747	.14506	1.91270
7.509	16.573	-.03758	.34157	.06452	.00276	.00214	.00024	.00059	.30897	.15927	1.94000
7.462	17.737	-.03934	.37861	.06391	.00205	.00215	.00033	.00058	.34114	.17622	1.93590
7.459	18.665	-.03881	.40960	.06358	.00181	.00217	.00038	.00056	.36771	.19132	1.92200
7.464	19.265	-.03863	.43439	.06329	.00170	.00179	.00034	.00055	.38918	.20307	1.91650
7.431	20.511	-.03891	.47798	.06302	.00091	.00186	.00036	.00056	.42560	.22650	1.87900
7.466	21.591	-.03924	.51715	.06345	-.00018	.00209	.00035	.00052	.45752	.24930	1.83520
7.496	22.426	-.03856	.54803	.06344	-.00069	.00207	.00028	.00053	.48239	.26770	1.80190
7.461	23.573	-.03718	.58823	.06337	-.00158	.00213	.00024	.00060	.51380	.29332	1.75160
7.515	24.315	-.03731	.62000	.06326	-.00285	.00221	.00023	.00061	.53896	.31293	1.72230
7.502	25.309	-.03749	.65098	.06315	-.00355	.00205	.00029	.00058	.56150	.33539	1.67420
7.485	26.405	-.03841	.70168	.06331	-.00504	.00220	.00037	.00060	.60032	.36875	1.62800
7.470	27.367	-.03905	.74798	.06357	-.00639	.00203	.00037	.00054	.63505	.40029	1.58650
7.469	28.330	-.03778	.78418	.06381	-.00749	.00148	.00047	.00039	.65998	.42830	1.54090
7.459	29.341	-.03907	.82080	.06365	-.00900	.00138	.00065	.00024	.68432	.45768	1.49520
7.463	30.048	-.03884	.85914	.06357	-.01070	.00147	.00061	.00022	.71185	.48521	1.46710
7.458	31.395	-.03653	.91131	.06352	-.01355	.00204	.00034	.00042	.74480	.52895	1.40810
7.508	32.561	-.02693	.95912	.06320	-.01620	.00227	.00022	.00053	.77436	.56945	1.35980
7.488	33.339	-.02689	.99902	.06323	-.01844	.00212	.00025	.00055	.79987	.60188	1.32900
7.499	34.168	-.02709	1.03690	.06280	-.02132	.00228	.00025	.00057	.82265	.63431	1.29690
7.475	35.278	-.02563	1.08480	.06245	-.02438	.00233	.00019	.00066	.84949	.67749	1.25390
7.428	36.132	-.02741	1.12000	.06193	-.02732	.00265	.00023	.00071	.86810	.71045	1.22190
7.434	37.235	-.02742	1.17110	.06135	-.03120	.00262	.00025	.00076	.89526	.75746	1.18190
7.421	38.144	-.02701	1.22170	.06090	-.03503	.00249	.00023	.00073	.92324	.80249	1.15050
7.394	39.085	-.02753	1.25900	.06048	-.03819	.00254	.00030	.00076	.93916	.84073	1.11710
	GRADIENT	-.00018	.04282	-.00015	-.00171	.00012	-.00001	.00001	.03391	.02643	-.03949

OA257 (LARC 20-M6-6559) OV102 LESS OMS PODS (R7E080) (10 JUL 81)

REFERENCE DATA

SREF = 2690.0000 SQ.FT. XMRP = 1076.6800 IN. XO
LREF = 474.8100 INCHES YMRP = .0000 IN. YO
BREF = 936.6800 INCHES ZMRP = 375.0000 IN. ZO
SCALE = .0100

PARAMETRIC DATA

BETA = -.500 PHI = .000
SPDBRK = 86.600 AILRON = .000
YP = .000 1S = 1.000
ELEVON = .000 MACH = 6.000
S-MODE = 1.000 S-DIR = 2.000

RUN NO. 332/ 0 RN/L = 7.44 GRADIENT INTERVAL = 23.00/ 25.00

RN/L	ALPHA	BETA	CN	CA	CLM	CY	CYN	CBL	CL	CD	L/D
7.435	-.187	-.54635	-.05610	.09240	-.01019	.01048	-.00005	.00057	-.05580	.09258	-.60268
7.420	-.072	-.52548	-.05764	.09283	-.00972	.01007	-.00005	.00052	-.05752	.09290	-.61916
7.475	.023	-.54577	-.05574	.09181	-.01012	.01038	-.00010	.00058	-.05578	.09178	-.60772
7.436	1.038	-.54611	-.04102	.08998	-.00902	.01030	-.00004	.00063	-.04265	.08922	-.47797
7.398	1.860	-.54696	-.02561	.08803	-.00777	.01032	-.00005	.00070	-.02846	.08715	-.32653
7.351	2.893	-.54378	-.00450	.08593	-.00590	.00964	-.00012	.00081	-.00883	.08559	-.10318
7.406	3.896	-.54607	.01382	.08456	-.00389	.00980	-.00002	.00089	.00804	.08530	.09425
7.447	4.764	-.54495	.03260	.08309	-.00198	.00939	-.00006	.00098	.02559	.08551	.29922
7.472	5.658	-.54522	.05045	.08192	.00018	.00960	-.00008	.00109	.04212	.08649	.48701
7.444	6.848	-.54402	.07506	.08072	.00317	.00918	-.00011	.00115	.06490	.08909	.72842
7.458	7.923	-.54525	.09557	.07965	.00498	.00919	.00002	.00117	.08368	.09206	.90899
7.453	9.120	-.54191	.12399	.07765	.00667	.00855	.00002	.00123	.11011	.09632	1.14320
7.463	10.294	-.54323	.15738	.07522	.00706	.00848	.00008	.00131	.14140	.10213	1.38460
7.465	11.661	-.54382	.18448	.07305	.00707	.00827	.00009	.00137	.16591	.10883	1.52460
7.433	13.242	-.54447	.23089	.06999	.00607	.00808	.00021	.00149	.20872	.12102	1.72470
7.450	14.446	-.54457	.27324	.06763	.00468	.00770	.00042	.00149	.24773	.13366	1.85340
7.463	15.484	-.54542	.30461	.06593	.00369	.00732	.00060	.00145	.27595	.14486	1.90500
7.457	16.813	-.54530	.34932	.06459	.00292	.00670	.00074	.00145	.31570	.16287	1.93840
7.441	18.066	-.54785	.39372	.06380	.00213	.00656	.00095	.00143	.35452	.18275	1.93990
7.463	19.334	-.54644	.43180	.06333	.00164	.00612	.00101	.00139	.38649	.20271	1.90660
7.463	20.627	-.54773	.47783	.06277	.00075	.00580	.00112	.00139	.42508	.22707	1.87200
7.424	21.958	-.54911	.53184	.06344	-.00065	.00582	.00131	.00132	.46954	.25771	1.82200
7.411	22.874	-.55042	.56496	.06352	-.00115	.00590	.00134	.00133	.49584	.27813	1.78280
7.419	24.272	-.54864	.60795	.06317	-.00214	.00602	.00136	.00139	.52825	.30749	1.71790
7.460	25.419	-.54802	.66388	.06339	-.00410	.00571	.00125	.00152	.57240	.34222	1.67260
7.467	26.497	-.54785	.70786	.06341	-.00500	.00586	.00121	.00157	.60521	.37257	1.62440
7.417	27.685	-.54870	.75460	.06365	-.00658	.00548	.00154	.00136	.63864	.40695	1.56930
7.410	29.196	-.54827	.81366	.06385	-.00851	.00503	.00164	.00114	.67915	.45263	1.50040
7.458	30.365	-.54826	.86772	.06355	-.01115	.00576	.00149	.00125	.71656	.49347	1.45210
7.462	31.554	-.55063	.92099	.06354	-.01382	.00611	.00101	.00154	.75157	.53610	1.40190
7.445	32.675	-.54541	.96101	.06328	-.01623	.00647	.00093	.00167	.77476	.57209	1.35430
7.456	33.814	-.54009	1.02480	.06290	-.02043	.00648	.00092	.00175	.81645	.62257	1.31140
7.449	35.444	-.53528	1.09030	.06230	-.02494	.00682	.00091	.00192	.85214	.68305	1.24760
7.463	36.560	-.53420	1.13970	.06185	-.02868	.00706	.00088	.00207	.87861	.72855	1.20600
7.470	37.802	-.53485	1.19660	.06118	-.03305	.00698	.00088	.00214	.90801	.78179	1.16140
7.457	39.169	-.52566	1.26490	.06052	-.03822	.00689	.00091	.00224	.94241	.84582	1.11420
	GRADIENT	.00000	.00000	.00000	.00000	.00000	.00000	.00000	.00000	.00000	.00000

OA257 (LARC 20-M6-6559) OV102 LESS OMS PODS (R7E081) (10 JUL 81)

REFERENCE DATA

SREF = 2690.0000 SQ.FT. XMRP = 1076.6800 IN. XO
LREF = 474.8100 INCHES YMRP = .0000 IN. YO
BREF = 936.6800 INCHES ZMRP = 375.0000 IN. ZO
SCALE = .0100

PARAMETRIC DATA

BETA = .500 PHI = .000
SPDBRK = 86.600 AILRON = .000
YP = .000 IS = 1.000
ELEVON = .000 MACH = 6.000
S-MODE = 1.000 S-DIR = 2.000

RUN NO. 331/ 0 RN/L = 7.57 GRADIENT INTERVAL = 23.00/ 25.00

RN/L	ALPHA	BETA	CN	CA	CLM	CY	CYN	CBL	CL	CD	L/D
7.499	-.234	.47268	-.05681	.09191	-.01129	-.00340	.00046	-.00021	-.05643	.09214	-.61243
7.689	-.191	.49391	-.05967	.09272	-.01068	-.00398	.00055	-.00029	-.05936	.09292	-.63881
7.575	1.403	.47281	-.03057	.08838	-.00909	-.00376	.00052	-.00027	-.03272	.08760	-.37355
7.558	2.568	.47232	-.01016	.08618	-.00699	-.00383	.00059	-.00032	-.01401	.08564	-.16362
7.567	3.683	.47097	.00870	.08457	-.00518	-.00370	.00060	-.00033	.00325	.08496	.03822
7.575	4.853	.47187	.03472	.08307	-.00187	-.00373	.00062	-.00038	.02757	.08571	.32161
7.533	6.354	.47034	.06438	.08142	.00192	-.00331	.00068	-.00041	.05498	.08804	.62448
7.565	7.826	.47282	.09443	.07978	.00494	-.00375	.00062	-.00046	.08269	.09189	.89979
7.538	8.995	.47369	.12551	.07781	.00658	-.00354	.00038	-.00038	.11180	.09647	1.15890
7.574	9.425	.47340	.14525	.07641	.00677	-.00318	.00033	-.00031	.13078	.09916	1.31880
7.570	10.566	.47281	.16363	.07490	.00662	-.00320	.00040	-.00034	.14713	.10363	1.41970
7.570	11.884	.47420	.19991	.07204	.00619	-.00328	.00027	-.00032	.18079	.11167	1.61900
7.527	13.151	.47605	.23418	.07010	.00581	-.00320	.00006	-.00027	.21209	.12154	1.74500
7.570	14.618	.47612	.27577	.06769	.00460	-.00262	-.00008	-.00023	.24976	.13510	1.84880
7.585	16.078	.47564	.32311	.06556	.00332	-.00244	-.00007	-.00025	.29231	.15249	1.91700
7.534	17.210	.47639	.36261	.06457	.00257	-.00268	-.00011	-.00027	.32727	.16896	1.93690
7.582	18.370	.47561	.40193	.06408	.00220	-.00249	-.00017	-.00023	.36126	.18749	1.92680
7.606	19.531	.47698	.44233	.06364	.00158	-.00247	-.00022	-.00025	.39560	.20785	1.90330
7.595	20.730	.47671	.48639	.06410	.00071	-.00200	-.00029	-.00023	.43221	.23212	1.86200
7.557	22.258	.47756	.53680	.06398	-.00061	-.00190	-.00053	-.00019	.47257	.26254	1.80000
7.519	23.314	.47813	.57780	.06383	-.00154	-.00161	-.00067	-.00015	.50536	.28729	1.75900
7.540	24.363	.47960	.61949	.06361	-.00281	-.00143	-.00076	-.00012	.53809	.31349	1.71650
7.550	26.095	.47890	.68745	.06391	-.00474	-.00172	-.00063	-.00024	.58927	.35977	1.63790
7.517	27.209	.47911	.73783	.06397	-.00626	-.00195	-.00062	-.00031	.62694	.39425	1.59020
7.566	28.313	.47763	.78401	.06410	-.00787	-.00197	-.00044	-.00045	.65981	.42828	1.54060
7.583	29.076	.47714	.81141	.06425	-.00893	-.00245	-.00029	-.00055	.67793	.45047	1.50490
7.569	30.320	.48193	.86463	.06418	-.01102	-.00292	-.00017	-.00069	.71397	.49190	1.45140
7.557	31.658	.48534	.91855	.06378	-.01397	-.00190	-.00034	-.00058	.74839	.53639	1.39520
7.548	33.131	.48688	.98902	.06356	-.01793	-.00195	-.00040	-.00057	.79349	.59378	1.33630
7.537	34.314	.48588	1.04090	.06320	-.02137	-.00177	-.00033	-.00055	.82410	.63898	1.28970
7.564	35.639	.49223	1.09890	.06262	-.02549	-.00171	-.00028	-.00055	.85661	.69119	1.23930
7.592	36.980	.49566	1.15420	.06198	-.02991	-.00206	-.00026	-.00058	.88473	.74379	1.18950
7.625	38.306	.49622	1.20840	.06112	-.03398	-.00191	-.00025	-.00063	.91038	.79703	1.14220
7.625	38.888	.49536	1.25980	.06093	-.03822	-.00186	-.00016	-.00071	.94234	.83833	1.12410
	GRADIENT	.00140	.03974	-.00022	-.00121	.00017	-.00009	.00003	.03120	.02498	-.04051

OA257 (LARC 20-M6-6559) OV102 LESS OMS PODS (R7E082) (10 JUL 81)

REFERENCE DATA

SREF = 2690.0000 SQ.FT. XMRP = 1076.6800 IN. XO
LREF = 474.8100 INCHES YMRP = .0000 IN. YO
BREF = 936.6800 INCHES ZMRP = 375.0000 IN. ZO
SCALE = .0100

PARAMETRIC DATA

BETA = .000 PHI = .000
SPDBRK = .000 AILRON = .000
YP = .000 1S = 1.000
ELEVON = .000 MACH = 6.000
S-MODE = 1.000 S-DIR = 2.000

RUN NO. 327/ O RN/L = 7.59 GRADIENT INTERVAL = 23.00/ 25.00

RN/L	ALPHA	BETA	CN	CA	CLM	CY	CYN	CBL	CL	CD	L/D
7.514	-.241	.04930	-.04489	.07474	-.03540	.00219	.00082	-.00015	-.04458	.07493	-.59498
7.735	-.065	.07801	-.04434	.07484	-.03547	.00134	.00080	-.00021	-.04426	.07489	-.59100
7.543	.021	.05017	-.04505	.07466	-.03530	.00191	.00078	-.00015	-.04507	.07464	-.60385
7.549	.959	.05029	-.02808	.07264	-.03288	.00184	.00078	-.00012	-.02929	.07216	-.40591
7.520	1.761	.05100	-.01536	.07167	-.03111	.00197	.00079	-.00008	-.01756	.07116	-.24673
7.532	2.988	.05048	.00849	.06961	-.02812	.00155	.00073	-.00004	.00485	.06995	.06939
7.566	3.864	.05185	.02659	.06816	-.02601	.00142	.00071	.00002	.02194	.06980	.31433
7.561	4.648	.05112	.04061	.06689	-.02446	.00161	.00075	.00004	.03505	.06996	.50109
7.599	5.801	.05183	.06383	.06505	-.02218	.00153	.00069	.00008	.05693	.07117	.79989
7.553	6.778	.05214	.08681	.06370	-.02015	.00144	.00069	.00011	.07868	.07350	1.07050
7.580	7.822	.05367	.10808	.06223	-.01856	.00134	.00065	.00012	.09861	.07636	1.29140
7.564	8.761	.05491	.13192	.06125	-.01700	.00107	.00059	.00017	.12105	.08063	1.50130
7.566	9.554	.06308	.15152	.06042	-.01571	.00136	.00061	.00019	.13939	.08473	1.64520
7.537	10.540	.07137	.17663	.05942	-.01424	.00108	.00054	.00026	.16278	.09073	1.79430
7.574	11.414	.06000	.19972	.05854	-.01320	.00105	.00049	.00026	.18418	.09690	1.90060
7.617	12.411	.06000	.22711	.05793	-.01206	.00134	.00051	.00031	.20935	.10539	1.98640
7.624	13.314	.06000	.24991	.05734	-.01132	.00133	.00050	.00034	.22999	.11335	2.02900
7.606	14.403	.08663	.28207	.05676	-.01043	.00140	.00044	.00037	.25909	.12514	2.07040
7.642	15.320	.07063	.30793	.05658	-.00979	.00127	.00036	.00042	.28203	.13593	2.07480
7.614	16.617	.06000	.34966	.05645	-.00897	.00136	.00035	.00044	.31891	.15409	2.06970
7.609	17.831	.06000	.39105	.05681	-.00881	.00125	.00037	.00047	.35487	.17382	2.04160
7.574	18.681	.06000	.41563	.05711	-.00871	.00130	.00040	.00042	.37544	.18723	2.00520
7.600	19.404	.06000	.44154	.05728	-.00840	.00104	.00038	.00047	.39742	.20072	1.98000
7.552	20.575	.07007	.48289	.05757	-.00821	.00112	.00037	.00047	.43185	.22360	1.93130
7.576	21.813	.06664	.52839	.05809	-.00841	.00140	.00036	.00043	.46898	.25027	1.87390
7.625	22.834	.06568	.56665	.05875	-.00881	.00114	.00042	.00042	.49944	.27404	1.82250
7.644	23.701	.06599	.59281	.05930	-.00938	.00142	.00044	.00039	.51897	.29258	1.77380
7.664	24.313	.07275	.62918	.05975	-.01002	.00156	.00044	.00044	.54878	.31351	1.75040
	GRADIENT	.01104	.05943	.00075	-.00106	.00023	-.00000	.00009	.04871	.03420	-.03823

OA257 (LARC 20-M6-6559) OV102 LESS OMS PODS (R7E083) (10 JUL 81)

REFERENCE DATA

SREF = 2690.0000 SQ.FT. XMRP = 1076.6800 IN. XO
LREF = 474.8100 INCHES YMRP = .0000 IN. YO
BREF = 936.6800 INCHES ZMRP = 375.0000 IN. ZO
SCALE = .0100

PARAMETRIC DATA

BETA = .000 PHI = .000
SPDBRK = .000 AILRON = .000
YP = .000 1S = 1.000
ELEVON = .000 MACH = 6.000
S-MODE = 1.000 S-DIR = 2.000

RUN NO. 325/ 0 RN/L = 7.55 GRADIENT INTERVAL = 23.00/ 25.00

RN/L	ALPHA	BETA	CN	CA	CLM	CY	CYN	CBL	CL	CD	L/D
7.446	14.368	-.03747	.28630	.05725	-.01070	.00153	.00048	.00044	.26314	.12651	2.08000
7.535	14.428	-.03765	.28113	.05723	-.01084	.00155	.00048	.00042	.25801	.12547	2.05630
7.511	14.683	-.01464	.28891	.05736	-.01072	.00106	.00048	.00033	.26493	.12871	2.05830
7.544	15.481	-.03652	.31396	.05688	-.00997	.00132	.00041	.00044	.28738	.13862	2.07320
7.528	16.603	-.03715	.34955	.05663	-.00910	.00158	.00043	.00048	.31879	.15414	2.06810
7.549	17.670	-.03640	.38041	.05661	-.00884	.00131	.00041	.00050	.34528	.16940	2.03830
7.523	18.434	-.03708	.41244	.05705	-.00895	.00147	.00045	.00049	.37324	.18454	2.02260
7.527	19.563	-.03758	.44418	.05751	-.00841	.00158	.00048	.00046	.39928	.20292	1.96770
7.538	20.705	-.03650	.48791	.05777	-.00823	.00145	.00040	.00050	.43597	.22654	1.92450
7.510	21.740	-.03801	.52855	.05813	-.00861	.00173	.00040	.00048	.46943	.24977	1.87950
7.540	21.999	-.03703	.54390	.05788	-.00825	.00181	.00039	.00052	.48262	.25741	1.87490
7.558	23.129	-.03799	.57826	.05860	-.00882	.00173	.00040	.00050	.50877	.28103	1.81040
7.569	24.047	-.03721	.61980	.05900	-.00926	.00182	.00041	.00050	.54197	.30644	1.76860
7.558	25.369	-.03534	.66151	.05909	-.00975	.00165	.00036	.00054	.57240	.33681	1.69950
7.522	26.487	-.02736	.71320	.05955	-.01102	.00164	.00026	.00060	.61178	.37138	1.64730
7.546	27.212	-.02619	.73717	.05968	-.01177	.00191	.00029	.00057	.62828	.39018	1.61020
7.577	28.371	-.02643	.78878	.06018	-.01325	.00159	.00039	.00042	.66544	.42776	1.55560
7.569	29.102	-.02811	.81809	.06029	-.01445	.00145	.00051	.00036	.68549	.45057	1.52140
7.590	30.177	-.02801	.85972	.06034	-.01616	.00132	.00053	.00031	.71288	.48432	1.47190
7.579	31.501	-.02219	.90807	.06053	-.01825	.00151	.00040	.00036	.74262	.52609	1.41160
7.586	32.469	-.01710	.95744	.06060	-.02064	.00193	.00030	.00052	.77525	.56512	1.37180
7.516	33.247	-.02221	.99837	.06070	-.02296	.00191	.00033	.00050	.80168	.59812	1.34030
7.560	33.940	.02599	1.02470	.06065	-.02458	.00174	.00033	.00052	.81628	.62246	1.31140
7.654	35.278	-.02380	1.08600	.06073	-.02811	.00222	.00034	.00063	.85150	.67680	1.25810
7.566	36.328	-.02575	1.13510	.06060	-.03145	.00215	.00025	.00068	.87859	.72126	1.21810
7.558	37.285	-.01380	1.16710	.06044	-.03360	.00226	.00023	.00072	.89199	.75511	1.18130
7.577	38.210	-.01331	1.20370	.06025	-.03596	.00223	.00019	.00073	.90856	.79189	1.14730
7.578	39.056	-.01534	1.26210	.06003	-.04067	.00241	.00015	.00087	.94223	.84182	1.11930
	GRADIENT	.00085	.04525	.00043	-.00048	.00010	.00001	.00000	.03617	.02768	-.04553

OA257 (LARC 20-M6-6559) OV102 LESS OMS PODS (R7E084) (10 JUL 81)

REFERENCE DATA

SREF = 2690.0000 SQ.FT. XMRP = 1076.6800 IN. XO
LREF = 474.8100 INCHES YMRP = .0000 IN. YO
BREF = 936.6800 INCHES ZMRP = 375.0000 IN. ZO
SCALE = .0100

PARAMETRIC DATA

BETA = -.500 PHI = .000
SPDBRK = .000 AILRON = .000
YP = .000 1S = 1.000
ELEVON = .000 MACH = 6.000
S-MODE = 1.000 S-DIR = 2.000

RUN NO. 328/ 0 RN/L = 7.44 GRADIENT INTERVAL = 23.00/ 25.00

RN/L	ALPHA	BETA	CN	CA	CLM	CY	CYN	CBL	CL	CD	L/D
7.297	-.414	-.55840	-.04772	.07538	-.03581	.00754	.00148	-.00026	-.04718	.07573	-.62303
7.361	-.398	-.55925	-.04756	.07520	-.03566	.00769	.00151	-.00027	-.04704	.07553	-.62273
7.486	-.232	-.52949	-.04769	.07519	-.03568	.00707	.00153	-.00032	-.04738	.07538	-.62860
7.397	1.787	-.55885	-.01408	.07180	-.03067	.00735	.00154	-.00010	-.01631	.07133	-.22867
7.351	2.851	-.55698	.00533	.07016	-.02823	.00674	.00149	.00001	.00184	.07034	.02612
7.345	3.766	-.55820	.02387	.06856	-.02604	.00678	.00152	.00011	.01932	.06998	.27610
7.328	4.808	-.55686	.04584	.06687	-.02375	.00675	.00149	.00021	.04007	.07047	.56865
7.358	5.781	-.55759	.05992	.06559	-.02249	.00700	.00151	.00029	.05301	.07129	.74360
7.387	6.851	-.55693	.08687	.06373	-.02023	.00653	.00143	.00038	.07864	.07364	1.06790
7.389	8.044	-.55490	.11369	.06241	-.01827	.00629	.00138	.00046	.10384	.07770	1.33630
7.411	9.340	-.55413	.14379	.06118	-.01631	.00606	.00136	.00056	.13196	.08370	1.57650
7.435	10.864	-.55478	.18168	.05958	-.01436	.00632	.00137	.00069	.16720	.09275	1.80260
7.481	12.275	-.55116	.21908	.05842	-.01259	.00588	.00129	.00080	.20165	.10366	1.94530
7.447	13.477	-.55365	.25602	.05778	-.01125	.00611	.00131	.00092	.23551	.11586	2.03270
7.430	14.454	-.55244	.28064	.05736	-.01072	.00595	.00124	.00099	.25743	.12559	2.04970
7.445	15.952	-.55223	.32754	.05706	-.00952	.00588	.00124	.00109	.29924	.14488	2.06540
7.430	17.340	-.55204	.37422	.05710	-.00862	.00566	.00128	.00114	.34019	.16604	2.04890
7.427	18.624	-.55257	.41922	.05705	-.00820	.00566	.00137	.00122	.37905	.18794	2.01680
7.446	19.088	-.55010	.45144	.05746	-.00790	.00562	.00132	.00123	.40783	.20193	2.01970
7.497	20.512	-.55010	.47841	.05719	-.00775	.00557	.00132	.00128	.42804	.22120	1.93510
7.473	21.800	-.54907	.53011	.05822	-.00802	.00556	.00135	.00123	.47057	.25093	1.87530
7.423	23.033	-.54942	.57842	.05927	-.00852	.00552	.00144	.00129	.50912	.28085	1.81280
7.458	24.114	-.54977	.62475	.05950	-.00922	.00550	.00149	.00133	.54591	.30956	1.76350
7.398	24.871	-.54915	.65242	.05961	-.00958	.00547	.00146	.00136	.56685	.32847	1.72570
7.459	25.785	-.54899	.67555	.05969	-.01004	.00525	.00138	.00142	.58233	.34761	1.67520
7.479	27.997	-.54966	.77593	.06054	-.01252	.00523	.00149	.00130	.65670	.41770	1.57220
7.555	29.349	-.54916	.83068	.06099	-.01467	.00542	.00153	.00126	.69417	.46030	1.50810
7.470	31.076	-.54146	.90781	.06117	-.01771	.00555	.00135	.00137	.74595	.52098	1.43180
7.452	32.395	-.53739	.95905	.06128	-.02025	.00605	.00127	.00152	.77697	.56556	1.37380
7.467	33.384	-.53708	1.00930	.06132	-.02324	.00605	.00127	.00155	.80901	.60655	1.33380
7.527	34.277	-.53681	1.04710	.06109	-.02531	.00590	.00126	.00158	.83087	.64023	1.29780
7.486	35.442	-.53321	1.09730	.06114	-.02857	.00608	.00132	.00168	.85853	.68613	1.25130
7.510	36.502	-.53314	1.14180	.06091	-.03143	.00600	.00122	.00175	.88161	.72819	1.21070
7.556	38.009	-.52903	1.21190	.06065	-.03625	.00649	.00113	.00196	.91756	.79407	1.15550
7.477	38.780	-.52551	1.25490	.06061	-.03946	.00695	.00113	.00206	.94030	.83324	1.12850
	GRADIENT	.00011	.04044	.00019	-.00058	-.00003	.00001	.00004	.03159	.02595	-.04727

OA257 (LARC 20-M6-6559) OV102 LESS OMS PODS (R7E085) (10 JUL 81)

REFERENCE DATA

SREF = 2690.0000 SQ.FT. XMRP = 1076.6800 IN. XO
LREF = 474.8100 INCHES YMRP = .0000 IN. YO
BREF = 936.6800 INCHES ZMRP = 375.0000 IN. ZO
SCALE = .0100

PARAMETRIC DATA

BETA = .500 PHI = .000
SPDBRK = .000 AILRON = .000
YP = .000 1S = 1.000
ELEVON = .000 MACH = 6.000
S-MODE = 1.000 S-DIR = 2.000

RUN NO. 329/ 0 RN/L = 7.44 GRADIENT INTERVAL = 23.00/ 25.00

RN/L	ALPHA	BETA	CN	CA	CLM	CY	CYN	CBL	CL	CD	L/D
7.266	-.170	.50437	-.04797	.07537	-.03592	-.00351	.00030	-.00011	-.04774	.07551	-.63226
7.249	-.052	.47487	-.04371	.07505	-.03540	-.00318	.00018	-.00002	-.04364	.07509	-.58111
7.274	1.171	.47448	-.02402	.07292	-.03250	-.00328	.00013	-.00003	-.02550	.07241	-.35216
7.295	2.307	.47526	-.00247	.07118	-.02958	-.00316	.00013	-.00002	-.00533	.07102	-.07509
7.346	3.338	.47534	.01420	.06978	-.02761	-.00310	.00011	-.00002	.01011	.07049	.14341
7.355	4.780	.47529	.04362	.06720	-.02455	-.00306	.00011	-.00003	.03787	.07060	.53634
7.363	5.972	.47438	.06566	.06538	-.02227	-.00302	.00009	-.00007	.05851	.07186	.81416
7.374	7.226	.47381	.08956	.06372	-.02020	-.00295	.00014	-.00007	.08083	.07448	1.08520
7.401	8.456	.47531	.12380	.06228	-.01781	-.00322	.00004	-.00009	.11330	.07981	1.41960
7.453	9.441	.47677	.14539	.06128	-.01628	-.00316	-.00002	-.00007	.13337	.08430	1.58210
7.462	10.784	.47542	.17815	.05988	-.01455	-.00302	-.00002	-.00007	.16380	.09216	1.77740
7.463	12.048	.47594	.21252	.05902	-.01306	-.00308	-.00006	-.00006	.19552	.10208	1.91530
7.453	13.250	.47690	.24686	.05832	-.01186	-.00282	-.00012	-.00004	.22692	.11335	2.00200
7.432	14.496	.47660	.28244	.05774	-.01079	-.00252	-.00016	-.00005	.25899	.12661	2.04570
7.462	15.697	.47660	.32183	.05740	-.00972	-.00258	-.00025	-.00005	.29430	.14233	2.06780
7.408	16.691	.47798	.35009	.05705	-.00922	-.00267	-.00029	-.00008	.31896	.15520	2.05510
7.434	18.092	.48410	.39308	.05709	-.00876	-.00238	-.00026	-.00007	.35592	.17634	2.01840
7.512	19.366	.48612	.43884	.05736	-.00811	-.00233	-.00027	-.00010	.39500	.19963	1.97860
7.528	20.700	.48750	.48608	.05764	-.00808	-.00222	-.00034	-.00014	.43433	.22574	1.92400
7.492	22.161	.48641	.54085	.05870	-.00852	-.00199	-.00039	-.00014	.47875	.25838	1.85290
7.512	23.272	.48715	.58488	.05921	-.00885	-.00171	-.00043	-.00016	.51390	.28548	1.80010
7.550	24.294	.48856	.61635	.05944	-.00929	-.00189	-.00055	-.00016	.53731	.30775	1.74590
7.558	25.626	.48775	.67174	.05988	-.01048	-.00157	-.00053	-.00018	.57976	.34451	1.68290
7.553	26.884	.48919	.72538	.06044	-.01151	-.00171	-.00067	-.00020	.61965	.38191	1.62250
7.542	28.168	.48861	.77973	.06086	-.01308	-.00174	-.00062	-.00028	.65866	.42174	1.56180
7.555	29.387	.48760	.82385	.06106	-.01453	-.00195	-.00046	-.00040	.68788	.45747	1.50370
7.579	30.464	.48860	.87387	.06129	-.01678	-.00244	-.00048	-.00049	.72216	.49588	1.45630
7.536	30.992	.48754	.91674	.06154	-.01887	-.00175	-.00051	-.00045	.75417	.52481	1.43710
7.533	33.020	.49313	.98615	.06151	-.02207	-.00174	-.00060	-.00038	.79335	.58895	1.34700
7.527	34.192	.49590	1.03280	.06142	-.02490	-.00145	-.00053	-.00042	.81974	.63118	1.29870
7.514	35.538	.49646	1.09690	.06133	-.02896	-.00160	-.00046	-.00043	.85697	.68748	1.24650
7.493	36.578	.49835	1.14370	.06122	-.03195	-.00172	-.00043	-.00045	.88199	.73073	1.20700
7.515	37.899	.50208	1.19070	.06100	-.03488	-.00185	-.00038	-.00048	.90214	.77957	1.15720
7.423	39.184	.50499	1.25450	.06080	-.03964	-.00170	-.00016	-.00055	.93395	.83972	1.11220
	GRADIENT	.00138	.03079	.00022	-.00044	-.00017	-.00012	.00000	.02291	.02179	-.05304

OA257 (LARC 20-M6-6559) OV102 LESS OMS PODS (R7E086) (10 JUL 81)

REFERENCE DATA

SREF = 2690.0000 SQ.FT. XMRP = 1076.6800 IN. XO
LREF = 474.8100 INCHES YMRP = .0000 IN. YO
BREF = 936.6800 INCHES ZMRP = 375.0000 IN. ZO
SCALE = .0100

PARAMETRIC DATA

ALPHA = 15.000 PHI = .000
SPDBRK = 86.600 AILRON = .000
YP = 1.000 1S = 1.000
ELEVON = .000 MACH = 6.000
S-MODE = 2.000 S-DIR = 1.000

RUN NO. 340/ 0 RN/L = 7.56 GRADIENT INTERVAL = -.60/ .60

RN/L	BETA	ALPHA	CN	CA	CLM	CY	CYN	CBL	CL	CD	L/D
7.617	-4.428	14.45100	.27964	.06699	.00096	.04881	.00313	.00719	.25407	.13465	1.88690
7.589	-4.300	14.45400	.27961	.06696	.00109	.04798	.00308	.00708	.25405	.13463	1.88700
7.590	-4.100	14.45900	.27964	.06698	.00134	.04587	.00297	.00680	.25406	.13468	1.88650
7.603	-3.900	14.46100	.27962	.06715	.00178	.04341	.00288	.00648	.25399	.13485	1.88350
7.601	-3.700	14.46600	.27980	.06733	.00225	.04106	.00280	.00618	.25411	.13509	1.88100
7.589	-3.500	14.46400	.27985	.06753	.00265	.03884	.00271	.00589	.25411	.13528	1.87830
7.587	-3.300	14.46900	.27964	.06771	.00315	.03652	.00260	.00560	.25385	.13543	1.87430
7.575	-3.100	14.46900	.27947	.06790	.00364	.03442	.00248	.00532	.25364	.13557	1.87090
7.566	-2.900	14.47400	.27944	.06799	.00396	.03224	.00232	.00504	.25358	.13568	1.86890
7.574	-2.700	14.47600	.27936	.06808	.00430	.03016	.00218	.00477	.25347	.13576	1.86710
7.574	-2.500	14.48200	.27950	.06814	.00447	.02799	.00201	.00448	.25358	.13587	1.86640
7.564	-2.300	14.48300	.27967	.06807	.00453	.02589	.00182	.00421	.25376	.13586	1.86780
7.546	-2.100	14.48500	.27984	.06810	.00463	.02377	.00164	.00393	.25391	.13594	1.86790
7.535	-1.900	14.48900	.27988	.06808	.00469	.02175	.00148	.00364	.25395	.13594	1.86810
7.529	-1.700	14.49400	.28006	.06806	.00472	.01979	.00133	.00334	.25411	.13598	1.86870
7.529	-1.500	14.49700	.28033	.06796	.00471	.01770	.00118	.00305	.25439	.13597	1.87090
7.530	-1.300	14.50100	.28047	.06794	.00474	.01555	.00100	.00273	.25452	.13601	1.87140
7.524	-1.100	14.50400	.28051	.06779	.00458	.01359	.00084	.00241	.25459	.13588	1.87370
7.534	-.900	14.50700	.28064	.06767	.00442	.01149	.00074	.00206	.25474	.13582	1.87570
7.554	-.700	14.51000	.28084	.06765	.00439	.00934	.00062	.00172	.25494	.13586	1.87640
7.565	-.500	14.51600	.28095	.06756	.00441	.00725	.00054	.00136	.25504	.13583	1.87770
7.540	-.300	14.52200	.28098	.06754	.00441	.00501	.00041	.00100	.25507	.13584	1.87770
7.547	-.100	14.52800	.28115	.06745	.00434	.00295	.00031	.00065	.25524	.13582	1.87930
7.550	.100	14.53100	.28127	.06742	.00420	.00101	.00021	.00031	.25535	.13583	1.87990
7.589	.300	14.53600	.28154	.06741	.00411	-.00121	.00007	-.00004	.25561	.13592	1.88060
7.586	.500	14.54100	.28166	.06749	.00418	-.00323	-.00003	-.00039	.25570	.13604	1.87950
7.592	.700	14.54400	.28160	.06753	.00415	-.00533	-.00019	-.00072	.25562	.13608	1.87840
7.553	.900	14.54800	.28188	.06747	.00409	-.00736	-.00029	-.00107	.25589	.13611	1.88010
7.561	1.100	14.55200	.28188	.06739	.00397	-.00953	-.00038	-.00142	.25590	.13605	1.88090
7.549	1.300	14.55600	.28197	.06739	.00385	-.01164	-.00046	-.00179	.25599	.13610	1.88090
7.573	1.500	14.56300	.28222	.06745	.00391	-.01392	-.00052	-.00216	.25619	.13624	1.88040
7.588	1.700	14.56700	.28258	.06767	.00407	-.01586	-.00065	-.00247	.25647	.13656	1.87810
7.569	1.900	14.56700	.28255	.06780	.00408	-.01793	-.00078	-.00280	.25641	.13669	1.87590
7.554	2.100	14.57400	.28262	.06791	.00411	-.02023	-.00087	-.00316	.25644	.13683	1.87410
7.551	2.300	14.57400	.28271	.06799	.00409	-.02237	-.00094	-.00350	.25650	.13694	1.87310
7.524	2.500	14.57700	.28281	.06807	.00407	-.02459	-.00101	-.00385	.25657	.13705	1.87210
7.512	2.700	14.58000	.28304	.06810	.00396	-.02678	-.00112	-.00418	.25678	.13715	1.87220
7.526	2.900	14.58200	.28348	.06808	.00391	-.02894	-.00129	-.00447	.25721	.13725	1.87400
7.548	3.100	14.58400	.28352	.06806	.00374	-.03102	-.00140	-.00477	.25725	.13726	1.87420
7.516	3.300	14.58500	.28356	.06804	.00341	-.03328	-.00153	-.00508	.25729	.13725	1.87460
7.522	3.500	14.58800	.28398	.06786	.00307	-.03547	-.00164	-.00538	.25774	.13720	1.87860
7.520	3.700	14.59400	.28420	.06776	.00271	-.03759	-.00178	-.00564	.25796	.13718	1.88040
	GRADIENT	.02429	.00076	-.00011	-.00032	-.01043	-.00056	-.00174	.00072	.00019	.00261

OA257 (LARC 20-M6-6559) OV102 LESS OMS PODS (R7E186) (10 JUL 81)

REFERENCE DATA

SREF = 2690.0000 SQ.FT. XMRP = 1076.6800 IN. XO
LREF = 474.8100 INCHES YMRP = .0000 IN. YO
BREF = 936.6800 INCHES ZMRP = 375.0000 IN. ZO
SCALE = .0100

PARAMETRIC DATA

ALPHA = 15.000 PHI = .000
SPDBRK = 86.600 AILRON = .000
YP = 1.000 1S = 1.000
ELEVON = .000 MACH = 6.000
S-MODE = 2.000 S-DIR = 1.000

RUN NO. 2340/ 0 RN/L = 7.56 GRADIENT INTERVAL = -.60/ .60

RN/L	BETA	ALPHA	CN	CA	CLM	CY	CYN	CBL	CL	CD	L/D
7.610	-4.400	14.45500	.27966	.06699	.00102	.04866	.00313	.00716	.25408	.13468	1.88660
7.588	-4.200	14.46000	.27960	.06698	.00119	.04698	.00303	.00695	.25401	.13468	1.88610
7.603	-4.000	14.45900	.27965	.06705	.00159	.04467	.00293	.00664	.25405	.13475	1.88530
7.593	-3.800	14.46300	.27975	.06724	.00196	.04222	.00284	.00633	.25409	.13498	1.88240
7.599	-3.600	14.46500	.27989	.06741	.00245	.03991	.00275	.00603	.25417	.13519	1.88020
7.587	-3.400	14.46700	.27974	.06757	.00294	.03767	.00266	.00575	.25399	.13532	1.87700
7.585	-3.200	14.46600	.27930	.06780	.00344	.03548	.00254	.00546	.25351	.13542	1.87200
7.565	-3.000	14.47000	.27957	.06801	.00381	.03327	.00238	.00519	.25371	.13571	1.86950
7.567	-2.800	14.47400	.27946	.06807	.00412	.03126	.00226	.00490	.25358	.13576	1.86790
7.577	-2.600	14.47900	.27947	.06809	.00437	.02907	.00210	.00462	.25357	.13580	1.86710
7.571	-2.400	14.48500	.27961	.06812	.00454	.02694	.00191	.00435	.25368	.13589	1.86680
7.549	-2.200	14.48600	.27977	.06808	.00457	.02483	.00173	.00407	.25384	.13590	1.86790
7.546	-2.000	14.48800	.27991	.06804	.00466	.02281	.00157	.00378	.25398	.13591	1.86880
7.531	-1.800	14.49000	.28009	.06806	.00471	.02078	.00140	.00349	.25415	.13597	1.86910
7.525	-1.600	14.49500	.28021	.06801	.00472	.01870	.00124	.00320	.25427	.13598	1.86990
7.534	-1.400	14.49900	.28026	.06795	.00472	.01660	.00108	.00289	.25432	.13595	1.87070
7.524	-1.200	14.50200	.28052	.06789	.00472	.01458	.00091	.00257	.25458	.13597	1.87230
7.523	-1.000	14.50400	.28070	.06774	.00445	.01254	.00078	.00224	.25479	.13588	1.87520
7.545	-.800	14.50900	.28069	.06765	.00439	.01038	.00068	.00189	.25478	.13582	1.87590
7.560	-.600	14.51600	.28092	.06764	.00443	.00838	.00059	.00155	.25499	.13589	1.87640
7.554	-.400	14.52200	.28097	.06758	.00443	.00616	.00047	.00118	.25505	.13587	1.87720
7.534	-.200	14.52500	.28112	.06756	.00439	.00396	.00035	.00083	.25519	.13591	1.87770
7.546	.000	14.53100	.28132	.06747	.00427	.00203	.00026	.00048	.25540	.13590	1.87930
7.567	.200	14.53200	.28150	.06743	.00411	-.00012	.00014	.00013	.25558	.13590	1.88060
7.589	.400	14.53900	.28165	.06747	.00414	-.00224	.00001	-.00022	.25570	.13601	1.88000
7.596	.600	14.54100	.28158	.06748	.00415	-.00424	-.00010	-.00056	.25562	.13601	1.87930
7.566	.800	14.54300	.28176	.06754	.00413	-.00632	-.00025	-.00089	.25577	.13612	1.87890
7.555	1.000	14.55000	.28173	.06736	.00405	-.00837	-.00032	-.00124	.25577	.13598	1.88100
7.554	1.200	14.55300	.28203	.06736	.00388	-.01061	-.00042	-.00161	.25606	.13607	1.88180
7.566	1.400	14.56200	.28221	.06743	.00383	-.01268	-.00047	-.00198	.25619	.13622	1.88070
7.584	1.600	14.56500	.28239	.06755	.00397	-.01494	-.00057	-.00232	.25633	.13640	1.87930
7.577	1.800	14.56700	.28248	.06775	.00410	-.01686	-.00071	-.00264	.25636	.13662	1.87650
7.566	2.000	14.57200	.28263	.06785	.00411	-.01901	-.00082	-.00297	.25647	.13678	1.87510
7.558	2.200	14.57300	.28275	.06793	.00407	-.02133	-.00090	-.00333	.25656	.13689	1.87420
7.532	2.400	14.57400	.28274	.06806	.00409	-.02349	-.00096	-.00369	.25652	.13702	1.87220
7.519	2.600	14.58000	.28287	.06805	.00399	-.02575	-.00107	-.00402	.25663	.13707	1.87230
7.518	2.800	14.57900	.28309	.06807	.00393	-.02777	-.00120	-.00433	.25684	.13714	1.87280
7.540	3.000	14.58400	.28361	.06808	.00382	-.03002	-.00136	-.00461	.25733	.13730	1.87420
7.539	3.200	14.58500	.28387	.06804	.00363	-.03222	-.00148	-.00491	.25759	.13733	1.87560
7.523	3.400	14.58600	.28382	.06791	.00325	-.03435	-.00158	-.00522	.25757	.13720	1.87730
7.524	3.600	14.58900	.28411	.06779	.00288	-.03681	-.00173	-.00555	.25788	.13716	1.88010
7.518	3.799	14.59100	.28435	.06767	.00243	-.03840	-.00185	-.00573	.25813	.13712	1.88260
	GRADIENT	.02071	.00066	-.00015	-.00030	-.01049	-.00057	-.00175	.00064	.00011	.00307

OA257 (LARC 20-M6-6559) OV102 LESS OMS PODS (R7E087) (10 JUL 81)

REFERENCE DATA

SREF = 2690.0000 SQ.FT. XMRP = 1076.6800 IN. XO
LREF = 474.8100 INCHES YMRP = .0000 IN. YO
BREF = 936.6800 INCHES ZMRP = 375.0000 IN. ZO
SCALE = .0100

PARAMETRIC DATA

ALPHA = 20.000 PHI = .000
SPDBRK = 86.600 AILRON = .000
YP = 1.000 1S = 1.000
ELEVON = .000 MACH = 6.000
S-MODE = 2.000 S-DIR = 1.000

RUN NO. 341/ 0 RN/L = 7.61 GRADIENT INTERVAL = -.60/ .60

RN/L	BETA	ALPHA	CN	CA	CLM	CY	CYN	CBL	CL	CD	L/D
7.609	-4.447	19.30300	.43766	.06287	-.00157	.04199	.00550	.00751	.39227	.20401	1.92280
7.623	-4.300	19.31100	.43780	.06285	-.00146	.04140	.00545	.00741	.39239	.20410	1.92260
7.626	-4.100	19.32400	.43797	.06288	-.00135	.03953	.00526	.00711	.39249	.20427	1.92140
7.631	-3.900	19.32300	.43802	.06293	-.00114	.03752	.00507	.00678	.39253	.20432	1.92110
7.636	-3.700	19.32700	.43806	.06300	-.00094	.03545	.00489	.00643	.39252	.20443	1.92010
7.631	-3.500	19.32700	.43844	.06305	-.00072	.03339	.00474	.00606	.39286	.20460	1.92010
7.638	-3.300	19.33400	.43857	.06314	-.00046	.03124	.00458	.00571	.39293	.20477	1.91890
7.642	-3.100	19.33900	.43897	.06321	-.00023	.02916	.00442	.00535	.39327	.20502	1.91820
7.636	-2.900	19.34500	.43914	.06331	-.00002	.02717	.00426	.00500	.39338	.20520	1.91700
7.640	-2.700	19.35000	.43914	.06338	.00019	.02507	.00412	.00461	.39334	.20531	1.91580
7.620	-2.500	19.35000	.43904	.06354	.00047	.02287	.00397	.00424	.39319	.20542	1.91410
7.612	-2.300	19.35400	.43939	.06359	.00068	.02087	.00380	.00387	.39349	.20561	1.91370
7.594	-2.100	19.35700	.43939	.06359	.00084	.01895	.00366	.00350	.39347	.20563	1.91350
7.595	-1.900	19.36000	.43945	.06361	.00089	.01686	.00343	.00316	.39351	.20569	1.91310
7.584	-1.700	19.36900	.43972	.06359	.00103	.01509	.00320	.00284	.39374	.20582	1.91300
7.589	-1.500	19.37600	.43968	.06355	.00108	.01323	.00285	.00254	.39369	.20582	1.91280
7.602	-1.300	19.37800	.43997	.06347	.00103	.01169	.00249	.00226	.39399	.20585	1.91390
7.613	-1.100	19.38600	.44049	.06345	.00107	.00995	.00207	.00199	.39446	.20606	1.91430
7.584	-.900	19.39200	.44050	.06339	.00104	.00843	.00168	.00172	.39446	.20605	1.91440
7.573	-.700	19.39500	.44066	.06330	.00101	.00691	.00132	.00144	.39463	.20604	1.91540
7.585	-.500	19.40000	.44095	.06331	.00102	.00515	.00100	.00113	.39489	.20618	1.91520
7.583	-.300	19.40600	.44118	.06333	.00106	.00348	.00071	.00079	.39508	.20632	1.91490
7.579	-.100	19.40800	.44114	.06332	.00109	.00183	.00045	.00045	.39503	.20631	1.91480
7.583	.100	19.41300	.44130	.06330	.00112	-.00002	.00018	.00011	.39518	.20638	1.91480
7.594	.300	19.41900	.44124	.06330	.00111	-.00168	-.00008	-.00023	.39510	.20640	1.91430
7.616	.500	19.42500	.44168	.06334	.00114	-.00342	-.00039	-.00053	.39547	.20663	1.91390
7.625	.700	19.43200	.44197	.06335	.00104	-.00507	-.00074	-.00083	.39572	.20677	1.91380
7.620	.900	19.43500	.44211	.06346	.00106	-.00675	-.00108	-.00113	.39580	.20695	1.91250
7.603	1.100	19.44000	.44219	.06353	.00101	-.00835	-.00145	-.00141	.39583	.20708	1.91150
7.594	1.300	19.44300	.44257	.06356	.00086	-.01006	-.00184	-.00170	.39618	.20725	1.91160
7.644	1.500	19.45300	.44291	.06354	.00073	-.01162	-.00221	-.00198	.39646	.20742	1.91140
7.652	1.700	19.45700	.44354	.06357	.00066	-.01328	-.00255	-.00227	.39703	.20768	1.91180
7.656	1.900	19.46100	.44333	.06355	.00058	-.01512	-.00286	-.00258	.39683	.20762	1.91130
7.636	2.100	19.46400	.44362	.06364	.00051	-.01693	-.00309	-.00292	.39706	.20783	1.91050
7.625	2.300	19.47100	.44368	.06371	.00043	-.01887	-.00330	-.00327	.39707	.20796	1.90940
7.612	2.500	19.47400	.44404	.06368	.00024	-.02098	-.00351	-.00363	.39740	.20807	1.90990
7.617	2.700	19.47700	.44421	.06366	.00003	-.02294	-.00367	-.00401	.39757	.20813	1.91020
7.617	2.900	19.48400	.44436	.06354	-.00019	-.02494	-.00385	-.00436	.39772	.20812	1.91100
7.618	3.100	19.48900	.44436	.06344	-.00047	-.02712	-.00406	-.00471	.39773	.20806	1.91160
7.605	3.300	19.49100	.44489	.06332	-.00073	-.02892	-.00421	-.00505	.39827	.20814	1.91350
7.611	3.458	19.49500	.44536	.06328	-.00087	-.03020	-.00432	-.00524	.39871	.20827	1.91440
	GRADIENT	.02414	.00057	.00001	.00011	-.00860	-.00137	-.00167	.00044	.00037	-.00119

OA257 (LARC 20-M6-6559) OV102 LESS OMS PODS (R7E187) (10 JUL 81)

REFERENCE DATA

SREF = 2690.0000 SQ.FT. XMRP = 1076.6800 IN. XO
LREF = 474.8100 INCHES YMRP = .0000 IN. YO
BREF = 936.6800 INCHES ZMRP = 375.0000 IN. ZO
SCALE = .0100

PARAMETRIC DATA

ALPHA = 20.000 PHI = .000
SPDBRK = 86.600 AILRON = .000
YP = 1.000 1S = 1.000
ELEVON = .000 MACH = 6.000
S-MODE = 2.000 S-DIR = 1.000

RUN NO. 2341/ 0 RN/L = 7.61 GRADIENT INTERVAL = -.60/ .60

RN/L	BETA	ALPHA	CN	CA	CLM	CY	CYN	CBL	CL	CD	L/D
7.614	-4.400	19.30700	.43785	.06284	-.00150	.04178	.00548	.00747	.39245	.20407	1.92310
7.622	-4.200	19.32100	.43791	.06284	-.00141	.04054	.00536	.00727	.39245	.20418	1.92210
7.635	-4.000	19.32200	.43796	.06289	-.00122	.03851	.00517	.00695	.39249	.20426	1.92150
7.634	-3.800	19.32700	.43814	.06300	-.00107	.03649	.00498	.00661	.39260	.20445	1.92020
7.639	-3.600	19.32600	.43825	.06303	-.00081	.03446	.00482	.00626	.39269	.20452	1.92010
7.630	-3.400	19.33000	.43845	.06311	-.00060	.03224	.00464	.00588	.39285	.20469	1.91930
7.645	-3.200	19.33800	.43883	.06316	-.00039	.03023	.00450	.00552	.39316	.20490	1.91880
7.631	-3.000	19.34200	.43904	.06327	-.00013	.02815	.00434	.00517	.39331	.20511	1.91750
7.639	-2.800	19.34700	.43913	.06334	.00008	.02613	.00419	.00480	.39335	.20524	1.91650
7.633	-2.600	19.35100	.43912	.06346	.00032	.02397	.00405	.00442	.39328	.20538	1.91490
7.613	-2.400	19.35100	.43914	.06360	.00055	.02186	.00388	.00405	.39326	.20552	1.91350
7.603	-2.200	19.35800	.43936	.06359	.00075	.01993	.00374	.00368	.39344	.20563	1.91330
7.600	-2.000	19.36000	.43936	.06360	.00086	.01792	.00357	.00333	.39344	.20565	1.91310
7.583	-1.800	19.36400	.43962	.06359	.00094	.01594	.00332	.00299	.39367	.20575	1.91330
7.596	-1.600	19.37200	.43969	.06351	.00104	.01412	.00303	.00269	.39373	.20575	1.91360
7.590	-1.400	19.37700	.43970	.06348	.00104	.01242	.00267	.00239	.39374	.20577	1.91340
7.612	-1.200	19.38200	.44024	.06346	.00105	.01082	.00229	.00213	.39423	.20596	1.91410
7.595	-1.000	19.38700	.44043	.06342	.00103	.00921	.00188	.00185	.39440	.20602	1.91430
7.579	-.800	19.39200	.44072	.06337	.00098	.00770	.00151	.00158	.39467	.20611	1.91490
7.567	-.600	19.39700	.44071	.06333	.00104	.00592	.00113	.00127	.39466	.20610	1.91490
7.588	-.400	19.40400	.44116	.06329	.00108	.00439	.00087	.00097	.39508	.20626	1.91550
7.575	-.200	19.40700	.44104	.06333	.00108	.00260	.00057	.00063	.39494	.20628	1.91460
7.589	.000	19.41000	.44117	.06327	.00110	.00090	.00030	.00029	.39507	.20628	1.91520
7.583	.200	19.41400	.44156	.06329	.00112	-.00082	.00005	-.00006	.39541	.20647	1.91510
7.604	.400	19.42200	.44140	.06329	.00110	-.00265	-.00024	-.00039	.39524	.20646	1.91430
7.619	.600	19.42900	.44179	.06335	.00110	-.00419	-.00055	-.00069	.39556	.20670	1.91370
7.629	.800	19.43500	.44204	.06341	.00109	-.00603	-.00092	-.00098	.39576	.20688	1.91300
7.607	1.000	19.43800	.44229	.06352	.00104	-.00748	-.00126	-.00127	.39595	.20708	1.91200
7.597	1.200	19.44100	.44249	.06358	.00091	-.00926	-.00165	-.00156	.39610	.20723	1.91140
7.618	1.400	19.44800	.44270	.06352	.00076	-.01080	-.00202	-.00184	.39629	.20730	1.91170
7.640	1.600	19.45500	.44315	.06359	.00070	-.01246	-.00238	-.00213	.39667	.20756	1.91110
7.672	1.800	19.46000	.44330	.06361	.00065	-.01414	-.00269	-.00241	.39679	.20766	1.91080
7.640	2.000	19.46300	.44354	.06363	.00055	-.01600	-.00299	-.00275	.39699	.20778	1.91060
7.642	2.200	19.46800	.44369	.06373	.00054	-.01788	-.00321	-.00308	.39708	.20796	1.90940
7.614	2.400	19.47200	.44386	.06368	.00037	-.01989	-.00341	-.00345	.39725	.20799	1.90990
7.613	2.600	19.47600	.44394	.06368	.00014	-.02190	-.00358	-.00382	.39731	.20805	1.90970
7.621	2.800	19.48100	.44424	.06357	-.00005	-.02387	-.00375	-.00418	.39760	.20809	1.91070
7.618	3.000	19.48600	.44466	.06351	-.00031	-.02606	-.00397	-.00453	.39800	.20819	1.91170
7.606	3.200	19.49000	.44474	.06336	-.00056	-.02791	-.00413	-.00488	.39812	.20811	1.91300
7.607	3.400	19.49400	.44508	.06327	-.00083	-.02981	-.00428	-.00519	.39845	.20818	1.91400
	GRADIENT	.02482	.00076	.00000	.00005	-.00854	-.00139	-.00166	.00062	.00043	-.00098

OA257 (LARC 20-M6-6559) OV102 LESS OMS PODS (R7E088) (10 JUL 81)

REFERENCE DATA

SREF = 2690.0000 SQ.FT. XMRP = 1076.6800 IN. XO
LREF = 474.8100 INCHES YMRP = .0000 IN. YO
BREF = 936.6800 INCHES ZMRP = 375.0000 IN. ZO
SCALE = .0100

PARAMETRIC DATA

ALPHA = 20.000 PHI = .000
SPDBRK = 86.600 AILRON = .000
YP = 1.000 1S = 1.000
ELEVON = .000 MACH = 6.000
S-MODE = 2.000 S-DIR = 1.000

RUN NO. 386/ 0 RN/L = 2.30 GRADIENT INTERVAL = -.60/ .60

RN/L	BETA	ALPHA	CN	CA	CLM	CY	CYN	CBL	CL	CD	L/D
2.311	-2.153	19.67900	.45068	.06298	.00050	.01814	.00416	.00331	.40315	.21107	1.91010
2.304	-2.021	19.67500	.45104	.06370	.00023	.01735	.00383	.00315	.40326	.21184	1.90360
2.304	-1.887	19.67900	.45098	.06351	.00040	.01601	.00365	.00293	.40325	.21167	1.90510
2.301	-1.742	19.67700	.45179	.06373	.00044	.01507	.00340	.00277	.40395	.21213	1.90420
2.302	-1.620	19.68600	.45107	.06359	.00102	.01380	.00315	.00258	.40328	.21182	1.90390
2.305	-1.486	19.68300	.45202	.06401	.00062	.01241	.00291	.00238	.40405	.21252	1.90120
2.313	-1.370	19.68600	.45031	.06401	.00123	.01171	.00284	.00218	.40243	.21196	1.89860
2.309	-1.245	19.69400	.45196	.06403	.00079	.01069	.00270	.00198	.40394	.21260	1.90000
2.308	-1.121	19.69200	.45276	.06451	.00117	.00926	.00240	.00180	.40454	.21330	1.89660
2.308	-1.018	19.70000	.45166	.06471	.00122	.00856	.00222	.00166	.40342	.21317	1.89250
2.296	-.712	19.71300	.45268	.06498	.00155	.00624	.00155	.00128	.40424	.21387	1.89010
2.304	-.517	19.71200	.45265	.06480	.00137	.00502	.00109	.00108	.40427	.21367	1.89200
2.313	-.353	19.71600	.45254	.06465	.00160	.00366	.00073	.00092	.40420	.21353	1.89300
2.307	-.191	19.72000	.45326	.06509	.00154	.00256	.00034	.00067	.40471	.21421	1.88930
2.312	-.047	19.71700	.45352	.06511	.00139	.00153	.00009	.00048	.40496	.21430	1.88960
2.317	.099	19.72600	.45194	.06488	.00167	.00018	-.00019	.00027	.40352	.21362	1.88900
2.316	.245	19.73500	.45368	.06513	.00115	-.00086	-.00050	.00006	.40504	.21450	1.88830
2.309	.388	19.73800	.45283	.06491	.00136	-.00218	-.00083	-.00016	.40431	.21403	1.88900
2.302	.533	19.73700	.45451	.06497	.00137	-.00312	-.00114	-.00032	.40586	.21465	1.89090
2.303	.673	19.74500	.45286	.06468	.00133	-.00387	-.00147	-.00044	.40438	.21387	1.89080
2.302	.812	19.74800	.45419	.06497	.00103	-.00479	-.00191	-.00059	.40553	.21461	1.88960
2.300	.958	19.75200	.45417	.06479	.00120	-.00592	-.00227	-.00077	.40556	.21447	1.89100
2.303	1.101	19.75000	.45427	.06479	.00106	-.00696	-.00254	-.00097	.40566	.21448	1.89130
2.298	1.246	19.75300	.45505	.06482	.00089	-.00819	-.00285	-.00115	.40637	.21480	1.89190
2.296	1.390	19.75700	.45479	.06441	.00132	-.00925	-.00311	-.00133	.40625	.21436	1.89520
2.293	1.692	19.76900	.45478	.06394	.00064	-.01210	-.00347	-.00186	.40635	.21399	1.89890
2.289	1.839	19.77300	.45566	.06373	.00030	-.01363	-.00361	-.00216	.40724	.21412	1.90200
2.287	1.988	19.77600	.45565	.06370	.00005	-.01556	-.00377	-.00243	.40722	.21411	1.90190
2.289	2.167	19.78200	.45505	.06329	.00020	-.01679	-.00398	-.00279	.40677	.21356	1.90470
	GRADIENT	.02703	.00113	.00020	-.00017	-.00782	-.00209	-.00138	.00089	.00077	-.00256

OA257 (LARC 20-M6-6559) OV102 LESS OMS PODS (R7E089) (10 JUL 81)

REFERENCE DATA

SREF = 2690.0000 SQ.FT. XMRP = 1076.6800 IN. XO
LREF = 474.8100 INCHES YMRP = .0000 IN. YO
BREF = 936.6800 INCHES ZMRP = 375.0000 IN. ZO
SCALE = .0100

PARAMETRIC DATA

ALPHA = 20.000 PHI = .000
SPDBRK = 86.600 AILRON = .000
YP = 1.000 1S = 1.000
ELEVON = .000 MACH = 6.000
S-MODE = 2.000 S-DIR = 2.000

RUN NO. 1386/ O RN/L = 2.30 GRADIENT INTERVAL = -.60/ .60

RN/L	BETA	ALPHA	CN	CA	CLM	CY	CYN	CBL	CL	CD	L/D
2.266	-1.882	19.68500	.45425	.06333	-.00015	.01637	.00366	.00289	.40637	.21264	1.91110
2.278	-1.718	19.68500	.45502	.06357	.00026	.01461	.00325	.00268	.40701	.21313	1.90970
2.301	-1.553	19.69500	.45440	.06370	.00000	.01365	.00316	.00243	.40635	.21311	1.90680
2.298	-1.382	19.69600	.45398	.06423	.00074	.01168	.00276	.00215	.40577	.21347	1.90080
2.302	-1.205	19.70600	.45423	.06407	.00056	.01024	.00252	.00189	.40603	.21348	1.90190
2.315	-1.034	19.70500	.45295	.06397	.00105	.00880	.00228	.00166	.40486	.21295	1.90120
2.316	-.849	19.71000	.45446	.06438	.00157	.00655	.00176	.00142	.40612	.21388	1.89880
2.316	-.677	19.71800	.45294	.06431	.00145	.00640	.00153	.00122	.40468	.21336	1.89670
2.316	-.497	19.72200	.45293	.06427	.00125	.00474	.00095	.00101	.40467	.21334	1.89680
2.301	-.309	19.72600	.45386	.06475	.00127	.00325	.00054	.00080	.40537	.21414	1.89300
2.299	-.143	19.73100	.45544	.06442	.00115	.00253	.00028	.00058	.40695	.21439	1.89820
2.294	.036	19.73300	.45331	.06472	.00127	.00035	-.00022	.00033	.40484	.21398	1.89190
2.292	.217	19.73700	.45418	.06470	.00151	-.00019	-.00039	.00008	.40565	.21428	1.89310
2.301	.397	19.74100	.45464	.06469	.00116	-.00198	-.00084	-.00016	.40607	.21446	1.89350
2.296	.590	19.75100	.45464	.06477	.00132	-.00377	-.00146	-.00037	.40601	.21460	1.89190
2.303	.763	19.75000	.45474	.06483	.00151	-.00450	-.00190	-.00054	.40608	.21468	1.89160
2.305	.935	19.75400	.45432	.06475	.00119	-.00570	-.00226	-.00074	.40570	.21449	1.89150
2.301	1.107	19.75800	.45560	.06455	.00101	-.00692	-.00260	-.00097	.40695	.21476	1.89490
2.296	1.312	19.76300	.45491	.06449	.00101	-.00869	-.00305	-.00122	.40631	.21451	1.89410
2.300	1.540	19.76200	.45400	.06420	.00044	-.01039	-.00334	-.00157	.40556	.21392	1.89580
2.292	1.770	19.77300	.45562	.06366	.00012	-.01296	-.00360	-.00204	.40722	.21404	1.90250
	GRADIENT	.02450	.00108	.00033	.00007	-.00770	-.00213	-.00130	.00081	.00086	-.00377

OA257 (LARC 20-M6-6559) OV102 LESS OMS PODS (R7E090) (10 JUL 81)

REFERENCE DATA

SREF = 2690.0000 SQ.FT. XMRP = 1076.6800 IN. XO
LREF = 474.8100 INCHES YMRP = .0000 IN. YO
BREF = 936.6800 INCHES ZMRP = 375.0000 IN. ZO
SCALE = .0100

PARAMETRIC DATA

ALPHA = 25.000 PHI = .000
SPDBRK = 86.600 AILRON = .000
YP = 1.000 1S = 1.000
ELEVON = .000 MACH = 6.000
S-MODE = 2.000 S-DIR = 1.000

RUN NO. 342/ 0 RN/L = 7.65 GRADIENT INTERVAL = -.60/ .60

RN/L	BETA	ALPHA	CN	CA	CLM	CY	CYN	CBL	CL	CD	L/D
7.724	-4.451	24.04300	.60856	.06265	-.00416	.03874	.00754	.00807	.53024	.30516	1.73760
7.745	-4.300	24.05800	.60893	.06259	-.00421	.03765	.00738	.00786	.53052	.30539	1.73720
7.752	-4.100	24.05900	.60954	.06253	-.00414	.03579	.00711	.00749	.53110	.30559	1.73790
7.757	-3.900	24.06300	.60989	.06244	-.00415	.03403	.00679	.00717	.53143	.30569	1.73850
7.759	-3.700	24.06600	.61031	.06238	-.00404	.03217	.00647	.00683	.53182	.30584	1.73890
7.757	-3.500	24.07200	.61061	.06236	-.00405	.03054	.00617	.00649	.53208	.30599	1.73890
7.767	-3.300	24.07900	.61097	.06225	-.00404	.02879	.00582	.00617	.53241	.30610	1.73930
7.742	-3.100	24.07800	.61140	.06225	-.00402	.02706	.00544	.00584	.53281	.30627	1.73970
7.732	-2.900	24.07800	.61163	.06224	-.00403	.02553	.00512	.00550	.53302	.30635	1.73990
7.715	-2.700	24.08100	.61194	.06224	-.00393	.02376	.00472	.00516	.53329	.30652	1.73980
7.702	-2.500	24.08400	.61216	.06223	-.00387	.02216	.00436	.00480	.53348	.30662	1.73980
7.713	-2.300	24.09500	.61237	.06221	-.00374	.02051	.00400	.00447	.53362	.30679	1.73930
7.713	-2.100	24.09900	.61306	.06225	-.00369	.01882	.00366	.00413	.53421	.30715	1.73930
7.712	-1.900	24.10900	.61310	.06221	-.00368	.01708	.00331	.00378	.53421	.30722	1.73880
7.694	-1.700	24.11200	.61324	.06219	-.00355	.01546	.00298	.00344	.53433	.30728	1.73890
7.706	-1.500	24.11900	.61379	.06225	-.00339	.01372	.00264	.00310	.53477	.30763	1.73840
7.710	-1.300	24.12700	.61384	.06225	-.00334	.01197	.00233	.00273	.53477	.30773	1.73780
7.713	-1.100	24.13400	.61415	.06226	-.00331	.01029	.00204	.00235	.53501	.30793	1.73740
7.723	-.900	24.14100	.61461	.06224	-.00324	.00857	.00174	.00197	.53540	.30816	1.73740
7.724	-.700	24.15000	.61466	.06227	-.00321	.00690	.00144	.00161	.53539	.30830	1.73660
7.701	-.500	24.15200	.61471	.06227	-.00316	.00528	.00108	.00126	.53542	.30833	1.73650
7.669	-.300	24.15400	.61483	.06228	-.00313	.00376	.00071	.00094	.53552	.30841	1.73640
7.645	-.100	24.15700	.61484	.06227	-.00310	.00228	.00030	.00064	.53552	.30843	1.73630
7.621	.100	24.15700	.61499	.06222	-.00312	.00083	-.00012	.00033	.53567	.30845	1.73670
7.617	.300	24.16500	.61504	.06222	-.00307	-.00062	-.00055	.00001	.53567	.30854	1.73610
7.587	.500	24.16900	.61555	.06224	-.00311	-.00210	-.00099	-.00028	.53612	.30881	1.73610
7.583	.700	24.17000	.61590	.06229	-.00305	-.00348	-.00138	-.00060	.53640	.30900	1.73590
7.557	.900	24.17600	.61601	.06231	-.00307	-.00505	-.00179	-.00093	.53646	.30913	1.73540
7.560	1.100	24.18200	.61620	.06226	-.00316	-.00664	-.00216	-.00128	.53663	.30921	1.73550
7.550	1.300	24.19000	.61643	.06227	-.00319	-.00827	-.00250	-.00162	.53679	.30940	1.73500
7.555	1.500	24.19500	.61647	.06232	-.00324	-.00997	-.00284	-.00198	.53677	.30950	1.73430
7.565	1.700	24.20200	.61683	.06239	-.00330	-.01158	-.00314	-.00234	.53704	.30978	1.73360
7.553	1.900	24.20500	.61708	.06237	-.00335	-.01335	-.00345	-.00271	.53726	.30989	1.73370
7.566	2.100	24.21400	.61736	.06237	-.00335	-.01516	-.00376	-.00311	.53746	.31010	1.73320
7.559	2.300	24.22200	.61743	.06242	-.00349	-.01690	-.00403	-.00348	.53746	.31024	1.73240
7.540	2.500	24.22400	.61760	.06252	-.00353	-.01878	-.00435	-.00387	.53756	.31042	1.73170
7.564	2.700	24.23300	.61776	.06256	-.00369	-.02058	-.00464	-.00423	.53765	.31060	1.73100
7.568	2.900	24.23900	.61826	.06269	-.00368	-.02231	-.00496	-.00458	.53802	.31099	1.73000
7.548	3.100	24.24400	.61858	.06277	-.00381	-.02411	-.00529	-.00493	.53825	.31124	1.72940
7.566	3.300	24.25700	.61876	.06287	-.00386	-.02586	-.00561	-.00526	.53830	.31152	1.72800
7.553	3.500	24.25900	.61873	.06294	-.00388	-.02773	-.00590	-.00562	.53824	.31159	1.72740
	GRADIENT	.01686	.00071	-.00005	.00006	-.00736	-.00208	-.00155	.00059	.00040	-.00036

OA257 (LARC 20-M6-6559) OV102 LESS OMS PODS (R7E190) (10 JUL 81)

REFERENCE DATA

SREF = 2690.0000 SQ.FT. XMRP = 1076.6800 IN. XO
LREF = 474.8100 INCHES YMRP = .0000 IN. YO
BREF = 936.6800 INCHES ZMRP = 375.0000 IN. ZO
SCALE = .0100

PARAMETRIC DATA

ALPHA = 25.000 PHI = .000
SPDBRK = 86.600 AILRON = .000
YP = 1.000 1S = 1.000
ELEVON = .000 MACH = 6.000
S-MODE = 2.000 S-DIR = 1.000

RUN NO. 2342/ 0 RN/L = 7.65 GRADIENT INTERVAL = -.60/ .60

RN/L	BETA	ALPHA	CN	CA	CLM	CY	CYN	CBL	CL	CD	L/D
7.730	-4.400	24.04300	.60874	.06266	-.00418	.03840	.00749	.00802	.53040	.30524	1.73760
7.744	-4.200	24.06000	.60956	.06257	-.00416	.03674	.00725	.00768	.53109	.30565	1.73750
7.759	-4.000	24.06100	.60934	.06249	-.00416	.03490	.00695	.00733	.53092	.30550	1.73790
7.756	-3.800	24.06600	.61018	.06244	-.00410	.03306	.00662	.00700	.53168	.30583	1.73850
7.757	-3.600	24.06800	.61047	.06237	-.00407	.03138	.00633	.00666	.53196	.30591	1.73890
7.763	-3.400	24.07300	.61092	.06231	-.00402	.02966	.00600	.00633	.53237	.30609	1.73930
7.755	-3.200	24.07800	.61123	.06228	-.00403	.02785	.00562	.00600	.53264	.30623	1.73930
7.741	-3.000	24.07800	.61143	.06226	-.00402	.02635	.00529	.00567	.53284	.30629	1.73960
7.721	-2.800	24.08000	.61168	.06224	-.00397	.02460	.00491	.00534	.53305	.30640	1.73970
7.705	-2.600	24.08300	.61208	.06224	-.00389	.02294	.00454	.00498	.53341	.30659	1.73980
7.704	-2.400	24.08900	.61232	.06219	-.00385	.02133	.00418	.00463	.53361	.30669	1.73990
7.715	-2.200	24.09900	.61264	.06222	-.00375	.01963	.00381	.00430	.53384	.30694	1.73920
7.713	-2.000	24.10700	.61317	.06222	-.00371	.01796	.00348	.00396	.53428	.30723	1.73900
7.704	-1.800	24.11100	.61337	.06221	-.00361	.01625	.00314	.00362	.53444	.30735	1.73890
7.697	-1.600	24.11500	.61359	.06221	-.00347	.01466	.00282	.00328	.53463	.30748	1.73880
7.711	-1.400	24.12400	.61379	.06224	-.00342	.01282	.00249	.00291	.53474	.30767	1.73800
7.712	-1.200	24.13200	.61406	.06225	-.00331	.01117	.00219	.00254	.53494	.30787	1.73760
7.715	-1.000	24.13900	.61435	.06227	-.00330	.00937	.00188	.00216	.53517	.30806	1.73720
7.724	-.800	24.14500	.61472	.06226	-.00317	.00778	.00161	.00180	.53547	.30827	1.73700
7.709	-.600	24.14900	.61471	.06231	-.00315	.00608	.00126	.00143	.53542	.30833	1.73650
7.686	-.400	24.15200	.61509	.06228	-.00314	.00449	.00090	.00110	.53577	.30849	1.73670
7.656	-.200	24.15500	.61496	.06227	-.00314	.00297	.00050	.00078	.53564	.30846	1.73650
7.627	.000	24.15700	.61488	.06224	-.00311	.00155	.00009	.00048	.53557	.30842	1.73650
7.617	.200	24.16400	.61522	.06226	-.00308	.00017	-.00032	.00018	.53583	.30864	1.73610
7.601	.400	24.16700	.61529	.06220	-.00308	-.00138	-.00078	-.00015	.53590	.30865	1.73620
7.587	.600	24.17100	.61545	.06226	-.00308	-.00276	-.00118	-.00045	.53600	.30880	1.73570
7.569	.800	24.17300	.61602	.06228	-.00308	-.00425	-.00159	-.00076	.53650	.30908	1.73580
7.558	1.000	24.18000	.61609	.06232	-.00308	-.00585	-.00198	-.00110	.53651	.30920	1.73510
7.552	1.200	24.18700	.61623	.06237	-.00316	-.00748	-.00234	-.00145	.53658	.30938	1.73440
7.558	1.400	24.19200	.61643	.06230	-.00322	-.00911	-.00267	-.00179	.53676	.30944	1.73460
7.558	1.600	24.20000	.61666	.06238	-.00321	-.01082	-.00300	-.00215	.53689	.30968	1.73370
7.565	1.800	24.20400	.61684	.06236	-.00328	-.01241	-.00329	-.00251	.53705	.30977	1.73370
7.557	2.000	24.21000	.61721	.06242	-.00336	-.01425	-.00361	-.00290	.53733	.31003	1.73310
7.558	2.200	24.21800	.61722	.06245	-.00342	-.01600	-.00389	-.00330	.53728	.31015	1.73230
7.556	2.400	24.22300	.61739	.06244	-.00353	-.01786	-.00419	-.00368	.53742	.31025	1.73220
7.551	2.600	24.23000	.61769	.06253	-.00358	-.01969	-.00449	-.00405	.53761	.31052	1.73130
7.564	2.800	24.23700	.61812	.06262	-.00367	-.02147	-.00480	-.00440	.53793	.31085	1.73050
7.567	3.000	24.24400	.61822	.06273	-.00369	-.02319	-.00512	-.00476	.53793	.31105	1.72940
7.550	3.200	24.25000	.61873	.06282	-.00383	-.02497	-.00545	-.00510	.53833	.31141	1.72870
7.556	3.400	24.25700	.61873	.06289	-.00385	-.02678	-.00575	-.00545	.53827	.31154	1.72780
7.553	3.565	24.26000	.61863	.06291	-.00394	-.02835	-.00598	-.00575	.53815	.31153	1.72740
	GRADIENT	.01875	.00051	-.00005	.00007	-.00733	-.00205	-.00156	.00039	.00034	-.00068

OA257 (LARC 20-M6-6559) OV102 LESS OMS PODS (R7E091) (10 JUL 81)

REFERENCE DATA

SREF = 2690.0000 SQ.FT. XMRP = 1076.6800 IN. XO
LREF = 474.8100 INCHES YMRP = .0000 IN. YO
BREF = 936.6800 INCHES ZMRP = 375.0000 IN. ZO
SCALE = .0100

PARAMETRIC DATA

ALPHA = 25.000 PHI = .000
SPDBRK = 86.600 AILRON = .000
YP = 1.000 1S = 1.000
ELEVON = .000 MACH = 6.000
S-MODE = 2.000 S-DIR = 1.000

RUN NO. 387/ 0 RN/L = 2.28 GRADIENT INTERVAL = -.60/ .60

RN/L	BETA	ALPHA	CN	CA	CLM	CY	CYN	CBL	CL	CD	L/D
2.286	-2.553	24.56700	.63409	.06338	-.00195	.02092	.00450	.00480	.55034	.32126	1.71310
2.277	-2.322	24.57300	.63512	.06335	-.00249	.01871	.00419	.00432	.55125	.32173	1.71340
2.289	-2.106	24.58000	.63447	.06271	-.00243	.01695	.00388	.00391	.55090	.32094	1.71650
2.295	-1.891	24.58700	.63612	.06288	-.00269	.01497	.00355	.00348	.55228	.32184	1.71600
2.295	-1.646	24.58700	.63670	.06275	-.00306	.01299	.00321	.00300	.55286	.32198	1.71710
2.297	-1.417	24.60000	.63565	.06233	-.00261	.01067	.00286	.00254	.55201	.32128	1.71810
2.295	-1.202	24.60000	.63725	.06240	-.00330	.00869	.00252	.00214	.55344	.32201	1.71870
2.292	-.982	24.61100	.63608	.06224	-.00302	.00697	.00215	.00177	.55237	.32149	1.71820
2.290	-.757	24.61800	.63812	.06228	-.00331	.00538	.00170	.00141	.55417	.32244	1.71870
2.285	-.537	24.62500	.63750	.06253	-.00283	.00336	.00133	.00103	.55347	.32247	1.71630
2.279	-.315	24.63100	.63708	.06229	-.00264	.00136	.00110	.00054	.55315	.32215	1.71710
2.280	-.098	24.63800	.63893	.06261	-.00296	.00006	.00063	.00017	.55467	.32326	1.71580
2.280	.118	24.65000	.63902	.06311	-.00248	-.00125	-.00013	-.00005	.55447	.32388	1.71200
2.276	.334	24.65000	.63887	.06314	-.00236	-.00212	-.00099	-.00020	.55432	.32385	1.71170
2.278	.556	24.66300	.64074	.06319	-.00283	-.00320	-.00183	-.00039	.55592	.32479	1.71160
2.282	.787	24.66900	.63859	.06296	-.00235	-.00459	-.00255	-.00064	.55403	.32375	1.71130
2.282	1.008	24.67700	.64079	.06306	-.00213	-.00581	-.00302	-.00098	.55595	.32483	1.71150
2.279	1.237	24.68300	.64033	.06325	-.00230	-.00750	-.00355	-.00137	.55541	.32487	1.70960
2.280	1.445	24.68800	.63925	.06301	-.00246	-.00929	-.00391	-.00177	.55450	.32425	1.71010
2.280	1.669	24.69600	.64143	.06354	-.00227	-.01121	-.00431	-.00220	.55622	.32572	1.70770
	GRADIENT	.03397	.00284	.00083	.00017	-.00584	-.00299	-.00125	.00204	.00227	-.00569

OA257 (LARC 20-M6-6559) OV102 LESS OMS PODS (R7E092) (10 JUL 81)

REFERENCE DATA

SREF =	2690.0000 SQ.FT.	XMRP =	1076.6800 IN.	XO	
LREF =	474.8100 INCHES	YMRP =	.0000 IN.	YO	
BREF =	936.6800 INCHES	ZMRP =	375.0000 IN.	ZO	
SCALE =	.0100				

PARAMETRIC DATA

ALPHA =	25.000	PHI =	.000
SPDBRK =	86.600	AILRON =	.000
YP =	1.000	1S =	1.000
ELEVON =	.000	MACH =	6.000
S-MODE =	2.000	S-DIR =	2.000

RUN NO. 1387/ O RN/L = 2.29 GRADIENT INTERVAL = -.60/ .60

RN/L	BETA	ALPHA	CN	CA	CLM	CY	CYN	CBL	CL	CD	L/D
2.258	-2.334	24.57700	.63511	.06306	-.00242	.01900	.00420	.00430	.55134	.32149	1.71500
2.269	-2.137	24.57300	.63602	.06289	-.00247	.01738	.00391	.00389	.55227	.32169	1.71680
2.288	-1.976	24.58600	.63616	.06272	-.00244	.01526	.00358	.00358	.55238	.32172	1.71700
2.298	-1.806	24.59300	.63697	.06262	-.00289	.01445	.00342	.00325	.55313	.32202	1.71770
2.299	-1.635	24.59800	.63629	.06235	-.00296	.01261	.00314	.00294	.55260	.32155	1.71850
2.305	-1.447	24.59700	.63713	.06235	-.00319	.01133	.00294	.00253	.55337	.32189	1.71910
2.297	-1.263	24.61400	.63890	.06224	-.00362	.00944	.00263	.00221	.55493	.32269	1.71970
2.297	-1.092	24.61300	.63780	.06206	-.00349	.00773	.00229	.00189	.55401	.32205	1.72020
2.295	-.910	24.62400	.63815	.06217	-.00311	.00625	.00192	.00158	.55421	.32241	1.71900
2.295	-.712	24.63000	.63812	.06224	-.00278	.00484	.00155	.00128	.55412	.32251	1.71820
2.289	-.552	24.62800	.63912	.06237	-.00292	.00344	.00142	.00095	.55500	.32303	1.71810
2.288	-.382	24.63800	.63831	.06223	-.00281	.00182	.00107	.00061	.55426	.32266	1.71780
2.275	-.200	24.64300	.63963	.06226	-.00332	.00061	.00077	.00029	.55542	.32329	1.71800
2.281	-.037	24.64800	.63919	.06235	-.00278	-.00060	.00026	.00006	.55495	.32323	1.71690
2.288	.148	24.64700	.63837	.06278	-.00263	-.00152	-.00039	-.00009	.55403	.32328	1.71380
2.294	.334	24.65900	.64026	.06278	-.00268	-.00181	-.00105	-.00022	.55568	.32419	1.71410
2.294	.498	24.66300	.63965	.06296	-.00283	-.00262	-.00166	-.00035	.55502	.32414	1.71230
2.283	.689	24.66900	.63974	.06276	-.00285	-.00354	-.00226	-.00053	.55516	.32405	1.71320
2.288	.860	24.67400	.63874	.06274	-.00269	-.00493	-.00281	-.00075	.55423	.32366	1.71240
2.288	1.036	24.68000	.63888	.06296	-.00218	-.00606	-.00317	-.00105	.55423	.32398	1.71070
2.302	1.237	24.68700	.64083	.06299	-.00172	-.00743	-.00361	-.00140	.55595	.32489	1.71120
2.286	1.393	24.69100	.63958	.06301	-.00179	-.00915	-.00391	-.00168	.55478	.32442	1.71000
2.284	1.586	24.69700	.64105	.06320	-.00162	-.01059	-.00420	-.00205	.55601	.32526	1.70940
	GRADIENT	.03062	.00087	.00070	.00024	-.00558	-.00297	-.00120	.00032	.00130	-.00589

OA257 (LARC 20-M6-6559) OV102 LESS OMS PODS (R7E093) (10 JUL 81)

REFERENCE DATA

SREF = 2690.0000 SQ.FT. XMRP = 1076.6800 IN. XO
LREF = 474.8100 INCHES YMRP = .0000 IN. YO
BREF = 936.6800 INCHES ZMRP = 375.0000 IN. ZO
SCALE = .0100

PARAMETRIC DATA

ALPHA = 30.000 PHI = .000
SPDBRK = 86.600 AILRON = .000
YP = 1.000 1S = 1.000
ELEVON = .000 MACH = 6.000
S-MODE = 2.000 S-DIR = 1.000

RUN NO. 343/ 0 RN/L = 7.40 GRADIENT INTERVAL = -.60/ .60

RN/L	BETA	ALPHA	CN	CA	CLM	CY	CYN	CBL	CL	CD	L/D
7.445	-4.539	28.98100	.80943	.06345	-.00957	.04056	.00769	.00972	.67733	.44769	1.51300
7.440	-4.400	28.99500	.80995	.06336	-.00954	.03946	.00751	.00948	.67772	.44802	1.51270
7.413	-4.200	28.99100	.81027	.06318	-.00969	.03758	.00721	.00902	.67812	.44798	1.51370
7.433	-4.000	28.99700	.81101	.06306	-.00972	.03580	.00692	.00860	.67878	.44831	1.51410
7.422	-3.800	29.00100	.81151	.06300	-.00972	.03396	.00663	.00816	.67922	.44854	1.51430
7.400	-3.600	29.00400	.81193	.06289	-.00987	.03206	.00636	.00772	.67961	.44868	1.51470
7.432	-3.400	29.01500	.81297	.06283	-.00993	.03017	.00607	.00729	.68046	.44926	1.51460
7.397	-3.200	29.02000	.81325	.06286	-.00994	.02826	.00579	.00682	.68065	.44948	1.51430
7.410	-3.000	29.02600	.81372	.06276	-.01001	.02647	.00552	.00638	.68107	.44970	1.51450
7.409	-2.800	29.03400	.81430	.06266	-.01005	.02462	.00526	.00593	.68156	.44999	1.51460
7.393	-2.600	29.03800	.81496	.06265	-.01006	.02275	.00499	.00545	.68210	.45035	1.51460
7.381	-2.400	29.04100	.81474	.06263	-.01013	.02096	.00471	.00502	.68190	.45026	1.51450
7.359	-2.200	29.04300	.81534	.06268	-.01008	.01915	.00444	.00457	.68239	.45062	1.51430
7.366	-2.000	29.05300	.81587	.06265	-.01001	.01738	.00419	.00414	.68279	.45097	1.51410
7.350	-1.800	29.05700	.81588	.06273	-.00990	.01559	.00392	.00372	.68273	.45109	1.51350
7.367	-1.600	29.06700	.81640	.06273	-.00992	.01381	.00365	.00327	.68310	.45146	1.51310
7.360	-1.400	29.07700	.81698	.06272	-.00980	.01202	.00334	.00285	.68353	.45186	1.51270
7.374	-1.200	29.09000	.81764	.06274	-.00975	.01034	.00302	.00244	.68400	.45235	1.51210
7.382	-1.000	29.09800	.81771	.06270	-.00979	.00878	.00266	.00205	.68402	.45244	1.51190
7.383	-.800	29.10000	.81810	.06264	-.00982	.00722	.00228	.00168	.68436	.45261	1.51210
7.387	-.600	29.11200	.81853	.06260	-.00969	.00558	.00185	.00128	.68467	.45292	1.51170
7.395	-.400	29.12100	.81898	.06254	-.00974	.00417	.00145	.00093	.68502	.45319	1.51160
7.388	-.200	29.12900	.81904	.06251	-.00977	.00254	.00102	.00057	.68503	.45329	1.51120
7.406	.000	29.13400	.81949	.06247	-.00983	.00112	.00064	.00024	.68540	.45354	1.51120
7.419	.200	29.14300	.81969	.06243	-.00993	-.00041	.00021	-.00011	.68552	.45371	1.51090
7.422	.400	29.15300	.82004	.06240	-.00992	-.00188	-.00023	-.00045	.68576	.45397	1.51060
7.413	.600	29.16100	.82048	.06238	-.00996	-.00340	-.00068	-.00079	.68609	.45426	1.51040
7.444	.800	29.16700	.82059	.06232	-.01006	-.00473	-.00110	-.00111	.68617	.45434	1.51020
7.440	1.000	29.17000	.82124	.06230	-.01014	-.00626	-.00159	-.00145	.68672	.45468	1.51040
7.432	1.200	29.17600	.82126	.06230	-.01019	-.00757	-.00201	-.00179	.68669	.45476	1.51000
7.432	1.400	29.18200	.82137	.06230	-.01027	-.00908	-.00245	-.00213	.68675	.45488	1.50970
7.427	1.600	29.19000	.82170	.06231	-.01031	-.01065	-.00283	-.00250	.68696	.45514	1.50940
7.419	1.800	29.19800	.82168	.06225	-.01043	-.01231	-.00319	-.00291	.68691	.45518	1.50910
7.419	2.000	29.20400	.82205	.06231	-.01048	-.01399	-.00353	-.00329	.68716	.45548	1.50860
7.420	2.200	29.21000	.82218	.06225	-.01057	-.01565	-.00385	-.00372	.68725	.45556	1.50860
7.422	2.400	29.21900	.82281	.06226	-.01066	-.01760	-.00415	-.00416	.68773	.45598	1.50820
7.388	2.600	29.21700	.82258	.06229	-.01077	-.01930	-.00444	-.00460	.68752	.45589	1.50810
7.395	2.800	29.22700	.82244	.06231	-.01076	-.02114	-.00474	-.00504	.68731	.45596	1.50740
7.390	3.000	29.23200	.82286	.06232	-.01081	-.02314	-.00505	-.00551	.68764	.45622	1.50720
7.412	3.200	29.24500	.82297	.06234	-.01088	-.02488	-.00530	-.00593	.68762	.45645	1.50650
7.399	3.400	29.24200	.82307	.06247	-.01091	-.02690	-.00562	-.00639	.68766	.45657	1.50610
7.401	3.600	29.25100	.82294	.06249	-.01092	-.02777	-.00574	-.00660	.68747	.45664	1.50550
	GRADIENT	.04018	.00154	-.00018	-.00024	-.00750	-.00210	-.00172	.00111	.00107	-.00111

OA257 (LARC 20-M6-6559) OV102 LESS OMS PODS (R7E193) (10 JUL 81)

REFERENCE DATA

SREF = 2690.0000 SQ.FT. XMRP = 1076.6800 IN. XO
LREF = 474.8100 INCHES YMRP = .0000 IN. YO
BREF = 936.6800 INCHES ZMRP = 375.0000 IN. ZO
SCALE = .0100

PARAMETRIC DATA

ALPHA = 30.000 PHI = .000
SPDBRK = 86.600 AILRON = .000
YP = 1.000 1S = 1.000
ELEVON = .000 MACH = 6.000
S-MODE = 2.000 S-DIR = 1.000

RUN NO. 2343/ 0 RN/L = 7.40 GRADIENT INTERVAL = -.60/ .60

RN/L	BETA	ALPHA	CN	CA	CLM	CY	CYN	CBL	CL	CD	L/D
7.433	-4.500	28.98200	.80963	.06340	-.00952	.04028	.00765	.00966	.67753	.44775	1.51320
7.425	-4.300	28.99400	.81032	.06325	-.00953	.03854	.00737	.00923	.67810	.44811	1.51330
7.423	-4.100	28.99400	.81085	.06310	-.00970	.03668	.00707	.00882	.67864	.44822	1.51410
7.433	-3.900	29.00000	.81120	.06305	-.00972	.03489	.00677	.00838	.67893	.44842	1.51400
7.405	-3.700	29.00300	.81201	.06297	-.00977	.03306	.00650	.00793	.67965	.44878	1.51440
7.419	-3.500	29.00900	.81241	.06289	-.00992	.03109	.00620	.00751	.67999	.44897	1.51460
7.421	-3.300	29.02000	.81302	.06283	-.00996	.02920	.00593	.00705	.68046	.44934	1.51440
7.395	-3.100	29.02300	.81358	.06279	-.00995	.02735	.00565	.00660	.68095	.44963	1.51450
7.412	-2.900	29.02900	.81384	.06272	-.01004	.02556	.00539	.00616	.68117	.44976	1.51450
7.404	-2.700	29.03700	.81468	.06266	-.01007	.02368	.00512	.00569	.68187	.45021	1.51460
7.389	-2.500	29.04100	.81484	.06265	-.01000	.02186	.00484	.00523	.68198	.45032	1.51440
7.362	-2.300	29.04000	.81491	.06268	-.01011	.02008	.00458	.00480	.68203	.45038	1.51440
7.368	-2.100	29.05000	.81568	.06268	-.01002	.01825	.00431	.00436	.68263	.45087	1.51400
7.359	-1.900	29.05900	.81620	.06270	-.00990	.01652	.00406	.00393	.68300	.45124	1.51360
7.357	-1.700	29.06300	.81632	.06272	-.00992	.01474	.00379	.00349	.68306	.45137	1.51330
7.362	-1.500	29.07200	.81649	.06274	-.00988	.01288	.00349	.00306	.68313	.45157	1.51280
7.363	-1.300	29.08000	.81738	.06269	-.00977	.01120	.00319	.00264	.68387	.45206	1.51280
7.379	-1.100	29.09400	.81756	.06268	-.00980	.00958	.00284	.00225	.68393	.45230	1.51210
7.378	-.900	29.09800	.81777	.06267	-.00983	.00801	.00247	.00186	.68408	.45245	1.51190
7.396	-.700	29.11200	.81846	.06264	-.00962	.00641	.00207	.00148	.68459	.45292	1.51150
7.386	-.500	29.11700	.81895	.06258	-.00972	.00487	.00165	.00111	.68501	.45317	1.51160
7.393	-.300	29.12200	.81889	.06251	-.00975	.00335	.00122	.00074	.68495	.45314	1.51160
7.394	-.100	29.13200	.81918	.06250	-.00982	.00184	.00083	.00041	.68513	.45340	1.51110
7.414	.100	29.13900	.81960	.06243	-.00984	.00035	.00042	.00006	.68547	.45362	1.51110
7.436	.300	29.15100	.81980	.06244	-.00990	-.00114	-.00000	-.00027	.68556	.45386	1.51050
7.412	.500	29.15700	.82038	.06240	-.00991	-.00260	-.00044	-.00062	.68602	.45419	1.51040
7.423	.700	29.16200	.82069	.06237	-.00999	-.00404	-.00088	-.00096	.68628	.45437	1.51040
7.446	.900	29.17300	.82082	.06231	-.01010	-.00551	-.00136	-.00127	.68632	.45452	1.51000
7.432	1.100	29.17200	.82094	.06230	-.01017	-.00689	-.00180	-.00162	.68644	.45455	1.51020
7.442	1.300	29.18000	.82139	.06232	-.01018	-.00828	-.00223	-.00196	.68677	.45488	1.50980
7.426	1.500	29.18500	.82164	.06232	-.01028	-.00989	-.00265	-.00230	.68694	.45506	1.50960
7.425	1.700	29.19300	.82155	.06226	-.01036	-.01143	-.00301	-.00272	.68683	.45506	1.50930
7.415	1.900	29.19900	.82179	.06227	-.01047	-.01316	-.00337	-.00309	.68698	.45527	1.50900
7.424	2.100	29.20700	.82214	.06229	-.01050	-.01487	-.00371	-.00350	.68722	.45554	1.50860
7.418	2.300	29.21400	.82218	.06226	-.01062	-.01664	-.00400	-.00394	.68722	.45563	1.50830
7.402	2.500	29.21900	.82247	.06227	-.01069	-.01846	-.00430	-.00439	.68742	.45583	1.50810
7.393	2.700	29.22300	.82284	.06231	-.01080	-.02030	-.00461	-.00481	.68770	.45610	1.50780
7.386	2.900	29.22800	.82282	.06232	-.01079	-.02212	-.00489	-.00529	.68763	.45616	1.50740
7.405	3.100	29.24000	.82287	.06239	-.01081	-.02405	-.00518	-.00570	.68754	.45639	1.50650
7.398	3.300	29.24200	.82295	.06242	-.01088	-.02591	-.00547	-.00617	.68758	.45648	1.50630
7.402	3.500	29.24600	.82292	.06247	-.01093	-.02744	-.00569	-.00652	.68750	.45656	1.50580
7.400	3.611	29.25200	.82295	.06249	-.01092	-.02780	-.00575	-.00661	.68747	.45665	1.50540
	GRADIENT	.04200	.00147	-.00017	-.00020	-.00747	-.00208	-.00172	.00103	.00107	-.00133

OA257 (LARC 20-M6-6559) OV102 LESS OMS PODS (R7E094) (10 JUL 81)

REFERENCE DATA

SREF = 2690.0000 SQ.FT. XMRP = 1076.6800 IN. XO
LREF = 474.8100 INCHES YMRP = .0000 IN. YO
BREF = 936.6800 INCHES ZMRP = 375.0000 IN. ZO
SCALE = .0100

PARAMETRIC DATA

ALPHA = 15.000 PHI = .000
SPDBRK = .000 AILRON = .000
YP = 1.000 1S = 1.000
ELEVON = .000 MACH = 6.000
S-MODE = 2.000 S-DIR = 1.000

RUN NO. 346/ 0 RN/L = 7.63 GRADIENT INTERVAL = -.60/ .60

RN/L	BETA	ALPHA	CN	CA	CLM	CY	CYN	CBL	CL	CD	L/D
7.697	-4.299	14.55100	.29050	.05849	-.01175	.03990	.00739	.00480	.26649	.12960	2.05630
7.600	-4.100	14.55900	.29043	.05835	-.01170	.03817	.00711	.00460	.26644	.12948	2.05770
7.608	-3.900	14.55700	.29047	.05826	-.01159	.03626	.00680	.00440	.26650	.12940	2.05950
7.612	-3.700	14.55800	.29076	.05820	-.01145	.03436	.00648	.00421	.26679	.12942	2.06150
7.606	-3.500	14.55900	.29079	.05809	-.01143	.03252	.00617	.00402	.26685	.12932	2.06340
7.602	-3.300	14.56600	.29094	.05802	-.01133	.03067	.00583	.00382	.26700	.12933	2.06450
7.613	-3.100	14.56700	.29107	.05797	-.01122	.02879	.00550	.00364	.26714	.12931	2.06580
7.642	-2.900	14.57100	.29121	.05794	-.01111	.02698	.00516	.00346	.26727	.12934	2.06650
7.668	-2.700	14.57400	.29114	.05784	-.01106	.02517	.00483	.00327	.26721	.12924	2.06760
7.696	-2.500	14.57900	.29132	.05776	-.01094	.02348	.00450	.00308	.26740	.12923	2.06910
7.674	-2.300	14.58200	.29164	.05779	-.01091	.02161	.00414	.00288	.26770	.12935	2.06960
7.687	-2.100	14.59100	.29174	.05771	-.01091	.01990	.00382	.00267	.26779	.12934	2.07050
7.692	-1.900	14.59600	.29204	.05764	-.01090	.01808	.00348	.00247	.26809	.12937	2.07230
7.687	-1.700	14.59800	.29233	.05762	-.01082	.01632	.00316	.00225	.26837	.12944	2.07340
7.659	-1.500	14.60200	.29217	.05760	-.01078	.01448	.00284	.00204	.26821	.12940	2.07280
7.643	-1.300	14.60500	.29210	.05762	-.01077	.01273	.00255	.00180	.26813	.12941	2.07190
7.633	-1.100	14.60400	.29229	.05762	-.01073	.01098	.00222	.00158	.26832	.12945	2.07270
7.616	-.900	14.61100	.29235	.05759	-.01082	.00902	.00187	.00135	.26837	.12948	2.07270
7.614	-.700	14.61300	.29248	.05752	-.01075	.00739	.00158	.00113	.26850	.12945	2.07420
7.600	-.500	14.61800	.29272	.05750	-.01072	.00577	.00132	.00089	.26873	.12952	2.07490
7.604	-.300	14.62200	.29277	.05754	-.01071	.00369	.00097	.00066	.26876	.12958	2.07400
7.591	-.100	14.62700	.29283	.05757	-.01069	.00209	.00068	.00043	.26880	.12965	2.07320
7.582	.100	14.62800	.29279	.05760	-.01072	.00022	.00036	.00020	.26876	.12968	2.07250
7.614	.300	14.63400	.29303	.05759	-.01069	-.00154	.00005	-.00002	.26897	.12976	2.07290
7.632	.500	14.63900	.29322	.05763	-.01071	-.00333	-.00029	-.00024	.26914	.12986	2.07250
7.611	.700	14.64000	.29336	.05764	-.01071	-.00498	-.00058	-.00048	.26926	.12992	2.07260
7.621	.900	14.64500	.29369	.05761	-.01075	-.00693	-.00092	-.00070	.26958	.12999	2.07390
7.622	1.100	14.64900	.29400	.05764	-.01072	-.00849	-.00118	-.00093	.26986	.13012	2.07390
7.625	1.300	14.65500	.29383	.05768	-.01072	-.01035	-.00151	-.00116	.26967	.13014	2.07210
7.627	1.500	14.65700	.29401	.05778	-.01069	-.01204	-.00183	-.00137	.26982	.13029	2.07090
7.618	1.700	14.66300	.29400	.05776	-.01074	-.01373	-.00215	-.00159	.26981	.13030	2.07060
7.639	1.900	14.66700	.29423	.05775	-.01084	-.01560	-.00245	-.00180	.27002	.13037	2.07120
7.649	2.100	14.67300	.29451	.05781	-.01097	-.01748	-.00276	-.00205	.27026	.13053	2.07050
7.646	2.300	14.67400	.29453	.05785	-.01102	-.01919	-.00305	-.00228	.27027	.13057	2.06990
7.647	2.500	14.67800	.29474	.05788	-.01100	-.02110	-.00339	-.00250	.27046	.13067	2.06970
7.635	2.700	14.68200	.29492	.05792	-.01112	-.02286	-.00367	-.00273	.27061	.13077	2.06930
7.637	2.900	14.68700	.29495	.05797	-.01114	-.02473	-.00401	-.00292	.27062	.13086	2.06800
7.622	3.100	14.69000	.29527	.05805	-.01121	-.02653	-.00433	-.00314	.27090	.13103	2.06750
7.616	3.300	14.69200	.29552	.05809	-.01131	-.02845	-.00466	-.00334	.27113	.13115	2.06730
7.622	3.500	14.69900	.29561	.05820	-.01129	-.03021	-.00498	-.00353	.27117	.13131	2.06510
7.618	3.700	14.70100	.29564	.05830	-.01153	-.03213	-.00534	-.00374	.27117	.13142	2.06340
7.620	3.900	14.70300	.29575	.05833	-.01157	-.03388	-.00564	-.00394	.27126	.13148	2.06310

OA257 (LARC 20-M6-6559) OV102 LESS OMS PODS (R7E094) (10 JUL 81)

REFERENCE DATA

SREF =	2690.0000 SQ.FT.	XMRP =	1076.6800 IN. XO		
LREF =	474.8100 INCHES	YMRP =	.0000 IN. YO		
BREF =	936.6800 INCHES	ZMRP =	375.0000 IN. ZO		
SCALE =	.0100				

PARAMETRIC DATA

ALPHA =	15.000	PHI =	.000
SPDBRK =	.000	AILRON =	.000
YP =	1.000	1S =	1.000
ELEVON =	.000	MACH =	6.000
S-MODE =	2.000	S-DIR =	1.000

RUN NO. 346/ 0 RN/L = 7.63 GRADIENT INTERVAL = -.60/ .60

RN/L	BETA	ALPHA	CN	CA	CLM	CY	CYN	CBL	CL	CD	L/D
7.647	4.100	14.70900	.29586	.05831	-.01151	-.03499	-.00583	-.00407	.27136	.13152	2.06320
	GRADIENT	.02029	.00046	.00011	.00000	-.00901	-.00159	-.00113	.00038	.00032	-.00229

OA257 (LARC 20-M6-6559) OV102 LESS OMS PODS (R7E194) (10 JUL 81)

REFERENCE DATA

SREF = 2690.0000 SQ.FT. XMRP = 1076.6800 IN. XO
LREF = 474.8100 INCHES YMRP = .0000 IN. YO
BREF = 936.6800 INCHES ZMRP = 375.0000 IN. ZO
SCALE = .0100

PARAMETRIC DATA

ALPHA = 15.000 PHI = .000
SPDBRK = .000 AILRON = .000
YP = 1.000 1S = 1.000
ELEVON = .000 MACH = 6.000
S-MODE = 2.000 S-DIR = 1.000

RUN NO. 2346/ O RN/L = 7.63 GRADIENT INTERVAL = -.60/ .60

RN/L	BETA	ALPHA	CN	CA	CLM	CY	CYN	CBL	CL	CD	L/D
7.610	-4.200	14.55500	.29047	.05846	-.01174	.03915	.00727	.00471	.26646	.12959	2.05620
7.603	-4.000	14.55700	.29038	.05831	-.01162	.03719	.00695	.00450	.26640	.12942	2.05840
7.613	-3.800	14.55900	.29055	.05818	-.01154	.03532	.00664	.00430	.26659	.12935	2.06100
7.607	-3.600	14.55800	.29063	.05814	-.01145	.03337	.00631	.00411	.26669	.12933	2.06210
7.600	-3.400	14.56300	.29094	.05806	-.01135	.03165	.00601	.00393	.26700	.12934	2.06420
7.610	-3.200	14.56600	.29100	.05797	-.01128	.02969	.00565	.00374	.26707	.12929	2.06560
7.625	-3.000	14.56900	.29108	.05795	-.01116	.02795	.00534	.00355	.26715	.12930	2.06600
7.657	-2.800	14.57400	.29126	.05787	-.01112	.02608	.00500	.00337	.26733	.12929	2.06760
7.690	-2.600	14.57700	.29148	.05780	-.01100	.02438	.00467	.00318	.26755	.12930	2.06920
7.679	-2.400	14.57700	.29133	.05776	-.01097	.02259	.00433	.00298	.26741	.12923	2.06940
7.679	-2.200	14.58800	.29178	.05774	-.01092	.02073	.00398	.00277	.26783	.12937	2.07030
7.688	-2.000	14.59300	.29192	.05768	-.01090	.01900	.00365	.00257	.26797	.12937	2.07130
7.689	-1.800	14.59800	.29204	.05764	-.01080	.01722	.00332	.00237	.26808	.12938	2.07200
7.681	-1.600	14.60100	.29225	.05763	-.01083	.01539	.00300	.00215	.26828	.12944	2.07250
7.648	-1.400	14.60500	.29226	.05762	-.01079	.01360	.00269	.00192	.26829	.12945	2.07240
7.641	-1.200	14.60600	.29222	.05767	-.01071	.01186	.00239	.00169	.26823	.12949	2.07140
7.617	-1.000	14.60800	.29236	.05761	-.01078	.00990	.00204	.00146	.26838	.12948	2.07270
7.614	-.800	14.61300	.29254	.05753	-.01078	.00823	.00172	.00125	.26857	.12947	2.07430
7.611	-.600	14.61600	.29253	.05752	-.01073	.00655	.00144	.00101	.26855	.12948	2.07410
7.604	-.400	14.61900	.29271	.05748	-.01069	.00465	.00113	.00077	.26873	.12950	2.07510
7.595	-.200	14.62600	.29279	.05755	-.01067	.00283	.00081	.00055	.26877	.12961	2.07360
7.590	.000	14.62700	.29276	.05759	-.01069	.00120	.00052	.00031	.26873	.12965	2.07280
7.590	.200	14.63300	.29302	.05760	-.01069	-.00069	.00020	.00009	.26897	.12975	2.07290
7.627	.400	14.63600	.29309	.05762	-.01063	-.00248	-.00014	-.00012	.26902	.12981	2.07250
7.617	.600	14.63700	.29332	.05764	-.01076	-.00412	-.00043	-.00036	.26924	.12989	2.07280
7.604	.800	14.64300	.29338	.05761	-.01072	-.00588	-.00074	-.00059	.26928	.12990	2.07300
7.626	1.000	14.64700	.29362	.05763	-.01071	-.00782	-.00108	-.00080	.26951	.13000	2.07310
7.619	1.200	14.65200	.29397	.05767	-.01072	-.00943	-.00134	-.00105	.26982	.13015	2.07310
7.623	1.400	14.65700	.29398	.05771	-.01071	-.01112	-.00166	-.00127	.26981	.13022	2.07190
7.628	1.600	14.66100	.29403	.05778	-.01070	-.01291	-.00200	-.00148	.26983	.13031	2.07060
7.623	1.800	14.66300	.29414	.05777	-.01081	-.01470	-.00230	-.00170	.26993	.13035	2.07090
7.643	2.000	14.67000	.29438	.05778	-.01086	-.01656	-.00261	-.00193	.27015	.13044	2.07100
7.661	2.200	14.67300	.29452	.05783	-.01097	-.01827	-.00290	-.00216	.27027	.13055	2.07030
7.643	2.400	14.67600	.29473	.05784	-.01104	-.02019	-.00322	-.00239	.27046	.13062	2.07050
7.641	2.600	14.68000	.29497	.05791	-.01112	-.02193	-.00352	-.00261	.27066	.13077	2.06970
7.640	2.800	14.68300	.29503	.05794	-.01113	-.02385	-.00384	-.00282	.27071	.13083	2.06920
7.626	3.000	14.68800	.29512	.05798	-.01125	-.02552	-.00415	-.00303	.27077	.13091	2.06840
7.616	3.200	14.69200	.29534	.05806	-.01125	-.02759	-.00450	-.00324	.27095	.13107	2.06730
7.623	3.400	14.69600	.29553	.05814	-.01132	-.02933	-.00482	-.00343	.27111	.13121	2.06620
7.615	3.600	14.70000	.29550	.05823	-.01146	-.03111	-.00515	-.00363	.27105	.13132	2.06410
7.616	3.800	14.70100	.29564	.05834	-.01153	-.03296	-.00549	-.00384	.27116	.13145	2.06270
7.634	4.000	14.70600	.29567	.05835	-.01156	-.03470	-.00577	-.00402	.27117	.13150	2.06220

OA257 (LARC 20-M6-6559) OV102 LESS OMS PODS (R7E194) (10 JUL 81)

REFERENCE DATA

SREF =	2690.0000 SQ.FT.	XMRP =	1076.6800 IN. XO		
LREF =	474.8100 INCHES	YMRP =	.0000 IN. YO		
BREF =	936.6800 INCHES	ZMRP =	375.0000 IN. ZO		
SCALE =	.0100				

PARAMETRIC DATA

ALPHA =	15.000	PHI =	.000
SPDBRK =	.000	AILRON =	.000
YP =	1.000	1S =	1.000
ELEVON =	.000	MACH =	6.000
S-MODE =	2.000	S-DIR =	1.000

RUN NO. 2346/ 0 RN/L = 7.63 GRADIENT INTERVAL = -.60/ .60

RN/L	BETA	ALPHA	CN	CA	CLM	CY	CYN	CBL	CL	CD	L/D
7.651	4.130	14.71000	.29594	.05829	-.01149	-.03505	-.00584	-.00408	.27143	.13153	2.06360
	GRADIENT	.01857	.00060	.00012	.00001	-.00889	-.00157	-.00114	.00051	.00036	-.00175

OA257 (LARC 20-M6-6559) OV102 LESS OMS PODS (R7E095) (10 JUL 81)

REFERENCE DATA

SREF = 2690.0000 SQ.FT. XMRP = 1076.6800 IN. XO
LREF = 474.8100 INCHES YMRP = .0000 IN. YO
BREF = 936.6800 INCHES ZMRP = 375.0000 IN. ZO
SCALE = .0100

PARAMETRIC DATA

ALPHA = 20.000 PHI = .000
SPDBRK = .000 AILRON = .000
YP = 1.000 1S = 1.000
ELEVON = .000 MACH = 6.000
S-MODE = 2.000 S-DIR = 1.000

RUN NO. 347/ 0 RN/L = 7.48 GRADIENT INTERVAL = -.60/ .60

RN/L	BETA	ALPHA	CN	CA	CLM	CY	CYN	CBL	CL	CD	L/D
7.484	-4.524	19.34200	.44562	.05786	-.00933	.03920	.00864	.00639	.40130	.20219	1.98480
7.488	-4.400	19.34900	.44573	.05786	-.00931	.03830	.00846	.00627	.40138	.20227	1.98440
7.476	-4.200	19.35300	.44602	.05782	-.00927	.03654	.00811	.00601	.40166	.20236	1.98490
7.474	-4.000	19.35700	.44620	.05776	-.00922	.03474	.00775	.00575	.40184	.20239	1.98550
7.473	-3.800	19.36000	.44631	.05769	-.00922	.03286	.00736	.00550	.40195	.20239	1.98600
7.476	-3.600	19.36000	.44644	.05763	-.00917	.03125	.00703	.00525	.40209	.20237	1.98690
7.482	-3.400	19.36600	.44680	.05759	-.00912	.02946	.00666	.00499	.40242	.20248	1.98740
7.467	-3.200	19.36400	.44715	.05758	-.00914	.02767	.00628	.00473	.40276	.20259	1.98810
7.466	-3.000	19.37000	.44737	.05750	-.00911	.02599	.00592	.00448	.40297	.20263	1.98880
7.476	-2.800	19.37900	.44753	.05747	-.00911	.02432	.00556	.00422	.40311	.20271	1.98860
7.462	-2.600	19.38200	.44772	.05747	-.00907	.02265	.00518	.00396	.40328	.20279	1.98870
7.456	-2.400	19.38100	.44795	.05736	-.00901	.02100	.00483	.00369	.40353	.20276	1.99020
7.454	-2.200	19.39000	.44812	.05733	-.00896	.01912	.00441	.00344	.40367	.20286	1.98990
7.459	-2.000	19.39200	.44822	.05735	-.00890	.01751	.00408	.00317	.40376	.20291	1.98980
7.478	-1.800	19.39300	.44852	.05729	-.00883	.01585	.00370	.00292	.40405	.20297	1.99070
7.486	-1.600	19.40000	.44889	.05733	-.00874	.01405	.00332	.00264	.40436	.20318	1.99010
7.492	-1.400	19.41300	.44903	.05730	-.00862	.01247	.00298	.00235	.40446	.20329	1.98960
7.491	-1.200	19.42000	.44903	.05737	-.00864	.01066	.00259	.00205	.40441	.20340	1.98830
7.493	-1.000	19.42600	.44929	.05737	-.00857	.00911	.00222	.00177	.40463	.20353	1.98810
7.491	-.800	19.43200	.44955	.05730	-.00850	.00763	.00187	.00151	.40488	.20360	1.98860
7.501	-.600	19.43700	.44980	.05725	-.00852	.00586	.00147	.00125	.40512	.20367	1.98900
7.491	-.400	19.44000	.44991	.05726	-.00855	.00437	.00114	.00097	.40520	.20373	1.98890
7.488	-.200	19.44400	.45026	.05729	-.00856	.00261	.00075	.00068	.40551	.20390	1.98870
7.489	.000	19.44900	.45017	.05729	-.00856	.00109	.00041	.00040	.40541	.20391	1.98810
7.481	.200	19.45300	.45039	.05733	-.00856	-.00066	.00004	.00012	.40558	.20406	1.98760
7.469	.400	19.45500	.45026	.05730	-.00855	-.00226	-.00030	-.00018	.40547	.20399	1.98770
7.469	.600	19.46000	.45049	.05734	-.00851	-.00393	-.00067	-.00045	.40565	.20414	1.98710
7.452	.800	19.46300	.45080	.05738	-.00852	-.00544	-.00099	-.00074	.40592	.20431	1.98680
7.464	1.000	19.46800	.45105	.05741	-.00860	-.00718	-.00140	-.00101	.40613	.20445	1.98640
7.480	1.200	19.47600	.45129	.05745	-.00861	-.00872	-.00177	-.00128	.40632	.20462	1.98570
7.475	1.400	19.47900	.45158	.05751	-.00866	-.01039	-.00215	-.00156	.40655	.20480	1.98510
7.479	1.600	19.48400	.45160	.05751	-.00877	-.01209	-.00253	-.00184	.40656	.20485	1.98460
7.483	1.800	19.48700	.45170	.05754	-.00886	-.01362	-.00286	-.00211	.40663	.20493	1.98430
7.487	2.000	19.49300	.45182	.05746	-.00897	-.01532	-.00323	-.00240	.40675	.20494	1.98480
7.499	2.200	19.49900	.45234	.05753	-.00901	-.01708	-.00361	-.00267	.40719	.20522	1.98420
7.497	2.400	19.50600	.45269	.05752	-.00907	-.01876	-.00397	-.00296	.40750	.20537	1.98420
7.490	2.600	19.51100	.45302	.05760	-.00911	-.02039	-.00435	-.00324	.40777	.20559	1.98340
7.501	2.800	19.51500	.45267	.05762	-.00916	-.02206	-.00473	-.00350	.40742	.20552	1.98230
7.506	3.000	19.52100	.45291	.05766	-.00916	-.02392	-.00515	-.00377	.40761	.20569	1.98170
7.532	3.200	19.53000	.45304	.05771	-.00915	-.02539	-.00550	-.00403	.40768	.20585	1.98050
7.498	3.400	19.53400	.45322	.05773	-.00926	-.02720	-.00592	-.00428	.40783	.20594	1.98030
7.521	3.600	19.53800	.45330	.05777	-.00924	-.02882	-.00628	-.00452	.40788	.20604	1.97960

OA257 (LARC 20-M6-6559) OV102 LESS OMS PODS (R7E095) (10 JUL 81)

REFERENCE DATA

SREF =	2690.0000 SQ.FT.	XMRP =	1076.6800 IN. XO		
LREF =	474.8100 INCHES	YMRP =	.0000 IN. YO		
BREF =	936.6800 INCHES	ZMRP =	375.0000 IN. ZO		
SCALE =	.0100				

PARAMETRIC DATA

ALPHA =	20.000	PHI =	.000
SPDBRK =	.000	AILRON =	.000
YP =	1.000	1S =	1.000
ELEVON =	.000	MACH =	6.000
S-MODE =	2.000	S-DIR =	1.000

RUN NO. 347/ 0 RN/L = 7.48 GRADIENT INTERVAL = -.60/ .60

RN/L	BETA	ALPHA	CN	CA	CLM	CY	CYN	CBL	CL	CD	L/D
7.486	3.800	19.54200	.45350	.05785	-.00936	-.03054	-.00664	-.00475	.40803	.20622	1.97860
	GRADIENT	.01929	.00052	.00007	.00001	-.00820	-.00179	-.00142	.00039	.00037	-.00164

OA257 (LARC 20-M6-6559) OV102 LESS OMS PODS (R7E195) (10 JUL 81)

REFERENCE DATA

SREF = 2690.0000 SQ.FT. XMRP = 1076.6800 IN. XO
LREF = 474.8100 INCHES YMRP = .0000 IN. YO
BREF = 936.6800 INCHES ZMRP = 375.0000 IN. ZO
SCALE = .0100

PARAMETRIC DATA

ALPHA = 20.000 PHI = .000
SPDBRK = .000 AILRON = .000
YP = 1.000 1S = 1.000
ELEVON = .000 MACH = 6.000
S-MODE = 2.000 S-DIR = 1.000

RUN NO. 2347/ O RN/L = 7.48 GRADIENT INTERVAL = -.60/ .60

RN/L	BETA	ALPHA	CN	CA	CLM	CY	CYN	CBL	CL	CD	L/D
7.496	-4.500	19.34300	.44560	.05786	-.00933	.03914	.00862	.00638	.40129	.20218	1.98480
7.485	-4.300	19.35300	.44591	.05783	-.00933	.03740	.00828	.00614	.40155	.20233	1.98460
7.474	-4.100	19.35700	.44624	.05781	-.00917	.03563	.00792	.00589	.40185	.20244	1.98500
7.475	-3.900	19.35800	.44636	.05773	-.00927	.03382	.00756	.00562	.40198	.20243	1.98580
7.473	-3.700	19.36100	.44628	.05765	-.00916	.03203	.00719	.00537	.40193	.20234	1.98640
7.481	-3.500	19.36200	.44677	.05759	-.00915	.03037	.00685	.00513	.40241	.20246	1.98760
7.478	-3.300	19.36500	.44697	.05763	-.00916	.02853	.00647	.00487	.40257	.20258	1.98720
7.460	-3.100	19.36900	.44707	.05754	-.00908	.02679	.00610	.00461	.40269	.20255	1.98810
7.477	-2.900	19.37500	.44724	.05745	-.00911	.02518	.00574	.00435	.40286	.20256	1.98880
7.461	-2.700	19.38300	.44781	.05746	-.00906	.02341	.00535	.00410	.40336	.20282	1.98880
7.464	-2.500	19.38200	.44775	.05742	-.00903	.02189	.00501	.00383	.40332	.20277	1.98910
7.451	-2.300	19.38500	.44802	.05734	-.00897	.02005	.00462	.00356	.40359	.20279	1.99020
7.448	-2.100	19.39000	.44815	.05738	-.00890	.01830	.00425	.00330	.40369	.20291	1.98950
7.474	-1.900	19.39100	.44843	.05731	-.00887	.01672	.00389	.00304	.40396	.20294	1.99050
7.483	-1.700	19.39800	.44876	.05733	-.00880	.01491	.00350	.00279	.40425	.20312	1.99020
7.493	-1.500	19.40200	.44888	.05731	-.00871	.01326	.00315	.00249	.40435	.20318	1.99010
7.485	-1.300	19.41800	.44907	.05729	-.00857	.01161	.00280	.00220	.40448	.20333	1.98930
7.501	-1.100	19.42500	.44915	.05734	-.00854	.00986	.00240	.00191	.40451	.20345	1.98830
7.484	-.900	19.42900	.44948	.05735	-.00853	.00837	.00205	.00164	.40481	.20361	1.98820
7.501	-.700	19.43400	.44946	.05729	-.00847	.00677	.00167	.00138	.40479	.20357	1.98840
7.495	-.500	19.43900	.44985	.05727	-.00850	.00514	.00130	.00111	.40515	.20371	1.98880
7.493	-.300	19.44200	.45002	.05726	-.00853	.00347	.00094	.00083	.40530	.20379	1.98880
7.489	-.100	19.44600	.45014	.05733	-.00858	.00187	.00058	.00054	.40538	.20392	1.98800
7.478	.100	19.45000	.45045	.05734	-.00859	.00022	.00023	.00025	.40565	.20406	1.98790
7.474	.300	19.45300	.45033	.05726	-.00858	-.00145	-.00012	-.00003	.40555	.20397	1.98830
7.474	.500	19.45900	.45059	.05731	-.00854	-.00306	-.00047	-.00032	.40576	.20414	1.98760
7.453	.700	19.45900	.45072	.05739	-.00853	-.00474	-.00084	-.00059	.40585	.20426	1.98690
7.465	.900	19.46800	.45099	.05740	-.00853	-.00629	-.00120	-.00086	.40608	.20443	1.98640
7.476	1.100	19.47100	.45128	.05746	-.00859	-.00807	-.00160	-.00114	.40632	.20460	1.98590
7.477	1.300	19.47400	.45140	.05753	-.00867	-.00955	-.00197	-.00142	.40640	.20473	1.98510
7.478	1.500	19.48300	.45148	.05751	-.00869	-.01122	-.00235	-.00170	.40645	.20479	1.98470
7.486	1.700	19.48700	.45158	.05755	-.00882	-.01282	-.00269	-.00197	.40652	.20490	1.98400
7.485	1.900	19.49100	.45185	.05747	-.00892	-.01451	-.00305	-.00225	.40678	.20493	1.98490
7.496	2.100	19.49600	.45202	.05747	-.00898	-.01620	-.00342	-.00254	.40693	.20503	1.98470
7.504	2.300	19.50100	.45232	.05748	-.00901	-.01789	-.00379	-.00282	.40719	.20519	1.98450
7.496	2.500	19.50800	.45270	.05754	-.00910	-.01947	-.00414	-.00310	.40750	.20541	1.98390
7.488	2.700	19.51300	.45273	.05766	-.00916	-.02129	-.00455	-.00338	.40747	.20556	1.98220
7.512	2.900	19.51900	.45293	.05766	-.00909	-.02307	-.00496	-.00364	.40764	.20568	1.98190
7.521	3.100	19.52500	.45305	.05769	-.00914	-.02462	-.00533	-.00389	.40771	.20579	1.98120
7.517	3.300	19.53300	.45299	.05770	-.00927	-.02633	-.00572	-.00415	.40763	.20584	1.98040
7.516	3.500	19.53300	.45333	.05777	-.00921	-.02805	-.00611	-.00439	.40792	.20602	1.98000
7.494	3.700	19.54000	.45343	.05782	-.00927	-.02970	-.00647	-.00464	.40798	.20614	1.97910

OA257 (LARC 20-M6-6559) OV102 LESS OMS PODS (R7E195) (10 JUL 81)

REFERENCE DATA

SREF =	2690.0000 SQ.FT.	XMRP =	1076.6800 IN. XO		
LREF =	474.8100 INCHES	YMRP =	.0000 IN. YO		
BREF =	936.6800 INCHES	ZMRP =	375.0000 IN. ZO		
SCALE =	.0100				

PARAMETRIC DATA

ALPHA =	20.000	PHI =	.000
SPDBRK =	.000	AILRON =	.000
YP =	1.000	1S =	1.000
ELEVON =	.000	MACH =	6.000
S-MODE =	2.000	S-DIR =	1.000

RUN NO. 2347/ O RN/L = 7.48 GRADIENT INTERVAL = -.60/ .60

RN/L	BETA	ALPHA	CN	CA	CLM	CY	CYN	CBL	CL	CD	L/D
7.486	3.817	19.54200	.45351	.05786	-.00938	-.03068	-.00667	-.00477	.40803	.20623	1.97860
	GRADIENT	.01957	.00071	.00003	-.00005	-.00820	-.00177	-.00143	.00058	.00040	-.00109

OA257 (LARC 20-M6-6559) OV102 LESS OMS PODS (R7E096) (10 JUL 81)

REFERENCE DATA

SREF = 2690.0000 SQ.FT. XMRP = 1076.6800 IN. XO
LREF = 474.8100 INCHES YMRP = .0000 IN. YO
BREF = 936.6800 INCHES ZMRP = 375.0000 IN. ZO
SCALE = .0100

PARAMETRIC DATA

ALPHA = 20.000 PHI = .000
SPDBRK = .000 AILRON = .000
YP = 1.000 1S = 1.000
ELEVON = .000 MACH = 6.000
S-MODE = 2.000 S-DIR = 1.000

RUN NO. 382/ O RN/L = 2.27 GRADIENT INTERVAL = -.60/ .60

RN/L	BETA	ALPHA	CN	CA	CLM	CY	CYN	CBL	CL	CD	L/D
2.274	-2.340	19.70600	.45351	.05897	-.00621	.01905	.00449	.00343	.40707	.20843	1.95300
2.274	-2.171	19.70400	.45446	.05923	-.00638	.01782	.00424	.00319	.40788	.20899	1.95170
2.276	-2.001	19.70400	.45573	.05921	-.00624	.01623	.00385	.00293	.40909	.20940	1.95360
2.271	-1.840	19.70800	.45508	.05906	-.00581	.01477	.00355	.00270	.40851	.20906	1.95400
2.270	-1.653	19.71200	.45584	.05924	-.00648	.01345	.00324	.00244	.40914	.20952	1.95280
2.274	-1.493	19.71500	.45533	.05925	-.00673	.01170	.00294	.00224	.40866	.20938	1.95180
2.283	-1.338	19.72000	.45501	.05938	-.00599	.01025	.00261	.00202	.40829	.20943	1.94960
2.274	-1.169	19.72900	.45538	.05940	-.00632	.00932	.00242	.00178	.40860	.20963	1.94910
2.268	-1.000	19.72700	.45473	.05919	-.00582	.00758	.00214	.00151	.40807	.20921	1.95050
2.264	-.853	19.72500	.45548	.05943	-.00599	.00626	.00181	.00127	.40870	.20967	1.94920
2.260	-.703	19.73500	.45677	.05969	-.00613	.00513	.00155	.00107	.40979	.21042	1.94740
2.262	-.533	19.74400	.45602	.05940	-.00631	.00390	.00123	.00084	.40914	.20996	1.94860
2.261	-.388	19.74800	.45597	.05944	-.00595	.00276	.00093	.00069	.40907	.21000	1.94790
2.263	-.227	19.75200	.45678	.05921	-.00615	.00162	.00063	.00048	.40990	.21009	1.95100
2.263	-.070	19.75500	.45588	.05944	-.00618	.00029	.00030	.00027	.40896	.21003	1.94710
2.263	.094	19.75400	.45726	.05947	-.00626	-.00092	-.00002	.00003	.41026	.21052	1.94880
2.262	.251	19.76300	.45736	.05954	-.00629	-.00225	-.00038	-.00017	.41029	.21067	1.94750
2.268	.423	19.76700	.45681	.05951	-.00592	-.00347	-.00075	-.00040	.40977	.21050	1.94670
2.269	.577	19.77000	.45670	.05955	-.00613	-.00451	-.00110	-.00057	.40964	.21051	1.94590
2.276	.727	19.77500	.45833	.05949	-.00647	-.00593	-.00137	-.00074	.41117	.21105	1.94830
2.275	.876	19.77200	.45826	.05933	-.00660	-.00667	-.00162	-.00098	.41118	.21085	1.95000
2.277	1.042	19.78800	.45836	.05932	-.00609	-.00819	-.00195	-.00121	.41121	.21099	1.94890
2.276	1.201	19.78500	.45819	.05937	-.00660	-.00952	-.00222	-.00148	.41104	.21096	1.94850
2.277	1.360	19.78400	.45767	.05953	-.00612	-.01104	-.00245	-.00170	.41051	.21093	1.94620
2.273	1.520	19.79300	.45867	.05961	-.00624	-.01227	-.00274	-.00196	.41139	.21141	1.94590
2.275	1.694	19.79200	.45746	.05958	-.00615	-.01370	-.00304	-.00220	.41026	.21096	1.94470
2.276	1.831	19.80100	.45868	.05917	-.00616	-.01512	-.00333	-.00239	.41152	.21105	1.94980
2.295	2.136	19.80900	.45833	.05933	-.00590	-.01735	-.00386	-.00284	.41111	.21114	1.94710
	GRADIENT	.02302	.00090	.00018	.00006	-.00766	-.00209	-.00130	.00070	.00064	-.00252

OA257 (LARC 20-M6-6559) OV102 LESS OMS PODS (R7E097) (10 JUL 81)

REFERENCE DATA

SREF =	2690.0000 SQ.FT.	XMRP =	1076.6800 IN. XO		
LREF =	474.8100 INCHES	YMRP =	.0000 IN. YO		
BREF =	936.6800 INCHES	ZMRP =	375.0000 IN. ZO		
SCALE =	.0100				

PARAMETRIC DATA

ALPHA =	20.000	PHI =	.000
SPDBRK =	.000	AILRON =	.000
YP =	1.000	1S =	1.000
ELEVON =	.000	MACH =	6.000
S-MODE =	2.000	S-DIR =	2.000

RUN NO. 1382/ O RN/L = 2.33 GRADIENT INTERVAL = -.60/ .60

RN/L	BETA	ALPHA	CN	CA	CLM	CY	CYN	CBL	CL	CD	L/D
2.356	-2.190	19.70600	.45598	.05887	-.00607	.01787	.00414	.00318	.40942	.20918	1.95730
2.351	-1.998	19.71600	.45662	.05885	-.00621	.01619	.00381	.00293	.41000	.20945	1.95750
2.341	-1.851	19.71400	.45702	.05908	-.00614	.01482	.00347	.00271	.41030	.20978	1.95580
2.352	-1.672	19.72400	.45757	.05907	-.00649	.01351	.00321	.00246	.41079	.21003	1.95590
2.348	-1.462	19.73000	.45741	.05883	-.00599	.01218	.00293	.00217	.41070	.20979	1.95760
2.345	-1.218	19.73500	.45757	.05920	-.00600	.00978	.00239	.00181	.41071	.21022	1.95360
2.342	-1.007	19.73400	.45776	.05922	-.00632	.00783	.00205	.00149	.41088	.21030	1.95380
2.335	-.817	19.74300	.45746	.05929	-.00643	.00622	.00176	.00120	.41054	.21034	1.95180
2.338	-.649	19.74700	.45813	.05912	-.00634	.00466	.00139	.00096	.41121	.21043	1.95410
2.339	-.454	19.75200	.45748	.05934	-.00621	.00287	.00092	.00074	.41052	.21045	1.95060
2.331	-.263	19.75700	.45839	.05944	-.00589	.00204	.00065	.00051	.41131	.21089	1.95040
2.338	-.047	19.76100	.45784	.05924	-.00622	.00009	.00017	.00022	.41085	.21055	1.95130
2.323	.123	19.76500	.45849	.05932	-.00619	-.00073	-.00010	-.00002	.41141	.21087	1.95100
2.320	.307	19.76900	.45864	.05953	-.00611	-.00258	-.00057	-.00027	.41147	.21115	1.94880
2.321	.507	19.77400	.45890	.05937	-.00647	-.00398	-.00097	-.00048	.41175	.21112	1.95040
2.323	.685	19.77800	.45908	.05955	-.00570	-.00550	-.00134	-.00069	.41185	.21138	1.94840
2.324	.872	19.78600	.45818	.05920	-.00642	-.00691	-.00172	-.00095	.41109	.21081	1.95010
2.315	1.047	19.78500	.45839	.05949	-.00589	-.00851	-.00204	-.00124	.41119	.21115	1.94740
2.308	1.238	19.79400	.45805	.05933	-.00644	-.00993	-.00230	-.00154	.41089	.21094	1.94790
2.298	1.433	19.79800	.45814	.05928	-.00659	-.01164	-.00262	-.00183	.41098	.21095	1.94830
2.301	1.627	19.79700	.45800	.05957	-.00629	-.01318	-.00297	-.00212	.41075	.21117	1.94510
2.294	1.841	19.80200	.45882	.05964	-.00641	-.01516	-.00338	-.00240	.41148	.21155	1.94510
	GRADIENT	.02243	.00126	.00007	-.00030	-.00732	-.00200	-.00130	.00107	.00066	-.00087

OA257 (LARC 20-M6-6559) OV102 LESS OMS PODS (R7E098) (10 JUL 81)

REFERENCE DATA

SREF = 2690.0000 SQ.FT. XMRP = 1076.6800 IN. XO
LREF = 474.8100 INCHES YMRP = .0000 IN. YO
BREF = 936.6800 INCHES ZMRP = 375.0000 IN. ZO
SCALE = .0100

PARAMETRIC DATA

ALPHA = 25.000 PHI = .000
SPDBRK = .000 AILRON = .000
YP = 1.000 1S = 1.000
ELEVON = .000 MACH = 6.000
S-MODE = 2.000 S-DIR = 1.000

RUN NO. 348/ 0 RN/L = 7.52 GRADIENT INTERVAL = -.60/ .60

RN/L	BETA	ALPHA	CN	CA	CLM	CY	CYN	CBL	CL	CD	L/D
7.568	-4.451	24.11900	.61443	.05531	-.00815	.03692	.00895	.00757	.53819	.30156	1.78470
7.563	-4.300	24.13000	.61499	.05531	-.00812	.03570	.00868	.00735	.53864	.30190	1.78420
7.564	-4.100	24.13200	.61519	.05520	-.00808	.03401	.00831	.00703	.53885	.30189	1.78490
7.564	-3.900	24.13300	.61533	.05522	-.00801	.03235	.00790	.00673	.53898	.30198	1.78480
7.558	-3.700	24.13500	.61577	.05523	-.00789	.03069	.00748	.00644	.53936	.30219	1.78490
7.532	-3.500	24.14000	.61605	.05524	-.00785	.02920	.00705	.00614	.53958	.30236	1.78460
7.547	-3.300	24.14400	.61612	.05516	-.00775	.02763	.00661	.00584	.53966	.30234	1.78490
7.538	-3.100	24.14900	.61653	.05513	-.00769	.02601	.00618	.00554	.54002	.30254	1.78500
7.512	-2.900	24.15700	.61692	.05506	-.00770	.02442	.00577	.00523	.54036	.30271	1.78510
7.527	-2.700	24.16500	.61735	.05507	-.00773	.02280	.00537	.00491	.54071	.30297	1.78470
7.537	-2.500	24.17000	.61770	.05502	-.00764	.02118	.00496	.00462	.54103	.30311	1.78490
7.525	-2.300	24.17800	.61779	.05500	-.00756	.01964	.00456	.00431	.54107	.30320	1.78460
7.505	-2.100	24.18200	.61840	.05501	-.00753	.01799	.00411	.00400	.54160	.30350	1.78450
7.510	-1.900	24.19200	.61870	.05502	-.00752	.01649	.00372	.00369	.54182	.30372	1.78390
7.524	-1.700	24.19700	.61891	.05496	-.00754	.01493	.00331	.00339	.54200	.30380	1.78410
7.506	-1.500	24.20400	.61937	.05496	-.00753	.01337	.00289	.00306	.54239	.30406	1.78380
7.499	-1.300	24.20900	.61955	.05498	-.00744	.01176	.00247	.00271	.54252	.30420	1.78340
7.501	-1.100	24.21500	.61988	.05497	-.00747	.01018	.00208	.00240	.54279	.30439	1.78320
7.515	-.900	24.22300	.62003	.05493	-.00748	.00870	.00170	.00209	.54290	.30448	1.78300
7.497	-.700	24.22500	.62040	.05499	-.00745	.00713	.00132	.00176	.54321	.30471	1.78270
7.512	-.500	24.23500	.62069	.05505	-.00739	.00556	.00093	.00143	.54339	.30498	1.78170
7.508	-.300	24.23800	.62067	.05510	-.00736	.00404	.00053	.00109	.54333	.30504	1.78120
7.526	-.100	24.24600	.62096	.05516	-.00725	.00252	.00011	.00079	.54354	.30530	1.78030
7.530	.100	24.25400	.62132	.05516	-.00724	.00110	-.00030	.00047	.54381	.30552	1.78000
7.519	.300	24.26200	.62161	.05518	-.00710	-.00043	-.00074	.00016	.54403	.30572	1.77950
7.528	.500	24.26800	.62158	.05516	-.00717	-.00182	-.00116	-.00015	.54398	.30577	1.77910
7.530	.700	24.27300	.62184	.05521	-.00718	-.00333	-.00161	-.00045	.54418	.30595	1.77860
7.522	.900	24.28100	.62207	.05514	-.00727	-.00474	-.00200	-.00077	.54437	.30606	1.77870
7.532	1.100	24.28500	.62241	.05512	-.00733	-.00631	-.00243	-.00111	.54466	.30623	1.77860
7.547	1.300	24.29600	.62254	.05510	-.00741	-.00788	-.00282	-.00144	.54473	.30636	1.77800
7.528	1.500	24.29600	.62268	.05509	-.00744	-.00945	-.00321	-.00178	.54486	.30641	1.77820
7.529	1.700	24.30000	.62254	.05505	-.00747	-.01100	-.00360	-.00211	.54473	.30636	1.77810
7.519	1.900	24.30300	.62316	.05512	-.00745	-.01262	-.00401	-.00243	.54525	.30671	1.77770
7.486	2.100	24.30200	.62280	.05506	-.00756	-.01419	-.00441	-.00279	.54495	.30649	1.77800
7.494	2.300	24.31200	.62312	.05510	-.00760	-.01586	-.00481	-.00309	.54518	.30675	1.77730
7.489	2.500	24.31600	.62342	.05514	-.00763	-.01763	-.00523	-.00342	.54541	.30695	1.77690
7.492	2.700	24.32400	.62362	.05521	-.00773	-.01920	-.00561	-.00374	.54552	.30717	1.77590
7.494	2.900	24.33000	.62405	.05517	-.00788	-.02080	-.00603	-.00405	.54590	.30737	1.77600
7.483	3.100	24.33500	.62452	.05531	-.00792	-.02243	-.00645	-.00435	.54625	.30774	1.77500
7.483	3.300	24.33700	.62428	.05533	-.00794	-.02401	-.00685	-.00466	.54600	.30768	1.77460
7.492	3.500	24.34300	.62421	.05536	-.00809	-.02561	-.00726	-.00494	.54590	.30774	1.77390
7.511	3.689	24.34900	.62416	.05540	-.00810	-.02708	-.00763	-.00521	.54580	.30780	1.77320
	GRADIENT	.03500	.00109	.00012	.00027	-.00739	-.00209	-.00157	.00076	.00089	-.00263

OA257 (LARC 20-M6-6559) OV102 LESS OMS PODS (R7E198) (10 JUL 81)

REFERENCE DATA

SREF = 2690.0000 SQ.FT. XMRP = 1076.6800 IN. XO
LREF = 474.8100 INCHES YMRP = .0000 IN. YO
BREF = 936.6800 INCHES ZMRP = 375.0000 IN. ZO
SCALE = .0100

PARAMETRIC DATA

ALPHA = 25.000 PHI = .000
SPDBRK = .000 AILRON = .000
YP = 1.000 IS = 1.000
ELEVON = .000 MACH = 6.000
S-MODE = 2.000 S-DIR = 1.000

RUN NO. 2348/ 0 RN/L = 7.52 GRADIENT INTERVAL = -.60/ .60

RN/L	BETA	ALPHA	CN	CA	CLM	CY	CYN	CBL	CL	CD	L/D
7.561	-4.400	24.12300	.61460	.05539	-.00811	.03656	.00888	.00751	.53829	.30173	1.78400
7.563	-4.200	24.13100	.61501	.05528	-.00811	.03488	.00850	.00720	.53867	.30188	1.78440
7.560	-4.000	24.13300	.61523	.05522	-.00803	.03314	.00809	.00690	.53888	.30194	1.78470
7.560	-3.800	24.13400	.61559	.05523	-.00799	.03152	.00769	.00659	.53920	.30210	1.78490
7.548	-3.600	24.13800	.61580	.05522	-.00788	.02992	.00727	.00629	.53937	.30221	1.78480
7.533	-3.400	24.14300	.61633	.05521	-.00780	.02843	.00684	.00599	.53984	.30247	1.78480
7.540	-3.200	24.14700	.61654	.05514	-.00773	.02683	.00640	.00569	.54003	.30253	1.78500
7.534	-3.000	24.15200	.61707	.05512	-.00769	.02526	.00598	.00539	.54050	.30278	1.78510
7.515	-2.800	24.15900	.61720	.05506	-.00774	.02360	.00557	.00508	.54060	.30284	1.78510
7.541	-2.600	24.16900	.61765	.05503	-.00771	.02206	.00517	.00478	.54098	.30309	1.78490
7.535	-2.400	24.17400	.61781	.05502	-.00761	.02041	.00475	.00447	.54110	.30319	1.78470
7.506	-2.200	24.17900	.61812	.05505	-.00753	.01884	.00434	.00416	.54135	.30339	1.78430
7.505	-2.000	24.18700	.61844	.05504	-.00752	.01723	.00392	.00384	.54160	.30360	1.78390
7.524	-1.800	24.19400	.61895	.05496	-.00756	.01571	.00351	.00355	.54206	.30379	1.78430
7.510	-1.600	24.20100	.61920	.05499	-.00749	.01415	.00309	.00322	.54223	.30399	1.78370
7.503	-1.400	24.20500	.61936	.05496	-.00750	.01261	.00269	.00290	.54237	.30407	1.78370
7.501	-1.200	24.21300	.61972	.05497	-.00747	.01094	.00227	.00256	.54266	.30430	1.78330
7.508	-1.000	24.22000	.62008	.05498	-.00745	.00945	.00190	.00223	.54294	.30453	1.78290
7.498	-.800	24.22400	.62023	.05498	-.00744	.00787	.00150	.00192	.54305	.30463	1.78270
7.501	-.600	24.23000	.62062	.05502	-.00742	.00634	.00112	.00159	.54337	.30488	1.78220
7.503	-.400	24.24100	.62052	.05506	-.00734	.00482	.00074	.00126	.54320	.30497	1.78120
7.528	-.200	24.24300	.62077	.05514	-.00734	.00327	.00032	.00095	.54339	.30516	1.78060
7.527	.000	24.25000	.62112	.05517	-.00721	.00181	-.00010	.00063	.54365	.30541	1.78010
7.522	.200	24.25900	.62149	.05517	-.00715	.00032	-.00052	.00031	.54394	.30564	1.77970
7.524	.400	24.26300	.62150	.05520	-.00713	-.00112	-.00095	.00000	.54392	.30572	1.77920
7.522	.600	24.27300	.62167	.05521	-.00722	-.00256	-.00138	-.00029	.54402	.30588	1.77850
7.530	.800	24.27600	.62183	.05516	-.00720	-.00401	-.00180	-.00060	.54417	.30593	1.77870
7.523	1.000	24.28300	.62239	.05510	-.00733	-.00548	-.00221	-.00094	.54467	.30618	1.77890
7.548	1.200	24.29000	.62227	.05510	-.00739	-.00715	-.00263	-.00127	.54452	.30620	1.77830
7.539	1.400	24.29500	.62263	.05513	-.00741	-.00866	-.00301	-.00161	.54481	.30641	1.77800
7.530	1.600	24.29800	.62268	.05509	-.00749	-.01021	-.00339	-.00196	.54485	.30644	1.77800
7.526	1.800	24.30100	.62306	.05513	-.00750	-.01183	-.00381	-.00227	.54517	.30664	1.77780
7.504	2.000	24.30400	.62297	.05509	-.00753	-.01337	-.00419	-.00261	.54508	.30661	1.77780
7.490	2.200	24.30700	.62317	.05512	-.00758	-.01505	-.00461	-.00293	.54525	.30674	1.77750
7.483	2.400	24.31400	.62339	.05511	-.00763	-.01673	-.00503	-.00326	.54541	.30689	1.77720
7.499	2.600	24.32100	.62350	.05518	-.00761	-.01832	-.00542	-.00358	.54544	.30707	1.77630
7.491	2.800	24.32600	.62383	.05521	-.00782	-.02000	-.00581	-.00390	.54570	.30727	1.77600
7.487	3.000	24.32900	.62401	.05519	-.00788	-.02158	-.00623	-.00420	.54586	.30737	1.77590
7.482	3.200	24.33400	.62423	.05527	-.00793	-.02321	-.00667	-.00451	.54599	.30758	1.77510
7.482	3.400	24.34100	.62427	.05535	-.00801	-.02479	-.00705	-.00480	.54597	.30773	1.77420
7.500	3.600	24.34400	.62432	.05540	-.00804	-.02639	-.00747	-.00508	.54598	.30782	1.77370
	GRADIENT	.03375	.00104	.00016	.00022	-.00741	-.00209	-.00157	.00070	.00089	-.00286

OA257 (LARC 20-M6-6559) OV102 LESS OMS PODS (R7E099) (10 JUL 81)

REFERENCE DATA

SREF = 2690.0000 SQ.FT. XMRP = 1076.6800 IN. XO
LREF = 474.8100 INCHES YMRP = .0000 IN. YO
BREF = 936.6800 INCHES ZMRP = 375.0000 IN. ZO
SCALE = .0100

PARAMETRIC DATA

ALPHA = 25.000 PHI = .000
SPDBRK = .000 AILRON = .000
YP = 1.000 1S = 1.000
ELEVON = .000 MACH = 6.000
S-MODE = 2.000 S-DIR = 1.000

RUN NO. 384/ 0 RN/L = 2.40 GRADIENT INTERVAL = -.60/ .60

RN/L	BETA	ALPHA	CN	CA	CLM	CY	CYN	CBL	CL	CD	L/D
2.407	-2.429	24.56600	.63898	.05955	-.00818	.01871	.00528	.00421	.55638	.31982	1.73970
2.415	-2.259	24.57100	.63739	.05933	-.00785	.01717	.00489	.00396	.55501	.31900	1.73990
2.409	-2.097	24.57600	.63810	.05936	-.00785	.01594	.00456	.00372	.55561	.31936	1.73970
2.406	-1.940	24.58100	.63875	.05962	-.00769	.01472	.00418	.00344	.55606	.31992	1.73810
2.399	-1.772	24.58500	.63882	.05937	-.00817	.01369	.00387	.00319	.55621	.31977	1.73940
2.393	-1.618	24.58400	.63871	.05940	-.00799	.01228	.00347	.00293	.55610	.31974	1.73920
2.391	-1.456	24.58900	.63903	.05938	-.00816	.01152	.00325	.00267	.55637	.31990	1.73920
2.394	-1.284	24.59900	.63971	.05943	-.00819	.00981	.00283	.00240	.55691	.32033	1.73860
2.404	-1.136	24.60400	.63910	.05969	-.00735	.00866	.00248	.00214	.55622	.32036	1.73620
2.412	-.978	24.60900	.64010	.05943	-.00797	.00764	.00227	.00189	.55721	.32059	1.73810
2.418	-.820	24.60800	.64044	.05943	-.00814	.00622	.00187	.00162	.55753	.32071	1.73840
2.434	-.656	24.61800	.64004	.05972	-.00752	.00488	.00155	.00138	.55699	.32092	1.73560
2.426	-.498	24.62300	.63963	.05972	-.00734	.00346	.00117	.00108	.55658	.32079	1.73500
2.418	-.343	24.62300	.64115	.05976	-.00734	.00223	.00088	.00082	.55795	.32146	1.73570
2.409	-.185	24.63300	.64073	.05975	-.00733	.00091	.00050	.00055	.55752	.32138	1.73480
2.415	-.025	24.63800	.64166	.05996	-.00725	.00019	.00016	.00027	.55825	.32200	1.73370
2.407	.126	24.64200	.64207	.05998	-.00758	-.00083	-.00020	.00006	.55859	.32223	1.73350
2.398	.276	24.64600	.64136	.06023	-.00748	-.00188	-.00063	-.00014	.55782	.32220	1.73130
2.392	.435	24.65700	.64255	.06002	-.00726	-.00280	-.00101	-.00037	.55892	.32261	1.73250
2.395	.587	24.65500	.64193	.05982	-.00741	-.00382	-.00139	-.00058	.55846	.32215	1.73350
2.395	.735	24.65900	.64176	.05999	-.00772	-.00455	-.00166	-.00081	.55820	.32227	1.73210
2.394	.886	24.66400	.64107	.05964	-.00729	-.00618	-.00205	-.00106	.55770	.32171	1.73350
2.403	1.055	24.66800	.64210	.05959	-.00808	-.00709	-.00237	-.00136	.55863	.32214	1.73410
2.406	1.216	24.67300	.64186	.05938	-.00779	-.00833	-.00266	-.00166	.55847	.32190	1.73490
2.395	1.366	24.67800	.64345	.05942	-.00827	-.00945	-.00297	-.00195	.55987	.32265	1.73530
2.387	1.521	24.68200	.64382	.05948	-.00827	-.01058	-.00331	-.00221	.56016	.32289	1.73480
2.398	1.664	24.69200	.64214	.05970	-.00743	-.01191	-.00365	-.00244	.55849	.32249	1.73180
2.405	1.809	24.69600	.64298	.05945	-.00808	-.01302	-.00398	-.00265	.55933	.32266	1.73350
	GRADIENT	.03357	.00196	.00026	-.00007	-.00656	-.00239	-.00152	.00148	.00138	-.00285

OA257 (LARC 20-M6-6559) OV102 LESS OMS PODS (R7EOA1) (10 JUL 81)

REFERENCE DATA

SREF =	2690.0000 SQ.FT.	XMRP =	1076.6800 IN.	XO	
LREF =	474.8100 INCHES	YMRP =	.0000 IN.	YO	
BREF =	936.6800 INCHES	ZMRP =	375.0000 IN.	ZO	
SCALE =	.0100				

PARAMETRIC DATA

ALPHA =	25.000	PHI =	.000
SPDBRK =	.000	AILRON =	.000
YP =	1.000	1S =	1.000
ELEVON =	.000	MACH =	6.000
S-MODE =	2.000	S-DIR =	2.000

RUN NO. 1384/ 0 RN/L = 2.33 GRADIENT INTERVAL = -.60/ .60

RN/L	BETA	ALPHA	CN	CA	CLM	CY	CYN	CBL	CL	CD	L/D
2.298	-2.196	24.57000	.63856	.05945	-.00750	.01674	.00470	.00382	.55602	.31959	1.73980
2.306	-2.025	24.57500	.64080	.05944	-.00848	.01564	.00433	.00355	.55803	.32056	1.74080
2.306	-1.841	24.58100	.63816	.05938	-.00763	.01425	.00395	.00327	.55563	.31945	1.73930
2.310	-1.630	24.58700	.63961	.05953	-.00730	.01227	.00341	.00294	.55685	.32026	1.73870
2.315	-1.441	24.59800	.64015	.05949	-.00763	.01123	.00312	.00262	.55729	.32056	1.73850
2.314	-1.279	24.59800	.64042	.05953	-.00747	.00969	.00272	.00235	.55752	.32070	1.73850
2.315	-1.096	24.60300	.64145	.05967	-.00823	.00809	.00231	.00205	.55837	.32130	1.73790
2.320	-.914	24.60800	.64009	.05973	-.00761	.00712	.00206	.00179	.55709	.32084	1.73630
2.333	-.749	24.61300	.64083	.05972	-.00763	.00587	.00170	.00149	.55773	.32120	1.73640
2.328	-.557	24.61900	.64106	.05976	-.00742	.00437	.00125	.00117	.55789	.32138	1.73590
2.338	-.376	24.62900	.63995	.05952	-.00778	.00284	.00090	.00089	.55693	.32079	1.73610
2.335	-.194	24.63000	.64177	.05964	-.00727	.00122	.00040	.00056	.55853	.32168	1.73630
2.332	-.020	24.63500	.64161	.05984	-.00723	-.00000	.00006	.00027	.55827	.32184	1.73460
2.336	.180	24.64600	.64237	.06006	-.00776	-.00103	-.00042	-.00003	.55880	.32246	1.73300
2.355	.353	24.64500	.64116	.06000	-.00768	-.00194	-.00083	-.00027	.55774	.32189	1.73270
2.345	.550	24.65600	.64100	.05980	-.00756	-.00337	-.00136	-.00054	.55761	.32176	1.73300
2.342	.739	24.66200	.64276	.05975	-.00795	-.00466	-.00176	-.00085	.55920	.32250	1.73390
2.341	.936	24.66300	.64201	.05935	-.00772	-.00630	-.00219	-.00117	.55868	.32183	1.73590
2.354	1.128	24.67400	.64215	.05953	-.00771	-.00752	-.00258	-.00152	.55867	.32217	1.73410
2.372	1.305	24.67300	.64246	.05949	-.00833	-.00901	-.00291	-.00185	.55897	.32225	1.73460
2.365	1.491	24.68600	.64277	.05968	-.00732	-.01053	-.00333	-.00217	.55910	.32268	1.73270
2.382	1.696	24.69200	.64133	.05951	-.00765	-.01229	-.00376	-.00249	.55783	.32198	1.73250
	GRADIENT	.03093	.00055	.00029	-.00014	-.00679	-.00235	-.00156	.00020	.00080	-.00365

OA257 (LARC 20-M6-6559) OV102 LESS OMS PODS (R7EOA2) (10 JUL 81)

REFERENCE DATA

SREF = 2690.0000 SQ.FT. XMRP = 1076.6800 IN. XO
LREF = 474.8100 INCHES YMRP = .0000 IN. YO
BREF = 936.6800 INCHES ZMRP = 375.0000 IN. ZO
SCALE = .0100

PARAMETRIC DATA

ALPHA = 30.000 PHI = .000
SPDBRK = .000 AILRON = .000
YP = 1.000 1S = 1.000
ELEVON = .000 MACH = 6.000
S-MODE = 2.000 S-DIR = 1.000

RUN NO. 349/ 0 RN/L = 7.54 GRADIENT INTERVAL = -.60/ .60

RN/L	BETA	ALPHA	CN	CA	CLM	CY	CYN	CBL	CL	CD	L/D
7.605	-4.529	28.93800	.81741	.06056	-.01512	.03757	.00924	.00891	.68605	.44853	1.52960
7.586	-4.400	28.94900	.81784	.06055	-.01514	.03646	.00901	.00869	.68634	.44885	1.52910
7.605	-4.200	28.95500	.81829	.06055	-.01499	.03485	.00863	.00831	.68669	.44914	1.52890
7.593	-4.000	28.96000	.81907	.06053	-.01506	.03313	.00827	.00790	.68734	.44955	1.52890
7.585	-3.800	28.96500	.81958	.06055	-.01503	.03144	.00789	.00751	.68775	.44987	1.52880
7.570	-3.600	28.96800	.81979	.06051	-.01501	.02958	.00750	.00711	.68792	.44998	1.52880
7.560	-3.400	28.97300	.82002	.06052	-.01500	.02784	.00713	.00669	.68807	.45017	1.52850
7.572	-3.200	28.98200	.82038	.06050	-.01502	.02613	.00676	.00630	.68833	.45043	1.52820
7.559	-3.000	28.98500	.82117	.06047	-.01499	.02440	.00638	.00590	.68901	.45082	1.52840
7.547	-2.800	28.99600	.82147	.06046	-.01495	.02265	.00599	.00547	.68919	.45109	1.52790
7.525	-2.600	29.00200	.82185	.06046	-.01493	.02103	.00563	.00504	.68948	.45134	1.52760
7.526	-2.400	29.01300	.82258	.06034	-.01502	.01935	.00523	.00467	.69009	.45172	1.52770
7.532	-2.200	29.01400	.82273	.06026	-.01501	.01771	.00486	.00427	.69026	.45173	1.52800
7.532	-2.000	29.02100	.82280	.06012	-.01502	.01613	.00448	.00388	.69032	.45173	1.52820
7.535	-1.800	29.03100	.82356	.06001	-.01498	.01451	.00409	.00351	.69096	.45213	1.52830
7.526	-1.600	29.03400	.82394	.05984	-.01502	.01294	.00369	.00314	.69135	.45221	1.52880
7.537	-1.400	29.04400	.82426	.05971	-.01505	.01137	.00328	.00278	.69162	.45237	1.52890
7.547	-1.200	29.05100	.82463	.05958	-.01510	.00994	.00289	.00241	.69195	.45253	1.52910
7.554	-1.000	29.06100	.82492	.05950	-.01501	.00836	.00247	.00205	.69217	.45271	1.52900
7.528	-.800	29.06500	.82520	.05940	-.01505	.00693	.00205	.00166	.69242	.45280	1.52920
7.546	-.600	29.08000	.82552	.05938	-.01503	.00539	.00161	.00131	.69260	.45311	1.52850
7.550	-.400	29.08700	.82597	.05933	-.01502	.00394	.00117	.00095	.69296	.45338	1.52840
7.562	-.200	29.09300	.82624	.05931	-.01488	.00243	.00074	.00063	.69316	.45357	1.52820
7.548	.000	29.09900	.82652	.05931	-.01493	.00086	.00030	.00026	.69336	.45377	1.52800
7.543	.200	29.11000	.82672	.05925	-.01502	-.00059	-.00012	-.00008	.69347	.45395	1.52760
7.526	.400	29.11000	.82705	.05925	-.01500	-.00218	-.00057	-.00045	.69375	.45412	1.52770
7.548	.600	29.12500	.82717	.05925	-.01498	-.00359	-.00099	-.00079	.69374	.45436	1.52690
7.552	.800	29.13300	.82748	.05925	-.01502	-.00507	-.00143	-.00112	.69396	.45460	1.52650
7.544	1.000	29.13600	.82786	.05917	-.01509	-.00648	-.00189	-.00148	.69430	.45476	1.52670
7.518	1.200	29.13700	.82797	.05916	-.01510	-.00800	-.00236	-.00183	.69439	.45481	1.52680
7.523	1.400	29.14400	.82789	.05911	-.01511	-.00936	-.00279	-.00217	.69429	.45480	1.52660
7.523	1.600	29.15000	.82794	.05914	-.01517	-.01088	-.00323	-.00252	.69427	.45494	1.52610
7.527	1.800	29.15900	.82853	.05919	-.01519	-.01242	-.00366	-.00290	.69468	.45538	1.52550
7.531	2.000	29.16900	.82884	.05915	-.01518	-.01405	-.00409	-.00327	.69490	.45562	1.52520
7.526	2.200	29.17300	.82899	.05914	-.01522	-.01550	-.00448	-.00362	.69501	.45573	1.52500
7.525	2.400	29.18200	.82890	.05914	-.01526	-.01722	-.00487	-.00401	.69485	.45580	1.52450
7.519	2.600	29.18400	.82917	.05918	-.01537	-.01881	-.00526	-.00440	.69505	.45598	1.52430
7.524	2.800	29.19600	.82922	.05918	-.01541	-.02063	-.00567	-.00482	.69500	.45615	1.52360
7.524	3.000	29.20000	.82934	.05918	-.01554	-.02229	-.00603	-.00522	.69507	.45626	1.52340
7.519	3.200	29.20600	.82945	.05922	-.01556	-.02409	-.00642	-.00561	.69511	.45642	1.52290
7.527	3.400	29.21100	.82944	.05927	-.01564	-.02581	-.00678	-.00603	.69503	.45653	1.52240
7.511	3.600	29.21500	.82956	.05926	-.01575	-.02752	-.00713	-.00644	.69512	.45662	1.52230

OA257 (LARC 20-M6-6559) OV102 LESS OMS PODS (R7EOA2) (10 JUL 81)

REFERENCE DATA

SREF =	2690.0000 SQ.FT.	XMRP =	1076.6800 IN. XO		
LREF =	474.8100 INCHES	YMRP =	.0000 IN. YO		
BREF =	936.6800 INCHES	ZMRP =	375.0000 IN. ZO		
SCALE =	.0100				

PARAMETRIC DATA

ALPHA =	30.000	PHI =	.000
SPDBRK =	.000	AILRON =	.000
YP =	1.000	1S =	1.000
ELEVON =	.000	MACH =	6.000
S-MODE =	2.000	S-DIR =	1.000

RUN NO. 349/ O RN/L = 7.54 GRADIENT INTERVAL = -.60/ .60

RN/L	BETA	ALPHA	CN	CA	CLM	CY	CYN	CBL	CL	CD	L/D
7.519	3.794	29.21100	.82917	.05936	-.01573	-.02846	-.00731	-.00667	.69475	.45647	1.52200
	GRADIENT	.03536	.00136	-.00011	.00001	-.00754	-.00217	-.00175	.00095	.00100	-.00121

OA257 (LARC 20-M6-6559) OV102 LESS OMS PODS (R7E1A2) (10 JUL 81)

REFERENCE DATA

SREF = 2690.0000 SQ.FT. XMRP = 1076.6800 IN. XO
LREF = 474.8100 INCHES YMRP = .0000 IN. YO
BREF = 936.6800 INCHES ZMRP = 375.0000 IN. ZO
SCALE = .0100

PARAMETRIC DATA

ALPHA = 30.000 PHI = .000
SPDBRK = .000 AILRON = .000
YP = 1.000 1S = 1.000
ELEVON = .000 MACH = 6.000
S-MODE = 2.000 S-DIR = 1.000

RUN NO. 2349/ 0 RN/L = 7.54 GRADIENT INTERVAL = -.60/ .60

RN/L	BETA	ALPHA	CN	CA	CLM	CY	CYN	CBL	CL	CD	L/D
7.587	-4.500	28.94300	.81735	.06055	-.01513	.03737	.00921	.00887	.68596	.44854	1.52930
7.602	-4.300	28.95400	.81826	.06055	-.01510	.03568	.00881	.00850	.68667	.44911	1.52890
7.598	-4.100	28.96100	.81874	.06051	-.01502	.03399	.00845	.00810	.68705	.44939	1.52890
7.585	-3.900	28.96100	.81904	.06053	-.01506	.03227	.00808	.00771	.68731	.44956	1.52890
7.579	-3.700	28.96900	.81973	.06049	-.01507	.03052	.00769	.00732	.68787	.44995	1.52880
7.565	-3.500	28.97200	.82009	.06052	-.01499	.02873	.00732	.00691	.68815	.45018	1.52860
7.568	-3.300	28.98100	.82030	.06052	-.01500	.02696	.00694	.00649	.68826	.45040	1.52810
7.563	-3.100	28.98300	.82083	.06051	-.01504	.02527	.00658	.00610	.68871	.45067	1.52820
7.558	-2.900	28.99000	.82133	.06043	-.01499	.02352	.00619	.00568	.68913	.45091	1.52830
7.534	-2.700	28.99900	.82189	.06045	-.01488	.02181	.00580	.00527	.68954	.45131	1.52790
7.525	-2.500	29.00600	.82211	.06041	-.01496	.02024	.00543	.00486	.68970	.45148	1.52760
7.525	-2.300	29.01300	.82263	.06027	-.01501	.01849	.00504	.00445	.69017	.45169	1.52800
7.540	-2.100	29.01700	.82322	.06020	-.01500	.01690	.00466	.00407	.69069	.45196	1.52820
7.532	-1.900	29.02600	.82331	.06006	-.01502	.01537	.00429	.00369	.69076	.45199	1.52820
7.530	-1.700	29.03200	.82368	.05993	-.01498	.01375	.00390	.00332	.69110	.45212	1.52860
7.531	-1.500	29.04100	.82404	.05978	-.01506	.01214	.00350	.00295	.69141	.45228	1.52870
7.544	-1.300	29.04500	.82429	.05969	-.01506	.01063	.00308	.00260	.69165	.45237	1.52890
7.554	-1.100	29.05600	.82478	.05955	-.01510	.00912	.00268	.00222	.69205	.45262	1.52900
7.533	-.900	29.06300	.82517	.05947	-.01498	.00765	.00226	.00185	.69238	.45282	1.52900
7.539	-.700	29.07400	.82533	.05938	-.01503	.00616	.00183	.00149	.69247	.45296	1.52880
7.547	-.500	29.08500	.82588	.05936	-.01498	.00465	.00139	.00114	.69288	.45334	1.52840
7.556	-.300	29.08700	.82600	.05930	-.01501	.00322	.00097	.00080	.69299	.45337	1.52850
7.557	-.100	29.09500	.82642	.05929	-.01493	.00165	.00052	.00044	.69331	.45366	1.52830
7.537	.100	29.10100	.82649	.05927	-.01495	.00016	.00008	.00009	.69333	.45375	1.52800
7.533	.300	29.10900	.82679	.05928	-.01498	-.00137	-.00034	-.00025	.69353	.45401	1.52760
7.539	.500	29.11900	.82729	.05927	-.01502	-.00292	-.00078	-.00062	.69389	.45435	1.52720
7.546	.700	29.12500	.82752	.05923	-.01508	-.00434	-.00121	-.00095	.69406	.45451	1.52700
7.550	.900	29.13600	.82761	.05920	-.01506	-.00577	-.00167	-.00130	.69407	.45465	1.52660
7.524	1.100	29.13600	.82759	.05916	-.01510	-.00719	-.00212	-.00165	.69407	.45462	1.52670
7.517	1.300	29.14000	.82794	.05911	-.01515	-.00867	-.00258	-.00199	.69437	.45479	1.52680
7.525	1.500	29.14800	.82805	.05914	-.01514	-.01009	-.00301	-.00236	.69438	.45497	1.52620
7.524	1.700	29.15800	.82852	.05915	-.01511	-.01165	-.00346	-.00270	.69471	.45533	1.52570
7.517	1.900	29.16300	.82869	.05920	-.01518	-.01323	-.00388	-.00309	.69480	.45551	1.52530
7.540	2.100	29.17500	.82871	.05915	-.01523	-.01477	-.00429	-.00345	.69474	.45563	1.52480
7.529	2.300	29.17900	.82889	.05914	-.01528	-.01636	-.00466	-.00382	.69487	.45575	1.52470
7.522	2.500	29.18300	.82916	.05919	-.01531	-.01802	-.00507	-.00420	.69505	.45597	1.52430
7.524	2.700	29.18900	.82915	.05916	-.01534	-.01972	-.00546	-.00461	.69501	.45601	1.52410
7.524	2.900	29.19500	.82911	.05920	-.01546	-.02147	-.00585	-.00502	.69491	.45610	1.52360
7.524	3.100	29.20400	.82934	.05919	-.01553	-.02314	-.00621	-.00542	.69504	.45632	1.52310
7.522	3.300	29.20800	.82932	.05924	-.01556	-.02496	-.00660	-.00583	.69496	.45640	1.52270
7.513	3.500	29.21000	.82948	.05929	-.01573	-.02668	-.00695	-.00624	.69506	.45655	1.52240
7.519	3.700	29.21400	.82936	.05930	-.01581	-.02815	-.00726	-.00659	.69493	.45654	1.52220
	GRADIENT	.03457	.00136	-.00007	-.00003	-.00759	-.00217	-.00175	.00096	.00101	-.00129

OA257 (LARC 20-M6-6559) OV102 LESS OMS & V.T. (R7EOA3) (10 JUL 81)

REFERENCE DATA

SREF = 2690.0000 SQ.FT. XMRP = 1076.6800 IN. XO
LREF = 474.8100 INCHES YMRP = .0000 IN. YO
BREF = 936.6800 INCHES ZMRP = 375.0000 IN. ZO
SCALE = .0100

PARAMETRIC DATA

BETA = .000 PHI = .000
AILRON = .000 YP = .000
1S = 1.000 ELEVON = .000
MACH = 6.000 S-MODE = 1.000
S-DIR = 2.000

RUN NO. 359/ 0 RN/L = 7.48 GRADIENT INTERVAL = 23.00/ 25.00

RN/L	ALPHA	BETA	CN	CA	CLM	CY	CYN	CBL	CL	CD	L/D
7.386	-.169	.01938	-.04018	.07155	-.03817	-.00007	.00038	.00000	-.03997	.07167	-.55769
7.651	-.019	.03887	-.04065	.07161	-.03816	-.00028	.00046	-.00003	-.04062	.07162	-.56720
7.396	.803	.02185	-.02463	.07014	-.03561	-.00016	.00035	.00003	-.02561	.06979	-.36701
7.396	1.676	.02031	-.00899	.06873	-.03337	-.00025	.00032	.00006	-.01099	.06844	-.16061
7.391	2.857	.01782	.01131	.06706	-.03082	-.00014	.00035	.00007	.00795	.06754	.11775
7.416	3.778	.01977	.02837	.06581	-.02881	-.00013	.00035	.00009	.02398	.06754	.35497
7.443	4.651	.01987	.04692	.06453	-.02671	-.00029	.00027	.00011	.04153	.06812	.60971
7.441	5.462	.02329	.06370	.06330	-.02510	-.00046	.00026	.00014	.05739	.06908	.83077
7.437	6.392	.02999	.08382	.06212	-.02311	-.00027	.00025	.00013	.07638	.07107	1.07480
7.452	7.544	.03202	.10927	.06094	-.02106	-.00048	.00019	.00015	.10032	.07476	1.34190
7.461	8.518	.03094	.13181	.06002	-.01945	-.00014	.00023	.00018	.12147	.07888	1.53990
7.479	9.451	.02975	.15495	.05906	-.01788	.00014	.00029	.00021	.14315	.08370	1.71020
7.482	10.292	.03193	.17590	.05837	-.01669	-.00038	.00018	.00023	.16264	.08886	1.83030
7.489	11.271	.03168	.19620	.05772	-.01550	-.00023	.00017	.00024	.18114	.09495	1.90770
7.469	12.407	.03081	.22779	.05698	-.01418	.00003	.00021	.00026	.21023	.10458	2.01010
7.504	13.422	.03264	.25523	.05635	-.01309	-.00032	.00009	.00030	.23518	.11406	2.06200
7.500	14.413	.03319	.28647	.05605	-.01196	-.00033	.00003	.00030	.26351	.12559	2.09820
7.513	15.461	.03287	.31940	.05599	-.01130	-.00021	.00004	.00031	.29292	.13911	2.10560
7.589	16.804	.03229	.35639	.05603	-.01059	.00001	.00006	.00034	.32498	.15667	2.07430
7.550	17.761	.03313	.38927	.05648	-.01044	-.00023	.00002	.00036	.35348	.17253	2.04880
7.520	18.572	.03265	.41959	.05704	-.01010	-.00003	.00003	.00038	.37957	.18771	2.02210
7.499	19.509	.03421	.44665	.05720	-.00972	-.00011	-.00002	.00038	.40191	.20308	1.97910
7.483	20.620	.03605	.49166	.05773	-.00967	-.00001	-.00002	.00039	.43983	.22718	1.93600
7.466	21.825	.03745	.52612	.05803	-.00960	-.00006	-.00006	.00035	.46683	.24947	1.87130
7.484	22.718	.03582	.56421	.05837	-.00987	-.00005	-.00010	.00033	.49789	.27174	1.83220
7.482	23.650	.03688	.60252	.05884	-.01020	-.00004	-.00011	.00031	.52831	.29561	1.78720
7.485	24.382	.04301	.63370	.05910	-.01069	-.00006	-.00012	.00030	.55278	.31544	1.75240
	GRADIENT	.00837	.04260	.00035	-.00067	-.00002	-.00002	-.00001	.03343	.02709	-.04755

OA257 (LARC 20-M6-6559) OV102 LESS OMS & V.T. (R7EOA4) (10 JUL 81)

REFERENCE DATA

SREF = 2690.0000 SQ.FT. XMRP = 1076.6800 IN. XO
LREF = 474.8100 INCHES YMRP = .0000 IN. YO
BREF = 936.6800 INCHES ZMRP = 375.0000 IN. ZO
SCALE = .0100

PARAMETRIC DATA

BETA = .000 PHI = .000
AILRON = .000 YP = .000
1S = 1.000 ELEVON = .000
MACH = 6.000 S-MODE = 1.000
S-DIR = 2.000

RUN NO. 358/ 0 RN/L = 7.56 GRADIENT INTERVAL = 23.00/ 25.00

RN/L	ALPHA	BETA	CN	CA	CLM	CY	CYN	CBL	CL	CD	L/D
7.499	2.956	-.03810	.01628	.06736	-.03058	.00055	.00042	.00007	.01279	.06811	.18774
7.475	3.240	-.03969	.01629	.06716	-.03055	.00062	.00046	.00007	.01247	.06797	.18342
7.477	4.071	-.03810	.03018	.06595	-.02896	.00053	.00042	.00009	.02543	.06793	.37429
7.466	4.920	-.03975	.04755	.06464	-.02702	.00072	.00045	.00009	.04183	.06848	.61088
7.460	5.656	-.03985	.06116	.06360	-.02571	.00056	.00039	.00011	.05460	.06932	.78759
7.456	6.750	-.04007	.08411	.06213	-.02358	.00071	.00039	.00013	.07623	.07158	1.06490
7.479	7.762	-.03900	.11286	.06094	-.02117	.00052	.00031	.00016	.10359	.07563	1.36980
7.497	8.762	-.03908	.12957	.06013	-.01992	.00053	.00032	.00018	.11890	.07916	1.50200
7.475	9.484	-.04040	.15366	.05923	-.01834	.00067	.00033	.00022	.14180	.08374	1.69330
7.531	10.277	-.03921	.17434	.05852	-.01709	.00039	.00026	.00025	.16110	.08869	1.81650
7.533	11.384	-.03924	.20256	.05764	-.01573	.00049	.00024	.00027	.18720	.09649	1.94020
7.611	12.517	-.03918	.22948	.05689	-.01437	.00078	.00028	.00029	.21170	.10527	2.01100
7.643	13.521	-.03912	.25943	.05649	-.01332	.00060	.00021	.00032	.23903	.11558	2.06810
7.564	14.271	-.03691	.28549	.05609	-.01231	.00056	.00019	.00033	.26285	.12473	2.10740
7.516	14.641	-.00572	.29105	.05640	-.01214	.00031	.00022	.00027	.26734	.12814	2.08630
7.564	15.598	-.03865	.32435	.05589	-.01128	.00088	.00021	.00033	.29737	.14104	2.10840
7.558	16.559	-.03703	.35472	.05606	-.01066	.00073	.00017	.00036	.32404	.15483	2.09290
7.597	17.651	-.03819	.39258	.05647	-.01038	.00056	.00012	.00041	.35698	.17285	2.06530
7.593	18.602	-.03535	.42056	.05671	-.01007	.00024	-.00001	.00041	.38049	.18791	2.02490
7.647	19.387	-.03761	.44716	.05703	-.00981	.00057	.00006	.00043	.40287	.20223	1.99210
7.692	20.520	-.03738	.48837	.05741	-.00969	.00066	.00001	.00042	.43726	.22496	1.94370
7.626	21.700	-.03563	.53303	.05798	-.00952	.00081	.00001	.00040	.47382	.25096	1.88800
7.633	22.598	-.03554	.56569	.05817	-.00973	.00086	-.00001	.00037	.49990	.27108	1.84410
7.650	23.570	-.03563	.60034	.05829	-.00993	.00131	.00001	.00036	.52695	.29348	1.79550
7.663	24.373	-.03763	.62967	.05846	-.01021	.00105	-.00004	.00039	.54943	.31311	1.75480
7.648	25.262	-.02985	.66534	.05866	-.01066	.00079	-.00007	.00036	.57667	.33698	1.71130
7.628	26.271	-.02986	.70489	.05883	-.01137	.00082	-.00008	.00039	.60604	.36475	1.66150
7.620	27.201	-.02649	.74511	.05902	-.01242	.00059	-.00018	.00038	.63573	.39310	1.61720
7.589	28.193	-.02466	.78863	.05977	-.01381	.00065	-.00006	.00028	.66683	.42526	1.56800
7.568	28.987	-.02034	.82272	.05988	-.01498	.00079	-.00002	.00032	.69063	.45108	1.53110
7.530	30.121	-.02048	.87070	.06020	-.01674	.00109	.00006	.00034	.72292	.48902	1.47830
7.573	31.133	-.02085	.90952	.06021	-.01835	.00095	.00002	.00040	.74739	.52179	1.43240
7.575	32.209	-.02128	.95742	.06017	-.02081	.00095	.00007	.00035	.77801	.56122	1.38630
7.616	33.141	-.02085	1.00000	.06043	-.02304	.00106	.00011	.00035	.80430	.59731	1.34650
7.564	33.982	-.02144	1.03220	.06029	-.02483	.00091	.00010	.00037	.82226	.62695	1.31150
7.593	35.034	-.02022	1.08190	.06038	-.02765	.00106	.00016	.00041	.85118	.67049	1.26950
7.594	36.074	-.01465	1.12810	.06035	-.03050	.00114	.00020	.00040	.87625	.71302	1.22890
7.550	37.203	-.01297	1.17830	.06005	-.03372	.00114	.00025	.00044	.90221	.76029	1.18670
7.516	38.104	-.01235	1.21480	.06001	-.03637	.00113	.00030	.00050	.91892	.79689	1.15310
7.498	38.828	-.01470	1.26440	.05986	-.03978	.00158	.00039	.00060	.94750	.83941	1.12880
	GRADIENT	-.00249	.03652	.00021	-.00035	-.00033	-.00006	.00004	.02799	.02445	-.05069

OA257 (LARC 20-M6-6559) OV102 LESS OMS & V.T. (R7EOA5) (10 JUL 81)

REFERENCE DATA

SREF = 2690.0000 SQ.FT. XMRP = 1076.6800 IN. XO
LREF = 474.8100 INCHES YMRP = .0000 IN. YO
BREF = 936.6800 INCHES ZMRP = 375.0000 IN. ZO
SCALE = .0100

PARAMETRIC DATA

BETA = -.500 PHI = .000
AILRON = .000 YP = .000
1S = 1.000 ELEVON = .000
MACH = 6.000 S-MODE = 1.000
S-DIR = 2.000

RUN NO. 360/ 0 RN/L = 7.50 GRADIENT INTERVAL = 23.00/ 25.00

RN/L	ALPHA	BETA	CN	CA	CLM	CY	CYN	CBL	CL	CD	L/D
7.358	-.162	-.50024	-.03963	.07150	-.03838	.00519	.00161	-.00039	-.03943	.07161	-.55059
7.363	-.088	-.50201	-.03925	.07160	-.03821	.00507	.00161	-.00038	-.03914	.07166	-.54616
7.727	-.075	-.50686	-.04147	.07140	-.03852	.00464	.00165	-.00046	-.04138	.07145	-.57909
7.389	1.229	-.50087	-.01770	.06945	-.03486	.00497	.00162	-.00030	-.01919	.06905	-.27785
7.382	2.644	-.49979	.00325	.06760	-.03187	.00470	.00156	-.00020	.00013	.06768	.00195
7.390	3.672	-.49961	.02570	.06586	-.02922	.00462	.00156	-.00009	.02143	.06737	.31812
7.404	4.525	-.49780	.04225	.06464	-.02735	.00442	.00152	-.00001	.03702	.06777	.54621
7.380	6.090	-.49369	.06646	.06282	-.02486	.00443	.00152	.00005	.05942	.06951	.85480
7.386	7.259	-.49368	.09482	.06140	-.02242	.00436	.00143	.00013	.08630	.07289	1.18410
7.439	8.463	-.49223	.12348	.05993	-.02023	.00408	.00133	.00024	.11332	.07745	1.46320
7.497	9.675	-.49122	.15487	.05887	-.01822	.00415	.00131	.00034	.14277	.08405	1.69860
7.519	10.988	-.48123	.18768	.05768	-.01631	.00418	.00130	.00040	.17325	.09240	1.87510
7.515	12.380	-.47853	.22310	.05675	-.01441	.00389	.00119	.00050	.20575	.10327	1.99240
7.515	13.262	-.47482	.25421	.05617	-.01321	.00384	.00113	.00056	.23455	.11298	2.07590
7.508	14.335	-.45976	.27479	.05585	-.01260	.00388	.00112	.00060	.25240	.12215	2.06640
7.502	16.264	-.41542	.34354	.05557	-.01065	.00354	.00095	.00066	.31423	.14956	2.10100
7.537	17.189	-.40442	.37665	.05582	-.01029	.00350	.00095	.00071	.34333	.16464	2.08530
7.569	18.108	-.39589	.40710	.05628	-.01019	.00339	.00091	.00076	.36944	.18003	2.05210
7.591	18.968	-.37593	.43446	.05648	-.00984	.00348	.00090	.00076	.39251	.19464	2.01660
7.547	20.084	-.37420	.47481	.05692	-.00953	.00318	.00079	.00081	.42639	.21650	1.96950
7.533	21.425	-.37436	.52216	.05744	-.00955	.00335	.00079	.00084	.46509	.24421	1.90450
7.523	22.724	-.37466	.57173	.05783	-.00969	.00358	.00078	.00086	.50501	.27419	1.84180
7.496	23.761	-.37377	.61362	.05820	-.01000	.00346	.00073	.00087	.53816	.30050	1.79080
7.468	25.286	-.37224	.67021	.05859	-.01092	.00344	.00069	.00088	.58097	.33925	1.71250
7.467	26.455	-.37312	.71729	.05868	-.01184	.00352	.00067	.00090	.61604	.37208	1.65570
7.427	27.461	-.37256	.75837	.05904	-.01314	.00333	.00067	.00092	.64569	.40211	1.60580
7.500	28.856	-.37494	.81317	.05980	-.01486	.00365	.00076	.00095	.68334	.44481	1.53630
7.529	30.184	-.37192	.87268	.05986	-.01723	.00368	.00076	.00100	.72426	.49051	1.47650
7.526	31.521	-.37383	.92997	.06004	-.01992	.00358	.00079	.00100	.76136	.53738	1.41680
7.549	32.568	-.37413	.97446	.06011	-.02209	.00372	.00081	.00108	.78888	.57521	1.37150
7.573	33.645	-.37371	1.01970	.06013	-.02458	.00382	.00088	.00111	.81556	.61501	1.32610
7.643	35.544	-.37464	1.10610	.06017	-.02984	.00387	.00088	.00117	.86506	.69198	1.25010
7.596	36.608	-.37371	1.15250	.05991	-.03282	.00387	.00092	.00121	.88942	.73538	1.20950
7.597	37.527	-.37541	1.19070	.05964	-.03529	.00410	.00098	.00129	.90798	.77259	1.17520
7.559	38.864	-.37580	1.25480	.05931	-.03955	.00436	.00114	.00143	.93983	.83354	1.12750
	GRADIENT	.00000	.00000	.00000	.00000	.00000	.00000	.00000	.00000	.00000	.00000

OA257 (LARC 20-M6-6559) OV102 LESS OMS & V.T. (R7EOA6) (10 JUL 81)

REFERENCE DATA

SREF = 2690.0000 SQ.FT. XMRP = 1076.6800 IN. XO
LREF = 474.8100 INCHES YMRP = .0000 IN. YO
BREF = 936.6800 INCHES ZMRP = 375.0000 IN. ZO
SCALE = .0100

PARAMETRIC DATA

BETA = .500 PHI = .000
AILRON = .000 YP = .000
1S = 1.000 ELEVON = .000
MACH = 6.000 S-MODE = 1.000
S-DIR = 2.000

RUN NO. 361/ O RN/L = 7.41 GRADIENT INTERVAL = 23.00/ 25.00

RN/L	ALPHA	BETA	CN	CA	CLM	CY	CYN	CBL	CL	CD	L/D
7.384	-.189	.46297	-.03964	.07139	-.03836	-.00346	-.00060	.00033	-.03940	.07152	-.55093
7.436	-.059	.46002	-.03929	.07159	-.03842	-.00323	-.00054	.00032	-.03922	.07163	-.54753
7.617	-.039	.53412	-.04001	.07131	-.03836	-.00403	-.00061	.00029	-.03996	.07134	-.56021
7.435	1.182	.46261	-.01951	.06973	-.03527	-.00329	-.00059	.00030	-.02094	.06931	-.30217
7.433	2.302	.46143	.00139	.06800	-.03241	-.00346	-.00064	.00026	-.00134	.06800	-.01969
7.429	3.454	.46135	.02278	.06653	-.02981	-.00332	-.00066	.00025	.01873	.06779	.27625
7.421	4.709	.46097	.04774	.06468	-.02711	-.00323	-.00065	.00021	.04227	.06839	.61806
7.415	5.996	.46304	.07225	.06309	-.02466	-.00340	-.00073	.00017	.06526	.07029	.92843
7.427	7.209	.46170	.09914	.06178	-.02225	-.00330	-.00072	.00015	.09060	.07373	1.22880
7.411	8.189	.46175	.12267	.06069	-.02055	-.00327	-.00073	.00011	.11277	.07754	1.45440
7.422	9.672	.46077	.15559	.05951	-.01842	-.00301	-.00069	.00010	.14338	.08480	1.69070
7.400	10.854	.46336	.18765	.05839	-.01648	-.00313	-.00074	.00011	.17330	.09268	1.86990
7.401	12.155	.46381	.22463	.05754	-.01472	-.00315	-.00079	.00009	.20747	.10355	2.00360
7.386	13.415	.46172	.26143	.05690	-.01345	-.00304	-.00081	.00006	.24110	.11600	2.07840
7.385	14.685	.46321	.29733	.05647	-.01225	-.00305	-.00087	.00002	.27330	.13000	2.10230
7.369	15.708	.46354	.33317	.05635	-.01136	-.00283	-.00086	-.00003	.30547	.14445	2.11480
7.385	16.688	.46382	.36297	.05644	-.01064	-.00290	-.00088	-.00004	.33148	.15830	2.09400
7.381	18.147	.46300	.40873	.05705	-.01040	-.00276	-.00094	-.00002	.37063	.18151	2.04190
7.388	19.104	.46910	.45473	.05771	-.00999	-.00272	-.00097	-.00006	.41080	.20336	2.02010
7.395	20.624	.46991	.50417	.05807	-.00970	-.00275	-.00106	-.00013	.45141	.23193	1.94630
7.396	22.013	.47193	.55540	.05865	-.00982	-.00282	-.00118	-.00019	.49293	.26255	1.87750
7.385	23.063	.47431	.59375	.05913	-.00996	-.00268	-.00115	-.00022	.52313	.28700	1.82280
7.401	24.320	.47417	.64236	.05944	-.01052	-.00232	-.00111	-.00026	.56088	.31871	1.75980
7.386	25.481	.47486	.68951	.05973	-.01125	-.00251	-.00117	-.00032	.59674	.35056	1.70230
7.395	26.764	.47502	.74620	.06009	-.01261	-.00256	-.00119	-.00036	.63920	.38967	1.64040
7.382	27.985	.47496	.79858	.06046	-.01421	-.00265	-.00119	-.00047	.67683	.42811	1.58100
7.415	29.297	.47367	.85388	.06136	-.01606	-.00261	-.00106	-.00049	.71464	.47135	1.51620
7.412	30.607	.47231	.91303	.06189	-.01850	-.00253	-.00106	-.00051	.75431	.51813	1.45580
7.418	31.875	.47069	.96932	.06196	-.02111	-.00242	-.00103	-.00052	.79043	.56449	1.40020
7.397	32.931	.47221	1.01870	.06205	-.02377	-.00240	-.00099	-.00055	.82127	.60587	1.35550
7.423	34.076	.47191	1.07610	.06227	-.02699	-.00243	-.00096	-.00060	.85640	.65449	1.30850
7.396	35.524	.48172	1.13870	.06224	-.03083	-.00243	-.00097	-.00062	.89062	.71231	1.25030
7.391	36.538	.47961	1.17790	.06223	-.03327	-.00215	-.00090	-.00062	.90937	.75128	1.21040
7.382	37.821	.48664	1.22780	.06197	-.03651	-.00228	-.00090	-.00064	.93186	.80183	1.16220
7.374	39.004	.48927	1.30560	.06184	-.04187	-.00201	-.00080	-.00055	.97565	.86978	1.12170
	GRADIENT	-.00011	.03867	.00025	-.00045	.00028	.00003	-.00003	.03003	.02523	-.05012

OA257 (LARC 20-M6-6559) OV102 LESS OMS & V.T. (R7EOA7) (10 JUL 81)

REFERENCE DATA

SREF = 2690.0000 SQ.FT. XMRP = 1076.6800 IN. XO
LREF = 474.8100 INCHES YMRP = .0000 IN. YO
BREF = 936.6800 INCHES ZMRP = 375.0000 IN. ZO
SCALE = .0100

PARAMETRIC DATA

ALPHA = 15.000 PHI = .000
AILRON = .000 YP = 1.000
1S = 1.000 ELEVON = .000
MACH = 6.000 S-MODE = 2.000
S-DIR = 1.000

RUN NO. 352/ O RN/L = 7.52 GRADIENT INTERVAL = -.60/ .60

RN/L	BETA	ALPHA	CN	CA	CLM	CY	CYN	CBL	CL	CD	L/D
7.552	-4.350	14.47800	.28879	.05706	-.01320	.03238	.00933	.00279	.26536	.12745	2.08210
7.522	-4.200	14.48600	.28881	.05703	-.01318	.03133	.00904	.00270	.26536	.12746	2.08190
7.518	-4.000	14.48400	.28893	.05692	-.01316	.02970	.00858	.00259	.26551	.12738	2.08440
7.514	-3.800	14.48600	.28922	.05688	-.01309	.02806	.00814	.00248	.26580	.12742	2.08610
7.521	-3.600	14.48900	.28948	.05684	-.01306	.02653	.00770	.00237	.26606	.12746	2.08740
7.534	-3.400	14.49100	.28966	.05675	-.01297	.02488	.00725	.00226	.26624	.12743	2.08940
7.535	-3.200	14.49600	.28969	.05665	-.01293	.02340	.00683	.00216	.26628	.12736	2.09080
7.540	-3.000	14.49900	.28979	.05657	-.01290	.02185	.00637	.00205	.26640	.12733	2.09230
7.534	-2.800	14.50100	.29022	.05663	-.01301	.02026	.00594	.00190	.26680	.12749	2.09260
7.546	-2.600	14.50800	.29044	.05656	-.01301	.01866	.00548	.00179	.26701	.12752	2.09390
7.550	-2.400	14.51100	.29048	.05652	-.01296	.01721	.00506	.00167	.26705	.12750	2.09450
7.520	-2.200	14.51100	.29080	.05648	-.01292	.01560	.00460	.00154	.26737	.12755	2.09620
7.532	-2.000	14.51600	.29097	.05635	-.01286	.01411	.00417	.00142	.26755	.12748	2.09880
7.536	-1.800	14.52000	.29084	.05635	-.01285	.01251	.00371	.00129	.26742	.12747	2.09790
7.571	-1.600	14.52300	.29103	.05629	-.01279	.01092	.00326	.00117	.26762	.12747	2.09940
7.547	-1.400	14.52800	.29104	.05621	-.01275	.00946	.00282	.00105	.26763	.12742	2.10040
7.538	-1.200	14.52900	.29115	.05619	-.01269	.00799	.00239	.00092	.26774	.12743	2.10110
7.524	-1.000	14.53400	.29103	.05613	-.01266	.00645	.00194	.00079	.26763	.12737	2.10130
7.527	-.800	14.53800	.29112	.05599	-.01261	.00492	.00151	.00066	.26774	.12728	2.10360
7.522	-.600	14.54100	.29103	.05594	-.01237	.00337	.00105	.00053	.26766	.12722	2.10400
7.530	-.400	14.54500	.29104	.05588	-.01235	.00198	.00064	.00040	.26768	.12718	2.10480
7.532	-.200	14.54900	.29111	.05593	-.01234	.00027	.00016	.00027	.26772	.12727	2.10370
7.535	.000	14.55400	.29120	.05594	-.01233	-.00119	-.00027	.00013	.26780	.12732	2.10330
7.526	.200	14.55600	.29138	.05602	-.01233	-.00275	-.00073	.00000	.26795	.12745	2.10230
7.522	.400	14.55800	.29123	.05594	-.01233	-.00428	-.00116	-.00013	.26782	.12735	2.10300
7.546	.600	14.56400	.29144	.05598	-.01233	-.00570	-.00159	-.00025	.26799	.12746	2.10250
7.536	.800	14.56900	.29162	.05602	-.01234	-.00735	-.00205	-.00039	.26815	.12757	2.10200
7.536	1.000	14.57000	.29185	.05605	-.01243	-.00872	-.00245	-.00052	.26837	.12767	2.10200
7.544	1.200	14.57500	.29203	.05613	-.01239	-.01034	-.00290	-.00065	.26851	.12781	2.10090
7.522	1.400	14.57900	.29228	.05621	-.01256	-.01182	-.00334	-.00077	.26872	.12797	2.09980
7.530	1.600	14.58300	.29251	.05624	-.01265	-.01328	-.00375	-.00091	.26892	.12807	2.09980
7.539	1.800	14.58500	.29286	.05635	-.01275	-.01496	-.00424	-.00103	.26924	.12828	2.09890
7.532	2.000	14.58700	.29292	.05644	-.01281	-.01643	-.00466	-.00116	.26926	.12839	2.09720
7.515	2.200	14.59100	.29293	.05652	-.01286	-.01803	-.00511	-.00129	.26924	.12849	2.09540
7.500	2.400	14.59500	.29316	.05660	-.01294	-.01970	-.00557	-.00141	.26943	.12864	2.09450
7.501	2.600	14.59700	.29324	.05669	-.01304	-.02114	-.00598	-.00153	.26949	.12876	2.09300
7.485	2.800	14.60200	.29337	.05676	-.01306	-.02286	-.00646	-.00165	.26959	.12889	2.09160
7.477	3.000	14.60600	.29350	.05684	-.01307	-.02435	-.00687	-.00176	.26969	.12902	2.09030
7.481	3.200	14.60600	.29357	.05696	-.01314	-.02594	-.00730	-.00188	.26972	.12915	2.08840
7.477	3.400	14.61400	.29375	.05702	-.01319	-.02743	-.00771	-.00200	.26986	.12929	2.08720
7.478	3.600	14.61700	.29377	.05707	-.01319	-.02949	-.00828	-.00214	.26987	.12936	2.08620
7.487	3.800	14.62000	.29382	.05712	-.01321	-.03070	-.00863	-.00225	.26988	.12944	2.08510

OA257 (LARC 20-M6-6559) OV102 LESS OMS & V.T. (R7EOA7) (10 JUL 81)

REFERENCE DATA

SREF =	2690.0000 SQ.FT.	XMRP =	1076.6800 IN. XO		
LREF =	474.8100 INCHES	YMRP =	.0000 IN. YO		
BREF =	936.6800 INCHES	ZMRP =	375.0000 IN. ZO		
SCALE =	.0100				

PARAMETRIC DATA

ALPHA =	15.000	PHI =	.000
AILRON =	.000	YP =	1.000
1S =	1.000	ELEVON =	.000
MACH =	6.000	S-MODE =	2.000
S-DIR =	1.000		

RUN NO. 352/ O RN/L = 7.52 GRADIENT INTERVAL = -.60/ .60

RN/L	BETA	ALPHA	CN	CA	CLM	CY	CYN	CBL	CL	CD	L/D
7.477	4.000	14.62400	.29398	.05723	-.01321	-.03239	-.00910	-.00236	.27001	.12959	2.08350
7.485	4.146	14.62100	.29393	.05721	-.01324	-.03332	-.00937	-.00244	.26997	.12955	2.08390
	GRADIENT	.01821	.00034	.00006	.00003	-.00763	-.00222	-.00066	.00027	.00022	-.00170

OA257 (LARC 20-M6-6559) OV102 LESS OMS & V.T. (R7E1A7) (10 JUL 81)

REFERENCE DATA

SREF = 2690.0000 SQ.FT. XMRP = 1076.6800 IN. XO
LREF = 474.8100 INCHES YMRP = .0000 IN. YO
BREF = 936.6800 INCHES ZMRP = 375.0000 IN. ZO
SCALE = .0100

PARAMETRIC DATA

ALPHA = 15.000 PHI = .000
AILRON = .000 YP = 1.000
1S = 1.000 ELEVON = .000
MACH = 6.000 S-MODE = 2.000
S-DIR = 1.000

RUN NO. 2352/ O RN/L = 7.52 GRADIENT INTERVAL = -.60/ .60

RN/L	BETA	ALPHA	CN	CA	CLM	CY	CYN	CBL	CL	CD	L/D
7.539	-4.300	14.48200	.28881	.05701	-.01316	.03216	.00927	.00276	.26537	.12743	2.08250
7.514	-4.100	14.48400	.28886	.05697	-.01316	.03049	.00881	.00265	.26543	.12741	2.08330
7.509	-3.900	14.48500	.28914	.05687	-.01312	.02886	.00835	.00254	.26572	.12738	2.08600
7.521	-3.700	14.48900	.28940	.05682	-.01304	.02728	.00792	.00242	.26598	.12742	2.08750
7.530	-3.500	14.49000	.28945	.05679	-.01299	.02567	.00747	.00232	.26603	.12741	2.08800
7.535	-3.300	14.49100	.28972	.05673	-.01300	.02415	.00704	.00221	.26631	.12742	2.08990
7.540	-3.100	14.49600	.28963	.05655	-.01293	.02259	.00660	.00210	.26625	.12725	2.09230
7.536	-2.900	14.50000	.28985	.05651	-.01289	.02109	.00615	.00199	.26647	.12728	2.09360
7.533	-2.700	14.50200	.29033	.05666	-.01299	.01939	.00570	.00185	.26689	.12756	2.09230
7.553	-2.500	14.50900	.29044	.05654	-.01298	.01797	.00527	.00173	.26701	.12750	2.09420
7.533	-2.300	14.51100	.29062	.05653	-.01298	.01636	.00482	.00161	.26718	.12755	2.09470
7.520	-2.100	14.51300	.29079	.05640	-.01290	.01484	.00439	.00148	.26737	.12747	2.09750
7.531	-1.900	14.51900	.29091	.05639	-.01286	.01328	.00395	.00136	.26748	.12752	2.09760
7.562	-1.700	14.52200	.29099	.05631	-.01282	.01173	.00349	.00123	.26757	.12748	2.09890
7.560	-1.500	14.52600	.29103	.05625	-.01275	.01019	.00304	.00111	.26762	.12744	2.09990
7.542	-1.300	14.52700	.29110	.05618	-.01270	.00870	.00260	.00099	.26770	.12740	2.10130
7.528	-1.100	14.53100	.29110	.05613	-.01267	.00721	.00217	.00085	.26770	.12738	2.10170
7.525	-.900	14.53500	.29108	.05607	-.01264	.00567	.00172	.00072	.26769	.12733	2.10230
7.525	-.700	14.53800	.29116	.05598	-.01245	.00416	.00128	.00060	.26779	.12728	2.10400
7.525	-.500	14.54400	.29094	.05593	-.01232	.00269	.00085	.00047	.26758	.12720	2.10370
7.532	-.300	14.54800	.29103	.05592	-.01235	.00106	.00038	.00034	.26765	.12723	2.10370
7.533	-.100	14.55200	.29107	.05593	-.01232	-.00044	-.00004	.00020	.26768	.12726	2.10330
7.532	.100	14.55400	.29124	.05599	-.01234	-.00195	-.00051	.00007	.26782	.12738	2.10250
7.524	.300	14.55800	.29120	.05590	-.01232	-.00345	-.00094	-.00007	.26780	.12730	2.10370
7.529	.500	14.56100	.29143	.05597	-.01229	-.00501	-.00138	-.00019	.26799	.12744	2.10290
7.542	.700	14.56600	.29162	.05598	-.01235	-.00654	-.00182	-.00032	.26817	.12752	2.10300
7.540	.900	14.57100	.29179	.05606	-.01235	-.00805	-.00226	-.00046	.26831	.12766	2.10170
7.545	1.100	14.57400	.29201	.05607	-.01246	-.00955	-.00269	-.00058	.26850	.12774	2.10190
7.529	1.300	14.57700	.29215	.05613	-.01254	-.01106	-.00311	-.00072	.26862	.12785	2.10100
7.522	1.500	14.57900	.29222	.05622	-.01257	-.01258	-.00355	-.00083	.26865	.12797	2.09940
7.538	1.700	14.58200	.29246	.05632	-.01273	-.01414	-.00400	-.00097	.26886	.12813	2.09830
7.535	1.900	14.58900	.29278	.05637	-.01278	-.01569	-.00444	-.00109	.26914	.12829	2.09780
7.527	2.100	14.58900	.29291	.05648	-.01285	-.01716	-.00487	-.00122	.26923	.12844	2.09620
7.499	2.300	14.59200	.29295	.05657	-.01291	-.01887	-.00535	-.00134	.26925	.12855	2.09460
7.507	2.500	14.59700	.29328	.05664	-.01296	-.02036	-.00577	-.00147	.26954	.12872	2.09400
7.493	2.700	14.59900	.29344	.05674	-.01302	-.02205	-.00624	-.00159	.26966	.12887	2.09250
7.477	2.900	14.60400	.29343	.05680	-.01305	-.02354	-.00665	-.00171	.26963	.12896	2.09090
7.480	3.100	14.60800	.29349	.05687	-.01313	-.02514	-.00708	-.00183	.26966	.12905	2.08960
7.472	3.300	14.61200	.29361	.05690	-.01315	-.02668	-.00750	-.00193	.26976	.12913	2.08900
7.480	3.500	14.61400	.29362	.05702	-.01318	-.02821	-.00792	-.00206	.26974	.12926	2.08690
7.475	3.700	14.61700	.29380	.05711	-.01322	-.02988	-.00840	-.00219	.26988	.12941	2.08550
7.487	3.900	14.62200	.29406	.05718	-.01321	-.03151	-.00886	-.00231	.27010	.12957	2.08470

OA257 (LARC 20-M6-6559) OV102 LESS OMS & V.T. (R7E1A7) (10 JUL 81)

REFERENCE DATA

SREF =	2690.0000 SQ.FT.	XMRP =	1076.6800 IN. XO		
LREF =	474.8100 INCHES	YMRP =	.0000 IN. YO		
BREF =	936.6800 INCHES	ZMRP =	375.0000 IN. ZO		
SCALE =	.0100				

PARAMETRIC DATA

ALPHA =	15.000	PHI =	.000
AILRON =	.000	YP =	1.000
1S =	1.000	ELEVON =	.000
MACH =	6.000	S-MODE =	2.000
S-DIR =	1.000		

RUN NO. 2352/ 0 RN/L = 7.52 GRADIENT INTERVAL = -.60/ .60

RN/L	BETA	ALPHA	CN	CA	CLM	CY	CYN	CBL	CL	CD	L/D
7.476	4.100	14.62300	.29387	.05725	-.01325	-.03315	-.00932	-.00243	.26990	.12958	2.08280
	GRADIENT	.01671	.00045	.00003	.00004	-.00765	-.00222	-.00066	.00038	.00022	-.00069

OA257 (LARC 20-M6-6559) OV102 LESS OMS & V.T. (R7EOA8) (10 JUL 81)

REFERENCE DATA

SREF = 2690.0000 SQ.FT. XMRP = 1076.6800 IN. XO
LREF = 474.8100 INCHES YMRP = .0000 IN. YO
BREF = 936.6800 INCHES ZMRP = 375.0000 IN. ZO
SCALE = .0100

PARAMETRIC DATA

ALPHA = 20.000 PHI = .000
AILRON = .000 YP = 1.000
1S = 1.000 ELEVON = .000
MACH = 6.000 S-MODE = 2.000
S-DIR = 1.000

RUN NO. 353/ 0 RN/L = 7.51 GRADIENT INTERVAL = -.60/ .60

RN/L	BETA	ALPHA	CN	CA	CLM	CY	CYN	CBL	CL	CD	L/D
7.542	-4.431	19.28300	.44343	.05721	-.01019	.03461	.01018	.00491	.39966	.20043	1.99400
7.547	-4.300	19.29300	.44364	.05721	-.01014	.03370	.00993	.00480	.39983	.20057	1.99350
7.536	-4.100	19.29100	.44412	.05714	-.01011	.03213	.00950	.00460	.40030	.20066	1.99500
7.535	-3.900	19.29100	.44427	.05709	-.01011	.03055	.00904	.00442	.40046	.20066	1.99580
7.543	-3.700	19.29200	.44456	.05708	-.01004	.02895	.00859	.00422	.40074	.20075	1.99620
7.532	-3.500	19.29700	.44490	.05701	-.01009	.02746	.00816	.00403	.40107	.20083	1.99710
7.532	-3.300	19.30200	.44500	.05693	-.01009	.02577	.00769	.00382	.40116	.20082	1.99760
7.536	-3.100	19.30500	.44521	.05691	-.01008	.02433	.00726	.00362	.40136	.20089	1.99790
7.523	-2.900	19.30900	.44567	.05683	-.01000	.02280	.00681	.00343	.40181	.20101	1.99900
7.512	-2.700	19.31300	.44610	.05681	-.01000	.02124	.00636	.00322	.40221	.20116	1.99950
7.530	-2.500	19.32100	.44635	.05681	-.00996	.01971	.00590	.00302	.40241	.20129	1.99920
7.556	-2.300	19.32800	.44648	.05671	-.00992	.01815	.00543	.00282	.40255	.20129	1.99990
7.556	-2.100	19.33400	.44677	.05668	-.00988	.01669	.00500	.00262	.40281	.20139	2.00010
7.552	-1.900	19.33700	.44667	.05662	-.00992	.01513	.00456	.00242	.40273	.20133	2.00040
7.526	-1.700	19.33900	.44679	.05660	-.00986	.01364	.00411	.00221	.40283	.20136	2.00050
7.521	-1.500	19.34600	.44731	.05664	-.00984	.01202	.00365	.00199	.40329	.20162	2.00020
7.527	-1.300	19.35300	.44773	.05663	-.00981	.01061	.00321	.00178	.40366	.20180	2.00030
7.487	-1.100	19.35700	.44792	.05666	-.00980	.00906	.00276	.00156	.40382	.20192	1.99990
7.505	-.900	19.36000	.44809	.05669	-.00991	.00756	.00230	.00136	.40396	.20203	1.99950
7.498	-.700	19.36500	.44860	.05678	-.00996	.00612	.00185	.00115	.40439	.20232	1.99880
7.502	-.500	19.37200	.44929	.05687	-.00997	.00455	.00138	.00096	.40499	.20268	1.99820
7.481	-.300	19.37600	.44955	.05695	-.00996	.00318	.00094	.00076	.40519	.20287	1.99730
7.468	-.100	19.37900	.44925	.05698	-.00994	.00160	.00044	.00055	.40489	.20282	1.99630
7.470	.100	19.38700	.44957	.05697	-.01000	.00030	.00002	.00034	.40517	.20298	1.99610
7.467	.300	19.39000	.44973	.05697	-.00996	-.00131	-.00047	.00014	.40531	.20305	1.99610
7.478	.500	19.39300	.44971	.05693	-.00992	-.00262	-.00090	-.00006	.40529	.20303	1.99620
7.484	.700	19.40100	.44987	.05696	-.00994	-.00433	-.00139	-.00028	.40541	.20316	1.99550
7.485	.900	19.40700	.44996	.05695	-.00992	-.00566	-.00181	-.00049	.40547	.20322	1.99520
7.479	1.100	19.41200	.45014	.05703	-.00993	-.00730	-.00231	-.00070	.40560	.20340	1.99410
7.491	1.300	19.41700	.45059	.05701	-.00994	-.00867	-.00274	-.00092	.40600	.20356	1.99450
7.490	1.500	19.42200	.45065	.05703	-.01003	-.01025	-.00320	-.00114	.40604	.20364	1.99390
7.489	1.700	19.42600	.45085	.05706	-.01007	-.01170	-.00365	-.00135	.40620	.20376	1.99350
7.489	1.900	19.43100	.45101	.05707	-.01008	-.01322	-.00409	-.00158	.40633	.20386	1.99320
7.505	2.100	19.43800	.45123	.05708	-.01010	-.01477	-.00454	-.00180	.40652	.20400	1.99280
7.511	2.300	19.44100	.45125	.05714	-.01015	-.01630	-.00497	-.00202	.40651	.20407	1.99200
7.515	2.500	19.44600	.45141	.05715	-.01018	-.01784	-.00540	-.00224	.40663	.20417	1.99160
7.519	2.700	19.45400	.45164	.05720	-.01020	-.01944	-.00583	-.00247	.40681	.20435	1.99080
7.504	2.900	19.45500	.45178	.05721	-.01022	-.02098	-.00625	-.00270	.40693	.20442	1.99070
7.515	3.100	19.46000	.45152	.05711	-.01022	-.02263	-.00671	-.00291	.40670	.20427	1.99100
7.522	3.300	19.46600	.45160	.05719	-.01029	-.02410	-.00714	-.00311	.40673	.20442	1.98970
7.515	3.500	19.47000	.45176	.05724	-.01025	-.02575	-.00761	-.00330	.40685	.20454	1.98910
7.521	3.608	19.47300	.45172	.05727	-.01029	-.02648	-.00782	-.00341	.40679	.20458	1.98840
	GRADIENT	.02214	.00042	.00005	.00002	-.00723	-.00229	-.00102	.00031	.00035	-.00197

OA257 (LARC 20-M6-6559) OV102 LESS OMS & V.T. (R7E1A8) (10 JUL 81)

REFERENCE DATA

SREF = 2690.0000 SQ.FT. XMRP = 1076.6800 IN. XO
LREF = 474.8100 INCHES YMRP = .0000 IN. YO
BREF = 936.6800 INCHES ZMRP = 375.0000 IN. ZO
SCALE = .0100

PARAMETRIC DATA

ALPHA = 20.000 PHI = .000
AILRON = .000 YP = 1.000
1S = 1.000 ELEVON = .000
MACH = 6.000 S-MODE = 2.000
S-DIR = 1.000

RUN NO. 2353/ 0 RN/L = 7.51 GRADIENT INTERVAL = -.60/ .60

RN/L	BETA	ALPHA	CN	CA	CLM	CY	CYN	CBL	CL	CD	L/D
7.539	-4.400	19.28100	.44345	.05720	-.01020	.03442	.01013	.00489	.39969	.20042	1.99430
7.541	-4.200	19.29000	.44398	.05720	-.01010	.03293	.00971	.00470	.40015	.20066	1.99420
7.534	-4.000	19.28700	.44412	.05716	-.01014	.03133	.00927	.00451	.40031	.20065	1.99510
7.540	-3.800	19.29000	.44442	.05710	-.01008	.02973	.00881	.00432	.40061	.20070	1.99600
7.541	-3.600	19.29500	.44470	.05702	-.01004	.02822	.00838	.00412	.40088	.20076	1.99690
7.538	-3.400	19.30000	.44508	.05696	-.01002	.02665	.00793	.00393	.40124	.20086	1.99760
7.533	-3.200	19.30500	.44516	.05693	-.01006	.02508	.00748	.00372	.40131	.20089	1.99760
7.528	-3.000	19.30900	.44549	.05687	-.01005	.02353	.00703	.00352	.40162	.20097	1.99840
7.518	-2.800	19.31300	.44594	.05685	-.00999	.02206	.00660	.00332	.40205	.20113	1.99890
7.525	-2.600	19.31800	.44630	.05679	-.00996	.02050	.00613	.00312	.40239	.20123	1.99960
7.542	-2.400	19.32300	.44664	.05680	-.00993	.01895	.00567	.00292	.40268	.20139	1.99950
7.573	-2.200	19.32900	.44662	.05668	-.00992	.01742	.00522	.00271	.40268	.20132	2.00030
7.554	-2.000	19.33400	.44665	.05663	-.00993	.01590	.00478	.00251	.40271	.20131	2.00040
7.541	-1.800	19.33700	.44685	.05663	-.00987	.01441	.00434	.00231	.40289	.20140	2.00040
7.522	-1.600	19.34300	.44694	.05659	-.00987	.01276	.00388	.00209	.40297	.20143	2.00060
7.523	-1.400	19.34700	.44752	.05663	-.00980	.01134	.00343	.00188	.40348	.20169	2.00050
7.508	-1.200	19.35600	.44761	.05667	-.00980	.00980	.00298	.00166	.40353	.20182	1.99940
7.497	-1.000	19.35800	.44803	.05671	-.00985	.00837	.00253	.00146	.40391	.20201	1.99940
7.499	-.800	19.36400	.44840	.05677	-.00990	.00687	.00208	.00125	.40421	.20223	1.99880
7.504	-.600	19.36700	.44898	.05685	-.00995	.00539	.00162	.00106	.40472	.20252	1.99840
7.494	-.400	19.37600	.44936	.05693	-.00995	.00381	.00115	.00086	.40503	.20278	1.99740
7.476	-.200	19.37800	.44945	.05694	-.00991	.00245	.00070	.00066	.40509	.20284	1.99710
7.462	.000	19.38200	.44948	.05699	-.01005	.00089	.00022	.00044	.40509	.20293	1.99620
7.473	.200	19.39000	.44967	.05693	-.00996	-.00055	-.00023	.00024	.40527	.20299	1.99650
7.473	.400	19.39200	.44974	.05694	-.00995	-.00196	-.00067	.00004	.40532	.20304	1.99630
7.485	.600	19.39900	.44993	.05697	-.00988	-.00346	-.00114	-.00017	.40546	.20318	1.99560
7.488	.800	19.40300	.44992	.05693	-.00995	-.00489	-.00157	-.00038	.40545	.20316	1.99570
7.481	1.000	19.41000	.45009	.05694	-.00998	-.00657	-.00208	-.00059	.40558	.20328	1.99520
7.484	1.200	19.41300	.45048	.05701	-.00992	-.00793	-.00252	-.00081	.40592	.20349	1.99480
7.488	1.400	19.41700	.45066	.05703	-.01000	-.00946	-.00296	-.00104	.40607	.20361	1.99440
7.486	1.600	19.42400	.45060	.05707	-.00999	-.01103	-.00343	-.00124	.40597	.20367	1.99320
7.486	1.800	19.43000	.45087	.05711	-.01010	-.01244	-.00387	-.00148	.40620	.20384	1.99270
7.496	2.000	19.43300	.45103	.05707	-.01007	-.01396	-.00431	-.00169	.40635	.20388	1.99300
7.520	2.200	19.43800	.45119	.05712	-.01014	-.01549	-.00475	-.00191	.40646	.20401	1.99240
7.512	2.400	19.44300	.45152	.05717	-.01018	-.01703	-.00518	-.00213	.40674	.20421	1.99180
7.506	2.600	19.44900	.45153	.05721	-.01013	-.01865	-.00562	-.00235	.40671	.20429	1.99090
7.516	2.800	19.45300	.45162	.05718	-.01019	-.02025	-.00605	-.00258	.40680	.20432	1.99100
7.509	3.000	19.45800	.45174	.05721	-.01019	-.02181	-.00649	-.00281	.40688	.20442	1.99040
7.518	3.200	19.46200	.45153	.05718	-.01024	-.02345	-.00694	-.00301	.40668	.20436	1.99000
7.517	3.400	19.46800	.45166	.05720	-.01027	-.02490	-.00737	-.00320	.40678	.20446	1.98950
7.521	3.600	19.47300	.45173	.05726	-.01028	-.02643	-.00780	-.00340	.40680	.20458	1.98850
	GRADIENT	.02500	.00068	.00007	.00003	-.00734	-.00230	-.00103	.00053	.00047	-.00200

OA257 (LARC 20-M6-6559) OV102 LESS OMS & V.T. (R7EOA9) (10 JUL 81)

REFERENCE DATA

SREF = 2690.0000 SQ.FT. XMRP = 1076.6800 IN. XO
LREF = 474.8100 INCHES YMRP = .0000 IN. YO
BREF = 936.6800 INCHES ZMRP = 375.0000 IN. ZO
SCALE = .0100

PARAMETRIC DATA

ALPHA = 20.000 PHI = .000
AILRON = .000 YP = 1.000
1S = 1.000 ELEVON = .000
MACH = 6.000 S-MODE = 2.000
S-DIR = 1.000

RUN NO. 379/ 0 RN/L = 2.32 GRADIENT INTERVAL = -.60/ .60

RN/L	BETA	ALPHA	CN	CA	CLM	CY	CYN	CBL	CL	CD	L/D
2.295	-2.445	19.74100	.45701	.05810	-.00711	.01874	.00559	.00303	.41052	.20905	1.96380
2.296	-2.269	19.75000	.45745	.05809	-.00728	.01752	.00521	.00284	.41092	.20925	1.96370
2.302	-2.097	19.74300	.45751	.05814	-.00727	.01632	.00479	.00263	.41097	.20927	1.96380
2.299	-1.941	19.74800	.45911	.05833	-.00737	.01511	.00443	.00245	.41240	.21002	1.96360
2.297	-1.786	19.75100	.45821	.05836	-.00740	.01408	.00407	.00229	.41153	.20977	1.96190
2.297	-1.630	19.75500	.45879	.05815	-.00718	.01296	.00375	.00210	.41213	.20979	1.96450
2.302	-1.486	19.75900	.45763	.05813	-.00674	.01160	.00342	.00197	.41104	.20942	1.96280
2.306	-1.332	19.76200	.45910	.05816	-.00756	.01061	.00307	.00178	.41240	.20996	1.96410
2.323	-1.171	19.76600	.45929	.05837	-.00722	.00938	.00271	.00160	.41249	.21026	1.96180
2.324	-1.024	19.77500	.45886	.05836	-.00741	.00806	.00232	.00146	.41205	.21016	1.96070
2.317	-.880	19.77700	.45797	.05811	-.00756	.00722	.00211	.00131	.41129	.20965	1.96180
2.310	-.709	19.78200	.45852	.05815	-.00759	.00572	.00171	.00112	.41178	.20990	1.96180
2.309	-.555	19.78600	.45879	.05797	-.00726	.00459	.00133	.00093	.41208	.20985	1.96370
2.307	-.386	19.78400	.45991	.05841	-.00774	.00358	.00101	.00076	.41300	.21063	1.96070
2.315	-.218	19.80000	.46007	.05820	-.00759	.00189	.00053	.00058	.41316	.21060	1.96180
2.317	-.057	19.80400	.46096	.05819	-.00752	.00116	.00029	.00041	.41398	.21093	1.96270
2.322	.103	19.80200	.46024	.05822	-.00751	-.00005	-.00009	.00022	.41331	.21070	1.96160
2.323	.257	19.80600	.46046	.05839	-.00767	-.00154	-.00050	.00003	.41344	.21095	1.95990
2.329	.414	19.81000	.46094	.05846	-.00755	-.00286	-.00089	-.00013	.41385	.21121	1.95940
2.329	.571	19.80700	.45948	.05814	-.00786	-.00387	-.00119	-.00031	.41260	.21040	1.96100
2.322	.732	19.81700	.46056	.05839	-.00765	-.00479	-.00147	-.00049	.41349	.21107	1.95900
2.325	.886	19.82100	.46111	.05841	-.00746	-.00590	-.00183	-.00068	.41398	.21130	1.95920
2.325	1.048	19.81900	.46130	.05840	-.00756	-.00747	-.00226	-.00086	.41417	.21135	1.95960
2.338	1.190	19.82800	.46025	.05835	-.00761	-.00869	-.00253	-.00101	.41317	.21100	1.95810
2.337	1.349	19.83200	.46111	.05863	-.00764	-.00981	-.00293	-.00120	.41387	.21159	1.95600
2.339	1.498	19.84100	.46067	.05862	-.00766	-.01093	-.00327	-.00136	.41342	.21150	1.95470
2.337	1.658	19.84500	.46093	.05862	-.00777	-.01202	-.00361	-.00155	.41366	.21161	1.95480
2.333	1.845	19.84400	.46184	.05847	-.00795	-.01343	-.00400	-.00175	.41457	.21178	1.95760
	GRADIENT	.02189	.00080	.00015	-.00026	-.00764	-.00227	-.00111	.00062	.00057	-.00239

OA257 (LARC 20-M6-6559) OV102 LESS OMS & V.T. (R7EOB1) (10 JUL 81)

REFERENCE DATA

SREF = 2690.0000 SQ.FT. XMRP = 1076.6800 IN. XO
LREF = 474.8100 INCHES YMRP = .0000 IN. YO
BREF = 936.6800 INCHES ZMRP = 375.0000 IN. ZO
SCALE = .0100

PARAMETRIC DATA

ALPHA = 20.000 PHI = .000
AILRON = .000 YP = 1.000
1S = 1.000 ELEVON = .000
MACH = 6.000 S-MODE = 2.000
S-DIR = 2.000

RUN NO. 1379/ 0 RN/L = 2.30 GRADIENT INTERVAL = -.60/ .60

RN/L	BETA	ALPHA	CN	CA	CLM	CY	CYN	CBL	CL	CD	L/D
2.300	-2.230	19.74200	.45872	.05807	-.00751	.01719	.00497	.00277	.41214	.20961	1.96620
2.291	-2.064	19.74200	.46007	.05827	-.00736	.01609	.00462	.00257	.41334	.21025	1.96600
2.301	-1.901	19.74400	.45911	.05807	-.00776	.01475	.00425	.00243	.41250	.20976	1.96660
2.290	-1.734	19.75400	.45956	.05825	-.00752	.01381	.00390	.00223	.41283	.21015	1.96450
2.283	-1.553	19.75900	.45984	.05829	-.00741	.01275	.00358	.00203	.41306	.21031	1.96400
2.293	-1.341	19.76300	.45954	.05824	-.00789	.01057	.00296	.00178	.41278	.21020	1.96380
2.300	-1.145	19.77500	.46045	.05801	-.00752	.00922	.00263	.00159	.41367	.21037	1.96640
2.295	-.928	19.77400	.45913	.05801	-.00737	.00789	.00219	.00135	.41243	.20991	1.96480
2.300	-.733	19.77800	.45971	.05828	-.00778	.00599	.00167	.00114	.41288	.21040	1.96230
2.286	-.532	19.78900	.46063	.05826	-.00749	.00440	.00120	.00091	.41371	.21077	1.96280
2.296	-.338	19.79300	.46044	.05816	-.00759	.00278	.00070	.00070	.41354	.21064	1.96320
2.304	-.156	19.79800	.46014	.05809	-.00752	.00185	.00043	.00048	.41327	.21051	1.96320
2.304	.018	19.80200	.46096	.05794	-.00752	.00014	-.00002	.00031	.41408	.21067	1.96550
2.297	.209	19.80700	.46150	.05821	-.00748	-.00107	-.00044	.00007	.41447	.21115	1.96300
2.299	.393	19.80500	.46113	.05827	-.00736	-.00251	-.00085	-.00013	.41411	.21106	1.96210
2.304	.587	19.81500	.46080	.05828	-.00738	-.00413	-.00127	-.00033	.41376	.21103	1.96060
2.302	.784	19.81900	.46060	.05829	-.00756	-.00554	-.00173	-.00057	.41355	.21100	1.95990
2.296	.999	19.81900	.46111	.05837	-.00752	-.00733	-.00227	-.00082	.41401	.21125	1.95980
2.309	1.180	19.83000	.46071	.05834	-.00744	-.00871	-.00261	-.00099	.41360	.21116	1.95870
2.309	1.404	19.83000	.46159	.05827	-.00774	-.01010	-.00305	-.00127	.41445	.21140	1.96050
2.326	1.627	19.84300	.46208	.05846	-.00753	-.01193	-.00360	-.00152	.41480	.21184	1.95810
2.342	1.818	19.84900	.46132	.05857	-.00749	-.01336	-.00398	-.00170	.41403	.21173	1.95550
	GRADIENT	.02142	.00062	.00008	.00016	-.00754	-.00220	-.00112	.00047	.00043	-.00176

OA257 (LARC 20-M6-6559) OV102 LESS OMS & V.T. (R7E0B2) (10 JUL 81)

REFERENCE DATA

SREF = 2690.0000 SQ.FT. XMRP = 1076.6800 IN. XO
LREF = 474.8100 INCHES YMRP = .0000 IN. YO
BREF = 936.6800 INCHES ZMRP = 375.0000 IN. ZO
SCALE = .0100

PARAMETRIC DATA

ALPHA = 25.000 PHI = .000
AILRON = .000 YP = 1.000
1S = 1.000 ELEVON = .000
MACH = 6.000 S-MODE = 2.000
S-DIR = 1.000

RUN NO. 354/ 0 RN/L = 7.61 GRADIENT INTERVAL = -.60/ .60

RN/L	BETA	ALPHA	CN	CA	CLM	CY	CYN	CBL	CL	CD	L/D
7.671	-4.585	24.14800	.62235	.05870	-.01071	.03480	.01047	.00673	.54388	.30817	1.76490
7.656	-4.400	24.15600	.62273	.05870	-.01064	.03342	.01007	.00651	.54418	.30839	1.76460
7.639	-4.200	24.15700	.62297	.05866	-.01071	.03190	.00962	.00623	.54441	.30847	1.76490
7.621	-4.000	24.15800	.62318	.05867	-.01063	.03042	.00918	.00596	.54459	.30856	1.76490
7.610	-3.800	24.16200	.62348	.05865	-.01060	.02884	.00870	.00569	.54485	.30872	1.76490
7.608	-3.600	24.16300	.62403	.05868	-.01059	.02742	.00825	.00543	.54533	.30898	1.76500
7.616	-3.400	24.17400	.62477	.05868	-.01060	.02582	.00777	.00516	.54595	.30938	1.76470
7.609	-3.200	24.17400	.62503	.05871	-.01059	.02433	.00733	.00488	.54618	.30952	1.76460
7.615	-3.000	24.18300	.62519	.05871	-.01054	.02292	.00685	.00461	.54628	.30966	1.76410
7.600	-2.800	24.18700	.62570	.05873	-.01051	.02134	.00638	.00432	.54670	.30993	1.76400
7.596	-2.600	24.19600	.62595	.05878	-.01053	.01980	.00592	.00404	.54687	.31017	1.76310
7.606	-2.400	24.20200	.62661	.05881	-.01050	.01835	.00549	.00376	.54742	.31053	1.76290
7.586	-2.200	24.20700	.62715	.05885	-.01056	.01674	.00501	.00347	.54787	.31083	1.76260
7.603	-2.000	24.20900	.62758	.05886	-.01054	.01526	.00455	.00321	.54825	.31104	1.76260
7.625	-1.800	24.21900	.62833	.05887	-.01049	.01386	.00409	.00293	.54887	.31144	1.76230
7.604	-1.600	24.22500	.62868	.05888	-.01049	.01224	.00360	.00264	.54915	.31166	1.76200
7.625	-1.400	24.23200	.62881	.05886	-.01049	.01080	.00312	.00233	.54926	.31176	1.76180
7.618	-1.200	24.23900	.62890	.05883	-.01054	.00936	.00267	.00203	.54930	.31184	1.76150
7.614	-1.000	24.24700	.62935	.05878	-.01053	.00795	.00221	.00174	.54969	.31205	1.76150
7.631	-.800	24.25300	.62984	.05880	-.01047	.00640	.00172	.00146	.55010	.31233	1.76130
7.623	-.600	24.25900	.62980	.05877	-.01048	.00492	.00128	.00118	.55004	.31234	1.76100
7.626	-.400	24.26700	.63016	.05871	-.01043	.00353	.00083	.00091	.55035	.31251	1.76110
7.634	-.200	24.27500	.63048	.05867	-.01039	.00206	.00038	.00063	.55062	.31269	1.76090
7.632	.000	24.28100	.63061	.05862	-.01036	.00053	-.00009	.00036	.55072	.31276	1.76090
7.640	.200	24.28600	.63077	.05863	-.01030	-.00085	-.00053	.00007	.55084	.31286	1.76060
7.630	.400	24.28900	.63074	.05857	-.01034	-.00228	-.00098	-.00021	.55082	.31283	1.76080
7.657	.600	24.29700	.63096	.05853	-.01031	-.00376	-.00145	-.00049	.55099	.31296	1.76060
7.635	.800	24.30500	.63108	.05850	-.01028	-.00516	-.00189	-.00077	.55107	.31306	1.76020
7.630	1.000	24.30900	.63137	.05849	-.01028	-.00655	-.00233	-.00108	.55132	.31322	1.76020
7.615	1.200	24.31200	.63128	.05843	-.01027	-.00810	-.00281	-.00135	.55124	.31315	1.76030
7.598	1.400	24.31600	.63173	.05841	-.01031	-.00944	-.00322	-.00164	.55164	.31335	1.76040
7.586	1.600	24.32100	.63165	.05844	-.01031	-.01092	-.00366	-.00193	.55152	.31339	1.75990
7.576	1.800	24.32500	.63181	.05841	-.01035	-.01246	-.00412	-.00224	.55166	.31348	1.75980
7.579	2.000	24.33000	.63193	.05838	-.01033	-.01392	-.00455	-.00253	.55176	.31354	1.75970
7.562	2.200	24.33400	.63200	.05840	-.01041	-.01556	-.00502	-.00282	.55178	.31364	1.75930
7.560	2.400	24.34000	.63198	.05839	-.01042	-.01705	-.00544	-.00311	.55174	.31367	1.75900
7.560	2.600	24.34500	.63228	.05837	-.01044	-.01874	-.00591	-.00340	.55199	.31383	1.75890
7.568	2.800	24.35400	.63258	.05837	-.01049	-.02041	-.00633	-.00371	.55222	.31403	1.75850
7.563	3.000	24.35900	.63266	.05822	-.01054	-.02190	-.00673	-.00398	.55233	.31398	1.75910
7.579	3.200	24.36800	.63267	.05822	-.01059	-.02339	-.00714	-.00425	.55228	.31408	1.75840
7.569	3.400	24.37200	.63281	.05820	-.01061	-.02495	-.00758	-.00452	.55240	.31414	1.75840
7.582	3.512	24.37500	.63297	.05812	-.01063	-.02575	-.00781	-.00465	.55256	.31418	1.75870
	GRADIENT	.03018	.00088	-.00019	.00014	-.00724	-.00227	-.00139	.00072	.00048	-.00037

OA257 (LARC 20-M6-6559) OV102 LESS OMS & V.T. (R7E1B2) (10 JUL 81)

REFERENCE DATA

SREF = 2690.0000 SQ.FT. XMRP = 1076.6800 IN. XO
LREF = 474.8100 INCHES YMRP = .0000 IN. YO
BREF = 936.6800 INCHES ZMRP = 375.0000 IN. ZO
SCALE = .0100

PARAMETRIC DATA

ALPHA = 25.000 PHI = .000
AILRON = .000 YP = 1.000
1S = 1.000 ELEVON = .000
MACH = 6.000 S-MODE = 2.000
S-DIR = 1.000

RUN NO. 2354/ 0 RN/L = 7.61 GRADIENT INTERVAL = -.60/ .60

RN/L	BETA	ALPHA	CN	CA	CLM	CY	CYN	CBL	CL	CD	L/D
7.662	-4.500	24.15300	.62246	.05873	-.01070	.03429	.01031	.00664	.54394	.30828	1.76440
7.649	-4.300	24.15700	.62271	.05868	-.01068	.03267	.00985	.00636	.54416	.30838	1.76460
7.629	-4.100	24.15800	.62339	.05865	-.01068	.03116	.00939	.00609	.54479	.30863	1.76520
7.613	-3.900	24.15800	.62336	.05863	-.01062	.02965	.00895	.00583	.54478	.30861	1.76530
7.597	-3.700	24.16000	.62382	.05871	-.01056	.02815	.00849	.00555	.54515	.30888	1.76490
7.613	-3.500	24.16800	.62429	.05869	-.01062	.02663	.00801	.00529	.54554	.30913	1.76470
7.614	-3.300	24.17300	.62488	.05869	-.01057	.02511	.00755	.00502	.54605	.30943	1.76470
7.612	-3.100	24.18000	.62510	.05874	-.01058	.02360	.00708	.00474	.54620	.30963	1.76400
7.611	-2.900	24.18700	.62531	.05869	-.01054	.02214	.00663	.00445	.54637	.30973	1.76400
7.602	-2.700	24.19400	.62583	.05874	-.01049	.02052	.00614	.00417	.54679	.31006	1.76350
7.600	-2.500	24.19900	.62641	.05881	-.01050	.01905	.00571	.00390	.54726	.31042	1.76300
7.603	-2.300	24.20400	.62700	.05883	-.01056	.01752	.00526	.00361	.54776	.31073	1.76280
7.595	-2.100	24.21000	.62730	.05888	-.01056	.01604	.00479	.00334	.54799	.31094	1.76230
7.620	-1.900	24.21600	.62807	.05889	-.01050	.01453	.00431	.00307	.54865	.31133	1.76230
7.618	-1.700	24.22500	.62846	.05888	-.01047	.01308	.00385	.00278	.54896	.31156	1.76200
7.615	-1.500	24.22800	.62877	.05887	-.01051	.01155	.00336	.00248	.54923	.31171	1.76200
7.620	-1.300	24.23600	.62887	.05882	-.01054	.01007	.00289	.00218	.54929	.31178	1.76180
7.615	-1.100	24.24500	.62913	.05883	-.01051	.00873	.00244	.00189	.54948	.31198	1.76130
7.611	-.900	24.24800	.62957	.05882	-.01050	.00714	.00196	.00161	.54987	.31218	1.76140
7.641	-.700	24.25900	.62994	.05875	-.01047	.00570	.00150	.00133	.55018	.31238	1.76120
7.618	-.500	24.26600	.63048	.05874	-.01050	.00423	.00106	.00104	.55063	.31265	1.76120
7.637	-.300	24.27000	.63041	.05871	-.01043	.00274	.00059	.00077	.55056	.31264	1.76100
7.633	-.100	24.27600	.63035	.05865	-.01036	.00139	.00017	.00050	.55051	.31262	1.76100
7.637	.100	24.28300	.63066	.05865	-.01033	-.00020	-.00031	.00021	.55074	.31282	1.76060
7.627	.300	24.28700	.63068	.05860	-.01031	-.00154	-.00074	-.00007	.55076	.31282	1.76070
7.642	.500	24.29400	.63088	.05857	-.01033	-.00308	-.00122	-.00035	.55091	.31294	1.76040
7.642	.700	24.30100	.63094	.05851	-.01028	-.00446	-.00167	-.00063	.55096	.31297	1.76040
7.638	.900	24.30800	.63113	.05849	-.01027	-.00584	-.00212	-.00092	.55110	.31311	1.76010
7.621	1.100	24.31100	.63125	.05846	-.01030	-.00739	-.00259	-.00121	.55121	.31315	1.76020
7.608	1.300	24.31400	.63137	.05841	-.01029	-.00876	-.00301	-.00150	.55132	.31319	1.76040
7.592	1.500	24.31900	.63173	.05843	-.01033	-.01023	-.00346	-.00179	.55161	.31340	1.76010
7.574	1.700	24.32100	.63171	.05841	-.01035	-.01164	-.00389	-.00209	.55158	.31340	1.76000
7.578	1.900	24.32900	.63200	.05842	-.01030	-.01319	-.00434	-.00238	.55181	.31360	1.75960
7.565	2.100	24.33300	.63219	.05840	-.01035	-.01475	-.00479	-.00268	.55197	.31369	1.75960
7.561	2.300	24.33800	.63209	.05839	-.01040	-.01631	-.00524	-.00297	.55185	.31370	1.75920
7.561	2.500	24.34400	.63225	.05839	-.01049	-.01787	-.00567	-.00326	.55197	.31382	1.75880
7.571	2.700	24.35000	.63271	.05839	-.01048	-.01958	-.00613	-.00355	.55235	.31406	1.75870
7.563	2.900	24.35900	.63280	.05830	-.01051	-.02122	-.00654	-.00384	.55242	.31411	1.75870
7.573	3.100	24.36500	.63276	.05827	-.01056	-.02256	-.00692	-.00411	.55237	.31412	1.75840
7.568	3.300	24.36800	.63276	.05820	-.01061	-.02414	-.00734	-.00438	.55237	.31409	1.75870
7.580	3.500	24.37500	.63295	.05813	-.01063	-.02567	-.00779	-.00464	.55253	.31417	1.75870
	GRADIENT	.02829	.00045	-.00016	.00018	-.00728	-.00227	-.00140	.00032	.00031	-.00076

OA257 (LARC 20-M6-6559) OV102 LESS OMS & V.T. (R7EOB3) (10 JUL 81)

REFERENCE DATA

SREF = 2690.0000 SQ.FT. XMRP = 1076.6800 IN. XO
LREF = 474.8100 INCHES YMRP = .0000 IN. YO
BREF = 936.6800 INCHES ZMRP = 375.0000 IN. ZO
SCALE = .0100

PARAMETRIC DATA

ALPHA = 25.000 PHI = .000
AILRON = .000 YP = 1.000
1S = 1.000 ELEVON = .000
MACH = 6.000 S-MODE = 2.000
S-DIR = 1.000

RUN NO. 380/ 0 RN/L = 2.28 GRADIENT INTERVAL = -.60/ .60

RN/L	BETA	ALPHA	CN	CA	CLM	CY	CYN	CBL	CL	CD	L/D
2.275	-2.211	24.53800	.63885	.05928	-.00768	.01720	.00511	.00371	.55653	.31924	1.74330
2.277	-2.058	24.53700	.63944	.05912	-.00754	.01606	.00474	.00350	.55714	.31934	1.74470
2.275	-1.902	24.54200	.63870	.05908	-.00753	.01443	.00431	.00326	.55646	.31904	1.74420
2.279	-1.748	24.54700	.63926	.05855	-.00769	.01365	.00405	.00304	.55716	.31883	1.74750
2.279	-1.612	24.55700	.63922	.05900	-.00771	.01252	.00365	.00281	.55688	.31932	1.74400
2.277	-1.467	24.55600	.64131	.05902	-.00761	.01180	.00340	.00259	.55878	.32020	1.74510
2.279	-1.330	24.56500	.63993	.05896	-.00766	.01073	.00310	.00240	.55750	.31966	1.74400
2.279	-1.189	24.56400	.64023	.05896	-.00747	.00931	.00273	.00219	.55777	.31978	1.74420
2.280	-1.045	24.56900	.64082	.05901	-.00732	.00827	.00244	.00197	.55827	.32011	1.74400
2.282	-.908	24.57200	.64028	.05897	-.00779	.00745	.00214	.00176	.55777	.31988	1.74370
2.286	-.766	24.58200	.64161	.05900	-.00772	.00643	.00184	.00156	.55891	.32056	1.74350
2.289	-.625	24.58600	.64021	.05878	-.00746	.00527	.00152	.00136	.55771	.31982	1.74380
2.287	-.477	24.59100	.64076	.05876	-.00730	.00413	.00115	.00113	.55819	.32008	1.74390
2.283	-.335	24.59000	.64167	.05897	-.00722	.00321	.00092	.00094	.55894	.32064	1.74320
2.281	-.201	24.59900	.64148	.05897	-.00761	.00227	.00061	.00069	.55871	.32065	1.74240
2.282	-.067	24.60900	.64118	.05874	-.00757	.00125	.00025	.00050	.55849	.32041	1.74310
2.283	.067	24.60700	.64132	.05897	-.00762	.00020	-.00007	.00031	.55853	.32066	1.74180
2.278	.211	24.61100	.64185	.05902	-.00759	-.00091	-.00043	.00006	.55896	.32096	1.74150
2.279	.352	24.61500	.64188	.05919	-.00814	-.00204	-.00076	-.00013	.55890	.32117	1.74020
2.277	.487	24.62500	.64081	.05898	-.00761	-.00288	-.00103	-.00034	.55795	.32062	1.74020
2.279	.617	24.62300	.64192	.05855	-.00776	-.00390	-.00133	-.00055	.55915	.32068	1.74360
2.281	.754	24.62800	.64342	.05879	-.00774	-.00483	-.00164	-.00076	.56039	.32157	1.74260
2.289	.889	24.63200	.64211	.05880	-.00742	-.00606	-.00199	-.00097	.55918	.32107	1.74160
2.289	1.023	24.64100	.64228	.05879	-.00756	-.00679	-.00223	-.00119	.55928	.32123	1.74110
2.288	1.157	24.64400	.64255	.05906	-.00794	-.00792	-.00264	-.00139	.55939	.32161	1.73930
2.294	1.291	24.65000	.64423	.05884	-.00776	-.00857	-.00282	-.00158	.56098	.32217	1.74120
2.294	1.416	24.64800	.64312	.05885	-.00740	-.00988	-.00320	-.00177	.55998	.32170	1.74070
2.296	1.549	24.65100	.64302	.05906	-.00757	-.01061	-.00350	-.00201	.55978	.32188	1.73910
2.301	1.670	24.65500	.64266	.05886	-.00739	-.01183	-.00385	-.00218	.55952	.32158	1.73990
2.301	1.798	24.65900	.64359	.05884	-.00750	-.01227	-.00404	-.00239	.56035	.32199	1.74030
2.302	1.890	24.66200	.64286	.05891	-.00770	-.01328	-.00429	-.00252	.55965	.32178	1.73920
	GRADIENT	.03432	.00023	.00026	-.00059	-.00744	-.00234	-.00154	-.00009	.00066	-.00389

OA257 (LARC 20-M6-6559) OV102 LESS OMS & V.T. (R7E0B4) (10 JUL 81)

REFERENCE DATA

SREF = 2690.0000 SQ.FT. XMRP = 1076.6800 IN. XO
LREF = 474.8100 INCHES YMRP = .0000 IN. YO
BREF = 936.6800 INCHES ZMRP = 375.0000 IN. ZO
SCALE = .0100

PARAMETRIC DATA

ALPHA = 25.000 PHI = .000
AILRON = .000 YP = 1.000
1S = 1.000 ELEVON = .000
MACH = 6.000 S-MODE = 2.000
S-DIR = 2.000

RUN NO. 1380/ 0 RN/L = 2.30 GRADIENT INTERVAL = -.60/ .60

RN/L	BETA	ALPHA	CN	CA	CLM	CY	CYN	CBL	CL	CD	L/D
2.276	-2.031	24.53700	.63954	.05902	-.00807	.01584	.00455	.00343	.55728	.31927	1.74550
2.265	-1.843	24.54800	.63996	.05912	-.00775	.01452	.00415	.00314	.55756	.31965	1.74430
2.269	-1.662	24.55900	.64135	.05892	-.00811	.01339	.00380	.00287	.55884	.32016	1.74550
2.276	-1.476	24.56000	.64082	.05889	-.00758	.01165	.00332	.00262	.55836	.31991	1.74540
2.279	-1.275	24.56500	.64115	.05903	-.00803	.01034	.00290	.00232	.55858	.32023	1.74430
2.284	-1.086	24.57800	.64138	.05886	-.00767	.00907	.00247	.00202	.55879	.32031	1.74450
2.297	-.880	24.58000	.64100	.05853	-.00770	.00724	.00192	.00171	.55857	.31985	1.74630
2.295	-.687	24.58600	.64322	.05884	-.00831	.00612	.00158	.00144	.56042	.32112	1.74520
2.300	-.495	24.59300	.64256	.05885	-.00802	.00423	.00112	.00112	.55978	.32093	1.74430
2.321	-.301	24.60600	.64130	.05880	-.00800	.00309	.00073	.00087	.55858	.32048	1.74300
2.324	-.129	24.60700	.64168	.05875	-.00751	.00177	.00031	.00060	.55894	.32060	1.74340
2.330	.046	24.61100	.64202	.05875	-.00797	.00059	-.00011	.00030	.55923	.32078	1.74330
2.310	.227	24.62300	.64321	.05900	-.00781	-.00090	-.00055	.00001	.56014	.32162	1.74160
2.311	.420	24.62800	.64320	.05886	-.00779	-.00209	-.00096	-.00028	.56016	.32154	1.74210
2.318	.605	24.63300	.64341	.05868	-.00794	-.00338	-.00135	-.00056	.56040	.32151	1.74300
2.303	.803	24.63300	.64244	.05871	-.00767	-.00516	-.00186	-.00086	.55950	.32114	1.74220
2.303	1.036	24.63900	.64344	.05884	-.00780	-.00674	-.00233	-.00120	.56032	.32174	1.74160
2.317	1.237	24.65100	.64358	.05909	-.00762	-.00822	-.00279	-.00152	.56028	.32214	1.73930
2.295	1.491	24.65700	.64395	.05879	-.00796	-.01027	-.00344	-.00192	.56071	.32208	1.74090
	GRADIENT	.03643	.00145	.00010	.00020	-.00706	-.00231	-.00155	.00107	.00104	-.00242

OA257 (LARC 20-M6-6559) OV102 LESS OMS & V.T. (R7E0B5) (10 JUL 81)

REFERENCE DATA

SREF = 2690.0000 SQ.FT. XMRP = 1076.6800 IN. XO
LREF = 474.8100 INCHES YMRP = .0000 IN. YO
BREF = 936.6800 INCHES ZMRP = 375.0000 IN. ZO
SCALE = .0100

PARAMETRIC DATA

ALPHA = 30.000 PHI = .000
AILRON = .000 YP = 1.000
1S = 1.000 ELEVON = .000
MACH = 6.000 S-MODE = 2.000
S-DIR = 1.000

RUN NO. 356/ 0 RN/L = 7.67 GRADIENT INTERVAL = -.60/ .60

RN/L	BETA	ALPHA	CN	CA	CLM	CY	CYN	CBL	CL	CD	L/D
7.668	-4.688	28.97300	.82034	.05954	-.01602	.03670	.01070	.00849	.68883	.44946	1.53260
7.663	-4.500	28.98200	.82060	.05959	-.01605	.03532	.01029	.00820	.68896	.44974	1.53190
7.668	-4.300	28.99000	.82118	.05959	-.01602	.03372	.00983	.00787	.68941	.45012	1.53160
7.665	-4.100	28.99800	.82193	.05957	-.01603	.03225	.00940	.00754	.69001	.45055	1.53150
7.668	-3.900	29.00500	.82254	.05956	-.01600	.03068	.00894	.00720	.69050	.45092	1.53130
7.656	-3.700	29.01200	.82267	.05956	-.01598	.02911	.00847	.00686	.69056	.45108	1.53090
7.647	-3.500	29.01500	.82332	.05960	-.01589	.02751	.00801	.00651	.69108	.45146	1.53080
7.656	-3.300	29.02600	.82388	.05963	-.01597	.02603	.00756	.00619	.69146	.45189	1.53010
7.643	-3.100	29.03300	.82429	.05960	-.01599	.02449	.00710	.00583	.69179	.45215	1.53000
7.686	-2.900	29.04100	.82485	.05970	-.01589	.02293	.00662	.00550	.69216	.45261	1.52930
7.696	-2.700	29.04900	.82529	.05969	-.01587	.02146	.00617	.00515	.69249	.45290	1.52900
7.706	-2.500	29.05600	.82585	.05970	-.01592	.01996	.00572	.00479	.69292	.45328	1.52870
7.701	-2.300	29.06500	.82653	.05968	-.01594	.01843	.00526	.00442	.69345	.45369	1.52850
7.704	-2.100	29.07600	.82694	.05974	-.01586	.01697	.00481	.00410	.69369	.45407	1.52770
7.690	-1.900	29.07900	.82754	.05978	-.01579	.01551	.00437	.00375	.69417	.45444	1.52750
7.682	-1.700	29.08700	.82791	.05978	-.01578	.01400	.00392	.00340	.69443	.45472	1.52720
7.691	-1.500	29.09600	.82844	.05977	-.01579	.01248	.00345	.00304	.69484	.45507	1.52690
7.688	-1.300	29.10700	.82883	.05974	-.01585	.01104	.00301	.00267	.69510	.45536	1.52650
7.670	-1.100	29.11200	.82917	.05974	-.01589	.00958	.00256	.00231	.69536	.45560	1.52620
7.671	-.900	29.11900	.82964	.05970	-.01591	.00813	.00213	.00195	.69574	.45588	1.52610
7.673	-.700	29.12600	.83013	.05972	-.01591	.00668	.00167	.00160	.69609	.45621	1.52580
7.664	-.500	29.13400	.83024	.05968	-.01580	.00513	.00122	.00125	.69615	.45633	1.52560
7.679	-.300	29.14100	.83057	.05965	-.01594	.00373	.00079	.00088	.69639	.45656	1.52530
7.698	-.100	29.14600	.83071	.05964	-.01586	.00219	.00032	.00058	.69648	.45668	1.52510
7.691	.100	29.15600	.83124	.05973	-.01583	.00073	-.00012	.00020	.69681	.45714	1.52430
7.673	.300	29.16200	.83150	.05975	-.01586	-.00070	-.00053	-.00014	.69699	.45735	1.52400
7.657	.500	29.16300	.83148	.05976	-.01585	-.00215	-.00096	-.00050	.69696	.45736	1.52390
7.662	.700	29.17300	.83198	.05976	-.01589	-.00361	-.00141	-.00085	.69732	.45773	1.52340
7.654	.900	29.18100	.83224	.05970	-.01592	-.00513	-.00186	-.00121	.69751	.45791	1.52320
7.663	1.100	29.18800	.83255	.05972	-.01598	-.00665	-.00229	-.00159	.69771	.45815	1.52290
7.663	1.300	29.19800	.83289	.05980	-.01601	-.00813	-.00273	-.00193	.69789	.45851	1.52210
7.658	1.500	29.20300	.83302	.05979	-.01606	-.00961	-.00318	-.00230	.69798	.45862	1.52190
7.670	1.700	29.20700	.83318	.05974	-.01604	-.01111	-.00363	-.00265	.69810	.45870	1.52190
7.670	1.900	29.21700	.83349	.05975	-.01600	-.01273	-.00411	-.00299	.69829	.45899	1.52140
7.653	2.100	29.22200	.83357	.05966	-.01610	-.01411	-.00455	-.00334	.69837	.45901	1.52150
7.662	2.300	29.22700	.83363	.05963	-.01611	-.01576	-.00502	-.00368	.69838	.45908	1.52130
7.681	2.500	29.23500	.83368	.05959	-.01608	-.01719	-.00545	-.00403	.69839	.45916	1.52100
7.685	2.700	29.24000	.83388	.05957	-.01606	-.01879	-.00592	-.00439	.69853	.45930	1.52080
7.680	2.900	29.24800	.83401	.05953	-.01618	-.02028	-.00636	-.00476	.69860	.45943	1.52060
7.682	3.100	29.24900	.83378	.05951	-.01611	-.02176	-.00682	-.00507	.69840	.45931	1.52050
7.673	3.300	29.25800	.83385	.05948	-.01626	-.02347	-.00729	-.00548	.69841	.45943	1.52020
7.680	3.500	29.26400	.83414	.05949	-.01623	-.02406	-.00749	-.00560	.69860	.45965	1.51990

OA257 (LARC 20-M6-6559) OV102 LESS OMS & V.T. (R7E0B5) (10 JUL 81)

REFERENCE DATA

SREF =	2690.0000 SQ.FT.	XMRP =	1076.6800 IN.	XO	
LREF =	474.8100 INCHES	YMRP =	.0000 IN.	YO	
BREF =	936.6800 INCHES	ZMRP =	375.0000 IN.	ZO	
SCALE =	.0100				

PARAMETRIC DATA

ALPHA =	30.000	PHI =	.000
AILRON =	.000	YP =	1.000
1S =	1.000	ELEVON =	.000
MACH =	6.000	S-MODE =	2.000
S-DIR =	1.000		

RUN NO. 356/ 0 RN/L = 7.67 GRADIENT INTERVAL = -.60/ .60

RN/L	BETA	ALPHA	CN	CA	CLM	CY	CYN	CBL	CL	CD	L/D
7.674	3.688	29.27000	.83418	.05951	-.01622	-.02419	-.00755	-.00566	.69858	.45976	1.51940
	GRADIENT	.03114	.00136	.00011	.00001	-.00730	-.00219	-.00173	.00088	.00114	-.00189

OA257 (LARC 20-M6-6559) OV102 LESS OMS & V.T. (R7E1B5) (10 JUL 81)

REFERENCE DATA

SREF = 2690.0000 SQ.FT. XMRP = 1076.6800 IN. XO
LREF = 474.8100 INCHES YMRP = .0000 IN. YO
BREF = 936.6800 INCHES ZMRP = 375.0000 IN. ZO
SCALE = .0100

PARAMETRIC DATA

ALPHA = 30.000 PHI = .000
AILRON = .000 YP = 1.000
1S = 1.000 ELEVON = .000
MACH = 6.000 S-MODE = 2.000
S-DIR = 1.000

RUN NO. 2356/ 0 RN/L = 7.68 GRADIENT INTERVAL = -.60/ .60

RN/L	BETA	ALPHA	CN	CA	CLM	CY	CYN	CBL	CL	CD	L/D
7.659	-4.600	28.97700	.82011	.05959	-.01609	.03606	.01051	.00837	.68858	.44944	1.53210
7.668	-4.400	28.98700	.82098	.05958	-.01606	.03450	.01006	.00803	.68926	.44997	1.53180
7.663	-4.200	28.99200	.82149	.05957	-.01601	.03297	.00961	.00771	.68967	.45027	1.53170
7.673	-4.000	29.00000	.82215	.05951	-.01606	.03144	.00917	.00736	.69022	.45063	1.53170
7.665	-3.800	29.01000	.82257	.05959	-.01594	.02986	.00870	.00703	.69047	.45102	1.53090
7.643	-3.600	29.01400	.82307	.05959	-.01598	.02827	.00823	.00669	.69087	.45132	1.53080
7.656	-3.400	29.01700	.82372	.05956	-.01593	.02673	.00779	.00634	.69143	.45165	1.53090
7.650	-3.200	29.03100	.82406	.05965	-.01598	.02529	.00733	.00601	.69158	.45206	1.52980
7.668	-3.000	29.03600	.82461	.05962	-.01591	.02371	.00685	.00567	.69203	.45236	1.52980
7.700	-2.800	29.04700	.82516	.05970	-.01586	.02219	.00639	.00533	.69239	.45283	1.52900
7.698	-2.600	29.05200	.82574	.05971	-.01588	.02074	.00595	.00497	.69285	.45319	1.52880
7.714	-2.400	29.06300	.82628	.05967	-.01591	.01919	.00548	.00463	.69325	.45354	1.52850
7.710	-2.200	29.07300	.82680	.05973	-.01590	.01772	.00505	.00426	.69360	.45397	1.52780
7.696	-2.000	29.07600	.82722	.05976	-.01587	.01622	.00459	.00392	.69393	.45423	1.52770
7.687	-1.800	29.08400	.82783	.05977	-.01581	.01474	.00414	.00357	.69439	.45463	1.52740
7.687	-1.600	29.09500	.82795	.05982	-.01580	.01323	.00367	.00322	.69438	.45488	1.52650
7.692	-1.400	29.10000	.82848	.05976	-.01582	.01178	.00323	.00285	.69484	.45514	1.52670
7.681	-1.200	29.10700	.82916	.05976	-.01586	.01028	.00279	.00251	.69539	.45555	1.52650
7.670	-1.000	29.11500	.82963	.05973	-.01593	.00891	.00235	.00213	.69574	.45585	1.52630
7.668	-.800	29.12100	.82997	.05971	-.01591	.00735	.00189	.00177	.69600	.45607	1.52610
7.658	-.600	29.12600	.83042	.05966	-.01591	.00600	.00147	.00144	.69637	.45632	1.52610
7.672	-.400	29.13900	.83044	.05965	-.01589	.00438	.00099	.00106	.69629	.45646	1.52540
7.690	-.200	29.14300	.83065	.05967	-.01592	.00299	.00055	.00073	.69643	.45664	1.52510
7.696	.000	29.15400	.83101	.05974	-.01582	.00144	.00010	.00038	.69663	.45700	1.52440
7.683	.200	29.16000	.83137	.05975	-.01581	.00006	-.00032	.00003	.69690	.45726	1.52410
7.670	.400	29.16700	.83194	.05970	-.01583	-.00143	-.00075	-.00031	.69735	.45758	1.52400
7.664	.600	29.16900	.83163	.05974	-.01588	-.00294	-.00120	-.00067	.69705	.45749	1.52360
7.658	.800	29.17800	.83219	.05981	-.01588	-.00437	-.00163	-.00103	.69744	.45793	1.52300
7.652	1.000	29.18400	.83244	.05972	-.01594	-.00587	-.00207	-.00140	.69765	.45804	1.52310
7.669	1.200	29.19300	.83287	.05975	-.01602	-.00736	-.00251	-.00176	.69794	.45839	1.52260
7.673	1.400	29.20100	.83304	.05973	-.01604	-.00889	-.00294	-.00212	.69803	.45856	1.52220
7.660	1.600	29.20600	.83322	.05977	-.01608	-.01038	-.00341	-.00248	.69812	.45875	1.52180
7.678	1.800	29.21100	.83333	.05975	-.01607	-.01191	-.00387	-.00281	.69819	.45884	1.52160
7.664	2.000	29.22000	.83358	.05967	-.01606	-.01338	-.00432	-.00316	.69838	.45900	1.52150
7.656	2.200	29.22700	.83349	.05962	-.01612	-.01493	-.00477	-.00352	.69827	.45899	1.52130
7.672	2.400	29.22800	.83367	.05959	-.01611	-.01645	-.00523	-.00386	.69843	.45908	1.52140
7.693	2.600	29.24000	.83394	.05956	-.01608	-.01800	-.00569	-.00420	.69858	.45932	1.52090
7.679	2.800	29.24200	.83398	.05956	-.01614	-.01951	-.00613	-.00458	.69860	.45937	1.52080
7.684	3.000	29.24700	.83385	.05951	-.01618	-.02105	-.00659	-.00493	.69848	.45932	1.52070
7.675	3.200	29.25000	.83368	.05948	-.01615	-.02261	-.00705	-.00527	.69831	.45926	1.52050
7.678	3.400	29.26100	.83402	.05948	-.01624	-.02381	-.00741	-.00555	.69853	.45955	1.52000
7.677	3.600	29.26700	.83416	.05950	-.01622	-.02413	-.00752	-.00564	.69859	.45971	1.51960
	GRADIENT	.03607	.00131	.00007	.00006	-.00739	-.00221	-.00174	.00083	.00114	-.00202

OA257 (LARC 20-M6-6559) OV102 LESS VERT. TAIL (R7E0B6) (10 JUL 81)

REFERENCE DATA

SREF = 2690.0000 SQ.FT. XMRP = 1076.6800 IN. XO
LREF = 474.8100 INCHES YMRP = .0000 IN. YO
BREF = 936.6800 INCHES ZMRP = 375.0000 IN. ZO
SCALE = .0100

PARAMETRIC DATA

BETA = .000 PHI = .000
AILRON = .000 YP = .000
1S = 1.000 ELEVON = .000
MACH = 6.000 S-MODE = 1.000
S-DIR = 2.000

RUN NO. 365/ 0 RN/L = 7.53 GRADIENT INTERVAL = 23.00/ 25.00

RN/L	ALPHA	BETA	CN	CA	CLM	CY	CYN	CBL	CL	CD	L/D
7.498	-.305	-.07144	-.05029	.07832	-.03192	.00100	.00047	-.00006	-.04987	.07858	-.63460
7.406	-.276	-.04434	-.05054	.07837	-.03172	.00122	.00052	-.00004	-.05016	.07862	-.63800
7.581	-.033	.02930	-.04811	.07781	-.03148	-.00026	.00032	-.00002	-.04806	.07784	-.61750
7.452	.816	.02025	-.03143	.07565	-.02985	.00006	.00036	.00003	-.03250	.07520	-.43220
7.498	1.916	.02979	-.01084	.07334	-.02757	-.00000	.00032	.00006	-.01328	.07294	-.18213
7.454	2.641	.03006	.00303	.07179	-.02642	-.00006	.00030	.00005	-.00028	.07185	-.00396
7.525	3.720	.02931	.02433	.06923	-.02508	.00009	.00035	.00008	.01979	.07067	.28001
7.515	4.544	.03018	.04103	.06737	-.02391	.00017	.00034	.00008	.03556	.07041	.50509
7.488	5.399	.03039	.06015	.06559	-.02300	.00015	.00033	.00010	.05371	.07096	.75694
7.455	6.227	.03124	.07812	.06432	-.02198	-.00009	.00029	.00011	.07069	.07241	.97611
7.460	7.440	.03252	.10569	.06288	-.02025	-.00023	.00018	.00013	.09666	.07603	1.27130
7.490	8.523	.03060	.13067	.06190	-.01874	.00001	.00023	.00017	.12005	.08059	1.48970
7.492	9.401	.03224	.15288	.06117	-.01748	-.00009	.00018	.00018	.14084	.08532	1.65070
7.461	10.109	.03242	.16972	.06070	-.01650	-.00037	.00012	.00021	.15643	.08955	1.74690
7.455	11.079	.03282	.19416	.06005	-.01547	-.00011	.00013	.00020	.17900	.09624	1.85990
7.484	12.342	.03390	.22773	.05930	-.01399	-.00034	.00006	.00025	.20980	.10661	1.96790
7.578	13.211	.03353	.25180	.05903	-.01276	-.00052	.00004	.00024	.23164	.11502	2.01400
7.589	14.231	.03361	.28175	.05851	-.01193	-.00025	.00008	.00023	.25872	.12597	2.05380
7.569	15.321	.03195	.31506	.05843	-.01080	-.00002	.00010	.00024	.28843	.13960	2.06610
7.573	16.597	.03301	.35473	.05824	-.00962	-.00002	.00009	.00025	.32331	.15714	2.05750
7.589	17.668	.03450	.38927	.05821	-.00887	-.00035	.00000	.00025	.35325	.17361	2.03470
7.592	18.538	.03362	.41705	.05821	-.00854	.00005	.00001	.00024	.37690	.18778	2.00710
7.531	19.285	.04002	.44173	.05838	-.00830	.00002	-.00003	.00022	.39767	.20099	1.97850
7.614	20.228	.04531	.47522	.05839	-.00818	-.00007	-.00004	.00021	.42572	.21910	1.94300
7.628	21.557	.04636	.52277	.05840	-.00837	-.00015	-.00003	.00022	.46474	.24640	1.88610
7.662	22.518	.04582	.55859	.05863	-.00848	.00038	.00002	.00021	.49355	.26808	1.84100
7.615	23.659	.04485	.60115	.05870	-.00896	.00003	-.00001	.00019	.52706	.29501	1.78660
7.579	24.418	.04620	.63293	.05896	-.00959	-.00016	-.00001	.00014	.55195	.31533	1.75040
	GRADIENT	.00177	.04187	.00033	-.00083	-.00025	.00000	-.00006	.03279	.02677	-.04769

OA257 (LARC 20-M6-6559) OV102 LESS VERT. TAIL (R7E0B7) (10 JUL 81)

REFERENCE DATA

SREF = 2690.0000 SQ.FT. XMRP = 1076.6800 IN. XO
LREF = 474.8100 INCHES YMRP = .0000 IN. YO
BREF = 936.6800 INCHES ZMRP = 375.0000 IN. ZO
SCALE = .0100

PARAMETRIC DATA

BETA = .000 PHI = .000
AILRON = .000 YP = .000
1S = 1.000 ELEVON = .000
MACH = 6.000 S-MODE = 1.000
S-DIR = 2.000

RUN NO. 364/ 0 RN/L = 7.39 GRADIENT INTERVAL = 23.00/ 25.00

RN/L	ALPHA	BETA	CN	CA	CLM	CY	CYN	CBL	CL	CD	L/D
7.356	14.000	-.20245	.27954	.05880	-.01181	.00130	.00027	.00037	.25701	.12469	2.06130
7.507	14.432	-.20094	.28606	.05889	-.01176	.00059	.00025	.00027	.26235	.12832	2.04440
7.373	14.596	-.20156	.27961	.05865	-.01188	.00104	.00023	.00035	.25580	.12721	2.01080
7.377	15.582	-.20119	.32008	.05843	-.01033	.00109	.00018	.00036	.29262	.14227	2.05690
7.355	16.696	-.20273	.35828	.05820	-.00950	.00113	.00024	.00037	.32646	.15868	2.05730
7.354	17.682	-.18603	.38928	.05822	-.00892	.00104	.00017	.00037	.35321	.17371	2.03330
7.385	18.580	-.06728	.41953	.05830	-.00833	.00009	-.00008	.00023	.37909	.18893	2.00640
7.357	19.380	-.05606	.44795	.05819	-.00799	.00024	-.00014	.00019	.40326	.20354	1.98120
7.341	20.396	-.04605	.48681	.05833	-.00771	.00018	-.00013	.00022	.43596	.22433	1.94340
7.345	21.547	-.04086	.52848	.05839	-.00802	.00042	-.00010	.00022	.47010	.24840	1.89250
7.318	22.501	-.04683	.56420	.05852	-.00819	.00023	-.00017	.00020	.49885	.26998	1.84770
7.348	23.266	-.04564	.59268	.05850	-.00823	.00035	-.00010	.00018	.52138	.28786	1.81120
7.369	23.966	-.04208	.62001	.05867	-.00843	.00024	-.00014	.00016	.54272	.30546	1.77670
7.385	25.139	-.04133	.65958	.05867	-.00931	-.00008	-.00016	.00009	.57219	.33331	1.71670
7.377	25.935	-.04519	.69744	.05889	-.00989	.00003	-.00020	.00011	.60144	.35798	1.68010
7.391	26.922	-.04321	.73871	.05883	-.01121	.00017	-.00023	.00010	.63201	.38692	1.63340
7.389	27.991	-.04398	.78146	.05886	-.01247	.00024	-.00027	.00013	.66243	.41874	1.58190
7.389	28.617	-.03797	.80790	.05859	-.01366	.00020	-.00027	.00010	.68115	.43838	1.55380
7.390	29.653	-.04477	.85144	.05855	-.01566	.00029	-.00031	.00012	.71096	.47213	1.50590
7.396	31.031	-.04644	.91195	.05861	-.01851	.00040	-.00026	.00007	.75122	.52034	1.44370
7.406	31.950	-.04607	.95321	.05880	-.02049	.00061	-.00023	.00011	.77770	.55431	1.40300
7.411	32.793	-.04672	.98790	.05894	-.02224	.00077	-.00019	.00015	.79854	.58460	1.36600
7.463	33.636	-.04639	1.02710	.05935	-.02397	.00068	-.00021	.00022	.82226	.61833	1.32980
7.413	35.012	-.04753	1.08490	.05938	-.02768	.00092	-.00012	.00021	.85447	.67108	1.27330
7.432	35.951	-.04824	1.12980	.05946	-.03034	.00083	-.00013	.00023	.87972	.71146	1.23650
7.423	36.802	-.04698	1.16930	.05926	-.03330	.00100	-.00008	.00023	.90077	.74791	1.20440
7.438	37.790	-.05327	1.21370	.05918	-.03624	.00139	.00001	.00032	.92284	.79045	1.16750
7.391	38.696	-.05947	1.25580	.05911	-.03896	.00112	-.00003	.00034	.94317	.83125	1.13460
	GRADIENT	.00508	.03904	.00024	-.00029	-.00015	-.00006	-.00002	.03049	.02514	-.04928

OA257 (LARC 20-M6-6559) OV102 LESS VERT. TAIL (R7E0B8) (10 JUL 81)

REFERENCE DATA

SREF = 2690.0000 SQ.FT. XMRP = 1076.6800 IN. XO
LREF = 474.8100 INCHES YMRP = .0000 IN. YO
BREF = 936.6800 INCHES ZMRP = 375.0000 IN. ZO
SCALE = .0100

PARAMETRIC DATA

BETA = -.500 PHI = .000
AILRON = .000 YP = .000
1S = 1.000 ELEVON = .000
MACH = 6.000 S-MODE = 1.000
S-DIR = 2.000

RUN NO. 366/ 0 RN/L = 7.54 GRADIENT INTERVAL = 23.00/ 25.00

RN/L	ALPHA	BETA	CN	CA	CLM	CY	CYN	CBL	CL	CD	L/D
7.721	-.047	-.48285	-.04868	.07784	-.03178	.00487	.00127	-.00034	-.04862	.07788	-.62432
7.463	.102	-.47572	.00317	-.00009	-.00002	.00109	.00004	.00001	.00317	-.00009	-36.57100
7.488	.181	-.51559	-.04746	.07768	-.03155	.00574	.00132	-.00029	-.04770	.07753	-.61530
7.468	1.381	-.51424	-.02289	.07475	-.02876	.00535	.00126	-.00019	-.02468	.07418	-.33270
7.478	2.510	-.51578	-.00124	.07230	-.02663	.00533	.00131	-.00011	-.00441	.07218	-.06110
7.485	3.563	-.51434	.01912	.06991	-.02515	.00505	.00133	-.00003	.01474	.07096	.20769
7.464	4.702	-.51333	.04397	.06719	-.02400	.00474	.00129	.00005	.03831	.07057	.54289
7.460	5.573	-.51385	.06255	.06539	-.02273	.00488	.00132	.00013	.05590	.07115	.78569
7.372	6.825	-.51292	.08707	.06356	-.02140	.00504	.00123	.00021	.07890	.07346	1.07400
7.405	8.308	-.51144	.11927	.06214	-.01943	.00496	.00109	.00032	.10904	.07873	1.38500
7.483	9.212	-.51233	.15153	.06134	-.01772	.00523	.00110	.00040	.13976	.08480	1.64800
7.489	10.812	-.51169	.18545	.06017	-.01595	.00507	.00108	.00048	.17087	.09389	1.81990
7.482	12.033	-.51108	.21954	.05924	-.01428	.00476	.00109	.00055	.20237	.10371	1.95130
7.475	13.331	-.50988	.25298	.05865	-.01295	.00472	.00109	.00064	.23263	.11540	2.01580
7.510	14.316	-.50896	.28513	.05838	-.01159	.00458	.00103	.00071	.26184	.12707	2.06060
7.529	15.274	-.50914	.31320	.05814	-.01084	.00472	.00101	.00076	.28682	.13859	2.06950
7.522	16.543	-.51123	.35313	.05806	-.00959	.00508	.00107	.00083	.32199	.15621	2.06130
7.515	17.746	-.50951	.39263	.05800	-.00887	.00475	.00097	.00089	.35626	.17492	2.03670
7.442	19.078	-.50882	.43566	.05807	-.00817	.00500	.00087	.00091	.39275	.19728	1.99080
7.460	20.129	-.50866	.47353	.05817	-.00792	.00515	.00095	.00096	.42458	.21758	1.95140
7.470	21.327	-.50834	.51721	.05819	-.00795	.00485	.00088	.00101	.46063	.24231	1.90100
7.543	22.789	-.50894	.56994	.05819	-.00827	.00502	.00090	.00106	.50291	.27440	1.83270
7.523	24.100	-.50717	.62219	.05855	-.00888	.00490	.00086	.00111	.54405	.30751	1.76920
7.534	24.788	-.50818	.64764	.05851	-.00937	.00495	.00087	.00111	.56344	.32465	1.73550
7.504	26.107	-.50757	.70056	.05858	-.01069	.00491	.00083	.00113	.60330	.36088	1.67180
7.556	27.631	-.50629	.76377	.05848	-.01252	.00491	.00081	.00115	.64954	.40604	1.59970
7.603	28.780	-.50658	.81143	.05842	-.01436	.00490	.00085	.00115	.68307	.44186	1.54590
7.640	30.277	-.50686	.87446	.05877	-.01710	.00473	.00094	.00114	.72555	.49164	1.47580
7.622	31.554	-.50757	.93040	.05901	-.01993	.00476	.00105	.00123	.76196	.53716	1.41850
7.678	32.593	-.50462	.97559	.05927	-.02211	.00481	.00107	.00130	.79002	.57546	1.37290
7.665	33.652	-.50515	1.02330	.05909	-.02509	.00479	.00115	.00131	.81908	.61626	1.32910
7.681	35.032	-.50411	1.08480	.05925	-.02875	.00450	.00112	.00135	.85424	.67122	1.27270
7.707	36.282	-.50469	1.13890	.05921	-.03239	.00466	.00117	.00140	.88303	.72167	1.22360
7.657	37.230	-.49480	1.17990	.05893	-.03497	.00501	.00126	.00147	.90383	.76080	1.18800
7.621	38.900	-.48980	1.25830	.05857	-.04066	.00534	.00136	.00159	.94251	.83577	1.12770
	GRADIENT	-.00147	.03699	-.00005	-.00071	.00008	.00001	.00001	.02818	.02491	-.04898

OA257 (LARC 20-M6-6559) OV102 LESS VERT. TAIL (R7E0B9) (10 JUL 81)

REFERENCE DATA

SREF = 2690.0000 SQ.FT. XMRP = 1076.6800 IN. XO
LREF = 474.8100 INCHES YMRP = .0000 IN. YO
BREF = 936.6800 INCHES ZMRP = 375.0000 IN. ZO
SCALE = .0100

PARAMETRIC DATA

BETA = .500 PHI = .000
AILRON = .000 YP = .000
1S = 1.000 ELEVON = .000
MACH = 6.000 S-MODE = 1.000
S-DIR = 2.000

RUN NO. 367/ 0 RN/L = 7.53 GRADIENT INTERVAL = 23.00/ 25.00

RN/L	ALPHA	BETA	CN	CA	CLM	CY	CYN	CBL	CL	CD	L/D
7.371	-.508	.59413	-.05356	.07900	-.03221	-.00485	-.00070	.00034	-.05285	.07947	-.66510
7.679	-.117	.52410	-.05052	.07823	-.03158	-.00445	-.00050	.00020	-.05036	.07834	-.64290
7.668	-.005	.50440	-.04973	.07812	-.03156	-.00452	-.00051	.00021	-.04973	.07813	-.63650
7.390	.086	.59570	-.05378	.07873	-.03210	-.00494	-.00073	.00033	-.05390	.07865	-.68527
7.395	1.321	.59363	-.02705	.07550	-.02897	-.00486	-.00063	.00029	-.02879	.07486	-.38452
7.368	2.579	.59391	-.00241	.07258	-.02662	-.00487	-.00078	.00024	-.00567	.07239	-.07832
7.353	3.680	.59416	.01931	.07011	-.02511	-.00458	-.00077	.00020	.01477	.07120	.20744
7.390	4.922	.59345	.04784	.06699	-.02331	-.00456	-.00080	.00017	.04191	.07084	.59160
7.394	6.243	.59366	.07578	.06453	-.02188	-.00455	-.00072	.00010	.06831	.07239	.94372
7.464	7.245	.59302	.09850	.06333	-.02048	-.00468	-.00072	.00005	.08973	.07524	1.19250
7.468	8.633	.59390	.13308	.06201	-.01864	-.00468	-.00071	.00003	.12226	.08128	1.50420
7.470	9.726	.59382	.15918	.06103	-.01713	-.00446	-.00075	.00003	.14658	.08705	1.68390
7.460	10.838	.59364	.18840	.06034	-.01564	-.00436	-.00076	.00000	.17369	.09469	1.83440
7.449	11.916	.59219	.21556	.05960	-.01430	-.00409	-.00078	-.00002	.19861	.10282	1.93150
7.401	13.202	.59317	.25227	.05909	-.01253	-.00407	-.00080	-.00006	.23211	.11514	2.01580
7.403	14.510	.59375	.28996	.05854	-.01137	-.00408	-.00087	-.00010	.26604	.12933	2.05710
7.427	15.657	.59367	.32571	.05836	-.00998	-.00427	-.00093	-.00015	.29788	.14410	2.06720
7.533	16.724	.59380	.35993	.05823	-.00924	-.00399	-.00088	-.00019	.32795	.15935	2.05810
7.534	17.970	.59412	.39717	.05815	-.00839	-.00390	-.00095	-.00025	.35986	.17784	2.02350
7.481	19.222	.59362	.43885	.05821	-.00779	-.00399	-.00101	-.00029	.39522	.19944	1.98160
7.603	20.463	.59518	.47263	.05800	-.00772	-.00394	-.00106	-.00032	.42253	.21958	1.92430
7.578	21.457	.59345	.52042	.05827	-.00794	-.00350	-.00098	-.00035	.46304	.24461	1.89300
7.516	22.898	.59264	.57491	.05848	-.00820	-.00346	-.00093	-.00046	.50685	.27756	1.82610
7.470	24.226	.59129	.62686	.05855	-.00880	-.00342	-.00092	-.00051	.54762	.31062	1.76300
7.559	25.170	.59426	.66316	.05855	-.00936	-.00390	-.00103	-.00056	.57529	.33504	1.71710
7.555	26.420	.59239	.71333	.05866	-.01073	-.00327	-.00097	-.00062	.61272	.36993	1.65630
7.451	27.854	.59350	.76999	.05850	-.01245	-.00347	-.00111	-.00063	.65344	.41148	1.58800
7.573	29.159	.59485	.82686	.05843	-.01476	-.00325	-.00119	-.00064	.69360	.45391	1.52810
7.616	30.250	.59223	.87562	.05888	-.01675	-.00307	-.00116	-.00068	.72673	.49198	1.47710
7.756	31.657	.58215	.93300	.05927	-.01953	-.00284	-.00107	-.00068	.76307	.54012	1.41280
7.759	32.974	.58410	.99186	.05937	-.02251	-.00275	-.00111	-.00064	.79977	.58964	1.35640
7.794	34.065	.58065	1.04100	.05931	-.02539	-.00242	-.00101	-.00067	.82912	.63222	1.31150
7.739	35.091	.58077	1.08710	.05929	-.02847	-.00249	-.00103	-.00072	.85546	.67348	1.27020
7.710	35.972	.58111	1.12270	.05907	-.03074	-.00270	-.00105	-.00072	.87395	.70729	1.23560
7.686	37.213	.57983	1.17900	.05904	-.03453	-.00249	-.00097	-.00078	.90324	.76005	1.18840
7.629	38.951	.57801	1.26000	.05858	-.04012	-.00190	-.00090	-.00071	.94309	.83769	1.12580
	GRADIENT	.00000	.00000	.00000	.00000	.00000	.00000	.00000	.00000	.00000	.00000

OA257 (LARC 20-M6-6559) OV102 LESS VERT. TAIL (R7EOC1) (10 JUL 81)

REFERENCE DATA

SREF = 2690.0000 SQ.FT. XMRP = 1076.6800 IN. XO
LREF = 474.8100 INCHES YMRP = .0000 IN. YO
BREF = 936.6800 INCHES ZMRP = 375.0000 IN. ZO
SCALE = .0100

PARAMETRIC DATA

ALPHA = 15.000 PHI = .000
AILRON = .000 YP = 1.000
1S = 1.000 ELEVON = .000
MACH = 6.000 S-MODE = 2.000
S-DIR = 1.000

RUN NO. 374/ 0 RN/L = 7.49 GRADIENT INTERVAL = -.60/ .60

RN/L	BETA	ALPHA	CN	CA	CLM	CY	CYN	CBL	CL	CD	L/D
7.428	-4.319	14.49100	.29175	.06098	-.01267	.03860	.00814	.00348	.26720	.13205	2.02360
7.407	-4.200	14.49800	.29174	.06086	-.01268	.03759	.00793	.00342	.26721	.13196	2.02500
7.449	-4.000	14.49900	.29177	.06079	-.01263	.03574	.00754	.00330	.26726	.13191	2.02610
7.460	-3.800	14.49900	.29175	.06062	-.01264	.03394	.00715	.00317	.26728	.13173	2.02900
7.470	-3.600	14.50300	.29203	.06045	-.01258	.03210	.00677	.00303	.26759	.13166	2.03240
7.472	-3.400	14.50500	.29237	.06026	-.01243	.03031	.00641	.00291	.26796	.13157	2.03670
7.480	-3.200	14.51000	.29279	.06014	-.01232	.02859	.00604	.00277	.26838	.13158	2.03970
7.466	-3.000	14.51200	.29259	.06011	-.01239	.02672	.00564	.00263	.26819	.13151	2.03930
7.487	-2.800	14.51600	.29267	.05998	-.01233	.02495	.00527	.00248	.26829	.13143	2.04140
7.517	-2.600	14.52200	.29287	.05985	-.01231	.02313	.00489	.00235	.26850	.13138	2.04380
7.505	-2.400	14.52500	.29304	.05980	-.01235	.02136	.00452	.00220	.26868	.13138	2.04500
7.495	-2.200	14.52900	.29338	.05972	-.01232	.01962	.00418	.00205	.26901	.13141	2.04720
7.499	-2.000	14.53400	.29348	.05963	-.01223	.01793	.00384	.00190	.26913	.13138	2.04850
7.498	-1.800	14.53600	.29350	.05956	-.01227	.01604	.00344	.00175	.26916	.13132	2.04970
7.516	-1.600	14.54200	.29348	.05946	-.01214	.01427	.00307	.00159	.26915	.13124	2.05070
7.523	-1.400	14.54500	.29355	.05942	-.01212	.01253	.00270	.00143	.26922	.13124	2.05140
7.543	-1.200	14.54900	.29363	.05934	-.01209	.01083	.00235	.00127	.26931	.13120	2.05260
7.551	-1.000	14.55400	.29410	.05932	-.01209	.00909	.00201	.00111	.26976	.13133	2.05410
7.544	-.800	14.55800	.29415	.05931	-.01198	.00736	.00164	.00095	.26979	.13134	2.05410
7.538	-.600	14.56200	.29416	.05929	-.01198	.00563	.00127	.00077	.26980	.13135	2.05410
7.532	-.400	14.56500	.29417	.05927	-.01194	.00394	.00093	.00062	.26982	.13134	2.05430
7.544	-.200	14.56900	.29421	.05931	-.01194	.00228	.00054	.00045	.26983	.13140	2.05340
7.534	.000	14.57100	.29431	.05931	-.01197	.00052	.00017	.00029	.26992	.13144	2.05360
7.542	.200	14.57500	.29432	.05932	-.01201	-.00124	-.00019	.00012	.26992	.13147	2.05310
7.517	.400	14.57700	.29461	.05940	-.01201	-.00301	-.00057	-.00003	.27017	.13163	2.05250
7.509	.600	14.58100	.29472	.05939	-.01206	-.00465	-.00091	-.00020	.27028	.13167	2.05260
7.493	.800	14.58300	.29472	.05944	-.01204	-.00646	-.00128	-.00037	.27026	.13174	2.05150
7.499	1.000	14.58800	.29468	.05948	-.01203	-.00835	-.00165	-.00054	.27019	.13179	2.05020
7.476	1.200	14.59000	.29484	.05953	-.01201	-.00997	-.00200	-.00071	.27034	.13188	2.04990
7.498	1.400	14.59400	.29475	.05955	-.01207	-.01165	-.00235	-.00087	.27023	.13190	2.04880
7.502	1.600	14.60000	.29496	.05965	-.01214	-.01339	-.00269	-.00102	.27040	.13208	2.04730
7.489	1.800	14.60000	.29494	.05972	-.01218	-.01515	-.00305	-.00119	.27036	.13214	2.04610
7.486	2.000	14.60500	.29527	.05978	-.01225	-.01687	-.00341	-.00136	.27065	.13230	2.04570
7.483	2.200	14.60900	.29520	.05985	-.01223	-.01868	-.00375	-.00152	.27056	.13237	2.04390
7.481	2.400	14.61200	.29525	.05994	-.01219	-.02048	-.00411	-.00168	.27058	.13248	2.04240
7.493	2.600	14.61700	.29534	.06001	-.01221	-.02224	-.00448	-.00182	.27063	.13260	2.04100
7.488	2.800	14.62000	.29534	.06008	-.01224	-.02407	-.00484	-.00199	.27061	.13269	2.03950
7.509	3.000	14.62300	.29559	.06014	-.01233	-.02583	-.00520	-.00213	.27083	.13282	2.03910
7.481	3.200	14.62700	.29563	.06029	-.01237	-.02779	-.00557	-.00229	.27083	.13299	2.03650
7.475	3.400	14.63100	.29565	.06038	-.01232	-.02937	-.00592	-.00243	.27081	.13310	2.03460
7.481	3.600	14.63300	.29572	.06050	-.01230	-.03117	-.00630	-.00258	.27085	.13324	2.03270
7.459	3.800	14.63700	.29563	.06061	-.01238	-.03294	-.00667	-.00273	.27072	.13335	2.03010

OA257 (LARC 20-M6-6559) OV102 LESS VERT. TAIL (R7EOC1) (10 JUL 81)

REFERENCE DATA

SREF = 2690.0000 SQ.FT. XMRP = 1076.6800 IN. XO
LREF = 474.8100 INCHES YMRP = .0000 IN. YO
BREF = 936.6800 INCHES ZMRP = 375.0000 IN. ZO
SCALE = .0100

PARAMETRIC DATA

ALPHA = 15.000 PHI = .000
AILRON = .000 YP = 1.000
1S = 1.000 ELEVON = .000
MACH = 6.000 S-MODE = 2.000
S-DIR = 1.000

RUN NO. 374/ 0 RN/L = 7.49 GRADIENT INTERVAL = -.60/ .60

RN/L	BETA	ALPHA	CN	CA	CLM	CY	CYN	CBL	CL	CD	L/D
7.439	4.000	14.64000	.29567	.06073	-.01238	-.03478	-.00706	-.00286	.27072	.13348	2.02820
7.431	4.169	14.63700	.29554	.06073	-.01238	-.03616	-.00735	-.00299	.27060	.13344	2.02790
	GRADIENT	.01554	.00048	.00010	-.00008	-.00862	-.00183	-.00081	.00040	.00029	-.00150

OA257 (LARC 20-M6-6559) OV102 LESS VERT. TAIL (R7E1C1) (10 JUL 81)

REFERENCE DATA

SREF = 2690.0000 SQ.FT. XMRP = 1076.6800 IN. XO
LREF = 474.8100 INCHES YMRP = .0000 IN. YO
BREF = 936.6800 INCHES ZMRP = 375.0000 IN. ZO
SCALE = .0100

PARAMETRIC DATA

ALPHA = 15.000 PHI = .000
AILRON = .000 YP = 1.000
1S = 1.000 ELEVON = .000
MACH = 6.000 S-MODE = 2.000
S-DIR = 1.000

RUN NO. 2374/ O RN/L = 7.49 GRADIENT INTERVAL = -.60/ .60

RN/L	BETA	ALPHA	CN	CA	CLM	CY	CYN	CBL	CL	CD	L/D
7.424	-4.300	14.49200	.29165	.06093	-.01266	.03843	.00811	.00349	.26712	.13197	2.02410
7.424	-4.100	14.49800	.29159	.06085	-.01273	.03668	.00774	.00335	.26707	.13192	2.02460
7.451	-3.900	14.49700	.29185	.06068	-.01264	.03484	.00734	.00323	.26737	.13181	2.02840
7.470	-3.700	14.50200	.29206	.06051	-.01259	.03302	.00696	.00310	.26760	.13171	2.03170
7.466	-3.500	14.50300	.29220	.06039	-.01245	.03116	.00657	.00297	.26776	.13164	2.03410
7.475	-3.300	14.50900	.29246	.06021	-.01227	.02943	.00621	.00284	.26805	.13156	2.03750
7.475	-3.100	14.51000	.29251	.06011	-.01235	.02765	.00584	.00270	.26812	.13148	2.03920
7.481	-2.900	14.51500	.29260	.05994	-.01237	.02583	.00547	.00256	.26824	.13137	2.04190
7.500	-2.700	14.51800	.29289	.05991	-.01240	.02407	.00509	.00241	.26852	.13142	2.04320
7.506	-2.500	14.52200	.29305	.05985	-.01235	.02231	.00471	.00227	.26868	.13142	2.04440
7.495	-2.300	14.52400	.29313	.05977	-.01231	.02044	.00434	.00212	.26877	.13137	2.04590
7.502	-2.100	14.53000	.29320	.05967	-.01223	.01876	.00400	.00198	.26885	.13132	2.04730
7.496	-1.900	14.53300	.29348	.05956	-.01220	.01700	.00365	.00182	.26914	.13130	2.04990
7.507	-1.700	14.53900	.29351	.05954	-.01224	.01517	.00325	.00168	.26917	.13132	2.04980
7.513	-1.500	14.54400	.29365	.05944	-.01217	.01334	.00288	.00151	.26932	.13128	2.05140
7.543	-1.300	14.54800	.29370	.05941	-.01212	.01174	.00255	.00135	.26936	.13128	2.05180
7.542	-1.100	14.55200	.29397	.05938	-.01211	.00994	.00218	.00119	.26962	.13134	2.05280
7.548	-.900	14.55400	.29393	.05930	-.01202	.00821	.00182	.00103	.26960	.13126	2.05390
7.544	-.700	14.56000	.29379	.05932	-.01206	.00645	.00145	.00086	.26944	.13127	2.05260
7.528	-.500	14.56300	.29400	.05929	-.01200	.00474	.00109	.00070	.26964	.13131	2.05340
7.550	-.300	14.56700	.29418	.05927	-.01194	.00309	.00074	.00054	.26981	.13135	2.05410
7.531	-.100	14.57000	.29449	.05929	-.01198	.00148	.00037	.00037	.27011	.13147	2.05450
7.542	.100	14.57200	.29443	.05932	-.01202	-.00037	-.00002	.00021	.27004	.13149	2.05370
7.518	.300	14.57500	.29442	.05936	-.01198	-.00209	-.00037	.00004	.27001	.13155	2.05260
7.511	.500	14.57800	.29420	.05945	-.01200	-.00387	-.00075	-.00012	.26976	.13159	2.05010
7.501	.700	14.58300	.29461	.05938	-.01203	-.00554	-.00109	-.00027	.27017	.13164	2.05240
7.498	.900	14.58500	.29468	.05943	-.01202	-.00739	-.00146	-.00045	.27022	.13172	2.05140
7.484	1.100	14.59000	.29485	.05948	-.01203	-.00912	-.00182	-.00062	.27036	.13183	2.05080
7.481	1.300	14.59200	.29480	.05953	-.01208	-.01079	-.00217	-.00079	.27029	.13188	2.04960
7.516	1.500	14.59600	.29497	.05964	-.01214	-.01257	-.00254	-.00094	.27042	.13205	2.04790
7.489	1.700	14.59800	.29490	.05972	-.01213	-.01427	-.00286	-.00110	.27033	.13212	2.04600
7.484	1.900	14.60300	.29496	.05972	-.01215	-.01607	-.00324	-.00127	.27038	.13216	2.04590
7.487	2.100	14.60600	.29520	.05980	-.01224	-.01785	-.00359	-.00144	.27058	.13231	2.04520
7.483	2.300	14.61200	.29527	.05986	-.01222	-.01958	-.00393	-.00160	.27062	.13241	2.04380
7.485	2.500	14.61500	.29535	.05997	-.01226	-.02122	-.00428	-.00175	.27066	.13255	2.04190
7.485	2.700	14.61900	.29542	.06005	-.01224	-.02319	-.00466	-.00191	.27070	.13267	2.04040
7.502	2.900	14.62100	.29540	.06018	-.01232	-.02489	-.00502	-.00207	.27064	.13279	2.03810
7.491	3.100	14.62700	.29550	.06025	-.01230	-.02678	-.00537	-.00221	.27071	.13292	2.03670
7.484	3.300	14.62900	.29556	.06035	-.01233	-.02866	-.00576	-.00235	.27074	.13304	2.03500
7.473	3.500	14.63400	.29551	.06043	-.01229	-.03020	-.00609	-.00250	.27066	.13313	2.03310
7.471	3.700	14.63700	.29571	.06058	-.01231	-.03211	-.00649	-.00265	.27080	.13334	2.03090
7.446	3.900	14.64000	.29558	.06074	-.01249	-.03378	-.00685	-.00281	.27063	.13348	2.02750

OA257 (LARC 20-M6-6559) OV102 LESS VERT. TAIL (R7E1C1) (10 JUL 81)

REFERENCE DATA

SREF =	2690.0000 SQ.FT.	XMRP =	1076.6800 IN. XO		
LREF =	474.8100 INCHES	YMRP =	.0000 IN. YO		
BREF =	936.6800 INCHES	ZMRP =	375.0000 IN. ZO		
SCALE =	.0100				

PARAMETRIC DATA

ALPHA =	15.000	PHI =	.000
AILRON =	.000	YP =	1.000
1S =	1.000	ELEVON =	.000
MACH =	6.000	S-MODE =	2.000
S-DIR =	1.000		

RUN NO. 2374/ 0 RN/L = 7.49 GRADIENT INTERVAL = -.60/ .60

RN/L	BETA	ALPHA	CN	CA	CLM	CY	CYN	CBL	CL	CD	L/D
7.426	4.100	14.63700	.29580	.06077	-.01247	-.03572	-.00724	-.00294	.27085	.13354	2.02810
	GRADIENT	.01443	.00024	.00015	-.00002	-.00863	-.00185	-.00082	.00016	.00029	-.00311

OA257 (LARC 20-M6-6559) OV102 LESS VERT. TAIL (R7EOC2) (10 JUL 81)

REFERENCE DATA

SREF = 2690.0000 SQ.FT. XMRP = 1076.6800 IN. XO
LREF = 474.8100 INCHES YMRP = .0000 IN. YO
BREF = 936.6800 INCHES ZMRP = 375.0000 IN. ZO
SCALE = .0100

PARAMETRIC DATA

ALPHA = 20.000 PHI = .000
AILRON = .000 YP = 1.000
1S = 1.000 ELEVON = .000
MACH = 6.000 S-MODE = 2.000
S-DIR = 1.000

RUN NO. 370/ 0 RN/L = 7.56 GRADIENT INTERVAL = -.60/ .60

RN/L	BETA	ALPHA	CN	CA	CLM	CY	CYN	CBL	CL	CD	L/D
7.555	-4.458	19.17800	.44059	.05995	-.00930	.03919	.00843	.00545	.39645	.20136	1.96880
7.535	-4.300	19.18900	.44094	.05994	-.00928	.03800	.00817	.00530	.39674	.20154	1.96850
7.543	-4.100	19.19200	.44106	.05982	-.00926	.03620	.00778	.00511	.39688	.20149	1.96970
7.555	-3.900	19.19300	.44122	.05971	-.00914	.03457	.00743	.00489	.39707	.20145	1.97110
7.543	-3.700	19.19700	.44138	.05963	-.00920	.03280	.00704	.00469	.39723	.20144	1.97190
7.542	-3.500	19.20000	.44161	.05949	-.00910	.03096	.00664	.00447	.39748	.20141	1.97350
7.543	-3.300	19.20500	.44199	.05946	-.00906	.02931	.00628	.00426	.39783	.20154	1.97400
7.539	-3.100	19.20900	.44215	.05933	-.00910	.02753	.00588	.00404	.39801	.20151	1.97520
7.536	-2.900	19.21400	.44232	.05928	-.00897	.02579	.00551	.00381	.39817	.20155	1.97560
7.530	-2.700	19.21900	.44246	.05915	-.00899	.02403	.00513	.00356	.39833	.20150	1.97680
7.548	-2.500	19.22500	.44271	.05908	-.00894	.02221	.00474	.00333	.39857	.20156	1.97740
7.541	-2.300	19.22800	.44288	.05903	-.00894	.02062	.00439	.00310	.39873	.20159	1.97790
7.555	-2.100	19.23300	.44281	.05898	-.00879	.01882	.00400	.00287	.39867	.20155	1.97800
7.560	-1.900	19.23700	.44312	.05890	-.00880	.01701	.00360	.00264	.39897	.20161	1.97890
7.550	-1.700	19.24100	.44343	.05886	-.00879	.01531	.00320	.00239	.39926	.20170	1.97950
7.544	-1.500	19.24600	.44351	.05885	-.00875	.01370	.00285	.00215	.39932	.20176	1.97920
7.548	-1.300	19.25100	.44364	.05879	-.00872	.01200	.00243	.00191	.39944	.20177	1.97970
7.571	-1.100	19.26000	.44397	.05880	-.00866	.01032	.00207	.00168	.39973	.20196	1.97920
7.553	-.900	19.26400	.44387	.05877	-.00871	.00851	.00167	.00142	.39963	.20192	1.97910
7.557	-.700	19.27000	.44429	.05872	-.00869	.00692	.00132	.00119	.40002	.20205	1.97980
7.549	-.500	19.27400	.44421	.05869	-.00865	.00519	.00096	.00096	.39994	.20203	1.97960
7.551	-.300	19.27800	.44428	.05864	-.00869	.00352	.00061	.00072	.40001	.20204	1.97990
7.542	-.100	19.28300	.44453	.05868	-.00857	.00176	.00024	.00049	.40021	.20218	1.97940
7.558	.100	19.28800	.44461	.05863	-.00855	.00001	-.00010	.00025	.40029	.20220	1.97960
7.562	.300	19.29300	.44460	.05855	-.00846	-.00165	-.00044	.00002	.40028	.20216	1.98000
7.564	.500	19.29800	.44466	.05852	-.00844	-.00339	-.00079	-.00020	.40034	.20219	1.98000
7.560	.700	19.30300	.44490	.05854	-.00845	-.00520	-.00115	-.00044	.40054	.20232	1.97980
7.574	.900	19.31300	.44528	.05861	-.00853	-.00695	-.00152	-.00069	.40083	.20258	1.97870
7.547	1.100	19.31400	.44561	.05870	-.00862	-.00863	-.00190	-.00094	.40112	.20278	1.97810
7.546	1.300	19.31600	.44548	.05875	-.00864	-.01045	-.00229	-.00119	.40097	.20280	1.97720
7.544	1.500	19.32000	.44562	.05881	-.00869	-.01203	-.00262	-.00142	.40107	.20293	1.97640
7.555	1.700	19.32600	.44593	.05892	-.00867	-.01377	-.00299	-.00165	.40130	.20318	1.97520
7.566	1.900	19.33300	.44619	.05889	-.00876	-.01539	-.00335	-.00188	.40154	.20329	1.97520
7.555	2.100	19.33600	.44636	.05891	-.00886	-.01718	-.00372	-.00213	.40168	.20338	1.97500
7.548	2.300	19.33900	.44662	.05899	-.00882	-.01908	-.00413	-.00236	.40188	.20357	1.97420
7.550	2.500	19.34600	.44658	.05901	-.00875	-.02063	-.00446	-.00260	.40182	.20362	1.97340
7.565	2.700	19.35300	.44680	.05914	-.00885	-.02252	-.00485	-.00285	.40195	.20386	1.97170
7.573	2.900	19.35700	.44688	.05924	-.00882	-.02422	-.00522	-.00310	.40198	.20401	1.97040
7.579	3.100	19.36100	.44694	.05931	-.00888	-.02603	-.00561	-.00334	.40200	.20413	1.96940
7.582	3.300	19.36600	.44706	.05937	-.00892	-.02780	-.00600	-.00358	.40208	.20425	1.96850
7.602	3.500	19.37300	.44727	.05950	-.00896	-.02938	-.00634	-.00380	.40221	.20450	1.96680
7.592	3.700	19.37700	.44754	.05957	-.00901	-.03130	-.00672	-.00401	.40242	.20469	1.96610

OA257 (LARC 20-M6-6559) OV102 LESS VERT. TAIL (R7EOC2) (10 JUL 81)

REFERENCE DATA

SREF = 2690.0000 SQ.FT. XMRP = 1076.6800 IN. XO
LREF = 474.8100 INCHES YMRP = .0000 IN. YO
BREF = 936.6800 INCHES ZMRP = 375.0000 IN. ZO
SCALE = .0100

PARAMETRIC DATA

ALPHA = 20.000 PHI = .000
AILRON = .000 YP = 1.000
1S = 1.000 ELEVON = .000
MACH = 6.000 S-MODE = 2.000
S-DIR = 1.000

RUN NO. 370/ 0 RN/L = 7.56 GRADIENT INTERVAL = -.60/ .60

RN/L	BETA	ALPHA	CN	CA	CLM	CY	CYN	CBL	CL	CD	L/D
7.583	3.900	19.38300	.44759	.05968	-.00906	-.03295	-.00707	-.00424	.40242	.20484	1.96450
	GRADIENT	.02429	.00047	-.00017	.00025	-.00859	-.00175	-.00116	.00041	.00017	.00036

OA257 (LARC 20-M6-6559) OV102 LESS VERT. TAIL (R7E1C2) (10 JUL 81)

REFERENCE DATA

SREF = 2690.0000 SQ.FT. XMRP = 1076.6800 IN. XO
LREF = 474.8100 INCHES YMRP = .0000 IN. YO
BREF = 936.6800 INCHES ZMRP = 375.0000 IN. ZO
SCALE = .0100

PARAMETRIC DATA

ALPHA = 20.000 PHI = .000
AILRON = .000 YP = 1.000
1S = 1.000 ELEVON = .000
MACH = 6.000 S-MODE = 2.000
S-DIR = 1.000

RUN NO. 2370/ 0 RN/L = 7.56 GRADIENT INTERVAL = -.60/ .60

RN/L	BETA	ALPHA	CN	CA	CLM	CY	CYN	CBL	CL	CD	L/D
7.549	-4.400	19.18100	.44075	.05993	-.00931	.03881	.00834	.00541	.39660	.20141	1.96910
7.534	-4.200	19.19100	.44098	.05990	-.00930	.03713	.00798	.00521	.39678	.20153	1.96890
7.546	-4.000	19.19200	.44116	.05977	-.00923	.03536	.00759	.00500	.39699	.20148	1.97040
7.551	-3.800	19.19400	.44125	.05971	-.00917	.03370	.00724	.00479	.39709	.20146	1.97110
7.539	-3.600	19.19700	.44159	.05957	-.00913	.03187	.00683	.00457	.39744	.20146	1.97290
7.545	-3.400	19.20100	.44186	.05945	-.00909	.03016	.00646	.00437	.39772	.20147	1.97420
7.542	-3.200	19.20700	.44208	.05939	-.00911	.02848	.00610	.00415	.39793	.20152	1.97470
7.536	-3.000	19.21200	.44225	.05927	-.00907	.02666	.00570	.00393	.39812	.20150	1.97570
7.531	-2.800	19.21600	.44253	.05921	-.00910	.02491	.00533	.00368	.39838	.20156	1.97640
7.539	-2.600	19.22100	.44246	.05908	-.00897	.02313	.00494	.00344	.39835	.20145	1.97740
7.552	-2.400	19.22600	.44275	.05906	-.00894	.02138	.00456	.00321	.39861	.20156	1.97760
7.546	-2.200	19.23000	.44301	.05901	-.00889	.01968	.00419	.00298	.39885	.20163	1.97820
7.547	-2.000	19.23400	.44303	.05890	-.00883	.01796	.00383	.00275	.39889	.20156	1.97900
7.563	-1.800	19.24100	.44325	.05887	-.00879	.01617	.00340	.00252	.39909	.20165	1.97920
7.538	-1.600	19.24400	.44350	.05890	-.00879	.01448	.00300	.00226	.39930	.20179	1.97880
7.536	-1.400	19.24800	.44350	.05883	-.00873	.01281	.00263	.00203	.39932	.20174	1.97940
7.567	-1.200	19.25600	.44377	.05876	-.00860	.01119	.00225	.00181	.39956	.20182	1.97980
7.572	-1.000	19.26400	.44396	.05875	-.00872	.00941	.00187	.00155	.39972	.20193	1.97950
7.551	-.800	19.26700	.44437	.05878	-.00873	.00768	.00149	.00130	.40009	.20212	1.97950
7.556	-.600	19.27400	.44428	.05872	-.00869	.00604	.00115	.00107	.40000	.20208	1.97940
7.545	-.400	19.27400	.44424	.05869	-.00863	.00430	.00078	.00083	.39996	.20204	1.97970
7.548	-.200	19.27900	.44447	.05869	-.00855	.00270	.00043	.00062	.40016	.20215	1.97950
7.554	.000	19.28500	.44439	.05863	-.00857	.00080	.00006	.00037	.40009	.20211	1.97960
7.562	.200	19.29100	.44456	.05856	-.00847	-.00077	-.00026	.00013	.40025	.20215	1.98000
7.557	.400	19.29600	.44477	.05852	-.00846	-.00254	-.00062	-.00010	.40045	.20221	1.98040
7.560	.600	19.30200	.44480	.05852	-.00845	-.00431	-.00097	-.00033	.40045	.20226	1.97990
7.564	.800	19.30900	.44525	.05861	-.00849	-.00602	-.00134	-.00056	.40083	.20254	1.97900
7.560	1.000	19.31300	.44522	.05864	-.00853	-.00782	-.00171	-.00081	.40077	.20259	1.97830
7.542	1.200	19.31300	.44520	.05866	-.00870	-.00948	-.00207	-.00106	.40075	.20260	1.97800
7.547	1.400	19.31900	.44556	.05877	-.00868	-.01122	-.00245	-.00130	.40103	.20286	1.97690
7.546	1.600	19.32300	.44589	.05885	-.00875	-.01296	-.00282	-.00153	.40130	.20308	1.97610
7.563	1.800	19.32800	.44609	.05891	-.00869	-.01463	-.00319	-.00176	.40145	.20324	1.97530
7.553	2.000	19.33200	.44635	.05893	-.00878	-.01628	-.00354	-.00200	.40168	.20337	1.97510
7.553	2.200	19.33600	.44642	.05894	-.00879	-.01809	-.00391	-.00225	.40172	.20343	1.97480
7.553	2.400	19.34300	.44648	.05897	-.00875	-.01982	-.00429	-.00248	.40175	.20353	1.97390
7.558	2.600	19.35000	.44676	.05906	-.00882	-.02164	-.00466	-.00273	.40196	.20375	1.97280
7.562	2.800	19.35500	.44683	.05914	-.00889	-.02331	-.00503	-.00297	.40198	.20388	1.97170
7.571	3.000	19.36100	.44696	.05926	-.00888	-.02504	-.00541	-.00322	.40203	.20408	1.97000
7.585	3.200	19.36400	.44699	.05936	-.00888	-.02687	-.00582	-.00347	.40202	.20422	1.96860
7.594	3.400	19.36900	.44714	.05946	-.00893	-.02858	-.00616	-.00370	.40211	.20439	1.96730
7.599	3.600	19.37600	.44731	.05952	-.00900	-.03065	-.00659	-.00393	.40223	.20455	1.96640
7.587	3.800	19.38000	.44753	.05957	-.00901	-.03216	-.00689	-.00412	.40241	.20470	1.96580

OA257 (LARC 20-M6-6559) OV102 LESS VERT. TAIL (R7E1C2) (10 JUL 81)

REFERENCE DATA

SREF =	2690.0000 SQ.FT.	XMRP =	1076.6800 IN. XO		
LREF =	474.8100 INCHES	YMRP =	.0000 IN. YO		
BREF =	936.6800 INCHES	ZMRP =	375.0000 IN. ZO		
SCALE =	.0100				

PARAMETRIC DATA

ALPHA =	20.000	PHI =	.000
AILRON =	.000	YP =	1.000
1S =	1.000	ELEVON =	.000
MACH =	6.000	S-MODE =	2.000
S-DIR =	1.000		

RUN NO. 2370/ 0 RN/L = 7.56 GRADIENT INTERVAL = -.60/ .60

RN/L	BETA	ALPHA	CN	CA	CLM	CY	CYN	CBL	CL	CD	L/D
7.582	3.944	19.38500	.44754	.05969	-.00912	-.03330	-.00714	-.00429	.40235	.20485	1.96410
	GRADIENT	.02500	.00048	-.00019	.00020	-.00861	-.00175	-.00116	.00043	.00016	.00061

OA257 (LARC 20-M6-6559) OV102 LESS VERT. TAIL (R7EOC3) (10 JUL 81)

REFERENCE DATA

SREF = 2690.0000 SQ.FT. XMRP = 1076.6800 IN. XO
LREF = 474.8100 INCHES YMRP = .0000 IN. YO
BREF = 936.6800 INCHES ZMRP = 375.0000 IN. ZO
SCALE = .0100

PARAMETRIC DATA

ALPHA = 20.000 PHI = .000
AILRON = .000 YP = 1.000
1S = 1.000 ELEVON = .000
MACH = 6.000 S-MODE = 2.000
S-DIR = 1.000

RUN NO. 376/ 0 RN/L = 2.42 GRADIENT INTERVAL = -.60/ .60

RN/L	BETA	ALPHA	CN	CA	CLM	CY	CYN	CBL	CL	CD	L/D
2.483	-2.472	19.69200	.45068	.06044	-.00567	.02237	.00443	.00332	.40396	.20877	1.93490
2.478	-2.405	19.69200	.45299	.06000	-.00593	.02210	.00439	.00326	.40628	.20914	1.94270
2.474	-2.165	19.69600	.45132	.06038	-.00557	.01965	.00391	.00299	.40456	.20896	1.93610
2.473	-1.942	19.70000	.45160	.06004	-.00623	.01810	.00356	.00274	.40493	.20876	1.93970
2.461	-1.738	19.69900	.45183	.06030	-.00560	.01606	.00315	.00250	.40506	.20907	1.93740
2.447	-1.537	19.70400	.45378	.06039	-.00587	.01450	.00281	.00223	.40685	.20985	1.93880
2.436	-1.342	19.71300	.45331	.06033	-.00589	.01253	.00241	.00200	.40639	.20970	1.93800
2.437	-1.138	19.71800	.45379	.06039	-.00596	.01072	.00202	.00174	.40681	.20996	1.93760
2.433	-.954	19.72200	.45284	.06052	-.00582	.00902	.00168	.00153	.40586	.20978	1.93470
2.425	-.772	19.72600	.45449	.06057	-.00591	.00791	.00140	.00130	.40738	.21042	1.93610
2.411	-.575	19.73000	.45429	.06046	-.00592	.00582	.00102	.00108	.40721	.21027	1.93660
2.401	-.394	19.73400	.45351	.06061	-.00570	.00465	.00075	.00086	.40641	.21017	1.93370
2.392	-.204	19.73800	.45494	.06041	-.00615	.00277	.00036	.00061	.40780	.21051	1.93730
2.394	-.017	19.74300	.45410	.06051	-.00550	.00122	.00004	.00039	.40696	.21035	1.93470
2.393	.166	19.74700	.45437	.06037	-.00551	-.00060	-.00027	.00017	.40726	.21034	1.93620
2.386	.345	19.75600	.45497	.06046	-.00570	-.00204	-.00064	-.00002	.40776	.21069	1.93530
2.381	.532	19.75500	.45532	.06050	-.00585	-.00366	-.00093	-.00024	.40807	.21084	1.93550
2.379	.718	19.76400	.45405	.06053	-.00603	-.00530	-.00126	-.00050	.40683	.21050	1.93270
2.377	.897	19.76900	.45506	.06040	-.00568	-.00694	-.00153	-.00074	.40782	.21076	1.93500
2.371	1.081	19.76800	.45706	.06044	-.00597	-.00836	-.00191	-.00098	.40968	.21146	1.93740
2.376	1.268	19.77800	.45579	.06046	-.00586	-.01010	-.00225	-.00122	.40845	.21112	1.93470
2.376	1.444	19.77600	.45605	.06056	-.00580	-.01154	-.00259	-.00145	.40866	.21129	1.93410
2.372	1.620	19.78500	.45556	.06038	-.00569	-.01320	-.00288	-.00165	.40823	.21102	1.93460
2.367	1.796	19.78900	.45641	.06045	-.00582	-.01473	-.00324	-.00190	.40898	.21141	1.93460
	GRADIENT	.02475	.00105	-.00004	.00017	-.00875	-.00179	-.00119	.00092	.00050	-.00022

OA257 (LARC 20-M6-6559) OV102 LESS VERT. TAIL (R7EOC4) (10 JUL 81)

REFERENCE DATA

SREF = 2690.0000 SQ.FT. XMRP = 1076.6800 IN. XO
LREF = 474.8100 INCHES YMRP = .0000 IN. YO
BREF = 936.6800 INCHES ZMRP = 375.0000 IN. ZO
SCALE = .0100

PARAMETRIC DATA

ALPHA = 20.000 PHI = .000
AILRON = .000 YP = 1.000
1S = 1.000 ELEVON = .000
MACH = 6.000 S-MODE = 2.000
S-DIR = 2.000

RUN NO. 1376/ 0 RN/L = 2.34 GRADIENT INTERVAL = -.60/ .60

RN/L	BETA	ALPHA	CN	CA	CLM	CY	CYN	CBL	CL	CD	L/D
2.343	-2.237	19.69500	.45373	.06026	-.00548	.02049	.00398	.00310	.40687	.20965	1.94070
2.354	-2.073	19.69900	.45493	.06045	-.00591	.01900	.00368	.00289	.40793	.21026	1.94010
2.368	-1.881	19.70800	.45390	.06022	-.00591	.01738	.00335	.00268	.40700	.20976	1.94030
2.346	-1.706	19.70700	.45549	.06011	-.00625	.01609	.00305	.00246	.40854	.21019	1.94370
2.364	-1.496	19.71200	.45371	.06030	-.00559	.01426	.00266	.00220	.40678	.20980	1.93890
2.354	-1.274	19.72200	.45423	.06028	-.00561	.01221	.00223	.00193	.40725	.21003	1.93900
2.343	-1.019	19.72600	.45403	.06014	-.00602	.01008	.00181	.00160	.40709	.20986	1.93980
2.320	-.692	19.72400	.45430	.06058	-.00595	.00685	.00117	.00121	.40720	.21035	1.93580
2.315	-.472	19.73400	.45580	.06048	-.00590	.00547	.00082	.00091	.40861	.21083	1.93810
2.301	-.180	19.73600	.45589	.06035	-.00563	.00261	.00028	.00058	.40874	.21075	1.93940
2.307	.068	19.74600	.45576	.06034	-.00609	.00050	-.00015	.00026	.40858	.21077	1.93850
2.334	.317	19.75200	.45565	.06052	-.00592	-.00184	-.00060	-.00005	.40839	.21094	1.93600
2.323	.561	19.75300	.45655	.06033	-.00607	-.00397	-.00104	-.00034	.40929	.21108	1.93900
2.334	.796	19.76400	.45580	.06057	-.00558	-.00612	-.00149	-.00066	.40847	.21113	1.93470
2.354	1.034	19.77000	.45564	.06053	-.00524	-.00835	-.00188	-.00095	.40830	.21108	1.93430
2.359	1.253	19.77500	.45654	.06025	-.00605	-.01006	-.00230	-.00123	.40923	.21116	1.93800
2.345	1.489	19.78200	.45684	.06038	-.00606	-.01188	-.00268	-.00151	.40945	.21143	1.93660
2.361	1.756	19.78800	.45561	.06044	-.00558	-.01470	-.00326	-.00187	.40824	.21111	1.93380
	GRADIENT	.02102	.00048	-.00005	-.00024	-.00911	-.00179	-.00122	.00039	.00026	-.00060

OA257 (LARC 20-M6-6559) OV102 LESS VERT. TAIL (R7EOC5) (10 JUL 81)

REFERENCE DATA

SREF = 2690.0000 SQ.FT. XMRP = 1076.6800 IN. XO
LREF = 474.8100 INCHES YMRP = .0000 IN. YO
BREF = 936.6800 INCHES ZMRP = 375.0000 IN. ZO
SCALE = .0100

PARAMETRIC DATA

ALPHA = 25.000 PHI = .000
AILRON = .000 YP = 1.000
1S = 1.000 ELEVON = .000
MACH = 6.000 S-MODE = 2.000
S-DIR = 1.000

RUN NO. 371/ 0 RN/L = 7.52 GRADIENT INTERVAL = -.60/ .60

RN/L	BETA	ALPHA	CN	CA	CLM	CY	CYN	CBL	CL	CD	L/D
7.502	-4.556	24.07900	.61923	.05981	-.00982	.03832	.00891	.00700	.54095	.30725	1.76060
7.500	-4.400	24.08300	.61970	.05973	-.00988	.03714	.00860	.00680	.54138	.30740	1.76120
7.516	-4.200	24.08900	.62031	.05963	-.00985	.03550	.00819	.00654	.54194	.30763	1.76170
7.520	-4.000	24.09400	.62068	.05961	-.00974	.03376	.00776	.00626	.54227	.30780	1.76180
7.530	-3.800	24.10200	.62108	.05949	-.00969	.03223	.00737	.00599	.54264	.30793	1.76220
7.534	-3.600	24.10800	.62128	.05944	-.00969	.03051	.00696	.00571	.54282	.30802	1.76230
7.554	-3.400	24.11500	.62177	.05936	-.00966	.02894	.00654	.00546	.54325	.30821	1.76260
7.548	-3.200	24.11900	.62230	.05928	-.00971	.02732	.00614	.00517	.54375	.30840	1.76310
7.550	-3.000	24.12600	.62263	.05928	-.00970	.02564	.00571	.00489	.54401	.30860	1.76290
7.562	-2.800	24.13400	.62277	.05924	-.00958	.02398	.00531	.00460	.54411	.30869	1.76260
7.563	-2.600	24.14000	.62305	.05919	-.00948	.02228	.00487	.00431	.54436	.30882	1.76270
7.577	-2.400	24.14700	.62332	.05911	-.00943	.02080	.00447	.00405	.54460	.30892	1.76290
7.581	-2.200	24.15300	.62384	.05912	-.00938	.01921	.00407	.00374	.54504	.30921	1.76270
7.572	-2.000	24.16100	.62409	.05910	-.00937	.01750	.00367	.00343	.54523	.30937	1.76240
7.563	-1.800	24.16400	.62430	.05910	-.00932	.01595	.00330	.00313	.54540	.30948	1.76230
7.557	-1.600	24.17000	.62462	.05905	-.00921	.01419	.00288	.00283	.54568	.30962	1.76240
7.551	-1.400	24.17900	.62465	.05904	-.00922	.01254	.00252	.00253	.54567	.30971	1.76180
7.546	-1.200	24.18300	.62496	.05899	-.00913	.01096	.00218	.00224	.54595	.30983	1.76210
7.532	-1.000	24.18500	.62524	.05902	-.00915	.00915	.00180	.00192	.54618	.30999	1.76190
7.516	-.800	24.19000	.62543	.05905	-.00914	.00757	.00144	.00163	.54632	.31014	1.76150
7.506	-.600	24.19600	.62570	.05901	-.00915	.00586	.00109	.00132	.54655	.31027	1.76150
7.489	-.400	24.19800	.62558	.05900	-.00909	.00420	.00076	.00101	.54643	.31024	1.76130
7.478	-.200	24.20500	.62582	.05896	-.00906	.00252	.00040	.00069	.54662	.31036	1.76120
7.488	.000	24.21000	.62603	.05898	-.00910	.00083	.00006	.00039	.54679	.31052	1.76090
7.456	.200	24.21400	.62652	.05890	-.00912	-.00083	-.00027	.00005	.54724	.31069	1.76140
7.451	.400	24.21800	.62672	.05891	-.00912	-.00249	-.00066	-.00025	.54740	.31081	1.76120
7.450	.600	24.22500	.62676	.05889	-.00912	-.00422	-.00105	-.00057	.54740	.31088	1.76080
7.472	.800	24.23200	.62694	.05887	-.00909	-.00593	-.00142	-.00088	.54753	.31101	1.76050
7.484	1.000	24.24000	.62716	.05895	-.00916	-.00753	-.00178	-.00121	.54767	.31124	1.75960
7.509	1.200	24.25000	.62764	.05893	-.00916	-.00918	-.00216	-.00149	.54806	.31151	1.75940
7.494	1.400	24.25300	.62789	.05899	-.00923	-.01083	-.00253	-.00181	.54824	.31171	1.75880
7.519	1.600	24.25900	.62805	.05906	-.00923	-.01254	-.00293	-.00211	.54833	.31188	1.75810
7.510	1.800	24.26400	.62826	.05911	-.00923	-.01410	-.00330	-.00241	.54847	.31206	1.75760
7.508	2.000	24.27400	.62843	.05912	-.00932	-.01580	-.00370	-.00272	.54857	.31224	1.75690
7.517	2.200	24.27600	.62882	.05918	-.00930	-.01746	-.00414	-.00301	.54888	.31247	1.75660
7.526	2.400	24.28600	.62883	.05925	-.00940	-.01906	-.00452	-.00330	.54881	.31263	1.75540
7.505	2.600	24.29100	.62896	.05928	-.00953	-.02076	-.00492	-.00360	.54889	.31277	1.75490
7.499	2.800	24.29500	.62936	.05935	-.00960	-.02242	-.00534	-.00390	.54921	.31303	1.75450
7.493	3.000	24.30200	.62950	.05946	-.00957	-.02401	-.00572	-.00419	.54925	.31326	1.75330
7.502	3.200	24.30600	.62985	.05947	-.00968	-.02574	-.00612	-.00449	.54954	.31345	1.75320
7.497	3.400	24.31300	.62973	.05958	-.00971	-.02743	-.00654	-.00475	.54934	.31357	1.75190
7.500	3.600	24.31500	.62956	.05966	-.00975	-.02912	-.00693	-.00505	.54915	.31359	1.75120

OA257 (LARC 20-M6-6559) OV102 LESS VERT. TAIL (R7EOC5) (10 JUL 81)

REFERENCE DATA

SREF =	2690.0000 SQ.FT.	XMRP =	1076.6800 IN. XO		
LREF =	474.8100 INCHES	YMRP =	.0000 IN. YO		
BREF =	936.6800 INCHES	ZMRP =	375.0000 IN. ZO		
SCALE =	.0100				

PARAMETRIC DATA

ALPHA =	25.000	PHI =	.000
AILRON =	.000	YP =	1.000
1S =	1.000	ELEVON =	.000
MACH =	6.000	S-MODE =	2.000
S-DIR =	1.000		

RUN NO. 371/ 0 RN/L = 7.52 GRADIENT INTERVAL = -.60/ .60

RN/L	BETA	ALPHA	CN	CA	CLM	CY	CYN	CBL	CL	CD	L/D
7.527	3.800	24.32000	.63005	.05974	-.00988	-.03078	-.00733	-.00531	.54954	.31391	1.75060
	GRADIENT	.02429	.00110	-.00011	-.00000	-.00839	-.00177	-.00158	.00091	.00059	-.00037

OA257 (LARC 20-M6-6559) OV102 LESS VERT. TAIL (R7E1C5) (10 JUL 81)

REFERENCE DATA

SREF = 2690.0000 SQ.FT. XMRP = 1076.6800 IN. XO
LREF = 474.8100 INCHES YMRP = .0000 IN. YO
BREF = 936.6800 INCHES ZMRP = 375.0000 IN. ZO
SCALE = .0100

PARAMETRIC DATA

ALPHA = 25.000 PHI = .000
AILRON = .000 YP = 1.000
1S = 1.000 ELEVON = .000
MACH = 6.000 S-MODE = 2.000
S-DIR = 1.000

RUN NO. 2371/ 0 RN/L = 7.52 GRADIENT INTERVAL = -.60/ .60

RN/L	BETA	ALPHA	CN	CA	CLM	CY	CYN	CBL	CL	CD	L/D
7.497	-4.500	24.08000	.61971	.05978	-.00986	.03801	.00881	.00694	.54138	.30743	1.76100
7.508	-4.300	24.08800	.61996	.05969	-.00984	.03628	.00839	.00667	.54162	.30752	1.76120
7.519	-4.100	24.09100	.62046	.05964	-.00973	.03462	.00797	.00641	.54207	.30771	1.76160
7.526	-3.900	24.09900	.62082	.05948	-.00976	.03295	.00755	.00613	.54243	.30779	1.76230
7.532	-3.700	24.10700	.62154	.05946	-.00976	.03143	.00717	.00585	.54304	.30814	1.76230
7.543	-3.500	24.11100	.62175	.05945	-.00970	.02974	.00675	.00557	.54322	.30826	1.76220
7.546	-3.300	24.11600	.62214	.05934	-.00965	.02814	.00634	.00532	.54360	.30836	1.76290
7.546	-3.100	24.12000	.62213	.05925	-.00957	.02644	.00592	.00503	.54360	.30832	1.76310
7.563	-2.900	24.13200	.62244	.05923	-.00959	.02480	.00551	.00474	.54383	.30853	1.76260
7.558	-2.700	24.13600	.62292	.05923	-.00954	.02318	.00510	.00446	.54424	.30877	1.76260
7.567	-2.500	24.14400	.62329	.05915	-.00954	.02152	.00467	.00418	.54457	.30892	1.76280
7.579	-2.300	24.14900	.62355	.05916	-.00941	.02004	.00428	.00389	.54478	.30908	1.76260
7.574	-2.100	24.15700	.62390	.05910	-.00936	.01839	.00388	.00358	.54508	.30924	1.76260
7.568	-1.900	24.16300	.62401	.05906	-.00931	.01665	.00347	.00329	.54516	.30932	1.76250
7.564	-1.700	24.16800	.62440	.05906	-.00930	.01509	.00310	.00299	.54549	.30952	1.76230
7.549	-1.500	24.17200	.62481	.05905	-.00924	.01331	.00270	.00267	.54585	.30972	1.76240
7.532	-1.300	24.17800	.62508	.05903	-.00922	.01175	.00236	.00237	.54607	.30987	1.76230
7.543	-1.100	24.18600	.62507	.05902	-.00907	.01005	.00198	.00208	.54602	.30993	1.76170
7.529	-.900	24.18700	.62549	.05901	-.00913	.00831	.00162	.00177	.54640	.31010	1.76200
7.507	-.700	24.19300	.62548	.05903	-.00913	.00667	.00127	.00147	.54635	.31018	1.76140
7.498	-.500	24.19700	.62562	.05900	-.00912	.00506	.00093	.00117	.54648	.31024	1.76140
7.482	-.300	24.20100	.62587	.05901	-.00906	.00337	.00059	.00087	.54667	.31039	1.76130
7.482	-.100	24.20500	.62601	.05897	-.00910	.00170	.00023	.00054	.54679	.31045	1.76130
7.467	.100	24.21300	.62632	.05894	-.00901	-.00003	-.00011	.00022	.54705	.31063	1.76110
7.455	.300	24.21700	.62645	.05890	-.00906	-.00166	-.00047	-.00010	.54716	.31069	1.76120
7.452	.500	24.22300	.62662	.05887	-.00914	-.00342	-.00086	-.00041	.54729	.31078	1.76100
7.449	.700	24.22800	.62689	.05894	-.00918	-.00504	-.00122	-.00073	.54749	.31100	1.76040
7.479	.900	24.23800	.62702	.05891	-.00918	-.00667	-.00159	-.00105	.54757	.31112	1.76000
7.495	1.100	24.24400	.62752	.05892	-.00917	-.00830	-.00197	-.00136	.54798	.31140	1.75970
7.498	1.300	24.25200	.62780	.05898	-.00907	-.01001	-.00235	-.00165	.54817	.31164	1.75900
7.505	1.500	24.25700	.62780	.05902	-.00924	-.01170	-.00273	-.00196	.54813	.31172	1.75840
7.522	1.700	24.26400	.62798	.05906	-.00921	-.01335	-.00311	-.00226	.54824	.31191	1.75770
7.502	1.900	24.27000	.62819	.05911	-.00927	-.01497	-.00350	-.00257	.54837	.31210	1.75700
7.501	2.100	24.27600	.62856	.05918	-.00932	-.01662	-.00392	-.00287	.54865	.31236	1.75640
7.533	2.300	24.28500	.62877	.05921	-.00932	-.01819	-.00432	-.00314	.54878	.31257	1.75570
7.513	2.500	24.28800	.62900	.05926	-.00948	-.01989	-.00472	-.00345	.54895	.31274	1.75530
7.502	2.700	24.29400	.62929	.05929	-.00951	-.02161	-.00514	-.00375	.54917	.31295	1.75480
7.502	2.900	24.30100	.62913	.05938	-.00954	-.02327	-.00553	-.00405	.54895	.31303	1.75370
7.494	3.100	24.30400	.62948	.05945	-.00961	-.02486	-.00592	-.00433	.54922	.31326	1.75320
7.505	3.300	24.31200	.62961	.05948	-.00969	-.02660	-.00634	-.00462	.54929	.31342	1.75260
7.495	3.500	24.31400	.62991	.05962	-.00972	-.02807	-.00669	-.00487	.54949	.31369	1.75170
7.511	3.700	24.31700	.63021	.05974	-.00982	-.02999	-.00714	-.00517	.54970	.31394	1.75100

OA257 (LARC 20-M6-6559) OV102 LESS VERT. TAIL (R7E1C5) (10 JUL 81)

REFERENCE DATA

SREF =	2690.0000 SQ.FT.	XMRP =	1076.6800 IN.	XO	
LREF =	474.8100 INCHES	YMRP =	.0000 IN.	YO	
BREF =	936.6800 INCHES	ZMRP =	375.0000 IN.	ZO	
SCALE =	.0100				

PARAMETRIC DATA

ALPHA =	25.000	PHI =	.000
AILRON =	.000	YP =	1.000
1S =	1.000	ELEVON =	.000
MACH =	6.000	S-MODE =	2.000
S-DIR =	1.000		

RUN NO. 2371/ O RN/L = 7.52 GRADIENT INTERVAL = -.60/ .60

RN/L	BETA	ALPHA	CN	CA	CLM	CY	CYN	CBL	CL	CD	L/D
7.521	3.853	24.31900	.63036	.05977	-.00982	-.03119	-.00743	-.00538	.54982	.31406	1.75070
	GRADIENT	.02657	.00101	-.00014	-.00000	-.00846	-.00177	-.00159	.00083	.00054	-.00036

OA257 (LARC 20-M6-6559) OV102 LESS VERT. TAIL (R7EOC6) (10 JUL 81)

REFERENCE DATA

SREF = 2690.0000 SQ.FT. XMRP = 1076.6800 IN. XO
LREF = 474.8100 INCHES YMRP = .0000 IN. YO
BREF = 936.6800 INCHES ZMRP = 375.0000 IN. ZO
SCALE = .0100

PARAMETRIC DATA

ALPHA = 25.000 PHI = .000
AILRON = .000 YP = 1.000
1S = 1.000 ELEVON = .000
MACH = 6.000 S-MODE = 2.000
S-DIR = 1.000

RUN NO. 377/ 0 RN/L = 2.30 GRADIENT INTERVAL = -.60/ .60

RN/L	BETA	ALPHA	CN	CA	CLM	CY	CYN	CBL	CL	CD	L/D
2.292	-2.542	24.58600	.63361	.06028	-.00689	.02214	.00480	.00436	.55109	.31843	1.73070
2.290	-2.492	24.59300	.63414	.06052	-.00695	.02184	.00474	.00430	.55143	.31894	1.72900
2.283	-2.216	24.59600	.63498	.06037	-.00638	.01948	.00416	.00392	.55224	.31919	1.73010
2.286	-1.979	24.60900	.63640	.06032	-.00690	.01757	.00370	.00357	.55348	.31985	1.73040
2.296	-1.728	24.60900	.63472	.06006	-.00719	.01579	.00318	.00321	.55205	.31892	1.73100
2.295	-1.439	24.61900	.63547	.06008	-.00674	.01349	.00260	.00277	.55267	.31934	1.73060
2.287	-1.223	24.63100	.63562	.06012	-.00635	.01152	.00211	.00244	.55273	.31956	1.72970
2.294	-1.039	24.63100	.63631	.06008	-.00708	.01008	.00178	.00214	.55338	.31981	1.73030
2.300	-.841	24.63700	.63629	.05950	-.00654	.00829	.00143	.00186	.55356	.31933	1.73350
2.303	-.665	24.64800	.63707	.05994	-.00652	.00659	.00106	.00156	.55403	.32016	1.73050
2.301	-.474	24.64100	.63701	.05973	-.00697	.00539	.00080	.00126	.55410	.31988	1.73220
2.226	-.297	24.63000	.63546	.06005	-.00688	.00352	.00056	.00093	.55262	.31941	1.73010
2.297	-.111	24.66400	.63790	.05999	-.00668	.00196	.00024	.00065	.55467	.32071	1.72950
2.293	.059	24.66900	.63875	.05972	-.00700	.00054	-.00005	.00037	.55553	.32087	1.73130
2.298	.237	24.67400	.63827	.05972	-.00703	-.00088	-.00032	.00010	.55506	.32072	1.73070
2.296	.410	24.68500	.63862	.05970	-.00703	-.00230	-.00055	-.00021	.55533	.32096	1.73020
2.301	.575	24.68500	.63804	.06016	-.00673	-.00392	-.00090	-.00050	.55461	.32112	1.72710
2.300	.741	24.69000	.63810	.05968	-.00688	-.00552	-.00115	-.00076	.55484	.32076	1.72980
2.295	.908	24.69400	.63812	.05969	-.00723	-.00683	-.00146	-.00106	.55483	.32081	1.72940
2.300	1.069	24.70000	.63927	.06008	-.00701	-.00824	-.00167	-.00133	.55568	.32171	1.72730
2.306	1.233	24.69800	.63935	.06029	-.00732	-.00964	-.00210	-.00156	.55567	.32192	1.72610
2.307	1.395	24.71000	.64078	.05992	-.00698	-.01067	-.00235	-.00184	.55706	.32229	1.72840
2.310	1.558	24.71500	.64015	.05965	-.00712	-.01196	-.00269	-.00209	.55657	.32183	1.72940
2.306	1.715	24.72400	.63961	.05995	-.00701	-.01349	-.00306	-.00233	.55590	.32197	1.72660
2.320	1.868	24.72500	.64050	.06003	-.00718	-.01477	-.00336	-.00255	.55668	.32242	1.72660
	GRADIENT	.05150	.00201	.00006	.00002	-.00864	-.00161	-.00165	.00151	.00140	-.00281

OA257 (LARC 20-M6-6559) OV102 LESS VERT. TAIL (R7EOC7) (10 JUL 81)

REFERENCE DATA

SREF = 2690.0000 SQ.FT. XMRP = 1076.6800 IN. XO
LREF = 474.8100 INCHES YMRP = .0000 IN. YO
BREF = 936.6800 INCHES ZMRP = 375.0000 IN. ZO
SCALE = .0100

PARAMETRIC DATA

ALPHA = 25.000 PHI = .000
AILRON = .000 YP = 1.000
1S = 1.000 ELEVON = .000
MACH = 6.000 S-MODE = 2.000
S-DIR = 2.000

RUN NO. 1377/ O RN/L = 2.29 GRADIENT INTERVAL = -.60/ .60

RN/L	BETA	ALPHA	CN	CA	CLM	CY	CYN	CBL	CL	CD	L/D
2.285	-2.401	24.58700	.63726	.06020	-.00769	.02131	.00449	.00420	.55443	.31989	1.73320
2.276	-2.237	24.59800	.63688	.06045	-.00682	.02015	.00421	.00397	.55392	.32007	1.73060
2.283	-2.057	24.60300	.63812	.06023	-.00754	.01853	.00381	.00369	.55511	.32044	1.73240
2.283	-1.876	24.60800	.63576	.06009	-.00668	.01700	.00348	.00342	.55300	.31937	1.73160
2.272	-1.703	24.60800	.63859	.06012	-.00733	.01569	.00308	.00315	.55556	.32057	1.73300
2.284	-1.521	24.62400	.63854	.05996	-.00719	.01406	.00267	.00289	.55549	.32056	1.73290
2.283	-1.331	24.62500	.63906	.06015	-.00715	.01283	.00233	.00259	.55588	.32096	1.73190
2.279	-1.139	24.63000	.63755	.05974	-.00665	.01129	.00194	.00232	.55465	.32001	1.73330
2.291	-.945	24.64100	.63856	.05981	-.00686	.00967	.00157	.00200	.55548	.32060	1.73260
2.277	-.774	24.64100	.63821	.05981	-.00668	.00813	.00128	.00174	.55516	.32045	1.73240
2.284	-.597	24.64600	.63823	.05984	-.00668	.00640	.00093	.00146	.55514	.32053	1.73190
2.278	-.429	24.65200	.63854	.05953	-.00646	.00505	.00073	.00119	.55551	.32043	1.73360
2.283	-.270	24.66100	.63847	.05971	-.00678	.00353	.00039	.00090	.55532	.32067	1.73180
2.290	-.104	24.66100	.63927	.05987	-.00731	.00229	.00015	.00062	.55598	.32114	1.73130
2.307	.077	24.66800	.63983	.05994	-.00677	.00036	-.00020	.00031	.55642	.32151	1.73060
2.299	.250	24.67900	.63963	.06000	-.00710	-.00136	-.00045	.00002	.55616	.32159	1.72940
2.305	.439	24.68000	.63855	.06010	-.00693	-.00269	-.00076	-.00028	.55513	.32123	1.72810
2.317	.632	24.69300	.63899	.05970	-.00691	-.00448	-.00107	-.00059	.55562	.32118	1.72990
2.315	.805	24.69900	.63927	.05973	-.00720	-.00587	-.00131	-.00088	.55583	.32138	1.72950
2.319	1.002	24.70600	.64005	.05989	-.00685	-.00794	-.00169	-.00123	.55643	.32192	1.72840
2.322	1.186	24.70500	.63968	.05968	-.00676	-.00913	-.00204	-.00152	.55618	.32157	1.72960
2.306	1.372	24.71000	.64020	.05990	-.00732	-.01072	-.00242	-.00180	.55654	.32203	1.72820
2.307	1.560	24.71600	.63948	.05976	-.00683	-.01242	-.00278	-.00209	.55591	.32166	1.72820
	GRADIENT	.03381	.00091	.00041	-.00040	-.00899	-.00167	-.00169	.00047	.00108	-.00438

OA257 (LARC 20-M6-6559) OV102 LESS VERT. TAIL (R7EOC8) (10 JUL 81)

REFERENCE DATA

SREF = 2690.0000 SQ.FT. XMRP = 1076.6800 IN. XO
LREF = 474.8100 INCHES YMRP = .0000 IN. YO
BREF = 936.6800 INCHES ZMRP = 375.0000 IN. ZO
SCALE = .0100

PARAMETRIC DATA

ALPHA = 30.000 PHI = .000
AILRON = .000 YP = 1.000
1S = 1.000 ELEVON = .000
MACH = 6.000 S-MODE = 2.000
S-DIR = 1.000

RUN NO. 372/ 0 RN/L = 7.53 GRADIENT INTERVAL = -.60/ .60

RN/L	BETA	ALPHA	CN	CA	CLM	CY	CYN	CBL	CL	CD	L/D
7.497	-4.735	29.02200	.82113	.06033	-.01536	.03869	.00930	.00861	.68875	.45112	1.52680
7.503	-4.600	29.03300	.82139	.06025	-.01538	.03767	.00903	.00838	.68894	.45131	1.52650
7.521	-4.400	29.03800	.82203	.06021	-.01523	.03601	.00861	.00805	.68948	.45165	1.52660
7.524	-4.200	29.04500	.82258	.06012	-.01532	.03438	.00822	.00768	.68994	.45191	1.52670
7.516	-4.000	29.05300	.82325	.06011	-.01536	.03272	.00783	.00733	.69047	.45233	1.52650
7.506	-3.800	29.05700	.82361	.06003	-.01533	.03103	.00739	.00699	.69079	.45249	1.52660
7.527	-3.600	29.06500	.82407	.06002	-.01529	.02938	.00699	.00665	.69114	.45280	1.52640
7.531	-3.400	29.07200	.82472	.05994	-.01526	.02777	.00658	.00631	.69168	.45313	1.52650
7.546	-3.200	29.08100	.82526	.05990	-.01530	.02617	.00617	.00595	.69211	.45347	1.52630
7.550	-3.000	29.08900	.82559	.05982	-.01524	.02453	.00576	.00560	.69237	.45364	1.52620
7.538	-2.800	29.09600	.82607	.05975	-.01520	.02286	.00536	.00523	.69277	.45391	1.52620
7.547	-2.600	29.10500	.82662	.05972	-.01521	.02133	.00496	.00487	.69319	.45426	1.52600
7.549	-2.400	29.11300	.82731	.05970	-.01519	.01968	.00455	.00452	.69374	.45467	1.52580
7.552	-2.200	29.12200	.82787	.05961	-.01525	.01812	.00416	.00417	.69421	.45498	1.52580
7.571	-2.000	29.13200	.82819	.05959	-.01516	.01640	.00375	.00381	.69441	.45524	1.52540
7.574	-1.800	29.13800	.82863	.05952	-.01529	.01487	.00337	.00345	.69479	.45546	1.52550
7.556	-1.600	29.14500	.82903	.05944	-.01532	.01328	.00298	.00309	.69512	.45567	1.52550
7.540	-1.400	29.15300	.82940	.05935	-.01531	.01170	.00261	.00272	.69542	.45587	1.52550
7.543	-1.200	29.15800	.83025	.05931	-.01533	.01010	.00221	.00237	.69614	.45631	1.52560
7.544	-1.000	29.16500	.83030	.05919	-.01531	.00846	.00180	.00201	.69620	.45631	1.52570
7.574	-.800	29.17600	.83065	.05919	-.01518	.00696	.00141	.00168	.69640	.45662	1.52510
7.562	-.600	29.18200	.83049	.05905	-.01523	.00535	.00104	.00129	.69628	.45649	1.52530
7.547	-.400	29.18500	.83081	.05901	-.01516	.00384	.00065	.00095	.69656	.45664	1.52540
7.549	-.200	29.19100	.83122	.05896	-.01522	.00218	.00022	.00060	.69690	.45687	1.52540
7.530	.000	29.19800	.83159	.05894	-.01522	.00066	-.00015	.00024	.69717	.45713	1.52510
7.517	.200	29.20500	.83191	.05892	-.01516	-.00093	-.00056	-.00010	.69741	.45735	1.52490
7.522	.400	29.21400	.83216	.05900	-.01516	-.00258	-.00095	-.00045	.69752	.45765	1.52410
7.515	.600	29.22000	.83213	.05891	-.01509	-.00420	-.00134	-.00082	.69749	.45763	1.52420
7.524	.800	29.22600	.83208	.05897	-.01510	-.00591	-.00172	-.00118	.69737	.45773	1.52350
7.525	1.000	29.23100	.83243	.05903	-.01520	-.00742	-.00208	-.00155	.69760	.45802	1.52310
7.537	1.200	29.24000	.83275	.05909	-.01519	-.00904	-.00246	-.00192	.69778	.45833	1.52240
7.533	1.400	29.24700	.83295	.05919	-.01513	-.01064	-.00288	-.00227	.69785	.45860	1.52170
7.525	1.600	29.25100	.83318	.05926	-.01514	-.01231	-.00331	-.00264	.69798	.45882	1.52130
7.524	1.800	29.26100	.83329	.05928	-.01510	-.01381	-.00370	-.00299	.69799	.45901	1.52060
7.520	2.000	29.26600	.83341	.05936	-.01522	-.01544	-.00411	-.00335	.69801	.45921	1.52000
7.528	2.200	29.27800	.83362	.05946	-.01523	-.01696	-.00449	-.00371	.69805	.45955	1.51900
7.524	2.400	29.28300	.83373	.05956	-.01529	-.01873	-.00492	-.00409	.69806	.45974	1.51840
7.518	2.600	29.28700	.83432	.05965	-.01537	-.02028	-.00531	-.00446	.69850	.46016	1.51790
7.523	2.800	29.29400	.83421	.05972	-.01539	-.02192	-.00572	-.00483	.69830	.46026	1.51720
7.535	3.000	29.30100	.83438	.05987	-.01537	-.02367	-.00613	-.00520	.69833	.46056	1.51630
7.550	3.200	29.31500	.83485	.05994	-.01546	-.02519	-.00654	-.00555	.69859	.46101	1.51540
7.525	3.400	29.31400	.83470	.06007	-.01546	-.02689	-.00697	-.00590	.69840	.46105	1.51480

OA257 (LARC 20-M6-6559) OV102 LESS VERT. TAIL (R7EOC8) (10 JUL 81)

REFERENCE DATA

SREF =	2690.0000 SQ.FT.	XMRP =	1076.6800 IN. XO		
LREF =	474.8100 INCHES	YMRP =	.0000 IN. YO		
BREF =	936.6800 INCHES	ZMRP =	375.0000 IN. ZO		
SCALE =	.0100				

PARAMETRIC DATA

ALPHA =	30.000	PHI =	.000
AILRON =	.000	YP =	1.000
1S =	1.000	ELEVON =	.000
MACH =	6.000	S-MODE =	2.000
S-DIR =	1.000		

RUN NO. 372/ 0 RN/L = 7.53 GRADIENT INTERVAL = -.60/ .60

RN/L	BETA	ALPHA	CN	CA	CLM	CY	CYN	CBL	CL	CD	L/D
7.524	3.600	29.31900	.83483	.06019	-.01559	-.02854	-.00739	-.00628	.69842	.46127	1.51410
	GRADIENT	.03321	.00148	-.00009	.00008	-.00797	-.00199	-.00176	.00108	.00106	-.00114

OA257 (LARC 20-M6-6559) OV102 LESS VERT. TAIL (R7E1C8) (10 JUL 81)

REFERENCE DATA

SREF = 2690.0000 SQ.FT. XMRP = 1076.6800 IN. XO
LREF = 474.8100 INCHES YMRP = .0000 IN. YO
BREF = 936.6800 INCHES ZMRP = 375.0000 IN. ZO
SCALE = .0100

PARAMETRIC DATA

ALPHA = 30.000 PHI = .000
AILRON = .000 YP = 1.000
1S = 1.000 ELEVON = .000
MACH = 6.000 S-MODE = 2.000
S-DIR = 1.000

RUN NO. 2372/ 0 RN/L = 7.53 GRADIENT INTERVAL = -.60/ .60

RN/L	BETA	ALPHA	CN	CA	CLM	CY	CYN	CBL	CL	CD	L/D
7.496	-4.700	29.02600	.82083	.06027	-.01528	.03842	.00924	.00855	.68849	.45097	1.52670
7.519	-4.500	29.03600	.82159	.06021	-.01527	.03680	.00881	.00823	.68911	.45141	1.52660
7.519	-4.300	29.04100	.82239	.06014	-.01531	.03520	.00843	.00786	.68980	.45180	1.52680
7.519	-4.100	29.04800	.82315	.06017	-.01532	.03358	.00803	.00751	.69039	.45228	1.52650
7.506	-3.900	29.05600	.82358	.06009	-.01534	.03181	.00760	.00717	.69075	.45250	1.52650
7.516	-3.700	29.06000	.82382	.06002	-.01528	.03023	.00719	.00681	.69095	.45261	1.52660
7.525	-3.500	29.06600	.82437	.05996	-.01520	.02855	.00678	.00648	.69142	.45290	1.52670
7.546	-3.300	29.07800	.82465	.05989	-.01528	.02695	.00637	.00614	.69160	.45312	1.52630
7.539	-3.100	29.08400	.82542	.05987	-.01531	.02533	.00596	.00576	.69224	.45355	1.52630
7.555	-2.900	29.09400	.82586	.05977	-.01527	.02374	.00557	.00542	.69260	.45380	1.52620
7.529	-2.700	29.09900	.82658	.05978	-.01521	.02211	.00516	.00505	.69317	.45422	1.52610
7.552	-2.500	29.10900	.82674	.05964	-.01519	.02047	.00475	.00469	.69331	.45429	1.52610
7.543	-2.300	29.11600	.82731	.05965	-.01524	.01889	.00436	.00434	.69374	.45466	1.52580
7.562	-2.100	29.12800	.82798	.05960	-.01519	.01729	.00397	.00399	.69426	.45509	1.52550
7.575	-1.900	29.13500	.82854	.05952	-.01522	.01570	.00357	.00365	.69473	.45538	1.52560
7.568	-1.700	29.14200	.82894	.05952	-.01529	.01406	.00317	.00328	.69502	.45566	1.52530
7.547	-1.500	29.14800	.82948	.05941	-.01529	.01248	.00279	.00291	.69550	.45590	1.52550
7.541	-1.300	29.15500	.82982	.05937	-.01532	.01083	.00240	.00254	.69577	.45611	1.52540
7.546	-1.100	29.16300	.82998	.05925	-.01525	.00931	.00202	.00219	.69590	.45618	1.52550
7.566	-.900	29.16800	.83025	.05917	-.01535	.00768	.00161	.00185	.69614	.45631	1.52560
7.567	-.700	29.18000	.83063	.05916	-.01524	.00618	.00124	.00147	.69637	.45663	1.52500
7.549	-.500	29.18200	.83073	.05908	-.01531	.00455	.00082	.00112	.69649	.45663	1.52530
7.553	-.300	29.18800	.83116	.05900	-.01516	.00301	.00044	.00077	.69685	.45684	1.52540
7.547	-.100	29.19500	.83140	.05898	-.01509	.00139	.00003	.00043	.69701	.45703	1.52510
7.522	.100	29.20100	.83156	.05892	-.01518	-.00017	-.00036	.00007	.69714	.45713	1.52500
7.524	.300	29.21100	.83194	.05893	-.01517	-.00179	-.00076	-.00028	.69738	.45745	1.52450
7.513	.500	29.21700	.83207	.05890	-.01513	-.00335	-.00114	-.00062	.69747	.45756	1.52430
7.518	.700	29.22200	.83230	.05896	-.01518	-.00504	-.00152	-.00101	.69759	.45777	1.52390
7.515	.900	29.22700	.83237	.05898	-.01517	-.00669	-.00192	-.00138	.69761	.45789	1.52350
7.543	1.100	29.23500	.83244	.05908	-.01505	-.00824	-.00228	-.00170	.69755	.45812	1.52270
7.526	1.300	29.24100	.83254	.05912	-.01515	-.00983	-.00265	-.00210	.69757	.45828	1.52220
7.528	1.500	29.24800	.83281	.05920	-.01511	-.01155	-.00310	-.00246	.69772	.45856	1.52160
7.523	1.700	29.25600	.83326	.05922	-.01519	-.01296	-.00350	-.00281	.69803	.45890	1.52110
7.523	1.900	29.26400	.83351	.05931	-.01518	-.01460	-.00390	-.00318	.69814	.45919	1.52040
7.528	2.100	29.26900	.83386	.05944	-.01532	-.01621	-.00430	-.00354	.69834	.45954	1.51960
7.520	2.300	29.28100	.83396	.05957	-.01522	-.01787	-.00471	-.00390	.69828	.45983	1.51850
7.521	2.500	29.28600	.83388	.05965	-.01527	-.01954	-.00512	-.00426	.69813	.45993	1.51790
7.526	2.700	29.29100	.83398	.05971	-.01538	-.02107	-.00551	-.00464	.69814	.46009	1.51740
7.526	2.900	29.29600	.83407	.05975	-.01544	-.02278	-.00592	-.00502	.69816	.46024	1.51690
7.549	3.100	29.30900	.83477	.05988	-.01541	-.02439	-.00634	-.00537	.69860	.46085	1.51590
7.533	3.300	29.31500	.83500	.06002	-.01547	-.02607	-.00677	-.00574	.69868	.46115	1.51510
7.520	3.500	29.31100	.83476	.06015	-.01545	-.02778	-.00719	-.00610	.69844	.46110	1.51470

OA257 (LARC 20-M6-6559) OV102 LESS VERT. TAIL (R7E1C8) (10 JUL 81)

REFERENCE DATA

SREF = 2690.0000 SQ.FT. XMRP = 1076.6800 IN. XO
LREF = 474.8100 INCHES YMRP = .0000 IN. YO
BREF = 936.6800 INCHES ZMRP = 375.0000 IN. ZO
SCALE = .0100

PARAMETRIC DATA

ALPHA = 30.000 PHI = .000
AILRON = .000 YP = 1.000
1S = 1.000 ELEVON = .000
MACH = 6.000 S-MODE = 2.000
S-DIR = 1.000

RUN NO. 2372/ 0 RN/L = 7.53 GRADIENT INTERVAL = -.60/ .60

RN/L	BETA	ALPHA	CN	CA	CLM	CY	CYN	CBL	CL	CD	L/D
7.526	3.648	29.32200	.83463	.06026	-.01557	-.02884	-.00747	-.00636	.69819	.46127	1.51360
	GRADIENT	.03571	.00131	-.00016	.00011	-.00793	-.00197	-.00175	.00095	.00094	-.00111

OA257 (LARC 20-M6-6559) OV102 W/(FSB) (R7E0C9) (10 JUL 81)

REFERENCE DATA

SREF = 2690.0000 SQ.FT. XMRP = 1076.6800 IN. XO
LREF = 474.8100 INCHES YMRP = .0000 IN. YO
BREF = 936.6800 INCHES ZMRP = 375.0000 IN. ZO
SCALE = .0100

PARAMETRIC DATA

BETA = .000 PHI = 180.000
SPDBRK = 86.600 AILRON = .000
YP = .000 1S = .000
ELEVON = .000 MACH = 6.000
S-MODE = 1.000 S-DIR = 2.000

RUN NO. 59/ 0 RN/L = 2.66 GRADIENT INTERVAL = .00/ 6.00

RN/L	ALPHA	BETA	CN	CA	CLM	CY	CYN	CBL	CL	CD	L/D
2.662	.054	-.01260	-.05767	.09822	-.00462	-.00115	.00042	-.00014	-.05776	.09816	-.58840
2.640	.084	-.01157	-.06202	.09955	-.00401	-.00137	.00046	-.00016	-.06217	.09946	-.62504
2.658	.132	-.01042	-.05768	.09829	-.00535	-.00145	.00043	-.00012	-.05791	.09816	-.58997
2.666	1.568	-.01793	-.03308	.09479	-.00295	-.00139	.00057	-.00024	-.03566	.09385	-.37997
2.656	3.632	-.01222	.00435	.09077	.00085	-.00175	.00073	-.00035	-.00141	.09086	-.01551
2.663	5.225	-.01819	.03681	.08695	.00228	-.00172	.00072	-.00038	.02874	.08994	.31959
2.661	6.846	-.01115	.07124	.08399	.00486	-.00198	.00076	-.00041	.06072	.09188	.66086
2.663	8.262	-.01307	.10211	.08207	.00626	-.00099	.00053	-.00031	.08926	.09589	.93081
2.659	9.978	-.01094	.14516	.07894	.00558	-.00125	.00025	-.00021	.12929	.10290	1.25640
2.669	11.934	-.00964	.19609	.07389	.00353	-.00124	.00046	-.00022	.17657	.11284	1.56490
2.654	13.598	-.01022	.24320	.07106	.00235	-.00108	.00030	-.00016	.21968	.12625	1.74010
2.654	15.031	-.01020	.28571	.06929	.00143	-.00047	.00017	-.00005	.25797	.14102	1.82930
	GRADIENT	-.00095	.01849	-.00227	.00141	-.00009	.00006	-.00005	.01694	-.00180	.17586

OA257 (LARC 20-M6-6559) OV102 W/(FSB) (R7EOC9) (10 JUL 81)

REFERENCE DATA

SREF = 2690.0000 SQ.FT. XMRP = 1076.6800 IN. XO
LREF = 474.8100 INCHES YMRP = .0000 IN. YO
BREF = 936.6800 INCHES ZMRP = 375.0000 IN. ZO
SCALE = .0100

PARAMETRIC DATA

BETA = .000 PHI = 180.000
SPDBRK = 86.600 AILRON = .000
YP = .000 1S = .000
ELEVON = .000 MACH = 6.000
S-MODE = 1.000 S-DIR = 2.000

RUN NO. 61/ O RN/L = 4.50 GRADIENT INTERVAL = .00/ 6.00

RN/L	ALPHA	BETA	CN	CA	CLM	CY	CYN	CBL	CL	CD	L/D
4.529	.033	.08422	-.06738	.09948	-.00183	-.00186	.00047	-.00015	-.06744	.09944	-.67818
4.427	.232	-.01116	-.06537	.10081	-.00150	-.00065	.00051	-.00014	-.06578	.10054	-.65420
4.507	2.160	.08560	-.02786	.09332	.00005	-.00192	.00059	-.00026	-.03136	.09220	-.34013
4.498	4.080	.08868	.00925	.08900	.00275	-.00254	.00071	-.00032	.00289	.08943	.03235
4.486	5.881	.09108	.04556	.08563	.00520	-.00238	.00078	-.00038	.03655	.08985	.40680
4.491	7.440	.08171	.07945	.08321	.00719	-.00278	.00076	-.00043	.06801	.09280	.73284
4.467	9.337	.08888	.12546	.08045	.00797	-.00213	.00042	-.00026	.11075	.09974	1.11040
4.462	11.458	.08894	.18092	.07549	.00591	-.00197	.00037	-.00018	.16232	.10993	1.47660
4.485	13.106	.08830	.22775	.07200	.00434	-.00127	.00033	-.00013	.20549	.12177	1.68750
4.549	14.611	.08408	.27307	.06984	.00298	-.00138	.00022	-.00010	.24662	.13647	1.80720
	GRADIENT	.00966	.01940	-.00257	.00118	-.00022	.00005	-.00004	.01787	-.00193	.18484

RUN NO. 63/ O RN/L = 7.44 GRADIENT INTERVAL = .00/ 6.00

RN/L	ALPHA	BETA	CN	CA	CLM	CY	CYN	CBL	CL	CD	L/D
7.666	.170	-.00932	-.06639	.10139	-.00070	-.00065	.00048	-.00018	-.06669	.10119	-.65900
7.652	.190	-.00684	-.06570	.10114	-.00078	-.00078	.00045	-.00017	-.06603	.10092	-.65433
7.290	.229	-.00985	-.06257	.10046	-.00101	-.00109	.00053	-.00018	-.06297	.10021	-.62840
7.380	2.479	-.01088	-.01931	.09323	.00007	-.00123	.00055	-.00021	-.02332	.09230	-.25265
7.279	4.447	-.00838	.01942	.08882	.00261	-.00139	.00065	-.00023	.01247	.09006	.13847
7.443	6.330	-.00941	.05884	.08529	.00562	-.00181	.00074	-.00031	.04908	.09126	.53785
7.482	8.374	-.01321	.10504	.08209	.00783	-.00205	.00056	-.00032	.09197	.09652	.95286
7.482	10.180	-.00403	.14992	.07875	.00767	-.00155	.00033	-.00019	.13364	.10401	1.28480
7.463	12.011	-.00484	.19949	.07495	.00621	-.00115	.00043	-.00015	.17953	.11482	1.56350
7.450	14.373	-.00939	.26686	.07093	.00446	-.00095	.00014	-.00001	.24090	.13495	1.78510
	GRADIENT	-.00009	.01986	-.00295	.00075	-.00014	.00004	-.00001	.01830	-.00270	.18306

OA257 (LARC 20-M6-6559) OV102 (R7EOD1) (10 JUL 81)

REFERENCE DATA

SREF = 2690.0000 SQ.FT. XMRP = 1076.6800 IN. XO
LREF = 474.8100 INCHES YMRP = .0000 IN. YO
BREF = 936.6800 INCHES ZMRP = 375.0000 IN. ZO
SCALE = .0100

PARAMETRIC DATA

BETA = .000 PHI = 270.000
SPDBRK = 86.600 AILRON = .000
YP = 1.000 1S = 1.000
ELEVON = .000 MACH = 6.000
S-MODE = 1.000 S-DIR = 2.000

RUN NO. 168/ 0 RN/L = 2.28 GRADIENT INTERVAL = .00/ 6.00

RN/L	ALPHA	BETA	CN	CA	CLM	CY	CYN	CBL	CL	CD	L/D
2.283	-5.113	.08016	-.16280	.12413	-.00348	.00254	-.00004	.00017	-.15108	.13814	-1.09370
2.284	-4.537	.09089	-.14974	.12104	-.00361	.00270	-.00013	-.00003	-.13970	.13251	-1.05430
2.288	-4.104	.09103	-.14400	.11816	-.00425	.00258	-.00012	-.00014	-.13518	.12817	-1.05470
2.288	-3.626	.09653	-.13602	.11573	-.00488	.00236	-.00012	-.00024	-.12843	.12410	-1.03490
2.281	-3.014	.09658	-.12389	.11306	-.00489	.00208	-.00004	-.00023	-.11777	.11942	-.98616
2.273	-2.571	.09662	-.11436	.11116	-.00533	.00193	.00001	-.00014	-.10926	.11618	-.94046
2.277	-2.137	.10197	-.10723	.10932	-.00531	.00176	.00003	-.00009	-.10308	.11324	-.91031
2.284	-1.529	.08674	-.09414	.10648	-.00613	.00181	-.00008	.00004	-.09126	.10895	-.83761
2.274	-1.034	.09211	-.08636	.10461	-.00624	.00177	-.00009	.00010	-.08446	.10616	-.79561
2.274	-.515	.09714	-.07671	.10260	-.00597	.00182	-.00002	.00011	-.07579	.10328	-.73377
2.294	-.130	.09698	-.06794	.10022	-.00730	.00195	.00001	.00013	-.06771	.10038	-.67455
2.301	-.098	.09758	-.07274	.10173	-.00520	.00099	.00005	.00004	-.07256	.10185	-.71242
2.276	-.057	.08687	-.07034	.10052	-.00627	.00156	-.00001	.00010	-.07024	.10059	-.69833
2.287	.392	.09216	-.06178	.09858	-.00625	.00136	.00003	.00009	-.06245	.09816	-.63621
2.283	.813	.09218	-.05431	.09814	-.00589	.00105	.00010	.00005	-.05570	.09736	-.57216
2.275	1.433	.08685	-.04178	.09626	-.00504	.00103	.00014	.00004	-.04417	.09519	-.46404
2.288	1.930	.08669	-.03512	.09481	-.00454	.00101	.00020	-.00001	-.03829	.09358	-.40918
2.279	2.466	.08689	-.02423	.09388	-.00387	.00088	.00018	.00005	-.02824	.09274	-.30453
2.269	2.864	.08678	-.01778	.09335	-.00255	.00082	.00023	.00003	-.02243	.09235	-.24286
2.268	3.361	.08643	-.00762	.09213	-.00173	.00029	.00044	-.00008	-.01301	.09152	-.14214
2.277	4.003	.08596	.00333	.09118	-.00073	-.00025	.00070	-.00016	-.00305	.09118	-.03341
	GRADIENT	-.00171	.01802	-.00214	.00157	-.00037	.00016	-.00006	.01644	-.00204	.16657

OA257 (LARC 20-M6-6559) OV102 (R7EOD1) (10 JUL 81)

REFERENCE DATA

SREF = 2690.0000 SQ.FT. XMRP = 1076.6800 IN. XO
LREF = 474.8100 INCHES YMRP = .0000 IN. YO
BREF = 936.6800 INCHES ZMRP = 375.0000 IN. ZO
SCALE = .0100

PARAMETRIC DATA

BETA = .000 PHI = 270.000
SPDBRK = 86.600 AILRON = .000
YP = 1.000 1S = 1.000
ELEVON = .000 MACH = 6.000
S-MODE = 1.000 S-DIR = 2.000

RUN NO. 160/ 0 RN/L = 4.50 GRADIENT INTERVAL = .00/ 6.00

RN/L	ALPHA	BETA	CN	CA	CLM	CY	CYN	CBL	CL	CD	L/D
4.444	-5.095	.00973	-.15639	.12292	-.00125	.00386	-.00005	.00026	-.14486	.13632	-1.06260
4.441	-4.665	.01044	-.15012	.12064	-.00141	.00385	-.00017	.00014	-.13981	.13245	-1.05560
4.453	-4.120	.01036	-.14028	.11758	-.00136	.00391	-.00016	-.00002	-.13147	.12736	-1.03230
4.497	-3.535	.01030	-.13050	.11444	-.00149	.00382	-.00014	-.00010	-.12320	.12226	-1.00760
4.532	-2.836	.01019	-.11706	.11105	-.00178	.00346	-.00004	-.00009	-.11142	.11670	-.95476
4.524	-2.129	.01013	-.10295	.10859	-.00194	.00332	.00000	-.00000	-.09884	.11234	-.87986
4.545	-1.476	.01005	-.09061	.10632	-.00219	.00324	.00003	.00008	-.08785	.10861	-.80879
4.553	-1.000	.01018	-.08181	.10460	-.00229	.00308	.00005	.00015	-.07997	.10601	-.75438
4.563	-.627	.01014	-.07698	.10315	-.00211	.00302	.00007	.00013	-.07584	.10399	-.72934
4.555	-.180	.01026	-.06616	.10139	-.00194	.00283	.00009	.00015	-.06584	.10159	-.64806
4.335	-.163	.01060	-.06920	.10238	-.00163	.00242	.00015	.00008	-.06890	.10257	-.67176
4.540	-.014	.01007	-.06562	.10067	-.00183	.00291	.00011	.00013	-.06559	.10069	-.65145
4.547	.513	.01043	-.05553	.09918	-.00141	.00263	.00011	.00013	-.05641	.09867	-.57170
4.590	1.124	.01016	-.04353	.09692	-.00138	.00255	.00017	.00013	-.04542	.09605	-.47288
4.541	1.661	.01019	-.03378	.09560	-.00074	.00240	.00020	.00014	-.03654	.09458	-.38632
4.514	2.292	.01020	-.02418	.09382	-.00022	.00213	.00026	.00010	-.02791	.09278	-.30088
4.487	2.793	.01035	-.01242	.09280	.00049	.00213	.00024	.00011	-.01692	.09209	-.18379
4.482	3.423	.01050	-.00094	.09105	.00099	.00212	.00023	.00014	-.00638	.09083	-.07022
4.496	4.025	.01079	.00877	.08956	.00192	.00192	.00022	.00014	.00246	.08996	.02738
	GRADIENT	.00012	.01840	-.00267	.00098	-.00020	.00003	.00000	.01685	-.00240	.17235

OA257 (LARC 20-M6-6559) OV102 (R7EOD1) (10 JUL 81)

REFERENCE DATA

SREF = 2690.0000 SQ.FT. XMRP = 1076.6800 IN. XO
LREF = 474.8100 INCHES YMRP = .0000 IN. YO
BREF = 936.6800 INCHES ZMRP = 375.0000 IN. ZO
SCALE = .0100

PARAMETRIC DATA

BETA = .000 PHI = 270.000
SPDBRK = 86.600 AILRON = .000
YP = 1.000 1S = 1.000
ELEVON = .000 MACH = 6.000
S-MODE = 1.000 S-DIR = 2.000

RUN NO. 164/ 0 RN/L = 7.53 GRADIENT INTERVAL = .00/ 6.00

RN/L	ALPHA	BETA	CN	CA	CLM	CY	CYN	CBL	CL	CD	L/D
7.634	-4.944	.10192	-.16631	.12545	.00094	.00216	.00015	.00016	-.15488	.13931	-1.11180
7.614	-4.638	.10219	-.16074	.12415	.00085	.00213	.00014	.00014	-.15018	.13674	-1.09830
7.589	-4.301	.10324	-.15522	.12197	.00054	.00216	.00004	.00011	-.14564	.13327	-1.09280
7.559	-4.030	.10387	-.14922	.12069	.00050	.00220	-.00003	.00003	-.14037	.13087	-1.07260
7.570	-3.649	.10927	-.14381	.11854	.00027	.00223	-.00005	-.00004	-.13597	.12745	-1.06690
7.567	-3.349	.09872	-.13868	.11667	.00022	.00218	-.00002	-.00010	-.13163	.12457	-1.05670
7.582	-3.002	.10412	-.13114	.11517	.00014	.00210	-.00001	-.00015	-.12493	.12188	-1.02500
7.602	-2.695	.10402	-.12619	.11351	-.00009	.00211	.00000	-.00016	-.12071	.11932	-1.01170
7.578	-2.400	.10375	-.11932	.11249	-.00020	.00206	.00005	-.00014	-.11450	.11738	-.97546
7.584	-2.076	.10366	-.11299	.11108	-.00026	.00203	.00007	-.00012	-.10889	.11510	-.94609
7.569	-1.743	.10358	-.10643	.10968	-.00068	.00192	.00011	-.00010	-.10304	.11287	-.91299
7.576	-1.442	.10347	-.10174	.10838	-.00090	.00187	.00013	-.00007	-.09898	.11091	-.89246
7.573	-1.117	.10387	-.09584	.10715	-.00092	.00180	.00011	-.00005	-.09374	.10900	-.86001
7.584	-.787	.09871	-.08892	.10590	-.00120	.00172	.00013	.00000	-.08746	.10711	-.81652
7.559	-.384	.09880	-.08172	.10459	-.00110	.00167	.00013	.00004	-.08102	.10513	-.77062
7.280	-.081	.10466	-.07795	.10399	-.00077	.00122	.00018	-.00000	-.07780	.10410	-.74738
7.567	-.062	.10368	-.07702	.10325	-.00129	.00203	.00010	.00009	-.07691	.10334	-.74426
7.543	.067	.09905	-.07435	.10274	-.00102	.00145	.00016	.00004	-.07447	.10265	-.72545
7.544	.501	.09900	-.06642	.10114	-.00100	.00129	.00021	.00002	-.06730	.10055	-.66930
7.551	.822	.09907	-.06183	.09984	-.00103	.00118	.00023	.00001	-.06326	.09895	-.63933
7.550	1.135	.09852	-.05545	.09902	-.00085	.00117	.00029	.00001	-.05740	.09790	-.58632
7.548	1.670	.10386	-.04461	.09733	-.00077	.00104	.00031	.00000	-.04743	.09599	-.49411
7.519	1.912	.09869	-.04137	.09651	-.00064	.00109	.00030	.00001	-.04456	.09507	-.46874
7.513	2.233	.09883	-.03548	.09534	-.00061	.00100	.00030	-.00001	-.03917	.09389	-.41720
7.517	2.474	.09876	-.02984	.09476	-.00042	.00098	.00031	.00001	-.03390	.09339	-.36304
7.492	2.976	.09893	-.01948	.09341	-.00006	.00093	.00031	-.00000	-.02430	.09228	-.26336
7.457	3.325	.09896	-.01535	.09269	.00026	.00094	.00031	.00001	-.02070	.09164	-.22583
7.409	3.615	.09909	-.00846	.09199	.00069	.00085	.00031	.00001	-.01425	.09127	-.15609
7.392	4.026	.10417	.00028	.09106	.00105	.00076	.00035	.00003	-.00611	.09085	-.06729
	GRADIENT	.00047	.01879	-.00295	.00051	-.00015	.00004	-.00000	.01721	-.00299	.16636

OA257 (LARC 20-M6-6559) OV102 (R7EOD2) (10 JUL 81)

REFERENCE DATA

SREF = 2690.0000 SQ.FT. XMRP = 1076.6800 IN. XO
LREF = 474.8100 INCHES YMRP = .0000 IN. YO
BREF = 936.6800 INCHES ZMRP = 375.0000 IN. ZO
SCALE = .0100

PARAMETRIC DATA

ALPHA = .000 PHI = 270.000
SPDBRK = 86.600 AILRON = .000
YP = 1.000 1S = 1.000
ELEVON = .000 MACH = 6.000
S-MODE = 1.000 S-DIR = 1.000

RUN NO. 169/ 0 RN/L = 2.29 GRADIENT INTERVAL = -.60/ .60

RN/L	BETA	ALPHA	CN	CA	CLM	CY	CYN	CBL	CL	CD	L/D
2.300	-4.994	-.09223	-.07527	.10669	-.00094	.07461	-.00339	.00389	-.07509	.10681	-.70307
2.297	-4.901	-.09221	-.07593	.10581	-.00122	.06791	-.00299	.00357	-.07576	.10593	-.71518
2.296	-3.984	-.08659	-.07396	.10501	-.00174	.05591	-.00227	.00291	-.07380	.10512	-.70200
2.291	-3.594	-.08396	-.07238	.10485	-.00195	.05309	-.00211	.00275	-.07223	.10496	-.68816
2.296	-3.350	-.08273	-.08108	.10441	-.00201	.05006	-.00193	.00257	-.08093	.10453	-.77420
2.282	-3.202	-.08360	-.07242	.10439	-.00224	.04785	-.00185	.00246	-.07227	.10449	-.69160
2.295	-2.874	-.08009	-.06984	.10393	-.00262	.04344	-.00164	.00224	-.06969	.10403	-.66994
2.283	-2.508	-.07656	-.06774	.10325	-.00277	.03863	-.00145	.00199	-.06760	.10334	-.65415
2.272	-2.397	-.07919	-.06998	.10324	-.00329	.03681	-.00142	.00194	-.06984	.10333	-.67585
2.278	-2.063	-.07195	-.07036	.10253	-.00369	.03206	-.00120	.00171	-.07023	.10262	-.68437
2.270	-1.687	-.07679	-.07001	.10261	-.00371	.02653	-.00093	.00140	-.06987	.10270	-.68030
2.274	-1.254	-.07865	-.07128	.10226	-.00436	.01998	-.00039	.00100	-.07114	.10236	-.69500
2.284	-.925	-.07137	-.07042	.10211	-.00408	.01474	-.00014	.00069	-.07029	.10220	-.68779
2.272	-.544	-.07512	-.06761	.10213	-.00405	.00987	-.00003	.00045	-.06747	.10222	-.66005
2.274	-.104	-.07939	-.07174	.10115	-.00556	.00380	-.00006	.00025	-.07160	.10125	-.70719
2.364	.134	-.08037	-.07183	.10216	-.00439	.00060	.00010	.00006	-.07168	.10227	-.70095
2.343	.177	-.08011	-.06708	.10033	-.00639	-.00072	.00016	.00001	-.06694	.10043	-.66655
2.275	.245	-.08079	-.07112	.10058	-.00622	-.00058	.00018	-.00001	-.07098	.10068	-.70497
2.344	.288	-.07644	-.06628	.10042	-.00621	-.00082	.00014	.00002	-.06615	.10051	-.65811
2.279	.446	-.07083	-.06614	.10049	-.00636	-.00352	.00040	-.00023	-.06602	.10057	-.65643
2.266	.610	-.07733	-.06675	.10095	-.00638	-.00600	.00060	-.00033	-.06661	.10104	-.65928
2.264	.912	-.07736	-.06725	.10098	-.00589	-.01077	.00102	-.00064	-.06711	.10107	-.66399
2.278	1.102	-.07924	-.06875	.10121	-.00558	-.01345	.00115	-.00080	-.06861	.10131	-.67725
2.276	1.404	-.07868	-.06869	.10215	-.00472	-.01772	.00130	-.00099	-.06855	.10225	-.67043
2.268	1.674	-.07740	-.07041	.10279	-.00395	-.02136	.00149	-.00118	-.07027	.10289	-.68301
2.271	2.024	-.07155	-.06860	.10217	-.00438	-.02682	.00194	-.00156	-.06848	.10226	-.66963
2.266	2.426	-.07911	-.06683	.10257	-.00406	-.03229	.00230	-.00193	-.06669	.10266	-.64960
2.265	2.612	-.08098	-.07033	.10307	-.00391	-.03546	.00248	-.00209	-.07018	.10317	-.68025
2.309	3.159	-.08189	-.06883	.10301	-.00333	-.04341	.00281	-.00250	-.06868	.10311	-.66610
2.327	3.488	-.08490	-.07113	.10329	-.00301	-.04777	.00293	-.00263	-.07098	.10339	-.68648
2.330	3.849	-.07548	-.06629	.10395	-.00218	-.05251	.00318	-.00287	-.06616	.10404	-.63591
2.328	4.046	-.08822	-.07073	.10350	-.00280	-.05520	.00327	-.00304	-.07057	.10361	-.68112
2.332	4.323	-.08828	-.07036	.10416	-.00263	-.05957	.00351	-.00321	-.07020	.10427	-.67324
2.332	4.558	-.09074	-.07038	.10380	-.00274	-.06457	.00376	-.00350	-.07022	.10392	-.67574
2.338	5.009	-.09261	-.07001	.10453	-.00225	-.07012	.00419	-.00386	-.06984	.10465	-.66736
	GRADIENT	.00091	.00143	-.00174	-.00234	-.01339	.00039	-.00064	.00143	-.00175	.00265

OA257 (LARC 20-M6-6559) OV102 (R7EOD2) (10 JUL 81)

REFERENCE DATA

SREF = 2690.0000 SQ.FT. XMRP = 1076.6800 IN. XO
LREF = 474.8100 INCHES YMRP = .0000 IN. YO
BREF = 936.6800 INCHES ZMRP = 375.0000 IN. ZO
SCALE = .0100

PARAMETRIC DATA

ALPHA = .000 PHI = 270.000
SPDBRK = 86.600 AILRON = .000
YP = 1.000 1S = 1.000
ELEVON = .000 MACH = 6.000
S-MODE = 1.000 S-DIR = 1.000

RUN NO. 161/ O RN/L = 4.44 GRADIENT INTERVAL = -.60/ .60

RN/L	BETA	ALPHA	CN	CA	CLM	CY	CYN	CBL	CL	CD	L/D
4.376	-4.907	-.11481	-.06934	.10470	.00061	.07375	-.00325	.00401	-.06913	.10484	-.65940
4.379	-4.604	-.12094	-.07071	.10411	.00040	.06438	-.00255	.00344	-.07049	.10426	-.67612
4.411	-4.270	-.11586	-.06814	.10384	.00123	.05535	-.00212	.00296	-.06793	.10398	-.65328
4.452	-3.105	-.11967	-.06918	.10373	.00059	.04654	-.00180	.00247	-.06896	.10387	-.66389
4.425	-2.245	-.11411	-.06948	.10340	-.00003	.03326	-.00126	.00177	-.06927	.10354	-.66905
4.413	-1.698	-.11628	-.06792	.10275	-.00057	.02626	-.00085	.00135	-.06771	.10288	-.65809
4.426	-1.592	-.12087	-.06986	.10220	-.00081	.02494	-.00079	.00127	-.06964	.10235	-.68044
4.446	-1.454	-.11711	-.06819	.10209	-.00081	.02316	-.00066	.00116	-.06798	.10223	-.66494
4.447	-1.102	-.11733	-.06777	.10188	-.00086	.01717	-.00036	.00084	-.06756	.10201	-.66228
4.477	-.741	-.11671	-.06684	.10164	-.00110	.01303	-.00016	.00061	-.06664	.10178	-.65473
4.471	-.470	-.11563	-.06784	.10177	-.00101	.00942	-.00004	.00042	-.06763	.10190	-.66369
4.489	-.298	-.11623	-.06624	.10109	-.00167	.00639	.00003	.00028	-.06603	.10123	-.65232
4.312	.010	-.10976	-.06708	.10189	-.00174	.00240	.00023	.00001	-.06688	.10202	-.65559
4.369	.048	-.11116	-.06749	.10093	-.00217	.00266	.00007	.00014	-.06729	.10106	-.66588
4.372	.063	-.11691	-.06835	.10112	-.00205	.00266	.00007	.00014	-.06814	.10126	-.67294
4.501	.096	-.11235	-.06715	.10071	-.00223	.00143	.00019	.00004	-.06696	.10084	-.66397
4.507	.447	-.11794	-.06649	.10078	-.00228	-.00345	.00045	-.00024	-.06628	.10092	-.65683
4.517	.815	-.11901	-.06742	.10087	-.00212	-.01005	.00083	-.00064	-.06721	.10101	-.66534
4.513	1.208	-.11774	-.06764	.10176	-.00161	-.01469	.00110	-.00091	-.06743	.10190	-.66174
4.509	1.378	-.11780	-.06707	.10155	-.00132	-.01696	.00124	-.00105	-.06686	.10169	-.65754
4.470	1.704	-.10884	-.06718	.10201	-.00081	-.02206	.00152	-.00132	-.06699	.10214	-.65589
4.433	2.140	-.12106	-.06948	.10209	-.00106	-.02891	.00199	-.00173	-.06926	.10223	-.67751
4.425	2.763	-.11939	-.06807	.10235	-.00058	-.03782	.00261	-.00228	-.06785	.10249	-.66201
4.417	3.366	-.11656	-.06782	.10315	.00034	-.04544	.00284	-.00269	-.06761	.10329	-.65460
4.412	3.746	-.12310	-.06847	.10336	.00018	-.05250	.00312	-.00309	-.06824	.10351	-.65929
4.411	4.275	-.11915	-.06911	.10370	.00024	-.05900	.00339	-.00341	-.06889	.10385	-.66337
4.398	4.740	-.12780	-.06847	.10320	-.00028	-.06643	.00388	-.00389	-.06823	.10336	-.66019
	GRADIENT	-.00040	.00047	-.00092	-.00135	-.01356	.00049	-.00069	.00047	-.00092	-.00142

OA257 (LARC 20-M6-6559) OV102 (R7EOD2) (10 JUL 81)

REFERENCE DATA

SREF = 2690.0000 SQ.FT. XMRP = 1076.6800 IN. XO
LREF = 474.8100 INCHES YMRP = .0000 IN. YO
BREF = 936.6800 INCHES ZMRP = 375.0000 IN. ZO
SCALE = .0100

PARAMETRIC DATA

ALPHA = .000 PHI = 270.000
SPDBRK = 86.600 AILRON = .000
YP = 1.000 1S = 1.000
ELEVON = .000 MACH = 6.000
S-MODE = 1.000 S-DIR = 1.000

RUN NO. 165/ 0 RN/L = 7.64 GRADIENT INTERVAL = -.60/ .60

RN/L	BETA	ALPHA	CN	CA	CLM	CY	CYN	CBL	CL	CD	L/D
7.598	-4.571	-.18907	-.07951	.10694	.00195	.06817	-.00277	.00350	-.07916	.10720	-.73845
7.625	-4.309	-.18530	-.07967	.10692	.00225	.06128	-.00235	.00313	-.07933	.10718	-.74014
7.616	-3.444	-.17618	-.08015	.10652	.00198	.05119	-.00204	.00268	-.07982	.10677	-.74765
7.620	-2.917	-.18299	-.07942	.10579	.00131	.04391	-.00179	.00230	-.07908	.10604	-.74576
7.625	-2.528	-.18203	-.07891	.10527	.00101	.03789	-.00154	.00198	-.07858	.10552	-.74468
7.671	-1.837	-.18090	-.07796	.10477	.00041	.02843	-.00095	.00141	-.07762	.10501	-.73918
7.668	-1.428	-.17441	-.07779	.10423	-.00017	.02216	-.00059	.00108	-.07748	.10446	-.74166
7.655	-1.143	-.17516	-.07768	.10401	-.00019	.01833	-.00047	.00092	-.07736	.10425	-.74208
7.656	-.853	-.18424	-.07873	.10415	-.00012	.01483	-.00035	.00076	-.07840	.10440	-.75091
7.655	-.492	-.18232	-.07829	.10383	-.00044	.00978	-.00023	.00050	-.07796	.10408	-.74903
7.658	-.217	-.18009	-.07723	.10392	-.00066	.00543	-.00002	.00027	-.07690	.10416	-.73828
7.683	.158	-.18812	-.07918	.10400	-.00061	.00030	.00025	-.00008	-.07883	.10426	-.75614
7.592	.415	-.18275	-.07769	.10378	-.00139	-.00283	.00041	-.00022	-.07736	.10402	-.74369
7.653	.458	-.17595	-.07746	.10322	-.00141	-.00364	.00051	-.00030	-.07714	.10345	-.74566
7.664	.926	-.17976	-.07688	.10375	-.00086	-.01090	.00097	-.00073	-.07655	.10399	-.73614
7.650	1.211	-.18308	-.07692	.10377	-.00097	-.01474	.00116	-.00094	-.07659	.10402	-.73630
7.665	1.679	-.17984	-.07705	.10415	-.00051	-.02146	.00148	-.00129	-.07672	.10439	-.73496
7.660	2.066	-.18127	-.07662	.10436	-.00028	-.02691	.00178	-.00156	-.07629	.10461	-.72935
7.644	2.496	-.17441	-.07753	.10478	.00018	-.03322	.00210	-.00189	-.07721	.10502	-.73517
7.625	3.018	-.18053	-.07803	.10555	.00084	-.04086	.00255	-.00231	-.07769	.10579	-.73439
7.655	3.439	-.18348	-.07926	.10593	.00124	-.04665	.00274	-.00261	-.07892	.10618	-.74326
7.633	3.741	-.18057	-.07782	.10632	.00164	-.05096	.00295	-.00284	-.07748	.10657	-.72708
7.617	4.313	-.18287	-.07912	.10661	.00188	-.05934	.00338	-.00327	-.07878	.10686	-.73717
7.632	4.945	-.18881	-.07826	.10637	.00139	-.06830	.00381	-.00373	-.07791	.10663	-.73068
	GRADIENT	.00175	.00023	-.00039	-.00098	-.01385	.00074	-.00082	.00023	-.00041	-.00073

OA257 (LARC 20-M6-6559) OV102 (R7EOD3) (10 JUL 81)

REFERENCE DATA

SREF = 2690.0000 SQ.FT. XMRP = 1076.6800 IN. XO
LREF = 474.8100 INCHES YMRP = .0000 IN. YO
BREF = 936.6800 INCHES ZMRP = 375.0000 IN. ZO
SCALE = .0100

PARAMETRIC DATA

ALPHA = 4.500 PHI = 270.000
SPDBRK = 86.600 AILRON = .000
YP = 1.000 1S = 1.000
ELEVON = .000 MACH = 6.000
S-MODE = 1.000 S-DIR = 1.000

RUN NO. 170/ 0 RN/L = 2.31 GRADIENT INTERVAL = -.60/ .60

RN/L	BETA	ALPHA	CN	CA	CLM	CY	CYN	CBL	CL	CD	L/D
2.329	-4.439	4.34400	.01221	.09221	.00127	.06242	-.00304	.00531	.00520	.09286	.05595
2.326	-4.342	4.34370	.01233	.09164	.00103	.05814	-.00280	.00490	.00535	.09231	.05797
2.325	-3.504	4.34330	.01259	.09148	.00090	.04837	-.00224	.00412	.00562	.09217	.06099
2.323	-2.995	4.34130	.00993	.09113	.00082	.04187	-.00183	.00358	.00300	.09162	.03279
2.321	-2.613	4.34250	.01305	.09063	.00023	.03690	-.00149	.00313	.00615	.09136	.06729
2.321	-2.125	4.34240	.01333	.09006	.00014	.02961	-.00104	.00249	.00647	.09081	.07125
2.314	-1.600	4.34190	.01270	.08971	.00014	.02233	-.00062	.00189	.00587	.09041	.06496
2.310	-1.319	4.34690	.01105	.08950	-.00049	.01919	-.00050	.00164	.00424	.09008	.04702
2.317	-.995	4.34110	.01271	.08918	-.00037	.01428	-.00025	.00119	.00592	.08989	.06585
2.314	-.497	4.34220	.01150	.08933	-.00045	.00723	.00018	.00053	.00471	.08995	.05233
2.318	-.116	4.34410	.01539	.08941	-.00014	.00237	.00057	.00010	.00857	.09032	.09489
2.301	.001	4.34020	.01176	.08957	-.00051	.00171	.00061	.00005	.00495	.09020	.05491
2.329	.117	4.32770	.01030	.09011	-.00015	-.00033	.00080	-.00018	.00347	.09064	.03833
2.304	.149	4.34710	.01258	.08959	-.00019	-.00112	.00089	-.00029	.00576	.09028	.06376
2.302	.457	4.34200	.01385	.08964	-.00016	-.00516	.00104	-.00058	.00703	.09043	.07770
2.301	.849	4.34280	.01442	.08932	-.00064	-.01045	.00140	-.00111	.00761	.09015	.08444
2.299	1.194	4.34170	.01313	.08931	-.00086	-.01491	.00159	-.00145	.00633	.09005	.07027
2.295	1.613	4.34650	.01411	.08936	-.00074	-.02068	.00193	-.00195	.00730	.09018	.08091
2.294	1.979	4.34280	.01356	.08931	-.00115	-.02582	.00230	-.00238	.00676	.09008	.07508
2.294	2.292	4.34300	.01556	.08964	-.00040	-.02971	.00254	-.00273	.00873	.09056	.09637
2.299	2.632	4.34230	.01244	.09029	-.00015	-.03452	.00282	-.00317	.00557	.09097	.06121
2.298	2.983	4.34240	.01338	.09060	.00017	-.03931	.00304	-.00357	.00648	.09135	.07095
2.293	3.308	4.34990	.01429	.09126	.00086	-.04340	.00325	-.00393	.00733	.09208	.07960
2.296	3.670	4.34410	.01231	.09157	.00118	-.04906	.00341	-.00435	.00534	.09224	.05792
2.296	3.989	4.34700	.01444	.09173	.00143	-.05220	.00355	-.00461	.00744	.09256	.08042
2.306	4.298	4.34650	.01410	.09152	.00111	-.05703	.00375	-.00502	.00712	.09233	.07715
2.301	4.367	4.34770	.01562	.09193	.00130	-.05709	.00375	-.00500	.00860	.09285	.09266
2.296	4.602	4.34760	.01503	.09205	.00143	-.06149	.00402	-.00541	.00801	.09292	.08623
2.299	4.937	4.35230	.01415	.09207	.00149	-.06643	.00444	-.00586	.00712	.09288	.07666
2.287	5.204	4.35150	.01394	.09247	.00169	-.07122	.00473	-.00628	.00689	.09326	.07383
	GRADIENT	-.00218	.00105	.00046	.00030	-.01296	.00093	-.00119	.00101	.00054	.01089

OA257 (LARC 20-M6-6559) DV102 (R7EOD3) (10 JUL 81)

REFERENCE DATA

SREF = 2690.0000 SQ.FT. XMRP = 1076.6800 IN. XO
LREF = 474.8100 INCHES YMRP = .0000 IN. YO
BREF = 936.6800 INCHES ZMRP = 375.0000 IN. ZO
SCALE = .0100

PARAMETRIC DATA

ALPHA = 4.500 PHI = 270.000
SPDBRK = 86.600 AILRON = .000
YP = 1.000 1S = 1.000
ELEVON = .000 MACH = 6.000
S-MODE = 1.000 S-DIR = 1.000

RUN NO. 162/ O RN/L = 4.52 GRADIENT INTERVAL = -.60/ .60

RN/L	BETA	ALPHA	CN	CA	CLM	CY	CYN	CBL	CL	CD	L/D
4.494	-4.772	9.45190	.01444	.09134	.00231	.06608	-.00292	.00576	-.00076	.09247	-.00817
4.432	-4.688	9.44070	.01576	.09087	.00222	.06498	-.00289	.00568	.00064	.09222	.00691
4.441	-4.667	9.44150	.01576	.09087	.00222	.06491	-.00288	.00568	.00064	.09223	.00692
4.528	-3.852	9.44540	.01384	.09059	.00267	.05138	-.00198	.00447	-.00122	.09164	-.01327
4.514	-3.277	9.44400	.01526	.09041	.00295	.04200	-.00159	.00369	.00022	.09169	.00241
4.525	-2.775	9.43780	.01511	.09046	.00317	.03822	-.00144	.00337	.00007	.09171	.00078
4.540	-2.234	9.43520	.01507	.08994	.00252	.03182	-.00115	.00282	.00012	.09119	.00133
4.557	-1.768	9.43230	.01521	.08945	.00224	.02539	-.00076	.00222	.00035	.09073	.00384
4.566	-1.593	9.42930	.01439	.08953	.00243	.02300	-.00061	.00202	-.00048	.09068	-.00524
4.581	-1.131	9.42890	.01364	.08917	.00215	.01701	-.00039	.00148	-.00116	.09020	-.01281
4.583	-.876	9.43000	.01506	.08896	.00212	.01361	-.00028	.00122	.00028	.09023	.00316
4.592	-.467	9.42620	.01171	.08924	.00229	.00811	-.00008	.00075	-.00307	.08995	-.03410
4.584	-.064	9.42270	.01428	.08916	.00270	.00274	.00023	.00023	-.00051	.09030	-.00563
4.590	.350	9.42740	.01444	.08907	.00242	-.00311	.00072	-.00039	-.00034	.09023	-.00378
4.574	.726	9.42250	.01516	.08880	.00188	-.00841	.00117	-.00094	.00042	.09009	.00467
4.593	1.140	9.42390	.01566	.08908	.00252	-.01398	.00148	-.00144	.00087	.09045	.00957
4.557	1.575	9.42160	.01299	.08914	.00187	-.02012	.00180	-.00198	-.00177	.09007	-.01968
4.528	1.989	9.43200	.01503	.08927	.00193	-.02513	.00214	-.00247	.00020	.09052	.00218
4.497	2.393	9.42610	.01440	.08932	.00208	-.03087	.00248	-.00298	-.00042	.09048	-.00465
4.487	2.764	9.43040	.01607	.08993	.00262	-.03549	.00269	-.00338	.00111	.09135	.01221
4.471	3.265	9.43370	.01590	.09062	.00312	-.04244	.00290	-.00395	.00083	.09200	.00905
4.463	3.483	9.43160	.01375	.09070	.00310	-.04482	.00298	-.00414	-.00130	.09172	-.01413
4.463	3.808	9.44210	.01618	.09075	.00306	-.04985	.00320	-.00458	.00107	.09217	.01164
4.464	4.304	9.43790	.01364	.09073	.00265	-.05653	.00356	-.00512	-.00142	.09174	-.01552
4.454	4.912	9.44670	.01679	.09111	.00248	-.06671	.00425	-.00606	.00161	.09263	.01735
	GRADIENT	.00151	.00334	-.00021	.00016	-.01375	.00098	-.00139	.00333	.00034	.03701

OA257 (LARC 20-M6-6559) OV102 (R7EOD3) (10 JUL 81)

REFERENCE DATA

SREF = 2690.0000 SQ.FT. XMRP = 1076.6800 IN. XO
LREF = 474.8100 INCHES YMRP = .0000 IN. YO
BREF = 936.6800 INCHES ZMRP = 375.0000 IN. ZO
SCALE = .0100

PARAMETRIC DATA

ALPHA = 4.500 PHI = 270.000
SPDBRK = 86.600 AILRON = .000
YP = 1.000 1S = 1.000
ELEVON = .000 MACH = 6.000
S-MODE = 1.000 S-DIR = 1.000

RUN NO. 166/ 0 RN/L = 7.54 GRADIENT INTERVAL = -.60/ .60

RN/L	BETA	ALPHA	CN	CA	CLM	CY	CYN	CBL	CL	CD	L/D
7.525	-4.628	4.53470	.01410	.09193	.00283	.06335	-.00237	.00538	.00679	.09276	.07320
7.505	-4.459	4.53380	.01355	.09186	.00262	.06327	-.00237	.00538	.00625	.09264	.06744
7.542	-4.443	4.54960	.01545	.09120	.00302	.05259	-.00175	.00447	.00816	.09214	.08860
7.552	-3.499	4.55120	.01447	.09084	.00305	.04255	-.00128	.00364	.00722	.09170	.07869
7.574	-3.008	4.54560	.01459	.09093	.00289	.03902	-.00119	.00336	.00734	.09180	.07994
7.539	-2.540	4.54510	.01430	.09047	.00270	.03282	-.00092	.00281	.00709	.09132	.07763
7.539	-1.891	4.54320	.01480	.09020	.00225	.02596	-.00063	.00224	.00761	.09109	.08351
7.568	-1.320	4.54100	.01408	.08961	.00170	.01815	-.00036	.00157	.00695	.09045	.07679
7.548	-.775	4.54400	.01299	.08954	.00174	.01088	-.00015	.00097	.00586	.09029	.06486
7.573	-.270	4.53840	.01297	.08955	.00159	.00461	.00014	.00040	.00585	.09030	.06475
7.584	.061	4.54130	.01446	.08959	.00164	.00106	.00039	.00005	.00733	.09045	.08099
7.447	.120	4.51670	.01362	.09008	.00169	.00034	.00041	-.00003	.00649	.09088	.07138
7.527	.201	4.52500	.01358	.08966	.00149	-.00061	.00041	-.00008	.00646	.09045	.07147
7.552	.243	4.52830	.01425	.08963	.00148	-.00058	.00040	-.00008	.00713	.09047	.07882
7.569	.383	4.54040	.01435	.08942	.00145	-.00379	.00076	-.00047	.00722	.09028	.07999
7.591	.744	4.53910	.01548	.08956	.00159	-.00912	.00114	-.00099	.00835	.09050	.09223
7.557	.973	4.54430	.01521	.08958	.00156	-.01147	.00131	-.00122	.00806	.09050	.08907
7.528	1.211	4.53630	.01469	.08967	.00183	-.01527	.00150	-.00155	.00755	.09055	.08341
7.519	1.486	4.53860	.01548	.08994	.00209	-.01870	.00162	-.00184	.00831	.09088	.09149
7.540	1.972	4.53140	.01505	.08996	.00220	-.02589	.00190	-.00245	.00790	.09087	.08689
7.543	2.424	4.53470	.01502	.09052	.00256	-.03113	.00214	-.00291	.00781	.09142	.08545
7.571	2.935	4.54130	.01543	.09076	.00276	-.03785	.00246	-.00351	.00819	.09170	.08935
7.560	3.433	4.53500	.01469	.09143	.00299	-.04446	.00265	-.00404	.00741	.09231	.08031
7.486	3.760	4.53730	.01501	.09167	.00324	-.04792	.00281	-.00433	.00771	.09257	.08331
7.489	4.165	4.53940	.01541	.09179	.00325	-.05380	.00311	-.00483	.00810	.09272	.08731
7.496	4.598	4.54170	.01458	.09187	.00306	-.06037	.00347	-.00537	.00726	.09273	.07829
7.503	4.977	4.53560	.01415	.09203	.00318	-.06568	.00376	-.00582	.00683	.09286	.07355
7.526	5.429	4.53850	.01592	.09236	.00322	-.07372	.00424	-.00647	.00857	.09333	.09179
	GRADIENT	-.00752	.00188	-.00008	-.00025	-.01208	.00079	-.00121	.00189	.00007	.02087

OA257 (LARC 20-M6-6559) OV102 (R7E425) (10 JUL 81)

REFERENCE DATA

SREF = 2690.0000 SQ.FT. XMRP = 1076.6800 IN. XO
LREF = 474.8100 INCHES YMRP = .0000 IN. YO
BREF = 936.6800 INCHES ZMRP = 375.0000 IN. ZO
SCALE = .0100

PARAMETRIC DATA

BETA = .000 PHI = .000
SPDBRK = 86.600 AILRON = .000
YP = .000 1S = 1.000
ELEVON = .000 MACH = 6.000
S-MODE = 1.000 S-DIR = 2.000

RUN NO. 136/ O RN/L = 4.39 GRADIENT INTERVAL = 23.00/ 25.00

RN/L	ALPHA	BETA	CN	CA	CLM	CY	CYN	CBL	CL	CD	L/D
4.319	-.315	-.07096	-.06646	.10159	-.00225	.00246	.00020	.00013	-.06591	.10195	-.64645
4.344	5.232	.00047	.04056	.08798	.00499	.00019	.00057	-.00006	.03237	.09131	.35447
4.384	9.821	.00576	.15164	.07879	.00738	.00051	.00045	.00005	.13598	.10350	1.31370
4.469	14.440	.00109	.28221	.06994	.00363	-.00020	.00020	.00014	.25586	.13810	1.85260
4.471	19.255	.00558	.44057	.06596	.00259	.00026	.00019	.00016	.39418	.20756	1.89910
4.463	24.279	.01043	.62767	.06292	-.00276	-.00080	.00046	-.00006	.54628	.31544	1.73180
4.445	24.324	.01553	.62781	.06264	-.00283	-.00099	.00047	-.00009	.54628	.31567	1.73050
4.413	29.280	.02185	.83375	.06255	-.01045	-.00022	.00005	-.00007	.69664	.46233	1.50680
4.366	34.483	.05707	1.05500	.06174	-.02424	.00058	-.00019	-.00016	.83472	.64821	1.28770
4.320	39.292	.05894	1.27240	.05985	-.04030	.00144	-.00057	.00037	.94681	.85207	1.11120
	GRADIENT	.11220	.00326	-.00606	-.00138	-.00410	.00042	-.00071	.00000	.00513	-.02892

OA257 (LARC 20-M6-6559) OV102 (R7E525) (10 JUL 81)

REFERENCE DATA

SREF = 2690.0000 SQ.FT. XMRP = 1076.6800 IN. XO
LREF = 474.8100 INCHES YMRP = .0000 IN. YO
BREF = 936.6800 INCHES ZMRP = 375.0000 IN. ZO
SCALE = .0100

PARAMETRIC DATA

BETA = .000 PHI = .000
SPDBRK = 86.600 AILRON = .000
YP = .000 1S = 1.000
ELEVON = .000 MACH = 6.000
S-MODE = 1.000 S-DIR = 2.000

RUN NO. 229/ 0 RN/L = 4.59 GRADIENT INTERVAL = 23.00/ 25.00

RN/L	ALPHA	BETA	CN	CA	CLM	CY	CYN	CBL	CL	CD	L/D
4.586	-.197	.01586	-.06405	.09960	-.00271	.00131	.00006	.00002	-.06371	.09982	-.63824
4.566	-.181	.01629	-.06380	.09951	-.00285	.00108	.00004	.00003	-.06349	.09971	-.63671
4.661	-.127	.00874	-.06655	.10116	-.00249	.00138	.00023	-.00002	-.06632	.10130	-.65466
4.596	5.139	.01729	.02877	.08760	.00359	.00038	.00036	-.00000	.02081	.08982	.23168
4.594	9.439	.01721	.13855	.07910	.00768	.00052	.00035	.00003	.12370	.10075	1.22780
4.573	9.944	.01880	.13847	.07889	.00782	.00023	.00031	.00002	.12276	.10162	1.20810
4.576	15.156	.01850	.26746	.06932	.00385	.00011	.00022	.00011	.24003	.13683	1.75420
4.547	19.447	.02087	.44246	.06616	.00210	-.00005	.00020	.00012	.39519	.20970	1.88460
4.554	19.536	.02332	.44284	.06615	.00255	.00019	.00024	.00013	.39523	.21043	1.87820
4.552	24.122	.02345	.61645	.06388	-.00304	-.00032	.00034	.00008	.53651	.31023	1.72940
4.549	29.186	.02292	.82273	.06265	-.01076	-.00055	.00050	-.00011	.68773	.45589	1.50860
4.606	34.421	.02527	1.05060	.06187	-.02353	.00058	.00020	.00020	.83165	.64490	1.28960
4.597	39.383	.02521	1.27720	.05976	-.04020	.00028	.00030	.00036	.94924	.85655	1.10820
	GRADIENT	.00000	.00000	.00000	.00000	.00000	.00000	.00000	.00000	.00000	.00000

OA257 (LARC 20-M6-6559) OV102 (R7E625) (10 JUL 81)

REFERENCE DATA

SREF = 2690.0000 SQ.FT. XMRP = 1076.6800 IN. XO
LREF = 474.8100 INCHES YMRP = .0000 IN. YO
BREF = 936.6800 INCHES ZMRP = 375.0000 IN. ZO
SCALE = .0100

PARAMETRIC DATA

BETA = .000 PHI = .000
SPDBRK = 86.600 AILRON = .000
YP = .000 1S = 1.000
ELEVON = .000 MACH = 6.000
S-MODE = 1.000 S-DIR = 2.000

RUN NO. 306/ O RN/L = 4.41 GRADIENT INTERVAL = 23.00/ 25.00

RN/L	ALPHA	BETA	CN	CA	CLM	CY	CYN	CBL	CL	CD	L/D
4.388	-.272	.00744	-.06651	.09995	-.00178	.00275	.00001	.00016	-.06604	.10027	-.65860
4.382	-.019	.00507	-.06621	.09997	-.00190	.00351	.00008	.00015	-.06618	.09999	-.66185
4.393	.035	.01664	-.06430	.10026	-.00158	.00329	.00019	.00013	-.06436	.10022	-.64218
4.386	5.158	.00539	.03639	.08690	.00460	.00216	.00032	.00023	.02843	.08982	.31656
4.399	9.418	.00400	.14088	.07869	.00843	.00174	.00049	.00024	.12610	.10068	1.25250
4.423	14.776	.00649	.28247	.06866	.00397	.00125	.00034	.00036	.25561	.13843	1.84650
4.447	19.495	.00640	.43435	.06547	.00295	.00099	.00043	.00039	.38760	.20667	1.87550
4.467	24.668	.00590	.61735	.06277	-.00296	.00044	.00066	.00032	.53481	.31469	1.69950
4.470	29.416	.00219	.82361	.06232	-.01000	.00032	.00086	.00016	.68682	.45880	1.49700
4.447	34.559	.01076	1.03790	.06056	-.02290	.00134	.00016	.00073	.82041	.63863	1.28460
4.403	39.269	.01386	1.25790	.05884	-.03918	.00135	.00016	.00105	.93663	.84179	1.11270
	GRADIENT	.00000	.00000	.00000	.00000	.00000	.00000	.00000	.00000	.00000	.00000

OA257 (LARC 20-M6-6559) OV102 (R7E445) (10 JUL 81)

REFERENCE DATA

SREF = 2690.0000 SQ.FT. XMRP = 1076.6800 IN. XO
LREF = 474.8100 INCHES YMRP = .0000 IN. YO
BREF = 936.6800 INCHES ZMRP = 375.0000 IN. ZO
SCALE = .0100

PARAMETRIC DATA

BETA = .000 PHI = .000
SPDBRK = 86.600 AILRON = .000
YP = 1.000 1S = 1.000
ELEVON = .000 MACH = 6.000
S-MODE = 1.000 S-DIR = 2.000

RUN NO. 108/ O RN/L = 4.38 GRADIENT INTERVAL = 23.00/ 25.00

RN/L	ALPHA	BETA	CN	CA	CLM	CY	CYN	CBL	CL	CD	L/D
4.456	-.300	.02741	-.06495	.09987	-.00239	.00130	.00013	.00008	-.06443	.10021	-.64297
4.310	-.126	.06919	-.06488	.09998	-.00249	.00037	.00018	.00002	-.06466	.10012	-.64584
4.403	4.577	.12120	.02807	.08802	.00354	-.00078	.00053	-.00016	.02096	.08998	.23290
4.380	9.526	.01153	.14166	.07879	.00740	-.00019	.00034	.00002	.12666	.10115	1.25220
4.371	14.420	.00672	.27945	.06900	.00314	-.00024	.00025	.00004	.25346	.13642	1.85800
4.338	19.251	-.06749	.43597	.06590	.00267	-.00029	.00028	.00010	.38987	.20595	1.89300
4.328	24.188	-.19753	.61725	.06222	-.00280	-.00001	.00069	.00010	.53757	.30966	1.73600
4.387	29.243	-.35933	.82426	.06184	-.01032	.00196	.00072	.00034	.68901	.45662	1.50890
4.331	34.181	-.59107	1.03950	.06051	-.02355	.00513	.00046	.00119	.82598	.63409	1.30260
4.410	39.036	-.65977	1.25710	.05987	-.03953	.00581	.00088	.00158	.93876	.83825	1.11990
	GRADIENT	.00000	.00000	.00000	.00000	.00000	.00000	.00000	.00000	.00000	.00000

OA257 (LARC 20-M6-6559) OV102 (R7E545) (10 JUL 81)

REFERENCE DATA

SREF = 2690.0000 SQ.FT. XMRP = 1076.6800 IN. XO
LREF = 474.8100 INCHES YMRP = .0000 IN. YO
BREF = 936.6800 INCHES ZMRP = 375.0000 IN. ZO
SCALE = .0100

PARAMETRIC DATA

BETA = .000 PHI = .000
SPDBRK = 86.600 AILRON = .000
YP = 1.000 1S = 1.000
ELEVON = .000 MACH = 6.000
S-MODE = 1.000 S-DIR = 2.000

RUN NO. 157/ 0 RN/L = 4.38 GRADIENT INTERVAL = 23.00/ 25.00

RN/L	ALPHA	BETA	CN	CA	CLM	CY	CYN	CBL	CL	CD	L/D
4.383	-.202	-.09247	-.06252	.09642	-.00211	.00392	.00003	.00021	-.06218	.09663	-.64347
4.412	.054	-.09388	-.06396	.09990	-.00205	.00385	.00004	.00022	-.06405	.09984	-.64156
4.386	5.827	-.10468	.02065	.08458	.00334	.00303	.00021	.00029	.01196	.08624	.13866
4.388	10.130	-.15245	.14725	.07527	.00696	.00233	.00050	.00027	.13172	.10000	1.31720
4.396	14.383	-.18891	.26740	.06707	.00321	.00232	.00049	.00043	.24236	.13139	1.84460
4.386	19.309	-.24273	.42397	.06414	.00269	.00261	.00069	.00052	.37892	.20072	1.88780
4.379	24.160	-.36203	.60145	.06136	-.00261	.00265	.00098	.00061	.52365	.30215	1.73310
4.360	29.162	-.48706	.80337	.06152	-.00971	.00394	.00114	.00075	.67156	.44519	1.50850
4.386	34.266	-.70722	1.02460	.06096	-.02287	.00761	.00052	.00193	.81242	.62724	1.29520
4.367	39.263	-.82098	1.25100	.05967	-.03949	.00761	.00124	.00236	.93085	.83794	1.11090
	GRADIENT	.00000	.00000	.00000	.00000	.00000	.00000	.00000	.00000	.00000	.00000

OA257 (LARC 20-M6-6559) OV102 (R7E645) (10 JUL 81)

REFERENCE DATA

SREF = 2690.0000 SQ.FT. XMRP = 1076.6800 IN. XO
LREF = 474.8100 INCHES YMRP = .0000 IN. YO
BREF = 936.6800 INCHES ZMRP = 375.0000 IN. ZO
SCALE = .0100

PARAMETRIC DATA

BETA = .000 PHI = .000
SPDBRK = 86.600 AILRON = .000
YP = 1.000 1S = 1.000
ELEVON = .000 MACH = 6.000
S-MODE = 1.000 S-DIR = 2.000

RUN NO. 174/ 0 RN/L = 4.38 GRADIENT INTERVAL = 23.00/ 25.00

RN/L	ALPHA	BETA	CN	CA	CLM	CY	CYN	CBL	CL	CD	L/D
4.328	-.283	-.03482	-.06462	.10030	-.00257	.00263	.00007	.00018	-.06413	.10062	-.63731
4.357	-.273	-.03670	-.06462	.10028	-.00256	.00269	.00004	.00018	-.06414	.10058	-.63769
4.465	.005	-.02795	-.06319	.10019	-.00240	.00256	.00009	.00013	-.06320	.10019	-.63081
4.318	4.566	.00670	.02475	.08846	.00336	.00137	.00036	.00010	.01763	.09015	.19556
4.321	9.370	-.03181	.13494	.07969	.00772	.00110	.00038	.00013	.12017	.10059	1.19460
4.346	14.425	-.09116	.27730	.06926	.00325	.00128	.00039	.00025	.25131	.13616	1.84570
4.363	20.248	-.21873	.44362	.06533	.00218	.00191	.00063	.00041	.39359	.21482	1.83220
4.383	24.449	-.32639	.62901	.06331	-.00361	.00205	.00099	.00050	.54640	.31797	1.71840
4.381	29.408	-.47427	.83445	.06274	-.01152	.00318	.00132	.00068	.69612	.46439	1.49900
4.397	34.551	-.64930	1.05490	.06111	-.02465	.00612	.00073	.00175	.83422	.64864	1.28610
4.441	39.259	-.84401	1.26840	.05878	-.04085	.00742	.00126	.00252	.94496	.84821	1.11410
	GRADIENT	.00000	.00000	.00000	.00000	.00000	.00000	.00000	.00000	.00000	.00000

OA257 (LARC 20-M6-6559) OV102 (R7E458) (10 JUL 81)

REFERENCE DATA

SREF = 2690.0000 SQ.FT. XMRP = 1076.6800 IN. XO
LREF = 474.8100 INCHES YMRP = .0000 IN. YO
BREF = 936.6800 INCHES ZMRP = 375.0000 IN. ZO
SCALE = .0100

PARAMETRIC DATA

ALPHA = 30.000 PHI = .000
SPDBRK = 86.600 AILRON = .000
YP = 1.000 1S = 1.000
ELEVON = .000 MACH = 6.000
S-MODE = 2.000 S-DIR = 1.000

RUN NO. 118/ O RN/L = 4.39 GRADIENT INTERVAL = -.60/ .60

RN/L	BETA	ALPHA	CN	CA	CLM	CY	CYN	CBL	CL	CD	L/D
4.407	-4.629	29.25300	.82128	.06395	-.01166	.03966	.00622	.00963	.68530	.45713	1.49910
4.406	-4.500	29.26800	.82178	.06389	-.01163	.03850	.00608	.00934	.68564	.45750	1.49870
4.406	-4.300	29.27500	.82242	.06369	-.01166	.03681	.00584	.00891	.68624	.45772	1.49930
4.411	-4.100	29.27300	.82259	.06355	-.01167	.03510	.00550	.00854	.68647	.45766	1.50000
4.408	-3.900	29.28500	.82366	.06336	-.01170	.03334	.00527	.00809	.68740	.45816	1.50030
4.408	-3.700	29.28700	.82353	.06318	-.01181	.03158	.00505	.00767	.68737	.45796	1.50090
4.406	-3.500	29.29800	.82416	.06303	-.01173	.02971	.00483	.00722	.68790	.45827	1.50110
4.404	-3.300	29.30100	.82494	.06294	-.01176	.02804	.00465	.00678	.68860	.45861	1.50150
4.412	-3.100	29.31200	.82551	.06289	-.01166	.02624	.00447	.00632	.68903	.45898	1.50120
4.407	-2.900	29.31700	.82512	.06283	-.01178	.02455	.00430	.00584	.68868	.45880	1.50110
4.404	-2.700	29.32300	.82598	.06276	-.01178	.02269	.00412	.00538	.68941	.45923	1.50120
4.396	-2.500	29.33600	.82663	.06263	-.01176	.02095	.00395	.00493	.68994	.45959	1.50120
4.398	-2.300	29.33700	.82644	.06254	-.01177	.01903	.00372	.00450	.68981	.45943	1.50150
4.401	-2.100	29.35000	.82703	.06240	-.01166	.01725	.00355	.00403	.69029	.45975	1.50140
4.399	-1.900	29.35300	.82741	.06225	-.01155	.01544	.00333	.00359	.69067	.45985	1.50190
4.395	-1.700	29.36200	.82745	.06212	-.01121	.01389	.00314	.00316	.69070	.45986	1.50200
4.389	-1.500	29.37000	.82726	.06201	-.01100	.01223	.00293	.00272	.69052	.45977	1.50190
4.388	-1.300	29.37400	.82728	.06183	-.01081	.01062	.00271	.00231	.69060	.45967	1.50240
4.394	-1.100	29.38600	.82774	.06181	-.01074	.00896	.00242	.00193	.69090	.46002	1.50190
4.395	-.900	29.38800	.82836	.06186	-.01062	.00745	.00211	.00157	.69141	.46039	1.50180
4.387	-.700	29.40300	.82891	.06183	-.01057	.00603	.00180	.00124	.69178	.46082	1.50120
4.384	-.500	29.40300	.82883	.06185	-.01066	.00459	.00142	.00089	.69170	.46080	1.50110
4.383	-.300	29.41400	.82864	.06175	-.01076	.00323	.00100	.00061	.69150	.46074	1.50080
4.385	-.100	29.42000	.82959	.06175	-.01077	.00178	.00063	.00028	.69228	.46129	1.50070
4.398	.100	29.42700	.82946	.06177	-.01078	.00036	.00028	-.00006	.69209	.46133	1.50020
4.405	.300	29.43900	.83013	.06165	-.01100	-.00106	-.00012	-.00039	.69265	.46169	1.50030
4.396	.500	29.43900	.82996	.06164	-.01106	-.00221	-.00062	-.00058	.69250	.46161	1.50020
4.396	.700	29.45200	.83035	.06165	-.01109	-.00293	-.00134	-.00069	.69273	.46196	1.49950
4.391	.900	29.45200	.83039	.06162	-.01121	-.00432	-.00173	-.00099	.69278	.46195	1.49970
4.385	1.100	29.46700	.83095	.06165	-.01118	-.00581	-.00196	-.00136	.69313	.46243	1.49890
4.390	1.300	29.47000	.83113	.06171	-.01145	-.00749	-.00217	-.00180	.69324	.46261	1.49850
4.387	1.500	29.47800	.83136	.06165	-.01152	-.00937	-.00234	-.00226	.69340	.46277	1.49840
4.391	1.700	29.48700	.83155	.06162	-.01158	-.01126	-.00247	-.00278	.69352	.46294	1.49810
4.387	1.900	29.48900	.83177	.06163	-.01165	-.01309	-.00266	-.00323	.69367	.46309	1.49790
4.383	2.100	29.50400	.83106	.06163	-.01162	-.01494	-.00286	-.00367	.69295	.46292	1.49690
4.388	2.300	29.50200	.83201	.06167	-.01176	-.01674	-.00310	-.00412	.69376	.46340	1.49710
4.382	2.500	29.51300	.83156	.06168	-.01163	-.01843	-.00336	-.00454	.69327	.46333	1.49630
4.378	2.700	29.51700	.83188	.06177	-.01165	-.02001	-.00363	-.00492	.69348	.46361	1.49580
4.390	2.900	29.52300	.83153	.06179	-.01167	-.02172	-.00390	-.00534	.69311	.46352	1.49530
4.380	3.100	29.53500	.83170	.06184	-.01152	-.02340	-.00416	-.00573	.69314	.46379	1.49450
4.377	3.300	29.53600	.83159	.06197	-.01151	-.02511	-.00439	-.00614	.69298	.46386	1.49390
4.384	3.500	29.54900	.83175	.06213	-.01148	-.02705	-.00463	-.00659	.69292	.46424	1.49260

OA257 (LARC 20-M6-6559) OV102 (R7E458) (10 JUL 81)

REFERENCE DATA

SREF =	2690.0000 SQ.FT.	XMRP =	1076.6800 IN.	XO	
LREF =	474.8100 INCHES	YMRP =	.0000 IN.	YO	
BREF =	936.6800 INCHES	ZMRP =	375.0000 IN.	ZO	
SCALE =	.0100				

PARAMETRIC DATA

ALPHA =	30.000	PHI =	.000
SPDBRK =	86.600	AILRON =	.000
YP =	1.000	1S =	1.000
ELEVON =	.000	MACH =	6.000
S-MODE =	2.000	S-DIR =	1.000

RUN NO. 118/ O RN/L = 4.39 GRADIENT INTERVAL = -.60/ .60

RN/L	BETA	ALPHA	CN	CA	CLM	CY	CYN	CBL	CL	CD	L/D
4.392	3.700	29.54700	.83129	.06218	-.01145	-.02880	-.00486	-.00704	.69252	.46404	1.49240
4.382	3.846	29.54800	.83138	.06225	-.01138	-.03005	-.00505	-.00732	.69255	.46416	1.49210
	GRADIENT	.03743	.00143	-.00019	-.00039	-.00690	-.00198	-.00153	.00104	.00099	-.00093

OA257 (LARC 20-M6-6559) OV102 (R7EA58) (10 JUL 81)

REFERENCE DATA

SREF = 2690.0000 SQ.FT. XMRP = 1076.6800 IN. XO
LREF = 474.8100 INCHES YMRP = .0000 IN. YO
BREF = 936.6800 INCHES ZMRP = 375.0000 IN. ZO
SCALE = .0100

PARAMETRIC DATA

ALPHA = 30.000 PHI = .000
SPDBRK = 86.600 AILRON = .000
YP = 1.000 1S = 1.000
ELEVON = .000 MACH = 6.000
S-MODE = 2.000 S-DIR = 1.000

RUN NO. 2118/ O RN/L = 4.39 GRADIENT INTERVAL = -.60/ .60

RN/L	BETA	ALPHA	CN	CA	CLM	CY	CYN	CBL	CL	CD	L/D
4.407	-4.600	29.26400	.82238	.06390	-.01167	.03945	.00619	.00958	.68619	.45776	1.49900
4.405	-4.400	29.26600	.82199	.06380	-.01173	.03760	.00597	.00912	.68588	.45750	1.49920
4.408	-4.200	29.27600	.82266	.06362	-.01162	.03599	.00568	.00874	.68647	.45779	1.49950
4.410	-4.000	29.27800	.82299	.06349	-.01175	.03423	.00537	.00831	.68681	.45786	1.50000
4.408	-3.800	29.28600	.82367	.06322	-.01172	.03246	.00516	.00789	.68747	.45805	1.50090
4.407	-3.600	29.29400	.82385	.06316	-.01179	.03063	.00496	.00744	.68760	.45819	1.50070
4.406	-3.400	29.29800	.82447	.06300	-.01175	.02880	.00473	.00700	.68818	.45840	1.50130
4.408	-3.200	29.31000	.82512	.06293	-.01172	.02721	.00458	.00656	.68868	.45880	1.50110
4.411	-3.000	29.31200	.82519	.06293	-.01170	.02533	.00438	.00608	.68873	.45885	1.50100
4.405	-2.800	29.32300	.82575	.06278	-.01172	.02368	.00423	.00561	.68921	.45913	1.50110
4.402	-2.600	29.32700	.82611	.06268	-.01181	.02182	.00403	.00515	.68953	.45927	1.50140
4.395	-2.400	29.33500	.82672	.06256	-.01174	.01999	.00382	.00472	.69006	.45957	1.50150
4.399	-2.200	29.34300	.82694	.06250	-.01172	.01815	.00364	.00425	.69022	.45971	1.50140
4.401	-2.000	29.34800	.82678	.06231	-.01159	.01629	.00343	.00381	.69013	.45953	1.50180
4.395	-1.800	29.36100	.82755	.06221	-.01140	.01469	.00323	.00337	.69074	.45997	1.50170
4.393	-1.600	29.36100	.82765	.06206	-.01115	.01303	.00303	.00295	.69091	.45989	1.50230
4.386	-1.400	29.37800	.82751	.06187	-.01086	.01142	.00283	.00250	.69074	.45987	1.50200
4.393	-1.200	29.37800	.82729	.06181	-.01082	.00977	.00255	.00212	.69058	.45971	1.50220
4.394	-1.000	29.38800	.82799	.06180	-.01063	.00824	.00229	.00175	.69112	.46016	1.50190
4.391	-.800	29.39800	.82853	.06187	-.01065	.00674	.00196	.00139	.69148	.46060	1.50120
4.385	-.600	29.39900	.82825	.06187	-.01063	.00527	.00163	.00104	.69122	.46047	1.50110
4.382	-.400	29.41100	.82865	.06177	-.01067	.00395	.00121	.00075	.69151	.46074	1.50090
4.384	-.200	29.41400	.82910	.06177	-.01074	.00251	.00080	.00045	.69189	.46099	1.50090
4.390	.000	29.42800	.82973	.06175	-.01080	.00107	.00046	.00011	.69234	.46146	1.50030
4.404	.200	29.42700	.82966	.06171	-.01090	-.00034	.00008	-.00022	.69230	.46137	1.50050
4.401	.400	29.44000	.83009	.06168	-.01091	-.00169	-.00034	-.00051	.69258	.46171	1.50000
4.396	.600	29.44600	.83058	.06162	-.01112	-.00251	-.00099	-.00062	.69299	.46197	1.50010
4.394	.800	29.45000	.83030	.06164	-.01110	-.00358	-.00157	-.00083	.69270	.46190	1.49970
4.386	1.000	29.46400	.83044	.06164	-.01121	-.00504	-.00186	-.00118	.69272	.46214	1.49890
4.390	1.200	29.46300	.83135	.06169	-.01133	-.00666	-.00208	-.00157	.69350	.46262	1.49910
4.387	1.400	29.48100	.83130	.06169	-.01140	-.00844	-.00227	-.00204	.69330	.46281	1.49800
4.391	1.600	29.47900	.83141	.06165	-.01161	-.01035	-.00240	-.00253	.69343	.46281	1.49830
4.388	1.800	29.49000	.83130	.06162	-.01156	-.01214	-.00257	-.00299	.69327	.46286	1.49780
4.384	2.000	29.49300	.83174	.06164	-.01162	-.01403	-.00274	-.00346	.69361	.46313	1.49770
4.385	2.200	29.50000	.83170	.06165	-.01168	-.01587	-.00298	-.00389	.69352	.46320	1.49720
4.386	2.400	29.51100	.83233	.06168	-.01168	-.01764	-.00323	-.00433	.69396	.46368	1.49670
4.380	2.600	29.51300	.83145	.06174	-.01164	-.01923	-.00350	-.00473	.69315	.46332	1.49610
4.385	2.800	29.52600	.83199	.06175	-.01163	-.02087	-.00377	-.00512	.69351	.46375	1.49540
4.387	3.000	29.52500	.83126	.06180	-.01160	-.02255	-.00404	-.00553	.69285	.46342	1.49510
4.376	3.200	29.53900	.83149	.06190	-.01143	-.02425	-.00427	-.00593	.69290	.46379	1.49400
4.380	3.400	29.54300	.83167	.06202	-.01150	-.02610	-.00453	-.00637	.69295	.46404	1.49330
4.388	3.600	29.54800	.83220	.06217	-.01142	-.02795	-.00474	-.00681	.69331	.46449	1.49260

OA257 (LARC 20-M6-6559) OV102 (R7EA58) (10 JUL 81)

REFERENCE DATA

SREF =	2690.0000 SQ.FT.	XMRP =	1076.6800 IN. XO		
LREF =	474.8100 INCHES	YMRP =	.0000 IN. YO		
BREF =	936.6800 INCHES	ZMRP =	375.0000 IN. ZO		
SCALE =	.0100				

PARAMETRIC DATA

ALPHA =	30.000	PHI =	.000
SPDBRK =	86.600	AILRON =	.000
YP =	1.000	1S =	1.000
ELEVON =	.000	MACH =	6.000
S-MODE =	2.000	S-DIR =	1.000

RUN NO. 2118/ 0 RN/L = 4.39 GRADIENT INTERVAL = -.60/ .60

RN/L	BETA	ALPHA	CN	CA	CLM	CY	CYN	CBL	CL	CD	L/D
4.391	3.800	29.55500	.83184	.06218	-.01135	-.02968	-.00500	-.00725	.69293	.46440	1.49210
	GRADIENT	.03786	.00186	-.00018	-.00038	-.00669	-.00209	-.00146	.00140	.00122	-.00093

OA257 (LARC 20-M6-6559) OV102 (R7E558) (10 JUL 81)

REFERENCE DATA

SREF = 2690.0000 SQ.FT. XMRP = 1076.6800 IN. XO
LREF = 474.8100 INCHES YMRP = .0000 IN. YO
BREF = 936.6800 INCHES ZMRP = 375.0000 IN. ZO
SCALE = .0100

PARAMETRIC DATA

ALPHA = 30.000 PHI = .000
SPDBRK = 86.600 AILRON = .000
YP = 1.000 1S = 1.000
ELEVON = .000 MACH = 6.000
S-MODE = 2.000 S-DIR = 1.000

RUN NO. 139/ O RN/L = 4.53 GRADIENT INTERVAL = -.60/ .60

RN/L	BETA	ALPHA	CN	CA	CLM	CY	CYN	CBL	CL	CD	L/D
4.460	-2.675	29.27800	.81817	.06184	-.01118	.02240	.00429	.00518	.68341	.45406	1.50510
4.476	-2.500	29.28300	.81877	.06182	-.01130	.02064	.00410	.00480	.68390	.45440	1.50510
4.487	-2.300	29.29300	.81892	.06178	-.01109	.01891	.00389	.00435	.68398	.45455	1.50470
4.496	-2.100	29.30300	.81945	.06176	-.01113	.01719	.00365	.00395	.68437	.45492	1.50440
4.520	-1.900	29.30700	.81965	.06181	-.01109	.01541	.00343	.00351	.68449	.45511	1.50400
4.534	-1.700	29.32500	.82082	.06181	-.01099	.01380	.00323	.00308	.68537	.45590	1.50330
4.536	-1.500	29.33000	.82148	.06185	-.01092	.01205	.00293	.00273	.68588	.45631	1.50310
4.531	-1.300	29.33400	.82063	.06186	-.01087	.01037	.00273	.00230	.68511	.45596	1.50260
4.527	-1.100	29.34700	.82122	.06184	-.01077	.00878	.00247	.00193	.68553	.45638	1.50210
4.528	-.900	29.34900	.82152	.06187	-.01079	.00719	.00213	.00161	.68576	.45657	1.50200
4.532	-.700	29.35800	.82048	.06188	-.01068	.00577	.00178	.00126	.68477	.45619	1.50110
4.537	-.500	29.36800	.82232	.06180	-.01072	.00434	.00139	.00099	.68634	.45713	1.50140
4.542	-.300	29.36800	.82172	.06172	-.01080	.00311	.00096	.00070	.68585	.45677	1.50150
4.538	-.100	29.38000	.82217	.06168	-.01085	.00175	.00061	.00038	.68617	.45710	1.50110
4.531	.100	29.39300	.82337	.06163	-.01091	.00037	.00024	.00008	.68713	.45780	1.50100
4.535	.300	29.39100	.82229	.06159	-.01094	-.00109	-.00019	-.00024	.68623	.45721	1.50090
4.540	.500	29.40300	.82344	.06152	-.01106	-.00231	-.00070	-.00048	.68717	.45786	1.50080
4.549	.700	29.40800	.82375	.06162	-.01103	-.00303	-.00145	-.00056	.68735	.45817	1.50020
4.550	.900	29.41300	.82366	.06164	-.01113	-.00440	-.00184	-.00086	.68722	.45819	1.49980
4.548	1.100	29.42400	.82409	.06164	-.01123	-.00597	-.00211	-.00122	.68751	.45854	1.49930
4.547	1.300	29.42800	.82448	.06172	-.01137	-.00760	-.00233	-.00163	.68778	.45885	1.49890
4.544	1.500	29.43300	.82460	.06171	-.01145	-.00946	-.00250	-.00211	.68784	.45895	1.49870
4.538	1.700	29.44400	.82483	.06172	-.01154	-.01136	-.00266	-.00258	.68795	.45920	1.49810
4.537	1.900	29.44400	.82410	.06175	-.01164	-.01316	-.00286	-.00301	.68730	.45888	1.49780
4.532	2.100	29.45400	.82519	.06179	-.01169	-.01500	-.00305	-.00348	.68816	.45957	1.49740
4.532	2.300	29.46600	.82549	.06186	-.01167	-.01681	-.00327	-.00392	.68828	.45992	1.49650
	GRADIENT	.03671	.00122	-.00026	-.00031	-.00675	-.00203	-.00149	.00089	.00081	-.00070

OA257 (LARC 20-M6-6559) OV102 (R7EB58) (10 JUL 81)

REFERENCE DATA

SREF = 2690.0000 SQ.FT. XMRP = 1076.6800 IN. XO
LREF = 474.8100 INCHES YMRP = .0000 IN. YO
BREF = 936.6800 INCHES ZMRP = 375.0000 IN. ZO
SCALE = .0100

PARAMETRIC DATA

ALPHA = 30.000 PHI = .000
SPDBRK = 86.600 AILRON = .000
YP = 1.000 1S = 1.000
ELEVON = .000 MACH = 6.000
S-MODE = 2.000 S-DIR = 1.000

RUN NO. 2139/ O RN/L = 4.53 GRADIENT INTERVAL = -.60/ .60

RN/L	BETA	ALPHA	CN	CA	CLM	CY	CYN	CBL	CL	CD	L/D
4.467	-2.600	29.27700	.81850	.06187	-.01120	.02166	.00422	.00500	.68369	.45425	1.50510
4.480	-2.400	29.29300	.81934	.06182	-.01107	.01974	.00399	.00457	.68433	.45480	1.50470
4.492	-2.200	29.29400	.81927	.06182	-.01118	.01806	.00378	.00416	.68426	.45477	1.50460
4.506	-2.000	29.30700	.81999	.06179	-.01105	.01629	.00355	.00373	.68480	.45526	1.50420
4.530	-1.800	29.31800	.82057	.06177	-.01107	.01458	.00332	.00330	.68523	.45566	1.50380
4.536	-1.600	29.32100	.81987	.06181	-.01091	.01292	.00308	.00291	.68456	.45538	1.50330
4.534	-1.400	29.33600	.82066	.06180	-.01084	.01126	.00283	.00252	.68514	.45594	1.50270
4.528	-1.200	29.34000	.82117	.06187	-.01086	.00954	.00262	.00210	.68552	.45630	1.50230
4.528	-1.000	29.34300	.82073	.06183	-.01078	.00800	.00231	.00177	.68513	.45609	1.50220
4.530	-.800	29.35800	.82201	.06182	-.01072	.00648	.00195	.00144	.68614	.45688	1.50180
4.534	-.600	29.35900	.82209	.06188	-.01077	.00513	.00161	.00113	.68617	.45698	1.50150
4.541	-.400	29.36900	.82211	.06180	-.01076	.00371	.00117	.00085	.68615	.45704	1.50130
4.539	-.200	29.37800	.82196	.06170	-.01077	.00239	.00076	.00055	.68599	.45699	1.50110
4.536	.000	29.38100	.82251	.06166	-.01088	.00105	.00044	.00021	.68647	.45727	1.50120
4.531	.200	29.39200	.82272	.06157	-.01090	-.00039	.00003	-.00009	.68661	.45742	1.50110
4.538	.400	29.39900	.82354	.06154	-.01099	-.00172	-.00040	-.00039	.68728	.45788	1.50100
4.546	.600	29.40200	.82412	.06159	-.01103	-.00261	-.00109	-.00050	.68774	.45824	1.50080
4.550	.800	29.41400	.82377	.06161	-.01104	-.00360	-.00166	-.00070	.68732	.45822	1.50000
4.547	1.000	29.41800	.82396	.06167	-.01125	-.00520	-.00198	-.00101	.68742	.45843	1.49950
4.549	1.200	29.42200	.82453	.06173	-.01134	-.00682	-.00221	-.00146	.68786	.45881	1.49920
4.545	1.400	29.43400	.82439	.06169	-.01137	-.00850	-.00243	-.00186	.68766	.45885	1.49870
4.541	1.600	29.43600	.82493	.06175	-.01156	-.01042	-.00256	-.00237	.68809	.45919	1.49850
4.537	1.800	29.44300	.82341	.06173	-.01155	-.01228	-.00275	-.00282	.68671	.45852	1.49770
4.532	2.000	29.45400	.82549	.06177	-.01166	-.01412	-.00294	-.00327	.68842	.45970	1.49750
4.533	2.200	29.45600	.82567	.06187	-.01177	-.01589	-.00315	-.00370	.68851	.45990	1.49710
4.532	2.325	29.46800	.82532	.06186	-.01163	-.01705	-.00331	-.00397	.68812	.45986	1.49640
	GRADIENT	.03625	.00173	-.00027	-.00024	-.00658	-.00214	-.00143	.00136	.00105	-.00048

OA257 (LARC 20-M6-6559) OV102 (R7E658) (10 JUL 81)

REFERENCE DATA

SREF = 2690.0000 SQ.FT. XMRP = 1076.6800 IN. XO
LREF = 474.8100 INCHES YMRP = .0000 IN. YO
BREF = 936.6800 INCHES ZMRP = 375.0000 IN. ZO
SCALE = .0100

PARAMETRIC DATA

ALPHA = 30.000 PHI = .000
SPDBRK = 86.600 AILRON = .000
YP = 1.000 1S = 1.000
ELEVON = .000 MACH = 6.000
S-MODE = 2.000 S-DIR = 1.000

RUN NO. 151/ O RN/L = 4.50 GRADIENT INTERVAL = -.60/ .60

RN/L	BETA	ALPHA	CN	CA	CLM	CY	CYN	CBL	CL	CD	L/D
4.549	-2.992	29.31800	.82386	.06298	-.01099	.02493	.00458	.00566	.68749	.45832	1.50000
4.549	-2.800	29.32400	.82415	.06291	-.01098	.02315	.00437	.00529	.68774	.45848	1.50010
4.560	-2.600	29.32700	.82513	.06293	-.01109	.02135	.00417	.00482	.68856	.45900	1.50010
4.564	-2.400	29.34300	.82562	.06282	-.01101	.01942	.00394	.00443	.68891	.45934	1.49980
4.576	-2.200	29.34300	.82563	.06275	-.01104	.01765	.00371	.00398	.68895	.45929	1.50000
4.570	-2.000	29.35400	.82586	.06273	-.01081	.01596	.00347	.00360	.68907	.45952	1.49950
4.573	-1.800	29.36100	.82615	.06274	-.01088	.01430	.00324	.00320	.68926	.45975	1.49920
4.564	-1.600	29.36700	.82640	.06280	-.01078	.01265	.00300	.00278	.68941	.46000	1.49870
4.556	-1.400	29.37900	.82726	.06282	-.01075	.01086	.00275	.00242	.69005	.46058	1.49820
4.555	-1.200	29.37900	.82694	.06279	-.01065	.00924	.00247	.00202	.68979	.46040	1.49820
4.547	-1.000	29.39000	.82768	.06284	-.01062	.00781	.00218	.00168	.69031	.46094	1.49760
4.538	-.800	29.39600	.82788	.06285	-.01063	.00628	.00184	.00136	.69044	.46111	1.49730
4.534	-.600	29.39800	.82804	.06288	-.01066	.00489	.00146	.00104	.69054	.46125	1.49710
4.525	-.400	29.41000	.82838	.06274	-.01070	.00352	.00104	.00074	.69081	.46144	1.49710
4.505	-.200	29.41000	.82828	.06277	-.01077	.00213	.00066	.00043	.69072	.46141	1.49700
4.481	.000	29.41400	.82863	.06271	-.01074	.00073	.00027	.00011	.69101	.46158	1.49710
4.469	.200	29.41700	.82888	.06265	-.01080	-.00073	-.00014	-.00020	.69124	.46169	1.49720
4.459	.400	29.42000	.82956	.06270	-.01089	-.00199	-.00062	-.00048	.69178	.46211	1.49700
4.447	.600	29.43200	.83003	.06265	-.01086	-.00270	-.00134	-.00057	.69212	.46244	1.49670
4.445	.800	29.43300	.82979	.06269	-.01101	-.00399	-.00181	-.00084	.69188	.46237	1.49640
4.435	1.000	29.44300	.83014	.06271	-.01110	-.00546	-.00207	-.00118	.69209	.46268	1.49580
4.426	1.200	29.44400	.83052	.06273	-.01128	-.00719	-.00232	-.00160	.69241	.46289	1.49580
4.417	1.400	29.44900	.83069	.06280	-.01139	-.00898	-.00250	-.00205	.69248	.46310	1.49530
4.410	1.600	29.46200	.83096	.06280	-.01139	-.01092	-.00264	-.00253	.69261	.46338	1.49470
4.395	1.800	29.45600	.83079	.06287	-.01159	-.01270	-.00283	-.00299	.69248	.46330	1.49470
4.385	1.994	29.46700	.83120	.06297	-.01159	-.01452	-.00302	-.00344	.69270	.46372	1.49380
	GRADIENT	.02304	.00159	-.00016	-.00018	-.00654	-.00223	-.00141	.00129	.00093	-.00021

OA257 (LARC 20-M6-6559) OV102 (R7EC58) (10 JUL 81)

REFERENCE DATA

SREF = 2690.0000 SQ.FT. XMRP = 1076.6800 IN. XO
LREF = 474.8100 INCHES YMRP = .0000 IN. YO
BREF = 936.6800 INCHES ZMRP = 375.0000 IN. ZO
SCALE = .0100

PARAMETRIC DATA

ALPHA = 30.000 PHI = .000
SPDBRK = 86.600 AILRON = .000
YP = 1.000 1S = 1.000
ELEVON = .000 MACH = 6.000
S-MODE = 2.000 S-DIR = 1.000

RUN NO. 2151/ 0 RN/L = 4.50 GRADIENT INTERVAL = -.60/ .60

RN/L	BETA	ALPHA	CN	CA	CLM	CY	CYN	CBL	CL	CD	L/D
4.548	-2.900	29.32300	.82406	.06292	-.01103	.02408	.00448	.00546	.68766	.45842	1.50010
4.554	-2.700	29.32300	.82444	.06292	-.01113	.02224	.00426	.00507	.68800	.45861	1.50020
4.561	-2.500	29.33700	.82553	.06290	-.01102	.02034	.00406	.00462	.68884	.45930	1.49980
4.573	-2.300	29.34500	.82567	.06280	-.01101	.01856	.00382	.00421	.68895	.45937	1.49980
4.572	-2.100	29.34600	.82560	.06278	-.01097	.01684	.00361	.00379	.68889	.45934	1.49980
4.571	-1.900	29.36100	.82640	.06271	-.01092	.01513	.00336	.00339	.68951	.45984	1.49950
4.569	-1.700	29.36200	.82604	.06277	-.01080	.01345	.00312	.00299	.68915	.45974	1.49900
4.560	-1.500	29.37400	.82693	.06285	-.01075	.01178	.00286	.00259	.68979	.46039	1.49830
4.556	-1.300	29.38100	.82711	.06282	-.01067	.01004	.00261	.00223	.68991	.46052	1.49810
4.552	-1.100	29.38300	.82727	.06282	-.01069	.00853	.00233	.00185	.69002	.46063	1.49800
4.542	-.900	29.39400	.82767	.06283	-.01060	.00704	.00201	.00152	.69029	.46097	1.49750
4.537	-.700	29.39500	.82789	.06285	-.01064	.00558	.00165	.00121	.69046	.46111	1.49740
4.530	-.500	29.40600	.82820	.06279	-.01062	.00416	.00126	.00088	.69066	.46134	1.49710
4.515	-.300	29.41000	.82872	.06274	-.01066	.00287	.00084	.00061	.69111	.46160	1.49720
4.494	-.100	29.41100	.82863	.06269	-.01077	.00141	.00045	.00028	.69105	.46152	1.49730
4.473	.100	29.41700	.82893	.06267	-.01074	-.00004	.00007	-.00005	.69127	.46173	1.49710
4.464	.300	29.41600	.82890	.06268	-.01086	-.00137	-.00036	-.00035	.69125	.46171	1.49720
4.454	.500	29.42900	.82975	.06258	-.01092	-.00242	-.00095	-.00055	.69193	.46220	1.49710
4.445	.700	29.43300	.82977	.06269	-.01089	-.00325	-.00162	-.00065	.69186	.46235	1.49640
4.441	.900	29.43500	.83013	.06270	-.01109	-.00472	-.00195	-.00104	.69216	.46256	1.49640
4.431	1.100	29.44700	.83027	.06272	-.01123	-.00637	-.00221	-.00138	.69217	.46279	1.49560
4.419	1.300	29.44500	.83045	.06286	-.01129	-.00807	-.00242	-.00183	.69228	.46298	1.49530
4.416	1.500	29.45500	.83112	.06277	-.01146	-.01001	-.00256	-.00232	.69282	.46336	1.49520
4.402	1.700	29.45900	.83081	.06283	-.01148	-.01184	-.00274	-.00277	.69250	.46330	1.49470
4.389	1.900	29.46200	.83099	.06287	-.01161	-.01366	-.00293	-.00322	.69260	.46346	1.49440
	GRADIENT	.01986	.00123	-.00018	-.00030	-.00672	-.00215	-.00148	.00100	.00069	-.00003

OA257 (LARC 20-M6-6559) OV102 (R7E758) (10 JUL 81)

REFERENCE DATA

SREF = 2690.0000 SQ.FT. XMRP = 1076.6800 IN. XO
LREF = 474.8100 INCHES YMRP = .0000 IN. YO
BREF = 936.6800 INCHES ZMRP = 375.0000 IN. ZO
SCALE = .0100

PARAMETRIC DATA

ALPHA = 30.000 PHI = .000
SPDBRK = 86.600 AILRON = .000
YP = 1.000 1S = 1.000
ELEVON = .000 MACH = 6.000
S-MODE = 2.000 S-DIR = 1.000

RUN NO. 175/ 0 RN/L = 4.38 GRADIENT INTERVAL = -.60/ .60

RN/L	BETA	ALPHA	CN	CA	CLM	CY	CYN	CBL	CL	CD	L/D
4.487	-4.447	29.16500	.81615	.06252	-.01223	.03710	.00619	.00880	.68221	.45232	1.50820
4.480	-4.300	29.18500	.81691	.06246	-.01216	.03581	.00599	.00852	.68274	.45289	1.50750
4.469	-4.100	29.17800	.81663	.06244	-.01220	.03414	.00572	.00813	.68256	.45265	1.50790
4.457	-3.900	29.18600	.81723	.06236	-.01237	.03225	.00550	.00766	.68307	.45297	1.50800
4.449	-3.700	29.19900	.81827	.06220	-.01244	.03032	.00532	.00721	.68395	.45349	1.50820
4.445	-3.500	29.19700	.81876	.06227	-.01242	.02850	.00512	.00675	.68436	.45376	1.50820
4.435	-3.300	29.20600	.81936	.06218	-.01246	.02667	.00493	.00628	.68486	.45408	1.50820
4.430	-3.100	29.21800	.81962	.06213	-.01238	.02489	.00475	.00586	.68501	.45431	1.50780
4.420	-2.900	29.21700	.82005	.06219	-.01246	.02315	.00459	.00541	.68536	.45457	1.50770
4.411	-2.700	29.22500	.82085	.06220	-.01247	.02132	.00439	.00498	.68600	.45505	1.50750
4.407	-2.500	29.23900	.82178	.06216	-.01236	.01944	.00419	.00454	.68672	.45564	1.50710
4.403	-2.300	29.24100	.82182	.06211	-.01237	.01775	.00400	.00413	.68675	.45564	1.50720
4.400	-2.100	29.24800	.82260	.06215	-.01240	.01597	.00377	.00369	.68736	.45615	1.50690
4.397	-1.900	29.26000	.82301	.06215	-.01233	.01430	.00354	.00330	.68763	.45649	1.50630
4.392	-1.700	29.26000	.82304	.06220	-.01236	.01265	.00327	.00293	.68763	.45655	1.50610
4.392	-1.500	29.26800	.82398	.06211	-.01247	.01079	.00308	.00247	.68842	.45702	1.50630
4.385	-1.300	29.28000	.82386	.06204	-.01240	.00909	.00283	.00209	.68826	.45705	1.50590
4.373	-1.100	29.27900	.82378	.06203	-.01256	.00752	.00255	.00176	.68820	.45699	1.50590
4.365	-.900	29.28700	.82439	.06196	-.01270	.00597	.00226	.00136	.68870	.45732	1.50600
4.359	-.700	29.30100	.82520	.06189	-.01265	.00434	.00194	.00102	.68934	.45782	1.50570
4.358	-.500	29.29900	.82492	.06193	-.01280	.00287	.00159	.00069	.68909	.45770	1.50560
4.353	-.300	29.30800	.82503	.06173	-.01283	.00158	.00116	.00040	.68920	.45769	1.50580
4.351	-.100	29.32100	.82552	.06168	-.01284	.00014	.00076	.00010	.68956	.45804	1.50550
4.358	.100	29.32200	.82590	.06168	-.01289	-.00125	.00037	-.00024	.68988	.45823	1.50560
4.357	.300	29.33200	.82666	.06170	-.01296	-.00270	-.00003	-.00056	.69046	.45874	1.50510
4.364	.500	29.34500	.82645	.06158	-.01302	-.00370	-.00060	-.00075	.69023	.45869	1.50480
4.372	.700	29.34200	.82649	.06177	-.01291	-.00458	-.00131	-.00083	.69019	.45885	1.50420
4.366	.900	29.35000	.82692	.06187	-.01296	-.00601	-.00167	-.00112	.69045	.45923	1.50350
4.360	1.100	29.36400	.82724	.06195	-.01288	-.00764	-.00198	-.00150	.69059	.45963	1.50250
4.358	1.300	29.36400	.82766	.06213	-.01289	-.00920	-.00225	-.00188	.69086	.46000	1.50190
4.356	1.500	29.37000	.82715	.06206	-.01298	-.01102	-.00246	-.00232	.69040	.45976	1.50170
4.357	1.700	29.38400	.82757	.06208	-.01294	-.01291	-.00266	-.00278	.69064	.46015	1.50090
4.366	1.900	29.38300	.82773	.06213	-.01305	-.01476	-.00290	-.00321	.69077	.46026	1.50090
4.364	2.100	29.39000	.82792	.06213	-.01304	-.01643	-.00310	-.00362	.69088	.46043	1.50050
4.357	2.300	29.40300	.82787	.06215	-.01299	-.01826	-.00336	-.00402	.69071	.46059	1.49960
4.352	2.500	29.39900	.82781	.06219	-.01300	-.01989	-.00360	-.00442	.69068	.46055	1.49970
4.353	2.700	29.41000	.82778	.06223	-.01303	-.02154	-.00388	-.00479	.69054	.46070	1.49890
4.346	2.900	29.42300	.82779	.06225	-.01285	-.02327	-.00413	-.00519	.69044	.46088	1.49810
4.351	3.100	29.42300	.82802	.06236	-.01302	-.02507	-.00440	-.00560	.69059	.46108	1.49780
4.346	3.300	29.43000	.82823	.06250	-.01294	-.02692	-.00464	-.00604	.69064	.46139	1.49690
4.341	3.500	29.44000	.82755	.06246	-.01284	-.02876	-.00487	-.00646	.68999	.46115	1.49630
4.338	3.700	29.44300	.82817	.06254	-.01300	-.03065	-.00507	-.00692	.69046	.46156	1.49590

OA257 (LARC 20-M6-6559) OV102 (R7E758) (10 JUL 81)

REFERENCE DATA

SREF =	2690.0000 SQ.FT.	XMRP =	1076.6800 IN. XO		
LREF =	474.8100 INCHES	YMRP =	.0000 IN. YO		
BREF =	936.6800 INCHES	ZMRP =	375.0000 IN. ZO		
SCALE =	.0100				

PARAMETRIC DATA

ALPHA =	30.000	PHI =	.000
SPDBRK =	86.600	AILRON =	.000
YP =	1.000	1S =	1.000
ELEVON =	.000	MACH =	6.000
S-MODE =	2.000	S-DIR =	1.000

RUN NO. 175/ O RN/L = 4.38 GRADIENT INTERVAL = -.60/ .60

RN/L	BETA	ALPHA	CN	CA	CLM	CY	CYN	CBL	CL	CD	L/D
4.345	3.896	29.44600	.82788	.06255	-.01293	-.03226	-.00527	-.00730	.69019	.46145	1.49570
	GRADIENT	.04329	.00185	-.00027	-.00022	-.00673	-.00213	-.00149	.00140	.00118	-.00086

OA257 (LARC 20-M6-6559) OV102 (R7ED58) (10 JUL 81)

REFERENCE DATA

SREF = 2690.0000 SQ.FT. XMRP = 1076.6800 IN. XO
LREF = 474.8100 INCHES YMRP = .0000 IN. YO
BREF = 936.6800 INCHES ZMRP = 375.0000 IN. ZO
SCALE = .0100

PARAMETRIC DATA

ALPHA = 30.000 PHI = .000
SPDBRK = 86.600 AILRON = .000
YP = 1.000 1S = 1.000
ELEVON = .000 MACH = 6.000
S-MODE = 2.000 S-DIR = 1.000

RUN NO. 2175/ 0 RN/L = 4.38 GRADIENT INTERVAL = -.60/ .60

RN/L	BETA	ALPHA	CN	CA	CLM	CY	CYN	CBL	CL	CD	L/D
4.484	-4.400	29.17800	.81650	.06253	-.01211	.03670	.00613	.00872	.68242	.45266	1.50760
4.475	-4.200	29.18100	.81716	.06245	-.01220	.03497	.00585	.00832	.68300	.45295	1.50790
4.464	-4.000	29.18100	.81693	.06241	-.01233	.03318	.00560	.00792	.68283	.45280	1.50800
4.452	-3.800	29.19200	.81782	.06224	-.01238	.03129	.00542	.00742	.68359	.45322	1.50830
4.447	-3.600	29.19800	.81844	.06224	-.01240	.02937	.00522	.00697	.68409	.45358	1.50820
4.441	-3.400	29.20000	.81865	.06225	-.01250	.02759	.00502	.00655	.68425	.45373	1.50800
4.430	-3.200	29.21400	.81982	.06220	-.01241	.02582	.00485	.00609	.68518	.45442	1.50780
4.426	-3.000	29.21600	.81954	.06215	-.01233	.02401	.00467	.00565	.68495	.45426	1.50780
4.415	-2.800	29.22000	.82074	.06218	-.01249	.02226	.00449	.00520	.68595	.45493	1.50780
4.409	-2.600	29.23500	.82170	.06216	-.01243	.02035	.00430	.00477	.68668	.45556	1.50730
4.404	-2.400	29.24000	.82197	.06212	-.01229	.01861	.00410	.00433	.68689	.45571	1.50730
4.402	-2.200	29.24200	.82210	.06219	-.01241	.01681	.00390	.00387	.68696	.45586	1.50690
4.399	-2.000	29.25700	.82280	.06212	-.01238	.01516	.00366	.00351	.68749	.45632	1.50660
4.394	-1.800	29.26200	.82305	.06210	-.01225	.01341	.00341	.00311	.68767	.45648	1.50640
4.393	-1.600	29.26200	.82310	.06219	-.01245	.01169	.00319	.00268	.68767	.45658	1.50610
4.391	-1.400	29.27700	.82411	.06206	-.01241	.00993	.00296	.00228	.68850	.45714	1.50610
4.378	-1.200	29.28100	.82363	.06201	-.01249	.00833	.00270	.00192	.68807	.45691	1.50590
4.369	-1.000	29.28300	.82415	.06196	-.01263	.00666	.00240	.00155	.68853	.45716	1.50610
4.361	-.800	29.29700	.82460	.06191	-.01267	.00517	.00210	.00120	.68883	.45751	1.50560
4.358	-.600	29.29900	.82489	.06194	-.01264	.00354	.00176	.00085	.68906	.45769	1.50550
4.356	-.400	29.30200	.82497	.06185	-.01290	.00226	.00138	.00056	.68915	.45769	1.50570
4.351	-.200	29.31800	.82530	.06171	-.01285	.00088	.00097	.00024	.68937	.45792	1.50540
4.354	.000	29.32200	.82600	.06169	-.01279	-.00050	.00057	-.00006	.68997	.45829	1.50550
4.358	.200	29.32400	.82600	.06168	-.01289	-.00203	.00018	-.00043	.68994	.45831	1.50540
4.359	.400	29.33800	.82659	.06169	-.01297	-.00333	-.00027	-.00067	.69035	.45877	1.50480
4.371	.600	29.34200	.82677	.06166	-.01296	-.00401	-.00106	-.00073	.69049	.45889	1.50470
4.370	.800	29.34300	.82630	.06183	-.01291	-.00523	-.00153	-.00096	.68999	.45882	1.50380
4.362	1.000	29.36000	.82723	.06187	-.01288	-.00686	-.00182	-.00132	.69064	.45952	1.50300
4.359	1.200	29.36200	.82706	.06202	-.01293	-.00839	-.00212	-.00169	.69040	.45958	1.50220
4.359	1.400	29.36800	.82656	.06211	-.01287	-.01010	-.00239	-.00206	.68988	.45948	1.50140
4.357	1.600	29.38100	.82741	.06204	-.01292	-.01198	-.00255	-.00256	.69055	.46000	1.50120
4.359	1.800	29.38400	.82726	.06208	-.01296	-.01384	-.00278	-.00297	.69037	.45999	1.50080
4.368	2.000	29.38500	.82763	.06215	-.01309	-.01560	-.00300	-.00344	.69066	.46025	1.50060
4.359	2.200	29.39900	.82764	.06215	-.01302	-.01736	-.00323	-.00382	.69055	.46043	1.49980
4.355	2.400	29.40200	.82800	.06212	-.01298	-.01906	-.00348	-.00422	.69085	.46061	1.49990
4.352	2.600	29.40300	.82764	.06225	-.01311	-.02074	-.00375	-.00462	.69047	.46056	1.49920
4.352	2.800	29.42000	.82786	.06227	-.01292	-.02238	-.00401	-.00497	.69052	.46089	1.49820
4.347	3.000	29.41900	.82772	.06230	-.01296	-.02417	-.00428	-.00537	.69039	.46084	1.49810
4.351	3.200	29.42300	.82799	.06244	-.01297	-.02596	-.00452	-.00583	.69052	.46115	1.49740
4.343	3.400	29.43900	.82857	.06248	-.01292	-.02793	-.00474	-.00627	.69088	.46164	1.49660
4.340	3.600	29.43300	.82848	.06261	-.01298	-.02967	-.00495	-.00670	.69078	.46166	1.49630
4.340	3.800	29.45200	.82821	.06258	-.01291	-.03157	-.00518	-.00713	.69042	.46172	1.49530
	GRADIENT	.03696	.00171	-.00021	-.00020	-.00657	-.00224	-.00140	.00130	.00110	-.00075

OA257 (LARC 20-M6-6559) OV102 (R7E858) (10 JUL 81)

REFERENCE DATA

SREF = 2690.0000 SQ.FT. XMRP = 1076.6800 IN. XO
LREF = 474.8100 INCHES YMRP = .0000 IN. YO
BREF = 936.6800 INCHES ZMRP = 375.0000 IN. ZO
SCALE = .0100

PARAMETRIC DATA

ALPHA = 30.000 PHI = .000
SPDBRK = 86.600 AILRON = .000
YP = 1.000 1S = 1.000
ELEVON = .000 MACH = 6.000
S-MODE = 2.000 S-DIR = 1.000

RUN NO. 231/ O RN/L = 4.52 GRADIENT INTERVAL = -.60/ .60

RN/L	BETA	ALPHA	CN	CA	CLM	CY	CYN	CBL	CL	CD	L/D
4.507	-4.792	29.28600	.82354	.06452	-.01025	.04034	.00683	.01016	.68672	.45912	1.49570
4.492	-4.600	29.29200	.82379	.06432	-.01055	.03852	.00662	.00975	.68699	.45914	1.49620
4.507	-4.400	29.29300	.82486	.06434	-.01043	.03667	.00639	.00924	.68791	.45969	1.49640
4.494	-4.200	29.29200	.82518	.06427	-.01054	.03494	.00618	.00875	.68822	.45979	1.49680
4.500	-4.000	29.29600	.82522	.06413	-.01064	.03327	.00587	.00837	.68830	.45973	1.49720
4.512	-3.800	29.30400	.82613	.06413	-.01059	.03147	.00563	.00787	.68903	.46026	1.49700
4.502	-3.600	29.31400	.82658	.06400	-.01083	.02961	.00547	.00738	.68940	.46050	1.49710
4.490	-3.400	29.32600	.82681	.06394	-.01077	.02769	.00527	.00688	.68954	.46070	1.49670
4.488	-3.200	29.33400	.82768	.06390	-.01081	.02591	.00506	.00642	.69025	.46118	1.49670
4.498	-3.000	29.34400	.82815	.06384	-.01097	.02409	.00485	.00600	.69061	.46148	1.49650
4.497	-2.800	29.35200	.82857	.06381	-.01104	.02227	.00463	.00554	.69092	.46177	1.49620
4.515	-2.600	29.35900	.82924	.06387	-.01088	.02048	.00442	.00504	.69143	.46222	1.49590
4.533	-2.400	29.36200	.82985	.06378	-.01082	.01871	.00416	.00458	.69197	.46248	1.49620
4.521	-2.200	29.36700	.82964	.06376	-.01094	.01693	.00390	.00411	.69176	.46242	1.49590
4.519	-2.000	29.37500	.82985	.06363	-.01109	.01524	.00361	.00376	.69194	.46251	1.49610
4.523	-1.800	29.38300	.83028	.06363	-.01108	.01344	.00335	.00328	.69225	.46282	1.49570
4.529	-1.600	29.39100	.83088	.06358	-.01102	.01173	.00311	.00285	.69274	.46316	1.49570
4.531	-1.400	29.40300	.83094	.06340	-.01103	.01006	.00290	.00248	.69277	.46319	1.49570
4.524	-1.200	29.41300	.83185	.06330	-.01109	.00835	.00264	.00195	.69354	.46367	1.49580
4.525	-1.000	29.42100	.83247	.06320	-.01116	.00676	.00234	.00157	.69406	.46398	1.49590
4.525	-.800	29.42800	.83244	.06312	-.01137	.00526	.00203	.00123	.69403	.46398	1.49580
4.528	-.600	29.43400	.83294	.06299	-.01132	.00371	.00165	.00083	.69447	.46418	1.49610
4.541	-.400	29.43300	.83277	.06285	-.01161	.00220	.00121	.00054	.69440	.46397	1.49670
4.546	-.200	29.44100	.83267	.06280	-.01163	.00078	.00082	.00021	.69427	.46398	1.49630
4.541	.000	29.45400	.83330	.06271	-.01150	-.00076	.00042	-.00022	.69476	.46436	1.49620
4.539	.200	29.46100	.83346	.06262	-.01153	-.00207	-.00001	-.00057	.69488	.46444	1.49620
4.546	.400	29.46800	.83331	.06254	-.01159	-.00289	-.00080	-.00059	.69474	.46438	1.49610
4.551	.600	29.47800	.83381	.06262	-.01160	-.00410	-.00134	-.00084	.69505	.46482	1.49530
4.559	.800	29.48800	.83402	.06275	-.01156	-.00551	-.00173	-.00116	.69509	.46517	1.49430
4.545	1.000	29.49400	.83373	.06281	-.01169	-.00698	-.00208	-.00153	.69475	.46515	1.49360
4.535	1.200	29.49700	.83400	.06290	-.01162	-.00877	-.00233	-.00198	.69493	.46538	1.49320
4.531	1.400	29.49900	.83380	.06293	-.01150	-.01055	-.00253	-.00245	.69472	.46534	1.49290
4.520	1.600	29.50000	.83423	.06299	-.01171	-.01227	-.00279	-.00294	.69506	.46562	1.49270
4.518	1.800	29.50600	.83491	.06315	-.01147	-.01421	-.00307	-.00344	.69553	.46617	1.49200
4.514	2.000	29.51100	.83431	.06325	-.01165	-.01580	-.00334	-.00382	.69491	.46602	1.49120
4.507	2.200	29.52200	.83506	.06346	-.01178	-.01764	-.00366	-.00427	.69537	.46670	1.49000
4.514	2.400	29.52900	.83522	.06364	-.01162	-.01923	-.00399	-.00462	.69537	.46702	1.48890
4.536	2.600	29.53900	.83600	.06396	-.01169	-.02109	-.00431	-.00509	.69580	.46780	1.48740
4.520	2.800	29.54800	.83617	.06427	-.01180	-.02278	-.00458	-.00555	.69573	.46827	1.48570
4.513	3.000	29.55700	.83544	.06451	-.01175	-.02455	-.00488	-.00595	.69489	.46823	1.48410
4.512	3.200	29.56300	.83594	.06466	-.01181	-.02616	-.00512	-.00635	.69521	.46868	1.48330
4.502	3.400	29.56500	.83578	.06474	-.01187	-.02826	-.00534	-.00697	.69502	.46869	1.48290

OA257 (LARC 20-M6-6559) OV102 (R7E858) (10 JUL 81)

REFERENCE DATA

SREF =	2690.0000 SQ.FT.	XMRP =	1076.6800 IN. XO		
LREF =	474.8100 INCHES	YMRP =	.0000 IN. YO		
BREF =	936.6800 INCHES	ZMRP =	375.0000 IN. ZO		
SCALE =	.0100				

PARAMETRIC DATA

ALPHA =	30.000	PHI =	.000
SPDBRK =	86.600	AILRON =	.000
YP =	1.000	1S =	1.000
ELEVON =	.000	MACH =	6.000
S-MODE =	2.000	S-DIR =	1.000

RUN NO. 231/ 0 RN/L = 4.52 GRADIENT INTERVAL = -.60/ .60

RN/L	BETA	ALPHA	CN	CA	CLM	CY	CYN	CBL	CL	CD	L/D
4.507	3.577	29.56300	.83587	.06478	-.01175	-.02989	-.00556	-.00732	.69508	.46875	1.48280
	GRADIENT	.03964	.00080	-.00034	-.00013	-.00651	-.00247	-.00144	.00054	.00057	-.00066

OA257 (LARC 20-M6-6559) OV102 (R7EE58) (10 JUL 81)

REFERENCE DATA

SREF = 2690.0000 SQ.FT. XMRP = 1076.6800 IN. XO
LREF = 474.8100 INCHES YMRP = .0000 IN. YO
BREF = 936.6800 INCHES ZMRP = 375.0000 IN. ZO
SCALE = .0100

PARAMETRIC DATA

ALPHA = 30.000 PHI = .000
SPDBRK = 86.600 AILRON = .000
YP = 1.000 1S = 1.000
ELEVON = .000 MACH = 6.000
S-MODE = 2.000 S-DIR = 1.000

RUN NO. 2231/ O RN/L = 4.52 GRADIENT INTERVAL = -.60/ .60

RN/L	BETA	ALPHA	CN	CA	CLM	CY	CYN	CBL	CL	CD	L/D
4.491	-4.700	29.29200	.82352	.06435	-.01055	.03948	.00673	.00997	.68674	.45904	1.49600
4.499	-4.500	29.29400	.82429	.06430	-.01050	.03762	.00651	.00951	.68741	.45940	1.49630
4.501	-4.300	29.29300	.82527	.06430	-.01053	.03578	.00630	.00894	.68829	.45986	1.49670
4.495	-4.100	29.29200	.82491	.06418	-.01060	.03409	.00603	.00858	.68803	.45957	1.49710
4.506	-3.900	29.30000	.82555	.06414	-.01061	.03242	.00574	.00813	.68855	.45995	1.49700
4.508	-3.700	29.31100	.82639	.06408	-.01069	.03057	.00556	.00761	.68922	.46044	1.49690
4.494	-3.500	29.31700	.82683	.06397	-.01077	.02861	.00538	.00709	.68961	.46063	1.49710
4.489	-3.300	29.33000	.82718	.06390	-.01088	.02679	.00515	.00668	.68985	.46089	1.49680
4.494	-3.100	29.33800	.82769	.06382	-.01093	.02495	.00493	.00625	.69026	.46117	1.49670
4.494	-2.900	29.35000	.82869	.06392	-.01086	.02315	.00476	.00569	.69099	.46189	1.49600
4.507	-2.700	29.35700	.82897	.06385	-.01102	.02132	.00450	.00527	.69121	.46206	1.49590
4.526	-2.500	29.36100	.82972	.06385	-.01085	.01955	.00428	.00480	.69183	.46247	1.49590
4.529	-2.300	29.36400	.82971	.06381	-.01085	.01784	.00403	.00435	.69182	.46246	1.49590
4.519	-2.100	29.37100	.82940	.06369	-.01107	.01606	.00375	.00396	.69155	.46229	1.49590
4.518	-1.900	29.37800	.82952	.06358	-.01120	.01433	.00346	.00358	.69166	.46234	1.49600
4.526	-1.700	29.38600	.83031	.06361	-.01104	.01268	.00320	.00310	.69226	.46285	1.49570
4.530	-1.500	29.39700	.83126	.06344	-.01106	.01090	.00304	.00264	.69309	.46330	1.49600
4.529	-1.300	29.40700	.83124	.06331	-.01107	.00916	.00276	.00224	.69305	.46331	1.49590
4.524	-1.100	29.41800	.83215	.06327	-.01109	.00758	.00250	.00175	.69378	.46385	1.49570
4.526	-.900	29.42500	.83246	.06320	-.01131	.00591	.00217	.00139	.69403	.46402	1.49570
4.524	-.700	29.43100	.83304	.06307	-.01135	.00444	.00187	.00096	.69454	.46427	1.49600
4.535	-.500	29.43400	.83202	.06288	-.01159	.00300	.00141	.00074	.69372	.46364	1.49630
4.543	-.300	29.44000	.83294	.06289	-.01157	.00151	.00103	.00038	.69448	.46416	1.49620
4.546	-.100	29.44600	.83269	.06274	-.01165	.00007	.00063	.00003	.69427	.46399	1.49630
4.539	.100	29.45500	.83316	.06266	-.01148	-.00146	.00022	-.00040	.69465	.46425	1.49630
4.543	.300	29.46400	.83322	.06255	-.01163	-.00247	-.00036	-.00058	.69469	.46431	1.49620
4.546	.500	29.47600	.83414	.06263	-.01160	-.00345	-.00111	-.00073	.69536	.46497	1.49550
4.560	.700	29.48200	.83371	.06266	-.01161	-.00483	-.00154	-.00098	.69492	.46486	1.49490
4.551	.900	29.48900	.83389	.06281	-.01158	-.00626	-.00191	-.00133	.69494	.46517	1.49390
4.539	1.100	29.49600	.83368	.06279	-.01172	-.00784	-.00222	-.00171	.69471	.46513	1.49360
4.536	1.300	29.49500	.83363	.06286	-.01154	-.00971	-.00243	-.00224	.69464	.46515	1.49340
4.523	1.500	29.49800	.83377	.06293	-.01164	-.01141	-.00266	-.00267	.69471	.46531	1.49300
4.520	1.700	29.50300	.83469	.06310	-.01161	-.01326	-.00292	-.00319	.69539	.46597	1.49230
4.516	1.900	29.50800	.83482	.06324	-.01161	-.01502	-.00319	-.00367	.69539	.46622	1.49160
4.510	2.100	29.51500	.83449	.06334	-.01175	-.01669	-.00351	-.00401	.69499	.46623	1.49070
4.507	2.300	29.52300	.83515	.06355	-.01175	-.01839	-.00382	-.00444	.69539	.46684	1.48960
4.526	2.500	29.53200	.83532	.06376	-.01172	-.02011	-.00414	-.00485	.69536	.46722	1.48830
4.531	2.700	29.54500	.83608	.06407	-.01175	-.02197	-.00445	-.00535	.69577	.46802	1.48660
4.513	2.900	29.55400	.83601	.06444	-.01177	-.02366	-.00473	-.00577	.69545	.46842	1.48470
4.514	3.100	29.56000	.83611	.06461	-.01183	-.02559	-.00505	-.00624	.69541	.46868	1.48380
4.506	3.300	29.56300	.83587	.06474	-.01179	-.02738	-.00524	-.00671	.69511	.46872	1.48300
4.506	3.500	29.56500	.83565	.06479	-.01181	-.02904	-.00548	-.00714	.69488	.46867	1.48260
	GRADIENT	.04157	.00170	-.00033	-.00001	-.00653	-.00246	-.00152	.00132	.00105	-.00057

OA257 (LARC 20-M6-6559) OV102 (R7E958) (10 JUL 81)

REFERENCE DATA

SREF = 2690.0000 SQ.FT. XMRP = 1076.6800 IN. XO
LREF = 474.8100 INCHES YMRP = .0000 IN. YO
BREF = 936.6800 INCHES ZMRP = 375.0000 IN. ZO
SCALE = .0100

PARAMETRIC DATA

ALPHA = 30.000 PHI = .000
SPDBRK = 86.600 AILRON = .000
YP = 1.000 1S = 1.000
ELEVON = .000 MACH = 6.000
S-MODE = 2.000 S-DIR = 1.000

RUN NO. 301/ 0 RN/L = 4.47 GRADIENT INTERVAL = -.60/ .60

RN/L	BETA	ALPHA	CN	CA	CLM	CY	CYN	CBL	CL	CD	L/D
4.527	-4.650	29.13400	.81925	.06431	-.01007	.04368	.00667	.01019	.68429	.45503	1.50380
4.529	-4.500	29.14900	.81987	.06427	-.01023	.04224	.00653	.00978	.68474	.45548	1.50330
4.518	-4.300	29.14900	.82018	.06419	-.01046	.04029	.00630	.00936	.68504	.45556	1.50370
4.509	-4.100	29.15400	.82143	.06416	-.01052	.03831	.00611	.00884	.68611	.45620	1.50400
4.497	-3.900	29.15400	.82171	.06410	-.01050	.03660	.00583	.00840	.68638	.45628	1.50430
4.483	-3.700	29.16000	.82277	.06397	-.01038	.03464	.00559	.00791	.68733	.45676	1.50480
4.481	-3.500	29.16600	.82305	.06388	-.01025	.03253	.00540	.00744	.68756	.45689	1.50490
4.499	-3.300	29.17200	.82351	.06388	-.01045	.03038	.00519	.00695	.68792	.45719	1.50470
4.496	-3.100	29.17900	.82334	.06388	-.01053	.02844	.00495	.00649	.68771	.45718	1.50420
4.485	-2.900	29.18600	.82368	.06382	-.01064	.02641	.00474	.00604	.68798	.45739	1.50410
4.475	-2.700	29.19600	.82465	.06383	-.01081	.02438	.00453	.00554	.68874	.45798	1.50390
4.481	-2.500	29.19800	.82589	.06381	-.01088	.02232	.00431	.00506	.68982	.45860	1.50420
4.494	-2.300	29.20500	.82627	.06373	-.01080	.02034	.00410	.00459	.69013	.45880	1.50420
4.486	-2.100	29.21400	.82705	.06367	-.01047	.01839	.00387	.00413	.69078	.45923	1.50420
4.479	-1.900	29.22100	.82703	.06368	-.01004	.01653	.00359	.00377	.69070	.45932	1.50380
4.476	-1.700	29.22600	.82704	.06376	-.01046	.01461	.00334	.00325	.69063	.45945	1.50320
4.469	-1.500	29.23700	.82717	.06376	-.01064	.01285	.00309	.00280	.69066	.45965	1.50260
4.472	-1.300	29.24400	.82738	.06360	-.01098	.01081	.00283	.00243	.69086	.45970	1.50290
4.471	-1.100	29.24900	.82830	.06356	-.01102	.00903	.00254	.00200	.69164	.46016	1.50300
4.476	-.900	29.25200	.82948	.06353	-.01114	.00715	.00222	.00155	.69266	.46076	1.50330
4.467	-.700	29.26400	.82997	.06336	-.01086	.00544	.00192	.00119	.69307	.46099	1.50350
4.463	-.500	29.27000	.83015	.06329	-.01073	.00381	.00155	.00086	.69321	.46109	1.50340
4.467	-.300	29.27500	.82971	.06317	-.01086	.00225	.00112	.00054	.69285	.46084	1.50350
4.467	-.100	29.28200	.83009	.06318	-.01092	.00072	.00074	.00015	.69312	.46110	1.50320
4.466	.100	29.29100	.83006	.06309	-.01126	-.00092	.00035	-.00027	.69307	.46112	1.50300
4.467	.300	29.29800	.83097	.06300	-.01149	-.00227	-.00016	-.00050	.69385	.46157	1.50320
4.477	.500	29.30000	.83166	.06293	-.01158	-.00324	-.00092	-.00067	.69447	.46188	1.50360
4.459	.700	29.31100	.83204	.06299	-.01130	-.00467	-.00143	-.00091	.69468	.46225	1.50280
4.453	.900	29.31900	.83198	.06301	-.01099	-.00629	-.00180	-.00122	.69456	.46233	1.50230
4.456	1.100	29.32100	.83172	.06318	-.01108	-.00799	-.00215	-.00158	.69423	.46238	1.50140
4.470	1.300	29.33000	.83162	.06328	-.01119	-.00984	-.00238	-.00209	.69402	.46253	1.50050
4.463	1.500	29.33700	.83153	.06336	-.01132	-.01185	-.00261	-.00252	.69385	.46264	1.49980
4.457	1.700	29.34300	.83214	.06338	-.01149	-.01379	-.00286	-.00301	.69432	.46303	1.49950
4.456	1.900	29.34800	.83226	.06343	-.01166	-.01584	-.00310	-.00352	.69436	.46319	1.49910
4.443	2.100	29.35500	.83306	.06336	-.01156	-.01768	-.00336	-.00395	.69503	.46361	1.49920
4.443	2.300	29.36500	.83303	.06332	-.01122	-.01963	-.00369	-.00435	.69494	.46369	1.49870
4.445	2.500	29.37100	.83308	.06343	-.01114	-.02136	-.00398	-.00479	.69489	.46387	1.49800
4.441	2.700	29.37700	.83238	.06349	-.01112	-.02322	-.00427	-.00518	.69420	.46365	1.49730
4.434	2.900	29.38100	.83170	.06360	-.01130	-.02516	-.00454	-.00563	.69351	.46346	1.49640
	GRADIENT	.03257	.00161	-.00035	-.00093	-.00721	-.00237	-.00160	.00132	.00088	-.00001

OA257 (LARC 20-M6-6559) OV102 (R7EF58) (10 JUL 81)

REFERENCE DATA

SREF = 2690.0000 SQ.FT. XMRP = 1076.6800 IN. XO
LREF = 474.8100 INCHES YMRP = .0000 IN. YO
BREF = 936.6800 INCHES ZMRP = 375.0000 IN. ZO
SCALE = .0100

PARAMETRIC DATA

ALPHA = 30.000 PHI = .000
SPDBRK = 86.600 AILRON = .000
YP = 1.000 1S = 1.000
ELEVON = .000 MACH = 6.000
S-MODE = 2.000 S-DIR = 1.000

RUN NO. 2301/ 0 RN/L = 4.47 GRADIENT INTERVAL = -.60/ .60

RN/L	BETA	ALPHA	CN	CA	CLM	CY	CYN	CBL	CL	CD	L/D
4.530	-4.600	29.14100	.81966	.06429	-.01014	.04324	.00664	.01003	.68460	.45529	1.50360
4.524	-4.400	29.14700	.82000	.06418	-.01039	.04125	.00643	.00955	.68491	.45544	1.50380
4.513	-4.200	29.15100	.82063	.06415	-.01050	.03918	.00620	.00911	.68544	.45575	1.50400
4.506	-4.000	29.15500	.82162	.06413	-.01051	.03755	.00597	.00864	.68628	.45628	1.50410
4.488	-3.800	29.15600	.82169	.06404	-.01048	.03566	.00571	.00815	.68637	.45625	1.50440
4.481	-3.600	29.16300	.82317	.06391	-.01029	.03355	.00549	.00765	.68768	.45694	1.50500
4.488	-3.400	29.16900	.82349	.06388	-.01038	.03151	.00529	.00723	.68793	.45714	1.50480
4.503	-3.200	29.17400	.82321	.06389	-.01047	.02943	.00506	.00673	.68764	.45708	1.50440
4.490	-3.000	29.18200	.82353	.06387	-.01060	.02744	.00485	.00627	.68787	.45731	1.50420
4.479	-2.800	29.19000	.82399	.06382	-.01074	.02533	.00465	.00575	.68823	.45758	1.50400
4.476	-2.600	29.19800	.82544	.06377	-.01086	.02333	.00442	.00529	.68945	.45834	1.50420
4.488	-2.400	29.20200	.82604	.06381	-.01089	.02132	.00420	.00483	.68993	.45871	1.50410
4.490	-2.200	29.21000	.82687	.06372	-.01061	.01933	.00399	.00436	.69062	.45915	1.50410
4.481	-2.000	29.21700	.82705	.06362	-.01031	.01743	.00375	.00390	.69077	.45923	1.50420
4.480	-1.800	29.22300	.82712	.06373	-.01049	.01549	.00347	.00347	.69073	.45943	1.50350
4.472	-1.600	29.23200	.82703	.06381	-.01050	.01373	.00320	.00305	.69055	.45956	1.50260
4.464	-1.400	29.23900	.82705	.06367	-.01085	.01179	.00300	.00263	.69058	.45953	1.50280
4.475	-1.200	29.24800	.82811	.06360	-.01095	.00986	.00268	.00219	.69146	.46009	1.50290
4.475	-1.000	29.25200	.82886	.06354	-.01112	.00811	.00237	.00182	.69212	.46045	1.50310
4.472	-.800	29.25800	.82971	.06343	-.01095	.00634	.00207	.00139	.69286	.46086	1.50340
4.465	-.600	29.26800	.82999	.06328	-.01071	.00470	.00177	.00102	.69311	.46097	1.50360
4.463	-.400	29.27500	.82991	.06317	-.01077	.00298	.00132	.00070	.69303	.46093	1.50350
4.469	-.200	29.27900	.82985	.06316	-.01088	.00148	.00094	.00031	.69294	.46094	1.50330
4.469	.000	29.28700	.82999	.06311	-.01108	-.00011	.00054	-.00005	.69303	.46106	1.50310
4.465	.200	29.29400	.83047	.06308	-.01136	-.00165	.00011	-.00040	.69340	.46136	1.50300
4.477	.400	29.30000	.83113	.06291	-.01162	-.00280	-.00052	-.00057	.69401	.46161	1.50350
4.469	.600	29.30400	.83169	.06303	-.01145	-.00383	-.00122	-.00075	.69441	.46203	1.50300
4.454	.800	29.31400	.83177	.06298	-.01113	-.00546	-.00163	-.00104	.69443	.46215	1.50260
4.452	1.000	29.32100	.83189	.06313	-.01105	-.00715	-.00197	-.00143	.69440	.46243	1.50160
4.466	1.200	29.32600	.83161	.06323	-.01106	-.00897	-.00228	-.00184	.69407	.46243	1.50090
4.468	1.400	29.33400	.83170	.06333	-.01118	-.01080	-.00247	-.00233	.69403	.46265	1.50010
4.461	1.600	29.34000	.83183	.06333	-.01143	-.01287	-.00274	-.00276	.69409	.46280	1.49980
4.456	1.800	29.34800	.83218	.06339	-.01156	-.01478	-.00298	-.00323	.69431	.46311	1.49920
4.448	2.000	29.35100	.83267	.06338	-.01165	-.01674	-.00321	-.00375	.69471	.46339	1.49920
4.440	2.200	29.36000	.83333	.06344	-.01143	-.01863	-.00352	-.00415	.69518	.46388	1.49860
4.446	2.400	29.36700	.83290	.06333	-.01116	-.02053	-.00384	-.00456	.69481	.46365	1.49850
4.444	2.600	29.37400	.83275	.06352	-.01111	-.02231	-.00412	-.00497	.69454	.46383	1.49740
4.436	2.800	29.38000	.83243	.06359	-.01115	-.02412	-.00442	-.00538	.69417	.46380	1.49670
4.433	2.974	29.38600	.83223	.06359	-.01135	-.02579	-.00462	-.00577	.69394	.46378	1.49630
	GRADIENT	.03089	.00146	-.00024	-.00078	-.00720	-.00241	-.00153	.00113	.00089	-.00037

OA257 (LARC 20-M6-6559) OV102 (R7E471) (10 JUL 81)

REFERENCE DATA

SREF = 2690.0000 SQ.FT. XMRP = 1076.6800 IN. XO
LREF = 474.8100 INCHES YMRP = .0000 IN. YO
BREF = 936.6800 INCHES ZMRP = 375.0000 IN. ZO
SCALE = .0100

PARAMETRIC DATA

ALPHA = 25.000 PHI = .000
SPDBRK = .000 AILRON = .000
YP = 1.000 1S = 1.000
ELEVON = .000 MACH = 6.000
S-MODE = 2.000 S-DIR = 1.000

RUN NO. 237/ 0 RN/L = 2.24 GRADIENT INTERVAL = -.60/ .60

RN/L	BETA	ALPHA	CN	CA	CLM	CY	CYN	CBL	CL	CD	L/D
2.231	-4.668	24.38600	.63310	.06215	-.00723	.03765	.00800	.00784	.55096	.31800	1.73260
2.224	-4.500	24.39800	.63352	.06201	-.00723	.03602	.00774	.00754	.55133	.31816	1.73290
2.226	-4.300	24.39900	.63416	.06190	-.00721	.03431	.00746	.00717	.55196	.31834	1.73390
2.228	-4.100	24.40200	.63428	.06184	-.00721	.03259	.00711	.00683	.55207	.31836	1.73410
2.224	-3.900	24.40800	.63443	.06176	-.00721	.03089	.00677	.00652	.55221	.31841	1.73420
2.221	-3.700	24.41000	.63428	.06167	-.00726	.02927	.00641	.00619	.55209	.31828	1.73460
2.222	-3.500	24.41400	.63535	.06166	-.00726	.02750	.00604	.00587	.55305	.31875	1.73500
2.233	-3.300	24.41700	.63543	.06168	-.00716	.02599	.00568	.00555	.55310	.31883	1.73480
2.236	-3.100	24.42100	.63566	.06164	-.00721	.02440	.00530	.00523	.55331	.31893	1.73490
2.238	-2.900	24.42400	.63617	.06160	-.00712	.02279	.00494	.00490	.55377	.31913	1.73520
2.232	-2.700	24.43200	.63604	.06157	-.00717	.02115	.00458	.00458	.55362	.31913	1.73480
2.225	-2.500	24.43800	.63610	.06153	-.00713	.01957	.00422	.00426	.55365	.31918	1.73460
2.232	-2.300	24.44200	.63658	.06144	-.00711	.01808	.00386	.00394	.55411	.31934	1.73520
2.243	-2.100	24.45100	.63700	.06138	-.00708	.01647	.00348	.00361	.55447	.31954	1.73520
2.236	-1.900	24.45600	.63686	.06131	-.00691	.01488	.00315	.00328	.55434	.31947	1.73520
2.230	-1.700	24.46500	.63721	.06125	-.00690	.01336	.00280	.00295	.55463	.31965	1.73510
2.226	-1.500	24.47100	.63731	.06125	-.00687	.01179	.00242	.00263	.55469	.31974	1.73480
2.223	-1.300	24.47800	.63833	.06121	-.00680	.01030	.00208	.00228	.55559	.32020	1.73520
2.222	-1.100	24.48700	.63813	.06126	-.00684	.00869	.00169	.00193	.55534	.32025	1.73410
2.227	-.900	24.49300	.63803	.06129	-.00690	.00704	.00141	.00157	.55521	.32029	1.73350
2.228	-.700	24.50000	.63797	.06132	-.00675	.00536	.00112	.00122	.55510	.32036	1.73270
2.230	-.500	24.50600	.63815	.06128	-.00667	.00369	.00081	.00087	.55524	.32045	1.73270
2.235	-.300	24.51200	.63883	.06131	-.00647	.00213	.00050	.00053	.55582	.32083	1.73240
2.232	-.100	24.51800	.63882	.06135	-.00641	.00056	.00014	.00020	.55575	.32092	1.73180
2.239	.100	24.52200	.63877	.06141	-.00635	-.00090	-.00022	-.00011	.55566	.32099	1.73110
2.239	.300	24.52600	.63888	.06131	-.00638	-.00239	-.00057	-.00042	.55579	.32098	1.73150
2.246	.500	24.53000	.64005	.06135	-.00651	-.00386	-.00094	-.00074	.55681	.32154	1.73170
2.243	.700	24.53800	.64023	.06126	-.00668	-.00535	-.00128	-.00105	.55696	.32161	1.73180
2.238	.900	24.54200	.64001	.06123	-.00693	-.00712	-.00162	-.00142	.55675	.32153	1.73160
2.241	1.100	24.54500	.64019	.06114	-.00699	-.00849	-.00195	-.00173	.55694	.32155	1.73200
2.249	1.300	24.55300	.64040	.06110	-.00711	-.01024	-.00234	-.00209	.55711	.32168	1.73190
2.248	1.500	24.55800	.64052	.06121	-.00705	-.01169	-.00269	-.00243	.55714	.32188	1.73090
2.248	1.700	24.56400	.64024	.06115	-.00705	-.01328	-.00309	-.00276	.55687	.32177	1.73060
2.246	1.900	24.57000	.64039	.06123	-.00712	-.01479	-.00348	-.00307	.55695	.32196	1.72990
2.255	2.100	24.58000	.64095	.06132	-.00707	-.01627	-.00385	-.00340	.55736	.32237	1.72900
2.254	2.300	24.58700	.64116	.06136	-.00714	-.01792	-.00422	-.00373	.55749	.32257	1.72830
2.253	2.500	24.59200	.64139	.06149	-.00704	-.01953	-.00457	-.00406	.55762	.32284	1.72730
2.253	2.700	24.60000	.64172	.06158	-.00722	-.02108	-.00491	-.00437	.55784	.32313	1.72640
2.247	2.900	24.60800	.64173	.06155	-.00725	-.02273	-.00529	-.00472	.55782	.32318	1.72600
2.248	3.100	24.61500	.64193	.06162	-.00724	-.02446	-.00561	-.00507	.55793	.32340	1.72520
2.246	3.300	24.62300	.64208	.06173	-.00717	-.02598	-.00592	-.00541	.55798	.32363	1.72410
2.248	3.500	24.62900	.64217	.06184	-.00730	-.02783	-.00627	-.00578	.55798	.32383	1.72310

OA257 (LARC 20-M6-6559) DV102 (R7E471) (10 JUL 81)

REFERENCE DATA

SREF =	2690.0000 SQ.FT.	XMRP =	1076.6800 IN. XO		
LREF =	474.8100 INCHES	YMRP =	.0000 IN. YO		
BREF =	936.6800 INCHES	ZMRP =	375.0000 IN. ZO		
SCALE =	.0100				

PARAMETRIC DATA

ALPHA =	25.000	PHI =	.000
SPDBRK =	.000	AILRON =	.000
YP =	1.000	1S =	1.000
ELEVON =	.000	MACH =	6.000
S-MODE =	2.000	S-DIR =	1.000

RUN NO. 237/ O RN/L = 2.24 GRADIENT INTERVAL = -.60/ .60

RN/L	BETA	ALPHA	CN	CA	CLM	CY	CYN	CBL	CL	CD	L/D
2.265	3.648	24.62700	.64142	.06185	-.00752	-.02892	-.00649	-.00603	.55731	.32351	1.72270
	GRADIENT	.02371	.00137	.00006	.00016	-.00754	-.00176	-.00160	.00110	.00085	-.00120

OA257 (LARC 20-M6-6559) OV102 (R7E471) (10 JUL 81)

REFERENCE DATA

SREF = 2690.0000 SQ.FT. XMRP = 1076.6800 IN. XO
LREF = 474.8100 INCHES YMRP = .0000 IN. YO
BREF = 936.6800 INCHES ZMRP = 375.0000 IN. ZO
SCALE = .0100

PARAMETRIC DATA

ALPHA = 25.000 PHI = .000
SPDBRK = .000 AILRON = .000
YP = 1.000 1S = 1.000
ELEVON = .000 MACH = 6.000
S-MODE = 2.000 S-DIR = 1.000

RUN NO. 239/ 0 RN/L = 7.26 GRADIENT INTERVAL = -.60/ .60

RN/L	BETA	ALPHA	CN	CA	CLM	CY	CYN	CBL	CL	CD	L/D
7.355	-4.679	24.12000	.62051	.06092	-.00945	.03643	.00777	.00772	.54144	.30916	1.75130
7.372	-4.500	24.13100	.62072	.06078	-.00938	.03483	.00747	.00741	.54163	.30923	1.75150
7.366	-4.300	24.13400	.62104	.06070	-.00932	.03329	.00717	.00710	.54194	.30932	1.75200
7.359	-4.100	24.14200	.62152	.06063	-.00928	.03167	.00681	.00680	.54236	.30952	1.75220
7.327	-3.900	24.14200	.62181	.06054	-.00919	.03011	.00645	.00648	.54266	.30956	1.75300
7.314	-3.700	24.14700	.62177	.06044	-.00915	.02843	.00608	.00617	.54264	.30951	1.75330
7.303	-3.500	24.15400	.62212	.06039	-.00912	.02693	.00571	.00587	.54294	.30967	1.75330
7.311	-3.300	24.16100	.62265	.06029	-.00906	.02538	.00534	.00558	.54343	.30986	1.75380
7.302	-3.100	24.16500	.62288	.06029	-.00903	.02389	.00499	.00527	.54362	.31000	1.75360
7.300	-2.900	24.17200	.62310	.06024	-.00890	.02217	.00465	.00492	.54380	.31011	1.75360
7.277	-2.700	24.17600	.62347	.06022	-.00893	.02065	.00431	.00460	.54413	.31027	1.75370
7.289	-2.500	24.18400	.62371	.06017	-.00884	.01913	.00397	.00429	.54432	.31040	1.75360
7.287	-2.300	24.19000	.62393	.06015	-.00881	.01756	.00365	.00396	.54450	.31053	1.75340
7.294	-2.100	24.19700	.62407	.06009	-.00877	.01587	.00332	.00361	.54461	.31060	1.75340
7.291	-1.900	24.20400	.62451	.06011	-.00868	.01421	.00300	.00326	.54497	.31087	1.75310
7.299	-1.700	24.21100	.62470	.06007	-.00870	.01259	.00269	.00289	.54511	.31098	1.75290
7.297	-1.500	24.21500	.62480	.06004	-.00869	.01102	.00239	.00257	.54520	.31103	1.75290
7.302	-1.300	24.22200	.62501	.06003	-.00860	.00941	.00210	.00220	.54535	.31117	1.75260
7.314	-1.100	24.22900	.62561	.06009	-.00844	.00772	.00180	.00184	.54584	.31153	1.75210
7.329	-.900	24.23000	.62541	.06006	-.00848	.00613	.00149	.00150	.54567	.31144	1.75210
7.335	-.700	24.24100	.62549	.06007	-.00838	.00454	.00119	.00113	.54568	.31158	1.75130
7.308	-.500	24.24400	.62585	.06011	-.00839	.00297	.00087	.00079	.54597	.31180	1.75100
7.305	-.300	24.24700	.62574	.06011	-.00835	.00143	.00052	.00047	.54585	.31179	1.75070
7.325	-.100	24.25000	.62602	.06007	-.00828	-.00011	.00016	.00014	.54610	.31189	1.75090
7.283	.100	24.25100	.62588	.06005	-.00835	-.00153	-.00019	-.00019	.54598	.31182	1.75100
7.264	.300	24.25700	.62605	.06001	-.00840	-.00300	-.00055	-.00050	.54613	.31191	1.75090
7.258	.500	24.26100	.62605	.05993	-.00851	-.00444	-.00090	-.00079	.54613	.31188	1.75110
7.241	.700	24.26600	.62635	.05994	-.00852	-.00599	-.00126	-.00114	.54637	.31206	1.75090
7.261	.900	24.27700	.62663	.05990	-.00864	-.00751	-.00159	-.00147	.54659	.31225	1.75050
7.215	1.100	24.27600	.62660	.05992	-.00868	-.00907	-.00193	-.00180	.54655	.31224	1.75050
7.217	1.300	24.28100	.62677	.05995	-.00873	-.01065	-.00226	-.00214	.54667	.31238	1.75000
7.201	1.500	24.28700	.62700	.05998	-.00883	-.01226	-.00260	-.00251	.54684	.31257	1.74950
7.183	1.700	24.29100	.62750	.06002	-.00885	-.01389	-.00296	-.00288	.54725	.31284	1.74930
7.169	1.900	24.29200	.62725	.06003	-.00890	-.01544	-.00328	-.00318	.54701	.31276	1.74900
7.169	2.100	24.30500	.62806	.06010	-.00892	-.01711	-.00363	-.00354	.54766	.31328	1.74810
7.156	2.300	24.30600	.62807	.06008	-.00905	-.01878	-.00395	-.00387	.54766	.31328	1.74820
7.144	2.500	24.31100	.62814	.06012	-.00912	-.02039	-.00428	-.00424	.54769	.31339	1.74760
7.161	2.700	24.32000	.62802	.06008	-.00919	-.02195	-.00462	-.00453	.54755	.31339	1.74720
7.167	2.900	24.33000	.62854	.06024	-.00923	-.02365	-.00498	-.00488	.54791	.31384	1.74580
7.172	3.100	24.33500	.62854	.06031	-.00930	-.02514	-.00531	-.00517	.54784	.31396	1.74500
7.182	3.300	24.34200	.62908	.06041	-.00940	-.02654	-.00561	-.00544	.54826	.31433	1.74420
7.186	3.500	24.34800	.62925	.06052	-.00943	-.02857	-.00603	-.00582	.54833	.31456	1.74320

OA257 (LARC 20-M6-6559) OV102 (R7E471) (10 JUL 81)

REFERENCE DATA

SREF =	2690.0000 SQ.FT.	XMRP =	1076.6800 IN. XO		
LREF =	474.8100 INCHES	YMRP =	.0000 IN. YO		
BREF =	936.6800 INCHES	ZMRP =	375.0000 IN. ZO		
SCALE =	.0100				

PARAMETRIC DATA

ALPHA =	25.000	PHI =	.000
SPDBRK =	.000	AILRON =	.000
YP =	1.000	1S =	1.000
ELEVON =	.000	MACH =	6.000
S-MODE =	2.000	S-DIR =	1.000

RUN NO. 239/ 0 RN/L = 7.26 GRADIENT INTERVAL = -.60/ .60

RN/L	BETA	ALPHA	CN	CA	CLM	CY	CYN	CBL	CL	CD	L/D
7.163	3.700	24.34900	.62932	.06056	-.00947	-.03003	-.00631	-.00617	.54837	.31464	1.74290
	GRADIENT	.01657	.00026	-.00018	-.00011	-.00739	-.00177	-.00159	.00022	.00010	.00017

OA257 (LARC 20-M6-6559) OV102 (R7EA71) (10 JUL 81)

REFERENCE DATA

SREF = 2690.0000 SQ.FT. XMRP = 1076.6800 IN. XO
LREF = 474.8100 INCHES YMRP = .0000 IN. YO
BREF = 936.6800 INCHES ZMRP = 375.0000 IN. ZO
SCALE = .0100

PARAMETRIC DATA

ALPHA = 25.000 PHI = .000
SPDBRK = .000 AILRON = .000
YP = 1.000 1S = 1.000
ELEVON = .000 MACH = 6.000
S-MODE = 2.000 S-DIR = 1.000

RUN NO. 2237/ O RN/L = 2.24 GRADIENT INTERVAL = -.60/ .60

RN/L	BETA	ALPHA	CN	CA	CLM	CY	CYN	CBL	CL	CD	L/D
2.225	-4.600	24.39500	.63313	.06211	-.00724	.03698	.00788	.00773	.55095	.31806	1.73220
2.225	-4.400	24.39900	.63388	.06201	-.00722	.03511	.00759	.00735	.55165	.31832	1.73300
2.227	-4.200	24.40000	.63431	.06184	-.00721	.03345	.00730	.00700	.55211	.31835	1.73430
2.226	-4.000	24.40500	.63442	.06179	-.00719	.03178	.00694	.00666	.55220	.31841	1.73430
2.222	-3.800	24.41000	.63446	.06175	-.00725	.03007	.00660	.00636	.55222	.31843	1.73420
2.222	-3.600	24.41100	.63471	.06169	-.00726	.02842	.00623	.00603	.55247	.31848	1.73470
2.225	-3.400	24.41300	.63518	.06169	-.00715	.02673	.00584	.00571	.55289	.31870	1.73480
2.236	-3.200	24.42000	.63550	.06168	-.00712	.02518	.00549	.00539	.55315	.31889	1.73460
2.238	-3.000	24.42400	.63577	.06154	-.00720	.02358	.00512	.00505	.55343	.31891	1.73540
2.236	-2.800	24.42800	.63638	.06155	-.00714	.02193	.00474	.00474	.55396	.31921	1.73540
2.229	-2.600	24.43300	.63632	.06153	-.00712	.02047	.00440	.00441	.55389	.31922	1.73510
2.226	-2.400	24.44200	.63664	.06145	-.00712	.01887	.00405	.00410	.55416	.31937	1.73520
2.240	-2.200	24.44700	.63652	.06148	-.00714	.01724	.00369	.00379	.55401	.31939	1.73460
2.240	-2.000	24.45400	.63675	.06139	-.00696	.01574	.00333	.00345	.55422	.31947	1.73480
2.233	-1.800	24.46000	.63703	.06129	-.00682	.01406	.00297	.00311	.55448	.31955	1.73520
2.228	-1.600	24.46600	.63743	.06126	-.00689	.01251	.00262	.00278	.55482	.31975	1.73520
2.224	-1.400	24.47500	.63772	.06125	-.00687	.01112	.00225	.00245	.55504	.31995	1.73480
2.222	-1.200	24.48100	.63755	.06123	-.00678	.00952	.00187	.00211	.55486	.31993	1.73430
2.224	-1.000	24.49100	.63814	.06131	-.00677	.00791	.00156	.00175	.55531	.32033	1.73350
2.229	-.800	24.49700	.63835	.06130	-.00671	.00624	.00129	.00140	.55547	.32048	1.73320
2.227	-.600	24.50300	.63861	.06133	-.00674	.00456	.00098	.00105	.55566	.32067	1.73280
2.235	-.400	24.50900	.63849	.06134	-.00654	.00294	.00065	.00070	.55551	.32068	1.73230
2.232	-.200	24.51400	.63881	.06128	-.00650	.00126	.00031	.00035	.55580	.32080	1.73250
2.235	.000	24.52000	.63919	.06136	-.00647	-.00013	-.00003	.00005	.55608	.32111	1.73180
2.239	.200	24.52400	.63877	.06136	-.00641	-.00158	-.00040	-.00025	.55567	.32096	1.73130
2.242	.400	24.52800	.63923	.06138	-.00645	-.00309	-.00075	-.00058	.55606	.32121	1.73110
2.245	.600	24.53400	.64013	.06131	-.00652	-.00459	-.00110	-.00089	.55688	.32158	1.73170
2.239	.800	24.53900	.64023	.06126	-.00687	-.00622	-.00143	-.00124	.55696	.32162	1.73170
2.238	1.000	24.54200	.64008	.06113	-.00695	-.00785	-.00180	-.00159	.55686	.32147	1.73220
2.245	1.200	24.54900	.64077	.06113	-.00702	-.00925	-.00213	-.00191	.55745	.32182	1.73220
2.249	1.400	24.55400	.64065	.06111	-.00709	-.01100	-.00252	-.00225	.55732	.32181	1.73190
2.246	1.600	24.56000	.64003	.06117	-.00701	-.01252	-.00288	-.00260	.55670	.32166	1.73070
2.248	1.800	24.56800	.64065	.06121	-.00705	-.01401	-.00328	-.00291	.55720	.32204	1.73020
2.250	2.000	24.57600	.64112	.06131	-.00708	-.01554	-.00367	-.00325	.55755	.32240	1.72940
2.255	2.200	24.58200	.64093	.06128	-.00716	-.01708	-.00404	-.00357	.55734	.32235	1.72900
2.252	2.400	24.59000	.64128	.06140	-.00708	-.01872	-.00437	-.00390	.55757	.32269	1.72790
2.254	2.600	24.59600	.64167	.06155	-.00709	-.02028	-.00475	-.00421	.55783	.32304	1.72680
2.249	2.800	24.60200	.64140	.06153	-.00724	-.02192	-.00510	-.00455	.55756	.32297	1.72640
2.247	3.000	24.61000	.64152	.06162	-.00719	-.02354	-.00543	-.00490	.55758	.32318	1.72530
2.248	3.200	24.62000	.64210	.06171	-.00720	-.02525	-.00579	-.00524	.55802	.32359	1.72450
2.246	3.400	24.62400	.64210	.06178	-.00729	-.02698	-.00610	-.00560	.55796	.32370	1.72370
2.255	3.600	24.62900	.64233	.06177	-.00726	-.02858	-.00641	-.00595	.55815	.32383	1.72360
	GRADIENT	.02518	.00107	.00002	.00017	-.00756	-.00175	-.00161	.00083	.00071	-.00123

OA257 (LARC 20-M6-6559) OV102 (R7EA71) (10 JUL 81)

REFERENCE DATA

SREF = 2690.0000 SQ.FT. XMRP = 1076.6800 IN. XO
LREF = 474.8100 INCHES YMRP = .0000 IN. YO
BREF = 936.6800 INCHES ZMRP = 375.0000 IN. ZO
SCALE = .0100

PARAMETRIC DATA

ALPHA = 25.000 PHI = .000
SPDBRK = .000 AILRON = .000
YP = 1.000 1S = 1.000
ELEVON = .000 MACH = 6.000
S-MODE = 2.000 S-DIR = 1.000

RUN NO. 2239/ 0 RN/L = 7.26 GRADIENT INTERVAL = -.60/ .60

RN/L	BETA	ALPHA	CN	CA	CLM	CY	CYN	CBL	CL	CD	L/D
7.374	-4.600	24.13100	.62070	.06087	-.00939	.03568	.00764	.00759	.54158	.30931	1.75090
7.365	-4.400	24.13000	.62091	.06074	-.00935	.03405	.00732	.00725	.54182	.30927	1.75190
7.363	-4.200	24.13800	.62108	.06060	-.00933	.03245	.00699	.00694	.54199	.30929	1.75240
7.342	-4.000	24.14000	.62145	.06057	-.00922	.03087	.00663	.00664	.54233	.30942	1.75270
7.326	-3.800	24.14500	.62179	.06047	-.00924	.02929	.00627	.00633	.54265	.30952	1.75320
7.307	-3.600	24.14900	.62197	.06042	-.00917	.02764	.00588	.00602	.54282	.30959	1.75330
7.302	-3.400	24.15500	.62240	.06037	-.00910	.02615	.00553	.00573	.54320	.30978	1.75350
7.306	-3.200	24.16300	.62279	.06031	-.00904	.02463	.00516	.00542	.54354	.30996	1.75360
7.307	-3.000	24.17000	.62317	.06028	-.00894	.02303	.00481	.00510	.54386	.31015	1.75350
7.278	-2.800	24.17200	.62310	.06025	-.00892	.02139	.00447	.00476	.54380	.31011	1.75360
7.281	-2.600	24.17800	.62323	.06017	-.00895	.01988	.00415	.00444	.54391	.31014	1.75380
7.290	-2.400	24.18700	.62391	.06015	-.00880	.01831	.00381	.00412	.54450	.31050	1.75360
7.286	-2.200	24.19300	.62396	.06014	-.00876	.01677	.00349	.00379	.54451	.31057	1.75330
7.290	-2.000	24.20100	.62438	.06012	-.00869	.01500	.00314	.00345	.54486	.31080	1.75310
7.293	-1.800	24.20700	.62449	.06009	-.00869	.01340	.00284	.00308	.54493	.31087	1.75290
7.291	-1.600	24.21000	.62441	.06004	-.00871	.01184	.00256	.00273	.54487	.31082	1.75300
7.303	-1.400	24.21900	.62489	.06003	-.00863	.01019	.00224	.00238	.54526	.31110	1.75270
7.306	-1.200	24.22200	.62520	.06007	-.00855	.00855	.00195	.00202	.54551	.31129	1.75240
7.322	-1.000	24.22900	.62518	.06003	-.00855	.00689	.00164	.00167	.54548	.31131	1.75220
7.335	-.800	24.23600	.62587	.06006	-.00842	.00534	.00134	.00131	.54606	.31168	1.75200
7.317	-.600	24.24000	.62553	.06006	-.00842	.00382	.00104	.00099	.54573	.31158	1.75150
7.311	-.400	24.24700	.62565	.06009	-.00839	.00220	.00070	.00062	.54578	.31173	1.75080
7.313	-.200	24.24800	.62592	.06014	-.00831	.00063	.00033	.00030	.54600	.31190	1.75060
7.301	.000	24.24900	.62593	.06008	-.00833	-.00079	-.00001	-.00003	.54603	.31185	1.75090
7.276	.200	24.25400	.62587	.06002	-.00837	-.00225	-.00037	-.00034	.54597	.31183	1.75090
7.258	.400	24.26000	.62596	.05997	-.00845	-.00370	-.00072	-.00065	.54604	.31186	1.75090
7.252	.600	24.26500	.62618	.05993	-.00852	-.00520	-.00107	-.00096	.54623	.31197	1.75090
7.249	.800	24.27200	.62653	.05993	-.00858	-.00673	-.00143	-.00131	.54652	.31218	1.75070
7.244	1.000	24.27800	.62634	.05987	-.00873	-.00830	-.00177	-.00163	.54633	.31211	1.75050
7.210	1.200	24.27700	.62686	.05994	-.00868	-.00985	-.00208	-.00198	.54678	.31237	1.75040
7.212	1.400	24.28400	.62695	.05996	-.00872	-.01149	-.00242	-.00235	.54682	.31249	1.74990
7.189	1.600	24.28800	.62725	.06000	-.00886	-.01308	-.00278	-.00269	.54706	.31269	1.74950
7.175	1.800	24.29500	.62738	.05999	-.00889	-.01464	-.00313	-.00304	.54713	.31281	1.74910
7.165	2.000	24.29800	.62788	.06008	-.00891	-.01632	-.00346	-.00337	.54755	.31312	1.74870
7.165	2.200	24.30700	.62811	.06010	-.00900	-.01791	-.00379	-.00371	.54769	.31333	1.74800
7.142	2.400	24.30900	.62782	.06008	-.00910	-.01958	-.00410	-.00404	.54743	.31320	1.74780
7.161	2.600	24.31700	.62828	.06008	-.00912	-.02116	-.00445	-.00439	.54780	.31347	1.74750
7.169	2.800	24.32600	.62872	.06022	-.00923	-.02285	-.00480	-.00472	.54809	.31386	1.74630
7.167	3.000	24.33100	.62857	.06028	-.00927	-.02440	-.00515	-.00503	.54791	.31390	1.74550
7.178	3.200	24.33900	.62881	.06034	-.00934	-.02595	-.00548	-.00532	.54806	.31413	1.74470
7.189	3.400	24.34400	.62906	.06043	-.00942	-.02765	-.00583	-.00564	.54821	.31436	1.74390
7.176	3.600	24.35100	.62931	.06055	-.00946	-.02937	-.00618	-.00602	.54836	.31464	1.74280

OA257 (LARC 20-M6-6559) OV102 (R7EA71) (10 JUL 81)

REFERENCE DATA

SREF =	2690.0000 SQ.FT.	XMRP =	1076.6800 IN. XO		
LREF =	474.8100 INCHES	YMRP =	.0000 IN. YO		
BREF =	936.6800 INCHES	ZMRP =	375.0000 IN. ZO		
SCALE =	.0100				

PARAMETRIC DATA

ALPHA =	25.000	PHI =	.000
SPDBRK =	.000	AILRON =	.000
YP =	1.000	1S =	1.000
ELEVON =	.000	MACH =	6.000
S-MODE =	2.000	S-DIR =	1.000

RUN NO. 2239/ 0 RN/L = 7.26 GRADIENT INTERVAL = -.60/ .60

RN/L	BETA	ALPHA	CN	CA	CLM	CY	CYN	CBL	CL	CD	L/D
7.160	3.718	24.34700	.62955	.06057	-.00945	-.03016	-.00635	-.00620	.54859	.31472	1.74310
	GRADIENT	.01911	.00045	-.00013	-.00009	-.00745	-.00176	-.00161	.00036	.00024	-.00023

OA257 (LARC 20-M6-6559) OV102 (R7E473) (10 JUL 81)

REFERENCE DATA

SREF = 2690.0000 SQ.FT. XMRP = 1076.6800 IN. XO
LREF = 474.8100 INCHES YMRP = .0000 IN. YO
BREF = 936.6800 INCHES ZMRP = 375.0000 IN. ZO
SCALE = .0100

PARAMETRIC DATA

ALPHA = 30.000 PHI = .000
SPDBRK = .000 AILRON = .000
YP = 1.000 1S = 1.000
ELEVON = .000 MACH = 6.000
S-MODE = 2.000 S-DIR = 1.000

RUN NO. 240/ 0 RN/L = 7.45 GRADIENT INTERVAL = -.60/ .60

RN/L	BETA	ALPHA	CN	CA	CLM	CY	CYN	CBL	CL	CD	L/D
7.523	-4.932	28.83500	.81128	.06243	-.01484	.03773	.00832	.00932	.68058	.44596	1.52610
7.518	-4.800	28.84400	.81118	.06231	-.01485	.03663	.00811	.00905	.68049	.44591	1.52610
7.515	-4.600	28.84600	.81174	.06213	-.01482	.03498	.00780	.00865	.68105	.44605	1.52680
7.503	-4.400	28.85100	.81233	.06194	-.01482	.03347	.00750	.00827	.68161	.44623	1.52750
7.499	-4.200	28.85800	.81267	.06178	-.01487	.03189	.00717	.00787	.68194	.44634	1.52780
7.500	-4.000	28.86900	.81358	.06175	-.01486	.03022	.00686	.00747	.68266	.44688	1.52760
7.500	-3.800	28.87300	.81369	.06163	-.01489	.02850	.00653	.00706	.68277	.44688	1.52790
7.508	-3.600	28.88100	.81408	.06166	-.01487	.02683	.00621	.00667	.68305	.44719	1.52740
7.530	-3.400	28.89500	.81490	.06156	-.01492	.02524	.00587	.00627	.68370	.44766	1.52730
7.511	-3.200	28.89900	.81539	.06156	-.01482	.02352	.00555	.00585	.68410	.44794	1.52720
7.516	-3.000	28.90600	.81585	.06154	-.01482	.02199	.00525	.00546	.68446	.44823	1.52700
7.518	-2.800	28.91500	.81622	.06148	-.01480	.02026	.00491	.00506	.68474	.44846	1.52690
7.507	-2.600	28.92400	.81674	.06145	-.01488	.01883	.00460	.00464	.68514	.44880	1.52660
7.512	-2.400	28.93300	.81698	.06139	-.01482	.01721	.00429	.00425	.68531	.44898	1.52640
7.512	-2.200	28.94200	.81774	.06133	-.01488	.01559	.00396	.00385	.68593	.44940	1.52630
7.523	-2.000	28.94900	.81784	.06129	-.01485	.01401	.00363	.00345	.68598	.44950	1.52610
7.514	-1.800	28.95600	.81846	.06125	-.01482	.01246	.00329	.00306	.68649	.44985	1.52600
7.528	-1.600	28.96900	.81876	.06115	-.01481	.01087	.00295	.00268	.68670	.45006	1.52580
7.495	-1.400	28.97100	.81928	.06117	-.01478	.00935	.00262	.00229	.68713	.45035	1.52580
7.468	-1.200	28.97100	.81946	.06116	-.01480	.00781	.00228	.00190	.68730	.45042	1.52590
7.467	-1.000	28.97400	.81909	.06110	-.01482	.00630	.00191	.00154	.68698	.45023	1.52590
7.436	-.800	28.97600	.81972	.06116	-.01473	.00479	.00157	.00116	.68748	.45062	1.52560
7.424	-.600	28.98000	.82021	.06118	-.01471	.00330	.00121	.00080	.68786	.45092	1.52550
7.398	-.400	28.98600	.82039	.06112	-.01465	.00172	.00084	.00041	.68801	.45102	1.52550
7.394	-.200	28.99500	.82072	.06116	-.01458	.00022	.00046	.00004	.68821	.45132	1.52490
7.398	.000	29.00500	.82112	.06124	-.01458	-.00129	.00007	-.00033	.68844	.45170	1.52410
7.385	.200	29.01000	.82124	.06129	-.01453	-.00274	-.00031	-.00067	.68848	.45187	1.52360
7.396	.400	29.01800	.82182	.06135	-.01457	-.00410	-.00072	-.00100	.68889	.45231	1.52310
7.426	.600	29.02800	.82159	.06134	-.01458	-.00558	-.00114	-.00134	.68862	.45230	1.52250
7.402	.800	29.03300	.82217	.06137	-.01452	-.00704	-.00156	-.00170	.68908	.45267	1.52230
7.400	1.000	29.04200	.82223	.06138	-.01459	-.00847	-.00194	-.00206	.68906	.45281	1.52170
7.394	1.200	29.05000	.82272	.06138	-.01460	-.00997	-.00234	-.00245	.68941	.45314	1.52140
7.406	1.400	29.05600	.82264	.06138	-.01463	-.01147	-.00274	-.00281	.68930	.45319	1.52100
7.408	1.600	29.06200	.82310	.06142	-.01454	-.01293	-.00314	-.00315	.68963	.45351	1.52060
7.407	1.800	29.07000	.82304	.06142	-.01475	-.01449	-.00352	-.00352	.68952	.45358	1.52020
7.388	2.000	29.07500	.82328	.06141	-.01466	-.01604	-.00390	-.00389	.68969	.45375	1.52000
7.396	2.200	29.08500	.82342	.06146	-.01463	-.01771	-.00423	-.00430	.68971	.45398	1.51930
7.398	2.400	29.09400	.82357	.06146	-.01468	-.01933	-.00460	-.00470	.68976	.45417	1.51880
7.389	2.600	29.09900	.82371	.06140	-.01471	-.02099	-.00494	-.00511	.68989	.45424	1.51880
7.389	2.800	29.10200	.82352	.06121	-.01478	-.02258	-.00525	-.00550	.68978	.45401	1.51930
7.407	3.000	29.11300	.82379	.06108	-.01481	-.02414	-.00554	-.00587	.69000	.45416	1.51930
7.398	3.200	29.11400	.82376	.06118	-.01499	-.02605	-.00587	-.00635	.68992	.45425	1.51880

OA257 (LARC 20-M6-6559) OV102 (R7E473) (10 JUL 81)

REFERENCE DATA

SREF =	2690.0000 SQ.FT.	XMRP =	1076.6800 IN. XO		
LREF =	474.8100 INCHES	YMRP =	.0000 IN. YO		
BREF =	936.6800 INCHES	ZMRP =	375.0000 IN. ZO		
SCALE =	.0100				

PARAMETRIC DATA

ALPHA =	30.000	PHI =	.000
SPDBRK =	.000	AILRON =	.000
YP =	1.000	1S =	1.000
ELEVON =	.000	MACH =	6.000
S-MODE =	2.000	S-DIR =	1.000

RUN NO. 240/ 0 RN/L = 7.45 GRADIENT INTERVAL = -.60/ .60

RN/L	BETA	ALPHA	CN	CA	CLM	CY	CYN	CBL	CL	CD	L/D
7.406	3.374	29.12200	.82392	.06145	-.01499	-.02722	-.00608	-.00667	.68986	.45466	1.51730
	GRADIENT	.03982	.00134	.00019	.00011	-.00737	-.00196	-.00178	.00077	.00130	-.00270

OA257 (LARC 20-M6-6559) OV102 (R7EA73) (10 JUL 81)

REFERENCE DATA

SREF = 2690.0000 SQ.FT. XMRP = 1076.6800 IN. XO
LREF = 474.8100 INCHES YMRP = .0000 IN. YO
BREF = 936.6800 INCHES ZMRP = 375.0000 IN. ZO
SCALE = .0100

PARAMETRIC DATA

ALPHA = 30.000 PHI = .000
SPDBRK = .000 AILRON = .000
YP = 1.000 1S = 1.000
ELEVON = .000 MACH = 6.000
S-MODE = 2.000 S-DIR = 1.000

RUN NO. 2240/ O RN/L = 7.45 GRADIENT INTERVAL = -.60/ .60

RN/L	BETA	ALPHA	CN	CA	CLM	CY	CYN	CBL	CL	CD	L/D
7.516	-4.900	28.84200	.81090	.06239	-.01485	.03752	.00828	.00924	.68021	.44582	1.52580
7.520	-4.700	28.84300	.81125	.06222	-.01482	.03582	.00795	.00886	.68060	.44585	1.52650
7.506	-4.500	28.85000	.81189	.06201	-.01483	.03422	.00765	.00846	.68120	.44607	1.52710
7.503	-4.300	28.85600	.81258	.06184	-.01485	.03267	.00734	.00807	.68184	.44632	1.52770
7.496	-4.100	28.85800	.81297	.06175	-.01485	.03108	.00702	.00767	.68221	.44646	1.52810
7.500	-3.900	28.87100	.81342	.06165	-.01488	.02938	.00669	.00727	.68255	.44674	1.52780
7.511	-3.700	28.87900	.81414	.06163	-.01488	.02766	.00637	.00687	.68314	.44715	1.52770
7.517	-3.500	28.88800	.81470	.06158	-.01493	.02601	.00604	.00646	.68358	.44750	1.52760
7.527	-3.300	28.89600	.81514	.06157	-.01485	.02442	.00572	.00607	.68390	.44780	1.52730
7.507	-3.100	28.90300	.81555	.06153	-.01487	.02274	.00540	.00565	.68423	.44804	1.52720
7.523	-2.900	28.91000	.81607	.06152	-.01483	.02114	.00508	.00526	.68464	.44837	1.52700
7.506	-2.700	28.91700	.81645	.06146	-.01474	.01950	.00475	.00486	.68494	.44858	1.52690
7.515	-2.500	28.92900	.81715	.06139	-.01493	.01808	.00444	.00444	.68549	.44900	1.52670
7.510	-2.300	28.93900	.81741	.06134	-.01486	.01637	.00412	.00405	.68566	.44921	1.52640
7.522	-2.100	28.94600	.81789	.06130	-.01485	.01482	.00379	.00365	.68605	.44949	1.52630
7.512	-1.900	28.95200	.81838	.06128	-.01480	.01325	.00346	.00326	.68644	.44979	1.52610
7.530	-1.700	28.96500	.81882	.06123	-.01486	.01168	.00312	.00287	.68675	.45010	1.52580
7.510	-1.500	28.97000	.81888	.06121	-.01475	.01018	.00279	.00250	.68677	.45018	1.52550
7.475	-1.300	28.96800	.81911	.06114	-.01477	.00853	.00245	.00209	.68702	.45021	1.52600
7.470	-1.100	28.97200	.81958	.06113	-.01480	.00701	.00210	.00171	.68740	.45047	1.52600
7.451	-.900	28.97400	.81966	.06113	-.01477	.00556	.00175	.00135	.68746	.45054	1.52590
7.421	-.700	28.97700	.81975	.06118	-.01474	.00402	.00140	.00096	.68749	.45065	1.52560
7.415	-.500	28.98300	.81979	.06112	-.01469	.00254	.00103	.00059	.68751	.45069	1.52540
7.398	-.300	28.99100	.82060	.06117	-.01455	.00095	.00065	.00023	.68813	.45123	1.52500
7.400	-.100	29.00200	.82106	.06123	-.01456	-.00057	.00028	-.00015	.68841	.45164	1.52430
7.388	.100	29.00800	.82107	.06125	-.01457	-.00198	-.00011	-.00049	.68837	.45173	1.52390
7.386	.300	29.01500	.82133	.06129	-.01450	-.00347	-.00053	-.00084	.68852	.45197	1.52340
7.417	.500	29.02200	.82158	.06131	-.01458	-.00483	-.00093	-.00117	.68867	.45220	1.52290
7.417	.700	29.03000	.82179	.06135	-.01456	-.00635	-.00135	-.00152	.68878	.45242	1.52240
7.395	.900	29.03400	.82240	.06141	-.01458	-.00775	-.00175	-.00189	.68925	.45283	1.52210
7.396	1.100	29.04500	.82233	.06140	-.01455	-.00921	-.00215	-.00226	.68911	.45291	1.52150
7.399	1.300	29.05300	.82262	.06140	-.01465	-.01073	-.00254	-.00261	.68930	.45315	1.52110
7.412	1.500	29.05900	.82258	.06138	-.01465	-.01219	-.00294	-.00298	.68922	.45320	1.52080
7.404	1.700	29.06600	.82300	.06139	-.01470	-.01371	-.00332	-.00335	.68953	.45349	1.52050
7.398	1.900	29.07200	.82310	.06143	-.01472	-.01522	-.00370	-.00370	.68955	.45365	1.52000
7.392	2.100	29.08100	.82361	.06144	-.01465	-.01687	-.00407	-.00410	.68993	.45400	1.51970
7.394	2.300	29.09000	.82372	.06143	-.01465	-.01860	-.00442	-.00450	.68994	.45416	1.51920
7.391	2.500	29.09700	.82362	.06146	-.01470	-.02009	-.00475	-.00490	.68979	.45422	1.51860
7.389	2.700	29.10000	.82349	.06129	-.01471	-.02185	-.00510	-.00532	.68973	.45405	1.51910
7.397	2.900	29.10800	.82359	.06112	-.01486	-.02333	-.00540	-.00569	.68984	.45404	1.51930
7.404	3.100	29.11400	.82352	.06107	-.01486	-.02511	-.00571	-.00612	.68976	.45404	1.51920
7.399	3.300	29.11800	.82379	.06133	-.01498	-.02665	-.00597	-.00652	.68983	.45444	1.51800
	GRADIENT	.03900	.00159	.00019	.00011	-.00736	-.00196	-.00176	.00099	.00141	-.00253

OA257 (LARC 20-M6-6559) OV102 (R7E573) (10 JUL 81)

REFERENCE DATA

SREF = 2690.0000 SQ.FT. XMRP = 1076.6800 IN. XO
LREF = 474.8100 INCHES YMRP = .0000 IN. YO
BREF = 936.6800 INCHES ZMRP = 375.0000 IN. ZO
SCALE = .0100

PARAMETRIC DATA

ALPHA = 30.000 PHI = .000
SPDBRK = .000 AILRON = .000
YP = 1.000 1S = 1.000
ELEVON = .000 MACH = 6.000
S-MODE = 2.000 S-DIR = 1.000

RUN NO. 286/ O RN/L = 7.58 GRADIENT INTERVAL = -.60/ .60

RN/L	BETA	ALPHA	CN	CA	CLM	CY	CYN	CBL	CL	CD	L/D
7.552	-4.920	29.00700	.82267	.06332	-.01463	.03828	.00849	.00952	.68876	.45431	1.51610
7.556	-4.800	29.01200	.82318	.06328	-.01466	.03731	.00831	.00927	.68919	.45458	1.51610
7.552	-4.600	29.01800	.82367	.06316	-.01468	.03559	.00798	.00885	.68964	.45478	1.51640
7.552	-4.400	29.02300	.82410	.06304	-.01463	.03393	.00765	.00844	.69003	.45494	1.51680
7.559	-4.200	29.02600	.82484	.06297	-.01472	.03246	.00732	.00806	.69069	.45527	1.51710
7.560	-4.000	29.03200	.82535	.06294	-.01469	.03075	.00699	.00766	.69110	.45557	1.51700
7.595	-3.800	29.04400	.82596	.06288	-.01468	.02899	.00664	.00728	.69156	.45596	1.51670
7.594	-3.600	29.05100	.82640	.06278	-.01467	.02730	.00631	.00686	.69194	.45617	1.51680
7.585	-3.400	29.05600	.82676	.06274	-.01477	.02572	.00598	.00645	.69224	.45637	1.51680
7.589	-3.200	29.06600	.82716	.06266	-.01473	.02409	.00566	.00603	.69254	.45662	1.51670
7.589	-3.000	29.07400	.82782	.06262	-.01477	.02243	.00534	.00563	.69308	.45699	1.51660
7.587	-2.800	29.08100	.82840	.06255	-.01471	.02081	.00502	.00522	.69356	.45730	1.51660
7.594	-2.600	29.08700	.82846	.06247	-.01474	.01921	.00470	.00480	.69360	.45734	1.51660
7.600	-2.400	29.09200	.82871	.06241	-.01476	.01754	.00438	.00438	.69381	.45747	1.51660
7.595	-2.200	29.09900	.82939	.06232	-.01480	.01594	.00407	.00398	.69440	.45781	1.51680
7.588	-2.000	29.10500	.82967	.06228	-.01481	.01432	.00377	.00358	.69462	.45797	1.51670
7.580	-1.800	29.11100	.83000	.06219	-.01482	.01269	.00343	.00317	.69490	.45813	1.51680
7.580	-1.600	29.12300	.83028	.06212	-.01485	.01110	.00310	.00276	.69508	.45835	1.51650
7.581	-1.400	29.12900	.83072	.06205	-.01491	.00947	.00277	.00236	.69545	.45857	1.51660
7.599	-1.200	29.13800	.83133	.06203	-.01484	.00800	.00243	.00200	.69593	.45896	1.51630
7.611	-1.000	29.14700	.83136	.06192	-.01489	.00648	.00206	.00161	.69593	.45900	1.51620
7.603	-.800	29.14500	.83169	.06186	-.01485	.00495	.00170	.00123	.69626	.45909	1.51660
7.605	-.600	29.15500	.83199	.06186	-.01485	.00352	.00135	.00086	.69644	.45934	1.51620
7.594	-.400	29.16100	.83230	.06181	-.01478	.00195	.00096	.00048	.69670	.45952	1.51610
7.564	-.200	29.16400	.83256	.06174	-.01488	.00048	.00061	.00010	.69693	.45963	1.51630
7.563	.000	29.17300	.83276	.06177	-.01487	-.00104	.00021	-.00025	.69702	.45986	1.51570
7.571	.200	29.17900	.83325	.06180	-.01478	-.00248	-.00016	-.00060	.69738	.46020	1.51540
7.586	.400	29.18900	.83345	.06183	-.01478	-.00402	-.00056	-.00094	.69746	.46044	1.51480
7.571	.600	29.19200	.83359	.06184	-.01482	-.00544	-.00098	-.00130	.69755	.46057	1.51450
7.560	.800	29.19800	.83404	.06193	-.01478	-.00683	-.00139	-.00165	.69786	.46093	1.51400
7.553	1.000	29.20700	.83431	.06196	-.01481	-.00838	-.00180	-.00204	.69800	.46120	1.51340
7.556	1.200	29.21300	.83448	.06194	-.01487	-.00973	-.00216	-.00238	.69812	.46134	1.51320
7.560	1.400	29.21800	.83457	.06197	-.01498	-.01127	-.00257	-.00275	.69814	.46147	1.51290
7.569	1.600	29.22800	.83452	.06194	-.01499	-.01275	-.00296	-.00311	.69802	.46155	1.51240
7.562	1.800	29.23500	.83486	.06198	-.01499	-.01428	-.00334	-.00347	.69825	.46182	1.51190
7.557	2.000	29.24100	.83504	.06196	-.01504	-.01586	-.00371	-.00386	.69836	.46197	1.51170
7.565	2.200	29.24700	.83525	.06197	-.01502	-.01754	-.00405	-.00427	.69850	.46215	1.51140
7.578	2.400	29.25700	.83504	.06197	-.01508	-.01911	-.00438	-.00466	.69824	.46216	1.51080
7.576	2.600	29.25800	.83525	.06197	-.01517	-.02082	-.00474	-.00508	.69841	.46229	1.51080
7.576	2.800	29.26500	.83531	.06200	-.01520	-.02237	-.00506	-.00548	.69839	.46243	1.51030
7.583	3.000	29.26900	.83570	.06201	-.01525	-.02419	-.00542	-.00591	.69869	.46266	1.51020
7.592	3.200	29.27700	.83556	.06208	-.01526	-.02585	-.00573	-.00633	.69848	.46277	1.50940

OA257 (LARC 20-M6-6559) OV102 (R7E573) (10 JUL 81)

REFERENCE DATA

SREF =	2690.0000 SQ.FT.	XMRP =	1076.6800 IN. XO		
LREF =	474.8100 INCHES	YMRP =	.0000 IN. YO		
BREF =	936.6800 INCHES	ZMRP =	375.0000 IN. ZO		
SCALE =	.0100				

PARAMETRIC DATA

ALPHA =	30.000	PHI =	.000
SPDBRK =	.000	AILRON =	.000
YP =	1.000	1S =	1.000
ELEVON =	.000	MACH =	6.000
S-MODE =	2.000	S-DIR =	1.000

RUN NO. 286/ O RN/L = 7.58 GRADIENT INTERVAL = -.60/ .60

RN/L	BETA	ALPHA	CN	CA	CLM	CY	CYN	CBL	CL	CD	L/D
7.597	3.396	29.28500	.83552	.06208	-.01526	-.02704	-.00595	-.00664	.69837	.46284	1.50890
	GRADIENT	.03250	.00139	.00001	.00003	-.00746	-.00193	-.00179	.00095	.00109	-.00154

OA257 (LARC 20-M6-6559) OV102 (R7EB73) (10 JUL 81)

REFERENCE DATA

SREF = 2690.0000 SQ.FT. XMRP = 1076.6800 IN. XO
LREF = 474.8100 INCHES YMRP = .0000 IN. YO
BREF = 936.6800 INCHES ZMRP = 375.0000 IN. ZO
SCALE = .0100

PARAMETRIC DATA

ALPHA = 30.000 PHI = .000
SPDBRK = .000 AILRON = .000
YP = 1.000 1S = 1.000
ELEVON = .000 MACH = 6.000
S-MODE = 2.000 S-DIR = 1.000

RUN NO. 2286/ 0 RN/L = 7.58 GRADIENT INTERVAL = -.60/ .60

RN/L	BETA	ALPHA	CN	CA	CLM	CY	CYN	CBL	CL	CD	L/D
7.555	-4.900	29.01100	.82292	.06333	-.01465	.03811	.00847	.00948	.68895	.45448	1.51590
7.553	-4.700	29.01500	.82340	.06322	-.01465	.03645	.00815	.00905	.68939	.45467	1.51620
7.553	-4.500	29.01900	.82399	.06311	-.01468	.03475	.00781	.00865	.68993	.45490	1.51670
7.545	-4.300	29.02200	.82440	.06304	-.01464	.03317	.00749	.00825	.69031	.45507	1.51690
7.556	-4.100	29.03000	.82498	.06295	-.01469	.03163	.00715	.00787	.69078	.45537	1.51700
7.581	-3.900	29.04000	.82544	.06289	-.01467	.02987	.00681	.00747	.69115	.45566	1.51680
7.600	-3.700	29.04700	.82626	.06282	-.01466	.02814	.00647	.00706	.69183	.45609	1.51690
7.584	-3.500	29.05400	.82650	.06274	-.01476	.02650	.00614	.00665	.69202	.45622	1.51690
7.594	-3.300	29.06300	.82695	.06274	-.01473	.02493	.00583	.00623	.69235	.45654	1.51650
7.583	-3.100	29.06700	.82756	.06266	-.01474	.02331	.00551	.00584	.69289	.45682	1.51680
7.588	-2.900	29.07800	.82789	.06261	-.01475	.02160	.00518	.00542	.69312	.45708	1.51640
7.586	-2.700	29.08600	.82833	.06254	-.01469	.02004	.00488	.00501	.69347	.45732	1.51640
7.609	-2.500	29.09100	.82852	.06245	-.01475	.01839	.00454	.00460	.69364	.45740	1.51650
7.594	-2.300	29.09400	.82896	.06236	-.01484	.01674	.00422	.00417	.69405	.45756	1.51680
7.591	-2.100	29.10100	.82936	.06230	-.01478	.01514	.00392	.00377	.69436	.45780	1.51670
7.587	-1.900	29.10800	.82991	.06224	-.01481	.01346	.00360	.00336	.69482	.45810	1.51670
7.586	-1.700	29.11600	.83029	.06218	-.01483	.01193	.00327	.00296	.69511	.45833	1.51660
7.579	-1.500	29.12600	.83071	.06209	-.01490	.01028	.00293	.00255	.69545	.45857	1.51660
7.598	-1.300	29.13500	.83116	.06201	-.01487	.00869	.00260	.00218	.69581	.45883	1.51650
7.612	-1.100	29.14500	.83139	.06195	-.01489	.00726	.00224	.00180	.69595	.45902	1.51620
7.601	-.900	29.14700	.83166	.06191	-.01491	.00570	.00189	.00141	.69620	.45913	1.51630
7.604	-.700	29.15100	.83207	.06187	-.01488	.00425	.00153	.00106	.69654	.45934	1.51640
7.609	-.500	29.15700	.83226	.06181	-.01482	.00273	.00116	.00067	.69669	.45945	1.51630
7.574	-.300	29.16100	.83251	.06177	-.01480	.00127	.00079	.00030	.69690	.45959	1.51640
7.567	-.100	29.17000	.83278	.06176	-.01485	-.00030	.00041	-.00008	.69706	.45982	1.51590
7.564	.100	29.17600	.83297	.06176	-.01485	-.00177	.00003	-.00044	.69717	.46000	1.51560
7.583	.300	29.18500	.83331	.06183	-.01480	-.00327	-.00035	-.00077	.69737	.46033	1.51490
7.578	.500	29.19200	.83336	.06183	-.01476	-.00469	-.00076	-.00112	.69736	.46043	1.51460
7.564	.700	29.19500	.83385	.06190	-.01477	-.00615	-.00118	-.00146	.69772	.46078	1.51420
7.559	.900	29.20200	.83403	.06191	-.01481	-.00755	-.00159	-.00184	.69782	.46095	1.51390
7.553	1.100	29.21000	.83440	.06197	-.01489	-.00908	-.00198	-.00222	.69805	.46129	1.51330
7.553	1.300	29.21700	.83447	.06199	-.01490	-.01048	-.00237	-.00256	.69804	.46142	1.51280
7.572	1.500	29.22700	.83462	.06196	-.01499	-.01204	-.00278	-.00293	.69811	.46159	1.51240
7.566	1.700	29.22900	.83472	.06194	-.01499	-.01347	-.00314	-.00330	.69820	.46165	1.51240
7.556	1.900	29.23800	.83503	.06196	-.01500	-.01508	-.00353	-.00367	.69838	.46194	1.51190
7.559	2.100	29.24500	.83502	.06194	-.01505	-.01669	-.00388	-.00406	.69833	.46198	1.51160
7.581	2.300	29.25300	.83506	.06197	-.01508	-.01827	-.00420	-.00446	.69828	.46213	1.51100
7.574	2.500	29.25800	.83531	.06198	-.01509	-.02000	-.00456	-.00487	.69846	.46232	1.51080
7.579	2.700	29.26400	.83522	.06195	-.01519	-.02156	-.00489	-.00528	.69834	.46234	1.51050
7.573	2.900	29.26800	.83545	.06200	-.01519	-.02328	-.00524	-.00568	.69849	.46252	1.51020
7.595	3.100	29.27400	.83544	.06205	-.01527	-.02516	-.00561	-.00614	.69840	.46265	1.50960
7.593	3.300	29.28000	.83561	.06208	-.01530	-.02656	-.00586	-.00652	.69849	.46283	1.50920
	GRADIENT	.03614	.00116	.00005	.00005	-.00745	-.00191	-.00179	.00070	.00104	-.00190

OA257 (LARC 20-M6-6559) OV102 (R7E673) (10 JUL 81)

REFERENCE DATA

SREF = 2690.0000 SQ.FT. XMRP = 1076.6800 IN. XO
LREF = 474.8100 INCHES YMRP = .0000 IN. YO
BREF = 936.6800 INCHES ZMRP = 375.0000 IN. ZO
SCALE = .0100

PARAMETRIC DATA

ALPHA = 30.000 PHI = .000
SPDBRK = .000 AILRON = .000
YP = 1.000 1S = 1.000
ELEVON = .000 MACH = 6.000
S-MODE = 2.000 S-DIR = 1.000

RUN NO. 298/ 0 RN/L = 7.61 GRADIENT INTERVAL = -.60/ .60

RN/L	BETA	ALPHA	CN	CA	CLM	CY	CYN	CBL	CL	CD	L/D
7.649	-4.655	28.94300	.82164	.06273	-.01473	.04065	.00812	.00913	.68866	.45252	1.52180
7.641	-4.500	28.94700	.82218	.06261	-.01479	.03924	.00785	.00880	.68916	.45273	1.52220
7.628	-4.300	28.95000	.82311	.06248	-.01443	.03752	.00754	.00842	.69001	.45310	1.52290
7.627	-4.100	28.95200	.82301	.06241	-.01452	.03575	.00721	.00801	.68994	.45301	1.52300
7.612	-3.900	28.95900	.82338	.06240	-.01475	.03388	.00689	.00761	.69022	.45326	1.52280
7.585	-3.700	28.96000	.82431	.06235	-.01477	.03195	.00657	.00719	.69105	.45369	1.52320
7.588	-3.500	28.97000	.82469	.06214	-.01464	.03004	.00623	.00679	.69140	.45380	1.52360
7.598	-3.300	28.97500	.82502	.06208	-.01460	.02831	.00593	.00639	.69168	.45398	1.52360
7.607	-3.100	28.98700	.82553	.06203	-.01465	.02645	.00560	.00598	.69205	.45433	1.52320
7.610	-2.900	28.99100	.82588	.06185	-.01487	.02466	.00530	.00557	.69242	.45438	1.52390
7.591	-2.700	28.99600	.82633	.06173	-.01473	.02286	.00499	.00515	.69283	.45455	1.52420
7.591	-2.500	29.00500	.82657	.06164	-.01458	.02124	.00467	.00474	.69301	.45469	1.52410
7.589	-2.300	29.01200	.82685	.06168	-.01471	.01947	.00436	.00435	.69318	.45496	1.52360
7.579	-2.100	29.01900	.82751	.06167	-.01479	.01758	.00404	.00392	.69371	.45536	1.52340
7.575	-1.900	29.02300	.82790	.06159	-.01473	.01585	.00372	.00353	.69405	.45553	1.52360
7.597	-1.700	29.03300	.82855	.06161	-.01453	.01404	.00337	.00315	.69453	.45598	1.52310
7.607	-1.500	29.04000	.82852	.06159	-.01472	.01236	.00302	.00275	.69446	.45603	1.52280
7.594	-1.300	29.04700	.82892	.06153	-.01486	.01058	.00269	.00233	.69478	.45625	1.52280
7.593	-1.100	29.05400	.82974	.06146	-.01473	.00889	.00236	.00194	.69548	.45668	1.52290
7.591	-.900	29.06600	.82997	.06139	-.01461	.00713	.00197	.00156	.69562	.45687	1.52260
7.590	-.700	29.07100	.82984	.06146	-.01477	.00550	.00161	.00119	.69543	.45694	1.52190
7.603	-.500	29.08100	.83019	.06144	-.01484	.00384	.00124	.00079	.69567	.45720	1.52160
7.605	-.300	29.08900	.83107	.06141	-.01475	.00213	.00088	.00042	.69639	.45770	1.52150
7.590	-.100	29.09200	.83094	.06139	-.01458	.00045	.00050	.00005	.69626	.45766	1.52130
7.590	.100	29.09700	.83060	.06146	-.01467	-.00122	.00012	-.00032	.69589	.45761	1.52070
7.606	.300	29.10900	.83126	.06148	-.01478	-.00291	-.00029	-.00065	.69636	.45810	1.52010
7.606	.500	29.11300	.83184	.06147	-.01481	-.00443	-.00066	-.00103	.69685	.45842	1.52010
7.612	.700	29.12100	.83201	.06147	-.01460	-.00613	-.00110	-.00137	.69692	.45861	1.51960
7.610	.900	29.12700	.83190	.06160	-.01476	-.00772	-.00153	-.00172	.69672	.45873	1.51880
7.631	1.100	29.14500	.83251	.06161	-.01487	-.00936	-.00191	-.00210	.69709	.45926	1.51790
7.617	1.300	29.14700	.83291	.06163	-.01494	-.01099	-.00228	-.00248	.69742	.45950	1.51780
7.636	1.500	29.15600	.83298	.06159	-.01478	-.01259	-.00268	-.00282	.69743	.45961	1.51750
7.633	1.700	29.16000	.83318	.06167	-.01484	-.01426	-.00307	-.00317	.69754	.45983	1.51700
7.639	1.900	29.17200	.83297	.06163	-.01499	-.01590	-.00346	-.00356	.69727	.45984	1.51640
7.669	2.100	29.17900	.83375	.06167	-.01504	-.01774	-.00382	-.00394	.69788	.46033	1.51600
7.641	2.300	29.18300	.83404	.06164	-.01493	-.01954	-.00417	-.00436	.69812	.46049	1.51600
7.635	2.500	29.18600	.83312	.06160	-.01500	-.02138	-.00452	-.00475	.69732	.46004	1.51580
7.650	2.700	29.19000	.83370	.06159	-.01510	-.02337	-.00487	-.00516	.69779	.46037	1.51570
	GRADIENT	.03214	.00121	.00006	-.00001	-.00831	-.00191	-.00181	.00078	.00104	-.00176

OA257 (LARC 20-M6-6559) OV102 (R7EC73) (10 JUL 81)

REFERENCE DATA

SREF = 2690.0000 SQ.FT. XMRP = 1076.6800 IN. XO
LREF = 474.8100 INCHES YMRP = .0000 IN. YO
BREF = 936.6800 INCHES ZMRP = 375.0000 IN. ZO
SCALE = .0100

PARAMETRIC DATA

ALPHA = 30.000 PHI = .000
SPDBRK = .000 AILRON = .000
YP = 1.000 1S = 1.000
ELEVON = .000 MACH = 6.000
S-MODE = 2.000 S-DIR = 1.000

RUN NO. 2298/ O RN/L = 7.61 GRADIENT INTERVAL = -.60/ .60

RN/L	BETA	ALPHA	CN	CA	CLM	CY	CYN	CBL	CL	CD	L/D
7.644	-4.600	28.94800	.82197	.06266	-.01481	.04018	.00802	.00901	.68894	.45269	1.52190
7.627	-4.400	28.94900	.82288	.06254	-.01462	.03838	.00769	.00860	.68979	.45303	1.52260
7.636	-4.200	28.95200	.82297	.06246	-.01441	.03666	.00738	.00821	.68989	.45303	1.52280
7.625	-4.000	28.95500	.82327	.06241	-.01463	.03481	.00706	.00781	.69015	.45316	1.52300
7.596	-3.800	28.96200	.82402	.06240	-.01479	.03292	.00673	.00740	.69075	.45361	1.52280
7.587	-3.600	28.96500	.82492	.06224	-.01466	.03097	.00641	.00699	.69160	.45393	1.52360
7.587	-3.400	28.97100	.82492	.06212	-.01452	.02918	.00607	.00659	.69161	.45391	1.52370
7.616	-3.200	28.98200	.82532	.06208	-.01461	.02745	.00577	.00620	.69189	.45420	1.52330
7.613	-3.000	28.99000	.82568	.06194	-.01481	.02554	.00544	.00579	.69221	.45435	1.52350
7.601	-2.800	28.99100	.82624	.06177	-.01483	.02375	.00514	.00535	.69277	.45449	1.52430
7.595	-2.600	29.00100	.82647	.06164	-.01458	.02198	.00483	.00494	.69296	.45460	1.52430
7.586	-2.400	29.00800	.82666	.06167	-.01461	.02041	.00452	.00455	.69306	.45480	1.52390
7.591	-2.200	29.01800	.82708	.06168	-.01479	.01851	.00419	.00414	.69334	.45514	1.52340
7.576	-2.000	29.01800	.82798	.06166	-.01478	.01674	.00388	.00372	.69412	.45556	1.52370
7.586	-1.800	29.02900	.82846	.06158	-.01456	.01494	.00355	.00334	.69450	.45586	1.52350
7.605	-1.600	29.03700	.82862	.06161	-.01462	.01325	.00320	.00295	.69457	.45606	1.52300
7.597	-1.400	29.04500	.82869	.06155	-.01484	.01147	.00286	.00252	.69460	.45613	1.52280
7.598	-1.200	29.05000	.82941	.06151	-.01486	.00970	.00252	.00213	.69520	.45651	1.52290
7.595	-1.000	29.06100	.83025	.06145	-.01466	.00800	.00217	.00174	.69587	.45701	1.52270
7.577	-.800	29.06500	.82989	.06149	-.01468	.00629	.00179	.00136	.69550	.45691	1.52220
7.599	-.600	29.07700	.82976	.06143	-.01486	.00474	.00144	.00099	.69533	.45693	1.52170
7.603	-.400	29.08400	.83061	.06142	-.01482	.00291	.00105	.00059	.69602	.45743	1.52160
7.597	-.200	29.09100	.83102	.06137	-.01461	.00128	.00069	.00023	.69635	.45767	1.52150
7.588	.000	29.09400	.83096	.06145	-.01460	-.00029	.00033	-.00013	.69624	.45775	1.52100
7.595	.200	29.10200	.83075	.06143	-.01474	-.00208	-.00009	-.00049	.69600	.45772	1.52060
7.607	.400	29.11200	.83159	.06151	-.01483	-.00364	-.00047	-.00084	.69661	.45832	1.51990
7.611	.600	29.11800	.83207	.06147	-.01469	-.00533	-.00088	-.00120	.69700	.45859	1.51990
7.609	.800	29.12400	.83206	.06154	-.01465	-.00691	-.00131	-.00154	.69691	.45872	1.51930
7.617	1.000	29.13600	.83197	.06157	-.01483	-.00850	-.00173	-.00191	.69672	.45885	1.51840
7.628	1.200	29.14800	.83250	.06162	-.01491	-.01020	-.00211	-.00229	.69706	.45930	1.51770
7.625	1.400	29.15000	.83313	.06162	-.01486	-.01182	-.00248	-.00265	.69759	.45963	1.51770
7.638	1.600	29.15900	.83309	.06164	-.01477	-.01343	-.00288	-.00300	.69748	.45973	1.51710
7.634	1.800	29.16500	.83309	.06166	-.01490	-.01510	-.00328	-.00336	.69742	.45984	1.51670
7.655	2.000	29.17300	.83331	.06167	-.01508	-.01685	-.00365	-.00376	.69754	.46005	1.51620
7.659	2.200	29.18100	.83397	.06168	-.01506	-.01861	-.00397	-.00416	.69804	.46048	1.51590
7.640	2.400	29.18500	.83347	.06160	-.01495	-.02046	-.00434	-.00455	.69762	.46021	1.51590
7.632	2.600	29.18900	.83311	.06163	-.01508	-.02228	-.00469	-.00496	.69726	.46010	1.51540
7.650	2.701	29.19000	.83372	.06159	-.01510	-.02339	-.00487	-.00516	.69781	.46038	1.51570
	GRADIENT	.03393	.00154	.00006	.00007	-.00834	-.00193	-.00181	.00104	.00122	-.00173

OA257 (LARC 20-M6-6559) OV102 W/(FSB) (S7E001) (10 JUL 81)

REFERENCE DATA

SREF = 2690.0000 SQ.FT. XMRP = 1076.6800 IN. XO
LREF = 474.8100 INCHES YMRP = .0000 IN. YO
BREF = 936.6800 INCHES ZMRP = 375.0000 IN. ZO
SCALE = .0100

PARAMETRIC DATA

BETA = .000 PHI = .000
SPDBRK = 86.600 AILRON = .000
YP = .000 1S = .000
ELEVON = .000 MACH = 6.000
S-MODE = 1.000 S-DIR = 2.000

RUN NO. 24/ O RN/L = 4.45 GRADIENT INTERVAL = 23.00/ 25.00

RN/L	ALPHA	BETA	MACH	PHI	Q	BP1	BP2	BP3	PT1	PT2	PSC
4.398	-.320	.06122	5.97990	-.00001	4.02320	.05479	.05092	.05280	248.59000	7.47450	.05162
4.448	-.036	.00486	5.96720	.00000	4.08410	.05544	.04978	.05149	250.14000	7.58810	.12661
4.417	-.010	.06060	5.97930	.00000	4.03840	.05451	.05040	.05280	249.43000	7.50290	.05152
4.497	.124	.00510	5.96550	.00001	4.03790	.19365	.04862	.05007	247.02000	7.50220	.15732
4.514	5.065	.06367	5.97870	.00027	4.11480	.05128	.04702	.05040	254.04000	7.64480	.04880
4.539	9.389	.05841	5.97820	.00039	4.12980	.04857	.04456	.04953	254.87000	7.67260	.04701
4.520	14.180	.05822	5.97740	.00039	4.10790	.04511	.03952	.04778	253.38000	7.63200	.04343
4.465	19.304	.05886	5.97650	.00031	4.05260	.04825	.04149	.05182	249.81000	7.52930	.04727
4.434	24.367	.06638	5.97490	.00017	4.04800	.05404	.04686	.06176	249.26000	7.52080	.05750
4.418	29.329	.06599	5.97400	.00042	4.04530	.05705	.04690	.06242	248.93000	7.51580	.06105
4.392	33.198	.05657	5.97270	.00015	4.03710	.06442	.05261	.08514	248.21000	7.50060	.06672
4.383	38.179	.05392	5.97170	.00067	4.03330	.08975	.06134	.07487	247.79000	7.49350	.09716
4.372	38.578	.00564	5.97000	.00254	4.02340	.07508	.05949	.06198	246.90000	7.47530	.08665
	GRADIENT	.00000	.00000	.00000	.00000	.00000	.00000	.00000	.00000	.00000	.00000

OA257 (LARC 20-M6-6559) OV102 W/(FSB) (S7E002) (10 JUL 81)

REFERENCE DATA

SREF = 2690.0000 SQ.FT. XMRP = 1076.6800 IN. XO
LREF = 474.8100 INCHES YMRP = .0000 IN. YO
BREF = 936.6800 INCHES ZMRP = 375.0000 IN. ZO
SCALE = .0100

PARAMETRIC DATA

BETA = .000 PHI = .000
SPDBRK = 86.600 AILRON = .000
YP = .000 1S = .000
ELEVON = .000 MACH = 6.000
S-MODE = 1.000 S-DIR = 2.000

RUN NO. 45/ 0 RN/L = 2.76 GRADIENT INTERVAL = .00/ 6.00

RN/L	ALPHA	BETA	MACH	PHI	Q	BP1	BP2	BP3	PT1	PT2	PSC
2.730	-.379	.03457	5.94720	-.00001	2.51180	.03227	.03207	.03140	151.73000	4.66720	.03291
2.724	-.143	.04311	5.93560	-.00000	2.50700	.03887	.03922	.03981	150.21000	4.65830	.03981
2.741	1.887	.03369	5.94630	.00007	2.51190	.03235	.03157	.03106	151.63000	4.66720	.03268
2.774	4.018	.02968	5.94520	.00015	2.50990	.03145	.03078	.02987	151.39000	4.66360	.03189
2.777	5.931	.03210	5.94420	.00018	2.51270	.02927	.02850	.02921	151.46000	4.66890	.02980
2.792	8.346	.03395	5.94320	.00028	2.51060	.02859	.02807	.02867	151.23000	4.66500	.02984
2.799	10.724	.03214	5.94230	.00032	2.50940	.02713	.02648	.02768	151.06000	4.66280	.02863
2.784	12.547	.03181	5.94160	.00045	2.51180	.02535	.02473	.02779	151.13000	4.66720	.02753
2.766	13.976	.03109	5.94070	.00044	2.51230	.02502	.02390	.02681	151.06000	4.66810	.02677
2.769	15.452	.03411	5.93970	.00021	2.51430	.02626	.02460	.02713	151.08000	4.67180	.02774
2.748	17.253	.03513	5.93880	.00023	2.51520	.02686	.02528	.02768	151.04000	4.67360	.02862
2.741	19.891	.04593	5.93780	.00032	2.51590	.02734	.02580	.02768	150.98000	4.67500	.02927
	GRADIENT	-.00042	-.00052	.00003	.00018	-.00076	-.00075	-.00046	-.04337	.00038	-.00071

RUN NO. 49/ 0 RN/L = 4.39 GRADIENT INTERVAL = .00/ 6.00

RN/L	ALPHA	BETA	MACH	PHI	Q	BP1	BP2	BP3	PT1	PT2	PSC
4.338	-.279	.01231	5.97060	-.00001	4.05100	.05211	.05075	.04920	248.70000	7.52650	.05172
4.372	-.264	.01237	5.97150	-.00001	4.08660	.05255	.05124	.04953	251.05000	7.59270	.05215
4.467	-.094	.00147	5.95880	-.00000	4.12690	.05233	.05069	.04854	251.30000	7.66780	.05196
4.365	.393	.00468	5.96970	.00002	4.04860	.05255	.05130	.04920	248.39000	7.52210	.05208
4.398	2.162	.00451	5.96910	.00009	4.06440	.05188	.05020	.04953	249.26000	7.55130	.05135
4.389	3.936	.01087	5.96840	.00021	4.07380	.05001	.04835	.04723	249.72000	7.56890	.04940
4.395	5.564	.00508	5.96770	.00028	4.08660	.04746	.04577	.04570	250.39000	7.59280	.04684
4.377	7.012	.00262	5.96710	.00041	4.08930	.04698	.04531	.04515	250.44000	7.59770	.04677
4.388	8.174	.00697	5.96650	.00042	4.10710	.04756	.04615	.04537	251.42000	7.63070	.04783
4.401	9.493	.00028	5.96580	.00028	4.12390	.04620	.04516	.04537	252.33000	7.66210	.04687
4.396	10.598	.00384	5.96510	.00039	4.12990	.04162	.04046	.04240	252.57000	7.67320	.04269
4.391	11.878	.00179	5.96450	.00045	4.12780	.04076	.03948	.04175	252.35000	7.66930	.04178
4.393	13.298	.00542	5.96390	.00036	4.13020	.04076	.03902	.04109	252.38000	7.67370	.04128
4.388	14.495	.01349	5.96320	.00037	4.12170	.04265	.04028	.04328	251.74000	7.65810	.04359
4.363	15.754	.00374	5.96250	.00007	4.10550	.04530	.04301	.04526	250.63000	7.62800	.04633
4.378	17.189	.01039	5.96190	.00047	4.09100	.04600	.04313	.04625	249.64000	7.60100	.04735
4.363	18.375	.00189	5.96130	.00035	4.07960	.04551	.04194	.04625	248.84000	7.57980	.04742
4.453	19.637	.00554	5.96050	.00050	4.14660	.04633	.04239	.04723	252.79000	7.70440	.04850
	GRADIENT	.00046	-.00039	.00005	.00714	-.00099	-.00106	-.00074	.37372	.01329	-.00102

OA257 (LARC 20-M6-6559) OV102 W/(FSB) (S7E002) (10 JUL 81)

REFERENCE DATA

SREF = 2690.0000 SQ.FT. XMRP = 1076.6800 IN. XO
LREF = 474.8100 INCHES YMRP = .0000 IN. YO
BREF = 936.6800 INCHES ZMRP = 375.0000 IN. ZO
SCALE = .0100

PARAMETRIC DATA

BETA = .000 PHI = .000
SPDBRK = 86.600 AILRON = .000
YP = .000 1S = .000
ELEVON = .000 MACH = 6.000
S-MODE = 1.000 S-DIR = 2.000

RUN NO. 52/ O RN/L = 7.48 GRADIENT INTERVAL = .00/ 6.00

RN/L	ALPHA	BETA	MACH	PHI	Q	BP1	BP2	BP3	PT1	PT2	PSC
7.398	-.280	-.00471	5.98950	-.00001	6.83060	.08270	.07855	.07543	424.87000	12.69000	.08133
7.267	-.240	-.00284	6.00210	-.00001	6.73060	.08423	.07996	.07750	422.30000	12.50400	.08299
7.349	1.395	-.00283	6.00110	.00012	6.77590	.08499	.08180	.08013	424.87000	12.58800	.08401
7.520	3.447	.00003	6.00030	.00024	6.92850	.08292	.07972	.07696	434.18000	12.87100	.08171
7.392	5.262	.00425	5.99940	.00052	6.84250	.07686	.07377	.07094	428.54000	12.71200	.07534
7.443	7.163	.00140	5.99850	.00056	6.83640	.07778	.07475	.07170	427.88000	12.70000	.07707
7.641	8.817	.00541	5.99760	.00069	7.03960	.07811	.07586	.07443	440.33000	13.07800	.07822
7.738	10.518	.00075	5.99670	.00058	7.13040	.07226	.07044	.07149	445.73000	13.24700	.07333
7.655	11.987	-.00147	5.99590	.00112	7.10310	.06924	.06618	.06919	443.76000	13.19600	.07028
7.560	13.853	.00365	5.99490	.00079	7.04470	.07237	.06923	.07334	439.83000	13.08700	.07394
7.551	15.234	.00323	5.99400	.00046	7.02170	.07454	.07091	.07421	438.12000	13.04500	.07527
7.571	16.541	.00303	5.99290	.00084	6.99790	.07464	.07085	.07388	436.29000	13.00100	.07514
7.588	17.708	.00505	5.99200	.00089	6.95710	.07205	.06802	.07203	433.47000	12.92500	.07297
7.570	18.469	.00261	5.99120	.00140	6.93140	.07005	.06569	.06984	431.64000	12.87700	.07098
	GRADIENT	.00182	-.00044	.00010	.01846	-.00208	-.00205	-.00236	1.02675	.03436	-.00222

OA257 (LARC 20-M6-6559) OV102 W/(FSB) (S7E003) (10 JUL 81)

REFERENCE DATA

SREF =	2690.0000 SQ.FT.	XMRP =	1076.6800 IN.	XO	
LREF =	474.8100 INCHES	YMRP =	.0000 IN.	YO	
BREF =	936.6800 INCHES	ZMRP =	375.0000 IN.	ZO	
SCALE =	.0100				

PARAMETRIC DATA

BETA =	.000	PHI =	.000
SPDBRK =	86.600	AILRON =	.000
YP =	.000	1S =	.000
ELEVON =	.000	MACH =	6.000
S-MODE =	1.000	S-DIR =	2.000

RUN NO. 46/ 0 RN/L = 2.72 GRADIENT INTERVAL = 23.00/ 25.00

RN/L	ALPHA	BETA	MACH	PHI	Q	BP1	BP2	BP3	PT1	PT2	PSC
2.689	14.763	.00656	5.95160	.00037	2.45350	.02496	.02359	.02550	148.65000	4.55880	.02639
2.759	14.971	.00888	5.94250	.00029	2.49260	.02583	.02470	.02648	150.07000	4.63150	.02741
2.696	15.809	.01374	5.95100	.00034	2.45180	.02599	.02445	.02626	148.49000	4.55560	.02767
2.697	17.055	.00401	5.95040	.00029	2.45430	.02621	.02445	.02637	148.57000	4.56020	.02779
2.697	18.477	.01130	5.94970	.00022	2.45840	.02696	.02497	.02659	148.75000	4.56790	.02857
2.701	19.747	.00262	5.94910	.00048	2.46060	.02621	.02457	.02572	148.82000	4.57190	.02779
2.712	21.058	.00665	5.94840	.00050	2.46170	.02675	.02506	.02561	148.82000	4.57400	.02799
2.719	22.188	.00345	5.94780	.00061	2.46610	.02874	.02635	.02713	149.02000	4.58220	.02992
2.710	23.455	.00995	5.94720	.00086	2.46910	.03105	.02783	.02888	149.14000	4.58770	.03261
2.709	24.392	.00618	5.94650	.00080	2.47290	.03108	.02915	.03074	149.30000	4.59480	.03303
2.738	25.548	.01009	5.94580	.00088	2.47990	.03048	.02850	.03303	149.65000	4.60790	.03336
2.733	26.507	.00453	5.94530	.00071	2.49050	.03043	.02777	.03347	150.23000	4.62760	.03348
2.751	28.091	.01225	5.94450	.00089	2.49450	.03221	.02857	.03598	150.40000	4.63500	.03534
2.753	29.765	.00662	5.94390	.00076	2.49560	.03389	.03010	.03828	150.40000	4.63710	.03764
	GRADIENT	-.00402	-.00075	-.00006	.00406	.00003	.00141	.00199	.17073	.00758	.00045

OA257 (LARC 20-M6-6559) OV102 W/(FSB) (S7E003) (10 JUL 81)

REFERENCE DATA

SREF = 2690.0000 SQ.FT. XMRP = 1076.6800 IN. XO
LREF = 474.8100 INCHES YMRP = .0000 IN. YO
BREF = 936.6800 INCHES ZMRP = 375.0000 IN. ZO
SCALE = .0100

PARAMETRIC DATA

BETA = .000 PHI = .000
SPDBRK = 86.600 AILRON = .000
YP = .000 1S = .000
ELEVON = .000 MACH = 6.000
S-MODE = 1.000 S-DIR = 2.000

RUN NO. 29/ 0 RN/L = 4.51 GRADIENT INTERVAL = 23.00/ 25.00

RN/L	ALPHA	BETA	MACH	PHI	Q	BP1	BP2	BP3	PT1	PT2	PSC
4.426	13.912	-.04176	5.97870	.00046	4.09130	.04417	.03916	.04262	252.59000	7.60110	.04224
4.438	14.239	-.03816	5.97840	.00008	4.09760	.18142	.18394	.18318	252.92000	7.61290	.18495
4.431	14.572	-.03942	5.97740	.00040	4.09340	.04430	.03949	.04284	252.50000	7.60500	.04241
4.424	14.594	-.03055	5.97690	.00042	4.09120	.04467	.03989	.04306	252.28000	7.60110	.04280
4.643	15.241	-.04028	5.96420	.00038	4.11770	.06101	.05854	.06100	251.67000	7.65050	.05942
4.440	15.434	-.03974	5.97650	.00024	4.08810	.04684	.04244	.04492	252.00000	7.59520	.04535
4.633	15.566	-.04049	5.96570	.00044	4.12830	.04715	.04370	.04491	252.59000	7.67030	.04544
4.427	16.323	-.03980	5.97580	.00027	4.09310	.04727	.04290	.04535	252.19000	7.60450	.04581
4.440	17.614	-.03046	5.97520	.00018	4.09590	.04704	.04149	.04634	252.25000	7.60970	.04582
4.438	18.465	-.03654	5.97450	.00022	4.10540	.04739	.04186	.04655	252.71000	7.62750	.04611
4.468	19.824	-.04049	5.97380	.00057	4.12550	.04888	.04309	.05226	253.83000	7.66490	.04806
4.493	20.921	-.04146	5.97320	.00022	4.12850	.05061	.04414	.05510	253.92000	7.67050	.05024
4.513	22.077	-.04128	5.97250	.00056	4.13980	.05182	.04545	.05433	254.49000	7.69140	.05284
4.534	23.132	-.03509	5.97180	.00050	4.14540	.05312	.04696	.05389	254.71000	7.70180	.05449
4.553	23.978	-.03953	5.97120	.00072	4.15520	.05458	.04825	.05597	255.21000	7.72010	.05615
4.590	24.846	-.04182	5.97060	.00088	4.16250	.05647	.05015	.05892	255.54000	7.73360	.05833
4.625	25.512	-.03188	5.97000	.00092	4.18000	.05641	.05003	.06100	256.51000	7.76620	.05943
4.572	26.288	-.04052	5.96940	.00079	4.17200	.05732	.04991	.06450	255.91000	7.75130	.06009
4.547	27.200	-.03992	5.96870	.00053	4.16240	.05711	.04951	.06767	255.19000	7.73340	.05978
4.530	28.420	-.04080	5.96800	.00101	4.15100	.05636	.04892	.07061	254.38000	7.71240	.05896
4.508	29.582	-.04163	5.96720	.00151	4.13350	.05624	.04862	.07204	253.17000	7.67980	.05881
	GRADIENT	-.00392	-.00070	.00022	.00997	.00196	.00186	.00293	.48375	.01854	.00224

OA257 (LARC 20-M6-6559) OV102 W/(FSB) (S7E003) (10 JUL 81)

REFERENCE DATA

SREF = 2690.0000 SQ.FT. XMRP = 1076.6800 IN. XO
LREF = 474.8100 INCHES YMRP = .0000 IN. YO
BREF = 936.6800 INCHES ZMRP = 375.0000 IN. ZO
SCALE = .0100

PARAMETRIC DATA

BETA = .000 PHI = .000
SPDBRK = 86.600 AILRON = .000
YP = .000 1S = .000
ELEVON = .000 MACH = 6.000
S-MODE = 1.000 S-DIR = 2.000

RUN NO. 53/ 0 RN/L = 7.44 GRADIENT INTERVAL = 23.00/ 25.00

RN/L	ALPHA	BETA	MACH	PHI	Q	BP1	BP2	BP3	PT1	PT2	PSC
7.411	14.317	.00997	6.00240	.00049	6.82690	.07183	.06842	.07148	428.44000	12.68200	.07308
7.576	15.340	.00799	5.99030	.00052	6.88380	.07492	.07115	.07421	428.40000	12.78900	.07540
7.502	15.364	.01488	5.99090	.00054	6.82340	.07237	.06876	.07159	424.83000	12.67700	.07329
7.400	15.977	.00762	6.00150	.00037	6.81680	.07231	.06890	.07040	427.53000	12.66400	.07288
7.371	17.339	.00782	6.00070	.00064	6.80510	.07070	.06679	.06962	426.58000	12.64200	.07182
7.372	18.397	.00627	5.99970	.00054	6.79070	.06869	.06437	.06842	425.38000	12.61500	.07029
7.476	19.822	.00735	5.99890	.00090	6.90990	.06966	.06497	.06854	432.60000	12.83700	.07109
7.444	20.849	.00963	5.99790	.00084	6.87790	.07113	.06618	.06940	430.31000	12.77700	.07220
7.394	22.269	.00687	5.99710	.00082	6.84320	.07108	.06593	.06766	427.91000	12.71300	.07175
7.384	23.681	.01090	5.99630	.00003	6.83170	.07248	.06730	.07084	426.95000	12.69200	.07429
7.366	24.844	.00996	5.99560	.00044	6.79970	.07324	.06775	.07268	424.72000	12.63200	.07560
7.471	26.290	.00919	5.99470	.00083	6.86670	.07573	.07103	.07683	428.65000	12.75700	.07891
7.510	27.486	.00876	5.99380	.00108	6.89730	.07994	.07476	.08143	430.30000	12.81400	.08387
7.495	29.210	.01328	5.99300	.00192	6.87570	.08157	.07584	.07980	428.70000	12.77400	.08619
	GRADIENT	-.00081	-.00060	.00036	-.02752	.00065	.00039	.00159	-1.91769	-.05159	.00113

OA257 (LARC 20-M6-6559) OV102 W/(FSB) (S7E004) (10 JUL 81)

REFERENCE DATA

SREF = 2690.0000 SQ.FT. XMRP = 1076.6800 IN. XO
LREF = 474.8100 INCHES YMRP = .0000 IN. YO
BREF = 936.6800 INCHES ZMRP = 375.0000 IN. ZO
SCALE = .0100

PARAMETRIC DATA

BETA = .000 PHI = .000
SPDBRK = 86.600 AILRON = .000
YP = .000 1S = .000
ELEVON = .000 MACH = 6.000
S-MODE = 1.000 S-DIR = 2.000

RUN NO. 47/ 0 RN/L = 2.71 GRADIENT INTERVAL = 23.00/ 25.00

RN/L	ALPHA	BETA	MACH	PHI	Q	BP1	BP2	BP3	PT1	PT2	PSC
2.631	19.514	.04738	5.95170	.00051	2.42460	.02561	.02427	.02451	146.91000	4.50500	.02728
2.717	19.879	.04589	5.94050	.00034	2.45440	.02640	.02518	.02582	147.56000	4.56050	.02839
2.638	21.116	.04833	5.95100	.00057	2.42630	.02668	.02518	.02495	146.94000	4.50820	.02800
2.664	22.427	.04615	5.95040	.00068	2.43620	.02889	.02653	.02604	147.48000	4.52650	.03012
2.674	23.724	.04599	5.94980	.00079	2.44950	.03043	.02823	.02867	148.22000	4.55130	.03233
2.676	25.128	.05072	5.94910	.00096	2.45610	.02986	.02844	.03172	148.56000	4.56360	.03280
2.695	26.290	.04509	5.94860	.00084	2.45930	.02987	.02746	.03260	148.69000	4.56950	.03305
2.702	27.496	.04825	5.94800	.00080	2.46000	.03118	.02786	.03424	148.67000	4.57090	.03419
2.713	28.451	.04627	5.94740	.00083	2.46220	.03302	.02943	.03697	148.74000	4.57490	.03662
2.725	29.704	.05102	5.94680	.00100	2.46840	.03430	.02998	.03860	149.05000	4.58650	.03798
2.722	30.783	.04148	5.94630	.00079	2.46570	.03437	.02989	.03784	148.84000	4.58150	.03790
2.727	31.903	.03606	5.94570	.00049	2.46850	.03466	.02992	.03642	148.95000	4.58670	.03814
2.734	32.914	.03374	5.94510	.00072	2.46870	.03578	.03071	.03762	148.90000	4.58710	.03930
2.742	34.055	.03455	5.94460	.00087	2.47630	.03882	.03314	.04147	149.30000	4.60120	.04256
2.775	35.240	.03582	5.94400	.00072	2.52720	.04124	.03452	.04223	152.31000	4.69570	.04570
2.770	36.426	.03355	5.94340	.00096	2.51450	.04330	.03551	.04289	151.48000	4.67210	.04832
2.747	37.577	.03513	5.94270	.00130	2.50080	.04400	.03658	.04496	150.58000	4.64680	.04858
2.705	39.364	.03393	5.94210	.00155	2.48230	.04855	.03956	.04868	149.40000	4.61230	.05375
	GRADIENT	.00000	.00000	.00000	.00000	.00000	.00000	.00000	.00000	.00000	.00000

OA257 (LARC 20-M6-6559) OV102 W/(FSB) (S7E004) (10 JUL 81)

REFERENCE DATA

SREF = 2690.0000 SQ.FT. XMRP = 1076.6800 IN. XO
LREF = 474.8100 INCHES YMRP = .0000 IN. YO
BREF = 936.6800 INCHES ZMRP = 375.0000 IN. ZO
SCALE = .0100

PARAMETRIC DATA

BETA = .000 PHI = .000
SPDBRK = 86.600 AILRON = .000
YP = .000 1S = .000
ELEVON = .000 MACH = 6.000
S-MODE = 1.000 S-DIR = 2.000

RUN NO. 30/ 0 RN/L = 4.52 GRADIENT INTERVAL = 23.00/ 25.00

RN/L	ALPHA	BETA	MACH	PHI	Q	BP1	BP2	BP3	PT1	PT2	PSC
4.406	13.501	-.00001	5.97710	.00024	4.05610	.17293	.16691	.15548	250.14000	7.53580	.18626
4.406	14.469	.01024	5.98080	.00043	4.04130	.04420	.03986	.04066	249.86000	7.50810	.04214
4.568	14.934	.00063	5.96170	.00036	4.07400	.04533	.04161	.04273	248.56000	7.56940	.04349
4.553	14.950	-.00102	5.96280	.00027	4.08570	.04446	.04051	.04153	249.48000	7.59120	.04266
4.430	20.262	.00235	5.97960	-.00013	4.04640	.05031	.04517	.04734	249.97000	7.51780	.04912
4.421	24.469	-.00024	5.97890	.00098	4.05560	.05289	.04764	.05182	250.43000	7.53480	.05305
4.434	25.296	.00708	5.97820	.00087	4.07150	.05318	.04791	.05400	251.27000	7.56440	.05365
4.445	26.371	.00069	5.97730	.00063	4.08460	.05300	.04708	.05565	251.92000	7.58880	.05382
4.455	27.653	.00163	5.97650	.00069	4.08940	.05175	.04616	.05390	252.09000	7.59770	.05254
4.481	28.487	.00186	5.97560	.00111	4.09270	.05209	.04665	.05302	252.13000	7.60380	.05283
4.511	29.231	.00933	5.97480	.00142	4.11320	.05339	.04772	.05302	253.24000	7.64190	.05380
4.519	30.193	.00128	5.97380	.00152	4.12000	.05582	.05018	.05346	253.49000	7.65460	.05622
4.575	30.747	.00794	5.97290	.00116	4.14200	.05733	.05138	.05401	254.69000	7.69550	.05764
4.610	31.696	-.00117	5.97210	.00069	4.17640	.05992	.05298	.05587	256.66000	7.75950	.06028
4.635	32.946	-.00186	5.97110	.00116	4.18740	.06259	.05460	.05870	257.17000	7.77980	.06273
4.639	33.693	.00845	5.97030	.00097	4.19100	.06436	.05544	.06013	257.24000	7.78670	.06437
4.633	34.637	.00039	5.96920	.00106	4.18320	.06701	.05704	.06199	256.57000	7.77210	.06680
4.616	35.645	-.00184	5.96840	.00126	4.17470	.06977	.05845	.06417	255.91000	7.75640	.06968
4.632	36.635	.00904	5.96750	.00137	4.15970	.07291	.05925	.06668	254.83000	7.72850	.07224
4.589	37.935	.00148	5.96660	.00187	4.15250	.07735	.06298	.07005	254.23000	7.71520	.07454
4.557	39.080	.00272	5.96590	.00176	4.13380	.07816	.06329	.06864	252.96000	7.68050	.07233
4.541	39.273	.00967	5.96500	.00178	4.11300	.07865	.06336	.06952	251.53000	7.64190	.07280
	GRADIENT	.00000	.00000	.00000	.00000	.00000	.00000	.00000	.00000	.00000	.00000

OA257 (LARC 20-M6-6559) OV102 W/(FSB) (S7E004) (10 JUL 81)

REFERENCE DATA

SREF = 2690.0000 SQ.FT. XMRP = 1076.6800 IN. XO
LREF = 474.8100 INCHES YMRP = .0000 IN. YO
BREF = 936.6800 INCHES ZMRP = 375.0000 IN. ZO
SCALE = .0100

PARAMETRIC DATA

BETA = .000 PHI = .000
SPDBRK = 86.600 AILRON = .000
YP = .000 1S = .000
ELEVON = .000 MACH = 6.000
S-MODE = 1.000 S-DIR = 2.000

RUN NO. 54/ 0 RN/L = 7.36 GRADIENT INTERVAL = 23.00/ 25.00

RN/L	ALPHA	BETA	MACH	PHI	Q	BP1	BP2	BP3	PT1	PT2	PSC
7.346	24.023	.01167	6.00020	.00012	6.77760	.07572	.07105	.07357	424.71000	12.59100	.07806
7.564	24.282	.01648	5.98940	.00020	6.86570	.07442	.06865	.07270	427.03000	12.75500	.07691
7.537	24.311	.01175	5.98990	.00052	6.89350	.07443	.06901	.07246	428.90000	12.80700	.07700
7.367	24.986	.00889	5.99940	.00047	6.80890	.07859	.07416	.07738	426.41000	12.64900	.08153
7.375	25.600	.01364	5.99880	.00105	6.83020	.07968	.07552	.07891	427.57000	12.68900	.08269
7.331	26.900	.01161	5.99820	.00065	6.82270	.08412	.07788	.08316	426.94000	12.67500	.08689
7.227	27.936	.01003	5.99760	.00097	6.72000	.08596	.07803	.08295	420.35000	12.48400	.08908
7.340	28.642	.00863	5.99700	.00120	6.82610	.08785	.07911	.08241	426.80000	12.68100	.09063
7.341	29.280	.01966	5.99640	.00172	6.84280	.08839	.07951	.08109	427.66000	12.71200	.09080
7.316	30.473	.00473	5.99570	.00124	6.82490	.09094	.08135	.08131	426.33000	12.67900	.09317
7.282	31.297	.00668	5.99500	.00073	6.80420	.09391	.08370	.08372	424.85000	12.64100	.09620
7.284	32.701	.00733	5.99440	.00038	6.78380	.10036	.08752	.08788	423.38000	12.60300	.10186
7.421	33.956	.01377	5.99380	.00074	6.91230	.10851	.09284	.09234	431.23000	12.84200	.10941
7.400	35.076	.00608	5.99310	.00059	6.88170	.11475	.09496	.09444	429.11000	12.78500	.11305
7.362	36.206	.00519	5.99240	.00122	6.84990	.11907	.09887	.09738	426.93000	12.72600	.11801
7.327	37.619	.00492	5.99180	.00147	6.80140	.13113	.10215	.10152	423.72000	12.63600	.12452
7.314	39.067	.00238	5.99120	.00196	6.77550	.14026	.10445	.10032	421.93000	12.58800	.12386
	GRADIENT	-.00435	.00343	.00032	-.00490	.00384	.00451	.00480	.68226	-.00944	.00446

OA257 (LARC 20-M6-6559) OV102 W/(FSB) (S7E005) (10 JUL 81)

REFERENCE DATA

SREF = 2690.0000 SQ.FT. XMRP = 1076.6800 IN. XO
LREF = 474.8100 INCHES YMRP = .0000 IN. YO
BREF = 936.6800 INCHES ZMRP = 375.0000 IN. ZO
SCALE = .0100

PARAMETRIC DATA

BETA = -.500 PHI = .000
SPDBRK = 86.600 AILRON = .000
YP = .000 1S = .000
ELEVON = .000 MACH = 6.000
S-MODE = 1.000 S-DIR = 2.000

RUN NO. 31/ 0 RN/L = 4.40 GRADIENT INTERVAL = 23.00/ 25.00

RN/L	ALPHA	BETA	MACH	PHI	Q	BP1	BP2	BP3	PT1	PT2	PSC
4.205	14.522	-.51252	6.00880	.00191	3.86740	.04338	.03925	.04175	243.78000	7.18440	.04209
4.198	14.586	-.50331	6.01110	.00186	3.86390	.04336	.03922	.04175	243.95000	7.17780	.04218
4.561	14.830	-.51352	5.95930	.00195	4.08250	.04435	.04066	.04262	248.68000	7.58530	.04318
4.481	14.911	-.50801	5.95490	.00183	4.03560	.06264	.06084	.06307	245.08000	7.49820	.06171
4.619	15.006	-.50990	5.95360	-.00002	4.07280	.18369	.18676	.18635	247.10000	7.56750	.18847
4.221	15.040	-.50390	6.00540	.00181	3.88510	.04414	.04014	.04240	244.33000	7.21750	.04311
4.249	16.159	-.51519	6.00270	.00204	3.91120	.04560	.04146	.04350	245.52000	7.26600	.04497
4.264	17.460	-.51519	6.00010	.00222	3.92600	.04609	.04143	.04426	245.99000	7.29340	.04580
4.294	18.303	-.51307	5.99740	.00229	3.94650	.04641	.04149	.04470	246.82000	7.33170	.04618
4.299	18.932	-.51427	5.99500	.00277	3.95440	.04636	.04143	.04502	246.90000	7.34630	.04643
4.334	20.069	-.51568	5.99200	.00274	3.97050	.04706	.04210	.04568	247.40000	7.37650	.04688
4.319	21.647	-.50738	5.98880	.00323	3.96390	.04975	.04389	.04655	246.44000	7.36420	.04966
4.315	22.802	-.51471	5.98620	.00357	3.95760	.05041	.04613	.04612	245.60000	7.35250	.05079
4.344	24.285	-.51438	5.98360	.00368	3.97590	.05518	.04889	.05236	246.29000	7.38670	.05582
4.482	25.554	-.50256	5.98090	.00349	4.09290	.05582	.05110	.05827	253.08000	7.60400	.05744
4.395	26.448	-.51348	5.97800	.00361	3.97430	.05409	.04800	.05859	245.24000	7.38380	.05666
4.572	27.270	-.51433	5.97500	.00367	4.10130	.05463	.04806	.06023	252.55000	7.61970	.05737
4.551	28.711	-.51696	5.97210	.00476	4.05550	.05431	.04874	.05859	249.23000	7.53480	.05686
4.700	30.239	-.51783	5.97040	.00553	4.18520	.05581	.05083	.05477	256.91000	7.77590	.05830
	GRADIENT	.00000	.00000	.00000	.00000	.00000	.00000	.00000	.00000	.00000	.00000

OA257 (LARC 20-M6-6559) OV102 W/(FSB) (S7E006) (15 JUL 81)

REFERENCE DATA

SREF = 2690.0000 SQ.FT. XMRP = 1076.6800 IN. XO
LREF = 474.8100 INCHES YMRP = .0000 IN. YO
BREF = 936.6800 INCHES ZMRP = 375.0000 IN. ZO
SCALE = .0100

PARAMETRIC DATA

BETA = -.500 PHI = .000
SPDBRK = 86.600 AILRON = .000
YP = .000 1S = .000
ELEVON = .000 MACH = 6.000
S-MODE = 1.000 S-DIR = 2.000

RUN NO. 32/ 0 RN/L = 4.24 GRADIENT INTERVAL = 23.00/ 25.00

RN/L	ALPHA	BETA	MACH	PHI	Q	BP1	BP2	BP3	PT1	PT2	PSC
4.324	14.457	-.48827	5.97080	.00207	4.01030	.04446	.04026	.04284	246.24000	7.45080	.04336
4.462	14.810	-.50116	5.95470	.00211	4.06430	.04461	.04075	.04295	246.77000	7.55160	.04358
4.469	15.367	-.50234	5.95430	.00223	4.08670	.04793	.04456	.04634	248.06000	7.59320	.04688
4.332	24.450	-.50070	5.96890	.00383	4.01690	.05377	.04929	.05368	246.32000	7.46320	.05455
4.346	25.209	-.50087	5.96820	.00403	4.02350	.05366	.04858	.05553	246.60000	7.47550	.05495
4.366	26.332	-.49051	5.96750	.00405	4.03400	.05410	.04791	.05804	247.12000	7.49500	.05634
4.402	27.644	-.50059	5.96660	.00434	4.04630	.05398	.04763	.05979	247.73000	7.51790	.05634
4.442	28.718	-.49909	5.96580	.00479	4.05830	.05474	.04880	.06001	248.31000	7.54020	.05698
4.467	29.578	-.50248	5.96510	.00572	4.06890	.05522	.04975	.05739	248.84000	7.55990	.05699
4.478	30.581	-.50357	5.96420	.00544	4.07230	.05755	.05205	.05575	248.90000	7.56620	.05922
4.474	31.565	-.49757	5.96320	.00505	4.08170	.05912	.05242	.05477	249.31000	7.58380	.06101
4.470	32.326	-.50320	5.96240	.00498	4.09300	.06079	.05335	.05663	249.84000	7.60470	.06265
4.463	33.347	-.49197	5.96150	.00500	4.11300	.06360	.05544	.05871	250.92000	7.64200	.06546
4.461	34.367	-.50193	5.96070	.00519	4.10020	.06658	.05725	.06012	250.00000	7.61810	.06837
4.548	35.339	-.49196	5.96000	.00537	4.11820	.06967	.05863	.06296	250.97000	7.65160	.07156
4.567	36.359	-.49847	5.95920	.00595	4.10700	.07237	.05918	.06700	250.14000	7.63080	.07437
4.587	37.145	-.49325	5.95840	.00594	4.08380	.07453	.05956	.06811	248.60000	7.58780	.07595
4.560	38.349	-.50196	5.95760	.00601	4.05090	.07648	.06275	.06886	246.46000	7.52660	.07503
4.622	39.314	-.50303	5.95680	.00704	4.11630	.08005	.06403	.06897	250.31000	7.64810	.07584
	GRADIENT	.00000	.00000	.00000	.00000	.00000	.00000	.00000	.00000	.00000	.00000

OA257 (LARC 20-M6-6559) OV102 W/(FSB) (S7E007) (10 JUL 81)

REFERENCE DATA

SREF = 2690.0000 SQ.FT. XMRP = 1076.6800 IN. XO
LREF = 474.8100 INCHES YMRP = .0000 IN. YO
BREF = 936.6800 INCHES ZMRP = 375.0000 IN. ZO
SCALE = .0100

PARAMETRIC DATA

BETA = .500 PHI = .000
SPDBRK = 86.600 AILRON = .000
YP = .000 1S = .000
ELEVON = .000 MACH = 6.000
S-MODE = 1.000 S-DIR = 2.000

RUN NO. 33/ 0 RN/L = 4.52 GRADIENT INTERVAL = 23.00/ 25.00

RN/L	ALPHA	BETA	MACH	PHI	Q	BP1	BP2	BP3	PT1	PT2	PSC
4.387	14.556	.48305	5.96980	-.00152	4.04110	.04523	.04195	.04251	247.95000	7.50810	.04457
4.394	14.585	.48797	5.96910	-.00151	4.04630	.04576	.04241	.04284	248.15000	7.51790	.04496
4.433	15.259	.48546	5.96860	-.00170	4.07130	.04726	.04370	.04371	249.60000	7.56410	.04627
4.496	15.406	.49393	5.95500	-.00185	4.09520	.04824	.04518	.04535	248.71000	7.60900	.04747
4.452	15.783	.49437	5.96790	-.00175	4.08530	.04787	.04428	.04448	250.34000	7.59030	.04695
4.482	16.746	.48560	5.96720	-.00192	4.09640	.04760	.04321	.04470	250.89000	7.61100	.04727
4.503	17.463	.48518	5.96650	-.00187	4.12010	.04684	.04210	.04350	252.22000	7.65500	.04637
4.543	18.654	.48668	5.96580	-.00217	4.13710	.04825	.04327	.04459	253.13000	7.68650	.04797
4.567	19.307	.49389	5.96520	-.00233	4.14620	.04867	.04309	.04579	253.58000	7.70340	.04896
4.574	19.976	.48799	5.96460	-.00280	4.16390	.04885	.04302	.04623	254.56000	7.73630	.04936
4.597	20.832	.49624	5.96400	-.00266	4.18030	.04977	.04376	.04655	255.45000	7.76680	.05014
4.609	21.622	.48922	5.96320	-.00314	4.18290	.05122	.04514	.04800	255.49000	7.77160	.05213
4.635	22.373	.48953	5.96240	-.00338	4.20380	.05177	.04726	.04644	256.62000	7.81050	.05270
4.621	23.630	.49668	5.96160	-.00324	4.19760	.05420	.04772	.04953	256.09000	7.79900	.05493
4.597	24.432	.48832	5.96070	-.00319	4.17800	.05159	.04543	.04843	254.75000	7.76280	.05331
4.574	25.307	.49560	5.96000	-.00300	4.15040	.05307	.04680	.04996	252.93000	7.71150	.05544
4.531	26.089	.48472	5.95910	-.00315	4.12810	.05473	.04862	.05302	251.42000	7.66990	.05798
4.517	27.140	.49073	5.95850	-.00331	4.11440	.05550	.04966	.05553	250.47000	7.64460	.05833
4.479	27.671	.48854	5.95780	-.00328	4.08370	.05577	.04972	.05695	248.48000	7.58750	.05839
4.483	28.793	.49198	5.95680	-.00368	4.06780	.05673	.04948	.06133	247.35000	7.55810	.05964
	GRADIENT	-.01042	-.00111	.00006	-.02444	-.00326	-.00286	-.00136	-1.67083	-.04512	-.00202

OA257 (LARC 20-M6-6559) OV102 W/(FSB) (S7E008) (10 JUL 81)

REFERENCE DATA

SREF = 2690.0000 SQ.FT. XMRP = 1076.6800 IN. XO
LREF = 474.8100 INCHES YMRP = .0000 IN. YO
BREF = 936.6800 INCHES ZMRP = 375.0000 IN. ZO
SCALE = .0100

PARAMETRIC DATA

BETA = .500 PHI = .000
SPDBRK = 86.600 AILRON = .000
YP = .000 1S = .000
ELEVON = .000 MACH = 6.000
S-MODE = 1.000 S-DIR = 2.000

RUN NO. 34/ 0 RN/L = 4.50 GRADIENT INTERVAL = 23.00/ 25.00

RN/L	ALPHA	BETA	MACH	PHI	Q	BP1	BP2	BP3	PT1	PT2	PSC
4.431	14.483	.50735	5.96800	-.00135	4.05710	.04598	.04232	.04372	248.62000	7.53780	.04502
4.418	14.499	.50553	5.96720	-.00140	4.05240	.04631	.04262	.04393	248.20000	7.52910	.04534
4.452	14.945	.50975	5.95100	-.00151	4.01640	.04587	.04253	.04426	243.25000	7.46260	.04541
4.422	23.189	.50407	5.96620	-.00335	4.05080	.05126	.04629	.04590	247.93000	7.52620	.05139
4.421	23.952	.49968	5.96550	-.00287	4.05350	.04987	.04395	.04679	247.98000	7.53130	.05072
4.437	24.516	.50656	5.96490	-.00290	4.05270	.05106	.04487	.04843	247.82000	7.52980	.05244
4.437	25.586	.50170	5.96410	-.00264	4.06300	.05409	.04782	.05258	248.31000	7.54880	.05660
4.444	26.446	.50288	5.96330	-.00330	4.07340	.05528	.04941	.05673	248.81000	7.56830	.05762
4.463	27.030	.50833	5.96260	-.00313	4.08140	.05593	.04981	.05827	249.17000	7.58310	.05853
4.472	28.161	.50267	5.96180	-.00344	4.08540	.05712	.04991	.06307	249.29000	7.59060	.06007
4.512	29.121	.50294	5.96100	-.00372	4.10760	.05766	.04988	.06373	250.50000	7.63190	.06051
4.544	29.665	.50344	5.96020	-.00353	4.12710	.05799	.04996	.06329	251.55000	7.66800	.06069
4.551	30.732	.50175	5.95920	-.00328	4.13600	.05862	.05089	.05696	251.92000	7.68460	.06060
4.551	31.259	.49966	5.95850	-.00330	4.13150	.06010	.05208	.05717	251.52000	7.67630	.06196
4.568	32.368	.50750	5.95790	-.00336	4.13740	.06286	.05393	.05837	251.77000	7.68740	.06484
4.586	33.312	.49810	5.95710	-.00320	4.13190	.06486	.05457	.05914	251.30000	7.67710	.06657
4.579	34.428	.49996	5.95630	-.00325	4.11430	.06756	.05596	.06154	250.09000	7.64440	.06978
4.553	35.611	.50120	5.95560	-.00356	4.09600	.07032	.05779	.06449	248.87000	7.61050	.07277
4.529	36.688	.50757	5.95480	-.00327	4.07850	.07318	.05887	.06733	247.65000	7.57790	.07552
4.634	38.019	.50188	5.95390	-.00364	4.16840	.07692	.06268	.06919	252.96000	7.74510	.07680
4.587	39.299	.50803	5.95320	-.00316	4.11410	.07924	.06293	.06919	249.54000	7.64420	.07542
	GRADIENT	.00144	-.00098	.00036	.00155	-.00025	-.00118	.00187	-.07449	.00294	.00070

OA257 (LARC 20-M6-6559) OV102 W/(FSB)FLR FILL.IN (S7E009) (10 JUL 81)

REFERENCE DATA

SREF = 2690.0000 SQ.FT. XMRP = 1076.6800 IN. X0
LREF = 474.8100 INCHES YMRP = .0000 IN. Y0
BREF = 936.6800 INCHES ZMRP = 375.0000 IN. Z0
SCALE = .0100

PARAMETRIC DATA

BETA = .000 PHI = .000
SPDBRK = 86.600 AILRON = .000
YP = .000 1S = .000
ELEVON = .000 MACH = 6.000
S-MODE = 1.000 S-DIR = 2.000

RUN NO. 51/ 0 RN/L = 4.31 GRADIENT INTERVAL = 23.00/ 25.00

RN/L	ALPHA	BETA	MACH	PHI	Q	BP1	BP2	BP3	PT1	PT2	PSC
4.346	-.253	.00539	5.97390	-.00001	4.02730	.05539	.05199	.04996	247.82000	7.48240	.05238
4.332	-.241	.00129	5.98000	-.00001	4.01270	.05545	.05202	.05018	247.95000	7.45500	.05256
4.549	-.018	-.00061	5.96030	.00000	4.12190	.05603	.05237	.05007	251.26000	7.65840	.05324
4.332	.929	.00067	5.98340	.00004	4.00470	.05559	.05203	.05073	248.05000	7.44010	.05287
4.318	2.759	-.00279	5.98960	.00014	3.98710	.05441	.05067	.04953	248.01000	7.40730	.05130
4.316	4.432	.00496	5.99520	.00023	3.97770	.05204	.04837	.04745	248.40000	7.38970	.04906
4.319	6.013	-.00094	5.99990	.00031	3.96610	.05020	.04628	.04655	248.48000	7.36800	.04714
4.317	7.946	.00242	6.00470	.00049	3.95030	.05020	.04671	.04590	248.31000	7.33850	.04790
4.322	9.674	-.00576	6.01070	.00030	3.93670	.04798	.04505	.04502	248.48000	7.31310	.04586
4.347	11.131	.00213	6.01640	.00036	3.94410	.04369	.04014	.04218	249.93000	7.32680	.04192
4.367	12.272	-.00352	6.02080	.00033	3.94080	.04376	.04026	.04240	250.47000	7.32060	.04202
4.357	13.709	.00183	6.02590	.00051	3.93730	.04441	.04051	.04262	251.14000	7.31390	.04253
4.345	15.057	-.00620	6.03180	.00032	3.93220	.04693	.04229	.04557	251.84000	7.30420	.04538
4.327	16.341	.00336	6.03790	.00018	3.91450	.04915	.04475	.04690	251.76000	7.27120	.04787
4.283	17.683	-.00630	6.04370	.00041	3.90490	.04879	.04346	.04690	252.13000	7.25320	.04803
4.222	19.086	-.00731	6.05100	.00045	3.87080	.04905	.04340	.04745	251.20000	7.18980	.04850
4.211	20.313	-.00500	6.05650	.00037	3.84170	.04937	.04334	.04767	250.26000	7.13560	.04857
4.185	21.444	.00051	6.06250	.00019	3.80700	.05036	.04379	.04745	249.01000	7.07090	.04964
4.207	22.936	.00236	6.07100	.00067	3.76910	.05128	.04579	.04590	247.98000	7.00030	.05078
	GRADIENT	.00000	.00000	.00000	.00000	.00000	.00000	.00000	.00000	.00000	.00000

OA257 (LARC 20-M6-6559) OV102 W/(FSB) (S7E010) (10 JUL 81)

REFERENCE DATA

SREF = 2690.0000 SQ.FT. XMRP = 1076.6800 IN. XO
LREF = 474.8100 INCHES YMRP = .0000 IN. YO
BREF = 936.6800 INCHES ZMRP = 375.0000 IN. ZO
SCALE = .0100

PARAMETRIC DATA

ALPHA = 15.000 PHI = .000
SPDBRK = 86.600 AILRON = .000
YP = 1.000 1S = .000
ELEVON = .000 MACH = 6.000
S-MODE = 2.000 S-DIR = 1.000

RUN NO. 83/ 0 RN/L = 4.53 GRADIENT INTERVAL = -.60/ .60

RN/L	BETA	ALPHA	MACH	PHI	Q	BP1	BP2	BP3	PT1	PT2	PSC
4.513	-4.144	14.55800	5.96020	-.97870	4.10600	.03733	.03766	.03410	250.27000	7.62900	.04012
4.521	-4.000	14.56800	5.96030	-.97946	4.11390	.03732	.03770	.03407	250.76000	7.64350	.04018
4.525	-3.800	14.56900	5.96040	-.97984	4.11420	.03755	.03784	.03420	250.79000	7.64410	.04029
4.531	-3.600	14.57300	5.96050	-.98029	4.11630	.03792	.03817	.03457	250.94000	7.64810	.04075
4.524	-3.400	14.56900	5.96050	-.98035	4.11420	.03841	.03862	.03505	250.82000	7.64420	.04134
4.518	-3.200	14.57900	5.96060	-.98144	4.10990	.03894	.03919	.03577	250.57000	7.63620	.04194
4.511	-3.000	14.57600	5.96070	-.98150	4.11010	.03946	.03965	.03641	250.60000	7.63660	.04252
4.508	-2.800	14.57900	5.96080	-.98201	4.10810	.03998	.04017	.03697	250.49000	7.63290	.04307
4.514	-2.600	14.58400	5.96080	-.98276	4.11220	.04048	.04073	.03764	250.75000	7.64050	.04364
4.516	-2.400	14.58400	5.96090	-.98302	4.11450	.04098	.04118	.03802	250.90000	7.64460	.04410
4.508	-2.200	14.58900	5.96100	-.98373	4.10910	.04141	.04159	.03840	250.59000	7.63470	.04449
4.511	-2.000	14.59000	5.96110	-.98413	4.11000	.04186	.04193	.03865	250.65000	7.63630	.04487
4.520	-1.800	14.59700	5.96110	-.98486	4.11110	.04237	.04227	.03890	250.73000	7.63840	.04523
4.526	-1.600	14.60100	5.96120	-.98542	4.11430	.04263	.04243	.03895	250.95000	7.64440	.04542
4.533	-1.400	14.60300	5.96130	-.98587	4.11880	.04265	.04247	.03883	251.23000	7.65260	.04541
4.534	-1.200	14.60900	5.96140	-.98650	4.12020	.04269	.04251	.03877	251.33000	7.65530	.04541
4.530	-1.000	14.61000	5.96140	-.98702	4.11900	.04280	.04253	.03870	251.27000	7.65300	.04539
4.526	-.800	14.61300	5.96150	-.98758	4.11550	.04289	.04245	.03878	251.07000	7.64660	.04537
4.527	-.600	14.61600	5.96160	-.98823	4.12070	.04291	.04232	.03889	251.40000	7.65610	.04532
4.521	-.400	14.61900	5.96170	-.98889	4.12180	.04283	.04214	.03896	251.48000	7.65820	.04513
4.522	-.200	14.62500	5.96170	-.98986	4.12580	.04257	.04193	.03904	251.74000	7.66560	.04488
4.532	.000	14.62700	5.96180	-.99061	4.12600	.04221	.04170	.03893	251.76000	7.66600	.04445
4.538	.200	14.63800	5.96190	-.99199	4.12610	.04189	.04148	.03892	251.78000	7.66620	.04413
4.540	.400	14.63500	5.96200	-.99234	4.12910	.04166	.04125	.03881	251.98000	7.67180	.04381
4.535	.600	14.64700	5.96200	-.99372	4.12780	.04151	.04122	.03879	251.91000	7.66930	.04368
4.532	.800	14.64700	5.96210	-.99420	4.13210	.04146	.04120	.03873	252.19000	7.67730	.04366
4.526	1.000	14.65200	5.96220	-.99514	4.13100	.04151	.04131	.03867	252.13000	7.67530	.04368
4.521	1.200	14.65900	5.96230	-.99616	4.13160	.04154	.04138	.03862	252.19000	7.67650	.04375
4.528	1.400	14.66100	5.96230	-.99681	4.13540	.04159	.04140	.03869	252.43000	7.68360	.04386
4.530	1.600	14.66600	5.96240	-.99769	4.13510	.04158	.04151	.03872	252.42000	7.68280	.04405
4.536	1.800	14.66600	5.96250	-.99811	4.13910	.04153	.04164	.03868	252.69000	7.69040	.04424
4.536	2.000	14.67400	5.96260	-.99902	4.14030	.04151	.04177	.03860	252.77000	7.69260	.04435
4.533	2.200	14.67800	5.96270	-.99988	4.14020	.04148	.04184	.03848	252.78000	7.69240	.04438
4.533	2.400	14.68000	5.96270	-1.00070	4.13950	.04150	.04185	.03830	252.75000	7.69110	.04433
4.529	2.600	14.68400	5.96280	-1.00160	4.13590	.04166	.04206	.03834	252.54000	7.68430	.04434
4.540	2.800	14.68600	5.96290	-1.00240	4.13950	.04178	.04216	.03830	252.77000	7.69100	.04426
4.539	3.000	14.69100	5.96300	-1.00330	4.14040	.04179	.04215	.03817	252.85000	7.69280	.04409
4.539	3.200	14.69400	5.96300	-1.00430	4.14370	.04164	.04196	.03781	253.06000	7.69890	.04370
4.531	3.400	14.69800	5.96310	-1.00520	4.14170	.04137	.04165	.03734	252.95000	7.69520	.04327
4.534	3.600	14.70100	5.96320	-1.00610	4.14480	.04098	.04121	.03685	253.15000	7.70100	.04271
4.535	3.800	14.70500	5.96330	-1.00710	4.14620	.04054	.04069	.03618	253.26000	7.70360	.04216
4.542	4.000	14.70800	5.96330	-1.00800	4.14650	.04007	.04029	.03571	253.29000	7.70420	.04166

OA257 (LARC 20-M6-6559) OV102 W/(FSB) (S7E010) (10 JUL 81)

REFERENCE DATA

SREF =	2690.0000 SQ.FT.	XMRP =	1076.6800 IN. XO		
LREF =	474.8100 INCHES	YMRP =	.0000 IN. YO		
BREF =	936.6800 INCHES	ZMRP =	375.0000 IN. ZO		
SCALE =	.0100				

PARAMETRIC DATA

ALPHA =	15.000	PHI =	.000
SPDBRK =	86.600	AILRON =	.000
YP =	1.000	1S =	.000
ELEVON =	.000	MACH =	6.000
S-MODE =	2.000	S-DIR =	1.000

RUN NO. 83/ O RN/L = 4.53 GRADIENT INTERVAL = -.60/ .60

RN/L	BETA	ALPHA	MACH	PHI	Q	BP1	BP2	BP3	PT1	PT2	PSC
4.554	4.200	14.71200	5.96340	-1.00910	4.14980	.03981	.03989	.03515	253.50000	7.71030	.04127
	GRADIENT	.02464	.00036	-.00455	.00646	-.00129	-.00099	-.00013	.45893	.01204	-.00149

OA257 (LARC 20-M6-6559) OV102 W/(FSB) (S7E110) (10 JUL 81)

REFERENCE DATA

SREF = 2690.0000 SQ.FT. XMRP = 1076.6800 IN. XO
LREF = 474.8100 INCHES YMRP = .0000 IN. YO
BREF = 936.6800 INCHES ZMRP = 375.0000 IN. ZO
SCALE = .0100

PARAMETRIC DATA

ALPHA = 15.000 PHI = .000
SPDBRK = 86.600 AILRON = .000
YP = 1.000 1S = .000
ELEVON = .000 MACH = 6.000
S-MODE = 2.000 S-DIR = 1.000

RUN NO. 2083/ 0 RN/L = 4.53 GRADIENT INTERVAL = -.60/ .60

RN/L	BETA	ALPHA	MACH	PHI	Q	BP1	BP2	BP3	PT1	PT2	PSC
4.516	-4.100	14.56700	5.96030	-.97920	4.10970	.03729	.03767	.03407	250.50000	7.63590	.04012
4.523	-3.900	14.56700	5.96030	-.97952	4.11440	.03737	.03773	.03411	250.80000	7.64450	.04019
4.532	-3.700	14.57200	5.96040	-.98010	4.11600	.03771	.03801	.03438	250.91000	7.64750	.04048
4.527	-3.500	14.57000	5.96050	-.98026	4.11530	.03816	.03840	.03479	250.88000	7.64610	.04102
4.521	-3.300	14.57400	5.96060	-.98083	4.11170	.03870	.03890	.03541	250.67000	7.63940	.04162
4.514	-3.100	14.57800	5.96060	-.98150	4.10870	.03919	.03944	.03609	250.50000	7.63400	.04226
4.508	-2.900	14.57500	5.96070	-.98159	4.10880	.03970	.03990	.03672	250.52000	7.63410	.04283
4.511	-2.700	14.58400	5.96080	-.98251	4.11010	.04020	.04044	.03729	250.62000	7.63650	.04338
4.516	-2.500	14.58200	5.96090	-.98280	4.11410	.04075	.04100	.03785	250.87000	7.64390	.04389
4.513	-2.300	14.58600	5.96090	-.98334	4.11180	.04120	.04138	.03821	250.75000	7.63970	.04428
4.507	-2.100	14.59100	5.96100	-.98402	4.10880	.04161	.04173	.03857	250.57000	7.63400	.04466
4.517	-1.900	14.59300	5.96110	-.98450	4.10980	.04214	.04208	.03879	250.65000	7.63590	.04500
4.523	-1.700	14.59900	5.96120	-.98509	4.11350	.04254	.04239	.03895	250.89000	7.64280	.04537
4.530	-1.500	14.60200	5.96120	-.98564	4.11660	.04269	.04244	.03890	251.09000	7.64850	.04541
4.536	-1.300	14.60800	5.96130	-.98632	4.12020	.04264	.04248	.03877	251.33000	7.65530	.04539
4.531	-1.100	14.60800	5.96140	-.98669	4.11930	.04278	.04254	.03876	251.28000	7.65370	.04539
4.527	-.900	14.61200	5.96150	-.98730	4.11710	.04286	.04249	.03875	251.16000	7.64960	.04538
4.526	-.700	14.61500	5.96150	-.98791	4.11730	.04291	.04239	.03883	251.19000	7.64980	.04537
4.525	-.500	14.61700	5.96160	-.98849	4.12130	.04291	.04222	.03893	251.45000	7.65740	.04525
4.520	-.300	14.62500	5.96170	-.98951	4.12390	.04270	.04201	.03904	251.61000	7.66210	.04500
4.528	-.100	14.62400	5.96180	-.99012	4.12680	.04240	.04180	.03900	251.80000	7.66750	.04466
4.534	.100	14.63400	5.96190	-.99144	4.12580	.04205	.04162	.03893	251.76000	7.66570	.04427
4.539	.300	14.63600	5.96190	-.99211	4.12690	.04174	.04135	.03887	251.84000	7.66770	.04397
4.538	.500	14.63700	5.96200	-.99288	4.12890	.04157	.04121	.03877	251.97000	7.67140	.04373
4.533	.700	14.64700	5.96210	-.99391	4.12920	.04147	.04124	.03877	252.00000	7.67190	.04367
4.530	.900	14.64500	5.96220	-.99440	4.13250	.04148	.04123	.03865	252.22000	7.67800	.04364
4.523	1.100	14.65600	5.96220	-.99570	4.13100	.04154	.04137	.03862	252.14000	7.67530	.04371
4.525	1.300	14.66000	5.96230	-.99644	4.13490	.04158	.04142	.03867	252.39000	7.68260	.04380
4.530	1.500	14.66400	5.96240	-.99727	4.13420	.04160	.04146	.03867	252.36000	7.68120	.04395
4.532	1.700	14.66600	5.96250	-.99790	4.13710	.04157	.04159	.03875	252.56000	7.68670	.04415
4.537	1.900	14.67000	5.96250	-.99854	4.14070	.04152	.04168	.03863	252.79000	7.69340	.04432
4.535	2.100	14.67600	5.96260	-.99943	4.13990	.04148	.04182	.03856	252.75000	7.69180	.04437
4.532	2.300	14.67900	5.96270	-1.00030	4.13910	.04148	.04183	.03833	252.72000	7.69040	.04433
4.530	2.500	14.68200	5.96280	-1.00110	4.13700	.04156	.04196	.03830	252.60000	7.68650	.04434
4.533	2.700	14.68500	5.96280	-1.00200	4.13810	.04173	.04214	.03836	252.68000	7.68850	.04431
4.541	2.900	14.68900	5.96290	-1.00290	4.13930	.04182	.04214	.03823	252.77000	7.69070	.04417
4.539	3.100	14.69200	5.96300	-1.00380	4.14180	.04174	.04207	.03807	252.94000	7.69540	.04395
4.535	3.300	14.69600	5.96310	-1.00470	4.14280	.04153	.04181	.03760	253.01000	7.69720	.04350
4.530	3.500	14.69900	5.96320	-1.00570	4.14170	.04119	.04146	.03709	252.96000	7.69510	.04299
4.536	3.700	14.70200	5.96320	-1.00660	4.14710	.04072	.04097	.03653	253.30000	7.70520	.04243
4.537	3.900	14.70700	5.96330	-1.00750	4.14550	.04028	.04055	.03587	253.22000	7.70230	.04185
4.548	4.100	14.71000	5.96340	-1.00860	4.14810	.03992	.04007	.03543	253.39000	7.70710	.04145

OA257 (LARC 20-M6-6559) OV102 W/(FSB) (S7E110) (10 JUL 81)

REFERENCE DATA

SREF =	2690.0000 SQ.FT.	XMRP =	1076.6800 IN. XO		
LREF =	474.8100 INCHES	YMRP =	.0000 IN. YO		
BREF =	936.6800 INCHES	ZMRP =	375.0000 IN. ZO		
SCALE =	.0100				

PARAMETRIC DATA

ALPHA =	15.000	PHI =	.000
SPDBRK =	86.600	AILRON =	.000
YP =	1.000	1S =	.000
ELEVON =	.000	MACH =	6.000
S-MODE =	2.000	S-DIR =	1.000

RUN NO. 2083/ 0 RN/L = 4.53 GRADIENT INTERVAL = -.60/ .60

RN/L	BETA	ALPHA	MACH	PHI	Q	BP1	BP2	BP3	PT1	PT2	PSC
4.557	4.248	14.71300	5.96340	-1.00930	4.15040	.03977	.03979	.03503	253.54000	7.71130	.04120
	GRADIENT	.02043	.00039	-.00444	.00657	-.00141	-.00103	-.00019	.46429	.01214	-.00159

OA257 (LARC 20-M6-6559) OV102 W/(FSB) (S7E011) (10 JUL 81)

REFERENCE DATA

SREF = 2690.0000 SQ.FT. XMRP = 1076.6800 IN. XO
LREF = 474.8100 INCHES YMRP = .0000 IN. YO
BREF = 936.6800 INCHES ZMRP = 375.0000 IN. ZO
SCALE = .0100

PARAMETRIC DATA

ALPHA = 17.500 PHI = .000
SPDBRK = 86.600 AILRON = .000
YP = 1.000 1S = .000
ELEVON = .000 MACH = 6.000
S-MODE = 2.000 S-DIR = 1.000

RUN NO. 82/ O RN/L = 4.45 GRADIENT INTERVAL = -.60/ .60

RN/L	BETA	ALPHA	MACH	PHI	Q	BP1	BP2	BP3	PT1	PT2	PSC
4.536	-4.249	17.07600	5.95810	-1.13940	4.19110	.03972	.04029	.03814	255.08000	7.78720	.04299
4.552	-4.100	17.08700	5.95850	-1.14010	4.20140	.03955	.04012	.03794	255.77000	7.80620	.04284
4.550	-3.900	17.09000	5.95860	-1.14070	4.19890	.03980	.04047	.03824	255.64000	7.80160	.04322
4.563	-3.700	17.09000	5.95870	-1.14100	4.20210	.04036	.04109	.03893	255.85000	7.80740	.04396
4.569	-3.500	17.09500	5.95880	-1.14160	4.20820	.04106	.04177	.03950	256.24000	7.81880	.04469
4.564	-3.300	17.09600	5.95890	-1.14200	4.21120	.04173	.04236	.04013	256.44000	7.82440	.04530
4.569	-3.100	17.09600	5.95900	-1.14240	4.21210	.04236	.04286	.04068	256.52000	7.82600	.04590
4.563	-2.900	17.10100	5.95910	-1.14320	4.20270	.04285	.04330	.04122	255.97000	7.80860	.04639
4.551	-2.700	17.10100	5.95920	-1.14360	4.18000	.04315	.04352	.04156	254.60000	7.76650	.04670
4.525	-2.500	17.10400	5.95930	-1.14460	4.14560	.04322	.04354	.04169	252.53000	7.70250	.04679
4.492	-2.300	17.10300	5.95950	-1.14530	4.10770	.04320	.04344	.04178	250.24000	7.63210	.04675
4.462	-2.100	17.10400	5.95960	-1.14600	4.08090	.04298	.04311	.04153	248.62000	7.58230	.04649
4.446	-1.900	17.11000	5.95970	-1.14710	4.06510	.04269	.04280	.04141	247.68000	7.55300	.04626
4.454	-1.700	17.11200	5.95980	-1.14780	4.06660	.04268	.04259	.04125	247.79000	7.55570	.04617
4.453	-1.500	17.11800	5.95990	-1.14880	4.06980	.04280	.04254	.04121	248.00000	7.56160	.04620
4.473	-1.300	17.12400	5.96000	-1.14950	4.09370	.04300	.04257	.04123	249.48000	7.60600	.04626
4.500	-1.100	17.13200	5.96010	-1.15050	4.12530	.04330	.04267	.04131	251.43000	7.66480	.04637
4.517	-.900	17.13700	5.96020	-1.15130	4.14110	.04360	.04295	.04168	252.41000	7.69410	.04669
4.538	-.700	17.14100	5.96030	-1.15220	4.15450	.04398	.04329	.04209	253.24000	7.71900	.04700
4.542	-.500	17.14800	5.96050	-1.15320	4.15490	.04436	.04377	.04256	253.29000	7.71980	.04747
4.532	-.300	17.14900	5.96060	-1.15410	4.14450	.04481	.04433	.04286	252.68000	7.70050	.04795
4.512	-.100	17.15100	5.96070	-1.15490	4.12080	.04518	.04477	.04314	251.25000	7.65650	.04826
4.493	.100	17.15300	5.96080	-1.15590	4.09650	.04541	.04508	.04332	249.79000	7.61130	.04844
4.472	.300	17.15300	5.96090	-1.15690	4.06890	.04542	.04502	.04337	248.12000	7.56000	.04841
4.445	.500	17.15800	5.96100	-1.15800	4.04510	.04533	.04484	.04318	246.69000	7.51570	.04819
4.422	.700	17.15700	5.96110	-1.15870	4.02920	.04511	.04452	.04290	245.74000	7.48610	.04783
4.406	.900	17.16100	5.96120	-1.15980	4.01760	.04473	.04408	.04262	245.05000	7.46460	.04731
4.390	1.100	17.16400	5.96130	-1.16090	4.00830	.04424	.04351	.04207	244.50000	7.44740	.04671
4.384	1.300	17.16900	5.96150	-1.16200	4.00760	.04377	.04302	.04140	244.48000	7.44600	.04612
4.376	1.500	17.17400	5.96160	-1.16300	4.00300	.04345	.04273	.04108	244.21000	7.43740	.04570
4.373	1.700	17.17600	5.96170	-1.16400	4.00150	.04324	.04243	.04081	244.15000	7.43480	.04545
4.366	1.900	17.18100	5.96180	-1.16510	4.00110	.04303	.04218	.04085	244.14000	7.43390	.04533
4.363	2.100	17.18400	5.96190	-1.16620	3.99910	.04292	.04196	.04097	244.04000	7.43030	.04521
4.356	2.300	17.18700	5.96200	-1.16700	3.99270	.04281	.04177	.04093	243.66000	7.41830	.04504
4.348	2.500	17.19300	5.96210	-1.16810	3.99410	.04263	.04169	.04089	243.77000	7.42110	.04482
4.347	2.700	17.19600	5.96220	-1.16890	3.99620	.04252	.04151	.04073	243.92000	7.42490	.04469
4.337	2.900	17.20000	5.96240	-1.17000	3.99190	.04245	.04138	.04070	243.67000	7.41690	.04461
4.334	3.100	17.20300	5.96250	-1.17100	3.99030	.04249	.04138	.04056	243.59000	7.41380	.04458
4.329	3.300	17.20800	5.96260	-1.17210	3.98600	.04248	.04131	.04042	243.35000	7.40600	.04447
4.324	3.500	17.21200	5.96270	-1.17310	3.98900	.04225	.04106	.04003	243.55000	7.41150	.04419
4.322	3.700	17.21500	5.96280	-1.17420	3.99140	.04153	.04032	.03933	243.72000	7.41600	.04350
4.326	3.900	17.22400	5.96290	-1.17570	3.99260	.04051	.03933	.03846	243.81000	7.41820	.04253

OA257 (LARC 20-M6-6559) OV102 W/(FSB) (S7E011) (10 JUL 81)

REFERENCE DATA

SREF =	2690.0000 SQ.FT.	XMRP =	1076.6800 IN. XO		
LREF =	474.8100 INCHES	YMRP =	.0000 IN. YO		
BREF =	936.6800 INCHES	ZMRP =	375.0000 IN. ZO		
SCALE =	.0100				

PARAMETRIC DATA

ALPHA =	17.500	PHI =	.000
SPDBRK =	86.600	AILRON =	.000
YP =	1.000	1S =	.000
ELEVON =	.000	MACH =	6.000
S-MODE =	2.000	S-DIR =	1.000

RUN NO. 82/ 0 RN/L = 4.45 GRADIENT INTERVAL = -.60/ .60

RN/L	BETA	ALPHA	MACH	PHI	Q	BP1	BP2	BP3	PT1	PT2	PSC
4.326	4.100	17.22400	5.96300	-1.17650	3.99210	.03950	.03816	.03730	243.80000	7.41730	.04142
4.322	4.229	17.22600	5.96310	-1.17730	3.99180	.03880	.03736	.03628	243.79000	7.41670	.04059
	GRADIENT	.00914	.00050	-.00477	-.11430	.00098	.00111	.00069	-6.87714	-.21246	.00073

OA257 (LARC 20-M6-6559) OV102 W/(FSB) (S7E111) (10 JUL 81)

REFERENCE DATA

SREF = 2690.0000 SQ.FT. XMRP = 1076.6800 IN. XO
LREF = 474.8100 INCHES YMRP = .0000 IN. YO
BREF = 936.6800 INCHES ZMRP = 375.0000 IN. ZO
SCALE = .0100

PARAMETRIC DATA

ALPHA = 17.500 PHI = .000
SPDBRK = 86.600 AILRON = .000
YP = 1.000 1S = .000
ELEVON = .000 MACH = 6.000
S-MODE = 2.000 S-DIR = 1.000

RUN NO. 2082/ 0 RN/L = 4.45 GRADIENT INTERVAL = -.60/ .60

RN/L	BETA	ALPHA	MACH	PHI	Q	BP1	BP2	BP3	PT1	PT2	PSC
4.550	-4.200	17.07800	5.95840	-1.13950	4.19580	.03958	.04018	.03792	255.42000	7.79590	.04285
4.549	-4.000	17.08800	5.95850	-1.14040	4.20110	.03964	.04024	.03805	255.76000	7.80570	.04298
4.550	-3.800	17.09200	5.95860	-1.14100	4.19870	.04010	.04072	.03857	255.64000	7.80130	.04360
4.569	-3.600	17.08800	5.95870	-1.14100	4.20540	.04071	.04141	.03918	256.06000	7.81360	.04433
4.565	-3.400	17.09900	5.95880	-1.14210	4.21010	.04141	.04210	.03985	256.37000	7.82240	.04501
4.567	-3.200	17.09500	5.95900	-1.14210	4.21290	.04206	.04262	.04035	256.56000	7.82760	.04558
4.565	-3.000	17.09900	5.95910	-1.14280	4.20770	.04262	.04314	.04101	256.26000	7.81790	.04613
4.558	-2.800	17.10200	5.95920	-1.14340	4.19270	.04298	.04342	.04141	255.37000	7.79010	.04658
4.541	-2.600	17.10100	5.95930	-1.14410	4.16530	.04321	.04353	.04165	253.72000	7.73910	.04678
4.508	-2.400	17.10400	5.95940	-1.14500	4.12500	.04324	.04352	.04176	251.28000	7.66420	.04680
4.478	-2.200	17.10500	5.95950	-1.14580	4.09380	.04309	.04329	.04162	249.40000	7.60620	.04665
4.447	-2.000	17.10700	5.95960	-1.14660	4.06960	.04277	.04295	.04147	247.94000	7.56130	.04634
4.449	-1.800	17.11100	5.95970	-1.14750	4.06490	.04267	.04270	.04130	247.68000	7.55250	.04621
4.451	-1.600	17.11600	5.95980	-1.14830	4.06640	.04272	.04257	.04123	247.79000	7.55530	.04616
4.461	-1.400	17.12100	5.96000	-1.14920	4.07870	.04288	.04253	.04122	248.56000	7.57820	.04623
4.488	-1.200	17.12600	5.96010	-1.14990	4.11090	.04311	.04258	.04130	250.54000	7.63800	.04629
4.509	-1.000	17.13500	5.96020	-1.15090	4.13400	.04344	.04284	.04144	251.97000	7.68100	.04648
4.526	-.800	17.13900	5.96030	-1.15180	4.14750	.04378	.04309	.04187	252.81000	7.70600	.04682
4.543	-.600	17.14300	5.96040	-1.15260	4.15590	.04417	.04350	.04230	253.34000	7.72160	.04722
4.539	-.400	17.14800	5.96050	-1.15360	4.15200	.04456	.04403	.04275	253.12000	7.71440	.04770
4.522	-.200	17.14900	5.96060	-1.15440	4.13230	.04497	.04458	.04293	251.94000	7.67770	.04813
4.499	.000	17.15300	5.96070	-1.15550	4.10820	.04533	.04496	.04323	250.49000	7.63300	.04839
4.485	.200	17.15200	5.96080	-1.15630	4.08260	.04544	.04510	.04339	248.95000	7.58550	.04845
4.458	.400	17.15600	5.96090	-1.15750	4.05680	.04538	.04495	.04327	247.39000	7.53750	.04830
4.432	.600	17.15800	5.96110	-1.15830	4.03570	.04522	.04471	.04310	246.12000	7.49820	.04806
4.414	.800	17.15800	5.96120	-1.15930	4.02430	.04493	.04428	.04279	245.45000	7.47720	.04758
4.397	1.000	17.16300	5.96130	-1.16040	4.01120	.04447	.04379	.04235	244.67000	7.45270	.04701
4.388	1.200	17.16600	5.96140	-1.16140	4.00900	.04400	.04325	.04173	244.56000	7.44870	.04639
4.379	1.400	17.17100	5.96150	-1.16250	4.00440	.04361	.04286	.04119	244.29000	7.44010	.04589
4.375	1.600	17.17500	5.96160	-1.16360	4.00250	.04330	.04259	.04090	244.20000	7.43660	.04553
4.369	1.800	17.17900	5.96170	-1.16460	4.00110	.04311	.04231	.04078	244.13000	7.43410	.04537
4.364	2.000	17.18300	5.96180	-1.16570	4.00090	.04296	.04208	.04091	244.13000	7.43360	.04528
4.360	2.200	17.18400	5.96200	-1.16650	3.99480	.04288	.04187	.04097	243.78000	7.42220	.04512
4.352	2.400	17.19100	5.96210	-1.16760	3.99330	.04273	.04174	.04096	243.71000	7.41950	.04496
4.347	2.600	17.19400	5.96220	-1.16850	3.99590	.04258	.04162	.04078	243.89000	7.42430	.04478
4.342	2.800	17.19700	5.96230	-1.16940	3.99370	.04250	.04145	.04072	243.78000	7.42030	.04464
4.334	3.000	17.20100	5.96240	-1.17060	3.99120	.04245	.04136	.04066	243.64000	7.41560	.04459
4.333	3.200	17.20500	5.96250	-1.17150	3.98910	.04248	.04130	.04049	243.53000	7.41170	.04456
4.326	3.400	17.21300	5.96260	-1.17280	3.98740	.04239	.04123	.04028	243.44000	7.40840	.04438
4.323	3.600	17.21200	5.96270	-1.17360	3.99070	.04194	.04076	.03974	243.67000	7.41460	.04390
4.324	3.800	17.22100	5.96290	-1.17500	3.99230	.04106	.03988	.03891	243.78000	7.41760	.04305
4.326	4.000	17.22100	5.96300	-1.17600	3.99210	.03998	.03874	.03786	243.79000	7.41730	.04196

OA257 (LARC 20-M6-6559) OV102 W/(FSB) (S7E111) (10 JUL 81)

REFERENCE DATA

SREF =	2690.0000 SQ.FT.	XMRP =	1076.6800 IN.	X0	
LREF =	474.8100 INCHES	YMRP =	.0000 IN.	Y0	
BREF =	936.6800 INCHES	ZMRP =	375.0000 IN.	Z0	
SCALE =	.0100				

PARAMETRIC DATA

ALPHA =	17.500	PHI =	.000
SPDBRK =	86.600	AILRON =	.000
YP =	1.000	1S =	.000
ELEVON =	.000	MACH =	6.000
S-MODE =	2.000	S-DIR =	1.000

RUN NO. 2082/ 0 RN/L = 4.45 GRADIENT INTERVAL = -.60/ .60

RN/L	BETA	ALPHA	MACH	PHI	Q	BP1	BP2	BP3	PT1	PT2	PSC
4.323	4.200	17.22500	5.96310	-1.17710	3.99190	.03898	.03755	.03661	243.80000	7.41690	.04082
	GRADIENT	.01143	.00055	-.00479	-.10727	.00094	.00107	.00070	-6.44821	-.19932	.00072

OA257 (LARC 20-M6-6559) OV102 W/(FSB) (S7E012) (10 JUL 81)

REFERENCE DATA

SREF = 2690.0000 SQ.FT. XMRP = 1076.6800 IN. XO
LREF = 474.8100 INCHES YMRP = .0000 IN. YO
BREF = 936.6800 INCHES ZMRP = 375.0000 IN. ZO
SCALE = .0100

PARAMETRIC DATA

ALPHA = 20.000 PHI = .000
SPDBRK = 86.600 AILRON = .000
YP = 1.000 1S = .000
ELEVON = .000 MACH = 6.000
S-MODE = 2.000 S-DIR = 1.000

RUN NO. 81/ 0 RN/L = 4.46 GRADIENT INTERVAL = -.60/ .60

RN/L	BETA	ALPHA	MACH	PHI	Q	BP1	BP2	BP3	PT1	PT2	PSC
4.440	-4.424	19.35700	5.96020	-1.28460	4.05580	.03715	.03744	.03350	247.20000	7.53570	.03963
4.441	-4.300	19.36900	5.96040	-1.28540	4.06450	.03675	.03715	.03290	247.77000	7.55180	.03925
4.449	-4.100	19.36700	5.96050	-1.28570	4.06760	.03735	.03767	.03344	247.98000	7.55760	.03986
4.465	-3.900	19.37200	5.96060	-1.28650	4.06880	.03861	.03889	.03495	248.07000	7.55990	.04119
4.460	-3.700	19.37400	5.96070	-1.28700	4.07230	.03979	.04011	.03658	248.30000	7.56630	.04256
4.452	-3.500	19.37600	5.96080	-1.28750	4.07730	.04083	.04117	.03802	248.62000	7.57560	.04379
4.447	-3.300	19.38400	5.96090	-1.28840	4.07780	.04175	.04209	.03917	248.67000	7.57650	.04485
4.452	-3.100	19.38400	5.96100	-1.28870	4.07990	.04267	.04295	.04030	248.81000	7.58050	.04583
4.455	-2.900	19.38900	5.96110	-1.28940	4.08130	.04352	.04360	.04104	248.91000	7.58300	.04670
4.452	-2.700	19.39500	5.96120	-1.29010	4.08150	.04416	.04414	.04152	248.94000	7.58340	.04728
4.448	-2.500	19.39200	5.96130	-1.29040	4.08220	.04459	.04437	.04164	249.00000	7.58470	.04772
4.450	-2.300	19.40500	5.96140	-1.29150	4.08580	.04482	.04450	.04179	249.24000	7.59130	.04794
4.447	-2.100	19.40700	5.96150	-1.29210	4.08610	.04488	.04451	.04173	249.28000	7.59200	.04801
4.452	-1.900	19.41300	5.96160	-1.29300	4.08690	.04478	.04442	.04169	249.34000	7.59340	.04795
4.458	-1.700	19.41900	5.96170	-1.29390	4.08700	.04461	.04429	.04173	249.36000	7.59360	.04795
4.459	-1.500	19.42000	5.96180	-1.29470	4.08980	.04444	.04408	.04188	249.55000	7.59880	.04791
4.459	-1.300	19.43200	5.96190	-1.29620	4.09110	.04431	.04384	.04209	249.65000	7.60130	.04794
4.457	-1.100	19.43400	5.96200	-1.29700	4.09120	.04430	.04365	.04223	249.67000	7.60140	.04795
4.460	-.900	19.43700	5.96210	-1.29800	4.09290	.04432	.04344	.04227	249.79000	7.60450	.04787
4.460	-.700	19.44500	5.96220	-1.29930	4.09490	.04445	.04338	.04249	249.93000	7.60830	.04787
4.462	-.500	19.44700	5.96230	-1.30020	4.09790	.04464	.04333	.04253	250.13000	7.61380	.04787
4.458	-.300	19.45600	5.96240	-1.30170	4.09710	.04485	.04345	.04268	250.10000	7.61230	.04792
4.459	-.100	19.45800	5.96250	-1.30270	4.09800	.04504	.04357	.04281	250.17000	7.61400	.04800
4.471	.100	19.46400	5.96260	-1.30400	4.10180	.04524	.04364	.04284	250.42000	7.62110	.04805
4.471	.300	19.47100	5.96270	-1.30540	4.10230	.04544	.04378	.04288	250.47000	7.62190	.04824
4.475	.500	19.47300	5.96280	-1.30660	4.10420	.04562	.04387	.04286	250.60000	7.62560	.04841
4.475	.700	19.48200	5.96290	-1.30810	4.10330	.04579	.04397	.04282	250.56000	7.62390	.04853
4.472	.900	19.48300	5.96300	-1.30930	4.10560	.04573	.04381	.04274	250.72000	7.62820	.04854
4.472	1.100	19.48700	5.96310	-1.31050	4.10600	.04559	.04347	.04236	250.76000	7.62890	.04833
4.475	1.300	19.49700	5.96320	-1.31220	4.10320	.04540	.04319	.04207	250.61000	7.62360	.04812
4.468	1.500	19.49600	5.96330	-1.31310	4.10460	.04523	.04293	.04163	250.71000	7.62620	.04788
4.462	1.700	19.50500	5.96340	-1.31480	4.10260	.04517	.04283	.04144	250.61000	7.62250	.04781
4.466	1.900	19.50800	5.96350	-1.31610	4.10440	.04515	.04287	.04141	250.73000	7.62590	.04785
4.466	2.100	19.51000	5.96360	-1.31700	4.10550	.04522	.04298	.04129	250.82000	7.62790	.04792
4.474	2.300	19.52400	5.96370	-1.31880	4.10840	.04531	.04310	.04129	251.01000	7.63320	.04800
4.482	2.500	19.52100	5.96380	-1.31950	4.10820	.04541	.04317	.04132	251.02000	7.63290	.04811
4.473	2.700	19.53100	5.96390	-1.32100	4.10510	.04558	.04319	.04147	250.84000	7.62710	.04819
4.467	2.900	19.53300	5.96400	-1.32190	4.10990	.04553	.04310	.04154	251.16000	7.63610	.04810
4.458	3.100	19.53500	5.96410	-1.32310	4.10590	.04527	.04282	.04155	250.93000	7.62860	.04789
4.450	3.300	19.54600	5.96420	-1.32450	4.10330	.04480	.04242	.04158	250.79000	7.62380	.04746
4.448	3.500	19.54300	5.96430	-1.32540	4.10430	.04423	.04191	.04152	250.86000	7.62570	.04693
4.445	3.700	19.55400	5.96440	-1.32710	4.10180	.04364	.04140	.04123	250.73000	7.62100	.04623

OA257 (LARC 20-M6-6559) OV102 W/(FSB) (S7E012) (10 JUL 81)

REFERENCE DATA

SREF =	2690.0000 SQ.FT.	XMRP =	1076.6800 IN. XO		
LREF =	474.8100 INCHES	YMRP =	.0000 IN. YO		
BREF =	936.6800 INCHES	ZMRP =	375.0000 IN. ZO		
SCALE =	.0100				

PARAMETRIC DATA

ALPHA =	20.000	PHI =	.000
SPDBRK =	86.600	AILRON =	.000
YP =	1.000	1S =	.000
ELEVON =	.000	MACH =	6.000
S-MODE =	2.000	S-DIR =	1.000

RUN NO. 81/ 0 RN/L = 4.46 GRADIENT INTERVAL = -.60/ .60

RN/L	BETA	ALPHA	MACH	PHI	Q	BP1	BP2	BP3	PT1	PT2	PSC
4.446	3.900	19.55700	5.96450	-1.32830	4.10160	.04289	.04080	.04085	250.73000	7.62060	.04550
4.447	4.100	19.56100	5.96460	-1.32960	4.10070	.04177	.03984	.04006	250.70000	7.61900	.04445
	GRADIENT	.02586	.00050	-.00634	.00727	.00099	.00054	.00032	.53000	.01356	.00053

OA257 (LARC 20-M6-6559) OV102 W/(FSB) (S7E112) (10 JUL 81)

REFERENCE DATA

SREF = 2690.0000 SQ.FT. XMRP = 1076.6800 IN. XO
LREF = 474.8100 INCHES YMRP = .0000 IN. YO
BREF = 936.6800 INCHES ZMRP = 375.0000 IN. ZO
SCALE = .0100

PARAMETRIC DATA

ALPHA = 20.000 PHI = .000
SPDBRK = 86.600 AILRON = .000
YP = 1.000 1S = .000
ELEVON = .000 MACH = 6.000
S-MODE = 2.000 S-DIR = 1.000

RUN NO. 2081/ 0 RN/L = 4.46 GRADIENT INTERVAL = -.60/ .60

RN/L	BETA	ALPHA	MACH	PHI	Q	BP1	BP2	BP3	PT1	PT2	PSC
4.439	-4.400	19.35400	5.96030	-1.28430	4.06210	.03690	.03725	.03314	247.60000	7.54730	.03941
4.443	-4.200	19.37000	5.96050	-1.28570	4.06560	.03693	.03730	.03302	247.85000	7.55380	.03944
4.456	-4.000	19.36800	5.96060	-1.28600	4.06840	.03795	.03825	.03413	248.04000	7.55900	.04047
4.464	-3.800	19.37600	5.96070	-1.28700	4.06910	.03923	.03953	.03583	248.10000	7.56040	.04191
4.456	-3.600	19.37300	5.96080	-1.28710	4.07550	.04033	.04065	.03732	248.50000	7.57220	.04320
4.449	-3.400	19.37900	5.96090	-1.28790	4.07760	.04134	.04164	.03864	248.65000	7.57610	.04432
4.448	-3.200	19.38400	5.96100	-1.28850	4.07820	.04220	.04255	.03978	248.70000	7.57730	.04536
4.455	-3.000	19.38600	5.96110	-1.28900	4.08150	.04312	.04331	.04074	248.92000	7.58330	.04631
4.454	-2.800	19.39300	5.96120	-1.28980	4.08100	.04390	.04389	.04130	248.91000	7.58250	.04704
4.449	-2.600	19.39600	5.96130	-1.29040	4.08210	.04442	.04427	.04161	248.99000	7.58460	.04755
4.448	-2.400	19.39800	5.96140	-1.29090	4.08270	.04476	.04445	.04176	249.04000	7.58560	.04784
4.449	-2.200	19.40800	5.96150	-1.29190	4.08690	.04487	.04452	.04180	249.31000	7.59330	.04799
4.450	-2.000	19.41000	5.96160	-1.29250	4.08710	.04486	.04446	.04169	249.34000	7.59370	.04798
4.453	-1.800	19.41800	5.96160	-1.29360	4.08510	.04470	.04437	.04167	249.24000	7.59000	.04795
4.459	-1.600	19.42100	5.96170	-1.29440	4.08870	.04452	.04419	.04181	249.48000	7.59670	.04793
4.458	-1.400	19.42400	5.96180	-1.29530	4.09070	.04435	.04397	.04201	249.62000	7.60050	.04792
4.457	-1.200	19.43400	5.96190	-1.29670	4.09070	.04431	.04374	.04217	249.63000	7.60050	.04796
4.459	-1.000	19.43300	5.96200	-1.29730	4.09210	.04432	.04351	.04224	249.74000	7.60310	.04791
4.460	-.800	19.44400	5.96210	-1.29890	4.09450	.04440	.04338	.04239	249.90000	7.60760	.04789
4.463	-.600	19.44600	5.96220	-1.29980	4.09780	.04454	.04335	.04251	250.12000	7.61360	.04786
4.459	-.400	19.45000	5.96230	-1.30090	4.09750	.04476	.04337	.04261	250.12000	7.61310	.04789
4.458	-.200	19.45700	5.96240	-1.30220	4.09660	.04494	.04352	.04276	250.08000	7.61150	.04797
4.465	.000	19.46100	5.96250	-1.30340	4.10070	.04514	.04357	.04281	250.35000	7.61900	.04801
4.473	.200	19.46600	5.96260	-1.30470	4.10220	.04533	.04369	.04284	250.45000	7.62190	.04813
4.472	.400	19.47100	5.96270	-1.30590	4.10340	.04553	.04383	.04289	250.54000	7.62410	.04832
4.477	.600	19.47600	5.96280	-1.30730	4.10360	.04572	.04394	.04284	250.57000	7.62430	.04846
4.472	.800	19.48600	5.96290	-1.30900	4.10400	.04577	.04394	.04281	250.62000	7.62520	.04856
4.473	1.000	19.48500	5.96300	-1.30980	4.10750	.04567	.04363	.04257	250.85000	7.63170	.04844
4.476	1.200	19.49200	5.96310	-1.31130	4.10500	.04550	.04330	.04219	250.71000	7.62690	.04822
4.471	1.400	19.49600	5.96320	-1.31270	4.10330	.04532	.04305	.04185	250.62000	7.62380	.04799
4.464	1.600	19.49700	5.96330	-1.31380	4.10370	.04521	.04285	.04152	250.66000	7.62450	.04783
4.462	1.800	19.50900	5.96340	-1.31560	4.10280	.04515	.04284	.04139	250.63000	7.62300	.04782
4.465	2.000	19.50900	5.96350	-1.31650	4.10530	.04518	.04293	.04129	250.79000	7.62750	.04787
4.467	2.200	19.51800	5.96360	-1.31800	4.10630	.04526	.04304	.04126	250.87000	7.62940	.04796
4.481	2.400	19.52200	5.96370	-1.31910	4.10880	.04536	.04314	.04135	251.05000	7.63410	.04808
4.478	2.600	19.52200	5.96380	-1.32000	4.10610	.04555	.04317	.04136	250.90000	7.62900	.04819
4.471	2.800	19.53500	5.96390	-1.32170	4.10770	.04560	.04317	.04145	251.01000	7.63190	.04816
4.463	3.000	19.53300	5.96400	-1.32240	4.10860	.04544	.04298	.04153	251.09000	7.63370	.04803
4.454	3.200	19.54100	5.96410	-1.32390	4.10440	.04504	.04265	.04156	250.85000	7.62590	.04771
4.448	3.400	19.54500	5.96420	-1.32500	4.10270	.04450	.04220	.04156	250.76000	7.62260	.04724
4.448	3.600	19.54700	5.96430	-1.32610	4.10450	.04395	.04166	.04136	250.88000	7.62600	.04655
4.444	3.800	19.55700	5.96440	-1.32780	4.10060	.04328	.04112	.04110	250.67000	7.61890	.04591

OA257 (LARC 20-M6-6559) OV102 W/(FSB) (S7E112) (10 JUL 81)

REFERENCE DATA

SREF =	2690.0000 SQ.FT.	XMRP =	1076.6800 IN. XO				
LREF =	474.8100 INCHES	YMRP =	.0000 IN. YO				
BREF =	936.6800 INCHES	ZMRP =	375.0000 IN. ZO				
SCALE =	.0100						

PARAMETRIC DATA

ALPHA =	20.000	PHI =	.000
SPDBRK =	86.600	AILRON =	.000
YP =	1.000	1S =	.000
ELEVON =	.000	MACH =	6.000
S-MODE =	2.000	S-DIR =	1.000

RUN NO. 2081/ 0 RN/L = 4.46 GRADIENT INTERVAL = -.60/ .60

RN/L	BETA	ALPHA	MACH	PHI	Q	BP1	BP2	BP3	PT1	PT2	PSC
4.449	4.000	19.55600	5.96450	-1.32880	4.10260	.04239	.04034	.04049	250.81000	7.62250	.04503
4.447	4.114	19.56200	5.96460	-1.32970	4.10040	.04168	.03977	.04000	250.68000	7.61830	.04437
	GRADIENT	.02518	.00050	-.00625	.00621	.00098	.00051	.00029	.45714	.01152	.00050

OA257 (LARC 20-M6-6559) OV102 W/(FSB) (S7E013) (10 JUL 81)

REFERENCE DATA

SREF = 2690.0000 SQ.FT. XMRP = 1076.6800 IN. XO
LREF = 474.8100 INCHES YMRP = .0000 IN. YO
BREF = 936.6800 INCHES ZMRP = 375.0000 IN. ZO
SCALE = .0100

PARAMETRIC DATA

ALPHA = 22.500 PHI = .000
SPDBRK = 86.600 AILRON = .000
YP = 1.000 1S = .000
ELEVON = .000 MACH = 6.000
S-MODE = 2.000 S-DIR = 1.000

RUN NO. 80/ 0 RN/L = 4.48 GRADIENT INTERVAL = -.60/ .60

RN/L	BETA	ALPHA	MACH	PHI	Q	BP1	BP2	BP3	PT1	PT2	PSC
4.487	-4.325	21.93900	5.96020	-1.44480	4.05400	.04172	.04051	.03787	247.10000	7.53230	.04351
4.475	-4.200	21.95400	5.96050	-1.44610	4.05400	.04173	.04048	.03779	247.15000	7.53240	.04345
4.483	-4.000	21.96300	5.96060	-1.44720	4.05910	.04165	.04047	.03779	247.48000	7.54180	.04345
4.484	-3.800	21.96100	5.96070	-1.44790	4.05930	.04167	.04055	.03780	247.51000	7.54220	.04349
4.478	-3.600	21.97300	5.96080	-1.44920	4.05330	.04178	.04088	.03796	247.15000	7.53100	.04369
4.482	-3.400	21.97800	5.96090	-1.45020	4.05310	.04203	.04130	.03840	247.15000	7.53050	.04414
4.485	-3.200	21.97900	5.96100	-1.45100	4.05250	.04249	.04188	.03904	247.14000	7.52950	.04480
4.477	-3.000	21.99100	5.96110	-1.45220	4.05570	.04310	.04271	.04005	247.35000	7.53550	.04574
4.476	-2.800	21.99000	5.96120	-1.45280	4.05940	.04386	.04355	.04118	247.59000	7.54240	.04666
4.479	-2.600	21.99600	5.96130	-1.45370	4.06030	.04481	.04446	.04239	247.66000	7.54400	.04766
4.480	-2.400	22.00500	5.96140	-1.45470	4.06030	.04579	.04547	.04347	247.68000	7.54400	.04868
4.482	-2.200	22.00500	5.96150	-1.45520	4.06470	.04691	.04655	.04475	247.96000	7.55210	.04976
4.493	-2.000	22.01700	5.96160	-1.45640	4.06530	.04803	.04770	.04616	248.02000	7.55330	.05104
4.490	-1.800	22.02300	5.96170	-1.45740	4.06790	.04908	.04877	.04739	248.19000	7.55800	.05224
4.491	-1.600	22.02700	5.96180	-1.45840	4.07140	.04992	.04946	.04811	248.42000	7.56460	.05306
4.489	-1.400	22.03600	5.96190	-1.45960	4.07070	.05045	.04975	.04829	248.40000	7.56330	.05345
4.477	-1.200	22.03600	5.96200	-1.46040	4.06840	.05057	.04962	.04811	248.27000	7.55910	.05347
4.475	-1.000	22.04400	5.96210	-1.46180	4.06790	.05017	.04919	.04750	248.26000	7.55810	.05287
4.467	-.800	22.05100	5.96210	-1.46310	4.06680	.04957	.04862	.04659	248.21000	7.55600	.05216
4.466	-.600	22.05300	5.96220	-1.46420	4.06870	.04920	.04811	.04572	248.34000	7.55950	.05160
4.463	-.400	22.06200	5.96230	-1.46580	4.06830	.04889	.04786	.04505	248.33000	7.55880	.05129
4.466	-.200	22.06500	5.96240	-1.46710	4.06860	.04875	.04770	.04448	248.37000	7.55940	.05107
4.468	.000	22.07000	5.96250	-1.46860	4.07210	.04857	.04741	.04406	248.60000	7.56590	.05092
4.480	.200	22.08000	5.96260	-1.47060	4.07550	.04852	.04733	.04377	248.82000	7.57220	.05096
4.482	.400	22.08000	5.96270	-1.47170	4.08070	.04876	.04751	.04379	249.16000	7.58190	.05126
4.481	.600	22.08900	5.96280	-1.47350	4.08050	.04903	.04784	.04419	249.16000	7.58150	.05161
4.493	.800	22.09300	5.96290	-1.47480	4.08280	.04925	.04810	.04470	249.32000	7.58570	.05199
4.489	1.000	22.09600	5.96300	-1.47620	4.08550	.04947	.04833	.04532	249.50000	7.59070	.05229
4.480	1.200	22.10400	5.96310	-1.47780	4.08420	.04945	.04838	.04572	249.44000	7.58840	.05239
4.480	1.400	22.10900	5.96320	-1.47910	4.08870	.04927	.04816	.04594	249.73000	7.59670	.05224
4.485	1.600	22.11300	5.96330	-1.48040	4.09100	.04866	.04748	.04589	249.89000	7.60090	.05171
4.479	1.800	22.12200	5.96340	-1.48190	4.09080	.04823	.04687	.04614	249.89000	7.60050	.05150
4.478	2.000	22.12400	5.96350	-1.48320	4.09190	.04788	.04626	.04612	249.98000	7.60260	.05131
4.484	2.200	22.13200	5.96360	-1.48440	4.09500	.04742	.04545	.04580	250.18000	7.60840	.05075
4.474	2.400	22.13600	5.96370	-1.48570	4.09260	.04680	.04447	.04544	250.05000	7.60390	.05012
4.477	2.600	22.14000	5.96380	-1.48710	4.09300	.04612	.04341	.04481	250.10000	7.60470	.04937
4.476	2.800	22.15000	5.96390	-1.48890	4.09000	.04546	.04254	.04432	249.93000	7.59920	.04874
4.488	3.000	22.15200	5.96400	-1.49000	4.09700	.04488	.04171	.04356	250.37000	7.61210	.04821
4.489	3.200	22.16100	5.96410	-1.49170	4.09450	.04436	.04113	.04311	250.24000	7.60750	.04773
4.475	3.400	22.16300	5.96420	-1.49310	4.09330	.04385	.04056	.04274	250.18000	7.60520	.04728
4.467	3.600	22.16400	5.96430	-1.49430	4.09160	.04338	.04000	.04221	250.10000	7.60210	.04676
4.464	3.800	22.17500	5.96440	-1.49630	4.08910	.04287	.03953	.04172	249.96000	7.59740	.04631

OA257 (LARC 20-M6-6559) OV102 W/(FSB) (S7E013) (10 JUL 81)

REFERENCE DATA

SREF =	2690.0000 SQ.FT.	XMRP =	1076.6800 IN. XO				
LREF =	474.8100 INCHES	YMRP =	.0000 IN. YO				
BREF =	936.6800 INCHES	ZMRP =	375.0000 IN. ZO				
SCALE =	.0100						

PARAMETRIC DATA

ALPHA =	22.500	PHI =	.000
SPDBRK =	86.600	AILRON =	.000
YP =	1.000	1S =	.000
ELEVON =	.000	MACH =	6.000
S-MODE =	2.000	S-DIR =	1.000

RUN NO. 80/ 0 RN/L = 4.48 GRADIENT INTERVAL = -.60/ .60

RN/L	BETA	ALPHA	MACH	PHI	Q	BP1	BP2	BP3	PT1	PT2	PSC
4.460	3.957	22.17700	5.96450	-1.49740	4.09000	.04253	.03919	.04136	250.03000	7.59910	.04595
	GRADIENT	.02839	.00050	-.00771	.01198	-.00018	-.00033	-.00140	.81607	.02232	-.00002

OA257 (LARC 20-M6-6559) OV102 W/(FSB) (S7E113) (10 JUL 81)

REFERENCE DATA

SREF = 2690.0000 SQ.FT. XMRP = 1076.6800 IN. XO
LREF = 474.8100 INCHES YMRP = .0000 IN. YO
BREF = 936.6800 INCHES ZMRP = 375.0000 IN. ZO
SCALE = .0100

PARAMETRIC DATA

ALPHA = 22.500 PHI = .000
SPDBRK = 86.600 AILRON = .000
YP = 1.000 1S = .000
ELEVON = .000 MACH = 6.000
S-MODE = 2.000 S-DIR = 1.000

RUN NO. 2080/ 0 RN/L = 4.48 GRADIENT INTERVAL = -.60/ .60

RN/L	BETA	ALPHA	MACH	PHI	Q	BP1	BP2	BP3	PT1	PT2	PSC
4.478	-4.300	21.94300	5.96040	-1.44510	4.05420	.04170	.04047	.03784	247.14000	7.53270	.04350
4.479	-4.100	21.95900	5.96060	-1.44660	4.05630	.04169	.04050	.03779	247.30000	7.53660	.04346
4.486	-3.900	21.96100	5.96070	-1.44750	4.06080	.04164	.04049	.03779	247.58000	7.54490	.04344
4.479	-3.700	21.96500	5.96070	-1.44850	4.05550	.04170	.04068	.03785	247.28000	7.53510	.04357
4.480	-3.500	21.97700	5.96080	-1.44990	4.05270	.04189	.04108	.03813	247.13000	7.52990	.04389
4.485	-3.300	21.97700	5.96090	-1.45060	4.05280	.04225	.04162	.03867	247.15000	7.53000	.04447
4.483	-3.100	21.98500	5.96100	-1.45160	4.05450	.04279	.04231	.03956	247.27000	7.53320	.04526
4.474	-2.900	21.99200	5.96110	-1.45250	4.05740	.04344	.04311	.04059	247.46000	7.53860	.04618
4.478	-2.700	21.99000	5.96120	-1.45310	4.06060	.04430	.04397	.04178	247.67000	7.54460	.04716
4.482	-2.500	22.00300	5.96130	-1.45430	4.06030	.04530	.04496	.04288	247.67000	7.54390	.04814
4.481	-2.300	22.00600	5.96140	-1.45490	4.06270	.04634	.04597	.04410	247.83000	7.54850	.04921
4.490	-2.100	22.01000	5.96150	-1.45580	4.06530	.04748	.04713	.04549	248.01000	7.55320	.05039
4.490	-1.900	22.02100	5.96160	-1.45700	4.06610	.04858	.04825	.04684	248.07000	7.55480	.05166
4.492	-1.700	22.02100	5.96170	-1.45770	4.07000	.04956	.04916	.04781	248.33000	7.56190	.05276
4.490	-1.500	22.03200	5.96180	-1.45890	4.07130	.05024	.04970	.04824	248.42000	7.56440	.05331
4.482	-1.300	22.03700	5.96190	-1.46010	4.06910	.05055	.04973	.04820	248.31000	7.56040	.05351
4.477	-1.100	22.03900	5.96200	-1.46110	4.06900	.05044	.04943	.04787	248.32000	7.56010	.05323
4.471	-.900	22.04800	5.96210	-1.46250	4.06710	.04987	.04890	.04705	248.22000	7.55660	.05250
4.465	-.700	22.05000	5.96220	-1.46360	4.06750	.04935	.04834	.04616	248.26000	7.55730	.05184
4.463	-.500	22.05600	5.96230	-1.46490	4.06890	.04902	.04797	.04539	248.36000	7.55990	.05139
4.466	-.300	22.06400	5.96240	-1.46640	4.06880	.04883	.04781	.04474	248.37000	7.55980	.05118
4.466	-.100	22.06600	5.96250	-1.46770	4.07050	.04866	.04752	.04427	248.49000	7.56290	.05100
4.471	.100	22.07700	5.96260	-1.46970	4.07340	.04852	.04737	.04385	248.69000	7.56840	.05091
4.482	.300	22.07900	5.96270	-1.47100	4.07710	.04860	.04740	.04376	248.93000	7.57520	.05109
4.482	.500	22.08300	5.96280	-1.47250	4.08210	.04887	.04768	.04403	249.25000	7.58440	.05143
4.486	.700	22.09400	5.96290	-1.47440	4.08130	.04915	.04796	.04444	249.22000	7.58290	.05182
4.495	.900	22.09400	5.96300	-1.47550	4.08530	.04936	.04823	.04503	249.48000	7.59050	.05216
4.485	1.100	22.10100	5.96310	-1.47710	4.08580	.04949	.04838	.04555	249.53000	7.59130	.05236
4.478	1.300	22.10800	5.96320	-1.47860	4.08530	.04940	.04834	.04589	249.51000	7.59040	.05236
4.484	1.500	22.11100	5.96330	-1.47970	4.09030	.04897	.04785	.04589	249.83000	7.59960	.05198
4.481	1.700	22.11900	5.96340	-1.48120	4.09050	.04842	.04717	.04600	249.86000	7.60000	.05157
4.478	1.900	22.12300	5.96350	-1.48250	4.09220	.04810	.04660	.04619	249.98000	7.60310	.05144
4.480	2.100	22.12900	5.96360	-1.48390	4.09200	.04771	.04587	.04600	249.99000	7.60280	.05109
4.480	2.300	22.13600	5.96370	-1.48520	4.09520	.04711	.04496	.04567	250.20000	7.60880	.05048
4.475	2.500	22.13700	5.96380	-1.48640	4.09320	.04648	.04392	.04517	250.10000	7.60510	.04976
4.478	2.700	22.14600	5.96390	-1.48800	4.09160	.04579	.04297	.04451	250.02000	7.60200	.04904
4.479	2.900	22.14900	5.96400	-1.48930	4.09250	.04514	.04212	.04392	250.09000	7.60370	.04848
4.492	3.100	22.15600	5.96400	-1.49080	4.09690	.04462	.04140	.04335	250.37000	7.61180	.04796
4.482	3.300	22.16300	5.96410	-1.49260	4.09420	.04409	.04085	.04288	250.23000	7.60690	.04750
4.470	3.500	22.16400	5.96420	-1.49360	4.09350	.04362	.04028	.04247	250.20000	7.60550	.04704
4.467	3.700	22.17000	5.96430	-1.49540	4.09080	.04314	.03981	.04197	250.05000	7.60050	.04657
4.462	3.900	22.17500	5.96440	-1.49690	4.08990	.04265	.03934	.04151	250.02000	7.59890	.04608
	GRADIENT	.02729	.00050	-.00769	.01340	-.00023	-.00041	-.00145	.90428	.02489	-.00002

OA257 (LARC 20-M6-6559) OV102 W/(FSB) (S7E014) (10 JUL 81)

REFERENCE DATA

SREF = 2690.0000 SQ.FT. XMRP = 1076.6800 IN. XO
LREF = 474.8100 INCHES YMRP = .0000 IN. YO
BREF = 936.6800 INCHES ZMRP = 375.0000 IN. ZO
SCALE = .0100

PARAMETRIC DATA

ALPHA = 25.000 PHI = .000
SPDBRK = 86.600 AILRON = .000
YP = 1.000 1S = .000
ELEVON = .000 MACH = 6.000
S-MODE = 2.000 S-DIR = 1.000

RUN NO. 77/ 0 RN/L = 4.42 GRADIENT INTERVAL = -.60/ .60

RN/L	BETA	ALPHA	MACH	PHI	Q	BP1	BP2	BP3	PT1	PT2	PSC
4.467	-4.182	24.24000	5.96920	-1.58480	4.06810	.04477	.04395	.04218	249.51000	7.55820	.04615
4.455	-4.000	24.25300	5.96930	-1.58630	4.06580	.04471	.04385	.04210	249.38000	7.55400	.04609
4.445	-3.800	24.24900	5.96930	-1.58680	4.06370	.04465	.04389	.04209	249.26000	7.55010	.04612
4.436	-3.600	24.25800	5.96940	-1.58830	4.05870	.04479	.04418	.04238	248.96000	7.54080	.04640
4.432	-3.400	24.26200	5.96940	-1.58930	4.05620	.04510	.04458	.04281	248.81000	7.53610	.04692
4.428	-3.200	24.26100	5.96950	-1.59010	4.05570	.04544	.04495	.04317	248.79000	7.53520	.04735
4.422	-3.000	24.27000	5.96950	-1.59150	4.05250	.04573	.04525	.04349	248.60000	7.52930	.04761
4.419	-2.800	24.27700	5.96960	-1.59280	4.05170	.04593	.04537	.04370	248.56000	7.52780	.04779
4.414	-2.600	24.27500	5.96960	-1.59360	4.05090	.04616	.04554	.04408	248.52000	7.52630	.04800
4.410	-2.400	24.28600	5.96960	-1.59500	4.04700	.04636	.04574	.04435	248.29000	7.51910	.04824
4.410	-2.200	24.29200	5.96970	-1.59640	4.04720	.04657	.04593	.04472	248.31000	7.51950	.04851
4.418	-2.000	24.29300	5.96970	-1.59720	4.04730	.04685	.04617	.04532	248.32000	7.51960	.04894
4.416	-1.800	24.30300	5.96980	-1.59860	4.04310	.04728	.04666	.04606	248.07000	7.51180	.04947
4.424	-1.600	24.30800	5.96980	-1.59970	4.04410	.04769	.04707	.04690	248.14000	7.51370	.05010
4.432	-1.400	24.31000	5.96990	-1.60060	4.04690	.04819	.04746	.04760	248.32000	7.51890	.05060
4.432	-1.200	24.32400	5.96990	-1.60240	4.04690	.04861	.04789	.04825	248.33000	7.51890	.05103
4.431	-1.000	24.32600	5.97000	-1.60350	4.04520	.04903	.04829	.04890	248.23000	7.51560	.05138
4.434	-.800	24.33000	5.97000	-1.60460	4.04620	.04951	.04870	.04949	248.30000	7.51760	.05178
4.434	-.600	24.34000	5.97000	-1.60600	4.04410	.05008	.04922	.05022	248.18000	7.51370	.05226
4.432	-.400	24.34700	5.97010	-1.60740	4.04600	.05069	.04978	.05103	248.31000	7.51730	.05295
4.429	-.200	24.34600	5.97010	-1.60810	4.04580	.05146	.05035	.05173	248.30000	7.51690	.05372
4.426	.000	24.35700	5.97020	-1.61010	4.04210	.05217	.05095	.05226	248.08000	7.50990	.05451
4.425	.200	24.36300	5.97020	-1.61180	4.04210	.05255	.05117	.05248	248.08000	7.50990	.05499
4.420	.400	24.36300	5.97030	-1.61330	4.04270	.05246	.05090	.05229	248.13000	7.51100	.05494
4.417	.600	24.37700	5.97030	-1.61530	4.04130	.05164	.05002	.05150	248.05000	7.50840	.05417
4.415	.800	24.38100	5.97040	-1.61690	4.04100	.05022	.04839	.05032	248.04000	7.50790	.05288
4.411	1.000	24.38200	5.97040	-1.61820	4.04150	.04905	.04698	.04925	248.08000	7.50890	.05169
4.413	1.200	24.39500	5.97050	-1.62020	4.04060	.04818	.04595	.04842	248.04000	7.50720	.05076
4.420	1.400	24.40100	5.97050	-1.62170	4.04140	.04757	.04514	.04789	248.09000	7.50860	.05021
4.428	1.600	24.40200	5.97050	-1.62290	4.04210	.04701	.04441	.04753	248.14000	7.50990	.04973
4.423	1.800	24.41200	5.97060	-1.62460	4.04080	.04663	.04385	.04731	248.07000	7.50760	.04938
4.420	2.000	24.41900	5.97060	-1.62640	4.04040	.04641	.04349	.04737	248.06000	7.50680	.04937
4.426	2.200	24.41800	5.97070	-1.62760	4.03970	.04645	.04331	.04742	248.02000	7.50550	.04952
4.417	2.400	24.43100	5.97070	-1.62980	4.03790	.04667	.04353	.04751	247.92000	7.50220	.04989
4.409	2.600	24.43700	5.97080	-1.63140	4.03640	.04666	.04367	.04742	247.83000	7.49940	.05013
4.413	2.800	24.43600	5.97080	-1.63270	4.03630	.04664	.04376	.04731	247.84000	7.49920	.05039
4.414	3.000	24.44800	5.97090	-1.63480	4.03400	.04660	.04391	.04714	247.70000	7.49490	.05059
4.414	3.200	24.45100	5.97090	-1.63640	4.03050	.04663	.04403	.04710	247.49000	7.48830	.05083
4.410	3.400	24.45300	5.97090	-1.63800	4.02870	.04669	.04402	.04701	247.39000	7.48510	.05095
4.402	3.600	24.46300	5.97100	-1.64000	4.02320	.04679	.04402	.04704	247.06000	7.47470	.05101
4.392	3.800	24.46700	5.97100	-1.64170	4.02070	.04687	.04396	.04712	246.91000	7.47010	.05096
4.389	4.000	24.46800	5.97110	-1.64300	4.01840	.04687	.04377	.04707	246.78000	7.46590	.05079

OA257 (LARC 20-M6-6559) OV102 W/(FSB) (S7E014) (10 JUL 81)

REFERENCE DATA

SREF =	2690.0000 SQ.FT.	XMRP =	1076.6800 IN. XO		
LREF =	474.8100 INCHES	YMRP =	.0000 IN. YO		
BREF =	936.6800 INCHES	ZMRP =	375.0000 IN. ZO		
SCALE =	.0100				

PARAMETRIC DATA

ALPHA =	25.000	PHI =	.000
SPDBRK =	86.600	AILRON =	.000
YP =	1.000	1S =	.000
ELEVON =	.000	MACH =	6.000
S-MODE =	2.000	S-DIR =	1.000

RUN NO. 77/ O RN/L = 4.42 GRADIENT INTERVAL = -.60/ .60

RN/L	BETA	ALPHA	MACH	PHI	Q	BP1	BP2	BP3	PT1	PT2	PSC
4.383	4.200	24.48100	5.97110	-1.64540	4.01540	.04697	.04369	.04698	246.60000	7.46020	.05076
4.379	4.381	24.47200	5.97120	-1.64620	4.01560	.04712	.04360	.04712	246.62000	7.46070	.05078
	GRADIENT	.02857	.00025	-.00775	-.00334	.00166	.00098	.00126	-.17321	-.00634	.00196

OA257 (LARC 20-M6-6559) OV102 W/(FSB) (S7E114) (10 JUL 81)

REFERENCE DATA

SREF = 2690.0000 SQ.FT. XMRP = 1076.6800 IN. XO
LREF = 474.8100 INCHES YMRP = .0000 IN. YO
BREF = 936.6800 INCHES ZMRP = 375.0000 IN. ZO
SCALE = .0100

PARAMETRIC DATA

ALPHA = 25.000 PHI = .000
SPDBRK = 86.600 AILRON = .000
YP = 1.000 1S = .000
ELEVON = .000 MACH = 6.000
S-MODE = 2.000 S-DIR = 1.000

RUN NO. 2077/ 0 RN/L = 4.42 GRADIENT INTERVAL = -.60/ .60

RN/L	BETA	ALPHA	MACH	PHI	Q	BP1	BP2	BP3	PT1	PT2	PSC
4.460	-4.100	24.25300	5.96930	-1.58580	4.06600	.04475	.04392	.04216	249.39000	7.55430	.04613
4.452	-3.900	24.25100	5.96930	-1.58650	4.06490	.04465	.04384	.04207	249.33000	7.55240	.04605
4.439	-3.700	24.25100	5.96940	-1.58740	4.06160	.04468	.04399	.04220	249.13000	7.54620	.04622
4.435	-3.500	24.26400	5.96940	-1.58900	4.05670	.04493	.04437	.04261	248.84000	7.53710	.04664
4.431	-3.300	24.26000	5.96940	-1.58960	4.05600	.04531	.04479	.04297	248.81000	7.53580	.04716
4.424	-3.100	24.26400	5.96950	-1.59070	4.05330	.04564	.04514	.04334	248.65000	7.53080	.04748
4.420	-2.900	24.27600	5.96950	-1.59220	4.05190	.04585	.04532	.04363	248.57000	7.52820	.04772
4.416	-2.700	24.27600	5.96960	-1.59330	4.05040	.04603	.04545	.04387	248.49000	7.52540	.04789
4.411	-2.500	24.27900	5.96960	-1.59420	4.04870	.04627	.04565	.04422	248.39000	7.52220	.04811
4.410	-2.300	24.29100	5.96970	-1.59580	4.04700	.04644	.04582	.04450	248.29000	7.51910	.04834
4.413	-2.100	24.29100	5.96970	-1.59660	4.04730	.04669	.04604	.04501	248.32000	7.51960	.04870
4.418	-1.900	24.29800	5.96980	-1.59780	4.04530	.04711	.04643	.04561	248.20000	7.51590	.04918
4.419	-1.700	24.31000	5.96980	-1.59950	4.04290	.04747	.04688	.04650	248.06000	7.51140	.04981
4.431	-1.500	24.31000	5.96980	-1.60020	4.04560	.04793	.04727	.04722	248.24000	7.51650	.05035
4.430	-1.300	24.31600	5.96990	-1.60150	4.04700	.04839	.04767	.04790	248.33000	7.51910	.05081
4.431	-1.100	24.32900	5.96990	-1.60310	4.04630	.04881	.04809	.04859	248.30000	7.51770	.05122
4.433	-.900	24.32900	5.97000	-1.60410	4.04580	.04926	.04850	.04915	248.27000	7.51680	.05156
4.436	-.700	24.33200	5.97000	-1.60510	4.04470	.04980	.04893	.04984	248.21000	7.51480	.05200
4.431	-.500	24.34700	5.97010	-1.60700	4.04530	.05038	.04951	.05064	248.26000	7.51580	.05260
4.432	-.300	24.34600	5.97010	-1.60760	4.04690	.05105	.05008	.05139	248.36000	7.51880	.05330
4.426	-.100	24.35100	5.97020	-1.60910	4.04270	.05183	.05070	.05199	248.11000	7.51110	.05415
4.427	.100	24.36300	5.97020	-1.61100	4.04270	.05242	.05109	.05246	248.12000	7.51110	.05479
4.422	.300	24.36200	5.97020	-1.61260	4.04240	.05258	.05110	.05245	248.11000	7.51040	.05503
4.420	.500	24.36700	5.97030	-1.61410	4.04260	.05223	.05059	.05200	248.13000	7.51080	.05469
4.417	.700	24.38300	5.97030	-1.61640	4.04120	.05091	.04917	.05095	248.05000	7.50830	.05347
4.412	.900	24.38100	5.97040	-1.61750	4.04020	.04960	.04766	.04976	248.00000	7.50640	.05225
4.410	1.100	24.38700	5.97040	-1.61900	4.04090	.04858	.04643	.04878	248.05000	7.50770	.05118
4.420	1.300	24.40000	5.97050	-1.62110	4.04220	.04786	.04552	.04813	248.14000	7.51020	.05047
4.423	1.500	24.39900	5.97050	-1.62210	4.04120	.04732	.04475	.04769	248.08000	7.50830	.04995
4.427	1.700	24.40300	5.97060	-1.62350	4.04160	.04686	.04411	.04741	248.12000	7.50900	.04952
4.419	1.900	24.41800	5.97060	-1.62570	4.04000	.04649	.04364	.04734	248.03000	7.50610	.04937
4.423	2.100	24.41800	5.97070	-1.62690	4.04020	.04639	.04337	.04738	248.05000	7.50640	.04941
4.423	2.300	24.42300	5.97070	-1.62860	4.03920	.04653	.04342	.04747	247.99000	7.50450	.04966
4.410	2.500	24.43300	5.97070	-1.63050	4.03560	.04672	.04360	.04752	247.78000	7.49790	.05002
4.411	2.700	24.43600	5.97080	-1.63200	4.03720	.04663	.04372	.04737	247.88000	7.50080	.05026
4.414	2.900	24.44100	5.97080	-1.63370	4.03470	.04662	.04384	.04723	247.74000	7.49620	.05050
4.417	3.100	24.45200	5.97090	-1.63580	4.03330	.04659	.04395	.04707	247.66000	7.49360	.05072
4.411	3.300	24.45300	5.97090	-1.63720	4.02980	.04666	.04403	.04709	247.46000	7.48720	.05093
4.405	3.500	24.45500	5.97100	-1.63880	4.02500	.04674	.04403	.04699	247.17000	7.47820	.05099
4.397	3.700	24.46700	5.97100	-1.64090	4.02110	.04684	.04401	.04710	246.94000	7.47100	.05099
4.391	3.900	24.46800	5.97110	-1.64240	4.02000	.04689	.04388	.04712	246.87000	7.46880	.05088
4.387	4.100	24.47400	5.97110	-1.64420	4.01570	.04696	.04372	.04705	246.62000	7.46080	.05076

OA257 (LARC 20-M6-6559) OV102 W/(FSB) (S7E114) (10 JUL 81)

REFERENCE DATA

SREF = 2690.0000 SQ.FT. XMRP = 1076.6800 IN. XO
LREF = 474.8100 INCHES YMRP = .0000 IN. YO
BREF = 936.6800 INCHES ZMRP = 375.0000 IN. ZO
SCALE = .0100

PARAMETRIC DATA

ALPHA = 25.000 PHI = .000
SPDBRK = 86.600 AILRON = .000
YP = 1.000 1S = .000
ELEVON = .000 MACH = 6.000
S-MODE = 2.000 S-DIR = 1.000

RUN NO. 2077/ 0 RN/L = 4.42 GRADIENT INTERVAL = -.60/ .60

RN/L	BETA	ALPHA	MACH	PHI	Q	BP1	BP2	BP3	PT1	PT2	PSC
4.380	4.300	24.48300	5.97120	-1.64620	4.01420	.04701	.04367	.04704	246.53000	7.45810	.05076
	GRADIENT	.02286	.00019	-.00749	-.00386	.00206	.00126	.00150	-.19857	-.00717	.00233

OA257 (LARC 20-M6-6559) OV102 W/(FSB) (S7E015) (10 JUL 81)

REFERENCE DATA

SREF = 2690.0000 SQ.FT. XMRP = 1076.6800 IN. XO
LREF = 474.8100 INCHES YMRP = .0000 IN. YO
BREF = 936.6800 INCHES ZMRP = 375.0000 IN. ZO
SCALE = .0100

PARAMETRIC DATA

ALPHA = 25.000 PHI = .000
SPDBRK = 86.600 AILRON = .000
YP = 1.000 1S = .000
ELEVON = .000 MACH = 6.000
S-MODE = 1.000 S-DIR = 1.000

RUN NO. 78/ 0 RN/L = 4.46 GRADIENT INTERVAL = -.60/ .60

RN/L	BETA	ALPHA	MACH	PHI	Q	BP1	BP2	BP3	PT1	PT2	PSC
4.500	-4.649	24.16600	5.97050	-1.57970	4.04440	.04509	.04335	.04164	248.27000	7.51420	.04683
4.499	-4.595	24.17600	5.97080	-1.57990	4.05890	.04519	.04332	.04153	249.22000	7.54120	.04684
4.536	-4.164	24.18500	5.97120	-1.58120	4.10610	.04491	.04332	.04131	252.18000	7.62890	.04666
4.521	-3.636	24.21400	5.97160	-1.58500	4.11650	.04589	.04513	.04284	252.90000	7.64820	.04838
4.534	-3.162	24.22100	5.97200	-1.58740	4.11910	.04649	.04559	.04363	253.12000	7.65290	.04889
4.506	-2.650	24.23500	5.97240	-1.59050	4.11570	.04703	.04593	.04450	252.98000	7.64660	.04928
4.496	-2.170	24.24800	5.97270	-1.59300	4.10750	.04779	.04670	.04581	252.54000	7.63150	.05036
4.471	-1.721	24.25400	5.97300	-1.59540	4.10730	.04886	.04768	.04778	252.58000	7.63100	.05173
4.463	-1.183	24.26800	5.97330	-1.59870	4.09370	.04995	.04878	.04953	251.79000	7.60570	.05272
4.437	-.707	24.29100	5.97360	-1.60240	4.08520	.05107	.04990	.05128	251.33000	7.59000	.05378
4.604	-.321	24.30100	5.96860	-1.60480	4.13680	.05395	.05124	.05335	253.62000	7.68600	.05701
4.330	-.308	24.12300	5.97680	-1.59530	3.98470	.05221	.05008	.05139	245.68000	7.40320	.05487
4.426	-.282	24.29000	5.97390	-1.60420	4.07440	.05255	.05099	.05236	250.71000	7.56990	.05541
4.400	.292	24.30100	5.97430	-1.60920	4.04570	.05183	.04977	.05106	249.00000	7.51650	.05480
4.403	.819	24.32500	5.97460	-1.61410	4.02400	.04730	.04454	.04668	247.72000	7.47620	.05029
4.376	1.461	24.33600	5.97490	-1.61850	4.02230	.04550	.04209	.04538	247.67000	7.47310	.04873
4.400	1.990	24.35600	5.97520	-1.62290	4.01080	.04528	.04129	.04559	247.01000	7.45160	.04892
4.366	2.275	24.35800	5.97540	-1.62480	4.00820	.04579	.04178	.04570	246.89000	7.44690	.04953
	GRADIENT	.10733	.00231	-.01310	-.03551	-.00188	-.00167	-.00224	-1.79248	-.06617	-.00170

OA257 (LARC 20-M6-6559) OV102 W/(FSB) (S7E016) (10 JUL 81)

REFERENCE DATA

SREF = 2690.0000 SQ.FT. XMRP = 1076.6800 IN. XO
LREF = 474.8100 INCHES YMRP = .0000 IN. YO
BREF = 936.6800 INCHES ZMRP = 375.0000 IN. ZO
SCALE = .0100

PARAMETRIC DATA

ALPHA = 27.500 PHI = .000
SPDBRK = 86.600 AILRON = .000
YP = 1.000 1S = .000
ELEVON = .000 MACH = 6.000
S-MODE = 2.000 S-DIR = 1.000

RUN NO. 79/ O RN/L = 4.46 GRADIENT INTERVAL = -.60/ .60

RN/L	BETA	ALPHA	MACH	PHI	Q	BP1	BP2	BP3	PT1	PT2	PSC
4.484	-4.097	27.05600	5.96700	-1.75270	4.10540	.05202	.04742	.04600	251.41000	7.62770	.05345
4.501	-3.900	27.06800	5.96720	-1.75420	4.10620	.05202	.04746	.04589	251.49000	7.62920	.05343
4.499	-3.700	27.06000	5.96720	-1.75460	4.10730	.05200	.04750	.04584	251.56000	7.63110	.05341
4.497	-3.500	27.06700	5.96730	-1.75590	4.10570	.05193	.04753	.04587	251.48000	7.62820	.05333
4.496	-3.300	27.07600	5.96740	-1.75730	4.10410	.05182	.04746	.04592	251.39000	7.62520	.05328
4.493	-3.100	27.07100	5.96740	-1.75810	4.10620	.05169	.04722	.04597	251.53000	7.62920	.05321
4.485	-2.900	27.08000	5.96750	-1.75950	4.10600	.05155	.04699	.04614	251.53000	7.62870	.05313
4.483	-2.700	27.08800	5.96750	-1.76090	4.10540	.05129	.04678	.04628	251.51000	7.62770	.05298
4.488	-2.500	27.09100	5.96760	-1.76200	4.10680	.05099	.04679	.04637	251.60000	7.63030	.05273
4.486	-2.300	27.10400	5.96770	-1.76380	4.10530	.05070	.04717	.04651	251.52000	7.62750	.05253
4.480	-2.100	27.10900	5.96770	-1.76510	4.10360	.05052	.04764	.04685	251.43000	7.62430	.05254
4.480	-1.900	27.11200	5.96780	-1.76640	4.10040	.05057	.04804	.04732	251.24000	7.61830	.05270
4.477	-1.700	27.12400	5.96790	-1.76830	4.09560	.05077	.04858	.04811	250.96000	7.60940	.05314
4.479	-1.500	27.12600	5.96790	-1.76950	4.09480	.05105	.04912	.04906	250.92000	7.60790	.05370
4.473	-1.300	27.12800	5.96800	-1.77080	4.09250	.05135	.04954	.04977	250.79000	7.60370	.05418
4.464	-1.100	27.14200	5.96800	-1.77290	4.08780	.05155	.04992	.05040	250.51000	7.59480	.05459
4.476	-.900	27.14700	5.96810	-1.77440	4.08780	.05170	.05017	.05081	250.52000	7.59480	.05484
4.471	-.700	27.14900	5.96820	-1.77560	4.08920	.05192	.05050	.05119	250.62000	7.59750	.05512
4.464	-.500	27.16200	5.96820	-1.77750	4.08770	.05190	.05042	.05156	250.54000	7.59470	.05529
4.470	-.300	27.16000	5.96830	-1.77870	4.08640	.05192	.05036	.05194	250.47000	7.59240	.05552
4.458	-.100	27.16900	5.96840	-1.78050	4.08070	.05203	.05042	.05223	250.13000	7.58170	.05570
4.453	.100	27.18100	5.96840	-1.78250	4.08170	.05194	.05041	.05232	250.20000	7.58350	.05571
4.451	.300	27.18000	5.96850	-1.78360	4.08210	.05162	.05006	.05194	250.24000	7.58420	.05538
4.448	.500	27.19100	5.96860	-1.78570	4.07850	.05116	.04954	.05122	250.03000	7.57760	.05476
4.443	.700	27.19800	5.96860	-1.78740	4.07810	.05094	.04918	.05059	250.02000	7.57690	.05448
4.446	.900	27.20100	5.96870	-1.78900	4.07890	.05082	.04901	.05006	250.08000	7.57830	.05449
4.454	1.100	27.21200	5.96870	-1.79110	4.07550	.05094	.04906	.05002	249.88000	7.57210	.05476
4.465	1.300	27.21700	5.96880	-1.79280	4.07670	.05107	.04916	.05007	249.96000	7.57420	.05510
4.457	1.500	27.22000	5.96890	-1.79440	4.07740	.05115	.04909	.05016	250.02000	7.57570	.05522
4.444	1.700	27.23200	5.96890	-1.79660	4.07350	.05112	.04904	.05015	249.79000	7.56840	.05535
4.448	1.900	27.23600	5.96900	-1.79830	4.07550	.05104	.04885	.05018	249.92000	7.57190	.05539
4.443	2.100	27.23900	5.96910	-1.80000	4.07540	.05111	.04865	.05037	249.93000	7.57180	.05551
4.429	2.300	27.25400	5.96910	-1.80240	4.07320	.05135	.04863	.05079	249.80000	7.56770	.05581
4.433	2.500	27.25300	5.96920	-1.80400	4.07210	.05186	.04874	.05147	249.75000	7.56570	.05634
4.424	2.700	27.26000	5.96930	-1.80590	4.07110	.05271	.04905	.05230	249.70000	7.56390	.05702
4.419	2.900	27.27200	5.96930	-1.80840	4.06930	.05356	.04937	.05308	249.60000	7.56060	.05767
4.419	3.100	27.27000	5.96940	-1.80980	4.06920	.05428	.04957	.05357	249.61000	7.56040	.05823
4.419	3.300	27.27800	5.96950	-1.81200	4.06580	.05465	.04941	.05401	249.41000	7.55410	.05852
4.422	3.500	27.29400	5.96950	-1.81450	4.06730	.05468	.04895	.05417	249.51000	7.55680	.05876
4.423	3.698	27.28500	5.96960	-1.81550	4.06920	.05432	.04833	.05390	249.64000	7.56020	.05861
	GRADIENT	.03100	.00037	-.00824	-.00827	-.00066	-.00076	-.00024	-.45286	-.01547	-.00044

OA257 (LARC 20-M6-6559) OV102 W/(FSB) (S7E116) (10 JUL 81)

REFERENCE DATA

SREF = 2690.0000 SQ.FT. XMRP = 1076.6800 IN. XO
LREF = 474.8100 INCHES YMRP = .0000 IN. YO
BREF = 936.6800 INCHES ZMRP = 375.0000 IN. ZO
SCALE = .0100

PARAMETRIC DATA

ALPHA = 27.500 PHI = .000
SPDBRK = 86.600 AILRON = .000
YP = 1.000 1S = .000
ELEVON = .000 MACH = 6.000
S-MODE = 2.000 S-DIR = 1.000

RUN NO. 2079/ O RN/L = 4.46 GRADIENT INTERVAL = -.60/ .60

RN/L	BETA	ALPHA	MACH	PHI	Q	BP1	BP2	BP3	PT1	PT2	PSC
4.499	-4.000	27.06100	5.96710	-1.75320	4.10570	.05207	.04743	.04588	251.45000	7.62830	.05344
4.504	-3.800	27.06500	5.96720	-1.75440	4.10880	.05200	.04748	.04589	251.65000	7.63390	.05341
4.498	-3.600	27.06000	5.96730	-1.75510	4.10720	.05194	.04751	.04585	251.56000	7.63090	.05338
4.497	-3.400	27.07300	5.96730	-1.75670	4.10380	.05187	.04753	.04589	251.37000	7.62470	.05330
4.495	-3.200	27.07300	5.96740	-1.75770	4.10560	.05174	.04736	.04594	251.49000	7.62790	.05324
4.488	-3.000	27.07400	5.96740	-1.75870	4.10520	.05162	.04707	.04609	251.48000	7.62730	.05317
4.481	-2.800	27.09200	5.96750	-1.76060	4.10540	.05142	.04686	.04619	251.50000	7.62760	.05307
4.485	-2.600	27.09100	5.96760	-1.76160	4.10580	.05113	.04675	.04634	251.53000	7.62830	.05286
4.487	-2.400	27.09600	5.96760	-1.76280	4.10620	.05084	.04696	.04642	251.57000	7.62910	.05261
4.484	-2.200	27.11000	5.96770	-1.76460	4.10520	.05058	.04738	.04663	251.52000	7.62730	.05252
4.479	-2.000	27.10900	5.96780	-1.76580	4.10130	.05051	.04782	.04702	251.29000	7.62010	.05258
4.479	-1.800	27.11400	5.96780	-1.76720	4.09800	.05060	.04829	.04763	251.10000	7.61380	.05287
4.477	-1.600	27.12700	5.96790	-1.76900	4.09470	.05091	.04886	.04862	250.91000	7.60770	.05343
4.478	-1.400	27.12500	5.96790	-1.77010	4.09460	.05119	.04933	.04947	250.92000	7.60760	.05396
4.467	-1.200	27.13500	5.96800	-1.77190	4.08930	.05145	.04976	.05007	250.60000	7.59780	.05440
4.468	-1.000	27.14500	5.96810	-1.77360	4.08850	.05159	.05003	.05068	250.56000	7.59610	.05469
4.474	-.800	27.14500	5.96810	-1.77480	4.08760	.05181	.05032	.05098	250.52000	7.59450	.05502
4.468	-.600	27.15700	5.96820	-1.77670	4.08940	.05192	.05048	.05137	250.64000	7.59790	.05520
4.466	-.400	27.16400	5.96830	-1.77830	4.08730	.05189	.05039	.05181	250.52000	7.59400	.05541
4.466	-.200	27.16300	5.96830	-1.77950	4.08330	.05193	.05037	.05210	250.29000	7.58660	.05558
4.455	.000	27.17700	5.96840	-1.78160	4.08190	.05199	.05046	.05229	250.21000	7.58400	.05573
4.451	.200	27.18200	5.96850	-1.78320	4.08170	.05182	.05026	.05219	250.21000	7.58370	.05562
4.451	.400	27.18300	5.96850	-1.78450	4.08110	.05138	.04978	.05157	250.18000	7.58240	.05505
4.444	.600	27.19700	5.96860	-1.78670	4.07760	.05104	.04936	.05088	249.98000	7.57600	.05458
4.442	.800	27.19800	5.96870	-1.78820	4.07800	.05082	.04905	.05032	250.02000	7.57670	.05445
4.452	1.000	27.20500	5.96870	-1.79000	4.07840	.05089	.04900	.05000	250.06000	7.57750	.05460
4.458	1.200	27.21800	5.96880	-1.79220	4.07500	.05103	.04910	.05004	249.86000	7.57120	.05496
4.463	1.400	27.21800	5.96880	-1.79350	4.07800	.05110	.04914	.05009	250.05000	7.57670	.05516
4.451	1.600	27.22500	5.96890	-1.79550	4.07570	.05109	.04911	.05013	249.92000	7.57240	.05523
4.443	1.800	27.23900	5.96900	-1.79780	4.07370	.05109	.04898	.05015	249.81000	7.56860	.05536
4.450	2.000	27.23800	5.96900	-1.79910	4.07660	.05104	.04872	.05025	250.00000	7.57410	.05545
4.432	2.200	27.24400	5.96910	-1.80100	4.07280	.05121	.04864	.05057	249.78000	7.56710	.05562
4.436	2.400	27.25500	5.96920	-1.80330	4.07330	.05154	.04865	.05108	249.82000	7.56800	.05604
4.428	2.600	27.25600	5.96920	-1.80500	4.07020	.05228	.04887	.05189	249.64000	7.56210	.05666
4.421	2.800	27.26700	5.96930	-1.80710	4.07000	.05317	.04922	.05270	249.64000	7.56170	.05736
4.419	3.000	27.27200	5.96940	-1.80920	4.06920	.05393	.04947	.05333	249.60000	7.56040	.05798
4.417	3.200	27.27300	5.96940	-1.81080	4.06630	.05451	.04953	.05386	249.43000	7.55490	.05839
4.423	3.400	27.28900	5.96950	-1.81340	4.06720	.05473	.04924	.05408	249.50000	7.55670	.05866
4.421	3.600	27.29300	5.96960	-1.81530	4.06680	.05458	.04865	.05412	249.48000	7.55580	.05877
	GRADIENT	.03161	.00032	-.00823	-.00882	-.00067	-.00084	-.00033	-.48928	-.01639	-.00045

OA257 (LARC 20-M6-6559) OV102 W/(FSB) (S7E017) (10 JUL 81)

REFERENCE DATA

SREF = 2690.0000 SQ.FT. XMRP = 1076.6800 IN. XO
LREF = 474.8100 INCHES YMRP = .0000 IN. YO
BREF = 936.6800 INCHES ZMRP = 375.0000 IN. ZO
SCALE = .0100

PARAMETRIC DATA

ALPHA = 30.000 PHI = .000
SPDBRK = 86.600 AILRON = .000
YP = 1.000 1S = .000
ELEVON = .000 MACH = 6.000
S-MODE = 2.000 S-DIR = 1.000

RUN NO. 88/ 0 RN/L = 4.54 GRADIENT INTERVAL = -.60/ .60

RN/L	BETA	ALPHA	MACH	PHI	Q	BP1	BP2	BP3	PT1	PT2	PSC
4.578	-4.545	29.04700	5.95370	-1.86840	4.14080	.05754	.04955	.04704	251.25000	7.69380	.06063
4.578	-4.400	29.05500	5.95380	-1.86950	4.14280	.05753	.04959	.04704	251.38000	7.69760	.06064
4.571	-4.200	29.06400	5.95380	-1.87100	4.14300	.05737	.04984	.04716	251.40000	7.69780	.06069
4.573	-4.000	29.06400	5.95390	-1.87170	4.14540	.05708	.05004	.04714	251.56000	7.70230	.06053
4.569	-3.800	29.07300	5.95390	-1.87310	4.14520	.05659	.05034	.04707	251.56000	7.70190	.06017
4.567	-3.600	29.07600	5.95400	-1.87410	4.14570	.05607	.05098	.04699	251.60000	7.70290	.05965
4.570	-3.400	29.08300	5.95410	-1.87540	4.14560	.05553	.05151	.04684	251.60000	7.70260	.05895
4.566	-3.200	29.09200	5.95410	-1.87670	4.14660	.05501	.05181	.04676	251.67000	7.70450	.05842
4.565	-3.000	29.09500	5.95420	-1.87790	4.14510	.05458	.05185	.04648	251.59000	7.70180	.05782
4.567	-2.800	29.10600	5.95420	-1.87940	4.14540	.05414	.05181	.04638	251.62000	7.70230	.05734
4.573	-2.600	29.11200	5.95430	-1.88070	4.14710	.05375	.05157	.04621	251.73000	7.70550	.05689
4.575	-2.400	29.12000	5.95430	-1.88220	4.14460	.05333	.05124	.04594	251.59000	7.70080	.05642
4.573	-2.200	29.12700	5.95440	-1.88370	4.14690	.05293	.05090	.04583	251.74000	7.70510	.05604
4.573	-2.000	29.13500	5.95450	-1.88520	4.14740	.05266	.05065	.04579	251.78000	7.70610	.05578
4.565	-1.800	29.14100	5.95450	-1.88660	4.14470	.05246	.05057	.04589	251.63000	7.70100	.05572
4.565	-1.600	29.14500	5.95460	-1.88800	4.15030	.05235	.05053	.04588	251.98000	7.71140	.05571
4.566	-1.400	29.15700	5.95460	-1.88970	4.14940	.05234	.05070	.04607	251.93000	7.70980	.05583
4.567	-1.200	29.16100	5.95470	-1.89120	4.15160	.05243	.05093	.04618	252.07000	7.71370	.05600
4.562	-1.000	29.17200	5.95470	-1.89310	4.15310	.05261	.05123	.04636	252.18000	7.71650	.05629
4.552	-.800	29.17500	5.95480	-1.89460	4.14950	.05291	.05153	.04668	251.97000	7.70990	.05666
4.546	-.600	29.18200	5.95490	-1.89660	4.14800	.05334	.05186	.04732	251.89000	7.70720	.05721
4.546	-.400	29.19000	5.95490	-1.89850	4.14840	.05387	.05246	.04831	251.92000	7.70790	.05792
4.542	-.200	29.19300	5.95500	-1.90030	4.14460	.05455	.05307	.04943	251.70000	7.70080	.05868
4.528	.000	29.20600	5.95500	-1.90270	4.13480	.05522	.05377	.05058	251.12000	7.68260	.05954
4.540	.200	29.20500	5.95510	-1.90430	4.13550	.05589	.05442	.05155	251.17000	7.68380	.06030
4.544	.400	29.21900	5.95510	-1.90720	4.13380	.05642	.05499	.05228	251.07000	7.68070	.06096
4.538	.600	29.21900	5.95520	-1.90880	4.13170	.05677	.05528	.05269	250.96000	7.67680	.06137
4.533	.800	29.22900	5.95530	-1.91080	4.13170	.05703	.05543	.05310	250.97000	7.67680	.06165
4.526	1.000	29.23400	5.95530	-1.91250	4.13030	.05731	.05555	.05354	250.89000	7.67420	.06201
4.516	1.200	29.23700	5.95540	-1.91410	4.12910	.05755	.05574	.05399	250.83000	7.67200	.06230
4.512	1.400	29.24800	5.95540	-1.91620	4.12800	.05775	.05592	.05436	250.77000	7.66990	.06249
4.506	1.600	29.24900	5.95550	-1.91790	4.12310	.05792	.05597	.05461	250.49000	7.66090	.06264
4.499	1.800	29.26400	5.95560	-1.92030	4.11910	.05806	.05613	.05509	250.25000	7.65340	.06280
4.501	2.000	29.26200	5.95560	-1.92170	4.11970	.05813	.05620	.05543	250.30000	7.65450	.06294
4.506	2.200	29.27600	5.95570	-1.92410	4.11970	.05828	.05631	.05587	250.31000	7.65450	.06311
4.503	2.400	29.27700	5.95570	-1.92580	4.12070	.05839	.05643	.05633	250.38000	7.65640	.06339
4.498	2.600	29.28500	5.95580	-1.92790	4.12020	.05860	.05657	.05666	250.36000	7.65550	.06368
4.491	2.800	29.29200	5.95580	-1.93000	4.11890	.05887	.05681	.05709	250.29000	7.65300	.06407
4.498	3.000	29.29600	5.95590	-1.93200	4.11880	.05915	.05696	.05744	250.30000	7.65280	.06434
4.501	3.200	29.31300	5.95600	-1.93480	4.11770	.05949	.05709	.05791	250.24000	7.65080	.06468
4.496	3.400	29.31000	5.95600	-1.93630	4.11360	.05994	.05708	.05856	250.00000	7.64310	.06497
4.494	3.600	29.32300	5.95610	-1.93880	4.11370	.06040	.05698	.05906	250.01000	7.64330	.06514

OA257 (LARC 20-M6-6559) OV102 W/(FSB) (S7E017) (10 JUL 81)

REFERENCE DATA

SREF =	2690.0000 SQ.FT.	XMRP =	1076.6800 IN. XO		
LREF =	474.8100 INCHES	YMRP =	.0000 IN. YO		
BREF =	936.6800 INCHES	ZMRP =	375.0000 IN. ZO		
SCALE =	.0100				

PARAMETRIC DATA

ALPHA =	30.000	PHI =	.000
SPDBRK =	86.600	AILRON =	.000
YP =	1.000	1S =	.000
ELEVON =	.000	MACH =	6.000
S-MODE =	2.000	S-DIR =	1.000

RUN NO. 88/ O RN/L = 4.54 GRADIENT INTERVAL = -.60/ .60

RN/L	BETA	ALPHA	MACH	PHI	Q	BP1	BP2	BP3	PT1	PT2	PSC
4.492	3.755	29.32000	5.95610	-1.94030	4.11180	.06082	.05692	.05958	249.91000	7.63980	.06539
	GRADIENT	.03232	.00025	-.01036	-.01557	.00299	.00298	.00467	-.89643	-.02904	.00361

OA257 (LARC 20-M6-6559) OV102 W/(FSB) (S7E117) (10 JUL 81)

REFERENCE DATA

SREF = 2690.0000 SQ.FT. XMRP = 1076.6800 IN. XO
LREF = 474.8100 INCHES YMRP = .0000 IN. YO
BREF = 936.6800 INCHES ZMRP = 375.0000 IN. ZO
SCALE = .0100

PARAMETRIC DATA

ALPHA = 30.000 PHI = .000
SPDBRK = 86.600 AILRON = .000
YP = 1.000 1S = .000
ELEVON = .000 MACH = 6.000
S-MODE = 2.000 S-DIR = 1.000

RUN NO. 2088/ 0 RN/L = 4.54 GRADIENT INTERVAL = -.60/ .60

RN/L	BETA	ALPHA	MACH	PHI	Q	BP1	BP2	BP3	PT1	PT2	PSC
4.580	-4.500	29.04800	5.95370	-1.86870	4.14190	.05755	.04957	.04701	251.32000	7.69570	.06064
4.576	-4.300	29.06200	5.95380	-1.87040	4.14360	.05748	.04972	.04708	251.44000	7.69900	.06067
4.569	-4.100	29.06300	5.95390	-1.87130	4.14310	.05726	.04997	.04715	251.42000	7.69800	.06061
4.574	-3.900	29.06800	5.95390	-1.87240	4.14680	.05684	.05015	.04708	251.65000	7.70480	.06034
4.566	-3.700	29.07600	5.95400	-1.87370	4.14510	.05633	.05061	.04709	251.56000	7.70170	.05994
4.568	-3.500	29.07600	5.95400	-1.87460	4.14560	.05577	.05125	.04689	251.60000	7.70270	.05931
4.570	-3.300	29.08800	5.95410	-1.87620	4.14630	.05525	.05170	.04679	251.65000	7.70400	.05869
4.565	-3.100	29.09200	5.95410	-1.87720	4.14610	.05481	.05189	.04661	251.64000	7.70350	.05811
4.568	-2.900	29.10400	5.95420	-1.87870	4.14520	.05435	.05183	.04641	251.60000	7.70180	.05758
4.567	-2.700	29.10900	5.95430	-1.88000	4.14630	.05395	.05172	.04631	251.68000	7.70390	.05713
4.575	-2.500	29.11500	5.95430	-1.88140	4.14510	.05355	.05141	.04611	251.61000	7.70170	.05664
4.575	-2.300	29.12400	5.95440	-1.88300	4.14570	.05311	.05106	.04589	251.66000	7.70280	.05623
4.574	-2.100	29.13000	5.95440	-1.88430	4.14950	.05278	.05072	.04581	251.90000	7.70990	.05592
4.570	-1.900	29.14000	5.95450	-1.88600	4.14580	.05254	.05060	.04587	251.69000	7.70300	.05574
4.564	-1.700	29.14100	5.95450	-1.88720	4.14800	.05240	.05054	.04586	251.83000	7.70710	.05572
4.564	-1.500	29.15300	5.95460	-1.88880	4.15030	.05234	.05061	.04600	251.98000	7.71130	.05575
4.567	-1.300	29.15800	5.95470	-1.89040	4.14950	.05238	.05082	.04611	251.94000	7.70990	.05592
4.564	-1.100	29.16400	5.95470	-1.89200	4.15200	.05250	.05105	.04625	252.11000	7.71450	.05610
4.557	-.900	29.17500	5.95480	-1.89390	4.15120	.05277	.05136	.04649	252.07000	7.71310	.05649
4.549	-.700	29.17700	5.95480	-1.89540	4.14900	.05309	.05166	.04696	251.94000	7.70900	.05691
4.546	-.500	29.18900	5.95490	-1.89770	4.14880	.05357	.05215	.04775	251.94000	7.70850	.05757
4.545	-.300	29.19100	5.95490	-1.89950	4.14720	.05420	.05277	.04881	251.85000	7.70560	.05830
4.534	-.100	29.20000	5.95500	-1.90150	4.13850	.05491	.05344	.05000	251.34000	7.68950	.05913
4.531	.100	29.20400	5.95510	-1.90350	4.13450	.05557	.05408	.05112	251.10000	7.68200	.05993
4.545	.300	29.21100	5.95510	-1.90570	4.13540	.05616	.05470	.05200	251.17000	7.68380	.06064
4.541	.500	29.22000	5.95520	-1.90810	4.13240	.05664	.05516	.05247	250.99000	7.67800	.06120
4.537	.700	29.22000	5.95520	-1.90960	4.13240	.05689	.05531	.05285	251.01000	7.67810	.06148
4.530	.900	29.23500	5.95530	-1.91180	4.13120	.05720	.05550	.05334	250.94000	7.67590	.06186
4.521	1.100	29.23400	5.95530	-1.91320	4.12940	.05742	.05563	.05376	250.84000	7.67250	.06219
4.514	1.300	29.24500	5.95540	-1.91520	4.12890	.05770	.05587	.05417	250.82000	7.67160	.06240
4.508	1.500	29.25000	5.95550	-1.91710	4.12520	.05784	.05595	.05446	250.61000	7.66470	.06257
4.502	1.700	29.25500	5.95550	-1.91900	4.12110	.05800	.05606	.05487	250.37000	7.65720	.06273
4.501	1.900	29.26300	5.95560	-1.92110	4.11940	.05809	.05616	.05526	250.28000	7.65400	.06285
4.501	2.100	29.26600	5.95560	-1.92270	4.11930	.05821	.05625	.05564	250.28000	7.65370	.06301
4.506	2.300	29.28100	5.95570	-1.92520	4.12100	.05834	.05639	.05621	250.39000	7.65690	.06325
4.500	2.500	29.28000	5.95580	-1.92680	4.11970	.05849	.05647	.05653	250.32000	7.65440	.06352
4.494	2.700	29.29100	5.95580	-1.92920	4.11940	.05872	.05669	.05684	250.31000	7.65390	.06386
4.495	2.900	29.29300	5.95590	-1.93090	4.11930	.05901	.05691	.05731	250.32000	7.65380	.06423
4.501	3.100	29.30400	5.95590	-1.93330	4.11870	.05931	.05701	.05764	250.29000	7.65260	.06449
4.496	3.300	29.31300	5.95600	-1.93550	4.11390	.05971	.05709	.05827	250.01000	7.64370	.06484
4.496	3.500	29.31400	5.95600	-1.93740	4.11340	.06016	.05701	.05878	249.99000	7.64280	.06500
4.492	3.700	29.32700	5.95610	-1.93990	4.11350	.06066	.05696	.05943	250.01000	7.64300	.06526
	GRADIENT	.03129	.00031	-.01037	-.01734	.00313	.00307	.00490	-1.00429	-.03220	.00371

OA257 (LARC 20-M6-6559) OV102 W/(FSB) (S7E018) (10 JUL 81)

REFERENCE DATA

SREF = 2690.0000 SQ.FT. XMRP = 1076.6800 IN. X0
LREF = 474.8100 INCHES YMRP = .0000 IN. Y0
BREF = 936.6800 INCHES ZMRP = 375.0000 IN. Z0
SCALE = .0100

PARAMETRIC DATA

ALPHA = 32.500 PHI = .000
SPDBRK = 86.600 AILRON = .000
YP = 1.000 1S = .000
ELEVON = .000 MACH = 6.000
S-MODE = 2.000 S-DIR = 1.000

RUN NO. 91/ 0 RN/L = 4.53 GRADIENT INTERVAL = -.60/ .60

RN/L	BETA	ALPHA	MACH	PHI	Q	BP1	BP2	BP3	PT1	PT2	PSC
4.424	-4.261	31.80500	5.96340	-2.02780	4.12980	.06171	.05604	.05477	252.28000	7.67300	.06446
4.440	-4.100	31.83000	5.96360	-2.03000	4.13700	.06173	.05610	.05474	252.74000	7.68640	.06441
4.465	-3.900	31.83300	5.96370	-2.03100	4.14320	.06162	.05633	.05491	253.14000	7.69790	.06439
4.480	-3.700	31.83400	5.96380	-2.03210	4.14880	.06141	.05657	.05509	253.50000	7.70830	.06425
4.473	-3.500	31.83900	5.96390	-2.03320	4.15450	.06125	.05702	.05542	253.86000	7.71900	.06420
4.466	-3.300	31.85100	5.96390	-2.03480	4.15850	.06109	.05748	.05576	254.12000	7.72640	.06414
4.505	-3.100	31.86600	5.96400	-2.03660	4.16340	.06091	.05771	.05605	254.44000	7.73550	.06400
4.524	-2.900	31.86900	5.96410	-2.03770	4.16760	.06077	.05787	.05636	254.71000	7.74330	.06398
4.527	-2.700	31.87100	5.96420	-2.03880	4.17280	.06055	.05791	.05652	255.05000	7.75300	.06382
4.527	-2.500	31.88400	5.96430	-2.04040	4.17540	.06052	.05805	.05670	255.22000	7.75770	.06378
4.525	-2.300	31.90400	5.96440	-2.04270	4.17850	.06033	.05793	.05674	255.42000	7.76340	.06365
4.543	-2.100	31.90500	5.96450	-2.04370	4.18450	.06031	.05790	.05690	255.81000	7.77460	.06368
4.541	-1.900	31.90700	5.96460	-2.04480	4.18950	.06026	.05775	.05687	256.13000	7.78400	.06355
4.518	-1.700	31.91500	5.96470	-2.04630	4.19190	.06031	.05775	.05676	256.30000	7.78840	.06356
4.521	-1.500	31.93400	5.96480	-2.04860	4.19650	.06033	.05770	.05674	256.59000	7.79700	.06356
4.531	-1.300	31.94000	5.96490	-2.05020	4.19990	.06031	.05753	.05659	256.82000	7.80340	.06351
4.543	-1.100	31.94200	5.96500	-2.05150	4.20590	.06036	.05743	.05634	257.20000	7.81450	.06347
4.554	-.900	31.95000	5.96510	-2.05340	4.20810	.06046	.05747	.05620	257.35000	7.81840	.06350
4.552	-.700	31.96900	5.96510	-2.05580	4.20860	.06050	.05747	.05614	257.40000	7.81940	.06350
4.551	-.500	31.97400	5.96520	-2.05760	4.20580	.06051	.05732	.05605	257.24000	7.81420	.06348
4.542	-.300	31.97200	5.96530	-2.05910	4.19600	.06066	.05738	.05612	256.66000	7.79610	.06366
4.533	-.100	31.97700	5.96540	-2.06080	4.18850	.06081	.05757	.05616	256.22000	7.78210	.06380
4.530	.100	31.99000	5.96550	-2.06310	4.18470	.06096	.05775	.05618	256.00000	7.77500	.06395
4.531	.300	31.99900	5.96560	-2.06520	4.18100	.06121	.05803	.05651	255.79000	7.76810	.06439
4.534	.500	31.99900	5.96570	-2.06680	4.17890	.06146	.05828	.05670	255.68000	7.76420	.06469
4.540	.700	32.00400	5.96580	-2.06860	4.17610	.06161	.05838	.05678	255.53000	7.75910	.06489
4.552	.900	32.01600	5.96590	-2.07100	4.17160	.06174	.05847	.05700	255.26000	7.75060	.06504
4.559	1.100	32.02900	5.96600	-2.07320	4.16990	.06200	.05861	.05742	255.18000	7.74750	.06543
4.564	1.300	32.02900	5.96610	-2.07480	4.17160	.06222	.05883	.05805	255.30000	7.75060	.06591
4.568	1.500	32.03200	5.96620	-2.07660	4.17250	.06246	.05909	.05874	255.37000	7.75240	.06635
4.568	1.700	32.04300	5.96630	-2.07890	4.16970	.06263	.05923	.05925	255.21000	7.74710	.06659
4.579	1.900	32.05600	5.96630	-2.08130	4.16940	.06278	.05919	.05962	255.21000	7.74650	.06667
4.573	2.100	32.05900	5.96640	-2.08320	4.16740	.06296	.05914	.06014	255.11000	7.74290	.06694
4.563	2.300	32.06000	5.96650	-2.08490	4.16610	.06333	.05941	.06084	255.05000	7.74040	.06747
4.564	2.500	32.07300	5.96660	-2.08750	4.16200	.06373	.05974	.06156	254.81000	7.73280	.06803
4.570	2.700	32.08400	5.96670	-2.09000	4.15950	.06392	.05991	.06214	254.68000	7.72820	.06849
4.561	2.900	32.08700	5.96680	-2.09210	4.15720	.06431	.06024	.06294	254.55000	7.72380	.06911
4.558	3.050	32.08800	5.96740	-2.09380	4.16400	.06553	.06131	.06514	255.06000	7.73650	.07062
	GRADIENT	.03129	.00050	-.00951	-.02619	.00093	.00099	.00063	-1.51857	-.04873	.00120

OA257 (LARC 20-M6-6559) OV102 W/(FSB) (S7E118) (10 JUL 81)

REFERENCE DATA

SREF = 2690.0000 SQ.FT. XMRP = 1076.6800 IN. XO
LREF = 474.8100 INCHES YMRP = .0000 IN. YO
BREF = 936.6800 INCHES ZMRP = 375.0000 IN. ZO
SCALE = .0100

PARAMETRIC DATA

ALPHA = 32.500 PHI = .000
SPDBRK = 86.600 AILRON = .000
YP = 1.000 1S = .000
ELEVON = .000 MACH = 6.000
S-MODE = 2.000 S-DIR = 1.000

RUN NO. 2091/ 0 RN/L = 4.53 GRADIENT INTERVAL = -.60/ .60

RN/L	BETA	ALPHA	MACH	PHI	Q	BP1	BP2	BP3	PT1	PT2	PSC
4.435	-4.200	31.82000	5.96350	-2.02880	4.13310	.06178	.05618	.05477	252.50000	7.67920	.06450
4.452	-4.000	31.83200	5.96360	-2.03050	4.14040	.06170	.05617	.05478	252.96000	7.69280	.06441
4.474	-3.800	31.83300	5.96370	-2.03150	4.14580	.06154	.05646	.05502	253.31000	7.70290	.06434
4.479	-3.600	31.83500	5.96380	-2.03270	4.15240	.06130	.05675	.05520	253.72000	7.71500	.06422
4.466	-3.400	31.84400	5.96390	-2.03380	4.15550	.06116	.05725	.05558	253.93000	7.72080	.06409
4.482	-3.200	31.86400	5.96400	-2.03600	4.16100	.06101	.05767	.05590	254.28000	7.73100	.06414
4.518	-3.000	31.86900	5.96410	-2.03720	4.16520	.06082	.05779	.05619	254.56000	7.73880	.06397
4.524	-2.800	31.86900	5.96420	-2.03820	4.17010	.06067	.05790	.05645	254.87000	7.74800	.06390
4.531	-2.600	31.87600	5.96430	-2.03960	4.17430	.06056	.05796	.05662	255.14000	7.75570	.06380
4.522	-2.400	31.89700	5.96440	-2.04170	4.17680	.06042	.05804	.05673	255.31000	7.76030	.06374
4.531	-2.200	31.90300	5.96450	-2.04310	4.18060	.06032	.05789	.05685	255.56000	7.76740	.06364
4.551	-2.000	31.90500	5.96450	-2.04420	4.18680	.06027	.05784	.05695	255.96000	7.77890	.06363
4.528	-1.800	31.90900	5.96460	-2.04550	4.19110	.06030	.05775	.05683	256.24000	7.78700	.06356
4.516	-1.600	31.92400	5.96470	-2.04740	4.19420	.06031	.05769	.05674	256.44000	7.79260	.06354
4.525	-1.400	31.94000	5.96480	-2.04950	4.19830	.06033	.05766	.05672	256.71000	7.80030	.06358
4.536	-1.200	31.94000	5.96490	-2.05080	4.20340	.06033	.05748	.05646	257.04000	7.80970	.06349
4.550	-1.000	31.94300	5.96500	-2.05240	4.20750	.06039	.05745	.05626	257.31000	7.81740	.06347
4.553	-.800	31.96000	5.96510	-2.05460	4.20830	.06050	.05746	.05617	257.37000	7.81890	.06351
4.553	-.600	31.97500	5.96520	-2.05680	4.20830	.06050	.05737	.05608	257.39000	7.81890	.06346
4.548	-.400	31.97300	5.96530	-2.05840	4.20160	.06057	.05729	.05606	256.99000	7.80640	.06352
4.537	-.200	31.97300	5.96540	-2.05990	4.19200	.06077	.05754	.05618	256.42000	7.78850	.06378
4.531	.000	31.98100	5.96550	-2.06180	4.18610	.06088	.05762	.05613	256.08000	7.77770	.06385
4.530	.200	31.99500	5.96560	-2.06420	4.18320	.06108	.05790	.05632	255.92000	7.77220	.06414
4.531	.400	32.00000	5.96570	-2.06610	4.17920	.06135	.05819	.05664	255.69000	7.76480	.06458
4.536	.600	32.00100	5.96570	-2.06760	4.17830	.06155	.05832	.05674	255.65000	7.76300	.06481
4.546	.800	32.00800	5.96580	-2.06960	4.17340	.06165	.05839	.05691	255.37000	7.75400	.06493
4.557	1.000	32.02300	5.96590	-2.07210	4.17030	.06186	.05851	.05711	255.20000	7.74820	.06520
4.561	1.200	32.02900	5.96600	-2.07400	4.17070	.06213	.05869	.05773	255.23000	7.74890	.06565
4.567	1.400	32.03000	5.96610	-2.07560	4.17350	.06232	.05893	.05837	255.42000	7.75410	.06611
4.566	1.600	32.03600	5.96620	-2.07770	4.17040	.06257	.05920	.05901	255.25000	7.74840	.06654
4.578	1.800	32.05100	5.96630	-2.08020	4.17060	.06270	.05920	.05937	255.28000	7.74880	.06662
4.574	2.000	32.06200	5.96640	-2.08260	4.16750	.06287	.05917	.05991	255.10000	7.74300	.06682
4.568	2.200	32.06100	5.96650	-2.08400	4.16720	.06314	.05925	.06045	255.10000	7.74250	.06716
4.561	2.400	32.06400	5.96660	-2.08600	4.16430	.06355	.05957	.06122	254.94000	7.73700	.06776
4.568	2.600	32.07900	5.96670	-2.08880	4.16120	.06379	.05979	.06184	254.77000	7.73130	.06822
4.566	2.800	32.08800	5.96680	-2.09120	4.15770	.06408	.06005	.06247	254.57000	7.72480	.06881
4.562	3.000	32.08500	5.96690	-2.09290	4.15780	.06456	.06048	.06343	254.60000	7.72490	.06950
	GRADIENT	.02750	.00045	-.00930	-.02564	.00090	.00089	.00059	-1.48571	-.04771	.00117

OA257 (LARC 20-M6-6559) OV102 W/(FSB) (S7E019) (10 JUL 81)

REFERENCE DATA

SREF = 2690.0000 SQ.FT. XMRP = 1076.6800 IN. XO
LREF = 474.8100 INCHES YMRP = .0000 IN. YO
BREF = 936.6800 INCHES ZMRP = 375.0000 IN. ZO
SCALE = .0100

PARAMETRIC DATA

ALPHA = 30.000 PHI = .000
SPDBRK = 86.600 AILRON = .000
YP = 1.000 1S = 1.000
ELEVON = .000 MACH = 6.000
S-MODE = 2.000 S-DIR = 1.000

RUN NO. 94/ 0 RN/L = 4.35 GRADIENT INTERVAL = -.60/ .60

RN/L	BETA	ALPHA	MACH	PHI	Q	BP1	BP2	BP3	PT1	PT2	PSC
4.414	-4.669	29.21400	5.97080	-1.88110	4.02020	.05659	.04861	.04726	246.84000	7.46920	.05914
4.410	-4.500	29.21900	5.97090	-1.88230	4.01880	.05657	.04861	.04732	246.77000	7.46670	.05912
4.414	-4.300	29.22700	5.97090	-1.88360	4.01710	.05632	.04875	.04736	246.67000	7.46350	.05901
4.413	-4.100	29.22500	5.97100	-1.88410	4.01980	.05600	.04900	.04735	246.85000	7.46840	.05882
4.417	-3.900	29.23500	5.97100	-1.88550	4.01730	.05561	.04954	.04739	246.70000	7.46390	.05844
4.407	-3.700	29.24100	5.97110	-1.88660	4.01740	.05515	.05039	.04749	246.72000	7.46410	.05805
4.406	-3.500	29.24200	5.97110	-1.88760	4.01810	.05466	.05106	.04735	246.77000	7.46540	.05754
4.404	-3.300	29.25900	5.97120	-1.88930	4.01560	.05417	.05148	.04741	246.63000	7.46070	.05710
4.396	-3.100	29.25600	5.97120	-1.89010	4.01560	.05376	.05168	.04748	246.64000	7.46080	.05674
4.390	-2.900	29.26600	5.97130	-1.89150	4.01550	.05344	.05168	.04742	246.64000	7.46050	.05643
4.388	-2.700	29.27700	5.97130	-1.89290	4.01440	.05307	.05161	.04747	246.58000	7.45840	.05614
4.394	-2.500	29.27800	5.97140	-1.89410	4.01650	.05266	.05139	.04726	246.71000	7.46230	.05581
4.389	-2.300	29.29300	5.97140	-1.89580	4.01650	.05234	.05114	.04712	246.72000	7.46230	.05546
4.375	-2.100	29.29600	5.97150	-1.89690	4.01730	.05207	.05100	.04710	246.78000	7.46380	.05530
4.369	-1.900	29.29900	5.97150	-1.89800	4.01680	.05177	.05081	.04701	246.76000	7.46290	.05506
4.368	-1.700	29.31400	5.97160	-1.90010	4.01340	.05141	.05067	.04683	246.56000	7.45660	.05476
4.379	-1.500	29.31500	5.97160	-1.90130	4.01170	.05130	.05058	.04674	246.46000	7.45340	.05468
4.381	-1.300	29.32600	5.97170	-1.90310	4.01070	.05126	.05059	.04674	246.41000	7.45150	.05474
4.384	-1.100	29.33300	5.97170	-1.90480	4.00870	.05133	.05060	.04683	246.30000	7.44790	.05491
4.378	-.900	29.33200	5.97180	-1.90600	4.00710	.05140	.05053	.04690	246.21000	7.44490	.05511
4.367	-.700	29.35100	5.97180	-1.90850	3.99890	.05163	.05057	.04712	245.71000	7.42960	.05541
4.351	-.500	29.34900	5.97190	-1.90980	3.99470	.05204	.05082	.04765	245.46000	7.42180	.05590
4.336	-.300	29.35200	5.97190	-1.91140	3.98850	.05263	.05123	.04840	245.09000	7.41020	.05657
4.322	-.100	29.36600	5.97200	-1.91380	3.98050	.05334	.05188	.04937	244.61000	7.39550	.05731
4.320	.100	29.36500	5.97200	-1.91540	3.97940	.05401	.05240	.05025	244.55000	7.39340	.05797
4.310	.300	29.37800	5.97210	-1.91840	3.97370	.05470	.05308	.05121	244.21000	7.38280	.05877
4.307	.500	29.38300	5.97220	-1.92030	3.97440	.05505	.05343	.05166	244.26000	7.38410	.05923
4.301	.700	29.38400	5.97220	-1.92180	3.97100	.05526	.05343	.05162	244.06000	7.37780	.05932
4.295	.900	29.39900	5.97230	-1.92410	3.96670	.05535	.05350	.05160	243.80000	7.36980	.05932
4.290	1.100	29.39600	5.97230	-1.92530	3.96570	.05557	.05363	.05201	243.75000	7.36790	.05958
4.280	1.300	29.40800	5.97240	-1.92740	3.95680	.05588	.05404	.05270	243.21000	7.35140	.06004
4.281	1.500	29.41500	5.97240	-1.92920	3.95410	.05618	.05438	.05344	243.05000	7.34630	.06042
4.274	1.700	29.41200	5.97250	-1.93040	3.95250	.05644	.05458	.05381	242.96000	7.34330	.06065
4.273	1.900	29.43100	5.97250	-1.93300	3.95000	.05653	.05462	.05422	242.82000	7.33870	.06077
4.284	2.100	29.43200	5.97260	-1.93470	3.95210	.05665	.05454	.05450	242.96000	7.34270	.06088
4.293	2.300	29.44100	5.97260	-1.93660	3.95350	.05671	.05442	.05467	243.05000	7.34540	.06096
4.293	2.500	29.45300	5.97270	-1.93880	3.96110	.05676	.05442	.05492	243.53000	7.35940	.06113
4.303	2.700	29.45400	5.97270	-1.94040	3.97580	.05693	.05450	.05527	244.44000	7.38680	.06139
4.322	2.820	29.46600	5.97280	-1.94200	3.99700	.05730	.05488	.05590	245.75000	7.42600	.06197
	GRADIENT	.03529	.00030	-.01073	-.02100	.00313	.00273	.00420	-1.24286	-.03897	.00342

OA257 (LARC 20-M6-6559) OV102 W/(FSB) (S7E119) (10 JUL 81)

REFERENCE DATA

SREF = 2690.0000 SQ.FT. XMRP = 1076.6800 IN. XO
LREF = 474.8100 INCHES YMRP = .0000 IN. YO
BREF = 936.6800 INCHES ZMRP = 375.0000 IN. ZO
SCALE = .0100

PARAMETRIC DATA

ALPHA = 30.000 PHI = .000
SPDBRK = 86.600 AILRON = .000
YP = 1.000 1S = 1.000
ELEVON = .000 MACH = 6.000
S-MODE = 2.000 S-DIR = 1.000

RUN NO. 2094/ O RN/L = 4.35 GRADIENT INTERVAL = -.60/ .60

RN/L	BETA	ALPHA	MACH	PHI	Q	BP1	BP2	BP3	PT1	PT2	PSC
4.412	-4.600	29.21300	5.97090	-1.88140	4.01920	.05657	.04859	.04731	246.79000	7.46730	.05917
4.411	-4.400	29.22600	5.97090	-1.88320	4.01720	.05647	.04871	.04731	246.68000	7.46370	.05908
4.411	-4.200	29.22500	5.97100	-1.88380	4.01740	.05618	.04885	.04739	246.70000	7.46410	.05889
4.416	-4.000	29.22900	5.97100	-1.88470	4.01900	.05582	.04919	.04740	246.80000	7.46700	.05865
4.412	-3.800	29.24200	5.97110	-1.88630	4.01690	.05538	.04996	.04744	246.68000	7.46300	.05827
4.406	-3.600	29.24000	5.97110	-1.88700	4.01880	.05490	.05072	.04742	246.81000	7.46670	.05780
4.407	-3.400	29.25000	5.97120	-1.88850	4.01650	.05442	.05131	.04737	246.68000	7.46240	.05733
4.401	-3.200	29.25900	5.97120	-1.88980	4.01610	.05395	.05160	.04748	246.66000	7.46160	.05691
4.392	-3.000	29.26000	5.97130	-1.89070	4.01560	.05361	.05169	.04741	246.64000	7.46060	.05659
4.387	-2.800	29.27200	5.97130	-1.89230	4.01470	.05326	.05167	.04745	246.59000	7.45900	.05628
4.391	-2.600	29.27600	5.97140	-1.89350	4.01490	.05290	.05152	.04734	246.61000	7.45940	.05597
4.394	-2.400	29.28400	5.97140	-1.89480	4.01630	.05252	.05125	.04715	246.71000	7.46210	.05558
4.381	-2.200	29.29700	5.97150	-1.89650	4.01630	.05217	.05106	.04709	246.72000	7.46200	.05536
4.371	-2.000	29.29600	5.97150	-1.89730	4.01740	.05198	.05091	.04710	246.79000	7.46400	.05522
4.369	-1.800	29.31000	5.97160	-1.89930	4.01490	.05156	.05075	.04690	246.65000	7.45930	.05487
4.372	-1.600	29.31600	5.97160	-1.90090	4.01290	.05135	.05061	.04682	246.53000	7.45560	.05470
4.383	-1.400	29.31700	5.97170	-1.90200	4.01160	.05121	.05056	.04671	246.46000	7.45330	.05469
4.382	-1.200	29.33300	5.97170	-1.90420	4.00940	.05130	.05062	.04682	246.34000	7.44920	.05485
4.384	-1.000	29.33200	5.97180	-1.90530	4.00850	.05137	.05057	.04686	246.29000	7.44740	.05500
4.372	-.800	29.33900	5.97180	-1.90700	4.00260	.05149	.05054	.04697	245.93000	7.43650	.05525
4.358	-.600	29.34900	5.97190	-1.90920	3.99590	.05181	.05064	.04729	245.53000	7.42400	.05560
4.344	-.400	29.34700	5.97190	-1.91050	3.99270	.05233	.05102	.04797	245.35000	7.41820	.05621
4.326	-.200	29.36300	5.97200	-1.91290	3.98260	.05299	.05159	.04886	244.73000	7.39930	.05694
4.321	.000	29.36300	5.97200	-1.91450	3.97980	.05366	.05214	.04985	244.57000	7.39410	.05763
4.316	.200	29.36800	5.97210	-1.91670	3.97630	.05440	.05271	.05073	244.36000	7.38770	.05839
4.307	.400	29.38200	5.97210	-1.91960	3.97310	.05489	.05328	.05153	244.18000	7.38170	.05906
4.305	.600	29.38400	5.97220	-1.92100	3.97370	.05517	.05346	.05171	244.22000	7.38280	.05931
4.296	.800	29.39300	5.97220	-1.92310	3.96790	.05532	.05349	.05159	243.87000	7.37190	.05934
4.292	1.000	29.39800	5.97230	-1.92470	3.96580	.05541	.05356	.05176	243.75000	7.36810	.05942
4.284	1.200	29.39900	5.97230	-1.92620	3.96170	.05567	.05379	.05235	243.51000	7.36050	.05978
4.282	1.400	29.41600	5.97240	-1.92850	3.95520	.05603	.05425	.05309	243.12000	7.34840	.06026
4.279	1.600	29.41300	5.97240	-1.92980	3.95340	.05633	.05450	.05362	243.01000	7.34500	.06054
4.272	1.800	29.42400	5.97250	-1.93200	3.95080	.05649	.05461	.05397	242.86000	7.34020	.06072
4.278	2.000	29.43300	5.97250	-1.93390	3.95140	.05661	.05461	.05441	242.91000	7.34140	.06085
4.291	2.200	29.43100	5.97260	-1.93530	3.95250	.05668	.05446	.05455	242.98000	7.34340	.06092
4.292	2.400	29.44900	5.97260	-1.93790	3.95630	.05675	.05441	.05482	243.22000	7.35040	.06102
4.298	2.600	29.45300	5.97270	-1.93960	3.96860	.05687	.05444	.05509	243.99000	7.37340	.06126
4.317	2.800	29.46400	5.97280	-1.94180	3.98700	.05715	.05469	.05560	245.13000	7.40750	.06175
	GRADIENT	.03214	.00025	-.01025	-.02002	.00296	.00252	.00397	-1.18571	-.03718	.00326

OA257 (LARC 20-M6-6559) OV102 W/(FSB) (S7E020) (10 JUL 81)

REFERENCE DATA

SREF = 2690.0000 SQ.FT. XMRP = 1076.6800 IN. XO
LREF = 474.8100 INCHES YMRP = .0000 IN. YO
BREF = 936.6800 INCHES ZMRP = 375.0000 IN. ZO
SCALE = .0100

PARAMETRIC DATA

ALPHA = 32.500 PHI = .000
SPDBRK = 86.600 AILRON = .000
YP = 1.000 1S = 1.000
ELEVON = .000 MACH = 6.000
S-MODE = 2.000 S-DIR = 1.000

RUN NO. 95/ 0 RN/L = 4.40 GRADIENT INTERVAL = -.60/ .60

RN/L	BETA	ALPHA	MACH	PHI	Q	BP1	BP2	BP3	PT1	PT2	PSC
4.505	-4.953	31.61900	5.97430	-2.01750	4.08660	.05267	.04150	.03771	251.53000	7.59240	.05109
4.498	-4.800	31.62400	5.97440	-2.01860	4.08320	.05279	.04152	.03767	251.33000	7.58610	.05114
4.492	-4.600	31.62600	5.97440	-2.01980	4.08430	.05286	.04158	.03781	251.41000	7.58820	.05119
4.485	-4.400	31.62500	5.97450	-2.02080	4.08430	.05281	.04160	.03793	251.42000	7.58830	.05105
4.472	-4.200	31.64000	5.97450	-2.02260	4.08110	.05254	.04185	.03818	251.23000	7.58230	.05088
4.466	-4.000	31.63600	5.97460	-2.02350	4.07970	.05215	.04207	.03842	251.14000	7.57960	.05069
4.459	-3.800	31.64900	5.97460	-2.02520	4.07460	.05172	.04259	.03866	250.84000	7.57010	.05039
4.460	-3.600	31.65400	5.97460	-2.02640	4.07370	.05121	.04321	.03901	250.79000	7.56860	.05011
4.446	-3.400	31.66000	5.97470	-2.02770	4.06880	.05078	.04400	.03927	250.50000	7.55950	.04979
4.440	-3.200	31.66900	5.97470	-2.02940	4.06530	.05034	.04489	.03947	250.29000	7.55300	.04955
4.431	-3.000	31.67000	5.97470	-2.03040	4.06180	.04996	.04568	.03967	250.08000	7.54640	.04927
4.421	-2.800	31.68300	5.97480	-2.03220	4.05310	.04963	.04620	.03975	249.55000	7.53030	.04896
4.422	-2.600	31.68600	5.97480	-2.03340	4.05140	.04928	.04646	.03975	249.45000	7.52710	.04870
4.421	-2.400	31.69700	5.97490	-2.03500	4.04910	.04893	.04626	.03952	249.32000	7.52280	.04834
4.418	-2.200	31.70100	5.97490	-2.03630	4.04750	.04863	.04600	.03929	249.23000	7.51990	.04803
4.416	-2.000	31.70500	5.97490	-2.03770	4.04530	.04837	.04548	.03883	249.10000	7.51590	.04767
4.410	-1.800	31.72200	5.97500	-2.03990	4.04370	.04805	.04494	.03841	249.01000	7.51290	.04727
4.404	-1.600	31.72000	5.97500	-2.04100	4.04170	.04777	.04426	.03792	248.89000	7.50900	.04684
4.396	-1.400	31.73300	5.97510	-2.04300	4.03820	.04765	.04375	.03761	248.68000	7.50260	.04659
4.399	-1.200	31.73600	5.97510	-2.04440	4.03870	.04767	.04329	.03749	248.72000	7.50350	.04651
4.400	-1.000	31.74200	5.97510	-2.04610	4.03920	.04771	.04295	.03738	248.75000	7.50440	.04653
4.390	-.800	31.75800	5.97520	-2.04840	4.03710	.04783	.04272	.03745	248.63000	7.50060	.04664
4.378	-.600	31.75500	5.97520	-2.04970	4.03570	.04803	.04255	.03760	248.55000	7.49790	.04678
4.366	-.400	31.77200	5.97520	-2.05190	4.03240	.04814	.04249	.03775	248.36000	7.49190	.04693
4.365	-.200	31.77400	5.97530	-2.05350	4.03290	.04829	.04249	.03795	248.39000	7.49270	.04709
4.360	.000	31.78100	5.97530	-2.05540	4.02920	.04832	.04243	.03797	248.17000	7.48580	.04716
4.354	.200	31.79200	5.97540	-2.05730	4.02940	.04829	.04243	.03809	248.19000	7.48630	.04725
4.347	.400	31.79000	5.97540	-2.05880	4.02890	.04815	.04226	.03792	248.16000	7.48520	.04717
4.341	.600	31.80800	5.97540	-2.06140	4.02610	.04800	.04213	.03787	248.00000	7.48020	.04707
4.336	.800	31.80400	5.97550	-2.06260	4.02380	.04784	.04195	.03772	247.87000	7.47590	.04694
4.337	1.000	31.81700	5.97550	-2.06490	4.02190	.04779	.04180	.03769	247.75000	7.47230	.04684
4.344	1.200	31.82500	5.97550	-2.06680	4.02140	.04777	.04172	.03778	247.73000	7.47130	.04690
4.346	1.400	31.82600	5.97560	-2.06850	4.01770	.04776	.04165	.03781	247.51000	7.46440	.04690
4.342	1.600	31.84200	5.97560	-2.07100	4.01510	.04768	.04172	.03794	247.36000	7.45970	.04697
4.334	1.800	31.84100	5.97570	-2.07260	4.01230	.04776	.04168	.03801	247.19000	7.45450	.04704
4.323	2.000	31.85600	5.97570	-2.07510	4.00590	.04801	.04169	.03821	246.80000	7.44250	.04724
4.318	2.200	31.85500	5.97570	-2.07690	4.00340	.04821	.04169	.03835	246.65000	7.43780	.04741
4.308	2.400	31.86200	5.97580	-2.07880	3.99930	.04834	.04164	.03835	246.41000	7.43040	.04754
4.299	2.600	31.87100	5.97580	-2.08110	3.99570	.04859	.04170	.03840	246.19000	7.42350	.04781
	GRADIENT	.03804	.00020	-.00941	-.00702	-.00001	-.00032	.00023	-.40179	-.01302	.00028

OA257 (LARC 20-M6-6559) OV102 W/(FSB) (S7E120) (10 JUL 81)

REFERENCE DATA

SREF = 2690.0000 SQ.FT. XMRP = 1076.6800 IN. XO
LREF = 474.8100 INCHES YMRP = .0000 IN. YO
BREF = 936.6800 INCHES ZMRP = 375.0000 IN. ZO
SCALE = .0100

PARAMETRIC DATA

ALPHA = 32.500 PHI = .000
SPDBRK = 86.600 AILRON = .000
YP = 1.000 1S = 1.000
ELEVON = .000 MACH = 6.000
S-MODE = 2.000 S-DIR = 1.000

RUN NO. 2095/ O RN/L = 4.39 GRADIENT INTERVAL = -.60/ .60

RN/L	BETA	ALPHA	MACH	PHI	Q	BP1	BP2	BP3	PT1	PT2	PSC
4.505	-4.900	31.61300	5.97440	-2.01750	4.08510	.05271	.04147	.03765	251.45000	7.58980	.05112
4.492	-4.700	31.62800	5.97440	-2.01930	4.08320	.05287	.04152	.03773	251.34000	7.58630	.05118
4.490	-4.500	31.62300	5.97450	-2.02010	4.08500	.05284	.04158	.03782	251.46000	7.58950	.05109
4.477	-4.300	31.63400	5.97450	-2.02180	4.08270	.05270	.04171	.03805	251.32000	7.58520	.05097
4.468	-4.100	31.63700	5.97450	-2.02300	4.08020	.05237	.04197	.03830	251.18000	7.58070	.05079
4.462	-3.900	31.64200	5.97460	-2.02420	4.07670	.05198	.04230	.03852	250.97000	7.57410	.05054
4.462	-3.700	31.65500	5.97460	-2.02600	4.07510	.05145	.04287	.03883	250.88000	7.57120	.05028
4.453	-3.500	31.65500	5.97470	-2.02690	4.07160	.05100	.04356	.03913	250.67000	7.56460	.04992
4.443	-3.300	31.66900	5.97470	-2.02890	4.06690	.05054	.04448	.03940	250.39000	7.55600	.04965
4.435	-3.100	31.66800	5.97470	-2.02970	4.06340	.05020	.04532	.03959	250.17000	7.54940	.04940
4.428	-2.900	31.67600	5.97480	-2.03120	4.05790	.04984	.04598	.03977	249.84000	7.53930	.04915
4.420	-2.700	31.68600	5.97480	-2.03280	4.05150	.04944	.04639	.03976	249.45000	7.52730	.04882
4.424	-2.500	31.69000	5.97480	-2.03420	4.05110	.04909	.04638	.03962	249.44000	7.52660	.04851
4.418	-2.300	31.70300	5.97490	-2.03590	4.04790	.04879	.04617	.03942	249.24000	7.52060	.04820
4.415	-2.100	31.70400	5.97490	-2.03700	4.04640	.04852	.04577	.03911	249.16000	7.51780	.04785
4.412	-1.900	31.71300	5.97500	-2.03880	4.04300	.04821	.04528	.03862	248.95000	7.51140	.04747
4.407	-1.700	31.72000	5.97500	-2.04040	4.04270	.04789	.04459	.03821	248.95000	7.51100	.04704
4.400	-1.500	31.72300	5.97500	-2.04180	4.03980	.04768	.04398	.03769	248.77000	7.50550	.04670
4.395	-1.300	31.74100	5.97510	-2.04410	4.03820	.04766	.04355	.03750	248.68000	7.50270	.04654
4.399	-1.100	31.73900	5.97510	-2.04530	4.03970	.04766	.04311	.03738	248.78000	7.50530	.04651
4.395	-.900	31.75400	5.97510	-2.04740	4.03800	.04778	.04284	.03739	248.68000	7.50220	.04655
4.384	-.700	31.75500	5.97520	-2.04890	4.03680	.04791	.04263	.03753	248.61000	7.49990	.04669
4.371	-.500	31.76000	5.97520	-2.05060	4.03370	.04810	.04251	.03766	248.43000	7.49410	.04683
4.365	-.300	31.77500	5.97530	-2.05280	4.03300	.04821	.04253	.03789	248.40000	7.49300	.04701
4.365	-.100	31.77300	5.97530	-2.05420	4.03190	.04827	.04241	.03800	248.33000	7.49090	.04712
4.355	.100	31.79100	5.97530	-2.05660	4.02810	.04830	.04244	.03801	248.11000	7.48390	.04723
4.352	.300	31.78800	5.97540	-2.05790	4.03010	.04822	.04236	.03798	248.24000	7.48750	.04719
4.342	.500	31.79800	5.97540	-2.06000	4.02630	.04808	.04221	.03788	248.01000	7.48050	.04711
4.338	.700	31.81000	5.97540	-2.06220	4.02490	.04790	.04206	.03786	247.93000	7.47790	.04701
4.335	.900	31.80900	5.97550	-2.06360	4.02250	.04779	.04184	.03768	247.79000	7.47340	.04686
4.341	1.100	31.82500	5.97550	-2.06610	4.02180	.04775	.04175	.03772	247.75000	7.47210	.04685
4.344	1.300	31.82200	5.97560	-2.06750	4.02000	.04778	.04171	.03779	247.65000	7.46880	.04692
4.344	1.500	31.83900	5.97560	-2.07000	4.01480	.04774	.04170	.03788	247.33000	7.45910	.04697
4.338	1.700	31.84200	5.97560	-2.07180	4.01400	.04768	.04170	.03795	247.29000	7.45760	.04699
4.328	1.900	31.84800	5.97570	-2.07380	4.00950	.04788	.04165	.03811	247.02000	7.44930	.04714
4.319	2.100	31.85800	5.97570	-2.07610	4.00360	.04812	.04168	.03830	246.66000	7.43820	.04736
4.314	2.300	31.85800	5.97580	-2.07780	4.00220	.04827	.04163	.03829	246.58000	7.43570	.04749
4.303	2.500	31.87100	5.97580	-2.08020	3.99710	.04847	.04166	.03838	246.28000	7.42620	.04766
4.294	2.655	31.86400	5.97580	-2.08120	3.99290	.04870	.04174	.03843	246.03000	7.41850	.04794
	GRADIENT	.03529	.00019	-.00924	-.00707	-.00001	-.00028	.00019	-.40000	-.01307	.00029

OA257 (LARC 20-M6-6559) OV102 W/(FSB) (S7E021) (10 JUL 81)

REFERENCE DATA

SREF = 2690.0000 SQ.FT. XMRP = 1076.6800 IN. XO
LREF = 474.8100 INCHES YMRP = .0000 IN. YO
BREF = 936.6800 INCHES ZMRP = 375.0000 IN. ZO
SCALE = .0100

PARAMETRIC DATA

ALPHA = 35.000 PHI = .000
SPDBRK = 86.600 AILRON = .000
YP = 1.000 1S = 1.000
ELEVON = .000 MACH = 6.000
S-MODE = 2.000 S-DIR = 1.000

RUN NO. 96/ 0 RN/L = 4.47 GRADIENT INTERVAL = -.60/ .60

RN/L	BETA	ALPHA	MACH	PHI	Q	BP1	BP2	BP3	PT1	PT2	PSC
4.532	-4.807	34.13800	5.96830	-2.15510	4.18060	.05630	.05251	.04300	256.24000	7.76730	.05552
4.532	-4.700	34.14700	5.96840	-2.15590	4.18250	.05636	.05260	.04320	256.38000	7.77080	.05567
4.536	-4.500	34.15200	5.96850	-2.15720	4.18670	.05636	.05264	.04324	256.66000	7.77860	.05561
4.545	-4.300	34.16300	5.96860	-2.15890	4.19120	.05638	.05274	.04339	256.95000	7.78700	.05559
4.542	-4.100	34.16300	5.96870	-2.16010	4.19380	.05640	.05269	.04345	257.13000	7.79180	.05541
4.534	-3.900	34.18000	5.96880	-2.16230	4.19010	.05638	.05248	.04357	256.92000	7.78500	.05524
4.536	-3.700	34.17800	5.96890	-2.16360	4.18300	.05629	.05200	.04368	256.50000	7.77180	.05499
4.527	-3.500	34.18500	5.96900	-2.16570	4.16780	.05609	.05135	.04371	255.59000	7.74350	.05471
4.502	-3.300	34.18900	5.96910	-2.16740	4.15270	.05594	.05075	.04374	254.67000	7.71540	.05442
4.490	-3.100	34.18900	5.96920	-2.16880	4.14440	.05594	.05015	.04372	254.18000	7.70010	.05419
4.481	-2.900	34.20600	5.96930	-2.17100	4.13720	.05590	.04964	.04372	253.76000	7.68670	.05404
4.474	-2.700	34.20200	5.96940	-2.17210	4.13390	.05594	.04931	.04366	253.57000	7.68050	.05383
4.470	-2.500	34.21400	5.96950	-2.17430	4.12080	.05600	.04918	.04362	252.79000	7.65630	.05369
4.459	-2.300	34.21900	5.96960	-2.17570	4.11400	.05615	.04894	.04354	252.39000	7.64360	.05351
4.447	-2.100	34.22500	5.96970	-2.17730	4.11020	.05624	.04866	.04341	252.17000	7.63640	.05331
4.442	-1.900	34.23500	5.96980	-2.17920	4.10490	.05632	.04839	.04328	251.86000	7.62660	.05317
4.450	-1.700	34.23700	5.96990	-2.18060	4.10400	.05641	.04806	.04305	251.83000	7.62500	.05299
4.449	-1.500	34.25300	5.97000	-2.18280	4.10260	.05655	.04768	.04298	251.75000	7.62230	.05281
4.440	-1.300	34.25400	5.97010	-2.18420	4.10190	.05665	.04734	.04283	251.73000	7.62110	.05267
4.439	-1.100	34.26600	5.97020	-2.18620	4.10180	.05668	.04698	.04268	251.74000	7.62080	.05249
4.444	-.900	34.27500	5.97030	-2.18810	4.10440	.05668	.04665	.04256	251.92000	7.62570	.05239
4.444	-.700	34.27600	5.97040	-2.18950	4.10600	.05663	.04638	.04235	252.03000	7.62870	.05217
4.441	-.500	34.29500	5.97050	-2.19190	4.10450	.05653	.04624	.04223	251.96000	7.62580	.05205
4.436	-.300	34.29500	5.97050	-2.19340	4.10460	.05646	.04624	.04219	251.98000	7.62600	.05208
4.441	-.100	34.31100	5.97060	-2.19580	4.10480	.05644	.04632	.04219	252.01000	7.62640	.05216
4.442	.100	34.31500	5.97070	-2.19750	4.10610	.05651	.04649	.04229	252.11000	7.62890	.05241
4.455	.300	34.32000	5.97080	-2.19930	4.10850	.05669	.04686	.04256	252.27000	7.63330	.05279
4.455	.500	34.33500	5.97090	-2.20180	4.10790	.05679	.04719	.04295	252.25000	7.63220	.05322
4.453	.700	34.33600	5.97100	-2.20340	4.11080	.05680	.04735	.04329	252.44000	7.63750	.05356
4.455	.900	34.35500	5.97110	-2.20610	4.10990	.05689	.04750	.04364	252.41000	7.63580	.05379
4.450	1.100	34.35300	5.97120	-2.20770	4.10970	.05693	.04754	.04386	252.41000	7.63550	.05410
4.444	1.300	34.36400	5.97130	-2.20990	4.10890	.05697	.04755	.04412	252.38000	7.63400	.05430
4.455	1.500	34.37400	5.97140	-2.21220	4.11110	.05688	.04745	.04437	252.53000	7.63820	.05442
4.459	1.700	34.37400	5.97150	-2.21380	4.11060	.05698	.04735	.04464	252.52000	7.63710	.05470
4.458	1.900	34.39600	5.97160	-2.21680	4.11070	.05714	.04745	.04508	252.55000	7.63740	.05518
4.462	2.100	34.39500	5.97170	-2.21840	4.11400	.05740	.04764	.04570	252.76000	7.64340	.05582
4.462	2.300	34.41000	5.97180	-2.22100	4.11310	.05778	.04807	.04647	252.73000	7.64180	.05663
4.466	2.500	34.41300	5.97190	-2.22300	4.11390	.05795	.04852	.04708	252.79000	7.64330	.05735
4.459	2.700	34.42100	5.97210	-2.22560	4.11590	.05763	.04921	.04781	252.94000	7.64690	.05805
	GRADIENT	.03986	.00043	-.00984	.00429	.00029	.00097	.00068	.34572	.00806	.00117

OA257 (LARC 20-M6-6559) OV102 W/(FSB) (S7E121) (10 JUL 81)

REFERENCE DATA

SREF = 2690.0000 SQ.FT. XMRP = 1076.6800 IN. XO
LREF = 474.8100 INCHES YMRP = .0000 IN. YO
BREF = 936.6800 INCHES ZMRP = 375.0000 IN. ZO
SCALE = .0100

PARAMETRIC DATA

ALPHA = 35.000 PHI = .000
SPDBRK = 86.600 AILRON = .000
YP = 1.000 1S = 1.000
ELEVON = .000 MACH = 6.000
S-MODE = 2.000 S-DIR = 1.000

RUN NO. 2096/ 0 RN/L = 4.47 GRADIENT INTERVAL = -.60/ .60

RN/L	BETA	ALPHA	MACH	PHI	Q	BP1	BP2	BP3	PT1	PT2	PSC
4.532	-4.800	34.14300	5.96830	-2.15530	4.18090	.05630	.05254	.04301	256.27000	7.76790	.05555
4.534	-4.600	34.14600	5.96850	-2.15630	4.18530	.05637	.05262	.04322	256.56000	7.77600	.05566
4.540	-4.400	34.15900	5.96860	-2.15830	4.18810	.05637	.05271	.04325	256.75000	7.78120	.05561
4.545	-4.200	34.16200	5.96870	-2.15950	4.19270	.05639	.05274	.04342	257.05000	7.78980	.05552
4.537	-4.000	34.16900	5.96880	-2.16100	4.19260	.05640	.05260	.04353	257.06000	7.78960	.05532
4.537	-3.800	34.18100	5.96890	-2.16310	4.18700	.05635	.05226	.04367	256.74000	7.77920	.05513
4.536	-3.600	34.17700	5.96900	-2.16440	4.17680	.05622	.05166	.04363	256.13000	7.76030	.05483
4.515	-3.400	34.19000	5.96910	-2.16670	4.15870	.05603	.05106	.04374	255.04000	7.72670	.05455
4.493	-3.200	34.18700	5.96910	-2.16800	4.14850	.05593	.05045	.04370	254.43000	7.70770	.05430
4.487	-3.000	34.19900	5.96920	-2.17000	4.13990	.05592	.04990	.04373	253.92000	7.69170	.05411
4.476	-2.800	34.20600	5.96930	-2.17170	4.13490	.05589	.04944	.04374	253.63000	7.68250	.05395
4.472	-2.600	34.20500	5.96940	-2.17310	4.12880	.05598	.04927	.04365	253.27000	7.67100	.05376
4.461	-2.400	34.21900	5.96950	-2.17530	4.11510	.05607	.04907	.04355	252.45000	7.64570	.05359
4.455	-2.200	34.22000	5.96960	-2.17640	4.11320	.05616	.04878	.04348	252.35000	7.64210	.05339
4.441	-2.000	34.23300	5.96970	-2.17850	4.10650	.05630	.04856	.04334	251.95000	7.62960	.05325
4.446	-1.800	34.23600	5.96980	-2.17980	4.10470	.05637	.04823	.04322	251.86000	7.62630	.05313
4.448	-1.600	34.24300	5.96990	-2.18160	4.10300	.05647	.04785	.04302	251.77000	7.62300	.05288
4.446	-1.400	34.25600	5.97000	-2.18370	4.10210	.05660	.04748	.04290	251.74000	7.62150	.05274
4.437	-1.200	34.25600	5.97010	-2.18490	4.10230	.05667	.04713	.04277	251.76000	7.62180	.05259
4.442	-1.000	34.27400	5.97020	-2.18740	4.10220	.05669	.04683	.04264	251.77000	7.62160	.05243
4.445	-.800	34.27400	5.97030	-2.18870	4.10510	.05664	.04653	.04249	251.97000	7.62700	.05223
4.443	-.600	34.28600	5.97040	-2.19070	4.10550	.05657	.04630	.04227	252.01000	7.62780	.05210
4.439	-.400	34.29600	5.97050	-2.19270	4.10510	.05651	.04619	.04220	252.00000	7.62690	.05205
4.436	-.200	34.29900	5.97060	-2.19430	4.10400	.05649	.04628	.04219	251.95000	7.62490	.05209
4.444	.000	34.31800	5.97070	-2.19690	4.10600	.05644	.04635	.04219	252.09000	7.62870	.05224
4.448	.200	34.31500	5.97080	-2.19820	4.10820	.05664	.04668	.04239	252.24000	7.63280	.05260
4.457	.400	34.33200	5.97090	-2.20080	4.10740	.05675	.04704	.04275	252.21000	7.63130	.05298
4.452	.600	34.33300	5.97100	-2.20240	4.10950	.05683	.04731	.04311	252.36000	7.63510	.05344
4.456	.800	34.34200	5.97110	-2.20450	4.11090	.05691	.04741	.04344	252.46000	7.63770	.05367
4.451	1.000	34.35500	5.97120	-2.20700	4.10900	.05693	.04754	.04377	252.36000	7.63410	.05401
4.447	1.200	34.35400	5.97130	-2.20860	4.10980	.05694	.04752	.04394	252.42000	7.63560	.05418
4.448	1.400	34.37300	5.97140	-2.21130	4.11000	.05694	.04753	.04424	252.45000	7.63600	.05439
4.457	1.600	34.37300	5.97150	-2.21300	4.11120	.05690	.04737	.04450	252.55000	7.63830	.05456
4.459	1.800	34.38700	5.97160	-2.21540	4.11010	.05705	.04741	.04484	252.50000	7.63620	.05492
4.461	2.000	34.39600	5.97170	-2.21760	4.11300	.05724	.04752	.04538	252.69000	7.64160	.05547
4.460	2.200	34.39900	5.97180	-2.21950	4.11250	.05757	.04784	.04607	252.68000	7.64070	.05622
4.464	2.400	34.41600	5.97190	-2.22230	4.11370	.05792	.04832	.04686	252.77000	7.64290	.05700
4.464	2.600	34.41300	5.97200	-2.22390	4.11460	.05794	.04877	.04729	252.84000	7.64460	.05761
4.459	2.710	34.42300	5.97210	-2.22580	4.11630	.05757	.04928	.04789	252.97000	7.64780	.05811
	GRADIENT	.04089	.00050	-.00986	.00371	.00025	.00092	.00069	.31429	.00689	.00115

OA257 (LARC 20-M6-6559) OV102 W/(FSB) (S7E022) (10 JUL 81)

REFERENCE DATA

SREF = 2690.0000 SQ.FT. XMRP = 1076.6800 IN. XO
LREF = 474.8100 INCHES YMRP = .0000 IN. YO
BREF = 936.6800 INCHES ZMRP = 375.0000 IN. ZO
SCALE = .0100

PARAMETRIC DATA

ALPHA = 37.500 PHI = .000
SPDBRK = 86.600 AILRON = .000
YP = 1.000 1S = 1.000
ELEVON = .000 MACH = 6.000
S-MODE = 2.000 S-DIR = 1.000

RUN NO. 97/ 0 RN/L = 4.54 GRADIENT INTERVAL = -.60/ .60

RN/L	BETA	ALPHA	MACH	PHI	Q	BP1	BP2	BP3	PT1	PT2	PSC
4.636	-4.920	36.66400	5.96620	-2.29060	4.22260	.05960	.05597	.04707	258.45000	7.84530	.06156
4.633	-4.800	36.68600	5.96630	-2.29240	4.22560	.05959	.05602	.04705	258.66000	7.85110	.06164
4.626	-4.600	36.67900	5.96640	-2.29330	4.22140	.05942	.05591	.04712	258.41000	7.84310	.06167
4.611	-4.400	36.69200	5.96650	-2.29560	4.21090	.05946	.05575	.04719	257.78000	7.82370	.06162
4.603	-4.200	36.68700	5.96660	-2.29690	4.20370	.05942	.05550	.04713	257.35000	7.81030	.06145
4.593	-4.000	36.70300	5.96660	-2.29930	4.19310	.05923	.05528	.04718	256.72000	7.79060	.06136
4.588	-3.800	36.70200	5.96670	-2.30090	4.18730	.05931	.05506	.04712	256.38000	7.77980	.06125
4.584	-3.600	36.71700	5.96680	-2.30320	4.18060	.05951	.05477	.04709	255.98000	7.76730	.06113
4.579	-3.400	36.71800	5.96690	-2.30490	4.17210	.05971	.05443	.04708	255.47000	7.75150	.06103
4.564	-3.200	36.72600	5.96700	-2.30690	4.16160	.06001	.05398	.04701	254.84000	7.73200	.06072
4.553	-3.000	36.73200	5.96700	-2.30860	4.15770	.06012	.05342	.04700	254.62000	7.72480	.06049
4.554	-2.800	36.74200	5.96710	-2.31070	4.15440	.06007	.05267	.04688	254.43000	7.71870	.06010
4.560	-2.600	36.75200	5.96720	-2.31250	4.15480	.06006	.05205	.04690	254.47000	7.71940	.05993
4.556	-2.400	36.75400	5.96730	-2.31420	4.15290	.06031	.05152	.04685	254.36000	7.71580	.05975
4.545	-2.200	36.77000	5.96730	-2.31630	4.14750	.06060	.05102	.04676	254.04000	7.70580	.05950
4.543	-2.000	36.76800	5.96740	-2.31770	4.14530	.06104	.05063	.04652	253.93000	7.70180	.05924
4.539	-1.800	36.78700	5.96750	-2.32000	4.14030	.06137	.05027	.04641	253.64000	7.69260	.05910
4.543	-1.600	36.78100	5.96760	-2.32130	4.13220	.06150	.05002	.04626	253.15000	7.67740	.05895
4.529	-1.400	36.80000	5.96760	-2.32390	4.12570	.06168	.04987	.04616	252.76000	7.66530	.05884
4.522	-1.200	36.79500	5.96770	-2.32480	4.12620	.06194	.04974	.04612	252.81000	7.66620	.05882
4.532	-1.000	36.81500	5.96780	-2.32750	4.12490	.06222	.04977	.04615	252.74000	7.66390	.05876
4.531	-.800	36.81500	5.96790	-2.32900	4.12710	.06254	.04979	.04623	252.89000	7.66790	.05875
4.521	-.600	36.83300	5.96790	-2.33150	4.12680	.06284	.04983	.04625	252.89000	7.66740	.05869
4.516	-.400	36.83300	5.96800	-2.33310	4.12770	.06308	.04991	.04623	252.95000	7.66900	.05875
4.514	-.200	36.84900	5.96810	-2.33540	4.12790	.06323	.04997	.04627	252.98000	7.66940	.05871
4.519	.000	36.85200	5.96820	-2.33720	4.13210	.06332	.04997	.04630	253.25000	7.67730	.05876
4.516	.200	36.86400	5.96830	-2.33950	4.13230	.06336	.04999	.04633	253.28000	7.67760	.05876
4.511	.400	36.87200	5.96830	-2.34160	4.13340	.06333	.04997	.04630	253.36000	7.67960	.05878
4.506	.600	36.87800	5.96840	-2.34350	4.13090	.06343	.05001	.04633	253.22000	7.67490	.05883
4.510	.800	36.89200	5.96850	-2.34590	4.13230	.06348	.05006	.04658	253.32000	7.67760	.05901
4.515	1.000	36.89600	5.96860	-2.34770	4.13310	.06351	.05008	.04673	253.38000	7.67900	.05917
4.524	1.200	36.91100	5.96860	-2.35040	4.13330	.06348	.05005	.04693	253.41000	7.67940	.05937
4.519	1.400	36.91500	5.96870	-2.35220	4.13360	.06325	.04997	.04699	253.44000	7.68000	.05948
4.512	1.600	36.92900	5.96880	-2.35500	4.13520	.06316	.05005	.04725	253.55000	7.68290	.05983
4.508	1.800	36.92600	5.96890	-2.35670	4.13470	.06298	.05010	.04754	253.53000	7.68210	.06016
4.504	2.000	36.94800	5.96890	-2.35980	4.13490	.06258	.05032	.04794	253.56000	7.68240	.06071
4.503	2.200	36.94500	5.96900	-2.36180	4.13580	.06216	.05064	.04833	253.63000	7.68410	.06142
4.503	2.400	36.96400	5.96910	-2.36490	4.13540	.06221	.05130	.04917	253.61000	7.68320	.06248
4.502	2.543	36.95500	5.96920	-2.36600	4.13490	.06185	.05212	.05015	253.60000	7.68230	.06374
	GRADIENT	.04071	.00041	-.01020	.00502	.00043	.00012	.00008	.37679	.00927	.00009

OA257 (LARC 20-M6-6559) OV102 W/(FSB) (S7E122) (10 JUL 81)

REFERENCE DATA

SREF = 2690.0000 SQ.FT. XMRP = 1076.6800 IN. XO
LREF = 474.8100 INCHES YMRP = .0000 IN. YO
BREF = 936.6800 INCHES ZMRP = 375.0000 IN. ZO
SCALE = .0100

PARAMETRIC DATA

ALPHA = 37.500 PHI = .000
SPDBRK = 86.600 AILRON = .000
YP = 1.000 1S = 1.000
ELEVON = .000 MACH = 6.000
S-MODE = 2.000 S-DIR = 1.000

RUN NO. 2097/ 0 RN/L = 4.54 GRADIENT INTERVAL = -.60/ .60

RN/L	BETA	ALPHA	MACH	PHI	Q	BP1	BP2	BP3	PT1	PT2	PSC
4.636	-4.900	36.67000	5.96630	-2.29090	4.22440	.05964	.05599	.04707	258.57000	7.84870	.06157
4.630	-4.700	36.68200	5.96640	-2.29280	4.22430	.05950	.05596	.04710	258.58000	7.84860	.06168
4.617	-4.500	36.68600	5.96650	-2.29450	4.21580	.05944	.05585	.04712	258.07000	7.83280	.06164
4.608	-4.300	36.69000	5.96650	-2.29610	4.20820	.05941	.05562	.04719	257.62000	7.81870	.06156
4.598	-4.100	36.69000	5.96660	-2.29780	4.19820	.05931	.05540	.04712	257.02000	7.80000	.06136
4.590	-3.900	36.70400	5.96670	-2.30020	4.19000	.05921	.05517	.04715	256.54000	7.78490	.06130
4.586	-3.700	36.70700	5.96680	-2.30190	4.18370	.05939	.05491	.04711	256.16000	7.77320	.06118
4.582	-3.500	36.72100	5.96680	-2.30420	4.17630	.05966	.05461	.04711	255.72000	7.75940	.06109
4.572	-3.300	36.71600	5.96690	-2.30550	4.16670	.05987	.05418	.04707	255.15000	7.74150	.06088
4.558	-3.100	36.73600	5.96700	-2.30800	4.15910	.06007	.05374	.04701	254.70000	7.72740	.06060
4.552	-2.900	36.73000	5.96710	-2.30930	4.15640	.06012	.05301	.04692	254.54000	7.72240	.06028
4.558	-2.700	36.75200	5.96710	-2.31180	4.15430	.06001	.05236	.04689	254.43000	7.71840	.06002
4.559	-2.500	36.75000	5.96720	-2.31320	4.15470	.06019	.05178	.04688	254.47000	7.71930	.05987
4.549	-2.300	36.76700	5.96730	-2.31570	4.14920	.06052	.05128	.04679	254.15000	7.70910	.05964
4.544	-2.100	36.76600	5.96740	-2.31690	4.14660	.06083	.05082	.04666	254.00000	7.70420	.05936
4.540	-1.900	36.78000	5.96740	-2.31900	4.14300	.06125	.05045	.04643	253.79000	7.69750	.05916
4.540	-1.700	36.78000	5.96750	-2.32040	4.13720	.06143	.05013	.04634	253.45000	7.68660	.05904
4.537	-1.500	36.79000	5.96760	-2.32260	4.12770	.06159	.04991	.04620	252.88000	7.66910	.05890
4.523	-1.300	36.79500	5.96770	-2.32430	4.12500	.06179	.04979	.04613	252.73000	7.66410	.05884
4.525	-1.100	36.80400	5.96780	-2.32610	4.12530	.06211	.04976	.04614	252.76000	7.66470	.05879
4.534	-.900	36.81700	5.96780	-2.32840	4.12560	.06237	.04978	.04618	252.79000	7.66510	.05875
4.526	-.700	36.82100	5.96790	-2.33010	4.12710	.06268	.04979	.04623	252.90000	7.66800	.05871
4.519	-.500	36.83500	5.96800	-2.33240	4.12750	.06297	.04989	.04632	252.93000	7.66860	.05875
4.514	-.300	36.83800	5.96810	-2.33400	4.12750	.06315	.04990	.04625	252.95000	7.66870	.05872
4.516	-.100	36.85400	5.96810	-2.33650	4.12970	.06329	.04998	.04630	253.10000	7.67280	.05873
4.518	.100	36.85200	5.96820	-2.33800	4.13270	.06334	.05000	.04630	253.29000	7.67830	.05877
4.514	.300	36.87000	5.96830	-2.34070	4.13250	.06325	.04998	.04630	253.30000	7.67800	.05873
4.508	.500	36.86900	5.96840	-2.34220	4.13240	.06336	.04997	.04630	253.30000	7.67770	.05880
4.507	.700	36.88900	5.96840	-2.34490	4.13140	.06347	.05004	.04646	253.26000	7.67600	.05893
4.511	.900	36.89100	5.96850	-2.34670	4.13230	.06351	.05006	.04666	253.32000	7.67750	.05912
4.521	1.100	36.91300	5.96860	-2.34960	4.13350	.06354	.05006	.04685	253.41000	7.67970	.05926
4.525	1.300	36.90900	5.96870	-2.35110	4.13350	.06337	.05002	.04692	253.42000	7.67980	.05942
4.514	1.500	36.92600	5.96870	-2.35380	4.13410	.06322	.05002	.04711	253.47000	7.68080	.05964
4.511	1.700	36.92700	5.96880	-2.35580	4.13590	.06307	.05009	.04733	253.60000	7.68420	.06001
4.505	1.900	36.94500	5.96890	-2.35870	4.13360	.06284	.05019	.04766	253.47000	7.68000	.06041
4.503	2.100	36.94400	5.96900	-2.36070	4.13540	.06232	.05050	.04814	253.60000	7.68340	.06104
4.504	2.300	36.95600	5.96910	-2.36340	4.13510	.06221	.05095	.04872	253.59000	7.68270	.06191
4.502	2.500	36.95900	5.96910	-2.36580	4.13540	.06206	.05167	.04958	253.62000	7.68330	.06310
	GRADIENT	.03771	.00039	-.01009	.00607	.00032	.00010	.00001	.44143	.01127	.00005

OA257 (LARC 20-M6-6559) OV102 W/(FSB) (S7E023) (10 JUL 81)

REFERENCE DATA

SREF = 2690.0000 SQ.FT. XMRP = 1076.6800 IN. XO
LREF = 474.8100 INCHES YMRP = .0000 IN. YO
BREF = 936.6800 INCHES ZMRP = 375.0000 IN. ZO
SCALE = .0100

PARAMETRIC DATA

ALPHA = 40.000 PHI = .000
SPDBRK = 86.600 AILRON = .000
YP = 1.000 1S = 1.000
ELEVON = .000 MACH = 6.000
S-MODE = 2.000 S-DIR = 1.000

RUN NO. 98/ 0 RN/L = 4.39 GRADIENT INTERVAL = -.60/ .60

RN/L	BETA	ALPHA	MACH	PHI	Q	BP1	BP2	BP3	PT1	PT2	PSC
4.437	-5.064	39.00700	5.96210	-2.41590	4.08470	.09666	.09058	.07102	249.28000	7.58920	.10358
4.429	-4.900	39.01100	5.96220	-2.41650	4.08740	.09707	.09076	.07104	249.48000	7.59430	.10444
4.430	-4.700	39.02200	5.96230	-2.41840	4.08790	.09709	.09040	.07087	249.52000	7.59520	.10474
4.449	-4.500	39.02200	5.96230	-2.41970	4.08770	.09711	.08981	.07039	249.52000	7.59490	.10498
4.451	-4.300	39.03600	5.96240	-2.42150	4.08770	.09717	.08943	.07017	249.53000	7.59490	.10527
4.448	-4.100	39.03700	5.96250	-2.42300	4.08930	.09720	.08918	.06994	249.63000	7.59780	.10550
4.436	-3.900	39.05400	5.96250	-2.42500	4.08910	.09704	.08906	.06994	249.63000	7.59740	.10585
4.432	-3.700	39.05700	5.96260	-2.42650	4.09010	.09705	.08874	.06989	249.70000	7.59930	.10611
4.431	-3.500	39.07400	5.96260	-2.42840	4.08980	.09687	.08831	.06995	249.69000	7.59880	.10642
4.432	-3.300	39.07000	5.96270	-2.42930	4.09480	.09678	.08773	.06982	250.01000	7.60800	.10674
4.436	-3.100	39.09200	5.96270	-2.43180	4.09240	.09664	.08691	.06975	249.87000	7.60370	.10701
4.437	-2.900	39.09000	5.96280	-2.43310	4.09370	.09657	.08607	.06978	249.96000	7.60600	.10734
4.431	-2.700	39.11100	5.96280	-2.43570	4.09210	.09605	.08486	.06978	249.87000	7.60300	.10762
4.419	-2.500	39.10300	5.96290	-2.43700	4.08640	.09542	.08400	.06982	249.53000	7.59250	.10798
4.407	-2.300	39.12400	5.96290	-2.44000	4.07720	.09491	.08330	.07002	248.98000	7.57540	.10832
4.398	-2.100	39.11600	5.96300	-2.44140	4.06960	.09422	.08236	.07019	248.53000	7.56130	.10867
4.396	-1.900	39.13600	5.96300	-2.44410	4.06410	.09387	.08179	.07033	248.20000	7.55110	.10900
4.396	-1.700	39.13800	5.96310	-2.44580	4.06190	.09383	.08116	.07048	248.07000	7.54690	.10939
4.384	-1.500	39.15200	5.96310	-2.44830	4.05540	.09391	.08062	.07091	247.68000	7.53470	.10976
4.377	-1.300	39.15200	5.96320	-2.45010	4.05280	.09403	.07989	.07100	247.54000	7.53000	.11014
4.366	-1.100	39.16600	5.96330	-2.45280	4.04510	.09416	.07917	.07101	247.07000	7.51560	.11052
4.359	-.900	39.16600	5.96330	-2.45460	4.04190	.09432	.07858	.07102	246.89000	7.50970	.11097
4.355	-.700	39.18300	5.96340	-2.45740	4.03670	.09458	.07810	.07107	246.58000	7.50000	.11130
4.355	-.500	39.18400	5.96340	-2.45930	4.03690	.09471	.07761	.07101	246.60000	7.50050	.11179
4.351	-.300	39.19800	5.96350	-2.46180	4.03460	.09498	.07730	.07092	246.47000	7.49630	.11220
4.361	-.100	39.20100	5.96350	-2.46410	4.03610	.09496	.07690	.07075	246.57000	7.49890	.11259
4.358	.100	39.21700	5.96360	-2.46660	4.03520	.09512	.07660	.07055	246.53000	7.49730	.11302
4.352	.300	39.22000	5.96360	-2.46870	4.03450	.09515	.07623	.07082	246.49000	7.49600	.11350
4.354	.500	39.23500	5.96370	-2.47130	4.03410	.09534	.07612	.07097	246.48000	7.49520	.11385
4.366	.700	39.23600	5.96370	-2.47310	4.03700	.09563	.07656	.07106	246.67000	7.50070	.11429
4.359	.900	39.25100	5.96380	-2.47570	4.03350	.09557	.07648	.07077	246.46000	7.49410	.11468
4.352	1.100	39.25600	5.96390	-2.47780	4.03310	.09533	.07607	.07012	246.44000	7.49340	.11509
4.339	1.300	39.26600	5.96390	-2.48000	4.03070	.09487	.07550	.06909	246.31000	7.48900	.11548
4.336	1.500	39.27400	5.96400	-2.48240	4.03030	.09418	.07473	.06784	246.29000	7.48830	.11590
4.338	1.700	39.28900	5.96400	-2.48510	4.02980	.09359	.07402	.06675	246.27000	7.48730	.11627
4.343	1.900	39.29000	5.96410	-2.48700	4.03050	.09320	.07351	.06605	246.32000	7.48850	.11675
4.344	2.100	39.30200	5.96410	-2.48970	4.02810	.09292	.07298	.06549	246.18000	7.48410	.11706
4.335	2.300	39.31000	5.96420	-2.49220	4.02900	.09282	.07269	.06552	246.25000	7.48580	.11747
4.329	2.500	39.31900	5.96420	-2.49470	4.02770	.09373	.07246	.06664	246.18000	7.48340	.11796
	GRADIENT	.04814	.00027	-.01189	-.00217	.00055	-.00156	-.00010	-.08286	-.00414	.00209

OA257 (LARC 20-M6-6559) OV102 W/(FSB) (S7E123) (10 JUL 81)

REFERENCE DATA

SREF = 2690.0000 SQ.FT. XMRP = 1076.6800 IN. XO
LREF = 474.8100 INCHES YMRP = .0000 IN. YO
BREF = 936.6800 INCHES ZMRP = 375.0000 IN. ZO
SCALE = .0100

PARAMETRIC DATA

ALPHA = 40.000 PHI = .000
SPDBRK = 86.600 AILRON = .000
YP = 1.000 1S = 1.000
ELEVON = .000 MACH = 6.000
S-MODE = 2.000 S-DIR = 1.000

RUN NO. 2098/ 0 RN/L = 4.39 GRADIENT INTERVAL = -.60/ .60

RN/L	BETA	ALPHA	MACH	PHI	Q	BP1	BP2	BP3	PT1	PT2	PSC
4.431	-5.000	39.00000	5.96220	-2.41540	4.08760	.09697	.09081	.07110	249.49000	7.59470	.10430
4.427	-4.800	39.01700	5.96230	-2.41750	4.08650	.09707	.09063	.07101	249.43000	7.59270	.10456
4.441	-4.600	39.01800	5.96230	-2.41880	4.08930	.09712	.09016	.07062	249.61000	7.59790	.10488
4.453	-4.400	39.03500	5.96240	-2.42070	4.08660	.09712	.08960	.07023	249.46000	7.59280	.10512
4.451	-4.200	39.03200	5.96240	-2.42200	4.08900	.09720	.08930	.07003	249.61000	7.59730	.10540
4.441	-4.000	39.05100	5.96250	-2.42420	4.08840	.09713	.08916	.06989	249.59000	7.59620	.10564
4.434	-3.800	39.05300	5.96250	-2.42570	4.09070	.09706	.08889	.06991	249.73000	7.60040	.10599
4.430	-3.600	39.06800	5.96260	-2.42760	4.08930	.09696	.08853	.06990	249.66000	7.59790	.10625
4.431	-3.400	39.07000	5.96260	-2.42870	4.09230	.09686	.08811	.06988	249.85000	7.60350	.10658
4.433	-3.200	39.08500	5.96270	-2.43070	4.09360	.09673	.08737	.06976	249.94000	7.60580	.10684
4.440	-3.000	39.09000	5.96270	-2.43220	4.09350	.09665	.08651	.06979	249.94000	7.60560	.10718
4.435	-2.800	39.10200	5.96280	-2.43450	4.09300	.09636	.08552	.06975	249.92000	7.60460	.10747
4.425	-2.600	39.10700	5.96290	-2.43630	4.09020	.09577	.08445	.06980	249.76000	7.59950	.10781
4.412	-2.400	39.11800	5.96290	-2.43870	4.08080	.09516	.08363	.06991	249.20000	7.58210	.10812
4.401	-2.200	39.12200	5.96300	-2.44080	4.07290	.09454	.08278	.07016	248.72000	7.56730	.10851
4.397	-2.000	39.12500	5.96300	-2.44260	4.06640	.09403	.08205	.07025	248.34000	7.55540	.10882
4.398	-1.800	39.13600	5.96310	-2.44500	4.06370	.09376	.08145	.07039	248.18000	7.55020	.10920
4.388	-1.600	39.14500	5.96310	-2.44710	4.05740	.09394	.08098	.07072	247.80000	7.53860	.10952
4.380	-1.400	39.15500	5.96320	-2.44940	4.05450	.09396	.08026	.07095	247.63000	7.53310	.10998
4.371	-1.200	39.15600	5.96320	-2.45120	4.04910	.09407	.07948	.07098	247.31000	7.52310	.11033
4.362	-1.000	39.16800	5.96330	-2.45380	4.04350	.09424	.07889	.07102	246.98000	7.51280	.11075
4.356	-.800	39.17300	5.96330	-2.45590	4.03940	.09449	.07832	.07104	246.74000	7.50500	.11117
4.355	-.600	39.18500	5.96340	-2.45830	4.03560	.09463	.07785	.07105	246.52000	7.49810	.11159
4.354	-.400	39.18500	5.96340	-2.46020	4.03650	.09485	.07745	.07095	246.58000	7.49970	.11197
4.352	-.200	39.20200	5.96350	-2.46300	4.03470	.09501	.07712	.07090	246.48000	7.49640	.11241
4.363	.000	39.20600	5.96360	-2.46520	4.03530	.09501	.07671	.07059	246.53000	7.49750	.11282
4.353	.200	39.21900	5.96360	-2.46770	4.03410	.09516	.07639	.07072	246.46000	7.49520	.11322
4.353	.400	39.22300	5.96370	-2.46970	4.03500	.09524	.07610	.07092	246.53000	7.49690	.11365
4.360	.600	39.23900	5.96370	-2.47240	4.03530	.09552	.07633	.07105	246.55000	7.49740	.11409
4.366	.800	39.24100	5.96380	-2.47430	4.03620	.09562	.07654	.07095	246.62000	7.49920	.11446
4.354	1.000	39.26300	5.96380	-2.47730	4.03250	.09552	.07628	.07055	246.41000	7.49240	.11491
4.344	1.200	39.25400	5.96390	-2.47850	4.03160	.09514	.07580	.06963	246.36000	7.49070	.11528
4.338	1.400	39.27400	5.96390	-2.48140	4.03070	.09455	.07516	.06853	246.31000	7.48900	.11568
4.337	1.600	39.27500	5.96400	-2.48340	4.03000	.09387	.07432	.06719	246.28000	7.48760	.11610
4.338	1.800	39.29700	5.96400	-2.48650	4.03020	.09345	.07377	.06639	246.30000	7.48800	.11648
4.347	2.000	39.29100	5.96410	-2.48820	4.02950	.09302	.07318	.06569	246.27000	7.48680	.11692
4.340	2.200	39.31300	5.96410	-2.49130	4.02830	.09291	.07285	.06555	246.20000	7.48440	.11728
4.332	2.400	39.30800	5.96420	-2.49300	4.02970	.09290	.07251	.06555	246.29000	7.48700	.11765
4.333	2.528	39.32000	5.96430	-2.49490	4.02820	.09427	.07245	.06767	246.21000	7.48420	.11826
	GRADIENT	.04554	.00029	-.01179	-.00080	.00064	-.00143	-.00004	-.00536	-.00159	.00208

OA257 (LARC 20-M6-6559) OV102 (S7E024) (10 JUL 81)

REFERENCE DATA

SREF = 2690.0000 SQ.FT. XMRP = 1076.6800 IN. XO
LREF = 474.8100 INCHES YMRP = .0000 IN. YO
BREF = 936.6800 INCHES ZMRP = 375.0000 IN. ZO
SCALE = .0100

PARAMETRIC DATA

BETA = .000 PHI = .000
SPDBRK = 86.600 AILRON = .000
YP = .000 1S = .000
ELEVON = .000 MACH = 6.000
S-MODE = 1.000 S-DIR = 2.000

RUN NO. 68/ 0 RN/L = 4.45 GRADIENT INTERVAL = 23.00/ 25.00

RN/L	ALPHA	BETA	MACH	PHI	Q	BP1	BP2	BP3	PT1	PT2	PSC
4.358	-.229	-.00446	5.96530	-.00001	4.03730	.05623	.05192	.05322	246.96000	7.50120	.05337
4.587	-.115	-.00882	5.94690	-.00000	4.21720	.05655	.05189	.05356	254.68000	7.83600	.05416
4.387	-.104	.00010	5.94620	-.00000	4.05590	.05596	.05164	.05323	244.83000	7.53630	.05388
4.352	4.117	-.00556	5.96430	.00011	4.03800	.05217	.04783	.04918	246.82000	7.50250	.04928
4.364	8.410	.00330	5.96350	.00010	4.03940	.04892	.04461	.04678	246.77000	7.50500	.04679
4.365	10.981	-.00330	5.96260	.00006	4.04870	.04350	.03875	.04315	247.19000	7.52240	.04151
4.360	13.943	.00374	5.96170	-.00018	4.04840	.04427	.03933	.04392	247.01000	7.52190	.04206
4.373	15.487	-.00472	5.96080	-.00034	4.05320	.04687	.04194	.04645	247.15000	7.53070	.04519
4.384	17.349	-.00727	5.96010	-.00052	4.05760	.04888	.04283	.04820	247.29000	7.53900	.04761
4.394	19.456	-.00988	5.95910	-.00071	4.08070	.05043	.04458	.04973	248.54000	7.58200	.04930
4.422	21.242	.00015	5.95820	-.00118	4.09240	.05444	.04873	.05323	249.09000	7.60380	.05357
4.458	23.080	-.00722	5.95750	-.00155	4.10420	.05389	.04802	.05083	249.68000	7.62560	.05296
4.462	24.812	-.00805	5.95660	-.00086	4.10480	.05596	.04826	.05607	249.56000	7.62680	.05593
4.493	26.445	-.00653	5.95570	-.00165	4.14130	.05715	.04943	.05738	251.64000	7.69470	.05625
4.544	27.964	-.00915	5.95490	-.00144	4.19880	.05920	.04996	.05934	254.99000	7.80150	.05830
4.532	29.466	-.00496	5.95400	-.00164	4.19330	.06028	.05161	.06044	254.49000	7.79130	.05990
4.539	30.848	-.00541	5.95310	-.00205	4.17340	.06212	.05373	.05814	253.13000	7.75440	.06092
4.540	32.346	-.00299	5.95230	-.00182	4.15390	.06602	.05435	.05869	251.80000	7.71810	.06328
4.537	34.164	.00469	5.95130	-.00176	4.12730	.07250	.05632	.06175	250.01000	7.66870	.06786
4.510	36.591	-.00084	5.95050	-.00223	4.09740	.08534	.06135	.06710	248.06000	7.61320	.07716
4.497	39.111	.00897	5.94960	-.00232	4.08340	.09610	.06442	.07005	247.07000	7.58730	.08087
	GRADIENT	-.00048	-.00052	.00040	.00035	.00119	.00014	.00303	-.06926	.00069	.00172

OA257 (LARC 20-M6-6559) OV102 (S7E025) (10 JUL 81)

REFERENCE DATA

SREF = 2690.0000 SQ.FT. XMRP = 1076.6800 IN. XO
LREF = 474.8100 INCHES YMRP = .0000 IN. YO
BREF = 936.6800 INCHES ZMRP = 375.0000 IN. ZO
SCALE = .0100

PARAMETRIC DATA

BETA = .000 PHI = .000
SPDBRK = 86.600 AILRON = .000
YP = .000 1S = 1.000
ELEVON = .000 MACH = 6.000
S-MODE = 1.000 S-DIR = 2.000

RUN NO. 129/ 0 RN/L = 2.23 GRADIENT INTERVAL = 23.00/ 25.00

RN/L	ALPHA	BETA	MACH	PHI	Q	BP1	BP2	BP3	PT1	PT2	PSC
2.168	-.503	-.02674	5.97700	-.00001	2.40620	.03466	.03369	.03689	148.37000	4.47040	.03497
2.422	-.132	-.02360	5.96600	-.00000	2.54010	.03633	.03544	.03842	155.45000	4.71950	.03676
2.184	3.599	-.02112	5.97570	.00020	2.40420	.03277	.03209	.03416	148.13000	4.46680	.03305
2.186	7.082	-.02636	5.97530	.00030	2.40510	.03249	.03169	.03416	148.14000	4.46850	.03319
2.184	9.685	-.02429	5.97490	.00040	2.40400	.03175	.03059	.03296	148.03000	4.46640	.03260
2.186	15.294	-.01768	5.97440	.00047	2.40350	.03050	.02967	.03209	147.94000	4.46540	.03177
2.188	19.387	-.02527	5.97390	.00047	2.40460	.03288	.03228	.03351	147.96000	4.46750	.03420
2.203	20.169	-.02333	5.97350	.00051	2.40870	.03443	.03347	.03514	148.17000	4.47520	.03601
2.218	21.861	-.02405	5.97320	.00084	2.41010	.03595	.03532	.03689	148.22000	4.47770	.03779
2.216	23.764	-.01990	5.97280	.00085	2.40930	.03639	.03673	.03766	148.14000	4.47640	.03836
2.210	25.933	-.02544	5.97240	.00073	2.41410	.03682	.03747	.03766	148.39000	4.48520	.03900
2.233	27.742	-.02277	5.97200	.00044	2.41590	.03774	.03860	.03777	148.46000	4.48860	.03995
2.238	29.472	-.02287	5.97160	.00052	2.42200	.03834	.03921	.03777	148.79000	4.49980	.04079
2.231	31.608	-.01736	5.97100	.00085	2.42720	.04012	.04090	.03951	149.05000	4.50950	.04277
2.243	33.291	-.02118	5.97050	.00080	2.43180	.04256	.04333	.04257	149.29000	4.51820	.04558
2.248	33.829	-.02245	5.97010	.00100	2.43670	.04450	.04499	.04497	149.54000	4.52720	.04782
2.263	35.943	-.01498	5.96970	.00072	2.44540	.04796	.04781	.04849	150.03000	4.54340	.05184
2.277	38.267	-.01846	5.96940	.00040	2.45810	.05272	.05082	.05264	150.78000	4.56700	.05702
2.304	39.465	-.01653	5.96900	.00047	2.48280	.05586	.05257	.05449	152.26000	4.61290	.06001
	GRADIENT	.00000	.00000	.00000	.00000	.00000	.00000	.00000	.00000	.00000	.00000

RUN NO. 121/ 0 RN/L = 4.43 GRADIENT INTERVAL = 23.00/ 25.00

RN/L	ALPHA	BETA	MACH	PHI	Q	BP1	BP2	BP3	PT1	PT2	PSC
4.474	-.242	-.01229	5.95510	-.00001	4.11110	.05937	.05618	.06460	249.69000	7.63850	.05783
4.472	-.003	.00864	5.95740	.00000	4.07390	.05849	.05534	.06351	247.82000	7.56930	.05697
4.463	.581	-.00746	5.95530	.00004	4.10920	.05894	.05569	.06373	249.61000	7.63490	.05732
4.450	3.884	-.01044	5.95540	.00017	4.07380	.05542	.05210	.05969	247.48000	7.56910	.05336
4.440	7.096	-.01163	5.95560	.00045	4.07980	.05337	.05029	.05936	247.87000	7.58040	.05221
4.435	10.510	-.01032	5.95570	.00043	4.08220	.05039	.04789	.05783	248.03000	7.58480	.05067
4.433	13.875	-.00466	5.95580	.00040	4.08590	.04969	.04654	.05684	248.28000	7.59170	.04920
4.432	17.086	-.01081	5.95590	.00055	4.08700	.05315	.05096	.05903	248.36000	7.59380	.05336
4.413	21.252	-.01256	5.95600	.00060	4.08400	.05953	.05827	.06351	248.20000	7.58810	.06128
4.399	25.039	-.01161	5.95610	.00075	4.07000	.06029	.05827	.06536	247.37000	7.56220	.06096
4.375	27.555	-.01035	5.95620	.00019	4.04740	.06056	.06033	.06427	246.01000	7.52020	.06236
4.368	30.603	.00015	5.95630	.00048	4.04030	.06364	.06344	.06559	245.60000	7.50690	.06616
4.379	32.226	.00207	5.95650	-.00004	4.03350	.06635	.06546	.06842	245.21000	7.49430	.06972
4.395	36.588	.00665	5.95660	.00094	4.02540	.07960	.07248	.07881	244.74000	7.47920	.08294
4.471	39.250	.00110	5.95680	.00070	4.04120	.09032	.08337	.08962	245.74000	7.50860	.09480
	GRADIENT	.00000	.00000	.00000	.00000	.00000	.00000	.00000	.00000	.00000	.00000

OA257 (LARC 20-M6-6559) OV102 (S7E025) (10 JUL 81)

REFERENCE DATA

SREF = 2690.0000 SQ.FT. XMRP = 1076.6800 IN. XO
LREF = 474.8100 INCHES YMRP = .0000 IN. YO
BREF = 936.6800 INCHES ZMRP = 375.0000 IN. ZO
SCALE = .0100

PARAMETRIC DATA

BETA = .000 PHI = .000
SPDBRK = 86.600 AILRON = .000
YP = .000 1S = 1.000
ELEVON = .000 MACH = 6.000
S-MODE = 1.000 S-DIR = 2.000

RUN NO. 123/ 0 RN/L = 7.51 GRADIENT INTERVAL = 23.00/ 25.00

RN/L	ALPHA	BETA	MACH	PHI	Q	BP1	BP2	BP3	PT1	PT2	PSC
7.383	-.310	-.09271	5.98690	-.00002	6.81450	.09364	.08978	.08687	423.10000	12.66000	.09199
7.387	-.292	-.08459	5.98580	-.00001	6.82630	.09343	.08972	.08665	423.52000	12.68200	.09180
7.538	-.144	-.05898	5.97420	-.00000	6.91640	.09348	.09021	.08610	425.68000	12.85000	.09199
7.424	2.333	-.09033	5.98510	.00023	6.85560	.09105	.08833	.08479	425.13000	12.73700	.08942
7.519	4.910	-.09011	5.98460	.00046	6.92960	.08704	.08492	.08107	429.56000	12.87400	.08563
7.520	7.761	-.08875	5.98390	.00067	6.93490	.09078	.08858	.08676	429.70000	12.88400	.09089
7.518	10.729	-.09133	5.98340	.00067	6.94350	.08521	.08492	.08459	430.07000	12.90000	.08755
7.552	13.137	-.08962	5.98280	.00088	6.95930	.07914	.07709	.07900	430.86000	12.92900	.08021
7.517	15.281	-.08788	5.98230	.00058	6.94640	.08206	.07977	.08021	429.91000	12.90500	.08227
7.519	18.093	-.08403	5.98170	.00073	6.94670	.08027	.07795	.07791	429.78000	12.90600	.08085
7.531	21.025	-.07545	5.98100	.00063	6.94990	.09061	.09052	.08621	429.75000	12.91200	.09339
7.535	23.197	-.07362	5.98060	-.00045	6.95240	.09797	.09822	.09560	429.78000	12.91700	.10188
7.501	26.776	-.07367	5.97970	-.00003	6.92610	.10062	.09627	.09409	427.89000	12.86800	.10370
7.541	29.064	-.07005	5.97910	.00068	6.93400	.10468	.10135	.09495	428.20000	12.88200	.10994
7.579	31.578	-.07474	5.97860	-.00057	6.97550	.11090	.10897	.10095	430.61000	12.96000	.11633
7.519	34.355	-.06557	5.97790	-.00013	6.93230	.11918	.11472	.10828	427.75000	12.87900	.12383
7.510	36.146	-.06496	5.97730	.00013	6.91810	.13318	.12610	.11734	426.71000	12.85300	.14031
7.508	39.086	-.05484	5.97670	-.00147	6.91200	.14472	.13467	.12927	426.14000	12.84200	.15346
	GRADIENT	.00000	.00000	.00000	.00000	.00000	.00000	.00000	.00000	.00000	.00000

OA257 (LARC 20-M6-6559) OV102 (S7E026) (10 JUL 81)

REFERENCE DATA

SREF = 2690.0000 SQ.FT. XMRP = 1076.6800 IN. XO
LREF = 474.8100 INCHES YMRP = .0000 IN. YO
BREF = 936.6800 INCHES ZMRP = 375.0000 IN. ZO
SCALE = .0100

PARAMETRIC DATA

BETA = .000 PHI = .000
SPDBRK = 86.600 AILRON = .000
YP = .000 1S = 1.000
ELEVON = .000 MACH = 6.000
S-MODE = 1.000 S-DIR = 2.000

RUN NO. 184/ 0 RN/L = 4.43 GRADIENT INTERVAL = 23.00/ 25.00

RN/L	ALPHA	BETA	MACH	PHI	Q	BP1	BP2	BP3	PT1	PT2	PSC
4.417	14.352	-.01189	5.96290	.00098	4.12080	.04341	.04218	.04373	251.63000	7.65630	.04319
4.419	14.366	-.01254	5.96190	.00114	4.12440	.04331	.04215	.04384	251.69000	7.66300	.04305
4.446	14.637	-.00125	5.94870	.00108	4.11630	.04314	.04212	.04373	248.89000	7.64840	.04293
4.406	14.859	-.01324	5.96150	.00111	4.11650	.04341	.04218	.04385	251.13000	7.64840	.04332
4.388	15.380	-.01240	5.96120	.00119	4.10430	.04352	.04227	.04395	250.33000	7.62570	.04352
4.391	15.767	-.01107	5.96090	.00113	4.09840	.04346	.04221	.04363	249.92000	7.61480	.04332
4.365	16.277	-.01338	5.96050	.00097	4.07220	.04379	.04270	.04395	248.26000	7.56610	.04371
4.362	16.613	-.01248	5.96020	.00102	4.05770	.04428	.04322	.04428	247.31000	7.53910	.04428
4.357	17.157	-.01184	5.95980	.00117	4.05960	.04454	.04329	.04439	247.37000	7.54270	.04448
4.365	17.540	-.00710	5.95940	.00127	4.06210	.04481	.04353	.04461	247.45000	7.54740	.04474
4.375	17.861	-.01085	5.95910	.00090	4.06540	.04498	.04393	.04494	247.59000	7.55350	.04518
4.373	18.308	-.01268	5.95870	.00152	4.06370	.04525	.04405	.04516	247.43000	7.55040	.04531
4.390	18.873	-.01269	5.95830	.00124	4.06800	.04539	.04394	.04516	247.62000	7.55840	.04521
4.405	19.311	-.00683	5.95800	.00131	4.05990	.04547	.04421	.04515	247.07000	7.54320	.04530
4.382	19.815	-.01479	5.95760	.00169	4.06090	.04568	.04457	.04537	247.07000	7.54510	.04556
4.406	20.294	-.00587	5.95720	.00140	4.07740	.04633	.04522	.04581	248.01000	7.57590	.04620
4.450	20.696	-.00706	5.95690	.00186	4.12890	.04703	.04590	.04592	251.08000	7.67150	.04691
4.480	21.109	-.00723	5.95660	.00159	4.16120	.04709	.04614	.04559	252.99000	7.73160	.04710
4.499	21.607	-.00140	5.95620	.00169	4.15780	.04682	.04629	.04515	252.71000	7.72520	.04734
4.483	22.067	-.00185	5.95580	.00151	4.15920	.04687	.04651	.04516	252.74000	7.72790	.04774
4.469	22.363	-.00718	5.95550	.00167	4.15750	.04719	.04700	.04559	252.57000	7.72470	.04812
4.451	22.696	-.00799	5.95480	.00203	4.14570	.04773	.04749	.04647	251.74000	7.70280	.04889
4.459	23.162	-.00730	5.95450	.00179	4.13880	.04806	.04789	.04723	251.27000	7.69010	.04960
4.443	23.720	-.00247	5.95410	.00190	4.12310	.04860	.04885	.04843	250.25000	7.66090	.05042
4.454	24.003	-.00753	5.95380	.00196	4.11950	.04893	.04949	.04920	249.97000	7.65420	.05073
4.433	24.481	-.00860	5.95340	.00204	4.10880	.04930	.05020	.05018	249.25000	7.63440	.05132
4.411	24.879	-.00786	5.95300	.00219	4.10120	.04979	.05084	.05105	248.73000	7.62020	.05195
4.399	25.248	-.00068	5.95260	.00213	4.08910	.05022	.05124	.05149	247.92000	7.59770	.05215
4.442	25.779	-.00567	5.95220	.00172	4.11410	.05037	.05156	.05182	249.37000	7.64410	.05282
4.493	26.239	-.00159	5.95180	.00171	4.16530	.05044	.05179	.05149	252.41000	7.73940	.05298
4.498	27.025	-.00176	5.95140	.00185	4.19350	.05023	.05139	.05072	254.04000	7.79170	.05284
4.476	27.507	-.00265	5.95100	.00183	4.17870	.05006	.05106	.05040	253.07000	7.76420	.05266
4.478	28.261	-.00324	5.95060	.00168	4.17030	.05033	.05099	.05040	252.49000	7.74870	.05291
4.463	29.067	-.00370	5.95030	.00198	4.16330	.05114	.05140	.05084	252.02000	7.73560	.05356
4.445	29.414	-.00487	5.95010	.00265	4.15400	.05147	.05142	.05062	251.41000	7.71830	.05381
	GRADIENT	-.00147	-.00087	.00022	-.02150	.00099	.00172	.00223	-1.45835	-.03994	.00134

OA257 (LARC 20-M6-6559) OV102 (S7E027) (10 JUL 81)

REFERENCE DATA

SREF = 2690.0000 SQ.FT. XMRP = 1076.6800 IN. XO
LREF = 474.8100 INCHES YMRP = .0000 IN. YO
BREF = 936.6800 INCHES ZMRP = 375.0000 IN. ZO
SCALE = .0100

PARAMETRIC DATA

BETA = .000 PHI = .000
SPDBRK = 86.600 AILRON = .000
YP = .000 1S = 1.000
ELEVON = .000 MACH = 6.000
S-MODE = 1.000 S-DIR = 2.000

RUN NO. 186/ 0 RN/L = 4.46 GRADIENT INTERVAL = 23.00/ 25.00

RN/L	ALPHA	BETA	MACH	PHI	Q	BP1	BP2	BP3	PT1	PT2	PSC
4.428	24.101	-.02414	5.96300	.00226	4.11360	.04979	.05072	.04854	251.22000	7.64290	.05201
4.346	24.420	-.00686	5.95230	.00214	4.13660	.04871	.04946	.04756	250.75000	7.68600	.05087
4.442	24.776	-.02295	5.96230	.00224	4.12610	.05069	.05174	.05018	251.86000	7.66620	.05308
4.453	25.548	-.02136	5.96200	.00205	4.12460	.05039	.05194	.04985	251.71000	7.66350	.05335
4.446	26.438	-.01482	5.96170	.00186	4.12240	.05011	.05170	.04898	251.52000	7.65940	.05343
4.449	27.310	-.01564	5.96130	.00184	4.12880	.05033	.05176	.04876	251.86000	7.67130	.05395
4.452	28.162	-.02054	5.96100	.00186	4.12990	.05086	.05192	.04931	251.86000	7.67340	.05442
4.461	28.941	-.02095	5.96060	.00214	4.13230	.05184	.05305	.04953	251.94000	7.67790	.05548
4.465	29.304	-.02190	5.96030	.00214	4.13010	.05228	.05363	.04974	251.74000	7.67370	.05592
4.472	29.462	-.02259	5.95990	.00254	4.13440	.05298	.05422	.05051	251.94000	7.68170	.05657
4.486	30.234	-.01606	5.95950	.00231	4.13770	.05487	.05585	.05193	252.08000	7.68780	.05848
4.483	30.811	-.01968	5.95920	.00214	4.13590	.05661	.05695	.05335	251.91000	7.68450	.06014
4.496	31.540	-.02001	5.95880	.00182	4.13380	.05845	.05809	.05498	251.71000	7.68070	.06186
4.495	32.286	-.02073	5.95840	.00170	4.13470	.05989	.05838	.05641	251.69000	7.68220	.06305
4.475	33.025	-.01339	5.95800	.00214	4.12310	.06104	.05929	.05739	250.91000	7.66070	.06404
4.468	33.666	-.01470	5.95750	.00176	4.12080	.06254	.06053	.05860	250.70000	7.65640	.06536
4.465	34.507	-.01305	5.95710	.00204	4.11240	.06411	.06127	.06013	250.12000	7.64090	.06657
4.443	35.056	-.01277	5.95670	.00189	4.09940	.06521	.06187	.06121	249.25000	7.61680	.06743
4.420	35.504	-.00458	5.95630	.00177	4.09410	.06618	.06215	.06187	248.87000	7.60690	.06820
4.432	36.158	-.01076	5.95590	.00195	4.09490	.06758	.06273	.06307	248.84000	7.60840	.06947
4.462	36.486	-.01125	5.95560	.00232	4.12030	.06867	.06322	.06351	250.33000	7.65570	.07043
4.482	36.856	-.01040	5.95530	.00246	4.15270	.06991	.06414	.06460	252.24000	7.71580	.07184
4.541	37.256	-.00943	5.95490	.00178	4.19970	.07164	.06539	.06591	255.04000	7.80310	.07375
4.539	37.682	-.00873	5.95460	.00203	4.22980	.07283	.06629	.06678	256.81000	7.85900	.07516
4.511	38.055	-.01004	5.95430	.00229	4.21570	.07386	.06703	.06766	255.90000	7.83290	.07631
4.477	38.726	-.00546	5.95390	.00265	4.20490	.07624	.06890	.06963	255.18000	7.81280	.07888
4.459	39.195	-.00208	5.95350	.00239	4.19150	.07726	.06925	.07083	254.29000	7.78800	.08030
	GRADIENT	.00087	-.00049	-.00002	.01759	.00142	.00161	.00253	.99072	.03281	.00166

OA257 (LARC 20-M6-6559) OV102 (S7E028) (10 JUL 81)

REFERENCE DATA

SREF = 2690.0000 SQ.FT. XMRP = 1076.6800 IN. XO
LREF = 474.8100 INCHES YMRP = .0000 IN. YO
BREF = 936.6800 INCHES ZMRP = 375.0000 IN. ZO
SCALE = .0100

PARAMETRIC DATA

BETA = .000 PHI = .000
SPDBRK = 86.600 AILRON = .000
YP = .000 1S = 1.000
ELEVON = .000 MACH = 6.000
S-MODE = 1.000 S-DIR = 2.000

RUN NO. 308/ 0 RN/L = 7.31 GRADIENT INTERVAL = 23.00/ 25.00

RN/L	ALPHA	BETA	MACH	PHI	Q	BP1	BP2	BP3	PT1	PT2	PSC
7.213	14.409	-.08117	5.99080	.00159	6.87630	.08894	.09069	.08571	428.11000	12.77500	.09267
7.202	14.509	-.08353	5.98970	.00145	6.84670	.08818	.08974	.08528	425.91000	12.72000	.09159
7.358	14.706	-.06277	5.97880	.00151	6.88240	.09105	.09306	.08801	424.92000	12.78700	.09447
7.229	16.777	-.08384	5.98890	.00177	6.81000	.08591	.08569	.08419	423.42000	12.65200	.08827
7.356	19.461	-.08360	5.98820	.00199	6.90320	.08391	.08126	.08145	428.99000	12.82500	.08545
7.335	21.811	-.07990	5.98740	.00197	6.88700	.08840	.07831	.08233	427.74000	12.79500	.08731
7.365	24.134	-.08059	5.98640	.00206	6.89030	.09154	.07801	.08550	427.66000	12.80100	.08744
7.418	26.727	-.08109	5.98570	.00207	6.92830	.09429	.07653	.08768	429.82000	12.87200	.09025
7.357	29.229	-.08321	5.98480	.00342	6.88850	.09619	.07555	.09424	427.08000	12.79800	.09665
7.317	32.132	-.07429	5.98390	.00326	6.88140	.10311	.08049	.10767	426.36000	12.78500	.10469
7.331	34.189	-.07261	5.98310	.00371	6.96430	.11610	.08829	.12232	431.26000	12.93900	.11569
7.294	37.119	-.07197	5.98230	.00296	6.93670	.13401	.09798	.13467	429.32000	12.88700	.12716
7.227	39.200	-.06148	5.98160	.00353	6.90910	.15003	.10842	.14178	427.41000	12.83600	.13778
	GRADIENT	.00000	.00000	.00000	.00000	.00000	.00000	.00000	.00000	.00000	.00000

OA257 (LARC 20-M6-6559) OV102 (S7E029) (10 JUL 81)

REFERENCE DATA

SREF = 2690.0000 SQ.FT. XMRP = 1076.6800 IN. XO
LREF = 474.8100 INCHES YMRP = .0000 IN. YO
BREF = 936.6800 INCHES ZMRP = 375.0000 IN. ZO
SCALE = .0100

PARAMETRIC DATA

BETA = .000 PHI = .000
SPDBRK = 86.600 AILRON = 3.000
YP = .000 1S = 1.000
ELEVON = .000 MACH = 6.000
S-MODE = 1.000 S-DIR = 2.000

RUN NO. 310/ 0 RN/L = 7.53 GRADIENT INTERVAL = 23.00/ 25.00

RN/L	ALPHA	BETA	MACH	PHI	Q	BP1	BP2	BP3	PT1	PT2	PSC
7.482	14.394	-.03120	5.98620	.00106	6.88680	.08991	.09095	.08911	427.38000	12.79500	.09314
7.454	14.441	-.03071	5.98450	.00094	6.86900	.08980	.09081	.08877	425.78000	12.76100	.09299
7.623	14.744	-.00670	5.96620	.00069	6.88960	.09202	.09337	.09118	421.68000	12.80100	.09563
7.571	14.757	-.00822	5.96710	.00057	6.89890	.09197	.09343	.09118	422.51000	12.81800	.09556
7.478	16.271	-.02960	5.98350	.00103	6.87520	.08888	.08935	.08867	425.88000	12.77300	.09167
7.544	17.782	-.03066	5.98250	.00115	6.93160	.08499	.08532	.08659	429.07000	12.87800	.08872
7.509	19.321	-.02984	5.98140	.00065	6.91470	.08401	.08105	.08441	427.71000	12.84700	.08547
7.527	21.174	-.02857	5.98050	.00061	6.89810	.08802	.07887	.08517	426.41000	12.81600	.08801
7.547	22.734	-.02747	5.97950	.00023	6.93320	.08899	.07803	.08593	428.27000	12.88100	.08711
7.532	24.178	-.02574	5.97850	-.00050	6.91840	.09181	.07973	.08921	427.08000	12.85400	.08821
7.571	25.994	-.02633	5.97750	-.00026	6.93690	.09364	.07782	.08856	427.91000	12.88800	.08692
7.582	27.623	-.02628	5.97660	-.00080	6.92630	.09089	.07555	.09085	426.99000	12.86800	.08737
7.546	29.046	-.02652	5.97560	-.00020	6.92150	.09402	.07340	.09380	426.41000	12.85900	.09204
7.549	31.103	-.01998	5.97470	-.00053	6.96220	.09992	.07825	.10342	428.66000	12.93500	.09908
7.519	32.515	-.01536	5.97350	-.00153	6.98030	.10479	.08182	.11009	429.40000	12.96900	.10324
7.511	34.303	-.01506	5.97260	-.00183	6.97410	.11237	.08735	.11839	428.74000	12.95700	.10983
7.525	36.196	-.01304	5.97160	-.00333	6.98940	.12314	.09564	.12801	429.40000	12.98600	.11833
7.482	37.590	-.01255	5.97070	-.00385	6.96890	.13153	.10127	.13392	427.88000	12.94800	.12423
7.487	39.039	-.00438	5.96980	-.00344	6.94970	.14262	.10855	.14068	426.41000	12.91200	.13285
	GRADIENT	.00000	.00000	.00000	.00000	.00000	.00000	.00000	.00000	.00000	.00000

OA257 (LARC 20-M6-6559) OV102 (S7E030) (10 JUL 81)

REFERENCE DATA

SREF =	2690.0000 SQ.FT.	XMRP =	1076.6800 IN.	XO	
LREF =	474.8100 INCHES	YMRP =	.0000 IN.	YO	
BREF =	936.6800 INCHES	ZMRP =	375.0000 IN.	ZO	
SCALE =	.0100				

PARAMETRIC DATA

BETA =	.000	PHI =	.000
SPDBRK =	86.600	AILRON =	5.000
YP =	.000	1S =	1.000
ELEVON =	.000	MACH =	6.000
S-MODE =	1.000	S-DIR =	2.000

RUN NO. 312/ 0 RN/L = 7.58 GRADIENT INTERVAL = 23.00/ 25.00

RN/L	ALPHA	BETA	MACH	PHI	Q	BP1	BP2	BP3	PT1	PT2	PSC
7.545	14.386	-.04272	5.98560	.00046	6.90490	.08926	.09128	.09009	428.32000	12.82800	.09256
7.576	14.430	-.04364	5.98680	.00044	6.92840	.08997	.09183	.09085	430.15000	12.87200	.09307
7.479	14.703	-.01135	5.96630	.00035	6.86620	.08591	.09011	.08845	420.26000	12.75700	.09076
7.533	16.150	-.04378	5.98440	.00054	6.89820	.08742	.08864	.08878	427.58000	12.81600	.09019
7.562	17.459	-.04338	5.98370	.00046	6.88560	.08499	.08526	.08604	426.58000	12.79200	.08763
7.522	18.619	-.04102	5.98300	.00005	6.88100	.08265	.08126	.08266	426.08000	12.78400	.08430
7.532	19.243	-.04165	5.98230	.00026	6.87350	.08243	.07997	.08233	425.42000	12.77000	.08360
7.546	20.529	-.04075	5.98160	-.00039	6.91330	.08477	.07893	.08298	427.66000	12.84400	.08462
7.527	21.787	-.03926	5.98080	-.00061	6.89530	.08759	.07911	.08419	426.33000	12.81100	.08680
7.514	23.094	-.03748	5.98010	-.00137	6.87690	.09154	.08013	.08561	424.97000	12.77600	.09001
7.552	24.410	-.03717	5.97940	-.00159	6.91170	.09500	.07930	.08735	426.91000	12.84100	.09108
7.557	25.713	-.03651	5.97860	-.00153	6.93430	.09749	.07844	.08681	428.07000	12.88300	.08993
7.560	26.702	-.01857	5.97790	-.00254	6.92410	.09732	.07985	.08976	427.24000	12.86400	.08961
7.545	28.023	-.00494	5.97710	-.00252	6.89300	.09511	.07751	.09479	425.08000	12.80600	.08955
7.570	29.939	-.02835	5.97570	-.00192	6.89570	.10117	.07874	.10156	424.83000	12.81100	.09652
7.610	31.533	-.02430	5.97500	-.00322	6.91120	.10544	.08108	.10626	425.58000	12.84000	.10157
7.615	32.927	-.02307	5.97400	-.00474	6.91440	.10712	.08403	.11271	425.50000	12.84600	.10496
7.677	34.346	-.02143	5.97330	-.00539	6.96780	.11194	.08937	.11948	428.57000	12.94600	.11047
7.686	35.445	-.02157	5.97260	-.00618	6.97400	.11670	.09454	.12528	428.74000	12.95700	.11507
7.719	36.294	-.01988	5.97190	-.00683	6.99020	.12113	.09794	.12942	429.52000	12.98700	.11902
7.700	37.522	-.01061	5.97100	-.00734	6.97240	.12736	.10160	.13456	428.16000	12.95400	.12435
7.673	39.032	-.01012	5.97030	-.00735	6.94740	.13715	.10861	.14309	426.41000	12.90800	.13337
	GRADIENT	.00024	-.00053	-.00017	.02644	.00263	-.00063	.00133	1.47397	.04939	.00082

OA257 (LARC 20-M6-6559) OV102 (S7E031) (10 JUL 81)

REFERENCE DATA

SREF = 2690.0000 SQ.FT. XMRP = 1076.6800 IN. XO
LREF = 474.8100 INCHES YMRP = .0000 IN. YO
BREF = 936.6800 INCHES ZMRP = 375.0000 IN. ZO
SCALE = .0100

PARAMETRIC DATA

BETA = -.500 PHI = .000
SPDBRK = 86.600 AILRON = .000
YP = .000 1S = 1.000
ELEVON = .000 MACH = 6.000
S-MODE = 1.000 S-DIR = 2.000

RUN NO. 131/ 0 RN/L = 2.34 GRADIENT INTERVAL = 23.00/ 25.00

RN/L	ALPHA	BETA	MACH	PHI	Q	BP1	BP2	BP3	PT1	PT2	PSC
2.311	-.458	-.43948	5.95440	-.00004	2.49960	.03535	.03520	.03009	151.74000	4.64430	.03608
2.303	14.440	-.39569	5.95180	.00154	2.49590	.03249	.03306	.02758	151.25000	4.63750	.03410
2.303	15.544	-.39080	5.95030	.00169	2.49280	.03033	.03020	.02496	150.90000	4.63180	.03198
2.308	16.608	-.38980	5.94960	.00152	2.49400	.02979	.02989	.02463	150.90000	4.63400	.03160
2.310	17.229	-.38591	5.94900	.00192	2.49830	.03059	.03063	.02506	151.10000	4.64210	.03244
2.329	18.323	-.39197	5.94830	.00207	2.49710	.03091	.03078	.02539	150.95000	4.63970	.03258
2.337	19.199	-.39211	5.94760	.00222	2.49500	.03281	.03299	.02594	150.75000	4.63590	.03429
2.340	20.090	-.39387	5.94690	.00261	2.49630	.03400	.03404	.02659	150.75000	4.63830	.03576
2.354	21.227	-.38086	5.94620	.00275	2.51230	.03601	.03505	.02812	151.64000	4.66800	.03774
2.385	22.542	-.38486	5.94550	.00294	2.55240	.03816	.03656	.03075	153.98000	4.74250	.04017
2.393	23.314	-.38648	5.94500	.00289	2.55380	.03859	.03729	.03173	154.02000	4.74520	.04095
2.378	24.166	-.38628	5.94410	.00292	2.54780	.03822	.03895	.03249	153.57000	4.73410	.04081
2.374	25.151	-.38509	5.94290	.00297	2.54250	.03715	.03852	.03118	153.12000	4.72430	.03965
2.349	26.289	-.37764	5.94230	.00289	2.53790	.03794	.03926	.03118	152.77000	4.71580	.04038
2.341	27.862	-.38634	5.94140	.00295	2.53060	.03930	.04110	.03173	152.24000	4.70220	.04196
2.329	28.473	-.38657	5.94080	.00315	2.52750	.03919	.04116	.03118	151.99000	4.69640	.04209
2.326	29.354	-.38733	5.94020	.00313	2.52160	.03897	.04098	.03053	151.58000	4.68550	.04183
2.293	29.436	-.39861	5.93900	.00332	2.48220	.03865	.04055	.02976	149.09000	4.61230	.04139
	GRADIENT	.00024	-.00105	.00004	-.00704	-.00043	.00194	.00090	-.52819	-.01302	-.00017

OA257 (LARC 20-M6-6559) OV102 (S7E031) (10 JUL 81)

REFERENCE DATA

SREF = 2690.0000 SQ.FT. XMRP = 1076.6800 IN. XO
LREF = 474.8100 INCHES YMRP = .0000 IN. YO
BREF = 936.6800 INCHES ZMRP = 375.0000 IN. ZO
SCALE = .0100

PARAMETRIC DATA

BETA = -.500 PHI = .000
SPDBRK = 86.600 AILRON = .000
YP = .000 1S = 1.000
ELEVON = .000 MACH = 6.000
S-MODE = 1.000 S-DIR = 2.000

RUN NO. 187/ 0 RN/L = 4.50 GRADIENT INTERVAL = 23.00/ 25.00

RN/L	ALPHA	BETA	MACH	PHI	Q	BP1	BP2	BP3	PT1	PT2	PSC
4.475	14.192	-.52191	5.96510	.00271	4.10270	.04498	.04418	.04144	250.91000	7.62270	.04524
4.485	14.271	-.52408	5.96440	.00277	4.10700	.04481	.04393	.04131	251.05000	7.63060	.04500
4.467	14.461	-.52249	5.96420	.00266	4.09720	.04460	.04387	.04131	250.42000	7.61250	.04486
4.473	14.600	-.50886	5.95600	.00277	4.08450	.04455	.04384	.04155	248.23000	7.58910	.04498
4.431	14.927	-.52392	5.96390	.00260	4.05950	.04390	.04316	.04066	248.06000	7.54250	.04428
4.411	15.528	-.51678	5.96360	.00293	4.03090	.04389	.04313	.04044	246.26000	7.48920	.04416
4.466	16.143	-.52342	5.96330	.00296	4.08050	.04422	.04344	.04109	249.25000	7.58150	.04473
4.496	16.786	-.52285	5.96300	.00291	4.10140	.04443	.04381	.04109	250.47000	7.62040	.04500
4.492	17.451	-.52373	5.96280	.00331	4.10030	.04503	.04433	.04131	250.36000	7.61830	.04557
4.476	18.304	-.52325	5.96250	.00364	4.09930	.04514	.04436	.04131	250.25000	7.61640	.04556
4.492	19.000	-.51703	5.96220	.00404	4.10460	.04501	.04418	.04120	250.53000	7.62630	.04533
4.496	19.817	-.52522	5.96170	.00396	4.10440	.04514	.04448	.04120	250.42000	7.62580	.04556
4.502	20.372	-.52578	5.96140	.00463	4.10280	.04546	.04476	.04131	250.28000	7.62300	.04582
4.489	20.908	-.52508	5.96110	.00451	4.10090	.04578	.04507	.04098	250.11000	7.61950	.04627
4.481	21.408	-.52464	5.96080	.00483	4.09590	.04552	.04510	.04022	249.75000	7.61010	.04633
4.480	21.972	-.52501	5.96050	.00473	4.09590	.04568	.04568	.04066	249.70000	7.61010	.04717
4.471	22.512	-.52088	5.96020	.00480	4.08720	.04649	.04660	.04131	249.12000	7.59400	.04806
4.463	23.047	-.52078	5.95990	.00488	4.07860	.04745	.04787	.04286	248.54000	7.57800	.04943
4.478	23.672	-.52066	5.95950	.00497	4.07630	.04817	.04915	.04439	248.34000	7.57380	.05061
4.512	24.320	-.51954	5.95920	.00507	4.09820	.04957	.05023	.04712	249.61000	7.61450	.05190
4.525	25.028	-.51889	5.95880	.00494	4.12470	.05017	.05130	.04756	251.16000	7.66370	.05266
4.592	25.799	-.51682	5.95860	.00507	4.18960	.05076	.05247	.04756	255.06000	7.78420	.05375
4.573	26.568	-.51281	5.95820	.00523	4.18090	.05103	.05314	.04734	254.48000	7.76820	.05458
4.562	27.238	-.51201	5.95790	.00548	4.16000	.05071	.05290	.04647	253.16000	7.72940	.05458
4.557	27.996	-.50792	5.95760	.00560	4.14650	.05053	.05235	.04614	252.27000	7.70430	.05467
4.544	28.712	-.50682	5.95720	.00624	4.13600	.05087	.05216	.04581	251.58000	7.68480	.05490
4.515	29.110	-.51316	5.95690	.00654	4.11930	.05071	.05161	.04537	250.50000	7.65370	.05458
	GRADIENT	.00098	-.00055	.00015	.01551	.00167	.00185	.00335	.84740	.02889	.00194

REFERENCE DATA

SREF = 2690.0000 SQ.FT. XMRP = 1076.6800 IN. XO
LREF = 474.8100 INCHES YMRP = .0000 IN. YO
BREF = 936.6800 INCHES ZMRP = 375.0000 IN. ZO
SCALE = .0100

PARAMETRIC DATA

BETA = -.500 PHI = .000
SPDBRK = 86.600 AILRON = .000
YP = .000 1S = 1.000
ELEVON = .000 MACH = 6.000
S-MODE = 1.000 S-DIR = 2.000

RUN NO. 124/ 0 RN/L = 7.51 GRADIENT INTERVAL = 23.00/ 25.00

RN/L	ALPHA	BETA	MACH	PHI	Q	BP1	BP2	BP3	PT1	PT2	PSC
7.502	14.080	-.45408	5.98760	.00311	6.88860	.08184	.07995	.07911	427.92000	12.79800	.08265
7.529	14.423	-.46614	5.97860	.00346	6.90650	.08265	.08121	.07987	426.37000	12.83100	.08353
7.550	14.435	-.45862	5.97820	.00333	6.92070	.08308	.08139	.08009	427.12000	12.85800	.08373
7.460	15.288	-.44030	5.98680	.00343	6.85770	.08000	.07810	.07648	425.74000	12.74000	.08052
7.467	16.239	-.43667	5.98650	.00375	6.87200	.07935	.07734	.07540	426.54000	12.76700	.08002
7.469	16.982	-.44224	5.98610	.00380	6.86890	.07941	.07773	.07495	426.24000	12.76100	.08020
7.483	17.926	-.44206	5.98570	.00428	6.87170	.07924	.07813	.07496	426.29000	12.76600	.08053
7.497	18.552	-.43566	5.98530	.00461	6.88770	.08016	.07915	.07573	427.17000	12.79600	.08131
7.534	19.554	-.44246	5.98490	.00482	6.92360	.08342	.08293	.07791	429.28000	12.86300	.08481
7.562	20.750	-.44270	5.98450	.00522	6.93500	.08721	.08753	.08075	429.86000	12.88400	.08980
7.503	21.513	-.43602	5.98410	.00515	6.90520	.09018	.09064	.08392	427.92000	12.82900	.09435
7.493	22.365	-.43962	5.98370	.00522	6.88780	.09337	.09263	.08861	426.71000	12.79600	.09798
7.509	23.438	-.44025	5.98330	.00535	6.88630	.09705	.09672	.09375	426.51000	12.79400	.10177
7.535	24.509	-.44062	5.98300	.00578	6.91790	.09932	.09963	.09593	428.37000	12.85200	.10316
7.528	25.294	-.43333	5.98260	.00584	6.93050	.09932	.09816	.09418	429.03000	12.87600	.10284
7.485	26.062	-.44022	5.98230	.00600	6.88790	.09889	.09625	.09200	426.29000	12.79700	.10208
7.475	26.754	-.43312	5.98190	.00611	6.86260	.09916	.09558	.09069	424.63000	12.75000	.10227
7.546	27.806	-.43036	5.98150	.00700	6.92590	.10095	.09691	.09047	428.42000	12.86700	.10535
7.592	29.026	-.42054	5.98120	.00793	6.97660	.10409	.09971	.09113	431.46000	12.96200	.11067
	GRADIENT	-.00035	-.00028	.00040	.02950	.00212	.00272	.00203	1.73639	.05414	.00130

OA257 (LARC 20-M6-6559) OV102 (S7E032) (10 JUL 81)

REFERENCE DATA

SREF = 2690.0000 SQ.FT. XMRP = 1076.6800 IN. XO
LREF = 474.8100 INCHES YMRP = .0000 IN. YO
BREF = 936.6800 INCHES ZMRP = 375.0000 IN. ZO
SCALE = .0100

PARAMETRIC DATA

BETA = -.500 PHI = .000
SPDBRK = 86.600 AILRON = .000
YP = .000 1S = 1.000
ELEVON = .000 MACH = 6.000
S-MODE = 1.000 S-DIR = 2.000

RUN NO. 132/ O RN/L = 2.28 GRADIENT INTERVAL = 23.00/ 25.00

RN/L	ALPHA	BETA	MACH	PHI	Q	BP1	BP2	BP3	PT1	PT2	PSC
2.250	24.157	-.42705	5.95540	.00288	2.44690	.03653	.03800	.02943	148.64000	4.54640	.03949
2.264	24.168	-.42818	5.95710	.00294	2.44640	.03642	.03797	.02965	148.79000	4.54540	.03942
2.268	24.855	-.47724	5.95400	.00315	2.44690	.03616	.03797	.02889	148.51000	4.54650	.03915
2.262	25.623	-.47776	5.95350	.00350	2.44880	.03634	.03791	.02867	148.56000	4.54990	.03888
2.265	26.549	-.47102	5.95290	.00327	2.45050	.03729	.03892	.02932	148.60000	4.55320	.04005
2.260	27.509	-.47664	5.95220	.00322	2.45000	.03822	.04024	.02954	148.51000	4.55220	.04107
2.269	28.452	-.47480	5.95170	.00344	2.45210	.03806	.03996	.02856	148.57000	4.55600	.04106
2.275	29.371	-.47288	5.95110	.00361	2.45110	.03783	.03957	.02801	148.46000	4.55430	.04083
2.259	30.489	-.47251	5.95030	.00356	2.42700	.03817	.04015	.02802	146.91000	4.50960	.04112
2.255	31.601	-.46645	5.94960	.00367	2.42890	.03999	.04190	.03053	146.96000	4.51310	.04319
2.297	32.865	-.46581	5.94900	.00344	2.48430	.04292	.04497	.03413	150.25000	4.61600	.04676
2.314	33.892	-.46083	5.94850	.00358	2.50730	.04487	.04638	.03634	151.58000	4.65870	.04874
2.282	35.023	-.46011	5.94790	.00392	2.46810	.04601	.04715	.03765	149.15000	4.58590	.05014
2.267	36.074	-.44870	5.94730	.00375	2.45420	.04714	.04798	.03918	148.26000	4.56010	.05149
2.307	36.911	-.45477	5.94680	.00393	2.47530	.04888	.04951	.04081	149.47000	4.59930	.05351
2.313	37.968	-.44790	5.94620	.00416	2.49050	.05141	.05099	.04289	150.33000	4.62760	.05641
2.304	39.393	-.42735	5.94510	.00468	2.48010	.05439	.05258	.04529	149.58000	4.60830	.05960
	GRADIENT	-.07166	-.00321	.00034	.00035	-.00045	-.00002	-.00094	-.29317	.00087	-.00044

RUN NO. 125/ O RN/L = 7.48 GRADIENT INTERVAL = 23.00/ 25.00

RN/L	ALPHA	BETA	MACH	PHI	Q	BP1	BP2	BP3	PT1	PT2	PSC
7.375	23.807	-.50000	5.98870	.00574	6.79320	.09775	.09877	.09418	422.31000	12.62100	.10188
7.504	24.063	-.50000	5.98330	.00493	6.91980	.09825	.09911	.09574	428.57000	12.85600	.10373
7.446	24.162	-.50000	5.98670	.00469	6.84710	.09890	.09948	.09508	425.08000	12.72100	.10316
7.479	25.847	-.50000	5.98650	.00476	6.87440	.10008	.09834	.09287	426.71000	12.77100	.10419
7.491	27.620	-.50000	5.98630	.00564	6.89910	.10100	.09783	.09135	428.17000	12.81700	.10586
7.476	29.659	-.50000	5.98600	.00648	6.87780	.10597	.10287	.09340	426.77000	12.77800	.11259
7.529	31.407	-.50000	5.98570	.00506	6.92220	.11106	.11007	.09910	429.45000	12.86000	.11774
7.500	32.821	-.50000	5.98550	.00510	6.89860	.11394	.11208	.10197	427.91000	12.81600	.11985
7.503	34.383	-.50000	5.98520	.00600	6.89220	.12037	.11620	.10675	427.42000	12.80500	.12517
7.503	36.620	-.50000	5.98490	.00618	6.88660	.13515	.12830	.11792	426.99000	12.79400	.14294
7.477	37.763	-.50000	5.98480	.00728	6.86740	.14071	.13174	.12030	425.76000	12.75900	.14826
7.520	38.878	-.50000	5.98450	.00569	6.89910	.14648	.13521	.12825	427.65000	12.81700	.15544
	GRADIENT	.00000	-.00864	-.00300	.22036	.00296	.00186	.00324	11.12917	.40873	.00433

OA257 (LARC 20-M6-6559) OV102 (S7E033) (10 JUL 81)

REFERENCE DATA

SREF = 2690.0000 SQ.FT. XMRP = 1076.6800 IN. XO
LREF = 474.8100 INCHES YMRP = .0000 IN. YO
BREF = 936.6800 INCHES ZMRP = 375.0000 IN. ZO
SCALE = .0100

PARAMETRIC DATA

BETA = .500 PHI = .000
SPDBRK = 86.600 AILRON = .000
YP = .000 1S = 1.000
ELEVON = .000 MACH = 6.000
S-MODE = 1.000 S-DIR = 2.000

RUN NO. 133/ 0 RN/L = 2.28 GRADIENT INTERVAL = 23.00/ 25.00

RN/L	ALPHA	BETA	MACH	PHI	Q	BP1	BP2	BP3	PT1	PT2	PSC
2.265	14.468	.49092	5.95470	-.00093	2.47050	.02816	.02839	.02157	150.00000	4.59030	.03046
2.274	15.613	.54147	5.95470	-.00121	2.47680	.02936	.03005	.02179	150.38000	4.60200	.03172
2.271	16.809	.54255	5.95470	-.00163	2.47540	.03039	.03091	.02234	150.30000	4.59940	.03268
2.276	18.146	.54198	5.95470	-.00158	2.47710	.03136	.03204	.02267	150.40000	4.60250	.03371
2.276	18.882	.54160	5.95470	-.00186	2.47790	.03210	.03306	.02321	150.45000	4.60400	.03456
2.277	19.757	.54262	5.95470	-.00196	2.47600	.03303	.03385	.02397	150.33000	4.60040	.03570
2.271	20.686	.54173	5.95470	-.00210	2.47410	.03396	.03496	.02463	150.22000	4.59690	.03690
2.273	21.557	.54843	5.95470	-.00247	2.47460	.03481	.03637	.02594	150.25000	4.59790	.03787
2.277	22.482	.54189	5.95470	-.00236	2.47600	.03584	.03772	.02670	150.33000	4.60040	.03889
2.273	23.386	.54148	5.95470	-.00229	2.47430	.03601	.03806	.02616	150.23000	4.59740	.03889
2.274	23.983	.54112	5.95470	-.00220	2.47190	.03546	.03692	.02583	150.08000	4.59280	.03806
2.273	24.632	.54591	5.95470	-.00218	2.47320	.03530	.03674	.02627	150.17000	4.59530	.03806
2.273	25.677	.54195	5.95470	-.00230	2.47300	.03601	.03763	.02747	150.15000	4.59480	.03876
2.270	26.158	.54266	5.95470	-.00269	2.47730	.03643	.03827	.02812	150.42000	4.60300	.03928
2.292	27.346	.54184	5.95470	-.00291	2.49890	.03676	.03910	.02834	151.73000	4.64310	.03985
2.288	28.300	.54063	5.95470	-.00292	2.49650	.03697	.03926	.02812	151.58000	4.63850	.04017
2.302	28.853	.54102	5.95470	-.00266	2.50060	.03751	.03993	.02845	151.83000	4.64610	.04094
2.298	29.658	.54033	5.95260	-.00237	2.49900	.03794	.04021	.02834	151.51000	4.64320	.04133
2.295	29.671	.54531	5.95470	-.00236	2.49650	.03822	.04048	.02845	151.58000	4.63850	.04152
	GRADIENT	.00361	-.00001	.00009	-.00084	-.00056	-.00105	.00010	-.04526	-.00160	-.00065

OA257 (LARC 20-M6-6559) OV102 (S7E033) (10 JUL 81)

REFERENCE DATA

SREF = 2690.0000 SQ.FT. XMRP = 1076.6800 IN. XO
LREF = 474.8100 INCHES YMRP = .0000 IN. YO
BREF = 936.6800 INCHES ZMRP = 375.0000 IN. ZO
SCALE = .0100

PARAMETRIC DATA

BETA = .500 PHI = .000
SPDBRK = 86.600 AILRON = .000
YP = .000 1S = 1.000
ELEVON = .000 MACH = 6.000
S-MODE = 1.000 S-DIR = 2.000

RUN NO. 126/ 0 RN/L = 7.49 GRADIENT INTERVAL = 23.00/ 25.00

RN/L	ALPHA	BETA	MACH	PHI	Q	BP1	BP2	BP3	PT1	PT2	PSC
7.446	14.381	.41687	5.98810	-.00285	6.79810	.08097	.07902	.07736	422.42000	12.63000	.08180
7.519	14.393	.41733	5.98900	-.00296	6.85710	.08173	.07985	.07824	426.37000	12.73900	.08264
7.508	14.539	.45972	5.97850	-.00288	6.84200	.07989	.07853	.07692	422.34000	12.71200	.08097
7.493	14.799	.41672	5.98700	-.00289	6.85040	.08157	.07985	.07780	425.38000	12.72700	.08270
7.499	15.626	.42261	5.98670	-.00304	6.86070	.08179	.08123	.07738	425.91000	12.74600	.08307
7.539	16.339	.42541	5.98630	-.00312	6.89730	.08135	.08123	.07683	428.07000	12.81400	.08288
7.514	17.070	.42730	5.98600	-.00353	6.87280	.07978	.07930	.07529	426.46000	12.76800	.08130
7.500	18.286	.42729	5.98550	-.00379	6.87010	.07968	.07847	.07517	426.16000	12.76300	.08141
7.500	19.107	.42721	5.98500	-.00460	6.86940	.08179	.08145	.07605	425.96000	12.76200	.08360
7.465	20.175	.43676	5.98450	-.00508	6.83280	.08607	.08667	.07976	423.55000	12.69400	.08910
7.518	20.826	.44064	5.98400	-.00557	6.88530	.08980	.09069	.08391	426.66000	12.79200	.09381
7.515	21.552	.43899	5.98370	-.00591	6.88470	.09229	.09297	.08621	426.51000	12.79100	.09634
7.501	22.319	.44364	5.98330	-.00640	6.86550	.09343	.09398	.08752	425.21000	12.75500	.09766
7.455	23.628	.44568	5.98270	-.00683	6.81720	.09662	.09668	.09047	422.06000	12.66500	.10048
7.468	24.841	.43981	5.98230	-.00726	6.83860	.09792	.09696	.09257	423.26000	12.70500	.10226
7.442	25.815	.43851	5.98190	-.00698	6.80930	.09792	.09461	.09146	421.33000	12.65100	.10178
7.443	26.731	.43727	5.98150	-.00714	6.79670	.09910	.09462	.09046	420.43000	12.62700	.10347
7.528	28.003	.43699	5.98110	-.00738	6.85720	.10051	.09681	.09178	424.05000	12.74000	.10546
7.531	28.758	.44161	5.98070	-.00793	6.88000	.10138	.09906	.09211	425.35000	12.78200	.10650
7.515	29.166	.44651	5.98010	-.00749	6.84700	.10176	.09963	.09178	423.14000	12.72100	.10700
	GRADIENT	-.00484	-.00033	-.00035	.01764	.00108	.00023	.00173	.98926	.03299	.00147

OA257 (LARC 20-M6-6559) OV102 (S7E034) (10 JUL 81)

REFERENCE DATA

SREF = 2690.0000 SQ.FT. XMRP = 1076.6800 IN. XO
LREF = 474.8100 INCHES YMRP = .0000 IN. YO
BREF = 936.6800 INCHES ZMRP = 375.0000 IN. ZO
SCALE = .0100

PARAMETRIC DATA

BETA = .500 PHI = .000
SPDBRK = 86.600 AILRON = .000
YP = .000 1S = 1.000
ELEVON = .000 MACH = 6.000
S-MODE = 1.000 S-DIR = 2.000

RUN NO. 134/ 0 RN/L = 2.28 GRADIENT INTERVAL = 23.00/ 25.00

RN/L	ALPHA	BETA	MACH	PHI	Q	BP1	BP2	BP3	PT1	PT2	PSC
2.249	24.563	.57268	5.97360	-.00211	2.42930	.03502	.03619	.02572	149.45000	4.51330	.03756
2.255	25.729	.57693	5.97040	-.00235	2.43230	.03579	.03754	.02780	149.30000	4.51910	.03888
2.252	26.610	.57246	5.96920	-.00269	2.43630	.03616	.03815	.02812	149.42000	4.52650	.03940
2.266	27.364	.57028	5.96770	-.00269	2.43880	.03660	.03883	.02823	149.42000	4.53110	.03985
2.266	28.529	.57099	5.96630	-.00267	2.44120	.03724	.03944	.02791	149.42000	4.53570	.04056
2.275	29.465	.57703	5.96480	-.00226	2.44180	.03807	.04018	.02834	149.30000	4.53680	.04144
2.265	30.500	.56947	5.96300	-.00202	2.44380	.03909	.04137	.02889	149.24000	4.54040	.04272
2.265	31.476	.56937	5.96160	-.00203	2.44860	.03969	.04183	.02944	149.39000	4.54940	.04348
2.269	32.390	.57034	5.96010	-.00209	2.44590	.04028	.04242	.03020	149.07000	4.54450	.04419
2.270	32.921	.57550	5.95880	-.00224	2.45160	.04145	.04331	.03173	149.29000	4.55510	.04549
2.268	33.923	.57828	5.95730	-.00219	2.45150	.04383	.04540	.03446	149.12000	4.55500	.04824
2.262	34.489	.58054	5.95600	-.00242	2.44850	.04509	.04662	.03555	148.81000	4.54930	.04974
2.285	35.498	.59225	5.95440	-.00303	2.48010	.04628	.04816	.03666	150.55000	4.60800	.05121
2.310	36.602	.58858	5.95280	-.00338	2.51290	.04823	.04969	.03874	152.37000	4.66900	.05326
2.316	37.492	.58945	5.95130	-.00339	2.51470	.05006	.05074	.04027	152.32000	4.67240	.05532
2.324	38.603	.59776	5.94980	-.00302	2.51180	.05309	.05221	.04223	151.99000	4.66710	.05865
2.329	39.621	.59150	5.94690	-.00290	2.49420	.05470	.05274	.04191	150.63000	4.63440	.06027
2.319	39.646	.58909	5.94840	-.00256	2.50890	.05525	.05304	.04256	151.68000	4.66180	.06089
	GRADIENT	.00000	.00000	.00000	.00000	.00000	.00000	.00000	.00000	.00000	.00000

OA257 (LARC 20-M6-6559) OV102 (S7E034) (10 JUL 81)

REFERENCE DATA

SREF = 2690.0000 SQ.FT. XMRP = 1076.6800 IN. XO
LREF = 474.8100 INCHES YMRP = .0000 IN. YO
BREF = 936.6800 INCHES ZMRP = 375.0000 IN. ZO
SCALE = .0100

PARAMETRIC DATA

BETA = .500 PHI = .000
SPDBRK = 86.600 AILRON = .000
YP = .000 1S = 1.000
ELEVON = .000 MACH = 6.000
S-MODE = 1.000 S-DIR = 2.000

RUN NO. 127/ 0 RN/L = 7.60 GRADIENT INTERVAL = 23.00/ 25.00

RN/L	ALPHA	BETA	MACH	PHI	Q	BP1	BP2	BP3	PT1	PT2	PSC
7.583	24.261	.39646	5.98580	-.00727	6.87410	.09933	.09922	.09332	426.48000	12.77100	.10377
7.584	24.277	.39704	5.98480	-.00753	6.86980	.09906	.09887	.09300	425.91000	12.76300	.10348
7.549	24.374	.41867	5.97590	-.00787	6.85150	.09716	.09590	.09048	422.16000	12.72900	.10114
7.574	24.386	.42023	5.97680	-.00769	6.88220	.09744	.09641	.09071	424.34000	12.78600	.10149
7.628	25.317	.39553	5.98380	-.00766	6.90760	.09943	.09688	.09245	427.97000	12.83300	.10389
7.616	26.215	.39473	5.98350	-.00759	6.90300	.09976	.09562	.09113	427.59000	12.82500	.10388
7.607	26.956	.40055	5.98320	-.00775	6.90270	.09992	.09541	.09026	427.47000	12.82400	.10434
7.581	27.736	.39850	5.98280	-.00798	6.87220	.10052	.09688	.09135	425.48000	12.76700	.10524
7.579	28.858	.39614	5.98240	-.00920	6.87560	.10187	.09942	.09300	425.58000	12.77400	.10712
7.579	29.755	.39417	5.98200	-.00846	6.87350	.10376	.10174	.09419	425.31000	12.77000	.10971
7.601	30.749	.39756	5.98160	-.00846	6.89250	.10555	.10229	.09540	426.39000	12.80500	.11157
7.593	31.887	.40596	5.98130	-.00966	6.88230	.10777	.10360	.09738	425.66000	12.78600	.11352
7.606	32.849	.40641	5.98100	-.00968	6.89980	.11112	.10561	.09933	426.64000	12.81900	.11630
7.620	33.652	.41181	5.98060	-.00898	6.90690	.11545	.10850	.10250	426.97000	12.83200	.12033
7.615	34.982	.41120	5.98020	-.00903	6.91270	.12427	.11574	.10862	427.22000	12.84300	.13139
7.619	35.775	.41880	5.97990	-.00969	6.91750	.12951	.12074	.11298	427.42000	12.85200	.13739
7.606	36.635	.41384	5.97960	-.00933	6.90000	.13266	.12302	.11519	426.25000	12.81900	.14032
7.587	37.699	.41547	5.97930	-.00941	6.88760	.13649	.12600	.11714	425.40000	12.79600	.14431
7.594	38.589	.41449	5.97900	-.01045	6.88940	.14024	.12898	.11934	425.42000	12.80000	.14947
7.599	39.120	.41541	5.97870	-.01132	6.88030	.14274	.13306	.12198	424.77000	12.78300	.15392
	GRADIENT	.20202	-.07847	-.00342	-.03285	-.01679	-.02554	-.02281	-25.34307	-.06083	-.02046

OA257 (LARC 20-M6-6559) OV102 (S7E035) (10 JUL 81)

REFERENCE DATA

SREF = 2690.0000 SQ.FT. XMRP = 1076.6800 IN. XO
LREF = 474.8100 INCHES YMRP = .0000 IN. YO
BREF = 936.6800 INCHES ZMRP = 375.0000 IN. ZO
SCALE = .0100

PARAMETRIC DATA

BETA = .000 PHI = .000
SPDBRK = .000 AILRON = .000
YP = .000 1S = 1.000
ELEVON = .000 MACH = 6.000
S-MODE = 1.000 S-DIR = 2.000

RUN NO. 252/ 0 RN/L = 2.26 GRADIENT INTERVAL = 23.00/ 25.00

RN/L	ALPHA	BETA	MACH	PHI	Q	BP1	BP2	BP3	PT1	PT2	PSC
2.241	14.590	-.19768	5.97270	.00112	2.42870	.02275	.02212	.02386	149.32000	4.51230	.02485
2.243	14.610	-.19789	5.97160	.00118	2.43070	.02285	.02221	.02397	149.34000	4.51610	.02499
2.302	14.967	-.18363	5.96040	.00113	2.44680	.02161	.02169	.02331	149.15000	4.54610	.02434
2.246	15.171	-.19751	5.97070	.00112	2.42910	.02391	.02266	.02505	149.14000	4.51320	.02609
2.240	16.043	-.19744	5.97030	.00117	2.42790	.02387	.02297	.02538	149.02000	4.51090	.02672
2.242	16.813	-.19715	5.96970	.00114	2.42580	.02393	.02319	.02582	148.84000	4.50710	.02716
2.239	17.273	-.19719	5.96930	.00119	2.42650	.02447	.02356	.02593	148.84000	4.50830	.02748
2.242	18.806	-.19716	5.96860	.00129	2.42480	.02572	.02494	.02648	148.66000	4.50520	.02805
2.242	19.919	-.19682	5.96820	.00125	2.42280	.02653	.02580	.02735	148.49000	4.50140	.02901
2.260	21.094	-.19683	5.96780	.00134	2.42350	.02740	.02629	.02834	148.49000	4.50260	.03003
2.251	22.098	-.19681	5.96730	.00140	2.42530	.02824	.02647	.02942	148.55000	4.50610	.03089
2.253	22.949	-.19645	5.96680	.00172	2.42390	.02869	.02626	.03019	148.42000	4.50360	.03157
2.262	23.855	-.19676	5.96590	.00150	2.42410	.02869	.02577	.03019	148.34000	4.50390	.03093
2.254	24.840	-.19680	5.96550	.00159	2.42320	.02799	.02543	.02845	148.24000	4.50220	.02946
2.267	25.975	-.19603	5.96500	.00178	2.42270	.02718	.02476	.02703	148.16000	4.50120	.02843
2.279	26.902	-.19690	5.96440	.00179	2.42740	.02716	.02463	.02778	148.39000	4.51010	.02954
2.303	27.803	-.19744	5.96380	.00213	2.43170	.02777	.02565	.02888	148.59000	4.51800	.03100
2.299	28.925	-.19652	5.96330	.00228	2.44080	.02858	.02675	.02997	149.09000	4.53500	.03202
2.315	29.481	-.19791	5.96250	.00255	2.47360	.02776	.02641	.02943	151.01000	4.59600	.03139
	GRADIENT	-.00004	-.00040	.00009	-.00091	-.00071	-.00034	-.00177	-.10141	-.00172	-.00150

OA257 (LARC 20-M6-6559) OV102 (S7E035) (10 JUL 81)

REFERENCE DATA

SREF = 2690.0000 SQ.FT. XMRP = 1076.6800 IN. XO
LREF = 474.8100 INCHES YMRP = .0000 IN. YO
BREF = 936.6800 INCHES ZMRP = 375.0000 IN. ZO
SCALE = .0100

PARAMETRIC DATA

BETA = .000 PHI = .000
SPDBRK = .000 AILRON = .000
YP = .000 1S = 1.000
ELEVON = .000 MACH = 6.000
S-MODE = 1.000 S-DIR = 2.000

RUN NO. 249/ 0 RN/L = 4.43 GRADIENT INTERVAL = 23.00/ 25.00

RN/L	ALPHA	BETA	MACH	PHI	Q	BP1	BP2	BP3	PT1	PT2	PSC
4.310	14.458	-.20904	5.96130	.00121	4.03090	.03663	.03730	.03902	245.88000	7.48940	.03995
4.365	14.507	-.20936	5.96190	.00129	4.03750	.03631	.03742	.03912	246.38000	7.50170	.04027
4.587	14.769	-.19559	5.95580	.00136	4.19710	.03794	.03957	.04120	255.04000	7.79830	.04275
4.326	15.430	-.20931	5.96070	.00136	4.06350	.03857	.03871	.04022	247.76000	7.54990	.04163
4.330	16.119	-.20860	5.96050	.00122	4.07310	.03968	.03926	.04109	248.31000	7.56780	.04256
4.316	16.726	-.20850	5.96030	.00124	4.07090	.04060	.03957	.04207	248.15000	7.56380	.04384
4.318	17.607	-.20854	5.96010	.00132	4.07790	.04150	.04006	.04306	248.54000	7.57680	.04513
4.317	18.293	-.20884	5.95990	.00148	4.08080	.04227	.04058	.04349	248.67000	7.58210	.04608
4.366	19.088	-.20830	5.95970	.00136	4.10740	.04366	.04117	.04404	250.26000	7.63160	.04617
4.382	20.153	-.20860	5.95940	.00155	4.10810	.04507	.04191	.04404	250.26000	7.63290	.04642
4.377	20.940	-.20741	5.95920	.00154	4.10910	.04585	.04279	.04382	250.28000	7.63470	.04709
4.402	21.687	-.20631	5.95900	.00156	4.12040	.04653	.04314	.04317	250.92000	7.65560	.04649
4.441	22.856	-.20369	5.95870	.00180	4.14250	.04811	.04375	.04393	252.22000	7.69670	.04716
4.469	23.696	-.20376	5.95850	.00148	4.15350	.04920	.04365	.04492	252.85000	7.71720	.04741
4.499	24.469	-.20407	5.95820	.00167	4.16740	.04968	.04316	.04491	253.66000	7.74310	.04704
4.507	25.081	-.20307	5.95800	.00172	4.17570	.04957	.04338	.04513	254.13000	7.75850	.04754
4.514	26.186	-.20373	5.95780	.00164	4.18140	.04925	.04359	.04579	254.43000	7.76910	.04850
4.537	27.008	-.20361	5.95760	.00164	4.19980	.04984	.04350	.04688	255.51000	7.80340	.04986
4.577	28.588	-.20254	5.95730	.00171	4.20970	.04999	.04289	.04876	256.07000	7.82170	.05211
4.575	29.267	-.20321	5.95700	.00212	4.20460	.04974	.04289	.04832	255.70000	7.81230	.05253
	GRADIENT	-.00040	-.00038	.00024	.01798	.00062	-.00063	-.00000	1.04801	.03352	-.00048

OA257 (LARC 20-M6-6559) OV102 (S7E035) (10 JUL 81)

REFERENCE DATA

SREF = 2690.0000 SQ.FT. XMRP = 1076.6800 IN. XO
LREF = 474.8100 INCHES YMRP = .0000 IN. YO
BREF = 936.6800 INCHES ZMRP = 375.0000 IN. ZO
SCALE = .0100

PARAMETRIC DATA

BETA = .000 PHI = .000
SPDBRK = .000 AILRON = .000
YP = .000 1S = 1.000
ELEVON = .000 MACH = 6.000
S-MODE = 1.000 S-DIR = 2.000

RUN NO. 246/ O RN/L = 7.54 GRADIENT INTERVAL = 23.00/ 25.00

RN/L	ALPHA	BETA	MACH	PHI	Q	BP1	BP2	BP3	PT1	PT2	PSC
7.529	14.249	-.04472	5.99780	.00168	6.82000	.06583	.06209	.05761	426.66000	12.67000	.06791
7.586	14.272	-.04428	5.99600	.00158	6.91120	.06648	.06258	.05804	431.81000	12.83900	.06848
7.557	14.533	-.01764	5.98180	.00142	6.87290	.06269	.06188	.05706	425.22000	12.76900	.06798
7.563	14.973	-.04200	5.99490	.00184	6.89120	.06605	.06258	.05706	430.23000	12.80200	.06976
7.536	15.724	-.03818	5.99430	.00171	6.88010	.06788	.06299	.05761	429.37000	12.78200	.07003
7.526	16.424	-.03951	5.99380	.00160	6.87510	.06951	.06363	.05826	428.90000	12.77200	.07021
7.503	17.324	-.03991	5.99310	.00151	6.85970	.07016	.06400	.05892	427.74000	12.74400	.07129
7.493	18.285	-.04175	5.99250	.00186	6.85020	.07031	.06539	.05958	426.98000	12.72600	.07260
7.504	19.518	-.04050	5.99160	.00157	6.86020	.07280	.06730	.06090	427.33000	12.74500	.07378
7.574	20.743	-.04192	5.99100	.00183	6.88960	.07524	.06822	.06155	428.99000	12.80000	.07518
7.540	21.393	-.04177	5.99050	.00183	6.87610	.07665	.06891	.06208	427.99000	12.77400	.07641
7.567	22.282	-.04219	5.98980	.00207	6.90940	.07816	.06974	.06209	429.87000	12.83600	.07757
7.538	23.077	-.03477	5.98920	.00197	6.90090	.07935	.07008	.06307	429.15000	12.82100	.07833
7.560	23.678	-.03235	5.98860	.00185	6.89670	.08032	.06919	.06405	428.70000	12.81300	.07859
7.543	24.295	-.03155	5.98790	.00199	6.88990	.08011	.06855	.06427	428.09000	12.80000	.07829
7.558	24.947	-.02974	5.98730	.00213	6.92020	.07897	.06858	.06285	429.78000	12.85600	.07731
7.570	25.836	-.02963	5.98670	.00216	6.88970	.07751	.06839	.06078	427.71000	12.80000	.07667
7.532	26.148	-.03158	5.98610	.00217	6.87840	.07778	.06866	.06110	426.83000	12.77900	.07730
7.519	26.958	-.03211	5.98530	.00251	6.86900	.07870	.06863	.06274	426.03000	12.76100	.07915
7.528	27.880	-.02856	5.98490	.00282	6.86720	.08076	.06863	.06459	425.78000	12.75800	.08190
7.605	29.007	-.02898	5.98420	.00317	6.93290	.08504	.06976	.06592	429.66000	12.88000	.08631
	GRADIENT	.00255	-.00102	.00010	.00845	-.00023	-.00082	-.00008	.22104	.01524	-.00054

OA257 (LARC 20-M6-6559) OV102 (S7E036) (10 JUL 81)

REFERENCE DATA

SREF = 2690.0000 SQ.FT. XMRP = 1076.6800 IN. X0
LREF = 474.8100 INCHES YMRP = .0000 IN. Y0
BREF = 936.6800 INCHES ZMRP = 375.0000 IN. Z0
SCALE = .0100

PARAMETRIC DATA

BETA = .000 PHI = .000
SPDBRK = .000 AILRON = .000
YP = .000 1S = 1.000
ELEVON = .000 MACH = 6.000
S-MODE = 1.000 S-DIR = 2.000

RUN NO. 253/ 0 RN/L = 2.23 GRADIENT INTERVAL = 23.00/ 25.00

RN/L	ALPHA	BETA	MACH	PHI	Q	BP1	BP2	BP3	PT1	PT2	PSC
2.245	24.431	-.07552	5.97520	.00079	2.42180	.03032	.02666	.03074	149.15000	4.49950	.03169
2.234	24.489	-.07586	5.97390	.00095	2.42150	.02999	.02651	.03019	149.00000	4.49890	.03138
2.177	24.643	-.01215	5.95850	.00053	2.34690	.02917	.02623	.02997	142.87000	4.36050	.03164
2.226	25.533	-.07659	5.97320	.00087	2.42190	.02914	.02574	.02878	148.95000	4.49960	.03015
2.240	26.150	-.07556	5.97270	.00088	2.42170	.02865	.02510	.02823	148.89000	4.49930	.02971
2.240	26.558	-.07359	5.97220	.00091	2.41850	.02881	.02546	.02845	148.64000	4.49340	.03003
2.233	28.063	-.07590	5.97140	.00113	2.41710	.03029	.02733	.03051	148.47000	4.49080	.03223
2.228	28.503	-.07397	5.97020	.00119	2.40850	.03048	.02771	.03096	147.82000	4.47480	.03278
2.220	29.580	-.07364	5.96940	.00105	2.40590	.03064	.02826	.03151	147.58000	4.47000	.03355
2.232	30.600	-.07582	5.96870	.00121	2.40780	.03109	.02820	.03195	147.63000	4.47360	.03424
2.229	31.458	-.07367	5.96810	.00115	2.40940	.03237	.02844	.03238	147.66000	4.47660	.03547
2.244	32.470	-.06860	5.96730	.00114	2.41040	.03435	.02955	.03401	147.64000	4.47840	.03728
2.229	33.427	-.06953	5.96660	.00114	2.40940	.03648	.03161	.03631	147.51000	4.47660	.03957
2.229	34.148	-.06854	5.96600	.00117	2.40940	.03772	.03250	.03740	147.44000	4.47650	.04079
2.251	34.259	-.06865	5.96540	.00126	2.41110	.03854	.03305	.03762	147.49000	4.47980	.04141
2.235	35.387	-.06854	5.96470	.00123	2.40960	.04108	.03446	.03817	147.33000	4.47690	.04301
2.240	36.208	-.06861	5.96420	.00132	2.40750	.04298	.03566	.03883	147.14000	4.47310	.04479
2.229	36.825	-.06955	5.96370	.00131	2.40780	.04502	.03667	.03981	147.11000	4.47360	.04661
2.227	37.563	-.06363	5.96310	.00138	2.40660	.04707	.03815	.04101	146.98000	4.47140	.04835
2.236	38.205	-.06452	5.96250	.00134	2.40560	.04865	.03975	.04221	146.86000	4.46950	.04967
2.236	38.529	-.06475	5.96200	.00153	2.40030	.04923	.04012	.04232	146.48000	4.45970	.04995
2.219	39.258	-.06318	5.96120	.00190	2.38680	.04909	.04011	.04177	145.58000	4.43470	.04992
	GRADIENT	.32250	-.08305	-.00153	-.38030	-.00539	-.00198	-.00318	-31.70847	-.70561	.00015

OA257 (LARC 20-M6-6559) OV102 (S7E036) (10 JUL 81)

REFERENCE DATA

SREF = 2690.0000 SQ.FT. XMRP = 1076.6800 IN. XO
LREF = 474.8100 INCHES YMRP = .0000 IN. YO
BREF = 936.6800 INCHES ZMRP = 375.0000 IN. ZO
SCALE = .0100

PARAMETRIC DATA

BETA = .000 PHI = .000
SPDBRK = .000 AILRON = .000
YP = .000 1S = 1.000
ELEVON = .000 MACH = 6.000
S-MODE = 1.000 S-DIR = 2.000

RUN NO. 250/ 0 RN/L = 4.54 GRADIENT INTERVAL = 23.00/ 25.00

RN/L	ALPHA	BETA	MACH	PHI	Q	BP1	BP2	BP3	PT1	PT2	PSC
4.448	24.345	-.18174	5.94940	.00192	4.09270	.04848	.04215	.04404	247.60000	7.60450	.04598
4.453	24.387	-.18170	5.94830	.00191	4.10230	.04855	.04221	.04404	247.98000	7.62230	.04614
4.530	24.591	-.16565	5.93670	.00187	4.21600	.04876	.04282	.04481	252.80000	7.83390	.04703
4.464	25.355	-.18180	5.94760	.00204	4.10340	.04826	.04148	.04404	247.93000	7.62450	.04610
4.464	26.438	-.18045	5.94730	.00196	4.09800	.04790	.04126	.04404	247.54000	7.61430	.04683
4.474	27.592	-.18092	5.94680	.00180	4.10200	.04839	.04101	.04579	247.70000	7.62180	.04850
4.468	28.254	-.18051	5.94630	.00215	4.10660	.04876	.04111	.04754	247.90000	7.63030	.04978
4.526	29.468	-.18197	5.94550	.00251	4.15980	.05065	.04282	.05029	250.97000	7.72930	.05266
4.607	30.788	-.18164	5.94490	.00246	4.22400	.05416	.04572	.05313	254.74000	7.84860	.05634
4.576	31.401	-.18144	5.94450	.00239	4.21450	.05623	.04685	.05324	254.10000	7.83090	.05809
4.580	32.609	-.17994	5.94410	.00219	4.20670	.06039	.04872	.05400	253.54000	7.81640	.06110
4.587	33.558	-.17397	5.94360	.00228	4.20870	.06444	.05094	.05576	253.58000	7.82030	.06414
4.573	34.588	-.17368	5.94310	.00218	4.20540	.06813	.05339	.05739	253.30000	7.81400	.06711
4.586	35.712	-.17336	5.94260	.00204	4.20670	.07213	.05628	.05990	253.30000	7.81660	.07062
4.613	36.847	-.17096	5.94220	.00255	4.23080	.07624	.05893	.06209	254.66000	7.86130	.07374
4.615	37.462	-.17031	5.94160	.00213	4.21840	.07851	.06092	.06405	253.82000	7.83830	.07607
4.584	37.928	-.17072	5.94110	.00247	4.20620	.08035	.06227	.06526	252.99000	7.81560	.07799
4.594	39.165	-.16458	5.94050	.00246	4.21130	.08485	.06550	.06985	253.19000	7.82510	.08395
	GRADIENT	.06964	-.05332	-.00019	.51917	.00113	.00282	.00332	21.92714	.96578	.00433

RUN NO. 247/ 0 RN/L = 7.44 GRADIENT INTERVAL = 23.00/ 25.00

RN/L	ALPHA	BETA	MACH	PHI	Q	BP1	BP2	BP3	PT1	PT2	PSC
7.420	24.101	.00989	6.00040	.00088	6.82120	.08097	.06756	.06077	427.49000	12.67200	.07385
7.471	24.356	.03087	5.98590	.00087	6.82620	.07924	.06886	.06340	423.52000	12.68200	.07912
7.527	24.369	.02878	5.98670	.00091	6.86010	.07962	.06900	.06339	425.86000	12.74500	.07927
7.439	27.051	.00983	5.99700	.00103	6.81960	.08059	.06796	.05925	426.38000	12.66900	.07514
7.427	28.033	.00984	5.99650	.00106	6.82490	.08087	.06664	.06252	426.58000	12.67900	.07718
7.380	29.292	.00923	5.99520	.00144	6.77780	.08260	.06750	.06591	423.26000	12.59200	.08076
7.403	30.408	.00854	5.99470	.00189	6.78780	.08720	.07036	.06799	423.72000	12.61000	.08550
7.346	31.483	.00990	5.99410	.00176	6.75780	.09169	.07382	.07137	421.68000	12.55400	.09054
7.383	32.432	.00849	5.99350	.00206	6.76200	.09597	.07672	.07389	421.78000	12.56200	.09510
7.421	33.111	.00901	5.99300	.00180	6.81210	.10003	.07940	.07586	424.74000	12.65600	.09914
7.455	34.461	.02065	5.99240	.00146	6.84570	.10739	.08383	.07937	426.67000	12.71800	.10550
7.458	35.570	.01955	5.99180	.00158	6.83680	.11306	.08704	.08295	425.93000	12.70100	.11096
7.438	36.736	.01967	5.99110	.00156	6.82020	.11793	.09048	.08678	424.69000	12.67100	.11595
7.429	37.421	.02070	5.99040	.00158	6.80240	.12106	.09376	.08939	423.39000	12.63800	.11938
7.553	38.303	.01895	5.98980	.00217	6.89530	.12744	.09949	.09572	428.98000	12.81000	.12768
7.486	38.984	.01925	5.98900	.00275	6.84970	.13014	.10385	.09889	425.91000	12.72600	.13151
	GRADIENT	.07581	-.05356	.00003	.08864	-.00583	.00524	.01001	-10.34833	.16748	.02042

OA257 (LARC 20-M6-6559) OV102 (S7E037) (10 JUL 81)

REFERENCE DATA

SREF = 2690.0000 SQ.FT. XMRP = 1076.6800 IN. XO
LREF = 474.8100 INCHES YMRP = .0000 IN. YO
BREF = 936.6800 INCHES ZMRP = 375.0000 IN. ZO
SCALE = .0100

PARAMETRIC DATA

BETA = -.500 PHI = .000
SPDBRK = .000 AILRON = .000
YP = .000 1S = 1.000
ELEVON = .000 MACH = 6.000
S-MODE = 1.000 S-DIR = 2.000

RUN NO. 259/ 0 RN/L = 2.31 GRADIENT INTERVAL = 23.00/ 25.00

RN/L	ALPHA	BETA	MACH	PHI	Q	BP1	BP2	BP3	PT1	PT2	PSC
2.301	14.554	-.58640	5.96380	.00191	2.46530	.02326	.02322	.02210	150.63000	4.58040	.02589
2.283	14.597	-.58590	5.96260	.00205	2.46580	.02348	.02328	.02254	150.55000	4.58150	.02634
2.316	14.806	-.59564	5.95090	.00202	2.43920	.02233	.02286	.02124	147.71000	4.53210	.02529
2.290	15.812	-.58576	5.96180	.00219	2.46440	.02310	.02346	.02330	150.38000	4.57890	.02762
2.294	16.915	-.58618	5.96140	.00217	2.46590	.02366	.02442	.02408	150.42000	4.58150	.02831
2.288	18.037	-.58558	5.96080	.00245	2.46520	.02464	.02500	.02430	150.32000	4.58030	.02850
2.293	18.712	-.58552	5.96030	.00253	2.46630	.02458	.02503	.02440	150.33000	4.58240	.02844
2.301	19.556	-.58518	5.95940	.00253	2.46730	.02481	.02571	.02517	150.30000	4.58420	.02894
2.294	20.208	-.58610	5.95890	.00260	2.46840	.02556	.02623	.02604	150.32000	4.58630	.02958
2.303	21.138	-.58376	5.95840	.00259	2.46660	.02664	.02660	.02670	150.15000	4.58290	.03041
2.323	22.157	-.58467	5.95760	.00270	2.47170	.02748	.02654	.02778	150.38000	4.59240	.03133
2.313	23.423	-.58567	5.95700	.00287	2.46920	.02766	.02645	.02779	150.17000	4.58780	.03132
2.309	24.195	-.58534	5.95650	.00283	2.46980	.02707	.02592	.02648	150.15000	4.58890	.03022
2.317	24.894	-.58467	5.95600	.00307	2.46800	.02653	.02549	.02528	149.98000	4.58560	.02939
2.333	25.494	-.58355	5.95550	.00309	2.46750	.02643	.02506	.02473	149.90000	4.58460	.02920
2.335	26.108	-.58538	5.95490	.00310	2.46860	.02653	.02503	.02539	149.92000	4.58680	.02978
2.320	27.134	-.58564	5.95440	.00337	2.46620	.02672	.02512	.02592	149.72000	4.58240	.03050
2.331	27.825	-.57922	5.95390	.00376	2.46330	.02675	.02537	.02594	149.49000	4.57680	.03118
2.313	28.682	-.57932	5.95340	.00394	2.46110	.02672	.02500	.02560	149.30000	4.57280	.03178
2.307	29.374	-.57864	5.95290	.00423	2.45400	.02610	.02476	.02484	148.82000	4.55970	.03118
	GRADIENT	.00068	-.00068	.00013	-.00079	-.00077	-.00065	-.00171	-.12747	-.00144	-.00131

OA257 (LARC 20-M6-6559) OV102 (S7E037) (10 JUL 81)

REFERENCE DATA

SREF = 2690.0000 SQ.FT. XMRP = 1076.6800 IN. XO
LREF = 474.8100 INCHES YMRP = .0000 IN. YO
BREF = 936.6800 INCHES ZMRP = 375.0000 IN. ZO
SCALE = .0100

PARAMETRIC DATA

BETA = -.500 PHI = .000
SPDBRK = .000 AILRON = .000
YP = .000 1S = 1.000
ELEVON = .000 MACH = 6.000
S-MODE = 1.000 S-DIR = 2.000

RUN NO. 255/ 0 RN/L = 7.51 GRADIENT INTERVAL = 23.00/ 25.00

RN/L	ALPHA	BETA	MACH	PHI	Q	BP1	BP2	BP3	PT1	PT2	PSC
7.330	14.457	-.48848	5.99050	.00502	6.78770	.05552	.05928	.05698	422.49000	12.61000	.06404
7.301	14.502	-.48687	5.98960	.00513	6.75500	.05524	.05880	.05698	420.19000	12.55000	.06370
7.626	14.633	-.44326	5.98080	.00474	6.92480	.05509	.06057	.05916	428.15000	12.86500	.06560
7.324	15.155	-.48438	5.98920	.00524	6.75630	.05628	.05897	.05829	420.16000	12.55200	.06462
7.327	15.832	-.48399	5.98880	.00537	6.76070	.05942	.05971	.05938	420.33000	12.56000	.06552
7.337	16.753	-.48404	5.98840	.00542	6.76000	.06023	.06007	.05960	420.16000	12.55900	.06577
7.362	17.595	-.48484	5.98810	.00594	6.76700	.06077	.06130	.06025	420.49000	12.57200	.06699
7.447	18.387	-.48490	5.98770	.00624	6.85070	.06114	.06292	.06114	425.59000	12.72700	.06882
7.439	19.243	-.48362	5.98730	.00645	6.83730	.06412	.06413	.06178	424.64000	12.70300	.06897
7.462	19.881	-.48454	5.98700	.00630	6.85270	.06580	.06506	.06201	425.49000	12.73100	.06969
7.519	20.667	-.48368	5.98660	.00661	6.90280	.06818	.06666	.06212	428.50000	12.82400	.07067
7.543	21.343	-.48331	5.98620	.00670	6.91730	.06926	.06683	.06266	429.29000	12.85100	.07121
7.512	22.115	-.48283	5.98590	.00716	6.90820	.07099	.06769	.06375	428.63000	12.83400	.07268
7.495	23.161	-.48433	5.98550	.00733	6.89390	.07332	.06757	.06484	427.63000	12.80800	.07357
7.460	24.061	-.48318	5.98520	.00757	6.87960	.07619	.06646	.06561	426.64000	12.78100	.07357
7.440	24.171	-.47814	5.98480	.00758	6.87050	.07640	.06634	.06572	425.97000	12.76400	.07383
7.538	25.050	-.47736	5.98450	.00842	6.94390	.07770	.06648	.06573	430.41000	12.90100	.07489
7.561	25.756	-.47406	5.98410	.00854	6.92560	.07683	.06613	.06528	429.18000	12.86700	.07499
7.609	26.337	-.47245	5.98380	.00847	6.91910	.07624	.06525	.06551	428.67000	12.85500	.07541
7.668	27.017	-.47198	5.98340	.00848	6.92820	.07694	.06523	.06670	429.13000	12.87200	.07651
7.679	27.886	-.47415	5.98310	.00987	6.92720	.07759	.06634	.06845	428.96000	12.87000	.07869
7.693	28.618	-.47289	5.98270	.01003	6.92620	.07748	.06732	.06954	428.80000	12.86800	.08060
7.734	28.972	-.47452	5.98230	.01050	6.95430	.07813	.06803	.07031	430.42000	12.92000	.08228
	GRADIENT	.00426	-.00055	.00026	-.02035	.00310	-.00122	.00086	-1.43344	-.03833	.00016

OA257 (LARC 20-M6-6559) OV102 (S7E038) (10 JUL 81)

REFERENCE DATA

SREF = 2690.0000 SQ.FT. XMRP = 1076.6800 IN. XO
LREF = 474.8100 INCHES YMRP = .0000 IN. YO
BREF = 936.6800 INCHES ZMRP = 375.0000 IN. ZO
SCALE = .0100

PARAMETRIC DATA

BETA = -.500 PHI = .000
SPDBRK = .000 AILRON = .000
YP = .000 1S = 1.000
ELEVON = .000 MACH = 6.000
S-MODE = 1.000 S-DIR = 2.000

RUN NO. 260/ 0 RN/L = 2.25 GRADIENT INTERVAL = 23.00/ 25.00

RN/L	ALPHA	BETA	MACH	PHI	Q	BP1	BP2	BP3	PT1	PT2	PSC
2.226	24.388	-.63347	5.96570	.00299	2.40670	.02837	.02513	.02867	147.24000	4.47150	.03086
2.229	24.564	-.63487	5.96640	.00319	2.40920	.02773	.02448	.02801	147.48000	4.47620	.03022
2.291	24.615	-.55902	5.95550	.00270	2.49810	.02630	.02531	.02680	151.76000	4.64150	.02972
2.218	25.422	-.55521	5.96380	.00288	2.41360	.02737	.02488	.02647	147.47000	4.48430	.02929
2.219	26.257	-.55521	5.96340	.00299	2.41480	.02745	.02485	.02637	147.51000	4.48670	.02933
2.212	27.189	-.55569	5.96290	.00335	2.41660	.02832	.02525	.02714	147.58000	4.49010	.03022
2.219	28.212	-.55615	5.96250	.00374	2.41880	.02875	.02568	.02735	147.66000	4.49400	.03150
2.212	29.216	-.55476	5.96210	.00368	2.42220	.02870	.02556	.02670	147.82000	4.50040	.03240
2.227	30.057	-.55493	5.96170	.00390	2.42560	.02897	.02543	.02703	147.99000	4.50670	.03316
2.228	30.851	-.55534	5.96130	.00368	2.43160	.02983	.02556	.02779	148.32000	4.51790	.03412
2.237	31.666	-.54955	5.96090	.00391	2.43650	.03097	.02617	.02867	148.57000	4.52690	.03502
2.237	32.680	-.54842	5.96030	.00398	2.44010	.03324	.02795	.03140	148.74000	4.53370	.03738
2.250	33.539	-.54799	5.95990	.00384	2.43970	.03534	.02958	.03369	148.67000	4.53300	.03944
2.247	34.474	-.54380	5.95950	.00383	2.44010	.03724	.03071	.03489	148.66000	4.53370	.04109
2.256	35.245	-.54378	5.95910	.00393	2.44730	.03906	.03170	.03598	149.05000	4.54710	.04240
2.252	36.248	-.54459	5.95870	.00395	2.45080	.04163	.03326	.03741	149.22000	4.55350	.04415
2.268	37.100	-.54475	5.95830	.00418	2.45850	.04395	.03477	.03937	149.65000	4.56780	.04589
2.284	37.827	-.54465	5.95800	.00422	2.48500	.04617	.03637	.04155	151.23000	4.61710	.04787
2.310	38.691	-.54502	5.95760	.00463	2.51300	.04903	.03882	.04396	152.89000	4.66910	.05011
2.316	39.242	-.54410	5.95720	.00478	2.51750	.04961	.03883	.04363	153.12000	4.67750	.05033
	GRADIENT	.24102	-.03226	-.00065	.30215	-.00770	-.00035	-.00704	15.11685	.56201	-.00467

OA257 (LARC 20-M6-6559) OV102 (S7E038) (10 JUL 81)

REFERENCE DATA

SREF = 2690.0000 SQ.FT. XMRP = 1076.6800 IN. XO
LREF = 474.8100 INCHES YMRP = .0000 IN. YO
BREF = 936.6800 INCHES ZMRP = 375.0000 IN. ZO
SCALE = .0100

PARAMETRIC DATA

BETA = -.500 PHI = .000
SPDBRK = .000 AILRON = .000
YP = .000 1S = 1.000
ELEVON = .000 MACH = 6.000
S-MODE = 1.000 S-DIR = 2.000

RUN NO. 256/ 0 RN/L = 7.50 GRADIENT INTERVAL = 23.00/ 25.00

RN/L	ALPHA	BETA	MACH	PHI	Q	BP1	BP2	BP3	PT1	PT2	PSC
7.290	24.165	-.44873	5.98750	.00694	6.75890	.07521	.06388	.06397	419.83000	12.55700	.07127
7.358	24.217	-.44925	5.98670	.00717	6.79310	.07608	.06410	.06463	421.71000	12.62000	.07179
7.380	24.714	-.44908	5.98630	.00726	6.82090	.07629	.06321	.06430	423.33000	12.67200	.07129
7.400	25.315	-.44188	5.98590	.00736	6.83450	.07532	.06284	.06244	424.06000	12.69700	.07114
7.420	25.866	-.43945	5.98560	.00733	6.85670	.07543	.06304	.06267	425.35000	12.73900	.07182
7.418	26.475	-.43891	5.98530	.00727	6.84060	.07575	.06297	.06397	424.25000	12.70900	.07295
7.432	27.565	-.43818	5.98490	.00774	6.83810	.07635	.06314	.06561	423.98000	12.70400	.07485
7.473	28.165	-.43803	5.98460	.00785	6.88280	.07656	.06383	.06791	426.66000	12.78700	.07705
7.494	28.868	-.43730	5.98420	.00821	6.90300	.07759	.06474	.07063	427.80000	12.82500	.07984
7.493	29.784	-.43815	5.98380	.00844	6.89350	.07960	.06558	.07424	427.10000	12.80700	.08292
7.511	30.755	-.43975	5.98350	.00965	6.90830	.08301	.06752	.07884	427.92000	12.83500	.08666
7.487	31.243	-.43817	5.98300	.00893	6.87870	.08447	.06895	.08112	425.94000	12.78000	.08855
7.538	32.295	-.43771	5.98260	.00901	6.90070	.08962	.07226	.08430	427.17000	12.82000	.09319
7.552	33.028	-.43579	5.98220	.00930	6.91840	.09302	.07410	.08496	428.17000	12.85300	.09581
7.573	33.977	-.42840	5.98180	.00999	6.92510	.09886	.07776	.08669	428.46000	12.86600	.09979
7.553	34.577	-.42663	5.98130	.00971	6.91980	.10140	.07911	.08691	427.97000	12.85600	.10170
7.556	34.904	-.42788	5.98090	.00999	6.89700	.10270	.07970	.08735	426.44000	12.81400	.10248
7.532	35.700	-.40651	5.98040	.00932	6.86500	.10665	.08182	.08975	424.31000	12.75400	.10579
7.592	36.529	-.40776	5.98000	.01044	6.93190	.11184	.08597	.09390	428.35000	12.87900	.11086
7.651	37.239	-.40802	5.97970	.01088	6.96500	.11595	.08950	.09706	430.29000	12.94000	.11475
7.634	38.277	-.40659	5.97930	.01023	6.95140	.12190	.09445	.10210	429.34000	12.91500	.12148
7.606	38.914	-.39403	5.97860	.01075	6.93750	.12602	.09783	.10537	428.27000	12.88900	.12678
	GRADIENT	-.00024	-.00163	.00042	.09007	.00136	-.00144	.00010	5.12482	.16741	-.00038

OA257 (LARC 20-M6-6559) OV102 (S7E039) (10 JUL 81)

REFERENCE DATA

SREF = 2690.0000 SQ.FT. XMRP = 1076.6800 IN. XO
LREF = 474.8100 INCHES YMRP = .0000 IN. YO
BREF = 936.6800 INCHES ZMRP = 375.0000 IN. ZO
SCALE = .0100

PARAMETRIC DATA

BETA = .500 PHI = .000
SPDBRK = .000 AILRON = .000
YP = .000 1S = 1.000
ELEVON = .000 MACH = 6.000
S-MODE = 1.000 S-DIR = 2.000

RUN NO. 261/ 0 RN/L = 2.26 GRADIENT INTERVAL = 23.00/ 25.00

RN/L	ALPHA	BETA	MACH	PHI	Q	BP1	BP2	BP3	PT1	PT2	PSC
2.270	14.361	.43429	5.96390	-.00097	2.44120	.02269	.02270	.02397	149.17000	4.53560	.02550
2.260	14.384	.43410	5.96270	-.00092	2.43850	.02267	.02273	.02418	148.89000	4.53070	.02570
2.267	14.860	.43397	5.94950	-.00092	2.43100	.02194	.02267	.02364	147.08000	4.51700	.02549
2.256	15.282	.43349	5.96170	-.00082	2.43510	.02372	.02377	.02495	148.57000	4.52430	.02728
2.268	16.130	.43576	5.96120	-.00123	2.43320	.02513	.02427	.02561	148.41000	4.52090	.02799
2.256	17.001	.43482	5.96070	-.00131	2.43410	.02583	.02482	.02637	148.41000	4.52250	.02875
2.260	18.098	.43521	5.96010	-.00121	2.43660	.02626	.02497	.02692	148.51000	4.52720	.02908
2.274	19.062	.43357	5.95960	-.00106	2.43830	.02634	.02524	.02756	148.55000	4.53030	.02954
2.270	19.849	.43426	5.95910	-.00135	2.43540	.02675	.02568	.02812	148.32000	4.52490	.02997
2.258	20.488	.43429	5.95860	-.00141	2.43910	.02728	.02595	.02921	148.51000	4.53190	.03048
2.266	21.277	.43333	5.95810	-.00148	2.43700	.02799	.02623	.02998	148.32000	4.52800	.03118
2.264	22.091	.43477	5.95760	-.00172	2.43950	.02869	.02688	.03074	148.42000	4.53260	.03189
2.254	23.035	.43423	5.95710	-.00157	2.43880	.02934	.02715	.03085	148.32000	4.53130	.03233
2.266	23.739	.43629	5.95660	-.00166	2.44210	.02943	.02727	.03106	148.47000	4.53740	.03261
2.272	24.511	.43813	5.95600	-.00165	2.44060	.02853	.02728	.02998	148.32000	4.53460	.03189
2.261	25.206	.43822	5.95550	-.00175	2.43970	.02784	.02688	.02889	148.22000	4.53310	.03131
2.249	25.749	.43996	5.95500	-.00167	2.43950	.02794	.02623	.02888	148.16000	4.53270	.03105
2.256	26.314	.44002	5.95450	-.00174	2.44290	.02835	.02574	.02888	148.30000	4.53890	.03089
2.263	27.334	.44436	5.95390	-.00199	2.44490	.02797	.02564	.02942	148.37000	4.54280	.03120
2.252	28.285	.44428	5.95340	-.00203	2.44230	.02778	.02592	.02976	148.16000	4.53790	.03214
2.248	29.016	.44444	5.95290	-.00218	2.44400	.02830	.02644	.03030	148.21000	4.54100	.03318
2.246	29.569	.44454	5.95230	-.00173	2.44140	.02859	.02678	.03009	147.99000	4.53620	.03368
	GRADIENT	.00264	-.00075	-.00005	.00117	-.00056	.00008	-.00061	-.00321	.00214	-.00031

OA257 (LARC 20-M6-6559) OV102 (S7E039) (10 JUL 81)

REFERENCE DATA

SREF = 2690.0000 SQ.FT. XMRP = 1076.6800 IN. XO
LREF = 474.8100 INCHES YMRP = .0000 IN. YO
BREF = 936.6800 INCHES ZMRP = 375.0000 IN. ZO
SCALE = .0100

PARAMETRIC DATA

BETA = .500 PHI = .000
SPDBRK = .000 AILRON = .000
YP = .000 1S = 1.000
ELEVON = .000 MACH = 6.000
S-MODE = 1.000 S-DIR = 2.000

RUN NO. 257/ 0 RN/L = 7.57 GRADIENT INTERVAL = 23.00/ 25.00

RN/L	ALPHA	BETA	MACH	PHI	Q	BP1	BP2	BP3	PT1	PT2	PSC
7.358	14.078	.62161	5.98620	-.00262	6.77720	.05563	.06130	.05763	420.58000	12.59100	.06532
7.475	14.538	.63012	5.97380	-.00259	6.88420	.05558	.06179	.05829	423.56000	12.79000	.06635
7.464	14.706	.62051	5.98490	-.00296	6.88070	.05861	.06149	.05829	426.64000	12.78300	.06622
7.454	15.621	.62244	5.98440	-.00313	6.87240	.05866	.06032	.05720	425.97000	12.76800	.06615
7.445	16.543	.62306	5.98400	-.00350	6.86960	.05995	.06088	.05938	425.66000	12.76300	.06771
7.466	17.738	.62283	5.98340	-.00369	6.88250	.06272	.06247	.06222	426.30000	12.78700	.07018
7.515	18.472	.62255	5.98290	-.00376	6.93410	.06466	.06324	.06310	429.34000	12.88200	.07077
7.535	19.449	.62125	5.98240	-.00353	6.94720	.06558	.06404	.06397	430.01000	12.90700	.07064
7.528	20.111	.62046	5.98200	-.00372	6.92760	.06715	.06557	.06342	428.66000	12.87100	.07126
7.524	20.873	.62219	5.98150	-.00451	6.90320	.06861	.06668	.06288	427.02000	12.82500	.07243
7.527	21.908	.62150	5.98110	-.00448	6.88840	.07051	.06708	.06244	425.97000	12.79800	.07338
7.590	22.747	.62299	5.98060	-.00486	6.91760	.07402	.06683	.06233	427.63000	12.85200	.07421
7.723	23.550	.62655	5.97970	-.00487	6.98700	.07434	.06789	.06223	431.66000	12.98100	.07457
7.697	24.066	.63205	5.97920	-.00520	6.96600	.07559	.06899	.06266	430.23000	12.94200	.07500
7.711	24.542	.63271	5.97880	-.00517	6.98360	.07705	.06988	.06310	431.17000	12.97500	.07563
7.720	25.124	.63313	5.97830	-.00549	6.98710	.07770	.07037	.06255	431.25000	12.98100	.07588
7.698	25.802	.63304	5.97790	-.00561	6.96230	.07743	.06980	.06135	429.58000	12.93500	.07566
7.756	26.471	.63506	5.97740	-.00579	7.00980	.07683	.06929	.06080	432.37000	13.02300	.07638
7.714	27.569	.63299	5.97690	-.00602	6.99000	.07597	.06691	.06070	430.99000	12.98700	.07796
7.659	28.585	.63268	5.97640	-.00611	6.94140	.07683	.06582	.06342	427.85000	12.89600	.08049
7.651	29.174	.63169	5.97590	-.00573	6.94600	.07738	.06604	.06550	427.98000	12.90500	.08248
	GRADIENT	.00627	-.00089	-.00031	-.00394	.00272	.00200	.00087	-.52498	-.00700	.00106

OA257 (LARC 20-M6-6559) DV102 (S7E040) (10 JUL 81)

REFERENCE DATA

SREF = 2690.0000 SQ.FT. XMRP = 1076.6800 IN. XO
LREF = 474.8100 INCHES YMRP = .0000 IN. YO
BREF = 936.6800 INCHES ZMRP = 375.0000 IN. ZO
SCALE = .0100

PARAMETRIC DATA

BETA = .500 PHI = .000
SPDBRK = .000 AILRON = .000
YP = .000 1S = 1.000
ELEVON = .000 MACH = 6.000
S-MODE = 1.000 S-DIR = 2.000

RUN NO. 262/ 0 RN/L = 2.26 GRADIENT INTERVAL = 23.00/ 25.00

RN/L	ALPHA	BETA	MACH	PHI	Q	BP1	BP2	BP3	PT1	PT2	PSC
2.277	24.252	.43277	5.96770	-.00190	2.46690	.02956	.02740	.03140	151.15000	4.58330	.03278
2.262	24.341	.43163	5.96670	-.00185	2.45950	.02880	.02737	.03041	150.58000	4.56960	.03228
2.261	24.499	.48297	5.95510	-.00210	2.44050	.02943	.02690	.03106	148.22000	4.53440	.03255
2.254	24.876	.43199	5.96620	-.00206	2.45890	.02815	.02718	.02965	150.50000	4.56860	.03183
2.251	25.541	.43197	5.96570	-.00211	2.45600	.02830	.02666	.02953	150.27000	4.56310	.03158
2.254	26.167	.43228	5.96530	-.00232	2.45510	.02891	.02651	.02954	150.17000	4.56150	.03164
2.253	26.790	.43291	5.96480	-.00220	2.45800	.02932	.02617	.02964	150.30000	4.56680	.03159
2.261	27.877	.43168	5.96420	-.00270	2.45800	.03013	.02650	.03128	150.23000	4.56690	.03275
2.254	28.760	.43227	5.96370	-.00258	2.46150	.03105	.02724	.03248	150.40000	4.57340	.03435
2.261	29.619	.43258	5.96330	-.00229	2.45850	.03150	.02798	.03303	150.17000	4.56780	.03522
2.262	30.121	.43282	5.96280	-.00247	2.45930	.03161	.02835	.03271	150.17000	4.56940	.03586
2.264	31.021	.43231	5.96220	-.00226	2.45870	.03205	.02826	.03238	150.07000	4.56810	.03681
2.261	31.980	.43276	5.96170	-.00262	2.45980	.03302	.02804	.03282	150.08000	4.57030	.03771
2.273	32.490	.43390	5.96130	-.00276	2.46260	.03392	.02832	.03346	150.22000	4.57550	.03850
2.268	33.076	.43352	5.96090	-.00258	2.46120	.03518	.02933	.03445	150.08000	4.57280	.03957
2.265	33.653	.43266	5.96050	-.00273	2.46160	.03670	.03084	.03588	150.07000	4.57370	.04097
2.267	34.493	.43216	5.96000	-.00247	2.46270	.03843	.03210	.03718	150.08000	4.57560	.04231
2.268	34.963	.44232	5.95960	-.00265	2.46170	.03951	.03268	.03795	149.98000	4.57390	.04320
2.271	35.631	.44343	5.95920	-.00280	2.46380	.04092	.03329	.03871	150.07000	4.57770	.04422
2.266	36.181	.44335	5.95880	-.00279	2.46690	.04220	.03397	.03969	150.22000	4.58360	.04521
2.261	37.166	.44327	5.95830	-.00284	2.46260	.04460	.03587	.04134	149.90000	4.57560	.04691
2.264	37.863	.45330	5.95790	-.00295	2.46300	.04653	.03723	.04286	149.88000	4.57620	.04828
2.250	38.785	.45370	5.95760	-.00259	2.45840	.04866	.03870	.04418	149.57000	4.56780	.04985
2.260	39.380	.45153	5.95720	-.00250	2.45800	.04908	.03855	.04396	149.50000	4.56700	.05011
	GRADIENT	.00098	-.00221	-.00030	-.00938	-.00188	-.00036	-.00230	-.80760	-.01719	-.00128

OA257 (LARC 20-M6-6559) OV102 (S7E040) (10 JUL 81)

REFERENCE DATA

SREF = 2690.0000 SQ.FT. XMRP = 1076.6800 IN. XO
LREF = 474.8100 INCHES YMRP = .0000 IN. YO
BREF = 936.6800 INCHES ZMRP = 375.0000 IN. ZO
SCALE = .0100

PARAMETRIC DATA

BETA = .500 PHI = .000
SPDBRK = .000 AILRON = .000
YP = .000 1S = 1.000
ELEVON = .000 MACH = 6.000
S-MODE = 1.000 S-DIR = 2.000

RUN NO. 258/ 0 RN/L = 7.57 GRADIENT INTERVAL = 23.00/ 25.00

RN/L	ALPHA	BETA	MACH	PHI	Q	BP1	BP2	BP3	PT1	PT2	PSC
7.518	23.922	.48297	5.98500	-.00617	6.90900	.07299	.06594	.06178	428.41000	12.83600	.07426
7.541	24.000	.48119	5.98380	-.00586	6.90320	.07348	.06637	.06222	427.68000	12.82500	.07473
7.478	24.178	.48119	5.97300	-.00549	6.86290	.07343	.06766	.06157	422.04000	12.75100	.07416
7.531	24.894	.48181	5.98330	-.00637	6.90650	.07516	.06765	.06244	427.75000	12.83100	.07567
7.509	25.734	.48255	5.98290	-.00695	6.89250	.07737	.06777	.06157	426.76000	12.80500	.07617
7.508	26.772	.48256	5.98250	-.00679	6.88710	.07885	.06683	.06014	426.30000	12.79500	.07690
7.474	27.644	.48335	5.98210	-.00743	6.87090	.07770	.06599	.06081	425.18000	12.76500	.07822
7.506	28.402	.48186	5.98160	-.00741	6.92690	.07922	.06650	.06375	428.51000	12.86900	.08074
7.529	28.781	.48176	5.98120	-.00747	6.92050	.07971	.06623	.06562	428.00000	12.85700	.08155
7.474	29.824	.48076	5.98030	-.00725	6.86520	.08296	.06880	.07030	424.31000	12.75500	.08623
7.556	30.815	.48070	5.97980	-.00749	6.93800	.08642	.07115	.07458	428.67000	12.89000	.09076
7.546	31.558	.48120	5.97940	-.00799	6.90500	.08794	.07213	.07786	426.51000	12.82900	.09300
7.579	32.503	.48131	5.97900	-.00834	6.92140	.09108	.07370	.08245	427.39000	12.85900	.09563
7.634	33.206	.48189	5.97860	-.00830	6.96370	.09388	.07531	.08527	429.87000	12.93800	.09787
7.623	33.962	.48798	5.97810	-.00923	6.93230	.09718	.07752	.08691	427.80000	12.87900	.10042
7.653	34.690	.49152	5.97760	-.00918	6.95540	.10119	.08075	.08888	429.10000	12.92200	.10402
7.685	35.242	.49217	5.97720	-.00913	6.97770	.10438	.08308	.09019	430.34000	12.96400	.10658
7.649	35.867	.49183	5.97670	-.00911	6.93630	.10730	.08513	.09149	427.63000	12.88700	.10886
7.701	36.687	.49081	5.97620	-.00935	6.98520	.11244	.08843	.09467	430.51000	12.97800	.11272
7.695	37.440	.49002	5.97570	-.00904	6.95670	.11650	.09088	.09620	428.60000	12.92500	.11559
7.636	38.336	.50038	5.97520	-.00816	6.91450	.12180	.09383	.10144	425.86000	12.84700	.11962
7.646	38.927	.49768	5.97480	-.00779	6.92160	.12712	.09591	.10769	426.18000	12.86000	.12364
	GRADIENT	-.00031	.00009	-.00044	.00521	.00211	.00149	.00056	.34759	.00934	.00135

OA257 (LARC 20-M6-6559) OV102 (S7E041) (10 JUL 81)

REFERENCE DATA

SREF = 2690.0000 SQ.FT. XMRP = 1076.6800 IN. XO
LREF = 474.8100 INCHES YMRP = .0000 IN. YO
BREF = 936.6800 INCHES ZMRP = 375.0000 IN. ZO
SCALE = .0100

PARAMETRIC DATA

BETA = .000 PHI = .000
SPDBRK = .000 AILRON = .000
YP = .000 1S = 1.000
ELEVON = .000 MACH = 6.000
S-MODE = 1.000 S-DIR = 2.000

RUN NO. 320/ 0 RN/L = 2.26 GRADIENT INTERVAL = 23.00/ 25.00

RN/L	ALPHA	BETA	MACH	PHI	Q	BP1	BP2	BP3	PT1	PT2	PSC
2.284	14.630	-.04375	5.97580	.00075	2.44750	.02864	.02434	.01988	150.80000	4.54720	.02687
2.263	14.839	-.04334	5.97440	.00065	2.44460	.02924	.02470	.02054	150.47000	4.54180	.02783
2.314	14.989	-.02249	5.95350	.00068	2.45230	.02796	.02403	.01923	148.78000	4.55650	.02641
2.274	16.240	-.04239	5.97370	.00073	2.44300	.03005	.02538	.02119	150.30000	4.53890	.02866
2.267	17.209	-.04360	5.97320	.00084	2.44260	.03075	.02575	.02185	150.22000	4.53810	.02917
2.265	18.164	-.04254	5.97260	.00087	2.43950	.03070	.02618	.02218	149.97000	4.53240	.02879
2.264	18.953	-.04210	5.97210	.00076	2.44000	.03114	.02652	.02295	149.96000	4.53330	.02961
2.252	19.672	-.04282	5.97150	.00069	2.43860	.03189	.02729	.02393	149.81000	4.53080	.03026
2.252	20.695	-.04152	5.97070	.00062	2.43580	.03346	.02772	.02524	149.56000	4.52560	.03205
2.251	21.650	-.04324	5.97000	.00093	2.43540	.03482	.02750	.02611	149.46000	4.52480	.03319
2.247	22.822	-.04299	5.96930	.00088	2.43280	.03584	.02753	.02699	149.22000	4.52000	.03473
2.238	23.947	-.04213	5.96860	.00099	2.43110	.03633	.02769	.02786	149.04000	4.51680	.03562
2.245	24.669	-.04280	5.96780	.00088	2.43100	.03617	.02732	.02797	148.96000	4.51670	.03498
2.240	25.535	-.04199	5.96710	.00100	2.43090	.03541	.02640	.02710	148.88000	4.51650	.03454
2.234	26.482	-.04218	5.96640	.00114	2.42800	.03541	.02646	.02644	148.63000	4.51110	.03396
2.242	27.624	-.03723	5.96570	.00121	2.42810	.03676	.02741	.02655	148.56000	4.51140	.03480
2.235	28.596	-.03751	5.96500	.00141	2.42800	.03795	.02821	.02644	148.48000	4.51100	.03589
2.244	29.565	-.03767	5.96420	.00155	2.42890	.03698	.02855	.02589	148.46000	4.51290	.03588
2.250	30.901	-.03687	5.96340	.00117	2.42900	.03596	.02824	.02535	148.38000	4.51300	.03607
2.248	31.948	-.03477	5.96260	.00115	2.42930	.03747	.02888	.02622	148.31000	4.51360	.03717
2.259	33.014	-.03216	5.96190	.00144	2.42900	.03925	.03042	.02786	148.23000	4.51300	.03921
2.264	33.760	-.03322	5.96130	.00152	2.42980	.04066	.03174	.02939	148.21000	4.51460	.04074
2.261	34.535	-.03312	5.96050	.00150	2.42870	.04217	.03251	.03016	148.06000	4.51250	.04196
2.259	35.413	-.03199	5.95970	.00145	2.42730	.04385	.03343	.03081	147.89000	4.50980	.04311
2.268	36.288	-.03292	5.95900	.00146	2.42850	.04602	.03466	.03180	147.89000	4.51210	.04458
2.255	37.228	-.02800	5.95830	.00155	2.42390	.04781	.03604	.03278	147.55000	4.50360	.04560
2.271	38.408	-.02812	5.95760	.00170	2.42400	.05013	.03724	.03431	147.48000	4.50390	.04727
2.291	39.004	-.02653	5.95670	.00206	2.42690	.04813	.03515	.03278	147.56000	4.50910	.04599
	GRADIENT	-.00093	-.00110	-.00016	-.00014	-.00022	-.00051	.00015	-.11076	-.00013	-.00089

OA257 (LARC 20-M6-6559) OV102 (S7E041) (10 JUL 81)

REFERENCE DATA

SREF = 2690.0000 SQ.FT. XMRP = 1076.6800 IN. XO
LREF = 474.8100 INCHES YMRP = .0000 IN. YO
BREF = 936.6800 INCHES ZMRP = 375.0000 IN. ZO
SCALE = .0100

PARAMETRIC DATA

BETA = .000 PHI = .000
SPDBRK = .000 AILRON = .000
YP = .000 1S = 1.000
ELEVON = .000 MACH = 6.000
S-MODE = 1.000 S-DIR = 2.000

RUN NO. 323/ O RN/L = 4.44 GRADIENT INTERVAL = 23.00/ 25.00

RN/L	ALPHA	BETA	MACH	PHI	Q	BP1	BP2	BP3	PT1	PT2	PSC
4.457	-.213	-.03704	5.95740	-.00001	4.10750	.05065	.04673	.04931	249.86000	7.63170	.05101
4.299	-.200	-.02392	5.94560	-.00001	4.07880	.05109	.04744	.05062	246.10000	7.57880	.05087
4.468	5.438	-.03616	5.95610	.00050	4.12080	.04470	.04329	.04372	250.44000	7.65660	.04563
4.441	10.383	-.03540	5.95520	.00081	4.10640	.04114	.03926	.04120	249.42000	7.62970	.04307
4.431	14.750	-.03429	5.95390	.00113	4.08270	.04081	.03828	.04055	247.76000	7.58580	.04397
4.422	19.607	-.03392	5.95310	.00105	4.05950	.04595	.03991	.04350	246.21000	7.54280	.04711
4.468	24.362	-.02365	5.95200	.00163	4.09210	.05266	.04240	.04865	248.01000	7.60330	.05273
4.599	29.514	-.02478	5.95110	.00210	4.23520	.05699	.04378	.04964	256.51000	7.86930	.05964
4.539	34.377	-.02312	5.95000	.00210	4.20220	.06781	.05100	.05587	254.32000	7.80790	.07025
4.448	39.316	-.02060	5.94890	.00208	4.13940	.08400	.06065	.08012	250.33000	7.69120	.08554
	GRADIENT	.00000	.00000	.00000	.00000	.00000	.00000	.00000	.00000	.00000	.00000

OA257 (LARC 20-M6-6559) OV102 (S7E041) (10 JUL 81)

REFERENCE DATA

SREF = 2690.0000 SQ.FT. XMRP = 1076.6800 IN. XO
LREF = 474.8100 INCHES YMRP = .0000 IN. YO
BREF = 936.6800 INCHES ZMRP = 375.0000 IN. ZO
SCALE = .0100

PARAMETRIC DATA

BETA = .000 PHI = .000
SPDBRK = .000 AILRON = .000
YP = .000 1S = 1.000
ELEVON = .000 MACH = 6.000
S-MODE = 1.000 S-DIR = 2.000

RUN NO. 314/ 0 RN/L = 7.56 GRADIENT INTERVAL = 23.00/ 25.00

RN/L	ALPHA	BETA	MACH	PHI	Q	BP1	BP2	BP3	PT1	PT2	PSC
7.406	14.356	-.02690	5.98740	.00172	6.77300	.06490	.06025	.06506	420.68000	12.58300	.06505
7.486	14.435	-.02617	5.98570	.00155	6.87430	.06506	.06040	.06528	426.46000	12.77100	.06525
7.497	14.688	.00575	5.96700	.00132	6.87890	.06636	.06430	.07162	421.26000	12.78100	.07138
7.534	14.706	.00507	5.96770	.00149	6.89720	.06485	.06252	.06932	422.59000	12.81500	.06870
7.459	15.640	-.02676	5.98500	.00184	6.84590	.06522	.05988	.06441	424.50000	12.71900	.06454
7.477	17.072	-.02683	5.98420	.00204	6.86850	.06615	.06068	.06550	425.66000	12.76100	.06697
7.497	18.219	-.02863	5.98340	.00243	6.85890	.06880	.06160	.06714	424.83000	12.74300	.06780
7.542	19.198	-.02679	5.98270	.00196	6.90930	.07107	.06289	.06911	427.74000	12.83600	.07004
7.542	20.379	-.02679	5.98190	.00243	6.90630	.07204	.06320	.07064	427.33000	12.83100	.07215
7.566	21.566	-.01782	5.98120	.00258	6.93140	.07275	.06313	.07238	428.66000	12.87800	.07305
7.540	23.274	-.01647	5.98040	.00225	6.92240	.07697	.06335	.07621	427.88000	12.86100	.07293
7.512	24.340	-.01638	5.97970	.00275	6.89950	.08216	.06399	.07686	426.25000	12.81800	.07464
7.525	25.368	-.01549	5.97900	.00203	6.90030	.08445	.06553	.07675	426.08000	12.82000	.07535
7.580	26.876	-.01606	5.97820	.00244	6.94510	.08450	.06618	.07654	428.62000	12.90300	.07657
7.538	28.100	-.01519	5.97730	.00263	6.90150	.08531	.06615	.07654	425.66000	12.82200	.07893
7.507	29.033	-.01617	5.97660	.00324	6.87390	.08823	.06750	.07916	423.75000	12.77100	.08206
7.529	29.611	-.01238	5.97600	.00342	6.86290	.09051	.06950	.08146	422.89000	12.75000	.08451
7.596	30.807	-.01401	5.97530	.00283	6.90570	.09532	.07334	.08615	425.33000	12.83000	.08974
7.653	32.036	-.01620	5.97460	.00365	6.96020	.10100	.07807	.09315	428.49000	12.93100	.09582
7.630	33.181	-.01500	5.97380	.00308	6.91880	.10388	.08062	.09851	425.72000	12.85500	.09935
7.624	34.181	-.01679	5.97320	.00369	6.90100	.10620	.08188	.10451	424.42000	12.82100	.10196
7.695	35.273	-.01519	5.97240	.00344	6.95500	.10993	.08417	.11095	427.52000	12.92200	.10533
7.704	36.432	-.00561	5.97150	.00385	6.95200	.11545	.08827	.11588	427.08000	12.91600	.10963
7.736	37.659	-.00644	5.97080	.00390	6.97960	.12211	.09285	.11971	428.54000	12.96800	.11605
7.658	39.048	-.00533	5.96990	.00474	6.94250	.13163	.10025	.12309	426.00000	12.89900	.12492
	GRADIENT	.00008	-.00066	.00047	-.02148	.00487	.00060	.00061	-1.52927	-.04034	.00161

OA257 (LARC 20-M6-6559) OV102 (S7E042) (10 JUL 81)

REFERENCE DATA

SREF = 2690.0000 SQ.FT. XMRP = 1076.6800 IN. XO
LREF = 474.8100 INCHES YMRP = .0000 IN. YO
BREF = 936.6800 INCHES ZMRP = 375.0000 IN. ZO
SCALE = .0100

PARAMETRIC DATA

BETA = -.500 PHI = .000
SPDBRK = .000 AILRON = .000
YP = .000 1S = 1.000
ELEVON = .000 MACH = 6.000
S-MODE = 1.000 S-DIR = 2.000

RUN NO. 321/ 0 RN/L = 2.26 GRADIENT INTERVAL = 23.00/ 25.00

RN/L	ALPHA	BETA	MACH	PHI	Q	BP1	BP2	BP3	PT1	PT2	PSC
2.253	14.604	-.52597	5.97630	.00232	2.41840	.02821	.02440	.01814	149.06000	4.49310	.02648
2.249	14.701	-.53121	5.97520	.00215	2.41590	.02833	.02443	.01825	148.79000	4.48850	.02718
2.304	14.950	-.51263	5.95760	.00228	2.46740	.02795	.02443	.01770	150.12000	4.58450	.02648
2.248	15.963	-.52563	5.97450	.00245	2.41610	.02848	.02464	.01912	148.73000	4.48890	.02802
2.255	16.708	-.52506	5.97390	.00240	2.41400	.02919	.02511	.01956	148.54000	4.48500	.02833
2.248	17.515	-.52562	5.97350	.00270	2.41350	.02979	.02541	.01978	148.46000	4.48400	.02840
2.250	18.161	-.52552	5.97300	.00277	2.41460	.03005	.02575	.02032	148.48000	4.48600	.02853
2.246	18.966	-.52447	5.97240	.00255	2.41380	.03022	.02609	.02087	148.38000	4.48470	.02904
2.250	19.656	-.52614	5.97190	.00288	2.41770	.03103	.02636	.02163	148.56000	4.49180	.02962
2.262	20.608	-.52418	5.97140	.00268	2.41860	.03265	.02710	.02305	148.56000	4.49350	.03141
2.246	21.452	-.52506	5.97090	.00314	2.41530	.03406	.02723	.02404	148.31000	4.48740	.03256
2.240	22.459	-.52368	5.97040	.00314	2.41590	.03520	.02713	.02513	148.29000	4.48850	.03402
2.247	23.479	-.52527	5.96990	.00355	2.41800	.03606	.02640	.02622	148.38000	4.49250	.03492
2.265	24.595	-.52461	5.96940	.00345	2.42030	.03563	.02615	.02579	148.46000	4.49670	.03473
2.247	25.379	-.52458	5.96890	.00356	2.41970	.03498	.02603	.02469	148.38000	4.49570	.03396
2.249	26.460	-.52458	5.96840	.00373	2.41960	.03546	.02624	.02414	148.31000	4.49540	.03384
2.254	27.545	-.52519	5.96790	.00422	2.42310	.03622	.02679	.02338	148.48000	4.50200	.03442
2.245	28.603	-.52629	5.96740	.00446	2.41980	.03552	.02729	.02283	148.23000	4.49580	.03448
2.249	29.755	-.52535	5.96690	.00470	2.42040	.03439	.02750	.02251	148.21000	4.49690	.03454
2.244	30.759	-.52512	5.96640	.00476	2.42120	.03525	.02787	.02284	148.21000	4.49850	.03543
2.249	31.663	-.52479	5.96590	.00474	2.41930	.03623	.02836	.02327	148.04000	4.49490	.03633
2.255	32.370	-.52438	5.96530	.00461	2.41890	.03758	.02922	.02458	147.96000	4.49430	.03754
2.248	33.127	-.52054	5.96480	.00484	2.41870	.03909	.03042	.02622	147.89000	4.49390	.03908
2.239	33.870	-.51716	5.96430	.00471	2.41530	.04034	.03131	.02688	147.63000	4.48760	.04055
2.248	34.563	-.51860	5.96350	.00514	2.41540	.04174	.03220	.02775	147.56000	4.48780	.04152
2.248	35.505	-.51819	5.96280	.00503	2.41500	.04391	.03352	.02895	147.46000	4.48700	.04298
2.250	36.499	-.51713	5.96230	.00517	2.41860	.04602	.03494	.03016	147.63000	4.49370	.04439
2.259	37.465	-.51819	5.96170	.00539	2.42090	.04808	.03647	.03125	147.71000	4.49800	.04605
2.251	38.330	-.51812	5.96120	.00551	2.42990	.05029	.03807	.03300	148.21000	4.51480	.04771
2.284	39.419	-.51863	5.96060	.00612	2.45710	.05099	.03749	.03322	149.81000	4.56530	.04836
	GRADIENT	.00059	-.00045	-.00010	.00206	-.00039	-.00022	-.00039	.07174	.00376	-.00017

OA257 (LARC 20-M6-6559) DV102 (S7E042) (10 JUL 81)

REFERENCE DATA

SREF = 2690.0000 SQ.FT. XMRP = 1076.6800 IN. XO
LREF = 474.8100 INCHES YMRP = .0000 IN. YO
BREF = 936.6800 INCHES ZMRP = 375.0000 IN. ZO
SCALE = .0100

PARAMETRIC DATA

BETA = -.500 PHI = .000
SPDBRK = .000 AILRON = .000
YP = .000 1S = 1.000
ELEVON = .000 MACH = 6.000
S-MODE = 1.000 S-DIR = 2.000

RUN NO. 316/ 0 RN/L = 7.62 GRADIENT INTERVAL = 23.00/ 25.00

RN/L	ALPHA	BETA	MACH	PHI	Q	BP1	BP2	BP3	PT1	PT2	PSC
7.459	14.432	-.51044	6.00610	.00557	6.71850	.06252	.05859	.05619	422.73000	12.48100	.06351
7.468	14.450	-.51110	6.00720	.00549	6.73610	.06252	.05871	.05608	424.14000	12.51400	.06332
7.774	14.673	-.49456	5.98180	.00543	6.90380	.06214	.06087	.05957	427.13000	12.82600	.06754
7.490	15.687	-.51281	6.00490	.00590	6.74950	.06317	.05822	.05695	424.30000	12.53900	.06313
7.516	16.774	-.51297	6.00410	.00636	6.75550	.06442	.05927	.05793	424.47000	12.55000	.06460
7.556	18.057	-.51206	6.00330	.00659	6.81120	.06609	.06031	.05946	427.71000	12.65300	.06671
7.587	19.212	-.51153	6.00230	.00717	6.82480	.06842	.06099	.06077	428.29000	12.67900	.06786
7.583	20.466	-.50996	6.00140	.00781	6.81210	.06891	.06087	.06219	427.21000	12.65500	.06856
7.590	21.753	-.50967	6.00020	.00823	6.84530	.07183	.06203	.06558	428.95000	12.71700	.07074
7.572	22.808	-.50853	5.99940	.00820	6.83080	.07491	.06253	.06733	427.79000	12.69000	.07189
7.577	24.325	-.50836	5.99840	.00872	6.81470	.08119	.06323	.06864	426.49000	12.66000	.07329
7.578	25.990	-.50950	5.99750	.00945	6.81720	.08277	.06437	.06831	426.38000	12.66500	.07394
7.637	27.131	-.50790	5.99660	.00962	6.86940	.08234	.06461	.06689	429.37000	12.76200	.07521
7.617	28.289	-.51020	5.99560	.01074	6.84620	.08315	.06511	.06700	427.63000	12.71900	.07771
7.645	29.197	-.50697	5.99430	.01048	6.86050	.08553	.06673	.06929	428.16000	12.74500	.08109
7.645	30.181	-.50906	5.99310	.01149	6.85460	.08915	.06956	.07170	427.41000	12.73400	.08480
7.658	31.089	-.50790	5.99220	.01124	6.85680	.09332	.07285	.07640	427.29000	12.73900	.08890
7.740	31.885	-.50673	5.99140	.01148	6.89860	.09657	.07576	.07978	429.65000	12.81600	.09247
7.729	33.320	-.50683	5.99050	.01155	6.90420	.10127	.07951	.08645	429.73000	12.82700	.09746
7.700	34.712	-.50284	5.98940	.01213	6.88200	.10560	.08157	.09629	428.04000	12.78500	.10157
7.676	35.871	-.50301	5.98840	.01209	6.86160	.10999	.08409	.10339	426.46000	12.74800	.10451
7.735	36.746	-.50086	5.98730	.01235	6.91370	.11491	.08796	.10809	429.37000	12.84400	.10898
7.705	38.859	-.49680	5.98610	.01396	6.88220	.12643	.09591	.11442	427.08000	12.78600	.11914
	GRADIENT	.00000	.00000	.00000	.00000	.00000	.00000	.00000	.00000	.00000	.00000

OA257 (LARC 20-M6-6559) OV102 (S7E043) (10 JUL 81)

REFERENCE DATA

SREF = 2690.0000 SQ.FT. XMRP = 1076.6800 IN. XO
LREF = 474.8100 INCHES YMRP = .0000 IN. YO
BREF = 936.6800 INCHES ZMRP = 375.0000 IN. ZO
SCALE = .0100

PARAMETRIC DATA

BETA = .500 PHI = .000
SPDBRK = .000 AILRON = .000
YP = .000 1S = 1.000
ELEVON = .000 MACH = 6.000
S-MODE = 1.000 S-DIR = 2.000

RUN NO. 319/ 0 RN/L = 2.28 GRADIENT INTERVAL = 23.00/ 25.00

RN/L	ALPHA	BETA	MACH	PHI	Q	BP1	BP2	BP3	PT1	PT2	PSC
2.294	14.408	.48154	5.98140	-.00063	2.44850	.02784	.02418	.01901	151.45000	4.54900	.02667
2.291	14.496	.48231	5.98020	-.00057	2.44520	.02833	.02455	.01945	151.12000	4.54280	.02744
2.307	14.983	.50346	5.95850	-.00065	2.40450	.02681	.02406	.01846	146.38000	4.46750	.02667
2.324	15.053	.50346	5.95950	-.00065	2.41240	.02703	.02418	.01868	146.97000	4.48230	.02673
2.285	15.436	.48302	5.97920	-.00080	2.44270	.02974	.02545	.02022	150.85000	4.53820	.02820
2.283	16.285	.48328	5.97840	-.00092	2.44120	.03055	.02557	.02054	150.69000	4.53540	.02884
2.266	17.592	.48236	5.97780	-.00103	2.44160	.03113	.02612	.02152	150.64000	4.53610	.02949
2.269	18.581	.48239	5.97700	-.00077	2.43850	.03098	.02640	.02196	150.37000	4.53060	.02910
2.268	19.836	.48254	5.97600	-.00088	2.43340	.03233	.02750	.02360	149.96000	4.52110	.03076
2.262	21.088	.48155	5.97520	-.00094	2.43210	.03379	.02763	.02480	149.79000	4.51860	.03223
2.263	22.295	.48353	5.97450	-.00099	2.42920	.03509	.02805	.02568	149.54000	4.51330	.03383
2.275	23.406	.48161	5.97370	-.00108	2.42650	.03547	.02830	.02633	149.29000	4.50820	.03460
2.260	24.441	.48171	5.97300	-.00118	2.42370	.03520	.02818	.02655	149.04000	4.50310	.03467
2.272	25.088	.48226	5.97220	-.00101	2.42230	.03520	.02769	.02677	148.88000	4.50040	.03518
2.262	26.192	.48146	5.97140	-.00115	2.42400	.03530	.02723	.02720	148.89000	4.50360	.03512
2.271	27.741	.48840	5.97050	-.00121	2.42370	.03693	.02775	.02688	148.79000	4.50310	.03588
2.279	28.888	.49165	5.96990	-.00141	2.42350	.03807	.02836	.02677	148.71000	4.50260	.03697
2.281	29.708	.49179	5.96920	-.00154	2.42330	.03769	.02916	.02655	148.63000	4.50230	.03729
2.278	30.570	.49256	5.96860	-.00146	2.42290	.03688	.02922	.02535	148.54000	4.50160	.03710
2.282	31.844	.49231	5.96800	-.00138	2.42400	.03725	.02898	.02589	148.54000	4.50370	.03767
2.283	33.003	.49258	5.96730	-.00162	2.42520	.03899	.03002	.02721	148.54000	4.50590	.03921
2.297	33.802	.49158	5.96660	-.00166	2.42370	.04050	.03174	.02885	148.38000	4.50310	.04055
2.299	34.520	.49917	5.96580	-.00145	2.42770	.04223	.03297	.03016	148.54000	4.51060	.04208
2.280	35.607	.50210	5.96500	-.00146	2.42360	.04429	.03371	.03081	148.21000	4.50290	.04336
2.296	36.905	.50086	5.96420	-.00136	2.42380	.04726	.03552	.03267	148.14000	4.50330	.04535
2.305	38.128	.50213	5.96350	-.00163	2.42330	.04959	.03727	.03442	148.04000	4.50250	.04733
2.297	39.319	.50283	5.96260	-.00146	2.42050	.05100	.03773	.03562	147.78000	4.49730	.04847
	GRADIENT	.00010	-.00068	-.00009	-.00270	-.00026	-.00012	.00021	-.24146	-.00493	.00006

OA257 (LARC 20-M6-6559) OV102 (S7E043) (10 JUL 81)

REFERENCE DATA

SREF = 2690.0000 SQ.FT. XMRP = 1076.6800 IN. XO
LREF = 474.8100 INCHES YMRP = .0000 IN. YO
BREF = 936.6800 INCHES ZMRP = 375.0000 IN. ZO
SCALE = .0100

PARAMETRIC DATA

BETA = .500 PHI = .000
SPDBRK = .000 AILRON = .000
YP = .000 1S = 1.000
ELEVON = .000 MACH = 6.000
S-MODE = 1.000 S-DIR = 2.000

RUN NO. 317/ 0 RN/L = 7.52 GRADIENT INTERVAL = 23.00/ 25.00

RN/L	ALPHA	BETA	MACH	PHI	Q	BP1	BP2	BP3	PT1	PT2	PSC
7.337	14.345	.55604	6.01150	-.00178	6.65000	.06182	.05927	.05520	419.98000	12.35400	.06332
7.363	14.429	.55449	6.01020	-.00141	6.68250	.06214	.05927	.05553	421.65000	12.41400	.06357
7.550	14.613	.59639	5.99290	-.00194	6.78160	.06214	.06056	.05826	422.81000	12.59900	.06543
7.412	16.412	.55664	6.00940	-.00222	6.73960	.06372	.05917	.05553	425.00000	12.52000	.06440
7.431	17.522	.55558	6.00880	-.00205	6.75480	.06490	.06013	.05673	425.80000	12.54800	.06684
7.415	18.378	.56313	6.00830	-.00234	6.74670	.06728	.06068	.05761	425.13000	12.53300	.06671
7.361	19.351	.56628	6.00770	-.00252	6.68480	.06804	.06136	.05848	421.06000	12.41800	.06869
7.410	21.029	.56615	6.00680	-.00270	6.72460	.06956	.06173	.06110	423.31000	12.49200	.07055
7.419	22.098	.56690	6.00620	-.00314	6.72600	.07004	.06130	.06230	423.22000	12.49500	.07035
7.456	23.196	.56738	6.00560	-.00310	6.75030	.07454	.06077	.06438	424.58000	12.54000	.07047
7.447	24.185	.56645	6.00500	-.00327	6.74520	.07848	.06255	.06580	424.09000	12.53100	.07226
7.492	25.421	.57368	6.00450	-.00357	6.78180	.08216	.06504	.06766	426.21000	12.59900	.07458
7.498	26.350	.57397	6.00390	-.00385	6.79080	.08255	.06566	.06897	426.63000	12.61500	.07477
7.442	27.275	.57435	6.00330	-.00370	6.72880	.08092	.06461	.06853	422.56000	12.50000	.07541
7.446	28.316	.57643	6.00270	-.00391	6.71340	.08347	.06517	.06919	421.40000	12.47200	.07886
7.587	29.278	.57519	6.00200	-.00393	6.82490	.08742	.06756	.07126	428.21000	12.67900	.08257
7.645	30.847	.57666	6.00100	-.00443	6.86130	.09300	.07229	.07727	430.20000	12.74700	.08909
7.671	31.982	.57729	6.00020	-.00499	6.87040	.09781	.07647	.08339	430.53000	12.76400	.09408
7.730	32.883	.57702	5.99940	-.00500	6.93010	.10073	.07862	.08896	434.02000	12.87400	.09754
7.677	34.131	.57754	5.99860	-.00493	6.89000	.10355	.08028	.09574	431.28000	12.80000	.10093
7.682	34.856	.58770	5.99780	-.00518	6.87130	.10652	.08212	.10022	429.87000	12.76500	.10348
7.704	36.498	.58707	5.99710	-.00506	6.90730	.11388	.08694	.10819	431.89000	12.83200	.10980
7.668	37.876	.58587	5.99630	-.00444	6.87040	.12108	.09171	.11093	429.37000	12.76400	.11570
7.643	38.964	.58524	5.99560	-.00414	6.85390	.12741	.09675	.11158	428.12000	12.73300	.12133
	GRADIENT	-.00094	-.00061	-.00018	-.00516	.00399	.00180	.00144	-.49521	-.00909	.00181

OA257 (LARC 20-M6-6559) OV102 (PRE-HEAT TO 185F) (S7E044) (10 JUL 81)

REFERENCE DATA

SREF = 2690.0000 SQ.FT. XMRP = 1076.6800 IN. XO
LREF = 474.8100 INCHES YMRP = .0000 IN. YO
BREF = 936.6800 INCHES ZMRP = 375.0000 IN. ZO
SCALE = .0100

PARAMETRIC DATA

BETA = .000 PHI = .000
SPDBRK = 86.600 AILRON = .000
YP = .000 1S = 1.000
ELEVON = .000 MACH = 6.000
S-MODE = 1.000 S-DIR = 2.000

RUN NO. 338/ 0 RN/L = 2.26 GRADIENT INTERVAL = 23.00/ 25.00

RN/L	ALPHA	BETA	MACH	PHI	Q	BP1	BP2	BP3	PT1	PT2	PSC
2.249	9.703	-.03117	5.97780	.00038	2.41090	.02742	.02650	.02639	148.75000	4.47920	.02971
2.244	9.719	-.03242	5.97680	.00043	2.41110	.02715	.02628	.02628	148.65000	4.47950	.02944
2.246	9.980	-.02059	5.96300	.00029	2.40700	.02596	.02579	.02530	146.99000	4.47220	.02823
2.237	10.639	-.03045	5.97580	.00029	2.40920	.02616	.02518	.02442	148.44000	4.47600	.02830
2.238	11.590	-.02923	5.97530	.00047	2.40710	.02476	.02429	.02409	148.26000	4.47220	.02702
2.244	12.691	-.02732	5.97470	.00054	2.40380	.02320	.02297	.02311	147.99000	4.46610	.02535
2.242	13.563	-.02480	5.97410	.00045	2.40230	.02309	.02238	.02278	147.84000	4.46320	.02510
2.242	14.566	-.02551	5.97360	.00041	2.40290	.02374	.02272	.02300	147.82000	4.46440	.02586
2.240	15.551	-.02456	5.97300	.00045	2.39850	.02374	.02272	.02311	147.49000	4.45630	.02593
2.238	16.623	-.02649	5.97240	.00046	2.39740	.02389	.02272	.02256	147.36000	4.45410	.02600
2.230	17.802	-.02448	5.97180	.00049	2.39800	.02379	.02269	.02267	147.34000	4.45530	.02600
2.244	18.720	-.02346	5.97130	.00051	2.40160	.02368	.02269	.02256	147.51000	4.46210	.02587
2.244	19.732	-.02048	5.97080	.00055	2.41030	.02380	.02260	.02257	147.99000	4.47810	.02599
2.259	20.457	-.02077	5.97030	.00067	2.42630	.02455	.02281	.02311	148.92000	4.50790	.02683
2.284	21.885	-.02255	5.96980	.00103	2.44720	.02564	.02315	.02333	150.15000	4.54670	.02804
2.299	22.810	-.02173	5.96920	.00116	2.46460	.02579	.02287	.02300	151.16000	4.57910	.02855
2.311	23.658	-.02059	5.96870	.00114	2.47500	.02541	.02306	.02278	151.74000	4.59850	.02823
2.290	24.700	-.02124	5.96790	.00104	2.47500	.02601	.02336	.02322	151.66000	4.59850	.02881
2.304	29.685	-.02085	5.96700	.00107	2.47390	.03039	.02533	.02562	151.50000	4.59640	.03354
2.289	34.697	-.02060	5.96600	.00113	2.46860	.03981	.03157	.03229	151.06000	4.58650	.04377
2.289	39.534	-.02113	5.96530	.00176	2.46590	.05236	.03879	.04070	150.83000	4.58150	.05970
	GRADIENT	-.00062	-.00077	-.00010	.00000	.00057	.00029	.00042	-.07667	.00000	.00055

OA257 (LARC 20-M6-6559) OV102 (S7E045) (10 JUL 81)

REFERENCE DATA

SREF = 2690.0000 SQ.FT. XMRP = 1076.6800 IN. XO
LREF = 474.8100 INCHES YMRP = .0000 IN. YO
BREF = 936.6800 INCHES ZMRP = 375.0000 IN. ZO
SCALE = .0100

PARAMETRIC DATA

BETA = .000 PHI = .000
SPDBRK = 86.600 AILRON = .000
YP = 1.000 1S = 1.000
ELEVON = .000 MACH = 6.000
S-MODE = 1.000 S-DIR = 2.000

RUN NO. 99/ 0 RN/L = 4.47 GRADIENT INTERVAL = 23.00/ 25.00

RN/L	ALPHA	BETA	MACH	PHI	Q	BP1	BP2	BP3	PT1	PT2	PSC
4.476	-.369	-.06674	5.96990	.02006	4.10810	.05612	.05652	.05389	252.08000	7.63260	.05797
4.441	-.191	-.05861	5.95550	.00758	4.07280	.05379	.05437	.05149	247.43000	7.56730	.05579
4.472	4.641	.00572	5.96870	-.32174	4.10070	.05185	.05204	.04603	251.41000	7.61890	.05343
4.462	9.548	-.07899	5.96730	-.65328	4.09580	.05060	.05151	.04548	250.88000	7.60980	.05387
4.412	14.421	-.13902	5.96640	-.97744	4.06830	.04734	.04756	.04197	249.04000	7.55880	.05039
4.400	19.253	-.18427	5.96450	-1.29060	4.03620	.05481	.05726	.04559	246.74000	7.49910	.05952
4.454	24.234	-.29445	5.96310	-1.60240	4.07090	.05990	.06208	.05073	248.62000	7.56370	.06565
4.512	29.302	-.42147	5.96150	-1.90690	4.11780	.06092	.06231	.04909	251.20000	7.65080	.06606
4.521	34.265	-.66010	5.96000	-2.19030	4.10900	.07294	.06801	.05936	250.42000	7.63450	.08060
4.570	39.224	-.74053	5.95860	-2.45870	4.14440	.09686	.07925	.07104	252.32000	7.70020	.10067
	GRADIENT	.00000	.00000	.00000	.00000	.00000	.00000	.00000	.00000	.00000	.00000

OA257 (LARC 20-M6-6559) OV102 (S7E046) (10 JUL 81)

REFERENCE DATA

SREF = 2690.0000 SQ.FT. XMRP = 1076.6800 IN. XO
LREF = 474.8100 INCHES YMRP = .0000 IN. YO
BREF = 936.6800 INCHES ZMRP = 375.0000 IN. ZO
SCALE = .0100

PARAMETRIC DATA

ALPHA = .000 PHI = .000
SPDBRK = 86.600 AILRON = .000
YP = 1.000 1S = 1.000
ELEVON = .000 MACH = 6.000
S-MODE = 2.000 S-DIR = 1.000

RUN NO. 179/ 0 RN/L = 4.47 GRADIENT INTERVAL = -.60/ .60

RN/L	BETA	ALPHA	MACH	PHI	Q	BP1	BP2	BP3	PT1	PT2	PSC
4.442	-4.002	-.23361	5.95720	.01062	4.07860	.05184	.05119	.04625	248.07000	7.57800	.05341
4.441	-3.900	-.23099	5.95720	.01036	4.08040	.05187	.05125	.04626	248.19000	7.58150	.05340
4.441	-3.700	-.23174	5.95730	.01044	4.08490	.05188	.05132	.04623	248.48000	7.58980	.05346
4.446	-3.500	-.23405	5.95730	.01061	4.09040	.05196	.05147	.04607	248.82000	7.60000	.05357
4.454	-3.300	-.23748	5.95740	.01081	4.09320	.05209	.05163	.04598	249.00000	7.60520	.05378
4.458	-3.100	-.23657	5.95740	.01079	4.09470	.05223	.05183	.04580	249.10000	7.60810	.05390
4.453	-2.900	-.23659	5.95750	.01074	4.09590	.05228	.05210	.04589	249.18000	7.61020	.05399
4.455	-2.700	-.23750	5.95760	.01080	4.10010	.05236	.05218	.04599	249.45000	7.61800	.05404
4.457	-2.500	-.23807	5.95760	.01083	4.10200	.05246	.05215	.04623	249.57000	7.62150	.05414
4.453	-2.300	-.23467	5.95770	.01062	4.10460	.05259	.05199	.04634	249.74000	7.62640	.05424
4.448	-2.100	-.23621	5.95770	.01065	4.10200	.05274	.05189	.04654	249.59000	7.62160	.05439
4.448	-1.900	-.23724	5.95780	.01077	4.10350	.05292	.05192	.04676	249.69000	7.62440	.05463
4.459	-1.700	-.23844	5.95780	.01084	4.10480	.05319	.05204	.04685	249.77000	7.62670	.05480
4.470	-1.500	-.23674	5.95790	.01071	4.10930	.05350	.05228	.04702	250.06000	7.63520	.05511
4.464	-1.300	-.23765	5.95790	.01078	4.10910	.05381	.05244	.04708	250.06000	7.63480	.05537
4.461	-1.100	-.23440	5.95800	.01059	4.11010	.05411	.05261	.04716	250.12000	7.63650	.05563
4.466	-.900	-.23535	5.95800	.01063	4.11260	.05439	.05278	.04738	250.29000	7.64120	.05586
4.463	-.700	-.23431	5.95810	.01055	4.11470	.05463	.05307	.04782	250.42000	7.64520	.05607
4.464	-.500	-.23507	5.95810	.01054	4.11710	.05479	.05343	.04834	250.58000	7.64960	.05620
4.459	-.300	-.23541	5.95820	.01054	4.11760	.05487	.05382	.04876	250.62000	7.65050	.05629
4.470	-.100	-.23512	5.95820	.01055	4.12090	.05491	.05417	.04898	250.82000	7.65660	.05631
4.475	.100	-.23589	5.95830	.01056	4.12250	.05488	.05431	.04898	250.93000	7.65960	.05623
4.473	.300	-.23636	5.95830	.01057	4.12610	.05486	.05429	.04888	251.16000	7.66620	.05614
4.471	.500	-.23562	5.95840	.01051	4.12750	.05474	.05409	.04876	251.25000	7.66880	.05598
4.479	.700	-.23618	5.95840	.01057	4.12770	.05459	.05391	.04879	251.28000	7.66930	.05588
4.488	.900	-.23621	5.95850	.01064	4.13060	.05442	.05363	.04875	251.46000	7.67470	.05571
4.482	1.100	-.23453	5.95850	.01053	4.13030	.05428	.05345	.04872	251.46000	7.67410	.05559
4.486	1.300	-.23400	5.95860	.01052	4.13440	.05422	.05341	.04844	251.71000	7.68180	.05548
4.488	1.500	-.23476	5.95860	.01061	4.13310	.05422	.05356	.04827	251.64000	7.67930	.05551
4.505	1.700	-.23208	5.95870	.01039	4.13630	.05425	.05376	.04807	251.84000	7.68520	.05554
4.496	1.900	-.23391	5.95880	.01058	4.13590	.05434	.05404	.04800	251.84000	7.68460	.05563
4.490	2.100	-.23408	5.95880	.01054	4.13870	.05444	.05433	.04805	252.01000	7.68970	.05581
4.488	2.300	-.23204	5.95890	.01046	4.13900	.05454	.05452	.04819	252.04000	7.69030	.05591
4.486	2.500	-.23160	5.95890	.01047	4.14030	.05465	.05466	.04858	252.13000	7.69270	.05607
4.480	2.700	-.23306	5.95900	.01056	4.13920	.05471	.05474	.04892	252.07000	7.69060	.05616
4.483	2.900	-.23283	5.95900	.01058	4.14220	.05476	.05481	.04906	252.26000	7.69630	.05621
4.487	3.100	-.23230	5.95910	.01056	4.14300	.05482	.05483	.04905	252.32000	7.69780	.05629
4.485	3.300	-.23056	5.95910	.01044	4.14460	.05485	.05489	.04912	252.42000	7.70060	.05638
4.485	3.500	-.22958	5.95920	.01033	4.14940	.05491	.05486	.04922	252.73000	7.70960	.05644
4.484	3.700	-.23115	5.95920	.01045	4.14840	.05501	.05503	.04938	252.68000	7.70770	.05657
4.492	3.900	-.23275	5.95930	.01056	4.14760	.05512	.05504	.04954	252.64000	7.70620	.05670
4.480	4.100	-.22771	5.95950	.01029	4.14600	.05527	.05523	.04999	252.57000	7.70330	.05694

OA257 (LARC 20-M6-6559) OV102 (S7E046) (10 JUL 81)

REFERENCE DATA

SREF =	2690.0000 SQ.FT.	XMRP =	1076.6800 IN.	XO	
LREF =	474.8100 INCHES	YMRP =	.0000 IN.	YO	
BREF =	936.6800 INCHES	ZMRP =	375.0000 IN.	ZO	
SCALE =	.0100				

PARAMETRIC DATA

ALPHA =	.000	PHI =	.000
SPDBRK =	86.600	AILRON =	.000
YP =	1.000	1S =	1.000
ELEVON =	.000	MACH =	6.000
S-MODE =	2.000	S-DIR =	1.000

RUN NO. 179/ 0 RN/L = 4.47 GRADIENT INTERVAL = -.60/ .60

RN/L	BETA	ALPHA	MACH	PHI	Q	BP1	BP2	BP3	PT1	PT2	PSC
4.474	4.254	-.23420	5.95960	.01074	4.14530	.05530	.05537	.05007	252.55000	7.70200	.05701
	GRADIENT	-.00091	.00027	-.00001	.01130	-.00004	.00069	.00035	.72571	.02087	-.00023

OA257 (LARC 20-M6-6559) OV102 (S7E146) (10 JUL 81)

REFERENCE DATA

SREF = 2690.0000 SQ.FT. XMRP = 1076.6800 IN. XO
LREF = 474.8100 INCHES YMRP = .0000 IN. YO
BREF = 936.6800 INCHES ZMRP = 375.0000 IN. ZO
SCALE = .0100

PARAMETRIC DATA

ALPHA = .000 PHI = .000
SPDBRK = 86.600 AILRON = .000
YP = 1.000 1S = 1.000
ELEVON = .000 MACH = 6.000
S-MODE = 2.000 S-DIR = 1.000

RUN NO. 2179/ 0 RN/L = 4.47 GRADIENT INTERVAL = -.60/ .60

RN/L	BETA	ALPHA	MACH	PHI	Q	BP1	BP2	BP3	PT1	PT2	PSC
4.442	-4.000	-.23335	5.95720	.01060	4.07870	.05184	.05119	.04625	248.08000	7.57830	.05341
4.439	-3.800	-.23165	5.95730	.01044	4.08140	.05187	.05128	.04629	248.26000	7.58320	.05346
4.444	-3.600	-.23304	5.95730	.01051	4.08860	.05190	.05137	.04616	248.70000	7.59660	.05349
4.447	-3.400	-.23680	5.95740	.01079	4.09070	.05204	.05154	.04606	248.84000	7.60070	.05365
4.460	-3.200	-.23670	5.95740	.01080	4.09540	.05217	.05172	.04583	249.13000	7.60920	.05386
4.454	-3.000	-.23796	5.95750	.01083	4.09380	.05226	.05200	.04584	249.05000	7.60620	.05393
4.453	-2.800	-.23556	5.95750	.01067	4.09810	.05232	.05219	.04594	249.32000	7.61440	.05403
4.455	-2.600	-.23698	5.95760	.01075	4.10040	.05245	.05220	.04608	249.47000	7.61860	.05408
4.456	-2.400	-.23570	5.95760	.01065	4.10310	.05251	.05209	.04631	249.64000	7.62370	.05421
4.451	-2.200	-.23735	5.95770	.01076	4.10380	.05266	.05193	.04641	249.69000	7.62490	.05429
4.445	-2.000	-.23685	5.95770	.01070	4.10200	.05284	.05187	.04667	249.59000	7.62150	.05452
4.454	-1.800	-.23590	5.95780	.01068	4.10420	.05305	.05193	.04684	249.74000	7.62570	.05470
4.463	-1.600	-.23476	5.95780	.01053	4.10590	.05333	.05215	.04695	249.85000	7.62880	.05498
4.467	-1.400	-.23751	5.95790	.01078	4.10970	.05364	.05235	.04701	250.09000	7.63580	.05525
4.461	-1.200	-.23769	5.95790	.01084	4.10880	.05398	.05256	.04709	250.04000	7.63420	.05549
4.464	-1.000	-.23418	5.95800	.01052	4.11160	.05425	.05268	.04723	250.22000	7.63950	.05577
4.463	-.800	-.23864	5.95800	.01082	4.11310	.05453	.05292	.04757	250.32000	7.64210	.05597
4.465	-.600	-.23517	5.95810	.01058	4.11710	.05471	.05323	.04809	250.57000	7.64960	.05616
4.461	-.400	-.23549	5.95820	.01054	4.11680	.05485	.05362	.04854	250.56000	7.64900	.05623
4.464	-.200	-.23460	5.95820	.01055	4.11990	.05487	.05399	.04893	250.76000	7.65490	.05633
4.475	.000	-.23533	5.95830	.01055	4.12220	.05491	.05424	.04898	250.91000	7.65900	.05628
4.473	.200	-.23641	5.95830	.01056	4.12330	.05487	.05431	.04896	250.99000	7.66120	.05617
4.473	.400	-.23718	5.95840	.01063	4.12770	.05481	.05421	.04877	251.26000	7.66930	.05608
4.472	.600	-.23662	5.95840	.01058	4.12670	.05465	.05402	.04879	251.21000	7.66740	.05596
4.485	.800	-.23492	5.95850	.01054	4.12950	.05452	.05376	.04878	251.39000	7.67270	.05580
4.485	1.000	-.23571	5.95850	.01059	4.12980	.05434	.05353	.04873	251.42000	7.67320	.05564
4.484	1.200	-.23490	5.95860	.01058	4.13260	.05424	.05340	.04858	251.60000	7.67830	.05554
4.484	1.400	-.23384	5.95860	.01051	4.13400	.05420	.05345	.04832	251.70000	7.68110	.05548
4.499	1.600	-.23460	5.95870	.01056	4.13500	.05421	.05364	.04813	251.76000	7.68280	.05551
4.503	1.800	-.23137	5.95870	.01040	4.13600	.05429	.05389	.04797	251.83000	7.68470	.05556
4.492	2.000	-.23253	5.95880	.01047	4.13740	.05435	.05417	.04805	251.93000	7.68730	.05571
4.490	2.200	-.23379	5.95880	.01060	4.13980	.05449	.05441	.04807	252.08000	7.69180	.05584
4.488	2.400	-.23253	5.95890	.01046	4.13930	.05460	.05462	.04839	252.06000	7.69090	.05600
4.483	2.600	-.23105	5.95890	.01039	4.14010	.05469	.05468	.04876	252.12000	7.69230	.05613
4.480	2.800	-.23160	5.95900	.01049	4.13990	.05475	.05481	.04899	252.12000	7.69190	.05620
4.487	3.000	-.23383	5.95900	.01061	4.14440	.05480	.05481	.04904	252.40000	7.70040	.05625
4.485	3.200	-.23116	5.95910	.01046	4.14230	.05483	.05487	.04905	252.28000	7.69640	.05634
4.487	3.400	-.22872	5.95910	.01034	4.14800	.05485	.05489	.04917	252.64000	7.70710	.05640
4.482	3.600	-.22916	5.95920	.01034	4.14890	.05494	.05496	.04926	252.70000	7.70860	.05649
4.492	3.800	-.23253	5.95930	.01057	4.14870	.05506	.05504	.04947	252.70000	7.70830	.05666
4.487	4.000	-.23406	5.95930	.01072	4.14550	.05517	.05511	.04960	252.51000	7.70230	.05673
4.476	4.200	-.22710	5.95950	.01022	4.14490	.05526	.05529	.05001	252.52000	7.70130	.05694
	GRADIENT	-.00170	.00025	.00003	.00964	-.00004	.00069	.00046	.63393	.01791	-.00019

OA257 (LARC 20-M6-6559) OV102 (S7E047) (10 JUL 81)

REFERENCE DATA

SREF = 2690.0000 SQ.FT. XMRP = 1076.6800 IN. XO
LREF = 474.8100 INCHES YMRP = .0000 IN. YO
BREF = 936.6800 INCHES ZMRP = 375.0000 IN. ZO
SCALE = .0100

PARAMETRIC DATA

ALPHA = 5.000 PHI = .000
SPDBRK = 86.600 AILRON = .000
YP = 1.000 1S = 1.000
ELEVON = .000 MACH = 6.000
S-MODE = 2.000 S-DIR = 1.000

RUN NO. 180/ 0 RN/L = 4.48 GRADIENT INTERVAL = -.60/ .60

RN/L	BETA	ALPHA	MACH	PHI	Q	BP1	BP2	BP3	PT1	PT2	PSC
4.481	-4.096	4.71260	5.95780	-.32512	4.13980	.05088	.05078	.04327	251.90000	7.69170	.05220
4.475	-3.900	4.71340	5.95790	-.32524	4.14260	.05092	.05081	.04335	252.09000	7.69700	.05223
4.468	-3.700	4.71530	5.95790	-.32540	4.14340	.05098	.05103	.04357	252.15000	7.69840	.05234
4.473	-3.500	4.71680	5.95800	-.32551	4.14630	.05113	.05125	.04376	252.33000	7.70390	.05245
4.471	-3.300	4.71570	5.95800	-.32556	4.14580	.05117	.05142	.04397	252.31000	7.70300	.05249
4.476	-3.100	4.71320	5.95810	-.32543	4.14980	.05117	.05139	.04408	252.57000	7.71040	.05249
4.480	-2.900	4.71630	5.95820	-.32572	4.14920	.05115	.05122	.04418	252.54000	7.70920	.05242
4.481	-2.700	4.71760	5.95820	-.32586	4.15120	.05106	.05084	.04412	252.67000	7.71300	.05230
4.473	-2.500	4.71930	5.95830	-.32608	4.14950	.05090	.05045	.04403	252.57000	7.70980	.05212
4.484	-2.300	4.72060	5.95830	-.32629	4.15260	.05070	.05013	.04386	252.77000	7.71550	.05202
4.487	-2.100	4.72200	5.95840	-.32652	4.15260	.05058	.04986	.04379	252.78000	7.71550	.05190
4.495	-1.900	4.72190	5.95840	-.32662	4.15510	.05049	.04971	.04374	252.94000	7.72020	.05186
4.498	-1.700	4.72490	5.95850	-.32688	4.15740	.05042	.04963	.04369	253.09000	7.72450	.05183
4.492	-1.500	4.72460	5.95850	-.32700	4.15730	.05042	.04964	.04362	253.09000	7.72430	.05184
4.484	-1.300	4.72740	5.95860	-.32722	4.15680	.05040	.04967	.04334	253.07000	7.72330	.05181
4.479	-1.100	4.72810	5.95860	-.32738	4.15640	.05043	.04975	.04322	253.06000	7.72250	.05180
4.485	-.900	4.72810	5.95870	-.32750	4.16130	.05053	.04987	.04295	253.37000	7.73170	.05176
4.492	-.700	4.73190	5.95870	-.32784	4.16320	.05057	.05005	.04286	253.49000	7.73530	.05175
4.491	-.500	4.73260	5.95880	-.32804	4.16170	.05064	.05019	.04272	253.41000	7.73250	.05175
4.486	-.300	4.73360	5.95880	-.32824	4.16130	.05061	.05030	.04267	253.39000	7.73160	.05174
4.482	-.100	4.73550	5.95890	-.32842	4.16210	.05057	.05028	.04267	253.45000	7.73310	.05168
4.483	.100	4.73640	5.95890	-.32863	4.16140	.05059	.05034	.04268	253.42000	7.73190	.05168
4.488	.300	4.73770	5.95900	-.32879	4.16390	.05064	.05033	.04275	253.58000	7.73650	.05172
4.481	.500	4.73810	5.95910	-.32899	4.16090	.05078	.05047	.04289	253.41000	7.73100	.05185
4.480	.700	4.73980	5.95910	-.32919	4.16360	.05098	.05063	.04310	253.58000	7.73600	.05206
4.482	.900	4.74110	5.95920	-.32940	4.16640	.05118	.05082	.04338	253.76000	7.74110	.05220
4.482	1.100	4.74150	5.95920	-.32962	4.16690	.05133	.05092	.04372	253.80000	7.74210	.05232
4.482	1.300	4.74480	5.95930	-.32990	4.16560	.05140	.05112	.04394	253.73000	7.73960	.05241
4.487	1.500	4.74610	5.95930	-.33016	4.16770	.05136	.05126	.04409	253.87000	7.74350	.05243
4.487	1.700	4.74550	5.95940	-.33026	4.16690	.05121	.05128	.04416	253.83000	7.74200	.05231
4.489	1.900	4.74790	5.95940	-.33059	4.16980	.05105	.05126	.04415	254.02000	7.74750	.05220
4.487	2.100	4.74910	5.95950	-.33077	4.16810	.05089	.05121	.04417	253.92000	7.74440	.05210
4.492	2.300	4.74900	5.95950	-.33101	4.16720	.05076	.05114	.04417	253.88000	7.74270	.05204
4.494	2.500	4.75390	5.95960	-.33140	4.16520	.05075	.05111	.04418	253.76000	7.73890	.05201
4.492	2.700	4.75490	5.95960	-.33168	4.16440	.05072	.05118	.04431	253.72000	7.73740	.05199
4.499	2.900	4.75630	5.95970	-.33193	4.16350	.05078	.05132	.04435	253.68000	7.73590	.05204
4.496	3.100	4.75720	5.95980	-.33219	4.16330	.05088	.05150	.04458	253.68000	7.73540	.05216
4.488	3.300	4.75650	5.95980	-.33237	4.15780	.05103	.05167	.04483	253.35000	7.72520	.05235
4.476	3.500	4.76300	5.95990	-.33302	4.14990	.05114	.05180	.04505	252.88000	7.71050	.05249
4.470	3.700	4.76200	5.95990	-.33315	4.14620	.05117	.05184	.04517	252.66000	7.70360	.05255
4.473	3.900	4.76610	5.96000	-.33362	4.13560	.05116	.05188	.04537	252.04000	7.68400	.05259
4.461	4.100	4.76850	5.96010	-.33402	4.12520	.05105	.05180	.04535	251.42000	7.66470	.05251

OA257 (LARC 20-M6-6559) OV102 (S7E047) (10 JUL 81)

REFERENCE DATA

SREF =	2690.0000 SQ.FT.	XMRP =	1076.6800 IN. XO		
LREF =	474.8100 INCHES	YMRP =	.0000 IN. YO		
BREF =	936.6800 INCHES	ZMRP =	375.0000 IN. ZO		
SCALE =	.0100				

PARAMETRIC DATA

ALPHA =	5.000	PHI =	.000
SPDBRK =	86.600	AILRON =	.000
YP =	1.000	1S =	1.000
ELEVON =	.000	MACH =	6.000
S-MODE =	2.000	S-DIR =	1.000

RUN NO. 180/ 0 RN/L = 4.48 GRADIENT INTERVAL = -.60/ .60

RN/L	BETA	ALPHA	MACH	PHI	Q	BP1	BP2	BP3	PT1	PT2	PSC
4.454	4.249	4.76260	5.96020	-.33371	4.11820	.05086	.05164	.04516	251.01000	7.65160	.05229
	GRADIENT	.00581	.00030	-.00094	.00044	.00011	.00022	.00016	.07714	.00086	.00007

OA257 (LARC 20-M6-6559) OV102 (S7E147) (10 JUL 81)

REFERENCE DATA

SREF = 2690.0000 SQ.FT. XMRP = 1076.6800 IN. XO
LREF = 474.8100 INCHES YMRP = .0000 IN. YO
BREF = 936.6800 INCHES ZMRP = 375.0000 IN. ZO
SCALE = .0100

PARAMETRIC DATA

ALPHA = 5.000 PHI = .000
SPDBRK = 86.600 AILRON = .000
YP = 1.000 1S = 1.000
ELEVON = .000 MACH = 6.000
S-MODE = 2.000 S-DIR = 1.000

RUN NO. 2180/ 0 RN/L = 4.48 GRADIENT INTERVAL = -.60/ .60

RN/L	BETA	ALPHA	MACH	PHI	Q	BP1	BP2	BP3	PT1	PT2	PSC
4.477	-4.000	4.71910	5.95790	-.32559	4.14040	.05088	.05078	.04333	251.95000	7.69290	.05223
4.471	-3.800	4.71550	5.95790	-.32536	4.14280	.05097	.05092	.04344	252.11000	7.69740	.05225
4.470	-3.600	4.71450	5.95800	-.32535	4.14420	.05101	.05117	.04370	252.20000	7.70000	.05243
4.471	-3.400	4.71600	5.95800	-.32558	4.14530	.05111	.05137	.04385	252.28000	7.70210	.05244
4.473	-3.200	4.71490	5.95810	-.32550	4.14730	.05117	.05144	.04404	252.41000	7.70570	.05251
4.479	-3.000	4.71500	5.95810	-.32561	4.14990	.05117	.05135	.04415	252.57000	7.71050	.05245
4.482	-2.800	4.71700	5.95820	-.32577	4.15030	.05109	.05103	.04417	252.61000	7.71130	.05238
4.477	-2.600	4.71630	5.95820	-.32586	4.15100	.05101	.05065	.04406	252.66000	7.71250	.05221
4.476	-2.400	4.72230	5.95830	-.32636	4.15090	.05081	.05030	.04395	252.66000	7.71230	.05209
4.488	-2.200	4.72090	5.95830	-.32636	4.15290	.05064	.04998	.04381	252.80000	7.71620	.05194
4.490	-2.000	4.72400	5.95840	-.32669	4.15400	.05053	.04978	.04379	252.87000	7.71820	.05190
4.501	-1.800	4.72170	5.95840	-.32670	4.15760	.05049	.04965	.04373	253.10000	7.72490	.05186
4.495	-1.600	4.72620	5.95850	-.32701	4.15710	.05042	.04963	.04365	253.08000	7.72380	.05184
4.488	-1.400	4.72480	5.95850	-.32703	4.15740	.05041	.04964	.04347	253.11000	7.72450	.05181
4.479	-1.200	4.72800	5.95860	-.32731	4.15600	.05042	.04970	.04328	253.03000	7.72190	.05178
4.481	-1.000	4.72890	5.95870	-.32747	4.15950	.05047	.04978	.04308	253.25000	7.72830	.05176
4.488	-.800	4.73100	5.95870	-.32777	4.16240	.05055	.04998	.04287	253.44000	7.73380	.05175
4.494	-.600	4.73230	5.95880	-.32793	4.16310	.05060	.05011	.04278	253.49000	7.73500	.05176
4.487	-.400	4.73350	5.95880	-.32815	4.15990	.05063	.05028	.04268	253.30000	7.72900	.05174
4.484	-.200	4.73480	5.95890	-.32833	4.16200	.05059	.05032	.04270	253.44000	7.73310	.05168
4.481	.000	4.73580	5.95890	-.32852	4.16090	.05057	.05032	.04267	253.38000	7.73090	.05167
4.485	.200	4.73690	5.95900	-.32866	4.16300	.05060	.05034	.04271	253.52000	7.73490	.05170
4.485	.400	4.73830	5.95900	-.32891	4.16210	.05070	.05038	.04278	253.47000	7.73310	.05178
4.480	.600	4.73910	5.95910	-.32908	4.16300	.05087	.05055	.04300	253.54000	7.73490	.05198
4.481	.800	4.74060	5.95910	-.32929	4.16450	.05108	.05072	.04324	253.64000	7.73760	.05213
4.482	1.000	4.74260	5.95920	-.32957	4.16690	.05129	.05088	.04356	253.80000	7.74220	.05229
4.482	1.200	4.74220	5.95920	-.32970	4.16600	.05138	.05103	.04382	253.75000	7.74040	.05239
4.485	1.400	4.74490	5.95930	-.33004	4.16640	.05139	.05119	.04403	253.79000	7.74120	.05244
4.488	1.600	4.74450	5.95940	-.33014	4.16810	.05130	.05126	.04412	253.90000	7.74430	.05239
4.487	1.800	4.74720	5.95940	-.33046	4.16810	.05113	.05129	.04417	253.91000	7.74430	.05228
4.489	2.000	4.74680	5.95950	-.33061	4.17070	.05094	.05123	.04412	254.08000	7.74920	.05214
4.487	2.200	4.75050	5.95950	-.33099	4.16680	.05081	.05120	.04417	253.85000	7.74190	.05207
4.494	2.400	4.74990	5.95960	-.33112	4.16650	.05074	.05112	.04419	253.84000	7.74130	.05203
4.492	2.600	4.75460	5.95960	-.33158	4.16360	.05073	.05111	.04420	253.67000	7.73590	.05198
4.497	2.800	4.75340	5.95970	-.33169	4.16470	.05073	.05123	.04430	253.75000	7.73790	.05201
4.496	3.000	4.75850	5.95970	-.33224	4.16190	.05084	.05141	.04444	253.58000	7.73270	.05211
4.495	3.200	4.75800	5.95980	-.33238	4.16330	.05097	.05157	.04470	253.68000	7.73530	.05224
4.479	3.400	4.76260	5.95980	-.33288	4.15210	.05108	.05175	.04490	253.01000	7.71450	.05240
4.474	3.600	4.76050	5.95990	-.33296	4.14940	.05117	.05184	.04509	252.85000	7.70950	.05253
4.465	3.800	4.76150	5.95990	-.33323	4.14200	.05119	.05187	.04526	252.41000	7.69580	.05257
4.472	4.000	4.76710	5.96010	-.33385	4.12930	.05112	.05187	.04538	251.66000	7.67210	.05254
4.460	4.200	4.76910	5.96020	-.33411	4.12070	.05098	.05176	.04528	251.15000	7.65630	.05239
	GRADIENT	.00573	.00025	-.00095	.00091	.00017	.00027	.00016	.10179	.00173	.00013

OA257 (LARC 20-M6-6559) OV102 (S7E048) (10 JUL 81)

REFERENCE DATA

SREF = 2690.0000 SQ.FT. XMRP = 1076.6800 IN. XO
LREF = 474.8100 INCHES YMRP = .0000 IN. YO
BREF = 936.6800 INCHES ZMRP = 375.0000 IN. ZO
SCALE = .0100

PARAMETRIC DATA

ALPHA = 10.000 PHI = .000
SPDBRK = 86.600 AILRON = .000
YP = 1.000 1S = 1.000
ELEVON = .000 MACH = 6.000
S-MODE = 2.000 S-DIR = 1.000

RUN NO. 181/ 0 RN/L = 4.50 GRADIENT INTERVAL = -.60/ .60

RN/L	BETA	ALPHA	MACH	PHI	Q	BP1	BP2	BP3	PT1	PT2	PSC
4.609	-4.226	9.72740	5.95930	-.66183	4.21220	.04401	.04329	.03749	256.57000	7.82620	.04559
4.618	-4.100	9.73320	5.95930	-.66241	4.21630	.04401	.04334	.03753	256.83000	7.83390	.04562
4.615	-3.900	9.73400	5.95940	-.66258	4.21640	.04397	.04333	.03746	256.84000	7.83410	.04552
4.605	-3.700	9.73180	5.95940	-.66250	4.21510	.04387	.04345	.03739	256.77000	7.83160	.04537
4.596	-3.500	9.73120	5.95940	-.66254	4.21020	.04378	.04349	.03720	256.48000	7.82260	.04527
4.588	-3.300	9.73320	5.95950	-.66285	4.20340	.04368	.04353	.03710	256.07000	7.80990	.04515
4.582	-3.100	9.73290	5.95950	-.66287	4.19630	.04360	.04355	.03703	255.64000	7.79670	.04504
4.574	-2.900	9.73750	5.95950	-.66332	4.18130	.04357	.04367	.03708	254.74000	7.76890	.04507
4.560	-2.700	9.73820	5.95960	-.66350	4.16260	.04355	.04377	.03708	253.60000	7.73410	.04507
4.529	-2.500	9.74310	5.95960	-.66401	4.13450	.04349	.04385	.03706	251.90000	7.68190	.04509
4.497	-2.300	9.74140	5.95960	-.66411	4.10980	.04335	.04368	.03695	250.40000	7.63600	.04501
4.469	-2.100	9.74790	5.95970	-.66480	4.08820	.04311	.04350	.03683	249.08000	7.59580	.04479
4.458	-1.900	9.74560	5.95970	-.66484	4.08060	.04281	.04324	.03657	248.63000	7.58170	.04450
4.474	-1.700	9.75220	5.95980	-.66522	4.10430	.04263	.04310	.03641	250.08000	7.62590	.04433
4.519	-1.500	9.75590	5.95980	-.66544	4.15440	.04286	.04328	.03659	253.14000	7.71880	.04456
4.560	-1.300	9.76350	5.95980	-.66594	4.19940	.04355	.04397	.03710	255.89000	7.80250	.04522
4.590	-1.100	9.76470	5.95990	-.66615	4.22920	.04453	.04494	.03801	257.71000	7.85770	.04627
4.609	-.900	9.77010	5.95990	-.66663	4.24430	.04567	.04606	.03888	258.64000	7.88590	.04741
4.600	-.700	9.77040	5.95990	-.66696	4.23730	.04674	.04717	.03990	258.22000	7.87290	.04853
4.581	-.500	9.77070	5.96000	-.66728	4.21510	.04744	.04807	.04057	256.88000	7.83170	.04951
4.548	-.300	9.77450	5.96000	-.66793	4.18000	.04785	.04889	.04119	254.74000	7.76630	.05018
4.522	-.100	9.77600	5.96000	-.66857	4.14920	.04790	.04923	.04140	252.87000	7.70910	.05043
4.492	.100	9.77850	5.96010	-.66917	4.12090	.04781	.04921	.04159	251.15000	7.65670	.05035
4.468	.300	9.77760	5.96010	-.66951	4.09170	.04751	.04879	.04148	249.38000	7.60230	.04995
4.441	.500	9.78120	5.96020	-.67013	4.06950	.04702	.04818	.04121	248.03000	7.56110	.04927
4.428	.700	9.78020	5.96020	-.67048	4.05710	.04640	.04737	.04059	247.28000	7.53800	.04851
4.409	.900	9.78640	5.96020	-.67121	4.04470	.04563	.04655	.03983	246.53000	7.51510	.04768
4.396	1.100	9.78570	5.96030	-.67139	4.04000	.04493	.04575	.03906	246.25000	7.50630	.04683
4.386	1.300	9.78770	5.96030	-.67193	4.03680	.04421	.04505	.03842	246.06000	7.50030	.04608
4.387	1.500	9.78870	5.96030	-.67223	4.04320	.04356	.04439	.03766	246.46000	7.51230	.04536
4.400	1.700	9.79520	5.96040	-.67296	4.06030	.04305	.04387	.03693	247.51000	7.54400	.04475
4.418	1.900	9.79640	5.96040	-.67319	4.07700	.04264	.04346	.03627	248.53000	7.57500	.04424
4.434	2.100	9.80180	5.96050	-.67387	4.08960	.04222	.04302	.03557	249.31000	7.59850	.04375
4.440	2.300	9.80350	5.96050	-.67434	4.09950	.04185	.04269	.03473	249.92000	7.61690	.04335
4.443	2.500	9.80830	5.96050	-.67495	4.10500	.04163	.04250	.03361	250.26000	7.62700	.04304
4.450	2.700	9.81010	5.96060	-.67537	4.11040	.04138	.04227	.03275	250.60000	7.63710	.04282
4.454	2.900	9.81100	5.96060	-.67575	4.11090	.04116	.04195	.03215	250.63000	7.63800	.04251
4.449	3.100	9.81390	5.96060	-.67626	4.11020	.04091	.04166	.03197	250.60000	7.63680	.04226
4.444	3.300	9.81610	5.96070	-.67673	4.10780	.04075	.04147	.03192	250.46000	7.63220	.04201
4.443	3.500	9.81940	5.96070	-.67726	4.10710	.04069	.04139	.03199	250.42000	7.63100	.04195
4.444	3.700	9.81880	5.96080	-.67771	4.10430	.04070	.04138	.03199	250.26000	7.62570	.04197
4.431	3.900	9.81840	5.96080	-.67807	4.09150	.04082	.04155	.03198	249.48000	7.60190	.04207

OA257 (LARC 20-M6-6559) OV102 (S7E048) (10 JUL 81)

REFERENCE DATA

SREF = 2690.0000 SQ.FT. XMRP = 1076.6800 IN. X0
LREF = 474.8100 INCHES YMRP = .0000 IN. Y0
BREF = 936.6800 INCHES ZMRP = 375.0000 IN. Z0
SCALE = .0100

PARAMETRIC DATA

ALPHA = 10.000 PHI = .000
SPDBRK = 86.600 AILRON = .000
YP = 1.000 1S = 1.000
ELEVON = .000 MACH = 6.000
S-MODE = 2.000 S-DIR = 1.000

RUN NO. 181/ 0 RN/L = 4.50 GRADIENT INTERVAL = -.60/ .60

RN/L	BETA	ALPHA	MACH	PHI	Q	BP1	BP2	BP3	PT1	PT2	PSC
4.388	4.100	9.82290	5.96090	-.67883	4.04950	.04090	.04162	.03188	246.94000	7.52390	.04211
	GRADIENT	.00919	.00020	-.00280	-.14589	-.00046	.00004	.00061	-8.86429	-.27106	-.00028

OA257 (LARC 20-M6-6559) OV102 (S7E148) (10 JUL 81)

REFERENCE DATA

SREF = 2690.0000 SQ.FT. XMRP = 1076.6800 IN. XO
LREF = 474.8100 INCHES YMRP = .0000 IN. YO
BREF = 936.6800 INCHES ZMRP = 375.0000 IN. ZO
SCALE = .0100

PARAMETRIC DATA

ALPHA = 10.000 PHI = .000
SPDBRK = 86.600 AILRON = .000
YP = 1.000 1S = 1.000
ELEVON = .000 MACH = 6.000
S-MODE = 2.000 S-DIR = 1.000

RUN NO. 2181/ 0 RN/L = 4.49 GRADIENT INTERVAL = -.60/ .60

RN/L	BETA	ALPHA	MACH	PHI	Q	BP1	BP2	BP3	PT1	PT2	PSC
4.612	-4.200	9.72970	5.95930	-.66206	4.21330	.04399	.04330	.03751	256.64000	7.82840	.04563
4.621	-4.000	9.73410	5.95930	-.66253	4.21820	.04398	.04332	.03749	256.95000	7.83740	.04557
4.609	-3.800	9.73500	5.95940	-.66270	4.21570	.04392	.04340	.03746	256.80000	7.83280	.04544
4.602	-3.600	9.73160	5.95940	-.66251	4.21380	.04382	.04348	.03730	256.69000	7.82920	.04533
4.592	-3.400	9.73270	5.95940	-.66276	4.20690	.04373	.04351	.03716	256.28000	7.81640	.04520
4.586	-3.200	9.73350	5.95950	-.66293	4.20080	.04365	.04353	.03705	255.91000	7.80510	.04509
4.580	-3.000	9.73750	5.95950	-.66333	4.18910	.04358	.04363	.03702	255.21000	7.78340	.04506
4.568	-2.800	9.73780	5.95950	-.66341	4.17450	.04356	.04376	.03705	254.32000	7.75630	.04504
4.546	-2.600	9.74050	5.95960	-.66372	4.14870	.04356	.04384	.03706	252.76000	7.70830	.04507
4.513	-2.400	9.74310	5.95960	-.66413	4.12180	.04344	.04380	.03707	251.13000	7.65830	.04507
4.481	-2.200	9.74310	5.95970	-.66439	4.09830	.04322	.04358	.03689	249.70000	7.61470	.04489
4.460	-2.000	9.74680	5.95970	-.66483	4.08180	.04296	.04341	.03678	248.70000	7.58400	.04465
4.462	-1.800	9.74750	5.95970	-.66501	4.08770	.04270	.04311	.03645	249.07000	7.59500	.04438
4.495	-1.600	9.75570	5.95980	-.66541	4.12790	.04268	.04313	.03646	251.52000	7.66970	.04437
4.544	-1.400	9.75650	5.95980	-.66546	4.18110	.04316	.04352	.03677	254.77000	7.76860	.04481
4.574	-1.200	9.76510	5.95980	-.66611	4.21480	.04403	.04445	.03752	256.83000	7.83100	.04575
4.604	-1.000	9.76600	5.95990	-.66628	4.23990	.04511	.04550	.03848	258.37000	7.87780	.04683
4.607	-.800	9.77320	5.95990	-.66688	4.24330	.04621	.04659	.03942	258.58000	7.88410	.04796
4.594	-.600	9.77140	5.96000	-.66717	4.22950	.04717	.04762	.04030	257.74000	7.85830	.04906
4.563	-.400	9.77370	5.96000	-.66762	4.19700	.04770	.04854	.04093	255.77000	7.79810	.04989
4.535	-.200	9.77390	5.96000	-.66821	4.16410	.04790	.04910	.04129	253.77000	7.73690	.05038
4.507	.000	9.78020	5.96010	-.66900	4.13500	.04788	.04927	.04151	252.01000	7.68280	.05043
4.480	.200	9.77790	5.96010	-.66925	4.10570	.04770	.04906	.04158	250.23000	7.62850	.05020
4.456	.400	9.78100	5.96010	-.66992	4.07980	.04730	.04851	.04130	248.65000	7.58020	.04963
4.432	.600	9.78030	5.96020	-.67025	4.06280	.04672	.04781	.04093	247.62000	7.54860	.04892
4.421	.800	9.78340	5.96020	-.67085	4.05020	.04600	.04699	.04016	246.87000	7.52530	.04811
4.400	1.000	9.78500	5.96030	-.67125	4.04140	.04525	.04616	.03947	246.33000	7.50890	.04724
4.390	1.200	9.78660	5.96030	-.67170	4.03820	.04454	.04538	.03875	246.14000	7.50290	.04645
4.385	1.400	9.78810	5.96030	-.67211	4.03810	.04388	.04473	.03807	246.14000	7.50270	.04570
4.391	1.600	9.79160	5.96040	-.67249	4.05020	.04333	.04413	.03724	246.89000	7.52530	.04502
4.407	1.800	9.79730	5.96040	-.67316	4.06850	.04282	.04368	.03663	248.01000	7.55920	.04449
4.429	2.000	9.79810	5.96040	-.67340	4.08440	.04244	.04322	.03593	248.99000	7.58880	.04398
4.437	2.200	9.80350	5.96050	-.67416	4.09410	.04202	.04285	.03519	249.58000	7.60680	.04354
4.442	2.400	9.80370	5.96050	-.67451	4.10290	.04174	.04254	.03420	250.13000	7.62310	.04319
4.447	2.600	9.80980	5.96060	-.67518	4.10870	.04148	.04236	.03314	250.49000	7.63390	.04294
4.453	2.800	9.80900	5.96060	-.67541	4.11050	.04128	.04213	.03243	250.60000	7.63730	.04267
4.453	3.000	9.81270	5.96060	-.67608	4.11100	.04104	.04181	.03203	250.64000	7.63820	.04236
4.445	3.200	9.81530	5.96070	-.67645	4.10910	.04081	.04156	.03191	250.53000	7.63460	.04212
4.444	3.400	9.81820	5.96070	-.67709	4.10740	.04069	.04140	.03195	250.43000	7.63140	.04198
4.445	3.600	9.81940	5.96070	-.67750	4.10630	.04068	.04141	.03198	250.38000	7.62950	.04195
4.440	3.800	9.82090	5.96080	-.67804	4.10190	.04076	.04145	.03202	250.11000	7.62130	.04200
4.411	4.000	9.82710	5.96090	-.67888	4.06500	.04093	.04164	.03202	247.88000	7.55270	.04214

OA257 (LARC 20-M6-6559) OV102 (S7E148) (10 JUL 81)

REFERENCE DATA

SREF =	2690.0000 SQ.FT.	XMRP =	1076.6800 IN. XO		
LREF =	474.8100 INCHES	YMRP =	.0000 IN. YO		
BREF =	936.6800 INCHES	ZMRP =	375.0000 IN. ZO		
SCALE =	.0100				

PARAMETRIC DATA

ALPHA =	10.000	PHI =	.000
SPDBRK =	86.600	AILRON =	.000
YP =	1.000	1S =	1.000
ELEVON =	.000	MACH =	6.000
S-MODE =	2.000	S-DIR =	1.000

RUN NO. 2181/ 0 RN/L = 4.49 GRADIENT INTERVAL = -.60/ .60

RN/L	BETA	ALPHA	MACH	PHI	Q	BP1	BP2	BP3	PT1	PT2	PSC
4.380	4.135	9.82050	5.96090	-.67871	4.04240	.04089	.04164	.03184	246.51000	7.51080	.04208
	GRADIENT	.00809	.00016	-.00266	-.14159	-.00042	.00008	.00052	-8.59643	-.26309	-.00020

OA257 (LARC 20-M6-6559) OV102 (S7E049) (10 JUL 81)

REFERENCE DATA

SREF = 2690.0000 SQ.FT. XMRP = 1076.6800 IN. XO
LREF = 474.8100 INCHES YMRP = .0000 IN. YO
BREF = 936.6800 INCHES ZMRP = 375.0000 IN. ZO
SCALE = .0100

PARAMETRIC DATA

ALPHA = 12.500 PHI = .000
SPDBRK = 86.600 AILRON = .000
YP = 1.000 1S = 1.000
ELEVON = .000 MACH = 6.000
S-MODE = 2.000 S-DIR = 1.000

RUN NO. 182/ 0 RN/L = 4.43 GRADIENT INTERVAL = -.60/ .60

RN/L	BETA	ALPHA	MACH	PHI	Q	BP1	BP2	BP3	PT1	PT2	PSC
4.447	-4.164	12.19600	5.95930	-.82573	4.06290	.04318	.04378	.03650	247.49000	7.54890	.04556
4.441	-4.000	12.20400	5.95940	-.82639	4.06210	.04320	.04382	.03657	247.45000	7.54740	.04556
4.445	-3.800	12.20300	5.95940	-.82643	4.06610	.04335	.04392	.03655	247.69000	7.55480	.04560
4.447	-3.600	12.20400	5.95940	-.82665	4.07120	.04352	.04409	.03664	248.01000	7.56420	.04569
4.453	-3.400	12.20800	5.95950	-.82700	4.07310	.04369	.04420	.03663	248.13000	7.56790	.04570
4.452	-3.200	12.21100	5.95950	-.82738	4.07310	.04373	.04438	.03655	248.14000	7.56780	.04564
4.449	-3.000	12.21300	5.95950	-.82767	4.07280	.04378	.04440	.03645	248.12000	7.56730	.04561
4.444	-2.800	12.21700	5.95960	-.82812	4.07050	.04384	.04452	.03650	247.99000	7.56300	.04570
4.439	-2.600	12.21900	5.95960	-.82843	4.06940	.04403	.04461	.03651	247.92000	7.56090	.04576
4.432	-2.400	12.22400	5.95960	-.82890	4.06630	.04408	.04477	.03680	247.74000	7.55520	.04587
4.432	-2.200	12.22600	5.95960	-.82927	4.06490	.04421	.04487	.03695	247.66000	7.55260	.04601
4.432	-2.000	12.22900	5.95970	-.82971	4.06450	.04433	.04503	.03717	247.64000	7.55190	.04620
4.437	-1.800	12.23300	5.95970	-.83009	4.06730	.04452	.04524	.03727	247.82000	7.55710	.04636
4.433	-1.600	12.23600	5.95970	-.83045	4.06820	.04464	.04533	.03728	247.88000	7.55880	.04659
4.429	-1.400	12.24000	5.95980	-.83094	4.06830	.04471	.04534	.03731	247.89000	7.55890	.04682
4.424	-1.200	12.24400	5.95980	-.83146	4.06730	.04470	.04522	.03727	247.83000	7.55700	.04696
4.435	-1.000	12.24500	5.95980	-.83174	4.07170	.04452	.04508	.03711	248.11000	7.56530	.04701
4.433	-.800	12.25200	5.95990	-.83256	4.06940	.04416	.04496	.03685	247.97000	7.56100	.04683
4.432	-.600	12.25100	5.95990	-.83285	4.06970	.04373	.04501	.03674	247.99000	7.56140	.04657
4.432	-.400	12.25600	5.95990	-.83363	4.06370	.04335	.04499	.03680	247.63000	7.55030	.04621
4.431	-.200	12.25700	5.95990	-.83417	4.06210	.04294	.04463	.03679	247.54000	7.54730	.04573
4.425	.000	12.26300	5.96000	-.83493	4.06160	.04238	.04397	.03646	247.52000	7.54640	.04492
4.430	.200	12.26200	5.96000	-.83538	4.06420	.04172	.04310	.03592	247.68000	7.55120	.04405
4.428	.400	12.27000	5.96000	-.83633	4.06300	.04099	.04218	.03520	247.61000	7.54910	.04310
4.425	.600	12.27000	5.96010	-.83679	4.06300	.04026	.04130	.03444	247.62000	7.54900	.04228
4.421	.800	12.27400	5.96010	-.83760	4.06110	.03963	.04053	.03375	247.51000	7.54560	.04153
4.422	1.000	12.27400	5.96010	-.83802	4.06380	.03922	.04001	.03314	247.68000	7.55050	.04101
4.418	1.200	12.28200	5.96020	-.83879	4.06530	.03897	.03971	.03279	247.77000	7.55330	.04069
4.421	1.400	12.28300	5.96020	-.83945	4.06910	.03890	.03958	.03260	248.01000	7.56040	.04055
4.418	1.600	12.28600	5.96020	-.84003	4.06660	.03882	.03950	.03227	247.86000	7.55570	.04040
4.418	1.800	12.28800	5.96020	-.84047	4.06820	.03885	.03958	.03206	247.97000	7.55880	.04040
4.415	2.000	12.29300	5.96030	-.84128	4.06950	.03912	.04001	.03192	248.05000	7.56120	.04064
4.415	2.200	12.29500	5.96030	-.84180	4.06860	.03958	.04055	.03193	248.00000	7.55950	.04117
4.414	2.400	12.30100	5.96030	-.84259	4.06760	.04014	.04118	.03183	247.95000	7.55760	.04171
4.414	2.600	12.30100	5.96040	-.84304	4.06730	.04059	.04175	.03186	247.93000	7.55700	.04227
4.411	2.800	12.30600	5.96040	-.84370	4.06610	.04082	.04206	.03171	247.87000	7.55490	.04254
4.415	3.000	12.30900	5.96040	-.84439	4.06600	.04078	.04211	.03138	247.86000	7.55450	.04257
4.411	3.200	12.31000	5.96050	-.84491	4.06380	.04060	.04194	.03082	247.73000	7.55040	.04233
4.411	3.400	12.31300	5.96050	-.84566	4.06300	.04026	.04168	.03021	247.69000	7.54900	.04201
4.408	3.600	12.31600	5.96050	-.84636	4.05890	.04004	.04153	.02972	247.45000	7.54150	.04173
4.402	3.800	12.31900	5.96060	-.84720	4.05690	.03988	.04149	.02949	247.33000	7.53770	.04156
4.388	4.000	12.32000	5.96060	-.84773	4.05330	.03966	.04096	.02941	247.13000	7.53100	.04112
	GRADIENT	.01607	.00016	-.00329	-.00346	-.00292	-.00327	-.00196	-.18035	-.00637	-.00371

OA257 (LARC 20-M6-6559) OV102 (S7E149) (10 JUL 81)

REFERENCE DATA

SREF = 2690.0000 SQ.FT. XMRP = 1076.6800 IN. XO
LREF = 474.8100 INCHES YMRP = .0000 IN. YO
BREF = 936.6800 INCHES ZMRP = 375.0000 IN. ZO
SCALE = .0100

PARAMETRIC DATA

ALPHA = 12.500 PHI = .000
SPDBRK = 86.600 AILRON = .000
YP = 1.000 1S = 1.000
ELEVON = .000 MACH = 6.000
S-MODE = 2.000 S-DIR = 1.000

RUN NO. 2182/ 0 RN/L = 4.43 GRADIENT INTERVAL = -.60/ .60

RN/L	BETA	ALPHA	MACH	PHI	Q	BP1	BP2	BP3	PT1	PT2	PSC
4.443	-4.100	12.20400	5.95940	-.82634	4.06160	.04316	.04378	.03651	247.41000	7.54650	.04554
4.443	-3.900	12.20300	5.95940	-.82640	4.06400	.04324	.04385	.03654	247.56000	7.55090	.04558
4.447	-3.700	12.20600	5.95940	-.82665	4.06950	.04345	.04400	.03661	247.90000	7.56110	.04565
4.450	-3.500	12.20600	5.95940	-.82680	4.07300	.04360	.04415	.03661	248.12000	7.56760	.04574
4.452	-3.300	12.21000	5.95950	-.82716	4.07230	.04373	.04433	.03657	248.09000	7.56640	.04568
4.450	-3.100	12.21200	5.95950	-.82753	4.07290	.04373	.04437	.03650	248.13000	7.56750	.04563
4.448	-2.900	12.21600	5.95950	-.82791	4.07190	.04383	.04448	.03642	248.07000	7.56560	.04564
4.441	-2.700	12.21900	5.95960	-.82830	4.06970	.04390	.04460	.03656	247.94000	7.56150	.04574
4.435	-2.500	12.22200	5.95960	-.82867	4.06740	.04406	.04474	.03662	247.80000	7.55710	.04583
4.432	-2.300	12.22500	5.95960	-.82914	4.06580	.04414	.04481	.03690	247.71000	7.55420	.04594
4.432	-2.100	12.22800	5.95970	-.82950	4.06410	.04428	.04497	.03701	247.62000	7.55120	.04606
4.434	-1.900	12.23100	5.95970	-.82990	4.06570	.04439	.04517	.03727	247.72000	7.55410	.04628
4.436	-1.700	12.23500	5.95970	-.83025	4.06840	.04458	.04528	.03729	247.89000	7.55920	.04649
4.431	-1.500	12.23900	5.95970	-.83073	4.06850	.04468	.04535	.03730	247.90000	7.55930	.04672
4.425	-1.300	12.24000	5.95980	-.83107	4.06680	.04471	.04529	.03732	247.80000	7.55600	.04687
4.429	-1.100	12.24300	5.95980	-.83151	4.07050	.04461	.04517	.03726	248.03000	7.56290	.04701
4.435	-.900	12.24800	5.95980	-.83210	4.07060	.04436	.04499	.03699	248.04000	7.56310	.04692
4.433	-.700	12.25000	5.95990	-.83268	4.06970	.04395	.04499	.03680	248.00000	7.56160	.04672
4.433	-.500	12.25200	5.95990	-.83315	4.06660	.04358	.04501	.03677	247.81000	7.55570	.04641
4.431	-.300	12.25500	5.95990	-.83386	4.06280	.04314	.04484	.03683	247.58000	7.54870	.04600
4.428	-.100	12.25900	5.96000	-.83452	4.06140	.04267	.04431	.03666	247.50000	7.54610	.04532
4.427	.100	12.26300	5.96000	-.83523	4.06270	.04207	.04357	.03623	247.59000	7.54850	.04451
4.430	.300	12.26500	5.96000	-.83580	4.06380	.04134	.04264	.03553	247.66000	7.55050	.04357
4.426	.500	12.27200	5.96010	-.83672	4.06210	.04061	.04175	.03482	247.56000	7.54730	.04270
4.424	.700	12.27100	5.96010	-.83713	4.06270	.03994	.04089	.03408	247.60000	7.54840	.04189
4.421	.900	12.27500	5.96010	-.83791	4.06140	.03938	.04024	.03340	247.53000	7.54610	.04124
4.421	1.100	12.27800	5.96010	-.83834	4.06560	.03910	.03977	.03299	247.79000	7.55390	.04081
4.418	1.300	12.28400	5.96020	-.83923	4.06670	.03895	.03964	.03270	247.86000	7.55590	.04063
4.422	1.500	12.28400	5.96020	-.83965	4.06880	.03887	.03952	.03241	248.00000	7.55990	.04046
4.417	1.700	12.28900	5.96020	-.84040	4.06610	.03880	.03952	.03216	247.84000	7.55480	.04037
4.420	1.900	12.29000	5.96030	-.84086	4.07030	.03892	.03968	.03192	248.10000	7.56250	.04044
4.413	2.100	12.29500	5.96030	-.84165	4.06840	.03937	.04031	.03193	247.99000	7.55910	.04089
4.417	2.300	12.29500	5.96030	-.84201	4.06860	.03987	.04085	.03186	248.00000	7.55940	.04142
4.412	2.500	12.30300	5.96040	-.84297	4.06660	.04035	.04149	.03186	247.89000	7.55580	.04200
4.414	2.700	12.30100	5.96040	-.84316	4.06810	.04072	.04192	.03178	247.99000	7.55860	.04245
4.413	2.900	12.30800	5.96040	-.84418	4.06610	.04081	.04213	.03154	247.87000	7.55470	.04261
4.415	3.100	12.30800	5.96040	-.84461	4.06540	.04071	.04201	.03113	247.83000	7.55350	.04247
4.407	3.300	12.31700	5.96050	-.84561	4.06250	.04043	.04184	.03056	247.66000	7.54810	.04218
4.412	3.500	12.31500	5.96050	-.84603	4.06130	.04010	.04159	.02995	247.59000	7.54580	.04186
4.405	3.700	12.32000	5.96050	-.84698	4.05740	.03994	.04151	.02957	247.36000	7.53870	.04162
4.396	3.900	12.31600	5.96060	-.84722	4.05520	.03985	.04133	.02943	247.23000	7.53450	.04142
4.386	4.039	12.32400	5.96070	-.84822	4.05140	.03959	.04088	.02946	247.01000	7.52740	.04106
	GRADIENT	.01914	.00019	-.00348	-.00260	-.00298	-.00338	-.00201	-.13143	-.00489	-.00381

OA257 (LARC 20-M6-6559) OV102 (S7E050) (10 JUL 81)

REFERENCE DATA

SREF = 2690.0000 SQ.FT. XMRP = 1076.6800 IN. XO
LREF = 474.8100 INCHES YMRP = .0000 IN. YO
BREF = 936.6800 INCHES ZMRP = 375.0000 IN. ZO
SCALE = .0100

PARAMETRIC DATA

ALPHA = 15.000 PHI = .000
SPDBRK = 86.600 AILRON = .000
YP = 1.000 1S = 1.000
ELEVON = .000 MACH = 6.000
S-MODE = 2.000 S-DIR = 1.000

RUN NO. 148/ 0 RN/L = 2.26 GRADIENT INTERVAL = -.60/ .60

RN/L	BETA	ALPHA	MACH	PHI	Q	BP1	BP2	BP3	PT1	PT2	PSC
2.293	-2.278	14.80500	5.96970	-1.00840	2.47620	.03185	.03449	.02518	151.93000	4.60070	.03590
2.296	-2.100	14.80700	5.96980	-1.00870	2.47630	.03199	.03461	.02531	151.94000	4.60070	.03601
2.297	-1.900	14.81100	5.96990	-1.00910	2.47170	.03200	.03449	.02533	151.67000	4.59220	.03595
2.289	-1.700	14.81300	5.97000	-1.00920	2.46620	.03197	.03425	.02541	151.35000	4.58210	.03584
2.286	-1.500	14.82300	5.97010	-1.01020	2.46090	.03197	.03425	.02552	151.03000	4.57220	.03581
2.281	-1.300	14.82000	5.97020	-1.01030	2.45740	.03222	.03473	.02578	150.83000	4.56570	.03609
2.276	-1.100	14.82900	5.97030	-1.01090	2.45190	.03242	.03539	.02601	150.50000	4.55550	.03637
2.278	-.900	14.83100	5.97040	-1.01120	2.44860	.03261	.03577	.02616	150.31000	4.54930	.03647
2.274	-.700	14.83200	5.97050	-1.01150	2.44460	.03264	.03587	.02639	150.07000	4.54200	.03644
2.265	-.500	14.83700	5.97070	-1.01220	2.43910	.03256	.03568	.02671	149.75000	4.53170	.03620
2.259	-.300	14.83900	5.97080	-1.01240	2.43480	.03219	.03513	.02689	149.49000	4.52360	.03575
2.254	-.100	14.84500	5.97090	-1.01310	2.43170	.03144	.03387	.02688	149.31000	4.51790	.03484
2.253	.100	14.84900	5.97100	-1.01360	2.42670	.03036	.03217	.02648	149.02000	4.50860	.03366
2.246	.300	14.85000	5.97110	-1.01410	2.42550	.02936	.03065	.02598	148.96000	4.50650	.03263
2.243	.500	14.85700	5.97120	-1.01480	2.42490	.02842	.02941	.02555	148.93000	4.50530	.03166
2.239	.700	14.86100	5.97130	-1.01530	2.42360	.02780	.02856	.02509	148.86000	4.50290	.03089
2.235	.900	14.86300	5.97140	-1.01570	2.42390	.02739	.02810	.02482	148.89000	4.50340	.03047
2.232	1.100	14.87000	5.97150	-1.01650	2.42330	.02729	.02796	.02466	148.86000	4.50220	.03030
2.238	1.300	14.87100	5.97160	-1.01680	2.42370	.02727	.02790	.02460	148.90000	4.50300	.03020
2.240	1.500	14.87500	5.97170	-1.01750	2.42370	.02723	.02799	.02450	148.91000	4.50300	.03012
2.240	1.700	14.88100	5.97180	-1.01830	2.42290	.02712	.02788	.02432	148.87000	4.50150	.02996
2.240	1.900	14.88000	5.97190	-1.01870	2.42440	.02713	.02784	.02428	148.97000	4.50430	.02992
2.240	2.100	14.88500	5.97200	-1.01970	2.42210	.02745	.02823	.02460	148.84000	4.50000	.03024
2.238	2.300	14.88500	5.97210	-1.02020	2.42160	.02762	.02848	.02460	148.82000	4.49920	.03035
2.236	2.500	14.89000	5.97220	-1.02070	2.42170	.02774	.02874	.02450	148.84000	4.49930	.03045
2.243	2.672	14.89100	5.97230	-1.02110	2.42170	.02790	.02907	.02436	148.85000	4.49920	.03052
	GRADIENT	.01957	.00050	-.00266	-.01484	-.00433	-.00664	-.00128	-.85429	-.02751	-.00475

OA257 (LARC 20-M6-6559) OV102 (S7E050) (10 JUL 81)

REFERENCE DATA

SREF = 2690.0000 SQ.FT. XMRP = 1076.6800 IN. XO
LREF = 474.8100 INCHES YMRP = .0000 IN. YO
BREF = 936.6800 INCHES ZMRP = 375.0000 IN. ZO
SCALE = .0100

PARAMETRIC DATA

ALPHA = 15.000 PHI = .000
SPDBRK = 86.600 AILRON = .000
YP = 1.000 1S = 1.000
ELEVON = .000 MACH = 6.000
S-MODE = 2.000 S-DIR = 1.000

RUN NO. 112/ 0 RN/L = 7.43 GRADIENT INTERVAL = -.60/ .60

RN/L	BETA	ALPHA	MACH	PHI	Q	BP1	BP2	BP3	PT1	PT2	PSC
7.458	-4.426	14.37300	5.98950	-.94119	6.82900	.07888	.08112	.07269	424.77000	12.68700	.08324
7.435	-4.300	14.38400	5.98960	-.94252	6.80910	.07867	.08099	.07244	423.56000	12.65000	.08302
7.452	-4.100	14.38000	5.98970	-.94295	6.82790	.07867	.08092	.07233	424.75000	12.68500	.08288
7.447	-3.900	14.38400	5.98980	-.94413	6.82770	.07880	.08106	.07248	424.76000	12.68500	.08296
7.461	-3.700	14.39000	5.98980	-.94516	6.83800	.07899	.08110	.07261	425.43000	12.70400	.08294
7.459	-3.500	14.39400	5.98990	-.94636	6.83800	.07903	.08110	.07279	425.44000	12.70400	.08284
7.462	-3.300	14.39600	5.99000	-.94727	6.83910	.07915	.08114	.07299	425.53000	12.70600	.08270
7.460	-3.100	14.40300	5.99010	-.94846	6.84020	.07926	.08131	.07313	425.63000	12.70800	.08263
7.474	-2.900	14.40800	5.99010	-.94957	6.85850	.07939	.08143	.07332	426.79000	12.74200	.08265
7.471	-2.700	14.41100	5.99020	-.95049	6.85480	.07954	.08160	.07354	426.58000	12.73500	.08277
7.466	-2.500	14.41800	5.99030	-.95179	6.84610	.07977	.08178	.07373	426.06000	12.71900	.08290
7.466	-2.300	14.41700	5.99040	-.95255	6.84530	.08003	.08209	.07423	426.03000	12.71700	.08326
7.479	-2.100	14.42600	5.99040	-.95369	6.85760	.08041	.08240	.07448	426.82000	12.74000	.08358
7.478	-1.900	14.42800	5.99050	-.95470	6.85580	.08063	.08255	.07468	426.73000	12.73700	.08382
7.486	-1.700	14.43500	5.99060	-.95591	6.85930	.08080	.08257	.07472	426.97000	12.74300	.08389
7.503	-1.500	14.43600	5.99060	-.95681	6.86540	.08066	.08216	.07468	427.37000	12.75500	.08370
7.487	-1.300	14.44500	5.99070	-.95828	6.85140	.08045	.08155	.07465	426.52000	12.72800	.08329
7.476	-1.100	14.44300	5.99080	-.95911	6.85070	.08018	.08094	.07490	426.50000	12.72700	.08301
7.458	-.900	14.44900	5.99090	-.96043	6.84300	.07998	.08051	.07518	426.04000	12.71300	.08277
7.466	-.700	14.44900	5.99090	-.96130	6.85230	.07977	.08009	.07540	426.65000	12.73000	.08254
7.452	-.500	14.45500	5.99100	-.96282	6.84250	.07946	.07968	.07561	426.05000	12.71200	.08227
7.475	-.300	14.45800	5.99110	-.96402	6.85850	.07887	.07902	.07556	427.07000	12.74200	.08174
7.480	-.100	14.46400	5.99120	-.96534	6.86260	.07839	.07838	.07560	427.35000	12.74900	.08128
7.458	.100	14.46400	5.99120	-.96657	6.84630	.07828	.07789	.07585	426.36000	12.71900	.08111
7.437	.300	14.46800	5.99130	-.96790	6.82770	.07839	.07762	.07600	425.22000	12.68500	.08104
7.450	.500	14.47200	5.99140	-.96903	6.83650	.07838	.07741	.07599	425.79000	12.70100	.08090
7.429	.700	14.47500	5.99150	-.97035	6.81940	.07811	.07703	.07569	424.75000	12.66900	.08049
7.417	.900	14.47600	5.99150	-.97140	6.81080	.07759	.07627	.07515	424.24000	12.65300	.07992
7.400	1.100	14.48100	5.99160	-.97284	6.79890	.07726	.07584	.07468	423.52000	12.63100	.07949
7.388	1.300	14.48200	5.99170	-.97387	6.78940	.07715	.07569	.07444	422.94000	12.61300	.07935
7.379	1.500	14.48600	5.99180	-.97505	6.78180	.07719	.07573	.07438	422.49000	12.59900	.07939
7.360	1.700	14.48700	5.99180	-.97618	6.76320	.07730	.07601	.07437	421.35000	12.56500	.07948
7.368	1.900	14.49300	5.99190	-.97744	6.76610	.07730	.07633	.07416	421.56000	12.57000	.07951
7.356	2.100	14.49400	5.99200	-.97847	6.76110	.07743	.07674	.07387	421.27000	12.56100	.07963
7.355	2.300	14.49900	5.99210	-.97970	6.76530	.07790	.07764	.07388	421.56000	12.56900	.08009
7.362	2.500	14.50200	5.99210	-.98090	6.77820	.07849	.07852	.07408	422.38000	12.59300	.08070
7.348	2.700	14.50400	5.99220	-.98226	6.77040	.07906	.07931	.07409	421.92000	12.57800	.08134
7.347	2.900	14.50700	5.99230	-.98351	6.76620	.07930	.07948	.07396	421.67000	12.57000	.08163
7.346	3.100	14.51000	5.99240	-.98487	6.76250	.07922	.07929	.07366	421.47000	12.56300	.08159
7.341	3.300	14.51200	5.99240	-.98620	6.75650	.07887	.07871	.07302	421.11000	12.55200	.08119
7.328	3.500	14.51500	5.99250	-.98763	6.74760	.07834	.07813	.07214	420.58000	12.53600	.08073
7.330	3.700	14.51800	5.99260	-.98909	6.74820	.07781	.07754	.07111	420.64000	12.53700	.08012

OA257 (LARC 20-M6-6559) OV102 (S7E050) (10 JUL 81)

REFERENCE DATA

SREF =	2690.0000 SQ.FT.	XMRP =	1076.6800 IN. XO		
LREF =	474.8100 INCHES	YMRP =	.0000 IN. YO		
BREF =	936.6800 INCHES	ZMRP =	375.0000 IN. ZO		
SCALE =	.0100				

PARAMETRIC DATA

ALPHA =	15.000	PHI =	.000
SPDBRK =	86.600	AILRON =	.000
YP =	1.000	1S =	1.000
ELEVON =	.000	MACH =	6.000
S-MODE =	2.000	S-DIR =	1.000

RUN NO. 112/ 0 RN/L = 7.43 GRADIENT INTERVAL = -.60/ .60

RN/L	BETA	ALPHA	MACH	PHI	Q	BP1	BP2	BP3	PT1	PT2	PSC
7.335	3.847	14.51400	5.99270	-.98975	6.75380	.07722	.07684	.07036	421.01000	12.54700	.07954
	GRADIENT	.01643	.00037	-.00627	-.01981	-.00099	-.00229	.00050	-1.12000	-.03657	-.00130

OA257 (LARC 20-M6-6559) OV102 (S7E150) (10 JUL 81)

REFERENCE DATA

SREF = 2690.0000 SQ.FT. XMRP = 1076.6800 IN. XO
LREF = 474.8100 INCHES YMRP = .0000 IN. YO
BREF = 936.6800 INCHES ZMRP = 375.0000 IN. ZO
SCALE = .0100

PARAMETRIC DATA

ALPHA = 15.000 PHI = .000
SPDBRK = 86.600 AILRON = .000
YP = 1.000 1S = 1.000
ELEVON = .000 MACH = 6.000
S-MODE = 2.000 S-DIR = 1.000

RUN NO. 2148/ 0 RN/L = 2.26 GRADIENT INTERVAL = -.60/ .60

RN/L	BETA	ALPHA	MACH	PHI	Q	BP1	BP2	BP3	PT1	PT2	PSC
2.294	-2.200	14.80800	5.96980	-1.00870	2.47650	.03193	.03458	.02523	151.95000	4.60120	.03597
2.298	-2.000	14.80600	5.96990	-1.00860	2.47460	.03201	.03458	.02531	151.84000	4.59760	.03601
2.293	-1.800	14.81500	5.97000	-1.00930	2.46920	.03198	.03437	.02538	151.53000	4.58770	.03589
2.287	-1.600	14.81800	5.97010	-1.00980	2.46330	.03195	.03422	.02540	151.17000	4.57670	.03578
2.284	-1.400	14.82100	5.97020	-1.01020	2.45970	.03205	.03442	.02564	150.96000	4.57000	.03594
2.276	-1.200	14.82700	5.97030	-1.01080	2.45320	.03233	.03511	.02593	150.57000	4.55790	.03622
2.278	-1.000	14.82800	5.97040	-1.01090	2.45100	.03252	.03559	.02605	150.45000	4.55370	.03643
2.277	-.800	14.83300	5.97050	-1.01150	2.44670	.03263	.03585	.02631	150.20000	4.54580	.03647
2.270	-.600	14.83700	5.97060	-1.01190	2.44180	.03266	.03586	.02656	149.91000	4.53680	.03637
2.262	-.400	14.84000	5.97070	-1.01230	2.43740	.03242	.03547	.02680	149.65000	4.52850	.03600
2.255	-.200	14.84500	5.97080	-1.01300	2.43280	.03188	.03458	.02695	149.37000	4.51990	.03534
2.255	.000	14.84500	5.97090	-1.01320	2.42990	.03093	.03304	.02671	149.21000	4.51450	.03426
2.249	.200	14.85000	5.97100	-1.01390	2.42580	.02985	.03140	.02628	148.97000	4.50690	.03315
2.242	.400	14.85700	5.97110	-1.01460	2.42420	.02886	.02996	.02571	148.88000	4.50400	.03205
2.242	.600	14.85700	5.97120	-1.01490	2.42470	.02809	.02896	.02530	148.92000	4.50490	.03125
2.236	.800	14.86300	5.97130	-1.01570	2.42340	.02757	.02831	.02494	148.85000	4.50250	.03066
2.233	1.000	14.86400	5.97140	-1.01590	2.42330	.02736	.02799	.02472	148.86000	4.50230	.03034
2.234	1.200	14.87300	5.97150	-1.01680	2.42350	.02728	.02794	.02468	148.88000	4.50280	.03025
2.239	1.400	14.87500	5.97160	-1.01730	2.42300	.02726	.02796	.02456	148.86000	4.50180	.03017
2.241	1.600	14.87600	5.97180	-1.01770	2.42430	.02718	.02790	.02441	148.95000	4.50420	.03003
2.239	1.800	14.88200	5.97190	-1.01850	2.42330	.02708	.02784	.02430	148.90000	4.50230	.02992
2.240	2.000	14.88500	5.97200	-1.01910	2.42310	.02726	.02798	.02439	148.90000	4.50190	.03004
2.239	2.200	14.88500	5.97210	-1.02010	2.42180	.02758	.02839	.02468	148.83000	4.49950	.03035
2.237	2.400	14.88900	5.97220	-1.02050	2.42150	.02768	.02860	.02456	148.82000	4.49890	.03038
2.241	2.600	14.89100	5.97230	-1.02100	2.42250	.02782	.02891	.02441	148.90000	4.50080	.03050
	GRADIENT	.01768	.00050	-.00259	-.01512	-.00408	-.00623	-.00118	-.87678	-.02816	-.00454

OA257 (LARC 20-M6-6559) OV102 (S7E150) (10 JUL 81)

REFERENCE DATA

SREF = 2690.0000 SQ.FT. XMRP = 1076.6800 IN. XO
LREF = 474.8100 INCHES YMRP = .0000 IN. YO
BREF = 936.6800 INCHES ZMRP = 375.0000 IN. ZO
SCALE = .0100

PARAMETRIC DATA

ALPHA = 15.000 PHI = .000
SPDBRK = 86.600 AILRON = .000
YP = 1.000 1S = 1.000
ELEVON = .000 MACH = 6.000
S-MODE = 2.000 S-DIR = 1.000

RUN NO. 2112/ 0 RN/L = 7.43 GRADIENT INTERVAL = -.60/ .60

RN/L	BETA	ALPHA	MACH	PHI	Q	BP1	BP2	BP3	PT1	PT2	PSC
7.445	-4.400	14.37700	5.98960	-.94162	6.81890	.07876	.08105	.07254	424.15000	12.66800	.08315
7.445	-4.200	14.37900	5.98960	-.94258	6.81860	.07862	.08090	.07232	424.16000	12.66800	.08294
7.446	-4.000	14.38200	5.98970	-.94359	6.82440	.07873	.08101	.07233	424.55000	12.67800	.08295
7.458	-3.800	14.38600	5.98980	-.94451	6.83630	.07892	.08111	.07255	425.31000	12.70100	.08297
7.459	-3.600	14.39300	5.98990	-.94583	6.83670	.07901	.08111	.07271	425.35000	12.70100	.08289
7.463	-3.400	14.39500	5.98990	-.94683	6.84120	.07907	.08110	.07288	425.66000	12.71000	.08275
7.458	-3.200	14.40200	5.99000	-.94801	6.83680	.07923	.08125	.07304	425.41000	12.70100	.08264
7.473	-3.000	14.40300	5.99010	-.94887	6.85380	.07935	.08136	.07320	426.49000	12.73300	.08261
7.470	-2.800	14.41200	5.99020	-.95018	6.85510	.07950	.08154	.07344	426.59000	12.73500	.08273
7.472	-2.600	14.41100	5.99020	-.95092	6.85310	.07964	.08166	.07365	426.49000	12.73200	.08283
7.464	-2.400	14.42000	5.99030	-.95237	6.84480	.07988	.08193	.07396	425.99000	12.71600	.08305
7.478	-2.200	14.41900	5.99040	-.95301	6.85670	.08021	.08226	.07434	426.76000	12.73800	.08344
7.472	-2.000	14.42700	5.99050	-.95428	6.85150	.08056	.08256	.07464	426.45000	12.72900	.08372
7.485	-1.800	14.42900	5.99050	-.95511	6.86210	.08073	.08256	.07469	427.13000	12.74800	.08385
7.492	-1.600	14.44000	5.99060	-.95672	6.85920	.08075	.08241	.07473	426.98000	12.74300	.08384
7.503	-1.400	14.43600	5.99070	-.95712	6.86300	.08061	.08187	.07465	427.23000	12.75000	.08352
7.480	-1.200	14.44700	5.99080	-.95885	6.84930	.08032	.08127	.07482	426.40000	12.72500	.08313
7.469	-1.000	14.44600	5.99080	-.95974	6.84960	.08007	.08070	.07504	426.44000	12.72500	.08289
7.460	-.800	14.44900	5.99090	-.96088	6.84580	.07987	.08029	.07533	426.23000	12.71800	.08266
7.461	-.600	14.45100	5.99100	-.96196	6.85000	.07965	.07991	.07548	426.51000	12.72600	.08241
7.466	-.400	14.45900	5.99110	-.96359	6.85120	.07915	.07934	.07564	426.61000	12.72800	.08199
7.474	-.200	14.45700	5.99110	-.96440	6.85930	.07861	.07866	.07556	427.13000	12.74300	.08147
7.474	.000	14.46500	5.99120	-.96600	6.85720	.07827	.07809	.07570	427.02000	12.73900	.08117
7.443	.200	14.46600	5.99130	-.96728	6.83380	.07835	.07773	.07595	425.59000	12.69600	.08108
7.448	.400	14.47100	5.99130	-.96847	6.83430	.07839	.07751	.07607	425.64000	12.69700	.08099
7.433	.600	14.47200	5.99140	-.96957	6.82320	.07835	.07732	.07589	424.97000	12.67600	.08075
7.424	.800	14.47600	5.99150	-.97098	6.81600	.07781	.07662	.07540	424.54000	12.66300	.08024
7.408	1.000	14.47700	5.99160	-.97201	6.80440	.07740	.07599	.07492	423.84000	12.64100	.07967
7.394	1.200	14.48200	5.99160	-.97342	6.79500	.07719	.07576	.07452	423.28000	12.62400	.07939
7.384	1.400	14.48500	5.99170	-.97448	6.78510	.07716	.07569	.07439	422.69000	12.60500	.07928
7.360	1.600	14.48600	5.99180	-.97565	6.76510	.07722	.07583	.07443	421.46000	12.56800	.07945
7.367	1.800	14.49000	5.99190	-.97680	6.76380	.07731	.07618	.07428	421.40000	12.56600	.07949
7.360	2.000	14.49200	5.99190	-.97781	6.76300	.07732	.07649	.07399	421.37000	12.56400	.07955
7.353	2.200	14.49700	5.99200	-.97912	6.76080	.07763	.07716	.07382	421.26000	12.56000	.07980
7.361	2.400	14.50000	5.99210	-.98036	6.77500	.07821	.07808	.07398	422.17000	12.58700	.08039
7.354	2.600	14.50400	5.99220	-.98160	6.77450	.07881	.07898	.07407	422.16000	12.58600	.08103
7.346	2.800	14.50500	5.99230	-.98286	6.76760	.07921	.07947	.07407	421.75000	12.57300	.08153
7.349	3.000	14.50900	5.99230	-.98424	6.76760	.07930	.07942	.07380	421.77000	12.57300	.08164
7.351	3.200	14.51100	5.99240	-.98556	6.76510	.07906	.07901	.07334	421.64000	12.56800	.08144
7.334	3.400	14.51300	5.99250	-.98694	6.75020	.07861	.07846	.07253	420.73000	12.54100	.08094
7.327	3.600	14.51600	5.99250	-.98835	6.74810	.07809	.07783	.07160	420.62000	12.53700	.08043
7.334	3.800	14.51900	5.99260	-.98985	6.75090	.07747	.07717	.07070	420.82000	12.54200	.07978
	GRADIENT	.01714	.00032	-.00633	-.02495	-.00101	-.00221	.00044	-1.44643	-.04625	-.00132

OA257 (LARC 20-M6-6559) OV102 (S7E051) (10 JUL 81)

REFERENCE DATA

SREF = 2690.0000 SQ.FT. XMRP = 1076.6800 IN. XO
LREF = 474.8100 INCHES YMRP = .0000 IN. YO
BREF = 936.6800 INCHES ZMRP = 375.0000 IN. ZO
SCALE = .0100

PARAMETRIC DATA

ALPHA = 17.500 PHI = .000
SPDBRK = 86.600 AILRON = .000
YP = 1.000 1S = 1.000
ELEVON = .000 MACH = 6.000
S-MODE = 2.000 S-DIR = 1.000

RUN NO. 147/ 0 RN/L = 2.32 GRADIENT INTERVAL = -.60/ .60

RN/L	BETA	ALPHA	MACH	PHI	Q	BP1	BP2	BP3	PT1	PT2	PSC
2.355	-2.325	17.16600	5.97090	-1.16250	2.50910	.02961	.03270	.02436	154.07000	4.66180	.03338
2.359	-2.200	17.16700	5.97100	-1.16260	2.50860	.02969	.03271	.02437	154.05000	4.66090	.03343
2.355	-2.000	17.17000	5.97110	-1.16310	2.50600	.02988	.03289	.02445	153.90000	4.65590	.03361
2.353	-1.800	17.17200	5.97120	-1.16330	2.50300	.02992	.03278	.02458	153.72000	4.65030	.03367
2.351	-1.600	17.18100	5.97130	-1.16410	2.49680	.02972	.03220	.02453	153.35000	4.63890	.03332
2.346	-1.400	17.18300	5.97130	-1.16440	2.49090	.02933	.03139	.02435	153.00000	4.62790	.03273
2.339	-1.200	17.18600	5.97140	-1.16490	2.48330	.02879	.03054	.02408	152.55000	4.61390	.03210
2.336	-1.000	17.19500	5.97150	-1.16570	2.47840	.02837	.02985	.02382	152.25000	4.60470	.03160
2.332	-.800	17.19800	5.97160	-1.16670	2.47400	.02813	.02935	.02377	151.99000	4.59640	.03127
2.325	-.600	17.20500	5.97170	-1.16750	2.46870	.02826	.02939	.02398	151.68000	4.58670	.03138
2.322	-.400	17.20500	5.97180	-1.16780	2.46630	.02837	.02951	.02417	151.54000	4.58220	.03153
2.321	-.200	17.21100	5.97190	-1.16860	2.46410	.02847	.02958	.02444	151.41000	4.57810	.03164
2.318	.000	17.21500	5.97200	-1.16920	2.46200	.02828	.02924	.02447	151.29000	4.57410	.03130
2.313	.200	17.21800	5.97210	-1.16980	2.46060	.02790	.02878	.02429	151.22000	4.57160	.03090
2.311	.400	17.22400	5.97220	-1.17070	2.45710	.02775	.02853	.02421	151.01000	4.56510	.03062
2.307	.600	17.22800	5.97230	-1.17140	2.45580	.02767	.02838	.02419	150.94000	4.56260	.03053
2.303	.800	17.23100	5.97240	-1.17220	2.45460	.02774	.02846	.02433	150.87000	4.56040	.03062
2.297	1.000	17.23900	5.97250	-1.17290	2.45140	.02782	.02851	.02451	150.69000	4.55450	.03074
2.293	1.200	17.23900	5.97260	-1.17340	2.45020	.02786	.02846	.02470	150.63000	4.55230	.03077
2.290	1.400	17.24700	5.97270	-1.17430	2.44820	.02779	.02838	.02476	150.52000	4.54860	.03072
2.290	1.600	17.25000	5.97270	-1.17490	2.44870	.02772	.02825	.02458	150.55000	4.54940	.03055
2.289	1.800	17.25100	5.97280	-1.17580	2.44900	.02768	.02814	.02452	150.58000	4.55000	.03053
2.288	2.000	17.25300	5.97290	-1.17710	2.44840	.02771	.02802	.02445	150.56000	4.54890	.03041
2.292	2.200	17.25800	5.97300	-1.17780	2.44930	.02756	.02771	.02402	150.62000	4.55050	.03013
2.294	2.400	17.26400	5.97310	-1.17860	2.44900	.02743	.02755	.02375	150.61000	4.55000	.02993
2.294	2.600	17.26700	5.97320	-1.17910	2.44780	.02749	.02772	.02351	150.54000	4.54770	.02986
	GRADIENT	.02036	.00050	-.00334	-.01082	-.00064	-.00104	.00010	-.61964	-.02018	-.00091

OA257 (LARC 20-M6-6559) OV102 (S7E051) (10 JUL 81)

REFERENCE DATA

SREF = 2690.0000 SQ.FT. XMRP = 1076.6800 IN. XO
LREF = 474.8100 INCHES YMRP = .0000 IN. YO
BREF = 936.6800 INCHES ZMRP = 375.0000 IN. ZO
SCALE = .0100

PARAMETRIC DATA

ALPHA = 17.500 PHI = .000
SPDBRK = 86.600 AILRON = .000
YP = 1.000 1S = 1.000
ELEVON = .000 MACH = 6.000
S-MODE = 2.000 S-DIR = 1.000

RUN NO. 111/ 0 RN/L = 7.40 GRADIENT INTERVAL = -.60/ .60

RN/L	BETA	ALPHA	MACH	PHI	Q	BP1	BP2	BP3	PT1	PT2	PSC
7.419	-4.327	16.93800	5.99270	-1.09930	6.81840	.07543	.07559	.07301	425.05000	12.66700	.07714
7.432	-4.200	16.94500	5.99280	-1.10030	6.82960	.07541	.07553	.07294	425.77000	12.68800	.07714
7.416	-4.000	16.94600	5.99280	-1.10140	6.82410	.07541	.07554	.07263	425.45000	12.67800	.07715
7.409	-3.800	16.94900	5.99290	-1.10260	6.81890	.07495	.07517	.07176	425.14000	12.66800	.07666
7.405	-3.600	16.95300	5.99300	-1.10370	6.82110	.07436	.07468	.07082	425.30000	12.67200	.07608
7.424	-3.400	16.96000	5.99300	-1.10500	6.84330	.07370	.07408	.06971	426.70000	12.71300	.07539
7.430	-3.200	16.96800	5.99310	-1.10640	6.85040	.07316	.07359	.06882	427.16000	12.72700	.07485
7.416	-3.000	16.96900	5.99320	-1.10740	6.83740	.07280	.07309	.06798	426.37000	12.70200	.07439
7.418	-2.800	16.97600	5.99330	-1.10880	6.83880	.07248	.07262	.06760	426.48000	12.70500	.07402
7.441	-2.600	16.98200	5.99330	-1.10980	6.86740	.07224	.07224	.06722	428.29000	12.75800	.07376
7.428	-2.400	16.98800	5.99340	-1.11110	6.85940	.07204	.07192	.06704	427.81000	12.74300	.07360
7.432	-2.200	16.99000	5.99350	-1.11240	6.85990	.07188	.07148	.06695	427.86000	12.74400	.07339
7.436	-2.000	16.99800	5.99350	-1.11390	6.86400	.07189	.07112	.06706	428.14000	12.75200	.07342
7.454	-1.800	17.00000	5.99360	-1.11540	6.86350	.07207	.07105	.06740	428.12000	12.75100	.07369
7.470	-1.600	17.00600	5.99370	-1.11710	6.86130	.07209	.07115	.06779	428.00000	12.74700	.07379
7.469	-1.400	17.00900	5.99370	-1.11840	6.87690	.07211	.07131	.06804	429.00000	12.77600	.07386
7.439	-1.200	17.01800	5.99380	-1.12030	6.86650	.07244	.07178	.06873	428.37000	12.75600	.07428
7.441	-1.000	17.01900	5.99390	-1.12170	6.87190	.07317	.07253	.06978	428.73000	12.76700	.07510
7.445	-.800	17.02500	5.99390	-1.12340	6.88090	.07420	.07356	.07109	429.31000	12.78300	.07621
7.451	-.600	17.02800	5.99400	-1.12480	6.88710	.07528	.07452	.07225	429.71000	12.79500	.07730
7.437	-.400	17.03200	5.99410	-1.12630	6.87450	.07609	.07533	.07321	428.95000	12.77100	.07820
7.446	-.200	17.03600	5.99410	-1.12780	6.88440	.07665	.07584	.07380	429.58000	12.79000	.07875
7.439	.000	17.04600	5.99420	-1.12970	6.88040	.07706	.07621	.07432	429.36000	12.78200	.07911
7.446	.200	17.04300	5.99430	-1.13080	6.88380	.07716	.07629	.07475	429.59000	12.78900	.07921
7.440	.400	17.05100	5.99430	-1.13270	6.87600	.07712	.07625	.07514	429.12000	12.77400	.07920
7.455	.600	17.05200	5.99440	-1.13390	6.89000	.07692	.07607	.07528	430.02000	12.80000	.07901
7.449	.800	17.06100	5.99450	-1.13600	6.88080	.07675	.07596	.07528	429.46000	12.78300	.07884
7.448	1.000	17.06000	5.99450	-1.13740	6.88020	.07634	.07552	.07495	429.44000	12.78200	.07842
7.408	1.200	17.06700	5.99460	-1.13960	6.84570	.07556	.07468	.07416	427.31000	12.71800	.07752
7.408	1.400	17.06500	5.99470	-1.14090	6.85160	.07485	.07390	.07341	427.70000	12.72900	.07674
7.386	1.600	17.07300	5.99470	-1.14280	6.82600	.07429	.07326	.07278	426.12000	12.68100	.07599
7.381	1.800	17.07200	5.99480	-1.14440	6.81450	.07389	.07280	.07231	425.42000	12.66000	.07560
7.366	2.000	17.07800	5.99490	-1.14610	6.80460	.07377	.07263	.07198	424.83000	12.64200	.07547
7.333	2.200	17.07400	5.99490	-1.14730	6.77280	.07362	.07245	.07157	422.86000	12.58200	.07540
7.340	2.400	17.07800	5.99500	-1.14890	6.76550	.07345	.07228	.07118	422.42000	12.56900	.07540
7.322	2.600	17.07800	5.99510	-1.15030	6.76730	.07327	.07217	.07111	422.56000	12.57200	.07542
7.298	2.800	17.08600	5.99510	-1.15230	6.75550	.07331	.07207	.07120	421.84000	12.55000	.07550
7.303	3.000	17.08600	5.99520	-1.15350	6.77190	.07357	.07218	.07135	422.88000	12.58100	.07579
7.288	3.200	17.09400	5.99530	-1.15530	6.76340	.07410	.07263	.07183	422.37000	12.56500	.07623
7.279	3.400	17.09400	5.99530	-1.15680	6.75280	.07457	.07303	.07229	421.73000	12.54500	.07676
7.293	3.600	17.10100	5.99540	-1.15850	6.76320	.07493	.07336	.07277	422.40000	12.56400	.07712
7.283	3.790	17.09800	5.99550	-1.15980	6.75530	.07529	.07366	.07356	421.94000	12.55000	.07761
	GRADIENT	.02089	.00032	-.00770	.00198	.00134	.00125	.00248	.22858	.00357	.00135

OA257 (LARC 20-M6-6559) OV102 (S7E151) (10 JUL 81)

REFERENCE DATA

SREF = 2690.0000 SQ.FT. XMRP = 1076.6800 IN. X0
LREF = 474.8100 INCHES YMRP = .0000 IN. Y0
BREF = 936.6800 INCHES ZMRP = 375.0000 IN. Z0
SCALE = .0100

PARAMETRIC DATA

ALPHA = 17.500 PHI = .000
SPDBRK = 86.600 AILRON = .000
YP = 1.000 1S = 1.000
ELEVON = .000 MACH = 6.000
S-MODE = 2.000 S-DIR = 1.000

RUN NO. 2147/ 0 RN/L = 2.32 GRADIENT INTERVAL = -.60/ .60

RN/L	BETA	ALPHA	MACH	PHI	Q	BP1	BP2	BP3	PT1	PT2	PSC
2.356	-2.300	17.16600	5.97090	-1.16250	2.50880	.02962	.03270	.02436	154.06000	4.66120	.03339
2.359	-2.100	17.16600	5.97100	-1.16260	2.50830	.02978	.03278	.02440	154.04000	4.66030	.03351
2.353	-1.900	17.17300	5.97110	-1.16330	2.50460	.02993	.03291	.02453	153.82000	4.65340	.03370
2.353	-1.700	17.17700	5.97120	-1.16370	2.49970	.02992	.03251	.02453	153.53000	4.64430	.03352
2.349	-1.500	17.17900	5.97130	-1.16410	2.49430	.02955	.03182	.02449	153.21000	4.63430	.03305
2.341	-1.300	17.18600	5.97140	-1.16480	2.48690	.02907	.03098	.02423	152.76000	4.62040	.03242
2.338	-1.100	17.18800	5.97150	-1.16510	2.48010	.02853	.03012	.02390	152.35000	4.60790	.03183
2.333	-.900	17.19600	5.97160	-1.16610	2.47540	.02822	.02956	.02381	152.07000	4.59900	.03137
2.328	-.700	17.20200	5.97170	-1.16710	2.47080	.02814	.02933	.02384	151.80000	4.59060	.03128
2.324	-.500	17.20300	5.97180	-1.16760	2.46790	.02831	.02942	.02409	151.63000	4.58510	.03148
2.321	-.300	17.21100	5.97190	-1.16840	2.46490	.02844	.02958	.02429	151.45000	4.57950	.03162
2.320	-.100	17.21000	5.97190	-1.16870	2.46270	.02843	.02945	.02449	151.33000	4.57550	.03153
2.315	.100	17.21700	5.97200	-1.16960	2.46150	.02808	.02899	.02438	151.27000	4.57330	.03109
2.311	.300	17.22100	5.97210	-1.17030	2.45860	.02784	.02865	.02425	151.10000	4.56790	.03073
2.309	.500	17.22400	5.97220	-1.17090	2.45640	.02770	.02842	.02416	150.97000	4.56380	.03055
2.305	.700	17.23400	5.97230	-1.17210	2.45510	.02770	.02839	.02427	150.90000	4.56140	.03053
2.300	.900	17.23200	5.97240	-1.17220	2.45360	.02777	.02845	.02440	150.82000	4.55850	.03064
2.295	1.100	17.24000	5.97250	-1.17310	2.45090	.02787	.02850	.02461	150.67000	4.55360	.03078
2.291	1.300	17.24300	5.97260	-1.17380	2.44860	.02782	.02843	.02474	150.53000	4.54930	.03075
2.291	1.500	17.24600	5.97270	-1.17450	2.44910	.02771	.02829	.02467	150.58000	4.55030	.03062
2.290	1.700	17.25300	5.97280	-1.17540	2.44910	.02768	.02819	.02455	150.58000	4.55020	.03053
2.288	1.900	17.25000	5.97290	-1.17650	2.44840	.02771	.02810	.02451	150.55000	4.54890	.03048
2.290	2.100	17.25500	5.97300	-1.17750	2.44940	.02764	.02788	.02427	150.62000	4.55080	.03029
2.294	2.300	17.26100	5.97310	-1.17820	2.44830	.02750	.02761	.02387	150.56000	4.54870	.03004
2.294	2.500	17.26200	5.97320	-1.17870	2.44900	.02745	.02761	.02360	150.62000	4.55010	.02986
2.293	2.647	17.26900	5.97320	-1.17930	2.44670	.02754	.02780	.02351	150.48000	4.54580	.02989
	GRADIENT	.02029	.00039	-.00330	-.01109	-.00074	-.00118	.00001	-.63000	-.02050	-.00111

OA257 (LARC 20-M6-6559) OV102 (S7E151) (10 JUL 81)

REFERENCE DATA

SREF = 2690.0000 SQ.FT. XMRP = 1076.6800 IN. XO
LREF = 474.8100 INCHES YMRP = .0000 IN. YO
BREF = 936.6800 INCHES ZMRP = 375.0000 IN. ZO
SCALE = .0100

PARAMETRIC DATA

ALPHA = 17.500 PHI = .000
SPDBRK = 86.600 AILRON = .000
YP = 1.000 1S = 1.000
ELEVON = .000 MACH = 6.000
S-MODE = 2.000 S-DIR = 1.000

RUN NO. 2111/ 0 RN/L = 7.40 GRADIENT INTERVAL = -.60/ .60

RN/L	BETA	ALPHA	MACH	PHI	Q	BP1	BP2	BP3	PT1	PT2	PSC
7.438	-4.300	16.93900	5.99270	-1.09950	6.83040	.07544	.07554	.07301	425.80000	12.68900	.07715
7.424	-4.100	16.94700	5.99280	-1.10100	6.82810	.07541	.07554	.07282	425.68000	12.68500	.07715
7.403	-3.900	16.94400	5.99290	-1.10180	6.81200	.07526	.07540	.07229	424.70000	12.65500	.07696
7.406	-3.700	16.95400	5.99290	-1.10340	6.81940	.07468	.07496	.07127	425.19000	12.66900	.07640
7.417	-3.500	16.95200	5.99300	-1.10410	6.83500	.07401	.07437	.07025	426.17000	12.69800	.07571
7.427	-3.300	16.96600	5.99310	-1.10580	6.84710	.07339	.07383	.06923	426.95000	12.72000	.07508
7.424	-3.100	16.96600	5.99320	-1.10660	6.84500	.07297	.07332	.06841	426.84000	12.71700	.07460
7.414	-2.900	16.97400	5.99320	-1.10820	6.83600	.07266	.07287	.06781	426.30000	12.70000	.07420
7.435	-2.700	16.97800	5.99330	-1.10920	6.85660	.07234	.07240	.06740	427.60000	12.73800	.07387
7.431	-2.500	16.98600	5.99340	-1.11050	6.86150	.07215	.07211	.06710	427.93000	12.74700	.07368
7.434	-2.300	16.98800	5.99340	-1.11160	6.86430	.07196	.07170	.06695	428.12000	12.75200	.07350
7.426	-2.100	16.99400	5.99350	-1.11320	6.85540	.07185	.07130	.06692	427.59000	12.73600	.07336
7.449	-1.900	16.99800	5.99360	-1.11450	6.87250	.07195	.07103	.06715	428.67000	12.76800	.07356
7.459	-1.700	17.00400	5.99360	-1.11630	6.85580	.07213	.07111	.06761	427.65000	12.73700	.07376
7.472	-1.500	17.00800	5.99370	-1.11780	6.86730	.07208	.07122	.06791	428.39000	12.75800	.07383
7.458	-1.300	17.01300	5.99380	-1.11930	6.87650	.07222	.07148	.06830	428.99000	12.77500	.07401
7.437	-1.100	17.01700	5.99380	-1.12100	6.86680	.07274	.07213	.06918	428.40000	12.75700	.07464
7.444	-.900	17.02200	5.99390	-1.12250	6.87750	.07368	.07302	.07038	429.08000	12.77700	.07563
7.449	-.700	17.02600	5.99400	-1.12410	6.88570	.07477	.07407	.07177	429.62000	12.79200	.07680
7.445	-.500	17.03100	5.99400	-1.12570	6.88140	.07573	.07494	.07276	429.37000	12.78400	.07780
7.446	-.300	17.03500	5.99410	-1.12710	6.88340	.07642	.07563	.07350	429.51000	12.78800	.07853
7.441	-.100	17.03700	5.99420	-1.12850	6.88150	.07688	.07606	.07410	429.42000	12.78400	.07896
7.439	.100	17.04400	5.99420	-1.13020	6.88090	.07714	.07630	.07459	429.40000	12.78300	.07919
7.447	.300	17.04800	5.99430	-1.13170	6.88230	.07716	.07628	.07495	429.50000	12.78600	.07923
7.443	.500	17.05000	5.99440	-1.13320	6.87880	.07702	.07617	.07524	429.31000	12.77900	.07911
7.453	.700	17.05400	5.99440	-1.13480	6.88760	.07686	.07602	.07530	429.88000	12.79600	.07888
7.452	.900	17.06100	5.99450	-1.13670	6.88360	.07658	.07581	.07516	429.65000	12.78800	.07865
7.422	1.100	17.06100	5.99460	-1.13830	6.85760	.07600	.07513	.07459	428.04000	12.74000	.07798
7.411	1.300	17.06800	5.99460	-1.14040	6.85150	.07518	.07428	.07382	427.68000	12.72900	.07712
7.391	1.500	17.06800	5.99470	-1.14180	6.83480	.07457	.07356	.07305	426.66000	12.69700	.07633
7.393	1.700	17.07300	5.99480	-1.14360	6.82540	.07403	.07298	.07251	426.09000	12.68000	.07576
7.374	1.900	17.07000	5.99480	-1.14500	6.80940	.07380	.07270	.07208	425.12000	12.65000	.07548
7.345	2.100	17.07600	5.99490	-1.14670	6.78710	.07372	.07253	.07181	423.74000	12.60900	.07543
7.337	2.300	17.07400	5.99500	-1.14800	6.76780	.07356	.07236	.07135	422.56000	12.57300	.07540
7.340	2.500	17.08300	5.99500	-1.14990	6.77240	.07335	.07220	.07113	422.86000	12.58200	.07542
7.301	2.700	17.07900	5.99510	-1.15110	6.75370	.07327	.07208	.07116	421.72000	12.54700	.07545
7.298	2.900	17.08700	5.99520	-1.15300	6.76170	.07340	.07210	.07127	422.24000	12.56200	.07564
7.302	3.100	17.08800	5.99520	-1.15420	6.77390	.07383	.07236	.07153	423.02000	12.58400	.07597
7.279	3.300	17.09400	5.99530	-1.15600	6.75360	.07436	.07286	.07208	421.77000	12.54700	.07652
7.284	3.500	17.09400	5.99540	-1.15730	6.75720	.07472	.07321	.07250	422.02000	12.55300	.07689
7.287	3.700	17.10200	5.99550	-1.15940	6.75790	.07509	.07354	.07305	422.08000	12.55500	.07732
	GRADIENT	.02014	.00037	-.00757	-.00241	.00128	.00119	.00246	-.05000	-.00457	.00127

OA257 (LARC 20-M6-6559) OV102 (S7E052) (10 JUL 81)

REFERENCE DATA

SREF = 2690.0000 SQ.FT. XMRP = 1076.6800 IN. X0
LREF = 474.8100 INCHES YMRP = .0000 IN. Y0
BREF = 936.6800 INCHES ZMRP = 375.0000 IN. Z0
SCALE = .0100

PARAMETRIC DATA

ALPHA = 20.000 PHI = .000
SPDBRK = 86.600 AILRON = .000
YP = 1.000 1S = 1.000
ELEVON = .000 MACH = 6.000
S-MODE = 2.000 S-DIR = 1.000

RUN NO. 146/ 0 RN/L = 2.28 GRADIENT INTERVAL = -.60/ .60

RN/L	BETA	ALPHA	MACH	PHI	Q	BP1	BP2	BP3	PT1	PT2	PSC
2.274	-2.390	19.77000	5.97130	-1.33090	2.46320	.02705	.02814	.02264	151.29000	4.57640	.02993
2.270	-2.200	19.77500	5.97140	-1.33130	2.46240	.02710	.02815	.02286	151.25000	4.57490	.02999
2.269	-2.000	19.78000	5.97150	-1.33160	2.46200	.02716	.02818	.02300	151.25000	4.57430	.03008
2.267	-1.800	19.78400	5.97160	-1.33200	2.46230	.02718	.02830	.02310	151.28000	4.57480	.03008
2.268	-1.600	19.79000	5.97180	-1.33250	2.46290	.02720	.02833	.02310	151.32000	4.57590	.03005
2.272	-1.400	19.79400	5.97190	-1.33300	2.46360	.02723	.02833	.02310	151.38000	4.57720	.03004
2.275	-1.200	19.80300	5.97200	-1.33390	2.46250	.02723	.02837	.02319	151.33000	4.57520	.03002
2.278	-1.000	19.80500	5.97210	-1.33440	2.46270	.02732	.02842	.02327	151.35000	4.57550	.02999
2.279	-.800	19.81200	5.97220	-1.33530	2.46240	.02770	.02873	.02352	151.34000	4.57490	.03031
2.283	-.600	19.82100	5.97240	-1.33680	2.46160	.02839	.02929	.02395	151.30000	4.57340	.03096
2.280	-.400	19.82200	5.97250	-1.33740	2.46200	.02909	.02994	.02445	151.34000	4.57410	.03166
2.281	-.200	19.82900	5.97260	-1.33840	2.46140	.02966	.03059	.02492	151.32000	4.57310	.03225
2.281	.000	19.83300	5.97270	-1.33910	2.46170	.03017	.03109	.02534	151.35000	4.57360	.03278
2.277	.200	19.83900	5.97280	-1.34000	2.46220	.03048	.03141	.02574	151.39000	4.57460	.03315
2.273	.400	19.84700	5.97290	-1.34120	2.46290	.03076	.03162	.02608	151.45000	4.57580	.03344
2.274	.600	19.84600	5.97310	-1.34170	2.46340	.03088	.03169	.02626	151.49000	4.57690	.03359
2.273	.800	19.85600	5.97320	-1.34300	2.46290	.03093	.03179	.02639	151.48000	4.57590	.03369
2.277	1.000	19.85900	5.97330	-1.34400	2.46230	.03104	.03185	.02636	151.45000	4.57480	.03377
2.282	1.200	19.86200	5.97340	-1.34490	2.46120	.03106	.03177	.02631	151.39000	4.57270	.03376
2.282	1.400	19.86900	5.97350	-1.34590	2.46110	.03109	.03153	.02631	151.40000	4.57250	.03372
2.280	1.600	19.87000	5.97370	-1.34660	2.46160	.03113	.03119	.02624	151.44000	4.57340	.03373
2.280	1.800	19.87800	5.97380	-1.34760	2.46210	.03108	.03102	.02635	151.49000	4.57440	.03373
2.282	2.000	19.88300	5.97390	-1.34830	2.46160	.03099	.03090	.02636	151.46000	4.57330	.03363
2.286	2.200	19.88600	5.97400	-1.34900	2.46360	.03065	.03070	.02642	151.61000	4.57720	.03338
2.285	2.400	19.89500	5.97410	-1.35070	2.46350	.03038	.03038	.02641	151.61000	4.57690	.03320
2.284	2.571	19.89100	5.97420	-1.35090	2.46420	.03019	.03002	.02638	151.66000	4.57820	.03309
	GRADIENT	.02411	.00055	-.00427	.00143	.00207	.00203	.00196	.15357	.00275	.00221

OA257 (LARC 20-M6-6559) OV102 (S7E052) (10 JUL 81)

REFERENCE DATA

SREF = 2690.0000 SQ.FT. XMRP = 1076.6800 IN. XO
LREF = 474.8100 INCHES YMRP = .0000 IN. YO
BREF = 936.6800 INCHES ZMRP = 375.0000 IN. ZO
SCALE = .0100

PARAMETRIC DATA

ALPHA = 20.000 PHI = .000
SPDBRK = 86.600 AILRON = .000
YP = 1.000 1S = 1.000
ELEVON = .000 MACH = 6.000
S-MODE = 2.000 S-DIR = 1.000

RUN NO. 106/ 0 RN/L = 7.48 GRADIENT INTERVAL = -.60/ .60

RN/L	BETA	ALPHA	MACH	PHI	Q	BP1	BP2	BP3	PT1	PT2	PSC
7.507	-4.435	19.20300	5.98270	-1.23790	6.88910	.08343	.08417	.07401	426.50000	12.79900	.08663
7.513	-4.300	19.21600	5.98280	-1.23950	6.89100	.08351	.08415	.07402	426.64000	12.80200	.08666
7.505	-4.100	19.21300	5.98290	-1.24050	6.89260	.08405	.08458	.07446	426.77000	12.80500	.08713
7.511	-3.900	19.22000	5.98300	-1.24190	6.90600	.08517	.08588	.07515	427.62000	12.83000	.08844
7.521	-3.700	19.22400	5.98300	-1.24320	6.90490	.08685	.08813	.07613	427.57000	12.82800	.09058
7.520	-3.500	19.23000	5.98310	-1.24480	6.90220	.08797	.08959	.07700	427.43000	12.82300	.09198
7.526	-3.300	19.23500	5.98320	-1.24580	6.91090	.08871	.09035	.07765	427.99000	12.83900	.09285
7.535	-3.100	19.24100	5.98330	-1.24720	6.92220	.08933	.09106	.07825	428.72000	12.86000	.09359
7.517	-2.900	19.24200	5.98340	-1.24840	6.90300	.08959	.09121	.07852	427.55000	12.82500	.09396
7.498	-2.700	19.24400	5.98340	-1.24980	6.86820	.08952	.09109	.07857	425.42000	12.76000	.09398
7.485	-2.500	19.24600	5.98350	-1.25130	6.85420	.08885	.09046	.07823	424.57000	12.73400	.09336
7.488	-2.300	19.25600	5.98360	-1.25300	6.86800	.08718	.08879	.07725	425.45000	12.76000	.09155
7.484	-2.100	19.25800	5.98370	-1.25430	6.86650	.08497	.08605	.07588	425.38000	12.75700	.08880
7.483	-1.900	19.26700	5.98380	-1.25630	6.86990	.08356	.08418	.07504	425.62000	12.76300	.08695
7.501	-1.700	19.27100	5.98380	-1.25790	6.89360	.08308	.08347	.07494	427.11000	12.80700	.08632
7.494	-1.500	19.27600	5.98390	-1.25980	6.89100	.08332	.08350	.07530	426.97000	12.80200	.08641
7.499	-1.300	19.28100	5.98400	-1.26180	6.89130	.08394	.08398	.07592	427.01000	12.80300	.08697
7.498	-1.100	19.28900	5.98410	-1.26400	6.88750	.08459	.08463	.07660	426.80000	12.79600	.08763
7.488	-.900	19.29100	5.98420	-1.26580	6.88440	.08538	.08557	.07721	426.63000	12.79000	.08852
7.467	-.700	19.29500	5.98420	-1.26780	6.86720	.08589	.08635	.07775	425.59000	12.75800	.08915
7.478	-.500	19.29800	5.98430	-1.26940	6.87710	.08601	.08659	.07816	426.23000	12.77700	.08930
7.479	-.300	19.31000	5.98440	-1.27170	6.88080	.08578	.08644	.07830	426.48000	12.78300	.08911
7.484	-.100	19.31100	5.98450	-1.27320	6.89140	.08544	.08599	.07839	427.16000	12.80300	.08867
7.469	.100	19.31600	5.98450	-1.27530	6.88320	.08522	.08555	.07869	426.67000	12.78800	.08838
7.475	.300	19.31800	5.98460	-1.27690	6.88330	.08499	.08496	.07874	426.70000	12.78800	.08804
7.475	.500	19.33200	5.98470	-1.27960	6.89100	.08494	.08463	.07908	427.21000	12.80200	.08800
7.462	.700	19.32800	5.98480	-1.28120	6.88180	.08514	.08436	.07944	426.66000	12.78500	.08813
7.469	.900	19.33900	5.98490	-1.28370	6.88790	.08530	.08421	.07981	427.06000	12.79700	.08841
7.469	1.100	19.33900	5.98490	-1.28560	6.89260	.08551	.08416	.08017	427.37000	12.80500	.08869
7.467	1.300	19.34600	5.98500	-1.28770	6.88910	.08562	.08422	.08056	427.18000	12.79900	.08891
7.467	1.500	19.34500	5.98510	-1.28940	6.88260	.08567	.08420	.08081	426.80000	12.78700	.08899
7.475	1.700	19.35800	5.98520	-1.29190	6.89760	.08573	.08426	.08081	427.76000	12.81500	.08903
7.475	1.900	19.35700	5.98530	-1.29340	6.90210	.08593	.08440	.08096	428.06000	12.82300	.08924
7.478	2.100	19.36600	5.98530	-1.29580	6.89530	.08607	.08451	.08112	427.66000	12.81000	.08940
7.471	2.300	19.36700	5.98540	-1.29730	6.89500	.08610	.08446	.08126	427.67000	12.81000	.08941
7.465	2.500	19.37300	5.98550	-1.29900	6.89550	.08603	.08431	.08160	427.72000	12.81100	.08938
7.465	2.700	19.37600	5.98560	-1.30080	6.89510	.08573	.08396	.08156	427.72000	12.81000	.08905
7.488	2.900	19.38400	5.98570	-1.30280	6.90790	.08528	.08357	.08139	428.54000	12.83400	.08862
7.475	3.100	19.38400	5.98570	-1.30440	6.90060	.08487	.08314	.08084	428.11000	12.82000	.08803
7.459	3.300	19.39000	5.98580	-1.30650	6.88600	.08447	.08274	.08034	427.22000	12.79300	.08748
7.452	3.500	19.39200	5.98590	-1.30830	6.87180	.08400	.08226	.07984	426.37000	12.76700	.08694
7.414	3.700	19.39000	5.98620	-1.31010	6.84110	.08284	.08125	.07922	424.55000	12.71000	.08554

OA257 (LARC 20-M6-6559) OV102 (S7E052) (10 JUL 81)

REFERENCE DATA

SREF =	2690.0000 SQ.FT.	XMRP =	1076.6800 IN.	XO	
LREF =	474.8100 INCHES	YMRP =	.0000 IN.	YO	
BREF =	936.6800 INCHES	ZMRP =	375.0000 IN.	ZO	
SCALE =	.0100				

PARAMETRIC DATA

ALPHA =	20.000	PHI =	.000
SPDBRK =	86.600	AILRON =	.000
YP =	1.000	1S =	1.000
ELEVON =	.000	MACH =	6.000
S-MODE =	2.000	S-DIR =	1.000

RUN NO. 106/ 0 RN/L = 7.48 GRADIENT INTERVAL = -.60/ .60

RN/L	BETA	ALPHA	MACH	PHI	Q	BP1	BP2	BP3	PT1	PT2	PSC
7.400	3.838	19.38800	5.98630	-1.31120	6.82980	.08265	.08098	.07894	423.88000	12.68900	.08516
	GRADIENT	.02843	.00037	-.00981	.00983	-.00114	-.00210	.00088	.72428	.01786	-.00143

OA257 (LARC 20-M6-6559) OV102 (S7E052) (10 JUL 81)

REFERENCE DATA

SREF = 2690.0000 SQ.FT. XMRP = 1076.6800 IN. XO
LREF = 474.8100 INCHES YMRP = .0000 IN. YO
BREF = 936.6800 INCHES ZMRP = 375.0000 IN. ZO
SCALE = .0100

PARAMETRIC DATA

ALPHA = 20.000 PHI = .000
SPDBRK = 86.600 AILRON = .000
YP = 1.000 1S = 1.000
ELEVON = .000 MACH = 6.000
S-MODE = 2.000 S-DIR = 1.000

RUN NO. 303/ 0 RN/L = 8.68 GRADIENT INTERVAL = -.60/ .60

RN/L	BETA	ALPHA	MACH	PHI	Q	BP1	BP2	BP3	PT1	PT2	PSC
8.792	-4.331	19.13200	5.98310	-1.20580	8.43480	.10539	.10316	.10125	522.34000	15.67100	.10775
8.793	-4.200	19.13900	5.98320	-1.20750	8.43250	.10537	.10316	.10111	522.23000	15.66600	.10778
8.801	-4.000	19.13800	5.98330	-1.20950	8.42280	.10552	.10354	.10136	521.67000	15.64800	.10806
8.797	-3.800	19.14100	5.98340	-1.21160	8.42150	.10561	.10384	.10169	521.63000	15.64600	.10826
8.761	-3.600	19.14400	5.98350	-1.21380	8.41710	.10543	.10395	.10200	521.40000	15.63800	.10828
8.728	-3.400	19.14700	5.98370	-1.21590	8.39400	.10463	.10390	.10232	520.00000	15.59500	.10825
8.711	-3.200	19.15200	5.98380	-1.21810	8.38680	.10289	.10348	.10240	519.60000	15.58100	.10786
8.698	-3.000	19.15400	5.98390	-1.21990	8.37620	.10099	.10264	.10219	518.98000	15.56200	.10733
8.683	-2.800	19.15800	5.98400	-1.22190	8.35590	.09988	.10153	.10180	517.76000	15.52400	.10650
8.666	-2.600	19.16200	5.98410	-1.22360	8.35340	.09964	.10056	.10154	517.65000	15.51900	.10566
8.665	-2.400	19.16600	5.98420	-1.22550	8.34730	.09946	.09971	.10114	517.31000	15.50800	.10477
8.651	-2.200	19.17300	5.98430	-1.22730	8.35610	.09927	.09888	.10067	517.89000	15.52400	.10393
8.624	-2.000	19.17900	5.98440	-1.22920	8.33900	.09924	.09863	.10036	516.87000	15.49300	.10355
8.615	-1.800	19.18200	5.98450	-1.23110	8.32570	.09928	.09874	.10018	516.09000	15.46800	.10334
8.607	-1.600	19.18600	5.98460	-1.23350	8.31490	.09961	.09902	.10034	515.45000	15.44800	.10364
8.608	-1.400	19.19300	5.98470	-1.23610	8.31810	.09996	.09940	.10063	515.69000	15.45400	.10422
8.600	-1.200	19.19800	5.98490	-1.23870	8.31340	.10035	.09992	.10095	515.44000	15.44500	.10509
8.606	-1.000	19.20100	5.98500	-1.24110	8.31950	.10093	.10034	.10121	515.86000	15.45600	.10589
8.616	-.800	19.20800	5.98510	-1.24400	8.33330	.10130	.10012	.10107	516.75000	15.48200	.10634
8.611	-.600	19.21300	5.98520	-1.24660	8.32670	.10097	.09967	.10033	516.38000	15.47000	.10568
8.619	-.400	19.21800	5.98530	-1.24930	8.32540	.10021	.09936	.09967	516.34000	15.46700	.10452
8.613	-.200	19.22100	5.98540	-1.25150	8.32560	.09966	.09922	.09932	516.39000	15.46800	.10394
8.618	.000	19.22900	5.98550	-1.25390	8.33900	.09960	.09919	.09917	517.26000	15.49300	.10374
8.617	.200	19.23300	5.98560	-1.25630	8.33540	.10003	.09937	.09931	517.07000	15.48600	.10404
8.631	.400	19.23700	5.98570	-1.25880	8.33890	.10091	.09977	.09976	517.33000	15.49200	.10464
8.627	.600	19.24100	5.98580	-1.26140	8.33780	.10180	.09990	.10015	517.30000	15.49000	.10516
8.635	.800	19.24900	5.98590	-1.26430	8.35380	.10296	.10047	.10075	518.33000	15.52000	.10578
8.641	1.000	19.25400	5.98600	-1.26720	8.35150	.10411	.10125	.10148	518.23000	15.51600	.10676
8.640	1.200	19.25600	5.98620	-1.27010	8.34900	.10458	.10174	.10191	518.11000	15.51100	.10708
8.667	1.400	19.26600	5.98630	-1.27290	8.37860	.10467	.10236	.10237	519.99000	15.56600	.10735
8.671	1.600	19.26900	5.98640	-1.27560	8.37410	.10494	.10328	.10324	519.74000	15.55800	.10776
8.700	1.800	19.27200	5.98650	-1.27830	8.38840	.10542	.10432	.10429	520.67000	15.58400	.10827
8.705	2.000	19.27700	5.98660	-1.28070	8.39770	.10552	.10478	.10489	521.29000	15.60100	.10839
8.701	2.200	19.28700	5.98670	-1.28330	8.39880	.10547	.10512	.10496	521.40000	15.60400	.10848
8.708	2.400	19.29300	5.98680	-1.28570	8.40720	.10561	.10574	.10499	521.96000	15.61900	.10872
8.716	2.600	19.29500	5.98690	-1.28770	8.41700	.10625	.10674	.10543	522.61000	15.63700	.10943
8.716	2.800	19.30100	5.98700	-1.29000	8.41950	.10693	.10743	.10575	522.80000	15.64200	.11021
8.722	3.000	19.30800	5.98710	-1.29250	8.41330	.10738	.10760	.10598	522.46000	15.63000	.11022
8.744	3.200	19.31100	5.98730	-1.29480	8.42820	.10783	.10752	.10585	523.42000	15.65800	.11022
8.741	3.400	19.31500	5.98740	-1.29720	8.44110	.10842	.10712	.10522	524.26000	15.68200	.11028
8.750	3.600	19.32300	5.98750	-1.30000	8.44890	.10882	.10643	.10408	524.79000	15.69600	.11020
	GRADIENT	.02393	.00050	-.01218	.01252	.00076	.00029	-.00007	.96787	.02286	-.00022

OA257 (LARC 20-M6-6559) OV102 (S7E152) (10 JUL 81)

REFERENCE DATA

SREF = 2690.0000 SQ.FT. XMRP = 1076.6800 IN. XO
LREF = 474.8100 INCHES YMRP = .0000 IN. YO
BREF = 936.6800 INCHES ZMRP = 375.0000 IN. ZO
SCALE = .0100

PARAMETRIC DATA

ALPHA = 20.000 PHI = .000
SPDBRK = 86.600 AILRON = .000
YP = 1.000 1S = 1.000
ELEVON = .000 MACH = 6.000
S-MODE = 2.000 S-DIR = 1.000

RUN NO. 2146/ 0 RN/L = 2.28 GRADIENT INTERVAL = -.60/ .60

RN/L	BETA	ALPHA	MACH	PHI	Q	BP1	BP2	BP3	PT1	PT2	PSC
2.272	-2.300	19.77300	5.97130	-1.33100	2.46310	.02709	.02810	.02275	151.29000	4.57620	.02995
2.269	-2.100	19.77600	5.97150	-1.33130	2.46200	.02713	.02815	.02298	151.24000	4.57420	.03004
2.267	-1.900	19.78200	5.97160	-1.33190	2.46140	.02720	.02825	.02307	151.21000	4.57310	.03010
2.267	-1.700	19.78700	5.97170	-1.33220	2.46290	.02719	.02827	.02308	151.32000	4.57600	.03008
2.270	-1.500	19.79300	5.97180	-1.33290	2.46330	.02721	.02834	.02318	151.35000	4.57660	.03004
2.273	-1.300	19.79800	5.97190	-1.33340	2.46230	.02722	.02834	.02312	151.31000	4.57470	.03001
2.277	-1.100	19.80300	5.97210	-1.33410	2.46330	.02728	.02836	.02325	151.38000	4.57660	.03000
2.278	-.900	19.80900	5.97220	-1.33480	2.46200	.02745	.02855	.02339	151.31000	4.57420	.03011
2.282	-.700	19.81300	5.97230	-1.33580	2.46220	.02803	.02896	.02372	151.34000	4.57460	.03059
2.281	-.500	19.82200	5.97240	-1.33710	2.46210	.02876	.02963	.02421	151.34000	4.57440	.03136
2.279	-.300	19.82700	5.97250	-1.33790	2.46160	.02941	.03025	.02471	151.32000	4.57340	.03196
2.282	-.100	19.82900	5.97260	-1.33860	2.46170	.02991	.03083	.02511	151.35000	4.57370	.03253
2.279	.100	19.83900	5.97280	-1.33980	2.46180	.03037	.03125	.02557	151.36000	4.57380	.03300
2.275	.300	19.84000	5.97290	-1.34040	2.46340	.03064	.03149	.02593	151.47000	4.57670	.03330
2.272	.500	19.84900	5.97300	-1.34160	2.46290	.03084	.03167	.02620	151.45000	4.57590	.03354
2.274	.700	19.85200	5.97310	-1.34240	2.46330	.03092	.03172	.02630	151.49000	4.57650	.03364
2.275	.900	19.85200	5.97320	-1.34310	2.46400	.03100	.03182	.02643	151.54000	4.57780	.03375
2.279	1.100	19.86500	5.97340	-1.34490	2.46130	.03106	.03185	.02635	151.40000	4.57300	.03377
2.283	1.300	19.86200	5.97350	-1.34520	2.46130	.03108	.03166	.02624	151.40000	4.57280	.03374
2.280	1.500	19.87000	5.97360	-1.34630	2.46160	.03108	.03135	.02626	151.43000	4.57340	.03374
2.280	1.700	19.87600	5.97370	-1.34710	2.46140	.03109	.03107	.02627	151.43000	4.57300	.03372
2.282	1.900	19.87700	5.97380	-1.34770	2.46260	.03104	.03093	.02635	151.52000	4.57530	.03371
2.283	2.100	19.88600	5.97400	-1.34880	2.46210	.03080	.03084	.02639	151.50000	4.57430	.03352
2.286	2.300	19.89100	5.97410	-1.34970	2.46290	.03050	.03053	.02643	151.57000	4.57590	.03326
2.283	2.500	19.89400	5.97420	-1.35090	2.46360	.03030	.03022	.02643	151.62000	4.57720	.03314
	GRADIENT	.02629	.00063	-.00446	.00136	.00208	.00205	.00201	.14429	.00250	.00220

OA257 (LARC 20-M6-6559) OV102 (S7E152) (10 JUL 81)

REFERENCE DATA

SREF = 2690.0000 SQ.FT. XMRP = 1076.6800 IN. XO
LREF = 474.8100 INCHES YMRP = .0000 IN. YO
BREF = 936.6800 INCHES ZMRP = 375.0000 IN. ZO
SCALE = .0100

PARAMETRIC DATA

ALPHA = 20.000 PHI = .000
SPDBRK = 86.600 AILRON = .000
YP = 1.000 1S = 1.000
ELEVON = .000 MACH = 6.000
S-MODE = 2.000 S-DIR = 1.000

RUN NO. 2106/ 0 RN/L = 7.48 GRADIENT INTERVAL = -.60/ .60

RN/L	BETA	ALPHA	MACH	PHI	Q	BP1	BP2	BP3	PT1	PT2	PSC
7.509	-4.400	19.20700	5.98280	-1.23840	6.88800	.08343	.08408	.07403	426.44000	12.79700	.08657
7.507	-4.200	19.21400	5.98280	-1.24000	6.88920	.08373	.08434	.07418	426.54000	12.79900	.08687
7.505	-4.000	19.21500	5.98290	-1.24110	6.89780	.08450	.08505	.07475	427.10000	12.81500	.08760
7.513	-3.800	19.22100	5.98300	-1.24260	6.90470	.08607	.08706	.07561	427.55000	12.82800	.08963
7.527	-3.600	19.22700	5.98310	-1.24390	6.90750	.08756	.08900	.07660	427.74000	12.83300	.09144
7.521	-3.400	19.23200	5.98320	-1.24540	6.90480	.08835	.09000	.07743	427.60000	12.82800	.09245
7.532	-3.200	19.23700	5.98320	-1.24640	6.91820	.08903	.09073	.07794	428.46000	12.85300	.09321
7.529	-3.000	19.24200	5.98330	-1.24770	6.91700	.08951	.09119	.07847	428.40000	12.85100	.09385
7.507	-2.800	19.24300	5.98340	-1.24920	6.88700	.08963	.09123	.07857	426.57000	12.79500	.09403
7.487	-2.600	19.24500	5.98350	-1.25060	6.85520	.08924	.09085	.07847	424.62000	12.73600	.09378
7.490	-2.400	19.25100	5.98360	-1.25200	6.86470	.08818	.08984	.07779	425.23000	12.75400	.09267
7.483	-2.200	19.25600	5.98360	-1.25360	6.86500	.08608	.08746	.07656	425.28000	12.75400	.09020
7.484	-2.000	19.26400	5.98370	-1.25530	6.86770	.08411	.08492	.07533	425.47000	12.75900	.08764
7.490	-1.800	19.26800	5.98380	-1.25710	6.88020	.08319	.08371	.07495	426.27000	12.78200	.08648
7.503	-1.600	19.27600	5.98390	-1,25890	6.89880	.08314	.08346	.07510	427.44000	12.81700	.08625
7.497	-1.400	19.27900	5.98400	-1.26080	6.89100	.08362	.08372	.07562	426.98000	12.80200	.08669
7.496	-1.200	19.28500	5.98400	-1.26290	6.88540	.08430	.08430	.07626	426.66000	12.79200	.08728
7.491	-1.000	19.28800	5.98410	-1.26480	6.88430	.08495	.08506	.07690	426.61000	12.79000	.08804
7.477	-.800	19.29500	5.98420	-1.26690	6.87520	.08567	.08604	.07752	426.07000	12.77300	.08893
7.467	-.600	19.29700	5.98430	-1.26870	6.86560	.08602	.08655	.07799	425.50000	12.75500	.08930
7.476	-.400	19.30400	5.98430	-1.27060	6.87740	.08594	.08657	.07820	426.25000	12.77700	.08923
7.485	-.200	19.30900	5.98440	-1.27230	6.88810	.08562	.08624	.07834	426.95000	12.79700	.08892
7.479	.000	19.31500	5.98450	-1.27430	6.88930	.08530	.08576	.07852	427.04000	12.79900	.08851
7.466	.200	19.31600	5.98460	-1.27610	6.87900	.08511	.08525	.07876	426.43000	12.78000	.08821
7.480	.400	19.32800	5.98470	-1.27830	6.89000	.08492	.08479	.07884	427.13000	12.80100	.08795
7.466	.600	19.32800	5.98470	-1.28030	6.88500	.08503	.08451	.07926	426.85000	12.79100	.08806
7.468	.800	19.33700	5.98480	-1.28250	6.88660	.08522	.08427	.07958	426.97000	12.79400	.08824
7.466	1.000	19.33600	5.98490	-1.28440	6.88860	.08537	.08416	.07999	427.11000	12.79800	.08858
7.473	1.200	19.34800	5.98500	-1.28690	6.89670	.08556	.08418	.08037	427.64000	12.81300	.08879
7.464	1.400	19.34300	5.98510	-1.28840	6.88310	.08564	.08425	.08065	426.82000	12.78800	.08897
7.473	1.600	19.35300	5.98510	-1.29070	6.88960	.08568	.08422	.08076	427.25000	12.80000	.08898
7.482	1.800	19.35700	5.98520	-1.29260	6.90850	.08582	.08433	.08091	428.45000	12.83500	.08913
7.471	2.000	19.36400	5.98530	-1.29460	6.89400	.08601	.08446	.08104	427.57000	12.80800	.08932
7.479	2.200	19.36500	5.98540	-1.29630	6.89710	.08612	.08451	.08117	427.78000	12.81400	.08944
7.469	2.400	19.37400	5.98550	-1.29840	6.89590	.08610	.08442	.08151	427.74000	12.81200	.08942
7.466	2.600	19.37200	5.98550	-1.29970	6.89790	.08590	.08413	.08157	427.88000	12.81500	.08925
7.475	2.800	19.38300	5.98560	-1.30190	6.89580	.08553	.08379	.08152	427.78000	12.81100	.08886
7.490	3.000	19.38400	5.98570	-1.30350	6.91440	.08509	.08336	.08110	428.95000	12.84600	.08829
7.468	3.200	19.39100	5.98580	-1.30560	6.89350	.08466	.08294	.08059	427.68000	12.80700	.08774
7.456	3.400	19.38800	5.98590	-1.30710	6.87940	.08424	.08251	.08005	426.83000	12.78100	.08723
7.445	3.600	19.39600	5.98600	-1.30950	6.86540	.08369	.08201	.07971	425.98000	12.75500	.08664
7.403	3.800	19.40000	5.98630	-1.31160	6.83300	.08277	.08115	.07907	424.07000	12.69500	.08537
	GRADIENT	.02643	.00039	-.00964	.01327	-.00098	-.00191	.00098	.94464	.02482	-.00125

OA257 (LARC 20-M6-6559) OV102 (S7E152) (10 JUL 81)

REFERENCE DATA

SREF = 2690.0000 SQ.FT. XMRP = 1076.6800 IN. XO
LREF = 474.8100 INCHES YMRP = .0000 IN. YO
BREF = 936.6800 INCHES ZMRP = 375.0000 IN. ZO
SCALE = .0100

PARAMETRIC DATA

ALPHA = 20.000 PHI = .000
SPDBRK = 86.600 AILRON = .000
YP = 1.000 1S = 1.000
ELEVON = .000 MACH = 6.000
S-MODE = 2.000 S-DIR = 1.000

RUN NO. 2303/ 0 RN/L = 8.68 GRADIENT INTERVAL = -.60/ .60

RN/L	BETA	ALPHA	MACH	PHI	Q	BP1	BP2	BP3	PT1	PT2	PSC
8.792	-4.300	19.13600	5.98320	-1.20630	8.43470	.10534	.10313	.10120	522.35000	15.67000	.10771
8.794	-4.100	19.14100	5.98330	-1.20860	8.42810	.10543	.10328	.10122	521.98000	15.65800	.10789
8.808	-3.900	19.13900	5.98340	-1.21050	8.42260	.10560	.10370	.10152	521.68000	15.64800	.10814
8.776	-3.700	19.14200	5.98350	-1.21260	8.42090	.10559	.10389	.10181	521.61000	15.64500	.10831
8.743	-3.500	19.14600	5.98360	-1.21490	8.40400	.10519	.10395	.10221	520.60000	15.61300	.10834
8.720	-3.300	19.15000	5.98370	-1.21710	8.38960	.10380	.10370	.10239	519.75000	15.58700	.10806
8.700	-3.100	19.15200	5.98380	-1.21900	8.38140	.10188	.10312	.10233	519.28000	15.57100	.10762
8.696	-2.900	19.15700	5.98390	-1.22090	8.36580	.10034	.10212	.10195	518.36000	15.54200	.10698
8.674	-2.700	19.16100	5.98400	-1.22290	8.35500	.09970	.10103	.10165	517.73000	15.52200	.10608
8.665	-2.500	19.16300	5.98410	-1.22450	8.35060	.09958	.10012	.10134	517.49000	15.51400	.10523
8.659	-2.300	19.16900	5.98430	-1.22630	8.35210	.09933	.09924	.10090	517.63000	15.51700	.10431
8.632	-2.100	19.17500	5.98440	-1.22840	8.34390	.09929	.09870	.10054	517.15000	15.50200	.10365
8.615	-1.900	19.18100	5.98450	-1.23020	8.33080	.09921	.09866	.10026	516.38000	15.47700	.10337
8.618	-1.700	19.18300	5.98460	-1.23220	8.32560	.09941	.09885	.10024	516.10000	15.46800	.10337
8.606	-1.500	19.19000	5.98470	-1.23490	8.31400	.09976	.09916	.10048	515.42000	15.44600	.10389
8.597	-1.300	19.19500	5.98480	-1.23740	8.31030	.10017	.09967	.10083	515.23000	15.43900	.10462
8.601	-1.100	19.19600	5.98490	-1.23970	8.31580	.10063	.10020	.10115	515.61000	15.44900	.10558
8.612	-.900	19.20400	5.98500	-1.24260	8.32550	.10119	.10033	.10122	516.25000	15.46800	.10624
8.618	-.700	19.21100	5.98510	-1.24540	8.33650	.10121	.09988	.10069	516.97000	15.48800	.10615
8.604	-.500	19.21400	5.98520	-1.24790	8.31350	.10066	.09948	.09999	515.58000	15.44500	.10513
8.618	-.300	19.22000	5.98530	-1.25030	8.32940	.09989	.09930	.09949	516.60000	15.47500	.10424
8.619	-.100	19.22600	5.98540	-1.25280	8.33410	.09956	.09920	.09924	516.94000	15.48300	.10375
8.611	.100	19.23100	5.98560	-1.25500	8.33580	.09977	.09924	.09917	517.08000	15.48600	.10381
8.628	.300	19.23400	5.98570	-1.25740	8.33630	.10049	.09957	.09954	517.15000	15.48700	.10438
8.623	.500	19.23800	5.98580	-1.26020	8.33290	.10131	.09984	.09993	516.97000	15.48100	.10486
8.637	.700	19.24600	5.98590	-1.26280	8.35250	.10236	.10016	.10044	518.23000	15.51800	.10536
8.636	.900	19.25100	5.98600	-1.26580	8.35190	.10363	.10089	.10116	518.23000	15.51600	.10635
8.645	1.100	19.25500	5.98610	-1.26860	8.35350	.10442	.10154	.10171	518.37000	15.51900	.10692
8.657	1.300	19.26300	5.98620	-1.27150	8.36670	.10458	.10199	.10208	519.23000	15.54400	.10719
8.659	1.500	19.26600	5.98630	-1.27420	8.36990	.10483	.10285	.10278	519.47000	15.55000	.10757
8.696	1.700	19.27000	5.98640	-1.27700	8.38520	.10522	.10381	.10381	520.46000	15.57800	.10794
8.694	1.900	19.27400	5.98650	-1.27940	8.38420	.10555	.10464	.10469	520.43000	15.57600	.10838
8.708	2.100	19.28300	5.98660	-1.28210	8.40250	.10549	.10494	.10496	521.61000	15.61000	.10840
8.710	2.300	19.29000	5.98680	-1.28440	8.40860	.10547	.10538	.10496	522.03000	15.62200	.10850
8.717	2.500	19.29300	5.98690	-1.28670	8.41630	.10588	.10623	.10517	522.55000	15.63600	.10901
8.716	2.700	19.30100	5.98700	-1.28900	8.41700	.10661	.10718	.10560	522.63000	15.63700	.10989
8.710	2.900	19.30600	5.98710	-1.29130	8.41550	.10720	.10759	.10587	522.58000	15.63500	.11024
8.736	3.100	19.30900	5.98720	-1.29370	8.41650	.10760	.10759	.10602	522.68000	15.63600	.11018
8.746	3.300	19.31200	5.98730	-1.29570	8.43920	.10810	.10736	.10562	524.13000	15.67900	.11019
8.745	3.500	19.32000	5.98740	-1.29870	8.44440	.10866	.10680	.10460	524.49000	15.68800	.11026
8.751	3.604	19.32300	5.98750	-1.30010	8.44920	.10883	.10642	.10406	524.81000	15.69700	.11020
	GRADIENT	.02386	.00063	-.01214	.01706	.00075	.00038	-.00003	1.24857	.03129	-.00012

OA257 (LARC 20-M6-6559) OV102 (S7E053) (10 JUL 81)

REFERENCE DATA

SREF = 2690.0000 SQ.FT. XMRP = 1076.6800 IN. XO
LREF = 474.8100 INCHES YMRP = .0000 IN. YO
BREF = 936.6800 INCHES ZMRP = 375.0000 IN. ZO
SCALE = .0100

PARAMETRIC DATA

ALPHA = 20.000 PHI = .000
SPDBRK = 86.600 AILRON = .000
YP = 1.000 1S = 1.000
ELEVON = .000 MACH = 6.000
S-MODE = 2.000 S-DIR = 1.000

RUN NO. 177/ O RN/L = 4.45 GRADIENT INTERVAL = -.60/ .60

RN/L	BETA	ALPHA	MACH	PHI	Q	BP1	BP2	BP3	PT1	PT2	PSC
4.491	-3.288	19.58900	5.95640	-1.30090	4.08580	.03964	.04075	.03645	248.37000	7.59140	.04170
4.498	-3.100	19.59700	5.95650	-1.30170	4.09140	.03956	.04078	.03642	248.73000	7.60190	.04174
4.492	-2.900	19.60200	5.95650	-1.30240	4.09270	.03961	.04076	.03647	248.82000	7.60420	.04178
4.486	-2.700	19.60500	5.95660	-1.30300	4.08960	.03976	.04087	.03643	248.64000	7.59850	.04190
4.485	-2.500	19.60700	5.95670	-1.30350	4.08890	.03998	.04098	.03652	248.61000	7.59720	.04207
4.484	-2.300	19.61800	5.95670	-1.30470	4.08710	.04029	.04125	.03671	248.51000	7.59380	.04233
4.483	-2.100	19.61800	5.95680	-1.30510	4.08930	.04080	.04150	.03707	248.66000	7.59800	.04263
4.480	-1.900	19.62700	5.95690	-1.30610	4.08990	.04120	.04173	.03741	248.71000	7.59910	.04289
4.483	-1.700	19.62900	5.95690	-1.30680	4.09030	.04155	.04198	.03770	248.74000	7.59990	.04318
4.477	-1.500	19.63200	5.95700	-1.30770	4.09080	.04183	.04212	.03793	248.78000	7.60070	.04330
4.470	-1.300	19.64000	5.95710	-1.30900	4.09020	.04203	.04225	.03832	248.76000	7.59960	.04352
4.470	-1.100	19.64200	5.95710	-1.30990	4.08870	.04222	.04225	.03849	248.68000	7.59680	.04360
4.468	-.900	19.65500	5.95720	-1.31150	4.08630	.04242	.04232	.03867	248.54000	7.59240	.04373
4.476	-.700	19.65400	5.95730	-1.31230	4.08930	.04265	.04245	.03885	248.74000	7.59790	.04391
4.463	-.500	19.66100	5.95730	-1.31360	4.08620	.04293	.04273	.03909	248.56000	7.59230	.04414
4.454	-.300	19.66600	5.95740	-1.31490	4.08720	.04325	.04312	.03951	248.64000	7.59410	.04452
4.452	-.100	19.66900	5.95750	-1.31600	4.08940	.04366	.04350	.03986	248.78000	7.59810	.04492
4.447	.100	19.67900	5.95750	-1.31760	4.08710	.04399	.04387	.04027	248.65000	7.59390	.04525
4.446	.300	19.68000	5.95760	-1.31880	4.08840	.04429	.04411	.04057	248.74000	7.59640	.04559
4.441	.500	19.68900	5.95770	-1.32030	4.08580	.04453	.04435	.04069	248.60000	7.59150	.04583
4.438	.700	19.69000	5.95770	-1.32140	4.08590	.04469	.04446	.04085	248.61000	7.59160	.04605
4.437	.900	19.69500	5.95780	-1.32280	4.08540	.04478	.04450	.04080	248.60000	7.59080	.04616
4.426	1.100	19.70200	5.95790	-1.32420	4.08190	.04478	.04457	.04076	248.39000	7.58420	.04624
4.424	1.300	19.70200	5.95790	-1.32520	4.08370	.04483	.04460	.04066	248.51000	7.58750	.04632
4.422	1.500	19.71100	5.95800	-1.32710	4.08380	.04486	.04476	.04074	248.53000	7.58780	.04640
4.417	1.700	19.71300	5.95810	-1.32810	4.08300	.04503	.04492	.04089	248.50000	7.58630	.04659
4.409	1.900	19.71900	5.95810	-1.32950	4.08120	.04534	.04527	.04110	248.40000	7.58300	.04693
4.403	2.100	19.72400	5.95820	-1.33080	4.07920	.04571	.04570	.04131	248.29000	7.57920	.04737
4.398	2.300	19.72900	5.95830	-1.33190	4.07740	.04610	.04605	.04157	248.19000	7.57580	.04774
4.392	2.500	19.73500	5.95840	-1.33340	4.07560	.04636	.04635	.04189	248.09000	7.57260	.04811
4.392	2.700	19.73600	5.95840	-1.33410	4.07610	.04667	.04647	.04225	248.14000	7.57350	.04838
4.391	2.900	19.74400	5.95850	-1.33560	4.07510	.04681	.04654	.04266	248.09000	7.57160	.04863
	GRADIENT	.02743	.00037	-.00669	-.00010	.00163	.00163	.00165	.05286	-.00019	.00171

OA257 (LARC 20-M6-6559) OV102 (S7E153) (10 JUL 81)

REFERENCE DATA

SREF = 2690.0000 SQ.FT. XMRP = 1076.6800 IN. XO
LREF = 474.8100 INCHES YMRP = .0000 IN. YO
BREF = 936.6800 INCHES ZMRP = 375.0000 IN. ZO
SCALE = .0100

PARAMETRIC DATA

ALPHA = 20.000 PHI = .000
SPDBRK = 86.600 AILRON = .000
YP = 1.000 1S = 1.000
ELEVON = .000 MACH = 6.000
S-MODE = 2.000 S-DIR = 1.000

RUN NO. 2177/ O RN/L = 4.45 GRADIENT INTERVAL = -.60/ .60

RN/L	BETA	ALPHA	MACH	PHI	Q	BP1	BP2	BP3	PT1	PT2	PSC
4.496	-3.200	19.60000	5.95640	-1.30170	4.08900	.03954	.04074	.03642	248.57000	7.59730	.04171
4.497	-3.000	19.59800	5.95650	-1.30190	4.09350	.03960	.04075	.03646	248.86000	7.60580	.04176
4.488	-2.800	19.60600	5.95660	-1.30290	4.09080	.03968	.04079	.03648	248.71000	7.60070	.04183
4.484	-2.600	19.60600	5.95660	-1.30320	4.08920	.03989	.04090	.03645	248.63000	7.59790	.04197
4.485	-2.400	19.61400	5.95670	-1.30430	4.08670	.04011	.04110	.03662	248.49000	7.59320	.04219
4.485	-2.200	19.61900	5.95680	-1.30500	4.08860	.04051	.04135	.03689	248.61000	7.59660	.04245
4.480	-2.000	19.62100	5.95680	-1.30560	4.08980	.04102	.04162	.03727	248.69000	7.59890	.04276
4.481	-1.800	19.63200	5.95690	-1.30670	4.08950	.04137	.04188	.03756	248.69000	7.59840	.04303
4.482	-1.600	19.62700	5.95700	-1.30710	4.09110	.04171	.04204	.03785	248.80000	7.60140	.04326
4.472	-1.400	19.63900	5.95700	-1.30860	4.09010	.04193	.04220	.03810	248.75000	7.59940	.04340
4.471	-1.200	19.64000	5.95710	-1.30940	4.08990	.04214	.04227	.03843	248.75000	7.59920	.04356
4.467	-1.000	19.64600	5.95720	-1.31050	4.08720	.04233	.04231	.03852	248.59000	7.59400	.04365
4.475	-.800	19.65400	5.95720	-1.31200	4.08820	.04251	.04239	.03880	248.67000	7.59600	.04383
4.469	-.600	19.65600	5.95730	-1.31280	4.08750	.04279	.04255	.03897	248.63000	7.59450	.04401
4.458	-.400	19.66600	5.95740	-1.31450	4.08640	.04306	.04291	.03928	248.58000	7.59250	.04434
4.453	-.200	19.66500	5.95740	-1.31530	4.08920	.04346	.04332	.03971	248.76000	7.59780	.04472
4.448	.000	19.67500	5.95750	-1.31680	4.08740	.04384	.04371	.04005	248.66000	7.59450	.04508
4.449	.200	19.68100	5.95760	-1.31820	4.08890	.04415	.04401	.04045	248.77000	7.59720	.04542
4.441	.400	19.68300	5.95760	-1.31940	4.08630	.04441	.04421	.04062	248.62000	7.59240	.04571
4.442	.600	19.69000	5.95770	-1.32090	4.08660	.04461	.04437	.04081	248.65000	7.59290	.04594
4.437	.800	19.69200	5.95780	-1.32220	4.08600	.04478	.04448	.04087	248.62000	7.59180	.04612
4.433	1.000	19.70000	5.95780	-1.32350	4.08340	.04479	.04454	.04077	248.48000	7.58700	.04621
4.424	1.200	19.70100	5.95790	-1.32470	4.08280	.04480	.04459	.04072	248.45000	7.58590	.04630
4.424	1.400	19.70800	5.95800	-1.32600	4.08390	.04484	.04466	.04070	248.53000	7.58790	.04632
4.418	1.600	19.71300	5.95800	-1.32760	4.08220	.04492	.04481	.04078	248.44000	7.58470	.04645
4.414	1.800	19.71400	5.95810	-1.32870	4.08300	.04518	.04506	.04095	248.50000	7.58620	.04673
4.404	2.000	19.72400	5.95820	-1.33040	4.07950	.04551	.04546	.04124	248.30000	7.57970	.04712
4.402	2.200	19.72600	5.95820	-1.33130	4.07950	.04589	.04585	.04139	248.31000	7.57980	.04759
4.395	2.400	19.73500	5.95830	-1.33280	4.07590	.04622	.04621	.04171	248.10000	7.57310	.04793
4.392	2.600	19.73400	5.95840	-1.33370	4.07620	.04651	.04642	.04205	248.14000	7.57370	.04825
4.391	2.800	19.74100	5.95840	-1.33490	4.07530	.04674	.04655	.04247	248.09000	7.57200	.04853
4.390	2.942	19.74500	5.95870	-1.33590	4.07530	.04688	.04634	.04308	248.13000	7.57190	.04882
	GRADIENT	.02714	.00032	-.00661	-.00057	.00158	.00156	.00160	.02679	-.00100	.00165

OA257 (LARC 20-M6-6559) OV102 (S7E054) (10 JUL 81)

REFERENCE DATA

SREF = 2690.0000 SQ.FT. XMRP = 1076.6800 IN. XO
LREF = 474.8100 INCHES YMRP = .0000 IN. YO
BREF = 936.6800 INCHES ZMRP = 375.0000 IN. ZO
SCALE = .0100

PARAMETRIC DATA

ALPHA = 20.000 PHI = .000
SPDBRK = 86.600 AILRON = .000
YP = 1.000 1S = 1.000
ELEVON = .000 MACH = 6.000
S-MODE = 2.000 S-DIR = 2.000

RUN NO. 1177/ 0 RN/L = 4.34 GRADIENT INTERVAL = -.60/ .60

RN/L	BETA	ALPHA	MACH	PHI	Q	BP1	BP2	BP3	PT1	PT2	PSC
4.302	-3.336	19.58800	5.96100	-1.30140	4.00980	.03982	.04087	.03645	244.54000	7.45020	.04184
4.301	-3.200	19.58300	5.96090	-1.30120	4.01370	.04012	.04102	.03668	244.77000	7.45750	.04212
4.297	-3.000	19.59200	5.96090	-1.30240	4.01230	.04041	.04119	.03688	244.66000	7.45470	.04231
4.297	-2.800	19.59300	5.96080	-1.30260	4.01540	.04080	.04137	.03717	244.85000	7.46060	.04254
4.300	-2.600	19.59900	5.96070	-1.30340	4.01730	.04115	.04160	.03755	244.95000	7.46410	.04279
4.304	-2.400	19.60500	5.96070	-1.30430	4.01790	.04152	.04174	.03783	244.98000	7.46530	.04297
4.303	-2.200	19.60800	5.96060	-1.30490	4.01450	.04188	.04199	.03827	244.75000	7.45880	.04326
4.307	-2.000	19.61700	5.96050	-1.30580	4.01420	.04208	.04214	.03853	244.73000	7.45840	.04342
4.310	-1.800	19.61800	5.96050	-1.30650	4.01610	.04231	.04229	.03881	244.83000	7.46190	.04360
4.313	-1.600	19.62600	5.96040	-1.30760	4.01760	.04257	.04248	.03919	244.91000	7.46460	.04385
4.318	-1.400	19.62700	5.96030	-1.30830	4.02130	.04287	.04271	.03950	245.12000	7.47150	.04411
4.314	-1.200	19.63500	5.96030	-1.30950	4.02380	.04315	.04295	.03972	245.27000	7.47620	.04436
4.321	-1.000	19.64000	5.96020	-1.31070	4.02350	.04346	.04330	.03998	245.24000	7.47560	.04469
4.320	-.800	19.64300	5.96010	-1.31170	4.02250	.04382	.04369	.04040	245.17000	7.47380	.04511
4.320	-.600	19.65300	5.96010	-1.31310	4.02200	.04421	.04412	.04071	245.12000	7.47290	.04550
4.323	-.400	19.65300	5.96000	-1.31400	4.02340	.04454	.04438	.04093	245.20000	7.47550	.04586
4.329	-.200	19.66200	5.95990	-1.31550	4.02440	.04474	.04455	.04113	245.24000	7.47730	.04608
4.334	.000	19.66400	5.95990	-1.31670	4.02910	.04488	.04463	.04112	245.52000	7.48600	.04627
4.340	.200	19.67000	5.95980	-1.31800	4.03420	.04496	.04475	.04116	245.81000	7.49550	.04640
4.344	.400	19.67400	5.95970	-1.31920	4.04090	.04508	.04481	.04106	246.21000	7.50800	.04657
4.343	.600	19.68400	5.95970	-1.32080	4.04520	.04514	.04498	.04112	246.46000	7.51590	.04671
4.352	.800	19.69000	5.95960	-1.32220	4.05170	.04532	.04514	.04117	246.85000	7.52800	.04688
4.364	1.000	19.69100	5.95950	-1.32320	4.05710	.04548	.04536	.04130	247.16000	7.53800	.04712
4.370	1.200	19.70200	5.95950	-1.32480	4.05990	.04574	.04568	.04149	247.32000	7.54330	.04741
4.383	1.400	19.70000	5.95940	-1.32580	4.06660	.04609	.04603	.04181	247.72000	7.55580	.04781
4.383	1.600	19.71000	5.95930	-1.32760	4.06620	.04647	.04641	.04220	247.69000	7.55510	.04825
4.383	1.800	19.71500	5.95920	-1.32890	4.06580	.04681	.04665	.04253	247.65000	7.55420	.04856
4.385	2.000	19.71900	5.95920	-1.33000	4.07040	.04699	.04682	.04282	247.92000	7.56280	.04883
4.382	2.200	19.72400	5.95910	-1.33130	4.07050	.04710	.04678	.04307	247.91000	7.56310	.04894
4.379	2.400	19.72800	5.95900	-1.33240	4.07490	.04716	.04664	.04326	248.16000	7.57110	.04907
4.377	2.600	19.73700	5.95900	-1.33380	4.07440	.04708	.04648	.04328	248.12000	7.57030	.04901
4.381	2.800	19.73300	5.95890	-1.33440	4.07460	.04694	.04629	.04321	248.12000	7.57070	.04892
4.392	2.942	19.73900	5.95870	-1.33550	4.07560	.04686	.04623	.04316	248.15000	7.57240	.04884
	GRADIENT	.02554	-.00034	-.00643	.02043	.00073	.00065	.00027	1.18036	.03789	.00096

OA257 (LARC 20-M6-6559) OV102 (S7E154) (10 JUL 81)

REFERENCE DATA

SREF = 2690.0000 SQ.FT. XMRP = 1076.6800 IN. XO
LREF = 474.8100 INCHES YMRP = .0000 IN. YO
BREF = 936.6800 INCHES ZMRP = 375.0000 IN. ZO
SCALE = .0100

PARAMETRIC DATA

ALPHA = 20.000 PHI = .000
SPDBRK = 86.600 AILRON = .000
YP = 1.000 1S = 1.000
ELEVON = .000 MACH = 6.000
S-MODE = 2.000 S-DIR = 2.000

RUN NO. 3177/ 0 RN/L = 4.34 GRADIENT INTERVAL = -.60/ .60

RN/L	BETA	ALPHA	MACH	PHI	Q	BP1	BP2	BP3	PT1	PT2	PSC
4.301	-3.300	19.58200	5.96100	-1.30110	4.01280	.03993	.04090	.03654	244.72000	7.45580	.04197
4.296	-3.100	19.58500	5.96090	-1.30160	4.01170	.04025	.04108	.03679	244.63000	7.45360	.04222
4.297	-2.900	19.59300	5.96080	-1.30250	4.01430	.04060	.04130	.03704	244.78000	7.45860	.04240
4.298	-2.700	19.59600	5.96080	-1.30300	4.01660	.04096	.04149	.03735	244.91000	7.46280	.04268
4.303	-2.500	19.60400	5.96070	-1.30390	4.01800	.04134	.04168	.03771	244.98000	7.46530	.04288
4.304	-2.300	19.60500	5.96060	-1.30450	4.01660	.04173	.04185	.03808	244.89000	7.46270	.04313
4.303	-2.100	19.61500	5.96060	-1.30550	4.01360	.04196	.04208	.03840	244.70000	7.45720	.04334
4.310	-1.900	19.61400	5.96050	-1.30600	4.01500	.04219	.04221	.03865	244.77000	7.45980	.04348
4.311	-1.700	19.62200	5.96040	-1.30700	4.01670	.04244	.04237	.03901	244.86000	7.46300	.04370
4.316	-1.500	19.62900	5.96040	-1.30800	4.01920	.04274	.04259	.03932	245.00000	7.46770	.04398
4.315	-1.300	19.62900	5.96030	-1.30880	4.02270	.04300	.04282	.03957	245.20000	7.47410	.04422
4.319	-1.100	19.64200	5.96020	-1.31040	4.02440	.04330	.04314	.03986	245.30000	7.47740	.04452
4.322	-.900	19.63900	5.96020	-1.31100	4.02370	.04364	.04346	.04016	245.24000	7.47590	.04488
4.319	-.700	19.64900	5.96010	-1.31250	4.02170	.04400	.04390	.04061	245.11000	7.47220	.04532
4.321	-.500	19.65100	5.96000	-1.31360	4.02220	.04439	.04425	.04083	245.13000	7.47330	.04570
4.325	-.300	19.65900	5.96000	-1.31480	4.02350	.04464	.04450	.04104	245.19000	7.47560	.04596
4.331	-.100	19.66300	5.95990	-1.31610	4.02620	.04483	.04458	.04110	245.35000	7.48080	.04617
4.338	.100	19.66500	5.95980	-1.31720	4.03300	.04492	.04470	.04113	245.75000	7.49330	.04634
4.342	.300	19.67700	5.95980	-1.31880	4.03660	.04503	.04478	.04109	245.96000	7.49990	.04649
4.343	.500	19.67500	5.95970	-1.31980	4.04320	.04512	.04486	.04109	246.35000	7.51220	.04664
4.345	.700	19.68700	5.95960	-1.32150	4.04780	.04522	.04507	.04117	246.61000	7.52070	.04682
4.359	.900	19.68800	5.95960	-1.32250	4.05510	.04538	.04524	.04125	247.05000	7.53430	.04699
4.368	1.100	19.69600	5.95950	-1.32400	4.05840	.04562	.04551	.04137	247.24000	7.54050	.04724
4.374	1.300	19.70200	5.95940	-1.32530	4.06230	.04591	.04584	.04165	247.47000	7.54780	.04763
4.388	1.500	19.70700	5.95930	-1.32690	4.06850	.04629	.04623	.04201	247.83000	7.55930	.04804
4.380	1.700	19.71400	5.95930	-1.32830	4.06440	.04662	.04655	.04234	247.57000	7.55170	.04840
4.386	1.900	19.71200	5.95920	-1.32920	4.06940	.04693	.04675	.04270	247.86000	7.56090	.04873
4.384	2.100	19.72300	5.95910	-1.33080	4.06990	.04707	.04681	.04293	247.88000	7.56180	.04888
4.380	2.300	19.72300	5.95910	-1.33170	4.07270	.04716	.04670	.04317	248.04000	7.56700	.04900
4.378	2.500	19.73300	5.95900	-1.33310	4.07540	.04715	.04658	.04332	248.19000	7.57220	.04907
4.377	2.700	19.73400	5.95890	-1.33400	4.07320	.04701	.04636	.04320	248.04000	7.56790	.04894
4.386	2.900	19.74100	5.95880	-1.33540	4.07400	.04691	.04629	.04317	248.08000	7.56950	.04888
	GRADIENT	.02514	-.00031	-.00630	.02159	.00070	.00058	.00021	1.25857	.03999	.00092

OA257 (LARC 20-M6-6559) OV102 (S7E055) (10 JUL 81)

REFERENCE DATA

SREF = 2690.0000 SQ.FT. XMRP = 1076.6800 IN. XO
LREF = 474.8100 INCHES YMRP = .0000 IN. YO
BREF = 936.6800 INCHES ZMRP = 375.0000 IN. ZO
SCALE = .0100

PARAMETRIC DATA

ALPHA = 22.500 PHI = .000
SPDBRK = 86.600 AILRON = .000
YP = 1.000 1S = 1.000
ELEVON = .000 MACH = 6.000
S-MODE = 2.000 S-DIR = 1.000

RUN NO. 145/ 0 RN/L = 2.27 GRADIENT INTERVAL = -.60/ .60

RN/L	BETA	ALPHA	MACH	PHI	Q	BP1	BP2	BP3	PT1	PT2	PSC
2.294	-2.451	22.16600	5.97100	-1.48310	2.47470	.02931	.03120	.02398	151.97000	4.59790	.03330
2.291	-2.300	22.17200	5.97100	-1.48370	2.47310	.02955	.03133	.02410	151.88000	4.59490	.03352
2.292	-2.100	22.17400	5.97110	-1.48400	2.47180	.03010	.03170	.02436	151.81000	4.59250	.03395
2.291	-1.900	22.18300	5.97120	-1.48490	2.46860	.03062	.03219	.02474	151.62000	4.58650	.03449
2.294	-1.700	22.18600	5.97130	-1.48540	2.46550	.03117	.03258	.02509	151.43000	4.58060	.03492
2.291	-1.500	22.19200	5.97140	-1.48610	2.46020	.03169	.03296	.02544	151.12000	4.57080	.03532
2.285	-1.300	22.19800	5.97150	-1.48680	2.45470	.03218	.03327	.02575	150.79000	4.56060	.03568
2.277	-1.100	22.19800	5.97150	-1.48740	2.44970	.03260	.03343	.02603	150.49000	4.55140	.03600
2.267	-.900	22.20900	5.97160	-1.48880	2.44410	.03299	.03358	.02641	150.15000	4.54090	.03628
2.264	-.700	22.21300	5.97170	-1.48950	2.43990	.03347	.03380	.02685	149.91000	4.53320	.03661
2.262	-.500	22.21500	5.97180	-1.49000	2.43710	.03376	.03375	.02734	149.74000	4.52800	.03684
2.258	-.300	22.22100	5.97190	-1.49090	2.43500	.03389	.03352	.02760	149.62000	4.52410	.03686
2.256	-.100	22.22700	5.97200	-1.49180	2.43420	.03392	.03328	.02786	149.58000	4.52260	.03680
2.255	.100	22.23800	5.97200	-1.49330	2.43190	.03389	.03330	.02820	149.45000	4.51820	.03676
2.258	.300	22.23800	5.97210	-1.49410	2.43120	.03378	.03327	.02849	149.41000	4.51690	.03666
2.255	.500	22.24300	5.97220	-1.49520	2.43070	.03350	.03327	.02865	149.39000	4.51600	.03643
2.254	.700	22.25100	5.97230	-1.49650	2.42990	.03331	.03344	.02880	149.35000	4.51460	.03631
2.257	.900	22.25500	5.97240	-1.49750	2.43090	.03328	.03368	.02903	149.42000	4.51640	.03634
2.257	1.100	22.26200	5.97250	-1.49850	2.43000	.03324	.03391	.02911	149.37000	4.51470	.03643
2.254	1.300	22.26700	5.97250	-1.49940	2.42860	.03322	.03429	.02892	149.30000	4.51220	.03649
2.257	1.500	22.27200	5.97260	-1.50040	2.42780	.03319	.03465	.02881	149.26000	4.51070	.03656
2.256	1.700	22.28000	5.97270	-1.50150	2.42590	.03300	.03468	.02850	149.15000	4.50720	.03635
2.250	1.900	22.27900	5.97280	-1.50200	2.42560	.03273	.03433	.02811	149.14000	4.50660	.03596
2.247	2.100	22.29200	5.97290	-1.50350	2.42480	.03235	.03391	.02778	149.10000	4.50500	.03554
2.251	2.300	22.29400	5.97300	-1.50420	2.42520	.03205	.03339	.02742	149.13000	4.50570	.03517
2.255	2.500	22.29500	5.97300	-1.50540	2.42560	.03190	.03290	.02710	149.16000	4.50650	.03498
	GRADIENT	.02886	.00037	-.00530	-.00653	-.00024	-.00045	.00137	-.35857	-.01229	-.00038

OA257 (LARC 20-M6-6559) OV102 (S7E055) (10 JUL 81)

REFERENCE DATA

SREF = 2690.0000 SQ.FT. XMRP = 1076.6800 IN. XO
LREF = 474.8100 INCHES YMRP = .0000 IN. YO
BREF = 936.6800 INCHES ZMRP = 375.0000 IN. ZO
SCALE = .0100

PARAMETRIC DATA

ALPHA = 22.500 PHI = .000
SPDBRK = 86.600 AILRON = .000
YP = 1.000 1S = 1.000
ELEVON = .000 MACH = 6.000
S-MODE = 2.000 S-DIR = 1.000

RUN NO. 105/ 0 RN/L = 7.47 GRADIENT INTERVAL = -.60/ .60

RN/L	BETA	ALPHA	MACH	PHI	Q	BP1	BP2	BP3	PT1	PT2	PSC
7.515	-4.452	21.53100	5.98620	-1.37450	6.92370	.09394	.09291	.08010	429.68000	12.86300	.10139
7.489	-4.300	21.54000	5.98630	-1.37660	6.89980	.09385	.09299	.08012	428.22000	12.81900	.10104
7.485	-4.100	21.53500	5.98640	-1.37790	6.89070	.09266	.09271	.07966	427.68000	12.80200	.09950
7.465	-3.900	21.53800	5.98640	-1.37980	6.87570	.09164	.09279	.07930	426.76000	12.77400	.09809
7.449	-3.700	21.53800	5.98650	-1.38160	6.85840	.09078	.09245	.07899	425.71000	12.74200	.09691
7.453	-3.500	21.54500	5.98660	-1.38340	6.85990	.09010	.09230	.07881	425.82000	12.74500	.09601
7.465	-3.300	21.54700	5.98660	-1.38510	6.86190	.08975	.09234	.07890	425.96000	12.74800	.09553
7.462	-3.100	21.55800	5.98670	-1.38690	6.86040	.08991	.09242	.07930	425.89000	12.74500	.09551
7.460	-2.900	21.55800	5.98670	-1.38840	6.86140	.09034	.09261	.08007	425.97000	12.74700	.09590
7.449	-2.700	21.56600	5.98680	-1.39040	6.84930	.09074	.09238	.08094	425.24000	12.72500	.09600
7.452	-2.500	21.56900	5.98690	-1.39180	6.84650	.09111	.09221	.08175	425.09000	12.72000	.09628
7.468	-2.300	21.58000	5.98690	-1.39390	6.85850	.09190	.09276	.08231	425.85000	12.74200	.09746
7.474	-2.100	21.58400	5.98700	-1.39540	6.87590	.09219	.09307	.08271	426.95000	12.77400	.09799
7.469	-1.900	21.59400	5.98710	-1.39750	6.87680	.09273	.09394	.08276	427.02000	12.77600	.09985
7.478	-1.700	21.59700	5.98710	-1.39920	6.88590	.09268	.09406	.08271	427.61000	12.79300	.10116
7.488	-1.500	21.61000	5.98720	-1.40170	6.88660	.09255	.09354	.08260	427.67000	12.79400	.10208
7.490	-1.300	21.61000	5.98730	-1.40360	6.88190	.09243	.09296	.08257	427.40000	12.78500	.10267
7.488	-1.100	21.62500	5.98730	-1.40660	6.87200	.09235	.09253	.08236	426.80000	12.76700	.10281
7.502	-.900	21.62800	5.98740	-1.40840	6.89360	.09247	.09265	.08227	428.16000	12.80700	.10283
7.495	-.700	21.64100	5.98750	-1.41110	6.89580	.09271	.09333	.08244	428.32000	12.81100	.10277
7.499	-.500	21.64100	5.98750	-1.41310	6.89600	.09300	.09415	.08284	428.35000	12.81200	.10282
7.503	-.300	21.65200	5.98760	-1.41570	6.89640	.09332	.09462	.08338	428.39000	12.81200	.10270
7.499	-.100	21.65100	5.98770	-1.41740	6.89520	.09351	.09474	.08390	428.34000	12.81000	.10242
7.491	.100	21.66000	5.98770	-1.42000	6.88370	.09336	.09454	.08405	427.64000	12.78900	.10184
7.492	.300	21.66300	5.98780	-1.42220	6.87720	.09287	.09401	.08391	427.26000	12.77700	.10080
7.473	.500	21.66900	5.98780	-1.42460	6.86340	.09225	.09336	.08341	426.42000	12.75100	.09952
7.464	.700	21.66800	5.98790	-1.42690	6.85670	.09173	.09236	.08286	426.02000	12.73900	.09830
7.435	.900	21.67600	5.98800	-1.42970	6.83090	.09130	.09126	.08230	424.44000	12.69100	.09717
7.432	1.100	21.67400	5.98800	-1.43160	6.82790	.09085	.09044	.08181	424.27000	12.68500	.09622
7.430	1.300	21.68500	5.98810	-1.43430	6.82630	.09085	.09025	.08161	424.19000	12.68200	.09577
7.431	1.500	21.68300	5.98820	-1.43600	6.82740	.09076	.09011	.08125	424.28000	12.68400	.09537
7.438	1.700	21.69400	5.98820	-1.43860	6.83690	.09102	.09032	.08152	424.89000	12.70200	.09535
7.438	1.900	21.69400	5.98830	-1.44050	6.83220	.09115	.09047	.08197	424.61000	12.69300	.09543
7.449	2.100	21.70500	5.98840	-1.44300	6.83580	.09131	.09047	.08259	424.86000	12.70000	.09546
7.448	2.300	21.70500	5.98840	-1.44450	6.84120	.09139	.09038	.08316	425.22000	12.71000	.09546
7.467	2.500	21.71800	5.98850	-1.44730	6.85200	.09138	.09010	.08342	425.91000	12.73000	.09527
7.471	2.700	21.71800	5.98860	-1.44890	6.86070	.09117	.08958	.08355	426.46000	12.74600	.09496
7.463	2.900	21.72900	5.98860	-1.45170	6.84970	.09052	.08880	.08320	425.80000	12.72600	.09426
7.483	3.100	21.72900	5.98870	-1.45350	6.86090	.08965	.08771	.08266	426.52000	12.74600	.09353
7.476	3.300	21.74200	5.98880	-1.45610	6.86790	.08873	.08651	.08213	426.97000	12.75900	.09281
7.478	3.500	21.73900	5.98880	-1.45810	6.86750	.08760	.08482	.08166	426.97000	12.75900	.09186
7.472	3.700	21.75200	5.98890	-1.46090	6.86120	.08654	.08330	.08111	426.59000	12.74700	.09082

OA257 (LARC 20-M6-6559) OV102 (S7E055) (10 JUL 81)

REFERENCE DATA

SREF =	2690.0000 SQ.FT.	XMRP =	1076.6800 IN. XO		
LREF =	474.8100 INCHES	YMRP =	.0000 IN. YO		
BREF =	936.6800 INCHES	ZMRP =	375.0000 IN. ZO		
SCALE =	.0100				

PARAMETRIC DATA

ALPHA =	22.500	PHI =	.000
SPDBRK =	86.600	AILRON =	.000
YP =	1.000	1S =	1.000
ELEVON =	.000	MACH =	6.000
S-MODE =	2.000	S-DIR =	1.000

RUN NO. 105/ O RN/L = 7.47 GRADIENT INTERVAL = -.60/ .60

RN/L	BETA	ALPHA	MACH	PHI	Q	BP1	BP2	BP3	PT1	PT2	PSC
7.475	3.900	21.74600	5.98900	-1.46260	6.86700	.08584	.08230	.08054	426.97000	12.75800	.08998
	GRADIENT	.02600	.00030	-.01137	-.03316	-.00075	-.00085	.00066	-1.96286	-.06157	-.00326

OA257 (LARC 20-M6-6559) DV102 (S7E155) (10 JUL 81)

REFERENCE DATA

SREF = 2690.0000 SQ.FT. XMRP = 1076.6800 IN. XO
LREF = 474.8100 INCHES YMRP = .0000 IN. YO
BREF = 936.6800 INCHES ZMRP = 375.0000 IN. ZO
SCALE = .0100

PARAMETRIC DATA

ALPHA = 22.500 PHI = .000
SPDBRK = 86.600 AILRON = .000
YP = 1.000 1S = 1.000
ELEVON = .000 MACH = 6.000
S-MODE = 2.000 S-DIR = 1.000

RUN NO. 2145/ 0 RN/L = 2.27 GRADIENT INTERVAL = -.60/ .60

RN/L	BETA	ALPHA	MACH	PHI	Q	BP1	BP2	BP3	PT1	PT2	PSC
2.292	-2.400	22.16700	5.97100	-1.48320	2.47410	.02938	.03122	.02402	151.93000	4.59670	.03337
2.291	-2.200	22.17500	5.97110	-1.48400	2.47260	.02977	.03148	.02426	151.85000	4.59400	.03375
2.292	-2.000	22.17700	5.97120	-1.48420	2.47050	.03035	.03194	.02454	151.73000	4.58990	.03420
2.293	-1.800	22.18300	5.97130	-1.48500	2.46790	.03091	.03239	.02493	151.58000	4.58510	.03472
2.293	-1.600	22.19100	5.97130	-1.48580	2.46210	.03145	.03277	.02528	151.23000	4.57430	.03513
2.289	-1.400	22.19100	5.97140	-1.48620	2.45830	.03196	.03307	.02559	151.01000	4.56740	.03550
2.280	-1.200	22.20100	5.97150	-1.48730	2.45140	.03240	.03339	.02595	150.59000	4.55460	.03588
2.272	-1.000	22.20400	5.97160	-1.48810	2.44680	.03277	.03345	.02622	150.32000	4.54600	.03612
2.265	-.800	22.20900	5.97170	-1.48900	2.44230	.03322	.03370	.02664	150.05000	4.53770	.03647
2.264	-.600	22.21800	5.97180	-1.49000	2.43800	.03364	.03381	.02710	149.79000	4.52960	.03675
2.260	-.400	22.21700	5.97180	-1.49040	2.43650	.03382	.03363	.02749	149.71000	4.52680	.03686
2.256	-.200	22.22900	5.97190	-1.49160	2.43430	.03390	.03341	.02774	149.58000	4.52270	.03682
2.255	.000	22.23200	5.97200	-1.49250	2.43300	.03391	.03327	.02802	149.51000	4.52030	.03676
2.257	.200	22.23600	5.97210	-1.49360	2.43190	.03385	.03328	.02832	149.45000	4.51820	.03675
2.256	.400	22.24400	5.97220	-1.49490	2.43030	.03368	.03329	.02857	149.37000	4.51540	.03659
2.255	.600	22.24500	5.97230	-1.49570	2.43070	.03339	.03331	.02867	149.40000	4.51600	.03633
2.255	.800	22.25400	5.97230	-1.49700	2.43040	.03328	.03357	.02892	149.39000	4.51560	.03631
2.258	1.000	22.25900	5.97240	-1.49810	2.43030	.03326	.03378	.02911	149.39000	4.51520	.03634
2.256	1.200	22.26400	5.97250	-1.49890	2.43000	.03318	.03406	.02901	149.38000	4.51470	.03645
2.253	1.400	22.27200	5.97260	-1.50010	2.42730	.03322	.03450	.02887	149.22000	4.50980	.03655
2.259	1.600	22.27500	5.97270	-1.50090	2.42750	.03313	.03474	.02865	149.24000	4.51000	.03647
2.253	1.800	22.27800	5.97280	-1.50170	2.42580	.03290	.03453	.02833	149.15000	4.50690	.03618
2.247	2.000	22.28900	5.97280	-1.50290	2.42450	.03254	.03417	.02789	149.08000	4.50450	.03574
2.249	2.200	22.29100	5.97290	-1.50370	2.42530	.03219	.03365	.02762	149.13000	4.50600	.03535
2.252	2.400	22.29800	5.97300	-1.50500	2.42460	.03195	.03314	.02726	149.10000	4.50470	.03505
2.255	2.508	22.29500	5.97310	-1.50540	2.42570	.03189	.03288	.02709	149.17000	4.50670	.03498
	GRADIENT	.02536	.00045	-.00502	-.00655	-.00019	-.00041	.00133	-.35357	-.01216	-.00034

OA257 (LARC 20-M6-6559) OV102 (S7E155) (10 JUL 81)

REFERENCE DATA

SREF = 2690.0000 SQ.FT. XMRP = 1076.6800 IN. XO
LREF = 474.8100 INCHES YMRP = .0000 IN. YO
BREF = 936.6800 INCHES ZMRP = 375.0000 IN. ZO
SCALE = .0100

PARAMETRIC DATA

ALPHA = 22.500 PHI = .000
SPDBRK = 86.600 AILRON = .000
YP = 1.000 1S = 1.000
ELEVON = .000 MACH = 6.000
S-MODE = 2.000 S-DIR = 1.000

RUN NO. 2105/ 0 RN/L = 7.47 GRADIENT INTERVAL = -.60/ .60

RN/L	BETA	ALPHA	MACH	PHI	Q	BP1	BP2	BP3	PT1	PT2	PSC
7.508	-4.400	21.53200	5.98630	-1.37500	6.91990	.09396	.09291	.08009	429.45000	12.85600	.10132
7.473	-4.200	21.53500	5.98630	-1.37730	6.88220	.09334	.09283	.07996	427.14000	12.78600	.10037
7.486	-4.000	21.53700	5.98640	-1.37880	6.89340	.09213	.09279	.07943	427.85000	12.80700	.09875
7.450	-3.800	21.54000	5.98650	-1.38090	6.86130	.09120	.09264	.07915	425.88000	12.74700	.09746
7.454	-3.600	21.53800	5.98650	-1.38230	6.86170	.09039	.09232	.07888	425.93000	12.74800	.09643
7.457	-3.400	21.54800	5.98660	-1.38440	6.85860	.08993	.09233	.07881	425.75000	12.74200	.09581
7.468	-3.200	21.55200	5.98670	-1.38600	6.86480	.08980	.09241	.07899	426.15000	12.75400	.09546
7.465	-3.000	21.56000	5.98670	-1.38780	6.86480	.09006	.09250	.07966	426.18000	12.75400	.09568
7.450	-2.800	21.56000	5.98680	-1.38950	6.85140	.09057	.09256	.08050	425.36000	12.72900	.09602
7.449	-2.600	21.56700	5.98680	-1.39110	6.84840	.09089	.09222	.08138	425.19000	12.72300	.09603
7.462	-2.400	21.57200	5.98690	-1.39270	6.84990	.09150	.09242	.08201	425.30000	12.72600	.09675
7.467	-2.200	21.58300	5.98700	-1.39470	6.86370	.09202	.09287	.08262	426.18000	12.75200	.09763
7.474	-2.000	21.58800	5.98700	-1.39630	6.88020	.09254	.09355	.08277	427.23000	12.78200	.09891
7.471	-1.800	21.59600	5.98710	-1.39850	6.88010	.09275	.09409	.08275	427.24000	12.78200	.10058
7.488	-1.600	21.60300	5.98720	-1.40040	6.88940	.09261	.09384	.08267	427.83000	12.79900	.10164
7.487	-1.400	21.61200	5.98720	-1.40280	6.88320	.09248	.09320	.08265	427.47000	12.78800	.10242
7.487	-1.200	21.61600	5.98730	-1.40490	6.87690	.09236	.09263	.08245	427.10000	12.77600	.10278
7.494	-1.000	21.62900	5.98740	-1.40760	6.88060	.09242	.09251	.08232	427.35000	12.78300	.10285
7.502	-.800	21.63400	5.98740	-1.40970	6.89970	.09257	.09295	.08231	428.55000	12.81800	.10279
7.492	-.600	21.64200	5.98750	-1.41210	6.89240	.09285	.09375	.08266	428.12000	12.80500	.10279
7.501	-.400	21.64300	5.98760	-1.41420	6.89410	.09315	.09443	.08306	428.24000	12.80800	.10277
7.503	-.200	21.65300	5.98760	-1.41680	6.89910	.09345	.09471	.08368	428.57000	12.81700	.10264
7.496	.000	21.65400	5.98770	-1.41850	6.89050	.09344	.09467	.08398	428.05000	12.80100	.10216
7.493	.200	21.66200	5.98770	-1.42120	6.87890	.09313	.09429	.08401	427.36000	12.78000	.10136
7.482	.400	21.66300	5.98780	-1.42320	6.87020	.09259	.09376	.08370	426.83000	12.76400	.10019
7.471	.600	21.67300	5.98790	-1.42590	6.86340	.09197	.09289	.08310	426.43000	12.75100	.09891
7.448	.800	21.66800	5.98790	-1.42810	6.84240	.09149	.09178	.08262	425.14000	12.71200	.09766
7.427	1.000	21.67700	5.98800	-1.43070	6.82360	.09105	.09079	.08203	424.00000	12.67700	.09665
7.433	1.200	21.67900	5.98810	-1.43300	6.83000	.09083	.09030	.08171	424.41000	12.68900	.09595
7.427	1.400	21.68500	5.98810	-1.43520	6.82460	.09081	.09017	.08145	424.09000	12.67900	.09556
7.437	1.600	21.68600	5.98820	-1.43710	6.83310	.09089	.09013	.08122	424.64000	12.69500	.09527
7.434	1.800	21.69500	5.98830	-1.43950	6.83110	.09111	.09045	.08176	424.54000	12.69100	.09545
7.452	2.000	21.70000	5.98830	-1.44170	6.84010	.09120	.09047	.08225	425.12000	12.70800	.09541
7.446	2.200	21.70500	5.98840	-1.44380	6.83680	.09137	.09048	.08293	424.93000	12.70100	.09551
7.458	2.400	21.71300	5.98850	-1.44600	6.84630	.09137	.09022	.08331	425.54000	12.71900	.09534
7.467	2.600	21.72200	5.98850	-1.44840	6.85510	.09134	.08984	.08355	426.11000	12.73600	.09520
7.464	2.800	21.72400	5.98860	-1.45030	6.85430	.09093	.08924	.08340	426.08000	12.73400	.09465
7.480	3.000	21.73000	5.98870	-1.45260	6.85730	.09007	.08827	.08292	426.28000	12.74000	.09388
7.478	3.200	21.73500	5.98870	-1.45470	6.86470	.08920	.08714	.08238	426.77000	12.75300	.09316
7.479	3.400	21.74300	5.98880	-1.45720	6.87130	.08819	.08575	.08193	427.19000	12.76600	.09239
7.469	3.600	21.74400	5.98890	-1.45940	6.85610	.08699	.08398	.08135	426.27000	12.73700	.09129
7.469	3.800	21.74900	5.98890	-1.46190	6.86140	.08615	.08275	.08090	426.61000	12.74700	.09042

OA257 (LARC 20-M6-6559) OV102 (S7E155) (10 JUL 81)

REFERENCE DATA

SREF =	2690.0000 SQ.FT.	XMRP =	1076.6800 IN.	XO	
LREF =	474.8100 INCHES	YMRP =	.0000 IN.	YO	
BREF =	936.6800 INCHES	ZMRP =	375.0000 IN.	ZO	
SCALE =	.0100				

PARAMETRIC DATA

ALPHA =	22.500	PHI =	.000
SPDBRK =	86.600	AILRON =	.000
YP =	1.000	1S =	1.000
ELEVON =	.000	MACH =	6.000
S-MODE =	2.000	S-DIR =	1.000

RUN NO. 2105/ 0 RN/L = 7.47 GRADIENT INTERVAL = -.60/ .60

RN/L	BETA	ALPHA	MACH	PHI	Q	BP1	BP2	BP3	PT1	PT2	PSC
7.478	3.949	21.75100	5.98900	-1.46330	6.87030	.08566	.08215	.08023	427.19000	12.76400	.08968
	GRADIENT	.02536	.00030	-.01139	-.02768	-.00073	-.00078	.00052	-1.62500	-.05125	-.00323

OA257 (LARC 20-M6-6559) OV102 (S7E056) (10 JUL 81)

REFERENCE DATA

SREF = 2690.0000 SQ.FT. XMRP = 1076.6800 IN. XO
LREF = 474.8100 INCHES YMRP = .0000 IN. YO
BREF = 936.6800 INCHES ZMRP = 375.0000 IN. ZO
SCALE = .0100

PARAMETRIC DATA

ALPHA = 25.000 PHI = .000
SPDBRK = 86.600 AILRON = .000
YP = 1.000 1S = 1.000
ELEVON = .000 MACH = 6.000
S-MODE = 2.000 S-DIR = 1.000

RUN NO. 144/ O RN/L = 2.27 GRADIENT INTERVAL = -.60/ .60

RN/L	BETA	ALPHA	MACH	PHI	Q	BP1	BP2	BP3	PT1	PT2	PSC
2.271	-2.470	24.67200	5.97030	-1.64010	2.44290	.03613	.03489	.02909	149.94000	4.53870	.04066
2.269	-2.300	24.67300	5.97040	-1.64060	2.44250	.03642	.03497	.02924	149.92000	4.53790	.04091
2.267	-2.100	24.68700	5.97050	-1.64170	2.44030	.03673	.03499	.02953	149.80000	4.53400	.04103
2.266	-1.900	24.68500	5.97050	-1.64190	2.44080	.03699	.03474	.02981	149.84000	4.53480	.04093
2.267	-1.700	24.69600	5.97060	-1.64290	2.44050	.03688	.03451	.02999	149.83000	4.53420	.04065
2.271	-1.500	24.70400	5.97070	-1.64380	2.44030	.03667	.03446	.03001	149.83000	4.53400	.04026
2.271	-1.300	24.70300	5.97080	-1.64400	2.44130	.03644	.03445	.03007	149.89000	4.53570	.04001
2.270	-1.100	24.71600	5.97080	-1.64520	2.44020	.03624	.03452	.03019	149.84000	4.53380	.03978
2.272	-.900	24.71900	5.97090	-1.64590	2.43990	.03604	.03465	.03031	149.82000	4.53320	.03955
2.269	-.700	24.72400	5.97100	-1.64660	2.43970	.03594	.03494	.03075	149.82000	4.53280	.03948
2.271	-.500	24.73800	5.97110	-1.64790	2.44000	.03587	.03535	.03113	149.84000	4.53330	.03939
2.273	-.300	24.73600	5.97110	-1.64830	2.43970	.03567	.03577	.03147	149.83000	4.53280	.03915
2.274	-.100	24.74600	5.97120	-1.64930	2.43970	.03544	.03615	.03185	149.85000	4.53290	.03892
2.269	.100	24.75000	5.97130	-1.65020	2.43910	.03525	.03625	.03207	149.82000	4.53180	.03861
2.267	.300	24.75300	5.97140	-1.65110	2.44100	.03492	.03612	.03206	149.94000	4.53520	.03817
2.267	.500	24.76600	5.97150	-1.65270	2.44070	.03472	.03590	.03197	149.93000	4.53470	.03780
2.269	.700	24.76700	5.97150	-1.65360	2.44140	.03454	.03558	.03164	149.98000	4.53600	.03747
2.265	.900	24.77400	5.97160	-1.65480	2.44020	.03441	.03543	.03125	149.92000	4.53380	.03726
2.263	1.100	24.78300	5.97170	-1.65620	2.44040	.03435	.03534	.03083	149.93000	4.53400	.03716
2.264	1.300	24.78300	5.97180	-1.65700	2.44140	.03450	.03535	.03033	150.01000	4.53600	.03721
2.265	1.500	24.79500	5.97190	-1.65850	2.44150	.03480	.03563	.03004	150.02000	4.53610	.03750
2.270	1.700	24.80000	5.97190	-1.65950	2.44000	.03516	.03602	.02986	149.93000	4.53320	.03782
2.273	1.900	24.80000	5.97200	-1.66020	2.44060	.03544	.03637	.02990	149.98000	4.53440	.03820
2.269	2.100	24.81700	5.97210	-1.66190	2.43980	.03559	.03651	.02993	149.94000	4.53290	.03835
2.265	2.300	24.81800	5.97220	-1.66270	2.44030	.03543	.03615	.02999	149.98000	4.53390	.03823
2.261	2.488	24.82700	5.97220	-1.66400	2.44140	.03516	.03566	.02998	150.05000	4.53580	.03805
	GRADIENT	.02786	.00043	-.00476	.00097	-.00117	.00055	.00089	.10714	.00187	-.00160

OA257 (LARC 20-M6-6559) OV102 (S7E056) (10 JUL 81)

REFERENCE DATA

SREF = 2690.0000 SQ.FT. XMRP = 1076.6800 IN. XO
LREF = 474.8100 INCHES YMRP = .0000 IN. YO
BREF = 936.6800 INCHES ZMRP = 375.0000 IN. ZO
SCALE = .0100

PARAMETRIC DATA

ALPHA = 25.000 PHI = .000
SPDBRK = 86.600 AILRON = .000
YP = 1.000 1S = 1.000
ELEVON = .000 MACH = 6.000
S-MODE = 2.000 S-DIR = 1.000

RUN NO. 102/ 0 RN/L = 7.40 GRADIENT INTERVAL = -.60/ .60

RN/L	BETA	ALPHA	MACH	PHI	Q	BP1	BP2	BP3	PT1	PT2	PSC
7.508	-4.415	23.98900	5.99630	-1.51680	6.90080	.09557	.09445	.07825	431.26000	12.82000	.10848
7.506	-4.300	24.00100	5.99640	-1.51870	6.90200	.09573	.09471	.07830	431.36000	12.82200	.10852
7.541	-4.100	24.00200	5.99640	-1.52020	6.91990	.09577	.09571	.07841	432.49000	12.85600	.10849
7.527	-3.900	24.00700	5.99650	-1.52260	6.90350	.09594	.09682	.07864	431.49000	12.82500	.10836
7.508	-3.700	24.00300	5.99650	-1.52460	6.88800	.09610	.09752	.07899	430.53000	12.79600	.10805
7.497	-3.500	24.01500	5.99660	-1.52690	6.88540	.09650	.09836	.07949	430.38000	12.79200	.10781
7.493	-3.300	24.01700	5.99660	-1.52890	6.88850	.09711	.09936	.08017	430.59000	12.79700	.10800
7.483	-3.100	24.02400	5.99670	-1.53130	6.87610	.09767	.09992	.08067	429.83000	12.77400	.10821
7.486	-2.900	24.02500	5.99670	-1.53350	6.87330	.09819	.10008	.08109	429.67000	12.76900	.10873
7.464	-2.700	24.03300	5.99680	-1.53600	6.85600	.09888	.09959	.08177	428.60000	12.73700	.10928
7.451	-2.500	24.03700	5.99680	-1.53820	6.84690	.09929	.09849	.08247	428.05000	12.72000	.10940
7.434	-2.300	24.03800	5.99690	-1.54050	6.82690	.09930	.09764	.08297	426.81000	12.68300	.10882
7.429	-2.100	24.04000	5.99690	-1.54270	6.81460	.09897	.09739	.08331	426.06000	12.66000	.10787
7.417	-1.900	24.04500	5.99700	-1.54500	6.80480	.09855	.09672	.08363	425.46000	12.64200	.10676
7.395	-1.700	24.04700	5.99700	-1.54720	6.79130	.09795	.09551	.08417	424.63000	12.61700	.10572
7.392	-1.500	24.05300	5.99710	-1.54950	6.78560	.09725	.09369	.08483	424.28000	12.60600	.10464
7.367	-1.300	24.06000	5.99710	-1.55200	6.76540	.09656	.09199	.08583	423.04000	12.56900	.10383
7.360	-1.100	24.05800	5.99720	-1.55360	6.76080	.09605	.09096	.08665	422.76000	12.56000	.10315
7.357	-.900	24.07100	5.99720	-1.55620	6.75930	.09592	.09164	.08752	422.68000	12.55700	.10321
7.358	-.700	24.06900	5.99730	-1.55800	6.76280	.09610	.09367	.08813	422.92000	12.56400	.10319
7.350	-.500	24.08400	5.99730	-1.56100	6.75650	.09665	.09619	.08873	422.53000	12.55200	.10339
7.345	-.300	24.08100	5.99740	-1.56300	6.75940	.09747	.09746	.08908	422.73000	12.55700	.10363
7.342	-.100	24.09400	5.99740	-1.56610	6.75850	.09798	.09818	.08935	422.69000	12.55600	.10397
7.341	.100	24.09200	5.99740	-1.56810	6.76040	.09796	.09861	.08978	422.82000	12.55900	.10418
7.338	.300	24.10600	5.99750	-1.57120	6.75370	.09783	.09887	.09036	422.42000	12.54700	.10436
7.344	.500	24.10600	5.99750	-1.57340	6.76300	.09777	.09897	.09087	423.01000	12.56400	.10445
7.338	.700	24.12000	5.99760	-1.57620	6.76300	.09764	.09867	.09098	423.03000	12.56400	.10421
7.355	.900	24.12300	5.99760	-1.57840	6.78140	.09742	.09806	.09082	424.19000	12.59800	.10396
7.363	1.100	24.13600	5.99770	-1.58120	6.78840	.09709	.09698	.09005	424.64000	12.61100	.10315
7.370	1.300	24.13800	5.99770	-1.58340	6.79730	.09658	.09569	.08859	425.21000	12.62800	.10203
7.371	1.500	24.15000	5.99780	-1.58610	6.79760	.09600	.09436	.08716	425.25000	12.62800	.10089
7.379	1.700	24.15200	5.99780	-1.58840	6.79700	.09560	.09340	.08640	425.22000	12.62700	.10036
7.382	1.900	24.16100	5.99790	-1.59100	6.79790	.09521	.09268	.08578	425.30000	12.62900	.09994
7.389	2.100	24.16600	5.99790	-1.59350	6.79770	.09489	.09218	.08532	425.29000	12.62800	.09968
7.378	2.300	24.17000	5.99800	-1.59600	6.79220	.09458	.09153	.08474	424.97000	12.61800	.09924
7.377	2.500	24.17700	5.99800	-1.59870	6.79620	.09416	.09089	.08412	425.23000	12.62600	.09881
7.379	2.700	24.18200	5.99810	-1.60140	6.79080	.09383	.09049	.08386	424.91000	12.61600	.09840
7.369	2.900	24.18600	5.99810	-1.60390	6.79040	.09322	.08996	.08345	424.90000	12.61500	.09778
7.358	3.100	24.19100	5.99820	-1.60660	6.78580	.09272	.08962	.08285	424.63000	12.60600	.09717
7.365	3.300	24.20100	5.99820	-1.60960	6.79150	.09263	.08973	.08276	424.99000	12.61700	.09711
7.375	3.500	24.20500	5.99830	-1.61200	6.79620	.09263	.08942	.08287	425.30000	12.62600	.09706
7.364	3.700	24.21100	5.99830	-1.61490	6.78770	.09246	.08863	.08317	424.78000	12.61000	.09700

OA257 (LARC 20-M6-6559) OV102 (S7E056) (10 JUL 81)

REFERENCE DATA

SREF =	2690.0000 SQ.FT.	XMRP =	1076.6800 IN. XO		
LREF =	474.8100 INCHES	YMRP =	.0000 IN. YO		
BREF =	936.6800 INCHES	ZMRP =	375.0000 IN. ZO		
SCALE =	.0100				

PARAMETRIC DATA

ALPHA =	25.000	PHI =	.000
SPDBRK =	86.600	AILRON =	.000
YP =	1.000	1S =	1.000
ELEVON =	.000	MACH =	6.000
S-MODE =	2.000	S-DIR =	1.000

RUN NO. 102/ 0 RN/L = 7.40 GRADIENT INTERVAL = -.60/ .60

RN/L	BETA	ALPHA	MACH	PHI	Q	BP1	BP2	BP3	PT1	PT2	PSC
7.365	3.900	24.21000	5.99840	-1.61710	6.78760	.09204	.08734	.08300	424.79000	12.61000	.09651
	GRADIENT	.02614	.00019	-.01266	.00247	.00095	.00266	.00214	.22857	.00471	.00110

OA257 (LARC 20-M6-6559) OV102 (S7E156) (10 JUL 81)

REFERENCE DATA

SREF = 2690.0000 SQ.FT. XMRP = 1076.6800 IN. XO
LREF = 474.8100 INCHES YMRP = .0000 IN. YO
BREF = 936.6800 INCHES ZMRP = 375.0000 IN. ZO
SCALE = .0100

PARAMETRIC DATA

ALPHA = 25.000 PHI = .000
SPDBRK = 86.600 AILRON = .000
YP = 1.000 1S = 1.000
ELEVON = .000 MACH = 6.000
S-MODE = 2.000 S-DIR = 1.000

RUN NO. 2144/ 0 RN/L = 2.27 GRADIENT INTERVAL = -.60/ .60

RN/L	BETA	ALPHA	MACH	PHI	Q	BP1	BP2	BP3	PT1	PT2	PSC
2.270	-2.400	24.67500	5.97030	-1.64050	2.44230	.03624	.03493	.02915	149.91000	4.53770	.04079
2.268	-2.200	24.67700	5.97040	-1.64100	2.44110	.03655	.03496	.02929	149.84000	4.53530	.04096
2.266	-2.000	24.68500	5.97050	-1.64170	2.44120	.03689	.03491	.02971	149.86000	4.53560	.04103
2.265	-1.800	24.69600	5.97060	-1.64280	2.44020	.03697	.03459	.02993	149.80000	4.53370	.04081
2.270	-1.600	24.69500	5.97060	-1.64300	2.44050	.03679	.03448	.03001	149.83000	4.53420	.04045
2.271	-1.400	24.70900	5.97070	-1.64430	2.44060	.03652	.03443	.03004	149.85000	4.53450	.04011
2.269	-1.200	24.70800	5.97080	-1.64460	2.44030	.03634	.03446	.03012	149.84000	4.53390	.03988
2.272	-1.000	24.71400	5.97090	-1.64540	2.44050	.03613	.03453	.03025	149.86000	4.53440	.03967
2.271	-.800	24.72600	5.97100	-1.64660	2.43980	.03597	.03478	.03047	149.82000	4.53300	.03950
2.270	-.600	24.72300	5.97100	-1.64690	2.43960	.03597	.03508	.03097	149.82000	4.53260	.03942
2.273	-.400	24.73600	5.97110	-1.64800	2.44020	.03580	.03555	.03132	149.86000	4.53380	.03930
2.274	-.200	24.74300	5.97120	-1.64890	2.43910	.03557	.03600	.03167	149.80000	4.53160	.03903
2.272	.000	24.74100	5.97130	-1.64920	2.44010	.03535	.03623	.03199	149.87000	4.53340	.03878
2.266	.200	24.75600	5.97130	-1.65090	2.43910	.03508	.03620	.03216	149.82000	4.53160	.03837
2.267	.400	24.76000	5.97140	-1.65180	2.44110	.03483	.03603	.03205	149.95000	4.53530	.03795
2.269	.600	24.76500	5.97150	-1.65300	2.44140	.03462	.03574	.03187	149.98000	4.53600	.03765
2.267	.800	24.77500	5.97160	-1.65450	2.44030	.03444	.03550	.03147	149.91000	4.53380	.03736
2.265	1.000	24.77400	5.97170	-1.65510	2.44060	.03437	.03533	.03099	149.94000	4.53440	.03716
2.263	1.200	24.78600	5.97170	-1.65670	2.44140	.03441	.03530	.03060	150.00000	4.53590	.03716
2.263	1.400	24.79200	5.97180	-1.65790	2.44090	.03461	.03546	.03019	149.98000	4.53510	.03732
2.267	1.600	24.79300	5.97190	-1.65860	2.44080	.03498	.03577	.02991	149.98000	4.53490	.03769
2.273	1.800	24.80700	5.97200	-1.66010	2.44030	.03532	.03619	.02988	149.96000	4.53390	.03804
2.270	2.000	24.80700	5.97200	-1.66100	2.44010	.03555	.03647	.02988	149.95000	4.53350	.03826
2.268	2.200	24.81400	5.97210	-1.66210	2.44050	.03552	.03636	.02999	149.99000	4.53430	.03833
2.262	2.400	24.82700	5.97220	-1.66360	2.44030	.03531	.03589	.02999	149.98000	4.53390	.03811
	GRADIENT	.03339	.00039	-.00498	.00129	-.00116	.00057	.00083	.12143	.00236	-.00154

OA257 (LARC 20-M6-6559) OV102 (S7E156) (10 JUL 81)

REFERENCE DATA

SREF = 2690.0000 SQ.FT. XMRP = 1076.6800 IN. XO
LREF = 474.8100 INCHES YMRP = .0000 IN. YO
BREF = 936.6800 INCHES ZMRP = 375.0000 IN. ZO
SCALE = .0100

PARAMETRIC DATA

ALPHA = 25.000 PHI = .000
SPDBRK = 86.600 AILRON = .000
YP = 1.000 1S = 1.000
ELEVON = .000 MACH = 6.000
S-MODE = 2.000 S-DIR = 1.000

RUN NO. 2102/ 0 RN/L = 7.40 GRADIENT INTERVAL = -.60/ .60

RN/L	BETA	ALPHA	MACH	PHI	Q	BP1	BP2	BP3	PT1	PT2	PSC
7.513	-4.400	23.99000	5.99630	-1.51690	6.90690	.09563	.09456	.07825	431.65000	12.83100	.10851
7.520	-4.200	24.00400	5.99640	-1.51950	6.90960	.09574	.09509	.07834	431.84000	12.83700	.10854
7.546	-4.000	24.00200	5.99650	-1.52130	6.91740	.09585	.09632	.07848	432.34000	12.85100	.10843
7.512	-3.800	24.00800	5.99650	-1.52390	6.89260	.09602	.09720	.07881	430.81000	12.80500	.10824
7.505	-3.600	24.00700	5.99660	-1.52550	6.88860	.09629	.09783	.07918	430.57000	12.79700	.10785
7.495	-3.400	24.01600	5.99660	-1.52800	6.88770	.09677	.09888	.07980	430.53000	12.79600	.10786
7.488	-3.200	24.01800	5.99670	-1.53000	6.88370	.09739	.09967	.08045	430.30000	12.78800	.10809
7.487	-3.000	24.02800	5.99670	-1.53260	6.87590	.09789	.10008	.08088	429.82000	12.77400	.10846
7.477	-2.800	24.02600	5.99680	-1.53450	6.86690	.09852	.09990	.08143	429.27000	12.75700	.10901
7.456	-2.600	24.03600	5.99680	-1.53720	6.85010	.09913	.09912	.08207	428.24000	12.72600	.10942
7.437	-2.400	24.03200	5.99690	-1.53910	6.83290	.09935	.09794	.08275	427.18000	12.69400	.10917
7.435	-2.200	24.04200	5.99690	-1.54180	6.82250	.09916	.09750	.08315	426.54000	12.67500	.10836
7.423	-2.000	24.03900	5.99690	-1.54360	6.80900	.09877	.09713	.08343	425.71000	12.64900	.10734
7.401	-1.800	24.04700	5.99700	-1.54620	6.79420	.09829	.09618	.08386	424.80000	12.62200	.10624
7.394	-1.600	24.04900	5.99700	-1.54840	6.78950	.09764	.09470	.08441	424.52000	12.61300	.10518
7.382	-1.400	24.06000	5.99710	-1.55080	6.77630	.09690	.09276	.08526	423.71000	12.58900	.10421
7.360	-1.200	24.05300	5.99710	-1.55260	6.76000	.09627	.09131	.08628	422.71000	12.55900	.10340
7.359	-1.000	24.06800	5.99720	-1.55510	6.76100	.09595	.09110	.08708	422.78000	12.56000	.10312
7.359	-.800	24.07000	5.99720	-1.55710	6.76090	.09595	.09248	.08784	422.79000	12.56000	.10319
7.352	-.600	24.07800	5.99730	-1.55960	6.75740	.09639	.09512	.08843	422.58000	12.55400	.10328
7.349	-.400	24.08200	5.99730	-1.56190	6.75860	.09705	.09691	.08896	422.67000	12.55600	.10350
7.340	-.200	24.08600	5.99740	-1.56450	6.75670	.09778	.09785	.08916	422.57000	12.55200	.10380
7.341	.000	24.09400	5.99740	-1.56720	6.75930	.09804	.09844	.08958	422.75000	12.55700	.10410
7.339	.200	24.09700	5.99750	-1.56950	6.75740	.09789	.09873	.09003	422.64000	12.55400	.10427
7.340	.400	24.10600	5.99750	-1.57230	6.75760	.09780	.09899	.09066	422.67000	12.55400	.10446
7.340	.600	24.11100	5.99760	-1.57470	6.76190	.09772	.09883	.09097	422.95000	12.56200	.10432
7.347	.800	24.12300	5.99760	-1.57740	6.77340	.09754	.09841	.09099	423.68000	12.58300	.10414
7.360	1.000	24.12700	5.99770	-1.57970	6.78410	.09727	.09754	.09048	424.37000	12.60300	.10358
7.370	1.200	24.14000	5.99770	-1.58240	6.79720	.09686	.09635	.08937	425.20000	12.62800	.10257
7.370	1.400	24.14100	5.99780	-1.58450	6.79730	.09630	.09497	.08786	425.22000	12.62800	.10136
7.379	1.600	24.15300	5.99780	-1.58730	6.79790	.09581	.09389	.08681	425.27000	12.62900	.10061
7.378	1.800	24.15400	5.99790	-1.58960	6.79620	.09541	.09300	.08612	425.18000	12.62600	.10015
7.386	2.000	24.16700	5.99790	-1.59250	6.79890	.09503	.09241	.08554	425.36000	12.63100	.09980
7.387	2.200	24.16500	5.99800	-1.59460	6.79680	.09475	.09187	.08503	425.24000	12.62700	.09944
7.377	2.400	24.17800	5.99800	-1.59750	6.79560	.09432	.09118	.08437	425.19000	12.62500	.09897
7.385	2.600	24.17700	5.99810	-1.59990	6.79430	.09399	.09069	.08395	425.12000	12.62200	.09861
7.372	2.800	24.18700	5.99810	-1.60280	6.78880	.09355	.09024	.08370	424.79000	12.61200	.09812
7.368	3.000	24.18600	5.99820	-1.60500	6.79240	.09291	.08967	.08317	425.03000	12.61900	.09744
7.358	3.200	24.20000	5.99820	-1.60830	6.78510	.09269	.08975	.08280	424.59000	12.60500	.09716
7.375	3.400	24.19800	5.99830	-1.61050	6.79720	.09261	.08964	.08279	425.36000	12.62700	.09707
7.368	3.600	24.21000	5.99830	-1.61360	6.79050	.09259	.08909	.08304	424.95000	12.61500	.09709
7.365	3.800	24.20800	5.99840	-1.61590	6.78750	.09226	.08800	.08309	424.78000	12.61000	.09679

OA257 (LARC 20-M6-6559) OV102 (S7E156) (10 JUL 81)

REFERENCE DATA

SREF =	2690.0000 SQ.FT.	XMRP =	1076.6800 IN.	XO	
LREF =	474.8100 INCHES	YMRP =	.0000 IN.	YO	
BREF =	936.6800 INCHES	ZMRP =	375.0000 IN.	ZO	
SCALE =	.0100				

PARAMETRIC DATA

ALPHA =	25.000	PHI =	.000
SPDBRK =	86.600	AILRON =	.000
YP =	1.000	1S =	1.000
ELEVON =	.000	MACH =	6.000
S-MODE =	2.000	S-DIR =	1.000

RUN NO. 2102/ 0 RN/L = 7.40 GRADIENT INTERVAL = -.60/ .60

RN/L	BETA	ALPHA	MACH	PHI	Q	BP1	BP2	BP3	PT1	PT2	PSC
7.363	3.971	24.20800	5.99840	-1.61790	6.78610	.09148	.08586	.08273	424.72000	12.60700	.09591
	GRADIENT	.02821	.00025	-.01270	.00218	.00100	.00289	.00212	.21072	.00393	.00098

OA257 (LARC 20-M6-6559) OV102 (S7E057) (10 JUL 81)

REFERENCE DATA

SREF = 2690.0000 SQ.FT. XMRP = 1076.6800 IN. XO
LREF = 474.8100 INCHES YMRP = .0000 IN. YO
BREF = 936.6800 INCHES ZMRP = 375.0000 IN. ZO
SCALE = .0100

PARAMETRIC DATA

ALPHA = 27.500 PHI = .000
SPDBRK = 86.600 AILRON = .000
YP = 1.000 1S = 1.000
ELEVON = .000 MACH = 6.000
S-MODE = 2.000 S-DIR = 1.000

RUN NO. 143/ 0 RN/L = 2.26 GRADIENT INTERVAL = -.60/ .60

RN/L	BETA	ALPHA	MACH	PHI	Q	BP1	BP2	BP3	PT1	PT2	PSC
2.278	-2.581	27.01100	5.97430	-1.78310	2.42980	.03981	.03898	.03258	149.56000	4.51440	.04577
2.279	-2.400	27.01600	5.97440	-1.78370	2.42970	.03912	.03908	.03247	149.55000	4.51410	.04517
2.272	-2.200	27.02000	5.97450	-1.78430	2.42880	.03831	.03917	.03235	149.51000	4.51260	.04456
2.269	-2.000	27.03000	5.97460	-1.78540	2.42810	.03777	.03922	.03224	149.48000	4.51120	.04395
2.265	-1.800	27.03100	5.97460	-1.78570	2.42800	.03752	.03949	.03230	149.48000	4.51110	.04346
2.262	-1.600	27.03800	5.97470	-1.78660	2.42860	.03753	.04011	.03236	149.53000	4.51220	.04320
2.265	-1.400	27.04900	5.97480	-1.78750	2.42830	.03746	.04029	.03241	149.51000	4.51160	.04269
2.263	-1.200	27.05100	5.97490	-1.78820	2.42830	.03722	.03986	.03252	149.52000	4.51150	.04192
2.261	-1.000	27.06000	5.97500	-1.78920	2.42840	.03699	.03937	.03255	149.54000	4.51180	.04122
2.259	-.800	27.06700	5.97510	-1.79010	2.42800	.03681	.03894	.03267	149.52000	4.51090	.04067
2.259	-.600	27.07100	5.97520	-1.79110	2.42950	.03667	.03862	.03287	149.62000	4.51370	.04031
2.257	-.400	27.08000	5.97520	-1.79240	2.42870	.03652	.03845	.03304	149.58000	4.51230	.04005
2.259	-.200	27.08400	5.97530	-1.79340	2.42840	.03641	.03827	.03297	149.57000	4.51170	.03983
2.259	.000	27.08900	5.97540	-1.79430	2.42870	.03628	.03820	.03278	149.60000	4.51230	.03968
2.256	.200	27.10200	5.97550	-1.79580	2.42830	.03613	.03809	.03255	149.58000	4.51150	.03948
2.257	.400	27.10300	5.97560	-1.79670	2.42920	.03591	.03777	.03248	149.65000	4.51320	.03921
2.262	.600	27.11300	5.97570	-1.79810	2.42940	.03564	.03739	.03241	149.67000	4.51370	.03886
2.265	.800	27.12300	5.97580	-1.79940	2.42840	.03542	.03704	.03253	149.62000	4.51180	.03855
2.264	1.000	27.12400	5.97580	-1.80050	2.43020	.03530	.03684	.03273	149.74000	4.51510	.03839
2.262	1.200	27.13500	5.97590	-1.80190	2.43020	.03523	.03672	.03297	149.75000	4.51510	.03829
2.260	1.400	27.14200	5.97600	-1.80300	2.43000	.03518	.03667	.03300	149.74000	4.51470	.03814
2.259	1.600	27.14400	5.97610	-1.80390	2.42970	.03514	.03655	.03270	149.73000	4.51410	.03808
2.258	1.800	27.15600	5.97620	-1.80550	2.42950	.03515	.03636	.03223	149.73000	4.51370	.03803
2.256	2.000	27.16000	5.97630	-1.80640	2.42810	.03519	.03635	.03175	149.65000	4.51120	.03799
2.256	2.200	27.16500	5.97640	-1.80750	2.42870	.03527	.03633	.03147	149.70000	4.51230	.03804
2.255	2.382	27.17400	5.97640	-1.80890	2.42760	.03531	.03630	.03123	149.64000	4.51030	.03801
	GRADIENT	.03393	.00045	-.00571	.00011	-.00082	-.00094	-.00052	.05357	.00029	-.00114

OA257 (LARC 20-M6-6559) OV102 (S7E057) (10 JUL 81)

REFERENCE DATA

SREF = 2690.0000 SQ.FT. XMRP = 1076.6800 IN. XO
LREF = 474.8100 INCHES YMRP = .0000 IN. YO
BREF = 936.6800 INCHES ZMRP = 375.0000 IN. ZO
SCALE = .0100

PARAMETRIC DATA

ALPHA = 27.500 PHI = .000
SPDBRK = 86.600 AILRON = .000
YP = 1.000 1S = 1.000
ELEVON = .000 MACH = 6.000
S-MODE = 2.000 S-DIR = 1.000

RUN NO. 103/ 0 RN/L = 7.40 GRADIENT INTERVAL = -.60/ .60

RN/L	BETA	ALPHA	MACH	PHI	Q	BP1	BP2	BP3	PT1	PT2	PSC
7.437	-4.814	26.67800	5.99410	-1.66900	6.88370	.10836	.09368	.08253	429.53000	12.78800	.11925
7.438	-4.700	26.68600	5.99420	-1.67050	6.88470	.10830	.09368	.08260	429.62000	12.79000	.11917
7.453	-4.500	26.68800	5.99420	-1.67260	6.88190	.10765	.09326	.08283	429.46000	12.78500	.11796
7.443	-4.300	26.69200	5.99430	-1.67500	6.87050	.10660	.09301	.08342	428.76000	12.76400	.11650
7.436	-4.100	26.69500	5.99430	-1.67710	6.87440	.10570	.09333	.08421	429.02000	12.77100	.11535
7.440	-3.900	26.70300	5.99440	-1.67960	6.87400	.10505	.09442	.08508	429.01000	12.77000	.11471
7.435	-3.700	26.70600	5.99440	-1.68160	6.87280	.10428	.09548	.08574	428.95000	12.76800	.11380
7.433	-3.500	26.71600	5.99450	-1.68410	6.87030	.10314	.09543	.08623	428.81000	12.76400	.11236
7.440	-3.300	26.71900	5.99450	-1.68600	6.88400	.10194	.09462	.08658	429.68000	12.78900	.11078
7.430	-3.100	26.72700	5.99460	-1.68880	6.87340	.10095	.09398	.08701	429.04000	12.76900	.10935
7.422	-2.900	26.72900	5.99460	-1.69100	6.86850	.10024	.09392	.08743	428.74000	12.76000	.10828
7.411	-2.700	26.74100	5.99470	-1.69360	6.86250	.09993	.09465	.08807	428.39000	12.74900	.10782
7.415	-2.500	26.74200	5.99470	-1.69560	6.86820	.10006	.09618	.08874	428.76000	12.76000	.10788
7.409	-2.300	26.75400	5.99480	-1.69860	6.86290	.10058	.09832	.08948	428.44000	12.75000	.10821
7.421	-2.100	26.75700	5.99480	-1.70060	6.87410	.10151	.10071	.09009	429.15000	12.77100	.10845
7.415	-1.900	26.77000	5.99490	-1.70350	6.87210	.10245	.10230	.09083	429.04000	12.76700	.10855
7.419	-1.700	26.76800	5.99490	-1.70570	6.87560	.10287	.10282	.09136	429.28000	12.77300	.10851
7.418	-1.500	26.78300	5.99500	-1.70850	6.87260	.10275	.10296	.09166	429.11000	12.76800	.10820
7.439	-1.300	26.78600	5.99500	-1.71080	6.88990	.10202	.10292	.09155	430.20000	12.80000	.10780
7.434	-1.100	26.80200	5.99510	-1.71390	6.88170	.10117	.10249	.09124	429.71000	12.78500	.10741
7.446	-.900	26.80200	5.99510	-1.71600	6.89430	.10046	.10138	.09121	430.51000	12.80800	.10695
7.442	-.700	26.81300	5.99520	-1.71900	6.89210	.09990	.09986	.09131	430.38000	12.80400	.10626
7.429	-.500	26.81200	5.99520	-1.72130	6.88230	.09946	.09826	.09152	429.79000	12.78600	.10569
7.423	-.300	26.82300	5.99530	-1.72450	6.86880	.09895	.09669	.09180	428.96000	12.76100	.10500
7.439	-.100	26.82500	5.99530	-1.72700	6.87250	.09873	.09562	.09230	429.20000	12.76800	.10462
7.416	.100	26.83100	5.99540	-1.72970	6.85810	.09871	.09491	.09281	428.32000	12.74100	.10448
7.407	.300	26.83600	5.99540	-1.73220	6.85650	.09913	.09463	.09344	428.24000	12.73800	.10475
7.387	.500	26.84300	5.99550	-1.73520	6.83950	.09959	.09484	.09370	427.19000	12.70600	.10498
7.380	.700	26.84700	5.99560	-1.73800	6.83340	.09998	.09514	.09368	426.83000	12.69500	.10525
7.359	.900	26.84600	5.99560	-1.74050	6.81550	.10018	.09578	.09351	425.72000	12.66200	.10532
7.350	1.100	26.84900	5.99570	-1.74320	6.80440	.10022	.09653	.09314	425.04000	12.64100	.10539
7.350	1.300	26.85600	5.99570	-1.74610	6.80080	.10010	.09750	.09275	424.84000	12.63400	.10533
7.343	1.500	26.86200	5.99580	-1.74910	6.79120	.09983	.09817	.09222	424.25000	12.61700	.10526
7.349	1.700	26.86400	5.99580	-1.75160	6.79000	.09947	.09810	.09166	424.19000	12.61400	.10494
7.341	1.900	26.87400	5.99590	-1.75480	6.79000	.09916	.09744	.09116	424.20000	12.61400	.10476
7.345	2.100	26.87800	5.99590	-1.75750	6.80100	.09911	.09666	.09104	424.90000	12.63500	.10472
7.335	2.300	26.88900	5.99600	-1.76090	6.79510	.09912	.09576	.09114	424.55000	12.62400	.10472
7.340	2.500	26.89100	5.99600	-1.76360	6.79770	.09891	.09427	.09108	424.73000	12.62900	.10434
7.336	2.700	26.90300	5.99610	-1.76720	6.78970	.09815	.09261	.09045	424.25000	12.61400	.10319
7.338	2.900	26.90300	5.99610	-1.76980	6.79130	.09640	.09048	.08762	424.36000	12.61700	.10082
7.330	3.100	26.91400	5.99620	-1.77310	6.79170	.09590	.08905	.08730	424.40000	12.61700	.10041
7.319	3.300	26.91200	5.99620	-1.77580	6.78550	.09569	.08785	.08700	424.03000	12.60600	.10016

OA257 (LARC 20-M6-6559) OV102 (S7E057) (10 JUL 81)

REFERENCE DATA

SREF = 2690.0000 SQ.FT. XMRP = 1076.6800 IN. XO
LREF = 474.8100 INCHES YMRP = .0000 IN. YO
BREF = 936.6800 INCHES ZMRP = 375.0000 IN. ZO
SCALE = .0100

PARAMETRIC DATA

ALPHA = 27.500 PHI = .000
SPDBRK = 86.600 AILRON = .000
YP = 1.000 1S = 1.000
ELEVON = .000 MACH = 6.000
S-MODE = 2.000 S-DIR = 1.000

RUN NO. 103/ 0 RN/L = 7.40 GRADIENT INTERVAL = -.60/ .60

RN/L	BETA	ALPHA	MACH	PHI	Q	BP1	BP2	BP3	PT1	PT2	PSC
7.321	3.500	26.92500	5.99630	-1.77930	6.77980	.09546	.08670	.08630	423.69000	12.59500	.09968
7.327	3.700	26.91800	5.99630	-1.78160	6.78740	.09509	.08547	.08518	424.19000	12.60900	.09914
	GRADIENT	.02857	.00027	-.01361	-.03790	.00016	-.00343	.00233	-2.29143	-.07086	-.00063

OA257 (LARC 20-M6-6559) OV102 (S7E157) (10 JUL 81)

REFERENCE DATA

SREF = 2690.0000 SQ.FT. XMRP = 1076.6800 IN. XO
LREF = 474.8100 INCHES YMRP = .0000 IN. YO
BREF = 936.6800 INCHES ZMRP = 375.0000 IN. ZO
SCALE = .0100

PARAMETRIC DATA

ALPHA = 27.500 PHI = .000
SPDBRK = 86.600 AILRON = .000
YP = 1.000 1S = 1.000
ELEVON = .000 MACH = 6.000
S-MODE = 2.000 S-DIR = 1.000

RUN NO. 2143/ 0 RN/L = 2.26 GRADIENT INTERVAL = -.60/ .60

RN/L	BETA	ALPHA	MACH	PHI	Q	BP1	BP2	BP3	PT1	PT2	PSC
2.280	-2.500	27.01000	5.97430	-1.78310	2.43030	.03944	.03896	.03253	149.59000	4.51540	.04553
2.275	-2.300	27.02100	5.97440	-1.78420	2.42890	.03865	.03915	.03241	149.51000	4.51260	.04487
2.271	-2.100	27.02300	5.97450	-1.78480	2.42870	.03801	.03921	.03228	149.51000	4.51230	.04425
2.268	-1.900	27.02900	5.97460	-1.78550	2.42830	.03757	.03929	.03223	149.49000	4.51160	.04366
2.262	-1.700	27.04300	5.97470	-1.78650	2.42800	.03749	.03980	.03231	149.48000	4.51100	.04333
2.264	-1.500	27.04300	5.97480	-1.78700	2.42910	.03751	.04030	.03235	149.56000	4.51300	.04299
2.265	-1.300	27.05000	5.97490	-1.78790	2.42880	.03734	.04010	.03247	149.55000	4.51250	.04230
2.261	-1.100	27.05700	5.97490	-1.78880	2.42750	.03709	.03962	.03253	149.48000	4.51010	.04154
2.260	-.900	27.06100	5.97500	-1.78950	2.42890	.03691	.03914	.03258	149.58000	4.51270	.04089
2.259	-.700	27.07000	5.97510	-1.79070	2.42880	.03673	.03877	.03276	149.58000	4.51250	.04047
2.257	-.500	27.07600	5.97520	-1.79170	2.42870	.03660	.03852	.03298	149.58000	4.51230	.04016
2.258	-.300	27.07900	5.97530	-1.79270	2.42910	.03647	.03834	.03302	149.61000	4.51300	.03997
2.259	-.100	27.09500	5.97540	-1.79430	2.42780	.03634	.03823	.03289	149.54000	4.51050	.03972
2.258	.100	27.09400	5.97550	-1.79500	2.42900	.03617	.03811	.03263	149.62000	4.51290	.03955
2.256	.300	27.10200	5.97550	-1.79620	2.42870	.03602	.03797	.03254	149.62000	4.51240	.03937
2.259	.500	27.10900	5.97560	-1.79750	2.42940	.03578	.03755	.03240	149.67000	4.51370	.03902
2.265	.700	27.11300	5.97570	-1.79840	2.42910	.03550	.03717	.03244	149.66000	4.51310	.03869
2.265	.900	27.12600	5.97580	-1.80010	2.42990	.03533	.03692	.03261	149.71000	4.51450	.03849
2.263	1.100	27.13200	5.97590	-1.80130	2.43020	.03523	.03676	.03286	149.74000	4.51510	.03832
2.260	1.300	27.13300	5.97600	-1.80210	2.43050	.03521	.03667	.03302	149.77000	4.51560	.03822
2.259	1.500	27.14600	5.97610	-1.80370	2.42980	.03512	.03659	.03287	149.73000	4.51420	.03814
2.258	1.700	27.14700	5.97610	-1.80440	2.42920	.03509	.03647	.03249	149.71000	4.51330	.03802
2.258	1.900	27.15500	5.97620	-1.80580	2.42890	.03518	.03635	.03200	149.70000	4.51270	.03800
2.255	2.100	27.16600	5.97630	-1.80720	2.42800	.03522	.03636	.03162	149.65000	4.51090	.03801
2.256	2.300	27.16600	5.97640	-1.80800	2.42830	.03525	.03627	.03136	149.68000	4.51150	.03801
	GRADIENT	.03329	.00039	-.00574	.00050	-.00080	-.00087	-.00065	.08000	.00109	-.00110

OA257 (LARC 20-M6-6559) OV102 (S7E157) (10 JUL 81)

REFERENCE DATA

SREF = 2690.0000 SQ.FT. XMRP = 1076.6800 IN. XO
LREF = 474.8100 INCHES YMRP = .0000 IN. YO
BREF = 936.6800 INCHES ZMRP = 375.0000 IN. ZO
SCALE = .0100

PARAMETRIC DATA

ALPHA = 27.500 PHI = .000
SPDBRK = 86.600 AILRON = .000
YP = 1.000 1S = 1.000
ELEVON = .000 MACH = 6.000
S-MODE = 2.000 S-DIR = 1.000

RUN NO. 2103/ 0 RN/L = 7.40 GRADIENT INTERVAL = -.60/ .60

RN/L	BETA	ALPHA	MACH	PHI	Q	BP1	BP2	BP3	PT1	PT2	PSC
7.435	-4.800	26.68200	5.99410	-1.66940	6.88220	.10836	.09373	.08255	429.45000	12.78600	.11927
7.448	-4.600	26.68400	5.99420	-1.67120	6.88670	.10805	.09348	.08271	429.75000	12.79400	.11866
7.449	-4.400	26.69400	5.99420	-1.67420	6.87450	.10718	.09309	.08306	429.01000	12.77100	.11722
7.442	-4.200	26.69000	5.99430	-1.67580	6.87560	.10614	.09304	.08385	429.09000	12.77300	.11591
7.442	-4.000	26.70300	5.99430	-1.67840	6.87770	.10537	.09382	.08465	429.23000	12.77700	.11501
7.438	-3.800	26.70000	5.99440	-1.68040	6.87200	.10466	.09500	.08543	428.89000	12.76700	.11430
7.434	-3.600	26.71500	5.99440	-1.68310	6.87270	.10374	.09564	.08601	428.95000	12.76800	.11314
7.436	-3.400	26.71700	5.99450	-1.68510	6.87580	.10252	.09500	.08643	429.16000	12.77400	.11153
7.436	-3.200	26.73000	5.99450	-1.68760	6.88160	.10143	.09427	.08681	429.54000	12.78400	.11000
7.426	-3.000	26.72600	5.99460	-1.68970	6.87040	.10058	.09384	.08720	428.85000	12.76400	.10876
7.416	-2.800	26.73800	5.99470	-1.69250	6.86550	.10005	.09421	.08772	428.56000	12.75500	.10795
7.412	-2.600	26.74100	5.99470	-1.69450	6.86340	.09990	.09531	.08840	428.45000	12.75100	.10777
7.413	-2.400	26.74900	5.99480	-1.69720	6.86860	.10026	.09718	.08914	428.79000	12.76000	.10808
7.413	-2.200	26.75100	5.99480	-1.69940	6.86600	.10099	.09954	.08976	428.64000	12.75500	.10834
7.419	-2.000	26.76400	5.99490	-1.70200	6.87360	.10205	.10165	.09048	429.13000	12.77000	.10850
7.415	-1.800	26.76800	5.99490	-1.70460	6.87290	.10273	.10263	.09111	429.10000	12.76800	.10857
7.418	-1.600	26.77600	5.99500	-1.70710	6.87410	.10290	.10294	.09154	429.19000	12.77100	.10839
7.426	-1.400	26.78400	5.99500	-1.70960	6.87970	.10241	.10294	.09162	429.56000	12.78100	.10800
7.437	-1.200	26.79300	5.99510	-1.71230	6.88640	.10166	.10279	.09139	429.99000	12.79300	.10761
7.440	-1.000	26.79900	5.99510	-1.71480	6.88780	.10075	.10198	.09123	430.09000	12.79600	.10721
7.448	-.800	26.80500	5.99520	-1.71730	6.89590	.10021	.10068	.09126	430.62000	12.81100	.10667
7.436	-.600	26.81600	5.99520	-1.72030	6.88880	.09966	.09903	.09141	430.19000	12.79800	.10596
7.422	-.400	26.81300	5.99530	-1.72260	6.87300	.09920	.09743	.09164	429.21000	12.76800	.10534
7.431	-.200	26.82900	5.99530	-1.72600	6.87070	.09879	.09608	.09198	429.08000	12.76400	.10478
7.427	.000	26.82600	5.99540	-1.72820	6.86350	.09874	.09524	.09259	428.65000	12.75100	.10456
7.411	.200	26.83800	5.99540	-1.73120	6.85780	.09889	.09469	.09309	428.31000	12.74000	.10457
7.396	.400	26.83600	5.99550	-1.73360	6.84820	.09937	.09465	.09367	427.73000	12.72200	.10484
7.383	.600	26.84600	5.99550	-1.73660	6.83520	.09981	.09498	.09373	426.93000	12.69800	.10518
7.373	.800	26.84300	5.99560	-1.73900	6.82860	.10012	.09540	.09367	426.53000	12.68600	.10529
7.348	1.000	26.85100	5.99560	-1.74220	6.80370	.10023	.09617	.09335	424.99000	12.64000	.10534
7.354	1.200	26.85200	5.99570	-1.74460	6.80610	.10017	.09701	.09293	425.16000	12.64400	.10534
7.342	1.400	26.86200	5.99570	-1.74780	6.79260	.10000	.09789	.09250	424.33000	12.61900	.10527
7.344	1.600	26.85900	5.99580	-1.75020	6.78930	.09969	.09822	.09196	424.14000	12.61300	.10516
7.345	1.800	26.87300	5.99580	-1.75350	6.78830	.09931	.09784	.09135	424.09000	12.61100	.10483
7.346	2.000	26.87500	5.99590	-1.75620	6.79890	.09908	.09706	.09105	424.77000	12.63100	.10468
7.338	2.200	26.88600	5.99590	-1.75940	6.79600	.09917	.09624	.09109	424.60000	12.62500	.10478
7.339	2.400	26.88700	5.99600	-1.76200	6.79910	.09898	.09505	.09108	424.81000	12.63100	.10450
7.337	2.600	26.89500	5.99600	-1.76530	6.79110	.09888	.09357	.09121	424.33000	12.61600	.10420
7.340	2.800	26.90100	5.99610	-1.76830	6.79320	.09703	.09143	.08868	424.48000	12.62000	.10167
7.334	3.000	26.90900	5.99610	-1.77150	6.79020	.09606	.08969	.08728	424.30000	12.61500	.10046
7.324	3.200	26.91200	5.99620	-1.77450	6.78930	.09582	.08851	.08729	424.26000	12.61300	.10038
7.316	3.400	26.91700	5.99630	-1.77750	6.78060	.09560	.08724	.08662	423.73000	12.59700	.09992

OA257 (LARC 20-M6-6559) OV102 (S7E157) (10 JUL 81)

REFERENCE DATA

SREF =	2690.0000 SQ.FT.	XMRP =	1076.6800 IN. XO		
LREF =	474.8100 INCHES	YMRP =	.0000 IN. YO		
BREF =	936.6800 INCHES	ZMRP =	375.0000 IN. ZO		
SCALE =	.0100				

PARAMETRIC DATA

ALPHA =	27.500	PHI =	.000
SPDBRK =	86.600	AILRON =	.000
YP =	1.000	1S =	1.000
ELEVON =	.000	MACH =	6.000
S-MODE =	2.000	S-DIR =	1.000

RUN NO. 2103/ O RN/L = 7.40 GRADIENT INTERVAL = -.60/ .60

RN/L	BETA	ALPHA	MACH	PHI	Q	BP1	BP2	BP3	PT1	PT2	PSC
7.322	3.600	26.92100	5.99630	-1.78040	6.78240	.09536	.08619	.08590	423.86000	12.60000	.09953
7.333	3.737	26.91500	5.99640	-1.78200	6.78360	.09469	.08437	.08411	423.97000	12.60200	.09869
	GRADIENT	.02589	.00025	-.01359	-.03987	.00016	-.00341	.00216	-2.41250	-.07429	-.00063

OA257 (LARC 20-M6-6559) OV102 (S7E058) (10 JUL 81)

REFERENCE DATA

SREF = 2690.0000 SQ.FT. XMRP = 1076.6800 IN. XO
LREF = 474.8100 INCHES YMRP = .0000 IN. YO
BREF = 936.6800 INCHES ZMRP = 375.0000 IN. ZO
SCALE = .0100

PARAMETRIC DATA

ALPHA = 30.000 PHI = .000
SPDBRK = 86.600 AILRON = .000
YP = 1.000 1S = 1.000
ELEVON = .000 MACH = 6.000
S-MODE = 2.000 S-DIR = 1.000

RUN NO. 142/ O RN/L = 2.32 GRADIENT INTERVAL = -.60/ .60

RN/L	BETA	ALPHA	MACH	PHI	Q	BP1	BP2	BP3	PT1	PT2	PSC
2.313	-2.656	29.41500	5.97000	-1.92600	2.49170	.04130	.04603	.03578	152.91000	4.62940	.04852
2.320	-2.500	29.41300	5.97000	-1.92620	2.49220	.04101	.04543	.03541	152.93000	4.63030	.04768
2.321	-2.300	29.42200	5.97000	-1.92710	2.49160	.04060	.04487	.03498	152.90000	4.62910	.04678
2.320	-2.100	29.43300	5.97000	-1.92810	2.49060	.04020	.04432	.03460	152.84000	4.62740	.04601
2.321	-1.900	29.43200	5.97000	-1.92860	2.49170	.03980	.04381	.03426	152.91000	4.62940	.04535
2.320	-1.700	29.44500	5.97000	-1.92980	2.49250	.03945	.04345	.03397	152.96000	4.63100	.04480
2.322	-1.500	29.45400	5.97000	-1.93090	2.49270	.03917	.04312	.03355	152.97000	4.63120	.04433
2.329	-1.300	29.45500	5.97000	-1.93150	2.49550	.03897	.04285	.03335	153.14000	4.63640	.04402
2.324	-1.100	29.46800	5.97000	-1.93270	2.49350	.03884	.04252	.03326	153.01000	4.63270	.04370
2.326	-.900	29.47500	5.97000	-1.93360	2.49340	.03872	.04206	.03323	153.01000	4.63260	.04332
2.337	-.700	29.47900	5.97000	-1.93440	2.49470	.03862	.04164	.03316	153.09000	4.63500	.04295
2.333	-.500	29.49000	5.97000	-1.93580	2.49350	.03845	.04122	.03310	153.02000	4.63280	.04258
2.329	-.300	29.49700	5.97000	-1.93670	2.49360	.03827	.04085	.03305	153.02000	4.63290	.04221
2.328	-.100	29.50100	5.97000	-1.93780	2.49440	.03815	.04057	.03301	153.07000	4.63430	.04192
2.325	.100	29.51400	5.97000	-1.93920	2.49450	.03802	.04030	.03314	153.08000	4.63460	.04161
2.322	.300	29.51600	5.97000	-1.94020	2.49300	.03788	.03997	.03319	152.99000	4.63190	.04136
2.323	.500	29.52200	5.97000	-1.94140	2.49280	.03775	.03974	.03345	152.97000	4.63140	.04119
2.326	.700	29.53200	5.97000	-1.94280	2.49030	.03762	.03946	.03363	152.82000	4.62680	.04095
2.323	.900	29.53300	5.97000	-1.94370	2.48770	.03748	.03918	.03374	152.66000	4.62210	.04078
2.322	1.100	29.54400	5.97000	-1.94520	2.48510	.03737	.03901	.03395	152.50000	4.61720	.04065
2.323	1.300	29.55200	5.97000	-1.94670	2.48250	.03730	.03881	.03413	152.34000	4.61230	.04052
2.321	1.500	29.55100	5.97000	-1.94750	2.48130	.03726	.03868	.03418	152.27000	4.61010	.04042
2.316	1.700	29.56300	5.97000	-1.94900	2.47920	.03724	.03858	.03434	152.14000	4.60620	.04033
2.312	1.900	29.57100	5.97000	-1.95040	2.47480	.03722	.03850	.03445	151.87000	4.59800	.04031
2.314	2.100	29.57200	5.97000	-1.95140	2.47190	.03729	.03841	.03463	151.69000	4.59270	.04028
2.313	2.300	29.58500	5.97000	-1.95320	2.46820	.03734	.03841	.03484	151.46000	4.58570	.04034
	GRADIENT	.03286	.00000	-.00570	-.00074	-.00068	-.00147	.00033	-.04715	-.00139	-.00140

OA257 (LARC 20-M6-6559) OV102 (S7E058) (10 JUL 81)

REFERENCE DATA

SREF = 2690.0000 SQ.FT. XMRP = 1076.6800 IN. XO
LREF = 474.8100 INCHES YMRP = .0000 IN. YO
BREF = 936.6800 INCHES ZMRP = 375.0000 IN. ZO
SCALE = .0100

PARAMETRIC DATA

ALPHA = 30.000 PHI = .000
SPDBRK = 86.600 AILRON = .000
YP = 1.000 1S = 1.000
ELEVON = .000 MACH = 6.000
S-MODE = 2.000 S-DIR = 1.000

RUN NO. 109/ O RN/L = 4.36 GRADIENT INTERVAL = -.60/ .60

RN/L	BETA	ALPHA	MACH	PHI	Q	BP1	BP2	BP3	PT1	PT2	PSC
4.443	-4.645	29.23900	5.95420	-1.88130	4.08160	.06889	.07816	.05631	247.74000	7.58370	.08432
4.440	-4.500	29.24800	5.95430	-1.88250	4.07980	.06894	.07820	.05632	247.66000	7.58040	.08431
4.442	-4.300	29.24500	5.95440	-1.88340	4.07670	.06857	.07813	.05637	247.48000	7.57460	.08370
4.433	-4.100	29.25200	5.95450	-1.88470	4.07530	.06807	.07789	.05642	247.40000	7.57210	.08274
4.429	-3.900	29.25200	5.95450	-1.88540	4.07630	.06770	.07734	.05644	247.47000	7.57400	.08176
4.420	-3.700	29.26600	5.95450	-1.88700	4.07350	.06747	.07626	.05646	247.31000	7.56870	.08049
4.418	-3.500	29.26500	5.95460	-1.88770	4.07220	.06722	.07505	.05630	247.24000	7.56630	.07925
4.421	-3.300	29.28000	5.95470	-1.88950	4.07030	.06676	.07408	.05599	247.14000	7.56280	.07820
4.414	-3.100	29.27900	5.95470	-1.89020	4.06510	.06602	.07280	.05558	246.83000	7.55300	.07721
4.402	-2.900	29.29100	5.95480	-1.89180	4.05520	.06530	.07150	.05508	246.23000	7.53460	.07630
4.389	-2.700	29.29200	5.95480	-1.89290	4.05010	.06446	.07012	.05457	245.93000	7.52520	.07525
4.383	-2.500	29.30000	5.95490	-1.89430	4.04690	.06378	.06896	.05406	245.75000	7.51920	.07429
4.378	-2.300	29.30500	5.95490	-1.89560	4.04520	.06323	.06808	.05364	245.65000	7.51620	.07358
4.373	-2.100	29.31500	5.95500	-1.89730	4.04280	.06270	.06725	.05309	245.51000	7.51160	.07268
4.368	-1.900	29.32500	5.95500	-1.89890	4.04140	.06219	.06651	.05259	245.44000	7.50900	.07179
4.366	-1.700	29.32800	5.95510	-1.90000	4.03830	.06183	.06575	.05194	245.26000	7.50320	.07080
4.363	-1.500	29.33800	5.95510	-1.90170	4.03750	.06135	.06479	.05133	245.22000	7.50190	.06926
4.368	-1.300	29.33800	5.95520	-1.90280	4.03720	.06096	.06420	.05049	245.21000	7.50130	.06795
4.372	-1.100	29.35300	5.95520	-1.90490	4.03610	.06067	.06395	.04997	245.15000	7.49910	.06701
4.369	-.900	29.35400	5.95530	-1.90620	4.03780	.06043	.06380	.04948	245.26000	7.50230	.06635
4.362	-.700	29.36600	5.95530	-1.90830	4.03510	.06023	.06364	.04925	245.11000	7.49740	.06582
4.356	-.500	29.36500	5.95540	-1.90970	4.03590	.06002	.06330	.04910	245.17000	7.49880	.06531
4.351	-.300	29.38200	5.95540	-1.91210	4.03230	.05979	.06294	.04913	244.96000	7.49210	.06487
4.349	-.100	29.38300	5.95550	-1.91360	4.03300	.05949	.06241	.04926	245.01000	7.49350	.06435
4.348	.100	29.39500	5.95550	-1.91580	4.03270	.05920	.06191	.04939	245.00000	7.49290	.06391
4.345	.300	29.39700	5.95560	-1.91790	4.03100	.05888	.06142	.04975	244.90000	7.48970	.06340
4.348	.500	29.40600	5.95560	-1.92040	4.02940	.05865	.06102	.05049	244.82000	7.48680	.06299
4.346	.700	29.41200	5.95570	-1.92220	4.02990	.05852	.06052	.05101	244.85000	7.48760	.06275
4.338	.900	29.41600	5.95570	-1.92370	4.02760	.05861	.06002	.05154	244.72000	7.48340	.06268
4.336	1.100	29.43000	5.95580	-1.92580	4.02640	.05882	.05952	.05235	244.66000	7.48110	.06284
4.331	1.300	29.42800	5.95580	-1.92690	4.02410	.05902	.05914	.05287	244.53000	7.47690	.06292
4.328	1.500	29.44300	5.95590	-1.92910	4.01990	.05916	.05881	.05309	244.28000	7.46900	.06302
4.322	1.700	29.43900	5.95590	-1.93030	4.01720	.05928	.05850	.05311	244.13000	7.46410	.06308
4.325	1.900	29.45600	5.95600	-1.93280	4.01170	.05933	.05818	.05326	243.80000	7.45390	.06309
4.320	2.100	29.45300	5.95600	-1.93420	4.01020	.05945	.05787	.05326	243.72000	7.45110	.06318
4.309	2.300	29.46700	5.95610	-1.93650	4.00420	.05969	.05767	.05338	243.36000	7.43980	.06339
4.311	2.500	29.46300	5.95610	-1.93800	4.00470	.05991	.05753	.05344	243.40000	7.44080	.06356
4.304	2.700	29.48000	5.95620	-1.94060	3.99970	.06019	.05749	.05349	243.10000	7.43140	.06374
4.309	2.900	29.48000	5.95620	-1.94220	3.99860	.06051	.05753	.05344	243.04000	7.42940	.06399
4.302	3.100	29.49200	5.95630	-1.94460	3.99340	.06087	.05770	.05351	242.74000	7.41980	.06426
4.300	3.300	29.49300	5.95630	-1.94630	3.99240	.06124	.05786	.05367	242.69000	7.41800	.06462
4.294	3.500	29.49900	5.95640	-1.94830	3.98990	.06173	.05814	.05379	242.54000	7.41320	.06504
	GRADIENT	.03743	.00023	-.01044	-.00524	-.00141	-.00235	.00128	-.27714	-.00969	-.00235

OA257 (LARC 20-M6-6559) OV102 (S7E058) (10 JUL 81)

REFERENCE DATA

SREF = 2690.0000 SQ.FT. XMRP = 1076.6800 IN. XO
LREF = 474.8100 INCHES YMRP = .0000 IN. YO
BREF = 936.6800 INCHES ZMRP = 375.0000 IN. ZO
SCALE = .0100

PARAMETRIC DATA

ALPHA = 30.000 PHI = .000
SPDBRK = 86.600 AILRON = .000
YP = 1.000 1S = 1.000
ELEVON = .000 MACH = 6.000
S-MODE = 2.000 S-DIR = 1.000

RUN NO. 104/ 0 RN/L = 7.44 GRADIENT INTERVAL = -.60/ .60

RN/L	BETA	ALPHA	MACH	PHI	Q	BP1	BP2	BP3	PT1	PT2	PSC
7.479	-4.784	29.22200	5.98870	-1.81370	6.88350	.11659	.10987	.09518	427.91000	12.78800	.12688
7.488	-4.600	29.23200	5.98880	-1.81610	6.88070	.11586	.10948	.09520	427.76000	12.78300	.12641
7.511	-4.400	29.24400	5.98880	-1.81830	6.89600	.11556	.11013	.09545	428.73000	12.81200	.12667
7.498	-4.200	29.24400	5.98890	-1.82030	6.89240	.11493	.11040	.09566	428.52000	12.80500	.12628
7.484	-4.000	29.25800	5.98890	-1.82300	6.88840	.11460	.11162	.09565	428.29000	12.79700	.12601
7.485	-3.800	29.25900	5.98900	-1.82500	6.89730	.11465	.11356	.09592	428.86000	12.81400	.12581
7.466	-3.600	29.26900	5.98900	-1.82790	6.88090	.11515	.11581	.09652	427.86000	12.78300	.12552
7.446	-3.400	29.26600	5.98910	-1.83040	6.85130	.11528	.11709	.09708	426.03000	12.72800	.12474
7.430	-3.200	29.27500	5.98910	-1.83330	6.83860	.11495	.11724	.09739	425.26000	12.70500	.12369
7.406	-3.000	29.27400	5.98920	-1.83560	6.81700	.11442	.11739	.09768	423.93000	12.66500	.12292
7.399	-2.800	29.27700	5.98920	-1.83780	6.80590	.11321	.11701	.09722	423.26000	12.64400	.12183
7.403	-2.600	29.28700	5.98930	-1.84030	6.81350	.11240	.11719	.09686	423.75000	12.65800	.12192
7.396	-2.400	29.29700	5.98940	-1.84300	6.81470	.11173	.11688	.09633	423.84000	12.66000	.12229
7.393	-2.200	29.30200	5.98940	-1.84550	6.81010	.11062	.11456	.09566	423.56000	12.65200	.12161
7.390	-2.000	29.30700	5.98950	-1.84790	6.80780	.10965	.11097	.09469	423.44000	12.64800	.12022
7.404	-1.800	29.32400	5.98950	-1.85050	6.82860	.10849	.10788	.09376	424.75000	12.68600	.11859
7.406	-1.600	29.32500	5.98960	-1.85260	6.83250	.10743	.10570	.09290	425.01000	12.69400	.11716
7.404	-1.400	29.33400	5.98960	-1.85570	6.82180	.10666	.10428	.09225	424.36000	12.67400	.11615
7.411	-1.200	29.34100	5.98970	-1.85820	6.83100	.10621	.10334	.09165	424.95000	12.69100	.11542
7.404	-1.000	29.35300	5.98970	-1.86140	6.82890	.10574	.10235	.09115	424.83000	12.68700	.11457
7.404	-.800	29.35200	5.98980	-1.86370	6.83420	.10558	.10144	.09092	425.18000	12.69700	.11417
7.393	-.600	29.36800	5.98980	-1.86730	6.82660	.10551	.10053	.09106	424.72000	12.68200	.11408
7.391	-.400	29.36400	5.98990	-1.86980	6.81800	.10499	.09952	.09098	424.20000	12.66700	.11345
7.409	-.200	29.38400	5.99000	-1.87340	6.83390	.10489	.09912	.09098	425.21000	12.69600	.11327
7.410	.000	29.38400	5.99000	-1.87600	6.83480	.10471	.09873	.09106	425.28000	12.69800	.11295
7.412	.200	29.40100	5.99010	-1.87960	6.83970	.10467	.09870	.09136	425.60000	12.70700	.11290
7.438	.400	29.40800	5.99010	-1.88290	6.85990	.10480	.09861	.09204	426.87000	12.74400	.11302
7.438	.600	29.42100	5.99020	-1.88630	6.86160	.10463	.09805	.09278	427.00000	12.74800	.11287
7.438	.800	29.42000	5.99020	-1.88930	6.86460	.10460	.09739	.09354	427.20000	12.75300	.11289
7.436	1.000	29.43400	5.99030	-1.89330	6.85720	.10422	.09638	.09379	426.75000	12.73900	.11245
7.454	1.200	29.43600	5.99030	-1.89600	6.87480	.10353	.09508	.09364	427.87000	12.77200	.11161
7.455	1.400	29.45100	5.99040	-1.89960	6.87910	.10305	.09378	.09307	428.15000	12.78000	.11096
7.464	1.600	29.45200	5.99050	-1.90220	6.88380	.10276	.09257	.09282	428.46000	12.78900	.11046
7.483	1.800	29.47000	5.99050	-1.90550	6.90390	.10261	.09154	.09280	429.73000	12.82600	.10994
7.488	2.000	29.47000	5.99060	-1.90810	6.90840	.10320	.09155	.09334	430.03000	12.83500	.11022
7.487	2.200	29.48500	5.99060	-1.91170	6.89250	.10360	.09180	.09413	429.05000	12.80500	.11052
7.496	2.400	29.48000	5.99070	-1.91390	6.89450	.10381	.09167	.09464	429.19000	12.80900	.11076
7.486	2.600	29.49300	5.99070	-1.91750	6.88650	.10383	.09128	.09494	428.71000	12.79400	.11081
7.483	2.800	29.49300	5.99080	-1.92020	6.89280	.10400	.09093	.09527	429.12000	12.80500	.11097
7.485	3.000	29.51100	5.99080	-1.92410	6.90520	.10480	.09155	.09600	429.91000	12.82800	.11160
7.494	3.200	29.51200	5.99090	-1.92700	6.91560	.10720	.09479	.09860	430.57000	12.84800	.11420
7.482	3.400	29.52300	5.99100	-1.93060	6.90430	.10832	.09602	.09983	429.89000	12.82700	.11512

OA257 (LARC 20-M6-6559) OV102 (S7E058) (10 JUL 81)

REFERENCE DATA

SREF =	2690.0000 SQ.FT.	XMRP =	1076.6800 IN. XO		
LREF =	474.8100 INCHES	YMRP =	.0000 IN. YO		
BREF =	936.6800 INCHES	ZMRP =	375.0000 IN. ZO		
SCALE =	.0100				

PARAMETRIC DATA

ALPHA =	30.000	PHI =	.000
SPDBRK =	86.600	AILRON =	.000
YP =	1.000	1S =	1.000
ELEVON =	.000	MACH =	6.000
S-MODE =	2.000	S-DIR =	1.000

RUN NO. 104/ O RN/L = 7.44 GRADIENT INTERVAL = -.60/ .60

RN/L	BETA	ALPHA	MACH	PHI	Q	BP1	BP2	BP3	PT1	PT2	PSC
7.488	3.600	29.52000	5.99100	-1.93350	6.90520	.10841	.09544	.09992	429.96000	12.82900	.11497
	GRADIENT	.04714	.00030	-.01596	.03475	-.00058	-.00173	.00136	2.24465	.06482	-.00087

OA257 (LARC 20-M6-6559) OV102 (S7E158) (10 JUL 81)

REFERENCE DATA

SREF = 2690.0000 SQ.FT. XMRP = 1076.6800 IN. XO
LREF = 474.8100 INCHES YMRP = .0000 IN. YO
BREF = 936.6800 INCHES ZMRP = 375.0000 IN. ZO
SCALE = .0100

PARAMETRIC DATA

ALPHA = 30.000 PHI = .000
SPDBRK = 86.600 AILRON = .000
YP = 1.000 1S = 1.000
ELEVON = .000 MACH = 6.000
S-MODE = 2.000 S-DIR = 1.000

RUN NO. 2142/ 0 RN/L = 2.32 GRADIENT INTERVAL = -.60/ .60

RN/L	BETA	ALPHA	MACH	PHI	Q	BP1	BP2	BP3	PT1	PT2	PSC
2.316	-2.600	29.41100	5.97000	-1.92600	2.49220	.04120	.04580	.03565	152.94000	4.63040	.04820
2.320	-2.400	29.42300	5.97000	-1.92690	2.49110	.04082	.04516	.03521	152.87000	4.62820	.04721
2.320	-2.200	29.42300	5.97000	-1.92720	2.49070	.04043	.04457	.03477	152.85000	4.62760	.04639
2.321	-2.000	29.43300	5.97000	-1.92830	2.49160	.03999	.04406	.03443	152.90000	4.62930	.04569
2.321	-1.800	29.44100	5.97000	-1.92930	2.49170	.03961	.04361	.03413	152.90000	4.62930	.04505
2.321	-1.600	29.44600	5.97000	-1.93010	2.49330	.03929	.04325	.03375	153.00000	4.63230	.04455
2.327	-1.400	29.45800	5.97000	-1.93140	2.49490	.03904	.04300	.03347	153.10000	4.63540	.04416
2.326	-1.200	29.46200	5.97000	-1.93210	2.49410	.03887	.04269	.03326	153.05000	4.63380	.04385
2.325	-1.000	29.46900	5.97000	-1.93300	2.49360	.03879	.04230	.03325	153.02000	4.63300	.04351
2.329	-.800	29.47900	5.97000	-1.93410	2.49290	.03864	.04185	.03326	152.98000	4.63170	.04316
2.336	-.600	29.48500	5.97000	-1.93510	2.49320	.03853	.04141	.03313	153.00000	4.63220	.04278
2.330	-.400	29.49000	5.97000	-1.93610	2.49360	.03837	.04104	.03310	153.03000	4.63300	.04239
2.328	-.200	29.50300	5.97000	-1.93740	2.49380	.03818	.04069	.03300	153.03000	4.63320	.04205
2.327	.000	29.50700	5.97000	-1.93850	2.49490	.03809	.04041	.03302	153.10000	4.63530	.04176
2.324	.200	29.51300	5.97000	-1.93960	2.49470	.03797	.04016	.03315	153.09000	4.63500	.04150
2.322	.400	29.52300	5.97000	-1.94100	2.49200	.03781	.03986	.03332	152.92000	4.62990	.04128
2.324	.600	29.52500	5.97000	-1.94190	2.49170	.03770	.03959	.03350	152.91000	4.62940	.04107
2.326	.800	29.53200	5.97000	-1.94330	2.48940	.03755	.03931	.03365	152.77000	4.62510	.04089
2.321	1.000	29.54600	5.97000	-1.94500	2.48620	.03741	.03909	.03383	152.57000	4.61920	.04072
2.324	1.200	29.54400	5.97000	-1.94570	2.48440	.03733	.03891	.03405	152.46000	4.61590	.04057
2.322	1.400	29.55300	5.97000	-1.94720	2.48210	.03727	.03874	.03416	152.31000	4.61150	.04046
2.319	1.600	29.56100	5.97000	-1.94840	2.48030	.03725	.03864	.03426	152.21000	4.60820	.04038
2.314	1.800	29.56000	5.97000	-1.94930	2.47780	.03722	.03849	.03435	152.05000	4.60350	.04028
2.311	2.000	29.57300	5.97000	-1.95100	2.47280	.03724	.03847	.03456	151.74000	4.59420	.04030
2.315	2.200	29.58100	5.97000	-1.95250	2.46960	.03734	.03839	.03473	151.55000	4.58840	.04030
2.313	2.304	29.58500	5.97000	-1.95320	2.46820	.03734	.03841	.03485	151.46000	4.58570	.04034
	GRADIENT	.03500	.00000	-.00579	-.00121	-.00068	-.00149	.00030	-.07679	-.00229	-.00141

OA257 (LARC 20-M6-6559) OV102 (S7E158) (10 JUL 81)

REFERENCE DATA

SREF = 2690.0000 SQ.FT. XMRP = 1076.6800 IN. XO
LREF = 474.8100 INCHES YMRP = .0000 IN. YO
BREF = 936.6800 INCHES ZMRP = 375.0000 IN. ZO
SCALE = .0100

PARAMETRIC DATA

ALPHA = 30.000 PHI = .000
SPDBRK = 86.600 AILRON = .000
YP = 1.000 1S = 1.000
ELEVON = .000 MACH = 6.000
S-MODE = 2.000 S-DIR = 1.000

RUN NO. 2109/ 0 RN/L = 4.36 GRADIENT INTERVAL = -.60/ .60

RN/L	BETA	ALPHA	MACH	PHI	Q	BP1	BP2	BP3	PT1	PT2	PSC
4.443	-4.600	29.24200	5.95430	-1.88150	4.08120	.06899	.07829	.05631	247.74000	7.58300	.08442
4.440	-4.400	29.24300	5.95440	-1.88270	4.07920	.06882	.07822	.05636	247.62000	7.57920	.08411
4.437	-4.200	29.25200	5.95440	-1.88420	4.07550	.06836	.07808	.05641	247.41000	7.57240	.08323
4.431	-4.000	29.25200	5.95450	-1.88500	4.07600	.06786	.07771	.05647	247.45000	7.57330	.08227
4.425	-3.800	29.26000	5.95450	-1.88630	4.07450	.06760	.07686	.05644	247.37000	7.57060	.08111
4.418	-3.600	29.26600	5.95460	-1.88740	4.07310	.06735	.07563	.05645	247.29000	7.56790	.07989
4.419	-3.400	29.27200	5.95460	-1.88860	4.07120	.06702	.07452	.05609	247.18000	7.56430	.07868
4.419	-3.200	29.27800	5.95470	-1.88970	4.06820	.06636	.07343	.05578	247.01000	7.55890	.07769
4.409	-3.000	29.28400	5.95470	-1.89090	4.06050	.06567	.07214	.05525	246.55000	7.54460	.07676
4.394	-2.800	29.29300	5.95480	-1.89250	4.05150	.06488	.07080	.05484	246.02000	7.52790	.07579
4.388	-2.600	29.29300	5.95480	-1.89340	4.04930	.06411	.06949	.05431	245.89000	7.52370	.07473
4.379	-2.400	29.30700	5.95490	-1.89520	4.04500	.06347	.06852	.05386	245.63000	7.51560	.07389
4.376	-2.200	29.30700	5.95490	-1.89620	4.04460	.06296	.06761	.05346	245.62000	7.51500	.07314
4.370	-2.000	29.32400	5.95500	-1.89830	4.04170	.06241	.06686	.05286	245.45000	7.50960	.07218
4.368	-1.800	29.32400	5.95500	-1.89930	4.04110	.06203	.06615	.05231	245.42000	7.50840	.07139
4.362	-1.600	29.33800	5.95510	-1.90110	4.03670	.06160	.06525	.05160	245.17000	7.50030	.07001
4.366	-1.400	29.33500	5.95510	-1.90190	4.03870	.06118	.06443	.05079	245.30000	7.50410	.06860
4.370	-1.200	29.34900	5.95520	-1.90410	4.03590	.06081	.06409	.05024	245.13000	7.49870	.06744
4.371	-1.000	29.35100	5.95520	-1.90550	4.03730	.06054	.06387	.04973	245.23000	7.50140	.06665
4.366	-.800	29.36100	5.95530	-1.90720	4.03630	.06034	.06373	.04934	245.17000	7.49950	.06610
4.359	-.600	29.36900	5.95530	-1.90920	4.03500	.06011	.06352	.04921	245.10000	7.49710	.06558
4.353	-.400	29.37100	5.95540	-1.91070	4.03370	.05990	.06317	.04910	245.04000	7.49480	.06507
4.350	-.200	29.38300	5.95540	-1.91290	4.03210	.05965	.06271	.04918	244.95000	7.49180	.06466
4.348	.000	29.38500	5.95550	-1.91450	4.03340	.05933	.06212	.04934	245.03000	7.49410	.06410
4.345	.200	29.39900	5.95550	-1.91700	4.03130	.05902	.06164	.04954	244.92000	7.49030	.06366
4.346	.400	29.39500	5.95560	-1.91890	4.03090	.05872	.06120	.05013	244.90000	7.48960	.06320
4.346	.600	29.41500	5.95560	-1.92160	4.02920	.05858	.06078	.05075	244.80000	7.48630	.06286
4.342	.800	29.41100	5.95570	-1.92280	4.02930	.05856	.06027	.05132	244.82000	7.48660	.06270
4.337	1.000	29.42600	5.95570	-1.92480	4.02660	.05869	.05976	.05189	244.67000	7.48150	.06273
4.334	1.200	29.42500	5.95580	-1.92620	4.02550	.05895	.05933	.05263	244.61000	7.47950	.06287
4.329	1.400	29.43800	5.95580	-1.92820	4.02110	.05912	.05897	.05299	244.35000	7.47120	.06295
4.325	1.600	29.43900	5.95590	-1.92960	4.01930	.05923	.05867	.05314	244.25000	7.46800	.06309
4.323	1.800	29.44900	5.95590	-1.93170	4.01420	.05929	.05837	.05315	243.95000	7.45850	.06307
4.324	2.000	29.45300	5.95600	-1.93340	4.01180	.05937	.05803	.05322	243.81000	7.45410	.06314
4.314	2.200	29.45600	5.95610	-1.93510	4.00690	.05959	.05778	.05331	243.52000	7.44490	.06328
4.310	2.400	29.46800	5.95610	-1.93750	4.00470	.05979	.05758	.05344	243.40000	7.44090	.06348
4.307	2.600	29.46900	5.95620	-1.93910	4.00180	.06003	.05747	.05341	243.23000	7.43550	.06360
4.303	2.800	29.48200	5.95620	-1.94150	3.99760	.06036	.05750	.05349	242.98000	7.42760	.06386
4.306	3.000	29.48200	5.95630	-1.94320	3.99540	.06066	.05758	.05345	242.85000	7.42340	.06411
4.300	3.200	29.49500	5.95630	-1.94560	3.99260	.06108	.05779	.05360	242.70000	7.41830	.06446
4.300	3.400	29.49000	5.95640	-1.94690	3.99240	.06142	.05794	.05370	242.69000	7.41790	.06477
4.292	3.537	29.49800	5.95640	-1.94860	3.98990	.06199	.05832	.05388	242.55000	7.41330	.06531
	GRADIENT	.03607	.00025	-.01030	-.00425	-.00136	-.00236	.00126	-.21607	-.00791	-.00231

OA257 (LARC 20-M6-6559) OV102 (S7E158) (10 JUL 81)

REFERENCE DATA

SREF = 2690.0000 SQ.FT. XMRP = 1076.6800 IN. XO
LREF = 474.8100 INCHES YMRP = .0000 IN. YO
BREF = 936.6800 INCHES ZMRP = 375.0000 IN. ZO
SCALE = .0100

PARAMETRIC DATA

ALPHA = 30.000 PHI = .000
SPDBRK = 86.600 AILRON = .000
YP = 1.000 1S = 1.000
ELEVON = .000 MACH = 6.000
S-MODE = 2.000 S-DIR = 1.000

RUN NO. 2104/ 0 RN/L = 7.44 GRADIENT INTERVAL = -.60/ .60

RN/L	BETA	ALPHA	MACH	PHI	Q	BP1	BP2	BP3	PT1	PT2	PSC
7.492	-4.700	29.23800	5.98870	-1.81520	6.88320	.11627	.10972	.09519	427.91000	12.78800	.12667
7.497	-4.500	29.23600	5.98880	-1.81710	6.88720	.11570	.10968	.09528	428.18000	12.79500	.12648
7.509	-4.300	29.24700	5.98880	-1.81950	6.89520	.11527	.11029	.09562	428.69000	12.81000	.12657
7.489	-4.100	29.24600	5.98890	-1.82150	6.88840	.11467	.11077	.09567	428.28000	12.79700	.12609
7.482	-3.900	29.26200	5.98890	-1.82430	6.89230	.11467	.11268	.09582	428.54000	12.80500	.12604
7.481	-3.700	29.26100	5.98900	-1.82630	6.89670	.11494	.11476	.09620	428.83000	12.81300	.12581
7.455	-3.500	29.27100	5.98910	-1.82940	6.86210	.11523	.11661	.09685	426.70000	12.74900	.12514
7.443	-3.300	29.26700	5.98910	-1.83160	6.84860	.11513	.11721	.09722	425.87000	12.72300	.12420
7.414	-3.100	29.27800	5.98920	-1.83460	6.82540	.11483	.11743	.09765	424.45000	12.68000	.12344
7.396	-2.900	29.27000	5.98920	-1.83650	6.80890	.11383	.11714	.09746	423.43000	12.65000	.12231
7.404	-2.700	29.28600	5.98930	-1.83940	6.80790	.11279	.11704	.09707	423.39000	12.64800	.12172
7.396	-2.500	29.28800	5.98930	-1.84150	6.81210	.11212	.11724	.09662	423.66000	12.65600	.12222
7.393	-2.300	29.30400	5.98940	-1.84450	6.81240	.11117	.11593	.09603	423.70000	12.65600	.12205
7.401	-2.100	29.30400	5.98940	-1.84650	6.81420	.11010	.11288	.09520	423.83000	12.65900	.12095
7.391	-1.900	29.31900	5.98950	-1.84940	6.81330	.10909	.10926	.09423	423.79000	12.65800	.11944
7.410	-1.700	29.32100	5.98950	-1.85130	6.83660	.10792	.10673	.09334	425.25000	12.70100	.11791
7.401	-1.500	29.33200	5.98960	-1.85440	6.82310	.10701	.10493	.09255	424.43000	12.67600	.11663
7.409	-1.300	29.33300	5.98970	-1.85670	6.82870	.10637	.10370	.09195	424.79000	12.68600	.11573
7.406	-1.100	29.34800	5.98970	-1.85990	6.82750	.10601	.10288	.09133	424.74000	12.68400	.11498
7.406	-.900	29.35300	5.98980	-1.86260	6.83300	.10563	.10190	.09101	425.09000	12.69400	.11435
7.398	-.700	29.36600	5.98980	-1.86580	6.83180	.10561	.10104	.09096	425.04000	12.69200	.11418
7.390	-.500	29.36400	5.98990	-1.86850	6.82030	.10528	.10001	.09112	424.34000	12.67100	.11382
7.403	-.300	29.37700	5.98990	-1.87180	6.82780	.10482	.09922	.09091	424.82000	12.68500	.11322
7.407	-.100	29.38200	5.99000	-1.87470	6.83220	.10484	.09897	.09105	425.11000	12.69300	.11317
7.415	.100	29.39500	5.99000	-1.87800	6.84050	.10462	.09868	.09115	425.64000	12.70800	.11283
7.426	.300	29.40400	5.99010	-1.88120	6.85150	.10475	.09867	.09175	426.34000	12.72900	.11297
7.436	.500	29.41300	5.99010	-1.88460	6.86000	.10475	.09838	.09241	426.89000	12.74400	.11298
7.441	.700	29.42000	5.99020	-1.88780	6.86540	.10463	.09775	.09319	427.24000	12.75500	.11292
7.437	.900	29.42700	5.99030	-1.89140	6.86150	.10438	.09685	.09374	427.01000	12.74700	.11256
7.444	1.100	29.43100	5.99030	-1.89440	6.86580	.10381	.09574	.09377	427.30000	12.75500	.11205
7.455	1.300	29.44200	5.99040	-1.89770	6.87840	.10329	.09445	.09340	428.10000	12.77900	.11128
7.462	1.500	29.45200	5.99040	-1.90090	6.88240	.10286	.09315	.09291	428.36000	12.78600	.11066
7.469	1.700	29.45900	5.99050	-1.90380	6.89010	.10261	.09199	.09272	428.86000	12.80100	.11009
7.486	1.900	29.47200	5.99050	-1.90690	6.90810	.10286	.09141	.09299	430.00000	12.83400	.11005
7.486	2.100	29.47400	5.99060	-1.90970	6.89750	.10346	.09172	.09378	429.35000	12.81400	.11039
7.492	2.300	29.48300	5.99060	-1.91280	6.89450	.10374	.09180	.09446	429.18000	12.80900	.11065
7.489	2.500	29.48500	5.99070	-1.91560	6.88920	.10379	.09149	.09476	428.87000	12.79900	.11075
7.484	2.700	29.49400	5.99080	-1.91890	6.88800	.10394	.09111	.09517	428.81000	12.79700	.11097
7.483	2.900	29.50000	5.99080	-1.92190	6.89790	.10411	.09084	.09535	429.45000	12.81500	.11094
7.484	3.100	29.51300	5.99090	-1.92560	6.90760	.10617	.09333	.09746	430.06000	12.83300	.11309
7.491	3.300	29.51600	5.99090	-1.92870	6.91320	.10796	.09570	.09940	430.43000	12.84300	.11486
7.479	3.500	29.52100	5.99100	-1.93210	6.90150	.10840	.09589	.10003	429.72000	12.82200	.11512

OA257 (LARC 20-M6-6559) OV102 (S7E158) (10 JUL 81)

REFERENCE DATA

SREF =	2690.0000 SQ.FT.	XMRP =	1076.6800 IN. XO		
LREF =	474.8100 INCHES	YMRP =	.0000 IN. YO		
BREF =	936.6800 INCHES	ZMRP =	375.0000 IN. ZO		
SCALE =	.0100				

PARAMETRIC DATA

ALPHA =	30.000	PHI =	.000
SPDBRK =	86.600	AILRON =	.000
YP =	1.000	1S =	1.000
ELEVON =	.000	MACH =	6.000
S-MODE =	2.000	S-DIR =	1.000

RUN NO. 2104/ O RN/L = 7.44 GRADIENT INTERVAL = -.60/ .60

RN/L	BETA	ALPHA	MACH	PHI	Q	BP1	BP2	BP3	PT1	PT2	PSC
7.494	3.643	29.52000	5.99110	-1.93440	6.90430	.10861	.09519	.10005	429.94000	12.82700	.11492
	GRADIENT	.04843	.00023	-.01600	.03970	-.00044	-.00144	.00130	2.54857	.07314	-.00076

OA257 (LARC 20-M6-6559) OV102 (S7E059) (10 JUL 81)

REFERENCE DATA

SREF = 2690.0000 SQ.FT. XMRP = 1076.6800 IN. XO
LREF = 474.8100 INCHES YMRP = .0000 IN. YO
BREF = 936.6800 INCHES ZMRP = 375.0000 IN. ZO
SCALE = .0100

PARAMETRIC DATA

ALPHA = 32.500 PHI = .000
SPDBRK = 86.600 AILRON = .000
YP = 1.000 1S = 1.000
ELEVON = .000 MACH = 6.000
S-MODE = 2.000 S-DIR = 1.000

RUN NO. 149/ O RN/L = 2.27 GRADIENT INTERVAL = -.60/ .60

RN/L	BETA	ALPHA	MACH	PHI	Q	BP1	BP2	BP3	PT1	PT2	PSC
2.264	-2.699	31.86000	5.97070	-2.07210	2.44070	.04265	.04779	.03354	149.85000	4.53460	.04955
2.267	-2.500	31.86400	5.97080	-2.07280	2.44070	.04239	.04734	.03328	149.86000	4.53460	.04914
2.262	-2.300	31.88200	5.97090	-2.07410	2.43940	.04214	.04687	.03310	149.79000	4.53210	.04870
2.262	-2.100	31.88200	5.97100	-2.07450	2.43980	.04194	.04641	.03307	149.82000	4.53290	.04825
2.261	-1.900	31.89300	5.97110	-2.07540	2.44050	.04166	.04605	.03304	149.88000	4.53430	.04781
2.261	-1.700	31.90100	5.97120	-2.07620	2.44020	.04143	.04570	.03289	149.87000	4.53360	.04734
2.263	-1.500	31.90300	5.97130	-2.07670	2.44160	.04108	.04528	.03268	149.97000	4.53620	.04682
2.266	-1.300	31.91700	5.97140	-2.07780	2.44070	.04076	.04489	.03250	149.92000	4.53460	.04631
2.269	-1.100	31.92000	5.97150	-2.07850	2.43960	.04040	.04449	.03210	149.86000	4.53250	.04583
2.275	-.900	31.92900	5.97160	-2.07960	2.43980	.04007	.04414	.03183	149.89000	4.53290	.04538
2.272	-.700	31.93800	5.97170	-2.08050	2.43950	.03977	.04373	.03149	149.88000	4.53240	.04498
2.270	-.500	31.94100	5.97180	-2.08110	2.44160	.03947	.04328	.03124	150.02000	4.53640	.04459
2.265	-.300	31.95700	5.97190	-2.08270	2.44090	.03923	.04291	.03104	149.99000	4.53510	.04421
2.265	-.100	31.95700	5.97200	-2.08330	2.44050	.03901	.04250	.03074	149.97000	4.53420	.04386
2.269	.100	31.96500	5.97210	-2.08440	2.44220	.03882	.04217	.03050	150.09000	4.53750	.04358
2.272	.300	31.97900	5.97220	-2.08590	2.44130	.03866	.04190	.03042	150.04000	4.53580	.04337
2.267	.500	31.97600	5.97230	-2.08650	2.44040	.03850	.04154	.03039	150.00000	4.53410	.04313
2.263	.700	31.99200	5.97240	-2.08800	2.44030	.03835	.04127	.03054	150.00000	4.53400	.04295
2.262	.900	31.99900	5.97250	-2.08920	2.43890	.03833	.04105	.03075	149.92000	4.53120	.04287
2.262	1.100	32.00000	5.97260	-2.09020	2.43830	.03840	.04093	.03113	149.90000	4.53020	.04291
2.261	1.300	32.01700	5.97270	-2.09200	2.43790	.03859	.04090	.03162	149.88000	4.52940	.04300
2.263	1.500	32.01900	5.97280	-2.09310	2.43620	.03876	.04087	.03208	149.79000	4.52630	.04314
2.261	1.700	32.02900	5.97290	-2.09460	2.43440	.03894	.04097	.03254	149.68000	4.52290	.04330
2.260	1.900	32.03900	5.97290	-2.09620	2.43350	.03910	.04099	.03293	149.64000	4.52130	.04338
2.266	2.100	32.04400	5.97300	-2.09750	2.43340	.03923	.04104	.03330	149.65000	4.52110	.04348
2.264	2.231	32.05600	5.97310	-2.09890	2.43240	.03928	.04104	.03352	149.59000	4.51920	.04355
	GRADIENT	.03557	.00050	-.00539	-.00044	-.00097	-.00172	-.00090	.02428	-.00087	-.00144

OA257 (LARC 20-M6-6559) OV102 (S7E059) (10 JUL 81)

REFERENCE DATA

SREF = 2690.0000 SQ.FT. XMRP = 1076.6800 IN. XO
LREF = 474.8100 INCHES YMRP = .0000 IN. YO
BREF = 936.6800 INCHES ZMRP = 375.0000 IN. ZO
SCALE = .0100

PARAMETRIC DATA

ALPHA = 32.500 PHI = .000
SPDBRK = 86.600 AILRON = .000
YP = 1.000 1S = 1.000
ELEVON = .000 MACH = 6.000
S-MODE = 2.000 S-DIR = 1.000

RUN NO. 113/ 0 RN/L = 7.60 GRADIENT INTERVAL = -.60/ .60

RN/L	BETA	ALPHA	MACH	PHI	Q	BP1	BP2	BP3	PT1	PT2	PSC
7.584	-4.739	31.40900	5.98170	-1.93750	6.88080	.11830	.12798	.10830	425.67000	12.78400	.13913
7.599	-4.600	31.40900	5.98180	-1.93900	6.88620	.11818	.12813	.10832	426.05000	12.79400	.13921
7.617	-4.400	31.42200	5.98190	-1.94200	6.89330	.11705	.12712	.10778	426.52000	12.80700	.13778
7.618	-4.200	31.42400	5.98200	-1.94420	6.89810	.11612	.12581	.10688	426.84000	12.81600	.13580
7.626	-4.000	31.43700	5.98210	-1.94700	6.91140	.11570	.12464	.10583	427.69000	12.84000	.13408
7.626	-3.800	31.44500	5.98220	-1.94950	6.91130	.11515	.12316	.10444	427.71000	12.84000	.13186
7.621	-3.600	31.45000	5.98230	-1.95210	6.90850	.11476	.12147	.10339	427.57000	12.83500	.13062
7.624	-3.400	31.46300	5.98240	-1.95470	6.91380	.11435	.11959	.10236	427.93000	12.84500	.12974
7.627	-3.200	31.46800	5.98250	-1.95700	6.92350	.11394	.11789	.10127	428.55000	12.86300	.12883
7.631	-3.000	31.48400	5.98250	-1.95980	6.92640	.11373	.11661	.10040	428.76000	12.86800	.12805
7.643	-2.800	31.48800	5.98260	-1.96190	6.93350	.11364	.11588	.09996	429.22000	12.88100	.12757
7.642	-2.600	31.49900	5.98270	-1.96460	6.92840	.11345	.11484	.09959	428.94000	12.87200	.12653
7.646	-2.400	31.50100	5.98280	-1.96670	6.93440	.11332	.11418	.09940	429.34000	12.88300	.12606
7.657	-2.200	31.52100	5.98290	-1.96990	6.94430	.11323	.11358	.09941	429.98000	12.90100	.12577
7.649	-2.000	31.51700	5.98300	-1.97190	6.93920	.11299	.11299	.09937	429.69000	12.89200	.12515
7.664	-1.800	31.53700	5.98310	-1.97510	6.95270	.11268	.11229	.09927	430.55000	12.91700	.12448
7.631	-1.600	31.53400	5.98320	-1.97760	6.93220	.11229	.11183	.09894	429.31000	12.87900	.12362
7.621	-1.400	31.54400	5.98330	-1.98080	6.92430	.11178	.11134	.09852	428.85000	12.86400	.12251
7.613	-1.200	31.54500	5.98340	-1.98360	6.91400	.11133	.11098	.09818	428.24000	12.84500	.12154
7.604	-1.000	31.55300	5.98350	-1.98660	6.90370	.11093	.11073	.09795	427.63000	12.82600	.12049
7.604	-.800	31.55900	5.98360	-1.98990	6.89910	.11052	.11061	.09746	427.37000	12.81700	.11942
7.578	-.600	31.56200	5.98370	-1.99330	6.87740	.10999	.11036	.09722	426.05000	12.77700	.11850
7.571	-.400	31.56900	5.98380	-1.99610	6.87810	.10915	.10980	.09690	426.13000	12.77800	.11710
7.559	-.200	31.57200	5.98390	-1.99910	6.86770	.10807	.10883	.09643	425.51000	12.75900	.11568
7.561	.000	31.58500	5.98390	-2.00250	6.87250	.10734	.10786	.09606	425.84000	12.76800	.11466
7.569	.200	31.59000	5.98400	-2.00520	6.88130	.10661	.10677	.09572	426.41000	12.78400	.11382
7.576	.400	31.60400	5.98410	-2.00860	6.89030	.10611	.10582	.09556	427.00000	12.80100	.11309
7.583	.600	31.60400	5.98420	-2.01110	6.89480	.10568	.10483	.09549	427.30000	12.81000	.11253
7.589	.800	31.62700	5.98430	-2.01510	6.89740	.10570	.10400	.09584	427.49000	12.81400	.11240
7.590	1.000	31.62100	5.98440	-2.01730	6.90620	.10560	.10309	.09609	428.06000	12.83100	.11208
7.580	1.200	31.64000	5.98450	-2.02130	6.90440	.10580	.10231	.09654	427.98000	12.82700	.11221
7.580	1.400	31.63800	5.98460	-2.02390	6.90760	.10586	.10128	.09702	428.20000	12.83300	.11214
7.569	1.600	31.64700	5.98470	-2.02730	6.89200	.10612	.10040	.09749	427.27000	12.80400	.11235
7.606	1.800	31.65500	5.98480	-2.03020	6.92300	.10665	.09980	.09802	429.21000	12.86200	.11285
7.589	2.000	31.66500	5.98490	-2.03380	6.91780	.10721	.09957	.09852	428.92000	12.85200	.11345
7.576	2.200	31.66900	5.98500	-2.03700	6.90890	.10754	.09917	.09870	428.40000	12.83600	.11372
7.563	2.400	31.67200	5.98510	-2.04020	6.90010	.10774	.09870	.09859	427.88000	12.81900	.11394
7.529	2.600	31.67400	5.98520	-2.04340	6.86580	.10786	.09804	.09825	425.78000	12.75600	.11378
7.522	2.800	31.67000	5.98530	-2.04610	6.85910	.10822	.09769	.09837	425.40000	12.74300	.11406
	GRADIENT	.03821	.00039	-.01509	.01611	-.00366	-.00475	-.00153	1.14107	.03036	-.00496

OA257 (LARC 20-M6-6559) OV102 (S7E159) (10 JUL 81)

REFERENCE DATA

SREF = 2690.0000 SQ.FT. XMRP = 1076.6800 IN. XO
LREF = 474.8100 INCHES YMRP = .0000 IN. YO
BREF = 936.6800 INCHES ZMRP = 375.0000 IN. ZO
SCALE = .0100

PARAMETRIC DATA

ALPHA = 32.500 PHI = .000
SPDBRK = 86.600 AILRON = .000
YP = 1.000 1S = 1.000
ELEVON = .000 MACH = 6.000
S-MODE = 2.000 S-DIR = 1.000

RUN NO. 2149/ 0 RN/L = 2.27 GRADIENT INTERVAL = -.60/ .60

RN/L	BETA	ALPHA	MACH	PHI	Q	BP1	BP2	BP3	PT1	PT2	PSC
2.268	-2.600	31.86800	5.97080	-2.07280	2.44070	.04251	.04758	.03346	149.86000	4.53470	.04936
2.264	-2.400	31.87100	5.97090	-2.07330	2.43950	.04226	.04709	.03313	149.79000	4.53240	.04890
2.262	-2.200	31.88000	5.97100	-2.07420	2.44030	.04201	.04663	.03308	149.85000	4.53380	.04849
2.261	-2.000	31.89300	5.97110	-2.07530	2.43890	.04178	.04622	.03307	149.78000	4.53130	.04803
2.261	-1.800	31.89300	5.97120	-2.07550	2.44040	.04154	.04585	.03299	149.88000	4.53400	.04758
2.262	-1.600	31.90500	5.97130	-2.07660	2.44040	.04124	.04552	.03283	149.89000	4.53420	.04708
2.264	-1.400	31.90900	5.97130	-2.07730	2.44060	.04093	.04509	.03255	149.91000	4.53450	.04656
2.269	-1.200	31.91500	5.97140	-2.07800	2.44080	.04058	.04472	.03229	149.93000	4.53480	.04606
2.272	-1.000	31.92900	5.97150	-2.07930	2.43940	.04023	.04434	.03198	149.85000	4.53210	.04561
2.275	-.800	31.92900	5.97160	-2.07980	2.43990	.03993	.04392	.03164	149.89000	4.53310	.04517
2.271	-.600	31.94000	5.97170	-2.08090	2.44020	.03963	.04353	.03140	149.93000	4.53370	.04478
2.268	-.400	31.95100	5.97180	-2.08190	2.44150	.03936	.04309	.03111	150.01000	4.53610	.04439
2.266	-.200	31.95300	5.97190	-2.08280	2.44160	.03911	.04271	.03089	150.03000	4.53620	.04404
2.265	.000	31.96400	5.97200	-2.08410	2.44060	.03891	.04234	.03064	149.98000	4.53440	.04371
2.271	.200	31.97000	5.97210	-2.08490	2.44190	.03878	.04203	.03041	150.07000	4.53680	.04347
2.271	.400	31.98000	5.97220	-2.08630	2.44120	.03860	.04174	.03045	150.04000	4.53550	.04329
2.264	.600	31.98700	5.97230	-2.08740	2.43990	.03840	.04138	.03041	149.97000	4.53320	.04302
2.263	.800	31.99200	5.97240	-2.08830	2.44050	.03832	.04114	.03060	150.02000	4.53430	.04290
2.262	1.000	32.00500	5.97250	-2.09000	2.43820	.03834	.04100	.03094	149.88000	4.52990	.04288
2.261	1.200	32.00700	5.97260	-2.09100	2.43790	.03849	.04085	.03134	149.88000	4.52940	.04294
2.262	1.400	32.01600	5.97270	-2.09240	2.43780	.03866	.04087	.03188	149.88000	4.52910	.04309
2.261	1.600	32.02900	5.97280	-2.09420	2.43480	.03885	.04095	.03232	149.70000	4.52370	.04321
2.261	1.800	32.03000	5.97290	-2.09510	2.43450	.03900	.04097	.03274	149.70000	4.52310	.04337
2.264	2.000	32.04200	5.97300	-2.09700	2.43360	.03916	.04103	.03312	149.65000	4.52130	.04344
2.265	2.200	32.05100	5.97310	-2.09840	2.43260	.03927	.04104	.03345	149.60000	4.51950	.04353
	GRADIENT	.03857	.00050	-.00543	-.00021	-.00099	-.00175	-.00085	.03928	-.00037	-.00144

OA257 (LARC 20-M6-6559) OV102 (S7E159) (10 JUL 81)

REFERENCE DATA

SREF = 2690.0000 SQ.FT. XMRP = 1076.6800 IN. XO
LREF = 474.8100 INCHES YMRP = .0000 IN. YO
BREF = 936.6800 INCHES ZMRP = 375.0000 IN. ZO
SCALE = .0100

PARAMETRIC DATA

ALPHA = 32.500 PHI = .000
SPDBRK = 86.600 AILRON = .000
YP = 1.000 1S = 1.000
ELEVON = .000 MACH = 6.000
S-MODE = 2.000 S-DIR = 1.000

RUN NO. 2113/ 0 RN/L = 7.60 GRADIENT INTERVAL = -.60/ .60

RN/L	BETA	ALPHA	MACH	PHI	Q	BP1	BP2	BP3	PT1	PT2	PSC
7.595	-4.700	31.40500	5.98170	-1.93770	6.88960	.11846	.12827	.10845	426.24000	12.80000	.13958
7.609	-4.500	31.42100	5.98180	-1.94080	6.89020	.11765	.12772	.10802	426.31000	12.80100	.13859
7.622	-4.300	31.41900	5.98190	-1.94280	6.89800	.11648	.12640	.10735	426.83000	12.81600	.13670
7.618	-4.100	31.43600	5.98200	-1.94610	6.90320	.11586	.12521	.10637	427.17000	12.82500	.13493
7.629	-3.900	31.43600	5.98210	-1.94800	6.91280	.11544	.12389	.10512	427.79000	12.84300	.13293
7.624	-3.700	31.45500	5.98220	-1.95120	6.91170	.11496	.12237	.10388	427.75000	12.84100	.13119
7.622	-3.500	31.45200	5.98230	-1.95320	6.90870	.11456	.12049	.10286	427.59000	12.83500	.13010
7.622	-3.300	31.46800	5.98240	-1.95600	6.91630	.11416	.11872	.10181	428.09000	12.84900	.12930
7.625	-3.100	31.46900	5.98250	-1.95800	6.92210	.11383	.11723	.10079	428.48000	12.86000	.12840
7.631	-2.900	31.48900	5.98260	-1.96100	6.92740	.11372	.11622	.10028	428.84000	12.87000	.12798
7.642	-2.700	31.48900	5.98270	-1.96310	6.92770	.11354	.11528	.09970	428.88000	12.87100	.12692
7.644	-2.500	31.50200	5.98280	-1.96570	6.93180	.11339	.11453	.09949	429.16000	12.87800	.12633
7.654	-2.300	31.51300	5.98290	-1.96840	6.94100	.11323	.11383	.09935	429.76000	12.89500	.12576
7.658	-2.100	31.52100	5.98300	-1.97100	6.94530	.11315	.11332	.09943	430.05000	12.90300	.12552
7.656	-1.900	31.53100	5.98310	-1.97390	6.94330	.11284	.11260	.09929	429.96000	12.90000	.12478
7.650	-1.700	31.53500	5.98320	-1.97640	6.94610	.11255	.11204	.09914	430.16000	12.90500	.12412
7.624	-1.500	31.54100	5.98320	-1.97920	6.92740	.11204	.11159	.09867	429.02000	12.87000	.12298
7.620	-1.300	31.54200	5.98330	-1.98200	6.92120	.11154	.11112	.09835	428.67000	12.85800	.12203
7.605	-1.100	31.55200	5.98340	-1.98530	6.90650	.11115	.11086	.09809	427.79000	12.83100	.12109
7.605	-.900	31.55000	5.98350	-1.98780	6.90020	.11064	.11067	.09765	427.43000	12.82000	.11987
7.594	-.700	31.56600	5.98360	-1.99190	6.89000	.11035	.11057	.09737	426.82000	12.80000	.11912
7.576	-.500	31.56100	5.98370	-1.99430	6.87860	.10958	.11009	.09706	426.14000	12.77900	.11777
7.558	-.300	31.57300	5.98380	-1.99790	6.86770	.10862	.10939	.09671	425.50000	12.75900	.11638
7.566	-.100	31.57500	5.98390	-2.00050	6.87450	.10759	.10826	.09620	425.95000	12.77200	.11502
7.562	.100	31.58800	5.98400	-2.00380	6.87410	.10692	.10729	.09592	425.95000	12.77100	.11422
7.574	.300	31.59400	5.98410	-2.00680	6.88620	.10638	.10631	.09564	426.72000	12.79300	.11349
7.579	.500	31.60800	5.98420	-2.01010	6.89380	.10586	.10537	.09554	427.23000	12.80800	.11281
7.588	.700	31.61500	5.98430	-2.01300	6.89740	.10567	.10438	.09558	427.48000	12.81400	.11239
7.587	.900	31.62300	5.98440	-2.01620	6.89830	.10568	.10360	.09601	427.56000	12.81600	.11230
7.588	1.100	31.63100	5.98450	-2.01920	6.91000	.10564	.10264	.09628	428.31000	12.83800	.11203
7.581	1.300	31.63700	5.98460	-2.02250	6.90810	.10586	.10179	.09682	428.22000	12.83400	.11225
7.568	1.500	31.64500	5.98470	-2.02580	6.89570	.10594	.10085	.09719	427.48000	12.81100	.11216
7.592	1.700	31.64900	5.98480	-2.02870	6.90970	.10633	.09999	.09776	428.38000	12.83700	.11261
7.596	1.900	31.66500	5.98480	-2.03220	6.91980	.10696	.09971	.09832	429.03000	12.85600	.11319
7.587	2.100	31.66400	5.98490	-2.03520	6.91740	.10740	.09938	.09865	428.91000	12.85100	.11360
7.569	2.300	31.67900	5.98500	-2.03910	6.90480	.10755	.09890	.09864	428.16000	12.82800	.11372
7.543	2.500	31.66600	5.98510	-2.04150	6.88060	.10784	.09838	.09850	426.69000	12.78300	.11397
7.526	2.700	31.67800	5.98520	-2.04510	6.86170	.10795	.09785	.09829	425.54000	12.74800	.11384
7.495	2.857	31.67100	5.98540	-2.04740	6.83760	.10863	.09740	.09864	424.11000	12.70300	.11440
	GRADIENT	.04443	.00050	-.01557	.01873	-.00371	-.00483	-.00158	1.30143	.03514	-.00490

OA257 (LARC 20-M6-6559) OV102 (S7E060) (10 JUL 81)

REFERENCE DATA

SREF = 2690.0000 SQ.FT. XMRP = 1076.6800 IN. XO
LREF = 474.8100 INCHES YMRP = .0000 IN. YO
BREF = 936.6800 INCHES ZMRP = 375.0000 IN. ZO
SCALE = .0100

PARAMETRIC DATA

ALPHA = 35.000 PHI = .000
SPDBRK = 86.600 AILRON = .000
YP = 1.000 1S = 1.000
ELEVON = .000 MACH = 6.000
S-MODE = 2.000 S-DIR = 1.000

RUN NO. 153/ 0 RN/L = 2.28 GRADIENT INTERVAL = -.60/ .60

RN/L	BETA	ALPHA	MACH	PHI	Q	BP1	BP2	BP3	PT1	PT2	PSC
2.300	-3.159	34.38400	5.95330	-2.21440	2.48800	.04876	.05190	.04202	150.93000	4.62280	.05390
2.300	-3.000	34.39600	5.95340	-2.21550	2.48510	.04859	.05170	.04205	150.75000	4.61730	.05362
2.301	-2.800	34.39700	5.95350	-2.21590	2.48610	.04834	.05144	.04205	150.83000	4.61920	.05334
2.294	-2.600	34.40800	5.95360	-2.21700	2.48400	.04811	.05110	.04196	150.71000	4.61540	.05291
2.288	-2.400	34.41600	5.95370	-2.21790	2.48260	.04778	.05078	.04186	150.64000	4.61280	.05257
2.287	-2.200	34.42000	5.95380	-2.21850	2.48100	.04748	.05046	.04163	150.55000	4.60990	.05214
2.286	-2.000	34.43900	5.95390	-2.22010	2.47950	.04712	.05016	.04148	150.47000	4.60700	.05180
2.283	-1.800	34.43400	5.95400	-2.22050	2.48000	.04682	.04976	.04140	150.51000	4.60790	.05143
2.285	-1.600	34.44800	5.95410	-2.22180	2.47880	.04658	.04937	.04126	150.44000	4.60560	.05102
2.283	-1.400	34.45200	5.95420	-2.22260	2.47870	.04644	.04907	.04122	150.45000	4.60560	.05080
2.276	-1.200	34.45900	5.95430	-2.22350	2.47810	.04638	.04886	.04136	150.42000	4.60450	.05065
2.272	-1.000	34.47600	5.95440	-2.22510	2.47750	.04630	.04862	.04149	150.39000	4.60320	.05053
2.276	-.800	34.47400	5.95440	-2.22550	2.47870	.04621	.04837	.04166	150.47000	4.60540	.05040
2.278	-.600	34.48900	5.95450	-2.22690	2.47730	.04618	.04810	.04195	150.40000	4.60290	.05030
2.278	-.400	34.49300	5.95460	-2.22790	2.47730	.04614	.04793	.04220	150.41000	4.60300	.05024
2.278	-.200	34.50100	5.95470	-2.22900	2.47620	.04619	.04769	.04241	150.35000	4.60080	.05016
2.280	.000	34.51400	5.95480	-2.23040	2.47520	.04616	.04751	.04270	150.30000	4.59900	.05016
2.282	.200	34.51500	5.95490	-2.23130	2.47540	.04617	.04734	.04283	150.33000	4.59940	.05015
2.275	.400	34.53200	5.95500	-2.23300	2.47330	.04611	.04718	.04289	150.21000	4.59540	.05014
2.274	.600	34.53100	5.95510	-2.23380	2.47230	.04601	.04693	.04289	150.16000	4.59370	.05005
2.269	.800	34.54400	5.95520	-2.23520	2.47020	.04585	.04662	.04277	150.04000	4.58970	.04982
2.265	1.000	34.55100	5.95530	-2.23650	2.47020	.04557	.04628	.04265	150.05000	4.58970	.04960
2.260	1.200	34.55600	5.95540	-2.23770	2.47110	.04534	.04595	.04230	150.11000	4.59130	.04931
2.258	1.400	34.57400	5.95550	-2.23970	2.46880	.04513	.04569	.04220	149.98000	4.58710	.04913
2.260	1.600	34.56900	5.95560	-2.24030	2.46880	.04501	.04543	.04206	149.99000	4.58700	.04897
2.261	1.797	34.58700	5.95570	-2.24230	2.46750	.04495	.04521	.04205	149.93000	4.58470	.04894
	GRADIENT	.03893	.00050	-.00593	-.00425	-.00010	-.00096	.00083	-.20357	-.00789	-.00017

OA257 (LARC 20-M6-6559) OV102 (S7E060) (10 JUL 81)

REFERENCE DATA

SREF = 2690.0000 SQ.FT. XMRP = 1076.6800 IN. XO
LREF = 474.8100 INCHES YMRP = .0000 IN. YO
BREF = 936.6800 INCHES ZMRP = 375.0000 IN. ZO
SCALE = .0100

PARAMETRIC DATA

ALPHA = 35.000 PHI = .000
SPDBRK = 86.600 AILRON = .000
YP = 1.000 1S = 1.000
ELEVON = .000 MACH = 6.000
S-MODE = 2.000 S-DIR = 1.000

RUN NO. 114/ 0 RN/L = 7.56 GRADIENT INTERVAL = -.60/ .60

RN/L	BETA	ALPHA	MACH	PHI	Q	BP1	BP2	BP3	PT1	PT2	PSC
7.587	-4.973	33.84800	5.98080	-2.06390	6.92610	.12734	.13232	.10321	428.21000	12.86800	.14286
7.592	-4.800	33.86100	5.98090	-2.06640	6.93830	.12737	.13197	.10308	429.00000	12.89100	.14285
7.596	-4.600	33.85900	5.98100	-2.06870	6.93860	.12666	.13056	.10195	429.04000	12.89100	.14193
7.593	-4.400	33.87500	5.98100	-2.07210	6.94250	.12601	.12978	.10057	429.31000	12.89800	.14096
7.601	-4.200	33.87400	5.98110	-2.07460	6.94770	.12556	.12939	.09932	429.66000	12.90800	.14012
7.602	-4.000	33.89100	5.98120	-2.07790	6.95160	.12532	.12932	.09820	429.92000	12.91500	.13946
7.601	-3.800	33.89500	5.98130	-2.08070	6.94790	.12502	.12906	.09717	429.71000	12.90800	.13883
7.631	-3.600	33.91000	5.98140	-2.08380	6.97030	.12486	.12896	.09665	431.12000	12.95000	.13836
7.644	-3.400	33.92100	5.98140	-2.08690	6.97940	.12495	.12960	.09628	431.71000	12.96700	.13821
7.639	-3.200	33.92400	5.98150	-2.08970	6.97450	.12486	.13082	.09613	431.43000	12.95800	.13774
7.645	-3.000	33.94100	5.98160	-2.09340	6.97820	.12446	.13194	.09622	431.68000	12.96500	.13710
7.643	-2.800	33.94200	5.98170	-2.09580	6.98320	.12416	.13256	.09668	432.01000	12.97400	.13643
7.626	-2.600	33.95200	5.98180	-2.09940	6.96620	.12387	.13233	.09730	430.99000	12.94200	.13572
7.620	-2.400	33.95300	5.98180	-2.10200	6.95560	.12351	.13152	.09831	430.35000	12.92200	.13483
7.618	-2.200	33.96500	5.98190	-2.10540	6.95270	.12295	.13015	.09945	430.20000	12.91700	.13382
7.595	-2.000	33.96400	5.98200	-2.10820	6.93390	.12238	.12880	.10017	429.06000	12.88200	.13287
7.580	-1.800	33.97000	5.98210	-2.11150	6.91820	.12171	.12717	.10034	428.11000	12.85300	.13177
7.551	-1.600	33.97700	5.98220	-2.11480	6.89890	.12144	.12587	.10039	426.94000	12.81700	.13121
7.570	-1.400	33.98300	5.98220	-2.11740	6.91740	.12142	.12462	.10065	428.11000	12.85200	.13098
7.532	-1.200	33.99000	5.98230	-2.12100	6.88120	.12132	.12337	.10091	425.89000	12.78400	.13056
7.531	-1.000	33.99000	5.98240	-2.12340	6.87840	.12066	.12141	.10087	425.74000	12.77900	.12938
7.535	-.800	34.00900	5.98250	-2.12680	6.88780	.12036	.11991	.10089	426.35000	12.79700	.12850
7.532	-.600	34.00600	5.98260	-2.12900	6.89070	.11992	.11841	.10080	426.56000	12.80200	.12757
7.538	-.400	34.02700	5.98260	-2.13250	6.90250	.11936	.11706	.10077	427.31000	12.82400	.12644
7.530	-.200	34.02900	5.98270	-2.13500	6.89970	.11905	.11599	.10084	427.16000	12.81900	.12585
7.535	.000	34.03800	5.98280	-2.13810	6.90200	.11874	.11470	.10088	427.33000	12.82300	.12535
7.538	.200	34.04500	5.98290	-2.14130	6.89190	.11884	.11373	.10108	426.72000	12.80400	.12537
7.566	.400	34.05100	5.98300	-2.14420	6.90340	.11901	.11295	.10127	427.46000	12.82600	.12593
7.568	.600	34.06600	5.98300	-2.14800	6.90680	.11909	.11207	.10100	427.70000	12.83200	.12610
7.542	.800	34.06200	5.98310	-2.15080	6.89320	.11900	.11130	.10074	426.87000	12.80600	.12633
7.513	1.000	34.07600	5.98320	-2.15500	6.87500	.11867	.11032	.10049	425.77000	12.77300	.12605
7.508	1.200	34.07600	5.98330	-2.15820	6.87360	.11845	.10954	.10066	425.71000	12.77000	.12607
7.488	1.400	34.08300	5.98340	-2.16200	6.84890	.11800	.10875	.10094	424.20000	12.72400	.12588
7.480	1.600	34.08000	5.98350	-2.16490	6.84350	.11763	.10784	.10101	423.90000	12.71400	.12540
7.463	1.800	34.09000	5.98350	-2.16860	6.83800	.11725	.10701	.10121	423.57000	12.70400	.12493
7.455	2.000	34.10100	5.98360	-2.17250	6.83840	.11704	.10639	.10157	423.62000	12.70500	.12451
7.450	2.200	34.10200	5.98370	-2.17590	6.83960	.11697	.10599	.10221	423.72000	12.70700	.12447
7.464	2.400	34.12000	5.98380	-2.17990	6.85440	.11699	.10551	.10266	424.67000	12.73400	.12440
7.478	2.600	34.12400	5.98390	-2.18310	6.87430	.11715	.10538	.10295	425.92000	12.77100	.12445
7.450	2.768	34.11800	5.98400	-2.18600	6.84480	.11734	.10506	.10339	424.14000	12.71700	.12452
	GRADIENT	.04357	.00039	-.01548	.00755	-.00061	-.00527	.00033	.58571	.01411	-.00106

OA257 (LARC 20-M6-6559) OV102 (S7E160) (10 JUL 81)

REFERENCE DATA

SREF = 2690.0000 SQ.FT. XMRP = 1076.6800 IN. XO
LREF = 474.8100 INCHES YMRP = .0000 IN. YO
BREF = 936.6800 INCHES ZMRP = 375.0000 IN. ZO
SCALE = .0100

PARAMETRIC DATA

ALPHA = 35.000 PHI = .000
SPDBRK = 86.600 AILRON = .000
YP = 1.000 1S = 1.000
ELEVON = .000 MACH = 6.000
S-MODE = 2.000 S-DIR = 1.000

RUN NO. 2153/ 0 RN/L = 2.28 GRADIENT INTERVAL = -.60/ .60

RN/L	BETA	ALPHA	MACH	PHI	Q	BP1	BP2	BP3	PT1	PT2	PSC
2.300	-3.100	34.38900	5.95340	-2.21490	2.48670	.04870	.05185	.04204	150.85000	4.62030	.05379
2.301	-2.900	34.39600	5.95350	-2.21570	2.48570	.04846	.05155	.04202	150.80000	4.61860	.05346
2.299	-2.700	34.40000	5.95360	-2.21640	2.48580	.04824	.05124	.04204	150.82000	4.61880	.05311
2.290	-2.500	34.41700	5.95370	-2.21770	2.48340	.04794	.05094	.04189	150.68000	4.61430	.05275
2.287	-2.300	34.41600	5.95370	-2.21810	2.48220	.04761	.05060	.04173	150.62000	4.61210	.05236
2.287	-2.100	34.42900	5.95380	-2.21940	2.47980	.04732	.05033	.04150	150.48000	4.60750	.05196
2.284	-1.900	34.43300	5.95390	-2.22010	2.48020	.04698	.04996	.04145	150.51000	4.60830	.05160
2.286	-1.700	34.43900	5.95400	-2.22100	2.47960	.04670	.04955	.04128	150.49000	4.60710	.05120
2.284	-1.500	34.45200	5.95410	-2.22230	2.47880	.04650	.04923	.04122	150.45000	4.60560	.05092
2.280	-1.300	34.45300	5.95420	-2.22300	2.47880	.04637	.04895	.04128	150.46000	4.60560	.05071
2.273	-1.100	34.47100	5.95430	-2.22450	2.47790	.04633	.04875	.04145	150.41000	4.60400	.05056
2.274	-.900	34.47400	5.95440	-2.22520	2.47840	.04625	.04851	.04156	150.45000	4.60500	.05045
2.277	-.700	34.47900	5.95450	-2.22600	2.47790	.04618	.04823	.04182	150.43000	4.60400	.05032
2.278	-.500	34.49300	5.95460	-2.22750	2.47690	.04615	.04800	.04209	150.38000	4.60220	.05027
2.278	-.300	34.49400	5.95470	-2.22830	2.47690	.04611	.04777	.04226	150.39000	4.60220	.05021
2.279	-.100	34.51300	5.95480	-2.23000	2.47540	.04616	.04760	.04257	150.31000	4.59940	.05016
2.282	.100	34.51100	5.95490	-2.23070	2.47530	.04616	.04744	.04278	150.31000	4.59920	.05015
2.278	.300	34.52500	5.95500	-2.23220	2.47440	.04616	.04726	.04284	150.27000	4.59750	.05016
2.276	.500	34.53300	5.95510	-2.23360	2.47230	.04609	.04707	.04289	150.15000	4.59360	.05012
2.271	.700	34.53300	5.95520	-2.23430	2.47120	.04590	.04677	.04284	150.09000	4.59150	.04991
2.268	.900	34.55200	5.95520	-2.23630	2.46980	.04572	.04648	.04269	150.02000	4.58890	.04974
2.263	1.100	34.55000	5.95530	-2.23700	2.47080	.04548	.04610	.04244	150.09000	4.59090	.04948
2.258	1.300	34.56800	5.95540	-2.23890	2.46980	.04524	.04579	.04226	150.04000	4.58890	.04922
2.259	1.500	34.57000	5.95550	-2.23990	2.46850	.04506	.04555	.04213	149.97000	4.58650	.04903
2.260	1.700	34.57800	5.95560	-2.24130	2.46830	.04497	.04534	.04205	149.97000	4.58610	.04893
	GRADIENT	.04157	.00050	-.00613	-.00437	-.00003	-.00090	.00085	-.21571	-.00819	-.00012

OA257 (LARC 20-M6-6559) OV102 (S7E160) (10 JUL 81)

REFERENCE DATA

SREF = 2690.0000 SQ.FT. XMRP = 1076.6800 IN. XO
LREF = 474.8100 INCHES YMRP = .0000 IN. YO
BREF = 936.6800 INCHES ZMRP = 375.0000 IN. ZO
SCALE = .0100

PARAMETRIC DATA

ALPHA = 35.000 PHI = .000
SPDBRK = 86.600 AILRON = .000
YP = 1.000 1S = 1.000
ELEVON = .000 MACH = 6.000
S-MODE = 2.000 S-DIR = 1.000

RUN NO. 2114/ O RN/L = 7.56 GRADIENT INTERVAL = -.60/ .60

RN/L	BETA	ALPHA	MACH	PHI	Q	BP1	BP2	BP3	PT1	PT2	PSC
7.593	-4.900	33.85000	5.98080	-2.06470	6.93700	.12760	.13250	.10341	428.91000	12.88800	.14317
7.592	-4.700	33.86000	5.98090	-2.06770	6.93830	.12705	.13127	.10256	429.01000	12.89000	.14250
7.601	-4.500	33.86900	5.98100	-2.07060	6.94450	.12635	.13013	.10127	429.42000	12.90200	.14145
7.599	-4.300	33.87300	5.98110	-2.07320	6.94680	.12570	.12946	.09986	429.58000	12.90600	.14047
7.605	-4.100	33.88800	5.98120	-2.07630	6.95180	.12543	.12939	.09875	429.92000	12.91500	.13974
7.598	-3.900	33.88800	5.98120	-2.07920	6.94830	.12522	.12923	.09762	429.72000	12.90900	.13923
7.619	-3.700	33.90800	5.98130	-2.08230	6.96310	.12490	.12893	.09687	430.66000	12.93600	.13850
7.638	-3.500	33.91000	5.98140	-2.08520	6.97360	.12489	.12917	.09648	431.34000	12.95600	.13824
7.646	-3.300	33.92900	5.98150	-2.08840	6.98380	.12497	.13018	.09618	431.99000	12.97500	.13801
7.638	-3.100	33.93000	5.98160	-2.09150	6.97190	.12468	.13148	.09612	431.28000	12.95300	.13742
7.651	-2.900	33.94500	5.98160	-2.09460	6.98810	.12430	.13233	.09642	432.31000	12.98300	.13684
7.629	-2.700	33.94600	5.98170	-2.09770	6.97090	.12401	.13255	.09698	431.27000	12.95100	.13599
7.618	-2.500	33.95100	5.98180	-2.10060	6.95730	.12372	.13205	.09784	430.45000	12.92600	.13539
7.615	-2.300	33.96100	5.98190	-2.10390	6.94820	.12325	.13088	.09888	429.91000	12.90900	.13428
7.613	-2.100	33.96300	5.98200	-2.10660	6.95160	.12270	.12946	.09990	430.14000	12.91500	.13343
7.585	-1.900	33.97000	5.98200	-2.11010	6.92020	.12196	.12793	.10031	428.23000	12.85700	.13217
7.567	-1.700	33.96900	5.98210	-2.11280	6.91110	.12159	.12656	.10038	427.69000	12.84000	.13156
7.561	-1.500	33.98400	5.98220	-2.11640	6.91010	.12134	.12513	.10053	427.65000	12.83800	.13103
7.550	-1.300	33.98300	5.98230	-2.11890	6.89990	.12151	.12413	.10086	427.04000	12.81900	.13097
7.525	-1.100	33.98900	5.98240	-2.12220	6.87420	.12103	.12242	.10090	425.47000	12.77100	.13006
7.542	-.900	34.00000	5.98240	-2.12500	6.89040	.12046	.12059	.10084	426.50000	12.80100	.12887
7.531	-.700	34.00700	5.98250	-2.12790	6.88770	.12017	.11918	.10086	426.36000	12.79600	.12807
7.535	-.500	34.02200	5.98260	-2.13100	6.89610	.11959	.11763	.10077	426.90000	12.81200	.12688
7.533	-.300	34.02300	5.98270	-2.13350	6.90190	.11921	.11660	.10081	427.28000	12.82300	.12623
7.529	-.100	34.03700	5.98280	-2.13670	6.89750	.11883	.11531	.10082	427.04000	12.81500	.12547
7.535	.100	34.03600	5.98280	-2.13940	6.89950	.11879	.11420	.10095	427.18000	12.81800	.12532
7.552	.300	34.05200	5.98290	-2.14310	6.89470	.11894	.11339	.10126	426.91000	12.80900	.12570
7.574	.500	34.05600	5.98300	-2.14580	6.91090	.11908	.11250	.10116	427.93000	12.83900	.12600
7.549	.700	34.06300	5.98310	-2.14940	6.89630	.11915	.11172	.10087	427.06000	12.81200	.12647
7.528	.900	34.06800	5.98320	-2.15280	6.88390	.11878	.11074	.10052	426.31000	12.78900	.12599
7.510	1.100	34.07500	5.98320	-2.15650	6.87450	.11863	.10999	.10061	425.75000	12.77200	.12619
7.494	1.300	34.08500	5.98330	-2.16040	6.85790	.11828	.10917	.10076	424.75000	12.74100	.12612
7.495	1.500	34.08000	5.98340	-2.16330	6.85380	.11779	.10828	.10095	424.52000	12.73300	.12570
7.471	1.700	34.09100	5.98350	-2.16700	6.84040	.11740	.10740	.10105	423.71000	12.70800	.12509
7.454	1.900	34.09000	5.98360	-2.17030	6.83430	.11714	.10663	.10139	423.36000	12.69700	.12470
7.455	2.100	34.10400	5.98370	-2.17420	6.84290	.11699	.10619	.10196	423.92000	12.71300	.12445
7.457	2.300	34.11000	5.98370	-2.17780	6.84590	.11699	.10570	.10242	424.12000	12.71900	.12439
7.473	2.500	34.12300	5.98380	-2.18160	6.86540	.11708	.10547	.10284	425.35000	12.75500	.12446
7.473	2.700	34.13200	5.98390	-2.18530	6.87290	.11730	.10529	.10308	425.85000	12.76900	.12448
	GRADIENT	.03657	.00037	-.01507	.00777	-.00049	-.00520	.00049	.59714	.01371	-.00088

REFERENCE DATA

SREF = 2690.0000 SQ.FT. XMRP = 1076.6800 IN. XO
LREF = 474.8100 INCHES YMRP = .0000 IN. YO
BREF = 936.6800 INCHES ZMRP = 375.0000 IN. ZO
SCALE = .0100

PARAMETRIC DATA

ALPHA = 37.500 PHI = .000
SPDBRK = 86.600 AILRON = .000
YP = 1.000 1S = 1.000
ELEVON = .000 MACH = 6.000
S-MODE = 2.000 S-DIR = 1.000

RUN NO. 154/ O RN/L = 2.31 GRADIENT INTERVAL = -.60/ .60

RN/L	BETA	ALPHA	MACH	PHI	Q	BP1	BP2	BP3	PT1	PT2	PSC
2.299	-3.244	36.73300	5.95230	-2.34360	2.49510	.05228	.05494	.04412	151.25000	4.63600	.05765
2.298	-3.100	36.72900	5.95240	-2.34360	2.49580	.05207	.05474	.04397	151.30000	4.63730	.05739
2.297	-2.900	36.74900	5.95250	-2.34520	2.49620	.05176	.05439	.04396	151.34000	4.63800	.05696
2.300	-2.700	36.75100	5.95270	-2.34590	2.49780	.05138	.05398	.04396	151.45000	4.64110	.05659
2.302	-2.500	36.76000	5.95280	-2.34680	2.49720	.05109	.05355	.04398	151.42000	4.64000	.05618
2.305	-2.300	36.77100	5.95290	-2.34790	2.49900	.05080	.05315	.04409	151.55000	4.64330	.05583
2.304	-2.100	36.77600	5.95300	-2.34880	2.49920	.05054	.05276	.04416	151.57000	4.64360	.05550
2.305	-1.900	36.79200	5.95310	-2.35020	2.49770	.05027	.05241	.04420	151.49000	4.64090	.05525
2.309	-1.700	36.79300	5.95320	-2.35100	2.49940	.05005	.05198	.04424	151.61000	4.64400	.05493
2.307	-1.500	36.80800	5.95340	-2.35260	2.49890	.04978	.05158	.04431	151.59000	4.64310	.05464
2.307	-1.300	36.81000	5.95350	-2.35340	2.49990	.04957	.05122	.04441	151.66000	4.64490	.05442
2.303	-1.100	36.82500	5.95360	-2.35500	2.49910	.04939	.05094	.04451	151.62000	4.64330	.05419
2.302	-.900	36.83000	5.95370	-2.35590	2.50000	.04923	.05073	.04472	151.69000	4.64500	.05406
2.309	-.700	36.83800	5.95380	-2.35720	2.50140	.04912	.05053	.04486	151.79000	4.64770	.05388
2.314	-.500	36.85200	5.95400	-2.35870	2.50080	.04901	.05039	.04500	151.77000	4.64660	.05376
2.307	-.300	36.85000	5.95410	-2.35960	2.50090	.04889	.05021	.04508	151.78000	4.64670	.05358
2.304	-.100	36.87100	5.95420	-2.36150	2.50100	.04874	.05005	.04517	151.80000	4.64690	.05346
2.306	.100	36.86900	5.95430	-2.36230	2.50190	.04864	.04988	.04521	151.87000	4.64860	.05334
2.302	.300	36.88600	5.95440	-2.36410	2.50090	.04852	.04976	.04521	151.82000	4.64680	.05321
2.307	.500	36.88700	5.95460	-2.36520	2.50100	.04840	.04961	.04511	151.84000	4.64700	.05306
2.308	.700	36.89900	5.95470	-2.36670	2.50040	.04823	.04938	.04499	151.81000	4.64570	.05285
2.306	.900	36.90900	5.95480	-2.36820	2.50150	.04799	.04911	.04476	151.90000	4.64790	.05262
2.308	1.100	36.91300	5.95490	-2.36940	2.50170	.04778	.04882	.04445	151.92000	4.64830	.05237
2.309	1.300	36.92800	5.95500	-2.37110	2.50110	.04767	.04860	.04430	151.90000	4.64710	.05226
2.317	1.500	36.92800	5.95510	-2.37200	2.50240	.04770	.04845	.04420	151.99000	4.64940	.05229
2.316	1.700	36.95300	5.95530	-2.37430	2.50270	.04792	.04842	.04433	152.02000	4.65000	.05265
	GRADIENT	.04014	.00057	-.00669	.00027	-.00061	-.00078	.00014	.07714	.00057	-.00068

OA257 (LARC 20-M6-6559) OV102 (S7E061) (10 JUL 81)

REFERENCE DATA

SREF = 2690.0000 SQ.FT. XMRP = 1076.6800 IN. XO
LREF = 474.8100 INCHES YMRP = .0000 IN. YO
BREF = 936.6800 INCHES ZMRP = 375.0000 IN. ZO
SCALE = .0100

PARAMETRIC DATA

ALPHA = 37.500 PHI = .000
SPDBRK = 86.600 AILRON = .000
YP = 1.000 1S = 1.000
ELEVON = .000 MACH = 6.000
S-MODE = 2.000 S-DIR = 1.000

RUN NO. 115/ 0 RN/L = 7.52 GRADIENT INTERVAL = -.60/ .60

RN/L	BETA	ALPHA	MACH	PHI	Q	BP1	BP2	BP3	PT1	PT2	PSC
7.576	-4.943	36.36200	5.98410	-2.19140	6.95590	.14085	.14043	.11126	431.05000	12.92300	.15702
7.583	-4.800	36.36400	5.98420	-2.19360	6.96180	.14092	.14009	.11144	431.44000	12.93400	.15673
7.591	-4.600	36.37400	5.98420	-2.19730	6.96630	.14126	.14075	.11094	431.73000	12.94200	.15708
7.593	-4.400	36.38100	5.98430	-2.20000	6.96810	.14192	.14407	.10958	431.86000	12.94600	.15768
7.574	-4.200	36.38400	5.98430	-2.20340	6.95250	.14089	.14354	.10963	430.90000	12.91700	.15607
7.561	-4.000	36.39500	5.98440	-2.20760	6.93840	.14051	.14554	.10908	430.04000	12.89000	.15571
7.564	-3.800	36.39400	5.98440	-2.21080	6.93930	.14116	.14875	.10719	430.11000	12.89200	.15728
7.547	-3.600	36.40800	5.98450	-2.21480	6.92050	.14115	.14867	.10595	428.97000	12.85700	.15732
7.543	-3.400	36.40200	5.98450	-2.21800	6.90370	.14062	.14746	.10523	427.93000	12.82600	.15675
7.540	-3.200	36.42000	5.98460	-2.22190	6.91070	.14011	.14580	.10526	428.38000	12.83900	.15614
7.524	-3.000	36.41900	5.98460	-2.22510	6.90320	.13930	.14417	.10560	427.93000	12.82500	.15493
7.527	-2.800	36.43500	5.98470	-2.22890	6.90590	.13830	.14255	.10617	428.12000	12.83000	.15342
7.532	-2.600	36.43900	5.98470	-2.23190	6.90590	.13762	.14106	.10706	428.13000	12.83000	.15232
7.532	-2.400	36.44900	5.98480	-2.23540	6.90840	.13716	.13967	.10812	428.30000	12.83500	.15191
7.526	-2.200	36.46000	5.98480	-2.23870	6.90620	.13709	.13831	.10900	428.18000	12.83100	.15177
7.534	-2.000	36.46600	5.98490	-2.24170	6.91580	.13780	.13767	.11042	428.78000	12.84800	.15282
7.538	-1.800	36.48300	5.98490	-2.24490	6.91580	.13818	.13728	.11139	428.80000	12.84800	.15328
7.544	-1.600	36.48000	5.98490	-2.24750	6.92070	.13839	.13684	.11221	429.12000	12.85800	.15332
7.553	-1.400	36.50100	5.98500	-2.25120	6.92570	.13852	.13568	.11272	429.44000	12.86700	.15303
7.586	-1.200	36.51000	5.98500	-2.25350	6.95520	.13893	.13473	.11341	431.29000	12.92200	.15322
7.560	-1.000	36.52000	5.98510	-2.25710	6.93350	.13888	.13403	.11417	429.95000	12.88100	.15305
7.565	-.800	36.52500	5.98510	-2.26020	6.93580	.13847	.13316	.11434	430.11000	12.88600	.15230
7.551	-.600	36.53200	5.98520	-2.26340	6.92550	.13807	.13214	.11440	429.49000	12.86600	.15168
7.536	-.400	36.53500	5.98520	-2.26660	6.90950	.13758	.13125	.11423	428.51000	12.83700	.15085
7.504	-.200	36.53100	5.98530	-2.26980	6.87900	.13653	.12978	.11378	426.63000	12.78000	.14929
7.486	.000	36.54200	5.98530	-2.27350	6.86050	.13553	.12802	.11317	425.50000	12.74600	.14783
7.465	.200	36.53600	5.98540	-2.27650	6.83780	.13477	.12634	.11245	424.11000	12.70400	.14686
7.463	.400	36.55300	5.98540	-2.28030	6.83980	.13400	.12485	.11202	424.24000	12.70700	.14576
7.473	.600	36.55500	5.98550	-2.28340	6.84860	.13341	.12353	.11152	424.81000	12.72400	.14495
7.475	.800	36.56800	5.98550	-2.28720	6.83850	.13263	.12232	.11090	424.19000	12.70500	.14400
7.464	1.000	36.56900	5.98560	-2.29030	6.84020	.13185	.12142	.11017	424.31000	12.70800	.14294
7.463	1.200	36.58700	5.98560	-2.29460	6.85250	.13103	.12068	.10946	425.09000	12.73100	.14217
7.459	1.400	36.59200	5.98570	-2.29820	6.85360	.13058	.12021	.10903	425.17000	12.73300	.14160
7.464	1.600	36.59700	5.98570	-2.30190	6.86130	.13021	.11972	.10902	425.66000	12.74700	.14135
7.466	1.800	36.61500	5.98580	-2.30630	6.85930	.12991	.11924	.10909	425.56000	12.74400	.14098
7.473	2.000	36.61200	5.98580	-2.30980	6.86180	.12952	.11854	.10914	425.72000	12.74800	.14047
7.469	2.200	36.62900	5.98590	-2.31420	6.86180	.12918	.11776	.10932	425.73000	12.74800	.13990
7.476	2.400	36.62800	5.98590	-2.31780	6.86980	.12922	.11691	.10967	426.25000	12.76300	.13975
7.470	2.600	36.64300	5.98600	-2.32240	6.86590	.12932	.11614	.11012	426.02000	12.75600	.13966
7.472	2.744	36.64300	5.98600	-2.32500	6.86080	.12962	.11504	.11042	425.72000	12.74600	.13953
	GRADIENT	.01964	.00025	-.01680	-.07345	-.00409	-.00751	-.00257	-4.48213	-.13607	-.00586

OA257 (LARC 20-M6-6559) OV102 (S7E161) (10 JUL 81)

REFERENCE DATA

SREF = 2690.0000 SQ.FT. XMRP = 1076.6800 IN. XO
LREF = 474.8100 INCHES YMRP = .0000 IN. YO
BREF = 936.6800 INCHES ZMRP = 375.0000 IN. ZO
SCALE = .0100

PARAMETRIC DATA

ALPHA = 37.500 PHI = .000
SPDBRK = 86.600 AILRON = .000
YP = 1.000 1S = 1.000
ELEVON = .000 MACH = 6.000
S-MODE = 2.000 S-DIR = 1.000

RUN NO. 2154/ O RN/L = 2.31 GRADIENT INTERVAL = -.60/ .60

RN/L	BETA	ALPHA	MACH	PHI	Q	BP1	BP2	BP3	PT1	PT2	PSC
2.298	-3.200	36.73100	5.95240	-2.34360	2.49510	.05223	.05489	.04406	151.25000	4.63600	.05758
2.298	-3.000	36.73700	5.95250	-2.34430	2.49640	.05194	.05459	.04396	151.35000	4.63850	.05716
2.296	-2.800	36.75500	5.95260	-2.34570	2.49640	.05156	.05422	.04398	151.36000	4.63850	.05682
2.301	-2.600	36.75100	5.95270	-2.34600	2.49780	.05125	.05376	.04400	151.45000	4.64100	.05636
2.303	-2.400	36.77200	5.95280	-2.34770	2.49830	.05092	.05335	.04405	151.50000	4.64190	.05599
2.305	-2.200	36.77100	5.95290	-2.34820	2.49970	.05065	.05295	.04409	151.59000	4.64460	.05568
2.304	-2.000	36.79000	5.95310	-2.34990	2.49830	.05041	.05261	.04420	151.52000	4.64200	.05536
2.309	-1.800	36.79100	5.95320	-2.35070	2.49870	.05014	.05218	.04425	151.56000	4.64270	.05511
2.307	-1.600	36.79900	5.95330	-2.35170	2.49890	.04992	.05178	.04427	151.58000	4.64300	.05477
2.308	-1.400	36.81000	5.95340	-2.35310	2.49940	.04966	.05140	.04436	151.63000	4.64400	.05453
2.305	-1.200	36.81500	5.95350	-2.35400	2.49970	.04947	.05106	.04445	151.65000	4.64440	.05427
2.303	-1.000	36.83300	5.95370	-2.35570	2.49950	.04931	.05085	.04458	151.66000	4.64420	.05411
2.305	-.800	36.83100	5.95380	-2.35640	2.50110	.04918	.05060	.04476	151.77000	4.64720	.05396
2.314	-.600	36.84700	5.95390	-2.35810	2.50100	.04905	.05047	.04493	151.77000	4.64700	.05382
2.310	-.400	36.85100	5.95400	-2.35920	2.50120	.04896	.05030	.04505	151.79000	4.64730	.05368
2.305	-.200	36.86400	5.95410	-2.36060	2.50120	.04881	.05015	.04511	151.81000	4.64720	.05352
2.305	.000	36.86700	5.95430	-2.36180	2.50140	.04870	.05000	.04521	151.83000	4.64770	.05342
2.304	.200	36.87500	5.95440	-2.36310	2.50130	.04859	.04982	.04521	151.84000	4.64760	.05326
2.302	.400	36.89000	5.95450	-2.36480	2.50100	.04847	.04969	.04521	151.83000	4.64680	.05311
2.309	.600	36.89000	5.95460	-2.36570	2.50130	.04831	.04944	.04509	151.87000	4.64750	.05295
2.306	.800	36.90900	5.95470	-2.36780	2.50080	.04809	.04926	.04490	151.85000	4.64650	.05273
2.308	1.000	36.90900	5.95480	-2.36870	2.50230	.04789	.04894	.04453	151.95000	4.64940	.05250
2.307	1.200	36.92800	5.95500	-2.37070	2.50120	.04771	.04869	.04429	151.90000	4.64740	.05229
2.315	1.400	36.92600	5.95510	-2.37150	2.50190	.04767	.04853	.04422	151.95000	4.64860	.05229
2.316	1.600	36.94000	5.95520	-2.37310	2.50240	.04781	.04844	.04423	152.00000	4.64950	.05241
2.316	1.704	36.95300	5.95530	-2.37430	2.50270	.04793	.04842	.04434	152.02000	4.65000	.05267
	GRADIENT	.03893	.00061	-.00652	.00011	-.00062	-.00082	.00016	.07321	.00016	-.00071

OA257 (LARC 20-M6-6559) OV102 (S7E161) (10 JUL 81)

REFERENCE DATA

SREF = 2690.0000 SQ.FT. XMRP = 1076.6800 IN. XO
LREF = 474.8100 INCHES YMRP = .0000 IN. YO
BREF = 936.6800 INCHES ZMRP = 375.0000 IN. ZO
SCALE = .0100

PARAMETRIC DATA

ALPHA = 37.500 PHI = .000
SPDBRK = 86.600 AILRON = .000
YP = 1.000 1S = 1.000
ELEVON = .000 MACH = 6.000
S-MODE = 2.000 S-DIR = 1.000

RUN NO. 2115/ 0 RN/L = 7.52 GRADIENT INTERVAL = -.60/ .60

RN/L	BETA	ALPHA	MACH	PHI	Q	BP1	BP2	BP3	PT1	PT2	PSC
7.582	-4.900	36.36000	5.98410	-2.19190	6.96680	.14087	.14043	.11140	431.74000	12.94300	.15695
7.593	-4.700	36.37600	5.98420	-2.19560	6.96540	.14089	.13971	.11138	431.67000	12.94100	.15651
7.593	-4.500	36.37100	5.98420	-2.19820	6.97060	.14192	.14299	.11000	432.00000	12.95000	.15787
7.583	-4.300	36.38800	5.98430	-2.20190	6.95920	.14151	.14400	.10955	431.31000	12.92900	.15696
7.573	-4.100	36.38600	5.98430	-2.20500	6.95040	.14035	.14355	.10965	430.78000	12.91300	.15524
7.554	-3.900	36.39600	5.98440	-2.20940	6.93110	.14088	.14774	.10814	429.60000	12.87700	.15666
7.557	-3.700	36.39700	5.98440	-2.21270	6.93290	.14127	.14893	.10649	429.73000	12.88000	.15747
7.546	-3.500	36.40200	5.98450	-2.21610	6.91280	.14091	.14822	.10559	428.50000	12.84300	.15713
7.540	-3.300	36.41400	5.98450	-2.22020	6.90360	.14040	.14659	.10515	427.93000	12.82600	.15641
7.533	-3.100	36.41700	5.98460	-2.22320	6.90890	.13984	.14501	.10548	428.28000	12.83600	.15574
7.523	-2.900	36.43400	5.98460	-2.22740	6.90340	.13878	.14337	.10586	427.95000	12.82500	.15409
7.532	-2.700	36.43300	5.98470	-2.23030	6.90780	.13796	.14177	.10659	428.24000	12.83400	.15290
7.531	-2.500	36.44900	5.98470	-2.23390	6.90600	.13732	.14033	.10762	428.14000	12.83000	.15206
7.528	-2.300	36.45000	5.98480	-2.23690	6.90730	.13703	.13897	.10854	428.24000	12.83300	.15175
7.532	-2.100	36.46900	5.98480	-2.24060	6.91330	.13742	.13785	.10965	428.62000	12.84400	.15220
7.535	-1.900	36.47300	5.98490	-2.24310	6.91640	.13813	.13753	.11106	428.83000	12.85000	.15323
7.547	-1.700	36.48700	5.98490	-2.24640	6.92380	.13835	.13713	.11182	429.30000	12.86300	.15339
7.541	-1.500	36.49200	5.98500	-2.24940	6.91690	.13834	.13626	.11246	428.89000	12.85100	.15309
7.575	-1.300	36.50300	5.98500	-2.25220	6.94360	.13872	.13511	.11308	430.56000	12.90000	.15317
7.577	-1.100	36.52100	5.98510	-2.25560	6.95070	.13903	.13444	.11377	431.02000	12.91300	.15327
7.560	-.900	36.51500	5.98510	-2.25820	6.93080	.13865	.13354	.11430	429.80000	12.87600	.15267
7.551	-.700	36.53100	5.98520	-2.26200	6.92520	.13831	.13266	.11440	429.46000	12.86600	.15203
7.555	-.500	36.53100	5.98520	-2.26490	6.92730	.13785	.13173	.11438	429.61000	12.87000	.15129
7.517	-.300	36.53800	5.98530	-2.26850	6.89200	.13709	.13057	.11402	427.43000	12.80400	.15017
7.493	-.100	36.53100	5.98530	-2.27130	6.86750	.13597	.12888	.11346	425.92000	12.75900	.14837
7.473	.100	36.54100	5.98540	-2.27510	6.84690	.13515	.12724	.11288	424.66000	12.72000	.14742
7.461	.300	36.54100	5.98540	-2.27820	6.83470	.13436	.12554	.11222	423.92000	12.69800	.14623
7.468	.500	36.55500	5.98550	-2.28180	6.84660	.13368	.12415	.11179	424.68000	12.72000	.14537
7.471	.700	36.56300	5.98550	-2.28550	6.83750	.13304	.12293	.11120	424.12000	12.70300	.14448
7.478	.900	36.56300	5.98560	-2.28840	6.84480	.13226	.12185	.11058	424.59000	12.71700	.14351
7.459	1.100	36.58600	5.98560	-2.29290	6.84330	.13140	.12098	.10976	424.51000	12.71400	.14248
7.464	1.300	36.58500	5.98560	-2.29610	6.85660	.13081	.12047	.10923	425.35000	12.73800	.14186
7.458	1.500	36.60000	5.98570	-2.30030	6.85470	.13040	.11997	.10901	425.25000	12.73500	.14146
7.469	1.700	36.60100	5.98570	-2.30360	6.86510	.13010	.11947	.10911	425.91000	12.75400	.14125
7.473	1.900	36.61900	5.98580	-2.30840	6.86060	.12971	.11894	.10913	425.64000	12.74600	.14073
7.471	2.100	36.61900	5.98580	-2.31190	6.86250	.12935	.11815	.10920	425.77000	12.74900	.14014
7.474	2.300	36.62800	5.98590	-2.31600	6.86690	.12916	.11732	.10946	426.06000	12.75800	.13983
7.473	2.500	36.64000	5.98590	-2.32030	6.86720	.12934	.11655	.10990	426.09000	12.75800	.13972
7.470	2.700	36.63400	5.98600	-2.32380	6.86540	.12945	.11553	.11034	426.00000	12.75500	.13963
	GRADIENT	.01986	.00027	-.01677	-.08514	-.00427	-.00780	-.00270	-5.20572	-.15814	-.00605

OA257 (LARC 20-M6-6559) OV102 (S7E062) (10 JUL 81)

REFERENCE DATA

SREF = 2690.0000 SQ.FT. XMRP = 1076.6800 IN. XO
LREF = 474.8100 INCHES YMRP = .0000 IN. YO
BREF = 936.6800 INCHES ZMRP = 375.0000 IN. ZO
SCALE = .0100

PARAMETRIC DATA

ALPHA = 40.000 PHI = .000
SPDBRK = 86.600 AILRON = .000
YP = 1.000 1S = 1.000
ELEVON = .000 MACH = 6.000
S-MODE = 2.000 S-DIR = 1.000

RUN NO. 155/ 0 RN/L = 2.23 GRADIENT INTERVAL = -.60/ .60

RN/L	BETA	ALPHA	MACH	PHI	Q	BP1	BP2	BP3	PT1	PT2	PSC
2.237	-3.296	39.22900	5.95650	-2.47800	2.45410	.05523	.05689	.04762	149.20000	4.55980	.06119
2.236	-3.100	39.22800	5.95660	-2.47840	2.45490	.05501	.05639	.04762	149.25000	4.56120	.06092
2.230	-2.900	39.24800	5.95670	-2.48000	2.45390	.05477	.05593	.04762	149.20000	4.55940	.06058
2.233	-2.700	39.24600	5.95680	-2.48050	2.45520	.05453	.05547	.04761	149.29000	4.56170	.06037
2.232	-2.500	39.26600	5.95690	-2.48210	2.45380	.05440	.05510	.04765	149.21000	4.55920	.06019
2.233	-2.300	39.26300	5.95690	-2.48260	2.45500	.05431	.05474	.04771	149.30000	4.56150	.06011
2.234	-2.100	39.28400	5.95700	-2.48420	2.45420	.05428	.05443	.04785	149.26000	4.56000	.06011
2.236	-1.900	39.28200	5.95710	-2.48490	2.45600	.05433	.05413	.04816	149.37000	4.56330	.06021
2.239	-1.700	39.30400	5.95720	-2.48670	2.45430	.05434	.05385	.04836	149.28000	4.56020	.06024
2.244	-1.500	39.30300	5.95730	-2.48740	2.45650	.05439	.05355	.04856	149.43000	4.56430	.06030
2.244	-1.300	39.32000	5.95740	-2.48900	2.45520	.05442	.05332	.04872	149.35000	4.56180	.06029
2.239	-1.100	39.32100	5.95750	-2.48990	2.45530	.05442	.05312	.04903	149.36000	4.56190	.06032
2.235	-.900	39.33600	5.95750	-2.49140	2.45500	.05443	.05292	.04922	149.36000	4.56140	.06029
2.237	-.700	39.34100	5.95760	-2.49260	2.45440	.05453	.05287	.04946	149.33000	4.56040	.06041
2.238	-.500	39.35000	5.95770	-2.49400	2.45460	.05474	.05282	.04972	149.35000	4.56070	.06058
2.238	-.300	39.36400	5.95780	-2.49550	2.45380	.05500	.05286	.05014	149.31000	4.55930	.06089
2.232	-.100	39.36900	5.95790	-2.49670	2.45350	.05521	.05283	.05050	149.30000	4.55860	.06109
2.226	.100	39.38100	5.95800	-2.49830	2.45300	.05525	.05278	.05068	149.28000	4.55780	.06115
2.226	.300	39.38700	5.95810	-2.49960	2.45360	.05504	.05243	.05036	149.32000	4.55870	.06083
2.227	.500	39.40100	5.95810	-2.50160	2.45330	.05478	.05207	.04979	149.32000	4.55830	.06050
2.228	.700	39.40300	5.95820	-2.50280	2.45350	.05449	.05168	.04908	149.34000	4.55860	.06012
2.230	.900	39.41700	5.95830	-2.50470	2.45260	.05412	.05139	.04844	149.29000	4.55690	.05974
2.230	1.100	39.41800	5.95840	-2.50580	2.45250	.05388	.05107	.04784	149.30000	4.55680	.05936
2.233	1.300	39.44000	5.95850	-2.50810	2.45260	.05371	.05086	.04745	149.31000	4.55700	.05915
2.233	1.500	39.43800	5.95860	-2.50930	2.45330	.05371	.05059	.04723	149.36000	4.55820	.05912
2.230	1.646	39.46000	5.95860	-2.51120	2.45250	.05374	.05054	.04718	149.32000	4.55680	.05916
	GRADIENT	.04800	.00043	-.00741	-.00109	.00005	-.00072	.00017	-.02000	-.00209	-.00007

OA257 (LARC 20-M6-6559) OV102 (S7E062) (10 JUL 81)

REFERENCE DATA

SREF = 2690.0000 SQ.FT. XMRP = 1076.6800 IN. XO
LREF = 474.8100 INCHES YMRP = .0000 IN. YO
BREF = 936.6800 INCHES ZMRP = 375.0000 IN. ZO
SCALE = .0100

PARAMETRIC DATA

ALPHA = 40.000 PHI = .000
SPDBRK = 86.600 AILRON = .000
YP = 1.000 1S = 1.000
ELEVON = .000 MACH = 6.000
S-MODE = 2.000 S-DIR = 1.000

RUN NO. 116/ 0 RN/L = 7.41 GRADIENT INTERVAL = -.60/ .60

RN/L	BETA	ALPHA	MACH	PHI	Q	BP1	BP2	BP3	PT1	PT2	PSC
7.434	-5.333	38.82200	5.98180	-2:31910	6.83750	.14972	.15530	.12128	423.03000	12.70300	.16258
7.429	-5.200	38.82500	5.98190	-2.32120	6.83870	.14969	.15535	.12160	423.13000	12.70500	.16260
7.416	-5.000	38.84000	5.98190	-2.32500	6.82950	.14905	.15483	.12148	422.58000	12.68800	.16190
7.418	-4.800	38.84300	5.98200	-2.32790	6.83710	.14884	.15463	.12131	423.08000	12.70200	.16166
7.404	-4.600	38.85200	5.98210	-2.33160	6.82620	.14883	.15389	.12049	422.42000	12.68200	.16184
7.404	-4.400	38.86000	5.98220	-2.33480	6.82770	.14895	.15287	.11952	422.54000	12.68500	.16203
7.413	-4.200	38.87600	5.98220	-2.33860	6.83120	.14961	.15169	.11926	422.78000	12.69100	.16316
7.416	-4.000	38.88700	5.98230	-2.34180	6.84080	.14999	.15056	.11961	423.40000	12.70900	.16353
7.405	-3.800	38.88700	5.98240	-2.34480	6.83870	.15032	.14943	.12021	423.29000	12.70500	.16397
7.399	-3.600	38.90500	5.98250	-2.34860	6.84090	.15049	.14829	.12078	423.45000	12.70900	.16385
7.394	-3.400	38.90400	5.98260	-2.35140	6.83860	.15026	.14695	.12138	423.33000	12.70500	.16338
7.412	-3.200	38.92900	5.98260	-2.35510	6.85770	.15004	.14584	.12179	424.53000	12.74100	.16290
7.402	-3.000	38.93100	5.98270	-2.35820	6.85600	.14997	.14464	.12211	424.45000	12.73700	.16271
7.395	-2.800	38.94600	5.98280	-2.36210	6.85680	.14957	.14342	.12239	424.52000	12.73900	.16225
7.391	-2.600	38.95100	5.98290	-2.36550	6.85760	.14908	.14227	.12269	424.59000	12.74000	.16149
7.409	-2.400	38.97000	5.98290	-2.36910	6.88140	.14876	.14141	.12333	426.09000	12.78500	.16103
7.427	-2.200	38.98300	5.98300	-2.37260	6.89170	.14858	.14059	.12425	426.75000	12.80400	.16054
7.443	-2.000	38.99200	5.98310	-2.37630	6.89560	.14865	.13989	.12552	427.01000	12.81100	.16052
7.438	-1.800	39.00900	5.98320	-2.38040	6.89410	.14872	.13923	.12672	426.94000	12.80800	.16047
7.441	-1.600	39.00700	5.98320	-2.38340	6.89910	.14895	.13863	.12768	427.28000	12.81800	.16071
7.436	-1.400	39.03300	5.98330	-2.38750	6.90270	.14883	.13779	.12848	427.52000	12.82400	.16065
7.430	-1.200	39.02900	5.98340	-2.39050	6.90330	.14885	.13729	.12922	427.58000	12.82500	.16089
7.422	-1.000	39.04300	5.98350	-2.39460	6.89670	.14833	.13684	.12945	427.19000	12.81300	.16068
7.411	-.800	39.04400	5.98350	-2.39790	6.89250	.14710	.13654	.12880	426.95000	12.80500	.15993
7.419	-.600	39.06000	5.98360	-2.40240	6.89380	.14608	.13628	.12754	427.06000	12.80800	.15921
7.429	-.400	39.06700	5.98370	-2.40620	6.90210	.14495	.13577	.12596	427.59000	12.82300	.15814
7.423	-.200	39.08200	5.98380	-2.41010	6.91340	.14390	.13552	.12465	428.32000	12.84400	.15733
7.427	.000	39.09500	5.98380	-2.41410	6.91410	.14295	.13520	.12339	428.38000	12.84500	.15646
7.411	.200	39.09100	5.98390	-2.41730	6.89930	.14181	.13503	.12214	427.49000	12.81800	.15551
7.421	.400	39.11500	5.98400	-2.42150	6.91320	.14061	.13456	.12065	428.37000	12.84400	.15430
7.411	.600	39.10900	5.98410	-2.42430	6.91330	.13956	.13411	.11949	428.40000	12.84400	.15327
7.406	.800	39.12600	5.98420	-2.42860	6.90960	.13897	.13368	.11884	428.19000	12.83700	.15267
7.402	1.000	39.13000	5.98420	-2.43200	6.90570	.13875	.13329	.11887	427.98000	12.83000	.15241
7.378	1.200	39.13100	5.98430	-2.43570	6.88430	.13832	.13278	.11868	426.67000	12.79000	.15198
7.375	1.400	39.13600	5.98440	-2.43950	6.87960	.13782	.13213	.11847	426.41000	12.78100	.15133
7.377	1.600	39.14300	5.98450	-2.44320	6.88590	.13799	.13190	.11864	426.82000	12.79300	.15142
7.383	1.800	39.16300	5.98450	-2.44750	6.89710	.13868	.13190	.11906	427.53000	12.81400	.15197
7.385	2.000	39.16200	5.98460	-2.45100	6.89860	.13932	.13192	.11949	427.65000	12.81600	.15260
7.393	2.200	39.18200	5.98470	-2.45570	6.90420	.13993	.13196	.11953	428.02000	12.82700	.15300
7.379	2.394	39.17600	5.98490	-2.45850	6.89920	.14899	.13395	.12314	427.76000	12.81800	.16188
	GRADIENT	.04500	.00039	-.01848	.01189	-.00542	-.00168	-.00666	.84821	.02214	-.00488

OA257 (LARC 20-M6-6559) OV102 (S7E162) (10 JUL 81)

REFERENCE DATA

SREF = 2690.0000 SQ.FT. XMRP = 1076.6800 IN. XO
LREF = 474.8100 INCHES YMRP = .0000 IN. YO
BREF = 936.6800 INCHES ZMRP = 375.0000 IN. ZO
SCALE = .0100

PARAMETRIC DATA

ALPHA = 40.000 PHI = .000
SPDBRK = 86.600 AILRON = .000
YP = 1.000 1S = 1.000
ELEVON = .000 MACH = 6.000
S-MODE = 2.000 S-DIR = 1.000

RUN NO. 2155/ 0 RN/L = 2.23 GRADIENT INTERVAL = -.60/ .60

RN/L	BETA	ALPHA	MACH	PHI	Q	BP1	BP2	BP3	PT1	PT2	PSC
2.237	-3.200	39.22600	5.95660	-2.47800	2.45480	.05516	.05666	.04762	149.24000	4.56100	.06101
2.232	-3.000	39.23700	5.95660	-2.47900	2.45370	.05493	.05617	.04762	149.18000	4.55900	.06072
2.232	-2.800	39.24600	5.95670	-2.48020	2.45480	.05464	.05570	.04760	149.26000	4.56110	.06047
2.233	-2.600	39.25500	5.95680	-2.48120	2.45460	.05447	.05529	.04762	149.26000	4.56070	.06024
2.232	-2.400	39.26700	5.95690	-2.48240	2.45430	.05433	.05493	.04770	149.25000	4.56010	.06018
2.233	-2.200	39.27300	5.95700	-2.48330	2.45470	.05429	.05457	.04776	149.28000	4.56100	.06011
2.234	-2.000	39.28400	5.95710	-2.48460	2.45480	.05430	.05429	.04799	149.30000	4.56110	.06016
2.239	-1.800	39.28600	5.95720	-2.48540	2.45570	.05434	.05397	.04826	149.36000	4.56270	.06020
2.242	-1.600	39.30500	5.95720	-2.48710	2.45570	.05438	.05368	.04850	149.37000	4.56280	.06029
2.244	-1.400	39.30700	5.95730	-2.48790	2.45610	.05441	.05344	.04862	149.40000	4.56350	.06030
2.242	-1.200	39.32600	5.95740	-2.48970	2.45490	.05441	.05322	.04892	149.34000	4.56130	.06030
2.236	-1.000	39.32100	5.95750	-2.49030	2.45560	.05439	.05300	.04913	149.39000	4.56250	.06030
2.236	-.800	39.34500	5.95760	-2.49240	2.45500	.05445	.05291	.04937	149.36000	4.56140	.06035
2.238	-.600	39.34200	5.95770	-2.49310	2.45490	.05458	.05282	.04956	149.37000	4.56130	.06048
2.238	-.400	39.36300	5.95770	-2.49500	2.45420	.05487	.05283	.04995	149.33000	4.55990	.06073
2.236	-.200	39.36300	5.95780	-2.49600	2.45360	.05515	.05285	.05039	149.30000	4.55880	.06103
2.228	.000	39.38300	5.95790	-2.49800	2.45280	.05527	.05279	.05065	149.26000	4.55730	.06114
2.226	.200	39.37800	5.95800	-2.49870	2.45350	.05518	.05264	.05064	149.31000	4.55860	.06103
2.226	.400	39.40000	5.95810	-2.50100	2.45320	.05493	.05226	.05005	149.31000	4.55810	.06066
2.228	.600	39.39700	5.95820	-2.50190	2.45420	.05465	.05187	.04942	149.38000	4.55990	.06036
2.229	.800	39.41600	5.95830	-2.50410	2.45320	.05430	.05154	.04869	149.32000	4.55800	.05987
2.231	1.000	39.41600	5.95840	-2.50520	2.45300	.05398	.05122	.04811	149.32000	4.55760	.05957
2.232	1.200	39.43300	5.95840	-2.50720	2.45250	.05381	.05097	.04760	149.30000	4.55670	.05924
2.233	1.400	39.43500	5.95850	-2.50850	2.45310	.05371	.05075	.04730	149.34000	4.55780	.05915
2.230	1.600	39.45300	5.95860	-2.51050	2.45250	.05374	.05057	.04716	149.32000	4.55680	.05913
	GRADIENT	.04536	.00045	-.00734	-.00075	.00006	-.00075	.00001	.00000	-.00143	-.00009

OA257 (LARC 20-M6-6559) OV102 (S7E162) (10 JUL 81)

REFERENCE DATA

SREF = 2690.0000 SQ.FT. XMRP = 1076.6800 IN. XO
LREF = 474.8100 INCHES YMRP = .0000 IN. YO
BREF = 936.6800 INCHES ZMRP = 375.0000 IN. ZO
SCALE = .0100

PARAMETRIC DATA

ALPHA = 40.000 PHI = .000
SPDBRK = 86.600 AILRON = .000
YP = 1.000 1S = 1.000
ELEVON = .000 MACH = 6.000
S-MODE = 2.000 S-DIR = 1.000

RUN NO. 2116/ 0 RN/L = 7.41 GRADIENT INTERVAL = -.60/ .60

RN/L	BETA	ALPHA	MACH	PHI	Q	BP1	BP2	BP3	PT1	PT2	PSC
7.443	-5.300	38.83100	5.98180	-2.31960	6.84950	.14980	.15534	.12139	423.79000	12.72500	.16267
7.414	-5.100	38.83100	5.98190	-2.32310	6.82480	.14928	.15503	.12149	422.28000	12.68000	.16205
7.410	-4.900	38.83600	5.98200	-2.32620	6.82630	.14889	.15481	.12158	422.40000	12.68200	.16175
7.413	-4.700	38.85300	5.98210	-2.33010	6.83460	.14887	.15434	.12094	422.93000	12.69800	.16176
7.408	-4.500	38.85200	5.98210	-2.33280	6.82950	.14882	.15332	.11992	422.64000	12.68800	.16188
7.391	-4.300	38.86700	5.98220	-2.33700	6.81660	.14924	.15230	.11929	421.86000	12.66400	.16260
7.421	-4.100	38.87300	5.98230	-2.33970	6.84240	.14991	.15111	.11936	423.48000	12.71200	.16347
7.410	-3.900	38.89100	5.98240	-2.34360	6.83850	.15014	.14998	.11989	423.27000	12.70500	.16371
7.398	-3.700	38.89300	5.98240	-2.34640	6.83600	.15050	.14887	.12048	423.13000	12.70000	.16400
7.393	-3.500	38.90500	5.98250	-2.35010	6.83930	.15035	.14765	.12115	423.36000	12.70600	.16365
7.404	-3.300	38.91900	5.98260	-2.35350	6.84540	.15012	.14633	.12153	423.76000	12.71800	.16304
7.410	-3.100	38.92900	5.98270	-2.35650	6.86050	.15006	.14529	.12199	424.71000	12.74600	.16288
7.393	-2.900	38.94000	5.98270	-2.36040	6.85060	.14978	.14407	.12229	424.12000	12.72700	.16248
7.394	-2.700	38.94500	5.98280	-2.36370	6.85850	.14935	.14279	.12253	424.64000	12.74200	.16189
7.402	-2.500	38.96400	5.98290	-2.36750	6.87050	.14890	.14180	.12296	425.40000	12.76400	.16121
7.417	-2.300	38.97100	5.98300	-2.37060	6.88920	.14867	.14098	.12378	426.58000	12.79900	.16083
7.442	-2.100	38.99600	5.98300	-2.37480	6.89540	.14850	.14025	.12480	426.99000	12.81100	.16047
7.442	-1.900	38.99600	5.98310	-2.37800	6.89740	.14872	.13957	.12617	427.13000	12.81400	.16049
7.437	-1.700	39.01200	5.98320	-2.38200	6.89580	.14879	.13888	.12720	427.06000	12.81100	.16058
7.440	-1.500	39.01800	5.98330	-2.38540	6.90080	.14896	.13821	.12810	427.39000	12.82100	.16073
7.428	-1.300	39.02700	5.98340	-2.38890	6.90100	.14884	.13749	.12891	427.43000	12.82100	.16083
7.432	-1.100	39.03800	5.98340	-2.39260	6.90320	.14862	.13695	.12941	427.58000	12.82500	.16079
7.411	-.900	39.04000	5.98350	-2.39620	6.89020	.14776	.13676	.12928	426.80000	12.80100	.16037
7.414	-.700	39.05900	5.98360	-2.40040	6.89640	.14660	.13641	.12816	427.20000	12.81200	.15956
7.429	-.500	39.06000	5.98370	-2.40410	6.89690	.14557	.13599	.12677	427.26000	12.81300	.15874
7.423	-.300	39.08300	5.98370	-2.40870	6.90690	.14434	.13566	.12527	427.90000	12.83200	.15771
7.425	-.100	39.08400	5.98380	-2.41180	6.91500	.14345	.13538	.12406	428.42000	12.84700	.15689
7.420	.100	39.09600	5.98390	-2.41600	6.90630	.14242	.13518	.12280	427.91000	12.83100	.15606
7.423	.300	39.09900	5.98400	-2.41900	6.91070	.14116	.13474	.12136	428.20000	12.83900	.15486
7.416	.500	39.10900	5.98400	-2.42270	6.91480	.14004	.13433	.12011	428.48000	12.84700	.15378
7.401	.700	39.11900	5.98410	-2.42650	6.90500	.13924	.13392	.11902	427.90000	12.82800	.15287
7.411	.900	39.12200	5.98420	-2.43000	6.91420	.13890	.13354	.11888	428.49000	12.84500	.15264
7.399	1.100	39.13700	5.98430	-2.43420	6.90260	.13855	.13300	.11869	427.80000	12.82400	.15209
7.371	1.300	39.12700	5.98440	-2.43740	6.87630	.13799	.13243	.11856	426.19000	12.77500	.15159
7.378	1.500	39.14400	5.98440	-2.44160	6.88390	.13773	.13193	.11846	426.68000	12.78900	.15126
7.383	1.700	39.14900	5.98450	-2.44520	6.89370	.13825	.13189	.11888	427.32000	12.80700	.15161
7.384	1.900	39.16500	5.98460	-2.44940	6.90120	.13918	.13198	.11941	427.80000	12.82100	.15246
7.384	2.100	39.17000	5.98470	-2.45330	6.89660	.13962	.13188	.11946	427.54000	12.81300	.15271
7.406	2.300	39.17900	5.98470	-2.45710	6.91040	.14096	.13235	.11977	428.42000	12.83800	.15402
	GRADIENT	.04357	.00036	-.01830	.01317	-.00546	-.00161	-.00661	.92714	.02500	-.00488

OA257 (LARC 20-M6-6559) OV102 (S7E063) (10 JUL 81)

REFERENCE DATA

SREF = 2690.0000 SQ.FT. XMRP = 1076.6800 IN. XO
LREF = 474.8100 INCHES YMRP = .0000 IN. YO
BREF = 936.6800 INCHES ZMRP = 375.0000 IN. ZO
SCALE = .0100

PARAMETRIC DATA

ALPHA = 40.000 PHI = .000
SPDBRK = 86.600 AILRON = .000
YP = 1.000 1S = 1.000
ELEVON = .000 MACH = 6.000
S-MODE = 2.000 S-DIR = 1.000

RUN NO. 176/ 0 RN/L = 4.40 GRADIENT INTERVAL = -.60/ .60

RN/L	BETA	ALPHA	MACH	PHI	Q	BP1	BP2	BP3	PT1	PT2	PSC
4.426	-3.904	39.17700	5.96200	-2.43050	4.04050	.07835	.07047	.06389	246.57000	7.50710	.08221
4.420	-3.800	39.17700	5.96200	-2.43110	4.04080	.07834	.07047	.06391	246.60000	7.50770	.08223
4.419	-3.600	39.18500	5.96210	-2.43290	4.04010	.07821	.07028	.06401	246.56000	7.50640	.08212
4.417	-3.400	39.19700	5.96210	-2.43470	4.04040	.07814	.07014	.06431	246.59000	7.50710	.08201
4.420	-3.200	39.19900	5.96210	-2.43620	4.04090	.07802	.07004	.06452	246.63000	7.50790	.08191
4.422	-3.000	39.21500	5.96220	-2.43830	4.04180	.07791	.07006	.06461	246.69000	7.50960	.08172
4.430	-2.800	39.22500	5.96220	-2.44020	4.04390	.07777	.07029	.06487	246.83000	7.51350	.08156
4.433	-2.600	39.22500	5.96230	-2.44170	4.04380	.07765	.07072	.06503	246.83000	7.51330	.08150
4.437	-2.400	39.24100	5.96230	-2.44400	4.04500	.07748	.07110	.06506	246.91000	7.51550	.08130
4.444	-2.200	39.25200	5.96240	-2.44590	4.04630	.07737	.07143	.06498	247.00000	7.51790	.08125
4.435	-2.000	39.25200	5.96240	-2.44750	4.04820	.07737	.07179	.06511	247.12000	7.52140	.08127
4.428	-1.800	39.27300	5.96250	-2.45020	4.04680	.07728	.07194	.06509	247.05000	7.51880	.08114
4.427	-1.600	39.27900	5.96250	-2.45230	4.04680	.07719	.07197	.06514	247.06000	7.51900	.08109
4.419	-1.400	39.27700	5.96260	-2.45390	4.04660	.07735	.07210	.06537	247.05000	7.51850	.08127
4.408	-1.200	39.30000	5.96260	-2.45670	4.04540	.07768	.07249	.06585	246.99000	7.51620	.08159
4.406	-1.000	39.30500	5.96270	-2.45880	4.04640	.07789	.07262	.06628	247.06000	7.51820	.08186
4.401	-.800	39.30800	5.96270	-2.46050	4.04640	.07802	.07264	.06672	247.07000	7.51820	.08215
4.402	-.600	39.32700	5.96280	-2.46330	4.04530	.07804	.07264	.06700	247.01000	7.51610	.08228
4.398	-.400	39.33300	5.96280	-2.46520	4.04630	.07816	.07290	.06732	247.07000	7.51790	.08252
4.396	-.200	39.33400	5.96290	-2.46730	4.04500	.07859	.07333	.06780	247.00000	7.51550	.08305
4.395	.000	39.35500	5.96290	-2.47050	4.04510	.07905	.07410	.06831	247.02000	7.51580	.08355
4.390	.200	39.35500	5.96300	-2.47250	4.04540	.07922	.07447	.06875	247.04000	7.51620	.08389
4.389	.400	39.36600	5.96300	-2.47500	4.04370	.07911	.07427	.06871	246.95000	7.51320	.08383
4.388	.600	39.38500	5.96310	-2.47800	4.04410	.07871	.07371	.06840	246.98000	7.51380	.08358
4.389	.800	39.38300	5.96310	-2.47990	4.04730	.07842	.07329	.06823	247.19000	7.51980	.08346
4.388	1.000	39.39100	5.96320	-2.48220	4.04900	.07801	.07281	.06788	247.30000	7.52300	.08316
4.384	1.200	39.41300	5.96320	-2.48530	4.04680	.07779	.07248	.06768	247.17000	7.51880	.08300
4.382	1.400	39.40800	5.96330	-2.48720	4.04030	.07739	.07218	.06717	246.79000	7.50680	.08276
4.372	1.600	39.41300	5.96330	-2.48980	4.02330	.07709	.07191	.06677	245.75000	7.47520	.08247
4.339	1.800	39.41800	5.96340	-2.49250	4.00150	.07714	.07229	.06706	244.44000	7.43470	.08275
4.313	2.000	39.43000	5.96350	-2.49540	3.98630	.07819	.07438	.06842	243.53000	7.40650	.08410
4.308	2.200	39.43400	5.96360	-2.49750	3.98190	.08111	.07888	.07094	243.28000	7.39830	.08774
	GRADIENT	.04661	.00025	-.01230	-.00150	.00081	.00127	.00142	-.05179	-.00279	.00131

OA257 (LARC 20-M6-6559) OV102 (S7E163) (10 JUL 81)

REFERENCE DATA

SREF = 2690.0000 SQ.FT. XMRP = 1076.6800 IN. XO
LREF = 474.8100 INCHES YMRP = .0000 IN. YO
BREF = 936.6800 INCHES ZMRP = 375.0000 IN. ZO
SCALE = .0100

PARAMETRIC DATA

ALPHA = 40.000 PHI = .000
SPDBRK = 86.600 AILRON = .000
YP = 1.000 1S = 1.000
ELEVON = .000 MACH = 6.000
S-MODE = 2.000 S-DIR = 1.000

RUN NO. 2176/ O RN/L = 4.40 GRADIENT INTERVAL = -.60/ .60

RN/L	BETA	ALPHA	MACH	PHI	Q	BP1	BP2	BP3	PT1	PT2	PSC
4.426	-3.900	39.17700	5.96200	-2.43060	4.04040	.07835	.07048	.06389	246.57000	7.50700	.08221
4.420	-3.700	39.17500	5.96200	-2.43180	4.04130	.07832	.07041	.06395	246.63000	7.50860	.08217
4.417	-3.500	39.19500	5.96210	-2.43400	4.03970	.07817	.07022	.06418	246.54000	7.50570	.08204
4.419	-3.300	39.19600	5.96210	-2.43530	4.04070	.07808	.07008	.06446	246.61000	7.50760	.08198
4.420	-3.100	39.20100	5.96220	-2.43690	4.04120	.07796	.06999	.06455	246.65000	7.50850	.08183
4.424	-2.900	39.22400	5.96220	-2.43940	4.04210	.07781	.07013	.06474	246.72000	7.51020	.08164
4.434	-2.700	39.22500	5.96230	-2.44090	4.04430	.07769	.07052	.06496	246.86000	7.51420	.08155
4.433	-2.500	39.23000	5.96230	-2.44270	4.04480	.07757	.07090	.06502	246.90000	7.51520	.08138
4.444	-2.300	39.24800	5.96240	-2.44490	4.04500	.07741	.07125	.06501	246.91000	7.51550	.08125
4.438	-2.100	39.25200	5.96240	-2.44660	4.04760	.07740	.07166	.06507	247.08000	7.52030	.08129
4.433	-1.900	39.26200	5.96250	-2.44880	4.04750	.07735	.07188	.06510	247.09000	7.52020	.08119
4.428	-1.700	39.27900	5.96250	-2.45150	4.04620	.07723	.07194	.06510	247.02000	7.51770	.08111
4.424	-1.500	39.27800	5.96260	-2.45310	4.04690	.07719	.07199	.06518	247.07000	7.51900	.08113
4.413	-1.300	39.28600	5.96260	-2.45520	4.04580	.07753	.07231	.06560	247.01000	7.51690	.08142
4.407	-1.100	39.30700	5.96270	-2.45800	4.04600	.07776	.07257	.06605	247.03000	7.51740	.08169
4.405	-.900	39.30400	5.96270	-2.45960	4.04740	.07794	.07263	.06650	247.12000	7.52000	.08200
4.400	-.700	39.31500	5.96280	-2.46170	4.04530	.07808	.07265	.06684	247.00000	7.51610	.08224
4.401	-.500	39.33400	5.96280	-2.46450	4.04600	.07805	.07270	.06712	247.05000	7.51730	.08240
4.397	-.300	39.33300	5.96290	-2.46620	4.04640	.07832	.07307	.06748	247.08000	7.51810	.08278
4.397	-.100	39.34400	5.96290	-2.46890	4.04480	.07882	.07375	.06802	247.00000	7.51520	.08331
4.393	.100	39.35800	5.96300	-2.47170	4.04580	.07918	.07439	.06863	247.06000	7.51690	.08379
4.389	.300	39.35600	5.96300	-2.47350	4.04470	.07923	.07445	.06876	247.01000	7.51490	.08393
4.388	.500	39.37400	5.96310	-2.47650	4.04330	.07886	.07396	.06852	246.93000	7.51230	.08365
4.389	.700	39.38600	5.96310	-2.47900	4.04590	.07857	.07351	.06837	247.10000	7.51720	.08353
4.389	.900	39.38500	5.96320	-2.48090	4.04860	.07822	.07305	.06809	247.27000	7.52220	.08333
4.384	1.100	39.40500	5.96320	-2.48400	4.04760	.07792	.07266	.06781	247.22000	7.52030	.08309
4.385	1.300	39.41200	5.96330	-2.48630	4.04470	.07756	.07232	.06744	247.05000	7.51500	.08289
4.382	1.500	39.40600	5.96330	-2.48820	4.03320	.07719	.07201	.06693	246.36000	7.49370	.08263
4.355	1.700	39.42100	5.96340	-2.49150	4.01230	.07696	.07197	.06676	245.09000	7.45480	.08250
4.324	1.900	39.41500	5.96350	-2.49360	3.99240	.07734	.07273	.06760	243.89000	7.41770	.08307
4.311	2.100	39.42300	5.96360	-2.49610	3.98560	.07875	.07539	.06901	243.49000	7.40510	.08493
4.307	2.259	39.42600	5.96370	-2.49780	3.98190	.08365	.08209	.07332	243.30000	7.39830	.09065
	GRADIENT	.04043	.00027	-.01210	-.00251	.00102	.00158	.00164	-.10714	-.00470	.00146

OA257 (LARC 20-M6-6559) OV102 (S7E064) (10 JUL 81)

REFERENCE DATA

SREF = 2690.0000 SQ.FT. XMRP = 1076.6800 IN. XO
LREF = 474.8100 INCHES YMRP = .0000 IN. YO
BREF = 936.6800 INCHES ZMRP = 375.0000 IN. ZO
SCALE = .0100

PARAMETRIC DATA

ALPHA = 40.000 PHI = .000
SPDBRK = 86.600 AILRON = .000
YP = 1.000 1S = 1.000
ELEVON = .000 MACH = 6.000
S-MODE = 2.000 S-DIR = 2.000

RUN NO. 1176/ 0 RN/L = 4.33 GRADIENT INTERVAL = -.60/ .60

RN/L	BETA	ALPHA	MACH	PHI	Q	BP1	BP2	BP3	PT1	PT2	PSC
4.338	-4.086	39.15700	5.96550	-2.42880	4.03050	.07867	.07130	.06534	246.56000	7.48840	.08264
4.333	-3.900	39.17700	5.96540	-2.43070	4.03140	.07846	.07118	.06573	246.60000	7.49030	.08234
4.336	-3.700	39.17800	5.96530	-2.43200	4.03480	.07824	.07119	.06575	246.80000	7.49650	.08215
4.341	-3.500	39.18600	5.96530	-2.43360	4.03710	.07794	.07128	.06571	246.94000	7.50090	.08188
4.343	-3.300	39.20200	5.96520	-2.43570	4.03640	.07767	.07142	.06567	246.89000	7.49960	.08161
4.343	-3.100	39.20600	5.96520	-2.43730	4.03780	.07749	.07167	.06561	246.96000	7.50200	.08140
4.346	-2.900	39.21300	5.96510	-2.43890	4.03990	.07736	.07202	.06551	247.08000	7.50600	.08131
4.344	-2.700	39.23100	5.96510	-2.44130	4.04010	.07725	.07228	.06548	247.09000	7.50640	.08128
4.349	-2.500	39.23400	5.96510	-2.44290	4.04120	.07723	.07238	.06545	247.14000	7.50840	.08125
4.353	-2.300	39.24000	5.96500	-2.44470	4.04170	.07712	.07237	.06548	247.17000	7.50930	.08119
4.353	-2.100	39.25800	5.96500	-2.44740	4.04140	.07705	.07224	.06556	247.14000	7.50880	.08108
4.351	-1.900	39.26000	5.96490	-2.44900	4.04190	.07710	.07220	.06587	247.16000	7.50960	.08113
4.353	-1.700	39.26500	5.96490	-2.45090	4.04340	.07735	.07235	.06639	247.25000	7.51260	.08141
4.353	-1.500	39.28700	5.96480	-2.45370	4.04270	.07752	.07238	.06680	247.19000	7.51110	.08161
4.353	-1.300	39.28900	5.96480	-2.45550	4.04300	.07775	.07242	.06728	247.20000	7.51170	.08187
4.354	-1.100	39.29500	5.96470	-2.45760	4.04290	.07798	.07266	.06772	247.19000	7.51160	.08225
4.351	-.900	39.31300	5.96470	-2.46020	4.04340	.07813	.07294	.06796	247.21000	7.51250	.08244
4.348	-.700	39.31400	5.96460	-2.46180	4.04270	.07848	.07353	.06823	247.16000	7.51120	.08289
4.348	-.500	39.32200	5.96460	-2.46410	4.04040	.07885	.07421	.06855	247.01000	7.50690	.08335
4.346	-.300	39.33600	5.96450	-2.46680	4.03530	.07886	.07426	.06839	246.69000	7.49750	.08337
4.348	-.100	39.33300	5.96450	-2.46880	4.03140	.07875	.07408	.06821	246.44000	7.49020	.08330
4.345	.100	39.34700	5.96440	-2.47160	4.02660	.07819	.07325	.06771	246.14000	7.48120	.08285
4.332	.300	39.36000	5.96440	-2.47450	4.01930	.07757	.07240	.06702	245.69000	7.46770	.08227
4.314	.500	39.35300	5.96430	-2.47610	4.00720	.07704	.07185	.06663	244.94000	7.44530	.08185
4.305	.700	39.36500	5.96430	-2.47880	3.99500	.07674	.07155	.06617	244.18000	7.42250	.08165
4.302	.900	39.37700	5.96420	-2.48150	3.98680	.07634	.07125	.06579	243.68000	7.40740	.08131
4.296	1.100	39.37100	5.96420	-2.48310	3.98150	.07614	.07125	.06572	243.35000	7.39750	.08122
4.306	1.300	39.39100	5.96410	-2.48630	3.97870	.07645	.07187	.06624	243.16000	7.39230	.08168
4.299	1.500	39.40000	5.96410	-2.48880	3.97670	.07736	.07317	.06727	243.03000	7.38860	.08275
4.292	1.700	39.39700	5.96400	-2.49080	3.97630	.07888	.07540	.06881	243.00000	7.38790	.08463
4.290	1.900	39.41900	5.96390	-2.49400	3.97590	.08103	.07872	.07092	242.96000	7.38710	.08730
4.293	2.100	39.41100	5.96390	-2.49550	3.97860	.08368	.08209	.07314	243.12000	7.39200	.09044
4.303	2.259	39.42500	5.96380	-2.49770	3.97860	.08377	.08233	.07339	243.09000	7.39200	.09076
	GRADIENT	.03443	-.00027	-.01227	-.03126	-.00193	-.00261	-.00203	-1.95000	-.05806	-.00161

OA257 (LARC 20-M6-6559) OV102 (S7E164) (10 JUL 81)

REFERENCE DATA

SREF = 2690.0000 SQ.FT. XMRP = 1076.6800 IN. XO
LREF = 474.8100 INCHES YMRP = .0000 IN. YO
BREF = 936.6800 INCHES ZMRP = 375.0000 IN. ZO
SCALE = .0100

PARAMETRIC DATA

ALPHA = 40.000 PHI = .000
SPDBRK = 86.600 AILRON = .000
YP = 1.000 1S = 1.000
ELEVON = .000 MACH = 6.000
S-MODE = 2.000 S-DIR = 2.000

RUN NO. 3176/ O RN/L = 4.33 GRADIENT INTERVAL = -.60/ .60

RN/L	BETA	ALPHA	MACH	PHI	Q	BP1	BP2	BP3	PT1	PT2	PSC
4.334	-4.000	39.16500	5.96540	-2.42970	4.03120	.07853	.07119	.06559	246.59000	7.48970	.08247
4.335	-3.800	39.18000	5.96540	-2.43150	4.03300	.07836	.07119	.06576	246.70000	7.49320	.08229
4.340	-3.600	39.17800	5.96530	-2.43260	4.03730	.07814	.07120	.06571	246.95000	7.50120	.08203
4.342	-3.400	39.19400	5.96530	-2.43470	4.03640	.07779	.07136	.06568	246.89000	7.49950	.08172
4.342	-3.200	39.20800	5.96520	-2.43660	4.03680	.07758	.07156	.06565	246.90000	7.50020	.08152
4.345	-3.000	39.20600	5.96520	-2.43800	4.03950	.07741	.07183	.06553	247.06000	7.50530	.08137
4.344	-2.800	39.22300	5.96510	-2.44010	4.03950	.07728	.07213	.06552	247.05000	7.50520	.08128
4.345	-2.600	39.23600	5.96510	-2.44230	4.04050	.07722	.07235	.06545	247.10000	7.50700	.08126
4.353	-2.400	39.23300	5.96500	-2.44370	4.04240	.07712	.07237	.06545	247.21000	7.51060	.08122
4.355	-2.200	39.24900	5.96500	-2.44610	4.04160	.07705	.07224	.06551	247.16000	7.50920	.08111
4.352	-2.000	39.26000	5.96490	-2.44820	4.04150	.07707	.07222	.06569	247.14000	7.50890	.08108
4.351	-1.800	39.26100	5.96490	-2.44980	4.04290	.07720	.07226	.06612	247.22000	7.51170	.08124
4.354	-1.600	39.27800	5.96480	-2.45250	4.04330	.07740	.07236	.06667	247.24000	7.51230	.08152
4.353	-1.400	39.29000	5.96480	-2.45470	4.04270	.07765	.07242	.06703	247.19000	7.51120	.08173
4.355	-1.200	39.28900	5.96470	-2.45650	4.04340	.07787	.07252	.06752	247.22000	7.51240	.08205
4.353	-1.000	39.30500	5.96470	-2.45900	4.04300	.07805	.07277	.06784	247.19000	7.51180	.08233
4.347	-.800	39.31500	5.96460	-2.46110	4.04250	.07830	.07322	.06805	247.15000	7.51080	.08268
4.349	-.600	39.31500	5.96460	-2.46270	4.04280	.07872	.07389	.06838	247.16000	7.51140	.08315
4.345	-.400	39.33100	5.96450	-2.46550	4.03740	.07894	.07435	.06857	246.82000	7.50130	.08343
4.348	-.200	39.33800	5.96450	-2.46800	4.03340	.07873	.07416	.06830	246.57000	7.49400	.08326
4.348	.000	39.33800	5.96440	-2.47000	4.02940	.07851	.07373	.06802	246.32000	7.48660	.08315
4.338	.200	39.35400	5.96440	-2.47310	4.02320	.07787	.07280	.06736	245.93000	7.47500	.08255
4.323	.400	39.35700	5.96430	-2.47540	4.01290	.07725	.07204	.06673	245.29000	7.45570	.08198
4.308	.600	39.35700	5.96430	-2.47730	4.00120	.07688	.07170	.06644	244.57000	7.43420	.08173
4.303	.800	39.37300	5.96420	-2.48030	3.99020	.07653	.07138	.06596	243.89000	7.41370	.08149
4.299	1.000	39.37200	5.96420	-2.48220	3.98430	.07627	.07123	.06568	243.52000	7.40270	.08125
4.301	1.200	39.38000	5.96410	-2.48470	3.98050	.07621	.07145	.06583	243.28000	7.39560	.08132
4.307	1.400	39.39700	5.96410	-2.48770	3.97780	.07682	.07243	.06662	243.11000	7.39070	.08207
4.293	1.600	39.39200	5.96400	-2.48950	3.97660	.07806	.07413	.06801	243.02000	7.38850	.08360
4.290	1.800	39.41000	5.96400	-2.49250	3.97560	.07993	.07696	.06982	242.95000	7.38660	.08587
4.292	2.000	39.41700	5.96390	-2.49490	3.97700	.08251	.08068	.07231	243.02000	7.38910	.08906
4.295	2.200	39.41900	5.96390	-2.49690	3.97820	.08400	.08250	.07352	243.09000	7.39130	.09093
	GRADIENT	.03464	-.00025	-.01227	-.03286	-.00174	-.00224	-.00187	-2.04821	-.06104	-.00141

OA257 (LARC 20-M6-6559) OV102 (S7E065) (10 JUL 81)

REFERENCE DATA

SREF = 2690.0000 SQ.FT. XMRP = 1076.6800 IN. XO
LREF = 474.8100 INCHES YMRP = .0000 IN. YO
BREF = 936.6800 INCHES ZMRP = 375.0000 IN. ZO
SCALE = .0100

PARAMETRIC DATA

ALPHA = 10.000 PHI = .000
SPDBRK = .000 AILRON = .000
YP = 1.000 1S = 1.000
ELEVON = .000 MACH = 6.000
S-MODE = 2.000 S-DIR = 1.000

RUN NO. 291/ 0 RN/L = 2.31 GRADIENT INTERVAL = -.60/ .60

RN/L	BETA	ALPHA	MACH	PHI	Q	BP1	BP2	BP3	PT1	PT2	PSC
2.302	-4.124	9.71980	5.96070	-.66791	2.47220	.02453	.02420	.02629	150.74000	4.59330	.02638
2.298	-4.000	9.72980	5.96080	-.66865	2.47180	.02452	.02416	.02630	150.72000	4.59260	.02642
2.301	-3.800	9.72490	5.96090	-.66836	2.47310	.02449	.02420	.02637	150.81000	4.59490	.02640
2.307	-3.600	9.72470	5.96100	-.66837	2.47250	.02449	.02418	.02626	150.79000	4.59390	.02636
2.309	-3.400	9.72660	5.96120	-.66860	2.47320	.02445	.02414	.02615	150.84000	4.59510	.02631
2.310	-3.200	9.72660	5.96130	-.66860	2.47330	.02438	.02408	.02602	150.86000	4.59540	.02624
2.306	-3.000	9.73020	5.96140	-.66895	2.47310	.02439	.02398	.02596	150.86000	4.59490	.02615
2.304	-2.800	9.73260	5.96150	-.66926	2.47310	.02445	.02389	.02592	150.87000	4.59500	.02611
2.299	-2.600	9.73230	5.96160	-.66932	2.47310	.02452	.02386	.02588	150.88000	4.59500	.02610
2.303	-2.400	9.73380	5.96170	-.66954	2.47460	.02461	.02383	.02591	150.99000	4.59780	.02613
2.308	-2.200	9.74090	5.96180	-.67013	2.47510	.02470	.02383	.02585	151.03000	4.59870	.02617
2.308	-2.000	9.74130	5.96190	-.67027	2.47400	.02463	.02383	.02583	150.97000	4.59670	.02611
2.309	-1.800	9.74440	5.96200	-.67063	2.47350	.02444	.02364	.02567	150.95000	4.59570	.02603
2.311	-1.600	9.75010	5.96210	-.67109	2.47450	.02425	.02343	.02563	151.02000	4.59750	.02596
2.310	-1.400	9.75050	5.96220	-.67130	2.47440	.02409	.02329	.02562	151.03000	4.59740	.02595
2.306	-1.200	9.75250	5.96240	-.67166	2.47460	.02402	.02321	.02552	151.05000	4.59770	.02597
2.311	-1.000	9.75700	5.96250	-.67207	2.47510	.02406	.02330	.02548	151.09000	4.59870	.02599
2.314	-.800	9.75770	5.96260	-.67230	2.47610	.02423	.02356	.02555	151.17000	4.60060	.02607
2.310	-.600	9.76100	5.96270	-.67274	2.47660	.02445	.02382	.02567	151.21000	4.60150	.02617
2.310	-.400	9.76280	5.96280	-.67303	2.47720	.02474	.02411	.02583	151.26000	4.60260	.02633
2.312	-.200	9.76480	5.96290	-.67340	2.47720	.02500	.02432	.02603	151.27000	4.60250	.02644
2.311	.000	9.76820	5.96300	-.67378	2.47780	.02519	.02450	.02603	151.32000	4.60360	.02657
2.309	.200	9.76940	5.96310	-.67413	2.47910	.02537	.02468	.02613	151.41000	4.60610	.02671
2.307	.400	9.77400	5.96320	-.67465	2.47950	.02548	.02479	.02625	151.44000	4.60680	.02677
2.309	.600	9.77570	5.96330	-.67501	2.47900	.02561	.02480	.02626	151.43000	4.60590	.02685
2.307	.800	9.77690	5.96340	-.67538	2.47960	.02555	.02481	.02615	151.47000	4.60700	.02679
2.311	1.000	9.78050	5.96360	-.67588	2.48020	.02545	.02475	.02597	151.52000	4.60820	.02667
2.315	1.200	9.78260	5.96370	-.67630	2.48130	.02543	.02474	.02588	151.60000	4.61020	.02654
2.313	1.400	9.78410	5.96380	-.67664	2.48120	.02539	.02479	.02570	151.61000	4.61000	.02644
2.311	1.600	9.78810	5.96390	-.67716	2.48080	.02536	.02491	.02554	151.59000	4.60930	.02634
2.309	1.800	9.79040	5.96400	-.67756	2.47930	.02521	.02492	.02540	151.51000	4.60650	.02622
2.307	2.000	9.79420	5.96410	-.67819	2.47900	.02503	.02484	.02533	151.51000	4.60590	.02612
2.308	2.200	9.79640	5.96420	-.67861	2.47990	.02496	.02484	.02530	151.57000	4.60760	.02615
2.308	2.400	9.80120	5.96430	-.67921	2.48090	.02496	.02486	.02534	151.64000	4.60940	.02618
2.311	2.600	9.80420	5.96440	-.67975	2.48040	.02486	.02478	.02539	151.62000	4.60840	.02617
2.317	2.800	9.80940	5.96450	-.68045	2.48190	.02477	.02467	.02542	151.73000	4.61130	.02612
2.318	3.000	9.81110	5.96470	-.68095	2.48230	.02469	.02449	.02544	151.76000	4.61200	.02605
2.316	3.200	9.81430	5.96480	-.68149	2.48190	.02460	.02434	.02542	151.76000	4.61140	.02598
2.313	3.400	9.81840	5.96490	-.68211	2.48160	.02454	.02423	.02536	151.74000	4.61070	.02593
	GRADIENT	.01270	.00050	-.00193	.00245	.00095	.00084	.00048	.20714	.00450	.00057

OA257 (LARC 20-M6-6559) OV102 (S7E065) (10 JUL 81)

REFERENCE DATA

SREF = 2690.0000 SQ.FT. XMRP = 1076.6800 IN. XO
LREF = 474.8100 INCHES YMRP = .0000 IN. YO
BREF = 936.6800 INCHES ZMRP = 375.0000 IN. ZO
SCALE = .0100

PARAMETRIC DATA

ALPHA = 10.000 PHI = .000
SPDBRK = .000 AILRON = .000
YP = 1.000 1S = 1.000
ELEVON = .000 MACH = 6.000
S-MODE = 2.000 S-DIR = 1.000

RUN NO. 277/ 0 RN/L = 7.63 GRADIENT INTERVAL = -.60/ .60

RN/L	BETA	ALPHA	MACH	PHI	Q	BP1	BP2	BP3	PT1	PT2	PSC
7.645	-4.508	9.67710	5.93940	-.64006	7.09550	.06242	.06206	.05730	426.28000	13.18400	.06520
7.647	-4.400	9.68520	5.93950	-.64091	7.09590	.06240	.06190	.05716	426.32000	13.18500	.06509
7.644	-4.200	9.68370	5.93960	-.64161	7.09350	.06230	.06175	.05726	426.20000	13.18100	.06521
7.632	-4.000	9.68350	5.93970	-.64225	7.08840	.06236	.06148	.05750	425.92000	13.17100	.06548
7.632	-3.800	9.68470	5.93970	-.64301	7.09110	.06242	.06111	.05771	426.11000	13.17600	.06578
7.639	-3.600	9.68560	5.93980	-.64374	7.09900	.06258	.06032	.05792	426.61000	13.19100	.06598
7.647	-3.400	9.68710	5.93990	-.64452	7.10400	.06279	.05956	.05803	426.93000	13.20000	.06614
7.661	-3.200	9.68790	5.94000	-.64523	7.11940	.06295	.05895	.05801	427.88000	13.22900	.06626
7.648	-3.000	9.69080	5.94010	-.64609	7.10790	.06318	.05855	.05774	427.22000	13.20700	.06650
7.660	-2.800	9.69390	5.94020	-.64700	7.11990	.06343	.05842	.05738	427.97000	13.23000	.06667
7.657	-2.600	9.69560	5.94030	-.64783	7.12350	.06373	.05868	.05717	428.21000	13.23600	.06692
7.654	-2.400	9.69960	5.94030	-.64880	7.11570	.06403	.05904	.05694	427.76000	13.22200	.06705
7.653	-2.200	9.70330	5.94040	-.64982	7.11890	.06421	.05951	.05681	427.98000	13.22800	.06711
7.643	-2.000	9.70850	5.94050	-.65098	7.11000	.06442	.05993	.05667	427.47000	13.21100	.06710
7.637	-1.800	9.71120	5.94060	-.65196	7.10370	.06468	.06025	.05656	427.12000	13.20000	.06713
7.638	-1.600	9.71120	5.94070	-.65271	7.10460	.06508	.06104	.05662	427.20000	13.20100	.06732
7.652	-1.400	9.71510	5.94080	-.65366	7.11660	.06559	.06254	.05693	427.95000	13.22400	.06774
7.656	-1.200	9.71630	5.94090	-.65464	7.10950	.06616	.06467	.05730	427.55000	13.21000	.06817
7.645	-1.000	9.71670	5.94100	-.65547	7.10690	.06651	.06573	.05743	427.42000	13.20500	.06847
7.651	-.800	9.72100	5.94100	-.65655	7.11640	.06669	.06629	.05739	428.01000	13.22300	.06860
7.640	-.600	9.72200	5.94110	-.65756	7.11130	.06692	.06680	.05736	427.73000	13.21400	.06869
7.632	-.400	9.72500	5.94120	-.65859	7.09890	.06720	.06684	.05696	427.01000	13.19100	.06862
7.628	-.200	9.72840	5.94130	-.65974	7.09730	.06741	.06659	.05646	426.94000	13.18800	.06868
7.612	.000	9.73240	5.94140	-.66091	7.08660	.06733	.06612	.05631	426.33000	13.16800	.06872
7.601	.200	9.73350	5.94150	-.66182	7.07710	.06717	.06532	.05666	425.78000	13.15000	.06871
7.604	.400	9.73440	5.94160	-.66290	7.08570	.06721	.06452	.05709	426.32000	13.16600	.06871
7.612	.600	9.73560	5.94160	-.66381	7.09120	.06747	.06419	.05754	426.68000	13.17600	.06874
7.624	.800	9.73900	5.94170	-.66484	7.10310	.06778	.06438	.05806	427.42000	13.19800	.06883
7.615	1.000	9.73910	5.94180	-.66581	7.09090	.06803	.06501	.05841	426.71000	13.17600	.06892
7.645	1.200	9.74110	5.94190	-.66687	7.09780	.06814	.06559	.05828	427.15000	13.18800	.06876
7.643	1.400	9.74440	5.94200	-.66804	7.09500	.06810	.06597	.05763	427.01000	13.18300	.06865
7.630	1.600	9.74670	5.94210	-.66910	7.09860	.06800	.06600	.05693	427.25000	13.19000	.06844
7.627	1.800	9.75340	5.94220	-.67051	7.10500	.06780	.06546	.05687	427.66000	13.20200	.06793
7.612	2.000	9.75440	5.94230	-.67149	7.09520	.06749	.06492	.05689	427.10000	13.18400	.06726
7.611	2.200	9.75470	5.94230	-.67245	7.08850	.06725	.06447	.05657	426.72000	13.17100	.06665
7.626	2.400	9.75890	5.94240	-.67381	7.11020	.06725	.06387	.05606	428.06000	13.21200	.06633
7.607	2.600	9.76090	5.94250	-.67482	7.09820	.06733	.06325	.05555	427.36000	13.18900	.06612
7.600	2.800	9.76180	5.94260	-.67590	7.08490	.06736	.06255	.05506	426.58000	13.16400	.06600
7.593	3.000	9.76490	5.94270	-.67708	7.08160	.06751	.06219	.05497	426.41000	13.15800	.06611
7.590	3.200	9.76810	5.94280	-.67822	7.08030	.06783	.06225	.05507	426.36000	13.15600	.06643
7.573	3.400	9.77280	5.94290	-.67955	7.06410	.06806	.06261	.05534	425.41000	13.12600	.06667
7.575	3.600	9.77620	5.94300	-.68068	7.05770	.06825	.06291	.05549	425.05000	13.11400	.06686

OA257 (LARC 20-M6-6559) OV102 (S7E065) (10 JUL 81)

REFERENCE DATA

SREF =	2690.0000 SQ.FT.	XMRP =	1076.6800 IN.	XO	
LREF =	474.8100 INCHES	YMRP =	.0000 IN.	YO	
BREF =	936.6800 INCHES	ZMRP =	375.0000 IN.	ZO	
SCALE =	.0100				

PARAMETRIC DATA

ALPHA =	10.000	PHI =	.000
SPDBRK =	.000	AILRON =	.000
YP =	1.000	1S =	1.000
ELEVON =	.000	MACH =	6.000
S-MODE =	2.000	S-DIR =	1.000

RUN NO. 277/ 0 RN/L = 7.63 GRADIENT INTERVAL = -.60/ .60

RN/L	BETA	ALPHA	MACH	PHI	Q	BP1	BP2	BP3	PT1	PT2	PSC
7.568	3.800	9.77660	5.94300	-.68152	7.05630	.06834	.06309	.05567	424.98000	13.11100	.06705
7.580	4.000	9.77570	5.94310	-.68268	7.06930	.06856	.06344	.05593	425.80000	13.13500	.06738
	GRADIENT	.01155	.00045	-.00526	-.01909	.00025	-.00246	.00018	-1.01606	-.03607	.00006

OA257 (LARC 20-M6-6559) OV102 (S7E165) (10 JUL 81)

REFERENCE DATA

SREF = 2690.0000 SQ.FT. XMRP = 1076.6800 IN. XO
LREF = 474.8100 INCHES YMRP = .0000 IN. YO
BREF = 936.6800 INCHES ZMRP = 375.0000 IN. ZO
SCALE = .0100

PARAMETRIC DATA

ALPHA = 10.000 PHI = .000
SPDBRK = .000 AILRON = .000
YP = 1.000 1S = 1.000
ELEVON = .000 MACH = 6.000
S-MODE = 2.000 S-DIR = 1.000

RUN NO. 2291/ 0 RN/L = 2.31 GRADIENT INTERVAL = -.60/ .60

RN/L	BETA	ALPHA	MACH	PHI	Q	BP1	BP2	BP3	PT1	PT2	PSC
2.301	-4.100	9.72210	5.96080	-.66807	2.47190	.02450	.02419	.02635	150.72000	4.59270	.02640
2.298	-3.900	9.72640	5.96090	-.66846	2.47210	.02450	.02419	.02635	150.75000	4.59310	.02639
2.306	-3.700	9.72470	5.96100	-.66836	2.47340	.02449	.02417	.02632	150.84000	4.59560	.02638
2.307	-3.500	9.72580	5.96110	-.66847	2.47260	.02448	.02419	.02623	150.80000	4.59400	.02632
2.310	-3.300	9.72940	5.96120	-.66878	2.47330	.02443	.02415	.02606	150.85000	4.59540	.02629
2.307	-3.100	9.72740	5.96130	-.66877	2.47290	.02436	.02406	.02599	150.84000	4.59460	.02621
2.306	-2.900	9.72970	5.96140	-.66901	2.47300	.02441	.02393	.02595	150.86000	4.59480	.02614
2.301	-2.700	9.73140	5.96150	-.66924	2.47310	.02449	.02388	.02591	150.88000	4.59500	.02613
2.300	-2.500	9.73390	5.96160	-.66945	2.47400	.02457	.02385	.02589	150.94000	4.59660	.02611
2.307	-2.300	9.73530	5.96180	-.66970	2.47450	.02466	.02386	.02589	150.98000	4.59760	.02615
2.308	-2.100	9.74160	5.96190	-.67024	2.47490	.02468	.02383	.02585	151.02000	4.59840	.02613
2.309	-1.900	9.74360	5.96200	-.67052	2.47380	.02453	.02377	.02577	150.96000	4.59630	.02610
2.309	-1.700	9.74830	5.96210	-.67096	2.47370	.02437	.02352	.02569	150.97000	4.59620	.02601
2.312	-1.500	9.74910	5.96220	-.67113	2.47460	.02417	.02335	.02562	151.03000	4.59770	.02596
2.308	-1.300	9.75110	5.96230	-.67142	2.47480	.02404	.02322	.02561	151.06000	4.59820	.02595
2.307	-1.100	9.75430	5.96240	-.67185	2.47460	.02404	.02323	.02549	151.06000	4.59780	.02595
2.315	-.900	9.75580	5.96250	-.67209	2.47590	.02415	.02342	.02549	151.15000	4.60010	.02603
2.311	-.700	9.75990	5.96260	-.67258	2.47640	.02432	.02366	.02561	151.19000	4.60110	.02612
2.309	-.500	9.76300	5.96270	-.67293	2.47670	.02459	.02397	.02573	151.22000	4.60170	.02625
2.312	-.300	9.76390	5.96280	-.67319	2.47720	.02486	.02419	.02586	151.26000	4.60250	.02637
2.312	-.100	9.76500	5.96300	-.67348	2.47740	.02508	.02442	.02604	151.29000	4.60300	.02653
2.310	.100	9.76960	5.96310	-.67401	2.47840	.02529	.02459	.02604	151.36000	4.60470	.02664
2.307	.300	9.77250	5.96320	-.67444	2.47930	.02541	.02476	.02620	151.43000	4.60660	.02672
2.310	.500	9.77460	5.96330	-.67480	2.47960	.02553	.02485	.02626	151.46000	4.60710	.02681
2.309	.700	9.77550	5.96340	-.67512	2.48020	.02558	.02483	.02626	151.50000	4.60810	.02682
2.308	.900	9.77930	5.96350	-.67566	2.47990	.02551	.02476	.02609	151.50000	4.60760	.02673
2.314	1.100	9.78310	5.96360	-.67616	2.48060	.02546	.02476	.02596	151.55000	4.60890	.02660
2.315	1.300	9.78340	5.96370	-.67651	2.48130	.02542	.02478	.02575	151.60000	4.61010	.02650
2.311	1.500	9.78630	5.96380	-.67695	2.48050	.02537	.02487	.02558	151.57000	4.60860	.02641
2.310	1.700	9.79000	5.96390	-.67741	2.47970	.02530	.02494	.02549	151.53000	4.60710	.02629
2.309	1.900	9.79270	5.96410	-.67785	2.47930	.02507	.02485	.02533	151.52000	4.60650	.02618
2.307	2.100	9.79480	5.96420	-.67833	2.47940	.02497	.02487	.02528	151.53000	4.60660	.02613
2.309	2.300	9.79930	5.96430	-.67895	2.48040	.02497	.02487	.02535	151.61000	4.60860	.02617
2.308	2.500	9.80340	5.96440	-.67951	2.48040	.02491	.02481	.02538	151.62000	4.60860	.02617
2.316	2.700	9.80710	5.96450	-.68010	2.48130	.02482	.02474	.02540	151.69000	4.61020	.02614
2.318	2.900	9.80760	5.96460	-.68049	2.48210	.02476	.02460	.02542	151.75000	4.61170	.02608
2.317	3.100	9.81390	5.96470	-.68127	2.48240	.02465	.02441	.02543	151.78000	4.61220	.02601
2.314	3.300	9.81740	5.96480	-.68182	2.48150	.02456	.02428	.02541	151.73000	4.61050	.02596
2.314	3.493	9.81640	5.96490	-.68208	2.48240	.02452	.02420	.02533	151.80000	4.61220	.02591
	GRADIENT	.01263	.00061	-.00195	.00311	.00093	.00090	.00052	.25429	.00586	.00057

OA257 (LARC 20-M6-6559) OV102 (S7E165) (10 JUL 81)

REFERENCE DATA

SREF = 2690.0000 SQ.FT. XMRP = 1076.6800 IN. XO
LREF = 474.8100 INCHES YMRP = .0000 IN. YO
BREF = 936.6800 INCHES ZMRP = 375.0000 IN. ZO
SCALE = .0100

PARAMETRIC DATA

ALPHA = 10.000 PHI = .000
SPDBRK = .000 AILRON = .000
YP = 1.000 1S = 1.000
ELEVON = .000 MACH = 6.000
S-MODE = 2.000 S-DIR = 1.000

RUN NO. 2277/ 0 RN/L = 7.63 GRADIENT INTERVAL = -.60/ .60

RN/L	BETA	ALPHA	MACH	PHI	Q	BP1	BP2	BP3	PT1	PT2	PSC
7.643	-4.500	9.67750	5.93940	-.64014	7.09250	.06242	.06205	.05727	426.10000	13.17900	.06519
7.640	-4.300	9.68280	5.93950	-.64124	7.08810	.06237	.06185	.05719	425.86000	13.17100	.06512
7.645	-4.100	9.68330	5.93960	-.64187	7.09770	.06230	.06160	.05742	426.47000	13.18800	.06533
7.623	-3.900	9.68090	5.93970	-.64239	7.08210	.06240	.06131	.05764	425.56000	13.15900	.06563
7.628	-3.700	9.68630	5.93980	-.64351	7.08820	.06251	.06080	.05780	425.95000	13.17100	.06590
7.640	-3.500	9.68470	5.93990	-.64398	7.10320	.06268	.05990	.05799	426.87000	13.19900	.06608
7.664	-3.300	9.68610	5.94000	-.64475	7.11530	.06287	.05924	.05808	427.63000	13.22100	.06618
7.654	-3.100	9.69000	5.94000	-.64573	7.11720	.06305	.05874	.05790	427.76000	13.22500	.06636
7.657	-2.900	9.69220	5.94010	-.64653	7.11390	.06328	.05844	.05755	427.59000	13.21900	.06659
7.663	-2.700	9.69520	5.94020	-.64744	7.12750	.06354	.05852	.05727	428.44000	13.24400	.06678
7.657	-2.500	9.69680	5.94030	-.64827	7.12080	.06389	.05884	.05712	428.06000	13.23100	.06700
7.653	-2.300	9.70450	5.94040	-.64953	7.11760	.06409	.05931	.05691	427.89000	13.22500	.06708
7.652	-2.100	9.70600	5.94050	-.65039	7.11910	.06430	.05974	.05674	428.01000	13.22800	.06711
7.638	-1.900	9.71060	5.94060	-.65146	7.10350	.06455	.06009	.05658	427.09000	13.19900	.06711
7.637	-1.700	9.71290	5.94060	-.65247	7.10430	.06485	.06055	.05654	427.17000	13.20100	.06721
7.651	-1.500	9.71480	5.94070	-.65328	7.11870	.06531	.06169	.05672	428.06000	13.22700	.06749
7.656	-1.300	9.71810	5.94080	-.65432	7.11150	.06586	.06371	.05711	427.65000	13.21400	.06797
7.652	-1.100	9.71530	5.94090	-.65493	7.11010	.06635	.06529	.05738	427.60000	13.21100	.06832
7.641	-.900	9.71800	5.94100	-.65595	7.10440	.06659	.06602	.05748	427.28000	13.20100	.06854
7.653	-.700	9.72060	5.94110	-.65696	7.12080	.06674	.06658	.05738	428.29000	13.23100	.06864
7.627	-.500	9.72430	5.94120	-.65813	7.09720	.06708	.06691	.05721	426.90000	13.18700	.06868
7.637	-.300	9.72910	5.94130	-.65929	7.10290	.06734	.06678	.05669	427.26000	13.19800	.06860
7.617	-.100	9.73010	5.94130	-.66027	7.08950	.06740	.06638	.05628	426.49000	13.17300	.06869
7.603	.100	9.73350	5.94140	-.66142	7.07800	.06726	.06578	.05645	425.82000	13.15200	.06871
7.616	.300	9.73540	5.94150	-.66238	7.09500	.06715	.06486	.05681	426.87000	13.18300	.06870
7.602	.500	9.73740	5.94160	-.66355	7.08240	.06734	.06430	.05729	426.14000	13.16000	.06874
7.625	.700	9.73710	5.94170	-.66428	7.10150	.06760	.06421	.05781	427.31000	13.19500	.06877
7.619	.900	9.73710	5.94180	-.66521	7.10130	.06793	.06466	.05828	427.32000	13.19500	.06890
7.626	1.100	9.73850	5.94190	-.66625	7.08850	.06811	.06529	.05839	426.58000	13.17100	.06886
7.637	1.300	9.74350	5.94200	-.66746	7.09000	.06812	.06582	.05796	426.69000	13.17400	.06874
7.643	1.500	9.74560	5.94200	-.66856	7.10280	.06804	.06605	.05722	427.49000	13.19800	.06855
7.626	1.700	9.75130	5.94210	-.66988	7.10020	.06792	.06581	.05679	427.36000	13.19300	.06821
7.620	1.900	9.75310	5.94220	-.67098	7.10160	.06763	.06516	.05697	427.47000	13.19600	.06758
7.607	2.100	9.75450	5.94230	-.67200	7.09010	.06732	.06471	.05675	426.81000	13.17400	.06691
7.615	2.300	9.76030	5.94240	-.67337	7.09330	.06724	.06417	.05640	427.02000	13.18000	.06648
7.619	2.500	9.76200	5.94250	-.67446	7.10900	.06729	.06358	.05579	427.99000	13.20900	.06622
7.603	2.700	9.76210	5.94260	-.67540	7.08880	.06733	.06290	.05521	426.81000	13.17200	.06606
7.599	2.900	9.76320	5.94270	-.67655	7.08570	.06741	.06231	.05498	426.64000	13.16600	.06601
7.592	3.100	9.76580	5.94270	-.67751	7.08190	.06767	.06218	.05498	426.44000	13.15900	.06626
7.577	3.300	9.77040	5.94280	-.67897	7.06860	.06797	.06245	.05520	425.66000	13.13400	.06655
7.573	3.500	9.77430	5.94290	-.68010	7.06060	.06816	.06275	.05544	425.21000	13.11900	.06677
7.576	3.700	9.77730	5.94300	-.68117	7.06020	.06832	.06303	.05560	425.21000	13.11900	.06694

OA257 (LARC 20-M6-6559) OV102 (S7E165) (10 JUL 81)

REFERENCE DATA

SREF = 2690.0000 SQ.FT. XMRP = 1076.6800 IN. XO
LREF = 474.8100 INCHES YMRP = .0000 IN. YO
BREF = 936.6800 INCHES ZMRP = 375.0000 IN. ZO
SCALE = .0100

PARAMETRIC DATA

ALPHA = 10.000 PHI = .000
SPDBRK = .000 AILRON = .000
YP = 1.000 1S = 1.000
ELEVON = .000 MACH = 6.000
S-MODE = 2.000 S-DIR = 1.000

RUN NO. 2277/ O RN/L = 7.63 GRADIENT INTERVAL = -.60/ .60

RN/L	BETA	ALPHA	MACH	PHI	Q	BP1	BP2	BP3	PT1	PT2	PSC
7.568	3.900	9.77620	5.94310	-.68222	7.06210	.06844	.06328	.05582	425.36000	13.12200	.06725
7.570	4.100	9.77110	5.94320	-.68277	7.06370	.06866	.06366	.05629	425.48000	13.12500	.06766
	GRADIENT	.01254	.00039	-.00536	-.01560	.00008	-.00277	.00013	-.80572	-.02871	.00008

OA257 (LARC 20-M6-6559) OV102 (S7E066) (10 JUL 81)

REFERENCE DATA

SREF = 2690.0000 SQ.FT. XMRP = 1076.6800 IN. XO
LREF = 474.8100 INCHES YMRP = .0000 IN. YO
BREF = 936.6800 INCHES ZMRP = 375.0000 IN. ZO
SCALE = .0100

PARAMETRIC DATA

ALPHA = 12.500 PHI = .000
SPDBRK = .000 AILRON = .000
YP = 1.000 1S = 1.000
ELEVON = .000 MACH = 6.000
S-MODE = 2.000 S-DIR = 1.000

RUN NO. 290/ 0 RN/L = 2.30 GRADIENT INTERVAL = -.60/ .60

RN/L	BETA	ALPHA	MACH	PHI	Q	BP1	BP2	BP3	PT1	PT2	PSC
2.313	-4.109	12.20600	5.95430	-.83484	2.48700	.02357	.02211	.02604	150.97000	4.62100	.02503
2.311	-4.000	12.21700	5.95440	-.83560	2.48710	.02357	.02209	.02604	150.98000	4.62110	.02506
2.314	-3.800	12.21200	5.95450	-.83529	2.48810	.02359	.02210	.02607	151.05000	4.62300	.02505
2.318	-3.600	12.21200	5.95460	-.83539	2.48780	.02362	.02212	.02601	151.04000	4.62230	.02511
2.316	-3.400	12.21800	5.95470	-.83593	2.48770	.02365	.02211	.02606	151.05000	4.62220	.02515
2.314	-3.200	12.21900	5.95480	-.83607	2.48660	.02365	.02207	.02604	150.99000	4.62010	.02514
2.316	-3.000	12.22000	5.95490	-.83622	2.48640	.02366	.02202	.02603	150.99000	4.61980	.02511
2.315	-2.800	12.22100	5.95500	-.83642	2.48590	.02378	.02205	.02598	150.97000	4.61890	.02512
2.320	-2.600	12.22800	5.95510	-.83707	2.48440	.02387	.02212	.02599	150.89000	4.61610	.02512
2.323	-2.400	12.23000	5.95520	-.83725	2.48290	.02393	.02216	.02602	150.80000	4.61320	.02512
2.324	-2.200	12.23300	5.95530	-.83763	2.48080	.02398	.02222	.02599	150.69000	4.60940	.02512
2.321	-2.000	12.23600	5.95530	-.83801	2.47910	.02398	.02226	.02596	150.60000	4.60630	.02508
2.323	-1.800	12.23900	5.95540	-.83841	2.47710	.02396	.02229	.02592	150.48000	4.60240	.02508
2.314	-1.600	12.23800	5.95550	-.83851	2.47390	.02390	.02237	.02588	150.29000	4.59650	.02510
2.307	-1.400	12.24200	5.95560	-.83898	2.47250	.02383	.02251	.02587	150.22000	4.59400	.02518
2.305	-1.200	12.24200	5.95570	-.83922	2.47190	.02373	.02266	.02591	150.20000	4.59280	.02525
2.306	-1.000	12.24800	5.95580	-.83978	2.46880	.02379	.02280	.02593	150.01000	4.58700	.02523
2.301	-.800	12.24900	5.95590	-.84013	2.46640	.02381	.02294	.02590	149.88000	4.58260	.02523
2.301	-.600	12.25500	5.95600	-.84072	2.46190	.02379	.02310	.02587	149.62000	4.57430	.02518
2.302	-.400	12.25800	5.95610	-.84129	2.45820	.02371	.02321	.02585	149.40000	4.56750	.02512
2.297	-.200	12.26000	5.95620	-.84161	2.45520	.02361	.02321	.02585	149.23000	4.56180	.02511
2.286	.000	12.26500	5.95630	-.84231	2.45170	.02349	.02320	.02585	149.03000	4.55540	.02509
2.279	.200	12.26700	5.95640	-.84261	2.45020	.02341	.02323	.02585	148.94000	4.55250	.02505
2.280	.400	12.27200	5.95640	-.84331	2.44920	.02336	.02320	.02589	148.89000	4.55070	.02500
2.276	.600	12.27500	5.95650	-.84385	2.44720	.02336	.02319	.02596	148.78000	4.54690	.02496
2.276	.800	12.27700	5.95660	-.84428	2.44600	.02339	.02311	.02602	148.72000	4.54480	.02492
2.279	1.000	12.28000	5.95670	-.84488	2.44520	.02348	.02301	.02604	148.68000	4.54320	.02487
2.282	1.200	12.28300	5.95680	-.84537	2.44480	.02350	.02290	.02604	148.66000	4.54250	.02479
2.283	1.400	12.28600	5.95690	-.84593	2.44550	.02345	.02275	.02599	148.72000	4.54380	.02465
2.282	1.600	12.28800	5.95700	-.84639	2.44510	.02336	.02258	.02579	148.70000	4.54300	.02451
2.278	1.800	12.28700	5.95710	-.84668	2.44400	.02328	.02244	.02551	148.65000	4.54110	.02431
2.274	2.000	12.29100	5.95720	-.84730	2.44280	.02319	.02231	.02515	148.58000	4.53870	.02421
2.273	2.200	12.29500	5.95730	-.84791	2.44390	.02308	.02231	.02493	148.66000	4.54080	.02418
2.278	2.400	12.29900	5.95740	-.84861	2.44450	.02296	.02234	.02484	148.71000	4.54200	.02427
2.283	2.600	12.30200	5.95750	-.84915	2.44380	.02300	.02247	.02475	148.67000	4.54060	.02440
2.290	2.800	12.30700	5.95760	-.84992	2.44370	.02323	.02253	.02476	148.67000	4.54030	.02451
2.295	3.000	12.31300	5.95770	-.85072	2.44440	.02350	.02257	.02473	148.73000	4.54180	.02456
2.299	3.200	12.31600	5.95780	-.85134	2.44420	.02380	.02258	.02477	148.72000	4.54130	.02458
2.295	3.361	12.31800	5.95780	-.85185	2.44210	.02400	.02258	.02476	148.61000	4.53750	.02461
	GRADIENT	.01696	.00041	-.00258	-.01198	-.00039	.00005	.00006	-.68393	-.02234	-.00017

OA257 (LARC 20-M6-6559) OV102 (S7E066) (10 JUL 81)

REFERENCE DATA

SREF = 2690.0000 SQ.FT. XMRP = 1076.6800 IN. XO
LREF = 474.8100 INCHES YMRP = .0000 IN. YO
BREF = 936.6800 INCHES ZMRP = 375.0000 IN. ZO
SCALE = .0100

PARAMETRIC DATA

ALPHA = 12.500 PHI = .000
SPDBRK = .000 AILRON = .000
YP = 1.000 1S = 1.000
ELEVON = .000 MACH = 6.000
S-MODE = 2.000 S-DIR = 1.000

RUN NO. 276/ 0 RN/L = 7.53 GRADIENT INTERVAL = -.60/ .60

RN/L	BETA	ALPHA	MACH	PHI	Q	BP1	BP2	BP3	PT1	PT2	PSC
7.590	-4.202	12.12400	5.94040	-.79554	7.07920	.06016	.05796	.05170	425.60000	13.15400	.06286
7.584	-4.100	12.13300	5.94050	-.79651	7.07840	.06008	.05793	.05169	425.57000	13.15200	.06276
7.583	-3.900	12.13300	5.94060	-.79747	7.07650	.05991	.05789	.05159	425.49000	13.14900	.06270
7.593	-3.700	12.13700	5.94070	-.79865	7.07480	.05970	.05788	.05159	425.41000	13.14600	.06261
7.579	-3.500	12.13700	5.94080	-.79951	7.07440	.05956	.05791	.05168	425.42000	13.14500	.06255
7.578	-3.300	12.13800	5.94090	-.80044	7.07080	.05966	.05813	.05185	425.23000	13.13800	.06262
7.570	-3.100	12.14200	5.94100	-.80163	7.06690	.05992	.05845	.05212	425.02000	13.13100	.06274
7.570	-2.900	12.14400	5.94110	-.80266	7.06760	.06041	.05875	.05237	425.09000	13.13200	.06302
7.567	-2.700	12.14700	5.94120	-.80367	7.07150	.06115	.05889	.05280	425.35000	13.14000	.06337
7.569	-2.500	12.15000	5.94130	-.80474	7.07770	.06172	.05862	.05328	425.76000	13.15100	.06364
7.570	-2.300	12.15600	5.94140	-.80604	7.08760	.06186	.05797	.05359	426.38000	13.17000	.06388
7.583	-2.100	12.15700	5.94150	-.80691	7.10450	.06183	.05715	.05351	427.43000	13.20100	.06388
7.577	-1.900	12.16000	5.94160	-.80798	7.09540	.06169	.05688	.05344	426.90000	13.18400	.06387
7.549	-1.700	12.16700	5.94160	-.80949	7.06210	.06151	.05716	.05340	424.93000	13.12200	.06389
7.531	-1.500	12.16900	5.94170	-.81072	7.04470	.06138	.05764	.05331	423.91000	13.09000	.06387
7.517	-1.300	12.17100	5.94180	-.81195	7.01920	.06137	.05830	.05328	422.40000	13.04200	.06383
7.512	-1.100	12.17400	5.94190	-.81319	7.01840	.06142	.05909	.05325	422.38000	13.04100	.06381
7.508	-.900	12.17600	5.94200	-.81423	7.02000	.06155	.06015	.05323	422.51000	13.04400	.06377
7.500	-.700	12.17900	5.94210	-.81540	7.02390	.06159	.06093	.05313	422.77000	13.05100	.06368
7.497	-.500	12.18000	5.94220	-.81656	7.01980	.06170	.06144	.05303	422.55000	13.04400	.06359
7.495	-.300	12.18200	5.94230	-.81776	7.02800	.06172	.06187	.05324	423.07000	13.05900	.06371
7.501	-.100	12.18800	5.94240	-.81922	7.04080	.06161	.06204	.05351	423.87000	13.08200	.06391
7.506	.100	12.19200	5.94250	-.82059	7.04250	.06167	.06216	.05388	424.00000	13.08600	.06425
7.495	.300	12.19700	5.94260	-.82209	7.03110	.06208	.06240	.05437	423.34000	13.06500	.06445
7.487	.500	12.19900	5.94270	-.82342	7.02860	.06254	.06254	.05475	423.22000	13.06000	.06472
7.465	.700	12.20400	5.94280	-.82507	7.00620	.06289	.06268	.05503	421.90000	13.01800	.06488
7.474	.900	12.20800	5.94290	-.82641	7.00920	.06318	.06268	.05514	422.11000	13.02400	.06496
7.477	1.100	12.21000	5.94300	-.82770	7.00180	.06364	.06254	.05532	421.69000	13.01000	.06505
7.482	1.300	12.21300	5.94310	-.82910	7.00460	.06407	.06256	.05551	421.89000	13.01500	.06518
7.485	1.500	12.21200	5.94320	-.83007	7.01400	.06457	.06286	.05569	422.48000	13.03300	.06532
7.503	1.700	12.21700	5.94330	-.83156	7.03230	.06501	.06320	.05580	423.61000	13.06700	.06561
7.500	1.900	12.22100	5.94340	-.83295	7.03970	.06543	.06361	.05606	424.08000	13.08000	.06590
7.507	2.100	12.22300	5.94350	-.83425	7.04290	.06579	.06376	.05625	424.31000	13.08600	.06605
7.512	2.300	12.22600	5.94360	-.83555	7.05310	.06600	.06368	.05610	424.95000	13.10500	.06605
7.528	2.500	12.22800	5.94360	-.83695	7.05380	.06605	.06343	.05573	425.02000	13.10700	.06596
7.537	2.700	12.23500	5.94370	-.83855	7.05890	.06601	.06317	.05518	425.35000	13.11600	.06586
7.523	2.900	12.23900	5.94380	-.83992	7.05540	.06614	.06299	.05470	425.17000	13.11000	.06589
7.512	3.100	12.24100	5.94390	-.84127	7.04680	.06639	.06282	.05428	424.68000	13.09400	.06601
7.500	3.300	12.24400	5.94400	-.84260	7.03570	.06661	.06258	.05385	424.04000	13.07300	.06611
7.490	3.500	12.24600	5.94410	-.84402	7.03240	.06677	.06224	.05349	423.87000	13.06700	.06622
7.495	3.700	12.24700	5.94420	-.84526	7.02910	.06697	.06192	.05314	423.70000	13.06100	.06624
7.514	3.900	12.25000	5.94430	-.84673	7.03570	.06718	.06159	.05283	424.13000	13.07300	.06643

OA257 (LARC 20-M6-6559) OV102 (S7E066) (10 JUL 81)

REFERENCE DATA

SREF =	2690.0000 SQ.FT.	XMRP =	1076.6800 IN. XO		
LREF =	474.8100 INCHES	YMRP =	.0000 IN. YO		
BREF =	936.6800 INCHES	ZMRP =	375.0000 IN. ZO		
SCALE =	.0100				

PARAMETRIC DATA

ALPHA =	12.500	PHI =	.000
SPDBRK =	.000	AILRON =	.000
YP =	1.000	1S =	1.000
ELEVON =	.000	MACH =	6.000
S-MODE =	2.000	S-DIR =	1.000

RUN NO. 276/ O RN/L = 7.53 GRADIENT INTERVAL = -.60/ .60

RN/L	BETA	ALPHA	MACH	PHI	Q	BP1	BP2	BP3	PT1	PT2	PSC
7.499	4.100	12.25200	5.94440	-.84808	7.02650	.06735	.06132	.05262	423.60000	13.05600	.06656
7.505	4.218	12.24800	5.94450	-.84846	7.03310	.06749	.06109	.05235	424.02000	13.06800	.06663
	GRADIENT	.02057	.00050	-.00695	.00786	.00076	.00103	.00177	.61286	.01457	.00118

OA257 (LARC 20-M6-6559) OV102 (S7E166) (10 JUL 81)

REFERENCE DATA

SREF = 2690.0000 SQ.FT. XMRP = 1076.6800 IN. XO
LREF = 474.8100 INCHES YMRP = .0000 IN. YO
BREF = 936.6800 INCHES ZMRP = 375.0000 IN. ZO
SCALE = .0100

PARAMETRIC DATA

ALPHA = 12.500 PHI = .000
SPDBRK = .000 AILRON = .000
YP = 1.000 1S = 1.000
ELEVON = .000 MACH = 6.000
S-MODE = 2.000 S-DIR = 1.000

RUN NO. 2290/ 0 RN/L = 2.30 GRADIENT INTERVAL = -.60/ .60

RN/L	BETA	ALPHA	MACH	PHI	Q	BP1	BP2	BP3	PT1	PT2	PSC
2.312	-4.100	12.20700	5.95440	-.83492	2.48670	.02356	.02210	.02603	150.95000	4.62030	.02503
2.312	-3.900	12.21500	5.95450	-.83550	2.48750	.02359	.02209	.02603	151.02000	4.62190	.02504
2.316	-3.700	12.21300	5.95460	-.83545	2.48820	.02362	.02213	.02609	151.07000	4.62320	.02508
2.316	-3.500	12.21500	5.95470	-.83567	2.48790	.02363	.02212	.02602	151.06000	4.62260	.02514
2.315	-3.300	12.21900	5.95470	-.83602	2.48680	.02366	.02210	.02602	151.00000	4.62060	.02515
2.316	-3.100	12.22100	5.95480	-.83623	2.48660	.02365	.02203	.02601	151.00000	4.62020	.02512
2.315	-2.900	12.22100	5.95490	-.83639	2.48610	.02373	.02204	.02600	150.98000	4.61930	.02510
2.316	-2.700	12.22400	5.95500	-.83674	2.48550	.02384	.02207	.02594	150.95000	4.61800	.02511
2.323	-2.500	12.23000	5.95510	-.83719	2.48340	.02390	.02212	.02600	150.83000	4.61430	.02513
2.325	-2.300	12.23200	5.95520	-.83749	2.48210	.02396	.02220	.02602	150.76000	4.61180	.02514
2.322	-2.100	12.23100	5.95530	-.83763	2.48070	.02399	.02222	.02596	150.69000	4.60930	.02512
2.322	-1.900	12.23800	5.95540	-.83820	2.47780	.02398	.02226	.02595	150.52000	4.60390	.02508
2.320	-1.700	12.24100	5.95550	-.83863	2.47510	.02391	.02231	.02593	150.37000	4.59890	.02508
2.310	-1.500	12.23900	5.95560	-.83867	2.47320	.02385	.02243	.02587	150.26000	4.59520	.02515
2.306	-1.300	12.24200	5.95570	-.83913	2.47230	.02379	.02260	.02592	150.22000	4.59360	.02520
2.307	-1.100	12.24400	5.95580	-.83946	2.47060	.02375	.02273	.02594	150.12000	4.59030	.02522
2.304	-.900	12.24800	5.95580	-.83991	2.46750	.02382	.02286	.02591	149.94000	4.58470	.02522
2.300	-.700	12.25300	5.95590	-.84052	2.46370	.02382	.02303	.02588	149.72000	4.57750	.02520
2.301	-.500	12.25600	5.95600	-.84096	2.46010	.02376	.02315	.02586	149.51000	4.57080	.02516
2.302	-.300	12.25800	5.95610	-.84138	2.45640	.02365	.02319	.02585	149.29000	4.56400	.02515
2.291	-.100	12.26300	5.95620	-.84201	2.45300	.02354	.02321	.02585	149.10000	4.55760	.02509
2.282	.100	12.26500	5.95630	-.84241	2.45060	.02343	.02321	.02585	148.96000	4.55330	.02509
2.280	.300	12.27000	5.95640	-.84304	2.45020	.02338	.02321	.02588	148.95000	4.55260	.02504
2.278	.500	12.27300	5.95650	-.84357	2.44810	.02336	.02320	.02594	148.83000	4.54870	.02498
2.275	.700	12.27500	5.95660	-.84403	2.44640	.02338	.02315	.02602	148.74000	4.54550	.02494
2.278	.900	12.27800	5.95670	-.84457	2.44530	.02342	.02306	.02602	148.68000	4.54350	.02489
2.280	1.100	12.28100	5.95680	-.84512	2.44470	.02350	.02296	.02610	148.65000	4.54220	.02484
2.282	1.300	12.28400	5.95690	-.84565	2.44540	.02349	.02285	.02605	148.70000	4.54360	.02475
2.282	1.500	12.28500	5.95700	-.84602	2.44520	.02341	.02268	.02587	148.70000	4.54320	.02458
2.280	1.700	12.28600	5.95700	-.84644	2.44460	.02333	.02256	.02564	148.67000	4.54200	.02439
2.276	1.900	12.29100	5.95710	-.84714	2.44350	.02324	.02237	.02536	148.62000	4.54000	.02424
2.273	2.100	12.29400	5.95720	-.84766	2.44310	.02314	.02232	.02506	148.61000	4.53940	.02419
2.275	2.300	12.29700	5.95730	-.84828	2.44450	.02299	.02232	.02487	148.70000	4.54200	.02422
2.280	2.500	12.30000	5.95740	-.84882	2.44390	.02296	.02238	.02480	148.67000	4.54070	.02433
2.287	2.700	12.30400	5.95750	-.84950	2.44430	.02309	.02250	.02477	148.71000	4.54160	.02447
2.293	2.900	12.31100	5.95760	-.85038	2.44420	.02335	.02257	.02473	148.71000	4.54140	.02452
2.298	3.100	12.31400	5.95770	-.85100	2.44400	.02365	.02258	.02470	148.71000	4.54100	.02459
2.297	3.300	12.31900	5.95780	-.85179	2.44320	.02389	.02261	.02476	148.67000	4.53960	.02462
	GRADIENT	.01757	.00050	-.00263	-.01157	-.00042	.00005	.00007	-.65143	-.02129	-.00017

OA257 (LARC 20-M6-6559) OV102 (S7E166) (10 JUL 81)

REFERENCE DATA

SREF = 2690.0000 SQ.FT. XMRP = 1076.6800 IN. XO
LREF = 474.8100 INCHES YMRP = .0000 IN. YO
BREF = 936.6800 INCHES ZMRP = 375.0000 IN. ZO
SCALE = .0100

PARAMETRIC DATA

ALPHA = 12.500 PHI = .000
SPDBRK = .000 AILRON = .000
YP = 1.000 1S = 1.000
ELEVON = .000 MACH = 6.000
S-MODE = 2.000 S-DIR = 1.000

RUN NO. 2276/ 0 RN/L = 7.53 GRADIENT INTERVAL = -.60/ .60

RN/L	BETA	ALPHA	MACH	PHI	Q	BP1	BP2	BP3	PT1	PT2	PSC
7.590	-4.200	12.12400	5.94050	-.79556	7.07900	.06016	.05796	.05170	425.59000	13.15400	.06286
7.591	-4.000	12.13200	5.94060	-.79693	7.08710	.05998	.05787	.05164	426.11000	13.16900	.06275
7.587	-3.800	12.13700	5.94070	-.79824	7.07080	.05979	.05787	.05163	425.16000	13.13800	.06267
7.585	-3.600	12.13800	5.94080	-.79910	7.07390	.05964	.05790	.05160	425.37000	13.14400	.06259
7.586	-3.400	12.13700	5.94080	-.79993	7.08020	.05958	.05794	.05175	425.78000	13.15600	.06253
7.573	-3.200	12.13900	5.94090	-.80102	7.06580	.05978	.05829	.05196	424.94000	13.12900	.06268
7.572	-3.000	12.14400	5.94100	-.80225	7.06860	.06013	.05860	.05222	425.14000	13.13400	.06284
7.568	-2.800	12.14500	5.94110	-.80319	7.06900	.06080	.05886	.05262	425.19000	13.13500	.06320
7.562	-2.600	12.14800	5.94120	-.80423	7.06940	.06149	.05880	.05304	425.24000	13.13600	.06352
7.577	-2.400	12.15200	5.94130	-.80529	7.08990	.06186	.05837	.05341	426.50000	13.17400	.06378
7.575	-2.200	12.15400	5.94140	-.80634	7.09440	.06184	.05750	.05361	426.80000	13.18200	.06390
7.582	-2.000	12.16000	5.94150	-.80753	7.10270	.06178	.05694	.05347	427.33000	13.19800	.06389
7.560	-1.800	12.16400	5.94160	-.80882	7.07600	.06160	.05697	.05339	425.75000	13.14800	.06393
7.535	-1.600	12.16800	5.94170	-.81011	7.04730	.06143	.05738	.05333	424.05000	13.09500	.06387
7.518	-1.400	12.16900	5.94180	-.81131	7.02810	.06135	.05796	.05331	422.93000	13.05900	.06386
7.512	-1.200	12.17400	5.94190	-.81262	7.01640	.06140	.05866	.05327	422.25000	13.03700	.06383
7.516	-1.000	12.17400	5.94200	-.81368	7.02110	.06148	.05958	.05327	422.56000	13.04600	.06381
7.501	-.800	12.17700	5.94210	-.81483	7.02090	.06157	.06060	.05324	422.58000	13.04600	.06370
7.499	-.600	12.17900	5.94220	-.81594	7.02230	.06161	.06118	.05305	422.68000	13.04800	.06359
7.497	-.400	12.18200	5.94230	-.81730	7.02320	.06175	.06174	.05314	422.77000	13.05000	.06364
7.491	-.200	12.18600	5.94240	-.81858	7.02930	.06168	.06195	.05336	423.17000	13.06100	.06380
7.499	.000	12.19000	5.94250	-.81992	7.04050	.06161	.06211	.05368	423.87000	13.08200	.06407
7.501	.200	12.19400	5.94250	-.82137	7.03470	.06188	.06227	.05413	423.54000	13.07100	.06433
7.492	.400	12.19900	5.94260	-.82284	7.03180	.06232	.06249	.05457	423.40000	13.06600	.06459
7.481	.600	12.20000	5.94270	-.82407	7.02180	.06273	.06261	.05491	422.82000	13.04700	.06483
7.464	.800	12.20400	5.94280	-.82554	7.00380	.06302	.06271	.05508	421.77000	13.01400	.06493
7.478	1.000	12.20800	5.94290	-.82701	7.00700	.06339	.06262	.05527	421.99000	13.02000	.06498
7.493	1.200	12.21100	5.94300	-.82829	7.01030	.06385	.06248	.05547	422.22000	13.02600	.06508
7.481	1.400	12.21100	5.94310	-.82957	7.00610	.06432	.06270	.05558	421.99000	13.01800	.06525
7.494	1.600	12.21600	5.94320	-.83089	7.02610	.06475	.06304	.05573	423.22000	13.05500	.06544
7.504	1.800	12.22000	5.94330	-.83237	7.03980	.06520	.06343	.05589	424.08000	13.08100	.06574
7.503	2.000	12.22100	5.94340	-.83356	7.03940	.06561	.06371	.05618	424.08000	13.08000	.06600
7.508	2.200	12.22300	5.94350	-.83488	7.04740	.06591	.06371	.05622	424.59000	13.09500	.06609
7.512	2.400	12.22600	5.94360	-.83619	7.04940	.06603	.06359	.05597	424.74000	13.09800	.06603
7.539	2.600	12.23100	5.94370	-.83777	7.05670	.06601	.06329	.05547	425.21000	13.11200	.06592
7.531	2.800	12.23700	5.94380	-.83920	7.05920	.06604	.06308	.05490	425.38000	13.11700	.06585
7.513	3.000	12.24000	5.94390	-.84060	7.04720	.06628	.06293	.05454	424.69000	13.09400	.06596
7.502	3.200	12.24200	5.94400	-.84193	7.03640	.06648	.06272	.05409	424.07000	13.07400	.06605
7.497	3.400	12.24500	5.94410	-.84329	7.03640	.06669	.06244	.05364	424.10000	13.07400	.06615
7.483	3.600	12.24600	5.94420	-.84465	7.02590	.06687	.06211	.05330	423.49000	13.05500	.06624
7.508	3.800	12.24900	5.94430	-.84609	7.03380	.06707	.06176	.05293	424.00000	13.06900	.06633
7.516	4.000	12.25100	5.94440	-.84725	7.03770	.06727	.06144	.05274	424.26000	13.07700	.06648

OA257 (LARC 20-M6-6559) OV102 (S7E166) (10 JUL 81)

REFERENCE DATA

SREF = 2690.0000 SQ.FT. XMRP = 1076.6800 IN. XO
LREF = 474.8100 INCHES YMRP = .0000 IN. YO
BREF = 936.6800 INCHES ZMRP = 375.0000 IN. ZO
SCALE = .0100

PARAMETRIC DATA

ALPHA = 12.500 PHI = .000
SPDBRK = .000 AILRON = .000
YP = 1.000 1S = 1.000
ELEVON = .000 MACH = 6.000
S-MODE = 2.000 S-DIR = 1.000

RUN NO. 2276/ O RN/L = 7.53 GRADIENT INTERVAL = -.60/ .60

RN/L	BETA	ALPHA	MACH	PHI	Q	BP1	BP2	BP3	PT1	PT2	PSC
7.504	4.200	12.24900	5.94450	-.84846	7.03190	.06747	.06112	.05243	423.94000	13.06600	.06662
	GRADIENT	.01875	.00039	-.00683	.00377	.00084	.00109	.00164	.36607	.00696	.00110