NASA
CR
3734-
v.1
c.1

TECH LIBRARY KAFB, NM
0062353

NASA Contractor Report 3734

Space Applications of Automation, Robotics and Machine Intelligence Systems (ARAMIS) - Phase II

Volume 1: Telepresence Technology Base Development

D. L. Akin, M. L. Minsky, E. D. Thiel,
and C. R. Kurtzman

CONTRACT NAS8-34381
OCTOBER 1983

LOAN COPY: RETURN TO
AFWL TECHNICAL LIBRARY
KIRTLAND AFB, N.M. 87117

25th Anniversary
1958-1983

NASA

TECH LIBRARY KAFB, NM

0062353

NASA Contractor Report 3734

Space Applications of Automation, Robotics and Machine Intelligence Systems (ARAMIS) - Phase II

Volume 1: Telepresence Technology Base Development

D. L. Akin, M. L. Minsky, E. D. Thiel,
and C. R. Kurtzman
Massachusetts Institute of Technology
Cambridge, Massachusetts

Prepared for
George C. Marshall Space Flight Center
under Contract NAS8-34381

National Aeronautics
and Space Administration

Scientific and Technical
Information Branch

1983

TABLE OF CONTENTS

VOLUME I: TELEPRESENCE TECHNOLOGY BASE DEVELOPMENT

1.1 INTRODUCTION.....1.1.1
1.1.1 CONTRACTUAL BACKGROUND OF STUDY.....1.1.1
1.1.2 CONTRIBUTORS TO THIS STUDY.....1.1.1
1.1.3 ORGANIZATION OF THE FINAL REPORT.....1.1.2
1.1.4 TELEPRESENCE DESCRIPTION.....1.1.2
1.1.5 DEFINITIONS AND EXPLAINATIONS.....1.1.4
1.2 EXAMINATION OF NASA GOALS AND PLANS.....1.2.1
1.2.1 INTRODUCTION.....1.2.1
1.2.2 NEAR TERM GOALS AND PLANS.....1.2.2
1.2.2.1 SPACECRAFT SERVICING.....1.2.2
1.2.2.2 STRUCTURAL ASSEMBLY.....1.2.7
1.2.2.3 CONTINGENCY EVENTS.....1.2.8
1.2.2.4 NEAR TERM TASK SUMMARY.....1.2.9
1.2.2.5 EVA EQUIVALENT CAPABILITY.....1.2.10
1.2.3 LONG TERM PLANS AND GOALS.....1.2.11
1.2.4 TELEPRESENCE PLANS AND GOALS CONCLUSIONS.....1.2.13
1.3 TECHNOLOGY REQUIREMENTS AND ASSESSMENT.....1.3.1
1.3.1 INTRODUCTION.....1.3.1
1.3.2 NEAR TERM TECHNOLOGY REQUIREMENTS AND ASSESSMENTS.....1.3.3
1.3.2.1 HUMAN FACTORS AND MAN/MACHINE INTERFACE.....1.3.3
1.3.2.1.1 REQUIREMENTS.....1.3.3
1.3.2.1.2 ASSESSMENT.....1.3.4
1.3.2.2 VISION.....1.3.5
1.3.2.2.1 REQUIREMENTS.....1.3.5
1.3.2.2.2 ASSESSMENT.....1.3.7
1.3.2.3 MANIPULATOR ARM.....1.3.9
1.3.2.3.1 REQUIREMENTS.....1.3.9
1.3.2.3.2 ASSESSMENT.....1.3.13
1.3.2.4 END EFFECTORS.....1.3.16
1.3.2.4.1 REQUIREMENTS.....1.3.16
1.3.2.4.2 ASSESSMENT.....1.3.17
1.3.2.5 SENSORS.....1.3.18
1.3.2.5.1 REQUIREMENTS.....1.3.18
1.3.2.5.2 ASSESSMENT.....1.3.19
1.3.2.6 COMMUNICATIONS.....1.3.21
1.3.2.6.1 REQUIREMENTS.....1.3.21
1.3.2.6.2 ASSESSMENT.....1.3.23
1.3.2.7 CONTROL.....1.3.27
1.3.2.7.1 REQUIREMENTS.....1.3.29
1.3.2.7.2 ASSESSMENT.....1.3.29
1.3.2.8 CONCLUSIONS.....1.3.35
1.3.3 ADVANCED TECHNOLOGY (LONG TERM TELEPRESENCE TECHNOLOGY).....1.3.35
1.3.3.1 FULL TELEPRESENCE.....1.3.36
1.3.3.2 CONTROL.....1.3.36
1.3.3.2.1 SUPERVISORY CONTROL.....1.3.36
1.3.3.2.2 ADAPTIVE CONTROL.....1.3.39
1.3.3.2.3 SUMMARY.....1.3.40
1.3.3.3 INTELLIGENT VISION.....1.3.40
1.3.3.4 MANIPULATORS AND END EFFECTORS.....1.3.41
1.3.3.5 SENSORS.....1.3.42
1.3.3.6 COMMUNICATIONS.....1.4.1

1.4 FACILITIES ASSESSMENT.....1.4.1
1.4.1 NASA MARSHALL SPACE FLIGHT CENTER (MSFC).....1.4.2
1.4.2 NASA JET PROPULSION LABORATORY (JPL).....1.4.3
1.4.3 NASA LANGLEY RESEARCH CENTER.....1.4.4
1.4.4 MARTIN MARIETTA AEROSPACE.....1.4.5
1.4.5 GRUMMAN AEROSPACE CORPORATION.....1.4.6
1.4.6 MASSACHUSETTS INSTITUTE OF TECHNOLOGY (MIT).....1.4.6
1.4.7 OTHER TELEPRESENCE RELATED FACILITIES WITH SPACE EXPERIENCE.....1.4.10
1.4.8 OTHER TELEPRESENCE RESEARCH FACILITIES.....1.4.11
1.4.9 SUMMARY.....1.4.13
1.5 DEVELOPMENT PROGRAM.....1.5.1
1.5.1 INTRODUCTION.....1.5.1
1.5.2 PROGRAM OUTLINE.....1.5.1
1.5.3 TECHNOLOGY DEVELOPMENT PROGRAM.....1.5.3
1.5.3.1 VISION.....1.5.5
1.5.3.2 MANIPULATORS.....1.5.6
1.5.3.3 END EFFECTORS.....1.5.7
1.5.3.4 SENSORS.....1.5.8
1.5.3.5 COMMUNICATIONS.....1.5.10
1.5.3.6 CONTROL.....1.5.11
1.5.4 DEVELOPMENT PROGRAM SUMMARY.....1.5.13
1.6 TELEPRESENCE TECHNOLOGY BASE DEVELOPMENT CONCLUSIONS.....1.6.1
1.6.1 TELEPRESENCE IS NEEDED.....1.6.1
1.6.2 TELEPRESENCE IS FEASIBLE.....1.6.2
1.7 BIBLIOGRAPHY.....1.7.1
1.7.1 GENERAL TELEPRESENCE AND ROBOTICS.....1.7.1
1.7.2 SATELLITE SERVICING.....1.7.2
1.7.3 SPACE TELESCOPE.....1.7.3
1.7.4 ADVANCED X-RAY ASTROPHYSICS FACILITY.....1.7.3
1.7.5 ADVANCED SPACE TELESCOPES.....1.7.4
1.7.6 TELEOPERATOR MANEUVERING SYSTEM.....1.7.4
1.7.7 SPACE STATION.....1.7.5
1.7.8 ORBITAL TRANSFER VEHICLE.....1.7.5
1.7.9 ASSEMBLY.....1.7.5
1.7.10 CONTROL.....1.7.6
1.7.11 HUMAN FACTORS.....1.7.6
1.7.12 MANIPULATORS.....1.7.7
1.7.13 RENDEZVOUS AND DOCKING.....1.7.7
1.7.14 SENSORS.....1.7.8
1.7.15 VISION.....1.7.8
1.7.16 REMOTE MANIPULATOR SYSTEM.....1.7.8
1.7.17 CONSUMABLE RESUPPLY.....1.7.9

TABLE OF CONTENTS

VOLUME 2: TELEPRESENCE PROJECT APPLICATIONS

2.1 INTRODUCTION.....2.1.1
2.1.1 CONTRACTUAL BACKGROUND OF STUDY.....2.1.1
2.1.2 CONTRIBUTORS TO THIS STUDY.....2.1.1
2.1.3 ORGANIZATION OF THE FINAL REPORT.....2.1.2
2.2 SPACE PROJECT SCIENTIFIC OVERVIEW.....2.2.1
2.2.1 THE SPACE TELESCOPE (ST).....2.2.1
2.2.2 THE ADVANCED X-RAY ASTROPHYSICS FACILITY (AXAF).....2.2.4
2.2.3 ADVANCED SPACE TELESCOPE CONCEPTS.....2.2.6
2.3 SPACE PROJECT TELEPRESENCE TASK ANALYSIS.....2.3.1
2.3.1 ST SERVICING TASKS.....2.3.5
2.3.1.1 AXIAL SCIENTIFIC INSTRUMENTS.....2.3.7
2.3.1.2 THE RADIAL SCIENTIFIC INSTRUMENT.....2.3.9
2.3.1.3 FINE GUIDANCE SENSORS (FGSs).....2.3.13
2.3.1.4 THE RATE SENSOR UNITS (RSUs).....2.3.15
2.3.1.5 THE SCIENCE INSTRUMENT CONTROL AND
DATA HANDLING UNIT (SI C&DH).....2.3.15
2.3.1.6 THE RATE GYRO ELECTRONICS (RGEs).....2.3.15
2.3.1.7 THE BATTERIES.....2.3.19
2.3.1.8 THE FINE GUIDANCE ELECTRONICS UNITS (FGEs).....2.3.19
2.3.1.9 LATCH DESIGN.....2.3.19
2.3.1.10 CONTINGENCY SERVICING.....2.3.19
2.3.2 AXAF SERVICING TASKS.....2.3.22
2.3.2.1 AXAF ELEMENTS AND INSTRUMENTS.....2.3.24
2.3.2.2 AXAF ORUs.....2.3.29
2.3.3 ADVANCED SPACE TELESCOPE SERVICING TASKS.....2.3.30
2.3.3.1 THE VERY LARGE SPACE TELESCOPE (VLST).....2.3.30
2.3.3.2 THE COHERENT OPTICAL SYSTEM OF
MODULAR IMAGING COLLECTORS (COSMIC).....2.3.34
2.3.3.3 THE 100-M THINNED-APERTURE TELESCOPE (TAT).....2.3.36
2.4 OPERATIONAL ANALYSIS.....2.4.1
2.4.1 RMS OPERATIONS.....2.4.4
2.4.2 GRASPING.....2.4.7
2.4.3 CONSUMABLE RESUPPLY.....2.4.8
2.4.4 ASSEMBLY.....2.4.9
2.4.5 ORBITAL TRANSFER.....2.4.14
2.4.5.1 ST ORBITAL TRANSFER.....2.4.15
2.4.5.2 XAF ORBITAL TRANSFER.....2.4.19
2.4.5.3 ADVANCED TELESCOPE ORBITAL TRANSFER.....2.4.23
2.4.6 RENDEZVOUS.....2.4.23
2.4.7 DOCKING.....2.4.25
2.4.8 MIRROR CLEANING AND RECOATING.....2.4.29
2.4.9 REMOTE OBSERVATION OF TELESCOPE SCIENCE DATA.....2.4.29
2.5 TECHNOLOGICAL ANALYSIS.....2.5.1
2.5.1 END EFFECTORS.....2.5.2
2.5.2 SENSORS.....2.5.3
2.5.3 VISION.....2.5.4
2.5.4 CONTROL.....2.5.5
2.5.5 HUMAN FACTORS.....2.5.6
2.5.6 PREDICTIVE DISPLAYS.....2.5.7
2.5.7 MANIPULATORS.....2.5.8
2.5.8 STOWAGE RACKS.....2.5.10
2.6 DEVELOPMENTAL ANALYSIS.....2.6.1
2.7 CONCLUSIONS.....2.7.1

2.8 BIBLIOGRAPHY.....2.1
2.8.1 GENERAL TELEPRESENCE AND ROBOTICS.....2.1
2.8.2 SATELLITE SERVICING.....2.2
2.8.3 SPACE TELESCOPE.....2.3
2.8.4 ADVANCED X-RAY ASTROPHYSICS FACILITY.....2.3
2.8.5 ADVANCED SPACE TELESCOPES.....2.4
2.8.6 TELEOPERATOR MANEUVERING SYSTEM.....2.4
2.8.7 SPACE STATION.....2.5
2.8.8 ORBITAL TRANSFER VEHICLE.....2.5
2.8.9 ASSEMBLY.....2.5
2.8.10 CONTROL.....2.6
2.8.11 HUMAN FACTORS.....2.6
2.8.12 MANIPULATORS.....2.7
2.8.13 RENDEZVOUS AND DOCKING.....2.7
2.8.14 SENSORS.....2.8
2.8.15 VISION.....2.8
2.8.16 REMOTE MANIPULATOR SYSTEM.....2.8
2.8.17 CONSUMABLE RESUPPLY.....2.9

TABLE OF CONTENTS

VOLUME III: EXECUTIVE SUMMARY

3.1 INTRODUCTION.....3.1.1
3.1.1 CONTRACTUAL BACKGROUND OF STUDY.....3.1.1
3.1.2 CONTRIBUTORS TO THIS STUDY.....3.1.1
3.1.3 ORGANIZATION OF THE FINAL REPORT.....3.1.2
3.1.4 TELEPRESENCE DESCRIPTION.....3.1.3
3.2 THE NEED FOR TELEPRESENCE.....3.2.1
3.2.1 INTRODUCTION.....3.2.1
3.2.2 NEAR TERM GOALS AND PLANS.....3.2.2
3.2.2.1 SPACECRAFT SERVICING.....3.2.2
3.2.2.2 STRUCTURAL ASSEMBLY.....3.2.4
3.2.2.3 CONTINGENCY EVENTS.....3.2.4
3.2.2.4 NEAR TERM TASK SUMMARY.....3.2.5
3.2.2.5 EVA EQUIVALENT CAPABILITY.....3.2.6
3.2.3 LONG TERM PLANS AND GOALS.....3.2.8
3.2.4 TELEPRESENCE PLANS AND GOALS CONCLUSIONS.....3.3.1
3.3 TELEPRESENCE FEASIBILITY.....3.3.1
3.3.1 TELEPRESENCE TECHNOLOGY.....3.3.1
3.3.2 ADVANCED TECHNOLOGY (LONG TERM TELEPRESENCE TECHNOLOGY).....3.3.9
3.3.2.1 FULL TELEPRESENCE.....3.3.10
3.3.2.2 SUPERVISORY CONTROL.....3.3.10
3.3.3 TELEPRESENCE PROJECT APPLICATION.....3.3.11
3.3.3.1 SPACE PROJECT TELEPRESENCE TASK ANALYSIS.....3.3.12
3.3.3.2 EXAMPLE TASK ANALYSIS -- ST SERVICING TASKS.....3.3.13
3.3.3.3 OPERATIONAL AND TECHNOLOGICAL ANALYSES.....3.3.14
3.3.3.4 TELEPRESENCE APPLICATION SUMMARY.....3.3.16
3.3.4 FACILITIES.....3.3.16
3.3.5 DEVELOPMENT PROGRAM.....3.3.17
3.4 CONCLUSIONS.....3.4.1
3.4.1 TELEPRESENCE IS NEEDED 3.4.1
3.4.2 TELEPRESENCE IS FEASIBLE.....3.4.2

VOLUME I: TELEPRESENCE TECHNOLOGY BASE DEVELOPMENT

1.1 INTRODUCTION

1.1.1 CONTRACTUAL BACKGROUND OF STUDY

On June 10, 1982, NASA Marshall Space Flight Center (MSFC) awarded a twelve month contract (NAS8-34381) to the Space Systems and the Artificial Intelligence Laboratories of the Massachusetts Institute of Technology, for a study entitled "Space Applications of Automation, Robotics, and Machine Intelligence Systems (ARAMIS), Phase II, Telepresence". This Phase II contract immediately followed the completion of the ARAMIS Phase I research (also contract NAS8-34381) which produced its own final report. The Space Systems Laboratory is part of the MIT Department of Aeronautics and Astronautics; the Artificial Intelligence Laboratory is one of MIT's interdepartmental laboratories. Work on the contract began on June 10, 1981, with a termination date for Phase II on June 9, 1983.

This document is the final report for Phase II of the ARAMIS study. The NASA MSFC Contracting Officer's Representative is Georg F. von Tiesenhausen (205-453-2789).

1.1.2 CONTRIBUTORS TO THIS STUDY

The members of the study team are listed in Table 1.1. Information necessary for this study was obtained from experts in government, industry, and academia, and from literature searches.

Principal Investigators:
- Professor David L. Akin (617-253-3626)
- Professor Marvin L. Minsky (617-253-5864)

Study Manager: Eric D. Thiel (617-253-2298)
Associate Study Manager: Clifford R. Kurtzman (617-253-2298)
Contributing Investigator: Professor Rene H. Miller (617-253-2263)
Research Staff:
- Russell D. Howard
- Joseph S. Oliveira

Part-time Researcher: Antonio Marra, Jr.

TABLE 1.1: STUDY PARTICIPANTS

1.1.3 ORGANIZATION OF THE FINAL REPORT

Volume 1 of this report is the Telepresence Technology Base Development. This volume defines the field of telepresence, and provides overviews of those capabilities that are now available, and those that will be required to support a NASA telepresence effort. This includes investigation of NASA's plans and goals with regard to telepresence, extensive literature search for materials relating to relevant technologies, a description of these technologies and their state-of-the-art, and projections for advances in these technologies over the next decade. Also included is a listing of facilities that are doing research and development relating to telepresence. A technology development program leading to the deployment of an operational telepresence system by 1992 is presented. Volume 1 of this report is intended as a broad approach to telepresence technology and the general development of that technology.

Volume 2 of this report is the Telepresence Project Applications. This volume examines several space projects in detail to determine what capabilities are required of a telepresence system in order to accomplish various tasks, such as servicing and assembly. The key operational and technological areas are identified, conclusions and recommendations are made for further research, and an example developmental program is presented, leading to an operational telepresence servicer. Volume 2 is intended as an example of telepresence technology, and the associated issues, when telepresence is applied to several specific space missions.

Volume 3 is the executive summary of this contract report.

1.1.4 TELEPRESENCE DESCRIPTION

For the reader not familiar with telepresence, this section is intended as a brief introduction to the concept of telepresence and some of the terminology used in this report.

Roughly translated, the word "telepresence" means remote presence, just as "teleoperator" means remote operation. One way to think of telepresence is as a high fidelity teleoperator system. A teleoperator receives instructions from a human operator, and performs some action based on the instructions at a location remote from the human operator. It is similar to an industrial robot, except that a human is in control instead of a computer.

The distinction between telepresence and teleoperation is in the capabilities of the manipulators, and the quality and quantity of information available to the operator.

TELEPRESENCE DEFINITION

AT THE WORKSITE, THE MANIPULATORS HAVE THE DEXTERITY TO ALLOW THE OPERATOR TO PERFORM NORMAL HUMAN FUNCTIONS

AT THE CONTROL STATION, THE OPERATOR RECEIVES SUFFICIENT QUANTITY AND QUALITY OF SENSORY FEEDBACK TO PROVIDE A FEELING OF ACTUAL PRESENCE AT THE WORKSITE

The operator uses motions similar to those which he/she would use at the worksite to control manipulators capable of accomplishing operations. The information available to the operator should maximize the feeling of being present at the worksite. This permits the operator to concentrate on the work using his/her natural abilities to perform the task, without being distracted by unnecessary differences between actually being present and using a remote system.

The purpose of a telepresence system is to perform space operations which require human intelligence, control, and dexterity when EVA is not possible, not desirable, or when EVA alone cannot accomplish the desired mission. A telepresence system should permit remote assembly and repair of spacecraft. Also, it will permit unanticipated problems to be solved. Skylab, Apollo 13,

and the planned repair of the Solar Max spacecraft all demonstrate the importance of human capabilities for solving problems. Fortunately, humans were onboard both Apollo and Skylab to perform repairs, and Solar Max is within EVA range, but failures will occur on spacecraft which are out of EVA range or time limits. Telepresence is a necessary part of future space operations.

1.1.5 DEFINITIONS AND EXPLAINATIONS

The following set of definitions have been included to aid the reader in understanding this report.

DEXTERITY. The more dexterous the system, the closer it is to being able to perform the same tasks as an onsite human. This does not mean that the dexterous system performs the tasks in the same manner as an onsite human, but that it can produce the same results. Dexterity does not require high precision. A human arm is certainly dexterous, but it cannot position itself with the precision of a non-dexterous robot arm. The human arm can do the same tasks because it is compliant and has excellent feedback in its control system.

DOF. Degrees-of-Freedom. In the context of this report, this is the number of separate motions at each arm joint. For example, a manipulator with 3 axis of rotation at the shoulder, one at the elbow, and three at the wrist has 7 DOF.

END EFFECTOR. The "hand" portion of the manipulator arm.

EVA. Extra-Vehicular-Activity. Astronauts in pressure suits working outside a spacecraft. EVA is presently limited to near shuttle operations and 6 hours duration. Radiation exposure safety requirements will limit EVA above shuttle altitudes to short duration missions. EVA technology and analysis used in this report are based upon present EVA pressure suit technology.

FORCE FEEDBACK. This term describes the process of providing the operator with knowledge of the amount of force he is applying with the manipulator. This may include torques as well as direct linear forces, but it is not intended as a sense of touch.

NON-DEXTEROUS ARM. Often used to describe robot arms designed for one set of tasks. Implies an arm of limited capacity which is usually limited to a small number of specialized tasks.

SERVICER. A spacecraft, probably using telepresence, that resupplies, repairs, or assembles another spacecraft.

SUPERVISORY CONTROL. This is a control mode using a mix of man and machine control. In supervisory control the operator uses high level commands, as opposed to direct control, to instruct the computer to perform selected tasks. Upon completion of the desired task the computer returns control of the system to the operator.

TACTILE FEEDBACK. This is the process of providing the operator with a sense of touch, although the information may be transmitted to the operator by visual display, or other means. The operator would not only be able to distinguish differential pressures across a sensing surface, but would also have the ability to sense parameters such as slip, texture, and/or temperature.

TELEOPERATOR. Remotely controlled manipulator which to date has usually required direct human vision (no video system) for control. Generally used to refer to present and past remote manipulators. An example is the manipulators used in the nuclear industry.

TELEPRESENCE. The concept of telepresence can be defined by the following two statements. At the worksite, the manipulators have the dexterity to allow the operator to perform normal human functions. At the control station, the operator receives sensory feedback of sufficient quantity and quality to provide a feeling of actual presence at the worksite. These two statements represent the definition of an "all up" telepresence system.

TELEPRESENCE SERVICER. A telepresence unit performing spacecraft servicing tasks.

TELEPRESENCE UNIT. The part of the telepresence system that is transported to the worksite to perform the desired tasks.

The terms function, operation, and task are used interchangeably in this report.

1.2 EXAMINATION OF NASA GOALS AND PLANS

1.2.1 INTRODUCTION

To determine the technology required for telepresence, the general tasks required of a telepresence system must first be understood. This volume considers NASA goals and plans in a general sense, both near and far term. Telepresence is summarized as the ability to perform certain broadly defined functions. The second volume of this report considers the application of telepresence to specific spacecraft programs, and examines the details and operational considerations of telepresence operations. The telepresence technology base (described in sections 1.3 and 1.5) is based upon the need to perform the telepresence functions developed in this section.

NASA's plans can be divided into near term (through about 1995) and far term (post 1995). There is necessarily some overlap between these divisions because of planning and scheduling uncertainties, but there is a clear difference in the levels of planning detail for these periods. Near term plans and goals are detailed enough to permit reasonable assumptions about missions and procedures; these assumptions are sufficient to determine technology requirements. Far term plans are not specific enough to permit a determination of technology requirements beyond identifying general areas of research interest.

Any estimation of the proper technology to be used to solve a future problem will be heavily influenced by the available and currently projected technological capabilities in the problem area. Thus, the technology requirements in section 1.3 consider applicable any technology which could be developed, space qualified, and integrated into a space telepresence system which has an initial operational capability of 1990 to 1992.

1.2.2 NEAR TERM GOALS AND PLANS

The near terms goals and plans can be divided into three areas; spacecraft servicing, structural assembly, and contingency events. Figures 1.1, 1.2, and 1.3 illustrate the three areas, and the class of operation to which they belong. Scheduled operations consist of any task which can be anticipated and has a predictable frequency. Unscheduled operations are also anticipated, but do not have a predictable frequency. Contingency operations are unanticipated events which were not considered in the spacecraft design or the mission planning. Thus, the use of EVA to close the orbiter payload bay doors is an unscheduled operation; the repair of the Skylab solar panel was a contingency operation.

1.2.2.1 SPACECRAFT SERVICING

Servicing is the most important area for near term telepresence application. NASA is firmly committed to servicing such spacecraft as Space Telescope, the Advanced X-ray Astronomy Facility (AXAF), and the Long Duration Exposure Facility (LDEF). In addition, the success of the Solar Max Mission depends on an EVA repair scheduled for STS 13. Also, servicing is virtually mandatory for large scale space processing of materials, for space stations, and for space operations in general. Such large scale projects may not be fully developed by 1995, but the technology must be developed and in place

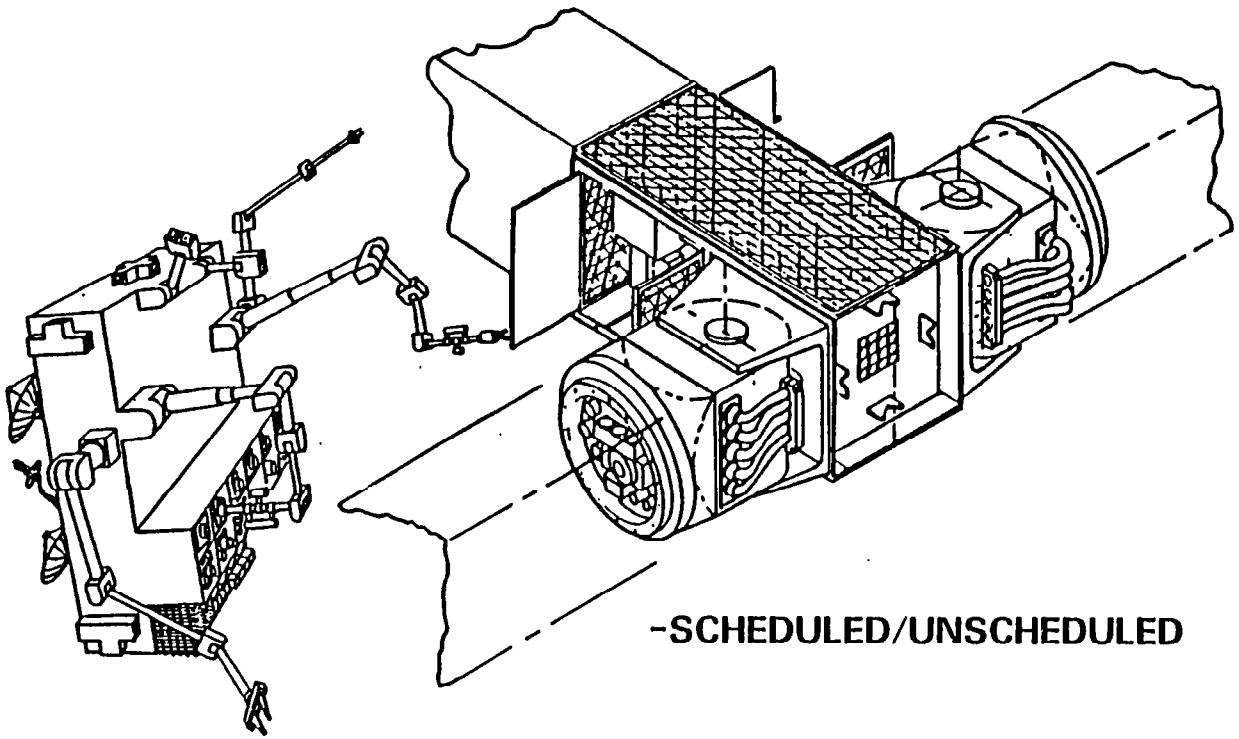

Figure 1.1: Spacecraft Servicing Operations.

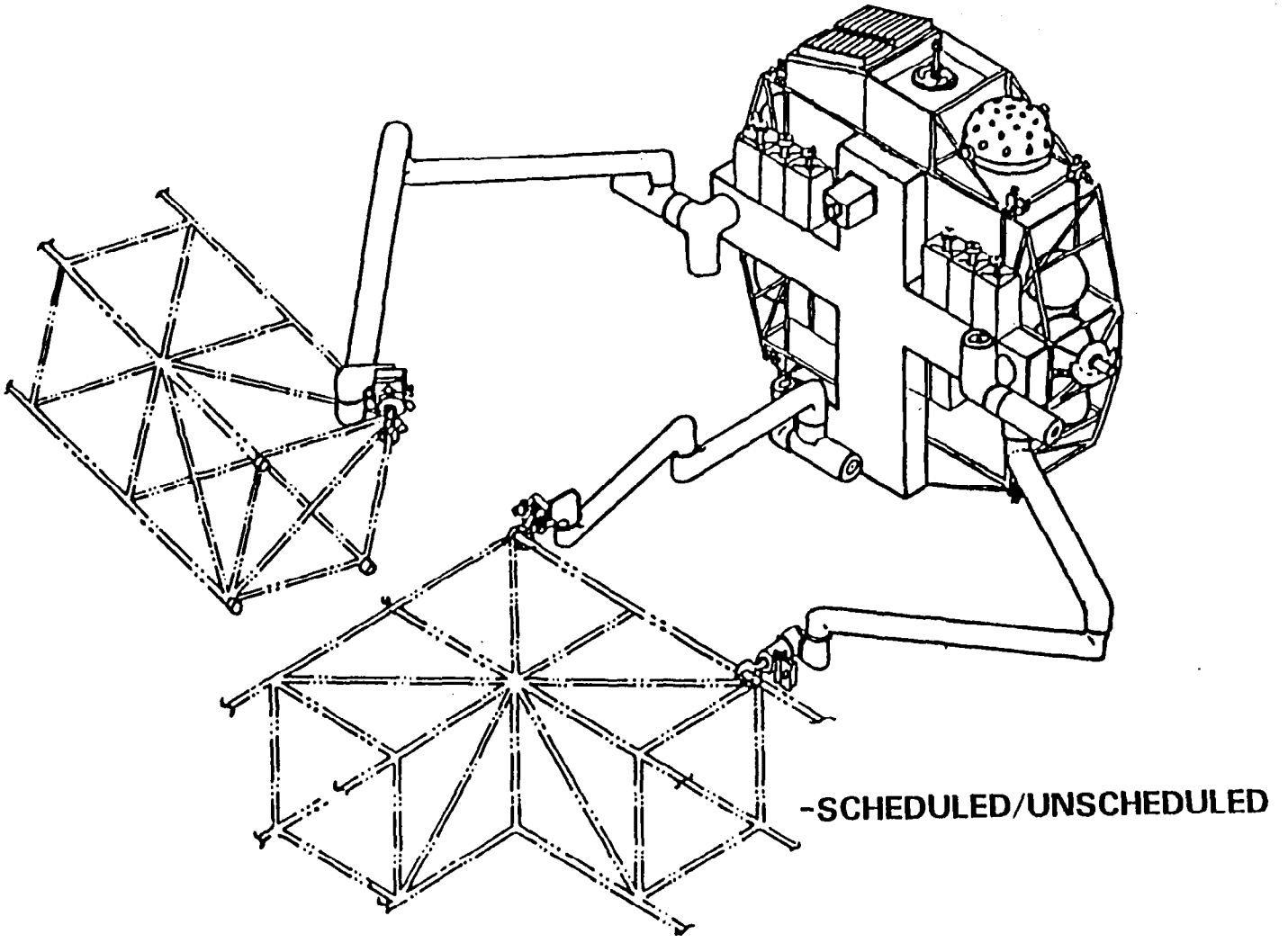

Figure 1.2: Structural Assembly.

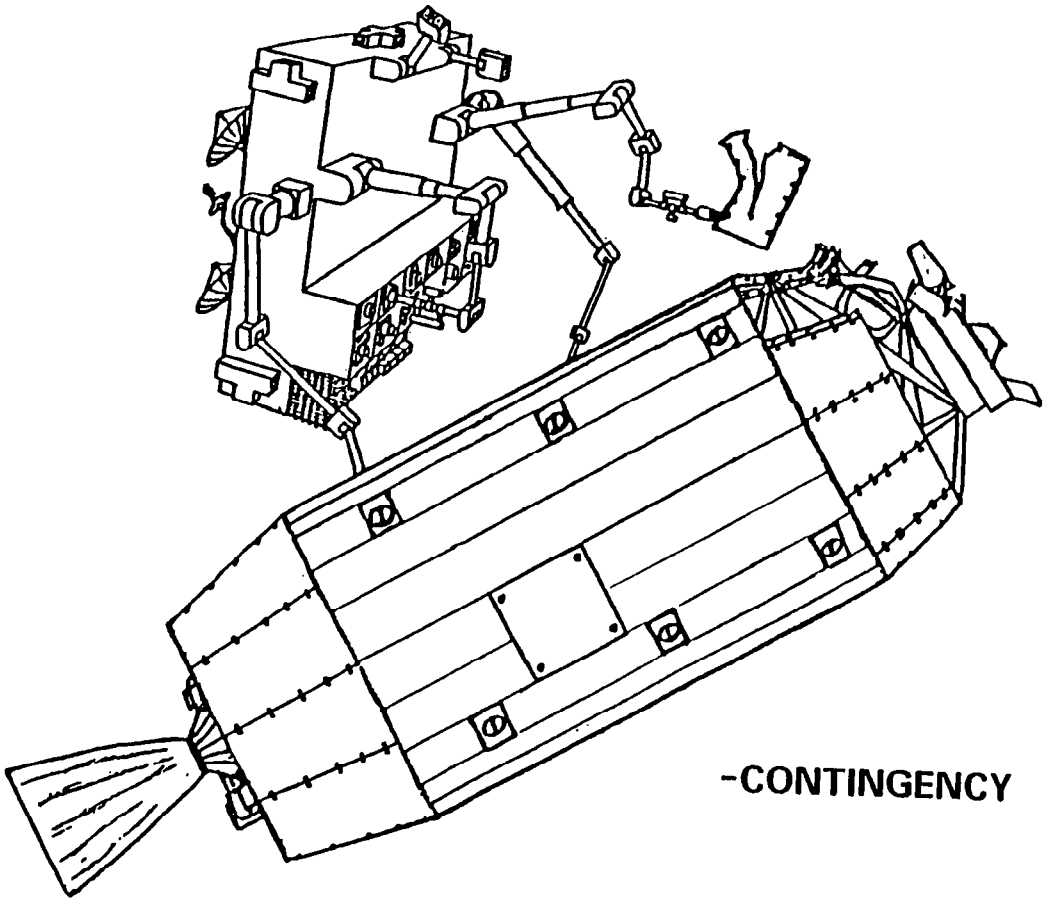

Figure 1.3: Contingency Events.

prior to full scale operations to provide servicing as needed.

A key problem with servicing planning is the "inertia" in spacecraft design and future planning. This inertia is endemic in the aerospace industry, but is particularly noticeable in servicing plans.

Essentially, the problem is that almost any servicing function can be performed with low level or near present technology, if the spacecraft is specifically designed to accommodate servicing performed by that type of technology. The end result is that servicing planning is currently limited to either simplistic module exchange devices or EVA operations. More advanced approaches (telepresence) are not being planned for because the technology is not being developed, and the technology is not being developed because there are no planned uses for it. This statement does not hold true for long term plans because some of the missions, by definition, require dexterous operations beyond EVA altitude and time capabilities, but telepresence capabilities will be needed prior to 2000.

Using more advanced technology, such as telepresence, has several advantages over low level technology such as non-dexterous module exchange devices. In general, the more advanced the servicer, the less impact servicing will have on the spacecraft design. Also, the advanced technology increases the reliability and versatility of the entire system. Consider the case of a jammed module or servicer arm. A module exchange mechanism could do little to solve the problem, and could conceivably be unable to detach itself from the crippled spacecraft, thus rendering both itself and the spacecraft useless. A more advanced teleoperator with two arms might be able to solve the problem; at the least it should be capable of freeing itself from the spacecraft. Such a system would also be capable of handling some contingency operations (see section 1.2.2.3).

Spacecraft servicing is composed of both scheduled and unscheduled

operations. Many of the individual near term mechanical tasks (module exchanges, for example) can be performed by robot devices similar to today's industrial robots, but the ability to assemble these tasks into more complex operations, handle even small anomalies in behavior, or reach through a crowded workspace, requires human control, as is provided by telepresence.

1.2.2.2 STRUCTURAL ASSEMBLY

NASA's near term plans do not explicitly call for structural assembly, but operations of this kind will probably be used for space station and other pre-1995 missions. Also, a system capable of performing near term servicing tasks is probably capable of performing many structural assembly tasks.

Most of the tasks required for structural assembly are simple positioning and manipulation operations, which should require less dexterity than servicing tasks. Some other capabilities are required for some assembly scenarios, such as cutting and welding, and can be accomplished with various tools or end effectors.

Some structural assembly tasks are scheduled, but most would be unscheduled because of the complexity of the work environment, and because it is doubtful that everything will be in a predetermined location at a predetermined time. Structural assembly tasks cannot be performed by simple industrial robot devices, because assembly is composed of many unscheduled operations which must be performed sequentially. The assembly of a structure requires the positioning and attachment of structural elements based on the assembly status of many other components in the structure. It is unlikely that a project of any size will exactly follow a preset construction plan; components will not always be exactly where they are expected nor behave in an expected manner. Also, the development of such an exact plan may be infeasible for many structures because ground simulations of space operations are not

completely reliable. A device similar to a present industrial robot would not be able to cope with such a flexible work environment. The unscheduled servicing operations are composed of a preplanned and predictable series of events. Unless performed by EVA, structural assembly needs a telepresence system and is, in many respects, more like contingency events than spacecraft servicing.

1.2.2.3 CONTINGENCY EVENTS

Discussion with NASA representatives indicates that the ability to handle contingency events is a priority capability. An examination of the Skylab or Apollo programs indicates that contingency operations have been of enormous benefit to the space program.

Less dramatic reasons exist for a contingency capability. On-orbit failures of spacecraft will become more common as the space program transitions to a space industry. Contingency repairs, such as the Solar Max repair, will be a necessary part of our space operations. Other, more complicated or dangerous tasks (replacing a failed battery or fuel tank, rescue operations, etc.), may exceed the EVA operations envelope and require a teleoperator mission. A spacecraft which has stopped communicating would require either EVA or a teleoperator of some type to approach it and make a diagnosis.

The contingency events discussed here may seem rather advanced for near term consideration, but they are possible contingency events which are, by definition, unplanned and unanticipated. Also, the repairs performed by a telepresence system would be determined by the details of the individual case and the technology available. An example of this is the Skylab program, in which the repair procedures developed were based on the capabilities and limitations of extra-vehicular assembly.

1.2.2.4 NEAR TERM TASK SUMMARY

Table 1.2 is a listing of the basic tasks which the study group has developed. The tasks are meant to be representative of the activities which are necessary for NASA to accomplish its goals, particularly spacecraft servicing, but are not intended as an exhaustive list of possible telepresence capabilities. These tasks are used to develop the telepresence technology requirements presented in section 1.3. An advanced telepresence system would be capable of more intricate tasks than those listed in Table 1.2.

OPERATE MECHANICAL CONNECTION
OPERATE ELECTRICAL CONNECTION
OPERATE LATCHING DEVICE
GRASP OBJECT
POSITION OBJECT
OPERATE CUTTING DEVICE
OPERATE WELDING DEVICE
GRAPPLE DOCKING FIXTURE OR HANDHOLD
OBSERVE SPACECRAFT/COMPONENT

TABLE 1.2: TELEPRESENCE TASK SUMMARY

These tasks are general in nature, and each could be either very simple or very complex. They are intended as a listing of basic mechanical operations, which can be combined to perform near term spacecraft servicing, structural assembly, and contingency events.

A brief consideration of spacecraft design, and the necessary characteristics of any system capable of performing spacecraft servicing, indicates that remote manipulators similar to those used on the ground today could accomplish these tasks. They would be slower and exhibit more difficulty than would a human in a shirt sleeve environment, but they could perform the necessary operations. In summary, the near term requirements are fairly simple mechanical operations which are within the capabilities of present ground manipulators.

1.2.2.5 EVA EQUIVALENT CAPABILITY

A comparison of the tasks listed in Table 1.2 with past EVA operations and neutral buoyancy simulations for Space Telescope and other missions indicates that the tasks required for NASA's near term goals could all be accomplished by EVA. This is not surprising, since most servicing plans call for EVA to perform the servicing. However, a consideration of reasonable manipulator and servicer technologies also leads to combinations of simple mechanical operations, which are similar to EVA tasks.

In addition to the fact that near term telepresence tasks are similar to EVA capabilities, there are several other justifications for designing near term telepresence systems to match EVA capabilities. NASA has experience with EVA operations, and this experience will continue to grow as the STS program continues. Since the Gemini program, NASA and industry have been accumulating design experience for EVA hardware and procedures. This experience is growing rapidly through programs such as Space Telescope, and efforts are being made to standardize spacecraft fittings and connections to facilitate space operations. This experience has produced confidence that EVA is capable of performing useful and important tasks. A telepresence system with capabilities similar to EVA would be able to utilize this experience in design and operations. It would also only need to demonstrate its ability to perform EVA tasks in one or two comprehensive tests to be considered capable of a wide variety of space tasks. A system with radically different capabilities than EVA would require more time and testing before confidence in its abilities could be established. Also, EVA and telepresence systems with similar capabilities would be capable of mutual backup operations and simultaneous operations. This would be especially useful during initial testing, and during very difficult operations. Furthermore, a telepresence system with an EVA equivalent capability would

provide for a smooth transition from our present technology of all EVA to a more advanced man-machine mix. Spacecraft designed for EVA or telepresence servicing would be serviceable by both methods. Spacecraft designed for EVA servicing would be only slightly different that those designed for telepresence servicing, due mostly to size and reach differences. This is not as important for non-LEO spacecraft because they are currently inaccessible to EVA, but near term servicing and assembly operations will be performed in LEO.

Finally, EVA equivalency does, by definition, include the ability to perform simple contingency operations.

It should be pointed out that the EVA equivalent capability does not mean that the telepresence system would perform the same tasks in the same manner as EVA. Telepresence might take longer, require more tools, and follow different procedures than EVA, but it would achieve the same results. Also, this EVA capability is based upon present suit technology. Future suit technology should significantly improve dexterity. Since both manipulator, end effector, and suit technologies are advancing, EVA and telepresence should continue to complement each other's operations through 2000.

1.2.3 LONG TERM PLANS AND GOALS

NASA's long term plans and goals are not specific or certain enough to permit definite conclusions other than general areas of interest. These areas of interest, or general goals, correspond closely with the potential future capabilities discussed in section 1.3.3 Advanced Technology. NASA will be able to utilize advanced technology, which is a natural product of present and near term research, to meet its long term goals. Unlike the technology necessary for near term telepresence, much of the advanced development will be performed by research in artificial intelligence and supervisory control which is not funded by NASA, although NASA support will be required to develop advanced AI

technologies for space use.

The most important long term goals are increased system dexterity and the ability for contingency operations. As space operations become space industry, and the construction, modification, and repair of orbital systems becomes routine, onsite high dexterity manipulation will be mandatory. Equipment shipped from Earth will not be preassembled as it is today, but will arrive as spares and components for orbital construction and assembly. Some of the components will probably require high dexterity assembly. More importantly, the need to replace damaged and failed components, particularly in intricate mechanical devices or complex systems, will require dexterity simply to access the repair site. An example is the modification or repair of a wiring harness. Despite clever design and much effort, there will be places where wiring will need to be guided through a harness that is difficult to reach, and which requires hand dexterity to feed the wiring.

The potential size and scope of future space operations will prohibit the extreme caution and highly detailed planning that accompanies present space missions. Commercial space missions will be commonplace, and industrial accidents will occur. The failure of a large materials processing furnace or a high pressure fuel line implies the need for crew rescue and versatile repair tasks. Tasks of this nature necessitate the ability to deal with nonfunctional and severely damaged equipment in an environment which may be unsuitable for EVA. The probability of successful advanced contingency operations is improved greatly by the availability of high dexterity telepresence.

Driven partly by the scope of future operations and partly by the fact that transmission time delays may degrade dexterity, increased system autonomy is desirable. Many future tasks could be repetitive and boring; high level supervisory control for these tasks would relieve operator fatigue and improve

reliability. In regions of obscured communications, an autonomous operation capability is necessary. Transmission time delays may make remote high dexterity control difficult or impossible, so some otherwise mundane tasks could require supervisory control or autonomy.

Due to the large costs of space vehicles, improvements to the telepresence system should be evolutionary, so that a new spacecraft is not required for each system upgrade. As spacecraft technology improves, the maneuvering system and telepresence unit may be replaced, but manipulator or computer system upgrades, for example, should not require replacing the entire spacecraft. The most radical advances in telepresence technology will occur in computer hardware and software, manipulators, and end effectors. Once a high dexterity manipulator is developed and installed, most system changes will be in software, which can be performed remotely from ground or space station control centers.

1.2.4 TELEPRESENCE PLANS AND GOALS CONCLUSIONS

For near term space operations, telepresence systems should be designed to be equivalent to EVA in capabilities. Telepresence may use different methods and may require more time to perform a given task than EVA, but telepresence should be able to achieve the same results. An EVA equivalent capability is desirable because it is more reliable than less capable options, such as the module exchange mechanism previously discussed, and is necessary for a minimum contingency operations capability. Also, an EVA equivalent telepresence system would have the option of using EVA as a backup and vice versa. Given the state of the technology discussed in section 1.3, an EVA equivalent telepresence system is a reasonable and timely development.

Long term telepresence goals are increased dexterity and autonomy. A rapidly growing workload composed of increasingly complex tasks will require

high dexterity manipulators and end effectors. The potential size and scope of future space operations and the desire for advanced contingency operations indicate that autonomy is an important goal.

1.3 TECHNOLOGY REQUIREMENTS AND ASSESSMENT

1.3.1 INTRODUCTION

This section presents the technology necessary to meet NASA's near term goals for telepresence. It also includes an assessment and discussion of the available technology. The requirements and assessments are organized by the technology areas shown in Figure 1.4, except for space adaptation, which is not a specific technology area, but is included in the figure due to the importance and difficulty of space qualifying hardware. Selected advanced features are included in the assessments where beneficial to system performance and operation. The assessments include recommended research and development topics, as well as state-of-the-art and promising near term technologies. A listing of present, near term, and advanced technologies is included in section 1.5, Development Program. This listing should be examined along with the technology assessment, because it covers a much wider time frame, and provides a concise statement of present and future technologies.

Section 1.3.3 presents a discussion of advanced telepresence technology. The advanced technology is also organized by technology areas, but is not presented in a requirements and assessments format, because NASA's long term plans are not specific enough to permit accurate development of technology requirements. Furthermore, technology forecasts past 1995 are of questionable accuracy.

Some of the technology requirements for an initial operational telepresence system may seem overly advanced to some readers, but the study group believes that such a system could be developed and flown following the

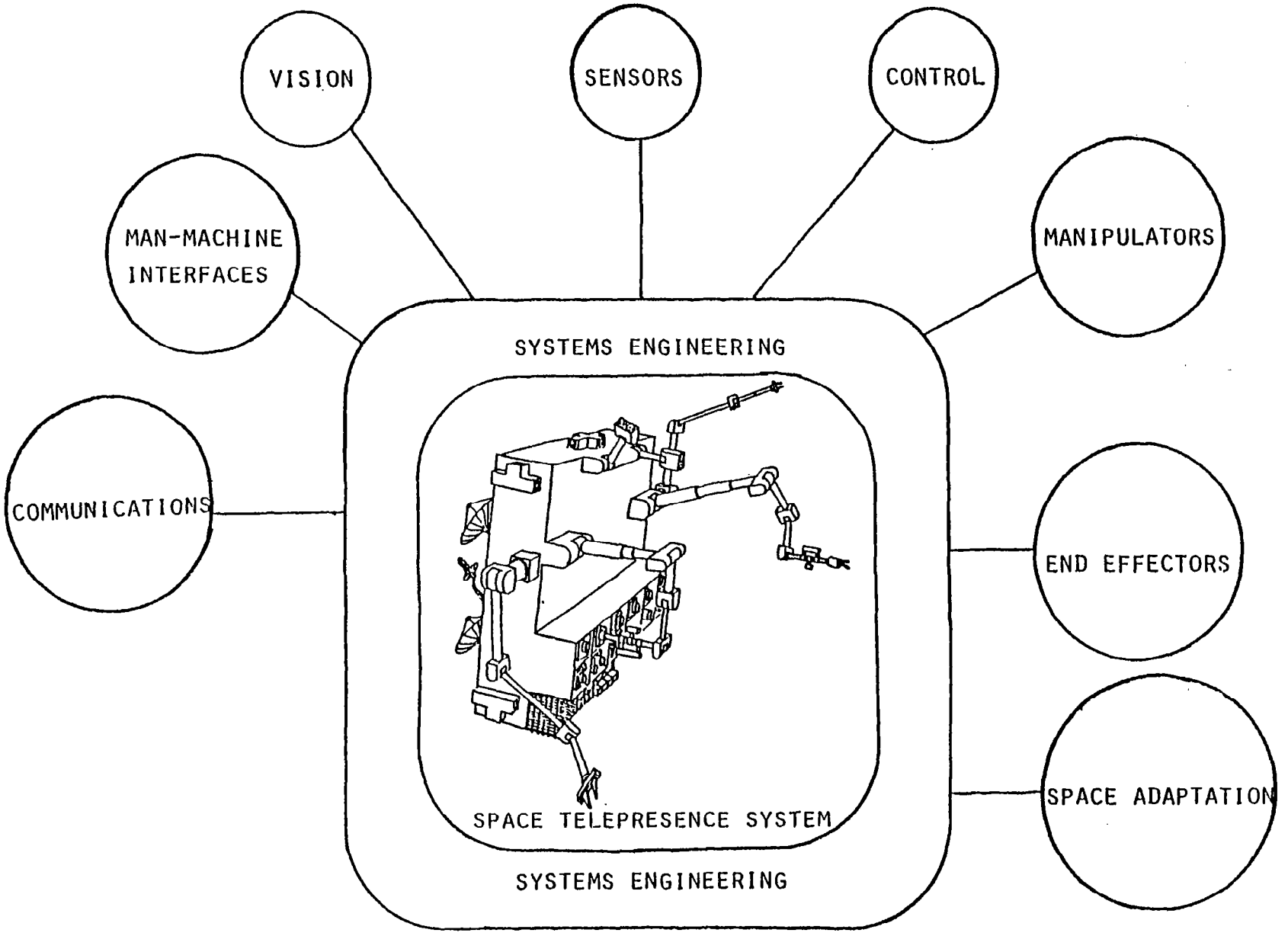

Figure 1.4: Telepresence Technology Areas.

procedures and schedule presented in section 1.5. Some options selected may not be absolutely necessary for a telepresence system operation, but have the potential to greatly improve performance or safety at minimal cost or schedule impact. Also, the technology requirements cannot be fully separated from consideration of what technology is available. Just as it does not make sense to require technology which will be beyond the state-of-the-art for 20 years, neither does it make sense to restrict the system to only that technology which has been previously developed and proven. An example would be a voice recognition system. Certainly the telepresence unit could function without it, but it can easily improve system performance. Since similar units are being flight tested onboard F-16 aircraft, and laboratory tests at JPL have verified the utility of voice controls for telepresence systems, it is reasonable to assume that reliable ground units will be available; a voice recognition command system is therefore part of the baseline for the initial telepresence system.

1.3.2 NEAR TERM TECHNOLOGY REQUIREMENTS AND ASSESSMENTS

1.3.2.1 HUMAN FACTORS AND MAN/MACHINE INTERFACE

1.3.2.1.1 REQUIREMENTS

From a human factors viewpoint, the more "transparent" the system, the better for operator performance. What this means is that the operator should not be performing tasks which would not have to be done if the operator were actually at the worksite. A mechanic rarely consciously considers how to position and move his arm while working: the control of his arm is autonomic. If he were forced to plan and think about each movement of his arm, his work would be slowed down considerably. A more extreme example is that of a runner. If a runner were to try to control his legs by actually thinking about the kinematics of motion, he probably would not be able to walk, let alone run.

The goal of a transparent system is to maximize the natural control of the system by the operator. This should be done to the maximum amount possible without degrading other system operating considerations. For example, a system with maximum "transparency" would have anthropomorphic manipulators with the size and response time of human arms. This may not be desirable for a space system, because such arms may be too short to perform some desired tasks. Also, if the manipulators had the power to respond as quickly as a human arm, they would probably be too heavy for space use.

The operator should also be provided with "natural" feedback and information whenever possible. Digital readouts provide useful information, but graphic or vector displays are often much easier to use. The operator should be able to gather the desired information without having to remove his attention from the task he is performing. This may lead to voice controls, "heads up" type displays, two operators per telepresence unit, etc.

One useful way to think about this problem is to consider the design of an aircraft. Flight and auxiliary system controls are always considered as a whole, because they interact through both the plane and the pilot. For example, placing the landing gear lever next to the flap switch on an airplane is a poor design, even though it may be a convenient location. The same interaction of primary and auxiliary functions is present in the control station of a telepresence system. This consideration of human factors has been applied to the other technology requirements and assessments.

1.3.2.1.2 ASSESSMENT

The nuclear industry has a large amount of experience with manipulator and remote workstation operations, but much of this experience has been with very limited manipulators and direct viewing of the worksite. A significant effort is now underway at Oak Ridge to analyze the remote operation problem from a

fundamental point of view, and to design teleoperator systems which can operate in and repair a permanently sealed nuclear facility. Much of this data base is applicable to space telepresence, but caution must be used since the work environment and tasks are significantly different.

Both government and industry have a large body of experience for aircraft and spacecraft cockpit design. Much of the data about displays, operator response time, and decision making capabilities should be very useful for designing the telepresence control and interface system.

The biggest problem with the human factors area is that much work has been done, but it has been scattered between research centers, and the efforts have usually been somewhat piecemeal. For example, one center has investigated one type of controller and one type of arm, and another center has programmed a simulation and a vision system, but the work has never been put together. The Naval Ocean Systems Center in Hawaii (NOSC) has the most complete telepresence unit yet assembled, but the hardware is not up to date, and funding has limited the amount of studies which they have been able to perform.

A research program needs to be started with simulation, experimental work, and hardware development proceeding together. This would permit valid experiments and tests of the man/machine interface.

1.3.2.2 VISION

1.3.2.2.1 REQUIREMENTS

Vision is the most important of man's senses, and is particularly critical for space operations where audio and tactile cues are absent. The system described in this section is felt to be the desirable baseline for a telepresence system.

The primary vision system should be a color stereo-optic device capable of being slaved to the operator's head position. The camera platform should have

at least 2 degrees-of-freedom (DOF) (pitch and yaw), and the display should be visible from any head orientation. Remote cameras should be able to provide oblique and closeup views of the worksite.

Stereo-optic vision has proven superior to monocular vision in performance tests, and provides the operator with depth perception capability. This capability will become important when guiding manipulator arms past obstacles. Color provides additional cues which aid in scene recognition and understanding. One of the best arguments for color vision is to view space operations (particularly in the orbiter payload bay) on a black and white display, and then on a color display. In many B&W images it is difficult to orient the image, let alone recognize components. The additional information provided by the color image usually solves problems of this type. Finally, because B&W vision will require use of TDRSS K band communications, but will only need a fraction of the K band capability, the inclusion of color vision should not be a major additional expense (see 1.3.2.6).

An operator reaching inside a spacecraft or working in a crowded environment would benefit from being able to pan and tilt the cameras by simply moving his head. This uses the natural motion of turning the head to change the scene being viewed. It also removes the need for always having to command camera position by voice or joystick control. To make this a workable system, a helmet mounted display is recommended. A binocular helmet mounted display would eliminate the need for complex optics usually associated with stereo vision, and allow greater comfort for the operator. Since the operator can select the initial point of operation, he can start work from a relaxed position, and then activate the helmet/camera position slave system. Two of the common complaints about stereo vision systems is that the optics cause headaches, and that the operator must hold his head in a fixed position. Helmet displays eliminate these problems. They allow the operator to choose

his own head position and, instead of using optics to create the stereo effect, they provide a separate image for each eye.

Experiments with difficult lighting situations, limited access to the workspace, and operations requiring closeup views all suggest that additional cameras are desirable, and often necessary. Closeup views from the wrist of each manipulator arm and side views from either the body of the servicer or the elbow of the arm would appear to be best, but this determination would be part of an experimental program. An additional option is placing cameras on a multi-DOF platform such as a manipulator arm, or remotely controlled maneuvering unit, and allow the operator to move the camera platform around the workspace.

1.3.2.2.2 ASSESSMENT

NOSC Hawaii has developed a 3 DOF (roll, pitch, yaw) B&W stereo vision system which is helmet mounted and is slaved to the operator's head orientation. The components of this system are off the shelf technology from the 1970's. Small B&W CCD cameras have been developed by RCA, Fairchild, and Hitachi. The Fairchild camera has already been space qualified for use on pressure suit helmets during EVA.

The primary vision system need not be CCD technology: space rated color cameras already in existence could do the job, but CCD cameras are smaller, lighter, use less power,and are are more reliable than the older vidicon types. Color CCD cameras are under development, and may become available at any time.

Color display units are also under development. The Air Force has a high resolution, wide field of view system under development for flight simulators. The Visually Coupled Airbourne Systems Simulator (VCASS) demonstrates that helmet mounted color vision systems are within the state-of-the-art. Advances in light valves and fiberoptic bundles may eliminate the need for mounting the

CRT on the helmet, and allow less expensive large fixed position CRT's to be used. Alternately, commercial introduction of color, high resolution video screens using liquid crystal technology is expected by the middle of 1984.

The hardware necessary for the vision system of a telepresence unit is nearly developed, and will require little NASA support. Work will be necessary to integrate and space qualify the system, but this should present little difficulty, as similar hardware has recently been qualified. The work that NASA will need to support is the testing of the vision system, and its command modes in conjuction with the rest of the telepresence system.

Several options exist for commanding the vision system. Slaving the camera position to the operator's head orientation is useful for many tasks, but could be a disadvantage during long or repetitive tasks that do not require camera repositioning. Since there will probably be extra fixed displays for viewing by non-operator personnel, a fixed display should also be provided for the operator. This will facilitate discussion of problems and procedures with observers, and some operators may prefer to use it for certain tasks.

Voice command of the vision system is a promising option. Speech recognition should become highly reliable in the next 2 to 3 years; it would free the operator's hands for manipulator control.

Computer aided control is also a viable option. The camera can be locked onto the end effector or some portion of the worksite at the discretion of the operator. This can be accomplished with voice commands, by keyboard, or by a simple joystick device. Also, sensors have been used in medical,and other, laboratory experiments which monitor the position of the operator's eyes to determine focal distance and target. An advanced vision system could monitor the operator's eyes to derive commands for the vision system. Such a system might be very natural and easy to use, but its feasiblity, usefulness, and human factors control laws must be determined by experiment before it can be

considered for use.

Due to the different work regimes and tasks, the operator should be provided with several options, and allowed to determine which is preferable. Since there may be many different users and operators of a telepresence system, not just highly trained "pilots", it should be flexible enough to adapt to the needs of various operators.

1.3.2.3 MANIPULATOR ARM

1.3.2.3.1 REQUIREMENTS

Two 7 DOF manipulator arms should be used for a telepresence system. They are capable of reaching around objects, and provide dexterity similar to a human arm. If feasible, the arms should be anthropomorphic, because this requires a minimum of adaptation to the system by the operator. In some cases, anthropomorphic arms may have difficulty performing certain tasks due to workspace and dexterity requirements, so non-anthropomorphic arms should be investigated. This is also discussed in section 2.5.7.

In addition to the main arms, there should be either a docking device or two grappling arms to lock the telepresence system in place relative to the worksite. A docking device is defined as a connection capable of transmitting reaction loads in all six axes; grapple arms (also known as anchor arms) are simple manipulators capable of grasping protrusions such as hand rails or structural members, and two would be required to provide a sufficiently rigid connection to the worksite. Without a docking device or grapple arms, thrusters would have to hold both the servicer and the spacecraft being repaired in position. This is a waste of fuel, and in most cases thruster performance would be inadequate. The docking device would be similar to the ones being planned for TMS orbital transfer operations. It is desirable to utilize the docking hardpoints for telepresence operations, because the

hardpoint will already be included in the design of any vehicle which can dock with TMS. Since the docking point on many spacecraft will be distant from the worksite, other means of attaching the servicer to the spacecraft being serviced are needed. Many of the spacecraft which are candidates for near term servicing will have RMS grapple fixtures and EVA handrails included in their design. One device could be used to grapple the RMS fixtures and lock the servicer in position, but this requires that several RMS fixtures be located at the proper positions to accomodate the needs of the servicer. Since many of the spacecraft are being designed without knowledge of the configuration and abilities of a telepresence servicer unit, this is a questionable option. A better choice is to have two simple arms with a generalized gripper or grippers which can use RMS grapple fixtures, EVA handholds, and structural members or other suitable hardpoints to lock the servicer in position. These arms need to be able to grapple in any orientation, so they will require 7 DOF; they do not require motors or means of locomotion, except for the grasping motion of the end effector. They can be positioned by the main arms, and use brakes or other devices to lock their position during the servicing operation. An alternative would be low power lightweight motors that are only used to position the arms, and again use brakes to lock their position during servicing activities.

One of the key problems in manipulator design is compatibility with the spacecraft to be serviced. Short manipulator arms may not be able to reach a distant worksite; long arms may have trouble with flexibility, and may lack dexterity at a close worksite. The TMS/servicer spacecraft could crawl along the spacecraft to be serviced, or otherwise adjust its position, but the size of the TMS/servicer would often preclude this technique.

One solution is to use long, many DOF arms with "miniarms" that lock the manipulator to the spacecraft near the worksite. The control difficulties and increased complexity of such a system make it an unlikely choice. Also, its

sized and weight could be prohibitive for small vehicles such as the TMS. It is possible to place a manipulator module on the end of the RMS. The module could be maneuvered into the desired position near the worksite and grapple arms could lock it into place. The long reach of the RMS and the high payload capacity of the shuttle make this a feasible option, but it would be limited by shuttle orbital and mission constraints (see section 2.4.1).

Another solution is a detachable servicer unit that leaves its TMS transporter and crawls along the spacecraft. This complicates the servicer design, and risks the loss of the servicer unit.

Probably the best approach, particularly for near term operations, is either multiple size arms or a modular segment arm system (Figure 1.5). The multiple arm approach selects from a set of different sized arms the proper size for a particular mission. This option would be best used with a telepresence unit based on the ground or at a space platform. This would allow the arms not being used for the present mission to be left behind, thus saving fuel and increasing payload capability. In some cases, more than one arm set would have to be carried, because of diverse servicing requirements for a single spacecraft.

The modular arm system uses several different sizes for each shoulder-to-elbow and elbow-to-wrist segment, etc. This system has the advantages of being able to tailor itself for each mission, and of being capable of a limited degree of self-repair. It is also inherently more complex than the other options.

In keeping with the NASA goal of an evolutionary system with capability increasing over time, there are some alternatives to traditional manipulator design that are worth investigating. Tendon activated manipulators have the inherent advantage of being able to place the motors closer to the "shoulder" of the arm, and thus reduce the effects of inertia. This lighter arm has a

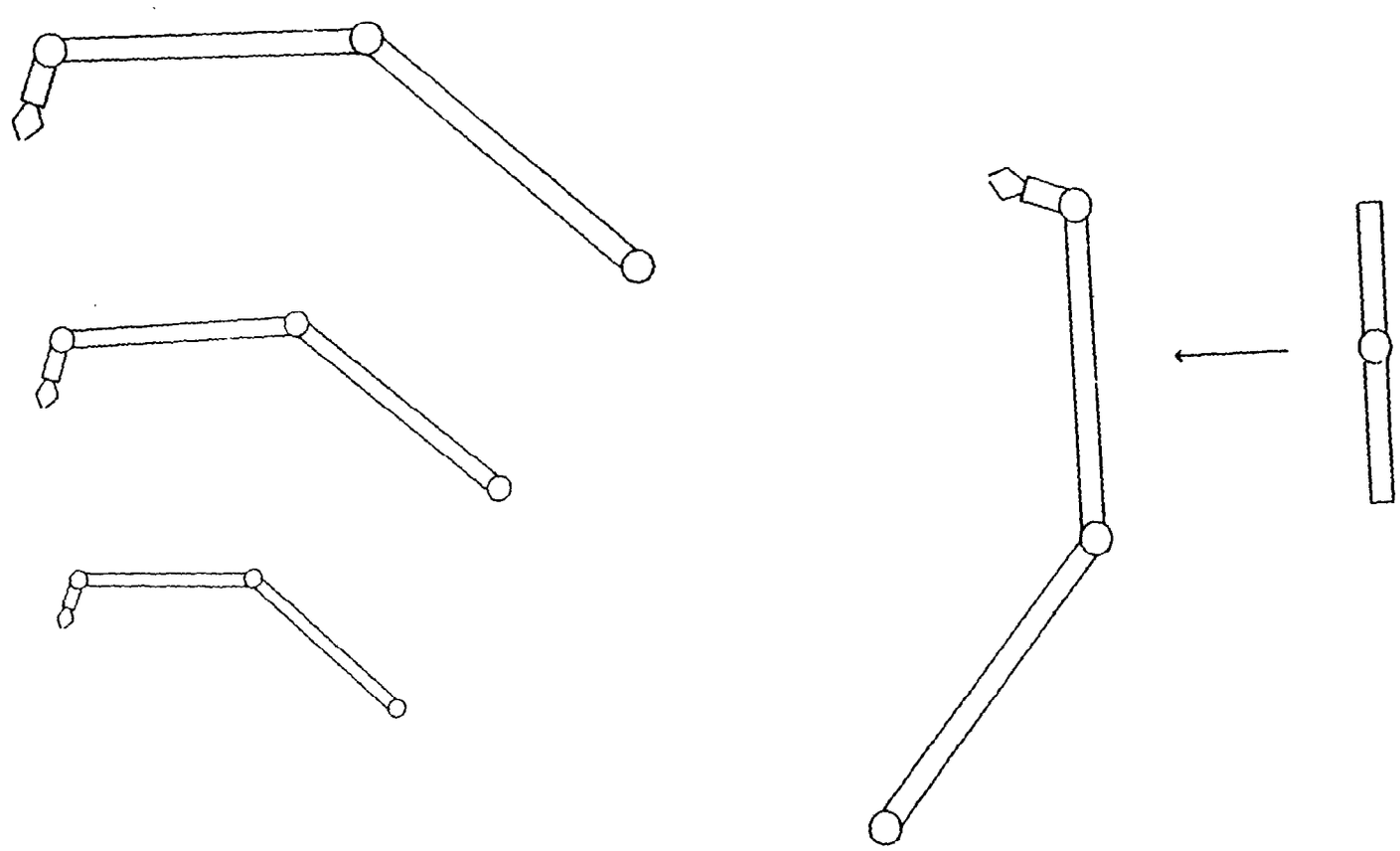

Figure 1.5: Manipulator Arm Options.

higher power-to-weight ratio, and is capable of fast response similar to that of the human arm. Such arms also have more backlash and error in arm position and movements. This is not a problem because, unlike industrial robots which often move with open loop control, the human operator provides closed loop position and trajectory control, and can accomodate the arm's backlash.

A much more advanced concept uses drive elements which are also structural elements to produce a truly flexible manipulator. An example is an arm constructed of stiff, but flexible wires which are held roughly parallel by widely separated nodes through which the wires pass. As tension is applied to a wire, the entire structure is deflected towards the wire under tension. This produces a manipulator flexible along it entire length. Such advanced arms are worthy of investigation, but the extremely large number of degrees-of-freedom of such a system will require advanced computer control capabilities.

1.3.2.3.2 ASSESSMENT

The basic work necessary for a space qualified 7 DOF manipulator arm has been completed. The Proto Flight Manipulator Arm (PFMA) built by Martin Marietta for Marshall Space Flight Center is the product of this effort. The PFMA was designed so that the ground development and demonstration units could be modified for space use. The PFMA, or arms like it, could be used as manipulator arms for the initial near term telepresence system.

A note should be made concerning the number of DOF of the manipulator arm; the 7 DOF in the manipulator discussed in this section is for the arm only, it does not include end effectors. End effectors can add several DOF, depending on their design. Also, some interchangeable end effectors (section 1.3.2.3) can incorporate some of the DOF normally associated with the manipulator arm into the end effector. For example, some interchangeable end effector designs

include pitch, yaw, and roll motions often associated with the wrist of the manipulator.

Docking fixtures and grapple points for the RMS are a well developed technology, and should not present any significant problems. Docking or grappling arms have not received much attention, and are a neglected technology. The basic technology for versatile docking arms is inherent in manipulator arm developments. An obvious solution to the problem is to use a second set of manipulator arms as the docking arms. This is an expensive option, and is probably not as desirable as designing dedicated docking arms. The dedicated arms could be designed without motors, or with very small ones just sufficient to lock the arms in place; the grapple arms could therefore be much lighter than the main manipulator arms. The grapple arms could be positioned by the main manipulator arms, and then locked in place by their own motors or brakes. A careful analysis of the size and shape of the telepresence unit and the worksite environments will be necessary prior to the design of the grapple arms, but the technology for such arms exists in present manipulators.

The technology for multiple sized arms does not yet exist. Near term telepresence systems will probably have to work with single sized arms unless the development of modular arms is given a high priority. The difficulties with modular manipulator segments are not fundamental problems, but are composed of a myriad of engineering difficulties arising from attempting to provide automatic, lightweight interfaces that can transfer power, data, forces and torques, and capable of being interchanged in space. A less versatile, but more feasible option would be to have several different sized arms which are plug-in modules at the shoulder (Figure 1.6). If the telepresence unit will be operating in a sortie mode from the ground or a space platform, it may not be necessary for the system to be able to change

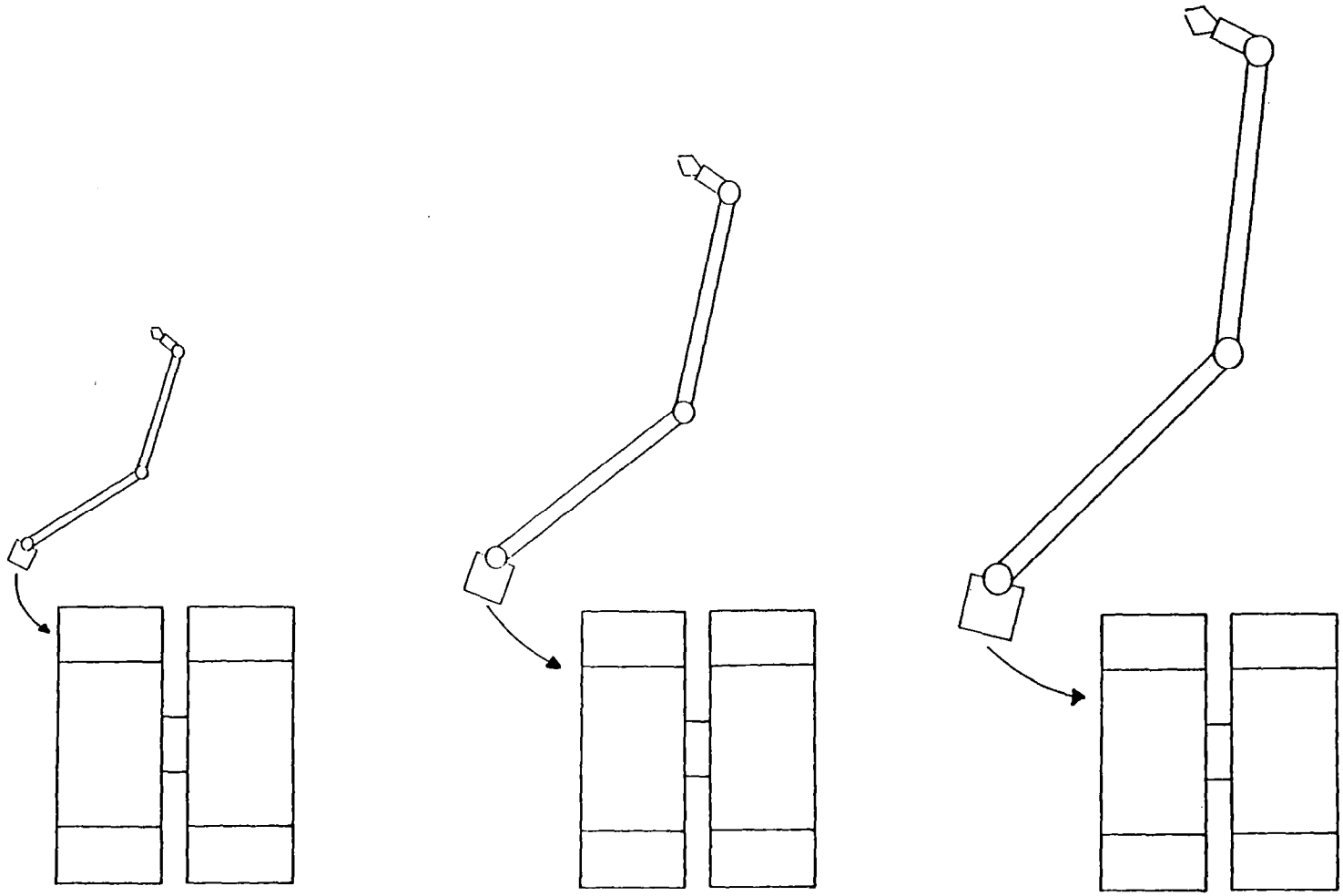

Figure 1.6: Multiple Sized Manipulator Arm Modules.

its own arms, as it could be done by onsite humans. In either case, the development of interchangeable manipulators is feasible, but will have to overcome many engineering difficulties.

Tendon actuated arms are certainly feasible, but probably could not be developed in time for use with a near term system. Flexible manipulators are presently only an interesting research topic. Both should be investigated, since more advanced telepresence systems could benefit from very dexterous high-power-to-weight ratio manipulators.

1.3.2.4 END EFFECTORS

1.3.2.4.1 REQUIREMENTS

There are essentially two different approaches to the problem of end effectors; the hand or hand analogue, and the interchangeable end effector approach. From the viewpoint of providing the best telepresence (highest sense of presence at the worksite and capabilities nearest that of a human), the mechanical hand is probably best. From the viewpoint of feasibility and reliability, the interchangeable end effectors are probably best.

As is quite obvious, human hands are remarkable constructions capable of almost any task. They are also very complex, which means any attempt to duplicate some or all of their capabilities will be a difficult undertaking. The biggest advantage of the hand type end effector is the operator's ability to perform dexterous operations with it. Two factors limit its usefulness for near term telepresence operations. First, most of the near term tasks do not require dexterity beyond the ability to grip an object or tool, so the need for the full dexterity of the hand is questionable. Second, the lack of force feedback would limit the usefulness of such an end effector. As discussed in section 1.3.2.6, the advantages of force feedback may be limited or eliminated by communications time delays.

Interchangeable end effectors are capable of performing the required near term telepresence tasks. In addition, a hand type end effector might be one of the end effectors carried by the telepresence unit. Advanced telepresence, particularly on a space station or in another short delay communications environment, will be able to take advantage of the additional dexterity and flexibility of a mechanical hand end effector. A general purpose gripping end effector or set of end effectors needs to be developed to manipulate various spacecraft components, and to allow the telepresence unit to attach itself to any structurally sound portion of the spacecraft it is servicing.

1.3.2.4.2 ASSESSMENT

Interchangeable end effector designs have been developed, and laboratory demonstrations performed at MSFC and elsewhere. Some task-specific end effectors have been developed, and there should be no problems developing the additional ones necessary for actual telepresence use. A generalized gripping device has not yet been developed. Hands, prehensile tails, and tentacles may be the only true such devices, but enough work has been done to permit the development of a set of devices sufficiently capable of performing generalized gripping tasks.

Dexterous end effector (hand or hand analogue) development has been sporadic at best, but recent work in prosthetics indicates that such devices are feasible. Sooner or later the limited dexterity of the non-hand end effectors will impact the performance or completion of a mission, and the need for a hand will become apparent. Since it is difficult to construct a hand with motors at each joint, this would be a good candidate for a tendon actuation system. Such a development could be combined with a general tendon drive manipulator program.

End effectors are a key component of a telepresence system, and have been

somewhat overlooked in past research. A good end effector will not necessarily make a good telepresence system, but a poor end effector guarantees a poor telepresence system. Near term telepresence systems should have no trouble being supplied with good end effectors, but advanced systems will require the development of more dexterous end effectors.

1.3.2.5 SENSORS

1.3.2.5.1 REQUIREMENTS

In addition to the vision system (section 1.3.2.2), various other sensing devices are required to provide information to the operator or the control system. Force and torque sensing ability is necessarily independent of whether force feedback to the operator is feasible. Commands from the operator may specify a certain level of force to be applied, and the telepresence unit will have to monitor its own force application, or structural and operational limits could be exceeded. It should be noted that there is a distinct difference between force sensing and tactile sensing. Tactile sensing is used to determine the texture of a surface, and can be used to sense slip (the sliding of an object or surface past an end effector) as well. Force sensing is used to observe and control the load being applied by an end effector, and is usually not able to differentiate between surfaces or identify slip.

Tactile sensing is not required by near term telepresence activities, and this information is, at present, difficult to transfer to an operator. One exception to this is the special case of slip sensing. When applying large loads or performing tasks in which the end effector may lose traction with the object being manipulated, slip sensors can be very useful in preventing the end effector from losing its grip on the object. The slip information can be sent directly to the manipulator control system, or to the operator via video, tactile, or audio signals.

Proximity sensors are very useful for grappling targets in an obscured vision environment. When reaching into an access hatch to disconnect an electrical connector, an audio or visual signal indicating distance to the connector (and/or closing velocity) can improve performance, and reduce the chances of a damaging collision. Even when vision is available, depth perception alone many not give sufficient or usable information, so the additional information from the proximity sensor is desirable.

Although a vision system decreases the importance of manipulator position sensors, they will be useful for a space telepresence system. Knowing the exact position of the arm in relation to the workspace permits the use of supervisory control systems as well as computer enhanced displays. For example, the range and rate of a manipulator closing on a target can be displayed to the operator as a visual or audio signal based upon the known position of the arm. Also, some control modes require either the absolute or relative position of the arm to be known in order for the control system to operate.

The ability to determine the range and range rate, azimuth, etc. of a nearby target may not be necessary for telepresence, since the operator can obtain sufficient information from the vision system for manipulation tasks, but range and related information is necessary for approach and docking. Also, for work with large structures, such information would be useful.

Force, torque, and position sensing capability are definite requirements for a telepresence system. Proximity and slip sensors are not mandatory, but are strongly recommended. Range and similar information is necessary for docking and may be useful for some telepresence tasks.

1.3.2.5.2 ASSESSMENT

Force and torque sensing is well within the state of the art. There are

two approaches which can easily be used. First, the load can be measured directly using strain gauges or a similar device on the manipulator structure; second, the current in the actuation motors can be measured to determine the load being applied. Both methods are simple, and can be easily implemented. For space use, fiberoptic strain and current sensors may be desirable because they are less sensitive to thermal distortion and electromagnetic interference (EMI). These sensors operate by changing their refractive index when under strain, and by altering the phase of a transmitted laser beam when placed in the field created by a current carrying wire.

Position sensors are most commonly potentiometers attached to the manipulator arm joints, whose changing resistance indicates a change in joint angle. A more difficult, but more precise, method is to use optical encoders to measure the joint position and change of position. Both of these methods use sensors at each arm joint, and usually require knowledge of the past position history of the arm in order to determine arm position. A process called "Selspot" uses infrared LED's attached to the manipulator arm and infrared sensors placed nearby (such sensors could be placed near the camera platform) to determine the position of the arm relative to the sensors. This method can determine the arm position without knowledge of its position history, but it is sensitive to obstructions of the LED infrared sources. All three technologies are within the state-of-the-art.

Proximity sensors have been in use for various purposes for many years, and are a mature technology. JPL has recently developed and tested a proximity sensor for a grapple device to be used with the RMS.

Tactile sensors have developed and tested at MIT and JPL, but would require significant development before any space use. Also, the problem of transmitting the information to the operator has not been solved. Current systems use visual displays of the tactile information, but direct tactile

communication with the operator would be more effective. Slip sensors are a less sophisticated version of tactile sensors, and are within present capabilities. An example of a simple slip sensor is a system of several microswitches built into the surface of a gripping device. As a rough surface or an edge passes a switch, a pulse is created by the opening or closing of the switch and communicated to the operator. The slip information does not present a display problem, because the operator only needs to know if slip is occurring, and as an option, the direction of slip.

Accurate range information for docking and rendezvous can be obtained from radar similar to the Ku band system onboard the shuttle orbiters. The performance of these systems degrades at close range (less than 30 m), and can damage delicate communications equipment. Laser radar can be extremely accurate at both long and close ranges, and can operate at low power levels and special frequencies to protect delicate equipment or nearby humans. The addition of retroreflectors on the target offer accuracies beyond the capability of any other technology. JPL has developed a system for alignment of large space structures. The technology from this, and other experimental laser rangefinders and radar systems could easily be adapted for spacecraft docking purposes.

1.3.2.6 COMMUNICATIONS

1.3.2.6.1 REQUIREMENTS

Although near term telepresence systems may be capable of some autonomous operations, most of the work will require direct human control. This means that a stable communications link must be maintained. This link must be of sufficient bandwidth to carry the commands to the spacecraft, and the video signal to the control station. The command link to the spacecraft requires only a low bandwidth signal, as video signals are not being sent to the spacecraft. The bandwidth will vary significantly depending upon how the

commands are sent. For example, a command to move a manipulator arm joint can be sent as a series of instructions (start, continue, stop) or as a single command (rotate X degrees). Regardless of the format used, the command uplink will be a small fraction of the downlink bandwidth used for video data. This raises the option of using a small bandwidth uplink and a high bandwidth downlink. Due to the desirability of stereo vision, a high data rate of at least 50 Megabits-per-second (Mbps) is desired. This provides the minimum resolution, scene size, and refresh rate necessary for effective B&W stereo vision. A higher bandwidth (200-300 Mbps) is highly desirable, since it provides higher resolution, larger scene size, faster refresh rates, and color capability. Also, auxiliary images may be simultaneously transmitted from remote cameras when the higher bandwidth is available.

The communications system should be designed to minimize time delays and their effects on operator performance. A delay of approximately 0.5 seconds, due to the speed of light, is unavoidable if a geosynchronous relay is to be used. Direct ground to spacecraft transmission has a smaller delay if the spacecraft is at a lower altitude than GEO, but ground station visibility decreases along with spacecraft altitiude, so this option has very limited usefulness. Space station to spacecraft communication also offers reduced time delays. These delays are negligible if the worksite is near the station, but as the distance to the worksite becomes greater, the problems of visibility limit the impact of this option. Since the 0.5 second delay is unavoidable with the required geosynchronous relay, the operator will be in a "move and wait" control strategy. In this mode the operator makes a motion or gives a command, and then waits to observe the results before giving another command. Experiments with test systems indicates that performance continues to degrade with increasing time delays.

The move and wait strategy does force the operator to carefully consider

his next move, but it also removes the ability for quick response and reaction to unexpected events. In addition, time delays render force feedback nearly useless, and may cause it to be disadvantageous. The feedback delay, coupled with the operator, could actually cause the system to become unstable.

Predictive displays may help to reduce the effects of time delays (see section 2.5.6), but they are useless or harmful during unexpected events, because the operator may assume the display is correct when it is actually wrong.

In summary, high bandwidth communications (200 Mbps) are desirable, and approximately 50 Mbps is required for a viable black and white system. Time delays produce several undesirable effects. They slow down operations, limit fast response and ability to handle unexpected events, and render force feedback questionable at best. Every effort should be made to minimize the total time delay and its effects on the operator.

1.3.2.6.2 ASSESSMENT

The communications capability for a color stereo vision system presently exists. The TDRSS K band single access link can handle up to 300 Mbps. Some of the hardware for the spacecraft side of the link needs more work and space qualification, but there are no technological problems. S band hardware is cheaper, available for space use off-the-shelf, and has less stringent pointing requirements, but it cannot handle the 50 Mbps necessary for a high quality B&W system, much less color. Since the K band should be used for B&W vision anyway, adding the capability for color should not greatly increase the cost of the communications system. The time delay problem is complicated by the fact that very little data exists about the interaction of a human operator and a manipulator system with time delays. At present, time delays longer than 0.1 to 0.3 seconds significantly degrade performance. Performance

appears to decrease in a linear fashion with increasing time delay. Figures 1.7 and 1.8 show the time delays associated with the TDRSS communications link. The delay on the downlink is 0.25 seconds from the spacecraft through TDRSS to White Sands and another 0.25 through a domestic satellite (DOMSAT) or ground lines. The delay in the uplink is 0.25 from White Sands through TDRSS to the spacecraft and another 0.25 through a DOMSAT or ground lines. The NASCOM block encoding can add up to 1.0 seconds to the uplink delay. The total delay could be reduced to 0.5 seconds if the control station were placed at White Sands. The alternative is very high speed land lines, and either a higher speed NASCOM block encoding scheme or abandonment of the NASCOM system. The simplest choice would be to place the control center at White Sands. The data may still require block formatting prior to transmission to TDRSS, but the delay should be significantly less than 1.0 second. Modern digital signal processing equipment should be certainly able to perform this function in less than 0.1 seconds. The shuttle has been suggested as a possible control station for a telepresence system. The only advantage of this option occurs when the worksite is close to the orbiter: in this case the time delay is negligible. When the worksite is not near the orbiter, as will be the case for many missions, the differing orbital constraints reduce visibility, and TDRSS must be used: any advantage to using the orbiter is then lost. Also, the orbiter would have to carry additional communications equipment, and mission operations would need to planned around the requirements of the communications system. A space station would provide an excellent base for telepresence operations. The telepresence system could be resupplied and maintained at the station, and could perform the same tasks for the station. The space station should have the capability for high bandwidth communication as part of its standard equipment. If the station is being used as a repair, servicing, and refurbishment site, many of the telepresence missions will be

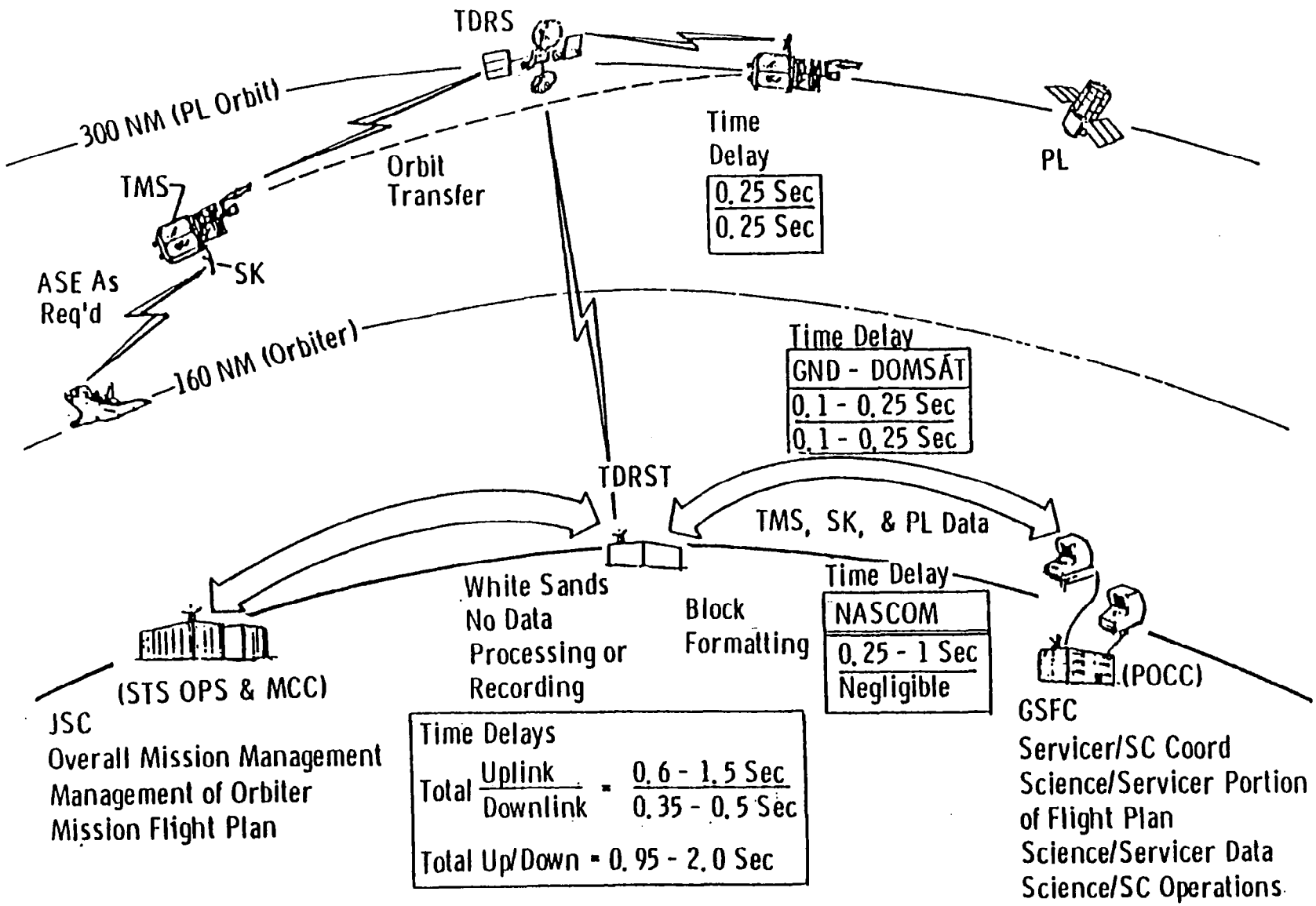

Figure 1.7: TDRSS Communication Links.

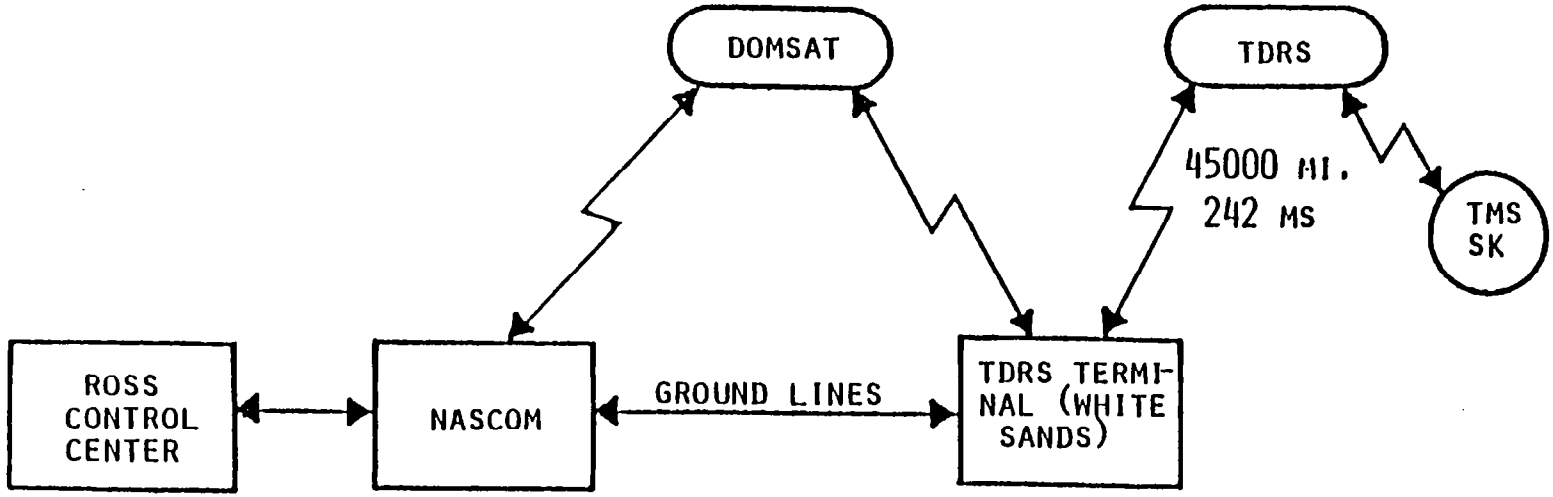

DELAY	BLOCK FORMATTING	PROPAGATION	PROP	TOTAL DELAY
UPLINK (SEC)	0.25 - 1.0	0.1 (GND) - 0.25 (DOMSAT)	0.25	0.6 - 1.5
DOWNLINK (SEC)	NEGLIGIBLE	0.1 (GND) - 0.25 (DOMSAT)	0.25	0.35 - 0.5
			TWO-WAY DELAY =	0.95 - 2.0

Figure 1.8: TDRSS Time Delays.

near the station, and will be able to operate without significant transmission time delays. The absence of time delays will permit the use of force feedback, which should improve the performance of delicate tasks. As the tasks it is performing take the telepresence servicer further from the space station, it will be necessary to use the TDRSS system, but this should present no problem. Also, near the time a space station is ready, a second generation of TDRSS type spacecraft should be available with enhanced capabilities. The space and ground segments of the required communications system are presently being deployed and tested. A K band link for the telepresence system needs space qualified hardware, but this should not present any problems. The time delays imposed by the TDRSS/NASCOM system may seriously impact performance, and NASA should seriously consider placing the control station at White Sands. Before a decision is made, further laboratory work needs to be done to determine the impact of time delays on a telepresence system. A shuttle based control station is marginally desirable, but a control site based on a space station would be useful for work on or near the station, and would be able to use force feedback control because time delays would not be present.

1.3.2.7 CONTROL

1.3.2.7.1 REQUIREMENTS

Control technology is the key to telepresence. A properly designed control system will make up for many errors elsewhere, but an improperly designed control system will render the system nearly useless, regardless of the quality of the other hardware. At the present time, much of the information necessary for this design task does not exist. The control technology requirements are presented as preliminary recommendations pending the results of the research suggested in the control technology assessment.

These technology requirements will, of necessity, be general in nature. The technology assessment will examine and recommend specific technologies. The primary function of the control system is to translate the commands of the operator into actions at the worksite. There are a number of techniques and control modes which can be used for this task, and they are discussed in the control assessment section. Research with telepresence simulators and ground development units will be necessary to identify the best control modes.

The control system should also utilize technologies that reduce workload and improve performance. Several widely different display or command modes are presently under development, and will be discussed further in the control assessment section. A clear choice of display and command modes is not yet available. One probable exception is voice command systems. Since the operator usually uses his hands to control the manipulators, it may be difficult (or risky) to stop and throw switches to control displays and cameras, change control modes or end effectors, etc. In addition, after observing manipulators under human and computer control, an obvious conclusion is that the simple command "stop" may be the most valuable function of a voice control system.

The telepresence system should also have a built in fail-safe capability. If communications are disrupted, the servicer should stop its actions. More advanced systems may take autonomous action, but this requires more intelligence than would be available for a near term system. A second type of fail-safe capability is also needed. An operator who sneezes while holding the manipulator controls, or accidentally gives improper commands, could cause significant damage. The ground or spacecraft computers must be able to recognize improper commands and refuse to obey them. For example, if the operator sneezes and suddenly jerks the manipulator controls during a delicate module exchange, the system should recognize that applying a large impulsive

force is improper during this operation.

One control task of critical importance is automated or remote docking. Since humans will not nominally be at the worksite, the docking of the telepresence system to the worksite is an important problem. Although remote docking is probably simpler than automated docking, the difficulties imposed by time delays, and the potential for the telepresence spacecraft to be "shadowed" by the target spacecraft, make automated docking extremely desirable.

1.3.2.7.2 ASSESSMENT

Of the several control techniques available for telepresence, only one has clearly shown itself to be highly desirable. Force feedback has consistently been found to improve operator performance during assembly and complex manipulation tasks. The more complex the task, the more force feedback helps the operator. Unfortunately, time delays longer than 0.1 to 0.3 seconds render force feedback useless or worse. Since these delays are an inherent part of any communications system using geosynchronous relays, force feedback to the operator may not be useful. This does not not mean that force control and measurement should not be used, but the operator may not be receiving direct feedback from the manipulators. A very promising option is to have a master control (either hand or exoskeletal controller) that measures the force applied to it, and commands the spacecraft to apply the same force. Figure 1.9 shows the difference between the two approaches. Part A shows force feedback with the operator closing the control loop, and part B shows force control with the spacecraft closing the control loop.

Three basic control modes for a manipulator system are shown in Figure 1.10. When in position mode, the manipulator matches the position of the controller. In rate mode, the manipulator matches the rate of motion of the

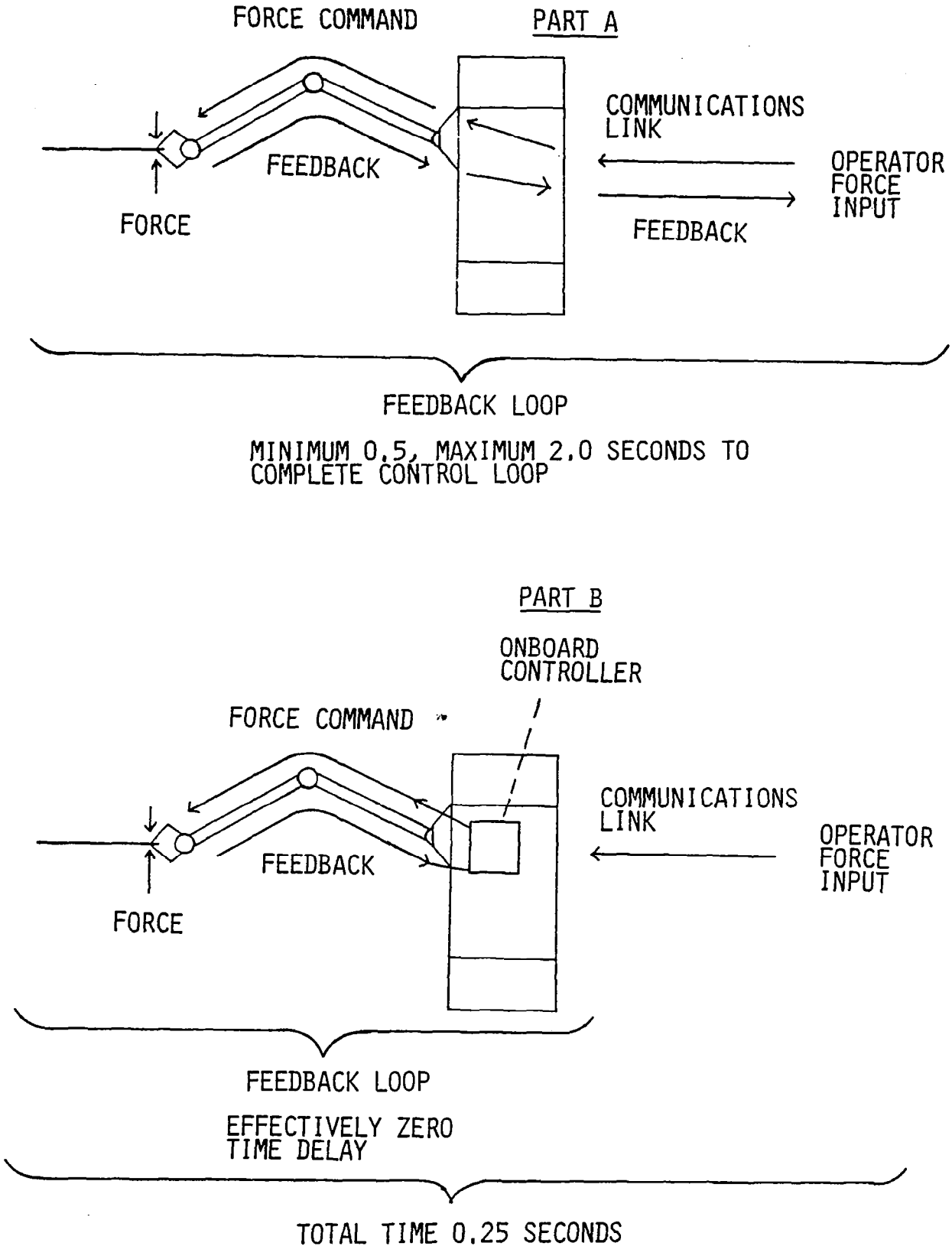

Figure 1.9: Force Feedback and Force Control.

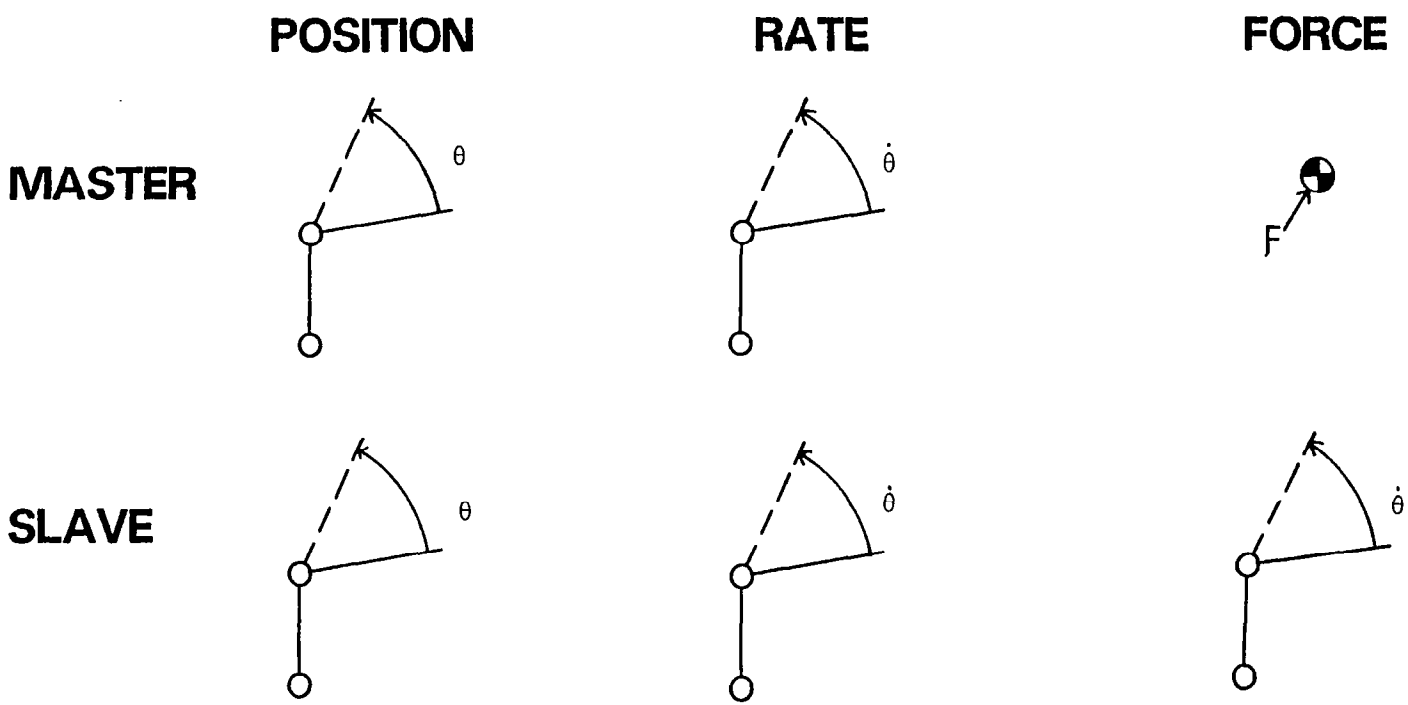

Figure 1.10: Basic Manipulator Control Modes.

controller. Force control causes the force applied to the controller to be applied by the manipulator. If the manipulator is not working on a fixed object, then the manipulator will move at an acceleration proportional to the applied force. All of these options, or combinations of them, are viable for manipulator control, and are within present technology. A clear choice of one system does not yet exist, and may not be desirable. Operators may prefer to have more than one control mode available for various tasks. JPL has developed a 6 DOF force reflecting hand controller, and also has a viscous damping model which helps operators deal with the differences in dynamics between master and slave arms.

Much work has been done on the control of an individual arm, and tests of various controllers have been performed. Unfortunately, most of the tests mixed manipulator arms, controllers (master arms or hand controllers), control modes, and tasks. The data often is less than complete, and it is not possible to accurately compare the various techniques and hardware. Much time has been wasted because of funding difficulties in the past few years. What is needed is a simulation of the desired tasks, coupled with a system that can use various control modes to command the telepresence unit. The simulation should include time delays and a remote vision system. Thus, operator performance can be evaluated for each control mode, arm controller, and task. From this data, a system could be chosen for space use. Past research has provided the information necessary to start such a program, but accurate judgement must wait until the system can be tested as a whole. Just as the operational functions of a heads up display and its control modes for a fighter aircraft would not be selected until integrated testing was performed to determine the impact on the pilot and system as a whole, neither should the control modes of a telepresence system be selected prior to integrated testing.

Several technologies capable of reducing the operator's workload and

improving performance have been developed and tested. Speech recognition systems have reached the stage where they are ready for space use. Presently they are available for home computer systems, and are being tested in F-16 aircraft. Such systems could switch control modes, control cameras, change end effectors, command data displays, provide emergency commands such as "stop", and initiate and terminate supervisory control algorithms. JPL has demonstrated the usefulness of voice command systems.

Event driven displays have been developed by JPL. As a particular event occurs, the data being displayed changes to prepare the operator for the next task. For example, proximity data is displayed until a grapple has made contact with its target, then the display automatically switches to load and contact force data. A menu of tasks could also be shown. Similarly, control modes could automatically be changed by the occurence of key events. This type of technology does not require any knowledge or capability beyond what is available today, but experiments must be performed to determine where and when this technology should be applied.

Supervisory control has been under extensive development at MIT, and elsewhere, for several years. This work has been directed towards undersea vehicles and operations, but much of it is applicable to space use. Acoustic communications links (used for undersea applications) create time delays longer than those encountered in space. Supervisory control has proven itself capable of partially alleviating the effects of such delays, and in reducing operator fatigue during repetitive operations. Also, some tasks, such as removing a nut from a bolt, are better performed by a machine than a human. The human must repeat a complicated set of motions to unscrew a nut; a machine simply rotates the wrist until the nut has come loose. At the present state-of-the-art, an operator controls the manipulator to position it over the nut, and then commands the automatic nut removal; or, if the position of the nut relative to

the arm is known, then the machine can command the arm to move to the proper position and remove the nut. Supervisory control, at present, is similar to industrial robots in that it makes little use of feedback from its surroundings, and usually requires the objects in the workspace to be at predetermined positions during the system operation. It can be quickly reprogrammed by monitoring the operator's performance of a task, and then repeating the operator's actions. Proximity sensors can also be used to aid in locating a target, as can machine vision, but more research is necessary to make this a viable option. Supervisory control is not yet capable of following a command such as "remove the access panel". This requires the machine to determine a goal structure and implement a solution, and is beyond present technology. Supervisory control could be applicable to almost any telepresence task, and is the first step towards autonomous operations.

Supervisory control is an attractive option for docking control. During the performance of a supervisory task, the spacecraft is essentially autonomous. However, the human operator can stop or modify the actions of the telepresence system, providing the advantages of both autonomy and human control. As for the actual technology involved, the US has extensive experience with piloted docking, but has yet to perform remote or autonomous docking. The problem is complex, but should not be difficult to solve; the Soviet Union has been performing remote and automated docking for several years. Their electronics technology is significantly less advanced than the US's, so duplicating or surpassing their capabilities is certainly feasible. Laser radar, rangefinders, and optical sensors are within present technological capabilities, and provide extremely accurate data for docking approach maneuvers. If the target spacecraft is equipped with laser retroreflectors, laser systems can determine position and orientation to within microns. The most difficult part of developing an automated docking

system is the control algorithm and software design, particularly if grapple arms are used for docking (section 1.3.2.3). The determination of the location of suitable hardpoints for the grapple arms, and the guidance of the arms, will require a research effort with extensive validation testing to develop the necessary confidence in the system prior to deployment.

As control technology and machine intelligence continue to advance, they will be integrated into the telepresence system with minimum impact to the system hardware. Most of the changes necessary will be in software, thus allowing the system to change in an evolutionary manner.

1.3.2.8 CONCLUSIONS

Most of the component technologies for a near term telepresence system have been previously developed, or could be developed soon. The major tasks ahead are system integration, and control system selection and design. The control system selection and design requires the integration of a ground telepresence system to perform human factors research. Selection of specific component technologies can be done during this research and, as discussed in section 1.5, a demonstration system flown by 1992.

1.3.3 ADVANCED TECHNOLOGY (LONG TERM TELEPRESENCE TECHNOLOGY)

The long term (post 1995) telepresence system will be able to take advantage of the advances in artificial intelligence. Advances in manipulator, sensor, and other technologies will have important effects, but the key to the system will be intelligent information processing and decision making.

Some of the technologies discussed in this section may be available prior to 1995, but many will require years of development, and may not be available until post 2000. The volatility and rapid expansion of computer and machine intelligence technology render forecasts in this area questionable.

The far term telepresence system will have two different modes of operation; full telepresence and advanced supervisory control. The remainder of this section will focus on the advanced technologies, beginning with full telepresence and control technology.

1.3.3.1 FULL TELEPRESENCE

At this level, the operator actually feels as if he were at the worksite and performs naturally, taking advantage of experience, learned reactions, expertise, and human decision making abilites. This type of system should not require training beyond a simple introduction to the system, because it will operate in a manner similar to the human. The manipulator arms may not be anthropomorphic, but the system will accept and adapt anthropomorphic input. The system will have the capability to interact with the operator in natural language. An advanced "user friendly" telepresence system is not significantly more difficult to construct than one which is not user friendly. All of the developments necessary either make the system more effective (easy to use manipulators) or will be developed for other purposes, and could easily be incorporated into the system (natural language interfaces).

Some problems will still exist despite any advances. Time delays will always exist, as long as the worksite is a long distance from the control center. Predictive displays and possiblities such as predictive force feedback can reduce the effects of time delays, but not completely eliminate them.

1.3.3.2 CONTROL

1.3.3.2.1 SUPERVISORY CONTROL

The utilization of supervisory control technology does not have to wait until post 1995, but the more advanced forms discussed here will require advances in machine vision and artificial intelligence. Present supervisory

control systems operate similarly to industrial robots. They cannot respond to changes in the environment, or to anomalous situations. More advanced supervisory systems will respond to higher level instructions, and will have the capability to perform complex tasks and make its own decisions. For example, it might understand and implement the instruction "replace amplifiers 6 and 7". It would look up the position of the parts, open the access panel, remove the module, replace the amplifiers, and return the module to its proper position. At this point the difference between autonomous operation and supervisory control becomes blurred. Thus, advanced supervisory control will be a natural step on the path to autonomous operations. An example of a mid-level supervisory control system in operation is presented in Figure 1.11. A remote human indicates an access panel to be removed. The onboard computer recognizes the type of panel, schedules the tasks needed to remove it, picks the first screw, determines that it is a phillips head, selects the correct tool and removes the screw, stores it if necessary, and goes on to the next task in the sequence.

A telepresence system with advanced supervisory control has several desirable features. It is very useful for tasks which are severely impacted by the effects of transmission time delays. Such a system would rely on limited machine intelligence to deal with departures from nominal procedure. Since it would perform many tasks semi-autonomously, it would have reduced dependence on communications links and ground commands. Extra capabilities not found in human operators, such as infinte roll wrists, extreme patience, etc.) are easily incorporated in the system software. Tasks which are boring, fatiguing, repetitive, or otherwise distasteful to human operators can be performed by the supervisory control system.

All levels of supervisory control can be developed in parallel with the telepresence system. The supervisory system is implemented in software, and

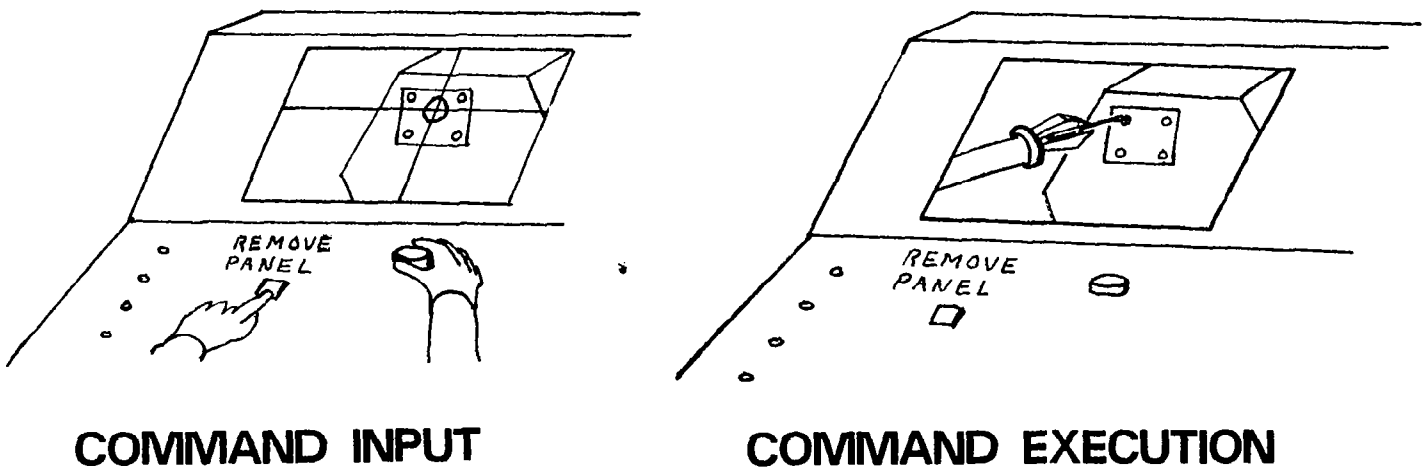

Figure 1.11: Supervisory Control Example.

can be added to a telepresence unit with minimum impact on the hardware. Particularly advanced control modes may require upgrading of the onboard computers, but should not affect the rest of the system.

1.3.3.2.2 ADAPTIVE CONTROL

Adaptive control is desirable, because it increases the flexibility and capability of the telepresence system. As telepresence operations become more complex, additional flexibility will become crucial for mission performance.

Near term missions require limited dexterity, plus the capability to perform contingency operations. As confidence in telepresence and our technological capability grows, so will the demands placed upon the system. Also, the increasing number and importance of spacecraft will create an increased need for reliable contingency operations.

Adaptive control, in the most advanced case, is an artificial intelligence technology that measures and observes the performance of a given task or set of tasks. If the performance is not as desired, the system will attempt to improve it. This may be done via an analysis of the problem to find a solution. If this is unsuccessful, the computer may make small test changes in procedures to try to find a solution via experiment. A less sophisticated example of this can be implemented mathematically in control algorithms using techniques such as hill climbing.

Adaptation occurs in most tasks which humans perform. For example, in a typical manipulatory task, many individual adaptations take place. If a screw being removed from a panel does not turn as easily as it should, the operator tries changing the angle of the tool or increasing the torque. Note that the angle and torque are not suddenly increased to preset values, but are gradually increased until the desired results are achieved. Also, the angle and torque are not modified by extreme amounts, thus preventing damage to the equipment.

Adaptations of this type occur often during assembly or repair operations. A control system capable of adaptation would aid operator control, and improve the reliability of supervisory and autonomous control. Much theoretical and experimental work remains to be done in this area, from algorithm and software development, through studying the interaction of human operators with an adaptive control system.

1.3.3.2.3 SUMMARY

Once advanced supervisory and adaptive control systems are developed, some fundamental questions will need to be answered by experiment and simulation. The appropriate levels of supervisory control can be determined, so tasks can be assigned to man or machine based upon performance. Adaptive control strategies can be identified which allow deviation from planned procedure to improve performance, but not beyond safe limits. Interaction between man and machine, and the results of past human factors experience, can be studied to begin identifying the optimum mix of man and machine control.

1.3.3.3 INTELLIGENT VISION

Advances in image processing and understanding will radically alter machine understanding and interaction with its environment. Computer control systems will be able to monitor all facets of the work environment, instead of having to rely on a few limited sensors, as is presently the case. The direct impact on telepresence will appear in high reliability predictive displays, computer enhanced images, and supervisory control. Enhanced images might contain hidden line details, suggested manipulator paths, caution indicators, and other useful data. This should reduce the impact and risks imposed by transmission time delays.

As machine image recognition allows the computer an improved understanding

of its environment, it increases the capacity for autonomous or semi-autonomous operations. Supervisory and adaptive control will be significantly improved by computer vision technology. Once this type of system is developed, it will form the basis for automatic hand-eye coordination manipulators. Such a system could, eventually, be capable of nearly all the control tasks associated with the human operator.

True machine image recognition and understanding may be a post-2000 technology, but many of the advantages of such a system can be achieved by intelligent use of available technology. For example, laser scanners could be used to read a bar code or similar device attached to spacecraft and manipulator components. Objects could be thus identified, without requiring the computer to truly recognize the target. Computers could then enhance the image or perform control tasks, without performing difficult and complex image recognition functions. An example of this particular technology has been used in supermarket checkout stands for several years.

If the image processing were performed onboard the telepresence unit, computer control of important tasks could be performed without the difficulties of transmission time delays. A side benefit is that the video image sent to the ground could use a variety of techniques to greatly reduce the required transmission bandwidth.

1.3.3.4 MANIPULATORS AND END EFFECTORS

Manipulators and end effectors should both benefit from improved motors and structural materials. Advances in tendon actuated devices should allow arms with fast responses and high ratios of power to arm-weight, because the drive motors could be mounted in the spacecraft near the shoulder. Other possibilities include mechanical "muscles", which would permit very dexterous and powerful manipulators.

The development of dexterous end effectors should be the most important development in this area. This will permit the performance of very intricate operations, which previously could only be performed on the ground or in a pressurized environment. The development of pressure suits with improved dexterity could also allow performance of dexterous operations in vacuum.

1.3.3.5 SENSORS

This discussion of sensors will also include visual sensors, because the intelligent vision section focuses on machine image processing.

Optical sensors should exceed human vision in resolution and field of view. CCD technology will permit high resolution sensors to be placed virtually anywhere desired. Advanced control systems will require the determination of vision sensor requirements based on the needs of machine vision, rather than human vision needs.

Laser imaging and scanning systems may be highly useful for providing additional information to computer control systems, but the data they produce will be useless to a human operator. 3D or holographic images are an interesting alternative to stereo vision systems, but do not at present seem to offer significant advantages over a stereo vision system.

General advances in force and proximity sensors can be expected, but their impact will not be very important. Acoustic sensors, which can be attached directly to a structure to test for failures, will be readily available.

The development of a reliable tactile information transfer system would be very desirable, if the operator is not using a system with significant time delays. The utility of tactile information is degraded by time delays, as is force feedback data. Tactile sensors are being developed today with success, but little work has been done on direct information transfer to the operator. Tactile data is presently transferred to the operator as a visual signal, instead of a tactile response.

1.3.3.6 COMMUNICATIONS

Communications technology is advancing rapidly, allowing increased bandwidth and data compression capability. Optical communication technology offers data rates and bandwidths far beyond anything in use today. Transmission of very high resolution, wide field of view images will be well within communications system capabilities. Advances in computer image processing will reduce the need for this increased capability, because the processed images could require less bandwidth than present data links. For example, a black region in an image requires several bits for each pixel (Depending on intensity ranges, color selection, etc.). The same image requires far less data to be transmitted if the image is processed. The computer can define the edges of the region and send instructions to the ground system to fill in the region, thus reducing the number of bits per pixel to a fraction of the unprocessed transmission.

Advances in signal processing, encoding, and optical fiber land line networks will permit placement of telepresence control centers at any location without concern for ground time delays. Such delays will continue to exist, but will be due almost entirely to signal travel delays, and thus be the minimum delay possible.

The lengthy delays imposed by geosynchronous relays may be eliminated by transmitting to neighboring satellites, and making use of ground based optical network links. As space operations expand and the number of spacecraft increase, the opportunity for using multiple spacecraft and non-geosynchronous relays will increase.

1.4 FACILITIES ASSESSMENT

The facilities assessment is a compilation of available government,

industrial, and academic centers capable of contributing to telepresence development. Primary attention was focused on facilities with expertise in telepresence and space operations. Other facilities with capabilities in marine and nuclear remote operations, biomechanical engineering, and automation and robotic assembly are also included. Six centers with expertise in telepresence technology and space operations are discussed at the beginning of this section. Other facilities and their abilities are listed at the end of this section, followed by a brief summary of the facilities assessment.

1.4.1 NASA MARSHALL SPACE FLIGHT CENTER (MSFC)

50 FT X 90 FT AIR-BEARING TEST FACILITY
- TESTS OF TELEOPERATED MANEUVERING SYSTEM (TMS)
- DOCKING MECHANISMS
- ADVANCED MANIPULATOR SYSTEMS
- DEPLOYABLE STRUCTURES
- MOBILITY UNIT/DOCKING TEST FACILITY
- EXTENDABLE DOCKING PROBE
- 5 DOF MANEUVERING UNIT
- MOBILITY UNIT CONTROL PANEL

ORBITAL DOCKING SIMULATION
- AUTOMATIC RENDEZVOUS AND DOCKING

ORBITAL CONTACT DYNAMICS
MOVING-BASE SIMULATOR USING SIX DOF MOTION SYSTEM

ELECTRONICS AND CONTROL LABORATORY
- PROTOFLIGHT MANIPULATOR ARM
- OPERATOR CONTROL STATION
- TELEMETRY STATION
- TELEOPERATOR CONTROL STATION DEVELOPMENT
- RANCHO ANTHROPOMORPHIC MANIPULATOR
- ISOMETRIC HAND CONTROLLER
- EXTENDABLE STIFF-ARM MANIPULATOR
- COMPUTER IMAGE AUGMENTATION AND ENHANCEMENT
- STEREO VISION SYSTEMS
- VISION SENSORS

INTEGRATED ORBITAL SERVICER ENGINEERING TEST UNIT

NEUTRAL BOUYANCY TANK FOR EVA AND SPACE OPERATIONS SIMULATION

MSFC was one of the early centers conducting research in remote space

operations, and was heavily involved in the TRS program to reboost Skylab to a higher orbit. The facilities for docking and contact dynamics simulation are excellent. A large air bearing test facility is nearing completion, and a 6 DOF moving base simulator is operational. The Integrated Orbital Servicer Engineering Test Unit is used to simulate module exchange by either onboard or remote computer control, and can be controlled directly by human operators. The Proto Flight Manipulator Arm (PFMA) is the only space specific manipulator currently available. Built by Martin Marietta, it was specifically designed for space use, and requires only minor modifications for space qualification. It provides an ability to use a space specific manipulator arm in ground simulations. Some of the facilities at MSFC, as with others around the country, have suffered from a lack of funding following the cancellation of the TRS program. Renewed interest in teleoperation and automation has begun to reverse this trend.

1.4.2 NASA JET PROPULSION LABORATORY (JPL)

ADVANCED TELEOPERATOR DEVELOPMENT LABORATORY
- DEVELOPMENT OF FLEXIBLE SENSOR-AIDED AND COMPUTER-AIDED MANIPULATOR CONTROLS
- MECHANICAL HANDS WITH SMART SENSORS
- EFFICIENT MAN-MACHINE INTERFACES
- PROXIMITY, FORCE-TORQUE, TOUCH AND SLIP SENSOR DEVELOPMENT
- EVENT-DRIVEN DISPLAYS
- VOICE RECOGNITION TO CONTROL DISPLAY AND MANIPULATOR MOTION
- SENSOR AUGMENTATION OF SHUTTLE RMS

ROBOTICS DEVELOPMENT LABORATORY
- MACHINE INTELLIGENCE
- FAULT TOLERANCE
- ROBOTICS TECHNOLOGY DEVELOPMENT
- COMPUTER VISION

JPL has been working for many years on manipulator control, sensors, and command/operator interface research. JPL has the most advanced manipulator control systems currently in operation, including proximity, force, and tactile

sensors, voice command, force feedback controllers, and event driven displays for command input.

This expertise in control systems is augmented by experience in machine intelligence, vision, and fault tolerance.

As with MSFC, research at JPL was impacted by the decline of interest in teleoperation during the late 1970's. The renewed interest in all aspects of automation technology should reverse the adverse effects of the late 70's.

1.4.3 NASA LANGLEY RESEARCH CENTER

INTELLIGENT SYSTEMS RESEARCH LABORATORY

- 7 LSI - 11/03 COMPUTER UNDER PARALLEL ASYNCHRONOUS CONTROL
- 2 UNIMATE 600, 6 DOF MANIPULATORS WITH FORCE/TORQUE TRANSDUCERS
- END EFFECTOR RESEARCH
- EXOSKELETAL SUIT FOR TELEOPERATION SYSTEM
- REAL TIME SIMULATION OF A LINEAR 5 DOF MANIPULATOR (NONLINEAR DYNAMIC MODEL FOR A GENERAL MANIPULATOR IS UNDER DEVELOPMENT)
- VAX 11/750 WITH LISP CAPABILITY
- ACTIVE AND PASSIVE COMPLIANCE CONTROL STUDIES
- HONEYWELL STEREO TV VIEWING SYSTEM - ON ORDER
- RECONFIGURABLE TELEOPERATOR/ROBOTIC CONTROL STATION - UNDER CONSTRUCTION
- INVESTIGATION OF TELEOPERATION TIME DELAY EFFECTS
- PRELIMINARY GROUND CONTROL STATION DESIGN AND REMOTE ORBITAL SERVICING SYSTEM (ROSS) DEVELOPED BY MARTIN-MARIETTA UNDER LRC CONTRACT
- ARTIFICIAL INTELLIGENCE APPLICATIONS TO AUTOMATED DECISION MAKING DEVELOPED BY MARTIN-MARIETTA UNDER LRC CONTRACT

NASA Langley is becomming very active in the automation and telepresence research efforts. Recent acquisition of modern computers and industrial robot arms provides the capability for robotics experimentation. Construction of a reconfigurable teleoperation control station, and acquisition of a stereo vision system, will provide a simulation and test capability for telepresence control concepts. Additional contractor support through programs such as the Remote Orbital Servicing System (ROSS) provide Langley with a broad base for telepresence research and development.

1.4.4 MARTIN MARIETTA AEROSPACE

SPACE OPERATION SIMULATIONS LABORATORY
- TELEOPERATOR MANEUVERING SYSTEM (TMS) SIMULATION
- 6 DOF MOVING BASE CARRIAGE FOR RENDEZVOUS AND DOCKING SIMULATIONS
- SHUTTLE CARGO BAY AND AFT FLIGHT DECK MOCKUPS
- NEUTRAL BUOYANCY TANK FOR EVA AND IVA SIMULATIONS
- LARGE SCREEN DISPLAY
- MANIPULATOR DESIGN EVALUATION

MANIPULATOR DEVELOPMENT LABORATORY
- TESTING OF REMOTE CONTROLLED MANIPULATOR SYSTEMS
- QUARTER-SCALE MANIPULATOR ARM CAPABLE OF SIMULATING THE SHUTTLE RMS, INCLUDING STEREO TV, FORCE FEEDBACK, BACK DRIVABILITY, AND POSITION CONTROL

MAN-COMPUTER INTERACTION LABORATORY
- VOICE RECOGNITION/SYNTHESIS
- HIGH-RESOLUTION COLOR-RASTER GRAPHICS DISPLAY SYSTEM
- MAN-COMPUTER INTERFACE DESIGN
- REMOTE MANNED-CONTROL OF FREE FLYING SPACECRAFT

SIMULATION SUPPORT LABORATORY

REMOTE ORBITAL SERVICING SYSTEM CONCEPT DEVELOPMENT FOR NASA LRC

MACHINE INTELLIGENCE UNIT
- EXPERT SYSTEMS
- NATURAL LANGUAGE DEVELOPMENT
- KNOWLEDGE REPRESENTATION

Martin Marietta has been involved in automation for several years, and was heavily involved in the TRS program. Simulation capabilities include shuttle mock ups, computer simulations, 6 DOF moving base simulator, and EVA simulations. Background experience includes Skylab docking and EVA, TMS studies, and MMU simulations. Present hardware research includes the PFMA development for MSFC, artificial intelligence, man/machine interface design, RMS quarter scale simulator with stereo display and force feedback, and the ROSS study for NASA Langley. Unlike other research and development centers, Martin Marietta appears to have been able to maintain and even improve its facilities, despite the decline in NASA funding during the late 70's.

1.4.5 GRUMMAN AEROSPACE CORPORATION

GRUMMAN IS INVOLVED IN EXPLORING THE USE OF MANIPULATORS FOR THE SERVICING OF SATELLITES IN SPACE

GRUMMAN IS USING A BILATERAL FORCE REFLECTION LABORATORY MANIPULATOR TO STUDY TELEPRESENCE TECHNOLOGY ISSUES RELATED TO SPACE OPERATIONS

THE GRUMMAN LARGE AMPLITUDE SPACE SIMULATOR (LASS) TEST FACILITY IS USED TO SIMULATE MISSION APPLICATIONS, DEVELOP SPACECRAFT SYSTEM REQUIREMENTS AND INTERFACES, AND EVOLVE TELEPRESENCE FLIGHT SYSTEM DESIGNS

GRUMMAN HAS ALSO DEVELOPED A REMOTE MAINTENANCE SYSTEM FOR THE STUDY OF NUCLEAR VESSEL SERVICING

Grumman is a recent entry into the space teleoperation field, but is advancing rapidly. A teleoperation laboratory using manipulators developed for the nuclear industry is in operation. Remote vision systems are under development. Tests have included a spacecraft servicing (via teleoperation) simulation in which a thermal blanket is removed, an access panel is opened, electrical and mechanical connections operated, and a module removed and reinserted into the simulated spacecraft. Also available is a 6 DOF moving base aircraft simulator, which has been used for teleoperation tests. It is important to note that this work has been supported by IR&D funds.

1.4.6 MASSACHUSETTS INSTITUTE OF TECHNOLOGY (MIT)

SPACE SYSTEMS LABORATORY
- NEUTRAL BUOYANCY SIMULATION OF EVA
- LABORATORY INVESTIGATION OF HUMAN FACTORS AND CONTROL SYSTEM DESIGN FOR TELEOPERATION
- BEAM ASSEMBLY TELEOPERATOR (BAT) FOR NEUTRAL BUOYANCY SIMULATION OF TELEPRESENCE
- ARAMIS PHASE II (TELEPRESENCE) STUDY FOR NASA MSFC

ARTIFICIAL INTELLIGENCE LABORATORY
- DESIGN OF DEXTEROUS (TENDON-ACTUATED) HANDS
- MANIPULATOR DESIGN
- HIGH RESOLUTION TACTILE SENSORS
- STRAIN GAGE FORCE SENSORS
- DEVELOPMENT OF HIGH LEVEL COMPUTER LANGUAGE BASED ON A GEOMETRIC MODELING SYSTEM
- ROBOT VISION AND PERCEPTION
- FUNDAMENTAL RESEARCH INTO ARTIFICIAL INTELLIGENCE CONCEPTS

MAN-MACHINE SYSTEMS LABORATORY
- SUPERVISORY CONTROL OF UNDERSEA TELEOPERATORS
- TACTILE SENSING FOR OCEANBOTTOM OPERATIONS
- VISION STUDY EVALUATING TRADEOFFS OF FRAME RATES, RESOLUTION, AND NUMBER OF GRAY SCALE LEVELS
- OBJECT SHAPE DETERMINATION FROM TACTILE SENSING
- PROSTHETICS RESEARCH

The Space Systems Laboratory (SSL) provides MIT with expertise in space operations, human factors, EVA, and neutral buoyancy simulation. MIT has acquired more neutral buoyancy space structure assembly time than any other organization. The development of the Beam Assembly Teleoperator (BAT) is designed for neutral buoyancy simulation of telepresence, and to provide data to supplement the EVA simulations (Figure 1.12). The SSL first became involved in telepresence in 1978 while under contract to MSFC to study "Extraterrestrial Processing and Manufacturing of Large Space Systems". A telepresence servicer unit was conceptualized as a part of that study (also known as the Free-Flying Hybrid Teleoperator) and is shown in Figure 1.13.

The Artificial Intelligence Laboratory (AI Lab) has been at the forefront of computer and automation technology since its formation. The term "Telepresence" was invented by the AI Lab's founder, Prof. Marvin Minsky. Besides AI research the AI Lab is involved in machine vision and perception, tactile sensor development, and the design of dexterous manipulators and end effectors.

The Man-Machine Systems Laboratory of the Department of Mechanical Engineering has pioneered quantitative human factors research and undersea

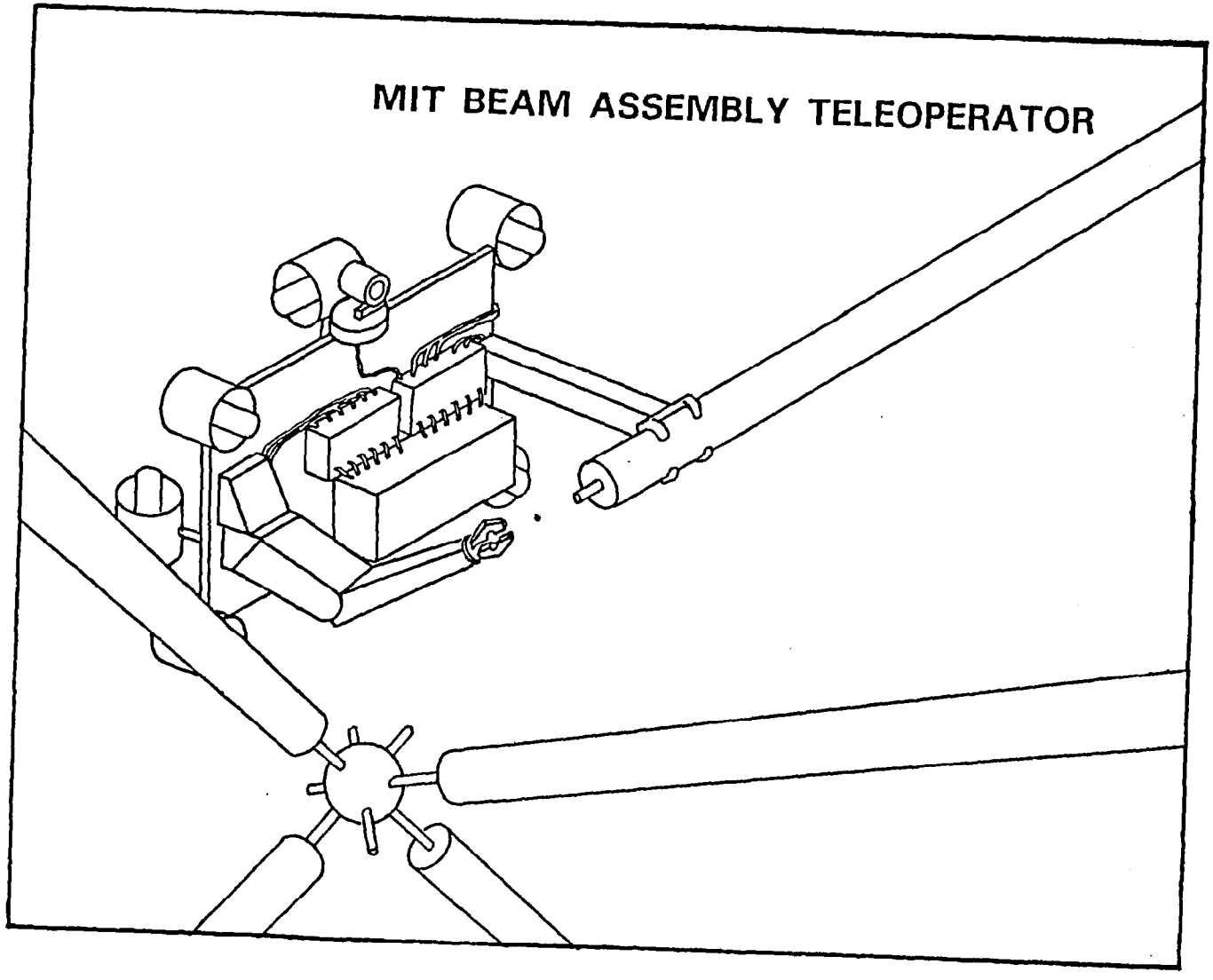

Figure 1.12: MIT Beam Assembly Teleoperator.

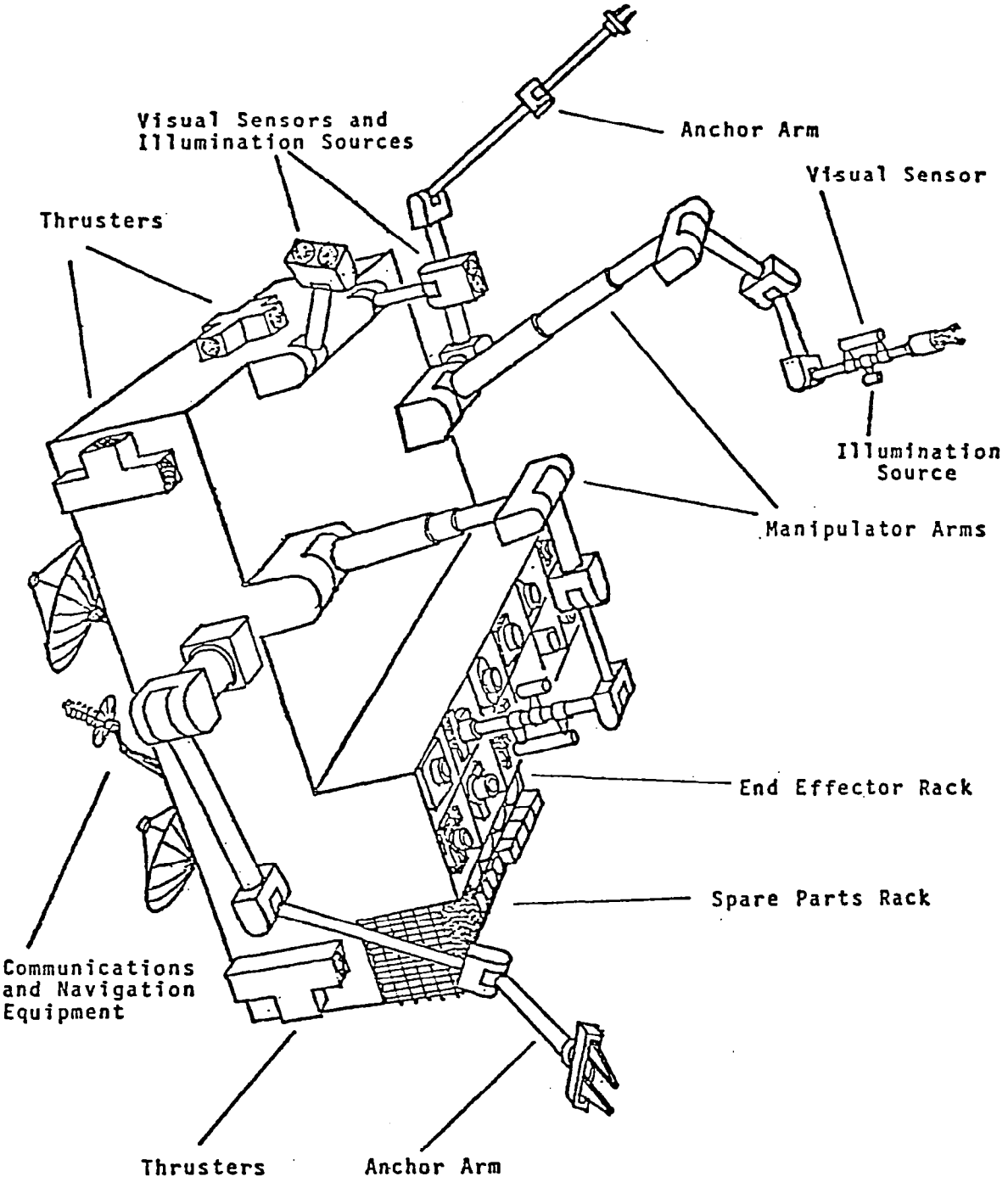

Figure 1.13: Conceptual Telepresence Servicer Unit

teleoperation development. Present laboratory projects include vision systems evaluation, prosthetics development, and object shape determination via tactile sensors. The development of supervisory control systems such as Superman and MMIT has been one of the laboratory's most significant contributions to the teleoperation field. This research is continuing, and more advanced research systems are under development.

1.4.7 OTHER TELEPRESENCE RELATED FACILITIES WITH SPACE EXPERIENCE

ESSEX CORPORATION
- LARGE SPACE SYSTEMS MAN/MACHINE ASSEMBLY ANALYSIS
- TELEOPERATOR AND ROBOTIC SYSTEM RESEARCH AND DEVELOPMENT
- MANIPULATOR, VISION, AND MOBILITY SYSTEM RESEACH
- EVA MOCKUPS
- HUMAN FACTORS FOR REMOTE SYSTEMS

LOCKHEED MISSILES AND SPACE
- SATELLITE SERVICING STUDY FOR NASA-JSC
- EVA SERVICING STUDIES FOR SPACE TELESCOPE

SPAR AEROSPACE LIMITED - CANADA
- SHUTTLE REMOTE MANIPULATOR SYSTEM (RMS)
- RMS CONTROLS AND DISPLAYS

TELEOPERATOR SYSTEMS CORPORATION
- LABORATORY MANIPULATOR SYSTEM FOR GRUMMAN AEROSPACE'S DEXTEROUS MANIPULATOR TEST PROGRAM
- REMOTE HANDLING SYSTEMS FOR MAINTENANCE OF FUSION REACTORS AND PARTICLE ACCELERATORS

VOUGHT
- TELEOPERATOR MANEUVERING SYSTEM (TMS)

These corporations are either involved in hardware design and test for remote space operations, or are studying space teleoperation.

Essex corporation has experience in EVA neutral buoyancy simulation support, large space structures assembly analysis, and hardware design and support for air bearing floor docking and manipulation simulations.

Teleoperator Systems Corporation is not explicitly concerned with space

operations, but their long experience with manipulator design and construction, coupled with their work for Grumman Aerospace, makes them a valuable resource for manipulator design.

1.4.8 OTHER TELEPRESENCE RESEARCH FACILITIES

NAVAL OCEAN SYSTEMS CENTER (NOSC) - HAWAII
- UNDERSEAS TELEPRESENCE
- STEREO-OPTIC VISION

NAVAL OCEAN SYSTEMS CENTER (NOSC) - SAN DIEGO
- UNDERSEAS TELEPRESENCE

UNIVERSITY OF FLORIDA, CENTER FOR INTELLIGENT MACHINES AND ROBOTICS
- DESIGN AND ANALYSIS OF MANIPULATOR ARMS
- ACTUATORS, SENSORS AND VISION
- MAN-MACHINE INTERFACE
- NUCLEAR TELEPRESENCE

UCLA, SCHOOL OF ENGINEERING AND APPLIED SCIENCES
- TELEPRESENCE STUDY FOR NOSC

UNIVERSITY OF ARIZONA
- TELEOPERATOR STUDY

SRI INTERNATIONAL
- 1977 TELEPRESENCE STUDY FOR NASA-AMES
- MACHINE VISION, PERCEPTION, AND INSPECTION

PERCEPTRONICS
- TELEOPERATION INVESTIGATION EXPERIENCE (NOT PRESENTLY BEING PURSUED)

OAK RIDGE NATIONAL LABORATORY
- SPEECH CONTROL
- NUCLEAR TELEPRESENCE
- RADIATION-PROOF MOTORS, LUBRICATION AND HIGH TEMPERATURE OPERATION

DEPARTMENT OF ENERGY (DOE)
- REMOTE HANDLING OF NUCLEAR WASTE DISPOSAL

FERMI NATIONAL ACCELERATOR LABORATORY
- NUCLEAR TELEPRESENCE

OTHER APPLICABLE FACILITIES

CHARLES STARK DRAPER LAB, INC.
- ROBOTIC ASSEMBLY

STANFORD UNIVERSITY
- SENSORS, MANIPULATORS, HANDS, VISION, ROBOTIC CONTROL

CARNEGIE-MELLON UNIVERSITY, ROBOTICS INSTITUTE
- MANIPULATION, PERCEPTION, SENSORS (TOUCH, FORCE, PRESSURE, TEMPERATURE, VIBRATION AND CHEMICAL), LEGGED MOTION ANALYSIS, MANUFACTURING, ARTIFICIAL INTELLIGENCE

RHODE ISLAND UNIVERSITY
- DEXTEROUS END EFFECTORS, ARTICULATED HANDS, PERCEPTION, TOUCH SENSING, ROBOTIC MANUFACTURING

GENERAL ELECTRIC
- ROBOTIC ASSEMBLY, SENSOR INTEGRATION, INTERACTIVE DISPLAYS

AUTOMATIX
- COMPUTER VISION, ROBOTICS

UNIMATION
- MAJOR INDUSTRIAL ROBOT MANUFACTURER

MACHINE INTELLIGENCE CORPORATION
- COMPUTER VISION, ROBOTICS

CINCINNATI MILACRON
- MAJOR INDUSTRIAL ROBOT MANUFACTURER

NATIONAL BUREAU OF STANDARDS
- SENSORS, CONTROL, VISION, AUTOMATED MANUFACTURING

VETERANS ADMINISTRATION, REHABILITATION ENGINEERING CENTER, STANFORD UNIVERSITY
- BIOMECHANICAL ENGINEERING, HUMAN-MACHINE INTERFACE

UNITED STATES AIR FORCE
- VISUALLY COUPLED AIRBOURNE SYSTEMS SIMULATOR (VCASS)

GOULD, INC.
- INTERACTIVE CONTROL SYSTEMS

LOS ALAMOS NATIONAL LABORATORY
- ANTHROPOMORPHIC WELDING ROBOT

These organizations have expertise in teleoperation, but are not primarily concerned with space operations.

The Naval Ocean Systems Center (NOSC) in Hawaii has the most advanced telepresence system in operation of any of the organizations investigated by

the study team. Their telepresence unit has two arms, one 7 DOF and one 8 DOF, controlled by an exoskeletal pair of arms worn by the operator. The system also has a mechanical spine and neck system, nearly able to duplicate human movement. The head contains a B&W stereo vision system and a binaural audio system. The teleoperator's head position and vision system are slaved to the operator's position by a head mounted stereo vision display using two B&W CRT's. Although the system is probably the most advanced in existence, the individual pieces are composed of off-the-shelf or old hardware designed for other purposes. Even with this handicap, the NOSC telepresence system is capable of many human motions and tasks.

The Oak Ridge National Laboratory has embarked on a impressive program to develop a sealed nuclear laboratory in which all work will be performed by teleoperation. They are continuing to analyze the problem of task and work environment design, while at the same time entering a hardware development program so that the necessary technology will be available when needed. They are also performing an in depth study of workstations and human factors to develop a data base for future system design. Although much of the data will not apply to space telepresence due to different environmental constraints and lack of time delays, NASA could benefit from monitoring the results of this work, and particularly by adopting a similar approach to telepresence development.

1.4.9 SUMMARY

The facilities and expertise to develop telepresence technology for space use definitly exist. A serious effort will require participation by government, industry, and academia.

Much of the hardware and software presently in existence are leftovers from the middle 1970's, due to a drop in funding late in that decade. Many

research facilities and their equipment have suffered during the past few years. Renewed interest has helped this situation somewhat, but an effective development effort will require the updating of these research facilities.

Military interest in this technology exists, but the scope and level of interest were not available to the study team.

1.5 DEVELOPMENT PROGRAM

1.5.1 INTRODUCTION

In order to provide remote servicing operations during the early 1990's, a telepresence development program must be started immediately. Much of the necessary technology already exists, but a significant development effort will be required to integrate the technologies into an operational system, and space qualify the hardware. Section 1.5.2 presents the general development plan; section 1.5.3 presents potential and existing technologies, and suggests specific development goals. The technology development program is also useful for assessing the state-of-the-art and potential technologies, but is not intended to be exhastive. Automation technology is progressing extremely rapidly, and developments occur on a day to day basis. In addition, the competitiveness of the industry often limits dissemination of information about a new technology until it is nearing production and marketing.

1.5.2 PROGRAM OUTLINE

Figure 1.14 presents the outline of a program which allows the evolutionary development of a space telepresence system. The first task, which should begin immediately, is the integration of the available technology into a ground demonstration system. This would allow the investigation of human factors and control system designs necessary for the development of an operational system.

EVOLUTION OF A SPACE TELEPRESENCE SYSTEM

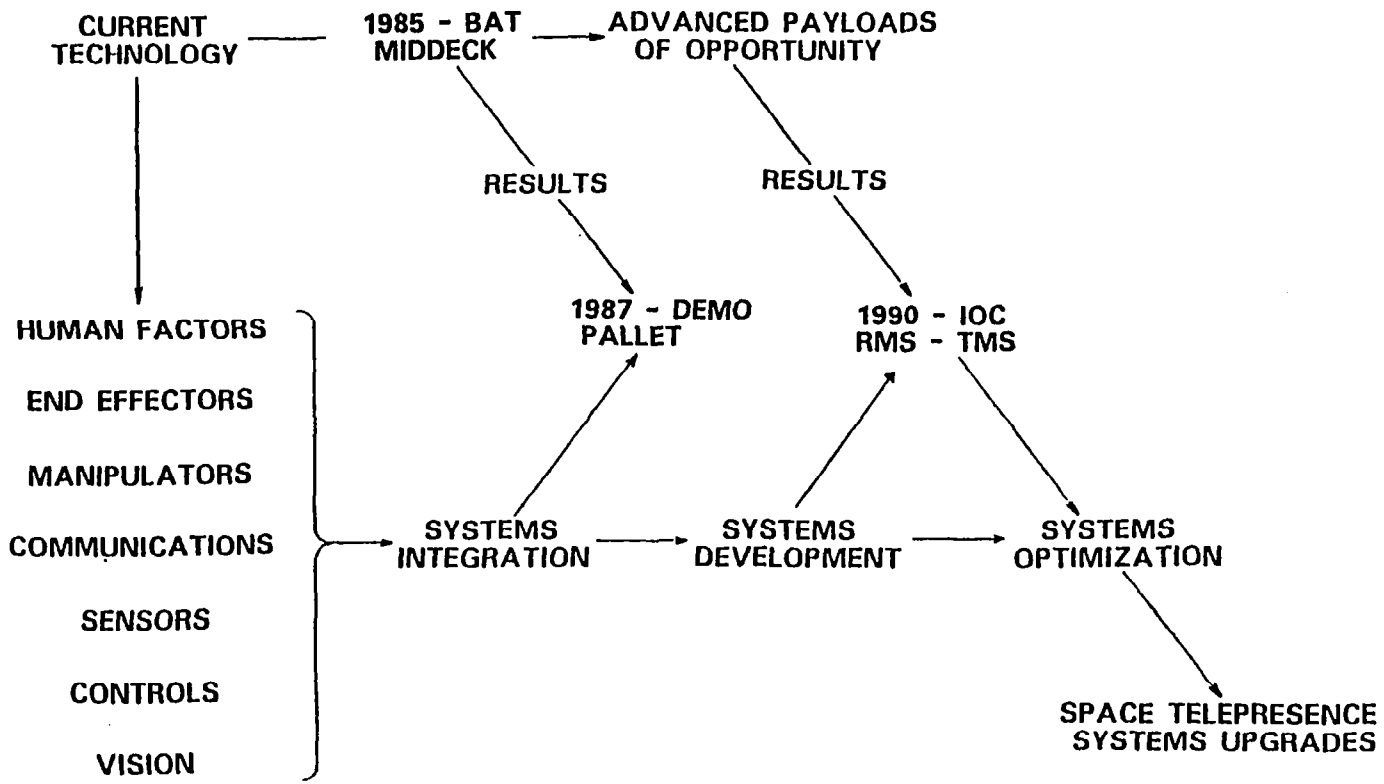

Figure 1.14: Development Program Outline.

In parallel with the ground systems integration, an experiment performed in the shuttle middeck would be used to verify the manipulator control system for actual zero-g operations. Ground tests can simulate much of the effects of the space environment, but manipulation of small masses cannot be accurately simulated on the ground. Their mass and inertia are dominated by the mass and inertia of a ground simulator and the contact dynamics are extremely difficult to model on a computer. An experiment in the orbiter middeck would allow low mass manipulation tests in zero-g, without requiring the construction of a vacuum rated system.

The results of the middeck experiment and the ground systems integration could be combined into a full scale demonstration and validation test on a pallet in the cargo bay. Other experiments onboard the orbiter could be performed as necessary along with continuing ground technology development.

All of these efforts lead to a 1990-1992 initial operational capability either for use on the TMS or as an attachment to the RMS for early operations. Continued systems development, most notably in software, and the addition of advanced technology when desirable, lead to a flexible and highly capable telepresence system.

1.5.3 TECHNOLOGY DEVELOPMENT PROGRAM

The technology development program discusses each of the six major technology areas. Each technology area has a listing of the key component technologies and divides them into three groups. Figure 1.15 shows the definitions of the three groups and how they are related to the NASA OAST seven technology readiness levels. The three groups also serve as a technology forecast. Group I is effectively current technology, Group II technology can be expected to be feasible in the next 10 years, and Group III technology will probably require at least 15 years to be developed.

The study group chose three levels instead of attempting to divide the technology into seven levels for two reasons. First, three levels more clearly represent the actual condition of telepresence technology for a development program; second, because dividing this technology into seven levels often forced arbitrary decisions about the technology level, particularly for software development levels.

NASA OAST SPACE SYSTEMS TECHNOLOGY MODEL (MAY 1980)
TECHNOLOGY READINESS LEVELS

LEVEL 1 BASIC PRINCIPLES OBSERVED AND REPORTED
LEVEL 2 CONCEPTUAL DESIGN FORMULATED
LEVEL 3 CONCEPTUAL DESIGN TESTED ANALYTICALLY OR EXPERIMENTALLY
LEVEL 4 CRITICAL FUNCTION/CHARATERISTIC DEMONSTRATION
LEVEL 5 COMPONENT/BREADBOARD TESTED IN RELEVANT ENVIRONMENT
LEVEL 6 PROTOTYPE/ENGINEERING MODEL TESTED IN RELEVANT ENVIRONMENT
LEVEL 7 ENGINEERING MODEL TESTED IN SPACE

TELEPRESENCE TECHNOLOGY GROUPS

GROUP I (LEVELS 5-7)
-TECHNOLOGY READY TO BE INTEGRATED INTO THE PALLET FLIGHT EXPERIMENT (1986), NOT NECESSARILY SPACE QUALIFIED

GROUP II (LEVELS 3-5)
-SIMILAR TECHNOLOGY TO GROUP I, WITH INCREASED PERFORMANCE, BUT REQUIRING SOME DEVELOPMENT, CAN BE READY FOR IOC FLIGHT (1992)

GROUP III (LEVELS 1-3)
-BREAKTHROUGH IN TECHNOLOGY TO HIGH PERFORMANCE, REQUIRING BASIC RESEARCH PRIOR TO SYSTEM DEVELOPMENT

FIGURE 1.15: TECHNOLOGY LEVELS AND GROUPS

This presentation is very useful as an addition to the technology assessment of section 1.3, but is more important as an indication that, for telepresence technology, systems integration is as important as the development of improved components. Most of the technology necessary for near term telepresence is in Group I, and all of it is either in Group I or II. A "*" next to a technology item indicates that either it, or something very similar

to it should be developed for use in a near term telepresence system, or that it should be investigated further if it is a Group III technology. Items without a "*" are included as reference points, and as indicators of technology availability.

1.5.3.1 VISION

GROUP I
- NOSC-TYPE STEREO BW CAMERAS, HELMET MOUNTED DISPLAYS

GROUP II
- NOSC-TYPE VISION SYSTEM WITH COLOR*
- VCASS WIDE-ANGLE STEREO DISPLAY*
- MULTI-DOF CAMERA PLATFORMS*

GROUP III
- COMPUTER AUGMENTED IMAGES*
- PREDICTIVE VIDEO DISPLAYS*
- SCANNING LASER IMAGER
- VARIABLE FOCAL PLANE 3-D DISPLAY
- HOLOGRAPHIC DISPLAYS

Video camera and display technology is advancing so rapidly that color vision systems could be available for a 1986 pallet experiment. The cameras and displays exist, but need to be integrated into an operational system.

Development of computer augmented images and predictive displays has begun, but will require several years of effort before it can be considered for operational use. The development of these technologies is not critical for telepresence, but should be very useful for advanced operations and reducing the effects of time delays.

Laser imaging systems are useful in difficult lighting situations and for obtaining extremely accurate range, position, and velocity information about an object; it may be very useful during docking, but is of limited use for actual telepresence.

3D vision technology is a very advanced technology which may not have significant advantages over a stereo vision system.

1.5.3.2 MANIPULATORS

GROUP I
- -ELECTRIC INDUSTRIAL ROBOT ARM
- -NUCLEAR INDUSTRY TELEOPERATORS
- -MIT BEAM ASSEMBLY TELEOPERATOR (BAT)*
- -MARTIN MARIETTA PFMA*

GROUP II
- -GRAPPLE ARMS*
- -INTERCHANGEABLE ARMS*
- -SECOND GENERATION SPACE MANIPULATOR*
- -NON-ANTHROPOMORPHIC ARM

GROUP III
- -MODULAR MANIPULATOR*
- -TENDON ACTUATED MANIPULATOR*
- -FLEXIBLE MANIPULATOR (TENTACLE)

The BAT and the PFMA are the two most advanced manipulators built for space operations or simulation. The BAT is designed for neutral buoyancy simulation of structural assembly, and consequently only has 5 DOF and is not sized for spacecraft servicing; it does possess an advanced control system designed for remote teleoperation and supervisory control. The PFMA is sized for spacecraft servicing, and was designed for near term space use; it has 7 DOF and can be space qualified easily, but, at present, it lacks a useful teleoperation control system. It is currently controlled by computer, or by switch control of individual joint position. The merger of the technology involved in these two manipulator systems, plus the work which has been done at JPL, would produce a highly capable space specific telepresence manipulator.

Grapple arms require development, but this should be a small effort, since most of the technology can be borrowed from previous manipulator development efforts. The same is true for interchangeable manipulator arms: work is needed to develop the necessary interface and modular construction technology, but most of what is needed can be taken from existing manipulator technology. The next generation (post PFMA) space manipulator should incorporate state-of-the-art technology to achieve the EVA equivalent capabilities

described in sections 1.2.2.1 to 1.2.2.4. It should have an advanced control system, a high power-to-weight ratio, interchangeable construction, and sizing based upon more up-to-date estimates of actual spacecraft designs and sizes.

A non-anthropomorphic manipulator is feasible in terms of actual manipulator construction, but the feasibility of the control and operation of such a device is uncertain. Humans have been able to control manipulators which were not the size or shape of a human arm, but a truly non-anthropomorphic arm usually has a different number of DOF. A human trying to control a 10 DOF arm, for example, could easily have trouble specifying the positions of 3 of the 10 DOF because the human arm is essentially 7 DOF (the exact number depends upon how the DOF are defined, for example, the ability to "shrug" a shoulder may add a DOF, but may not be able to add any useful amount of control to a master-slave manipulator system). This technology is worthy of investigation, but it is not a high priority item.

The modular manipulator and the tendon actuated manipulator both have significant potential benefits, and should be thoroughly investigated.

A flexible or tentacular manipulator is the non-anthropomorphic manipulator taken to an extreme, and suffers from the same problems. It may have to wait for complete computer control of the manipulator system.

1.5.3.3 END EFFECTORS

GROUP I
- -1 DOF GRIPPERS
- -SIMPLE GRAPPLES (RMS)*
- -SIMPLE TOOL (AND/OR END EFFECTOR) INTERCHANGE MECHANISMS*
- -DOCKING DEVICES*

GROUP II
- -GENERALIZED GRIPPERS*
- -MULTI-DOF GRIPPERS*
- -ADVANCED TOOL (AND/OR END EFFECTOR) INTERCHANGE MECHANISMS*

GROUP III
- -HAND ANALOGUES*

The 1 DOF gripper is simply a pincher similar to a lobster claw and is capable only of simple opening/closing motion. Some generalized grippers may also be only 1 DOF, but will use a compliant surface to improve their gripping capability. There are a number of generalized gripper designs; this particular technology has items in both Group I and Group II technologies.

Tool interchange mechanisms have been demonstrated in the laboratory and used in simulations. Some of this technology could be used today, but an effective system requires further development.

Docking devices also require more development, but this is a far more mature technology than tool interchange mechanisms, and is consequently a lower priority.

Multi-DOF grippers, and some advanced tools or end effectors, begin to blur the distinction between tools and mechanical hands. All of these technologies should receive the highest research priority because of their potential to significantly increase the dexterity of telepresence systems.

1.5.3.4 SENSORS

GROUP I
- -PROXIMITY SENSORS*
- -MOTOR CURRENT FORCE AND TORQUE SENSORS
- -ARM POSITION SENSORS*
- -SELSPOT*
- -LASER BAR-CODE READERS

GROUP II
- -SLIP SENSORS*
- -STRAIN GAUGE FORCE AND TORQUE SENSORS
- -FIBEROPTIC FORCE AND TORQUE SENSORS*
- -LASER RANGE AND POSITION SENSORS*

GROUP III
- -TACTILE SENSORS*
- -ACOUSTIC STRUCTURAL ANALYZERS

Proximity sensors are a mature technology for many applications, and a RMS

end effector using proximity sensors has been developed and tested at JPL.

Motor current sensors have been used for many years by the nuclear industry to provide force data for manipulator control, and is a mature technology. Strain gauge sensors are comparatively new to this application, but they are also a well developed technology. Fiberoptic current and strain sensors appear to be superior to standard current and strain sensors (section 1.3.2.5.2), and should be developed further.

Slip sensors are very useful for automatic grip control and prevention of excessive loads (if slip occurs, it is often due to the application of excessive force). JPL has demonstrated slip sensors in the laboratory.

Arm position sensors, such as potentiometers and optical encoders which measure joint position, are in use today for terrestrial applications. The Selspot is an infrared device that measures arm position directly, and is useful when precise measurements are necessary. All of these sensors are within present technology, and require minimal development prior to space qualification.

The laser bar-code reader, similar to those used in supermarket checkout stands, is potentially useful for aiding computers to recognize images. It is not necessary for near term telepresence unless research indicates that the operator needs to have objects in his field of view identified by computer.

Unlike the code-reader, laser radar and ranging devices could be very useful for docking and operations in crowded worksites. Additional development of this technology is necessary; although demonstration units exist which produce very precise measurements at high speed.

Tactile sensors are useful when tactile feedback is feasible, and could be used by advanced computer systems capable of understanding tactile data. This technology deserves further investigation because of its potential benefit.

Acoustic signals transmitted through a structure are reflected and

modified by flaws and failures in the structure, and can potentially be used to analyze the structure. Although it may be useful for the assembly of large structures, it is not a priority research item.

1.5.3.5 COMMUNICATIONS

GROUP I
- -S BAND LINKS (TDRSS)
- -DATA COMPRESSION AND ENCODING

GROUP II
- -K BAND LINKS*
- -ADVANCED DATA COMPRESSION AND ENCODING*

GROUP III
- -SECOND GENERATION TDRSS
- -SPACE STATION CONTROL CENTER*
- -OPTICAL LINKS*
- -DIRECT LINKS (VIA NETWORK)

The K band communications links require some hardware development for the spacecraft side of the link, but this is a straightforeward design and test problem which does not require any significant advances in communications technology.

Data compression is not required for a near term telepresence system using the K band links, but error correcting codes are desirable. As the system grows in complexity, other users compete for TDRSS time, and other communications links become available; data compression may become necessary. This technology is desirable and should be investigated, but is not an immediate priority.

A second generation of TDRSS type spacecraft, or commercial communications satellites, will probably become available a few years after the deployment of a telepresence system. They are a desirable alternative to the TDRSS system, and will be developed without requiring involvement by telepresence researchers.

A space station control center offers the elimination of transmission time delays for work near the station. Since time delays reduce the capabilities of the system, this could be very important for delicate repair or assembly on-orbit.

The investigation of optical communications could have numerous benefits. A laser is more resistant to local interference and can carry far more information than radio transmissions, thus reducing the chances of communications being unavailable. Also, a telepresence system capable of optical communications would be readily able to take advantage of a ground and space network using fiberoptics and laser technology. A versatile optical network could automatically use the least time delay communications link. As ground stations become more common, the need for geosynchronous relays could be reduced for many operations, since the number of optical ground stations would permit direct communications with the spacecraft. Such a system could not be in place until post 2000, but its potential capabilities deserve attention by NASA for telepresence, and any other activity involving communications.

1.5.3.6 CONTROL

GROUP I
- PILOTED DOCKING
- MASTER-SLAVE MANIPULATOR*
- MASTER-SLAVE MANIPULATOR WITH FORCE FEEDBACK*
- NOSC TYPE CAMERA CONTROLLER*

GROUP II
- REMOTELY PILOTED DOCKING
- AUTOMATED DOCKING
- MANIPULATOR WITH FORCE CONTROL*
- VOICE CONTROL SYSTEM*
- EVENT DRIVEN FUNCTIONS*
- SUPERVISORY CONTROL*
- FAIL SAFE CONTROL*

GROUP III
- CAMERA CONTROL BY EYE FOCUS*
- ADVANCED SUPERVISORY CONTROL*
- ADAPTIVE CONTROL*

Docking is not necessarily a telepresence function, but it is a necessary part of most telepresence missions. The US has a wealth of experience with piloted docking operations from the manned space program, but no experience with actual remotely piloted or automated docking operations. Both are desirable for telepresence because of time delays and the need to provide backup docking modes. Much development and testing remains before either mode is ready for use, but the problems should not be insurmountable: the Soviets have demonstrated both docking modes repeatedly.

Various master-slave and multi-DOF hand controllers have been developed. The remaining work is to test the various options and select the best features for a telepresence controller, and to integrate the technology into a working system. Also, more attention must be paid to force control systems, since force feedback is not desirable in the presence of time delays.

Camera position control by slaving to the operator's head orientation has been demonstrated, and can easily be applied to space telepresence. It is possible to monitor eye position and focus length to determine where a subject is looking; this is a possible method of controlling camera focus and possibly zoom settings. If feasible, this type of system could greatly enhance an operator's sense of presence at the worksite, and it is worthy of further investigation.

Voice control systems have been demonstrated for a variety of purposes and could improve the performance of a telepresence system. Little development work is necessary, but command modes and procedures must be selected and integrated into an operational telepresence system.

Event driven displays have been tested at JPL, and have been found to be useful. A similar, but more advanced, use of this technology is to switch control modes, procedures, menus of instructions, etc. based upon some

predetermined cue. Event driven functions could help an operator to handle complex tasks and procedures. This technology is not well developed, and its interaction with an operator requires a serious research effort in a simulated work environment.

Supervisory control has been demonstrated in the laboratory, and could become an important part of a telepresence system. It is also the first step towards autonomous systems. Supervisory control, and the more autonomous advanced modes, should be investigated thoroughly.

An important technology which has received little attention so far is a fail safe control system. If an operator makes an obvious mistake or communications are lost, the onboard computers should be able to prevent damage to the telepresence system or the spacecraft it is working on. Such a control system would need some very advanced capabilities to be completely fail safe, but much can be accomplished with near term technology, while research into Group III technologies provides more capable systems.

Adaptive control can potentially enable telepresence systems to respond autonomously to anomalous situations of varying severity (amount of excursion from nominal performance), and to learn from past experience. Adaptive control is necessary for some of the advanced modes of supervisory control. It is an important, and potentially very useful, technology that will require much research before it is ready for use.

1.5.4 DEVELOPMENT PROGRAM SUMMARY

The development of a telepresence system capable of achieving the same results as EVA can be completed by 1992. An examination of the technology assessment (section 1.3) and the preceeding development program show that all of the necessary technology either exists or has been demonstrated in the laboratory. Several areas require individual technology development efforts,

but the majority of a development program must focus on the integration of the telepresence system. This requires the ability to simulate the workspace, operate a ground telepresence system, and test the control system interaction with a human operator.

In order to complete an operational telepresence system by 1992, a development program must begin immediately. NASA needs to more clearly define which space missions are going to use teleoperated servicing, and to build spacecraft with servicing as a design criteria. Industry should be used to develop the necessary space qualified hardware and build the telepresence system. Academic institutions should be involved to determine control system and operator interactions, to identify the proper uses of the various technologies available for telepresence, and to begin or continue the development of the Group III technologies. Since the capabilities and expertise of NASA, industry, and academic institutions often overlap, and because each type of organization approaches the problem from a different perspective, each should participate in all phases of the development effort. The actual hardware necessary for a ground telepresence development system need not be very expensive, so NASA should encourage in-house, industrial, and academic ground development systems.

A ground development program, coupled with space experiments as necessary, will provide NASA with a highly capable and versatile teleoperation system able to meet both near and long term needs.

1.6 TELEPRESENCE TECHNOLOGY BASE DEVELOPMENT CONCLUSIONS

1.6.1 TELEPRESENCE IS NEEDED

Future NASA plans, both short and long term, call for spacecraft servicing, structural assembly, and contingency operations. The success of large scale space operations, both for NASA and industry, will require the

capability to perform versatile operations in space, similar to those associated with any large program on the ground.

Telepresence is well suited to this demanding work environment because it provides both the ability to use human judgment and manipulative skill, and the ability to use autonomous technology (robotics) when it becomes available. Thus, telepresence has the advantages of both machine and human capabilities.

Due to the nature of near term spacecraft design, and the specifics of feasible near term technology (system deployment by 1992), the initial telepresence system should be designed to be capable of accomplishing the same tasks as an astronaut in a pressure suit (present EVA suit technology, see section 1.2.2.5).

The lack of definite long term plans, and the rapid advance of electronics and control technology, make determination of specific long term telepresence objectives difficult. Since artificial intelligence and manipulator technology will continue to advance, as will the demands placed upon remote servicing systems, it is reasonable to conclude that long term telepresence systems will be capable of very complex mechanical tasks and high levels of autonomy.

1.6.2 TELEPRESENCE IS FEASIBLE

Most of the necessary technology for an EVA equivalent telepresence system has already been developed. Certain areas, such as vision systems, need development of specific components, such as small, lightweight color displays, but these areas are usually being developed independent of NASA. Space adaptation and qualification of these technologies is also necessary, but the most important task is system integration. During this process, human operator interactions with the hardware and the control system must be analyzed to permit design of the actual flight system.

Table 1.3 presents a summary of the technology requirements for a near

- STEREO-OPTIC VISION SYSTEM--PREFERABLY COLOR--
  CAPABILITY TO SLAVE TO OPERATOR'S HEAD POSITION
- HEAD-MOUNTED VISION DISPLAY SYSTEM
- TWO 7 DOF MANIPULATOR ARMS WITH FORCE CONTROL
- TWO GRAPPLE ARMS OR ONE DOCKING DEVICE
- INTERCHANGEABLE END-EFFECTORS
- OPERATOR USES FORCE-INDICATING HAND CONTROLLERS
  OR EXOSKELETAL ARMS FOR CONTROL

TABLE 1.3: TECHNOLOGY REQUIREMENTS SUMMARY

term telepresence system. The study group believes that such a system could be built and flown by 1992 if a laboratory development program is begun immediately. Telepresence technology, and the research centers involved with it, have been adversely affected by a lack of funding during the past few years, but the technology, facilities, and personnel necessary for the development of a telepresence system are available.

1.7 BIBLIOGRAPHY

This bibliography is duplicated in Volume II of this report and is divided into sections based upon the topics discussed in both Volumes I and II.

1.7.1 GENERAL TELEPRESENCE AND ROBOTICS

Bejczy, A. K. "Advanced Teleoperators," Astronautics & Aeronautics, May 1979.

Birk, John, & Robert Kelley. "Research Needed to Advance the State of Knowledge in Robotics," Workshop Proceedings, Newport, Rhode Island, April 15-17, 1980.

Deutsch, Stanley, & Ewald Heer, "Manipulator Systems Extend Man's Capabilities in Space," Astronautics & Aeronautics, June, 1972.

Estabrook, Norman B., Robert Wernli, & Robert T. Hoffman. "Recovery Operations Utilizing a Remotely Controlled Vehicle/Work System," Reprint, OCEAN '80, Murray Publishing Co., Seattle, Washington, 1980.

Gevarter, William B. "An Overview of Artificial Intelligence and Robotics," U.S. Department of Commerce, National Bureau of Standards, NBSIR 82-2479, March, 1982.

Heer, Ewald. "Report of the JPL Advocacy Group for Autonomous Systems Technology Research and Development," JPL Report No. 714-128.

Heer, Ewald ed. "Robots and Manipulator Systems," National Conference on Remotely Manned Systems, 2D, University of Southern California, 1975.

Heer, Ewald. "Robots and Manipulators," Mechanical Engineering, November, 1981.

Hestenes, J. D. "Advanced Teleoperator Technology Development," 199-51-04, JPL.

Hill, J. W. & Salisbury, J. K., Jr. "Study to Design and Develop Remote Manipulator Systems," Annual Report 2, NASA Contract NAS2-8652, SRI International, November, 1977.

Long, James E., & Timothy J. Healy. "Advanced Automation for Space Missions: Technical Summary," NASA/ASEE Summer Study. University of Santa Clara, Santa Clara, CA., September, 1980.

McReynolds, Stephen R. "A Benefit and Role Assessment of Advanced Automation for NASA," JPL, 730-13, April, 1978.

Minsky, Marvin. "Telepresence," Omni, June, 1980.

"MSFC Teleoperator-Telepresence Planning Activities Overview," MSFC, February, 1982.

NASA Space Systems Technology Model, Volume 1, Part A. NASA, Office of Aeronautics and Space Technology, September, 1981.

Plantier, Michel, & Rene Bodmer. "Teleoperation and Automation," Eurosat, S.A., Geneva, May, 1981.

Shields, Nicholas Jr. "Earth Orbital Teleoperator Systems (EOTS) Evaluation: Year End Report," NASA-CR-150912, Essex Corp., Hunstville, Alabama, 1978.

"Systems Technology Development: An Early Telepresence Flight Demonstration in Cooperation with the Research and Technology Office, George C. Marshall Space Flight Center," NASA MSFC, September, 1981.

Wagnon, Wayne. "Marshall Space Flight Center Teleoperators and Robotics Activities and Plans," Presentation to OAST. MSFC, Information and Electronic Systems Laboratory, March 4, 1982.

Wernli, Robert L. "Deep Ocean Applications of Manipulators and Work Systems," Proceedings of the 27th Conference on Remote Systems Technology, 1979.

Wernli, Robert L. "Development of a Design Baseline for Remotely Controlled Underwater Work Systems," Naval Ocean Systems Center, San Diego, CA., 1979.

Wernli, Robert L. "Robotics Undersea," Mechanical Engineering, August, 1982.

Wernli, Robert L. "The Work Systems Package - Remote Work Experience," Reprint, Proceedings of Oceans, September, 1979.

1.7.2 SATELLITE SERVICING

"AXAF Utilization of STS and Satellite Servicing," SAI Conference Center, McLean, Virginia, Astrophysics Division, NASA Headquarters, Contract No. NASW-3518, April 21-22, 1982.

"AXAF Utilization of STS and Satellite Servicing," Goddard Space Flight Center, Greenbelt, Maryland, Astrophysics Division, NASA Headquarters, Contract No. NASW-3518, June 16-17, 1982.

Dooling, Dave. "Report on the National Scene: Satellite Servicing About to Budge," Astronautics & Aeronautics, April, 1982.

"Integrated Orbital Servicing Study for Low-Cost Payload Programs," Final Report, Martin Marietta Corporation, NASA Contract NAS8-30820, September 1975.

"MSFC's Remote Satellite Services Program Planning Summary," MSFC Space Systems Group, February, 1981.

Pruett, Robertson, Lougheed. "Development of Concepts for Satellite Retrieval Devices: Final Report," NASA-CR-161178, Essex Corp., Huntsville, Alabama, February 8, 1979.

"Satellite Services System Analysis Study," Lockheed Missles & Space Company, NASA Contract NAS9-16181.

"Satellite Services Workshop," NASA Lyndon B. Johnson Space Center, Engineering and Development Directorate, June 1982.

Schappell, R. T. "Remote Orbital Servicing System (ROSS): Final Report," NASA Contract NAS1-16759, Martin Marietta, April, 1982.

1.7.3 SPACE TELESCOPE

Bahcall, John N., & Spitzer, Lyman Jr. "The Space Telescope," Scientific American, Volume 247, Number 1, July 1982, pp. 40 - 51.

Field, Elmer L. "Space Telescope, A Long-Life Free Flyer," Space Telescope Project Office, NASA MSFC, October 1979.

Fisher, H. T. "Space Telescope & RMS Utilization," Lockheed Missiles and Space Co., Remote Manipulator System Users Conference, May 1981.

Halpern, Jennifer. "ST, The Extraterrestrial Telescope," Mechanical Engineering, November 1982.

Henson, B. W. "Solar Array Neutral Buoyancy Test Report," Space Telescope Project, European Space Agency, European Space Research and Technology Centre, March 1981.

Sanders, Fred G. "Space Telescope Neutral Buoyancy Simulations - The First Two Years," NASA TM-82485, June 1982.

"Space Telescope On-Orbit Maintenance Mission - Space Support Equipment Human Engineering Design Criteria," NASA MSFC, January 1982.

Trucks, Howard F. "Space Telescope Maintenance and Refurbishment," Space Telescope Project Office, NASA MSFC.

Waldrop, Mitchell M. "Space Telescope in Trouble," Science, Volume 220, April, 1983.

1.7.4 ADVANCED X-RAY ASTROPHYSICS FACILITY

"AXAF Industry Briefing: Presentation Package," NASA Marshall Space Flight Center, November 1982.

"AXAF Reference Design Concepts," NASA Marshall Space Flight Center, January 1983.

"AXAF Utilization of STS and Satellite Servicing," SAI Conference Center, McLean, Virginia, Astrophysics Division, NASA Headquarters, Contract No. NASW-3518, April 21-22, 1982.

"AXAF Utilization of STS and Satellite Servicing," Goddard Space Flight Center, Greenbelt, Maryland, Astrophysics Division, NASA Headquarters, Contract No. NASW-3518, June 16-17, 1982.

1.7.5 ADVANCED SPACE TELESCOPES

"Advanced Optical Systems Technology Study," NASA, November 1982.

Bekey, Ivan, & Harris Mayer. "1980-2000 Raising our Sights for Advanced Space Systems," Astronautics & Aeronautics, July/August 1976.

"COSMIC," NASA Marshall Space Flight Center, December 1981.

Jones, Charles O., Max E. Nein, & John W. Warner. "Project Concept Summary: COSMIC," NASA Astrophysics Long-Term Program, October 1980.

Jones, Charles O., Max E. Nein, & John W. Warner. "Project Concept Summary: 100-m Thinned Aperture Telescope (TAT)," NASA Astrophysics Long-Term Program, October 1980.

Jones, Charles O., Max E. Nein, & John W. Warner. "Project Concept Summary: Very Large Space Telescope (VLST)," NASA Astrophysics Long-Term Program, October 1980.

Rosendhal, Jeffrey D., Mark B. Kuhner, & Kathleen Maher. "Project Concepts Executive Summary: A Road Map To The Twenty-First Century," NASA Astrophysics Program, October 1980.

Traub, Wesley A. "Feasibility Study of an Optically Coherent Telescope Array in Space," Technical Report No. 1, NASA MSFC Contract NAS8-33893, November 1981.

1.7.6 TELEOPERATOR MANEUVERING SYSTEM

"Teleoperator Maneuvering System: Mark II Propulsion Module Study (Servicing and Orbital Basing)," Final Review, Martin Marietta Corporation, NASA MSFC Contract NAS8-34581, May 1982.

"Teleoperator Maneuvering System: Mark II Propulsion Module Study (Servicing and Orbital Basing)," Midterm Report, Martin Marietta Corporation, NASA MSFC Contract NAS8-34581, October 1982.

"Teleoperator Maneuvering System Study: Mission Requirements and System Definition," Vought Corporation, NASA MSFC Contract NAS8-33903, May 1982.

"Teleoperator Maneuvering System Study: Mission Requirements and System Definition," Vought Corporation, Continuation of NASA MSFC Contract NAS8-33903, January 1983

Turner, J. R. "Teleoperator Maneuvering System," in "Satellite Services Workshop," NASA Lyndon B. Johnson Space Center, Engineering and Development Directorate, June 1982.

1.7.7 SPACE STATION

"Definition of Technology Development Mission For Early Space Station: Orbit Transfer Vehicle Servicing," General Dynamics, Convair Division, Orientation Meeting, October 1982.

"Definition of Technology Development Mission For Early Space Station: Orbit Transfer Vehicle Servicing," General Dynamics, Convair Division, Interim Review, October 1982.

"Space Station Systems Definition Working Group Meeting," NASA Marshall Space Flight Center, November 1982.

"Technology Required For Space Station," NASA MSFC, March 1982.

von Tiesenhausen, Georg. "An Approach Toward Function Allocation Between Humans and Machines in Space Station Activities," NASA TM-82510, November 1982.

von Tiesenhausen, Georg. "The Role of Humans and of Automation in Space Stations," NASA MSFC Program Development, October 1982.

1.7.8 ORBITAL TRANSFER VEHICLE

"Definition of Technology Development Mission For Early Space Station: Orbit Transfer Vehicle Servicing," General Dynamics, Convair Division, Orientation Meeting, October 1982.

"Definition of Technology Development Mission For Early Space Station: Orbit Transfer Vehicle Servicing," General Dynamics, Convair Division, Interim Review, October 1982.

Hastings, L. J. "Cryogenic Fluid Transfer - Orbiter Transfer Vehicle," in "Satellite Services Workshop," NASA Lyndon B. Johnson Space Center, Engineering and Development Directorate, June 1982.

"Orbital Transfer Vehicle: Concept Definition Study," Boeing, NASA MSFC Contract NAS8-33532, July 1980.

1.7.9 ASSEMBLY

"Analysis of Large Space Structures Assembly: Large Space Systems Man/Machine Assembly Analysis," NASA Contract NAS8-32989, Essex Corporation, June 1982.

Shields, Nicholas, Jr., Edwin C. Pruett. "Analysis of Large Space Structures Assembly," NASA Contract NAS8-32989, March 1981.

"Space Transportation Systems Advanced Concepts: Large Space Structures," NASA, August 1981.

1.7.10 CONTROL

Bejczy, A. K. "Kinesthetic and Graphic Feedback for Integrated Operator Control," Preprint, 6th Annual Advanced Control Conference, Man-Machine Interfaces for Industrial Control, Purdue University, West Lafayette, Indiana, April 28-30, 1980.

Bejczy, Antal K. "Sensors, Controls, and Man-Machine Interface for Advanced Teleoperation," Science, Reprint Series, Volume 208, pp. 1327-1335, June 20, 1980.

Brooks, Thurston L. "Supervisory Manipulation Based on the Concepts of Absolute vs Relative and Fixed vs Moving Tasks," Preprint, ASME CENTURY II, Emerging Technology Conferences, International Computer Technology Conference, San Francisco, CA., August 13-15, 1980.

Brooks, T. L., & T. B. Sheridan. "Superman: A System for Supervisory Manipulation and the Study of Human/Computer Interactions," MIT Sea Grant College Program, MITSG 79-20, July 1979.

Saltman, D. & Williams, G., III. "Magic Mirrors," Omni, February 1982.

Sheridan, T. B., W. L. Verplank, & T. L. Brooks, "Human/Computer Control of Undersea Teleoperators," Proceedings of the International Conference on Cybernetics and Society, IEEE, November, 1978.

1.7.11 HUMAN FACTORS

Bejczy, A. K. "Kinesthetic and Graphic Feedback for Integrated Operator Control," Preprint, 6th Annual Advanced Control Conference, Man-Machine Interfaces for Industrial Control, Purdue University, West Lafayette, Indiana, April 28-30, 1980.

Bejczy, Antal K. "Sensors, Controls, and Man-Machine Interface for Advanced Teleoperation," Science, Reprint Series, Volume 208, pp. 1327-1335, June 20, 1980.

Bejczy, A. K., J. K. Salisbury Jr. "Kinesthetic Coupling between Operator and Remote Manipulator," Preprint, International Computer Technology Conference, The American Society of Engineers, San Francisco, CA., August 12-15, 1980.

Bejczy, A. K., & M. Vuskovic. "An Interactive Manipulator Control System," Preprint, Proceedings of the Second International Symposium on Mini & Microcomputers in Control, Fort Lauderdale, Florida, December, 1979.

Chu, Yee-Yeen, William H. Crooks, & Amos Freedy. "Man-Machine Communication in Remote Manipulation: Task-Oriented Supervisory Command Language (TOSC)," NR 196-140, Perceptronics, Woodland Hills, CA., March, 1980.

Cole, R. E., R. L. Pepper, B. E. Pinz, "The Influence of Head Movement Parallax on Perceptual Performance under Direct and TV-Displayed Conditions," Technical Report No. 678, Naval Ocean Systems Center, May, 1981.

Hall, Stephen B., Georg von Tiesenhausen, Gary W. Johnson. "The Human Role in Space," NASA TM-82482, Marshall Space Flight Center, April, 1982.

Pepper, R. L., & R. E. Cole. "Display System Variables Affecting Operator Performance in Undersea Vehicles and Work Systems," Technical Report No. 265, Naval Ocean Systems Center, June, 1978.

Richardson, Cecil S. "The Integrated Cockpit and the HH-60D Helicopter," Technical Directions, Federal Systems Division, Vol. 8, No. 2, Summer, 1982.

Saltman, D. & Williams, G., III. "Magic Mirrors," Omni, February 1982.

Shields, Nicholas Jr. et al. "Human Operator Performance of Remotely Controlled Tasks," Essex Report No. H-82-0101, Essex Corp., Huntsville, Alabama, March, 1982.

Smallowitz, Howard. "Continuum: Double Vision," Omni, October, 1981.

Smith, D. C., et al. "Remote Operator Performance Comparing Mono and Stereo TV Displays: The Effects of Visibility, Learning and Task Factors," Technical Report No. 380, Naval Ocean Systems Center, February, 1979.

Verplank, W. L. "Display Aids for Remote Control of Untethered Undersea Vehicles," Office or Naval Research Contract N00014-77-C-0256, Man-Machine Systems Laboratory, Dept. of Mechanical Engineering, MIT, 1978.

von Tiesenhausen, Georg. "An Approach Toward Function Allocation Between Humans and Machines in Space Station Activities," NASA TM-82510, November 1982.

von Tiesenhausen, Georg. "The Role of Humans and of Automation in Space Stations," NASA MSFC Program Development, October 1982.

1.7.12 MANIPULATORS

Olsen, Roy E. "Dextrous Manipulator Laboratory Program," 18th Annual Conference on Manual Control, Dayton, Ohio, June 10, 1982.

1.7.13 RENDEZVOUS AND DOCKING

Anderson, Robert L. "Development of Automated Rendezvous and Proximity Operations Techniques For Rendezvous and Close-In Operation and Satellite Servicing," NASA JSC Contract NAS9-16310, First Quarterly Review, Lincom Corporation, October 1981.

Becker, R. W., and R. L. Anderson. "Automated Rendezvous and Proximity Operations," in "Satellite Services Workshop," NASA Lyndon B. Johnson Space Center, Engineering and Development Directorate, June 1982.

Eastman, Robert M. "Upgrading the Free Flying Rendezvous and Docking Simulation and the Orbital Servicer System," NASA/ASEE Summer Faculty Research Fellowship Program, NASA Contract NGT-01-002-099, MSFC, University of Alabama, July 25, 1980.

Erwin, H. O., "Laser Docking Sensor," in "Satellite Services Workshop," NASA Lyndon B. Johnson Space Center, Engineering and Development Directorate, June 1982.

Plantier, Michel, & Rene Bodmer. "Teleoperation and Automation," Eurosat, S.A., Geneva, May, 1981.

Schappell, Roger T., Frank A. Vandenburg, & Catherine A. Hughes. "Study of Automated Rendezvous and Docking Technology: Final Report," Contract JPL-955363, Martin Marietta, October, 1979.

1.7.14 SENSORS

Bejczy, Antal K. "Sensors, Controls, and Man-Machine Interface for Advanced Teleoperation," Science, Reprint Series, Volume 208, pp. 1327-1335, June 20, 1980.

Bejczy, A. K., J. W. Brown, & J. L. Lewis. "Evaluation of Proximity Sensor Aided Grasp Control for Shuttle RMS," Preprint, Proceedings of the 15th Annual Conference on Manual Control, Wright State University, Dayton Ohio, March 20-22, 1979.

Hecht, Jeff. "Fiber Optics Turns to Sensing," High Technology, Vol. 2, No. 4, July/August, 1982.

1.7.15 VISION

Cole, R. E., R. L. Pepper, B. E. Pinz, "The Influence of Head Movement Parallax on Perceptual Performance under Direct and TV-Displayed Conditions," Technical Report No. 678, Naval Ocean Systems Center, May, 1981.

Cook, Peter A., "Aerial Combat Simulation in the U.S. Air Force," Astronautics & Aeronautics, September, 1982.

"Superconducting Chip Speeds Video Compression," High Technology, Vol. 2, No. 5, September/October, 1982.

1.7.16 REMOTE MANIPULATOR SYSTEM

Bejczy, A. K., J. W. Brown, & J. L. Lewis. "Evaluation of Proximity Sensor Aided Grasp Control for Shuttle RMS," Preprint, Proceedings of the 15th Annual Conference on Manual Control, Wright State University, Dayton Ohio, March 20-22, 1979.

Fisher, H. T. "Space Telescope & RMS Utilization," Lockheed Missiles and Space Co., Remote Manipulator System Users Conference, May 1981.

Fuller, B. R. "The Role of the Shuttle Remote Manipulator in Satellite Servicing," in "Satellite Services Workshop," NASA Lyndon B. Johnson Space Center, Engineering and Development Directorate, June 1982.

1.7.17 CONSUMABLE RESUPPLY

Hastings, L. J. "Cryogenic Fluid Transfer - Orbiter Transfer Vehicle," in "Satellite Services Workshop," NASA Lyndon B. Johnson Space Center, Engineering and Development Directorate, June 1982.

McGee, J. M. "Fluids Management Technology," in "Satellite Services Workshop," NASA Lyndon B. Johnson Space Center, Engineering and Development Directorate, June 1982.

Rudy, G. C. "Spacecraft Automatic Umbilical Systems," in "Satellite Services Workshop," NASA Lyndon B. Johnson Space Center, Engineering and Development Directorate, June 1982.

1. REPORT NO.	2. GOVERNMENT ACCESSION NO.	3. RECIPIENT'S CATALOG NO.
NASA CR-3734		

4. TITLE AND SUBTITLE	5. REPORT DATE
Space Applications of Automation, Robotics and Machine Intelligence Systems (ARAMIS) - Phase II Volume 1: Telepresence Technology Base Development	October 1983
	6. PERFORMING ORGANIZATION CODE
7. AUTHOR(S) D. L. Akin, M. L. Minsky, E. D. Thiel, and C. R. Kurtzman	8. PERFORMING ORGANIZATION REPORT # SSL Report #30-83
9. PERFORMING ORGANIZATION NAME AND ADDRESS Space Systems Laboratory and Artificial Intelligence Lab. Massachusetts Institute of Technology 77 Massachusetts Avenue Cambridge, Massachusetts 02139	10. WORK UNIT NO. M-424
	11. CONTRACT OR GRANT NO. NAS8-34381
12. SPONSORING AGENCY NAME AND ADDRESS National Aeronautics and Space Administration Washington, D. C. 20546	13. TYPE OF REPORT & PERIOD COVERED Contractor Report
	14. SPONSORING AGENCY CODE

15. SUPPLEMENTARY NOTES Phase II, Final Report

Contract Monitor: Georg von Tiesenhausen, Marshall Space Flight Center, AL

16. ABSTRACT

This report defines the field of telepresence, and provides overviews of those capabilities that are now available, and those that will be required to support a NASA telepresence effort. This includes investigation of NASA's plans and goals with regard to telepresence, extensive literature search for materials relating to relevant technologies, a description of these technologies and their state-of-the-art, and projections for advances in these technologies over the next decade.

Several space projects are examined in detail to determine what capabilities are required of a telepresence system in order to accomplish various tasks, such as servicing and assembly. The key operational and technological areas are identified, conclusions and recommendations are made for further research, and an example developmental program is presented, leading to an operational telepresence servicer.

17. KEY WORDS	18. DISTRIBUTION STATEMENT
Telepresence Satellite servicing Space station	Unclassified - Unlimited Subject Category: 37

19. SECURITY CLASSIF. (of this report)	20. SECURITY CLASSIF. (of this page)	21. NO. OF PAGES	22. PRICE
Unclassified	Unclassified	103	A06

MSFC - Form 3292 (Rev. December 1972)

For sale by National Technical Information Service, Springfield, Virginia 22161

NASA-Langley, 1983