NASA
CR
3734-
v.2
c.1

TECH LIBRARY KAFB, NM
0062352

NASA Contractor Report 3735

Space Applications of Automation, Robotics and Machine Intelligence Systems (ARAMIS) - Phase II

Volume 2: Telepresence Project Applications

LOAN COPY: RETURN TO
AFWL TECHNICAL LIBRARY
KIRTLAND AFB, N.M. 87117

D. L. Akin, M. L. Minsky, E. D. Thiel,
and C. R. Kurtzman

CONTRACT NAS8-34381
OCTOBER 1983

25th Anniversary
1958-1983

NASA

TECH LIBRARY KAFB, NM

0062352

NASA Contractor Report 3735

Space Applications of Automation, Robotics and Machine Intelligence Systems (ARAMIS) - Phase II

Volume 2: Telepresence Project Applications

D. L. Akin, M. L. Minsky, E. D. Thiel,
and C. R. Kurtzman
Massachusetts Institute of Technology
Cambridge, Massachusetts

Prepared for
George C. Marshall Space Flight Center
under Contract NAS8-34381

National Aeronautics
and Space Administration

Scientific and Technical
Information Branch

1983

TABLE OF CONTENTS

VOLUME I: TELEPRESENCE TECHNOLOGY BASE DEVELOPMENT

1.1 INTRODUCTION....1.1.1
1.1.1 CONTRACTUAL BACKGROUND OF STUDY....1.1.1
1.1.2 CONTRIBUTORS TO THIS STUDY....1.1.1
1.1.3 ORGANIZATION OF THE FINAL REPORT....1.1.2
1.1.4 TELEPRESENCE DESCRIPTION....1.1.2
1.1.5 DEFINITIONS AND EXPLAINATIONS....1.1.4
1.2 EXAMINATION OF NASA GOALS AND PLANS....1.2.1
1.2.1 INTRODUCTION....1.2.1
1.2.2 NEAR TERM GOALS AND PLANS....1.2.2
1.2.2.1 SPACECRAFT SERVICING....1.2.2
1.2.2.2 STRUCTURAL ASSEMBLY....1.2.7
1.2.2.3 CONTINGENCY EVENTS....1.2.8
1.2.2.4 NEAR TERM TASK SUMMARY....1.2.9
1.2.2.5 EVA EQUIVALENT CAPABILITY....1.2.10
1.2.3 LONG TERM PLANS AND GOALS....1.2.11
1.2.4 TELEPRESENCE PLANS AND GOALS CONCLUSIONS....1.2.13
1.3 TECHNOLOGY REQUIREMENTS AND ASSESSMENT....1.3.1
1.3.1 INTRODUCTION....1.3.1
1.3.2 NEAR TERM TECHNOLOGY REQUIREMENTS AND ASSESSMENTS....1.3.3
1.3.2.1 HUMAN FACTORS AND MAN/MACHINE INTERFACE....1.3.3
1.3.2.1.1 REQUIREMENTS....1.3.3
1.3.2.1.2 ASSESSMENT....1.3.4
1.3.2.2 VISION....1.3.5
1.3.2.2.1 REQUIREMENTS....1.3.5
1.3.2.2.2 ASSESSMENT....1.3.7
1.3.2.3 MANIPULATOR ARM....1.3.9
1.3.2.3.1 REQUIREMENTS....1.3.9
1.3.2.3.2 ASSESSMENT....1.3.13
1.3.2.4 END EFFECTORS....1.3.16
1.3.2.4.1 REQUIREMENTS....1.3.16
1.3.2.4.2 ASSESSMENT....1.3.17
1.3.2.5 SENSORS....1.3.18
1.3.2.5.1 REQUIREMENTS....1.3.18
1.3.2.5.2 ASSESSMENT....1.3.19
1.3.2.6 COMMUNICATIONS....1.3.21
1.3.2.6.1 REQUIREMENTS....1.3.21
1.3.2.6.2 ASSESSMENT....1.3.23
1.3.2.7 CONTROL....1.3.27
1.3.2.7.1 REQUIREMENTS....1.3.29
1.3.2.7.2 ASSESSMENT....1.3.29
1.3.2.8 CONCLUSIONS....1.3.35
1.3.3 ADVANCED TECHNOLOGY (LONG TERM TELEPRESENCE TECHNOLOGY)....1.3.35
1.3.3.1 FULL TELEPRESENCE....1.3.36
1.3.3.2 CONTROL....1.3.36
1.3.3.2.1 SUPERVISORY CONTROL....1.3.36
1.3.3.2.2 ADAPTIVE CONTROL....1.3.39
1.3.3.2.3 SUMMARY....1.3.40
1.3.3.3 INTELLIGENT VISION....1.3.40
1.3.3.4 MANIPULATORS AND END EFFECTORS....1.3.41
1.3.3.5 SENSORS....1.3.42
1.3.3.6 COMMUNICATIONS....1.4.1

1.4 FACILITIES ASSESSMENT.....1.4.1
1.4.1 NASA MARSHALL SPACE FLIGHT CENTER (MSFC).....1.4.2
1.4.2 NASA JET PROPULSION LABORATORY (JPL).....1.4.3
1.4.3 NASA LANGLEY RESEARCH CENTER.....1.4.4
1.4.4 MARTIN MARIETTA AEROSPACE.....1.4.5
1.4.5 GRUMMAN AEROSPACE CORPORATION.....1.4.6
1.4.6 MASSACHUSETTS INSTITUTE OF TECHNOLOGY (MIT).....1.4.6
1.4.7 OTHER TELEPRESENCE RELATED FACILITIES WITH SPACE EXPERIENCE.....1.4.10
1.4.8 OTHER TELEPRESENCE RESEARCH FACILITIES.....1.4.11
1.4.9 SUMMARY.....1.4.13
1.5 DEVELOPMENT PROGRAM.....1.5.1
1.5.1 INTRODUCTION.....1.5.1
1.5.2 PROGRAM OUTLINE.....1.5.1
1.5.3 TECHNOLOGY DEVELOPMENT PROGRAM.....1.5.3
1.5.3.1 VISION.....1.5.5
1.5.3.2 MANIPULATORS.....1.5.6
1.5.3.3 END EFFECTORS.....1.5.7
1.5.3.4 SENSORS.....1.5.8
1.5.3.5 COMMUNICATIONS.....1.5.10
1.5.3.6 CONTROL.....1.5.11
1.5.4 DEVELOPMENT PROGRAM SUMMARY.....1.5.13
1.6 TELEPRESENCE TECHNOLOGY BASE DEVELOPMENT CONCLUSIONS.....1.6.1
1.6.1 TELEPRESENCE IS NEEDED.....1.6.1
1.6.2 TELEPRESENCE IS FEASIBLE.....1.6.2
1.7 BIBLIOGRAPHY.....1.7.1
1.7.1 GENERAL TELEPRESENCE AND ROBOTICS.....1.7.1
1.7.2 SATELLITE SERVICING.....1.7.2
1.7.3 SPACE TELESCOPE.....1.7.3
1.7.4 ADVANCED X-RAY ASTROPHYSICS FACILITY.....1.7.3
1.7.5 ADVANCED SPACE TELESCOPES.....1.7.4
1.7.6 TELEOPERATOR MANEUVERING SYSTEM.....1.7.4
1.7.7 SPACE STATION.....1.7.5
1.7.8 ORBITAL TRANSFER VEHICLE.....1.7.5
1.7.9 ASSEMBLY.....1.7.5
1.7.10 CONTROL.....1.7.6
1.7.11 HUMAN FACTORS.....1.7.6
1.7.12 MANIPULATORS.....1.7.7
1.7.13 RENDEZVOUS AND DOCKING.....1.7.7
1.7.14 SENSORS.....1.7.8
1.7.15 VISION.....1.7.8
1.7.16 REMOTE MANIPULATOR SYSTEM.....1.7.8
1.7.17 CONSUMABLE RESUPPLY.....1.7.9

TABLE OF CONTENTS

VOLUME 2: TELEPRESENCE PROJECT APPLICATIONS

2.1 INTRODUCTION....2.1.1
2.1.1 CONTRACTUAL BACKGROUND OF STUDY....2.1.1
2.1.2 CONTRIBUTORS TO THIS STUDY....2.1.1
2.1.3 ORGANIZATION OF THE FINAL REPORT....2.1.2
2.2 SPACE PROJECT SCIENTIFIC OVERVIEW....2.2.1
2.2.1 THE SPACE TELESCOPE (ST)....2.2.1
2.2.2 THE ADVANCED X-RAY ASTROPHYSICS FACILITY (AXAF)....2.2.4
2.2.3 ADVANCED SPACE TELESCOPE CONCEPTS....2.2.6
2.3 SPACE PROJECT TELEPRESENCE TASK ANALYSIS....2.3.1
2.3.1 ST SERVICING TASKS....2.3.5
2.3.1.1 AXIAL SCIENTIFIC INSTRUMENTS....2.3.7
2.3.1.2 THE RADIAL SCIENTIFIC INSTRUMENT....2.3.9
2.3.1.3 FINE GUIDANCE SENSORS (FGSs)....2.3.13
2.3.1.4 THE RATE SENSOR UNITS (RSUs)....2.3.15
2.3.1.5 THE SCIENCE INSTRUMENT CONTROL AND DATA HANDLING UNIT (SI C&DH)....2.3.15
2.3.1.6 THE RATE GYRO ELECTRONICS (RGEs)....2.3.15
2.3.1.7 THE BATTERIES....2.3.19
2.3.1.8 THE FINE GUIDANCE ELECTRONICS UNITS (FGEs)....2.3.19
2.3.1.9 LATCH DESIGN....2.3.19
2.3.1.10 CONTINGENCY SERVICING....2.3.19
2.3.2 AXAF SERVICING TASKS....2.3.22
2.3.2.1 AXAF ELEMENTS AND INSTRUMENTS....2.3.24
2.3.2.2 AXAF ORUs....2.3.29
2.3.3 ADVANCED SPACE TELESCOPE SERVICING TASKS....2.3.30
2.3.3.1 THE VERY LARGE SPACE TELESCOPE (VLST)....2.3.30
2.3.3.2 THE COHERENT OPTICAL SYSTEM OF MODULAR IMAGING COLLECTORS (COSMIC)....2.3.34
2.3.3.3 THE 100-M THINNED-APERTURE TELESCOPE (TAT)....2.3.36
2.4 OPERATIONAL ANALYSIS....2.4.1
2.4.1 RMS OPERATIONS....2.4.4
2.4.2 GRASPING....2.4.7
2.4.3 CONSUMABLE RESUPPLY....2.4.8
2.4.4 ASSEMBLY....2.4.9
2.4.5 ORBITAL TRANSFER....2.4.14
2.4.5.1 ST ORBITAL TRANSFER....2.4.15
2.4.5.2 XAF ORBITAL TRANSFER....2.4.19
2.4.5.3 ADVANCED TELESCOPE ORBITAL TRANSFER....2.4.23
2.4.6 RENDEZVOUS....2.4.23
2.4.7 DOCKING....2.4.25
2.4.8 MIRROR CLEANING AND RECOATING....2.4.29
2.4.9 REMOTE OBSERVATION OF TELESCOPE SCIENCE DATA....2.4.29
2.5 TECHNOLOGICAL ANALYSIS....2.5.1
2.5.1 END EFFECTORS....2.5.2
2.5.2 SENSORS....2.5.3
2.5.3 VISION....2.5.4
2.5.4 CONTROL....2.5.5
2.5.5 HUMAN FACTORS....2.5.6
2.5.6 PREDICTIVE DISPLAYS....2.5.7
2.5.7 MANIPULATORS....2.5.8
2.5.8 STOWAGE RACKS....2.5.10
2.6 DEVELOPMENTAL ANALYSIS....2.6.1
2.7 CONCLUSIONS....2.7.1

2.8 BIBLIOGRAPHY.....2.1
2.8.1 GENERAL TELEPRESENCE AND ROBOTICS.....2.1
2.8.2 SATELLITE SERVICING.....2.2
2.8.3 SPACE TELESCOPE.....2.3
2.8.4 ADVANCED X-RAY ASTROPHYSICS FACILITY.....2.3
2.8.5 ADVANCED SPACE TELESCOPES.....2.4
2.8.6 TELEOPERATOR MANEUVERING SYSTEM.....2.4
2.8.7 SPACE STATION.....2.5
2.8.8 ORBITAL TRANSFER VEHICLE.....2.5
2.8.9 ASSEMBLY.....2.5
2.8.10 CONTROL.....2.6
2.8.11 HUMAN FACTORS.....2.6
2.8.12 MANIPULATORS.....2.7
2.8.13 RENDEZVOUS AND DOCKING.....2.7
2.8.14 SENSORS.....2.8
2.8.15 VISION.....2.8
2.8.16 REMOTE MANIPULATOR SYSTEM.....2.8
2.8.17 CONSUMABLE RESUPPLY.....2.9

TABLE OF CONTENTS

VOLUME III: EXECUTIVE SUMMARY

3.1 INTRODUCTION.....3.1.1
3.1.1 CONTRACTUAL BACKGROUND OF STUDY.....3.1.1
3.1.2 CONTRIBUTORS TO THIS STUDY.....3.1.1
3.1.3 ORGANIZATION OF THE FINAL REPORT.....3.1.2
3.1.4 TELEPRESENCE DESCRIPTION.....3.1.3
3.2 THE NEED FOR TELEPRESENCE.....3.2.1
3.2.1 INTRODUCTION.....3.2.1
3.2.2 NEAR TERM GOALS AND PLANS.....3.2.2
3.2.2.1 SPACECRAFT SERVICING.....3.2.2
3.2.2.2 STRUCTURAL ASSEMBLY.....3.2.4
3.2.2.3 CONTINGENCY EVENTS.....3.2.4
3.2.2.4 NEAR TERM TASK SUMMARY.....3.2.5
3.2.2.5 EVA EQUIVALENT CAPABILITY.....3.2.6
3.2.3 LONG TERM PLANS AND GOALS.....3.2.8
3.2.4 TELEPRESENCE PLANS AND GOALS CONCLUSIONS.....3.3.1
3.3 TELEPRESENCE FEASIBILITY.....3.3.1
3.3.1 TELEPRESENCE TECHNOLOGY.....3.3.1
3.3.2 ADVANCED TECHNOLOGY (LONG TERM TELEPRESENCE TECHNOLOGY).....3.3.9
3.3.2.1 FULL TELEPRESENCE.....3.3.10
3.3.2.2 SUPERVISORY CONTROL.....3.3.10
3.3.3 TELEPRESENCE PROJECT APPLICATION.....3.3.11
3.3.3.1 SPACE PROJECT TELEPRESENCE TASK ANALYSIS.....3.3.12
3.3.3.2 EXAMPLE TASK ANALYSIS -- ST SERVICING TASKS.....3.3.13
3.3.3.3 OPERATIONAL AND TECHNOLOGICAL ANALYSES.....3.3.14
3.3.3.4 TELEPRESENCE APPLICATION SUMMARY.....3.3.16
3.3.4 FACILITIES.....3.3.16
3.3.5 DEVELOPMENT PROGRAM.....3.3.17
3.4 CONCLUSIONS.....3.4.1
3.4.1 TELEPRESENCE IS NEEDED 3.4.1
3.4.2 TELEPRESENCE IS FEASIBLE.....3.4.2

VOLUME 2: TELEPRESENCE PROJECT APPLICATIONS

2.1 INTRODUCTION

2.1.1 CONTRACTUAL BACKGROUND OF STUDY

On June 10, 1982, NASA Marshall Space Flight Center (MSFC) awarded a twelve month contract (NAS8-34381) to the Space Systems and the Artificial Intelligence Laboratories of the Massachusetts Institute of Technology, for a study entitled "Space Applications of Automation, Robotics, and Machine Intelligence Systems (ARAMIS)", Phase II, Telepresence. This Phase II contract immediately followed the completion of the ARAMIS Phase I research (also contract NAS8-34381) which produced its own final report. The Space Systems Laboratory is part of the MIT Department of Aeronautics and Astronautics; the Artificial Intelligence Laboratory is one of MIT's interdepartmental laboratories. Work on the contract began on June 10, 1981, with a termination date for Phase II on June 9, 1983.

This document is the final report for Phase II of the ARAMIS study. The NASA MSFC Contracting Officer's Representative is Georg F. von Tiesenhausen (205-453-2789).

2.1.2 CONTRIBUTORS TO THIS STUDY

The members of the study team are listed in Table 2.1. Information necessary for this study was obtained from experts in government, industry, and academia, and from literature searches.

Principal Investigators:
- Professor David L. Akin (617-253-3626)
- Professor Marvin L. Minsky (617-253-5864)

Study Manager: Eric D. Thiel (617-253-2298)
Associate Study Manager: Clifford R. Kurtzman (617-253-2298)
Contributing Investigator: Professor Rene H. Miller (617-253-2263)
Research Staff:
- Russell D. Howard
- Joseph S. Oliveira

Part-time Researcher: Antonio Marra, Jr.

TABLE 2.1: STUDY PARTICIPANTS

2.1.3 ORGANIZATION OF THE FINAL REPORT

Volume 1 of this report is the Telepresence Technology Base Development. This volume defines the field of telepresence, and provides overviews of those capabilities that are now available, and those that will be required to support a NASA telepresence effort. This includes investigation of NASA's plans and goals with regard to telepresence, extensive literature search for materials relating to relevant technologies, a description of these technologies and their state-of-the-art, and projections for advances in these technologies over the next decade. Also included is a listing of facilities that are doing research and development relating to telepresence. A technology development program leading to the deployment of an operational telepresence system by 1992 is presented. Volume 1 of this report is intended as a broad approach to telepresence technology and the general development of that technology.

Volume 2 of this report is the Telepresence Project Applications. This volume examines several space projects in detail to determine what capabilities are required of a telepresence system in order to accomplish various tasks, such as servicing and assembly. The key operational and technological areas are identified, conclusions and recommendations are made for further research, and an example developmental program is presented, leading to an operational telepresence servicer. Volume 2 is intended as an example of telepresence technology, and the associated issues, when telepresence is applied to several specific space missions.

Volume 3 is the executive summary of this contract report.

2.2 SPACE PROJECT SCIENTIFIC OVERVIEW

In consultation with NASA MSFC, five space projects were selected for study:

- The Space Telescope (ST)
- The Advanced X-Ray Astrophysics Facility (AXAF)
- The Very Large Space Telescope (VLST)
- The Coherent Optical System of Modular Imaging Collectors (COSMIC)
- The 100-m Thinned Aperture Telescope (TAT)

These space projects were chosen to span the years 1985-2000, with ST representing a relatively near term potential telepresence application, AXAF being a mid-term application, and VLST, COSMIC, and TAT being far term applications with increased complexity and requiring technology well beyond the current state-of-the-art. Together the space projects cover a wide spectrum of tasks, such as spacecraft servicing, resupply, rendezvous and docking, and on-orbit assembly. The Space Telescope is the only space project which is certain to be implemented, although there is a high probability that AXAF will also receive a go-ahead. Even if none of the three far term space projects receive full funding and development, it is felt that the telepresence technologies and capabilities which they imply will be necessary in the late 1990's.

This section presents an overview of the scientific capabilities of each of the five space projects.

2.2.1 THE SPACE TELESCOPE (ST)

The Space Telescope (Figure 2.1), with a projected lifetime of at least 10 years, will be the first free flying spacecraft designed for on-orbit maintenance. Scheduled for a February 28, 1985 launch on STS-25, the ST is a

THE SPACE TELESCOPE

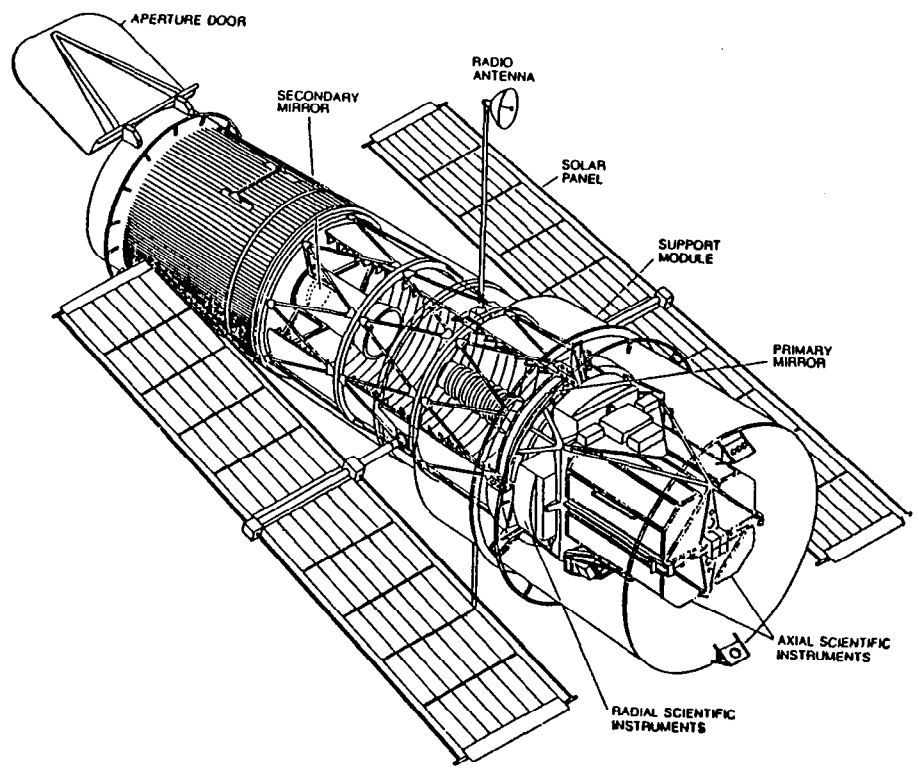

FROM SCIENTIFIC AMERICAN, JULY 1982

LAUNCH DATE:	FEBRUARY 1985
LIFETIME:	10 YEARS
LAUNCH SYSTEM:	STS
LAUNCH ORBIT:	595 Km, 28.5°
SIZE:	3.1 m LENGTH
	4.3 m DIAMETER
MASS:	11,600 Kg
MISSION:	UV-VIS-IR ASTRONOMY

Figure 2.1: Space Telescope.

13.1-m-long cylinder, 4.26-m in diameter, containing five scientific instruments and a support systems module, and with a mass of 11,600 kg. As ST operates above the Earth's atmosphere, it is sensitive to a much greater range of wavelengths than is possible on ground, and it is also immune to "twinkling" effects caused by turbulence in the upper atmosphere which blurs ground based observations. ST's optics will thereby allow observation of objects 50 times less bright and with ten times better resolution than the best ground-based telescopes, allowing viewing of objects 14 billion light years away.

The ST carries five scientific instruments:

- The Wide Field/Planetary Camera will study galaxies, clusters of galaxies, and the spatial distribution of faint quasars. In addition, it can provide full-disc images of planets, with short exposure times, if necessary. The camera utilizes charge coupled device detectors, capable of observation of stars as faint as the 28th apparent visual magnitude.
- The Faint Object Camera will utilize the full resolution of ST on the very faintest object detectable. It will be capable of producing low-resolution spectra, and will permit the study of faint structures which are situated close to bright objects. It is designed for the highest spatial resolution ST can deliver: approximately 0.03 arc-sec.
- The High Resolution Spectrograph will examine the ultraviolet spectrum to enable observations of objects 1000 times fainter than those which could be detected by earlier space observatories. This will permit observations of stars in crowded fields, the study of close visual binaries, determination of the composition of the interstellar medium, and the abundance of elements.

- The Faint-Object Spectrograph will measure ultraviolet and optical radiation emitted by distant sources to determine their constitution, physical characteristics, and dynamics.
- The High-Speed Photometer will measure rapid brightness variability over time intervals as short as a microsecond.

In addition to these five instruments, the precise measurement of the relative position of stars will be accomplished without the use of a special instrument. Of the ST's three fine guidance sensors, only two are necessary to identify and make acquisition of "guide stars." The third (redundant) fine guidance sensor will be used to obtain high precision astrometric measurements.

ST's advanced capabilities will allow detailed study and observation of quasars, pulsars, gas clouds, planets, novae, supernovae, variable stars, neutron stars, black holes, and star formation, as well as yielding insight into the origin of the universe.

2.2.2 THE ADVANCED X-RAY ASTROPHYSICS FACILITY (AXAF)

The Advanced X-Ray Astrophysics Facility (Figure 2.2) will be a free flying national facility whose X-Ray observations will complement visual and radio observations made from ground and space observatories (such as the Space Telescope). Plans call for AXAF to be Shuttle launched in April of 1990, with a projected lifetime of fifteen years or longer, achieved through on-orbit maintenance and replenishment of consumables. With its large mirror area, fine resolution, and high efficiency detectors, a factor of 100 or more increase in sensitivity over previously obtainable measurements is projected.

High resolution spectroscopy of the strongest sources and high sensitivity (non-dispersive) spectroscopy of the weaker ones with the AXAF will allow detailed tests to be made of theoretical models of galactic and extragalactic sources. Polarimetry will provide critical data on the physical state of

LAUNCH DATE:	APRIL 1990
LIFETIME:	15 YEARS
LAUNCH SYSTEM:	STS
LAUNCH ORBIT:	395Km 28.5^{o}
SIZE:	3.1 m LENGTH
	4.3 m DIAMETER
MASS:	19,000 Kg (PRELIM)
MISSION:	X-RAY ASTROPHYSICS

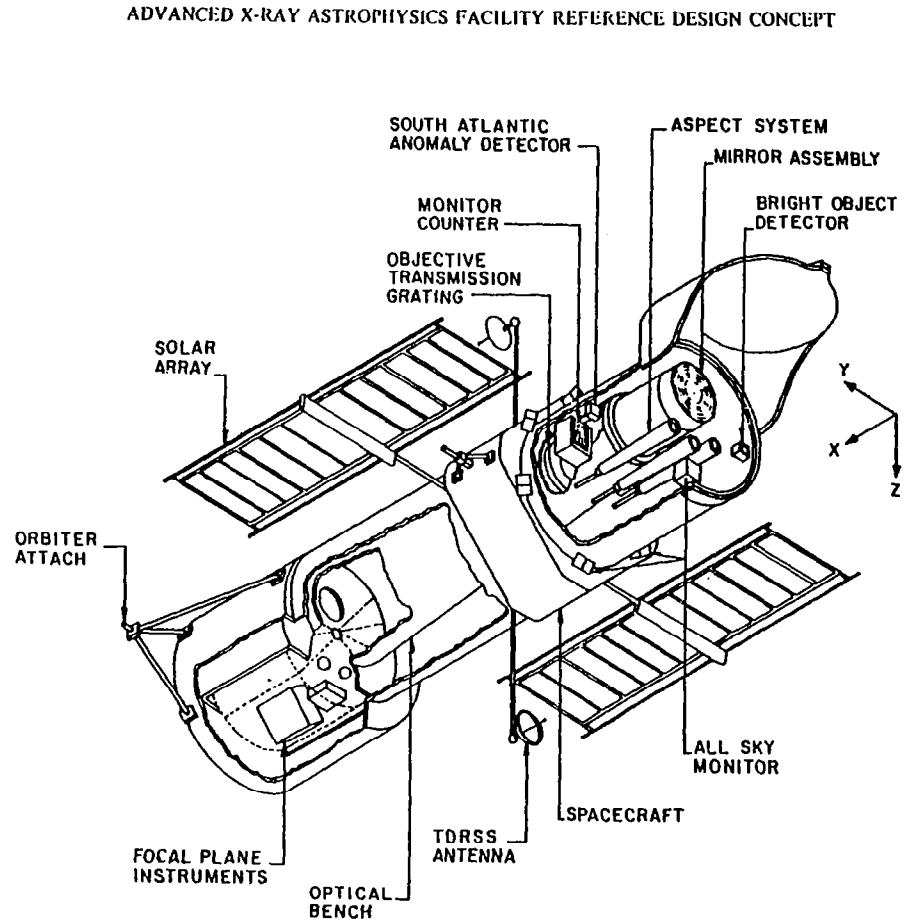

From NASA MSFC, AXAF Reference Design Concept, January 1983.

Figure 2.2: Advanced X-Ray Astrophysics Facility (AXAF).

non-thermal sources. High detector efficiency and high resolution (0.5 arc-sec) will permit the observation of bright galactic nuclei and the intergalactic gas to distances far in excess of current capabilities, as well as cluster detection. Such distances are comparable to or greater than those attainable with the Space Telescope in the study of similar objects. AXAF will also make observations of stellar sources, globular clusters, supernovae, interstellar medium, normal and active galaxies, the X-ray background, pulsars, quasars, and black holes. As with ST, it is anticipated that AXAF will discover new and previously unexpected objects.

AXAF scientific instruments include:

- High Resolution Imagers (3)
- Low Resolution Imagers (2) (Image Proportional Counters)
- A Low Resolution (Solid State) Spectrometer
- A High Resolution Dispersive (Focal Plane Dispersive) Spectrometer
- A Polarimeter
- All-Sky Monitors (7)
- An Objective Grating Spectrometer
- A Monitor Proportional Counter (2)

2.2.3 ADVANCED SPACE TELESCOPE CONCEPTS

The Space Telescope (section 2.2.1) is expected to remain operational at least through 1995, through the use of on-orbit maintenance and servicing. It is anticipated, however, that in the late 1990's, with the completion of the ST program, a new space telescope will be needed, capable of at least an order of magnitude improvement over ST capabilities.

In response to the future demand for telescopes with unprecedented angular

resolution and very large collecting areas, NASA has studied three concepts for advanced space telescopes:

- The Very Large Space Telescope (VLST) (Figure 2.3)
- The Coherent Optical System of Modular Imaging Collectors (COSMIC) (Figure 2.4)
- The 100-m Thinned Aperture Telescope (TAT) (Figure 2.5)

The VLST is the smallest and least capable telescope, TAT the largest and most capable, while COSMIC is intermediate in size and capability.

The next generation space telescope will repeat, with greater detail, observations made by ST, and investigate phenomena which are beyond the resolution of ST. Such phenomena include:

- Calibration of the distance scales of the universe
- High resolution studies of quasars
- Searches for planetary systems

2.3 SPACE PROJECT TELEPRESENCE TASK ANALYSIS

Each of the five space projects has been analyzed to determine, to the extent that is currently possible, the nature of the activities which an on-orbit telepresence system should be able to accomplish. Documents supplied by NASA have been used as a basis for these evaluations. These documents are listed, by space project, in the bibliography. For the ST, the physical parameters of the structure are known in detail: this task therefore consists of analyzing, at a nuts and bolts level, each of the tasks which will be necessary to perform ST servicing and maintenance. For AXAF, for which there are several tentative designs containing less detail than is available for the ST, this task consists of evaluating anticipated telepresence requirements, and recommending modifications for the spacecraft to make it "telepresence friendly". Finally, for the advanced space telescope applications,

VERY LARGE
SPACE TELESCOPE (VLST)

PROGRAM SUMMARY:	UV, visible IR astronomy larger than ST
ORBITED MASS:	22,800 kg
STRUCTURE (TELESCOPE):	21,250 kg
INSTRUMENTS:	1,600 kg
LAUNCH VEHICLE:	Shuttle and External Tank (Orbital) Assembly

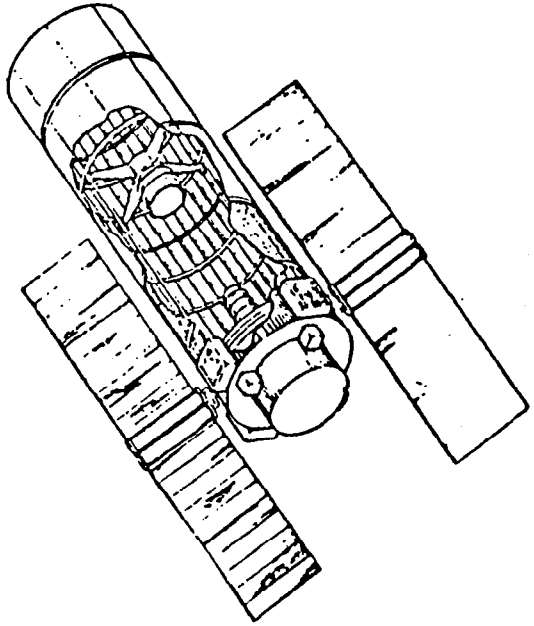

From Project Concept Summary:
NASA, October 1980.

Figure 2.3: Very Large Space Telescope.

COHERENT OPTICAL SYSTEM OF
MODULAR IMAGING COLLECTORS
(COSMIC)

PROGRAM SUMMARY:	Visible, IR, UV, astronomy larger than ST
ORBITAL MASS:	67,000 kg
INSTRUMENTS:	2,300 kg
LAUNCH VEHICLE:	Shuttle, HLV, OTV, IUS

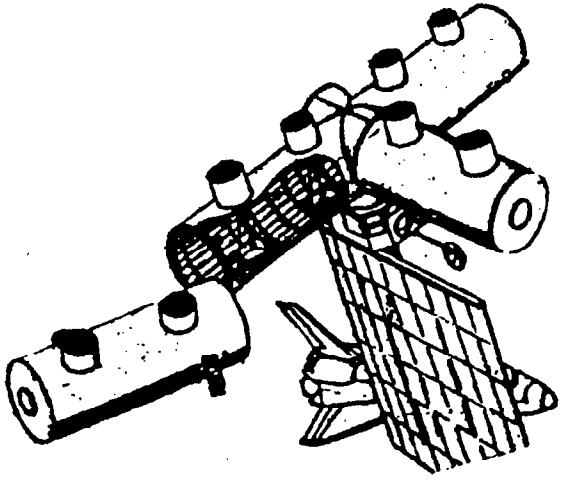

From Project Concept Summary,
NASA, October 1980.

Figure 2.4: COSMIC.

100-M THINNED-APERTURE
TELESCOPE (TAT)

PROGRAM SUMMARY:	UV/optical/IR astronomy, larger than ST
ORBITAL MASS:	85,000 kg
INSTRUMENTS:	2,000 kg
LAUNCH VEHICLE:	Shuttle, HLV, OTV, IUS

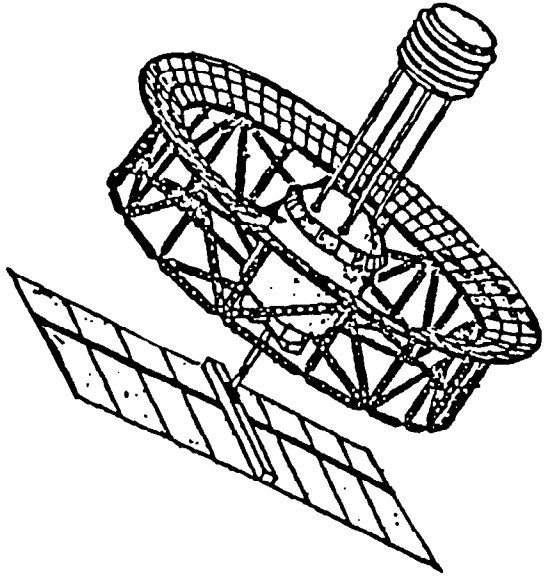

From Project Concept Summary, NASA, October 1980.

Figure 2.5: 100-M Thinned Aperture Telescope.

telepresence requirements are evaluated at a very general level to determine appropriate areas for further research and development.

In general, spacecraft will be maintained by a combination of scheduled, unscheduled, and contingency tasks during their on-orbit lifetime:

- Scheduled tasks are those that can be anticipated with a particular frequency, e.g., battery replacement and consumable resupply.
- Unscheduled tasks are those that can be anticipated, but whose frequency is not predictable, e.g., solar panel replacement.
- Contingency tasks are those that cannot be fully anticipated, e.g., debris impact repair.

The hardware analyses presented in this section are used to determine key operational and technological telepresence technology areas, and as a basis for the conclusions and recommendations for further research presented in sections 2.4 and 2.5 of this report.

2.3.1 ST SERVICING TASKS

Present plans call for the Space Telescope to be deployed and inserted directly into orbit by the Space Shuttle. Further, current plans are to have pressure suited astronauts (EVA) perform ST servicing. The ST has a design life of 10 years, but this could be significantly extended with on-orbit maintenance, ground maintenance, and ground refurbishment. The Space Telescope configuration has undergone extensive testing through the use of neutral buoyancy simulations, which have clearly delineated the steps necessary to maintain, refurbish, and perform selected planned and contingency operations in EVA. These simulations determined the type and location of crew aids which have been integrated into ST to facilitate EVA servicing of the spacecraft. The methodology developed, and the crew aids devised, are being used as

starting points for future efforts in ensuring spacecraft serviceability.

Orbital maintenance is baselined for a total of 23 orbital replacement units (ORUs) aboard ST. These consist of:

- 5 Scientific Instruments (SIs)
- 3 Fine Guidance Sensors (FGSs)
- The Science Instrument Control and Data Handling Unit (SI C&DH)
- 3 Rate Sensor Units (RSUs)
- 3 Rate Gyro Electronics Units (RGEs)
- 3 Fine Guidance Electronics Units (FGEs)
- 5 Batteries

Further, on-orbit override of certain malfunctioning ST mechanisms (such as would be required by faulty Solar Array deployment) has been designed for on a contingency basis. It is estimated that ST will require orbital maintenance anywhere from 2 1/2 to 5 years after initial deployment.

Ground maintenance is contemplated to replace hardware which cannot be replaced on-orbit, and to perform minor repairs (for example, the replacement of the Reaction Wheel Assemblies). This maintenance will be performed at Kennedy Space Center to eliminate additional ST downtime for surface transportation.

After 10 years of orbital operation, it is estimated that ST will require major ground refurbishment. Major ST elements will be disassembled for extensive overhaul, including mirror recoating (if required). Scientific advancement and early ST science data may indicate a need for new scientific instruments, or the upgrading of those currently aboard ST. Orbital operational data will also be utilized to make hardware changes and improvements which will upgrade ST performance. While ground maintenance activities should be accomplished within 6 months, ground refurbishment would probably take a year or longer.

Telepresence is potentially capable of handling all orbital maintenance activities, as well as reboosting and orbital deployment from and retrieval to the Space Shuttle (with assistance from the Teleoperator Maneuvering System (TMS)). While EVA activities are currently planned for performing orbital maintenance functions, the implementation of telepresence could potentially reduce costs of maintenance operations, free the Shuttle and crew for other tasks, and offer other additional advantages. The cost reduction potential is due to spreading the non-recurring costs of a telepresence servicer over all the spacecraft it will service, rather than a single space project.

In keeping with the conclusion of this study that telepresence should be capable of performing those tasks which could be performed by an astronaut in EVA (see Volume 1), telepresence alternatives are considered in this report primarily for planned orbital maintenance activities, but not for those planned to require ground maintenance or refurbishment. It is possible that an on-orbit telepresence system will eventually be capable of performing many of the activities currently expected to require ground maintenance, thus potentially reducing the number of reflights necessary for the ST.

The 23 servicing tasks aboard ST set limiting constraints on the telepresence technology required for a servicer. Utilizing documentation made available by the Marshall Space Flight Center regarding the results of neutral buoyancy simulations, each of these tasks, the steps necessary for their execution, and the requirements they impose on the development of a telepresence system are discussed below.

2.3.1.1 AXIAL SCIENTIFIC INSTRUMENTS

Located in the ST's aft shroud (Figure 2.6), the four Axial SIs will be the most massive objects ever to be freely manipulated in EVA by the U.S. space program. About the size of a telephone booth (91 x 91 x 221 cm, or 36 x 36 x

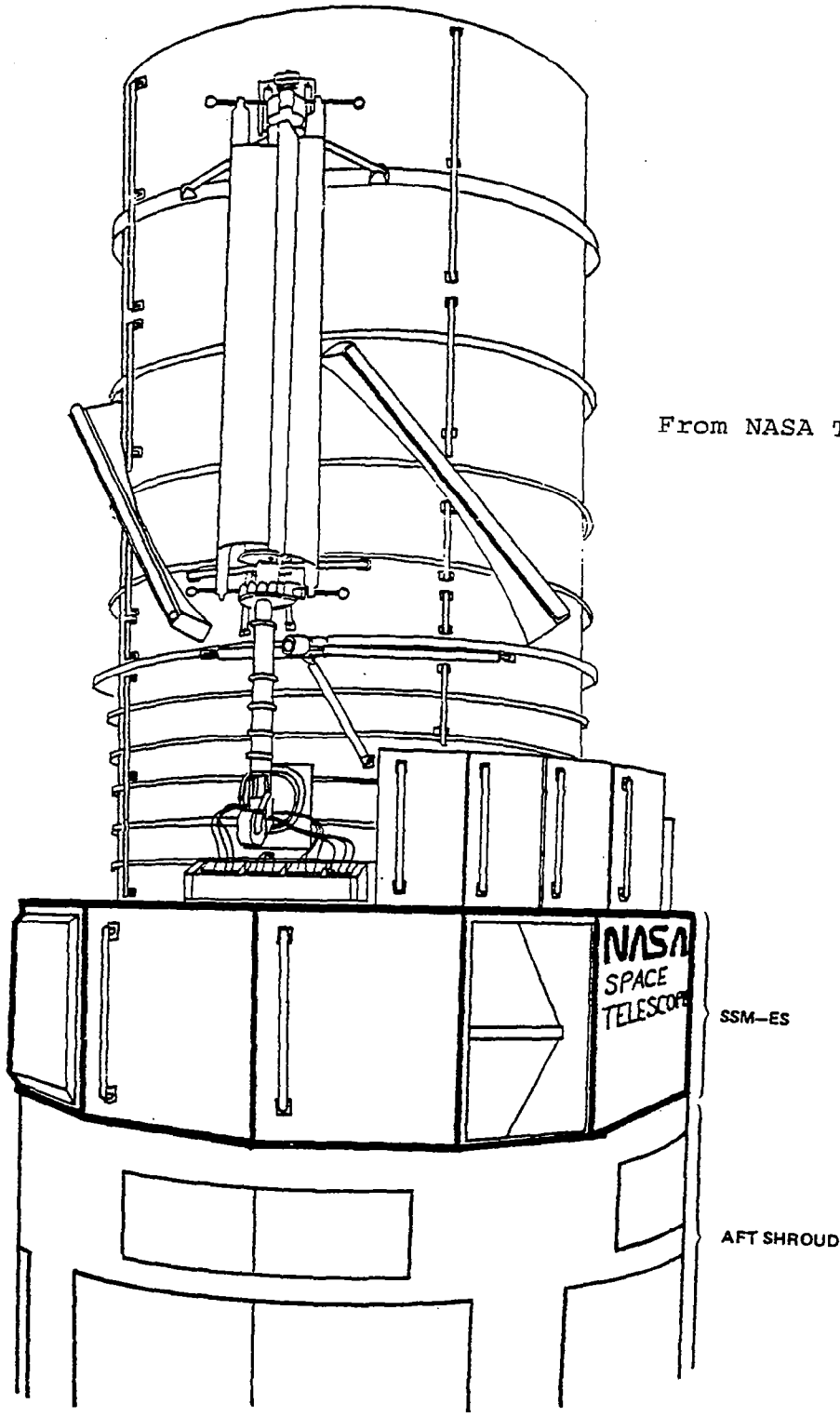

From NASA TM-82485.

Figure 2.6: ST Support Systems Module Equipment Section and Aft Shroud.

87 inches), the SIs have a mass of up to 320 kg (700 lbf). In addition, there are external surfaces on the SIs that are very sensitive. Each Axial SI has four vertical handrails on its surface, and Ground Support Equipment hardpoints on each end, which are the only points at which the SI can make contact with either the servicer or guiderails (on the ST) when being handled. Electrical connectors must be disconnected and stowed for SI removal, followed by the release of three latches. These latches, or registration fittings, are ball and socket joints which are activated by a ratchet drive (Figure 2.7). The SI is then pulled out of its restraint and moved along guiderails (Figure 2.8) toward a position outside the aft shroud of the ST, where it is free from any restraint. The installation of a spare SI is carried out in reverse order from the above procedure. When performed by astronauts in EVA, this procedure requires the efforts of two crewmen located in portable foot restraints.

A servicing manipulator must have sufficient dexterity to perform the connecting and disconnecting of the electrical interfaces, although this dexterity is not extreme, as the location of the electrical disconnect socket has constrained this to be a one handed operation when performed by an astronaut. It is therefore a much simpler operation for a telepresence system than one requiring two-handed coordination. The connecting process is carried out by slipping a ground strap with a keyhole slot over a bolt which is tightened to a specified torque (Figure 2.9). All electrical connections are then made by using a wing nut connector requiring only one-fourth turn to lock or unlock, with spring detents to prevent inadvertent operation.

2.3.1.2 THE RADIAL SCIENTIFIC INSTRUMENT

The Wide Field Planetary Camera (WFPC) is the Radial SI, and it differs in configuration from the Axial SIs. WFPC removal and replacement is simpler than for the Axial SIs as the WFPC is smaller, is accessible from outside the aft

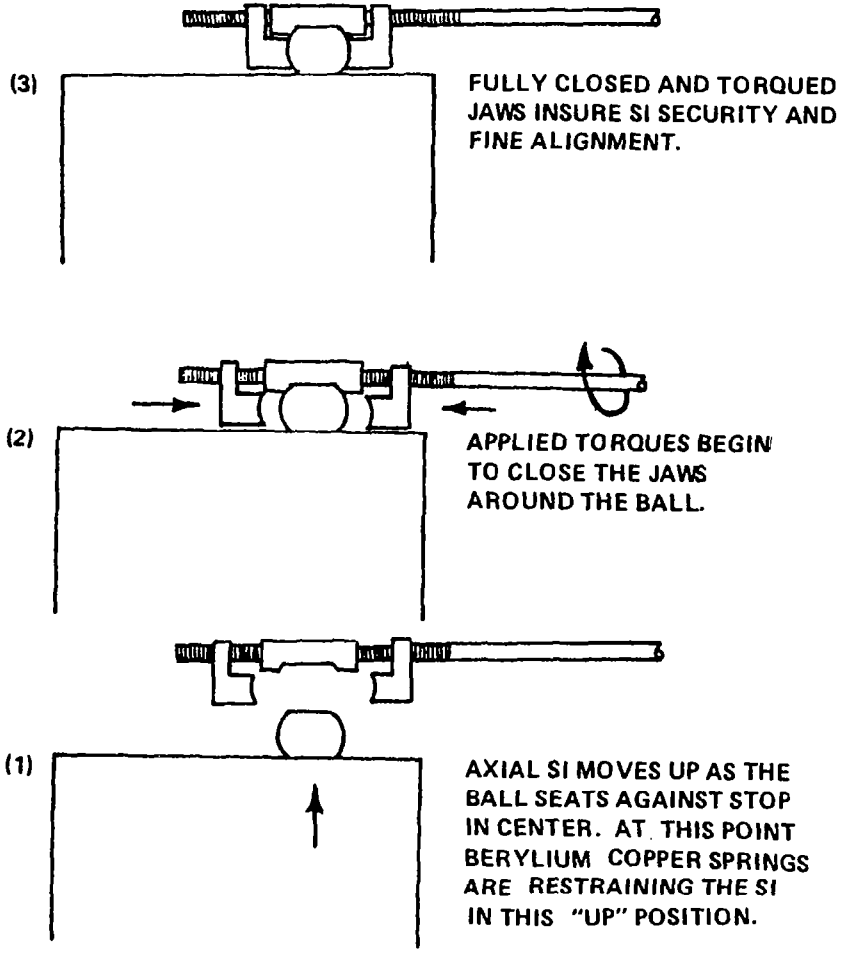

From NASA TM-82845, June 1982.

Figure 2.7: Axial SI Registration Fitting.

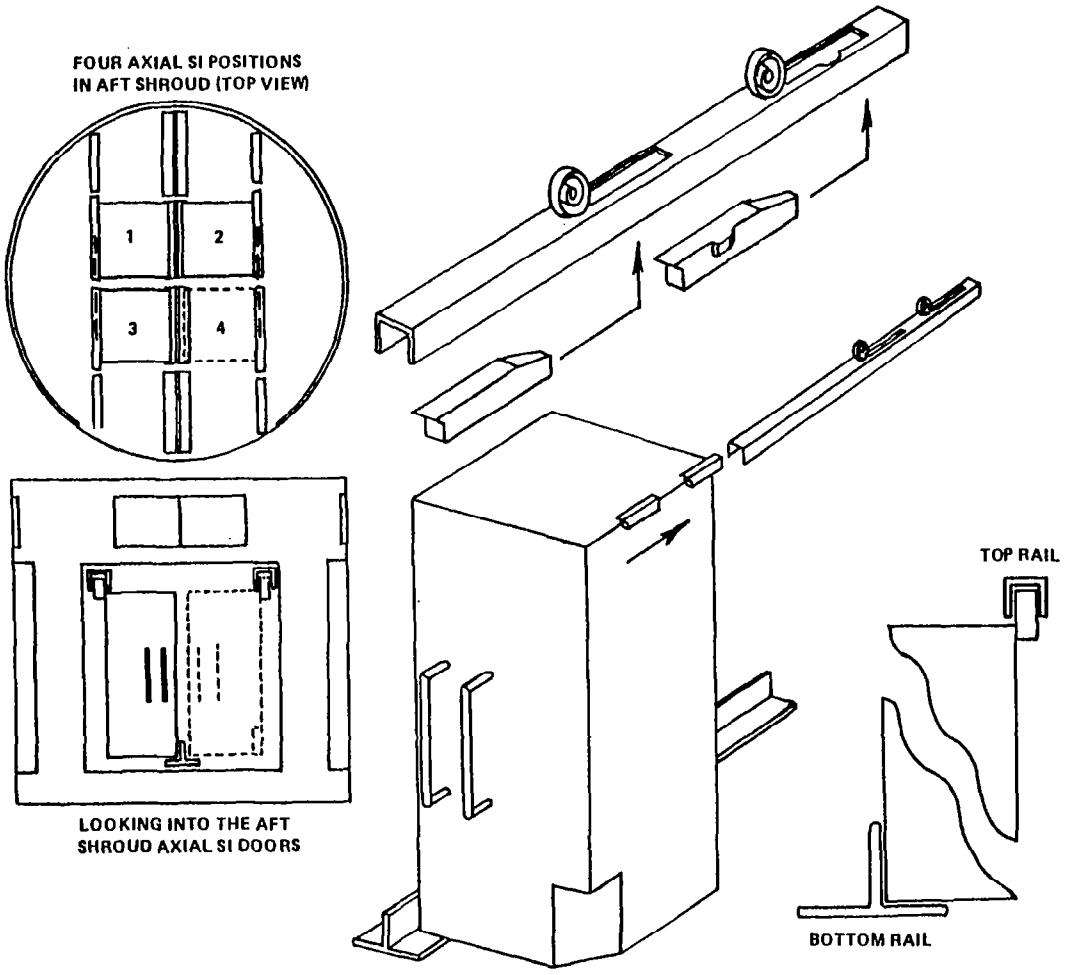

From NASA TM-82485, June 1982.

Figure 2.8: Axial SI Rails Showing Movement.

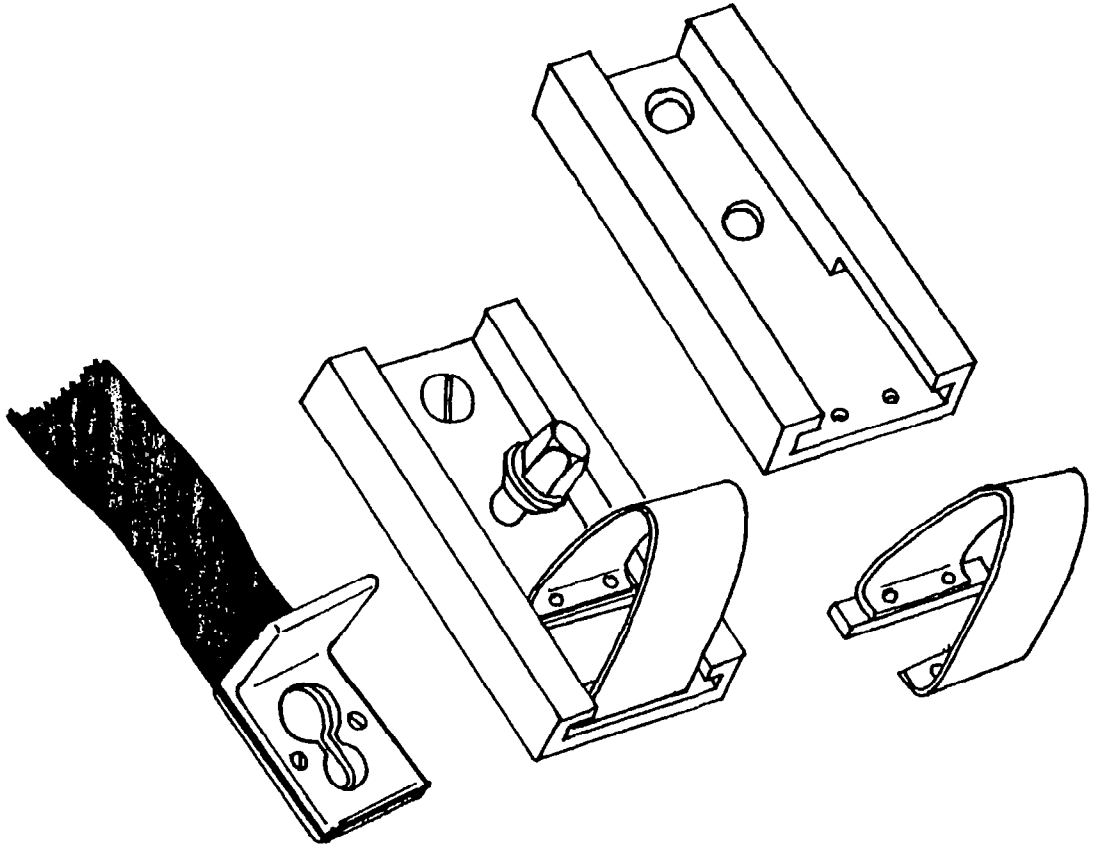

From NASA TM-82485,
June 1982.

Figure 2.9: Anti-Rotation Device for Fastening Ground Strap and Fitting.

shroud with very good visibility, and access to the registration fittings (latches) is unrestricted.

The WFPC must be slid out from the aft shroud radially on the guiderails. To aid in SI removal, a temporary handhold plate or other grappling aid is attached to the radiator on the WFPC at the beginning of removal, and retrieved after a replacement SI is installed.

After SI removal, a cover is installed over the WFPC's sensitive mirror. This is a "one-handed" operation.

The WFPC has two registration fittings which secure the SI, provide proper alignment, and mate electrical fittings. While ground strap installation is required, the electrical connectors are automatically attached when one of the registration fittings is torqued.

2.3.1.3 FINE GUIDANCE SENSORS (FGSs)

The 3 FGSs are mounted radially in the aft shroud (Figure 2.10) and closely resemble the WFPC. Like the WFPC, the FGSs are inserted and removed by two guiderails which interface with the instrument on each side, and the FGSs must be fitted with a handhold plate or other grappling aid to facilitate removal. Access to the instruments is more difficult than with the WFPC, in that the FGS lies inside the aft shroud and is only accessible through wide doors which must first be opened. Registration fittings are similar to those used on the Radial SI, and are accessed by the crew on each side of the FGS's outward-facing surface. A ganged electrical connector which attaches to the left side of the FGS's outward facing surface supplies all electrical connections, and mirror protective covers will be attached to the FGS mirror located on the rear of the instrument, as on the WFPC.

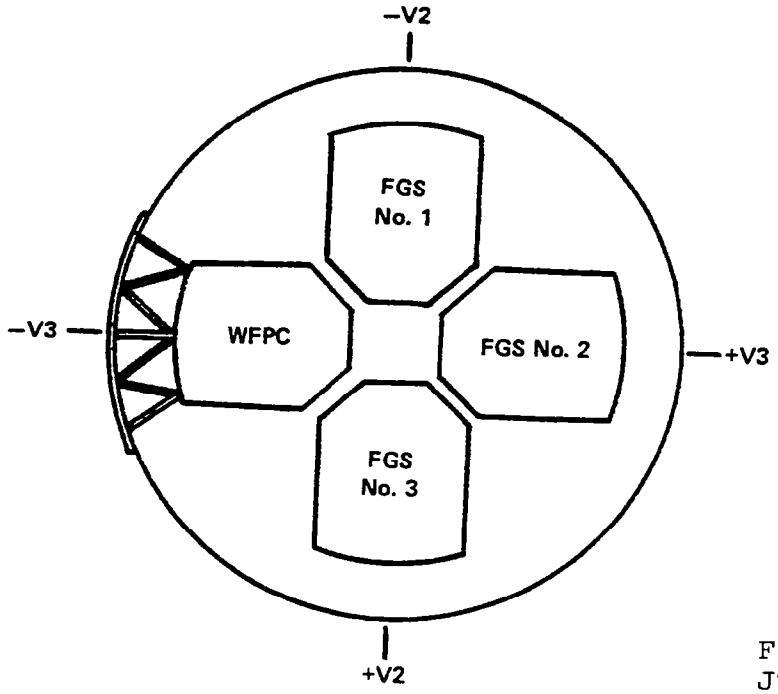

From NASA TM-82845, June 1982.

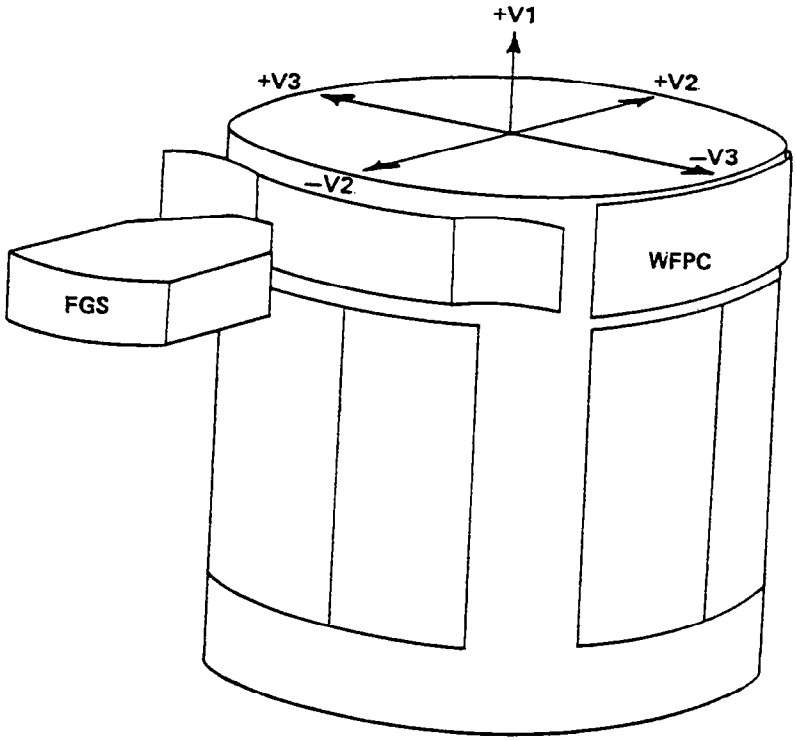

Figure 2.10: FGS Orientation in AS.

2.3.1.4 THE RATE SENSOR UNITS (RSUs)

Each of the 3 Fixed Head Star Trackers (FHSTs) has its own RSU which is replaceable on-orbit. To gain access to the RSUs, the conical light shields on each of the FHSTs must be removed. The light shield attachment fittings are difficult to access, and were therefore designed to be operated with one hand. Additionally, the area in the aft shroud designated as a workspace for this activity is small. When performed in EVA, there is only room for one crewmember, who must work from a foot restraint position which allows him to hold the light shield with one hand while working the "J-hook" fasteners (Figure 2.11) with another.

Once the light shields have been removed, the RSU can be accessed for removal and replacement. Each RSU is secured in place by three hex bolts which are integral with the RSU structure (Figure 2.12). There are also two electrical pigtail connectors to each RSU, similar in type to the electrical connectors for the Axial SI (Figure 2.13).

2.3.1.5 THE SCIENCE INSTRUMENT CONTROL AND DATA HANDLING UNIT (SI C&DH)

The SI C&DH is mounted on the inside of the door to the Systems Support Module Equipment Section (SSM/ES) Bay 10. The SI C&DH mounting fixture accepts fasteners that both attach the SI C&DH and provide electrical connections. (Figure 2.14). The mounting assembly has keyhole bolts (A) and a torque bolt (B) which seats the ORU in the electrical connectors (C). Once the torque bolt has seated the ORU electrical connectors, the keyhold bolts are torqued to secure the ORU. Removal is accomplished by repeating the same procedure in reverse order.

2.3.1.6 THE RATE GYRO ELECTRONICS (RGEs)

The 3 RGEs are located inside SSM/ES Bay 10. The removal and installation

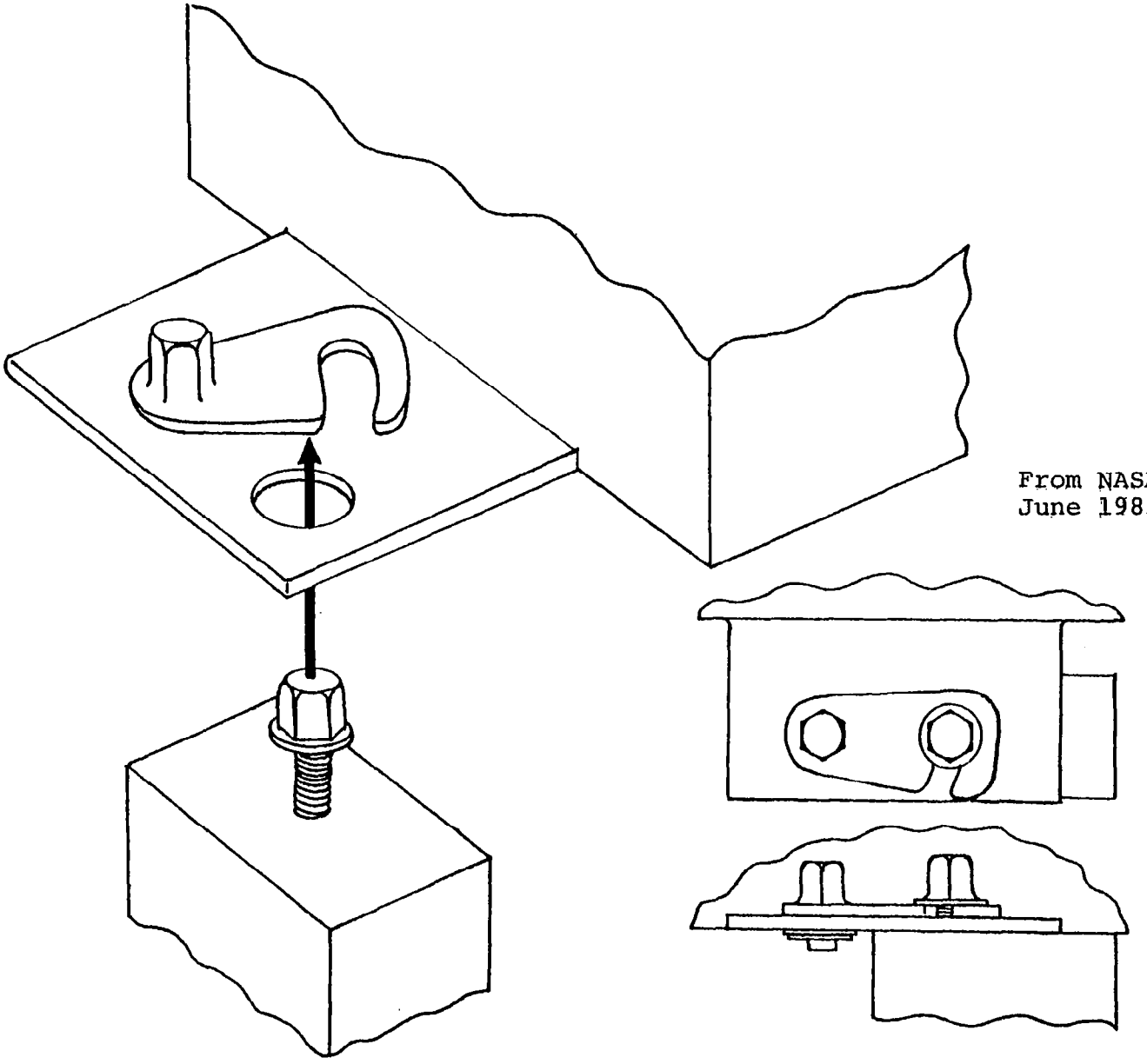

From NASA TM-82485, June 1982.

Figure 2.11: J-Hook Latch.

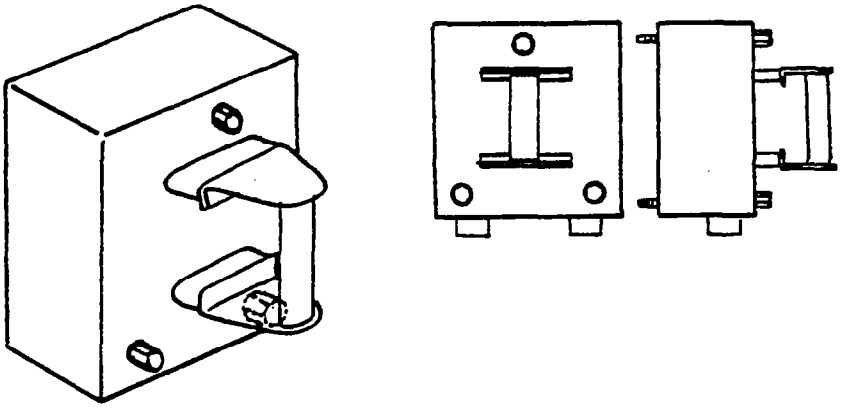

Figure 2.12: RSU Mounting Bolt Locations.

From NASA TM-82485,
June 1982.

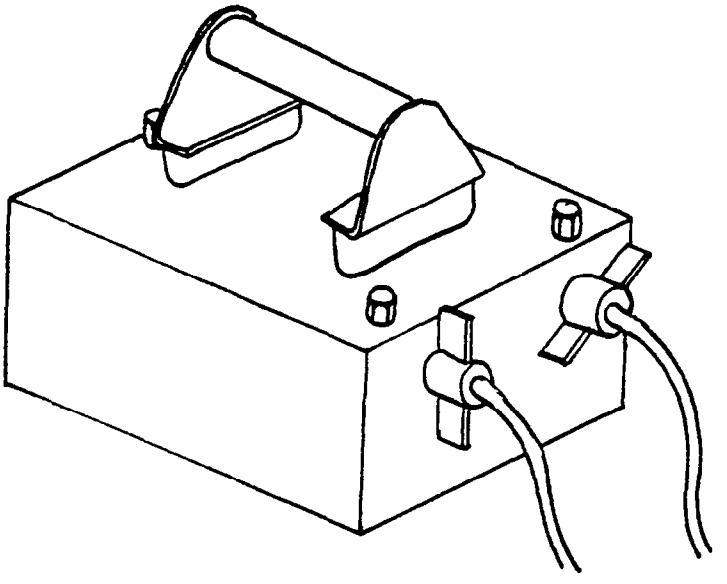

Figure 2.13: RSU Electrical Wing Tab Connectors.

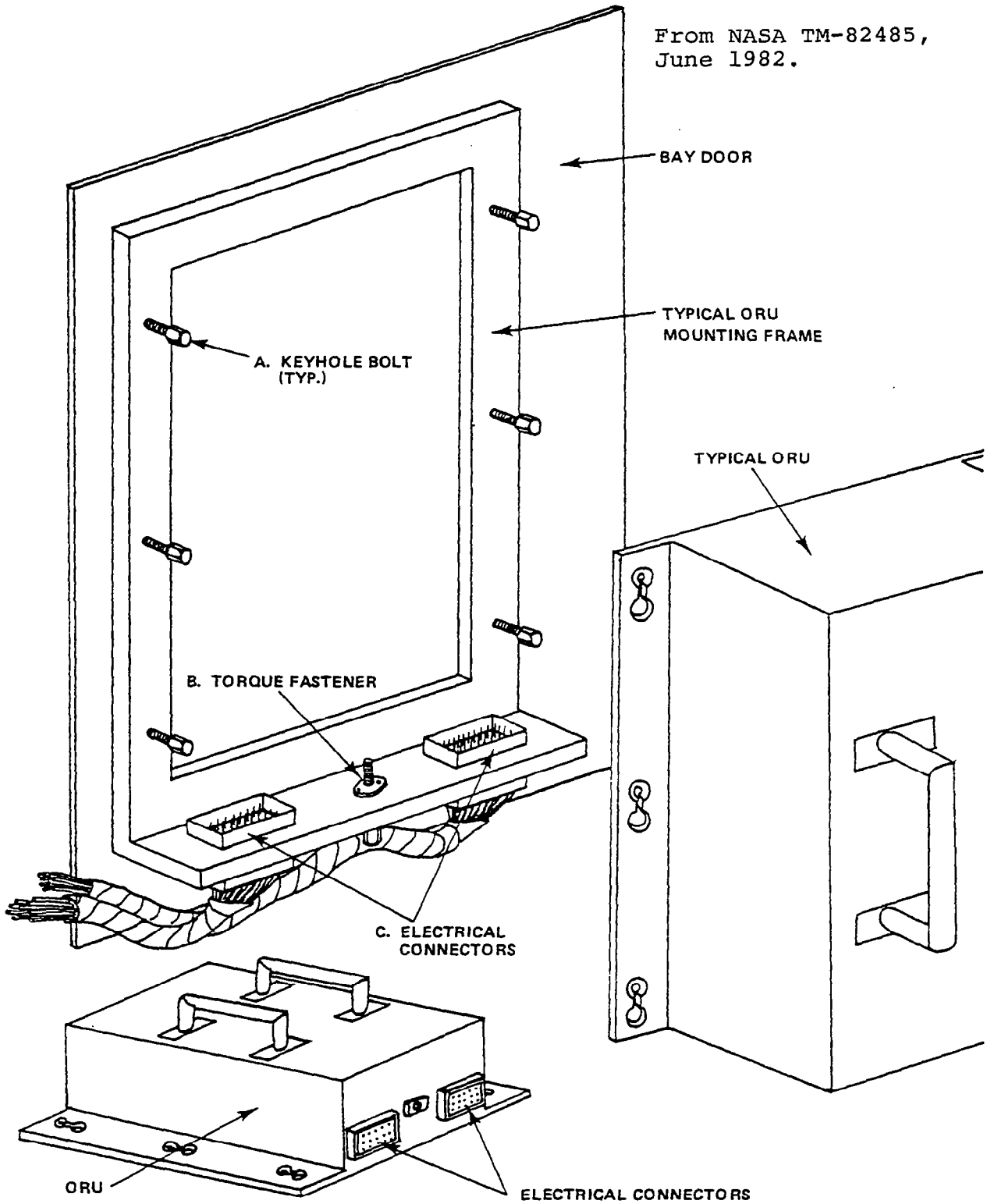

Figure 2.14: Typical ORU (e.g., SI C&DH) Door Mounting System.

of the RGEs is accomplished in the same manner as the SI C&DH, as all fasteners and electrical connections are identical.

2.3.1.7 THE BATTERIES

SSM/ES Bay doors for Bays 2 and 3 house the 5 batteries (Figure 2.15) which are scheduled for changeout on every maintenance mission. The batteries are attached to the mounting frame with J-hook fasteners, and electrical connections are made by connecting an electrical pigtail connector to the battery end.

2.3.1.8 THE FINE GUIDANCE ELECTRONICS UNITS (FGEs)

Maintenance of the 3 FGEs involves the removal and replacement of the unit from the bay doors on which they are attached. The fasteners and connectors are identical to those used on the SI C&DH.

2.3.1.9 LATCH DESIGN

Every ORU except the Radial SI is concealed by doors which must be opened and closed during servicing. There are three types of latches on the ST. Adjustable grip latches (Figure 2.16) are operated as a one-handed task with a ratchet wrench, and are located on the edge of the bay doors. Upon closing, a torque is applied to the latch's hex fastener. T-bolt latches swing into a slotted member on the door, and the T-bolt is torqued to the proper value. Finally, the third type of latch is the same as the T-bolt but has a handle to which the T-bolt is mounted. The handle has an over-center locking feature which holds the doors closed and restrained until final torque is applied.

2.3.1.10 CONTINGENCY SERVICING

The Solar Arrays are designed to be either stowed (secure in the forward

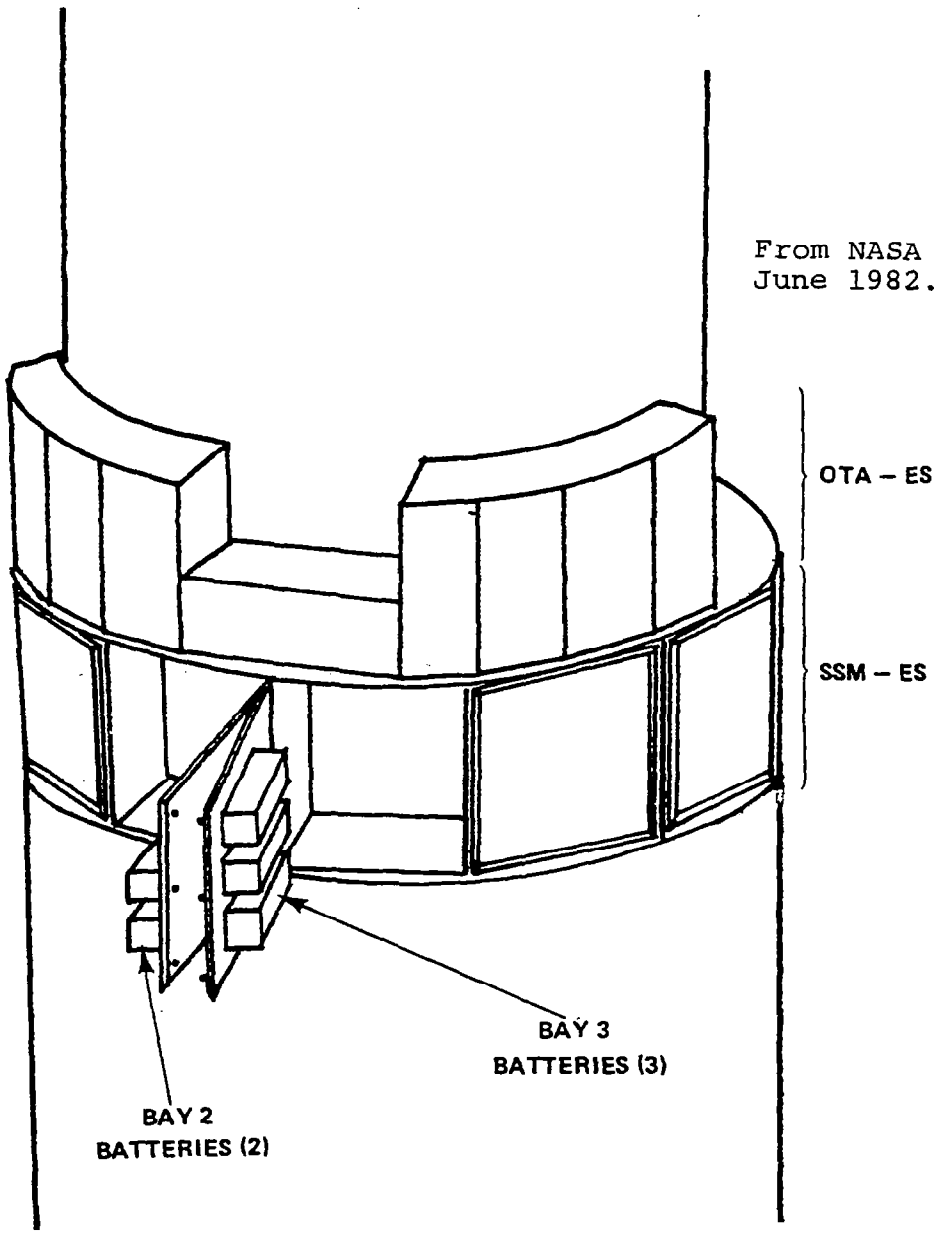

Figure 2.15: Bay 2 and 3 Doors and Battery Placement.

From NASA TM-82485,
June 1982.

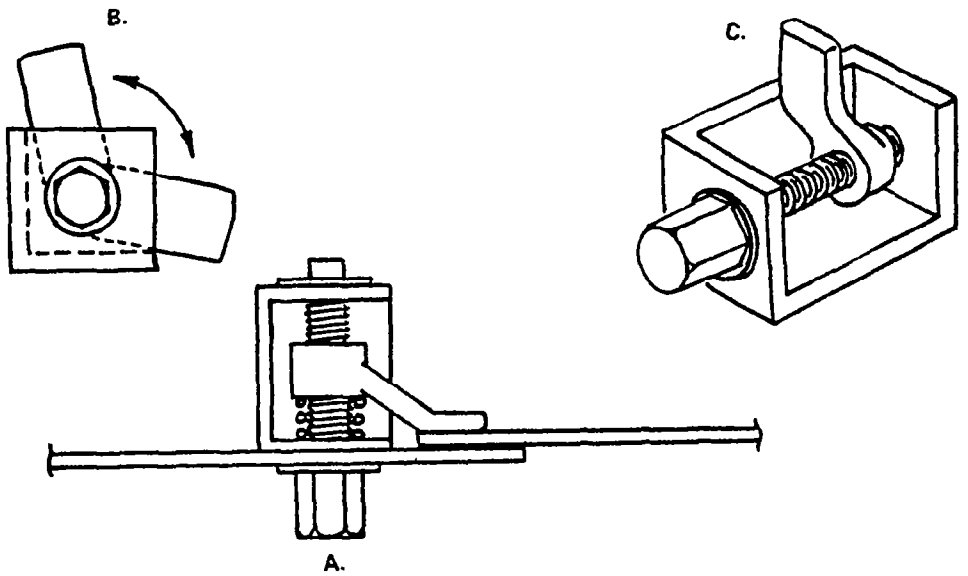

Figure 2.16: Adjustable Grip Latch.

and aft latches as in the case of launch configuration) or deployed (free from the latches and perpendicular to the body of the ST, as in orbit). Failures at the forward or aft latch could prevent deployment or safe stowage, and failure of any of five mechanisms in the region of the jettison clamp assembly would require intervention or jettison.

Contingency operations consist of four basic tasks as illustrated in Figure 2.17. For Solar Array stowage, the secondary deployment mechanism's brakes must be applied, the secondary and primary deployment mechanisms operated, and the aft and forward latches engaged. Solar Array deployment is essentially the reverse of this.

For Solar Array jettison, with the Solar Arrays deployed, the brakes must be applied, diode box connectors disconnected, brackets stowed on the primary deployment mechanism arm, jettison clamp released, and the Solar Arrays released. If the Solar Arrays are stowed, the brakes are not applied, but the aft latch must be released prior to jettison.

Additionally, if the Shuttle Remote Manipulator System (RMS) is used to assist jettison, a portable grapple fixture (PGF) must be installed. This involves inserting a hex shaft into an appropriate socket on the Solar Array and pinning it.

Other ST components subject to contingency servicing are the High Gain Antenna (HGA) and the Aperture Door. The HGA is similar to the Solar Arrays in mechanical function and servicing requirements. The operation of the Aperture Door is a simple task with unrestricted access.

2.3.2 AXAF SERVICING TASKS

AXAF scientific instruments and spacecraft subsystems will be designed for replacement on-orbit. Additionally, some of the science instruments aboard AXAF have expendables that will be sized for 3 years of operation, after which

From NASA TM-82485,
June 1982.

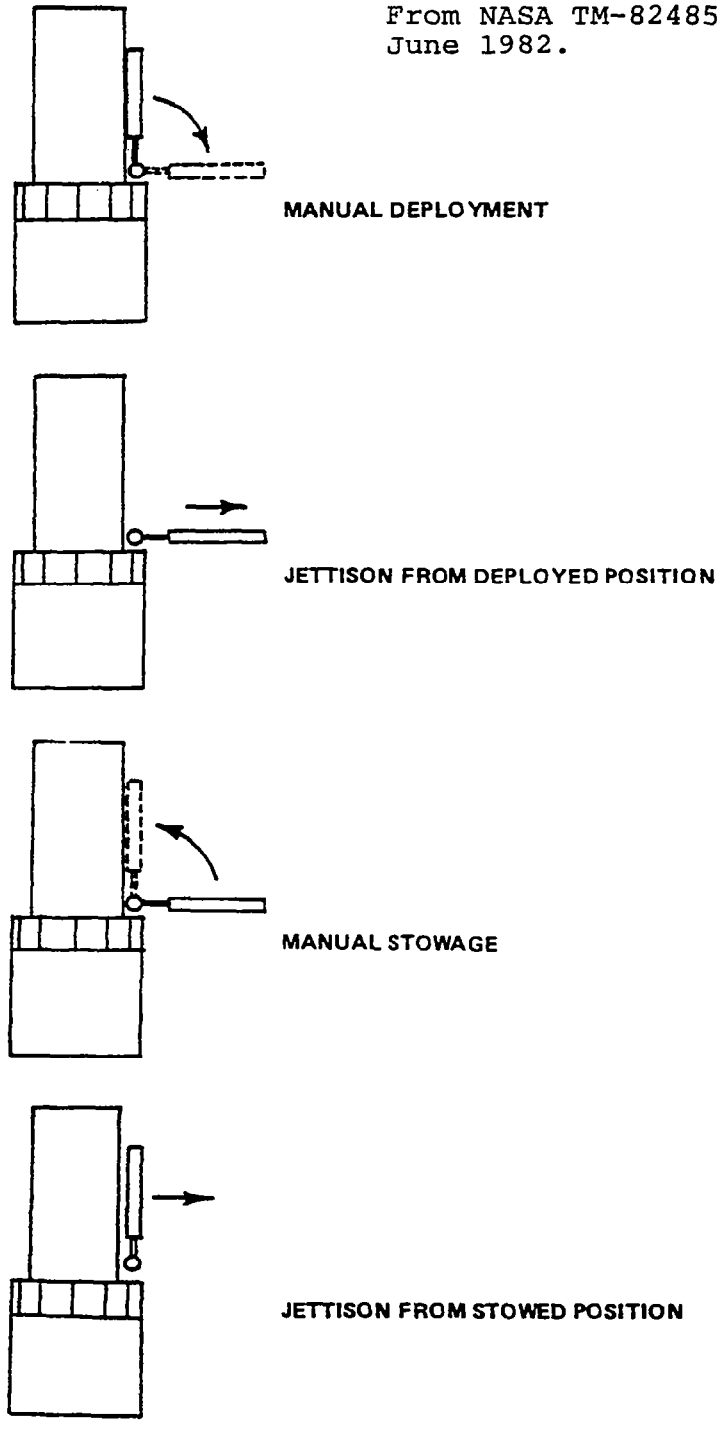

Figure 2.17: Solar Array Contingency Tasks.

the gases must be replenished, or the entire instrument with its gas supply replaced.

2.3.2.1 AXAF ELEMENTS AND INSTRUMENTS

The major elements of the AXAF (Figure 2.18) are the spacecraft module, outer shells, and the optical assembly. The optical assembly is composed of the mirror assembly, the optical bench, and the carousel and focal plane science instruments. The outer shells, including the light shield and aft shroud, are used for protection and to provide the proper thermal environment to assure stability of the optical assembly. The spacecraft module houses most of the support subsystem components such as electronics, batteries, computers, and reaction wheels. However, other support subsystem avionics components, such as solar arrays and communications antennae, are mounted on the exterior of the AXAF.

AXAF has three major equipment grouping locations (Figure 2.19): the focal plane instruments at the aft end, the spacecraft support equipment located in the middle, and the forward sensors near the mirror assembly. These equipment groups include the following instrumentation:

FORWARD GROUP:

- Fixed Head Startrackers
- Bright Object Sensor
- Dry Inertial Reference Unit II (Rate Gyro Package)
- Modular Power System Electronics
- South Atlantic Anomaly Detectors
- Objective Grating Electronics

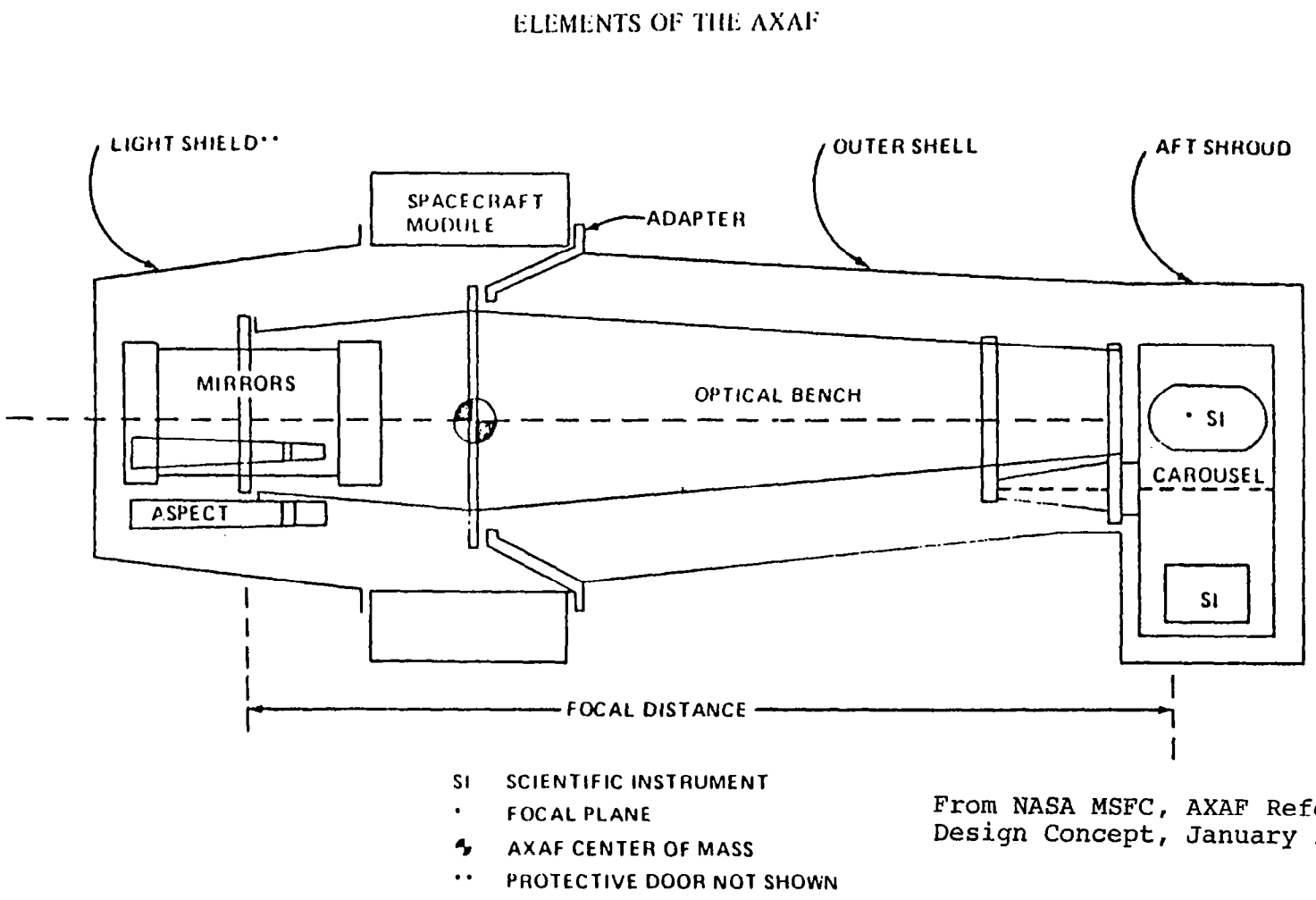

From NASA MSFC, AXAF Reference Design Concept, January 1983.

Figure 2.18: AXAF Major Elements.

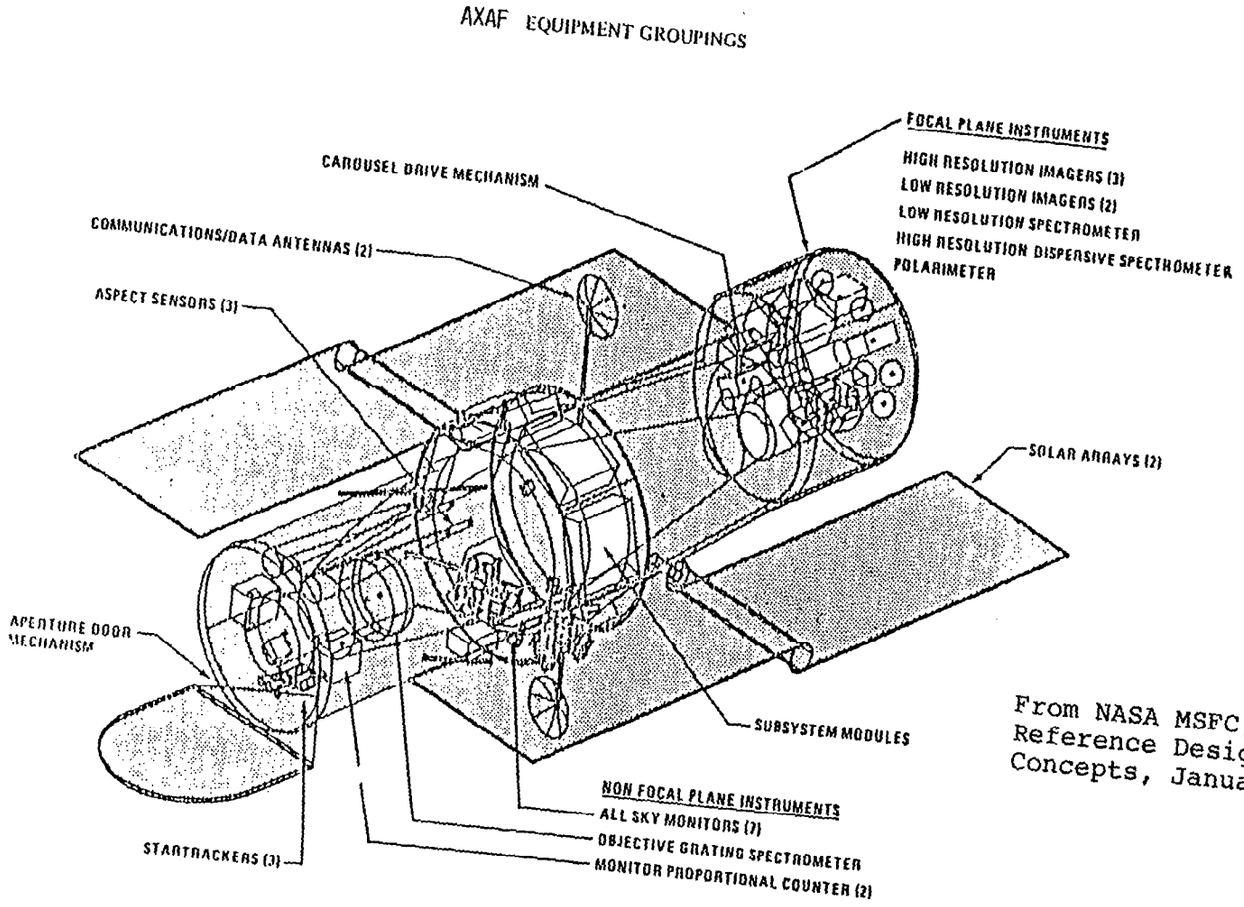

From NASA MSFC, AXAF Reference Design Concepts, January 1983.

Figure 2.19: AXAF Major Equipment Groupings.

SUBSYSTEMS GROUP:

Electrical Power System Module

Communication and Data Handling Module

Attitude Control System Module

Reaction Wheel Assemblies and Electronics

High Gain Antennas

Solar Arrays

AFT GROUP:

X-Ray Instruments

Detectors

Electronics

Gas Supplies

Carousel Drive

Assembly

Three types of support subsystems are currently under consideration for AXAF (Figure 2.20): the Space Telescope Support Systems Module (SSM), the Multimission Modular Spacecraft (MMS), and the HEAO Spacecraft Equipment Module (SEM). Studies have determined that each of these spacecraft could be modified to meet AXAF support requirements. Final determination will be made on the basis of spacecraft availability, cost, and program constraints.

Equipment interfaces and repair operations for AXAF are very similar to those encountered in servicing ST (section 2.3.2.1). The later launch date of AXAF, however, will allow the development of more sophisticated and "operator friendly" supervisory control than will be possible for early ST servicing.

One area in which AXAF differs from ST is that several AXAF instruments

TYPICAL SPACECRAFT CONFIGURATIONS

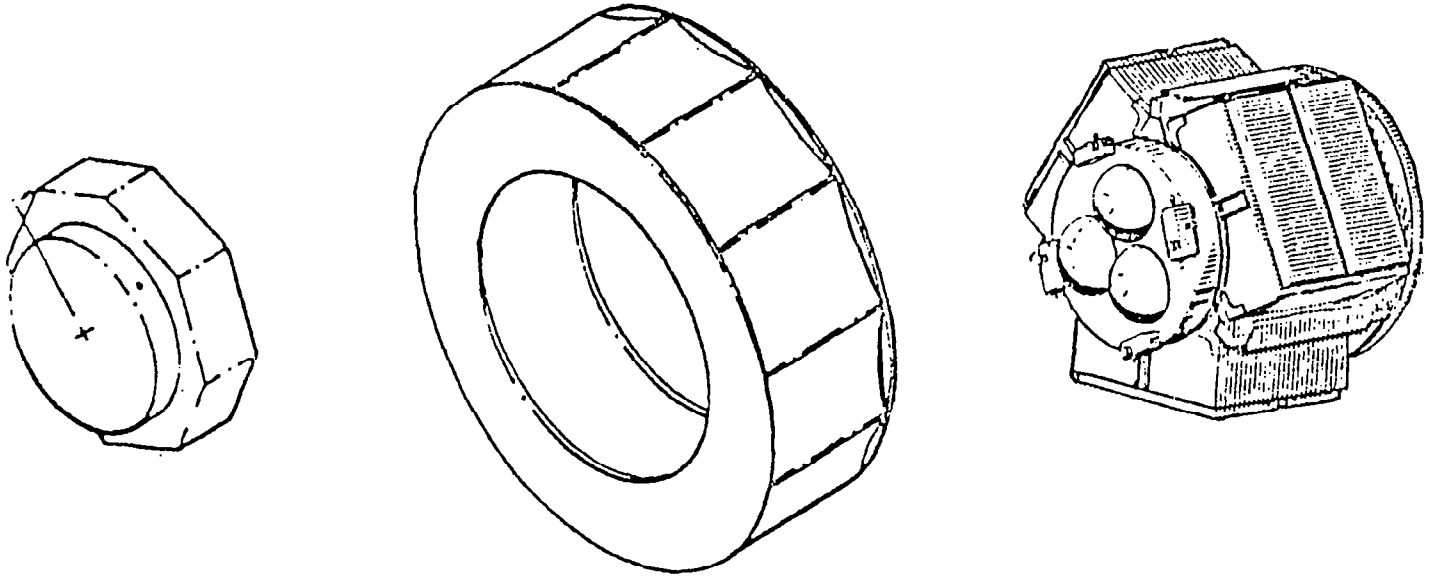

SEM

HEAO–SPACECRAFT
EQUIPMENT MODULE

SSM

SPACE TELESCOPE
SUPPORT SYSTEMS MODULE

MMS

MULTIMISSION MODULAR
SPACECRAFT

From NASA MSFC, AXAF Reference Design Concepts, January 1983.

Figure 2.20: Spacecraft Support Subsystems.

require resupply of consumables. These include:

- The High Resolution Dispersive Spectrometer (Focal Plane Crystal Spectrometer) which requires argon/xenon gas
- The Low Resolution Dispersive Spectrometer (Imaging Proportional Counter) which requires xenon/methane gas
- The Low Resolution Spectrometer (Solid State Spectrometer) which requires ammonia/methane cryogen

Methods of accomplishing consumable resupply are discussed in section 2.4.3.

2.3.2.2 AXAF ORUs

Orbital Replacement Unit (ORU) selection has not yet occurred for AXAF, but studies have been performed to identify candidate maintenance items. Plans call for any AXAF configuration to allow access to several components which are critical to the mission, prone to failure, or easy to maintain. These include:

- Focal Plane Instruments
- Non-Focal Plane Instruments
- Subsystem Elements
- Solar Arrays
- Antennas
- Aperture Door Drive Motor and Mechanisms
- Carousel Drive Motor and Mechanisms

AXAF ORUs will span a wide range of mass and volume. For example, the Low Resolution Spectrometer (137 cm (54 in) diameter and 114 cm (45 in) long), whose resolution is enhanced by increased size, occupies a large volume. The gyro assembly, on the other hand, is a physically small replaceable unit. Masses of focal plane instruments range from 39 kg (86 lbf) to 174 kg (384 lbf), non-focal plane instruments have masses 73 kg (160 lbf) or less, equipment near the High Resolution Mirror Assembly have masses 55 kg (121 lbf)

or less, and the subsystems modules have masses in the 106 kg (233 lbf) to 265 kg (585 lbf) range.

Seven workstations are anticipated for EVA access to these instruments. These include:

1) Focal Plane Instrument Workstation (the AXAF carousel is used to allow all the focal plane instruments to be brought to this workstation for replacement. The carousel will be operated either by cranking or by power delivered by an umbilical from some external source, such as the Orbiter or the TMS/Servicer)
2) Carousel Drive Workstation
3) Subsystem Workstations (a family of similar workstations from which subystem boxes, arrays, and antennas may be maintained)
4) Aft Non-Focal Plane Instrument Workstation
5) Mid Non-Focal Plane Instrument Workstation
6) Forward Non-Focal Plane Instrument Workstation
7) Aperture Door Workstation

2.3.3 ADVANCED SPACE TELESCOPE SERVICING TASKS

Due to their size, these three missions all require some degree of orbital assembly, with VLST being the least complex, TAT the most complex, and COSMIC somewhere in between. Orbital assembly is a potential telepresence capability which is not required for either ST or AXAF. When assembly operations take longer than the seven day duration of a Shuttle mission, telepresence will become the required method for performing the assembly in the absence of a manned space platform.

2.3.3.1 THE VERY LARGE SPACE TELESCOPE (VLST)

The VLST is a two-mirror telescope which will be assembled using

prefabricated optical components carried into orbit inside a modified Shuttle External Tank (ET). The VLST will be assembled in orbit from components in the Shuttle bay, as well as the ET. The configuration requires revisits for maintenance and refurbishment.

The Shuttle bay is not capable of transporting a preassembled mirror larger than 4-m diameter to orbit. The launch of an 8-m mirror, however, is possible if a shortened hydrogen tank is substituted in the Shuttle ET (Figure 2.21), and the leftover volume is used to carry the telescope's secondary mirror, support structure, and 8-m preassembled primary mirror. Should analysis show that it is not possible to use the ET to carry telescope components, the primary mirror will have to be transported as a folded or disassembled structure inside the Orbiter bay, and will require complex on-orbit assembly and alignment.

In one option being considered for VLST assembly, the Shuttle reaches an orbital altitude of 425 km (Figure 2.22, Step 1) and the ET is vented of all residual propellants. The Shuttle then separates from the ET and docks to a berthing port on the ET interstage (Step 2). The Remote Manipulator System (RMS) will then be used to enter the interstage with a work platform so that astronauts in EVA may disconnect the LOX tank main interstage, forward shroud, and hydrogen tank from the modified interstage section, which contains the VLST components (Step 3). As this task is only performed once, and potentially requires both dexterity and the ability to fit inside small work areas, it is well suited to being done by an astronaut (with RMS assist) rather than a telepresence system unless a system is available which can accomplish this task with little or no modification. Once this interstage has been disassembled from the tanks, it becomes the telescope spacecraft structure. Power and stabilization modules are then removed from the Shuttle bay and mounted externally on the interstage spacecraft structure. Metering rods, also

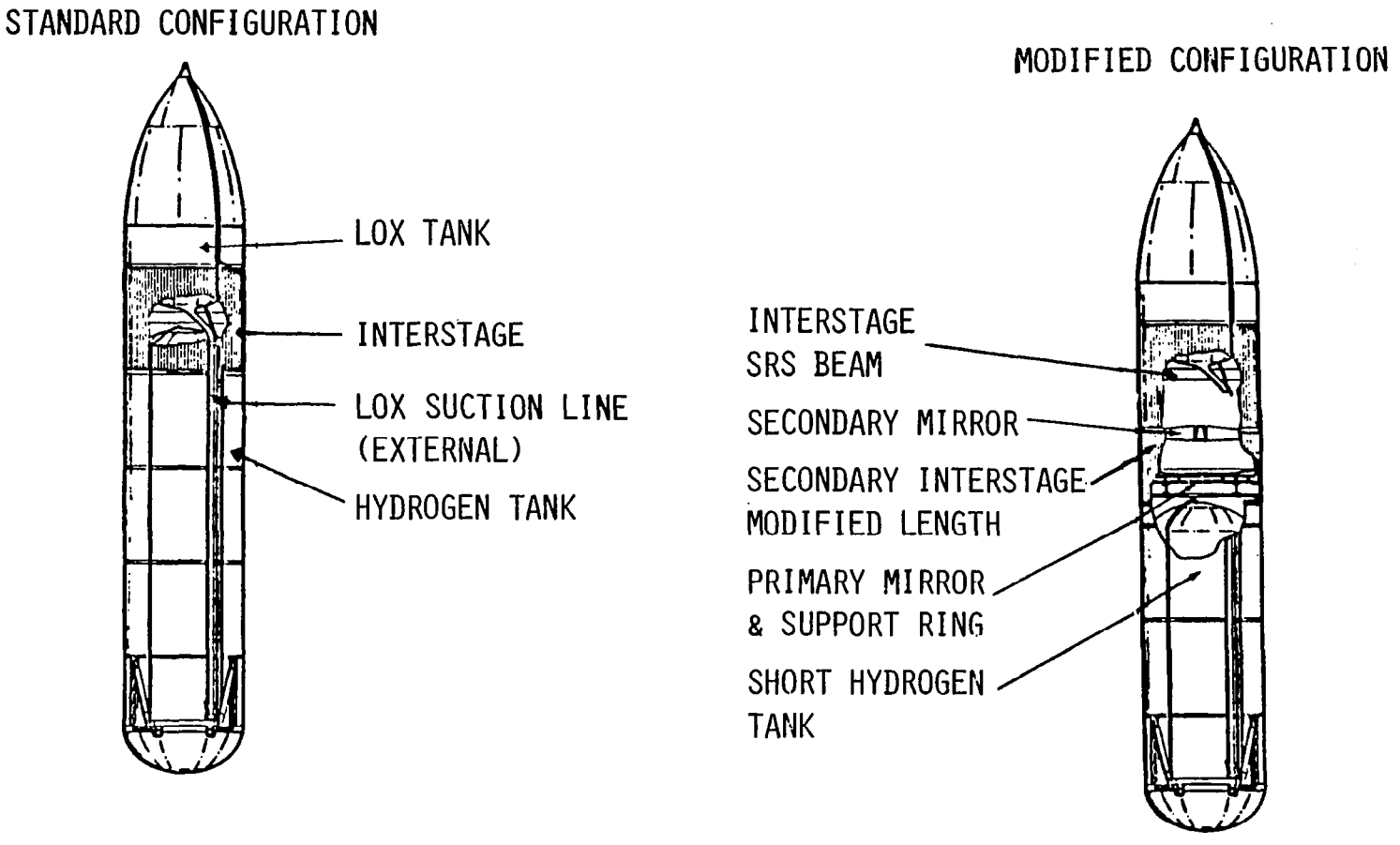

Figure 2.21: Shuttle External Tank (ET)

From Project Concept Summary: Very Large Space Telescope, NASA, October 1980.

From Project Concept Summary: Very Large Space Telescope, NASA, October 1980.

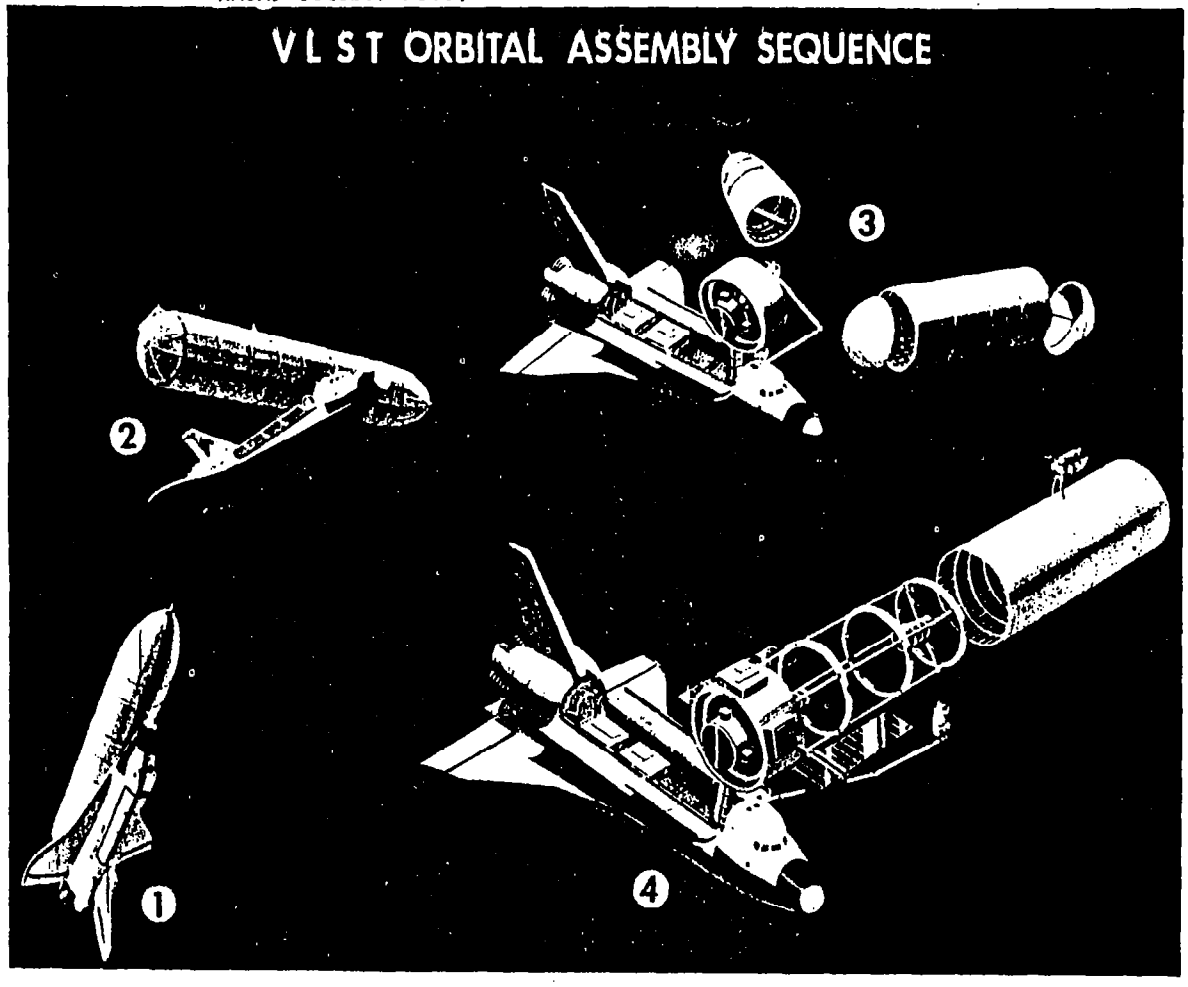

Figure 2.22: VLST Launch and Orbital Assembly.

carried in the Shuttle bay, are installed to mating rod sections mounted to the primary mirror support structure. The secondary mirror spider frame with its mirror is extended out from the launch location in the interstage (Step 4). After securing and reinforcing the secondary mirror spider and metering structure and activating the power modules and stabilization module, the incomplete telescope is left in orbit and the Shuttle returns to Earth.

During the next visit the Space Shuttle will carry into orbit another ET, the hydrogen tank on which has been modified in such a manner that it can be removed from the ET structure, its forward and aft bulkheads can be cut, and the entire cylindrical section can then be installed with the telescope spacecraft structure as a light shield. Further construction and assembly is then conducted to install the conical light baffles at the primary and secondary mirrors and install checkout instrument modules and laser interferometers for telescope alignment, leading up to preparing the telescope for initial checkout.

2.3.3.2 THE COHERENT OPTICAL SYSTEM OF MODULAR IMAGING COLLECTORS (COSMIC)

COSMIC is carried into orbit inside the Shuttle cargo bay in modules which will be assembled in orbit. The initial module will be a 10-meter baseline array capable of performing astronomy observations with greater resolution that the ST, and resolution will be further increased with the addition of other modules carried into orbit on subsequent Shuttle flights. COSMIC will thereby evolve into a two to four element interferometer, and then eventually into a large equivalent aperture imaging complex.

COSMIC major structural elements are illustrated in Figure 2.23. The Beam Combining Telescope (BCT) forms the central element which interfaces with all the other major elements. One BCT can serve four telescope modules (TM). Each TM is a linear array containing at least four small Afocal Interferometric

COSMIC ELEMENTS

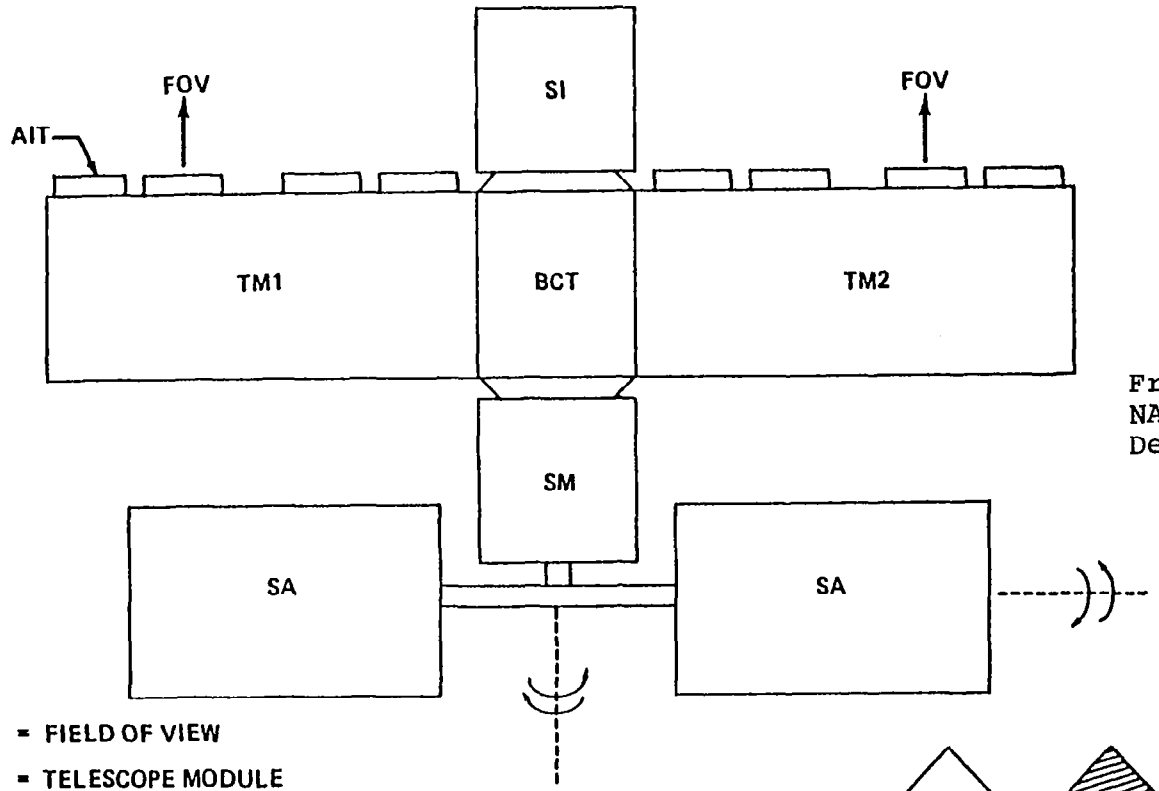

From COSMIC,
NASA MSFC,
December 1981.

FOV = FIELD OF VIEW
TM = TELESCOPE MODULE
SI = SCIENCE INSTRUMENTS
BCT = BEAM COMBINING TELESCOPE
SM = SUBSYSTEMS MODULE
SA = SOLAR ARRAY
AIT = AFOCAL INTERFEROMETRIC TELESCOPE

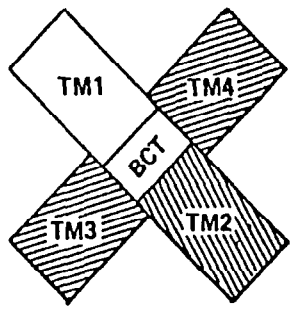

Figure 2.23: COSMIC Major Structural Elements.

Telescopes (AIT's). Four telescope modules form the final cross-shaped COSMIC configuration. The Science Instrument (SI) module and the subsystems module (SM) are on opposite sides of the cross.

In one possible assembly scenario, a first launch transports the SM, SI, BCT, and TM1 into orbit. The second launch brings up the TM2 and additional subsystems. A third and fourth launch bring up TM3 and TM4, respectively. Launches would occur at approximately one-year intervals, allowing checkout and science data gathering in each configuration. An alternative scenario, which would permit construction of a more powerful COSMIC, would transport a Spacecraft Bus and Science Instruments on the first launch, and TM1 through TM4 would be brought into orbit on four subsequent launches.

A Payload Installation and Deployment Aid (PIDA), conceptualized at JSC, could be used to hold and rotate the COSMIC into the positions required for assembly by the RMS (Figure 2.24). Orbital reboosting is baselined to be accomplished by the Teleoperator Maneuvering System (TMS).

2.3.3.3 THE 100-M THINNED-APERTURE TELESCOPE (TAT)

The TAT is a large aperture telescope to be deployed in low Earth orbit using advanced assembly techniques. Several Shuttle flights will provide for assembly of the initial structure, including the assembly of structural components, attachment of the equipment and instrument sections and the addition of the solar arrays. The primary and secondary mirror sections will be added incrementally to provide an early initial capability to obtain high resolution observations of brighter sources. Eventual filling in of sections of the annular mirrors will provide full capability for faint-object detection.

The construction of this system requires the development of extensive orbital construction and assembly techniques similar to those under consideration for large geosynchronous communications platforms. The basic

COSMIC ASSEMBLY SCHEMATIC USING PIDA TYPE DEVICE

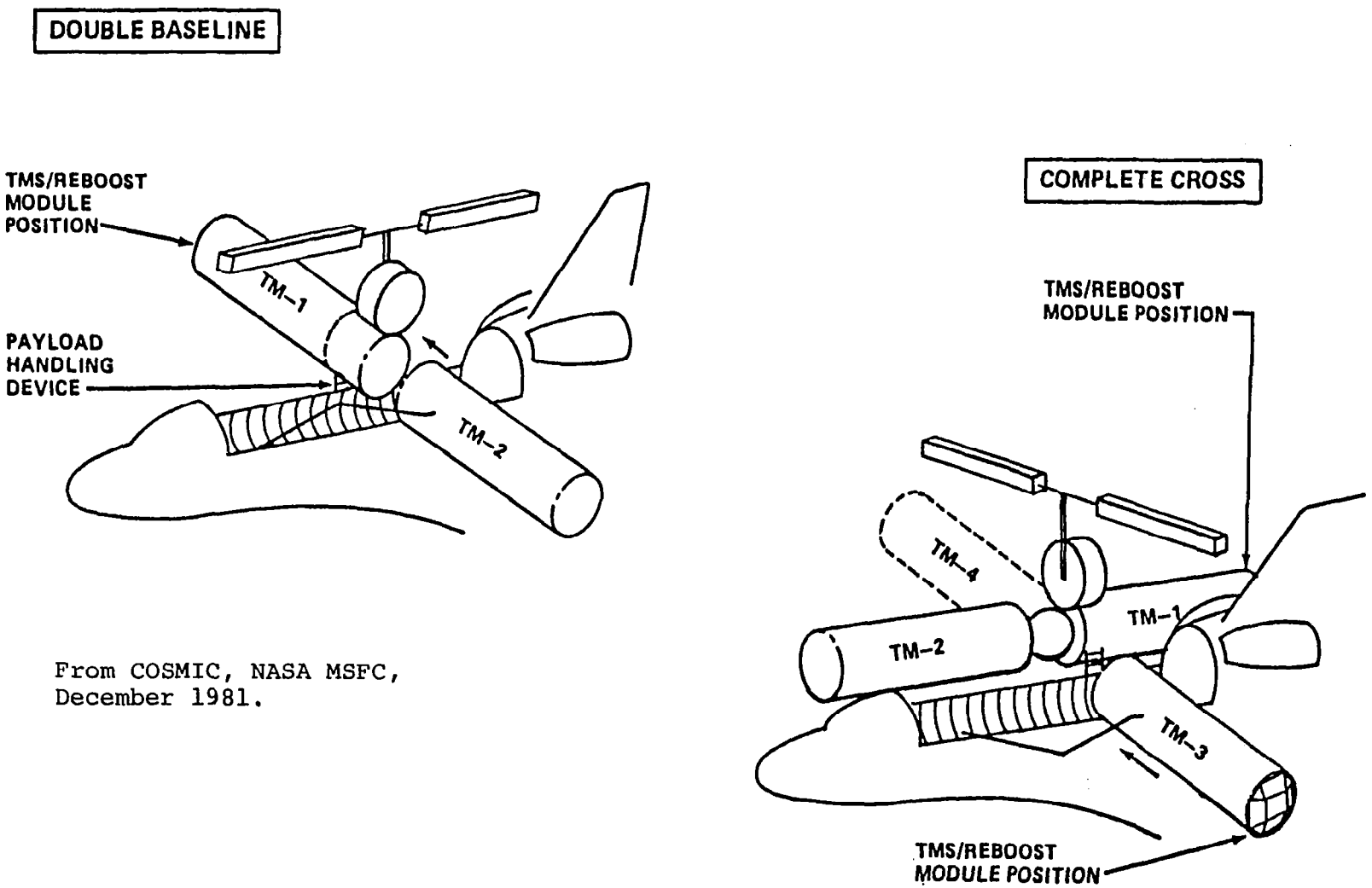

From COSMIC, NASA MSFC, December 1981.

Figure 2.24: COSMIC Assembly Via PIDA Device.

structure can be assembled to nominal tolerance and then instrumented with retroreflectors for improved dimensional stability using laser gage interferometers. The individual array elements are mounted from this structure and articulated by individual actuator systems to form a coherently phased array. Interferometric sensors in the focal plane of the telescope can sense the optical wavefront error. From this information, the phasing errors of the individual elements can be derived and corrected.

2.4 OPERATIONAL ANALYSIS

Some preliminary work has been done to design a remote servicer which would be compatible with several spacecraft, and capable of performing servicing to the same extent as EVA. The Free-Flying Hybrid Teleoperator (Figure 2.25) was conceptualized at M.I.T. to be capable of propelling itself to a repair site, attaching itself to a structure, carrying tools, spare parts, and a variety of sensors, diagnosing and repairing faults, and communicating with human supervisors. The Remote Orbital Servicing System (ROSS) (Figure 2.26) was conceptualized by Martin-Marietta Aerospace to be capable of servicing the Space Telescope, the Solar Maximum Mission, and the Long Duration Exposure Facility, using current state-of-the-art technology. At the time of the study, however, the servicing requirements for ST were incomplete, and therefore insufficient data were available for a complete telepresence analysis.

In order to more completely assess the areas for further research and development, the five space projects were analyzed to determine specific operations which place constraints on a telepresence system. The operational analysis presented in this section looks at the key telepresence operations which place requirements on the capabilities and characteristics of a servicer. There is necessarily some overlap between the areas studied in this section and

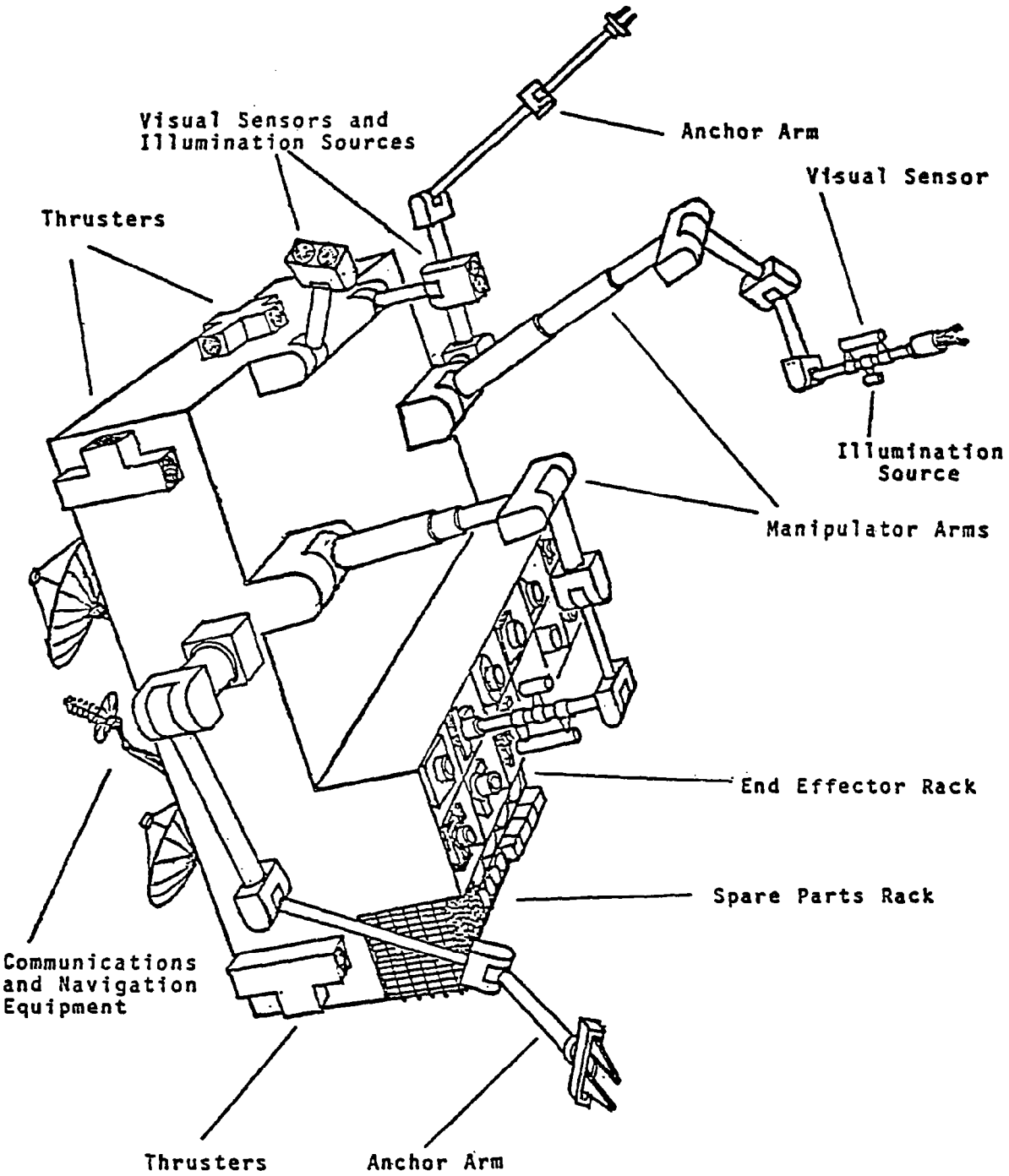

Figure 2.25: M.I.T. Free-Flying Hybrid Teleoperator

SERVICER KIT

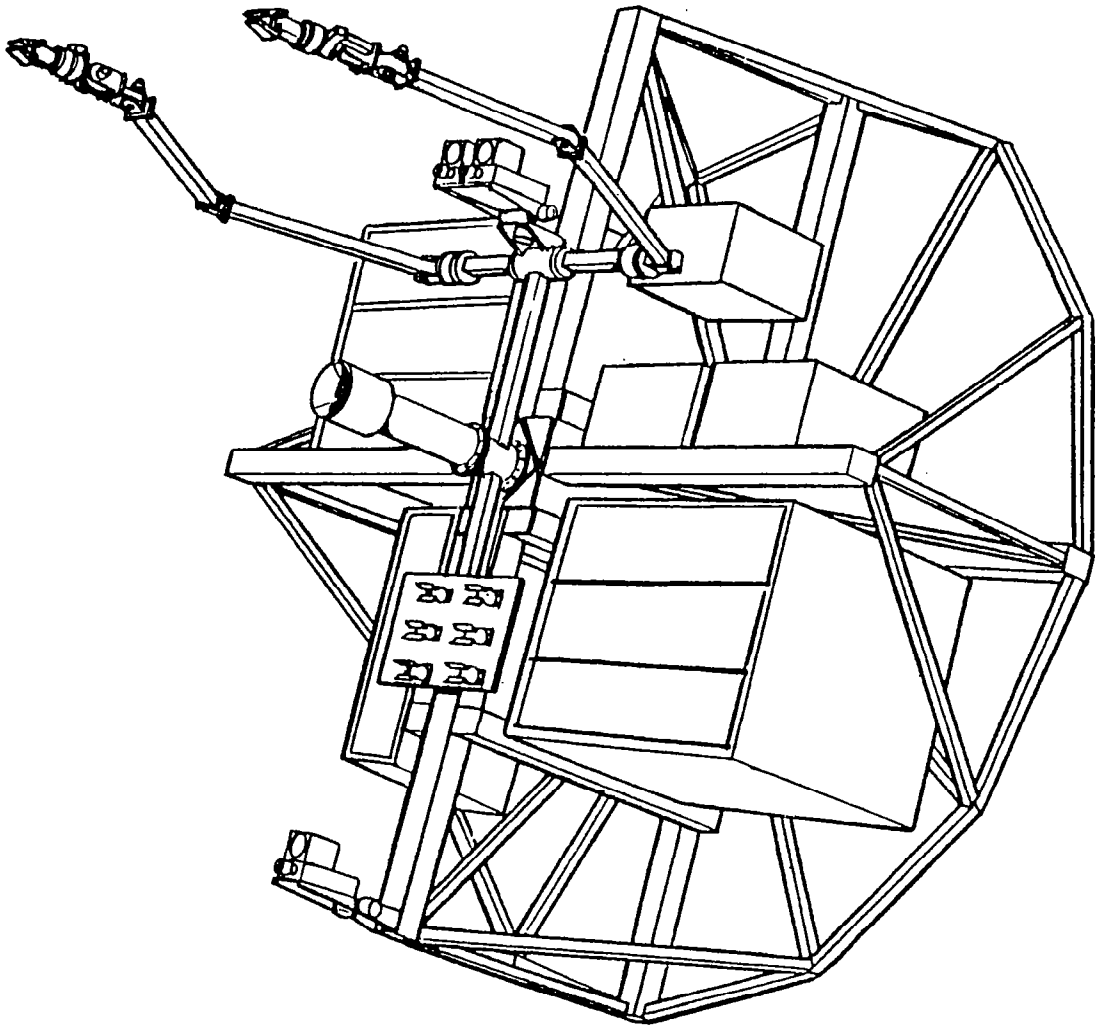

From Martin Marietta, April 1982,
Remote Orbital Servicing System
Study.

Figure 2.26: ROSS Servicer.

in the telepresence technology analysis in section 2.5 (further technology analysis is contained in Volume 1 of this report). For example, section 2.4.2 considers the problems involved in performing grasping operations with a telepresence system, while section 2.5.1 investigates end effector technology, which covers the development of grasping end effectors (as well as other types of end effectors) but does not consider the dynamics of the grasping operation. Results are generally presented only once, even if they pertain to many subsections of sections 2.4 and 2.5. A list of other subsections which have further relevant conclusions is therefore presented at the end of each subsection.

2.4.1 RMS OPERATIONS

Space Telescope telepresence activities currently planned by NASA involving the Shuttle Remote Manipulator System (RMS) fall into two categories: primary RMS operations involving planned manipulation of the ST structure in deployment and retrieval operations, and unscheduled maintenance operations involving contingency options in the event of ST systems malfunction upon deployment or retrieval. The RMS, however, offers limited opportunities to demonstrate full telepresence, and hence plans usually consider the RMS as augmenting the capabilities of an astronaut in EVA, rather than as an alternative to those capabilities.

Primary RMS operations call for the RMS to grapple and extract the ST from the Shuttle cargo bay. The RMS will then position the ST above the Orbiter for a brief ground-to-ST checkout via TDRSS. The RMS can hold ST for extension of appendages (Solar Arrays, Antennas, and the Aperture Door), and release the ST to space.

Upon ST retrieval, the RMS will grapple the free flying ST, and position and berth it to the Flight Support System positioning system. The RMS can also

be used to position the ST in the cargo bay for a planned Earth return.

Unscheduled maintenance operations (Figure 2.27) include regrasping the ST grapple fixture for ST capture in the event of ST malfunction upon release. If any such event occurs, the RMS will position the ST vertically adjacent to the Orbiter cargo bay sills for EVA maintenance. During retrieval operations, the RMS (with EVA assist) can grapple an unretractable appendage and jettison it to space. Indeed, the success of using the RMS as a means of jettisoning the Solar Array in neutral buoyancy simulations suggests that the Solar Array could be replaced on-orbit, even though it was not planned to be orbitally replaceable.

In the event of an unplanned Earth return, the RMS can grapple and jettison the environmental protective enclosure in the Shuttle bay, and then position the ST for Earth return.

An additional use for the RMS in spacecraft servicing is as the base of a portable foot restraint or work platform, to provide crewmember access to the various components of the ST or to assist in the EVA operations necessary to assemble VLST. In neutral buoyancy simulations, a portable foot restraint was modified and attached to a portable grapple fixture held by the RMS. The RMS foot restraint was used to facilitate the transfer of orbital replacement units with little difficulty. The RMS is not presently man-rated due to the safety aspects inherent in attaching a man to the end of a 45 foot robot arm, but Grumman is currently under contract to the Johnson Space Center to build a Cherry Picker (a manned platform mounted at the end of the RMS used to assist EVA).

The RMS, however, has a much greater potential for telepresence usage.

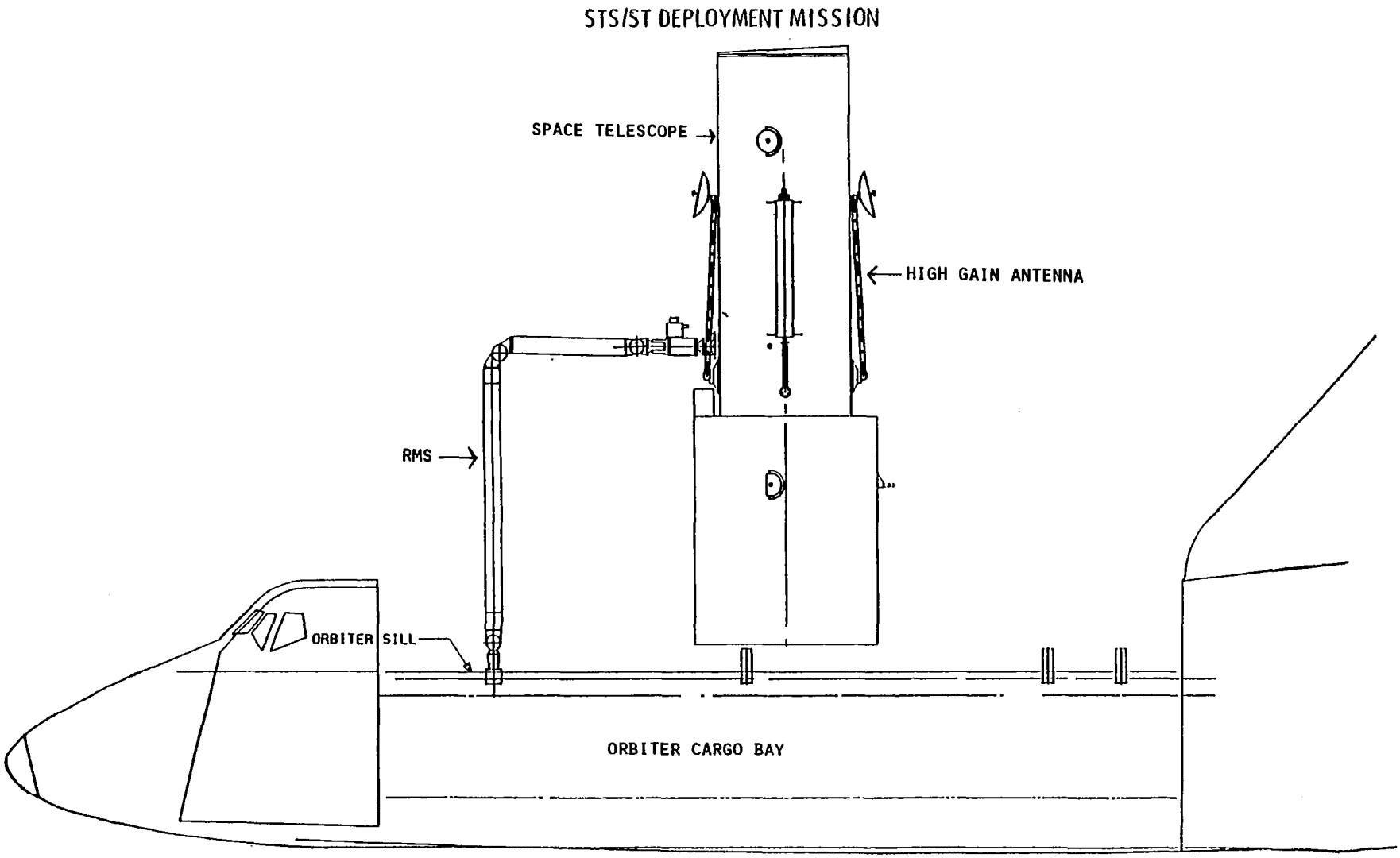

Figure 2.27: Proposed Contingency Maintenance Configuration.

Special purpose end effector modules could be developed to perform:

- Latching and delatching of items such as ST T-bolt latches.
- Torqueing with a powered wrench or screwdriver as is required for ST registration fitting operation.
- Rotary and power tool operations, such as cutting and drilling, as will be required for VLST assembly.
- Painting, as is required for VLST assembly.
- Welding, as may be required for TAT construction.
- Consumable Replenishment, for items such as AXAF scientific instruments.

In some cases these end effector modules will be units which will attach onto the end of the RMS, and in other cases there may be a need for a more complicated module which can eliminate vibration problems, due to RMS flexibility, by latching to the object on which it is working.

SEE ALSO: 2.4.2 GRASPING

2.5.1 END EFFECTORS

2.4.2 GRASPING

In order to perform gross motion of payloads, little end effector fidelity is required. What is needed, however, is an end effector capable of securely and safely grappling almost any object. The RMS currently is only capable of manipulating payloads with a standard grapple fixture. An end effector for grasping should be able to grapple to structural elements, rigid booms, and EVA handrails. Some effort must be given to insuring that the transported object remains under control without allowing structural failure to be induced by the grasp of the end effector. Research is needed to determine actuation geometries which will perform reliable and controllable grasping action on a variety of different types of attach points. This research could be performed

in a laboratory at first, but would eventually be done in a facility capable of including contact dynamics, such as an air-bearing floor or moving base simulation facility.

SEE ALSO: 2.4.1 RMS OPERATIONS
2.5.1 END EFFECTORS

2.4.3 CONSUMABLE RESUPPLY

Consumable resupply can be handled in several ways: tank changeout, replenishment via an umbilical, or replacement of the entire instrument with its gas supply. It is not yet clear which of these options will be chosen for AXAF resupply operations. Tank changeout would be easiest, but in many of the designs being considered for the instruments, the consumables are integral with the entire scientific instrument, and hence cannot be modularly replaced. Alternatively, consumable replenishment requires the development of a new umbilical technology to accomplish fluid transfer in space. Some work has been done in the area of space umbilical technology, and an umbilical system for fluid transfer operations (non-cryogenic) is scheduled to be tested on STS 17. The final alternative, which requires the complete changeout of the entire instrument, necessitates the replacement of a functioning system just to refuel it.

It is not anticipated that refueling operations or gas supply replenishment will require special end-effector dexterity. If refueling is accomplished by tank changeout or by instrument exchange, then the hardware will be similar to that used for any other non-refueling module exchange. If an umbilical is used for refueling, it will probably require similar dexterity for operation as the wing nut electrical connectors used on ST.

SEE ALSO: 2.5.8 STOWAGE RACKS

2.4.4 ASSEMBLY

Locking joints which require low dexterity to operate should be used to join and attach components, rather than complex joint interfaces requiring high end effector dexterity. Even if the assembly operations are accomplished by pressure suited astronauts (EVA), such a joint will be necessary as current suit gloves provide little dexterity and tactile feedback to the astronaut. An example of a low dexterity locking joint is the MIT Structural Connector (Figure 2.28) developed at MIT for use in assembling space structures. A teleoperator system capable of assembling structures using the joints is currently under construction at MIT. This Beam Assembly Teleoperator (BAT) (Figure 2.29) is a medium dexterity system which will be capable of assembling in neutral bouyancy the same structures used by the MIT Space Systems Lab for EVA assembly experiments.

Precision positioning and alignment of some spacecraft components are required for VLST, COSMIC, and TAT assembly. As alignment to optical tolerances (1-2 microns) is required, telepresence is not capable of directly positioning the modules in alignment. Instead, a telepresence system could roughly position and attach the component or module, and then possibly provide some additional fine position adjustment by operating a knob, lever, or some other device provided for fine alignment of the relative positions of the two objects being attached. This includes correction of small errors in distance (path length) and orientation (tip/tilt).

When very fine alignment is necessary, the alignment and alignment maintenance should be accomplished by using an active automatic alignment system. Indeed, it is anticipated that all dimensional tolerances for the TAT will be actively maintained, due to the structure's size and flexibility. In addition, an active control system is necessary to compensate for misalignments caused by thermal expansion of the structure.

M.I.T. CONNECTOR DESIGN

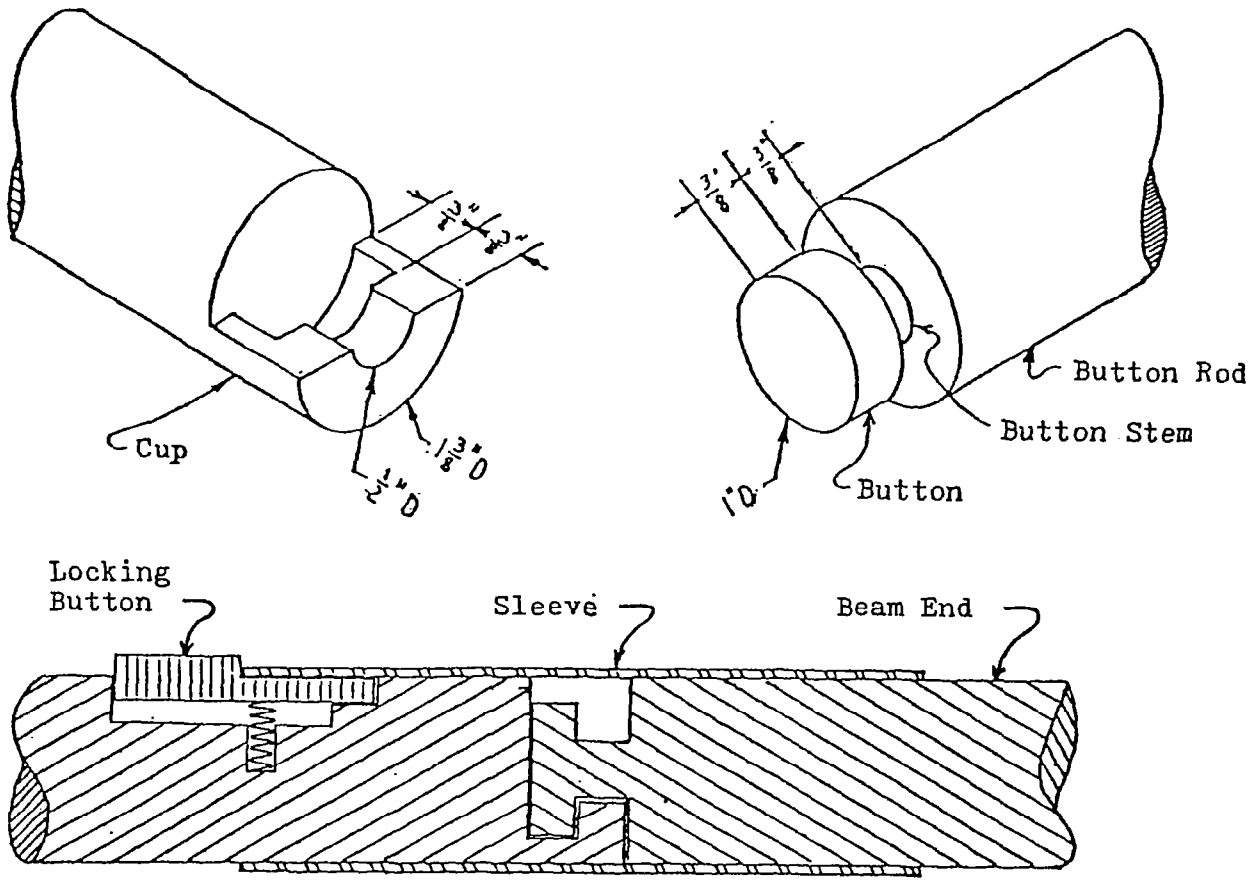

Figure 2.28: M.I.T. Connector Design.

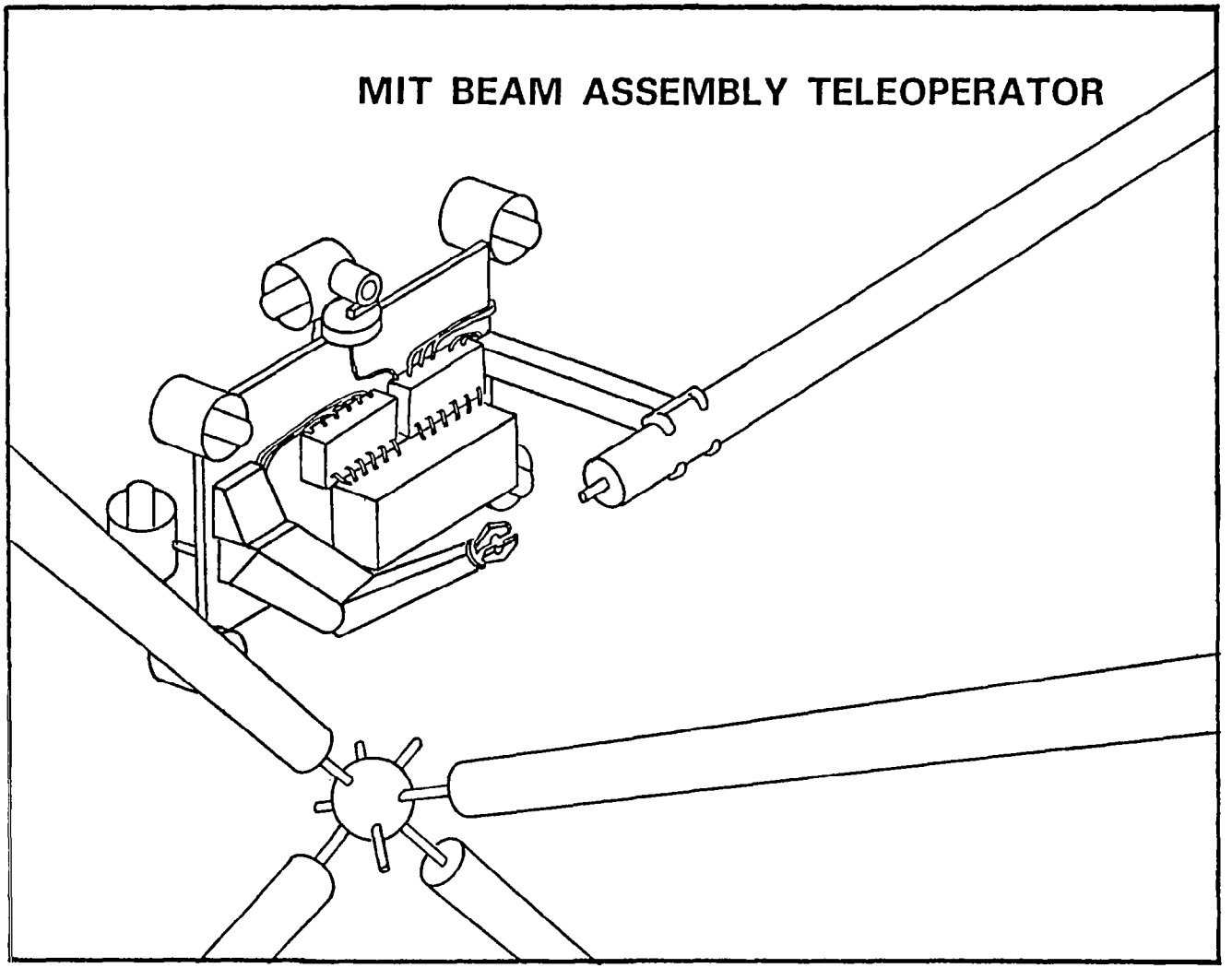

Figure 2.29: M.I.T. Beam Assembly Teleoperator (BAT).

In order to perform maneuvers during assembly, a low thrust propulsion system will be necessary for the telepresence system. A possible candidate for propulsive needs would be a modification of the Manned Maneuvering Unit (MMU), used by astronauts in EVA for maneuvering in space.

Research should be done to determine the optimum thrust levels for teleoperator control. Increased thrust impulse levels decrease the time necessary for maneuvers, but increase fuel expenditures, complicate control (collision avoidance), and increase contamination caused by expended propellants. Alternatively, low impulse thrust levels require less fuel and make collision avoidance easier, but require more time to achieve transfer. Additionally, low impulse thrust levels are necessary for performing fine (small distance) maneuvers.

When a free flying teleoperator is attaching a component to a structure to which the teleoperator is not docked, the center of mass of the teleoperator must remain stationary (provided no thrust is exerted) while the manipulator is being moved. This implies that, if the mass of the object being manipulated is large, a commanded manipulator motion will not necessarily bring the object to the anticipated position in relation to the structure on which the object is to be attached. In Figure 2.30, Step 1, a servicing manipulator is attempting to place a payload (black box) at the aim point on a structure. For purposes of illustration, the payload has a mass equal to that of the servicer, and their center of mass (CM) is shown by a cross. At Step 2, the servicer moves the payload to a position directly "in front" of the servicer (on the reference axes), but as the system's center of mass must remain stationary, the body of the servicer also moves, so that the point "in front" of the servicer is no longer the point to which the operator is aiming. Additionally, as angular momentum must be conserved throughout the motion, the servicer rotates about the point at which it is attached to the manipulator. In Step 3, the servicer

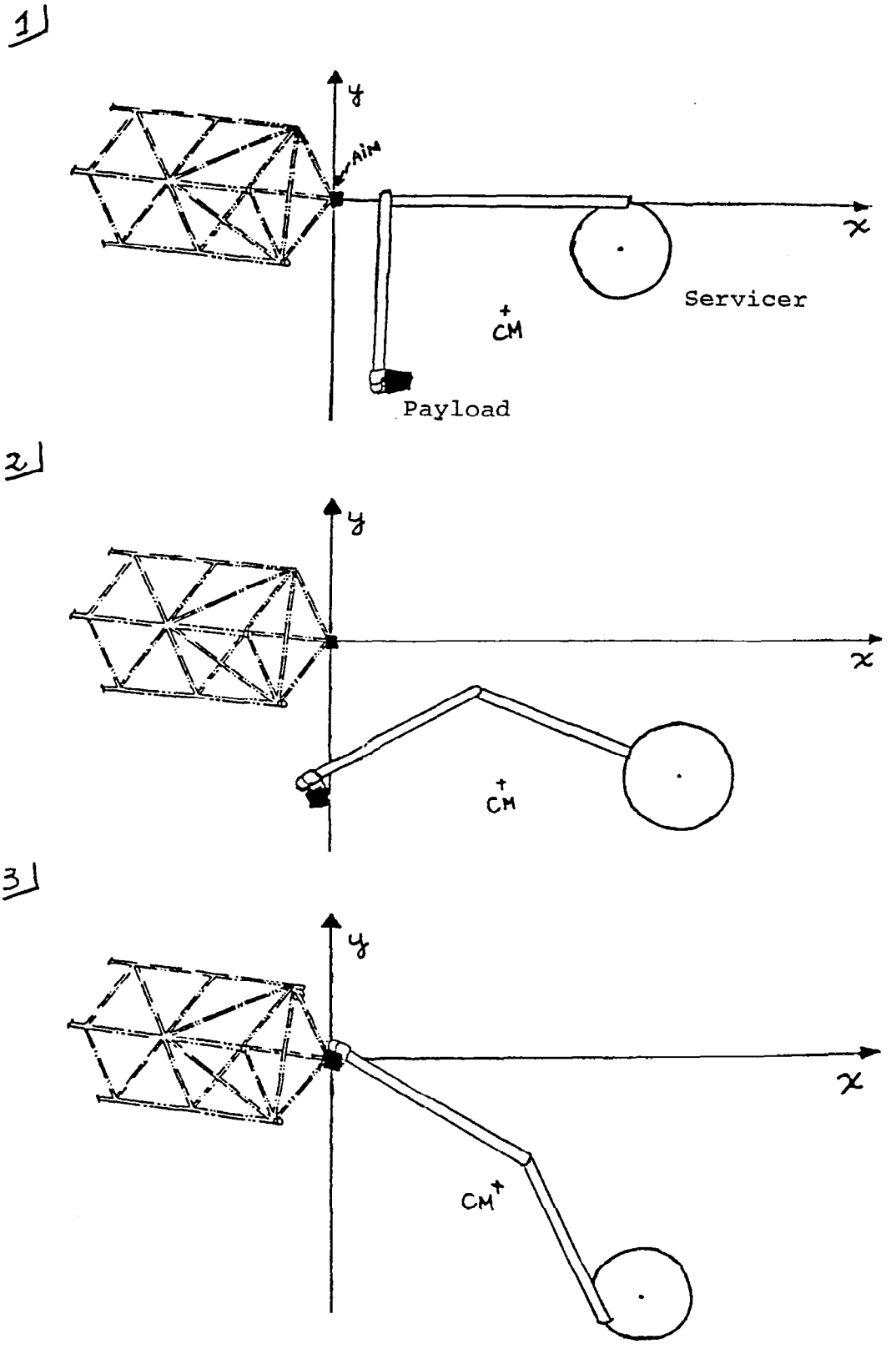

Figure 2.30: Free Flying Manipulation

makes an additional motion to reach the aim point. In practice, the mass of the payload may be much less than the servicer, so this effect will be less pronounced, but still noticable.

In some cases, it is possible to compensate for this effect by modeling the inertias of the system, and including appropriate compensation into the computer control of the manipulator motion. A second possible solution is to provide enough thrust to the servicer so as to compensate for the inertia effect. A third approach would be to properly orient the manipulator, and then slowly thrust the entire teleoperator, as a rigid body, into place. Lastly, no active compensation may be necessary, as it may be possible for the human controller to learn to automatically compensate for this effect. This problem is currently under preliminary investigation at the MIT Space Systems Lab, but further development and testing of the control software will be necessary before implementation.

For the translation and installation of fragile mirror elements, as will be required for TAT construction, special problems are encountered. The telepresence system must be able to attach to the rear (nonreflective) side of the mirror and maneuver it into place in the telescope structure. Thrusters must use a propellant (cold gas) that will not degrade the mirror surface, and docking velocities must be low enough so that the mirrors are not damaged. The mirror must be mated to the structure in such a way that it is possible to fine adjust the mirror's position and orientation.

SEE ALSO: 2.4.6 RENDEZVOUS

2.4.5 ORBITAL TRANSFER

Full implementation of telepresence will involve remote operation for all ST and AXAF on-orbit maintenance functions. Such operations could take place in the vicinity of the Shuttle, or by delivery of a servicer to the spacecraft

via a vehicle such as the Teleoperator Maneuvering System (TMS). Near-Orbiter operations require that the Shuttle rendezvous with the spacecraft, or that the spacecraft be brought to the Orbiter's vicinity. With telepresence, Shuttle personnel are freed to perform other tasks, while being available on a contingency basis.

Alternatively, TMS delivery of the servicer to the spacecraft would not require a Shuttle rendezvous. If the servicer and/or the TMS are ground based, they must be transported into orbit by the Shuttle, and then make orbital transfers to and from the spacecraft which is to be serviced. The TMS and servicer could also be stationed in Low Earth Orbit (LEO), permitting quicker, less complicated, and more economical servicing not only to the Space Telescope and AXAF, but also to any future spacecraft designed for orbital servicing. Standardized replacement parts between satellites would be highly desirable in order to reduce the number of mechanical servicing interfaces. In addition, commonality in replacement items would reduce the number of different parts that have to be carried by the TMS and servicer. This would allow the TMS and servicer to remain on-orbit for a greater length of time. Substantial economic savings would be realized by not having to cycle the TMS and servicer through ground launch after each operation.

As a third alternative, the TMS and servicer could be based at a space platform, which would serve as a repository for all satellite replacement items. After each mission, the servicer would be replenished from stores (of both parts and fuel) aboard the space platform. This would allow greater variability in spacecraft parts and servicing applications, while still eliminating launch and ground operations.

2.4.5.1 ST ORBITAL TRANSFER

Boosting and retrieving ST to a higher orbit than is possible via Shuttle

delivery by direct orbital insertion is highly desirable. Studies by Vought Corporation have indicated the feasibility of using the TMS to accomplish this task. Although the ST was not designed for placement and retrieval by the TMS, analyses have shown that the TMS, with a special front-end adapter, requiring no change to ST, could be used to retrieve the ST for servicing at the Orbiter standard mission altitude of 296 km (160 NM) (Figure 2.31). After servicing, the TMS can redeploy the ST to a 685 km (370 NM) altitude.

The 685 km (370 NM) altitude is preferred for the ST, as it reduces momentum wheel speed required for pointing control. A dedicated, direct insertion by the STS is only capable of achieving a maximum deployment altitude of 593 km (320 NM). Current plans call for combining ST launch with that of the Long Duration Exposure Facility (LDEF) to save in Shuttle costs, but incurring a loss of insertion altitude to 559 km (302 NM).

Five years after initial deployment (1990) ST will have decayed to an altitude of 509 km (275 NM) (Figure 2.32), and current reliability projections indicate that ST is expected to require servicing after this period. In any event, ST has a minimum controllable altitude of 398 km (215 NM) which, without reboosting, it will reach in late 1991. The necessary EVA servicing hardware for ST is expected to be available in mid-1987, and a current initial operation date of January 1988 is expected for the TMS.

A dedicated direct-insertion Orbiter mission to 509 km (275 NM) could achieve a reboost to 563 km (304 NM) after servicing. Alternatively, a retrieval by TMS of ST to the Orbiter at an altitude of 296 km (160 NM) could achieve a subsequent TMS redeployment to 685 km (370 NM). This use of TMS for ST retrieval and servicing could significantly reduce STS transportation charges, and free the Orbiter for other missions.

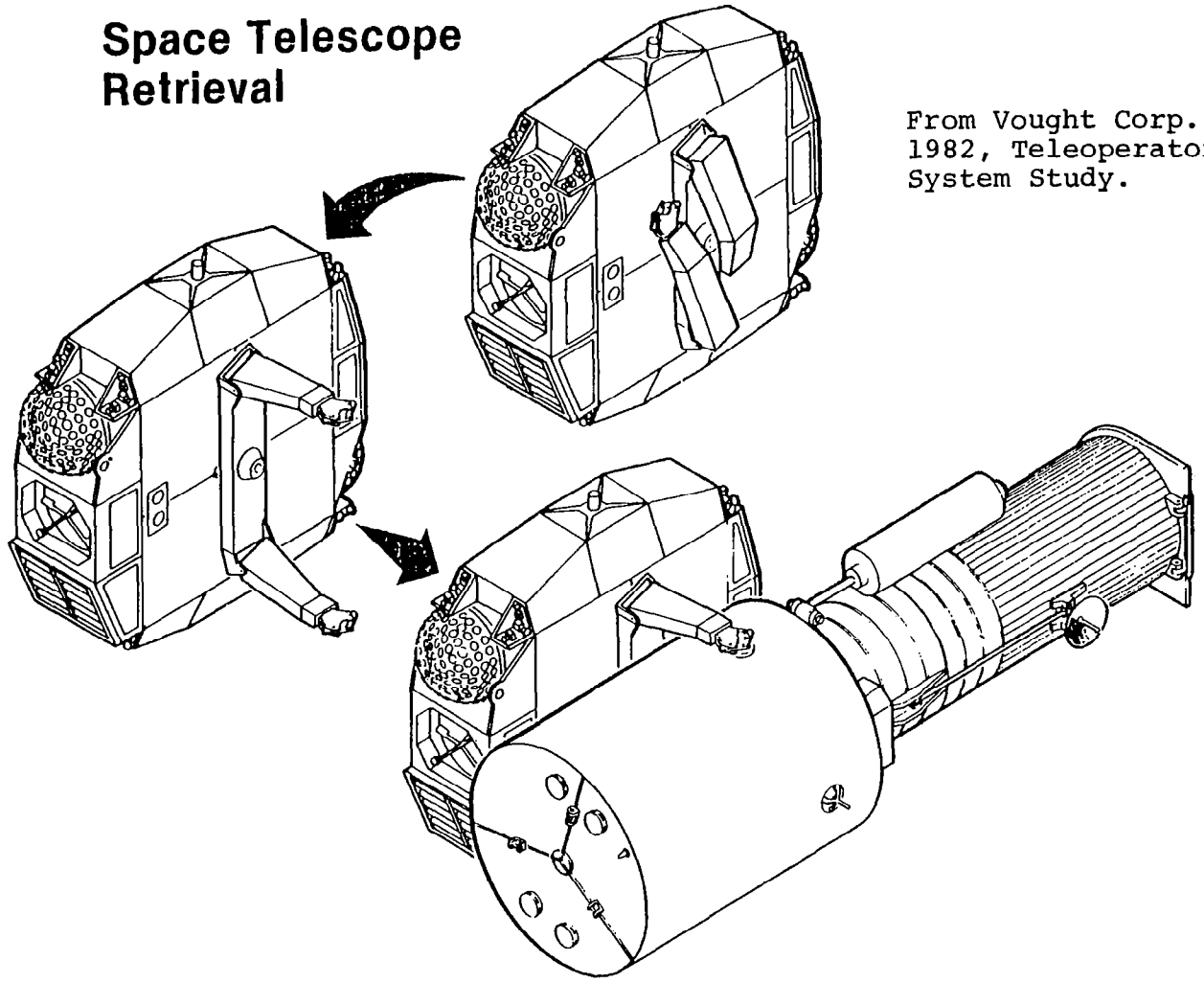

From Vought Corp., December 1982, Teleoperator Maneuvering System Study.

Figure 2.31: Space Telescope Retrieval.

Projected Space Telescope (ST) Decay History — 2σ Nominal

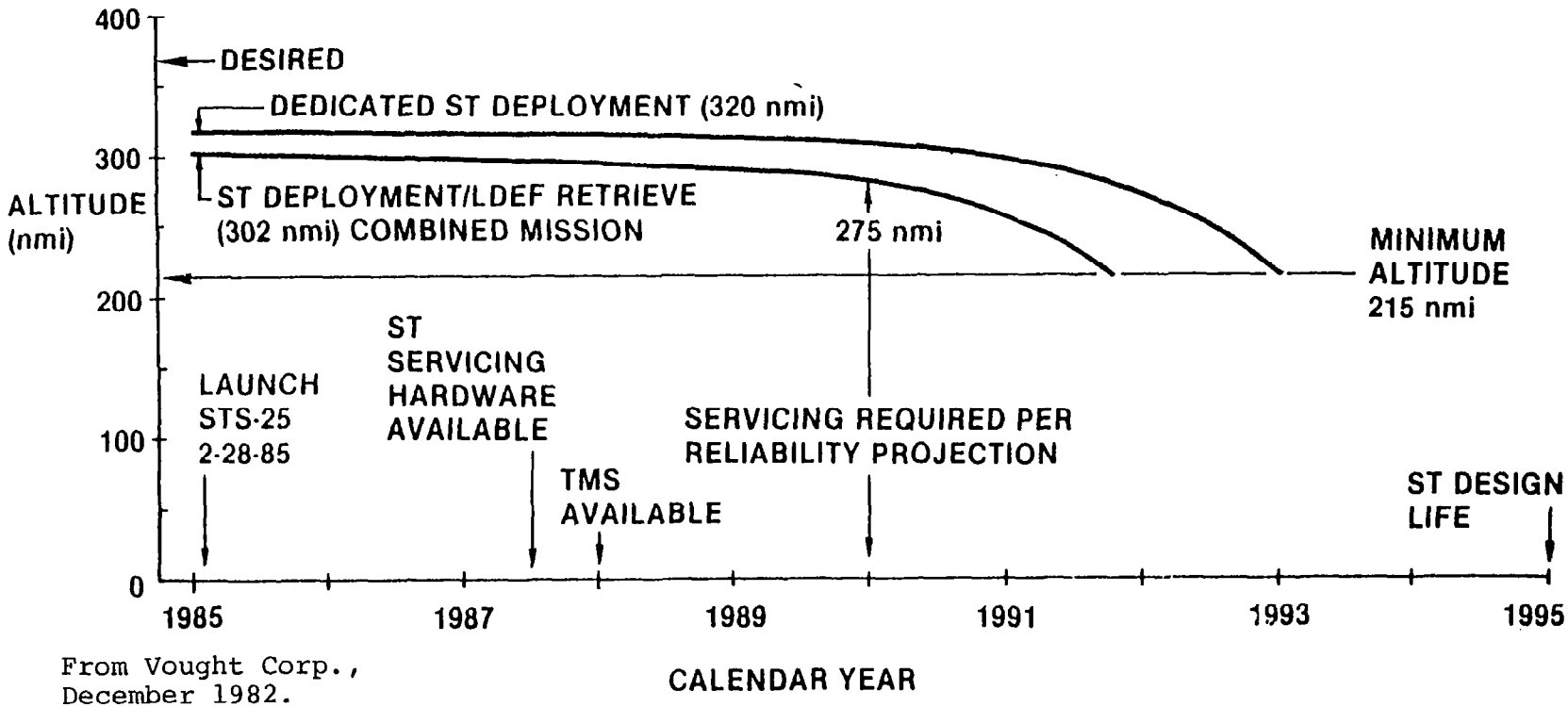

From Vought Corp., December 1982.

Figure 2.32: Teleoperator Maneuvering System Study.

2.4.5.2 AXAF ORBITAL TRANSFER

AXAF, like ST, will require periodic reboosting to higher altitudes. AXAF should take 3 years to decay from an initial insertion altitude of 593 km (320 NM) to a minimum controllable altitude, which may be in the 398 km (215 NM) to 380 km (205 NM) range. This contrasts with the 7 years required by ST, and is due to the lower mass of AXAF with approximately the same external area, producing a lower ballistic coefficient.

As with ST, the TMS is an alternative to dedicated Orbiter missions for performing servicing, reboosting, and retrieval of AXAF (Figure 2.33). After rendezvousing with AXAF at a decayed altitude of 380 km (205 NM), the Shuttle is only capable of reboosting to 482 km (260 NM), which will necessitate subsequent AXAF reboosting at 10-month intervals to keep AXAF above minimum altitude (Figure 2.34). TMS could be used to reboost AXAF to 593 km (320 NM), thus requiring fewer Shuttle launches to support AXAF, and allowing the Orbiter to remain at 296 km (160 NM), with the possibility of cargo-bay sharing. Unlike operations with the ST, the TMS would have sufficient propellant to return AXAF to the Orbiter subsequent to post-servicing redeployment, if required by improper AXAF operation.

Large savings are to be gained through the use of the TMS (Figure 2.35). Vought estimates project a total of $1,104 million in transportation costs (1982 dollars) for AXAF over a fifteen year lifetime, if all flights require dedicated Shuttle launches. In contrast, transportation costs are reduced to $423 million by using a ground-based TMS for all reboosting and retrieval operations. Further savings could be realized by using a space-based TMS (either in Low Earth Orbit or at a space platform). This option is particularly attractive when the TMS is accompanied by a telepresence servicer, as maintenance, refurbishment, and repair functions can also be performed without the necessity of a Shuttle launch. Indeed, the TMS development and

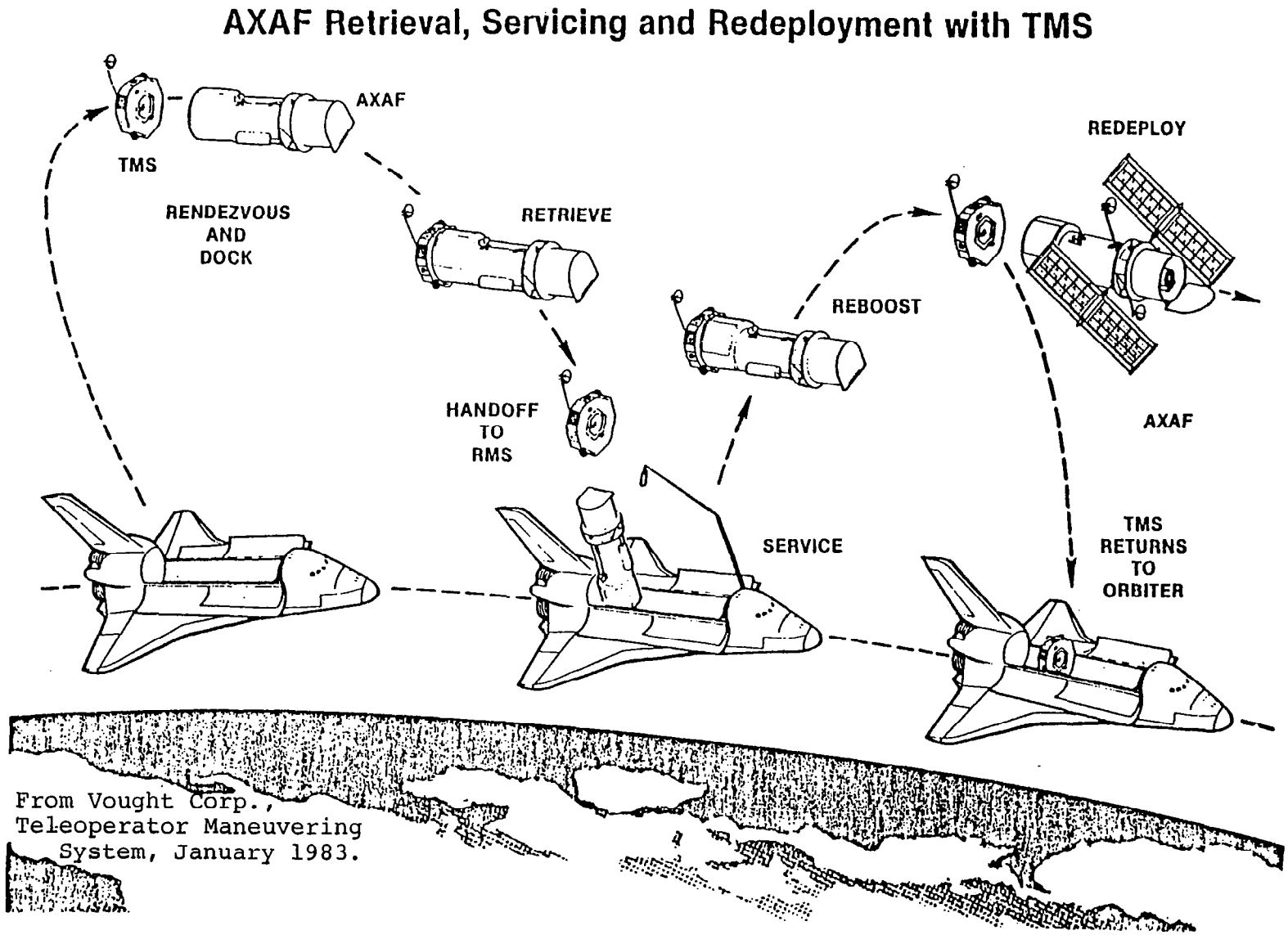

From Vought Corp., Teleoperator Maneuvering System, January 1983.

Figure 2.33: TMS and AXAF Operations.

AXAF Mission Scenarios

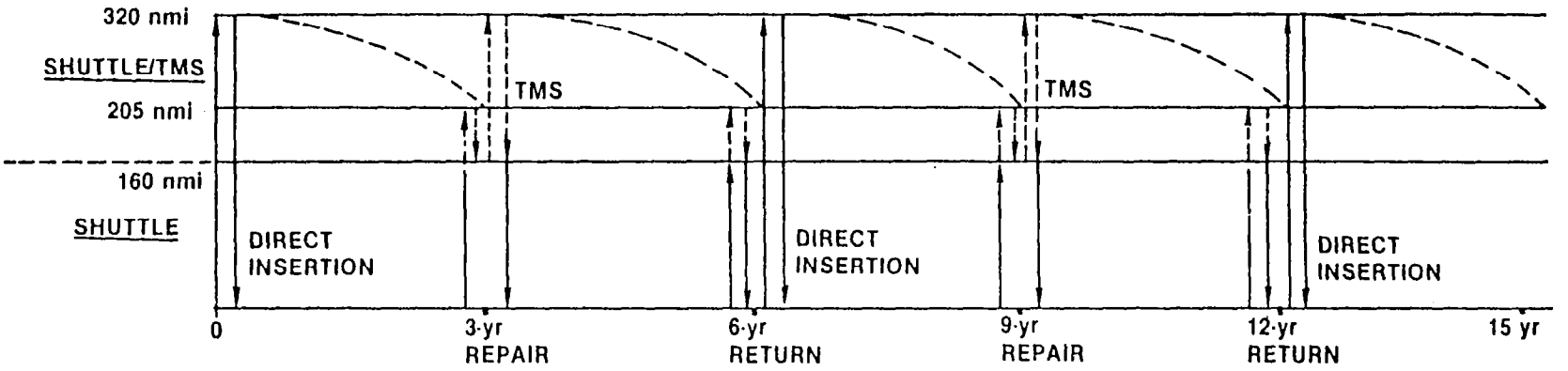

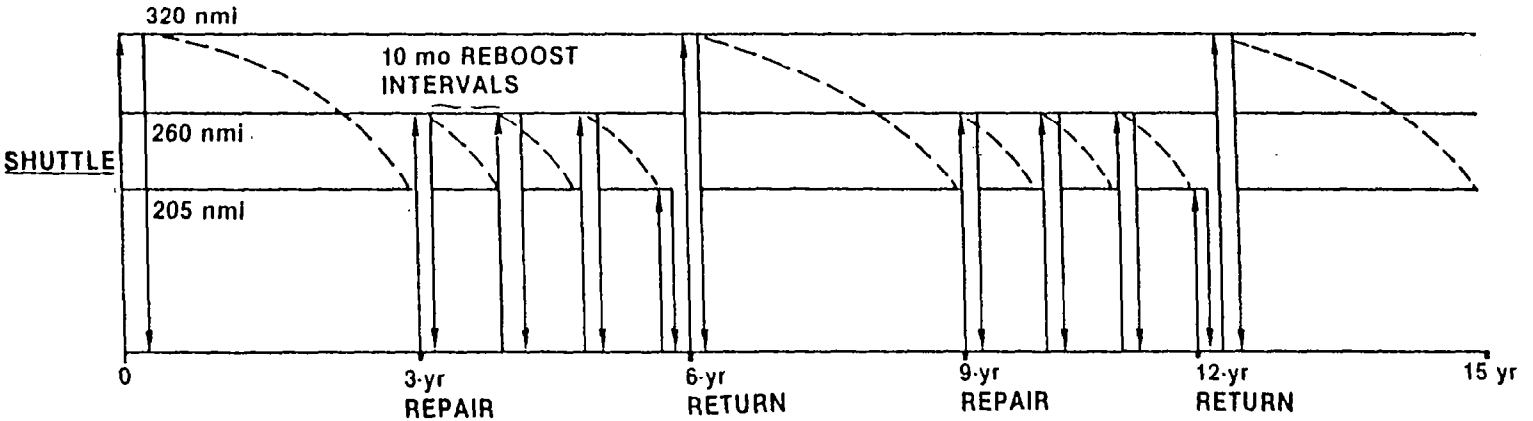

From Vought Corp., Teleoperated Maneuvering System, December 1982.

Figure 2.34: AXAF Mission Scenarios.

Transportation Options for AXAF Mission

($M 1982)

	COST $M 1982
1 ORBITER - ALL FLIGHTS DEDICATED	1,104
2 ORBITER - HALF OF REBOOST SHARED	928
3 ORBITER - HALF SHARED EXCEPT LAUNCH	784
4 ORBITER - ALL SHARED EXCEPT LAUNCH	376
5 GROUND-BASED TMS - EXCEPT LAUNCH/RETRIEVE	654
6 SPACE-BASED TMS - EXCEPT LAUNCH/RETRIEVE	624
7 GROUND-BASED TMS - EXCEPT LAUNCH	423
8 SPACE-BASED TMS - EXCEPT LAUNCH	360

From Vought Corp., Teleoperated Maneuvering System, December 1982.

Figure 2.35: TMS Savings.

recurring costs for several vehicles may be available from the transportation funding saved on even a single NASA observatory mission. Such a servicer would maintain several spacecraft, in addition to AXAF.

Another advantage gained by not using the Orbiter for reboosting is that it is then possible to design AXAF so that it can be reboosted by the TMS without the restowage of appendages (such as the solar arrays), as the redeployment of the solar arrays entails an inherent possibility of cell damage.

2.4.5.3 ADVANCED TELESCOPE ORBITAL TRANSFER

As the size of the three advanced space telescopes prevents their stowage in the Shuttle bay for orbital transfer, either an integral propulsion system or a system such as the TMS will be necessary. The telescopes are much larger than ST or AXAF, and therefore their orbit will decay much faster. For example, if COSMIC is in a 463 km (250 NM) orbit (the minimum operating altitude due to aerodynamic torques), reboosting will be necessary approximately every 35 days. As this frequency may be too great for science data taking requirements, an altitude of 556 km (300 NM) may be used to extend reboost frequency to 90 days.

2.4.6 RENDEZVOUS

To perform teleoperated rendezvous of the TMS/Servicer and a target spacecraft, a ground controller could view a representation of the target vehicle on a screen or heads-up display, and use a set of hand controllers to input translational and rotational commands to the TMS/Servicer. Range and range rate information would be computed from stereo video information from the TMS/Servicer and displayed digitally on the screen. The hand controllers could be similar to those used on a Manned Maneuvering Unit (MMU). Additionally,

target vehicle pointing control can be used in aligning the target vehicle with the TMS/Servicer.

A more advanced system would have a human position a pointer on the video screen and a computer would determine the appropriate thrusting maneuvers. This system takes advantage of human abilities to perform recognition, correlation, manipulation, and coordination, while the functions of calculation and integration are taken over by computer. Such a system could reduce the workload of the ground controller, while also reducing the amount of fuel and time required for a given mission.

Voice and supervisory control of thrusting is also possible. For example, a "STOP" command could fire thrusters to bring the servicer to rest relative to the target vehicle. Eventually, supervisory control could progress to the point where an operator would be able to specify translation commands as "MOVE TO COMPONENT A" without having to worry about such factors as determining proper thrust levels, thrust application times, and coasting times. Further, as translation distances become larger, (or translation times longer), trajectories for orbital maneuvers become different than would be used in an inertial reference frame. Computer control could be used to compensate for this effect. Much of the operational experience and helpful supervisory methods learned from the servicing of satellites such as ST and AXAF will be used as a starting point for the more complex rendezvous operations required in performing the assembly of the advanced space telescopes.

Eventually rendezvous and docking operations can become completely automated. The U.S. Apollo program demonstrated autonomous rendezvous, but docking was always completed with a manual docking by an astronaut. The Soviets demonstrated autonomous rendezvous and docking as early as 1967, and they are developing the technology to an advanced state. Papers published by Soviets have even considered rendezvous with maneuvering, noncooperative and

evasive target vehicles. There is no technical reason why the U.S. cannot demonstrate autonomous rendezvous and docking with present state-of-the-art hardware.

Collision control can be a significant problem, especially in the presence of a time delay. A possible solution deserving investigation is an on-orbit system which could automatically monitor the teleoperator's velocity with respect to other objects in the work area, and command thrust application when a collision is impending at velocities greater than those desired for docking applications.

SEE ALSO: 2.4.4 ASSEMBLY

2.5.3 VISION

2.4.7 DOCKING

Tradeoffs exist between installing dedicated docking fixtures on a target vehicle or providing the servicer with special purpose docking manipulators. While one dedicated docking fixture will always be necessary for any spacecraft which will undergo orbital transfer by the TMS, the general practice of providing several docking fixtures for the TMS on any spacecraft which will require servicing is potentially very costly, and in some cases impossible due to structural or weight constraints. For example, three dedicated docking fixtures are potentially needed for servicing AXAF. Attachment of the TMS to the aft end of AXAF (Figure 2.36) would allow a servicer access to the instrumentation carousel for servicing. Additional TMS/Servicer interfaces for AXAF located at the subsystems modules (Figure 2.37) and at the forward end would allow manipulator access to the additional components requiring servicing.

It should be noted, however, that it is not necessary that the servicer have access to all instruments: for example, assuming 1) providing a forward

AXAF SERVICING
—Instrumentation Modules Exchange—

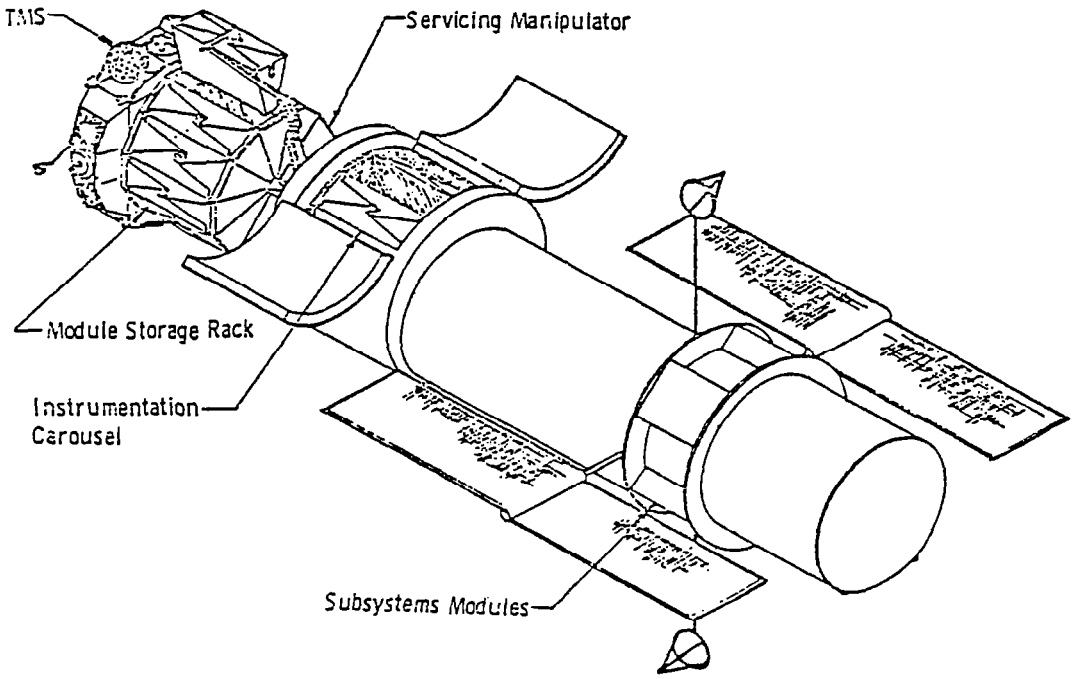

Figure 2.36: Instrumentation Servicing.
From Vought Corp., in AXAF Utilization of STS and Satellite Servicing, NASA GSFC, June 1982.

AXAF SERVICING
--Subsystems Modules Exchange--

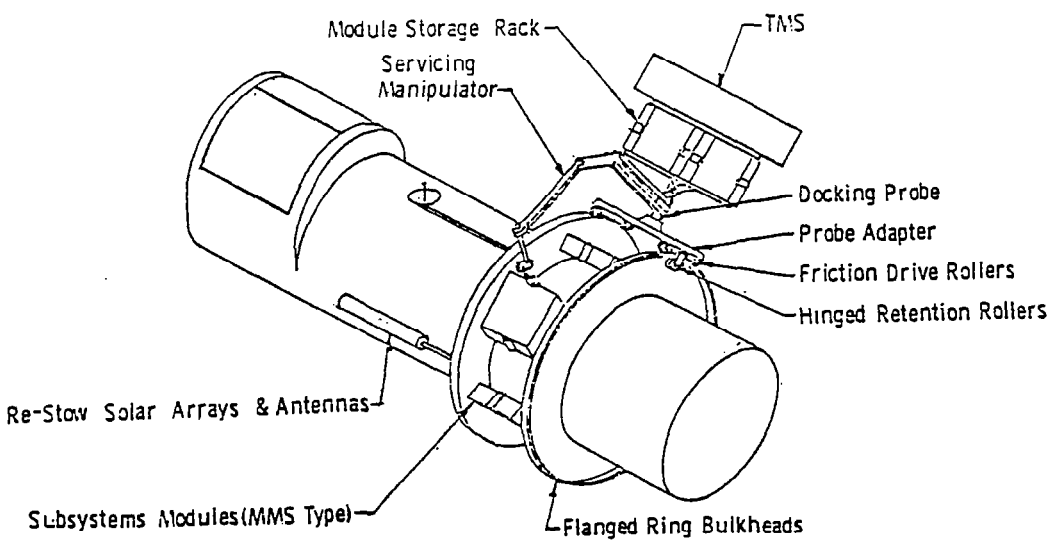

Figure 2.37: Additional Module Servicing.

end anchoring interface is too expensive, 2) the anticipated servicer is not equipped with special purpose docking manipulators for anchoring itself to the forward end via handrails, and 3) forward end instruments are deemed not likely to require servicing, then a possible alternative scenario would be to plan for servicing of AXAF by telepresence, other than contingencies requiring forward end access. The TMS would then be used to bring AXAF to the Shuttle for EVA servicing.

Using special purpose docking manipulators capable of locking in a fixed position is the method of performing docking preferred by this study. The servicer would then be capable of crawling around the spacecraft using handrails and foot restraint sockets provided to support EVA activities (these are shown for ST in Figure 2.38). The system would be much more versatile and anthropomorphic in its ability to position itself like a human, and no special design would be required to allow the spacecraft being serviced to accommodate telepresence.

At least two docking manipulators must be used to allow an adequate hold on the spacecraft, provide stability in servicing, and provide adequate means of moving the servicer around the spacecraft. The docking manipulators can be very simple in construction, as they can potentially be made without the capability to move about on their own; they can be positioned by the more dexterous servicing manipulators, with the only actions they perform being the actual latching on to the spacecraft and locking in place.

Simulation and experiments should determine the optimal means of moving a teleoperator around a structure being worked on. Undocking, translating via thrust application, and then redocking is one method, but this requires much more fuel than having the teleoperator crawl around the structure. Neutral buoyancy tests with humans using maneuvering units, conducted by MIT, have indicated that people tend to use both methods for movement, but testing must

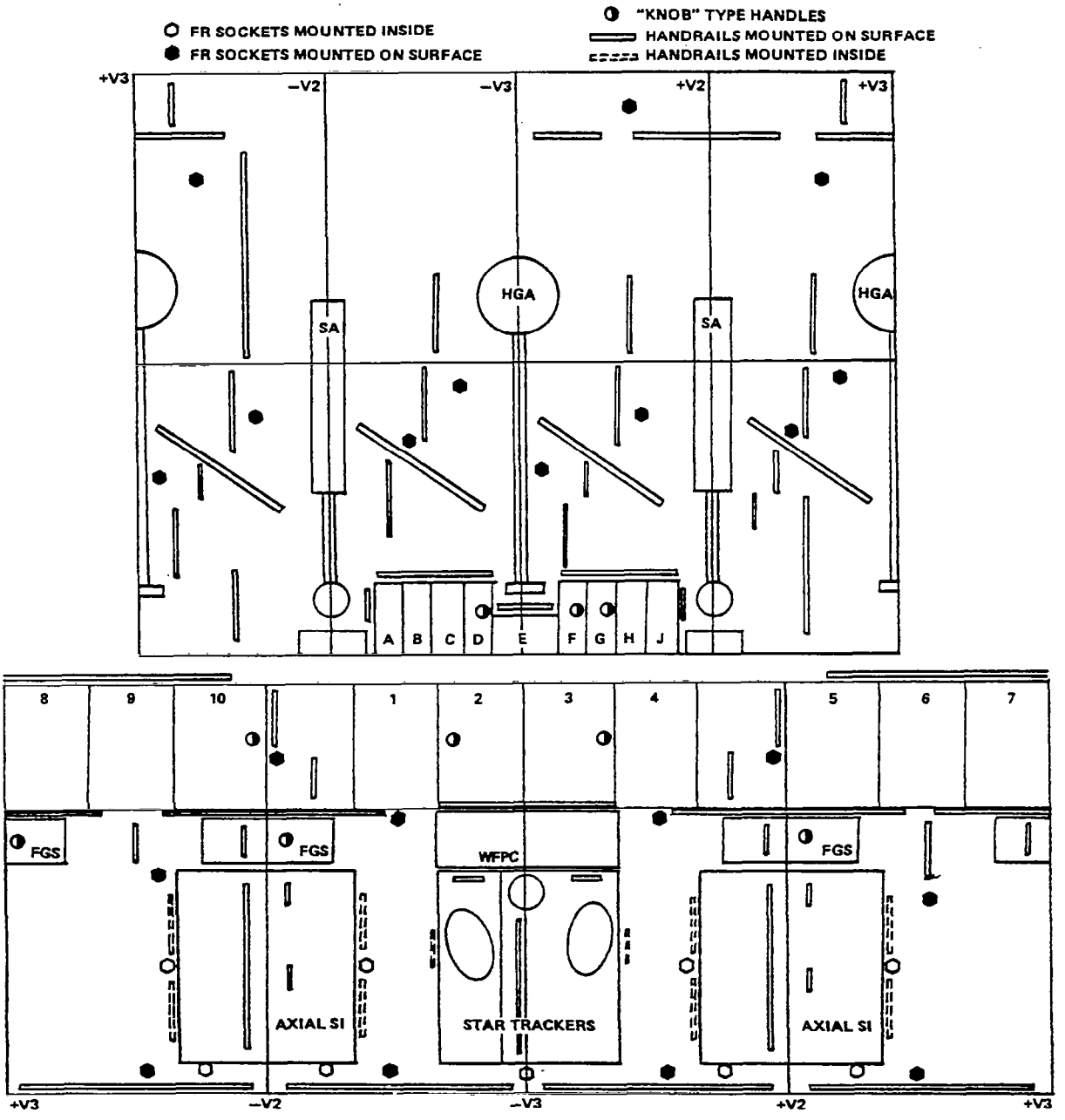

From NASA TM-82485, June 1982.

Figure 2.38: ST FR Sockets and Handrail Locations.

be done to investigate if this will be the case for a teleoperator. If this is the case, then structures must be designed with sufficient handholds or other grappling devices to facilitate easy maneuvering.

2.4.8 MIRROR CLEANING AND RECOATING

In order to perform on-orbit mirror cleaning and recoating, special purpose automatic equipment will be necessary. Mirror cleaning is a complicated operation which probably cannot be accomplished without removing the mirror elements from the telescope. Mirror cleaning will proceed by having a telepresence system remove a mirror element from the telescope and transport it to the mirror cleaning and recoating apparatus. After cleaning, the mirror element is then transported back to the telescope for reinsertion. The telepresence system could also be used to adjust and repair the mirror cleaning and recoating apparatus in the event of malfunction.

2.4.9 REMOTE OBSERVATION OF TELESCOPE SCIENCE DATA

Certain observations from space telescopes will require the observing scientist to verify receipt of proper data, and to make real-time decisions at critical points during an observation. In order to facilitate this capability for the Space Telescope, the Science Institute at John Hopkins University will have the capability to display data in real-time, and will issue command requests to the Operations Control Center. The Institute will provide equipment for visiting scientists to perform analysis of the data obtained by ST.

As an additional service, the capability should exist to relay, in real-time, telescope science data to a scientist not located at the Science Institute. This type of remote telescope operation is currently being experimentally implemented at the Kitt Peak National Observatory. The

scientist would use a standard computer terminal linked to the Science Institute over either a telephone or a satellite link, thereby allowing the astronomer to receive data and direct the telescope by remote control. Such a system would save the costs normally incurred for travel and housing of a visiting scientist, and would allow the scientist to pursue his normal work and lifestyle when not using the telescope. Of course, all commands would still be cleared by the Science Institute (either autonomously or by human supervisors) so that the telescope is not accidentally damaged; this would still occur if the astronomer was located at the Institute. Telephone lines have the limitation of being able to carry only one TV picture every 31 seconds, making it difficult to fine-adjust the telescope. The costlier satellite link, on the other hand, can transmit a dynamicly changing image.

2.5 TECHNOLOGICAL ANALYSIS

The key telepresence component technology areas (hardware and software) which will be required to construct a servicer and ground station are assessed in this section (further technology analysis, including a presentation of the hardware and facilities available, is contained in Volume 1 of this report). There is necessarily some overlap between the areas studied in this section and in the telepresence operational analysis in section 2.4. For example, section 2.4.2 considers the problems involved in performing grasping operations with a telepresence system, while section 2.5.1 investigates end effector technology, which covers the development of grasping end effectors (as well as other types of end effectors) but does not consider the dynamics of the grasping operation. Results are generally presented only once, even if they pertain to many subsections of sections 2.4 and 2.5. A list of other subsections which have further relevant conclusions is therefore presented at the end of each subsection.

2.5.1 END EFFECTORS

The end effector dexterity required to service ST and AXAF is not extreme. This is not surprising, as the suits used by the astronauts to ensure serviceability of ST in neutral buoyancy simulations were quite bulky and inflexible, and hence all hand operations were thereby constrained. Further, equipment interfaces are standardized as much as feasible to minimize tools, access, and training requirements.

Latch operation and other manipulation tasks require low to medium dexterity manipulation, such as ratchet wrench operation, and can usually be performed with one "hand". One or two general purpose grasping end effectors and a powered socket wrench end effector should be developed for module manipulation, latch operation, and torque application.

Special purpose end effectors will be necessary for the servicer and RMS if they are to perform such operations as painting, cutting, and welding.

Based on current knowledge of structural requirements for spacecraft such as ST and AXAF, a catalog should be developed of types of fasteners or actuators which might be used, along with the tools capable of performing the actuation. This effort should focus not only on nominal assembly operations, but also on actuation techniques required for off-nominal assembly or contingency repairs. Such a catalog would be of great use to spacecraft designers who wish to ensure satellite serviceability.

Details of the interchanging of end effectors are described by a series of detailed motions, defined by the design of the system. This type of activity is not conducive to telepresence (the average human has little experience changing his hand), but as the geometry of both the end effector interface and of the tool storage rack are exactly known, end effector exchange is a good candidate as an application of supervisory control. Research should examine

the relative merits of a rotating end effector rack (allowing a single preprogrammed motion to return or remove tools) versus the reduction in mass and increase in complication of a static multi-bin end effector rack, with independent targeting of the manipulator for each exchange operation.

As more advanced functions are required of a telepresence servicer, there will be a need for end effector dexterity to exceed that of a suited astronaut, and approach or possibly even surpass that of the human hand. Such an end effector would allow the remote operator to actuate the manipulator and end effector with motions identical to those normally used to operate an arm and hand. Research is necessary to determine how an anthropomorphic end effector can be designed and built. The human hand is probably the most mechanically intricate part of the body. Reproducing the dexterity of the hand in the same volume will require tendon actuation schemes in advance of the current state of the art, along with sophicticated force actuators on the tendons.

SEE ALSO: 2.4.1 RMS OPERATIONS

2.4.2 GRASPING

2.5.2 SENSORS

Proximity sensors provide valuable information to the operator when grappling, and would be beneficial to a telepresence system. Additionally, contact sensors should be used to ensure the operator that the manipulator has a hold on an object.

While force and tactile feedback to the operator is not necessary for ST and AXAF servicing, it is required that forces and torques exerted by the operator be accurately delivered by the end effector. Closed loop force feedback at the worksite would allow accurate force application. This is discussed more fully in section 2.5.4.

More advanced anthropomorphic systems would require that force/torque and

touch/slip sensors be integrated into the hand. These sensors would provide the information needed to perform terminal orientation and dynamic compliance control with fine manipulator motions. Force/torque sensors are currenly available for certain applications, but touch/slip sensors are currently only in breadboard form, and require further research and development before they will be capable of delivering true tactile feedback.

SEE ALSO: 2.5.3 VISION

2.5.4 CONTROL

2.5.3 VISION

Black and white stereo vision should be provided to the operator, with upgrading to a color capability as it becomes available.

Investigations should be performed of:

- The use of zoom control.
- The uses of supplemental video inputs, such as close-up cameras on the manipulator wrists or on independent appendages, or such as wide-angle cameras for giving the operator an overall view of the worksite for purposes of orientation and task planning.
- Optimal positions for providing lighting.
- Optimal methods of shifting the operator's attention from one video input to another. Possible alternatives are having many video screens (or, for a helmet mounted display, having many different fields of view), having one video screen which shifts cameras upon voice command, or having one video screen which automatically switches cameras depending upon the task being performed ("event-driven"). It is probable that some combination of these schemes will prove optimal.

For some applications, such as spacecraft rendezvous, it may be possible to reduce the bandwidth required for video transmission through the use of data

compression. Cameras on the servicer can be made to view arrays of light emitters or reflectors arranged on the target vehicle to provide signatures unique to that side of the target vehicle. Techniques for extracting only emitter signature data from full video images are available. Only the location of the emitters is then transmitted, and software at the ground station is then used to derive a computer graphic representation of the spacecraft. All the necessary data for a high frame rate video image are thereby transmitted at kilobits per second rates, instead of megabits per second rates.

SEE ALSO: 2.5.5 HUMAN FACTORS

2.5.4 CONTROL

A velocity-force control system which can accurately measure the forces exerted on a hand controller and accurately translate them into actuator response can be used for ST and AXAF servicing. Translational forces, gripping forces, and rotational torques control actuator forces at the worksite, with the result being that when the end effector is free to move, the forces on the hand controller determine end effector velocity, and when the end effector is gripped on an object, the forces determine the forces exerted on the object. Closed loop feedback at the worksite would ensure accurate force application.

Such a control system is mechanically much simpler than one which gives the operator force feedback and is slaved to the operator's arm motion, although control algorithms must be developed to translate operator hand controller commands into manipulator link motions which will produce the desired end effector behavior. The drawback in this system is that manipulator arm motion is not dictated by the operator; only the end effector motion is specified. There is therefore a possibility of collision between the manipulator links and the object being serviced. A possible solution to this problem is predictive displays, which are discussed in section 2.5.6.

Voice recognition would be very valuable for many tasks. For example, once a power ratchet is in position the command "torque to 45 inch-pounds" could be given verbally to initiate torqueing.

The capability to execute supervisory control routines should be provided. In this manner, improvements will cause little impact on telepresence hardware, with major changes being in control station software. As the system is used, the need for supervisory control to make repetitive preprogrammed operations will become evident. Such operations might include the changing of end effectors or the automatic regression of the manipulator from the worksite. A supervisory system could also provide prompts to the operator detailing what must be done at each step of the servicing operation.

SEE ALSO: 2.5.5 HUMAN FACTORS
2.5.6 PREDICTIVE DISPLAYS
2.5.7 MANIPULATORS

2.5.5 HUMAN FACTORS

Helmet mounted displays can be used to slave the camera platform to the head orientation of the operator. Alternatively, when the system is not very anthropomorphic, studies have shown that it is often best to control camera pointing through verbal instructions from the operator performing the servicing to either a second operator in control of camera positioning, or a voice recognition system capable of executing the operators instructions. Aural feedback of proximity data (such a change in tone as a manipulator approaches its target) can provide useful and unencumbering information to the operator. In determining operator effectiveness, the importance of varying time delays (1 to 2 seconds for ground control) that will be encountered in servicing must be examined to find the limitations on performance placed by the delays. Human adaptive responses and rates of learning must also be investigated.

The human controller of a telepresence system can potentially be located on the ground, in the Shuttle, or on a space platform. Each of these options has both advantages and disadvantages:

- If the controller is on the ground, time delays can pose significant operational problems, although predictive displays (section 2.5.6) offer a potential method of reducing the impact of time delays.
- If the controller is in the Shuttle, time delays can be eliminated, but operational time is limited to only when the Shuttle is in orbit and in communications range, dedicated and valuable astronaut time is required for operation, and the control station must be transported into orbit on each Shuttle flight on which it is used.
- If a space platform were operational, basing the control station there would allow operation whenever the platform is within communications range, and without significant time delays. It is not certain, however, that a space platform will become operational within the time frame considered for ST and AXAF servicing.

These considerations indicate that a ground based control station is the preferred option for control of a telepresence system.

SEE ALSO: 2.5.4 CONTROL
2.5.7 MANIPULATORS
2.5.6 PREDICTIVE DISPLAYS

2.5.6 PREDICTIVE DISPLAYS

Recent advances in computer aided modeling (CAM) make predictive displays a potential method of eliminating many of the restrictions imposed by time

delays. For example, a computer could store a model of ST, which would be updated and modified as the structure is altered by servicing. As the operator moves the manipulator, the computer would immediately show the operator where the manipulator links and end effector are positioned in relation to ST, even though the video response from ST had not yet been received. In this manner, many of the problems caused by the "move-and-wait" strategies usually employed in dealing with time delays are reduced. Further, a supervisory system at the control station could compare the commanded manipulator position to the position of the ST structure, and then override the operator's instructions in the event that they indicate an impending collision of the manipulator or end effector with ST. As many manipulator paths are possible for a given end effector motion, it could also steer the manipulator links clear of obstacles.

Work needs to be done to find methods of updating and revising the computer simulation when an unexpected event occurs. Using machine vision processing of video data from the worksite is a possible method of updating the stored model.

SEE ALSO: 2.5.4 CONTROL

2.5.7 MANIPULATORS

Most servicing operations can be accomplished with one manipulator (aside from those used for anchoring), but a second one is probably necessary for a few tasks, such as the removal or replacement of the Axial Scientific Instruments aboard ST. The manipulators must be capable of providing a reach functionally equivalent to that of two EVA crewmembers in position to move the SI along the guiderails.

Manipulator design may prove to be a pivotal technology area for the application of telepresence to spacecraft servicing, and extensive computer simulation of the manipulator and the worksite may be desirable before

manipulator characteristics and physical dimensions are determined (see section 2.5.6 and section 2.6). The servicer will almost certainly be larger than an astronaut, and hence it will not always be possible for the servicer to position itself in the same position and orientation that an astronaut would use to access a spacecraft. This is particularly important in dealing with components, such as the ST RSUs, which are even difficult to access via EVA. To solve this access problem, non-anthropomorphic manipulator designs will be required. Possible designs include:

- Telescoping manipulator links.
- Long manipulator links.
- The use of more than two manipulator links.
- Modular manipulators capable of on-orbit reconfiguration through the use of interchangeable links.

The control of non-anthropomorphic manipulator arms needs further study. Human factors tests should be performed to quantify the requirements for telepresence arms, through investigation of:

- How much difference between human arm and manipulator arm movement is allowable, before the difference becomes apparent to the operator, and then deleterious to performance.
- How to best control manipulator motion when there are more than two appendages. Certainly appendages used for anchoring do not need constant attention, and can probably be forgotten once fastened.

Increasing the allowable length of manipulator arms will expand their ranges of use. It also implies, however, lower stiffness, and greater interaction of arm structural frequencies with control frequencies of the operator and with the rigid-body modes of the payload. The lower arm structural frequencies create greater opportunities for forced response at

resonant frequency, with the possibility of damage to the end effector or to the arm itself. Investigation should examine the development of:

- Innovative structural designs to increase manipulator arm rigidity.
- Passive damping augmentation for manipulators.
- Active damping algorithms for implementation in manipulator software.
- The development of model-referenced systems. (An example would be a system which automatically places small input forces and torques on the manipulator payload after grappling, and uses the resultant motions of the manipulator to infer the mass properties of the payload.)
- The possibility of fastening down all but the last two manipulator links near the point of servicing, and then operating those two links as if they were the entire manipulator.

Actuators need to be developed for anthropomorphic arms. Geared motors and external linear actuators are fine for large translation manipulators, but reduce the articulation of the arm below the standards required for telepresence, which would benefit from low volume, low mass, high torque actuators, as well as innovative ideas such as tendon-driven joints.

SEE ALSO: 2.5.6 PREDICTIVE DISPLAYS

2.5.8 STOWAGE RACKS

Adequate stowage volume must exist on the servicer for removed parts and replacement spares, with the stowage rack configuration constrained to being compatible with the Shuttle and the TMS. Instruments must be protected from acoustic vibration encountered during launch. The stowage rack must also

provide structural support for replacement modules during launch and reentry, as well as protection from the thermal stresses, contamination, and radiation in the space environment.

Areas for stowage rack research include:

- The development of lightweight designs, possibly utilizing advanced materials. With current designs, the stowage racks will take up a major portion of the servicer weight, but there is a large potential for reducing this weight contribution with a resulting savings in launch costs and propellant necessary for TMS/Servicer maneuvers.
- The development of an easily reconfigurable and reusable stowage rack, capable of a large number of missions supporting different spacecraft. It is possible the stowage rack used for ST servicing will be usable for AXAF, largely without change, but in general a stowage rack is needed which can be easily reconfigured for the instruments encountered in a variety of space projects. Such reconfiguration would possibly include both the ability to change compartment volume as well as to add or subtract stowage modules, as needed.
- The development of stowage modules capable of stowing gases and providing for the cooling of cryogens aboard the servicer enroute to the spacecraft being serviced.

2.6 DEVELOPMENTAL ANALYSIS

There are an endless number of approaches to the development of the hardware and software necessary for an operational telepresence system. This discussion is presented as an example development program well suited for academic research. Also, it serves to illustrate the complexity of the general

development program outlined in section 1.5.3. The details of specific development programs, such as this one, are dependent on technology, scheduling, funding, and the capabilities of the development facility. NASA, industry, and academia all have expertise to contribute to the development effort. The following program is intended as an example, but it is also viable as a suggestion for further work.

Figure 2.39 presents a possible development pathway for a velocity-force hand controller, manipulator, and predictive display.

Initially, a 3 degree of freedom (DOF) hand controller would be assembled, capable of executing up-down and right-left translation and simple two-finger grasping. Signals from the hand controller would command changes in end effector position on a computer simulation. For example, the end effector could be represented on the computer screen as a pair of vertical parallel lines, which move horizontally and vertically when they receive translation commands, and move closer together or farther apart when they receive grasping commands. Simple block objects could also be modeled in the computer simulation, and the operator of the hand controller could attempt to perform various operations with the controller, such as stacking and unstacking the blocks.

As confidence in the system progresses, several additional factors could be added to the simulation:

- A time delay could be added to measure its effects on operator performance.
- The worksite can be made more complex, including blocks of varying shapes, sizes, and masses. Immovable structures and obstacles can also be added to the model.

DEVELOPMENT TREE FOR MANIPULATOR, HAND CONTROLLER, AND PREDICTIVE DISPLAY

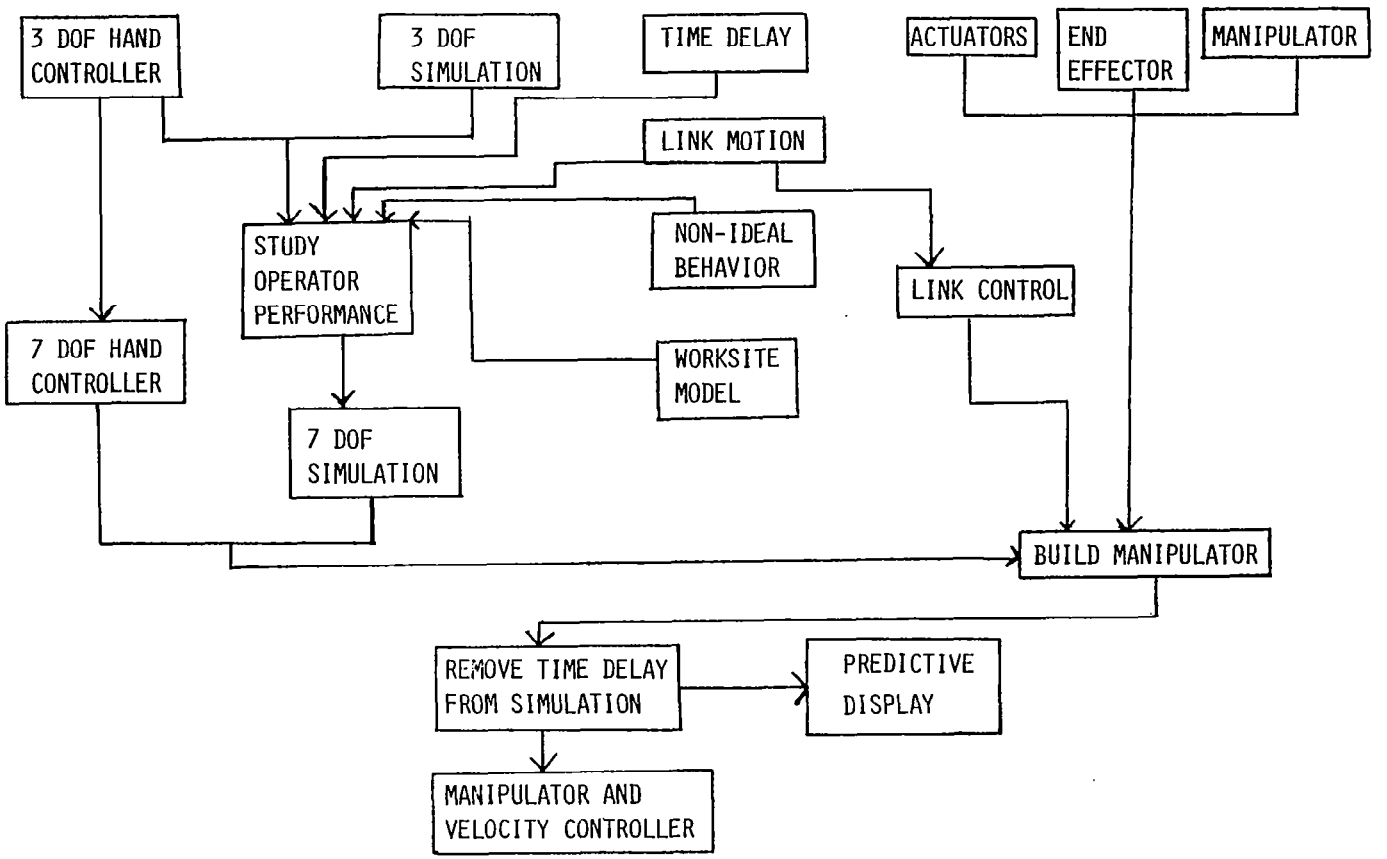

Figure 2.39: Possible Development Tree.

- As algorithms are developed which can translate operator end effector commands into manipulator link motions, the manipulator link model can be added to the simulation to determine if the manipulator has the necessary reach to perform the desired servicing, and control strategies can be developed to prevent collisions of the manipulator links with the worksite.
- Non-ideal manipulator behavior can be added to the simulation to include such factors as finite manipulator start and stop times.

With the addition of each new factor to the model, operator performance would be studied to determine the ability of the operator to adequately control the end effector. If the operator does not have adequate control over the end effector, modifications (such as changing hand controller gains, or manipulator link sizes) must be made to the system.

Eventually, as sufficient confidence of the system is gained, the hand controller and its simulation would be upgraded to a full 7 degrees of freedom (3 translation DOF, 3 rotation DOF, and 1 grasping DOF). Accompaning this would be the development of a detailed model of the satellite for which the system is to perform servicing. Operator performance studies would again be performed, and when it is determined that the simulated manipulator is capable of performing the desired tasks, the actual manipulator would be built and integrated into the system. The time delay is then removed from the simulation, and the simulation then functions as a predictive display when there is a real time lag between the operator's commands and the received video response. The advantage of using this type of a development program is that the potentially expensive development of the manipulator does not proceed until there is good assurance that it will be capable of performing its desired tasks.

Other hardware, such as the vision system, end effectors, contact sensors,

and stowage racks could then be integrated into the system to produce the full telepresence servicer. Land based and neutral buoyancy testing would precede in-space testing and operation.

2.7 CONCLUSIONS

As has been demonstrated, a near term telepresence servicer is potentially capable of handling all ST and AXAF orbital maintenance activities, as well as orbital deployment, retrieval and reboosting (with the assistance of the TMS). An upgraded system will potentially be able to perform complex orbital assembly functions, as required for the advanced space telescopes.

Telepresence has the potential to be extremely useful in LEO, and, unless EVA becomes feasible at higher orbits, a necessary system for advanced space operations. This operational analysis of future space missions has found telepresence to be a desirable and feasible option for servicing, assembly, and contingency operations.

Research has now progressed to the point where experimental verification, and determination of the man/machine interactions of a telepresence system is a necessary next step. The study group strongly recommends that NASA begin a significant development effort immediately. If development of the necessary hardware and software commences immediately, a telepresence system could be assembled and flown by 1992. This date coincides with potential initial need for servicing operations and the possible assembly of a space station. The successful perfomance of one contingency operation during the deployment and assembly of the station could more than justify the cost of the entire telepresence development program.

2.8 BIBLIOGRAPHY

2.8.1 GENERAL TELEPRESENCE AND ROBOTICS

Bejczy, A. K. "Advanced Teleoperators," Astronautics & Aeronautics, May 1979.

Birk, John, & Robert Kelley. "Research Needed to Advance the State of Knowledge in Robotics," Workshop Proceedings, Newport, Rhode Island, April 15-17, 1980.

Deutsch, Stanley, & Ewald Heer, "Manipulator Systems Extend Man's Capabilities in Space," Astronautics & Aeronautics, June, 1972.

Estabrook, Norman B., Robert Wernli, & Robert T. Hoffman. "Recovery Operations Utilizing a Remotely Controlled Vehicle/Work System," Reprint, OCEAN '80, Murray Publishing Co., Seattle, Washington, 1980.

Gevarter, William B. "An Overview of Artificial Intelligence and Robotics," U.S. Department of Commerce, National Bureau of Standards, NBSIR 82-2479, March, 1982.

Heer, Ewald. "Report of the JPL Advocacy Group for Autonomous Systems Technology Research and Development," JPL Report No. 714-128.

Heer, Ewald ed. "Robots and Manipulator Systems," National Conference on Remotely Manned Systems, 2D, University of Southern California, 1975.

Heer, Ewald. "Robots and Manipulators," Mechanical Engineering, November, 1981.

Hestenes, J. D. "Advanced Teleoperator Technology Development," 199-51-04, JPL.

Hill, J. W. & Salisbury, J. K., Jr. "Study to Design and Develop Remote Manipulator Systems," Annual Report 2, NASA Contract NAS2-8652, SRI International, November, 1977.

Long, James E., & Timothy J. Healy. "Advanced Automation for Space Missions: Technical Summary," NASA/ASEE Summer Study. University of Santa Clara, Santa Clara, CA., September, 1980.

McReynolds, Stephen R. "A Benefit and Role Assessment of Advanced Automation for NASA," JPL, 730-13, April, 1978.

Minsky, Marvin. "Telepresence," Omni, June, 1980.

"MSFC Teleoperator-Telepresence Planning Activities Overview," MSFC, February, 1982.

NASA Space Systems Technology Model, Volume 1, Part A. NASA, Office of Aeronautics and Space Technology, September, 1981.

Plantier, Michel, & Rene Bodmer. "Teleoperation and Automation," Eurosat, S.A., Geneva, May, 1981.

Shields, Nicholas Jr. "Earth Orbital Teleoperator Systems (EOTS) Evaluation: Year End Report," NASA-CR-150912, Essex Corp., Hunstville, Alabama, 1978.

"Systems Technology Development: An Early Telepresence Flight Demonstration in Cooperation with the Research and Technology Office, George C. Marshall Space Flight Center," NASA MSFC, September, 1981.

Wagnon, Wayne. "Marshall Space Flight Center Teleoperators and Robotics Activities and Plans," Presentation to OAST. MSFC, Information and Electronic Systems Laboratory, March 4, 1982.

Wernli, Robert L. "Deep Ocean Applications of Manipulators and Work Systems," Proceedings of the 27th Conference on Remote Systems Technology, 1979.

Wernli, Robert L. "Development of a Design Baseline for Remotely Controlled Underwater Work Systems," Naval Ocean Systems Center, San Diego, CA., 1979.

Wernli, Robert L. "Robotics Undersea," Mechanical Engineering, August, 1982.

Wernli, Robert L. "The Work Systems Package - Remote Work Experience," Reprint, Proceedings of Oceans, September, 1979.

2.8.2 SATELLITE SERVICING

"AXAF Utilization of STS and Satellite Servicing," SAI Conference Center, McLean, Virginia, Astrophysics Division, NASA Headquarters, Contract No. NASW-3518, April 21-22, 1982.

"AXAF Utilization of STS and Satellite Servicing," Goddard Space Flight Center, Greenbelt, Maryland, Astrophysics Division, NASA Headquarters, Contract No. NASW-3518, June 16-17, 1982.

Dooling, Dave. "Report on the National Scene: Satellite Servicing About to Budge," Astronautics & Aeronautics, April, 1982.

"Integrated Orbital Servicing Study for Low-Cost Payload Programs," Final Report, Martin Marietta Corporation, NASA Contract NAS8-30820, September 1975.

"MSFC's Remote Satellite Services Program Planning Summary," MSFC Space Systems Group, February, 1981.

Pruett, Robertson, Lougheed. "Development of Concepts for Satellite Retrieval Devices: Final Report," NASA-CR-161178, Essex Corp., Huntsville, Alabama, February 8, 1979.

"Satellite Services System Analysis Study," Lockheed Missles & Space Company, NASA Contract NAS9-16181.

"Satellite Services Workshop," NASA Lyndon B. Johnson Space Center, Engineering and Development Directorate, June 1982.

Schappell, R. T. "Remote Orbital Servicing System (ROSS): Final Report," NASA Contract NAS1-16759, Martin Marietta, April, 1982.

2.8.3 SPACE TELESCOPE

Bahcall, John N., & Spitzer, Lyman Jr. "The Space Telescope," Scientific American, Volume 247, Number 1, July 1982, pp. 40 - 51.

Field, Elmer L. "Space Telescope, A Long-Life Free Flyer," Space Telescope Project Office, NASA MSFC, October 1979.

Fisher, H. T. "Space Telescope & RMS Utilization," Lockheed Missiles and Space Co., Remote Manipulator System Users Conference, May 1981.

Halpern, Jennifer. "ST, The Extraterrestrial Telescope," Mechanical Engineering, November 1982.

Henson, B. W. "Solar Array Neutral Buoyancy Test Report," Space Telescope Project, European Space Agency, European Space Research and Technology Centre, March 1981.

Sanders, Fred G. "Space Telescope Neutral Buoyancy Simulations - The First Two Years," NASA TM-82485, June 1982.

"Space Telescope On-Orbit Maintenance Mission - Space Support Equipment Human Engineering Design Criteria," NASA MSFC, January 1982.

Trucks, Howard F. "Space Telescope Maintenance and Refurbishment," Space Telescope Project Office, NASA MSFC.

Waldrop, Mitchell M. "Space Telescope in Trouble," Science, Volume 220, April, 1983.

2.8.4 ADVANCED X-RAY ASTROPHYSICS FACILITY

"AXAF Industry Briefing: Presentation Package," NASA Marshall Space Flight Center, November 1982.

"AXAF Reference Design Concepts," NASA Marshall Space Flight Center, January 1983.

"AXAF Utilization of STS and Satellite Servicing," SAI Conference Center, McLean, Virginia, Astrophysics Division, NASA Headquarters, Contract No. NASW-3518, April 21-22, 1982.

"AXAF Utilization of STS and Satellite Servicing," Goddard Space Flight Center, Greenbelt, Maryland, Astrophysics Division, NASA Headquarters, Contract No. NASW-3518, June 16-17, 1982.

2.8.5 ADVANCED SPACE TELESCOPES

"Advanced Optical Systems Technology Study," NASA, November 1982.

Bekey, Ivan, & Harris Mayer. "1980-2000 Raising our Sights for Advanced Space Systems," Astronautics & Aeronautics, July/August 1976.

"COSMIC," NASA Marshall Space Flight Center, December 1981.

Jones, Charles O., Max E. Nein, & John W. Warner. "Project Concept Summary: COSMIC," NASA Astrophysics Long-Term Program, October 1980.

Jones, Charles O., Max E. Nein, & John W. Warner. "Project Concept Summary: 100-m Thinned Aperture Telescope (TAT)," NASA Astrophysics Long-Term Program, October 1980.

Jones, Charles O., Max E. Nein, & John W. Warner. "Project Concept Summary: Very Large Space Telescope (VLST)," NASA Astrophysics Long-Term Program, October 1980.

Rosendhal, Jeffrey D., Mark B. Kuhner, & Kathleen Maher. "Project Concepts Executive Summary: A Road Map To The Twenty-First Century," NASA Astrophysics Program, October 1980.

Traub, Wesley A. "Feasibility Study of an Optically Coherent Telescope Array in Space," Technical Report No. 1, NASA MSFC Contract NAS8-33893, November 1981.

2.8.6 TELEOPERATOR MANEUVERING SYSTEM

"Teleoperator Maneuvering System: Mark II Propulsion Module Study (Servicing and Orbital Basing)," Final Review, Martin Marietta Corporation, NASA MSFC Contract NAS8-34581, May 1982.

"Teleoperator Maneuvering System: Mark II Propulsion Module Study (Servicing and Orbital Basing)," Midterm Report, Martin Marietta Corporation, NASA MSFC Contract NAS8-34581, October 1982.

"Teleoperator Maneuvering System Study: Mission Requirements and System Definition," Vought Corporation, NASA MSFC Contract NAS8-33903, May 1982.

"Teleoperator Maneuvering System Study: Mission Requirements and System Definition," Vought Corporation, Continuation of NASA MSFC Contract NAS8-33903, January 1983

Turner, J. R. "Teleoperator Maneuvering System," in "Satellite Services Workshop," NASA Lyndon B. Johnson Space Center, Engineering and Development Directorate, June 1982.

2.8.7 SPACE STATION

"Definition of Technology Development Mission For Early Space Station: Orbit Transfer Vehicle Servicing," General Dynamics, Convair Division, Orientation Meeting, October 1982.

"Definition of Technology Development Mission For Early Space Station: Orbit Transfer Vehicle Servicing," General Dynamics, Convair Division, Interim Review, October 1982.

"Space Station Systems Definition Working Group Meeting," NASA Marshall Space Flight Center, November 1982.

"Technology Required For Space Station," NASA MSFC, March 1982.

von Tiesenhausen, Georg. "An Approach Toward Function Allocation Between Humans and Machines in Space Station Activities," NASA TM-82510, November 1982.

von Tiesenhausen, Georg. "The Role of Humans and of Automation in Space Stations," NASA MSFC Program Development, October 1982.

2.8.8 ORBITAL TRANSFER VEHICLE

"Definition of Technology Development Mission For Early Space Station: Orbit Transfer Vehicle Servicing," General Dynamics, Convair Division, Orientation Meeting, October 1982.

"Definition of Technology Development Mission For Early Space Station: Orbit Transfer Vehicle Servicing," General Dynamics, Convair Division, Interim Review, October 1982.

Hastings, L. J. "Cryogenic Fluid Transfer - Orbiter Transfer Vehicle," in "Satellite Services Workshop," NASA Lyndon B. Johnson Space Center, Engineering and Development Directorate, June 1982.

"Orbital Transfer Vehicle: Concept Definition Study," Boeing, NASA MSFC Contract NAS8-33532, July 1980.

2.8.9 ASSEMBLY

"Analysis of Large Space Structures Assembly: Large Space Systems Man/Machine Assembly Analysis," NASA Contract NAS8-32989, Essex Corporation, June 1982.

Shields, Nicholas, Jr., Edwin C. Pruett. "Analysis of Large Space Structures Assembly," NASA Contract NAS8-32989, March 1981.

"Space Transportation Systems Advanced Concepts: Large Space Structures," NASA, August 1981.

2.8.10 CONTROL

Bejczy, A. K. "Kinesthetic and Graphic Feedback for Integrated Operator Control," Preprint, 6th Annual Advanced Control Conference, Man-Machine Interfaces for Industrial Control, Purdue University, West Lafayette, Indiana, April 28-30, 1980.

Bejczy, Antal K. "Sensors, Controls, and Man-Machine Interface for Advanced Teleoperation," Science, Reprint Series, Volume 208, pp. 1327-1335, June 20, 1980.

Brooks, Thurston L. "Supervisory Manipulation Based on the Concepts of Absolute vs Relative and Fixed vs Moving Tasks," Preprint, ASME CENTURY II, Emerging Technology Conferences, International Computer Technology Conference, San Francisco, CA., August 13-15, 1980.

Brooks, T. L., & T. B. Sheridan. "Superman: A System for Supervisory Manipulation and the Study of Human/Computer Interactions," MIT Sea Grant College Program, MITSG 79-20, July 1979.

Saltman, D. & Williams, G., III. "Magic Mirrors," Omni, February 1982.

Sheridan, T. B., W. L. Verplank, & T. L. Brooks, "Human/Computer Control of Undersea Teleoperators," Proceedings of the International Conference on Cybernetics and Society, IEEE, November, 1978.

2.8.11 HUMAN FACTORS

Bejczy, A. K. "Kinesthetic and Graphic Feedback for Integrated Operator Control," Preprint, 6th Annual Advanced Control Conference, Man-Machine Interfaces for Industrial Control, Purdue University, West Lafayette, Indiana, April 28-30, 1980.

Bejczy, Antal K. "Sensors, Controls, and Man-Machine Interface for Advanced Teleoperation," Science, Reprint Series, Volume 208, pp. 1327-1335, June 20, 1980.

Bejczy, A. K., J. K. Salisbury Jr. "Kinesthetic Coupling between Operator and Remote Manipulator," Preprint, International Computer Technology Conference, The American Society of Engineers, San Francisco, CA., August 12-15, 1980.

Bejczy, A. K., & M. Vuskovic. "An Interactive Manipulator Control System," Preprint, Proceedings of the Second International Symposium on Mini & Microcomputers in Control, Fort Lauderdale, Florida, December, 1979.

Chu, Yee-Yeen, William H. Crooks, & Amos Freedy. "Man-Machine Communication in Remote Manipulation: Task-Oriented Supervisory Command Language (TOSC)," NR 196-140, Perceptronics, Woodland Hills, CA., March, 1980.

Cole, R. E., R. L. Pepper, B. E. Pinz, "The Influence of Head Movement Parallax on Perceptual Performance under Direct and TV-Displayed Conditions," Technical Report No. 678, Naval Ocean Systems Center, May, 1981.

Hall, Stephen B., Georg von Tiesenhausen, Gary W. Johnson. "The Human Role in Space," NASA TM-82482, Marshall Space Flight Center, April, 1982.

Pepper, R. L., & R. E. Cole. "Display System Variables Affecting Operator Performance in Undersea Vehicles and Work Systems," Technical Report No. 265, Naval Ocean Systems Center, June, 1978.

Richardson, Cecil S. "The Integrated Cockpit and the HH-60D Helicopter," Technical Directions, Federal Systems Division, Vol. 8, No. 2, Summer, 1982.

Saltman, D. & Williams, G., III. "Magic Mirrors," Omni, February 1982.

Shields, Nicholas Jr. et al. "Human Operator Performance of Remotely Controlled Tasks," Essex Report No. H-82-0101, Essex Corp., Huntsville, Alabama, March, 1982.

Smallowitz, Howard. "Continuum: Double Vision," Omni, October, 1981.

Smith, D. C., et al. "Remote Operator Performance Comparing Mono and Stereo TV Displays: The Effects of Visibility, Learning and Task Factors," Technical Report No. 380, Naval Ocean Systems Center, February, 1979.

Verplank, W. L. "Display Aids for Remote Control of Untethered Undersea Vehicles," Office or Naval Research Contract N00014-77-C-0256, Man-Machine Systems Laboratory, Dept. of Mechanical Engineering, MIT, 1978.

von Tiesenhausen, Georg. "An Approach Toward Function Allocation Between Humans and Machines in Space Station Activities," NASA TM-82510, November 1982.

von Tiesenhausen, Georg. "The Role of Humans and of Automation in Space Stations," NASA MSFC Program Development, October 1982.

2.8.12 MANIPULATORS

Olsen, Roy E. "Dextrous Manipulator Laboratory Program," 18th Annual Conference on Manual Control, Dayton, Ohio, June 10, 1982.

2.8.13 RENDEZVOUS AND DOCKING

Anderson, Robert L. "Development of Automated Rendezvous and Proximity Operations Techniques For Rendezvous and Close-In Operation and Satellite Servicing," NASA JSC Contract NAS9-16310, First Quarterly Review, Lincom Corporation, October 1981.

Becker, R. W., and R. L. Anderson. "Automated Rendezvous and Proximity Operations," in "Satellite Services Workshop," NASA Lyndon B. Johnson Space Center, Engineering and Development Directorate, June 1982.

Eastman, Robert M. "Upgrading the Free Flying Rendezvous and Docking Simulation and the Orbital Servicer System," NASA/ASEE Summer Faculty Research Fellowship Program, NASA Contract NGT-01-002-099, MSFC, University of Alabama, July 25, 1980.

Erwin, H. O., "Laser Docking Sensor," in "Satellite Services Workshop," NASA Lyndon B. Johnson Space Center, Engineering and Development Directorate, June 1982.

Plantier, Michel, & Rene Bodmer. "Teleoperation and Automation," Eurosat, S.A., Geneva, May, 1981.

Schappell, Roger T., Frank A. Vandenburg, & Catherine A. Hughes. "Study of Automated Rendezvous and Docking Technology: Final Report," Contract JPL-955363, Martin Marietta, October, 1979.

2.8.14 SENSORS

Bejczy, Antal K. "Sensors, Controls, and Man-Machine Interface for Advanced Teleoperation," Science, Reprint Series, Volume 208, pp. 1327-1335, June 20, 1980.

Bejczy, A. K., J. W. Brown, & J. L. Lewis. "Evaluation of Proximity Sensor Aided Grasp Control for Shuttle RMS," Preprint, Proceedings of the 15th Annual Conference on Manual Control, Wright State University, Dayton Ohio, March 20-22, 1979.

Hecht, Jeff. "Fiber Optics Turns to Sensing," High Technology, Vol. 2, No. 4, July/August, 1982.

2.8.15 VISION

Cole, R. E., R. L. Pepper, B. E. Pinz, "The Influence of Head Movement Parallax on Perceptual Performance under Direct and TV-Displayed Conditions," Technical Report No. 678, Naval Ocean Systems Center, May, 1981.

Cook, Peter A., "Aerial Combat Simulation in the U.S. Air Force," Astronautics & Aeronautics, September, 1982.

"Superconducting Chip Speeds Video Compression," High Technology, Vol. 2, No. 5, September/October, 1982.

2.8.16 REMOTE MANIPULATOR SYSTEM

Bejczy, A. K., J. W. Brown, & J. L. Lewis. "Evaluation of Proximity Sensor Aided Grasp Control for Shuttle RMS," Preprint, Proceedings of the 15th Annual Conference on Manual Control, Wright State University, Dayton Ohio, March 20-22, 1979.

Fisher, H. T. "Space Telescope & RMS Utilization," Lockheed Missiles and Space Co., Remote Manipulator System Users Conference, May 1981.

Fuller, B. R. "The Role of the Shuttle Remote Manipulator in Satellite Servicing," in "Satellite Services Workshop," NASA Lyndon B. Johnson Space Center, Engineering and Development Directorate, June 1982.

2.8.17 CONSUMABLE RESUPPLY

Hastings, L. J. "Cryogenic Fluid Transfer - Orbiter Transfer Vehicle," in "Satellite Services Workshop," NASA Lyndon B. Johnson Space Center, Engineering and Development Directorate, June 1982.

McGee, J. M. "Fluids Management Technology," in "Satellite Services Workshop," NASA Lyndon B. Johnson Space Center, Engineering and Development Directorate, June 1982.

Rudy, G. C. "Spacecraft Automatic Umbilical Systems," in "Satellite Services Workshop," NASA Lyndon B. Johnson Space Center, Engineering and Development Directorate, June 1982.

1. REPORT NO.	2. GOVERNMENT ACCESSION NO.	3. RECIPIENT'S CATALOG NO.
NASA CR-3735		

4. TITLE AND SUBTITLE	5. REPORT DATE
Space Applications of Automation, Robotics and Machine Intelligence Systems (ARAMIS) - Phase II Volume 2: Telepresence Project Applications	October 1983
	6. PERFORMING ORGANIZATION CODE
7. AUTHOR(S) D. L. Akin, M. L. Minsky, E. D. Thiel, and C. R. Kurtzman	8. PERFORMING ORGANIZATION REPORT # SSL Report #31-83
9. PERFORMING ORGANIZATION NAME AND ADDRESS Space Systems Lab. and Space Systems Lab. Massachusetts Institute of Technology 77 Massachusetts Avenue Cambridge, Massachusetts 02139	10. WORK UNIT NO. M-425
	11. CONTRACT OR GRANT NO. NAS8-34381
12. SPONSORING AGENCY NAME AND ADDRESS National Aeronautics and Space Administration Washington, D. C. 20546	13. TYPE OF REPORT & PERIOD COVERED Contractor Report
	14. SPONSORING AGENCY CODE

15. SUPPLEMENTARY NOTES

Phase II, Final Report

Contract Monitor: Georg von Tiesenhausen, Marshall Space Flight Center, AL.

16. ABSTRACT

This report defines the field of telepresence, and provides overviews of those capabilities that are now available, and those that will be required to support a NASA telepresence effort. This includes investigation of NASA's plans and goals with regard to telepresence, extensive literature search for materials relating to relevant technologies, a description of these technologies and their state-of-the-art, and projections for advances in these technologies over the next decade.

Several space projects are examined in detail to determine what capabilities are required of a telepresence system in order to accomplish various tasks, such as servicing and assembly. The key operational and technological areas are identified, conclusions and recommendations are made for further research, and an example developmental program is presented, leading to an operational telepresence servicer.

17. KEY WORDS	18. DISTRIBUTION STATEMENT
Telepresence Satellite servicing Space Station	Unclassified - Unlimited Subject Category: 37

19. SECURITY CLASSIF. (of this report)	20. SECURITY CLASSIF. (of this page)	21. NO. OF PAGES	22. PRICE
Unclassified	Unclassified	114	A06

MSFC - Form 3292 (Rev. December 1972)

For sale by National Technical Information Service, Springfield, Virginia 22161

NASA-Langley, 1983