NASA Conference Publication 2285

NASA
CP
2285
c.1

TECH LIBRARY KAFB, NM
0099242

Joint University Program for Air Transportation Research - 1982

LOAN COPY: RETURN TO
AFWL TECHNICAL LIBRARY
KIRTLAND AFB, N.M. 87117

Proceedings of a conference held at
NASA Langley Research Center
Hampton, Virginia
December 10, 1982

25th Anniversary
1958-1983

NASA

TECH LIBRARY KAFB, NM

0099242

NASA Conference Publication

Joint University Program for Air Transportation Research - 1982

Proceedings of a conference held at
NASA Langley Research Center
Hampton, Virginia
December 10, 1982

NASA
National Aeronautics
and Space Administration

Scientific and Technical
Information Branch

1983

PREFACE

The Joint University Program for Air Transportation Research is a coordinated set of three grants sponsored by NASA Langley Research Center, one each with Massachusetts Institute of Technology (NGL-22-009-640), Ohio University (NGR-36-009-017), and Princeton University (NGL-31-001-252), to support the training of students for the air transportation system. These grants, initiated in 1971, encourage the development of innovative curriculums and support the establishment of graduate and undergraduate research assistantships and internships.

An important feature of this program is the quarterly review, one held at each of the schools and the fourth at a NASA facility. This latter review for 1982 was held at NASA Langley Research Center, Hampton, Virginia, December 10, 1982. At these reviews the program participants, both graduate and undergraduate, have an opportunity to present their research activities to their peers, professors, and invited guests from government and industry.

This conference publication represents the third in a series of yearly summaries of the activities of the program. (The 1980 summary appears in NASA CP-2176 and the 1981 summary in NASA CP-2224.) The majority of the material is the efforts of the students supported by the grants.

Three types of contributions are included. Completed works are represented by the full technical papers. Research previously published in the open literature (for example, theses or journal articles) is presented in an annotated bibliography. Status reports of ongoing research are represented by copies of viewgraphs augmented with a brief descriptive text.

Use of trade names or names of manufacturers in this report does not constitute an official endorsement of such products or manufacturers, either expresed or implied, by the National Aeronautics and Space Administration.

CONTENTS

PREFACE iii

OHIO UNIVERSITY

INVESTIGATION OF AIR TRANSPORTATION TECHNOLOGY AT OHIO UNIVERSITY, 1982 3
Richard H. McFarland

A MICROCOMPUTER-BASED POSITION UPDATING SYSTEM FOR GENERAL AVIATION UTILIZING LORAN-C 7
Joseph P. Fischer

ENHANCED CHARACTER SIZES FOR THE VDM-1 VIDEO DISPLAY BOARD 9
Stanley M. Novacki III and James D. Nickum

RF FRONT END INTERFACE AND AGC MODIFICATION 23
Stephen R. Yost

PRELIMINARY DESCRIPTION OF THE AREA NAVIGATION SOFTWARE FOR A MICROCOMPUTER-BASED LORAN-C RECEIVER 33
Fujiko Oguri

LORAN-C RF PROCESSING 45
Ralph W. Burhans

LORAN-C RECEIVER REPACKAGING 53
Daryl L. McCall

NEW VIDEO DISPLAY FOR THE LORAN-C RECEIVER 57
Fujiko Oguri

NEW FRONT END INTERFACE AND AGC MODIFICATIONS 61
Stephen R. Yost

LORAN-C CONTROL AND DISPLAY 65
Stanley M. Novacki III

SUMMARY OF SIMPLE ACTIVE ANTENNAS FOR VLF-LF 69
Ralph W. Burhans

MASSACHUSETTS INSTITUTE OF TECHNOLOGY

INVESTIGATION OF AIR TRANSPORTATION TECHNOLOGY AT MASSACHUSETTS INSTITUTE OF TECHNOLOGY, 1982 75
Robert W. Simpson

LATERAL RUNWAY APPROACH GUIDANCE USING LORAN-C 81
Robert W. Simpson

DEVELOPMENT OF REAL-TIME ATC SIMULATION FACILITY..... 89
John Pararas

RELATIVE-DATUM LORAN NAVIGATION..... 99
Antonio Elias

PRINCETON UNIVERSITY

INVESTIGATION OF AIR TRANSPORTATION TECHNOLOGY AT
PRINCETON UNIVERSITY, 1982..... 109
Robert F. Stengel

COCKPIT VOICE RECOGNITION PROGRAM AT PRINCETON UNIVERSITY..... 117
Chien Y. Huang

DISTRIBUTED PROCESSING AND FIBER OPTIC COMMUNICATIONS IN
AIR DATA MEASUREMENT..... 133
Kristin A. Farry and Robert F. Stengel

DATA ACQUISITION FOR STALL/SPIN FLIGHT RESEARCH..... 141
M. Sri-Jayantha

Ohio

University

INVESTIGATION OF AIR TRANSPORTATION TECHNOLOGY

AT OHIO UNIVERSITY, 1982

Richard H. McFarland
Avionics Engineering Center
Department of Electrical Engineering
Ohio University
Athens, Ohio 45701

INTRODUCTORY REMARKS

The work performed at Ohio University during 1982 under the Joint University Program for Air Transportation has emphasized improvement and refinement of the Loran-C receiver system for general aviation use. A major goal has been to make this receiver more suitable for use in light aircraft by a pilot who probably will not have much help in piloting and navigating. This receiver was designed earlier as a part of this NASA-supported work.

One major requirement is the capability to provide area navigation, sometimes called random navigation (RNAV). RNAV is fundamentally a computational aid which allows the pilot to select a destination point with the only restriction being availability of Loran-C signal. The destination point having been selected, the pilot should then desirably be able to proceed to that point by simply keeping a needle centered on a display. The centered needle guarantees the desired track to the destination.

A master's thesis is in preparation that provides the software and mechanization to accomplish the RNAV function. This is another step towards providing a complete Loran-C navigation receiving capability as a total result of this project effort. A preliminary paper by Oguri gives a description of the software which accomplishes the RNAV function in this Loran-C navigation system. Outputs from the calculations are cross-track error, range and tracking guidance to the waypoints, ground speed, estimated time to the waypoint, and typical CDI/To-From displays referencing the waypoints.

Work has continued on providing better preamplifier capabilities as has been traditional. Yost has worked on improving the RF receiver board to accomplish more accurate cycle tracking with an improved notch filter circuit and improved AGC. Evidence has shown that the envelope-type detector produces the same time differences as obtained from more expensive Loran-C sets such as the TI-9900 and the Trimble 10A. This is felt to be significant since the more sophisticated cycle matching techniques are considered to be of high quality.

The Ohio University receiver has been modified during this year by addition of 8K of RAM or PROM memory to aid program expansion and increase flexibility. A simpler RS-232 interface has also been added for data logging.

The display format initially had very small characters. Novacki and Nickum have provided enhanced character font graphics to improve readability of the data on the CRT. This is consistent with overall design considerations of this system for practical general aviation use.

Flight experiments have been completed; however, more are imminent now that complete repackaging of the hardware has been accomplished. Early breadboard units were found to give rise to intermittents and to reduce reliability even for experimental flights. Accordingly, considerable effort was expended to bring the hardware to a form which would increase reliability significantly. The forthcoming flights will also benefit from the new data reduction software which will speed analysis of the flight data.

It is important to stress that this receiver, which is designed for the general aviation airplane, is not to be considered an item per se for the GA marketplace; rather, it is a research receiver with considerable flexibility for examining the various parameters which must be set before the final design takes place. The intent is to provide a research tool that will aid the industry in bringing forth more optimum designs for the GA user. The industry should be able to benefit by being able to save engineering time and cost needed to produce a quality Loran-C receiving system. Evidence obtained from industrial representatives indicates that Loran-C can be expected to play an important role in the GA market of the future. The opportunity to replace a VOR navigation receiver, DME interrogator, and a dedicated RNAV computer with one Loran-C receiving system is an attractive option for the GA operator, especially if costs are kept well below the total price of the contemporary 3-unit package now running close to $8000.

The work described in the following pages has had the consistent goal especially for small aircraft. Documentation of the results for this year is contained in a short annotated bibliography. A more extensive bibliography covering earlier related work can be found in NASA CP-2224 (ref. 1).

An important highlight of the past year of the program at Ohio University has been receipt of the Radio Technical Commission for Aeronautics (RTCA) W. E. Jackson Award for the outstanding technical paper submitted in the national competition for this prize. The paper, a master's thesis, titled "A Microcomputer-Based Position Updating System for General Aviation Utilizing Loran-C," was written by Joseph P. Fischer and published in March 1982 (ref. 2). A summary of this thesis is included in the papers contributed by Ohio University to these conference proceedings. The paper provides a review of Loran-C development and operation and identifies the significance of the accuracies required with the TD's (time differences). TD's must be converted to positional information and much emphasis has been placed on accomplishing this efficiently with a specially developed algorithm. Distance and bearing angle computations are described.

The Super Jolt microcomputer was used to accomplish the calculations which ultimately were performed in flight to demonstrate finally that such devices could be effectively used to provide low cost implementation of Loran-C navigational information.

REFERENCES

1. Joint University Program for Air Transportation Research - 1982. NASA CP-2224, June 1982.

2. Fischer, Joseph P.: A Microcomputer-Based Position Updating System for General Aviation Utilizing Loran-C. OU NASA TM 85, Ohio University, May 1982.

BIBLIOGRAPHY - TECHNICAL MEMORANDA PREPARED UNDER NASA CONTRACT NGR 36-009-017

(Produced in 1982)

OU NASA
TM number

83 ENHANCED CHARACTER SIZES FOR THE VDM-1 VIDEO DISPLAY BOARD
James D. Nickum, Stanley M. Novacki, III, December 1982.

Described is a software program to provide increased character size on a 3.75-inch diagonal CRT display used in the Loran-C receiver designed by the Avionics Engineering Center at Ohio University.

84 RF FRONT-END INTERFACE AND AGC MODIFICATION
Stephen R. Yost, December 1982.

The Mini-L-82 RF front-end has been interfaced to the Ohio University Loran-C receiver utilizing a modified AGC system.

85 A MICROCOMPUTER-BASED POSITION UPDATING SYSTEM FOR GENERAL AVIATION UTILIZING LORAN-C
Joseph P. Fischer, May 1982.

This report identifies the advantages Loran-C offers over VOR/DME as a primary navigation aid. These advantages include long range coverage by several stations, coverage at low altitudes and the capability to have non-precision approaches at airports not already served by landing aids. Modern digital electronic technology is used to produce a device to convert Loran-C to useful pilot information using simple software algorithms and low-cost microprocessor devices. The cost and lack of availability of suitable processors to execute these algorithms have prevented a Loran-C navigator from being developed prior to this work. Results indicate that the microprocessor-based Loran-C navigator has an accuracy of 1.0 nm or less over an area typically covered by a triad of Loran-C stations and can execute a position update in less than 0.2 seconds. The system has been tested in 30 hours of flight and has proved that it can give reliable and accurate navigation information.

A MICROCOMPUTER-BASED POSITION UPDATING SYSTEM FOR GENERAL AVIATION UTILIZING LORAN-C

Joseph P. Fischer
Avionics Engineering Center
Department of Electrical Engineering
Ohio University
Athens, Ohio

ABSTRACT

The paper, which discusses use of a microprocessor for providing navigation information from the inherent hyperbolic geometries of Loran-C, also identifies the advantages Loran-C offers over VOR/DME as a primary navigation aid. These advantages include long range coverage by several stations, coverage at low altitudes, and the capability to have non-precision approaches at airports not already served by landing aids. Modern digital electronic technology is used to produce a device to convert Loran-C data to useful pilot information using simple software algorithms and low-cost microprocessor devices. The cost and lack of availability of suitable processors to execute these algorithms have prevented a Loran-C navigator from being developed prior to this work. Results indicate that the microprocessor-based Loran-C navigator has an accuracy of 1.0 nm or less over an area typically covered by a triad of Loran-C stations and can execute a position update in less than 0.2 seconds. The system has been tested in 30 hours of flight and has proved that it can give reliable and accurate navigation information.

TECHNICAL MEMORANDUM OU NASA 83

ENHANCED CHARACTER SIZES FOR THE VDM-1 VIDEO DISPLAY BOARD

Described is a software program to provide increased character size on a 3.75-inch diagonal CRT display used in the Loran-C receiver designed by the Avionics Engineering Center at Ohio University.

Stanley M. Novacki III and James D. Nickum
Avionics Engineering Center
Department of Electrical Engineering
Ohio University
Athens, Ohio 45701

I. INTRODUCTION

This technical memorandum will address a display enhancement implemented on the new VDM-1 video display board that is currently installed in the Ohio University Loran-C navigation receiver. This enhancement provides increased character size for easier viewing of the 3.75-inch diagonal CRT display currently being used with the Loran-C receiver. The enhancement is purely software once the display is placed in the low resolution graphics mode. Additionally, certain functions are possible, such as displaying a course deviation indicator (CDI) at the bottom of the display.

II. APPROACH

It was decided to investigate the success of artificially drawing the alpha-numeric symbols in a size more easily recognizable on the three-inch CRT at a typical viewing distance in a general aviation cockpit.

The 6847 video display driver incorporated in the Ohio University Loran-C receiver has an on-chip character generator to produce standard ASCII characters in the devices character mode [1]. Characters from this generator produce 5x7 dot cells. For purposes of experimentation and especially for ease of execution, a 6x8 dot cell was chosen to be evaluated. A sample character in the 6x8 cell is shown in Figure 1. Several of the characters using this new font aspect ratio were evaluated by storing the six 8-bit bytes that represent the dot pattern of the character in the VDM-1 video memory locations. It was determined that the increase of character size of 37% produced no appreciable readability when viewed from a distance of 3 feet. The next logical step was to produce a character font that was significantly larger than the 6x8 cell font size. To make the characters twice as large in both directions with the current memory write technique requires 32 load and store instructions and 3K bytes of memory alone to store the font definitions, which is far too awkward. A simple solution was found on examination of the 6847 data sheet. The 6847 video driver chip could be placed in a course graphics mode of 128x96 pixels per screen. In this mode writing one pixel will write an equivalent 2x2 pixel in the 256x192 high resolution graphics mode. In this manner storing a 6x8 cell font will produce a 12x16 dot graphics character. In the configuration that exists on the VDM-1 board, mode initialization switch settings are changed to set up the 128x96 course graphics mode. This character size is a 450% increase in size over the original 5x7 dot font of the on-board character generator. The readability of these characters is excellent and should provide a better information display in evaluating the Ohio University developed Loran-C receiver.

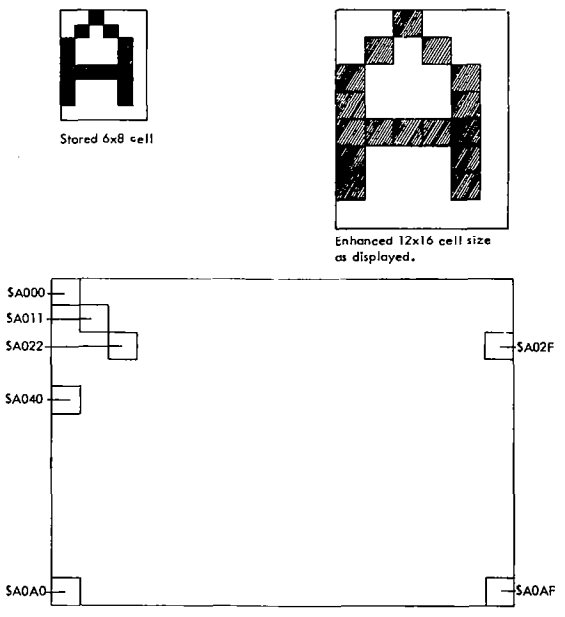

Figure 1.- Character font and display memory map.

III. SOFTWARE

In the 128x96 dot graphics mode the video screen consists of 1536 memory locations. Each row consists of 16 8-bit-wide slices. A "1" or "0" turns each bit in a character cell on or off respectively. Each row of bits begins with a hexidecimal address on a 16-byte boundary; i.e., the first row might be $A000, the next $A010, the next $A020 and so on. To draw a character, the software routines use a two-byte address on page zero to point at the top row of the next printing location; this is conventionally called the cursor. A blank line is stored at the address contained in cursor. The cursor is incremented by $10 to point at the row beneath the one most recently written. The first byte of the character is retrieved from the font bit table and stored at the second row in the character. The cursor is advanced by $10 to point at the next row of the character font, the byte from the font table is fetched and stored and then the process repeats until all 8 of the bytes that describe the character are written at the location desired on the VDM-1 display board. In this manner, any of the printing characters in the font table can be placed in the video display field.

The font table contains all 96 of the ASCII printable characters; the remaining 32 nonprinting characters are trapped out so that nothing is printed on the screen. The non-printing characters have hexidecimal values $00-1F. By subtracting $20 from the ASCII value, the nonprinting characters can be trapped out and not printed. The remaining printable characters range from $20-$7F. Once a valid ASCII printable character is found in this range it is adjusted to the range $00-$5F which corresponds to the values in the offset address table with the same index value. This then provides the offset value to find the 8 bytes in the font table to draw the character.

The font table and offset tables for this version of the software only support the first 64 characters of the 96 printable characters. This includes the numbers, symbols, and upper case characters in the ASCII character set. The lower case letters are mapped into the upper case reference addresses for offset and font table look up. The addition of 256 more bytes of font storage would allow lower case letters to be displayed.

IV. IMPLEMENTATION

The software implementation of this display format is accomplished using the software as listed in the appendix. Essentially, the software consists of three subroutines, two tables and a main program. The entire program as listed is intended as a subroutine with input conditions of (x) = column position on display, (y) = row position on display and (A) = ASCII character value.

The main segment of the program initializes variables and pointers and calls the subroutines to locate the character memory cell and write the character.
There are three subroutines that do the following:

Subroutine CLEAR will clear the entire screen of all characters.

Subroutine SETCSR will, based on the values in the X and Y registers, determine the cursor position in the VDM-1 display memory space to write the character. The value of X can range from $00-$0F, and the value of Y from $00-$0C.

Subroutine DRWCHR will, based on the value in the A accumulator, fetch the proper offset address value from the offset address table and then fetch and write to the screen memory the image of the values stored in the font table.

The two tables consist of the offset address table which provides the indexing based on the ASCII character value into the font table. Table two is the font table which contains the bit pattern in byte-wise form for output to the display screen.

For future implementation, the offset address table can be eliminated by a fixed multiply routine such that the index into the font table can be seen to be an integer integer multiple of 8. For example, if the 6th printable ASCII character is required, the offset necessary to fetch the character from the font table is 6x8, which is 48 or $30. This is the correct entry as shown in the offset address table in the appendix. This is expected to be implemented in the next revision of this software.

V. SUMMARY

Presented here is a relatively simple method of implementing a more readable display for output of Loran-C navigation information to the pilot of the aircraft. The software takes advantage of hardware bit replication for producing the enhanced character size required in this application without the need for excessive memory allocation for font data storage.

VI. REFERENCE

[1] VDM-1 Video Display Board Instruction Manual, Microcomputer Products Inc., Columbus, Ohio, May 30, 1981.

VII. APPENDIX

```
 END PASS 1:   0 ERRORS

     1
*************************************************************************
     2                  *
     3                  *  THIS SOFTWARE WILL PRODUCE ENHANCED ALPHA-NUMERICS FOR
THE
     4                  *  VDM-1 VIDEO DISPLAY CARD INCLUDED IN THE LORAN C
RECEIVER
     5                  *  DESIGNED BY THE AVIONICS ENGINEERING CENTER AT OHIO
     6                  *  UNIVERSITY.  THE DISPLAY CONSISTS OF 12 ROWS OF 16
CHARACTERS.
     7                  *  THE DISPLAY CELL SIZE IS 12 X 16 BITS ASSUMING THE
HIGH RES
     8                  *  DISPLAY MODE OF 256 X 192.  THE VDM-1 IS ASSUMED TO BE
IN THE
     9                  *  128 X 96 LOW RESOLUTION MODE WHEN EXECUTING THIS
SOFTWARE.
    10                  *
    11
*************************************************************************
    12                  *
    13                  *
    14  0000                   ORG 0
    15  0000 00 00      BITPTR BSS 2
    16  0002 00 00      CURSOR BSS 2
    17  0004 00         FONTST BSS 1
    18  0005            BITS   EQU $1200        ;OFFSET ADDRESS TABLE START
    19                  *
    20                  *    MAIN PROGRAM START
    21                  *
    22  1000                   ORG $1000        ;START PROGRAM ADDRESS
    23  1000 20 11 10          JSR CLEAR        ;CLEAR SCREEN
    24  1003 A9 13             LDA =$13
    25  1005 85 04             STA FONTST       ;SET FONT PAGE #
    26  1007 00         INCHR  BRK              ;SET CHAR TO BE PLOTTED AND (X,Y)
    27  1008 20 45 10          JSR SETCSR       ;READY INDIRECT ADDRESSES
    28  100B 20 2A 10          JSR DRWCHR       ;DRAW THE CHARACTER!!!
    29  100E 4C 07 10          JMP INCHR        ;DO IT AGAIN..
    30                  *
    31                  *
    32
*************************************************************************
    33                  *
    34                  *    CLEAR SCREEN SUBROUTINE
    35                  *
    36                  *    ENTRY      NONE
    37                  *
    38                  *    EXIT NONE
    39                  *
    40                  *    USES A,Y
    41                  *
    42
*************************************************************************
    43                  *
    44                  *
    45  1011            CLEAR  EQU *
    46  1011 A9 A0             LDA =$A0
    47  1013 85 03             STA CURSOR+1     ;HIGH BYTE CURSOR POSITION
    48  1015 A9 00      LOOP1  LDA =0
    49  1017 85 02             STA CURSOR       ;LOW BYTE OF CURSOR POSITION
    50  1019 A8                TAY              ;SET INDEX ADDRESS
    51  101A A9 FF             LDA =$FF         ;BLANKING FILL CHR..
    52  101C 91 02      LOOP2  STA (CURSOR),Y
    53  101E C8                INY             BUMP ;INDEX ADDRESS
    54  101F D0 FB             BNE LOOP2        ;LOOP TILL Y=0
    55  1021 E6 03             INC CURSOR+1     ;INCREMENT CURSOR OVER PAGE BOUND
    56  1023 A5 03             LDA CURSOR+1
    57  1025 C9 A8             CMP =$A8         ;TEST IF AT BOT OF DISP SCREEN
    58  1027 D0 EC             BNE LOOP1
    59  1029 60                RTS
    60                  *
```

```
                        *
*************************************************************************
                        *
                        *     DRAW CHARACTER ROUTINE
                        *
                        *     ENTRY      A = ASCII VALUE OF CHARACTER
                        *
                        *          (CURSOR) = 16 BIT ADDRESS OF CURSOR POSITION
                        *
                        *     EXIT       NONE
                        *
                        *     USES       X,Y,A
                        *
*************************************************************************
                        *
                        *
102A                    DRWCHR EQU *
102A A2 08                     LDX =8            ;READY FONT BYTE COUNTER
102C A0 00                     LDY =0            ;READY ZERO-OFFSET
                        *
102E B1 00              PLOT   LDA (BITPTR),Y    ;GET BIT PATTERN
1030 49 FF                     EOR =$FF          ;LET'S GO INVERSE VIDEO
1032 91 02                     STA (CURSOR),Y    ;DRAW IT AT (X,Y) ON SCREEN
1034 A5 02                     LDA CURSOR
1036 18                        CLC
1037 69 10                     ADC =$10          ;FORM NEXT DRAWING ADDRESS
1039 85 02                     STA CURSOR
103B 90 02                     BCC NOFIX
103D E6 03                     INC CURSOR+1      ;ADJUST PAGE-NUMBER IF NEEDED
103F                    NOFIX  EQU *
103F E6 00                     INC BITPTR        ;POINT TO NEXT SET OF BITS
1041 CA                        DEX               ;COUNT BITS JUST PLOTTED
1042 D0 EA                     BNE PLOT          ;IF NOT DONE, PLOT REST OF CHAR
1044 60                 DONE   RTS
                        *
                        *
*************************************************************************
                        *
                        *     SET CURSOR ROUTINE
                        *
                        *      ENTRY      X = COLUMN FOR CURSOR POSITION
                        *                 Y = ROW FOR CURSOR POSITION
                        *                 A = ASCII VALUE OF CHAR TO BE WRITTEN
                        *
                        *
                        *      EXIT      (CURSOR) = ADDRESS OF CURSOR LOCATION
                        *
                        *     USES       NONE
                        *
*************************************************************************
                        *
                        *
                        *
1045                    SETCSR EQU *
1045 48                        PHA               ;SAVE CHR ON STACK
1046 A9 A0                     LDA =$A0
1048 85 03                     STA CURSOR+1
104A A9 00                     LDA =0
104C 85 02                     STA CURSOR        ;INIT CURSOR TO (0,0) ON SCREEN
104E C0 00                     CPY =0
1050 F0 0A                     BEQ ROWSET        ;NO NEED TO ADJUST CURSOR FOR
ROW..
1052 18                 LOCROW CLC               ;COMPUTE NEW ADDRESS FROM X,Y
COORDS
1053 69 80                     ADC =$80          ;MOVE TO NEXT ROW
1055 90 02                     BCC DECNT         ;NO NEED TO FIX PAGE OF CURSOR
1057 E6 03                     INC CURSOR+1      ;DO SO OTHERWISE
1059 88                 DECNT  DEY
```

```
105A D0 F6            BNE LOCROW      ;LOOP UNTIL AT ROW (Y)
105C 85 02     ROWSET STA CURSOR
105E 8A               TXA             ;GET X-COORD TO ADD TO CURSOR
105F 29 0F            AND =$0F        ;NO COL NUMBERS > 15!
1061 18               CLC
1062 65 02            ADC CURSOR      ;ADD IN COLUMN NUMBER
1064 85 02            STA CURSOR      ;FORM ABSOULUTE CURSOR ADDRESS
                 *
                 *    CURSOR READY FOR PLOTTING CHARACTER..
                 *
1066 68               PLA             ;RECOVER CHARACTER TO COMPUTE BIT
TABLE ADD.
1067 48               PHA             ;SAVE IT FOR PLOTTING
1068 18               CLC
1069 E9 20            SBC =$20        ;DISALLOW CTRL CHRS; ALSO SAVES
SPACE!!
106B AA               TAX             ;USE CHAR AS OFFSET INTO ADDRESS
TABLE
106C BD 00 12         LDA BITS,X      ;GET LOW-ORDER BYTE OF FONT ENTRY
106F 85 00            STA BITPTR
1071 68               PLA             ;RECOVER TO COMPUTE WHICH BIT
TABLE
1072 29 40            AND =$40        ;SAVE BIT 6 FOR TABLE
DETERMINATION
1074 18               CLC
1075 2A               ROL A
1076 2A               ROL A
1077 2A               ROL A
1078 65 04            ADC FONTST      ;COMPUTE TABLE PAGE #, CARRY CLEAR
FROM ROL'S
107A 85 01            STA BITPTR+1    ;FORM ABSOLUTE FONT ENTRY POINTER
107C 60               RTS
                 *
                 *
*****************************************************************************
                 *
                 *     OFFSET ADDRESS TABLE FOR NUMBERS AND SYMBOLS
                 *
*****************************************************************************
                 *
                 *
1200                  ORG $1200
1200 00               HEX 00
1201 08               HEX 08
1202 10               HEX 10
1203 18               HEX 18
1204 20               HEX 20
1205 28               HEX 28
1206 30               HEX 30
1207 38               HEX 38
1208 40               HEX 40
1209 48               HEX 48
120A 50               HEX 50
120B 58               HEX 58
120C 60               HEX 60
120D 68               HEX 68
120E 70               HEX 70
120F 78               HEX 78
1210 80               HEX 80
1211 88               HEX 88
1212 90               HEX 90
1213 98               HEX 98
1214 A0               HEX A0
1215 A8               HEX A8
1216 B0               HEX B0
1217 B8               HEX B8
1218 C0               HEX C0
1219 C8               HEX C8
121A D0               HEX D0
121B D8               HEX D8
```

```
 191  121C E0                HEX E0
 192  121D E8                HEX E8
 193  121E F0                HEX F0
 194  121F F8                HEX F8
 195                 *
 196                 *
 197
*************************************************************************
 198                 *
 199                 *     OFFSET ADDRESS TABLE FOR UPPER CASE CHARACTERS
 200                 *
 201
*************************************************************************
 202                 *
 203                 *
 204  1220 00                HEX 00
 205  1221 08                HEX 08
 206  1222 10                HEX 10
 207  1223 18                HEX 18
 208  1224 20                HEX 20
 209  1225 28                HEX 28
 210  1226 30                HEX 30
 211  1227 38                HEX 38
 212  1228 40                HEX 40
 213  1229 48                HEX 48
 214  122A 50                HEX 50
 215  122B 58                HEX 58
 216  122C 60                HEX 60
 217  122D 68                HEX 68
 218  122E 70                HEX 70
 219  122F 78                HEX 78
 220  1230 80                HEX 80
 221  1231 88                HEX 88
 222  1232 90                HEX 90
 223  1233 98                HEX 98
 224  1234 A0                HEX A0
 225  1235 A8                HEX A8
 226  1236 B0                HEX B0
 227  1237 B8                HEX B8
 228  1238 C0                HEX C0
 229  1239 C8                HEX C8
 230  123A D0                HEX D0
 231  123B D8                HEX D8
 232  123C E0                HEX E0
 233  123D E8                HEX E8
 234  123E F0                HEX F0
 235  123F F8                HEX F8
 236                 *
 237                 *
 238
*************************************************************************
 239                 *
 240                 *     CHARACTER FONT TABLE FOR NUMBERS AND SYMBOLS
 241                 *
 242
*************************************************************************
 243                 *
 244                 *
 245  1300                   ORG $1300
 246  1300 00 00 00  SP      HEX 00,00,00,00,00,00,00,00
           00 00 00
           00 00
 247  1308 20 20 20  XCL     HEX 20,20,20,20,00,20,20,00
           20 00 20
           20 00
 248  1310 50 50 50  DQOU    HEX 50,50,50,00,00,00,00,00
           00 00 00
           00 00
 249  1318 50 50 F8  LBS     HEX 50,50,F8,50,F8,50,50,00
           50 F8 50
           50 00
 250  1320 20 78 A0  DOLR    HEX 20,78,A0,70,28,F0,20,00
```

```
            70 28 F0
            20 00
251   1328  C0 C8 10  PRCNT   HEX C0,C8,10,20,40,98,18,00
            20 40 98
            18 00
252   1330  40 A0 A0  ANDSN   HEX 40,A0,A0,40,A8,90,68,00
            40 A8 90
            68 00
253   1338  20 20 20  APOS    HEX 20,20,20,00,00,00,00,00
            00 00 00
            00 00
254   1340  20 40 80  LPAREN  HEX 20,40,80,80,80,40,20,00
            80 80 40
            20 00
255   1348  20 10 08  RPAREN  HEX 20,10,08,08,08,10,20,00
            08 08 10
            20 00
256   1350  20 A8 70  ASTRSK  HEX 20,A8,70,20,70,A8,20,00
            20 70 A8
            20 00
257   1358  00 20 20  PLUSSN  HEX 00,20,20,78,20,20,00,00
            78 20 20
            00 00
258   1360  00 00 00  COMMA   HEX 00,00,00,00,20,20,40,00
            00 20 20
            40 00
259   1368  00 00 00  PERIOD  HEX 00,00,00,00,20,20,00,00
            00 20 20
            00 00
260   1370  00 08 10  OSLASH  HEX 00,08,10,20,40,80,00,00
            20 40 80
            00 00
261   1378  70 88 98  ZERO    HEX 70,88,98,A8,C8,88,70,00
            A8 C8 88
            70 00
262   1380  20 60 20  ONE     HEX 20,60,20,20,20,20,70,00
            20 20 20
            70 00
263   1388  70 88 08  TWO     HEX 70,88,08,70,80,80,F8,00
            70 80 80
            F8 00
264   1390  F8 08 10  THREE   HEX F8,08,10,30,08,88,70,00
            30 08 88
            70 00
265   1398  10 30 50  FOUR    HEX 10,30,50,F8,10,10,10,00
            F8 10 10
            10 00
266   13A0  F8 80 F0  FIVE    HEX F8,80,F0,08,08,88,70,00
            08 08 88
            70 00
267   13A8  38 40 80  SIX     HEX 38,40,80,F0,88,88,70,00
            F0 88 88
            70 00
268   13B0  F8 08 08  SEVEN   HEX F8,08,08,10,20,40,80,00
            10 20 40
            80 00
269   13B8  70 88 88  EIGHT   HEX 70,88,88,70,88,88,70,00
            70 88 88
            70 00
270   13C0  70 88 88  NINE    HEX 70,88,88,78,08,10,E0,00
            78 08 10
            E0 00
271   13C8  00 00 20  COLON   HEX 00,00,20,00,20,00,00,00
            00 20 00
            00 00
272   13D0  00 00 20  SEM     HEX 00,00,20,00,20,20,40,00
            00 20 20
            40 00
273   13D8  10 20 40  LTHAN   HEX 10,20,40,80,40,20,10,00
            80 40 20
            10 00
274   13E0  00 00 F8  EQALS   HEX 00,00,F8,00,F8,00,00,00
```

```
                00 F8 00
                00 00
  275   13E8 40 20 10  GTHAN  HEX 40,20,10,08,10,20,40,00
                08 10 20
                40 00
  276   13F0 70 88 08  QUESTN HEX 70,88,08,30,20,00,20,00
                30 20 00
                20 00
  277   13F8 70 88 A8  ATSIGN HEX 70,88,A8,B8,B0,80,78,00
                B8 B0 80
                78 00
  278                  *
  279                  *
  280
*************************************************************************
  281                  *
  282                  *     CHARACTER FONT TABLE FOR UPPER CASE LETTERS
  283                  *
  284
*************************************************************************
  285                  *
  286                  *
  287   1400 20 50 88  CAPA   HEX 20,50,88,88,F8,88,88,00
                88 F8 88
                88 00
  288   1408 F0 88 88  CAPB   HEX F0,88,88,F0,88,88,F0,00
                F0 88 88
                F0 00
  289   1410 70 88 80  CAPC   HEX 70,88,80,80,80,88,70,00
                80 80 88
                70 00
  290   1418 F0 88 88  CAPD   HEX F0,88,88,88,88,88,F0,00
                88 88 88
                F0 00
  291   1420 F8 80 80  CAPE   HEX F8,80,80,F0,80,80,F8,00
                F0 80 80
                F8 00
  292   1428 F8 80 80  CAPF   HEX F8,80,80,F0,80,80,80,00
                F0 80 80
                80 00
  293   1430 70 88 80  CAPG   HEX 70,88,80,80,90,88,78,00
                80 90 88
                78 00
  294   1438 88 88 88  CAPH   HEX 88,88,88,F8,88,88,88,00
                F8 88 88
                88 00
  295   1440 70 20 20  CAPI   HEX 70,20,20,20,20,20,70,00
                20 20 20
                70 00
  296   1448 08 08 08  CAPJ   HEX 08,08,08,08,08,88,70,00
                08 08 88
                70 00
  297   1450 88 90 A0  CAPK   HEX 88,90,A0,C0,A0,90,88,00
                C0 A0 90
                88 00
  298   1458 80 80 80  CAPL   HEX 80,80,80,80,80,80,F8,00
                80 80 80
                F8 00
  299   1460 88 B8 A8  CAPM   HEX 88,B8,A8,A8,A8,88,88,00
                A8 A8 88
                88 00
  300   1468 88 80 C8  CAPN   HEX 88,80,C8,A8,98,88,88,00
                A8 98 88
                88 00
  301   1470 70 88 88  CAPO   HEX 70,88,88,88,88,88,70,00
                88 88 88
                70 00
  302   1478 F0 88 F8  CAPP   HEX F0,88,F8,F0,80,80,80,00
                F0 80 80
                80 00
  303   1480 70 88 88  CAPQ   HEX 70,88,88,88,A8,90,68,00
                88 A8 90
```

```
                68 00
 304   1488     F0 88 88   CAPR    HEX F0,88,88,F0,A0,90,88,00
                F0 A0 90
                88 00
 305   1490     70 88 80   CAPS    HEX 70,88,80,70,08,88,70,00
                70 08 88
                70 00
 306   1498     F8 A8 20   CAPT    HEX F8,A8,20,20,20,20,20,00
                20 20 20
                20 00
 307   14A0     88 88 88   CAPU    HEX 88,88,88,88,88,88,70,00
                88 88 88
                70 00
 308   14A8     88 88 88   CAPV    HEX 88,88,88,A0,A0,20,20,00
                A0 A0 20
                20 00
 309   14B0     88 88 88   CAPW    HEX 88,88,88,A8,A8,A8,50,00
                A8 A8 A8
                50 00
 310   14B8     88 88 50   CAPX    HEX 88,88,50,20,50,88,88,00
                20 50 88
                88 00
 311   14C0     88 88 50   CAPY    HEX 88,88,50,20,20,20,20,00
                20 20 20
                20 00
 312   14C8     F8 08 10   CAPZ    HEX F8,08,10,20,40,80,F8,00
                20 40 80
                F8 00
 313   14D0     F8 C0 C0   LBRKT   HEX F8,C0,C0,C0,C0,C0,F8,00
                C0 C0 C0
                F8 00
 314   14D8     00 80 40   LSLSH   HEX 00,80,40,20,10,08,00,00
                20 10 08
                00 00
 315   14E0     F8 18 18   RBRKT   HEX F8,18,18,18,18,18,F8,00
                18 18 18
                F8 00
 316   14E8     20 50 81   CARET   HEX 20,50,81,00,00,00,00,00
                00 00 00
                00 00
 317   14F0     00 00 00   USCORE  HEX 00,00,00,00,00,00,F8,00
                00 00 00
                F8 00
 318                                   END

END PASS 2:   0 ERRORS

1 SYMB   ADDR  DEF   REFERENCES

ANDSN   1330   252
APOS    1338   253
ASTRSK  1350   256
ATSIGN  13F8   277
BITPTR  0000    15      91   143   151    81
BITS    1200    18     142
CAPA    1400   287
CAPB    1408   288
CAPC    1410   289
CAPD    1418   290
CAPE    1420   291
CAPF    1428   292
CAPG    1430   293
CAPH    1438   294
CAPI    1440   295
CAPJ    1448   296
CAPK    1450   297
CAPL    1458   298
CAPM    1460   299
CAPN    1468   300
CAPO    1470   301
CAPP    1478   302
CAPQ    1480   303
```

CAPR	1488	304										
CAPS	1490	305										
CAPT	1498	306										
CAPU	14A0	307										
CAPV	14A8	308										
CAPW	14B0	309										
CAPX	14B8	310										
CAPY	14C0	311										
CAPZ	14C8	312										
CARET	14E8	316										
CLEAR	1011	45	23									
COLON	13C8	271										
COMMA	1360	258										
CURSOR	0002	16	47	49	55	56	84	87	89	117	119	125
			128	132	133	52	83					
DECNT	1059	126	124									
DOLR	1320	250										
DONE	1044	94										
DQOU	1310	248										
DRWCHR	102A	77	28									
EIGHT	13B8	269										
EQALS	13E0	274										
FIVE	13A0	266										
FONTST	0004	17	25	150								
FOUR	1398	265										
GTHAN	13E8	275										
INCHR	1007	26	29									
LBRKT	14D0	313										
LBS	1318	249										
LOCROW	1052	122	127									
LOOP1	1015	48	58									
LOOP2	101C	52	54									
LPAREN	1340	254										
LSLSH	14D8	314										
LTHAN	13D8	273										
NINE	13C0	270										
NOFIX	103F	90	88									
ONE	1380	262										
OSLASH	1370	260										
PERIOD	1368	259										
PLOT	102E	81	93									
PLUSSN	1358	257										
PRCNT	1328	251										
QUESTN	13F0	276										
RBRKT	14E0	315										
ROWSET	105C	128	121									
RPAREN	1348	255										
SEM	13D0	272										
SETCSR	1045	114	27									
SEVEN	13B0	268										
SIX	13A8	267										
SP	1300	246										
THREE	1390	264										
TWO	1388	263										
USCORE	14F0	317										
XCL	1308	247										
ZERO	1378	261										

TECHNICAL MEMORANDUM OU NASA 84

RF FRONT END INTERFACE AND AGC MODIFICATION

The Mini-L-82 RF front end has been interfaced to the Ohio University LORAN-C receiver utilizing a modified AGC system.

Stephen R. Yost

Avionics Engineering Center
Department of Electrical Engineering
Ohio University
Athens, Ohio 45701

I. INTRODUCTION

The latest RF front end built by Burhans (Mini-L-82) has been successfully interfaced to the Ohio University LORAN-C receiver (Figure 1). In order for the front end to operate optimally, modifications were made to existing automatic gain control (AGC) circuitry already developed for the Ohio University LORAN-C receiver. This AGC circuit is described in reference 1. This technical memorandum will describe the hardware modifications to the AGC and other interface circuitry, as well as some preliminary results.

II. RF FRONT END DESCRIPTION

The Mini-L-82 RF front end (refer to Figures 2 and 3) is similar in overall design to the previous front end used with the Ohio University receiver but it has a much narrower bandwidth. Also, the Mini-L-82 has a much improved response to lower input signal levels. The output of the front end is a negative-going zero crossing pulse which is 10 microseconds long (Figure 4). In order for the receiver to operate properly, this pulse is inverted using a 7404 TTL inverter. The front end output is also open collector; therefore, an external pull-up resistor is provided. The positive-going 10 microsecond pulse is applied to the existing receiver circuitry which extends the pulse to 70 microseconds using a 74123 monostable. This 70-microsecond pulse is the optimum value for the search and track software routines. Efforts were made to adjust search and track software parameters to use the 10-microsecond pulse. However, it was found that this pulse width increased search time substantially and also created difficulties for the tracking loops because of the LORAN-C phase code which causes the zero crossing pulse to shift five microseconds with each phase reversal. Therefore, the interface between the Mini-L-82 and the receiver is essentially the same as that for the old front end.

III. AGC CIRCUIT DESIGN

The AGC circuit is based roughly on the circuit designed for use with the old front end (ref. 2), and is part of the sensor processor section of the Ohio University LORAN-C receiver (Figures 5 to 7). The envelopes of all the tracked LORAN-C stations are sampled individually with the sampled voltages stored on capacitors. Each tracked station has its own "channel" in the AGC circuit (Figure 8). Channel address control is provided by the microcomputer. Since the magnitude of the sampled voltage often exceeds five volts, all of the AGC circuit components are CMOS integrated circuits with a twelve-volt power supply.

Even though the basic circuit design is similar to the previous AGC circuit, there are important differences to optimize performance with the new front end. The front end is designed to optimize performance at low signal levels. The AGC will "turn down" the gain on the LORAN-C stations until the region of best front end performance is reached. Since the various LORAN-C stations in a given chain are received at various signal amplitudes, it is the function of the AGC to reduce the gain on each

station proportionate to that station's received signal level. The end result is that all of the LORAN-C stations are processed at a constant signal level. This condition is essential to the proper operation of an envelope-detector front end such as the Mini-L-82.

In the previous AGC circuit, the envelope was sampled during a 20-microsecond sampling window that was delayed 40 microseconds from the zero crossing. It was determined that this sampling area could possibly contain some sky wave contamination. In the current AGC design, the envelope is sampled during a 20-microsecond window starting at the zero crossing. The sampled voltage is dependent on the slope of the envelope at that point. Strong stations have a large slope; hence, a larger sample voltage is stored for that station. The sampled voltages are stored on their respective channels and adjusted for optimum front end performance by the gain and offset adjustment op-amp in the circuit. The AGC amplifier is an integral part of the Mini-L-82 front end design and provides up to 60 dB of gain.

The AGC circuit was built on a Vector (tm) circuit card in the receiver that also contains 8K bytes of ROM/RAM memory and the serial interface (Figures 9, 10, and 11). Tantalum capacitors were used for the sample and hold circuits because of their low leakage characteristic.

IV. RESULTS AND FURTHER OPTIMIZATION

Preliminary results indicate that the new front end AGC combination perform satisfactorily. Side-by-side bench tests with Trimble 10A and Texas Instruments 9900 LORAN-C receivers have proven that the proper time differences are being obtained. Extensive bench tests and flight tests will follow as time permits.

Further optimization of the AGC circuit will occur as software to track all of the stations in a LORAN-C chain is developed. The AGC circuit was designed to sample up to six separate LORAN-C stations. Along with expanded station tracking software, a more sophisticated search routine is also under development. It is also planned to develop a printed circuit board for the AGC and enclose it with the RF front end in a sealed enclosure to reduce interference from the other digital circuits of the microcomputer.

V. ACKNOWLEDGEMENTS

The design, construction, and testing of the Mini-L-82 and the AGC circuitry have been funded as a part of the continuing development of Ohio transportation research as a part of the continuing development of Ohio University's LORAN-C receiver. The author would like to thank Mr. Ralph Burhans for continuing his quest for a better front end for the Ohio University LORAN-C receiver. His advise and expertise were of great help in this project. Also providing invaluable assistance were Mr. Jim Nickum, Dr. Robert Lilley, Mr. Daryl McCall, and Ms. Fujiko Oguri. Mr. Nickum took all of the photographs that appear in this report.

VI. REFERENCES

1. Yost, Stephen R., "Commutated Automatic Gain Control System", OU NASA TM-81, Avionics Engineering Center, Department of Electrical Engineering, Ohio University, Athens, Ohio, 45701, November 1981.

2. Lilley, Dr. R.W. and Daryl McCall, "A LORAN-C Prototype Navigation Receiver for General Aviation", OU NASA TM-80, Avionics Engineering Center, Department of Electrical Engineering, Ohio University, Athens, Ohio, 45701, August 1981.

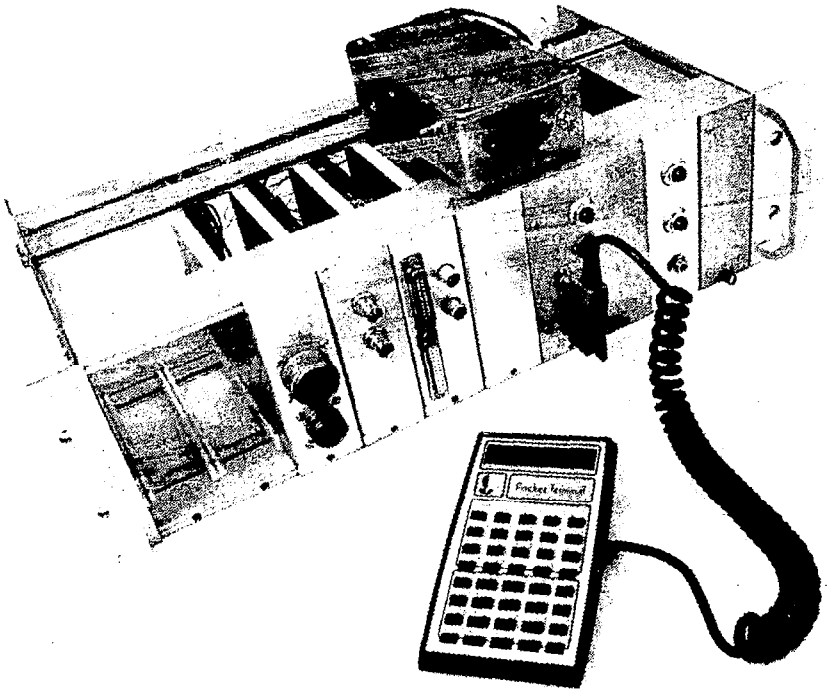

Figure 1.- Ohio University Loran-C receiver.

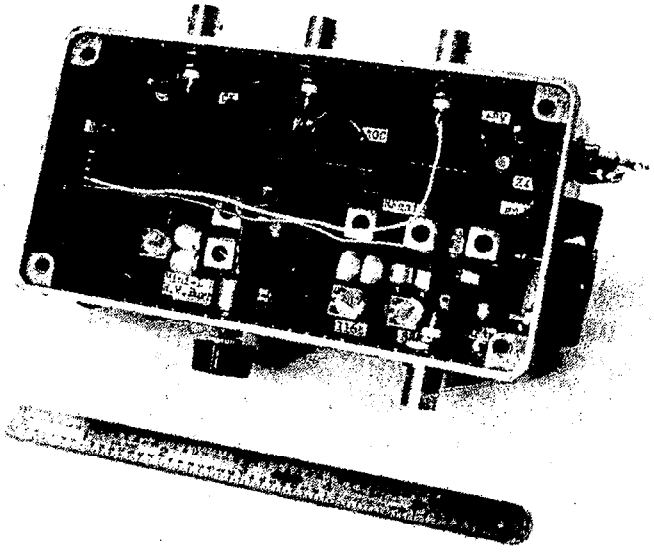

Figure 2.- Mini-L-82 front end.

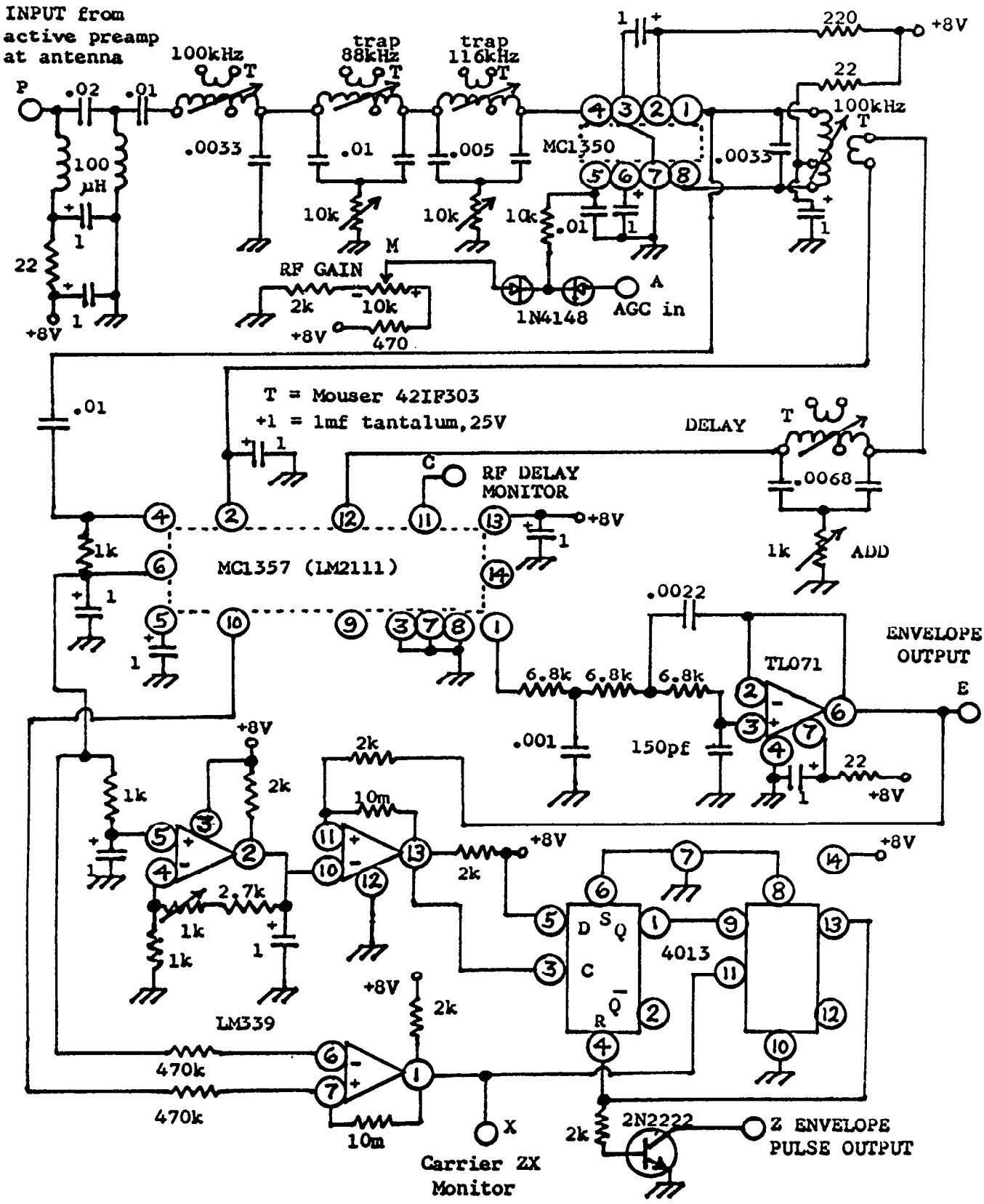

Figure 3.- Mini-L-82 circuit diagram.

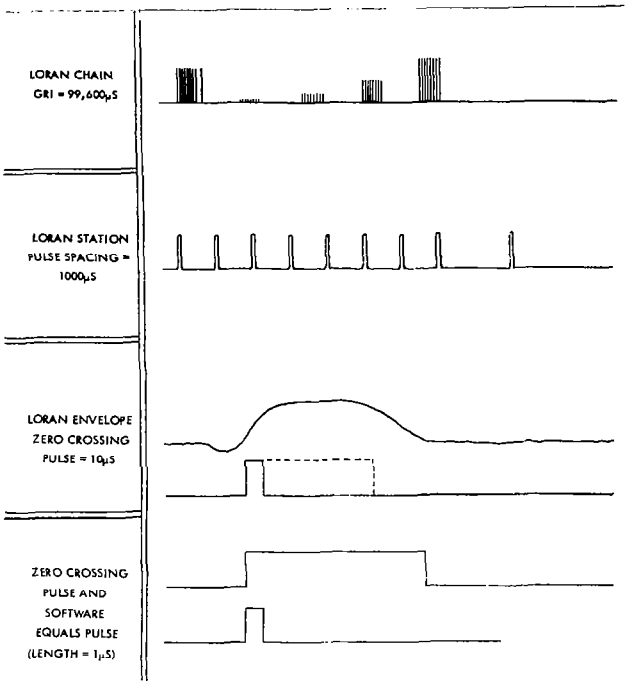

Figure 4.- Loran-C chain parameters.

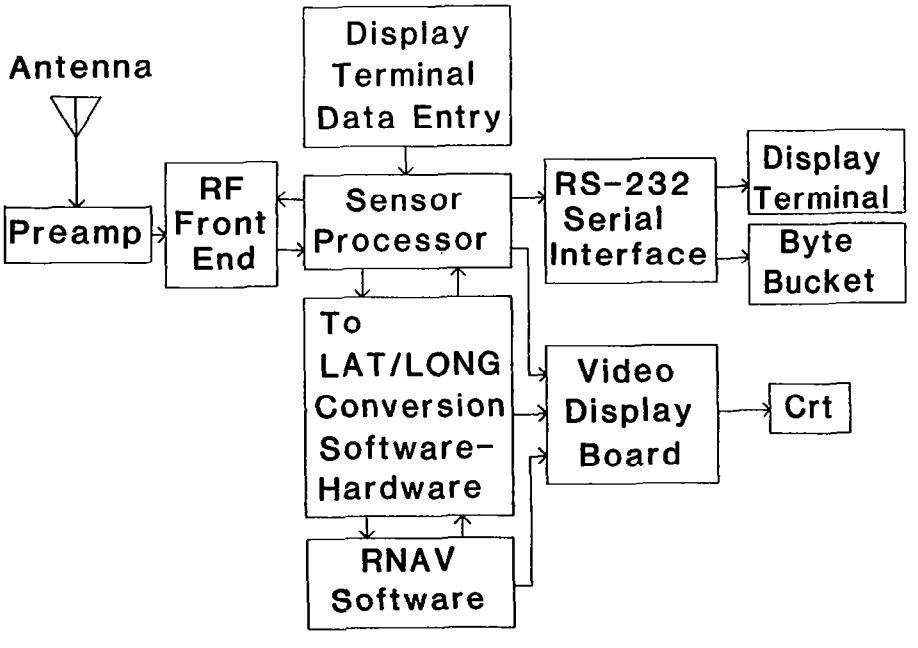

Figure 5.- Receiver block diagram.

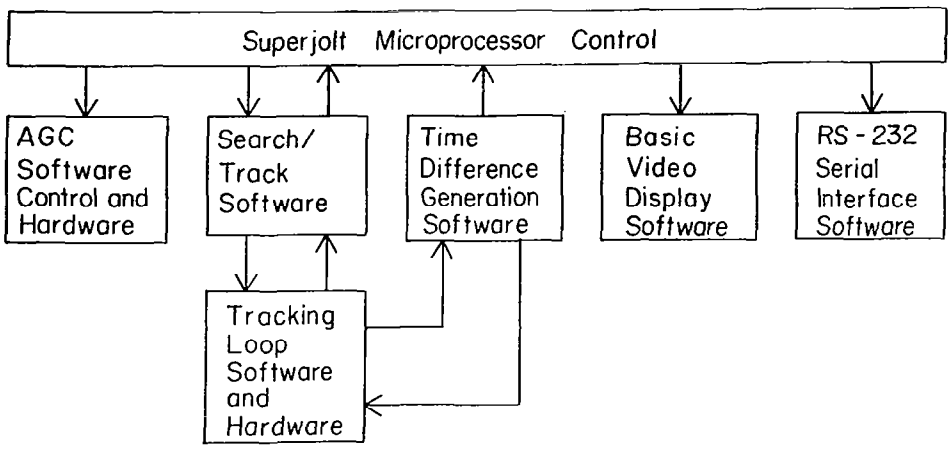

Figure 6.- Sensor processor block diagram.

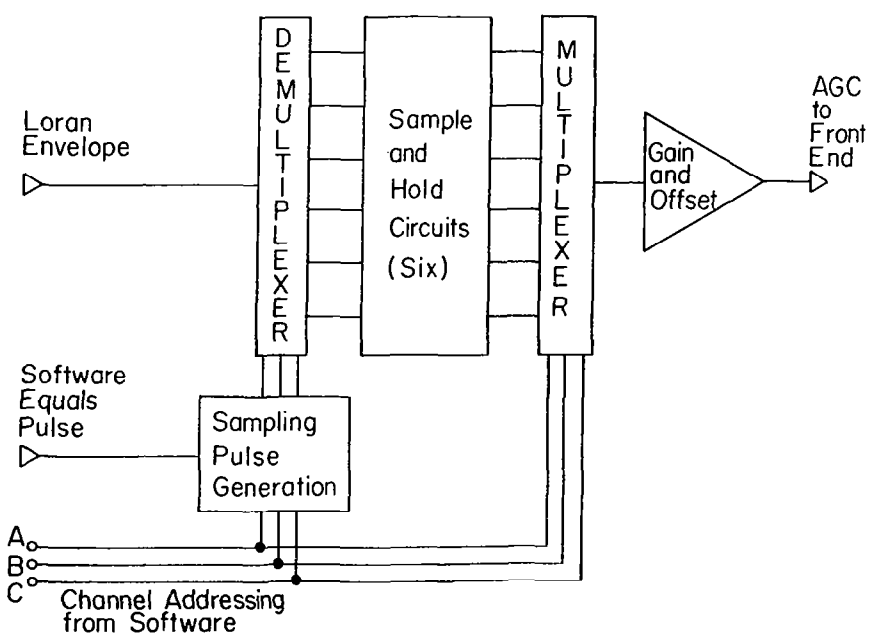

Figure 7.- AGC block diagram.

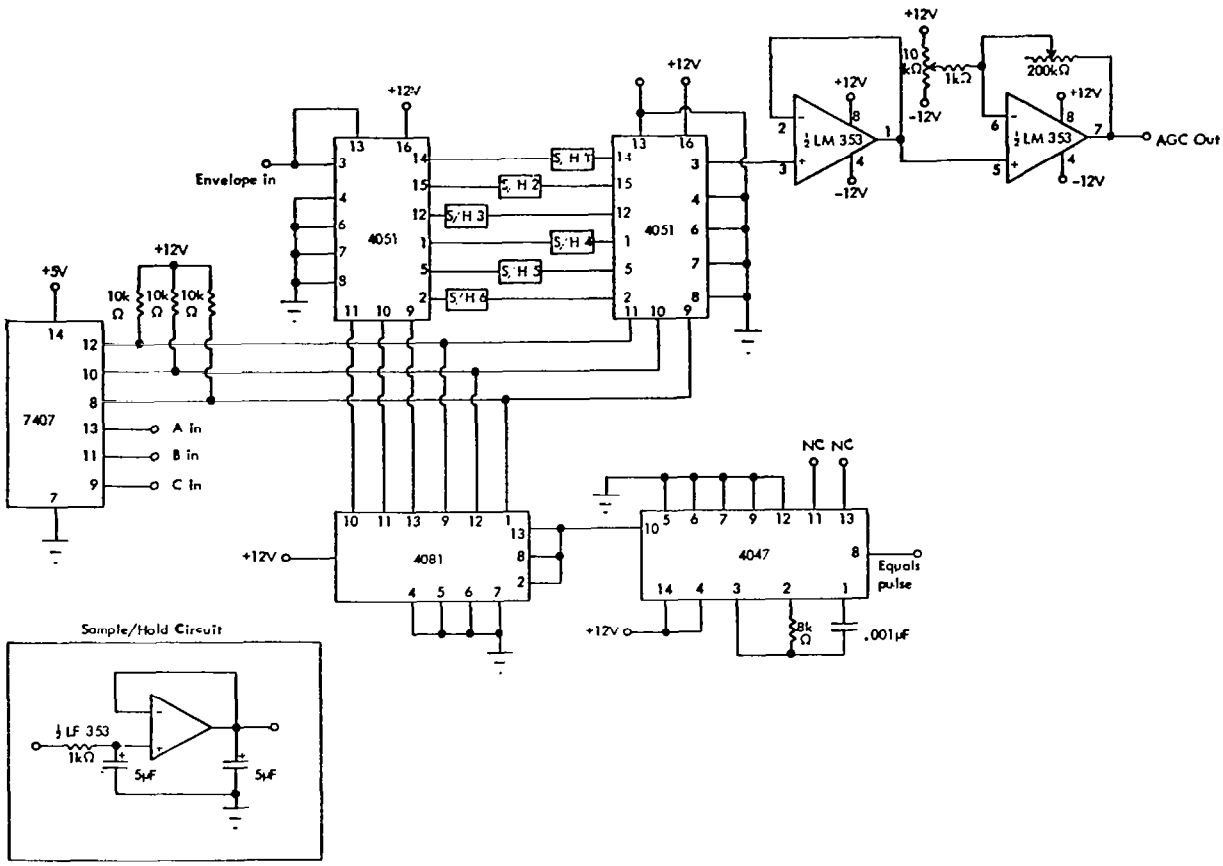

Figure 8.- AGC circuit diagram.

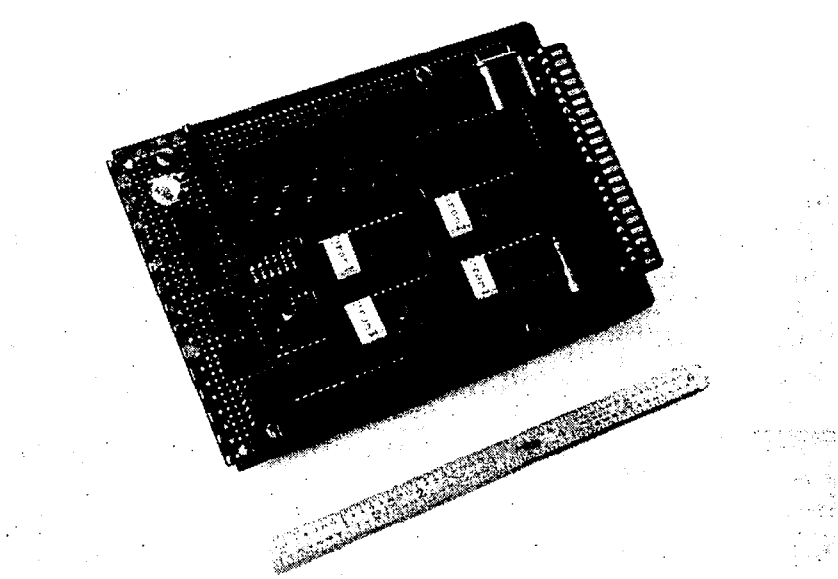

Figure 9.- AGC/memory/interface board.

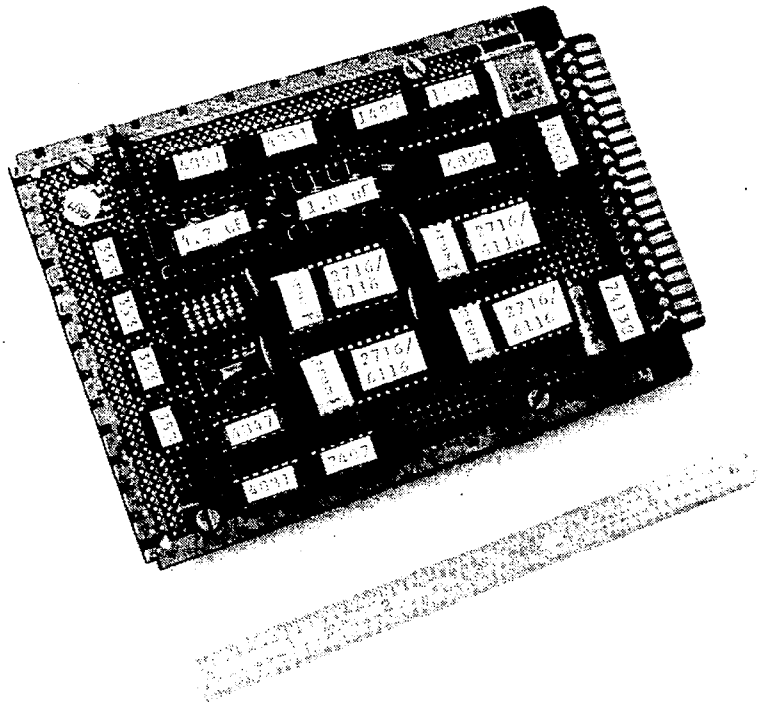

Figure 10.- AGC/memory/interface board components.

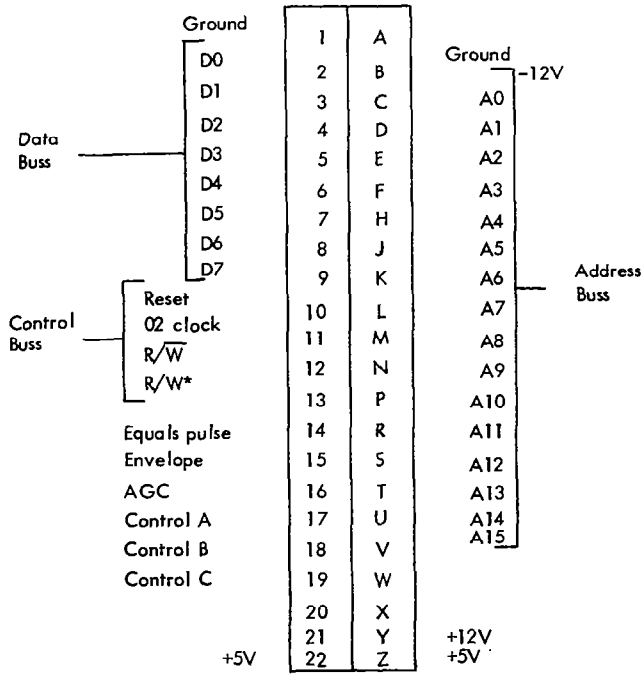

Figure 11.- Edge connector pin assignments.

PRELIMINARY DESCRIPTION OF THE AREA NAVIGATION SOFTWARE FOR A MICROCOMPUTER-BASED LORAN-C RECEIVER

This area navigation software gives automatic capability to the Ohio University Loran-C receiver based on a microprocessor (MOS 6502).

Fujiko Oguri
Avionics Engineering Center
Department of Electrical Engineering
Ohio University
Athens, Ohio 45701

I. INTRODUCTION

This report describes engineering work which has been done to make Loran-C a more useful, practical system for general aviation. Specifically, this work deals with the development of new software and implementation of this software on a microcomputer (MOS 6502) to provide high quality navigation information directly to the pilot.

This software development provides Area/Route Navigation (RNAV) information from Time Differences (TDs) in raw form using an elliptical Earth model and a spherical model [1]. It is prepared for the microcomputer-based Loran-C receiver developed at the Ohio University Avionics Engineering Center. To compute navigation information, a (MOS 6502) microcomputer and a mathematical chip (AM 9511A) were combined with the Ohio University Loran-C receiver. Final data in this report reveals that this software does indeed provide accurate information with reasonable execution times.

II. COMPUTATION FOR AREA NAVIGATION

A. Range and Bearing Angle

The computation of range and bearing angle between two points on Earth is not simple, because the shape of the Earth is an irregular ellipsoid. It is not necessary to do exact measurements, but there is certain accuracy which is required for area navigation (Advisory Circular 90-45A [2]). On the other hand, the memory capacity and execution time of the microcomputer are considerations for a microprocessor-based Loran-C receiver.

The elliptical Earth model designed by the Aeronautical Chart and Information Center [3] was chosen for this computation. This model gives sufficient accuracy and is feasible for the area navigation application. The equations for range and bearings are the following:

$$\text{Range} = a\,\theta - \frac{a\,f}{4}\Big[\,(\sin\beta + \sin\beta_1)^2\,\frac{1-\cos\theta}{\sin\theta}\,\frac{\theta - \sin\theta}{\sin\theta} + \left(\frac{\sin\beta - \sin\beta_1}{\sin\beta}\right)^2 (1+\cos\theta)\,(\theta + \sin\theta)\,\Big]$$

$$\text{Bearing} = \tan^{-1}\frac{\cos\beta_1\,\sin(\lambda - \lambda_1)}{\cos\beta\,\sin\beta_1 - \sin\beta\,\cos\beta_1\,\cos(\lambda - \lambda_1)}$$

where a = major (equatorial) radius
f = flattening of reference ellipsoid
ϕ = geodetic latitude of the receiver
ϕ_1 = geodetic latitude of the waypoint

$\tan\beta = (1 - f)\tan\phi$
$\tan\beta_1 = (1 - f)\tan\phi_1$

θ = angle from receiver to waypoint
λ = geodetic longitude of the receiver
λ_1 = geodetic longitude of the waypoint

B. Cross Track Error

Cross track error (CTE) indicates the position error measured on the perpendicular from the desired track to the actual position of the aircraft. Cross track error bearing (CTEB) indicates the angle difference between the desired track and actual track. Since the error of the

spherical model is small for a short distance, the spherical trigonometry is adequate for the CTE calculation which provides small distance indications (less than 10 nm).

C. Ground Speed and Estimated Time of Arrival

As an application for Loran-C area navigation, the computation cycle is about 1.3 seconds and the range difference is less than 0.1 nm, so that a small range error causes a large ground speed (GS) error. To solve this problem, averaging is applied after sixteen GS are calculated. But averaging is not a complete solution, because each measuring point has at least 0.2 nm floating error which causes at least 45 nm error after the averaging with sixteen references. More references produce more accurate averaging; however, this consumes more of the limited memory space.

The recursive filter loop is added after the averaging. This filter is a valuable aid in data smoothing and prediction, and is easily implemented on a microprocessor system [4]. In this case, only the first-order gain is considered because of the memory capacity limit:

Initial condition is:

$$GS = 0$$

Inside the loop:

$$GS = GSP + G1(GSO - GSP)$$

For the next calculation:

$$GSP = GS$$

Where GSP is ground speed predicted
GSO is ground speed observed by Loran-C receiver
G1 is first-order gain.

Estimated time of arrival (ETA) can be output after the calculations of range and ground speed are available.

III. THE MICROCOMPUTER SYSTEM APPLICATION

A. Hardware

The microprocessor is the heart of the hardware system. The MOS Technology 6502 was chosen for the Loran-C receiver, developed at Ohio University, because of the low price and speed. Most of the microprocessor work done at Ohio University was done using a Super-Jolt microcomputer [5].

The TD-to-position and area navigation calculations involve multiprecision addition, subtraction, multiplication, division, and trigonometric functions. Additionally, it is necessary to use a floating-point format since the numerical range is approximately 10^{-7} to 10^{6} for the calculations. It is desirable to use an external device to support the microprocessor for these calculations.

The AM 9511A by Advanced MicroDevices, a peripheral mathematics processor, is used to do the necessary floating-point calculations. In order to interface the AM 9511A to the Jolt microcomputer system, a M6820 peripheral interface adapter (PIA) is used as the additional hardware interface.

A CRT display is attached to the Ohio University Loran-C receiver. In order to display navigation information on the CRT screen, a VDM-1 videographic board by Micro Computer Products, which utilizes a MC6847 video display chip, is used.

B. Interfacing Software

A set of subroutines, developed by Fischer ([1], pp. 76-80), initializes the hardware interface and the 9511, writes a single floating-point (32-bit) number, read a floating-point (32-bit) number, send an eight-bit word to the 9511 representing a command to be executed, and read the 9511 eight-bit status register.

C. Navigation Programs

There are two navigational programs for the Loran-C receiver. Main program "LORPROM4" does Loran-C phased locked-loop operation to provide two TDs [6]. After two TDs are calculated, ten GRIs later, the main program jumps to the subprogram "FRNAVN2." There are two parts in this subprogram. Part one, "COORD," provides coordinates of the position using two TDs as input data, and the part two, "RNAV", provides area navigation information after the position is computed.

The main program and subprogram form one loop which takes about twelve to thirteen GRIs to execute. Figure 1 shows the scheme of the navigation software and the address map for the two programs.

D. RNAV Program

The "RNAV" program is the main subject of this report. Figure 2 shows the flow chart of the whole program. There are four parts in this program.

The first part of the RNAV program takes care of finding selected from/to waypoints from the user's waypoint table, displaying from/to waypoints and converting the degree, minute, second format (BCD) to the floating-point format in radian units. The coordinates of waypoints and desired waypoint numbers are input into the waypoint table from the keyboard by the user.

The second part of the RNAV program calculates range and bearing angle. For the first loop, which includes all programs (LORPROM4, COORD, and RNAV), the user chooses desired waypoints which calculate range and bearing angle of the desired course. From the second loop, it starts calculating range and bearing angle between the position of the aircraft and a TO waypoint.

After range and bearing angle are calculated, "RNAV's" third part calculates CTEB and CTE. This is very convenient for a user to display whether the off-course is to the left or right. Letter "L" or "R" is added to the front of CTEB display to correct the course. Also, a CDI display is added on the CRT screen. The CDI display has a range of ±2 nm and a resolution of 0.1 nm.

RNAV's fourth part takes care of the ground speed calculation and estimated time of arrival at the waypoint. Since averaging is applied for the ground speed calculation, the first sixteen loops collect references of range, CTEB, and GRI loop number. After sixteen loops, this part calculates the average ground speed using sets of sixteen references. If one loop takes thirteen GRI (for example: GRI = 99600μs), the average period becomes about 1.3 seconds. After the averaging, the average ground speed goes through recursive filter loops, as was mentioned before. The first-order gain of 0.035 is used for the Ohio University Loran-C receiver because it provides the fastest response without noisy data. Although this response is still slow for an accelerative flight, it is reasonable for a constant ground speed representative of cruise flight.

All navigation information is displayed on a CRT screen. Figure 3 shows a Loran-C receiver display. To display information on the screen, all data except CDI must be converted from floating-point format to BCD.

IV. TEST RESULTS

Accuracy tests were accomplished by picking random locations in the Loran-C coverage region. According to the simulation of the RNAV program, the range/bearing calculation indicates high accuracy (see Table 1). Although TD-to-position coordinate conversion error is considered, the accuracy is on the order of 0.1 to 0.3 nm. Moreover, the effects of the deviation of the TDs in the receiver should be considered; however, this effect is a function of how the Loran-C pulse is sampled.

Flight testing was done to prove the capability of the Ohio University Loran-C microcomputer-controlled navigation system. The test showed about ±0.5 nm position accuracy ([1], pp. 94-97). Therefore, this system indicates a sufficient accuracy for enroute/terminal navigation and for certain landing approaches. However, since the accuracy is mainly dependent on the deviation of the TD's, more studies are needed for this receiver design. Additional flight tests are scheduled to check the ground speed responsiveness with a CDI display for enroute landing approach.

V. ACKNOWLEDGEMENTS

Acknowledgements are made to the following people who aided with the research effort represented by this paper: Dr. Richard H. McFarland, Director and M. S. thesis advisor; Dr. Robert W. Lilley, associate director; and student researchers Joseph P. Fischer, Daryl McCall, Steven Yost, and Stanley Novacki.

VI. REFERENCES

[1] Fischer, Joseph P., "A Microcomputer-Based Position Updating System for General Aviation Utilizing Loran-C," M.S. thesis, Ohio University, Athens, Ohio, March 1982.

[2] "FAA Advisory Circular 90-45A," Department of Transportation, Federal Aviation Administration, Washington, D.C., 20590, February 1975.

[3] "Geodetic Distance and Azimuth Computations for Lines Over 500 Miles," Aeronautical Chart and Information Center, Technical Report No. 80, St. Louis, Mo., December 1959.

[4] Norris, D. O., and L. E. Snyder, "Analysis of the Automatic Traffic Advisory Resolution Service (ATARS) Tracking and Turn Detection Function," OU/AEC/EER 47-6, Avionics Engineering Center, Department of Electrical Engineering, Ohio University, Athens, Ohio, August 1981.

[5] "JOLT Demon Software Manual," Microcomputer Associates Inc., Santa Clara, California, 1975.

[6] Lilley, R. W., and D. L. McCall, "A Loran-C Prototype Navigation Receiver for General Aviation," OU/NASA Technical Memorandum 80, Avionics Engineering Center, Department of Electrical Engineering, Ohio University, Athens, Ohio, August 1981.

Range/Bearing Mean Error without Coordinate Conversion Error		
	Range	Bearing
0 < Range < 100 nm	0.001 nm	0.03°
100 < Range < 200 nm	0.006 nm	0.05°
200 < Range < 300 nm	0.015 nm	0.04°

Range/Bearing Mean Error with Coordinate Conversion Errors		
	Range	Bearing
0 < Range < 100 nm	0.072 nm	0.07°
100 < Range < 200 nm	0.121 nm	0.06°
200 < Range < 300 nm	0.304 nm	0.05°

Table 1.- Range/bearing calculation accuracy.

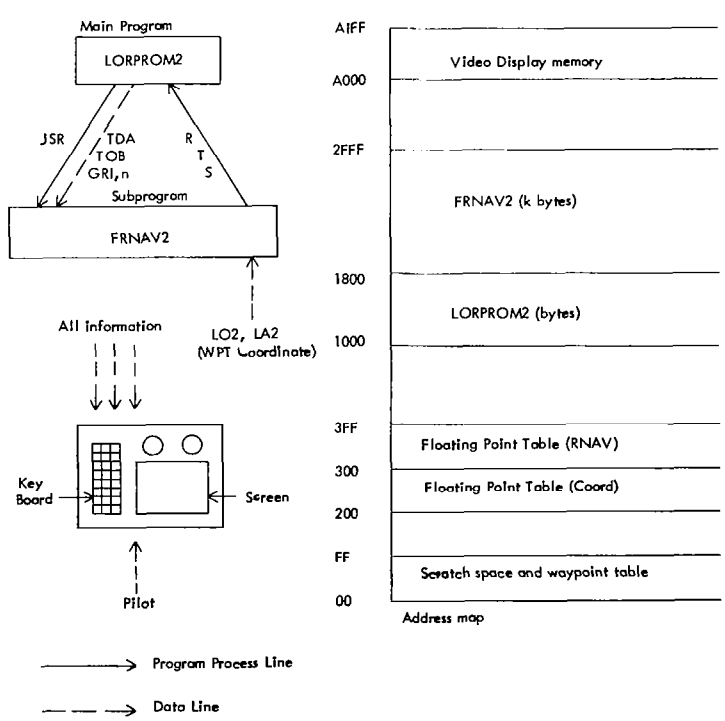

Figure 1.- Loran-C receiver software.

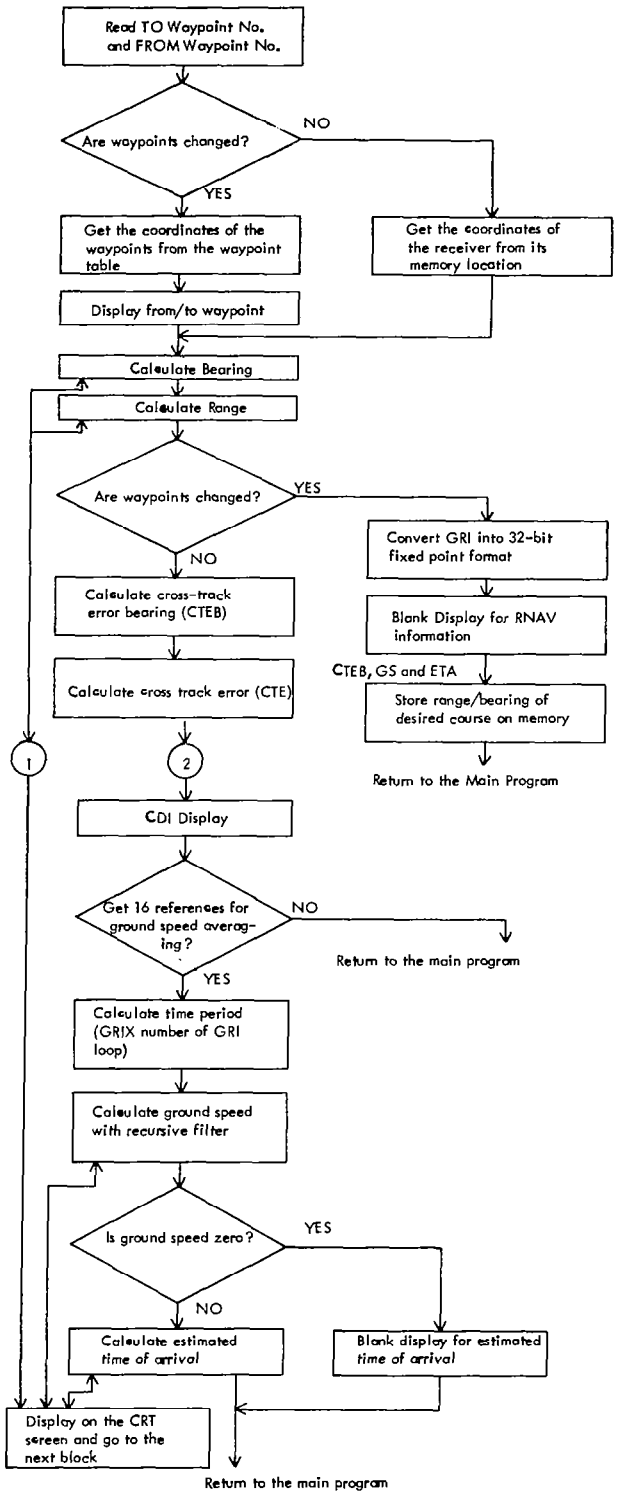

Figure 2.- Flow chart of RNAV program.

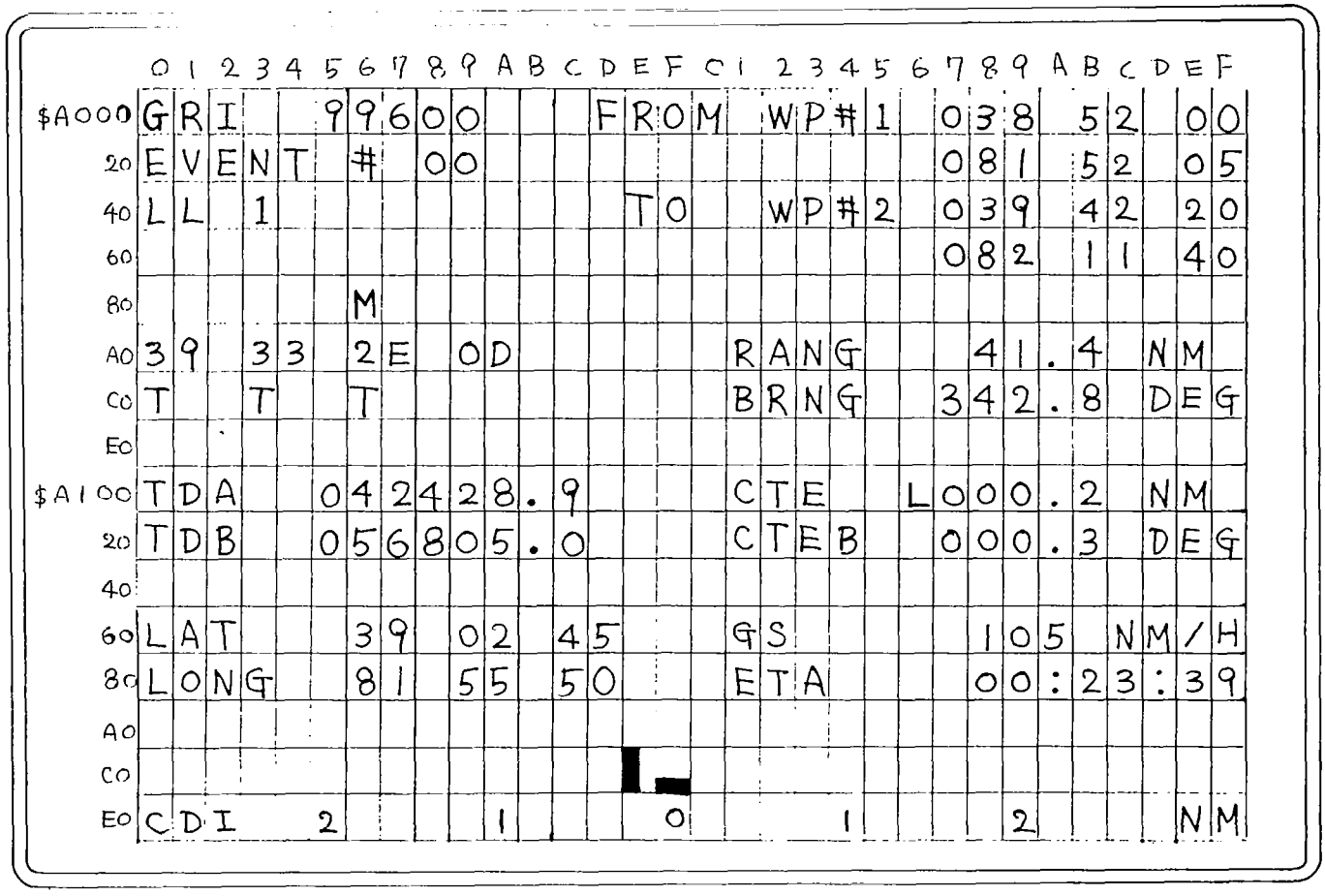

Figure 3.- Loran-C receiver CRT display.

LORAN-C RF PROCESSING

Ralph W. Burhans
Avionics Engineering Center
Department of Electrical Engineering
Ohio University
Athens, Ohio 45701

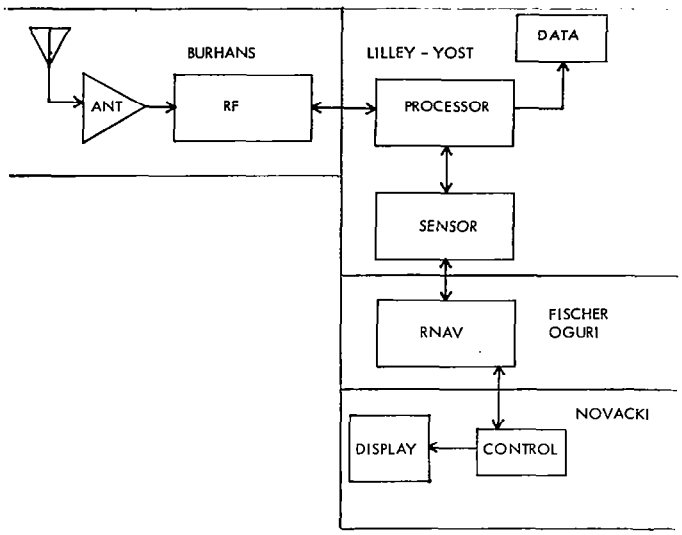

LORAN-C RECEIVER EFFORT
1981-1982

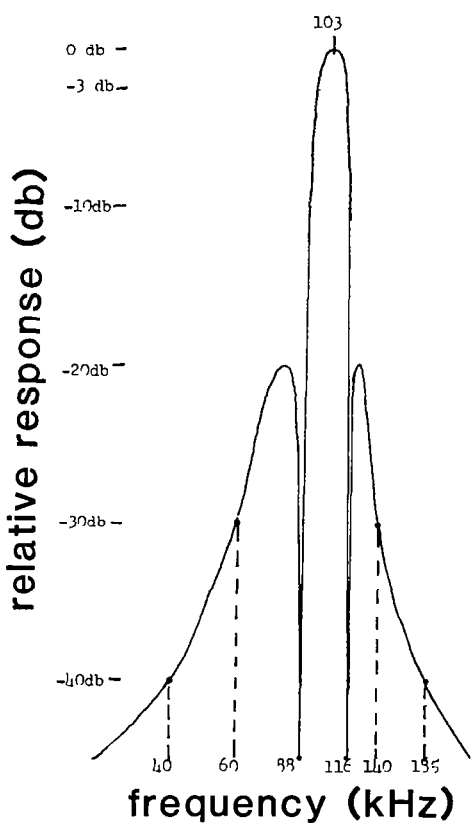

Combined Response
Active Antenna & Loran-C Input Network

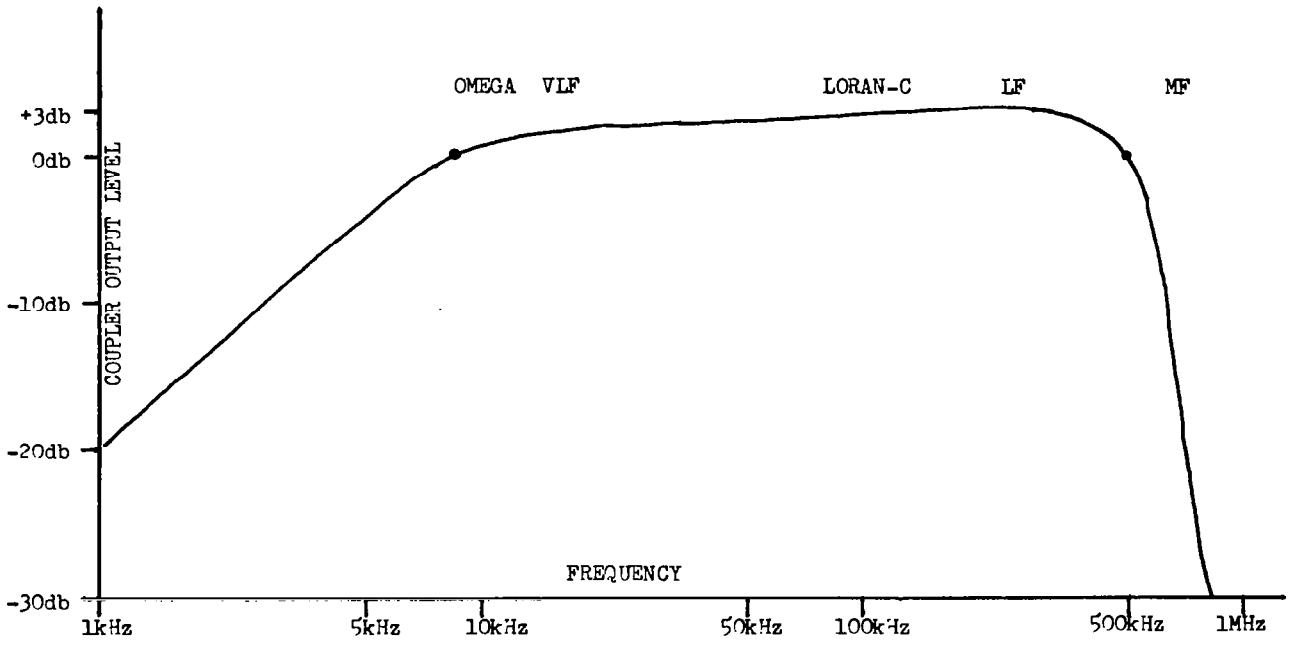

VLF-LF Active Antenna Response

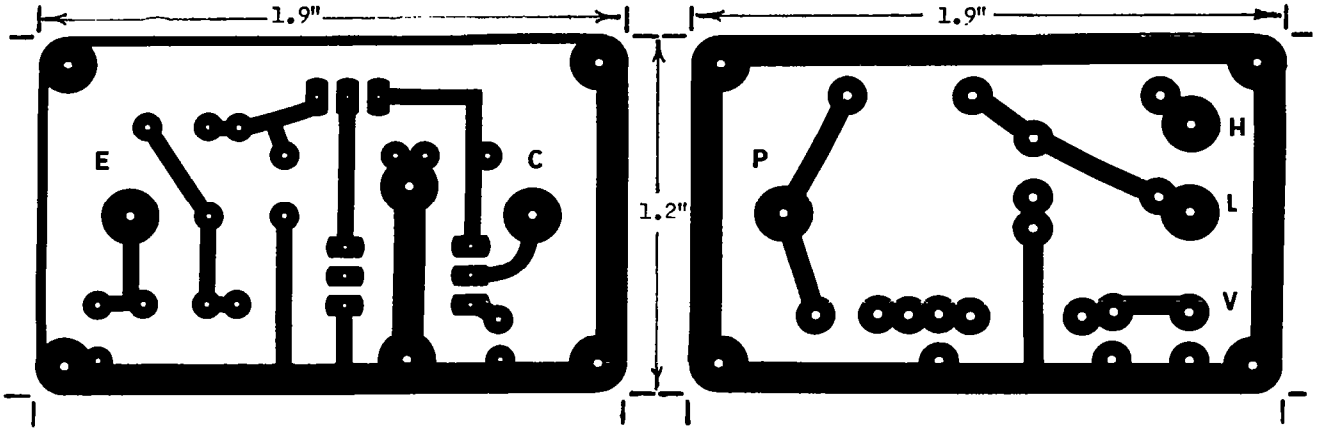

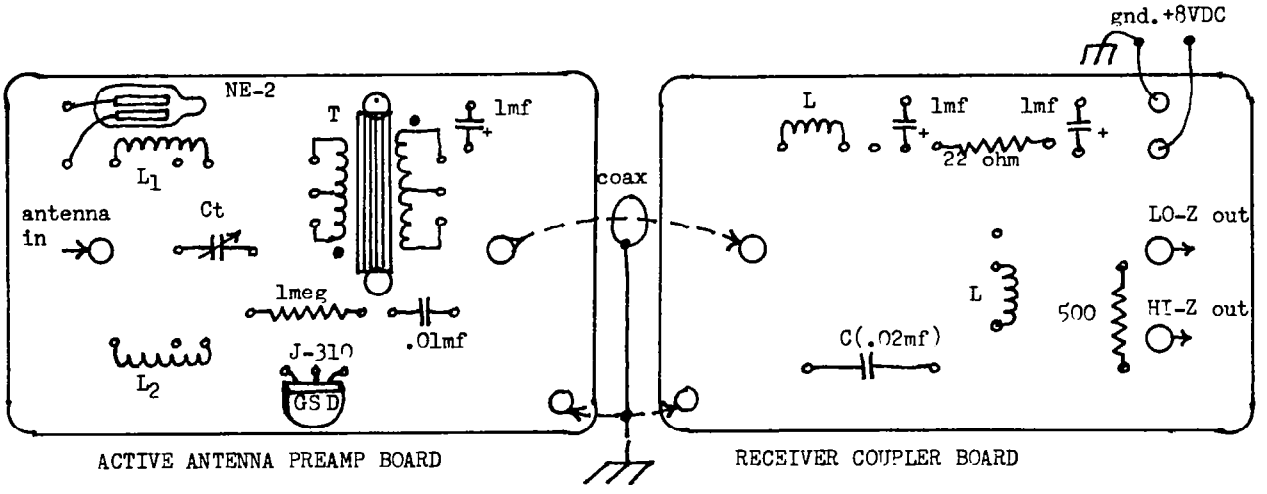

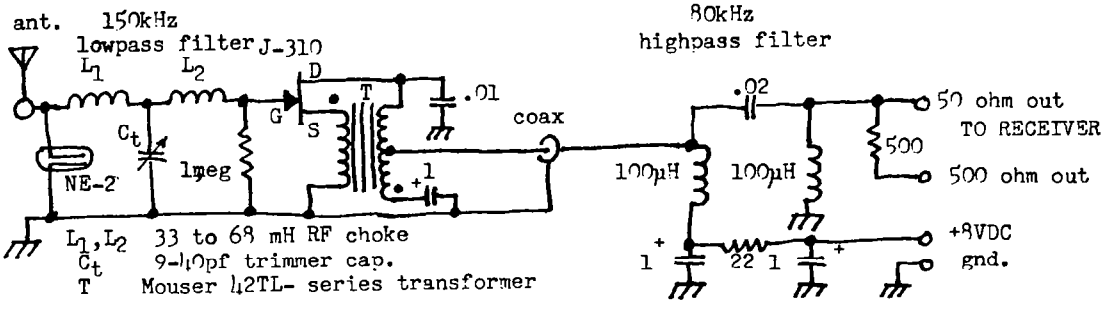

Active Antenna Boards Configured for Loran-C

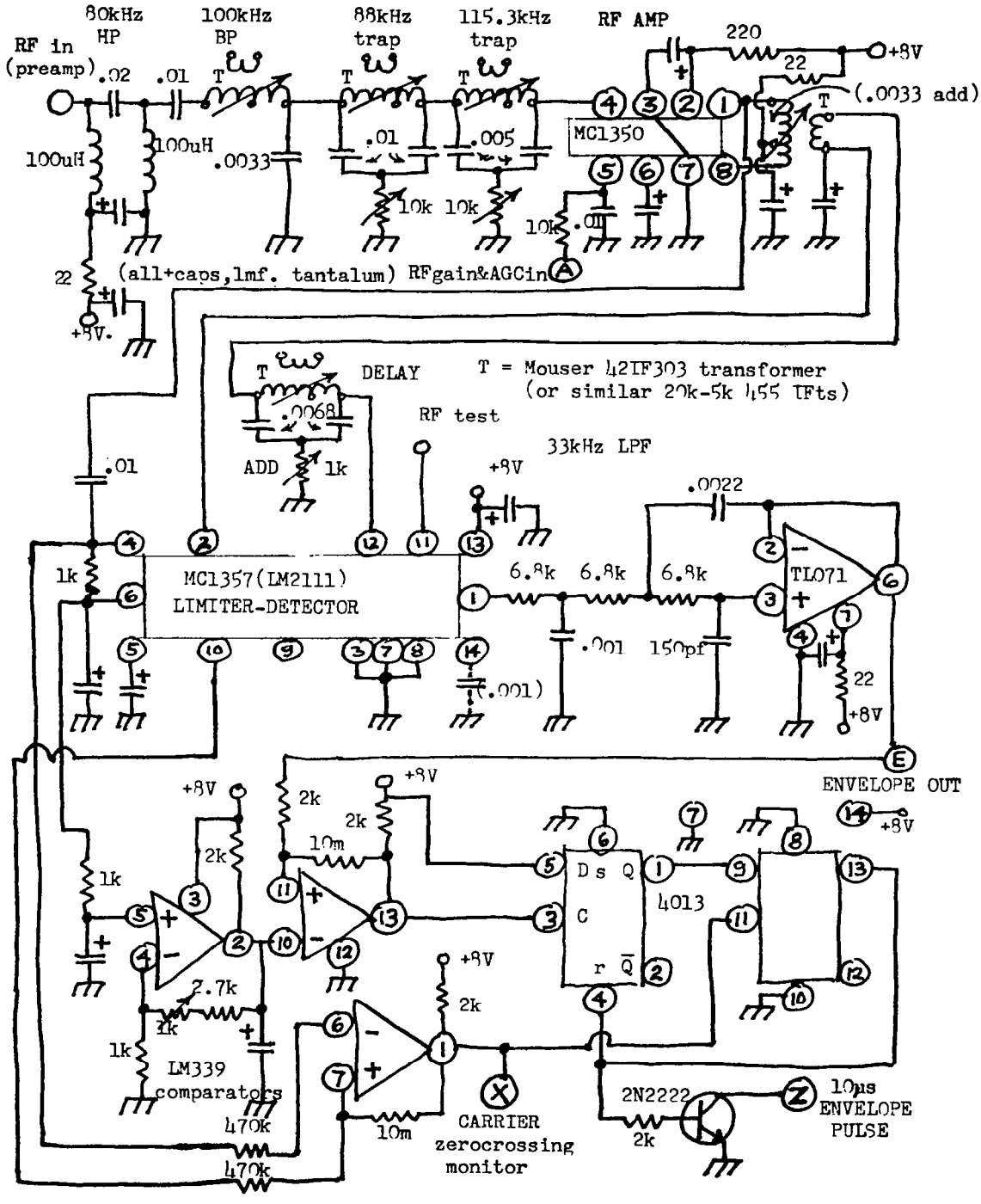

Mini Loran-C RF Circuit - 1982

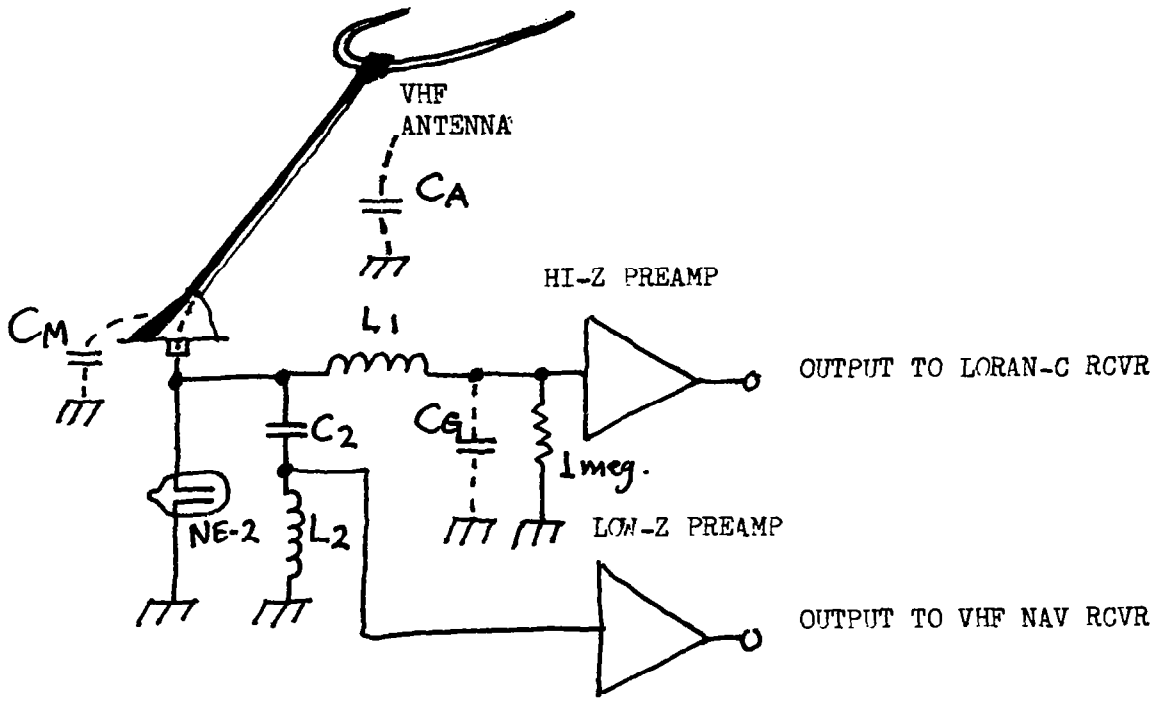

FOR LORAN-C $X_{L_1} = X_{C_G}$, $L_1 \approx 82$ mH @ 120kHz

FOR VHF NAV $X_{L_2} = X_{C_2} = 50$ ohms @ 110 MHz

$C_2 = 28$ pf, $L_2 = 0.7\ \mu H$

PHYSICAL HEIGHT Approx. 1/4 wave at 110 MHz, about 60cm (0.6m)

EFFECTIVE HEIGHT At Loran-C

$$= \frac{C_A}{C_A + C_M + C_2} \times 60\text{cm} \approx \text{about } 10\text{cm}$$

Possible Method of Operating VHF-Nav Antenna for Loran-C

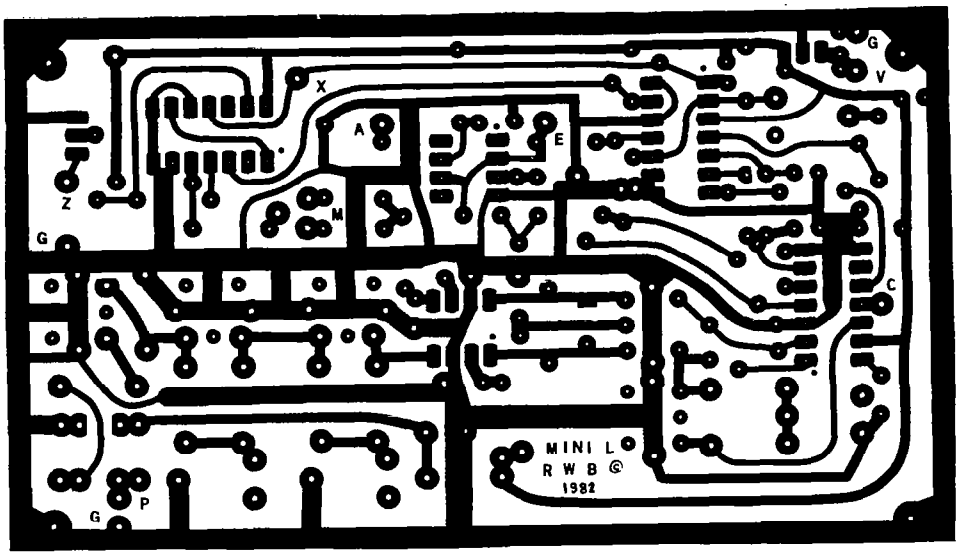

Mini RF Circuit Board Layout

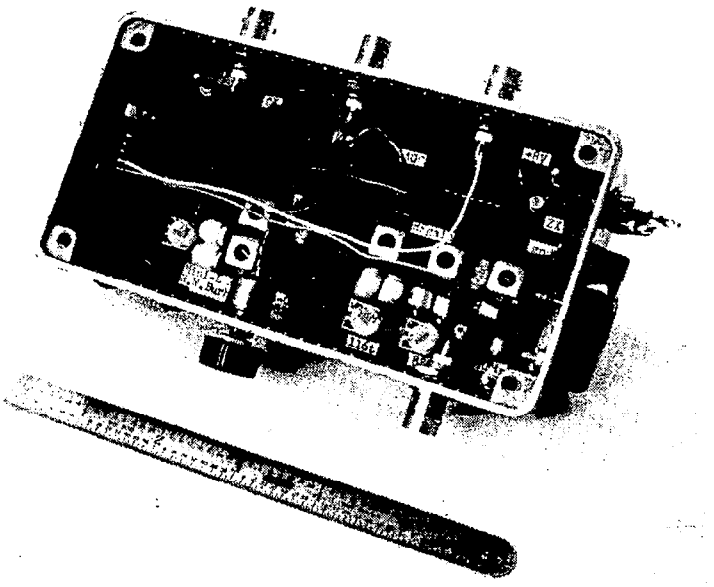

Mini-L-82 RF front end

LORAN-C RECEIVER REPACKAGING

Daryl L. McCall
Avionics Engineering Center
Department of Electrical Engineering
Athens, Ohio 45701

LORAN-C HARDWARE CONSOLIDATION

- IMPLEMENTATION OF VDM-1

- ADDITION OF 8K MEMORY
  i) 6116 RAM / 2716 ROM

- SERIAL COMM INTERFACE
  i) 6850 ACIA

MEMORY MAP

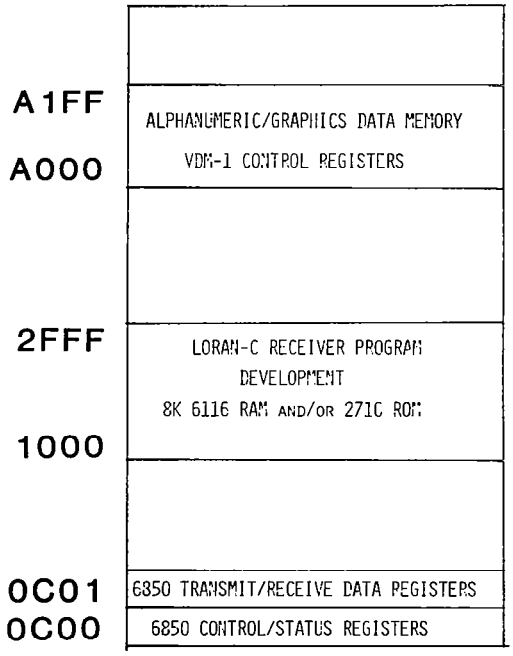

ADVANTAGES

VDM-1

- ALL HAV DATA ON A SINGLE PAGE
- GRAPHICS/CDI CAPABILITY
- ? ? ? ?

8K MEMORY EXPANSION

- EASY RAM TO ROM PROGRAM CONVERSION

SERIAL INTERFACE

- BYTE BUCKET
- USER KEYBOARD
- OTHER SERIAL PERIPHERALS

MULTIPLE BAUD RATE GENERATOR

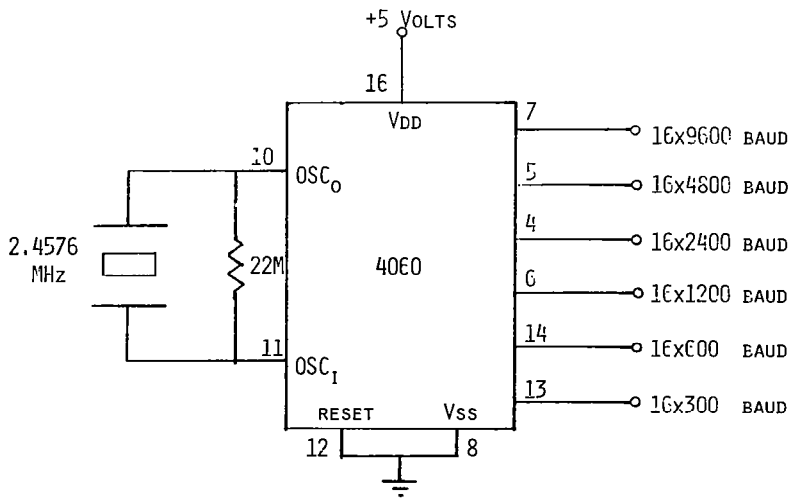

NEXT TIME.....

CURRENT FILTERING

* AVERAGE OF 10 TDs EVERY .996 SECONDS
* FIRST ORDER FILTERING

PROPOSED FILTER

* ALPHA-BETA TRACKING FILTER (GPS ALGORITHM)
  I) EASILY ADJUSTABLE REACTION TIME
  II) 8 MULTIPLIES AND 4 ADDITIONS PER FIX

NEW VIDEO DISPLAY FOR THE LORAN-C RECEIVER

Fujiko Oguri
Avionics Engineering Center
Department of Electrical Engineering
Ohio University
Athens, Ohio 45701

LORAN-C NEW CRT DISPLAY WITH VIDEO GRAPHIC BOARD (VDM1 manufactured by Micro Computer Associate)

- CDI DISPLAY

  Indicates FTE plus the receiver error

  0.1 resolution

  ±2 nm range

  CDI ± 2 nm range (enroute)

- FROM/TO WAYPOINT DISPLAY

  Indicates a desired course

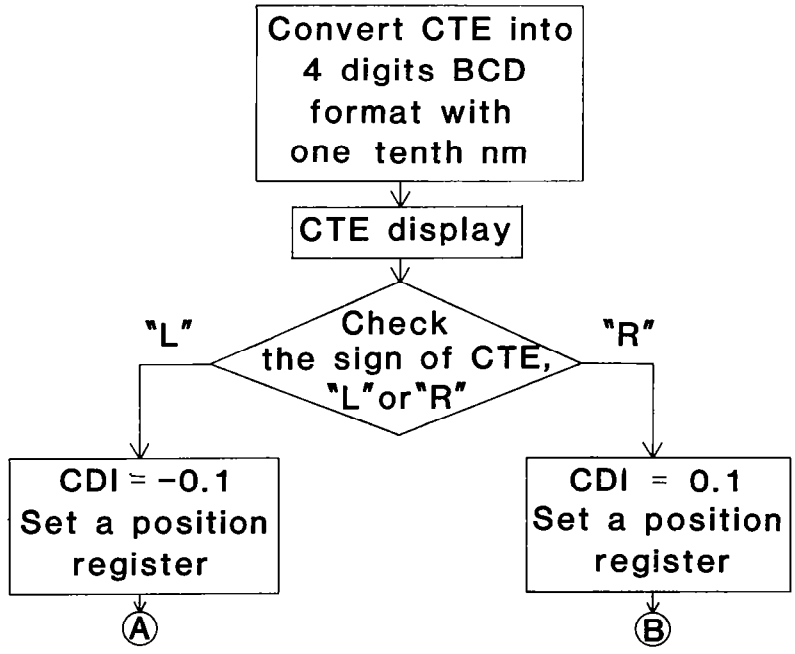

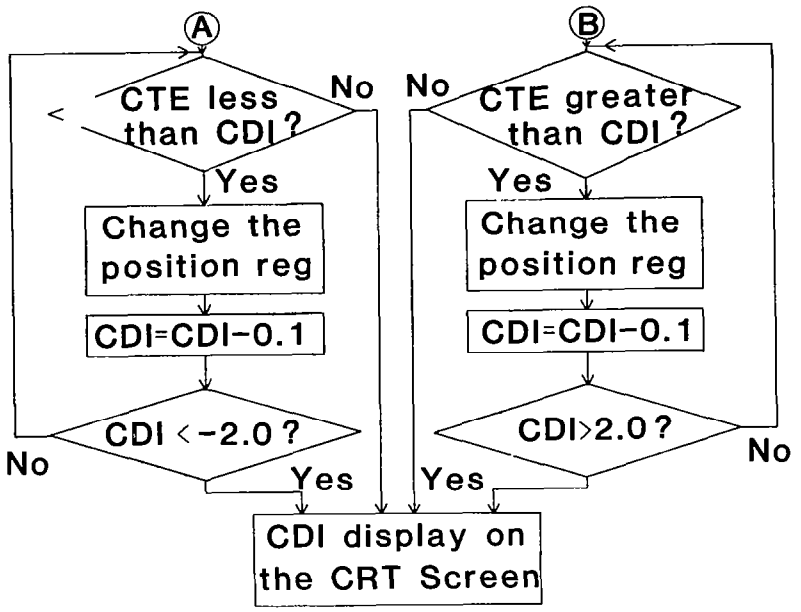

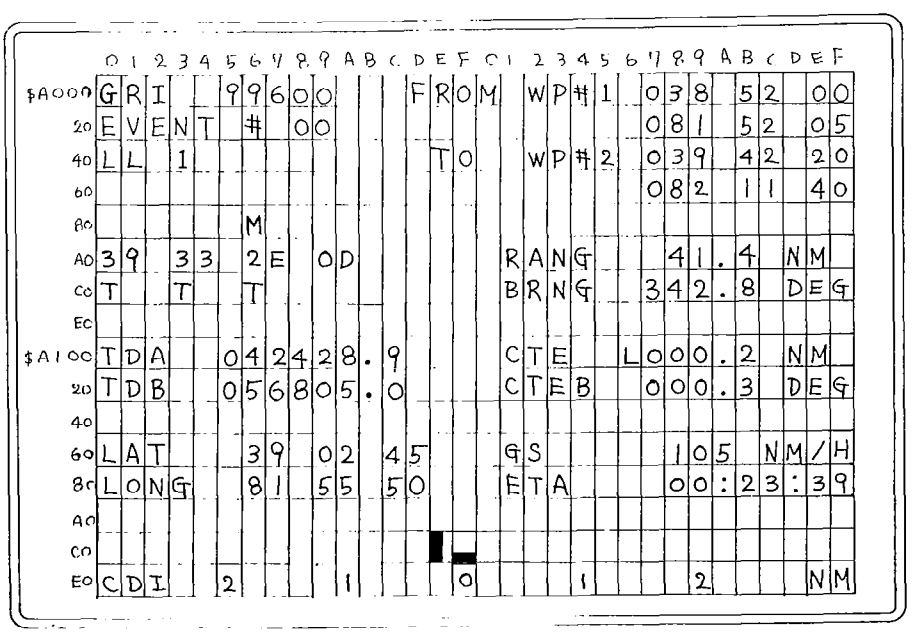

LORAN-C RECEIVER CRT DISPLAY

NEW FRONT END INTERFACE AND AGC MODIFICATIONS

Stephen R. Yost
Avionics Engineering Center
Department of Electrical Engineering
Ohio University
Athens, Ohio 45701

OVERALL RECEIVER BLOCK DIAGRAM

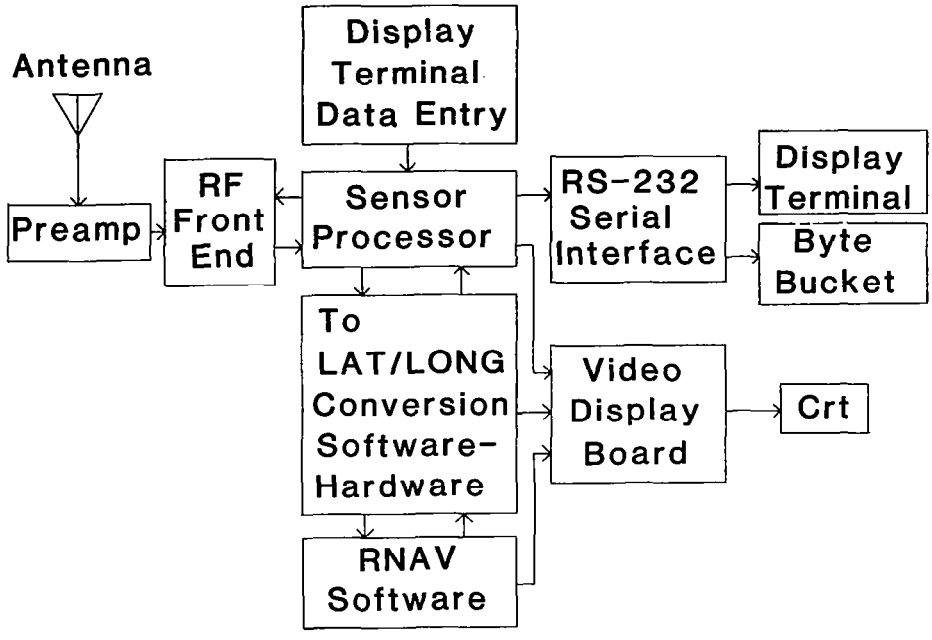

SENSOR PROCESSOR

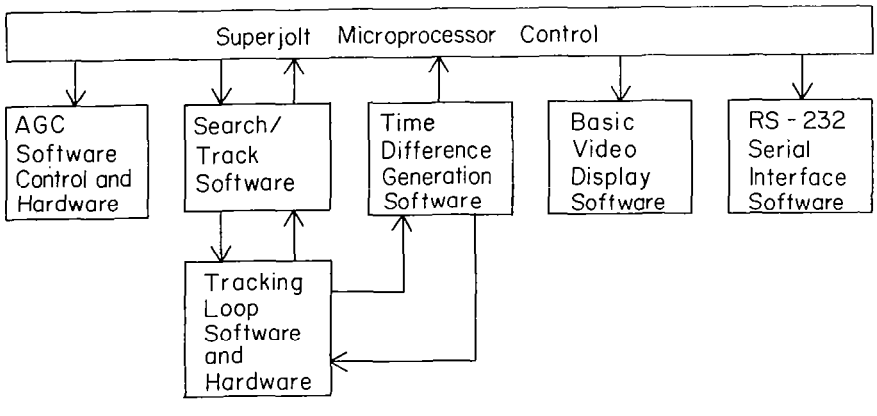

AGC BLOCK DIAGRAM

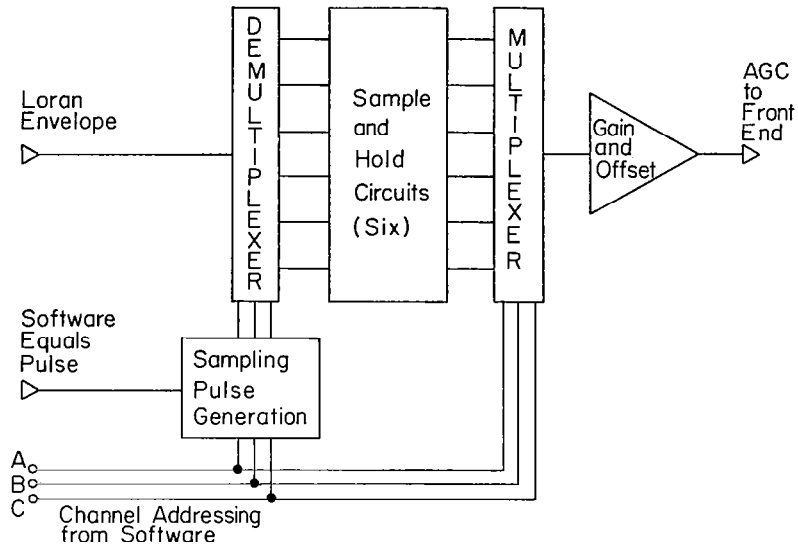

LORAN-C SEARCH/TRACK PARAMETERS

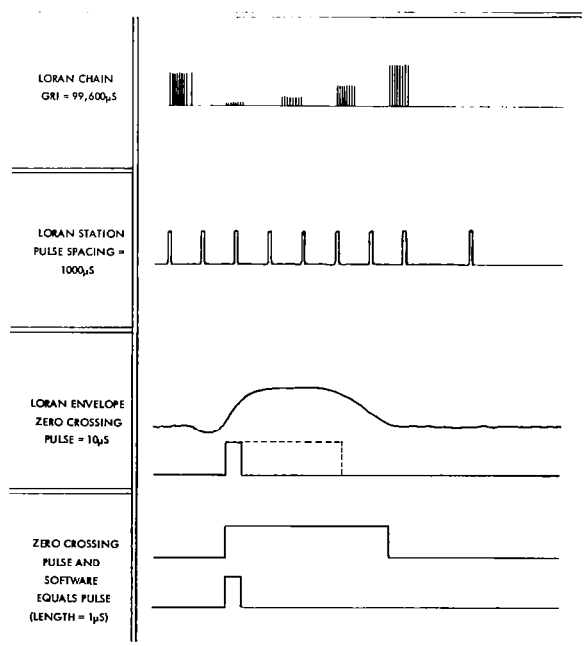

LORAN-C CONTROL AND DISPLAY

Stanley M. Novacki III
Avionics Engineering Center
Department of Electrical Engineering
Ohio University
Athens, Ohio 45701

Loran-C Control-Display Summary

1. Combination Character/ Graphics Display

2. Rho-theta Data, Plus Lat-long

3. Multiple Stored, Numbered Waypoints

4. Microprocessor Bus Attachment

5. Compact Package

Receiver Initialization Using Keyboard

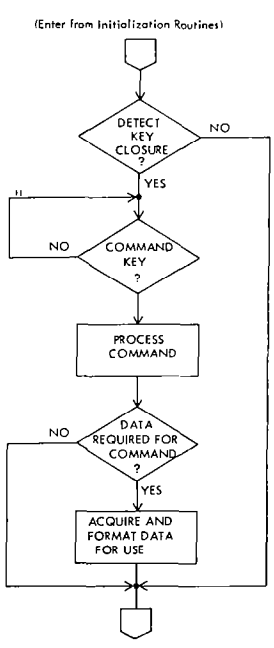

Loran-C Control Display

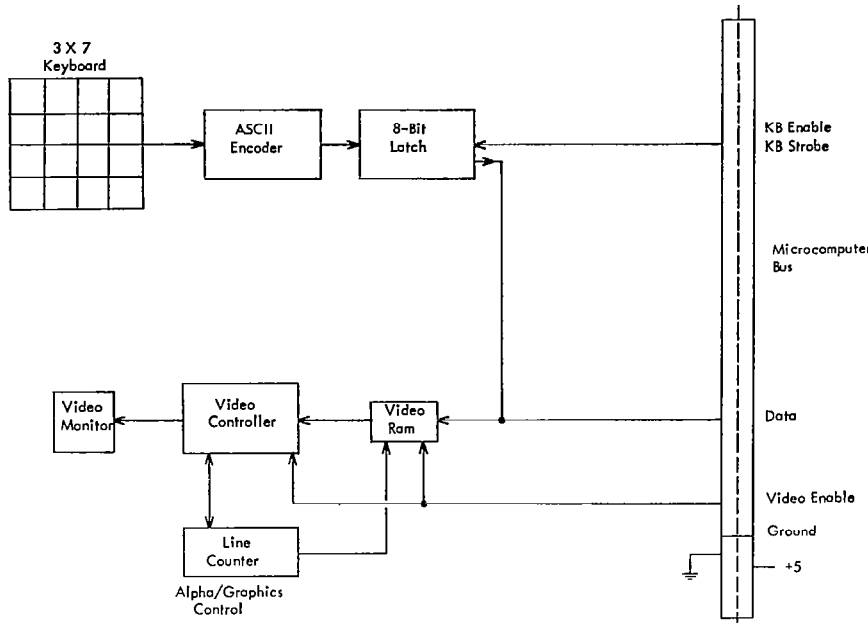

Keypad
Evaluation Prototype

7	8	9
4	5	6
1	2	3
.	0	D
BSP	ENT	SKIP
CNCL	SC	NAV
PWR	SW	AW

ASCII Keyboard Encoder Using AY-5-2376

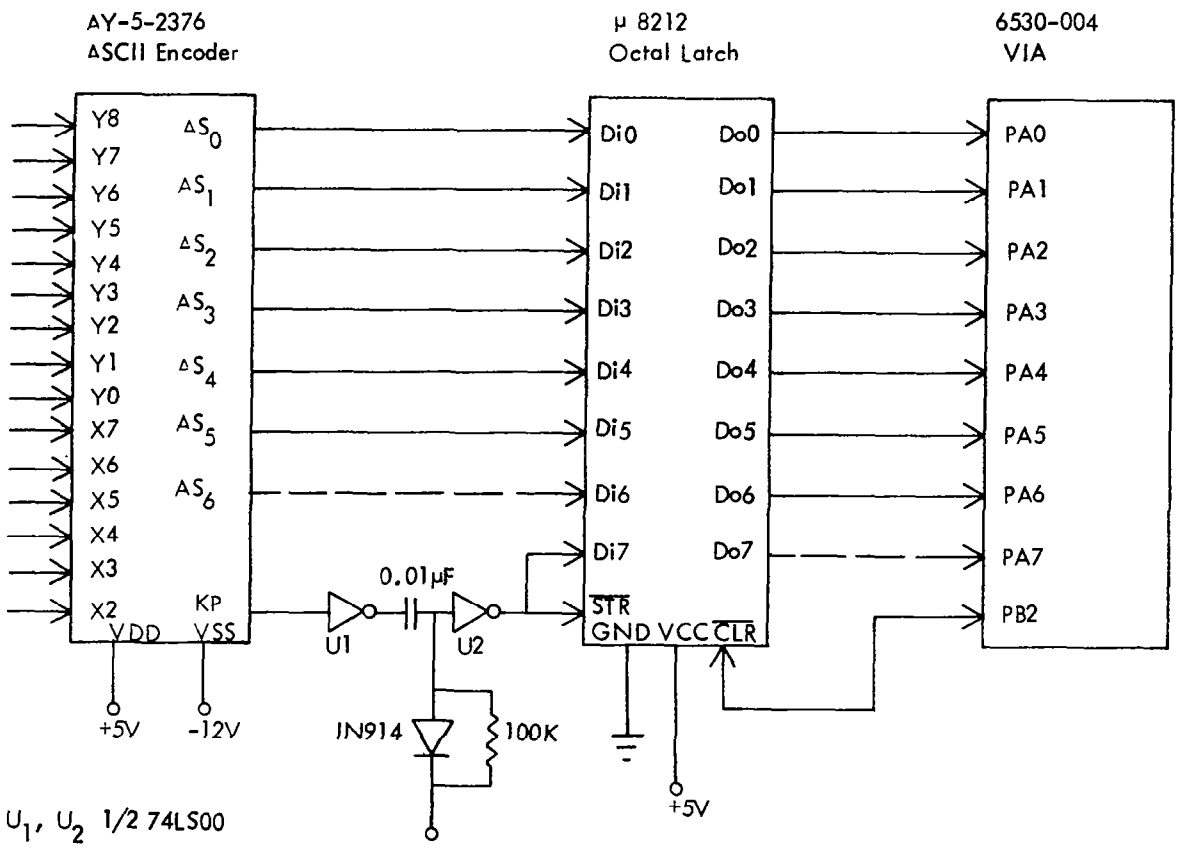

SUMMARY OF SIMPLE ACTIVE ANTENNAS FOR VLF-LF

Ralph W. Burhans
Avionics Engineering Center
Department of Electrical Engineering
Ohio University
Athens, Ohio 45701

POWER AMPLIFIERS OR HIGH CURRENT JFET OR VMOS-FET SEMICONDUCTORS, CLASS A OPERATION

HIGH IMPEDANCE INPUT LOW PASS FILTERS TO REDUCE INTERMODULATION DISTORTION

BIAS RESISTOR TRIM FOR BEST LINEARITY

FOR E-FIELD:

- USE AS SHORT A SHIP OR BLADE AS POSSIBLE, MINIMUM HEIGHT ABOUT 50 CM
- MINIMIZE INPUT CAPACITANCE AT ANTENNA MOUNT WITH NO CABLE
- MOUNT ANTENNA IN CLEAR AREA FREE FROM NEARBY OBSTRUCTIONS

FOR H-FIELD:

- USE BALANCED WINDING WITH RH-LH CENTER TAP OR MOIBUS-TYPE WINDING
- SHIELD LOOP IN TROUGH ENCLOSURE
- MOUNT ANTENNA IN AREA FREE FROM FERRO-MAGNETIC MATERIALS (IRON & STEEL)

INPUT STATIC PROTECTION

- NEON BULB FOR E-FIELD WITH JFET
- LIMITER DIODES FOR H-FIELD WITH VMOS-FET

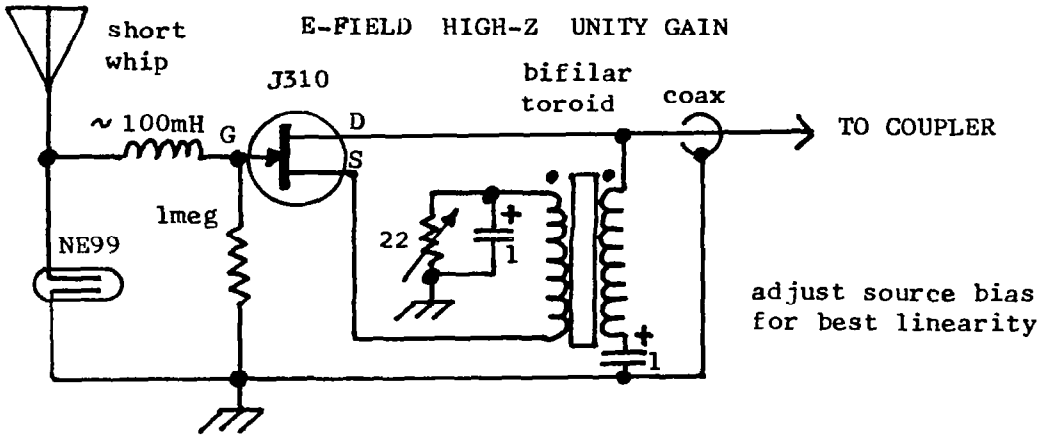

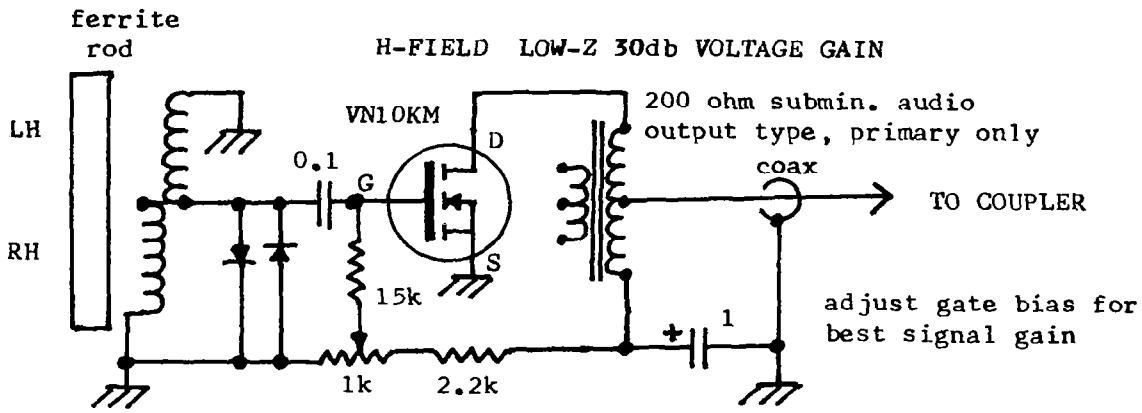

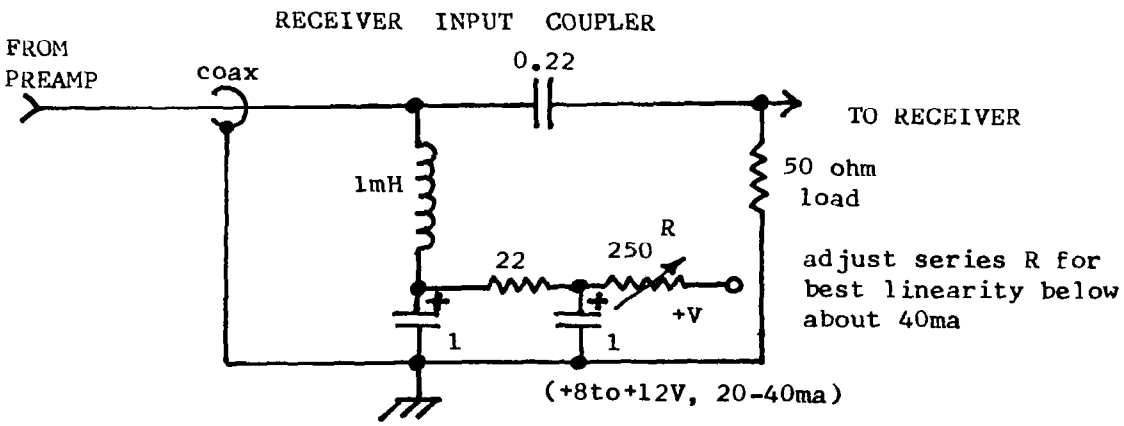

BEST VLF-LORAN-C ACTIVE ANTENNAS (1982)

Massachusetts Institute of Technology

INVESTIGATION OF AIR TRANSPORTATION TECHNOLOGY AT MASSACHUSETTS INSTITUTE OF TECHNOLOGY, 1982

Robert W. Simpson
Flight Transportation Laboratory
Massachusetts Institute of Technology
Cambridge, Massachusetts 02139

SUMMARY OF RESEARCH

There have been a variety of research topics sponsored by the Joint University Program during the past year. Three projects ended at mid-year (i.e., the work on Aircraft Ice Prevention by Microwaves by John Hansman; the P-Pod Display work by James Littlefield; and the Automated Decision Support Systems for Terminal Area ATC by John Pararas). This research is available in the MIT reports listed in the annotated bibliography that follows. One new project has been initiated to investigate the use of Loran-C for guidance in flying approaches to landing by general aviation aircraft. This is described in the conference presentations in this publication. Also, the research work by John Pararas in developing an ATC simulation for the MVRSF (Manned Vehicle Simulation Research Facility) at NASA Ames Research Center is presented later since it is a direct consequence of his prior work in the Joint University Program. There is one other area of research which received minor support from the grant. The thesis of Shinsuke Endoh on a general theory for air traffic collision models is listed in our annotated bibliography.

LATERAL APPROACH GUIDANCE TO GA RUNWAYS USING LORAN-C

For the past few years, MIT has been flight testing a low cost marine Loran-C receiver in various applications to enroute and approach flying. The success in conducting non-precision approaches has raised the possibility of using Loran-C to provide good lateral guidance to the runway for general aviation aircraft. This research is aimed at investigating the dynamic performance of a runway lateral guidance system which would use a simplified method of processing time difference data in a local reference grid plane centered on the runway touchdown point, a local Loran-C update at time of approach, and some heading rate augmentation from a fluidic rate gyro. The issue is the dynamic response of the system to cross track errors.

If successful, Loran-C would provide a very attractive low cost system for enroute navigation and for approach lateral guidance to any runway within good coverage of a Loran-C chain. Currently, the enroute R-NAV or L-NAV mode uses a latitude-longitude reference system to define waypoints for flying airways or direct cross-country flights. Multiple waypoints can be identified by their 3-letter aviation code stored in EPROM chips. It is feasible to have a second approach mode of processing the time differences for surveyed runway touchdown points and the L-NAV approach chart geometrics. It appears to be possible to supply lateral guidance from beyond the approach fix to the runway. Also, information on distance/time to touchdown and nominal approach altitudes can be provided. In the approach mode, it is possible to navigate to the final approach fix, and to switch easily to a missed approach fix if a go-around is necessary.

This project has now selected a new Loran-C marine receiver as the basic building block for the system. It is the Micrologic ML-3000 with custom built software for special I/O features which provide a real time stream of time difference data. An aircraft antenna and coupler have also been selected.

MASSACHUSETTS INSTITUTE OF TECHNOLOGY

ANNOTATED BIBLIOGRAPHY

1981-1982

Endoh, Shinsuke: Aircraft Collision Models. Flight Transportation Laboratory Report R82-2, Department of Aeronautics and Astronautics, MIT, May 1982.

In air traffic control, the gas model of classical physics has been borrowed to describe the expected frequency of mid-air collisions for uncontrolled aircraft moving randomly in the airspace. In this study, the gas model is extended to a comprehensive general conceptualization which can describe the mid-air collision rate (or conflict rate, or encounter rate) for uncontrolled air traffic in a wide variety of practical situations such as overtaking along an airway, intersections of two airway traffic flows, IFR-VFR encounters for an airway imbedded in a VFR area, radial flow patterns around an airport, etc. By prescribing the probability density functions (pdf) for horizontal position, speed, direction, vertical rate of climb, and altitude, it becomes possible to study the effects of traffic concentrations on collision or encounter rate, and consequently on air traffic controller workload. It is proved that a uniform distribution of direction maximizes collision rate while a uniform distribution of position minimizes collision rate. By gathering data on the pdf's of air traffic in a given ATC sector, it will be possible to provide assessments of general level of risk and controller workloads as a function of traffic flow rates or density.

Hansman, Robert John, Jr.: The Interaction of Radio Frequency Electromagnetic Fields with Atmospheric Water Droplets and Applications to Aircraft Ice Prevention. Flight Transportation Laboratory Report R82-5, Department of Aeronautics and Astronautics, MIT, June 1982.

In this work the physics of advanced microwave anti-icing systems, which pre-heat impinging supercooled water droplets prior to impact, is studied by means of a computer simulation and is found to be feasible. In order to create a physically realistic simulation, theoretical and experimental work was necessary and the results are presented in this work.

The behavior of the absorption cross-section for melting ice particles is measured by a resonant cavity technique and is found to agree with theoretical predictions. Values of the dielectric parameters of supercooled water are measured by a similar technique at $\lambda = 2.82$ cm down to $-17^{o}C$. The hydrodynamic behavior of accelerated water droplets is studied photographically in a wind tunnel. Droplets are found to initially deform as oblate spheroids and to eventually become unstable and break up in Bessel function modes for large values of acceleration or droplet size. This

confirms the theory as to the maximum stable droplet size in the atmosphere. A computer code which predicts droplet trajectories in an arbitrary flow field is written and confirmed experimentally. Finally, the above results are consolidated into a simulation to study the heating by electromagnetic fields of droplets impinging onto an object such as an airfoil. Results indicate that there is sufficient time to heat droplets prior to impact for typical parameter values, and design curves for such a system are presented in the study.

Littlefield, James A.: A Programmable Pilot Oriented Display System for General Aviation Aircraft. Flight Transportation Laboratory Report R82-4, Department of Aeronautics and Astronautics, MIT, May 1982.

This report presents a complete description of a digital flight data processing platform designed to support a range of airborne or flight simulator-based experiments requiring the acquisition, processing, and display of information. The Programmable Pilot Oriented Display (PPOD) is based on IEEE S-100 bus standard equipment and readily available software utilities. The design philosophy and techniques used to achieve project objectives with a minimum of hardware/software customization are discussed. System resources include three Z80 processors, intelligent IO, complete interprocessor communications firmware, and RS-170 composite video output. Discussion of both PPOD capabilities and the steps required to employ PPOD in future experimental setups are presented in the context of a mobile test run.

Pararas, John D.: Decision Support Systems for Automated Terminal Area Air Traffic Control. Flight Transportation Laboratory Report R82-3, Department of Aeronautics and Astronautics, MIT, June 1982.

This work studies the automation of the terminal area Air Traffic Management and Control (ATM/C) system. The ATM/C decision-making process is analyzed and broken down into a number of "automation functions". Each of these functions is described with particular emphasis on its role in the overall system and its interactions with the other ATM/C automation functions. Runway Scheduling and Traffic Flight Plan Generation are identified as the two functions with the greatest potential for providing efficiency improvements over the current terminal area ATC system and are studied in detail.

A very general Mixed Integer Linear Programming (MILP) formulation of the Runway Scheduling problem is developed. Less general formulations and algorithms which have appeared in the literature are reviewed and evaluated. A heuristic algorithm is developed. The algorithm is based on the work of Dear and adopts the Maximum Position Shifting methodology proposed by him (ref. 1). It extends Dear's work in several ways: (1) it is applicable to multiple runway configurations, (2) it is designed to operate in a real-time simulation environment, and (3) it is designed to accept arbitrary constraints imposed by the ATM/C controller.

The methodology for generating flight plans is developed. Flight plans

are based on a specified route structure. They are four-dimensional and conflict-free. To allow maximum runway scheduling flexibility, a specific route structure is proposed. It is designed to allow easy modification of flight plans to adapt to the dynamically changing schedule.

To allow algorithmic development and testing of this (as well as other) ATM/C automation concepts, a real-time terminal area simulation facility (called TASIM) is designed and implemented. The facility has a number of characteristics which make it a good general-purpose tool for terminal area ATM/C research:

(1) Highly modular design which allows addition, removal and modification of functions with relative ease

(2) Realistic modelling of the aircraft dynamics of motion and the aircraft guidance system (errors introduced by the navigation equipment (onboard and on the ground) and by the surveillance radars are also modelled)

(3) Capability to simulate multiple controller positions

(4) Flexible controller interface which allows easy implementation of alternative displays and alternative protocols for man-machine interaction

The simulation is fully operational in the conventional (manual) ATC mode. In addition, it is currently interfaced with an implementation of the runway scheduling heuristic, and with a special purpose final vectoring display designed to aid the controller in precisely timing the delivery of landing aircraft at the outer marker.

REFERENCE

1. Dear, Roger D.: The Dynamic Scheduling of Aircraft in the Near Terminal Area. Flight Transportation Report R76-9, Dept. of Aeronautics and Astronautics, Massachusetts Institute of Technology, Cambridge, Mass., Sept. 1976.

LATERAL RUNWAY APPROACH GUIDANCE USING LORAN-C

Robert W. Simpson
Flight Transportation Laboratory
Massachusetts Institute of Technology
Cambridge, Massachusetts 02139

RESEARCH OBJECTIVES

The objectives of this project are to design and flight test a lateral guidance system for flying approaches to a runway by general aviation aircraft. The issue is whether or not good dynamic response can be obtained by exploiting the repeatable accuracy of Loran-C position data and combining it with heading rate data. We would like to provide the pilot with cross-pointer displays such that he can keep the aircraft within ±75 feet of the runway centerline at approach speeds typical of general aviation aircraft.

RESEARCH ISSUES -

CAN WE USE LORAN C DATA TO PROVIDE GA AIRCRAFT WITH GOOD LATERAL GUIDANCE TO ANY RUNWAY? IF SO, LORAN C RECEIVER CAN PROVIDE GA WITH ENROUTE NAVIGATION, PLUS LANDING GUIDANCE. DO WE NEED HEADING RATE DATA FROM RATE GYRO TO OBTAIN GOOD ESTIMATES OF CROSS TRACK VELOCITIES?

SYSTEM CONCEPT

Normally, for enroute navigation Loran-C data is converted to a latitude-longitude reference frame which requires extensive processing and is not suitable for simple guidance. This shows the estimation of current position and guidance information, but is more than adequate for enroute flying and for flying non-precision approaches similar to those which use NDB's or VOR's. If we are to provide lateral guidance to the runway centerline such that cross-track deviations and velocities are quickly detected, it is desirable to switch to a local reference grid plane centered at the touchdown point. This allows us to filter the Loran-C data easily and with much simpler processing, and also requires very little geometric data and processing algorithms to be stored in onboard computer memory.

1. THERE CAN BE TWO MODES OF PROCESSING LORAN C DATA FROM RECEIVER

   A) ENROUTE - LAT-LONG CONVERSION OF TD'S FOR LONG LEGS BETWEEN WAY POINTS

   B) APPROACH - LOCAL REFERENCE GRID PLANE CENTERED AT TOUCHDOWN PT. ON RUNWAY, X-AXIS IN RUNWAY DIRECTION

SYSTEM OPERATIONAL CONCEPT

The Loran-C system is used in its R-NAV mode enroute. In the vicinity of the airport, the pilot receives altimeter setting and also two Loran-C corrections from nominal surveyed TD's at airport. These corrections are entered (if necessary), the runway approach is selected, and the system is switched to APPROACH mode. Altitudes, distances, final approach fix, and missed-approach fixes are stored in memory for this approach. The approach mode supplies guidance to the final approach fix, to the touchdown point, and if necessary to the missed-approach fix. Distance and track to each point are available at all times, along with the minimum desired altitude.

2. UPON REACHING AREA OF AIRPORT, PILOT RECEIVES ALTIMETER SETTING, PLUS $\Delta 1, \Delta 2$ CORRECTIONS FOR CURRENT DEVIATION FROM NOMINAL LORAN C TD'S AT AIRPORT.

3. APPROACH GEOMETRY AND ALTITUDES STORED IN ROM. PILOT SELECTS APPROACH IDENTIFICATION.

4. SIMPLE, RAPID STANDARDIZED PROCESSING OF TD'S TO PROVIDE ESTIMATES OF POSITION AND SPEED WITH GOOD DYNAMIC RESPONSE FOR GUIDANCE DISPLAYS.

5. NO VERTICAL GUIDANCE, BUT DISPLAY OF RANGE TO TOUCHDOWN OR OUTER MARKER, AND DESIRED ALTITUDE ON APPROACH.

SYSTEM DESIGN PLANS

We have a Digital Marine North Star 6000 receiver which can serve as the ground station. We plan to acquire a Micrologic ML 3000 marine receiver, which will be modified to provide a real-time stream of digital data on time differences. This data will be sent to a guidance processor system designed and built by MIT which will compute positions in a local reference grid and filter or track the aircraft position and position rate. A fluidic rate gyro (based on original NASA LaRC design) has been developed at MIT and will provide heading rate information. The guidance outputs will be sent to an ordinary HSI instrument or to the P-POD display.

1. LORAN C RECEIVER
   - DIGITAL MARINE NORTH STAR 6000 (MARINE)
   - MICROLOGIC ML-3000 MARINE NAVIGATOR
     - OUTPUT PORT FOR TD'S (TO Z-80)
     - PRICE $2700 (DISCOUNT - $1700)
     - 9x5x11 INCHES
     - WEIGHT 9 LBS.
     - PRE-AMP AND WHIP ANTENNA $483 (305)
     - FULL NAVIGATION OUTPUTS
2. PROCESSOR BOX - MIT
3. DISPLAY - HSI (?)
   - P-POD

SYSTEM DESIGN PLANS - PROCESSOR BOX

The guidance processing can be done in a small 1/4 ATR box, which has various input and output devices on its face. An external plug-in EPROM will be used to establish the runway geometries, processing coefficients, guidance programs, and so forth. This is easy to create and modify external to the box using the P-POD microcomputer-based development system, and is then plugged in for testing. The pilot can select the approach to be flown, and can insert the two Loran-C updates using thumbwheels. He will see range and desired altitude in digital data format.

2. Processor Box (1/4 ATR)

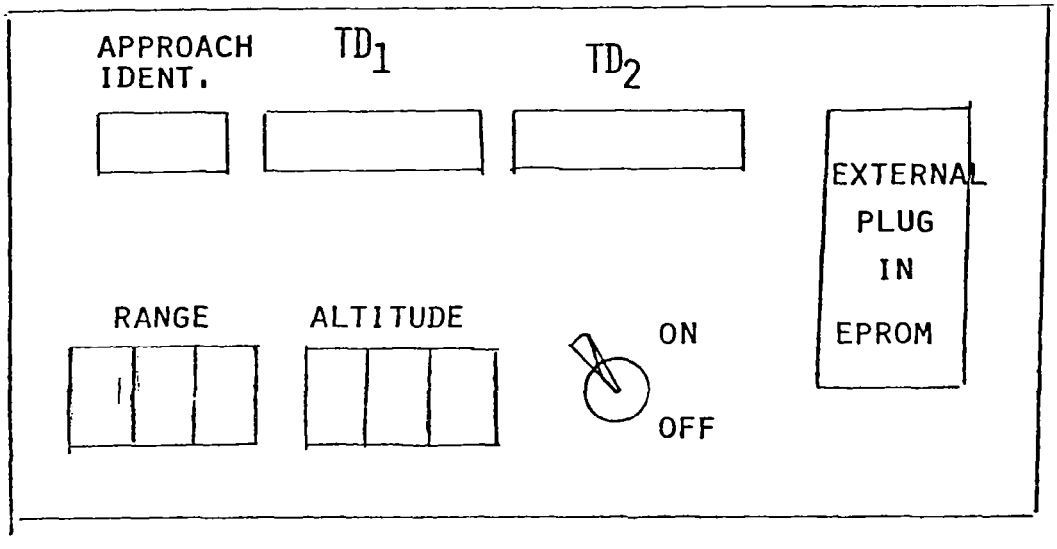

CONTAINS - EPROM (RUNWAY GEOMETRY, COEFFICIENTS)

- Z-80 PROCESSOR
- CLOCK
- I/O CHIPS, A/D CONVERSION
- POWER SUPPLY
- MIT FLUIDIC RATE GYRO (IMPROVED SENSOR)

SYSTEM DESIGN PLANS - DISPLAY

If the lateral displacement and rate are Y and $\dot{Y}$, respectively, they will be converted from digital estimates to analog inputs that drive an HSI-type display. A possible format is shown, and an alternative is to incorporate the P-POD electronic display, which would provide a more flexible device in constructing various display formats.

PILOT DISPLAY SYSTEM

HSI

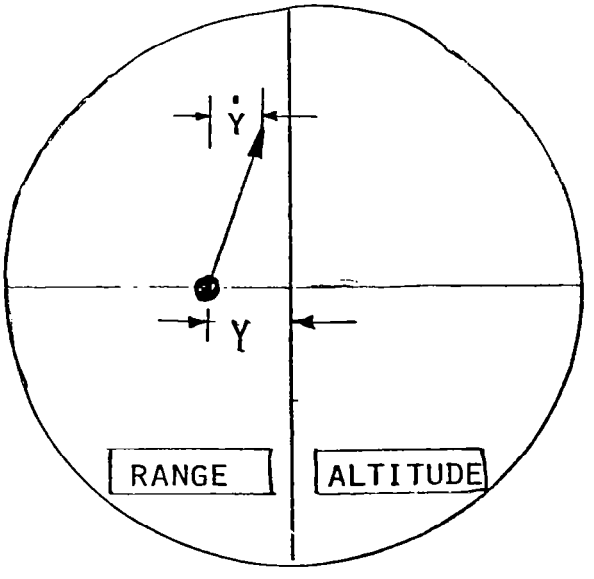

FLAG-(SNR)

ALTERNATIVES - P-POD DISPLAY

DEVELOPMENT OF REAL-TIME ATC SIMULATION FACILITY

John Pararas
Flight Transportation Laboratory
Massachusetts Institute of Technology
Cambridge, Massachusetts 02139

INTRODUCTION

The Flight Transportation Laboratory has developed a real-time interactive Air Traffic Control simulation facility designed to provide a versatile and easy-to-use tool for research and experimentation involving Air Traffic Control. The facility uses a VAX-11/750 as the central computer. The SANDERS GRAPHICS-7 display system is used to simulate air traffic control displays. Pseudo-pilot displays are provided on Texas Instruments TI940 video terminals. Finally, a custom-designed audio system driven by a Z-80 and interfaced with the VAX provides voice communication between the air traffic controllers and the pseudo-pilots. The audio system provides computer-controlled voice disguising and thus allows each aircraft to have its own audio characteristics and provides an added realism to the experiment.

The facility can accommodate multiple controller stations and pseudo-pilot stations. Each station is manned by a single operator who has a large repertoire of commands with which to control his/her display and the simulated aircraft under his/her jurisdiction. An additional console and a distinct set of commands allow full controllability of the simulation environment by the experimenter in real time.

The ATC facility has the following unique characteristics:

1. Software modularity. In contrast to training simulators, an experiment-oriented simulator can expect frequent software changes and extensions to support new experiment requirements. This is particularly important in the case of ATC research where new software itself is the subject of research (e.g., tracking algorithms, collision avoidance systems, ATC automation algorithms, evaluation of alternative display formats, etc.) The ATC simulation is designed to reduce the cost of adapting it to a particular experiment and interfacing new software by a multiprocessing approach to software modularity.

2. Controllability and repeatability. The facility provides for controllability and repeatability of each experiment through a mechanism called "scripting." This mechanism allows the experimenter, prior to running the experiment, to generate a set of actions and for each action the set of conditions that have to be met for the action to take place. Time logging of simulation events allows the experimenter to determine what took place and in what order during the experiment.

3. Manpower requirements. The facility is designed to minimize the number of operators required for an experiment as well as the amount of training required. The scripting mechanism can be used to automatically activate operator commands, thus minimizing the amount of intervention required. It can also be used to cue operators on actions that they have to take (e.g., verbalizing an ATC clearance or acknowledgement) so that controllers and pseudo-pilots will not require extensive familiarity with ATC before they can be successfully employed in an experiment. In addition, the

pseudo-aircraft will automatically follow a flight plan (if one is present), thus allowing one pseudo-pilot to control up to 12 aircraft, especially in an enroute environment.

PURPOSE: Research on pilot workload, advanced cockpit instrumentation

REQUIREMENTS: Full mission simulation (up to 8 hours) in a realistic ATC environment

COMPONENTS: ATC Subsystem

Conventional Cab (B727)

Advanced Cab

Audio Subsystem

Figure 1.- The MVSRF (Manned Vehicle Systems Research Facility).

HISTORICAL NOTE

The first version of the simulation (funded by NASA Langley Research Center) was designed and built by Val Heinz in 1976 (ref. 1). It was designed to operate in fast time and it primarily modeled the aircraft dynamics, the navigation and surveillance systems, and the readings of the onboard instrumentation. This software is now the core of POSGEN, one of the processes comprising the simulation facility (see the section on software configuration).

The Val Heinz effort was part of a larger program in air traffic control research at the Flight Transportation Laboratory. Fast time simulation, however, proved to be an insufficient tool for detailed ATC studies. It failed to model the man/machine interface, which in air traffic control is one of the key factors affecting the operation of the system. As a result, the author designed and developed TASIM, a real-time terminal area simulation, by embedding the Val Heinz software into a real-time ATC environment. This (second) version of the simulation was designed to be controlled by a single person (thus the air traffic controller also acted as a pseudo-pilot) and was primarily targeted for terminal area operations. This effort started in 1979 and was complete in 1981. It was funded jointly by the NASA Joint University Program and the MATCALS program of the U.S. Marines.

The third (current) version of the ATC simulation facility was developed for the Man-Vehicle Systems Research Facility at NASA Ames Research Center. The major improvements from the prvious version are:

1. The extension of the ATC environment to include enroute as well as tower and ground ATC sectors

2. The capability to interface with cockpit simulators

3. The implementation of pseudo-pilot stations and thus the divorcing of the pilot task from the traffic control task

4. The interfacing with the audio subsystem, thus allowing realistic simulation of voice communications between the pilots and the controllers

5. The development of a script mechanism to control the simulation environment

PURPOSE: Provide a realistic ATC environment in which cabs will fly their experiments

REQUIREMENTS:

-- Realistically simulate pseudo-aircraft movements within the airspace

-- Drive multiple controller displays

-- Drive multiple "pseudo-pilot" displays

-- Manage the allocation and "connectivity" of audio channels

-- Provide cabs with ATC data needed to drive onboard instrumentation (CDTI's, out-the-window displays, etc).

Figure 2.- The ATC subsystem - MVSRF.

THE HARDWARE CONFIGURATION

The figure below depicts the hardware configuration for the facility, with emphasis on the major hardware and human interfaces. At the center of the figure is the ATC host computer. In this case the host is a VAX-11/750. The host is interfaced through a parallel DMA interface to a SANDERS GRAPHIC-7 display computer which drives three calligraphic display indicators simulating the Plan View Display (PVD) available to the air traffic controller. Each controller display has a keyboard associated with it, allowing controller input to the simulation. Two additional DMA interfaces are used for communication between the ATC host and the cockpit simulators. These are designed for message rates of up to 30 Hz each.

The remaining interfaces follow the standard RS232 protocol. The "Command Link" connects the ATC host to the ATC console and allows the experimenter to interface with the simulation control program and create or modify the desired ATC environment for each experiment. The audio link is a two-way communications link used to generate and modify the parameters of the audio subsystem. The audio subsystem is thus automatically controlled by the ATC host. Finally, three two-way communication links are used to drive the pseudo-pilot displays and transmit pseudo-pilot commands to the ATC host.

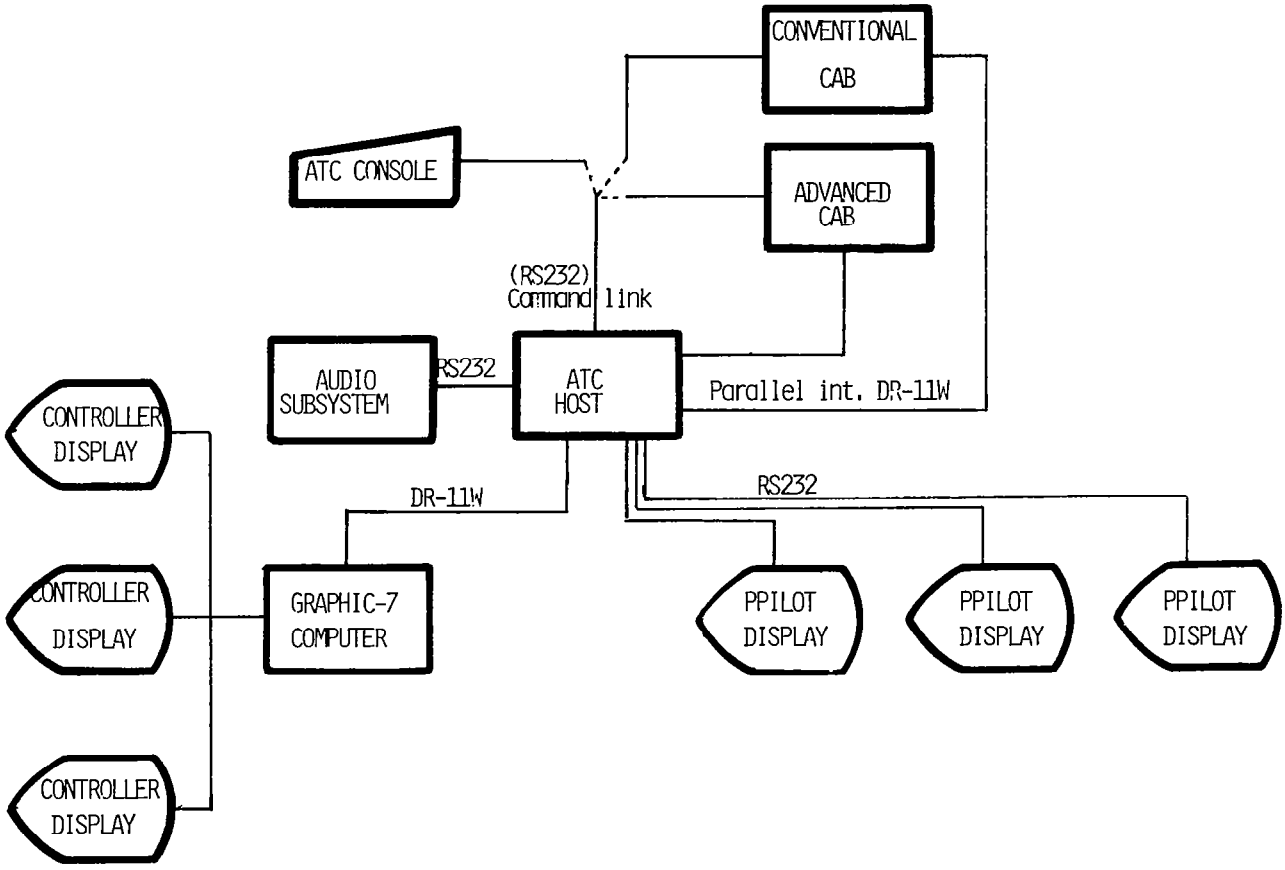

Figure 3.- MVSRF hardware diagram.

SOFTWARE CONFIGURATION

The ATC simulation facility consists of a number of independent programs. Following the VAX nomenclature, these will be called processes. Each process "knows" how to perform a specific set of tasks. A process can invoke a task by sending an appropriate "message" to the process that knows how to perform it. The target process then responds by performing the task and (if required) replying with a "TASK COMPLETED" message.

This message passing and receiving mechanism is a very powerful tool. It allows a high percentage of the code to be "context-free." This means that one process is not required to know the details of how the task is performed. All it needs to know is how to invoke it. This, in turn, results in simpler code and provides a highly flexible system which is easily amenable to modifications and extensions.

This architecture has another property which is highly desirable for simulating the ATC environment - by the very nature of message passing, all tasks are performed asynchronously. This is consistent with the nature of the ATC system, in which many of the "events" that result in some change in the system are not repetitive (e.g., the aircraft starts climbing whenever the pilot commands it to, manually or through the autopilot, and the latter usually occurs only after the controller clears the aircraft to a different altitude). When two or more tasks have to be performed sequentially, the controlling process (i.e., the one which sends the message) uses the "TASK COMPLETED" message mentioned above as a trigger to dispatch the message to perform the next task in the sequence.

One disadvantage of message passing is that the associated overhead is large when large amounts of data are being passed. To avoid this, "global sections" are used (the name is again borrowed from the standard VAX nomenclature). Global sections are blocks of memory resembling common blocks of standard FORTRAN. The difference is that whereas common blocks are shared by subroutines within the same process, global sections are shared among different processes. Messages therefore only have to include a small number of arguments since the bulk of the data can directly be accessed by the target process through the global sections. As expected, this "optimization" has a price associated with it; the integrity of the data structures has to be maintained at all times. This is particularly true of linked data structures (e.g., lists, stacks, double-ended queues, etc.).

The simulation consists of the following processes: the simulation control (SIMCON), the aircraft position generator (POSGEN), the air traffic controller station driver (SECTOR), and the pseudo-pilot station driver (PPILOT). Each controller station is associated with a distinct "copy" of the SECTOR process and each pseudo-pilot station is associated with a distinct "copy" of the PPILOT process. The complete ATC system therefore will involve eight distinct processes. The accompanying figure depicts the major tasks associated with each process.

SIMCON -- All Communications outside the ATC subsystem
Simulation timing
Experimenter command processing
Script Control
Audio Control

POSGEN -- Aircraft motion and dynamics
Airborne Instrument readings
Ground facilities (Radars, Navaids)

SECTOR -- Controller display generation (Enroute, Terminal Area, Ground)
Controller command processing

PPILOT -- Pseudo-pilot display generation
Pseudo-pilot command processing

Figure 4.- Software components.

BRIEF DESCRIPTION AND PURPOSE OF THE SCRIPT MECHANISM

The script mechanism allows precisely timed pacing and control of ATCSIM operations while maintaining a flexible override and deviation capability by the simulation actors. Essentially, it allows the "delivery" of text lines to any one of three terminal types: experimenter (command console), controller, and pseudo-pilots. The text lines appear in either specially designated areas of these terminals (information-only lines) or on the terminal's input area.

These text lines are "delivered" upon occurrence of a simulation "event" or the reaching of a certain simulation time. The specifics of this delivery and the text line that must be delivered are given by means of a "script" directive."

Upon delivery to the target terminal, text lines may have one of three functions.

1. The lines may simply show some information to the actor (such as cueing the actor to perform a specified action). Such a script line is termed a "display only" line.

2. The lines may place a command line on the actor's terminal input area, which can be entered by the actor just pressing the "enter" key just as if he/she had keyed in that line. Additionally, the actor may edit the line before entering it or simply cancel the command. Such a script line is termed a "validated" line.

3. Finally, the text may be sent to the terminal for automatic entering, in which case it does not require any actor action (but is logged as if the actor had entered it). Such a line is termed an "automatic" line.

To summarize, a script line is composed of three elements: a "trigger directive," which specifies the event or time that is to cause the script line to be executed; an "action directive," which specifies the target terminal and disposition of the line; and finally, the data itself, or "text," of the script line.

Provides repeatability and controllability of experiments

SCRIPT	a set of "directives" allowing specific actions to occur automatically when certain specified conditions are met	
SCRIPT LINE	trigger action data	
TRIGGER:	(a)	timer events
	(b)	aircraft state events
	(c)	audio events
	(d)	named events
ACTION	to whom how (automatic - validate - display)	
DATA	alphanumeric string	

Figure 5.- ATC simulation script.

REFERENCE

1. Heinz, V.: Stochastic Simulation of Terminal Area Air Space. S. M. Thesis, Mass. Inst. of Technol., Cambridge, June 1976.

RELATIVE-DATUM LORAN NAVIGATION

Antonio Elias
Flight Transportation Laboratory
Massachusetts Institute of Technology
Cambridge, Massachusetts

THE BASIC APPROACH

For short-range navigation around an airport, there are operational and computational advantages in changing the reference frame for Loran navigation for the normal latitude-longitude frame to a tangential local reference plane. This is called "Relative Datum Loran Navigation" since it is centered at a selected reference point (such as a runway touchdown point) whose time differences (TD's) in a given Loran grid have been accurately surveyed.

If the receiver TD's are related to this datum to produce a relative TD (ΔTD), the computation of its position in the x,y local reference plane can be computed easily using two linked linear equations which have four known constant coefficients. We can store the TD's of all touchdown points and these four coefficients in order to provide x,y in local reference planes related to each runway.

- NAVIGATE ON AN EAST-NORTH CARTESIAN GRID AROUND A REFERENCE POINT WHOSE TD'S HAVE BEEN ACCURATELY MEASURED
- APPROXIMATE THE HYPERBOLIC GRID WITH AN OBLIQUE RECTILINEAR GRID TANGENT TO THE L.O.P.'S AT THE REFERENCE POINT
- USE AS BASIC MEASUREMENTS THE DIFFERENCES BETWEEN THE RECEIVED TD'S AND THE PUBLISHED REFERENCE POINT'S TD'S (STD'S)
- THE PROBLEM IS THEN UNIQUELY DETERMINED BY SIX PARAMETERS: TD_{R1}, TD_{R2}, A_{12} A_{11}, A_{21}, A_{22}:

$$\begin{Bmatrix} x \\ y \end{Bmatrix} = A \begin{Bmatrix} TD_1 - TD_{R1} \\ TD_2 - TD_{R2} \end{Bmatrix}$$

- THE A'S ARE WEAK FUNCTIONS OF: THE GREAT CIRCLE AZIMUTHS FROM THE REFERENCE POINT TO EACH TRANSMITTER, AND THE SIGNAL PROPAGATION VELOCITY

LOCAL GRID GEOMETRY

The geometry of the Loran-C grid of LOP's can be approximately described as an oblique rectilinear grid whose directions are known. We define unit vectors $\underline{e}_1$, $\underline{e}_2$ as gradients to the LOP's at the grid datum point. The formulation of the receiver position is then derived as shown on the next few figures.

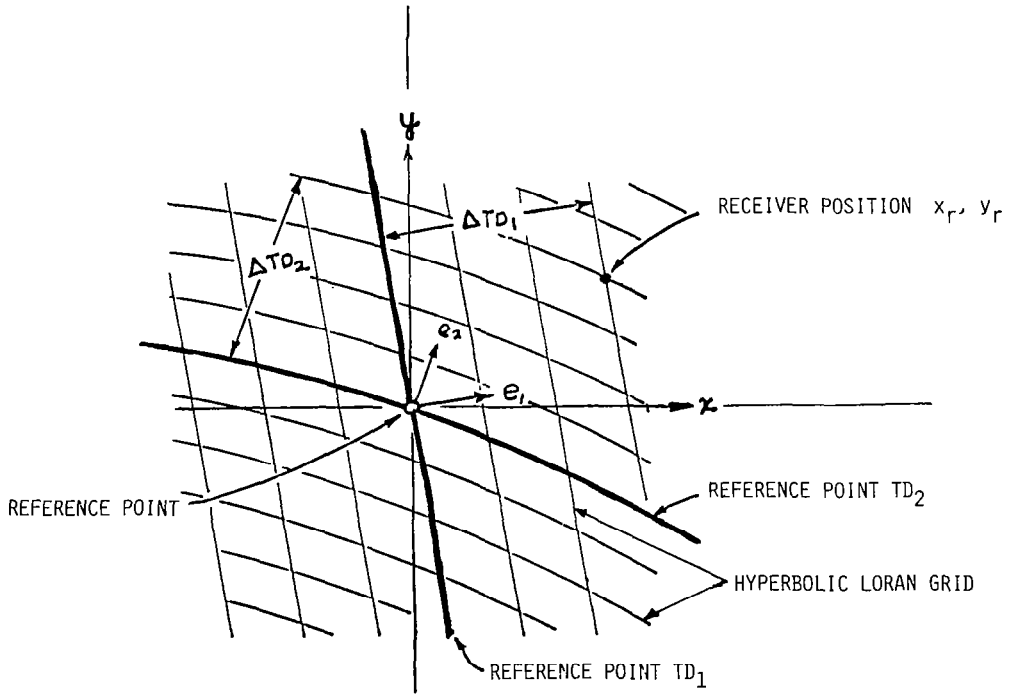

FORMULATION

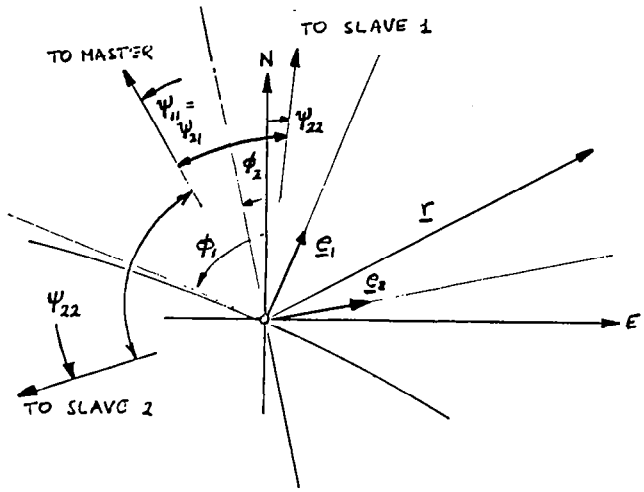

THE BISECTORS OF THE TRANSMITTERS' DIRECTIONS ARE TANGENT TO THE HYPERBOLAS:

$$\phi_1 = 1/2\ (\Psi_{11} + \Psi_{12})$$
$$\phi_2 = 1/2\ (\Psi_{21} + \Psi_{22})$$

THE UNIT VECTORS NORMAL TO THE HYPERBOLAS ARE 90° TO THE RIGHT OF THE BISECTORS:

$$\underline{e}_1 = \cos\phi_1\ \underline{i} - \sin\phi_1 \underline{j}$$

$$\underline{e}_2 = \cos\phi_2\ \underline{i} - \sin\phi_2 \underline{j}$$

THE SPACING BETWEEN THE TRANSMITTERS DIRECTIONS DETERMINES THE GRID GRADIENT:

$$|\nabla_1| = \frac{2\nu}{c} \sin\left(\frac{\Psi_{12}-\Psi_{11}}{2}\right) \qquad |\nabla_2| = \frac{2\nu}{c} \sin\left(\frac{\Psi_{22}-\Psi_{21}}{2}\right)$$

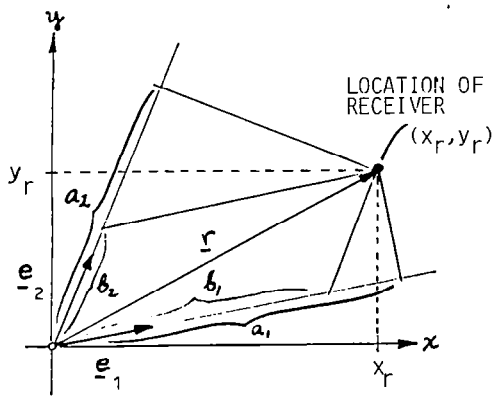

TO FIND THE RECEIVER LOCATION (x_r, y_r)

$$\underline{r} = b_1\underline{e}_1 + b_2\underline{e}_2$$

Then

$$a_1 = \underline{r}.\underline{e}_1 = b_1\underline{e}_1\underline{e}_1 + b_2\underline{e}_1\underline{e}_2$$
$$a_2 = \underline{r}.\underline{e}_2 = b_1\underline{e}_1\underline{e}_2 + b_2\underline{e}_2\underline{e}_2$$

IF WE DEFINE $\eta = \underline{e}_1\underline{e}_2$,

$$\begin{Bmatrix} a_1 \\ a_2 \end{Bmatrix} = \begin{bmatrix} 1 & \eta \\ \eta & 1 \end{bmatrix} \begin{Bmatrix} b_1 \\ b_2 \end{Bmatrix}, \quad \text{OR} \quad \begin{Bmatrix} b_1 \\ b_2 \end{Bmatrix} = \frac{1}{1-\eta^2} \begin{bmatrix} 1 & -\eta \\ \eta & 1 \end{bmatrix} \begin{Bmatrix} a_1 \\ a_2 \end{Bmatrix}$$

THE RECEIVER LOCATION BECOMES

$$x_r = b_1 e_{1x} + b_2 e_{2x}$$
$$y_r = b_1 e_{1Y} + b_2 e_{2Y}$$

FORMULATION

NOTE THAT $\frac{1}{1-\eta^2}$ = g, GEOMETRIC DILUTION OF POSITION AT THE DATUM

SUBSTITUTING $x_r = \{a_1 - \eta a_2\}\ g \cos\phi_1 + \{-\eta a_1 + a_2\}\ g \cos\phi_2$

$= \{\cos\phi_1 - \eta\cos\phi_2\}\ g\ a_1 + \{-\eta\cos\phi_1 + \cos\phi_2\}\ g\ a_2$

SIMILIARLY $y_r = \{-\sin\phi_1 + \eta\sin\phi_2\}\ g\ a_1\ \{+\eta\sin\phi_1 - \sin\phi_2\}\ g\ a_2$

NOW $a_1 = \Delta TD_1 . |\nabla_1|$

$a_2 = \Delta TD_2 . |\nabla_2|$

THEREFORE

$$\begin{Bmatrix} x_r \\ y_r \end{Bmatrix} = \begin{bmatrix} \{\cos\phi_1 - \eta\cos\phi_2\}\ g\ |\nabla_1|, & \{-\eta\cos\phi_1 + \cos\phi_2\}\ g\ |\nabla_2| \\ \{-\sin\phi_1 + \eta\sin\phi_2\}\ g\ |\nabla_1|, & \{\eta\sin\phi_1 - \sin\phi_2\}\ g\ |\nabla_2| \end{bmatrix} \begin{Bmatrix} \Delta TD_1 \\ \Delta TD_2 \end{Bmatrix}$$

$$\doteq \begin{bmatrix} A_{11} & A_{12} \\ A_{21} & A_{22} \end{bmatrix} \begin{Bmatrix} \Delta TD_1 \\ \Delta TD_2 \end{Bmatrix}$$ WHERE A_{11}, A_{12}, A_{13}, A_{14} ARE CONSTANTS

RECTILINEAR GRID ASSUMPTION

The Loran-C grid is actually hyperbolic. There is a geometric error from assuming it to be rectilinear around the datum. For several airports in New England, we can show that the lateral position errors are less than 1° of the runway heading within 20 kilometers of the airport. At 10 kilometers, the lateral errors are less than 70 meters. At 5 kilometers, they are less than 15 meters. It will be necessary to choose a good geometry for every airport, and to study these errors at airports in other parts of the US.

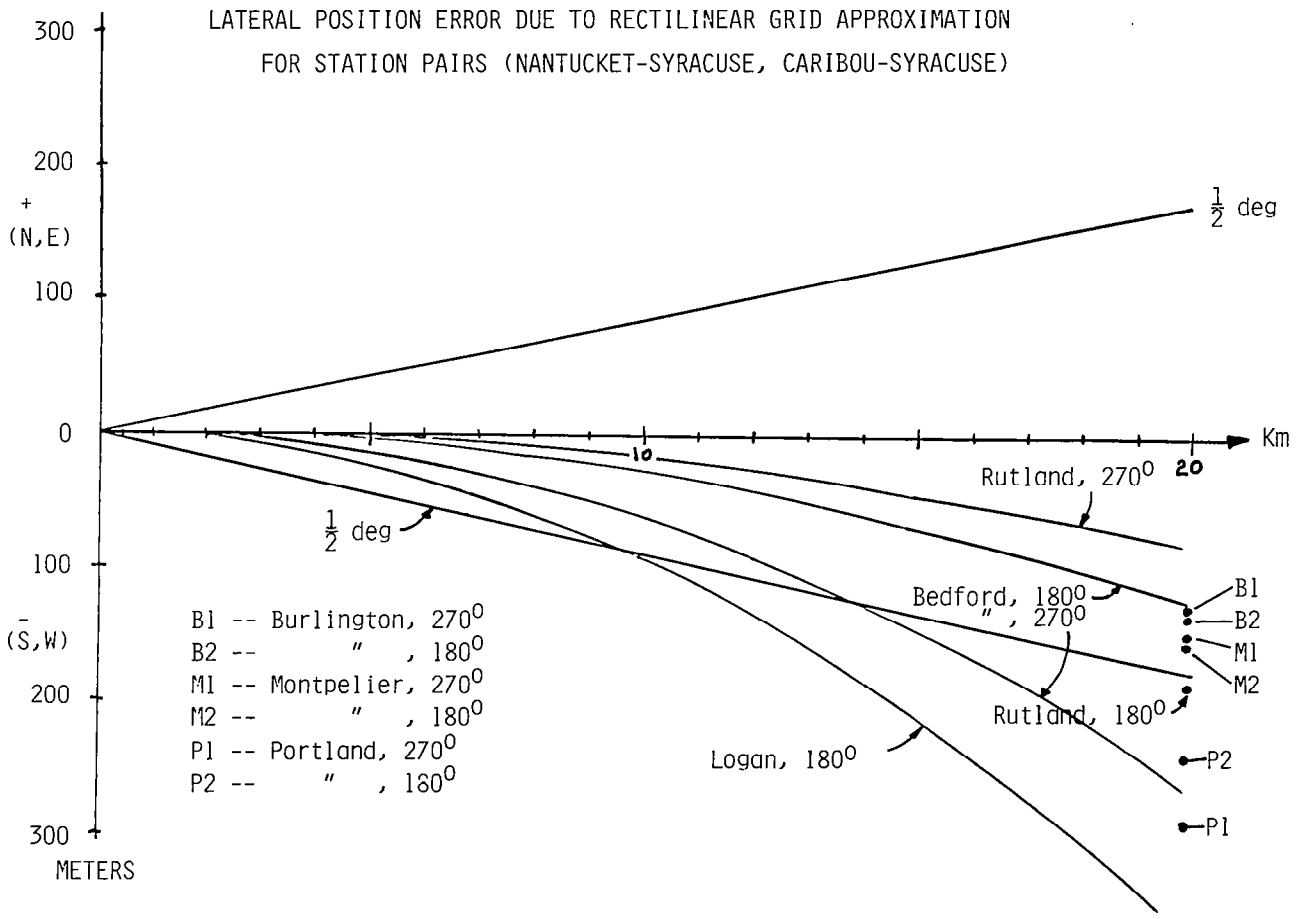

MERITS

- FIRST-ORDER EFFECTS OF THE ERROR IN MODELING SIGNAL PROPAGATION VELOCITY "COMMON-MODE" OUT OF THE PROBLEM (SECOND-ORDER EFFECTS REMAIN)
- THE APPROACH IS INDEPENDENT OF LATITUDE-LONGITUDE CONVERSION ALGORITHMS
- THE COMPUTATION REQUIREMENTS ARE REDUCED TO FOUR MULTIPLICATIONS, TWO ADDITIONS, AND TWO SUBTRACTIONS PER FIX, AND MAY BE CARRIED OUT IN (SCALED) FIXED POINT
- ALL THE DATA REQUIRED TO FULLY DEFINE ONE REFERENCE POINT CAN BE STORED IN 80 BITS (10 BYTES)
- IF FED THE RATE OF CHANGE OF THE TD's (AVAILABLE DIRECTLY FROM MOST SIGNAL TRACKING LOOPS), THE METHOD WILL COMPUTE $\dot{x}$, $\dot{y}$ WHICH CAN BE USED IN PATH GUIDANCE

OPEN QUESTIONS

- WHAT IS THE MAGNITUDE OF THE ERROR INDUCED BY THE RECTILINEAR-GRID APPROXIMATION AT AIRPORTS IN OTHER AREAS OF USA?
- WHAT ARE THE EFFECTS (THROUGH THE A's) OF ERRORS IN THE KNOWLEDGE OF AZIMUTH DIRECTION OF THE TRANSMITTERS AND PROPAGATION VELOCITY?
- WILL IT WORK IN ACTUAL PRACTICE?
- WHAT ARE THE ADVANTAGES OF A SECOND-ORDER MODEL OF THE FORM?

$$\begin{Bmatrix} x \\ y \end{Bmatrix} = [A] \begin{Bmatrix} \Delta TD_1 \\ \Delta TD_2 \end{Bmatrix} + [E] \begin{Bmatrix} \Delta TD_1^2 \\ \Delta TD_2^2 \end{Bmatrix}$$

Princeton University

INVESTIGATION OF AIR TRANSPORTATION TECHNOLOGY AT PRINCETON UNIVERSITY, 1982

Robert F. Stengel
Department of Mechanical and Aerospace Engineering
Princeton University
Princeton, New Jersey 08544

SUMMARY OF RESEARCH

The Air Transportation Technology Program at Princeton University, a program emphasizing graduate and undergraduate student research, proceeded along six avenues during the past year:

- Investigation of Fuel-Use Characteristics of General Aviation Aircraft
- Experimentation with an Ultrasonic Altimeter
- Single-Pilot Instrument Flight
- Application of Fiber Optics in Flight Control Systems
- Voice Recognition Inputs for Navigation/Communication Receiver Tuning
- Computer-Aided Aircraft Design

Principal investigator Robert Stengel worked with Profs. Larry Sweet and H.C. Curtiss in advising the students participating in this program.

Navigation research conducted during earlier years provided a logical stepping stone to consideration of flight management systems for general aviation aircraft, including fuel-minimizing guidance between origin and destination points. The effectiveness of such guidance logic is, of course, dependent on the accuracy of aircraft fuel use models, and this, in turn, requires adequate mathematical description of engine characteristics. In his doctoral research, Richard Parkinson developed a cruise performance model that can be developed from operating handbook data, and he developed a detailed mathematical model of the fuel use characteristics of general aviation reciprocating engines. Final results are documented in his thesis{1}. Mr. Parkinson began his research under the guidance of Prof. Dunstan Graham, who retired from the university in 1980; he continued with the supervision of Profs. Curtiss and Sweet. Working with Prof. Curtiss, graduate student Eugene Morelli is continuing this research.

Several students have studied the feasibility of using an ultrasonic transducer as an altimeter for the landing approach through touchdown. The transducer, initially developed for use in an automatic range-finding camera, demonstrated better than 1% accuracy for ranges of 0.27 to 10.67 m (0.9 to 35 ft) in laboratory and wind tunnel tests, with transverse air velocities of up to 45.7 m/sec (150 ft/sec) and with sensor angles of 0 to 25 deg. Following last year's work by Amy Snyder, senior Philip Chu was able to increase the measurement range to 56 ft by modifications to the device's circuitry{2}; the changes made the device more susceptible to wind-induced noise. Patricia Corvini, a junior in electrical engineering and computer science, investigated a microprocessor-based correlation technique for improving the measurements when the signal-to-noise ratio is low{3}. The processing principle was verified, although the implementation was not suitable for real-time application.

The Flight Research Laboratory completed a study of flying qualities criteria for single-pilot instrument flight operations, culminating in the Ph.D. thesis of Aharon Bar-Gill{4}. Techniques for applying extended optimal smoothing to sequential DME data and on-board inertial and air data were developed and applied to flight test data. In this approach, a single DME receiver is switched between alternate DME stations to update the state estimate, which is processed after the flight has been completed. Because all the measured data are applied to estimate the state at each point in the flight path, the result is somewhat more accurate than that which would be obtained from the extended-optimal filter. Experimental results yielded quantitative indicators of pilot performance and workload as functions of the aircraft's long-period longitudinal dynamic characteristics.

Fiber optic data transmission promises to provide decreased weight, improved resistance to electro-magnetic interference, and increased reliability in future active flight control systems. Graduate student Kristin Farry is nearing completion of an application of fiber-optic technology in a multi-microprocessor system. Princeton's Variable-Response Research Aircraft (VRA) has dual angle-of-attack and sideslip-angle vanes mounted at each wingtip, previously connected to the central analog and digital control logic by standard wiring{5}. Dual microprocessors have been installed at the wingtips; the sensors are connected directly to these units, which in turn communicate with the central microprocessor via fiber optic links. The local processors provide scaling and instrument error correction, elimination of roll rate effects on sensed angles, and analog/digital conversion before sending the data to the flight control computer unit. The fiber optic multiprocessor system has been tested in flight, and the results will be presented in Ms. Farry's M.S.E. thesis.

Voice recognition of pilot inputs could play a major role in future air transportation, not only for commercial aircraft but for general aviation aircraft as well. This capability has

particular significance for single-pilot instrument flight operations, where one pilot is required to perform all the tasks normally carried out by two or three persons in the larger aircraft. The tasks that could be carried out using voice command are varied; as a generality, these are characterized as the jobs which a captain might ask the co-pilot to do (e.g., tuning radios, maintaining contact with air traffic control, holding altitude, and so on). Frances Koo, a senior in electrical engineering and computer science, completed a project in preparation for voice recognition tuning of the navigation and communication receivers in Princeton's Avionics Research Aircraft (ARA){6}. This work is being continued in the Ph.D. research of Chien Huang. The ARA's DME receiver has been tuned in flight by digital signals from a microprocessor, which received inputs from the pilot via the voice recognition board{7}. Initial developments are being extended to include the tuning of VOR and communications receivers, as well as the statistical evaluation of the system when used with different vocabularies, operators, and background noise conditions.

Work was begun on the Princeton Aircraft Design System (PADS), a modular interactive graphics computer program for the design of aircraft. The objective is to facilitate the design of aircraft configurations ranging from general aviation and glider aircraft to supersonic transports and other high-performance aircraft. Four students produced reports on various aspects of the PADS computer program, which is implemented in the APL computer language using Princeton University's IBM 3081-based Interactive Computer Graphics Laboratory facilities{8-11}. Seniors Thomas Edwards, James Gerber, and Marina Vogel respectively worked on preliminary design, internal geometry, and graphical input. Junior Brian Holasek began development of the wing geometry and aerodynamics module.

The NASA grant supporting student research in air transportation technology has inestimable value in helping educate a new generation of engineers for the aerospace industry, and it is producing research results that are relevant to the continued excellence of aeronautical development in this country.

REFERENCES AND ANNOTATED BIBLIOGRAPHY

1. R.C.H. Parkinson, "A Fuel-Efficient Cruise Performance Model for General Aviation Piston Engine Airplanes", Princeton University Ph.D. Thesis, No. MAE 1527-T, June 1982.

This dissertation presents a fuel-efficient cruise performance model that maximizes the specific range of airplanes powered by spark-ignition piston engines and propellers. The uses and limitations of typical pilot operating handbook cruise performance data for constructing cruise performance models are first examined. These data are found to be inadequate for constructing such models. A new model consisting of two subsystems is developed. The new model facilitates the maximization of specific range; by virtue of its simplicity, it appears suitable for airborne implementation.

2. P.C. Chu, "Ultrasonic Altimetry: Final Report, Enhanced Range Capability; The Modified Polaroid Ranging System", Princeton University Independent Work Report, Dec 1981.

This report studies the feasibility of using the Polaroid Ultrasonic Ranging System as an altimeter for landing aircraft during the final approach and flare maneuver. Using an external processing circuit and time-stepped gains, fairly reliable ranging could be obtained up to a minimum of 50 ft. The two factors that appear to limit the ranging system are the signal-to-noise ratio and the "chirp" volume of the transducer.

3. P. Corvini, "Hardware and Software for a Feasibility Study of Cross-Correlation for Extending the Range of an Ultrasonic Ranging System", Princeton University Independent Work Project, May 1982.

The aim of this work was to provide an inexpensive means of determining if digital correlation analysis could be used to extend the usable range of an ultrasonic ranging system. The system consisted of the existing sensor, the modified circuit board described above, a breadboard timing circuit, and three Multibus™ microcomputer boards. The ultrasonic chirp consisted of 56 cycles emitted at 50 to 60 Hz; data from several chirps were combined to get a composite picture of a single chirp, using an analog/digital converter operating at 28 Hz. The system allowed sixteen shifted passes at 10 Hz for an effective rate of 160 Hz.

4. A. Bar-Gill, "Longitudinal Flying Qualities Criteria for Single-Pilot Instrument Flight Operations", Princeton University Ph.D. Thesis, No. MAE 1576-T, Oct 1982.

This research used estimation and control theory, flight testing, and statistical analysis to deduce flying qualities criteria for general aviation single-pilot instrument flight rule (SPIFR) operations. The principal concern was that unsatisfactory aircraft dynamic response combined with high navigation/communication workload can produce problems of safety and efficiency. The objective was achieved by flying SPIFR tasks with different longitudinal dynamic configurations (using the variable-stability features of the test aircraft) and by assessing the effects of such variations on pilot opinion and performance. The experimental results yielded quantitative indicators of pilot performance and workload, and for each of them, multivariate regression was applied to evaluate candidate flying qualities criteria. Results indicated that phugoid mode damping, stick force sensitivity, and pitch attitude sensitivity were the most significant flying qualities parameters for these tasks. In the course of the research, a numerically robust algorithm for flight path reconstruction was developed. This nonlinear optimal smoothing algorithm used multiple, scanned DME measurements in combination with aerodynamic and inertial data to provide highly accurate position, velocity, and angular estimates.

5. K.A. Farry and R.F. Stengel, "Distributed Processing and Fiber Optic Communications in Air Data Measurement", Proceedings of the 1982 National Aerospace and Electronic Systems Conference, Dayton, May 1982.

This paper describes the application of distributed processing, fiber optics, and hardware redundancy to collecting air data. Microprocessor-controlled instrumentation packages in each wingtip of Princeton's Variable-Response Research Aircraft (VRA) collect angle-of-attack and sideslip-angle data in digital form. After scaling, filtering, and calibrating the data, the wingtip processors send the data to the central processor, located in the VRA's fuselage, via fiber-optic links. The system design is presented, and results of a preliminary flight test are discussed. During this flight, over 2000 data transmissions occurred without error. The technology shows considerable promise for enhancing the reliability and performance of future flight control systems.

6. F. Koo, "An Application of Voice Recognition: Frequency-Tuning On Board an Airplane", Princeton University Independent Work Report, May 1982.

The objective of this work is to develop a system for tuning aircraft radios using voice inputs. The report presents an overview of voice recognition technology, and it identifies factors to be considered in experimentation. The voice recognition system is described. It consists of a commercially available voice recognition module, a host microcomputer, and the digital interface to aircraft radios. The system is capable of recognizing 100 words, which are then used to control the tuning function.

7. "Filter Center", Aviation Week & Space Technology, Vol. 117, No. 15, Oct. 11, 1982, p. 135.

Princeton University is exploring use of voice-recognition techniques as a potential 'electronic co-pilot' for general aviation aircraft under sponsorship of NASA's Langley Research Center. Current tests on board a Ryan Navion are using an Interstate Electronics CRM-102 voice-recognition system in which the pilot tunes Bendix BX-2000 distance measuring equipment by speaking the name or identification letters of a Vortac station. After training to a specific pilot's voice prior to takeoff, the system achieves about 95% successful recognition of commands and no false recognitions.

8. T.A. Edwards, "A User's Guide to the Preliminary Design Module of the Princeton Aircraft Design System", Princeton University Independent Work Report, May 1982.

The PADS Preliminary Design Module is an integrated system of APL computer programs with the capability to size and/or optimize an airplane to meet an arbitrary number of constraints. The package doubles as the initiator of PADS, and as an independent learning tool for decision-making in the conceptual stage of airplane design. Four design parameters were selected as the most representative performance "drivers": wing aspect ratio, sweep angle, wing loading, and thrust loading. The design module permutes these parameters and determines the resultant "point" designs.

9. J. Gerber, "Princeton Aircraft Design System (PADS) -- Internal Geometry Module: A Step in the Realization of Computer-Aided Engineering for Aircraft Design", Princeton University Independent Work Project, May 1982.

With the use of fast computer graphics, designers have become capable of describing complex, three-dimensional objects for drafting reproduction in one half to a quarter of the time required for conventional drafting techniques. These same computer-aided design advantages can be brought to bear on the integrated design of aircraft. The PADS internal geometry module is one element of such a system, providing the mechanism for defining the geometries of specific components including the description of line segments, component attributes, and component assemblies. The module provides a 3-D representation of a component or assembly that can be rotated, projected, or transformed to meet specific requirements. The package is "menu-driven", providing the user with relevant "help" information, as required.

10. B. Holasek, "PADS: Wing and Tail Geometry, Wing Section with Data Base for Design Support", Princeton University Independent Work Project, May 1982.

This is an interim report describing accomplishments during the first term of a two-term project. Airfoil and wing planform characteristics are defined and calculated, and the results can be viewed in two or three dimensions. Future features will include the estimation of wing aerodynamic characteristics and the graphical mating of the wing to the fuselage.

11. M.H.C. Vogel, "Princeton Aircraft Design System: Graphical Input and Modification of Data Bases", Princeton University Independent Work Report, May 1982.

A package for input and manipulation of data bases was defined, and coding was begun. Objects can be described using input from a terminal keyboard or a digitizing pad, and editing capabilities are provided.

COCKPIT VOICE RECOGNITION PROGRAM AT PRINCETON UNIVERSITY

Chien Y. Huang
Flight Research Laboratory
Princeton University
Princeton, New Jersey

OVERVIEW

- Today's Technology

The voice recognition is a fairly new technology. Although not as mature as the voice synthesis, it is able to offer limited-vocabulary low-error-rate modules. There are numerous commercially available boards; most of them (if not all) use frequency division technique (to be explained later) to achieve recognition.

- Advantage of vocal over manual input

Vocal input is superior to the manual one in situations where eye-hand coordination is not feasible or difficult. By resorting to verbal commands, a person is actually using a familiar input mode which has the additional advantage of speed.

- Current Research Effort

Current research on voice recognition is being carried out at NASA Ames and Langley Research Centers. Quite a few masters theses have been written on the performance of a voice recognition device at the Naval Postgraduate School. The Army has conducted related work on helicopters.

- Objective of Princeton University's Study

The objective of Princeton University's Flight Research Laboratory is to find applications of voice recognition technology (VRT) to the aeronautics, particularly on the pilot workload alleviation. We believe that the VRT does not have to prove its

maturity any longer. We believe that time has come for us to use its unproven capabilities in the cockpit environment. We have elected to demonstrate the feasibility of voice tuning of radio and DME since it has immediate advantages to the pilot and it can be completed in a reasonable time.

OVERVIEW

- TODAY'S TECHNOLOGY
- ADVANTAGE OF VOCAL OVER MANUAL INPUT
- CURRENT RESEARCH EFFORT (AT NASA, NAVY, ARMY, ...)
- OBJECTIVE OF PRINCETON UNIVERSITY'S STUDY

SYSTEM BLOCK DIAGRAM

The Voice Recognition System at Princeton's Flight Research Laboratory consists of a Z80 CPU which uses two serial ports and one parallel I/0 port to establish communication with CRT, VRM, DME and NAV/COM units, as shown in the figure. The DME and NAV/COM are part of Bendix 2000 product line. They provide digital I/0 for easy interfacing. The VRM is an Interstate Electronics Voice Recognition Module 102. Details of this board follow.

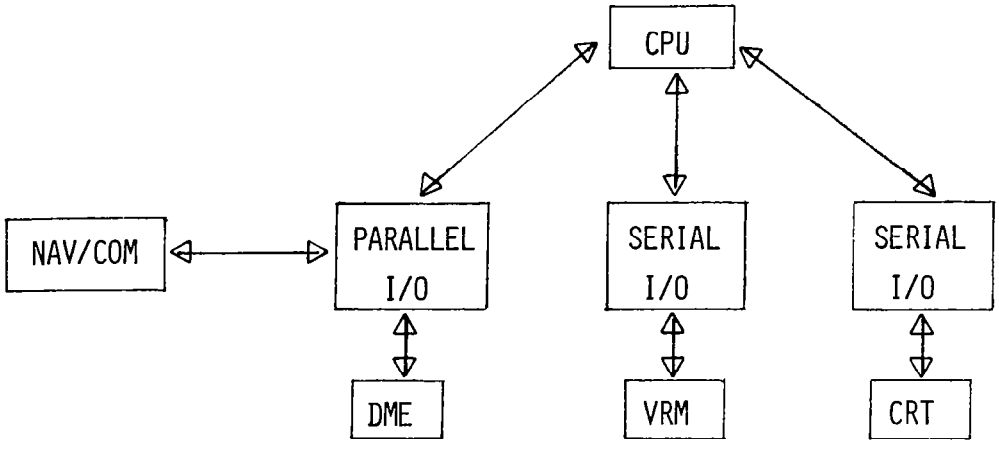

VRM SIMPLIFIED FUNCTIONAL DIAGRAM

The VRM board processes the speech by determining the energy content at discrete frequency intervals. As can be seen from the figure, the speech is first equalized so that a stronger voice is treated in the same way as a weak one. The preamplifier is optional since some mikes have built-in preamps. The speech then passes through a bandpass filter bank whose output is digitally encoded and stored in the 2K x 8 RAMS. The VRM communicates with a host processor via either serial or parallel lines. The ROM shown contains the program that controls the voice recognition process, including pilot cueing, logical response to identified words, and receiver tuning.

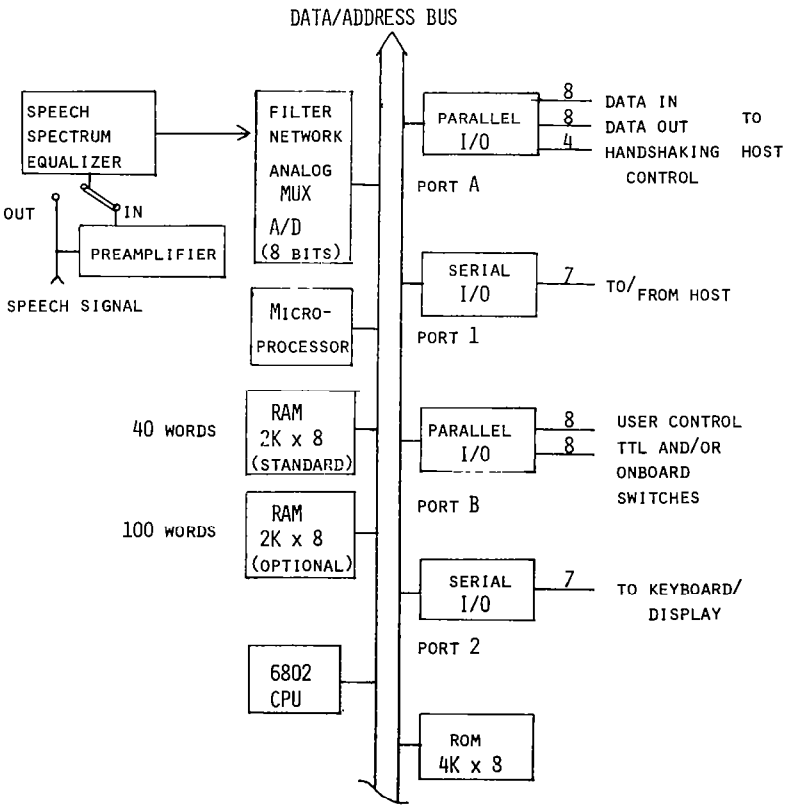

(From ref. 1)

FIRST FEASIBILITY TEST

Our first feasibility test was carried out on September 17, 1982 when we performed in-flight tuning of the DME. That flight test had the sole purpose of demonstrating that voice-recognition is viable in a noisy cockpit environment; therefore the vocabulary was kept to only six words: "over, tune, Robbinsville, Colts Neck, Yardley, Solberg". After reporting our success in the last Quarterly Report[1], we set three goals: test the VRM with vocabulary of 40 words or more (which we did); identify and implement potential pilot tasks whose workload can be alleviated by a voice system (which we have partially completed); and study the scenario of a vocally interactive pilot-airplane configuration (which remains to be done).

---

[1] Joint University Program Quarterly Review, held at the Massachusetts Institute of Technology, Oct. 1, 1982.

FIRST FEASIBILITY TEST: IN-FLIGHT DME TUNING
(SEPT. 17, 1982)
(LIMITED VOCABULARY)

GOALS SET:

- TEST THE VRM WITH VOCABULARY OF 40 WORDS OR MORE
- IDENTIFY (AND IMPLEMENT) POTENTIAL PILOT TASKS WHOSE WORKLOAD CAN BE ALLEVIATED BY A VOICE SYSTEM
- STUDY THE SCENARIO OF A VOCALLY INTERACTIVE PILOT-AIRPLANE CONFIGURATION

VOCABULARY

The vocabulary we chose as a first cut consists of words that are meaningful for pilots to use in the cockpit. We feel that the presence of every word in the vocabulary should be justified. Therefore we see that, as we go down the list, the numbers (0 - 9) are there for obvious reasons. "Point (.)" is used to denote decimals. The word "tune" is the first word given for radio or DME tuning command. "RBV" (Robbinsville), "CTK" (Colts Neck), "YRD" (Yardley) are three arbitrary DME stations; the stations can be altered according to the need. "Exit" is used to exit the recognition mode, as is the word "quit". "Delete" is needed to correct a wrong input (say the last of a string of numbers). "Sleep" is to tell the computer to go into hibernation mode to be awakened only by the command "Wakeup". These are useful when the pilot desires to converse with others without leaving the recognition mode. "Run" is to denote the beginning of an experiment, as in "Run" "Number",,,. "Execute" tells the machine to execute the command. "COM1", "COM2","NAV1", "NAV2" and "DME" are addressable equipments. "Over" may be used to denote the end of a sub-command. "Turn" is used with the other four words, "Right", "Left", "On", and "Off" to perform indicated functions. "Change" is used to modify something like "Frequency" or "Airspeed". "Knots" is needed to specify an airspeed value. Similarly "Altitude" is used together with "Thousand", "Hundred" and "Feet" to command the aircraft to "Climb-to" or "Descend-to" or "Hold" certain altitude. Finally, "Heading" is used together with "North", "West", "South", and "East" to perform changes in the airplane's direction.

VOCABULARY

0. ZERO
1. ONE
2. TWO
3. THREE
4. FOUR
5. FIVE
6. SIX
7. SEVEN
8. EIGHT
9. NINE
10. . (POINT)
11. TUNE
12. RBV
13. CTK
14. YRD
15. EXIT
16. DELETE
17. ABORT
18. SLEEP
19. WAKEUP
20. QUIT
21. RUN
22. NUMBER
23. EXECUTE
24. COM1
25. COM2
26. NAV1
27. NAV2
28. DME
29. OVER
30. TURN
31. RIGHT
32. LEFT
33. ON
34. OFF
35. CHANGE
36. FREQUENCY
37. AIRSPEED
38. KNOTS
39. ALTITUDE
40. HUNDRED
41. THOUSAND
42. FEET
43. HEADING
44. NORTH
45. WEST
46. SOUTH
47. EAST
48. CLIMB-TO
49. DESCEND-TO
50. HOLD

DESIRABLE PERFORMANCE TEST OF VRM

After reviewing the literature on voice recognition and utilizing some common sense and intuition, we arrived at a set of tests which ought to be conducted on any voice recognition system (so that the users become familiar with the performance of their module which is different from one unit to another).

The first test one would like to carry out is probably the error rate test; that is, what percentage of the time does the system misrecognize the words spoken. This should be distinguished from the rejection rate, where the system does not recognize the word and rejects the input as invalid. The error rate test should be performed under various conditions, such as in quiet and noisy environment, with and without the noise canceller. The second test concerns the error rate as a function of training passes. This will help the users to determine the optimal number of training passes to achieve the lowest error rate. The third test is designed to see if a female voice would have more or less problem than that of male voice. The fourth test is important when it is desirable to limit some users' functional access. Suppose only one person is allowed to command the system (by voice) to perform a specific task. We would like the system to reject other users from this unauthorized command; hence, the need to learn how well the VRM performs as far as speaker differentiation is concerned. The fifth test is related to rejection rate, which determines how high the threshold level should be set. The threshold level is the minimum score that an utterance must get in order to be declared a valid word. The higher we set the level, the higher the score (and the lower the error rate),

and vice versa. Clearly there is an optimum setting that must be determined from the experiments. The last interesting test is to check how the system performs with several different languages in the same vocabulary. Most systems are language-independent; however, there are languages or sounds that are better suited for VRM than others.

DESIRABLE PERFORMANCE TESTS OF VRM

1. ERROR RATE (WITH AND WITHOUT NOISE CANCELLER) IN QUIET AND NOISY ENVIRONMENT

2. ERROR RATE VS. TRAINING PASSES

3. FEMALE VS. MALE VOICE

4. SPEAKER DIFFERENTIATION

5. OPTIMUM TRESHOLD LEVEL (REJECTION RATE)

6. MULTILINGUAL MODE

RESULTS ERROR RATE

This figure shows the statistics we have gathered for error rate. The subject item "without canceller" means test was conducted in a quiet laboratory environment whereas the "with canceller" means the test was given inside our Navion cockpit which has a noise cancelling microphone. It turned out that we had some setup problems with the latter case (electrical interference) so its results are somewhat misleading.

The experiment consists of having the subjects train the VRM for a number of times using the previous vocabulary. The VRM then was put into recognition mode and the subjects would read back the entire vocabulary once; thereafter, they would randomly pick words to say.

From the results displayed on the figure,we see that the error rate does not seem to decrease with the number of trainings. This is because the subjects, as they used the system and became more familiar with it, tended to repeat the words that were incorrectly recognized and therefore involuntarily increased the error rate. The higher error rate of subject D relative to other three should not be taken to mean poorer VRM performance with a female voice, since one sample is hardly conclusive.

RESULTS - ERROR RATE

	3 TRAININGS	5 TRAININGS	7/8 TRAININGS
SUBJECT A:			
WITHOUT CANCELLER	1.22%	2.94%	4.76%
WITH CANCELLER	3.%	4.5%	6.58%
SUBJECT B:			
WITHOUT CANCELLER	1.22%	1.26%	3.5%
WITH CANCELLER	6.25%	1.%	3.26%
SUBJECT C:			
WITHOUT CANCELLER	1.1%	0.%	1.8%
WITH CANCELLER	2.%	6.4%	7.14%
SUBJECT D: (FEMALE)			
WITHOUT CANCELLER	8.53%	5.06%	9.86%

RESULTS - REJECTION RATE

The effect of number of trainings is most pronounced in the case of rejection rate. We see a clear downward trend as the number of trainings is increased. This is true both with and without noise cancelers. A few more experiments should be performed in order to determine the optimum training passes and concurrently the ideal threshold level.

	3 TRAININGS	5 TRAININGS	7/8 TRAININGS
SUBJECT A:			
WITHOUT CANCELLER	8.2%	4.4%	0.%
WITH CANCELLER	7.7%	0.%	1.3%
SUBJECT B:			
WITHOUT CANCELLER	17.%	5.06%	3.5%
WITH CANCELLER	15.%	11.%	4.3%
SUBJECT C:			
WITHOUT CANCELLER	25.8%	8.8%	3.6%
WITH CANCELLER	34.%	17.%	4.28%
SUBJECT D: (FEMALE)			
WITHOUT CANCELLER	40.%	6.33%	9.86%

SUMMARY

We can summarize our work as follows:

1. Voice recognition is a rapidly maturing technology, and speaker-dependent systems have become a commercial reality.

2. Voice recognition is a viable avionic tool, despite the aircraft noise, and it can be utilized to alleviate pilots' workload.

3. Performance of a current voice recognition module depends on choice of vocabulary, training, and speaker. This means that we can optimize the system by a sound combination of the factors mentioned.

- VOICE RECOGNITION IS A RAPIDLY MATURING TECHNOLOGY

- VOICE RECOGNITION IS A VIABLE AVIONIC TOOL

- PERFORMANCE OF CURRENT VRM DEPENDS ON CHOICE OF VOCABULARY, TRAINING AND SPEAKER.

FUTURE WORK

Our future work will be targeted at:

1. Modification and refinement of vocabulary. This means further testing in a feedback loop.

2. Completion of voice-tuning of NAV/COM UNIT. This work is almost finished. The next step is to check that it functions properly.

3. Identification of additional workload education capability of voice recognition within the cockpit will be conducted. One day we will be able to not only fly by wire but also fly by voice.

- MODIFICATION AND REFINEMENT OF VOCABULARY

- COMPLETION OF VOICE - TUNING OF NAV/COM UNIT

- IDENTIFICATION OF ADDITIONAL WORKLOAD REDUCTION CAPABILITY OF VOICE RECOGNITION WITHIN COCKPIT.

REFERENCE

1. Voice Recognition Module Reference Manual, Rev. 3. Interstate Electronics Corp., Anaheim, CA, April 1981.

DISTRIBUTED PROCESSING AND FIBER OPTIC COMMUNICATIONS IN AIR DATA MEASUREMENT*

Kristin A. Farry

Robert F. Stengel

Princeton University
Flight Research Laboratory
Princeton, New Jersey 08544

ABSTRACT

This paper describes the application of distributed processing, fiber optics, and hardware redundancy to collecting airstream data in Princeton's digitally controlled Variable-Response Research Aircraft (VRA). Microprocessor-controlled instrumentation packages in each wingtip of the aircraft collect angle-of-attack and sideslip data in digital form; after scaling, filtering, and calibrating the data, they send it to the aircraft's microprocessor Digital Flight Control System (micro-DFCS) via digital fiber optic data links. Each wingtip's package is independent of the other; therefore, the system has dual hardware redundancy. The fiber optic link design is presented as well as a description of the calibration and communications software. Translation of the system's dual redundancy into fault tolerance is also covered. Results of preliminary flight tests are included.

INTRODUCTION

The Flight Research Laboratory at Princeton University has undertaken a research program that focuses on the development of multi-microprocessor flight control systems for future aircraft. In the past, our attention was directed at new methodologies for digital control system design and at developing the capability to test advanced hardware and software in flight. More recently, we have addressed technology that eventually will lead to "fly-by-light" and distributed processor systems.

This paper describes an angle of attack and sideslip data collection and calibration system that has two independent microprocessor-based units. The data are transmitted from these calibration units to the aircraft's digital flight control system in ready-to-use form via a fiber optic bus. The micro-DFCS uses the system's dual redundancy to make judgements on information quality before using the data as inputs to the flight control computations. This system incorporates three important new flight control technologies — distributed processing, fiber optic communications, and fault tolerance.

An overview of the system is presented first, followed by a description of the hardware used. The fiber optic link design is discussed in particular detail. Software design is detailed next, in three parts — data preparation, communications, and redundancy management. Finally, the status of the system testing is described, along with an outline for the remainder of the test program.

SYSTEM DESCRIPTION

Two air data sensor vanes — measuring angle of attack and sideslip angle — are mounted at each wingtip of the aircraft. Their unusual position represents a tradeoff between the aircraft's structural rigidity and airstream distortion. Unfortunately, this location puts the vanes in the vicinity of the wingtip vortex, which makes calibration of the data more difficult than with conventional air data sensor booms.

The sensors deliver analog signals (electrical voltages) to the wingtip microprocessor packages (WIMP), each one of which contains a multiplexed A/D unit, a CPU, memory, and a fiber optic communications interface mounted in an STD bus. In the WIMP, the sensors' analog output signals are converted to digital format. Signal noise and other unwanted contributions, such as upwash and roll-rate effects are eliminated from the raw data by software-implemented filtering and calibration, so that each wingtip sensor unit's data are independent of the other's. Roll rate and velocity signals for these calculations must come from the micro-DFCS central information package. This, as well as communications "handshake", requires two-way communication between the WIMPs and the micro-DFCS. After filtering and calibration in each WIMP, the data are transferred via the fiber optic data link to the aircraft's digital flight control system. The data's validity is determined by comparing the results from each wingtip. This signal flow is outlined in Figure 1.

Before the installation of this system, the micro-DFCS read the analog output directly from the

*A version of this paper has appeared in the NAECON'82 Conference Record and also in IEEE Trans. Aero. Electron. Sys., vol. AES-19, no. 3, May 1983, pp. 467-473.

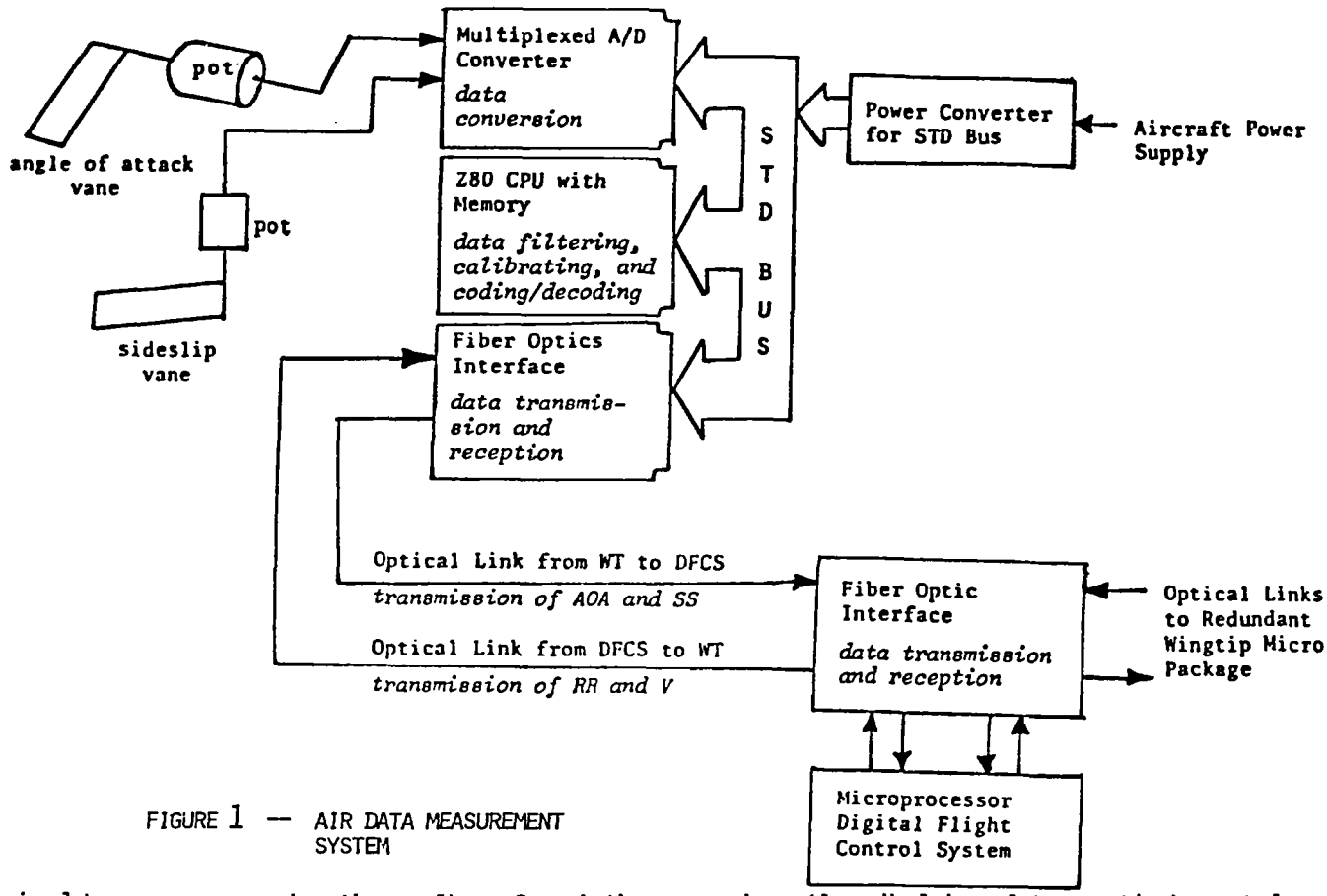

FIGURE 1 — AIR DATA MEASUREMENT SYSTEM

air data vanes, averaging the readings from both sides to eliminate roll rate effects. No fault detection or isolation was feasible. An undetected sensor fault in a flight test program can lead to erroneous data and require costly reruns.

HARDWARE

Figure 2 shows the VRA and the system installation. The system hardware falls into two categories — computational and communications. All hardware used to collect, calibrate, and filter data and detect errors is grouped under the computational heading; the communications category consists of the fiber optic links. The following two sections describe each component in detail.

Computational Hardware

Wingtip Microprocessor Package (WIMP). Each WIMP unit has three cards — CPU, A/D, and fiber optics interface — mounted in a Prolog STD card cage. The STD bus is a tightly structured 56-pin bus; the small size (4.5" x 5" x 0.5") and modularity of the STD components are useful where space is limited. Mostek's MDX-CPU2 card was chosen to be the wingtip central processor. It has a 4 MHz Z80 CPU and a memory of 11K (10K PROM and 1K RAM) bytes. Data Translation's DT2742 12-bit multiplexed A/D unit was selected for data conversion. The fiber optic interface consists of an optical transmitter and receiver (described in a later section) mounted on a Prolog Utility I/O card. The wingtip packages are powered by Power Products DC-DC converters, which transform the aircraft's 28 Vdc supply to the + 5 and ± 12 Vdc needed by the WIMPs.

Microprocessor Digital Flight Control System (micro-DFCS). The VRA's micro-DFCS required only one addition for this project — two pairs of fiber optic transmitters and receivers. The Model 3 micro-DFCS (Reference [1]) consists of 3 Multibus cards — a Monolithic Systems 8004 single board computer, an Intel iSBC 732 Analog/Digital (A/D) card, and an Intel iSBC 724 Digital/Analog (D/A) card. References [1] to [3] cover this system in depth.

Communications Hardware

A one-way fiber optic link has at least 4 components. In addition to the optical fiber itself, a transducer is needed at each end to convert the signal from electrical form to optical form (transmitter) and back again (receiver). Special connectors are needed at each end of the fiber to attach it to the transmitter and receiver. In some cases, additional connectors are needed to fasten two fibers end to end. Figure 3 shows these components.

One-way 10 meter links are used in the system. The design's power margins allow these links to be extended to 20 meters by butting two 10 meter

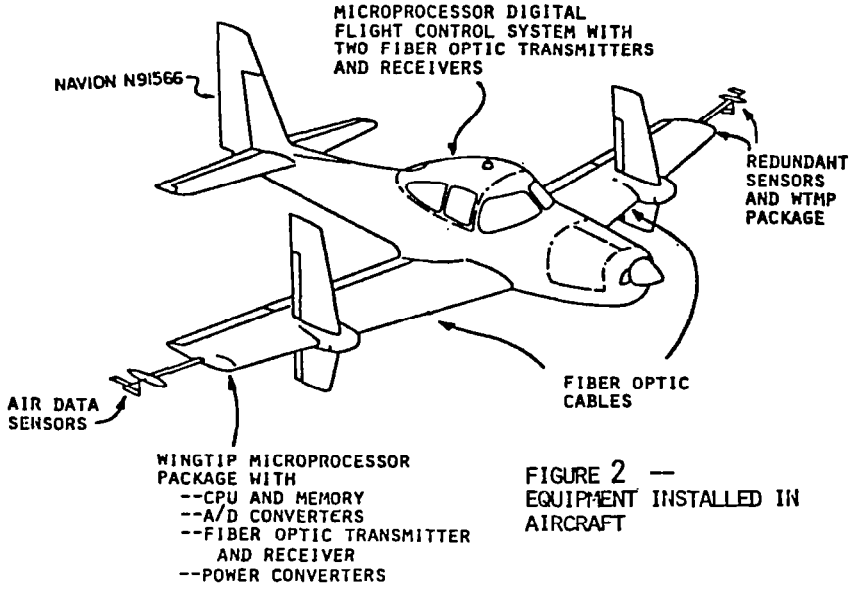

FIGURE 2 — EQUIPMENT INSTALLED IN AIRCRAFT

fibers together with a mechanical splice, as shown in Figure 3. Power allowances also were made for the addition of couplers or duplexers at a later date.

The design procedure for an aircraft fiber optic link differs from that of a generic fiber optic link in only one respect — special consideration must be made for the harsh environment. References [4] to [7] give introductions to the design of links similar to the ones described here.

Link Components

Fiber and Cabling. The Siecor 155 multi-mode, step-index fiber was selected because it combines the advantages of all-glass fibers (low attenuation, small performance variations over wide temperature changes, resistance to harsh environments, and ease in installing connectors) with the large core diameter and high coupling efficiencies generally found only in plastic or plastic-clad fibers. This fiber's attenuation is 35 dB/km and its numerical aperture is 0.4.

In addition to the required performance parameters, this fiber has a tightly buffered, rugged cable design. Tight buffering was selected over loose buffering in spite of the higher tensile strength and slightly lower attenuation of the latter cable design because it displays much better crushing resistance and more uniform performance over wide variations in temperature [8]. With this cabling, the fiber can withstand an installation load of up to 400 N, a crush load up to 500 N/cm, and a minimum bending radius of 15 mm.

Transmitter and Receiver Modules. Optelecom's 2100 series digital transmitter/receiver set was selected for the system because it has a high attenuation margin and dynamic range (23 dB), maintains a low bit error rate (1 bit error in 10 bit transmissions at maximum attenuation), and has no coding limitations. Its 820 nm operating wavelength matches the minimum attenuation spectrum of the fiber selected as well as that of many other fibers. The bandwidth capability (5 Mb/s with RZ coding and 10 Mb/s with NRZ coding) exceeds Mil Standard 1553 requirements for the foreseeable future. The small size of the modules (2" x 1.5" x 0.65") allows their installation inside the STD bus card cages, very close to the controlling computer. Also, they are well shielded from electromagnetic interference, a must for this noisy environment.

Connectors. Epoxy Technology's all-metal SMA type epoxy-bond-and-polish connector was selected

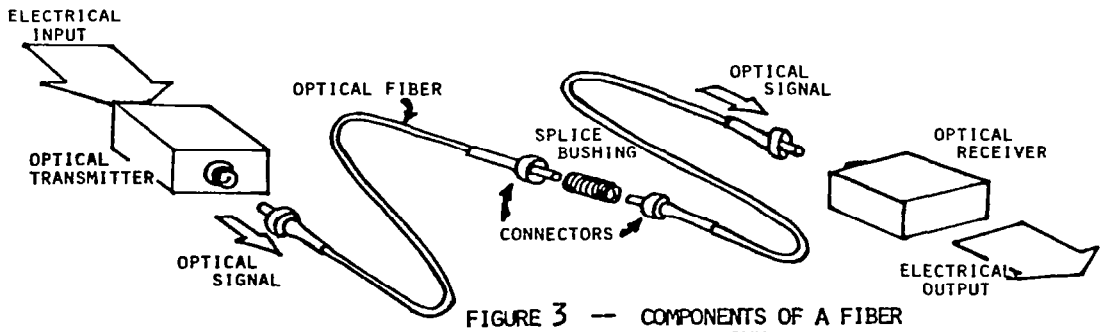

FIGURE 3 — COMPONENTS OF A FIBER OPTIC LINK

for the fiber terminations. This connector has equal performance for either fiber-to-fiber or fiber-to-T/R junctions (1.0 dB). The pull-out strength of the installed connector is 150-200 lb/ft^2

Installing Epoxy-bond-and-polish connectors requires skill, time and some simple tools. In addition, the connectors cannot be reused on another fiber. The non-epoxy alternatives, while generally reusable and considerably easier to install, are either more expensive or not sufficiently rugged, have higher attenuation, and require sophisticated fiber preparation tools. Therefore, the epoxy-bond-and-polish connector was chosen with the actual installation being done by Light Control Systems.

Link Performance

The attenuation of the 10-meter fiber-connector combination is 4 dB; a spliced 20-meter link's attenuation is nearly twice this amount. Because the transmitter launches approximately 27 dBμ into the fiber and the receiver's detection threshold is 3 dBμ, there is a 20 dB attenuation margin to allow for system performance degradation due to time and temperature changes, as well as future hardware additions such as multiplexers and couplers.

SOFTWARE

Data Preparation

The WIMPs perform several functions before sending data to the micro-DFCS. These include (1) data acquisition, (2) scaling, (3) filtering, and (4) calibration. To save time in software development, tasks (2), (3), and (4) are programmed using the high level language Pascal/MT. Due to precise timing requirements, task (1) was coded in assembly language. A summary of these tasks follows.

Data Acquisition. Data acquisition control consists of initializing the A/D unit for the appropriate channel and reading the 12-bit integer result when the A/D board signals completion of the conversion.

Data Scaling. Because the raw data are offset integer representations of potentiometer voltages, scaling is required. First the offset or zero bias is subtracted. Then each raw integer is converted to a floating point number and multiplied by a scaling constant to convert it from a voltage to an angle.

Data Filtering. High frequency noise in the raw sensor data is removed by a simplified Kalman filter. To implement this filter, the angle of attack (α) and sideslip angle (β) are assumed to be dynamically uncoupled, to be heavily damped, and to have a response sufficiently fast that they can be considered to be in steady state at all times. Further, the α and β inputs can be modelled as first order Gauss-Markov processes. The measurements from the vanes, z_α and z_β, are assumed to be properly scaled, to have bias removed, and to be subject to white noise. The α and β estimates are given by

$$\hat{\alpha}_\kappa = \hat{\alpha}_{\kappa-1} + k_\alpha(z_{\alpha_\kappa} - \hat{\alpha}_{\kappa-1}) \qquad [1]$$

$$\hat{\beta}_\kappa = \hat{\beta}_{\kappa-1} + k_\beta(z_{\beta_\kappa} - \hat{\beta}_{\kappa-1}) \qquad [2]$$

and k, the scalar Kalman gain, is given by

$$k = \frac{2}{1 + \left[1 + \left[\frac{2\sigma_v}{2\sigma_w}\right]^2\right]^{1/2}} \qquad [3]$$

where σ_v and σ_w are covariances of the measurement noise and the process noise, respectively. This filter is derived in reference [9].

Data Calibration. The local α and β at the wingtips are coupled by wingtip vorticity. In addition, roll rate (p) causes a local α increment, pb/2V (where b is the spanwise location of the α vane), that is not measured at the aircraft's center of gravity. Both of these effects must be eliminated by a transformation of the form

$$\begin{bmatrix} \alpha_c \\ \beta_c \end{bmatrix} = \begin{bmatrix} C_{11} & \pm C_{12} \\ \pm C_{21} & C_{22} \end{bmatrix} \begin{bmatrix} \hat{\alpha} \\ \hat{\beta} \end{bmatrix}_\kappa + \begin{bmatrix} \pm \frac{p_\kappa b}{2V_\kappa} \\ 0 \end{bmatrix} \qquad [4]$$

Effects of yaw rate on sideslip angle are negligible and are not included in this transformation. The vorticity correction coefficients C_{ij} are velocity dependent and must be recomputed during every data processing cycle. The signs of these transformation coefficients depend on which wingtip is under consideration.

Data Communications Structure

In this system, the two microprocessors in the wingtips are loosely coupled to the micro-DFCS, which is the executive processor of the system. The traffic management algorithm chosen for data exchange between the microprocessors uses a modified polling scheme. The micro-DFCS interrupts the wingtip microprocessors whenever angle-of-attack or sideslip data are needed and whenever new roll rate and velocity data are available. The micro-DFCS sends the WIMP being polled a 3-bit variable name (001 for sideslip, 002 for roll rate, etc.) as soon as its interrupt is answered, so the WIMP knows which value to send or receive. Each transmission is ended with a parity bit for error detection. Figure 4 shows the message format.

The wingtip microprocessors cannot interrupt the micro-DFCS, because uncontrolled delays in some flight control routines might be undesirable. Perhaps equally important, a "babbling" failure of a wingtip unit cannot cripple the entire flight

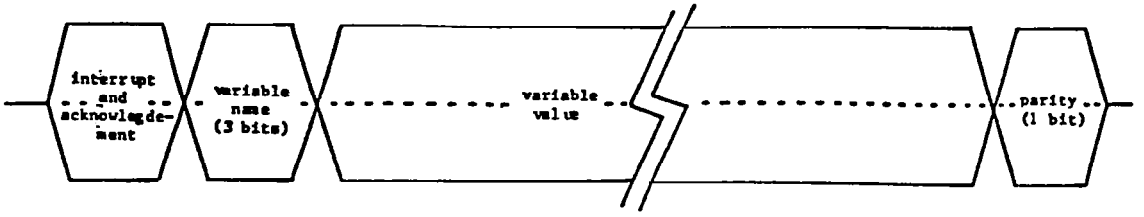

FIGURE 4 — MESSAGE FORMAT

control system by continuous uncontrolled interrupts. This bus protocol minimizes the data communications overhead for all processors, the timing sensitivity, and the propagation of wingtip microprocessor problems to the micro-DFCS.

Manchester Bi-Phase code is used to transmit data; this code is also known as self-clocking return-to-zero (RZ) code. The beginning of each bit interval is marked by a transition. If the bit is a one, a second transition will occur in the middle of the interval; for a zero bit, the signal will remain at the same level throughout the interval (Figure 5). This code requires twice the bandwidth of more commonly used non-return-to-zero (NRZ) code schemes, but it eliminates many of their timing problems and lengthens transmitter life [10].

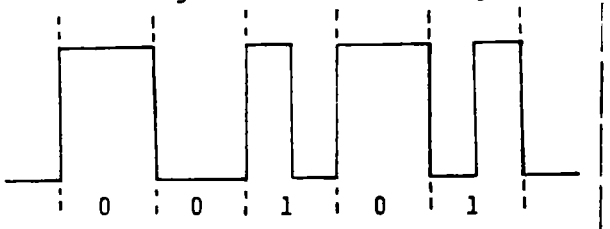

FIGURE 5 -- MANCHESTER BI-PHASE CODE

All coding for data transmission is done by software, in order to maintain flexibility, even though this limits the maximum speed to an order of magnitude slower than the controlling microprocessor. The baud rate currently being used is 31000 bits per second.

Redundancy Management

The dual redundancy of the system cannot be translated into fault tolerance without adequate software. Redundancy management requires fault detection and recovery. Fault detection is the driving portion of fault tolerance, since recovery procedures will not be applied if the associated fault is not detected. It is important to detect a fault even if no recovery is possible in a flight test, since much time and money can be saved by aborting a test which would otherwise result in useless data. Of course, the degree of detection and recovery possible depends on the area and type of failure occurring.

Possible breakdowns in this system may be classified by the area in which they occur [data preparation or data communications] and their type [hard (permanent) or soft (temporary)]. Figure 6 shows some samples of faults anticipated in each category, as well as the detection method used and whether recovery is possible.

The possibility of transmission errors is addressed during the transmission itself; if the data pass these tests, their accuracy is examined. Faults in data communications are easiest to detect, since they generally result in incomplete, incoherent, or inconsistent transmissions. Incomplete or, in many cases, incoherent transmissions can be detected when a bit transition fails to occur in a specified time interval. Incoherent transmissions that meet the transition timing requirements will be caught by the parity check at the end of the transmission. Even if neither of these tests catches an error, the faulty data will be caught in the data preparation screening. If a data communications flaw is detected, the data from the processor in question are discarded for the current cycle. In the unlikely event that data from both WIMPs are improperly transmitted in the same cycle, the micro-DFCS must repoll one WIMP in order to obtain some data for the control system.

Detecting a fault in the data preparation is more complicated. In this system, a Sequential Probability Ratio Test (SPRT) (References [11] and [12]) will be used to evaluate the difference between the results from each WIMP. The micro-DFCS assumes that both sensors are operative as long as the difference between the two sensors has a mean of zero. If this mean shifts away from zero, a bias failure in one of the sensors has occurred. Unfortunately, with only dual redundancy it is very difficult — if not impossible — to isolate such a failure to one WIMP. A third opinion is needed. Use of analytically derived aircraft acceleration limits is being considered for the third opinion; this may be useful in isolating sudden sensor package failures.

Only three fault recovery options are available in this system: (1) ignoring the output of the faulty processor, (2) repeating the reading in question, and (3) resetting one or both units. The first two procedures can be used only when a fault can be attributed to one WIMP, usually the case for transmission errors. Alternative (1) is used most often. Any error detected in transmission is assumed to be temporary; the error is recorded and bypassed until repeated occurrences justify removing the affected WIMP from the loop entirely. Transmission faults from both WIMPs in the same cycle require alternative (2), repetition. The micro-DFCS cannot repeat requests indefinitely, however, and will quickly resort to (3) (resetting the system) if data cannot be obtained on a second try. Resetting one or both WIMPs may also be done when a data preparation fault is detected. This is done in case the fault is due to a processor having

ERROR TYPE		POSSIBLE ERRORS	DETECTION	RECOVERY
DATA COMMUNI-CATIONS	SOFT	-Bit error -Power supply transient	-Failure to answer poll -Failure to finish transmission -Incoherent transmission	-Discard data sample from affect WTMP -Request retransmission of data in question
	HARD	-Failed transmitter or receiver -Broken fiber -Local power failure		-Stop requesting data from affected WTMP -Reset affected WTMP
DATA PREPARA-TION	SOFT	-Temporary A/D failure -Temporary CPU failure -Temporary memory failure	-Comparison of both WTMP computations	-Attempt to isolate failure to one WTMP -Reset one WTMP if failure isolation is possible -Reset entire system if failure isolation is not possible
	HARD	-Permanent A/D failure -Permanent CPU failure -Permanent memory failure		

FIGURE 6 — ERROR DETECTION AND RECOVERY

been "glitched" into an incorrect state that could be corrected by reinitialization. A total reset results in a significant delay in data availability, so the pilot is warned before this action takes place.

SYSTEM TESTING

Testing of the system has begun and will be completed in the near future. Extensive ground testing has verified that the hardware and software operate as designed in a laboratory environment. Only in flight tests can the system's design be completely evaluated, however.

Flight testing of the system has been divided into two phases: (1) hardware evaluation and (2) total system evaluation. The primary goal of the first phase is to verify that all the hardware performs satisfactorily in flight. These tests are being done with a minimum of software so that any hardware faults can be separated easily from software bugs. Of course, the communications hardware cannot be tested adequately without the data communications software, so the data transfer techniques are being tested simultaneously. A secondary task scheduled in this part of the testing is collecting some data to check the calibration coefficients that will be used in the system.

A first flight, checking the data transmission between a single WTMP and the micro-DFCS, has been completed with satisfactory results. During this flight, the outside air temperature was -13° C. In over 2000 data transmissions in this flight, no transmission errors occurred.

The second phase of the flight testing, total system evaluation, will focus primarily on evaluating the data filtering and calibration software as well as the system's fault tolerance.

CONCLUSION

A dual-redundant air data measurement system incorporating distributed microprocessors and fiber optic data transfer to a central processor has been designed and fabricated, and testing has begun. The system is installed in a flight test aircraft which provides a realistic environment for experimentation, and it has demonstrated satisfactory operation in a preliminary flight test. The technology under study shows considerable promise for enhancing the reliability and performance of future flight control systems.

ACKNOWLEDGEMENT

This work has been sponsored in part by the Office of Naval Research under Contract No. N00014-78-C-0257 and by the National Aeronautics and Space Administration under Grant No. NGL 31-001-252.

REFERENCES

[1] R. F. Stengel, "Digital Flight Research Using Microprocessor Technology", IEEE Transactions on

Aerospace and Electronic Systems, Vol. AES-15, No.3, May 1979, pp. 397-404.

[2] J. C. Seat, G. E. Miller, and R. F. Stengel, "A Microprocessor System for Flight Control Research", 1979 NAECON Proceedings, May 1979, pp. 319-326.

[3] R. F. Stengel and G. E. Miller, "Flight Tests of a Microprocessor Control System", Journal of Guidance and Control, Vol. 3, No. 6, Nov.-Dec. 1980, pp. 494-500.

[4] J. R. Goodman, "Optical Control Technology," Bell Helicopter Textron. Presented at the Helicopter Flight Controls Specialist Meeting, American Helicopter Society, October 1978.

[5] H. F. Wolf et al, Handbook of Fiber Optics: Theory and Applications, Garland STPM Press, New York, New York, 1979.

[6] "Optical Fiber Communiations Link Design," ITT Technical Note R-1, ITT, Roanoke, Virginia, 1978.

[7] R. A. Wey, "Proper Cable Choice Optimizes Short-link Cost/Performance", Laser Focus, March 1981.

[8] J. A. Cole and J. L. Ellis, "Optical Fibers and Cables for Computer Systems Applications." Presented at FOC (Fiber Optics Communications) East, March 1981.

[9] R. F. Stengel, J. R. Broussard, and P. W. Berry, "The Design of Digital- Adaptive Controllers for VTOL Aircraft", NASA CR-144912, 12 March 1976.

[10] "Digital Data Transmission with the HP Fiber Optic System," Hewlett-Packard Application Note 1000, March 1980, pp. 316-317.

[11] A. P. Sage and J. L. Melsa, Estimation Theory with Applications to Communications and Control, McGraw-Hill Book Company, New York, 1971.

[12] M. Sri-Jayantha, "Design Considerations for a Flight Data Acquisition System", Princeton University, MAE - 1510, January 1981.

DATA ACQUISITION FOR STALL/SPIN FLIGHT RESEARCH

M. Sri-Jayantha
Princeton University
Princeton, New Jersey

DATA ACQUISITION FOR STALL/SPIN FLIGHT RESEARCH

A special purpose digital data acquisition system is built for stall/spin flight research. A Schweizer 2-32 sailplane is used as the test vehicle. Computer hardware and its architecture are described. Concepts of system failure detection are considered in the design. Special instrumentation developed for the high angle of attack flight is presented. A representative flight time history of a maneuver also is shown. The flight data will be used for the identification of aerodynamic parameters.

- OBJECTIVE
- CIBOLA 2-32 SAILPLANE
- COMPUTER ARCHITECTURE
- SPECIAL INSTRUMENTATION
- SYSTEM FAILURE DETECTION
- FLIGHT TEST DESIGN
- CONCLUSION

OBJECTIVE

The data acquisition system is designed to be portable. The computer based data collection system is also used to monitor the sensor system "health". The collected flight data is transferred to a ground based computer (IBM 3081) and the aerodynamic parameters are estimated. Aerodynamic parameters can be used in several areas such as simulation, control system design, etc.

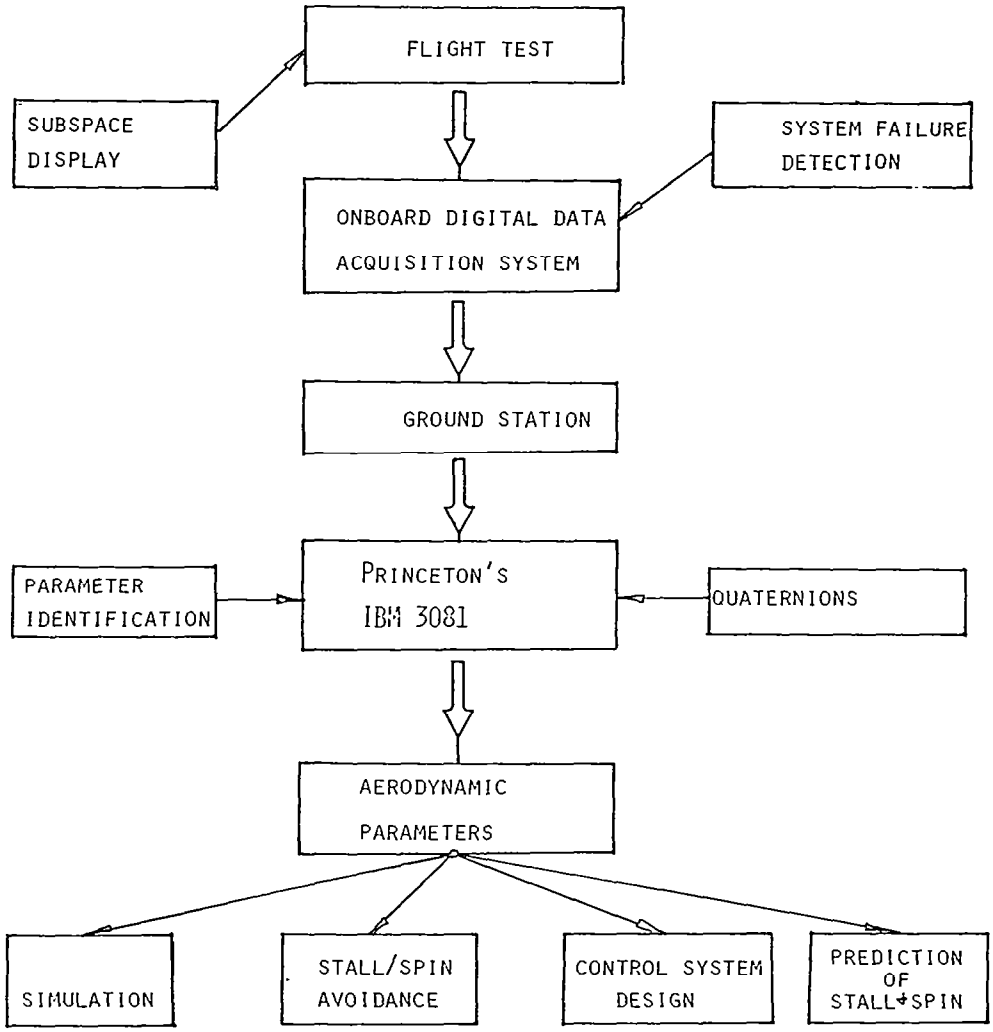

ELEMENTS OF PARAMETER IDENTIFICATION

An instrumentation package, a data acquisition system, a flight test procedure, and identification algorithms are crucial to parameter identification. Once a set of parameters have been identified, the aerodynamic model should be validated.

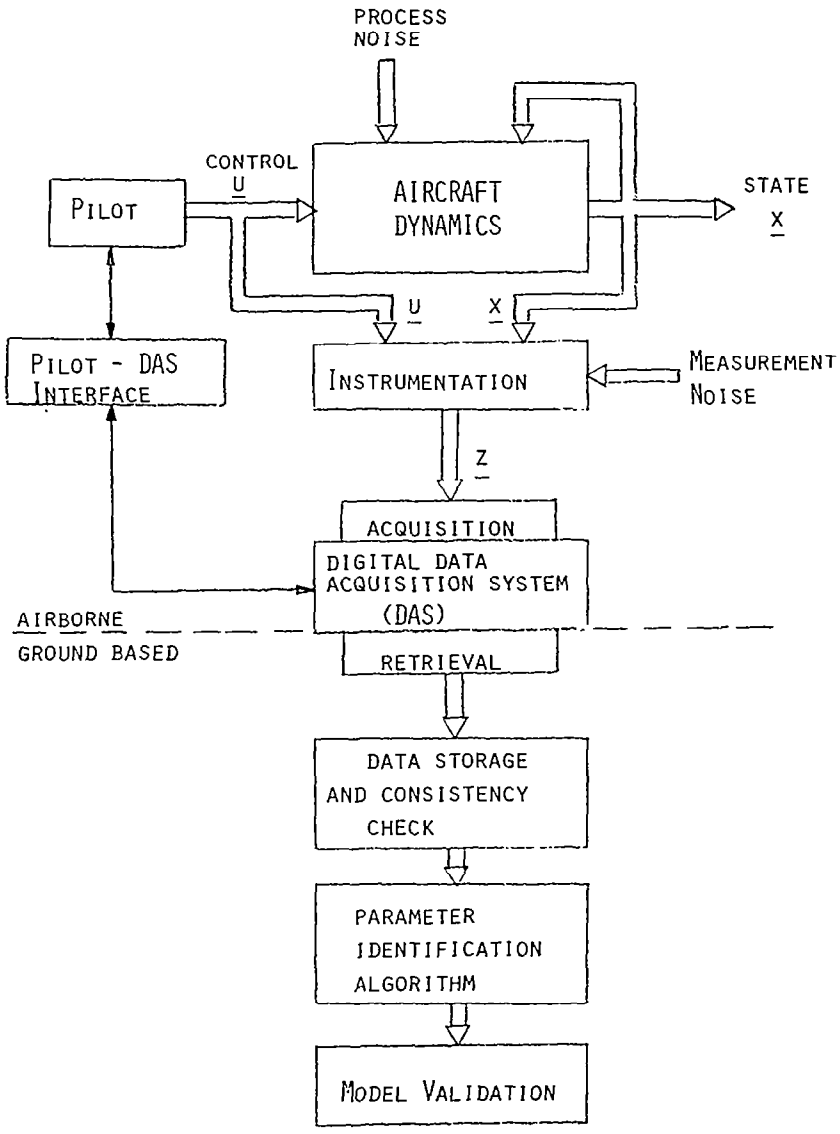

CIBOLA 2-32 SAILPLANE

The two-seat Schweizer 2-32 (Cibola) sailplane is used as the test vehicle. The inertial measurement unit (IMU) and the microcomputer system are located behind the second seat. The air data units (ADU) are mounted at the wing tips.

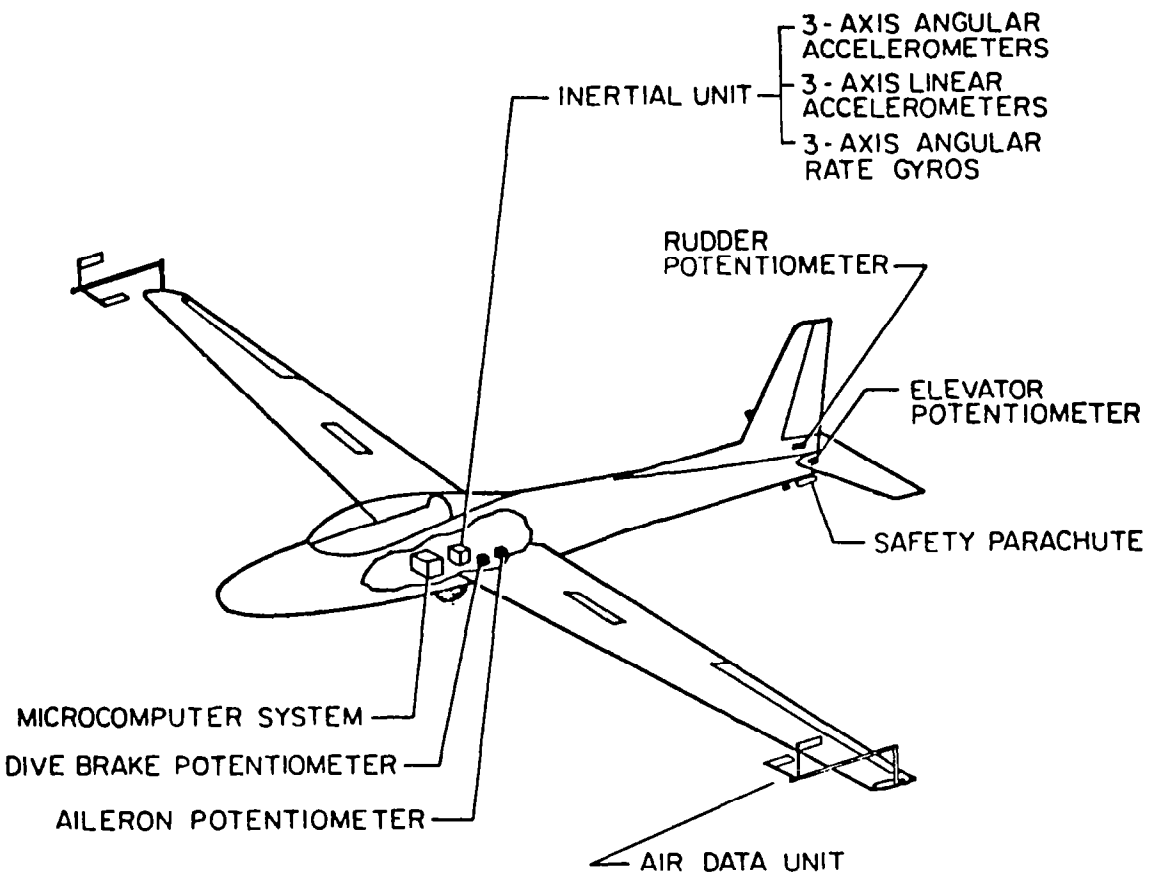

MICRO-MAP HARDWARE

The data acquisition system is referred to as Micro-MAP (Microprocessor-Based system for the Measurement of Aerodynamic Parameters). The inertial measurement unit and the computer system are two important subsystems. The inertial measurement unit is designed to function as a junction box to provide modularity and portability. The computer system provides the automatic data acquisition and sensor monitoring capability. The inertial measurement unit weighs 24 lbs, the computer system weights 20 lbs, and the batteries and power supply components weigh 65 lbs. The total power of the Micro-MAP is 150 watts.

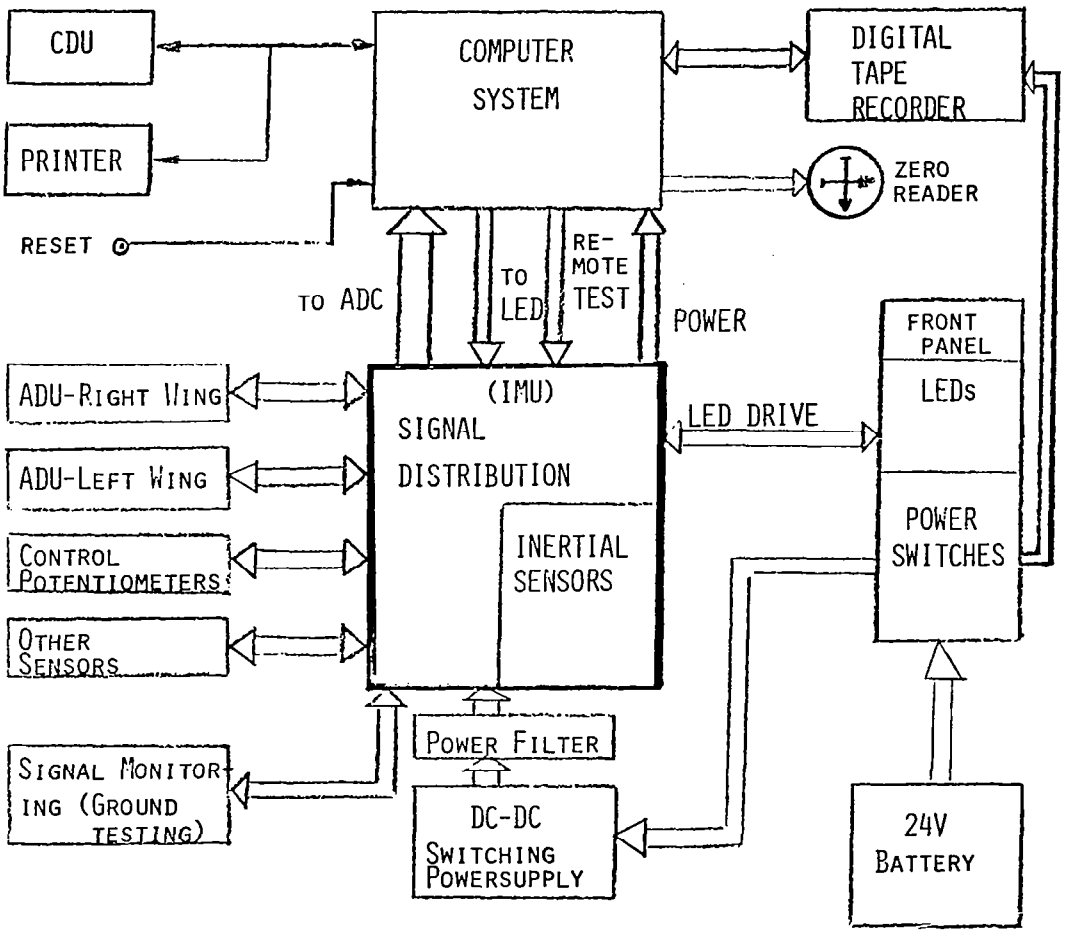

COMPUTER ARCHITECTURE

Two Multibus™ compatible microcomputers are programmed to operate as multiprocessors. The CPU#0 accomplishes the data sampling and digitizing using the analog-to-digital converter board. Sensor system monitoring is also performed by the CPU#0. The data storage and retrieval are performed by CPU#1 which is dedicated for tape control. Sensor outputs are filtered before sampling. The computers require regulated +28 V, +/-12 V and +5 V.

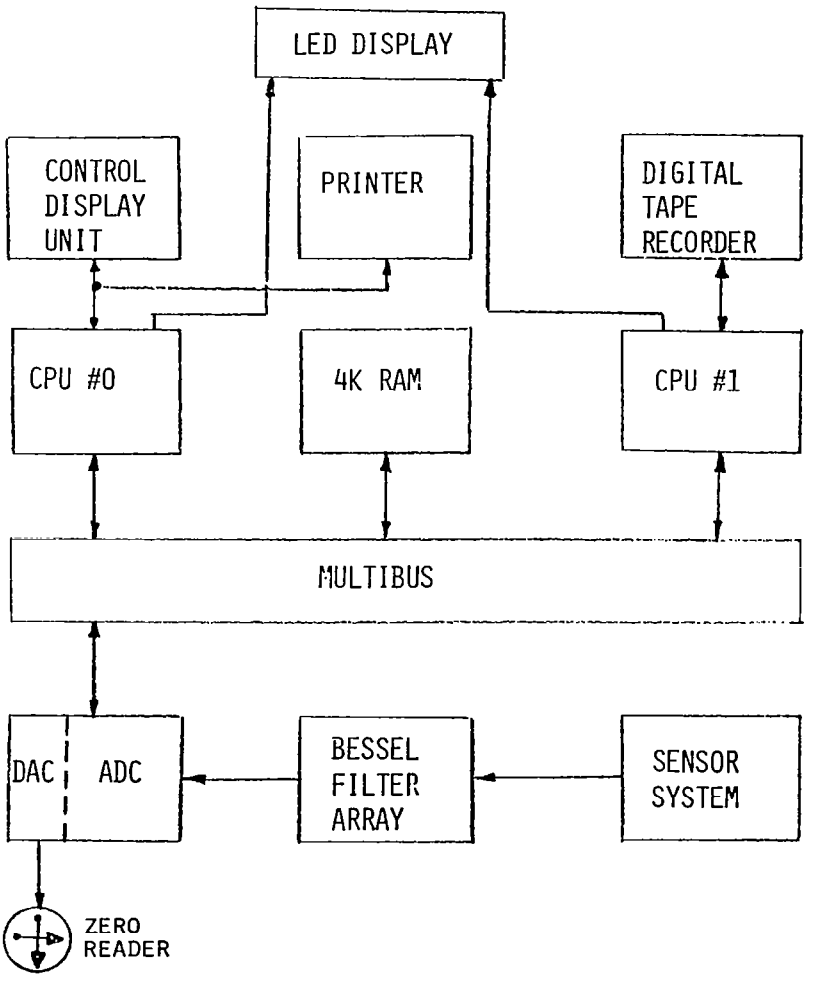

INERTIAL COMPONENTS

The inertial sensors (3 linear accelerometers, 3 angular accelerometers, and 3 angular rate gyros) are rigidly mounted in an aluminum box and mounted near the aircraft's center of gravity. The inertial measurement unit has a dimension of 10" x 10" x 9".

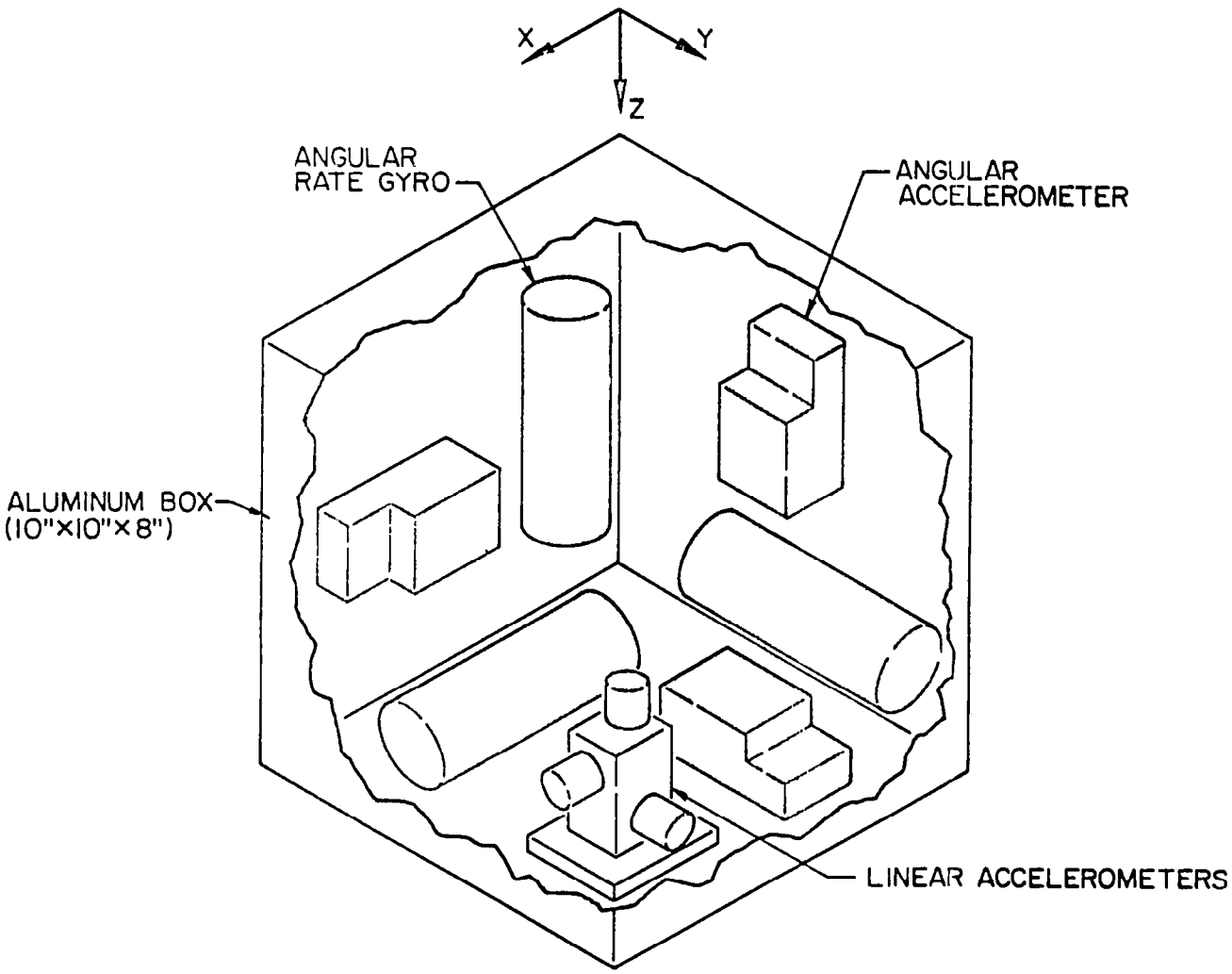

AIR DATA UNIT

The total pressure is measured using a Kiel probe. Two rectangular vanes provide angle of attack and sideslip measurements. Two air data units are mounted on the wing tips. Flow interference is reduced by positioning the sensors upstream of the leading edge.

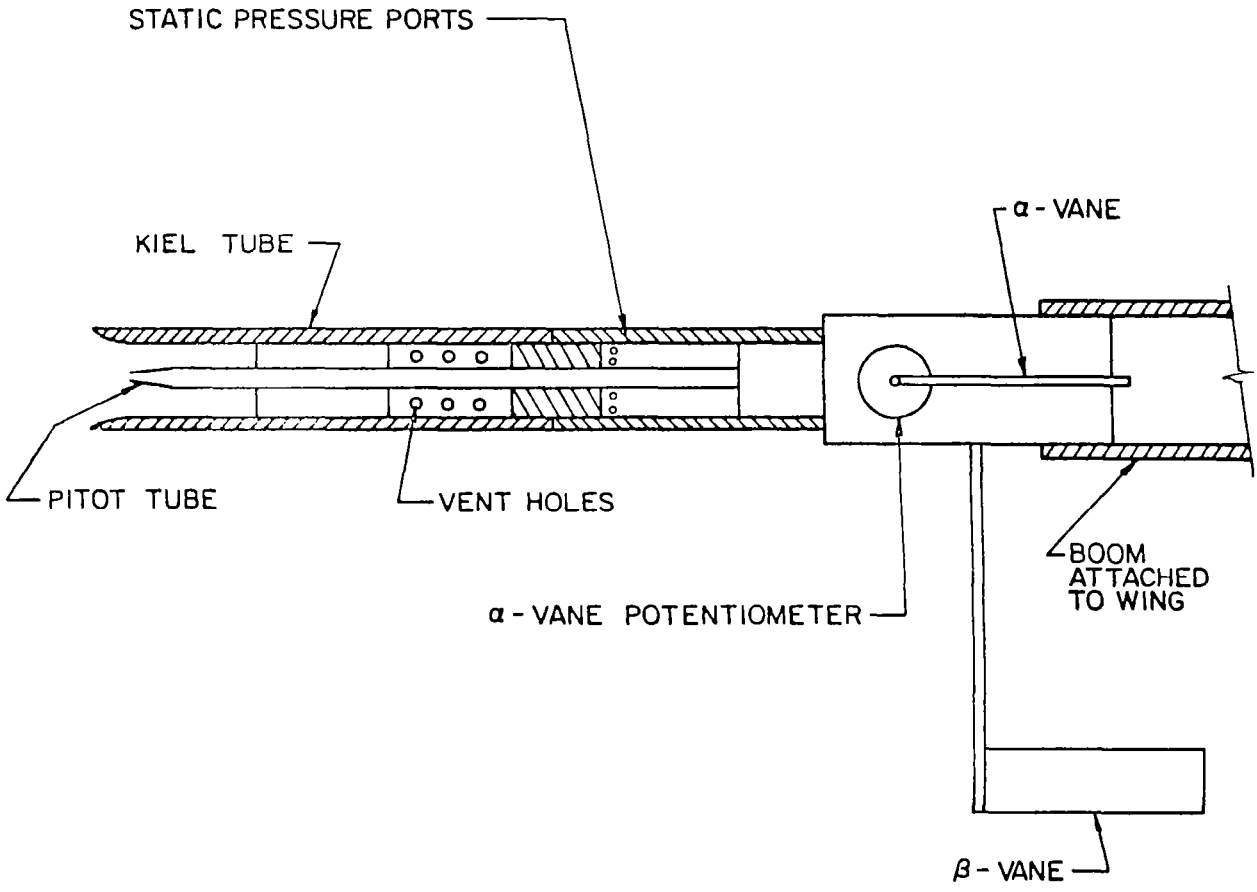

WIND TUNNEL TEST

The wind tunnel test performed on the pitot-static system (with Kiel probe) shows the reduced sensitivity of total pressure measured to large flow angles. The measurement is seen to be flat to a total angle of 60°.

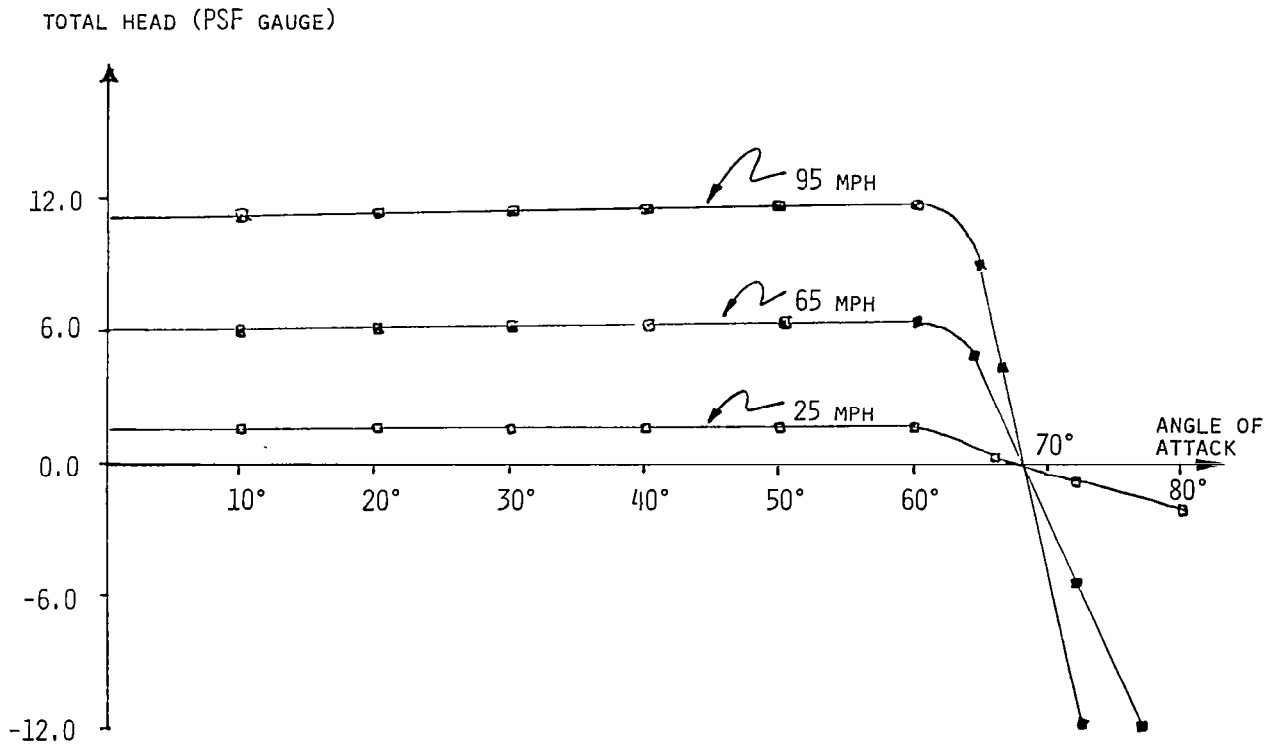

SOURCES OF FAILURE OF MICRO-MAP

The Micro-MAP could fail to operate under various conditions. The sources of failure can be categorized into six groups. Computer operation is considered mandatory for detection of the remaining four failure types. Eight light-emitting diodes located in the cockpit are programmed to display the Micro-MAP status.

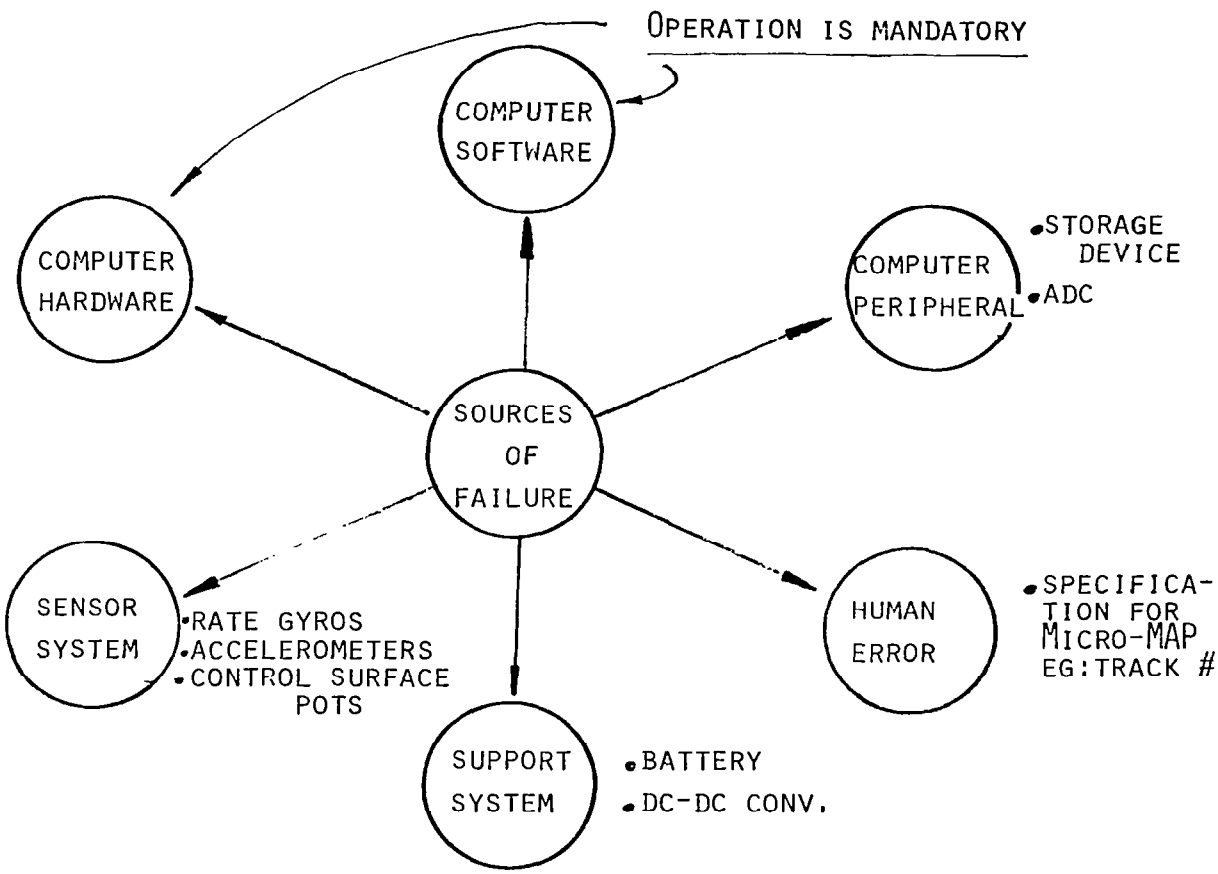

PARAMETER IDENTIFICATION METHODS

Among the existing identification methods, Estimation-Before-Modeling technique is suitable for high angle of attack parameter identification. The complex modeling and aircraft state estimation problems are separated. In addition, it identifies a single model of each aerodynamic coefficient for all maneuvers rather than one for each maneuver, as is usual with other methods.

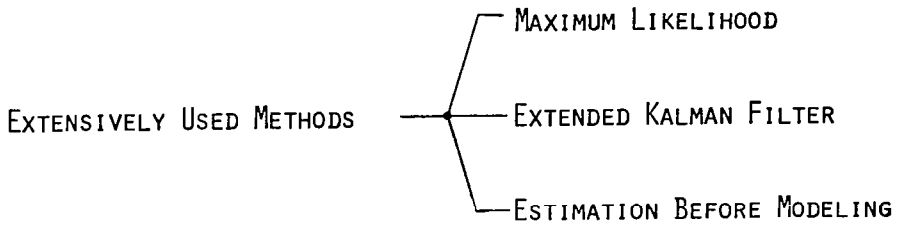

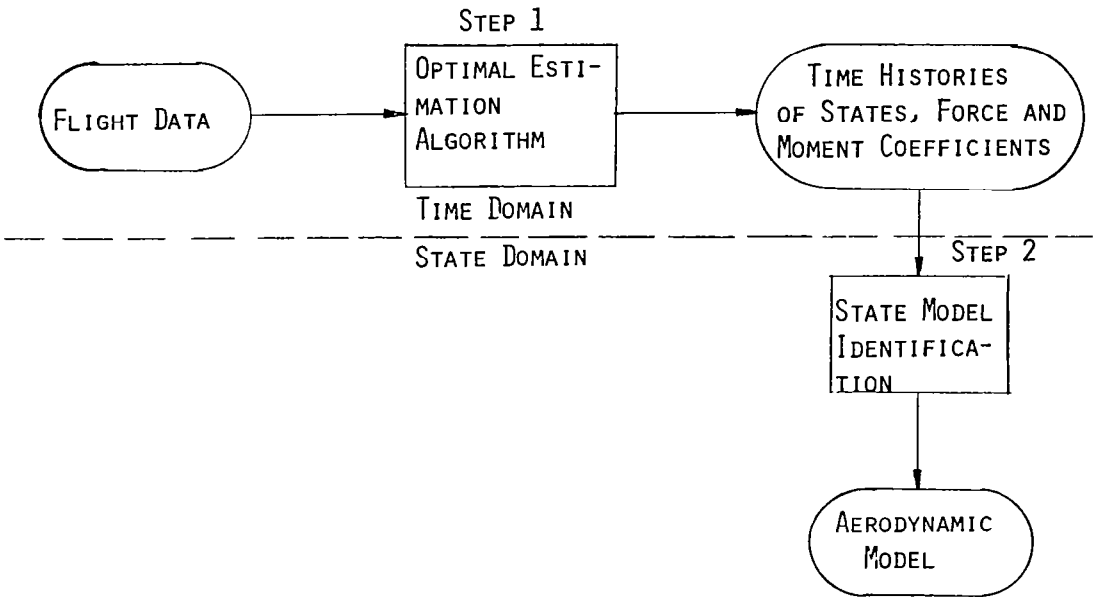

FLIGHT TEST DESIGN

Sufficient flight test data in each subspace is essential for the regression analysis. The flight testing is performed systematically using the Micro-MAP by displaying to the pilot the required angle of attack and sideslip corresponding to a subspace.

OBJECTIVE: TO IMPROVE THE DISTRIBUTION OF FLIGHT TEST DATA

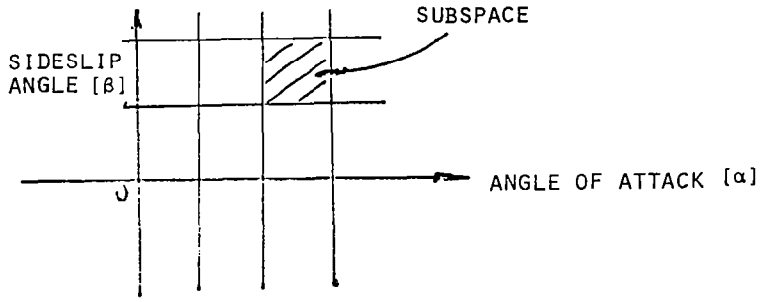

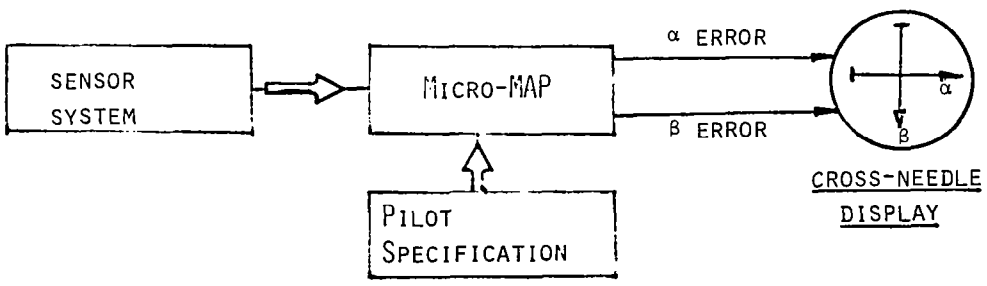

FLIGHT TEST RESULTS - CONTROL INPUTS

The time history of the control inputs which generates dynamic motion about all three axes is presented. The maneuver consists of 7 s of trim data and about 30 s of dynamic data. The trim data will be used to compute the initial condition required by the estimation algorithm. The dynamic part of the flight data will be used in the regression analysis, by which the aerodynamic parameters will be computed.

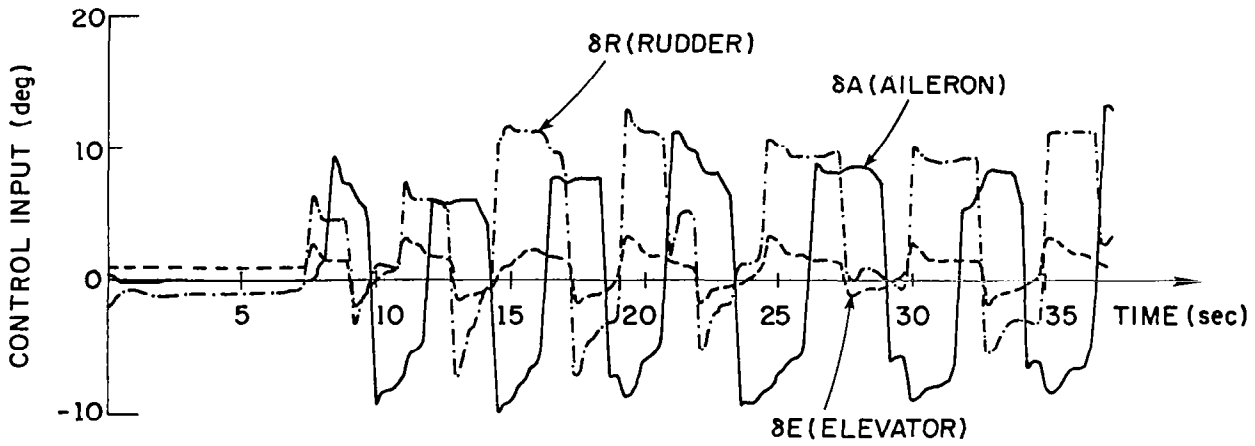

FLIGHT TEST RESULTS - LINEAR ACCELERATION

The time history of the three components of the linear acceleration corresponding to the control inputs is shown in this figure. The acceleration components in the X and Y directions are relatively small, but the variation is important for regression analysis.

The elevator primarily controls the pitching moment acting on the aircraft. The linear acceleration in the Z direction is controlled by the resulting change in the angle of attack. However, in the figure, the switching of the elevator angle causes a noticeable jump in the linear acceleration, which can be attributed to the change of total lift due to the change in the elevator angle.

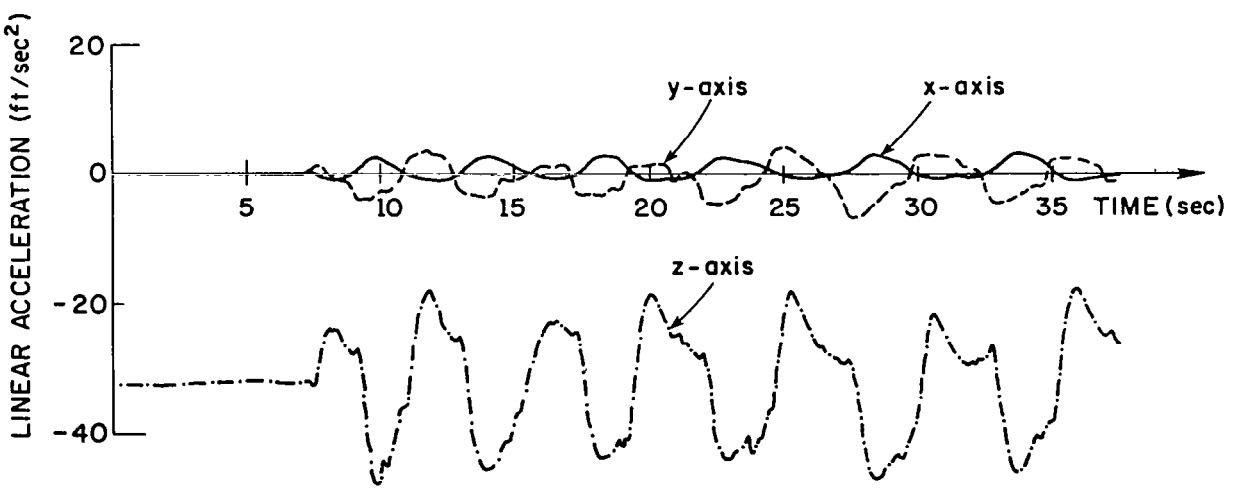

CONCLUSIONS

The data acquisition system has been designed and flight tested. It is self-contained and portable. The instrumentation and the identification algorithms have been designed to accommodate high angle of attack flight domain. The on-board computers are programmed to monitor the sensor systems and to improve the flight test effectiveness. The Estimation-Before-Modeling technique has been chosen as the parameter identification procedure.

- DATA ACQUISITION SYSTEM HAS BEEN DESIGNED AND FLIGHT TESTED
- SIMPLE FAILURE DETECTION TECHNIQUES HAVE BEEN IMPLEMENTED
- USING INFLIGHT COMPUTATIONAL POWER, FLIGHT TESTING IS MADE SYSTEMATIC
- PARAMETER IDENTIFICATION ALGORITHMS HAVE BEEN IMPLEMENTED

1. Report No.	2. Government Accession No.	3. Recipient's Catalog No.
NASA CP-2285		

4. Title and Subtitle	5. Report Date
JOINT UNIVERSITY PROGRAM FOR AIR TRANSPORTATION RESEARCH - 1982	October 1983
	6. Performing Organization Code: 505-34-13-57
7. Author(s)	8. Performing Organization Report No.: L-15688
	10. Work Unit No.
9. Performing Organization Name and Address: NASA Langley Research Center, Hampton, Virginia 23665	11. Contract or Grant No.
	13. Type of Report and Period Covered: Conference Publication
12. Sponsoring Agency Name and Address: National Aeronautics and Space Administration, Washington, DC 20546	14. Sponsoring Agency Code

15. Supplementary Notes

16. Abstract

This report summarizes the research conducted during 1982 under the NASA-sponsored Joint University Program for Air Transportation Research. This material was presented at a meeting held at NASA Langley Research Center, December 10, 1982. The Joint University Program is a coordinated set of three grants sponsored by NASA Langley Research Center, one each with the Massachusetts Institute of Technology, Ohio University, and Princeton University. Research topics include navigation; guidance, control and display concepts; and hardware, with special emphasis on applications to general aviation aircraft. Completed works and status reports are presented. Also included are annotated bibliographies of all published research sponsored on these grants since 1972.

17. Key Words (Suggested by Author(s))	18. Distribution Statement
Air transportation Avionics General aviation Low-frequency terrestrial navigation Aircraft displays Aircraft stability and control	Unclassified - Unlimited Subject Category 01

19. Security Classif. (of this report)	20. Security Classif. (of this page)	21. No. of Pages	22. Price
Unclassified	Unclassified	161	A08

For sale by the National Technical Information Service, Springfield, Virginia 22161

NASA-Langley, 1983