September 1983

DMS-DR-2511
NASA-CR-167,670

Volume 2 of 3

RESULTS OF COLD PLUME TESTS OF THE 0.010-SCALE MODEL (75-OTS) IN THE NASA/AMES RESEARCH CENTER 11x11-FOOT WIND TUNNEL (IA300)

by

J.G.R. Collette
Rockwell International
Space Transportation & Systems Group

Prepared under NASA Contract Number NAS9-16283

by

Data Management Services
Chrysler Huntsville Electronics Division
Michoud Engineering Office
New Orleans, Louisiana 70189

for

Systems Engineering Division

Johnson Space Center
National Aeronautics and Space Administration
Houston, Texas

WIND TUNNEL TEST SPECIFICS:

Test Number:	ARC 11TWT 561-1
NASA Series Number:	IA300
Model Number:	75-OTS
Test Dates:	Jan. 27, 1983 to March 2, 1983
Occupancy Hours:	472

FACILITY COORDINATOR:

J.J. Brownson
Mail Stop 227-5
Ames Research Center
Moffett Field, CA 94035
Phone: (415) 965-5647

PROJECT ENGINEERS:

R.H. Spangler
J.G.R. Collette
J. Marroquin
Rockwell International
12214 Lakewood Blvd.
Downey, CA 90241
Phone: (213) 922-1463

AERODYNAMICS ENGINEERS:

L.P. LeBlanc
F.C. Chinn
Rockwell International
12214 Lakewood Blvd.
Downey, CA 90241
Phone: (213) 922-5369

DATA MANAGEMENT SERVICES:

Prepared by: Liaison: S. R. Houlihan
Operations: G. W. Klug, B.F. Burst

Approved: J. L. Glynn, Manager
Data Operations

Concurrence: N. D. Kemp, Manager
Data Management Services

Chrysler Huntsville Electronics Division/Michoud Engineering Office assumes no responsibility for the data presented other than display characteristics.

RESULTS OF COLD PLUME TESTS OF THE 0.010-SCALE MODEL (75-OTS) IN THE NASA/AMES RESEARCH CENTER 11x11-FOOT WIND TUNNEL (IA300)

ABSTRACT

by

J.G.R. Collette
Rockwell International STS Group

Tests were conducted in the NASA/Ames Research Center 11x11-Foot Transonic Wind Tunnel to determine the effects of gaseous and solid plumes on the forebody pressure distributions of the Space Shuttle Integrated (Launch) Vehicle. A 0.010-Scale model (75-OTS) of the Space Shuttle was employed for this test. High-pressure air was routed through the model support struts and calibrated nozzles to simulate the SSME and SRB plumes. The SSME and SRB plumes were separately throttleable.

The test was conducted in three phases. The first phase employed a dual strut configuration in which the Orbiter was supported by a dorsal strut located at the vertical tail location. This configuration permitted free flow in the Orbiter/ET interstage area. The attach structures were simulated but were not attached to the orbiter. The second test phase utilized a single strut that carried air and instrumentation for the SRB's, ET and Orbiter. A strut between the ET and Orbiter carried air to the Orbiter. This arrangement allowed free air flow over the upper surface of the Orbiter. The third phase of the test employed MSFC-designed solid plume simulations in lieu of gaseous plumes.

ABSTRACT (Concluded)

SRB and SSME power settings were determined by matching base pressures to STS-1 through 4 flight data. After determining proper power settings, surface pressure data, elevon hinge moment data and wing load data were recorded at each Mach number between 0.6 and 1.4, angles of attack from -8 to +4 degrees and angles of sideslip from -4 to +4 degrees.

TABLE OF CONTENTS

	Page
ABSTRACT	iii
INDEX OF MODEL FIGURES	2
INDEX OF DATA FIGURES	3
INTRODUCTION	5
NOMENCLATURE	7
REMARKS	14
CONFIGURATIONS INVESTIGATED	17
INSTRUMENTATION	23
TEST FACILITY DESCRIPTION	24
TEST PROCEDURES	25
DATA REDUCTION	27
REFERENCES	31
TABLES	
I. TEST CONDITIONS	32
II. DATA SET/RUN NUMBER COLLATION SUMMARY	33
III. ELEVON DEFLECTION MEASUREMENTS	59
IV. NOZZLE DIMENSIONS	60
V. WING BALANCE CONSTANTS	61
VI. ELEVON HINGE MOMENT AND DEFLECTION CONSTANTS	62
VII. ORBITER PRESSURE INSTRUMENTATION	63
VIII. EXTERNAL TANK PRESSURE INSTRUMENTATION	71
IX. SRB PRESSURE INSTRUMENTATION	73
X. IA300 BAD POINT DATA	75
FIGURES	
MODEL	78
DATA (Volume I)	98

APPENDIX (See page 58 for component breakdown)

TABULATED FORCE DATA (Microfiche only Volume II)

TABULATED PRESSURE DATA (Microfiche only Volume III)

INDEX OF MODEL FIGURES

		Page
1.	Axis Systems and Sign Conventions	
	a. Axis Systems Definition	78
	b. Instrumented Wing Panel Coordinate System	79
	c. Control Surface Deflections	80
2.	Model Sketches	
	a. Integrated Launch Vehicle Configuration	81
	b. Single Strut Installation	82
	c. Dual Strut Installation	83
	d. External Tank Base	84
	e. Orbiter Base	85
3.	Model Photographs	
	a. Single Strut Installation - front quarter view	86
	b. Single Strut Installation - rear quarter view	87
	c. Single Strut Installation - overall view	88
	d. Single Strut Installation - detail of interstrut	89
	e. Dual Strut Installation - front quarter view	90
	f. Dual Strut Installation - rear quarter view	91
	g. Dual Strut Installation - side view	92
	h. Dual Strut Installation - overall view	93
	i. Solid Plume Installation - dummy sting (C1) front quarter	94
	j. Solid Plume Installation - dummy sting (C1) rear quarter	95
	k. Solid Plume Installation - simulated plume (C2) front quarter	96
	l. Solid Plume Installation - simulated plume (C2) rear quarter	97

INDEX OF DATA FIGURES

FIGURE	TITLE	CONDITIONS VARYING	SCHEDULE	PAGE
1	DUAL STRUT CALIBRATIONS - 22 DEGREE SSME NOZZLES	(MACH,PSRB,PSSME,SSMENOZ)	A	1-182
2	DUAL STRUT CALIBRATIONS - 35 DEGREE SSME NOZZLES	(MACH,PSRB,PSSME,SSMENOZ)	A	183-292
3A	TYPICAL PRESSURE DISTRIBUTION - ORBITER FUSELAGE AND OMS	PHI,ALPHA,BETA	B	293-298
3B	TYPICAL PRESSURE DISTRIBUTION - BODY FLAP (UPPER)	ETA,ALPHA,BETA	C	299-301
3C	TYPICAL PRESSURE DISTRIBUTION - BODY FLAP (LOWER)	ETA,ALPHA,BETA	C	302-304
3D	TYPICAL PRESSURE DISTRIBUTION - ORBITER BASE	ALPHA,BETA	D	305-307
3E	TYPICAL PRESSURE DISTRIBUTION - LEFT WING (UPPER SURFACE)	ETA,ALPHA,BETA	E	308-313
3F	TYPICAL PRESSURE DISTRIBUTION - LEFT WING (LOWER SURFACE)	ETA,ALPHA,BETA	E	314-319
3G	TYPICAL PRESSURE DISTRIBUTION - SSME NOZZLE INTERIOR	PHI,ALPHA,BETA	F	320-322
3H	TYPICAL PRESSURE DISTRIBUTION - SSME NOZZLE EXTERIOR	ALPHA,BETA	G	323-325
3I	TYPICAL PRESSURE DISTRIBUTION - LEFT OMS NOZZLE	PHI,ALPHA,BETA	H	326-328
3J	TYPICAL PRESSURE DISTRIBUTION - RIGHT OMS NOZZLE	PHI,ALPHA,BETA	H	329-331
3K	TYPICAL PRESSURE DISTRIBUTION - LEFT HAND VERTICAL TAIL	ETA,ALPHA,BETA	I	332-334
3L	TYPICAL PRESSURE DISTRIBUTION - RIGHT HAND VERTICAL TAIL	ETA,ALPHA,BETA	I	335-337
3M	TYPICAL PRESSURE DISTRIBUTION - EXTERNAL TANK	PHI,ALPHA,BETA	J	338-346
3N	TYPICAL PRESSURE DISTRIBUTION - EXTERNAL TANK BASE	PHI,ALPHA,BETA	K	347-352
3O	TYPICAL PRESSURE DISTRIBTUION - LEFT HAND SRB	PHI,ALPHA,BETA	L	353-358
3P	TYPICAL PRESSURE DISTRIBUTION - LEFT HAND SRB BASE	PHI,ALPHA,BETA	D	359-361
3Q	TYPICAL PRESSURE DISTRIBUTION - LEFT HAND SRB BASE NOZZLE INTERIOR	PHI,ALPHA,BETA	D	362-364

INDEX OF DATA FIGURES (Concluded)

FIGURE	TITLE	CONDITIONS VARYING	SCHEDULE	PAGE
3R	TYPICAL PRESSURE DISTRIBUTION - LEFT HAND SRB BASE NOZZLE EXTERIOR	ALPHA,BETA	G	365-367
3S	TYPICAL PRESSURE DISTRIBUTION - RIGHT HAND SRB	PHI,ALPHA,BETA	L	368-370
3T	TYPICAL PRESSURE DISTRIBUTION - RIGHT HAND SRB BASE	PHI,ALPHA,BETA	D	371-373
3U	TYPICAL PRESSURE DISTRIBUTION - RIGHT HAND SRB BASE NOZZLE INTERIOR	PHI,ALPHA,BETA	D	374-376
3V	TYPICAL PRESSURE DISTRIBUTION - RIGHT HAND SRB BASE NOZZLE EXTERIOR	ALPHA,BETA	G	377-379

SCHEDULE	COEFFICIENTS PLOTTED
A	$P_{B_{SRB}}/P_O$ VS $P_{C_{ORB}}/P_O$
	$P_{B_{TANK}}/P_O$ VS $P_{C_{ORB}}/P_O$
	$P_{B_{ORB}}/P_O$ VS $P_{C_{ORB}}/P_O$
	$P_{B_{SRB}}/P_O$ VS $P_{C_{SRB}}/P_O$
	$P_{B_{TANK}}/P_O$ VS $P_{C_{SRB}}/P_O$
	$P_{B_{ORB}}/P_O$ VS $P_{C_{SRB}}/P_O$
	SP VS $P_{C_{ORB}}/P_O$
	ME or MP VS $P_{C_{ORB}}/P_O$
	SP VS $P_{C_{SRB}}/P_O$
	ME or MP VS $P_{C_{SRB}}/P_O$
B	C_p VS x/l_B

SCHEDULE	COEFFICIENTS PLOTTED
C	C_p VS X/CBF
D	C_p VS TAPNO.
E	C_p VS x/c_W
F	C_p VS NOZNO.
G	PAVG VS NOZNO.
H	C_p VS XN
I	C_p VS x/c_V
J	C_p VS x/l_T
K	C_p VS R/RT
L	C_p VS x/l_S

INTRODUCTION

Test IA300 was conducted in the NASA/Ames Research Center 11x11-Foot Transonic Wind Tunnel to determine the effects of Main Engine (SSME) and Solid Rocket Booster (SRB) exhaust plumes on the integrated vehicle forebody surface pressures and the elevon hinge moments and wing loads. The plumes were simulated with cold high-pressure air supplied to the model through two strut configurations. The single strut arrangement consisted of a faired strut entering the bottom of the External Tank with smaller struts bridging between the ET and Orbiter and between the ET and each SRB. In the dual strut configuration, an additional air-carrying strut entered the Orbiter in place of the vertical tail. The strut between the ET and the Orbiter was thus eliminated so that realistic flow could be simulated under the Orbiter.

Plume power settings were determined by matching flight test data from STS-1 through STS-4 to model base pressures. The model was then run through an α/β matrix at the appropriate power settings. The data were then used to expand the data base for the IVBC-3 airloads analysis.

Solid plume shapes were mounted on the base of the Orbiter and on each SRB to obtain additional data on correlation between solid plumes and gaseous plumes.

The Mach range tested was from 0.6 to 1.4. The angle of attack range varied from -8 degrees to +4 degrees at sideslip angles of -4, 0 and +4 degrees.

Data collected during this test include readings from up to 373 surface locations and 14 internal locations as well as wing loads (3-component) and elevon hinge moments.

INTRODUCTION (Concluded)

This report contains information on the conduct of the test, details of the model and instrumentation, all collected data and selected plotted data.

NOMENCLATURE

SYMBOL	MNEMONIC	DEFINITION
α	ALPHA	Model angle of attack, deg.
A_B		Base Area, ft^2
AEEP1-5	AEEP1-5	Average external exit pressures
AIEP1-5	AIEP1-5	Average internal exit pressure
a_m		Distance between bending gauge electrical centers, in.
A_T		Nozzle throat area, $in.^2$
b		Span, in.
	BASE	Pseudo dimension for orbiter base taps
β	BETA	Model angle-of-sideslip, deg.
β_O	BETAO	Orbiter angle-of-sideslip, deg.
β_T	BETAT	External tank angle-of-sideslip, deg.
	B.L.	Butt line
BM_{W_I}		Wing-root bending moment at inboard gauge, in-lb
BM_{W_O}		Wing-root bending moment at outboard gauge, in-lb
B_W		Wing bending moment, in-lb
	BREF	Model wing reference span, in.
c		MAC, in.
C_{h_E}	CHEI	Inner elevon hinge moment coefficient
$C_{h_{eo}}$	CHEO	Outer elevon hinge moment coefficient
	CONF	Model configuration designation
C_{N_W}	CNW	Wing panel normal force coefficient
C_{P_i}	CP	Pressure coefficient for model surface tap i.
$C_{P_{B_O}}$	CPBO	Orbiter base pressure coefficient
$C_{P_{B_{ET}}}$	CPBET	External tank base pressure coefficient

NOMENCLATURE (Continued)

SYMBOL	MNEMONIC	DEFINITION
$CP_{B_{SL}}$	CPBSL	Left SRB base pressure coefficient
$CP_{B_{SR}}$	CPBSR	Right SRB base pressure coefficient
CB_W	CPMW	Wing bending moment coefficient
CPR_j		Chamber pressure ratio for nozzle j
	CRMW	Wing torsion coefficient
$\mathcal{C}_L$		Model centerline
CT_W	CTW	Wing torsion moment coefficient
d		Distance from Y_o=105 to electrical axis of gauge #2, in.
$\Delta\beta$	DELB	Incremental angle-of-sideslip, $\beta_O - \beta_T$
ΔE_{L_I}		Left inboard elevon deflection due to load, degrees.
ΔE_{L_O}		Left outboard elevon deflection due to load, degrees.
D_T		Nozzle throat diameter
D_E		Nozzle exit diameter
e_m		Distance from X_o=130 to gauge #3, in.
δ/e	ELEVON	Elevon deflection, deg.
EPR_j		Exit pressure ratio for nozzle j
η	ETA	Spanwise location on the model component
	EXITPL	Pseudo dimension for SRB exterior taps
	F.S.	Full scale
HM_E		Elevon hinge moment, in-lb
	IVBC	Integrated Vehicle Baseline Configuration

NOMENCLATURE (Continued)

SYMBOL	MNEMONIC	DEFINITION
K		Elevon hinge moment constant, in-lb/mv/v
$k_{ij}, k_{11} \rightarrow k_{33}$		Wing balance constants (see Table V)
K_{Δ}		Wing bending deflection constant, deg/in-lb
K_{Δ_E}		Elevon deflection constant, degree/in-lb
$K_{\Delta_{EI}}$		Inboard elevon deflection constant, deg/in-lb
$K_{\Delta EO}$		Outboard elevon deflection constant, deg/in-lb
ℓ_B		Reference body length, in.
	LE	Leading edge
	LHS	Left hand SRB
	LREF	Model body reference length, in.
M1,2,3		Wing balance moment outputs, in-lb
M_∞,M	MACH	Freestream Mach number
SSME GIMB	MEGIMB	Main engine gimbal angle, deg.
SSME NOZ	MENOZ	Main engine nozzle deflection angle, deg.
$M_{e_{1-5}}$	ME1-5	Exit Mach Number
$M_{p_{1-5}}$	MP1-5	Plume Mach number
	M.S.	Model Scale
	MFO	Orbiter mass flow
	MFSL	Left SRB mass flow
	MFSR	Right SRB mass flow
mv/v		Millivolt per volt
N_W		Wing panel normal force, lb
	NOZNO	Dimension indicating nozzle number of SRB taps

NOMENCLATURE (Continued)

SYMBOL	MNEMONIC	DEFINITION
δE_{L_I}	PELI	Left inboard elevon setting, corrected for load deflection, degrees
δE_{L_O}	PELO	Left outboard elevon setting, corrected for load deflection, degrees
δe_I	IB-ELV	Inboard elevon deflection, deg.
δe_o	OB-ELV	Outboard elevon deflection, deg.
ϕ	PHI	Model angular cylindrical coordinate position around the body, deg.
	PAVG	Average SRB external tap pressure
P_c		Plenum chamber pressure, psia
P_{c_j}		Chamber pressure for nozzle j, psia
P_e		Nozzle exit pressure, psia
P_{e_j}		Exit pressure for nozzle j, psia
P_{ET}	PET	External tank chamber pressure/P_∞
P_i		Pressure at model surface tap i, psia
P_{SR}	PSRBR	Right SRB chamber pressure/P_∞
P_t	PT	Freestream total pressure, psf
P_∞	PO,P	Freestream static pressure, psf
P_{SRB}	PSRB	LHSRB chamber pressure/P_∞
P_{SSME}	PSSME	Orbiter chamber pressure/P_∞
	PLUMEX	Plume extension length, in.
$\theta_{W_{SSME}}$	PMTO	SSME nozzle wall deflection angle
$\theta_{W_{SRB}}$	PMTS	SRB nozzle wall deflection angle
q	Q(PSF),Q	Freestream dynamic pressure, psf
	RN/L	Unit Reynolds number, million per ft.
ρ	RHO	Density, slugs/ft^3

NOMENCLATURE (Continued)

SYMBOL	MNEMONIC	DEFINITION
	RPE1-10	Internal exit pressure/P_∞
	R1-5	External tank base pressure instrumentation location, in.
R/R_T	R/RT	External tank base pressure tap location, fraction of tank radius
Σ		Summation
	RPBO	Orbiter base pressure/P_∞
	RPBET	External tank base pressure/P_∞
	RPBSL	Left SRB base pressure/P_∞
	RPBSR	Right SRB base pressure/P_∞
S		Surface area, in^2
	SP1-5	Similarity parameter
	SREF	Model wing reference area, in^2
	SRBGIM, SRB GIMB	Left hand SRB gimbal angle, deg.
	SRBNOZ, SRB NOZ	Left hand SRB nozzle deflection angle, deg.
T_c		Plenum chamber temperature, ^oR
	TE	Trailing edge
	TET	External tank temperature, ^oR
	TORB	Orbiter temperature, ^oR
	TSRMR(L)	Right SRB temperature, ^oR (left)
T_s, T_∞		Freestream static temperature, ^oR
T_t	TTR	Total temperature, ^oR
	TPM1-5	Individual nozzle wall deflection angles, deg. (see subscripts)
	TAPNO.	Tap number
T_w		Wing panel torsion moment, in-lb

NOMENCLATURE (Continued)

SYMBOL	MNEMONIC	DEFINITION
	TVC	Thrust Vector Control
θ_w	WPHI	Deflection of R/H wing panel in pitch plane due to torsion moment, deg. (position LE up)
	W.L.	Water line
$\dot{W}, \dot{w}$		Mass flow rate, lb/sec
X_{CP_W}, Y_{CP_W}		Wing center of pressure location, in.
X_{BM_W}, Y_{BM_W}		Wing bending moment gauge location, in.
$X_{W_{RC}}, Y_{W_{RC}}$		Wing reference center location, in.
$X_{\ell/B}, X/L_B$	X/LB	Longitudinal location on orbiter body surface, fraction of body length
$X/c_v, X_v/C_v$	X/CV	Chordwise location on vertical tail, fraction of local chord
X/C_w	X/CW	Chordwise location on wing surface, fraction of local chord
X/C_{BF}	X/CBF	Chordwise location on body flap, fraction of local chord
$X/_{\ell_T}, X/L_T$	X/LT	Longitudinal location on external tank body, fraction of body length
$X/\ell_S, X/LS$	X/LS	Longitudinal location on solid rocket booster surface, fraction of body length
X_T	XT	Body station on the external tank
Z_T	ZT	Vertical location on the external tank
X_N	XN	Longitudinal location of tap on OMS nozzle
Xo,Yo,Zo	XO,YO,ZO	Orbiter body coordinate station in full scale dimensions, in.
	XMRP,YMRP, ZMRP	Location of the moment reference point in the orbiter coordinate system, in.
X_{CP_W}	XCPW	Longitudinal location of the center of pressure of the wing
Y_{CP_W}	YCPW	Lateral location of the center of pressure of the wing

NOMENCLATURE (Concluded)

SYMBOL	MNEMONIC	DEFINITION
γ		Specific heat ratio (1.4 for air)
θ		Nozzle wall angle, deg
ν		Prandtl-Meyer angle, deg

Subscripts

c	Chamber
e	Exit
i	Surface tap number
j	Nozzle number 1 Center MPS 2 LHMPS 3 RHMPS 4 LHSRB 5 RHSRB
m	Model
s	Static
t	Total
B	Base, body
E	Elevon
I	Inboard
L/H,LH	Left Hand
O,o,ORB	Outboard,(Orbiter)
P	Plume
RC	Reference Center
S,SRB	Solid Rocket Booster
T,ET,TANK	External Tank
W	Wing, wall
∞	Static freestream
T	Throat

REMARKS

Because of a suspected scanivalve malfunction, runs 34, 40, and 41 were repeated with runs 43, 44, and 45, respectively. Difficulties in holding a constant Mach number led to a rerun of sequences -9 through -12 of run 163 with sequences -13 through -16 of the same run. The data from the reruns supersede the earlier measurements. This is reflected in the tabulated data.

The Mach number (1.05) for runs 403-408 was set by deflecting the flex walls of the tunnel. Whether this incorrect procedure had any effect on the data is not known. Standing shocks were observed just aft of the model at M = 1.05 and 1.10 with power off. These may have affected some base pressure data.

Prior to run 68, the ET chamber pressure measurements were made with an uncalibrated transducer. A calibrated instrument was installed after run 67 and the previous transducer was sent out for a post-test calibration. All the earlier measurements were corrected accordingly.

Tap 76 on the orbiter base (35-degree nozzles, nominal gimbal angle) was plugged inside the base plate. At some point between runs 163 and 251, the pressure measurements of tap 77 (also on the orbiter base) were substituted for those of tap 76. The tabulated data have been corrected.

After run 379, a mix-up was uncovered in the measurements from the nozzle exit pressure taps:

REMARKS (Continued)

Tap	Was on Channel	Should have been on Channel
87	5	2 P_e (2)
88	6	5 P_e (5)
89	2	6 P_e (6)

An investigation led to the conclusion that this condition had existed since the beginning of the test. The situation was corrected during the model change after run 499 and all tabulated data have been corrected.

Some difficulties were encountered with the thermocopules located in the four plenum chambers of the model. The instruments in both SRB plenums were lost during the pretest high-pressure system trials. No attempt was made to repair them. Earlier ET plenum temperatures had been registering within one or two degrees of the SRB temperatures and were considered sufficiently accurate to compute the mass flow rates of the SRB nozzles. No orbiter or ET plenum temperature measurements were available during the following runs:

Orbiter	ET
33-161	163-561
563-813	

During the first major model change in preparation for the second phase of the test, four strain gauges were lost: the lower rear strut, the inboard elevon hinge moment, the wing torsion, and the inboard wing bending. Although the last appeared to have been recovered for runs 818 through 878, the inboard wing bending data for these runs should be treated

with caution. None of the other three gauges was recovered for the remainder of the test.

Elevon deflections were measured whenever a change in elevon setting was called for during the test. The results of these measurements are listed in Table III.

Base pressure matching was obtained for all but the lower priority conditions of Mach 0.6 and 0.8. However, the data from these Mach numbers can be extrapolated from the ten percent low value to the matched condition. The power-on elevon effectiveness tested indicated that a complete elevon deflection series was not required. Accordingly, the test was limited to three sets of elevon deflections. The results of preliminary analysis tend to support the thesis that plume effects account for a significant portion of the differences between flight measurements and predicted aerodynamic values.

CONFIGURATIONS INVESTIGATED

The model tested was a 0.010-scale replica of the Rockwell International Space Shuttle launch configuration. The 75-OTS model had the capability of simulating the rocket plumes generated from the SRB and SSME systems by directing high-pressure air through pre-calibrated flow-through nozzles. The launch configuration (orbiter, external tank (ET), and solid rocket boosters (SRB)) is depicted in Figure 2a.

The Orbiter was a blended wing-body with a double delta-wing planform and full span elevons with an interpanel gap between the inboard and outboard panels. A single centerline vertical tail with rudder and/or speedbrake capability was mounted between the two OMS pods, and a single body flap was fitted on the lower trailing edge of the fuselage. The rudder/speed-brake and body flap were not deflectable on this model. The orbiter model was generally in accord with the VC70-000002 configuration control drawing.

In the dual strut configuration, the vertical tail was replaced by a dorsal strut supporting the orbiter and housing the instrumentation as well as the high-pressure air flow passages. In the single strut configuration, the orbiter was supported from below by a similar strut which eliminated the ET/orbiter umbilical doors and cavities.

The orbiter was instrumented with 216 surface pressure taps distributed over the fuselage, wing, vertical tail, and body flap. The right-hand wing and elevons were mounted on strain-gauged beams to measure forces and moments.

The External Tank was modeled to conform with ICD-2-00001/IRN 0078 for the Light Weight Tank. The tank had a cylindrical cross section with an ogive forward section blending into a 40° conical nose with the biconic nose spike. The 75-OTS ET was originally modeled to the inner mold line (331" diameter) and remained at this diameter for test IA300. All significant protuberances and interstage hardware of the Light Weight Tank were simulated except where interfered with by the support struts carrying the instrumentation wiring/tubing, and the high-pressure flow passages.

The Solid Rocket Boosters simulated the configuration defined in the shuttle configuration control drawing VC-77-000002. Protrusions and penetrations were simulated with the exception of the forward separation motors and the proposed TVC pod on the aft skirt. The gaps between the SRB's and the ET were bridged by the struts which housed the high-pressure air flow passages and instrumentation lines.

The model was designed, fabricated, and instrumented by and under the direction of the North American Aircraft Operations model shop of Rockwell International. The model was fabricated of ARMCO 17-4 steel stock with the exception of the fasteners, seals and instrumentation. As a minimum, each element of the model was designed to a safety factor of 5 based on the ultimate strength of the material, or 3 based on the yield strength. All high-pressure air chambers and passages were proof tested to 1.5 times the working pressure.

The model was supported by two support system configurations during the three phases of the test. The initial installation was on the dual strut configuration which allowed the interstage area between the orbiter and ET to be simulated without interference. The single strut configuration was installed in order to measure the pressures on the upper fuselage, upper wing, and vertical tail, with proper upper surface simulation.

In the dual strut configuration, the ET and SRB's were supported, as in the single strut configuration, on a strut entering the lower surface of the ET. The high-pressure air for the SRB's was supplied through this strut. The pressure instrumentation tubing for the ET and SRB's was routed through the leading edge of the same strut to scanivalves mounted on the horizontal support beam below. The orbiter was then supported on a second strut entering the upper fuselage surface and replacing the vertical tail. The SSME's were supplied with high-pressure air through this dorsal strut. The orbiter instrumentation was routed through passages in the leading and trailing edges of this strut to scanivalves mounted on the upper horizontal support beam. In this configuration, the Orbiter/ET attach hardware and significant protuberances and cavities in the interstage region were simulated. The attach hardware, however, was non-load bearing, terminating in a "soft" attachment to the orbiter. The dual strut configuration is shown in Figure 2c.

In the single strut support system, the total launch configuration was supported from the lower sting and blade strut assembly which entered the lower surface of the ET. In this configuration, the strut continued through

the ET to support the SRB's and Orbiter and to supply high-pressure air to the SRM's and SSME's. The Orbiter and SRB instrumentation tubing and electrical leads were routed to the ET and on down through the leading and trailing edges of the strut to scanivalves and a wiring harness mounted in the lower horizontal support beam. Although the interstage struts were faired fore and aft, they still presented significant interference with the flow fields in these regions. The single strut installation is shown in Figure 2b.

The Orbiter was modeled of ARMCO 17-4 steel with all significant penetrations simulated. The aft fuselage contained the plenum chamber for the SSME flow system. For ease of manufacture, the base of the model was simulated with a flat base plate inclined at 13° to the vertical, rather than the $10^{\circ}/16^{\circ}$ aft surface on the full-scale vehicle. A total of seven base plates were provided: three for the gimbal angles associated with the high-simulation parameter nozzles, three for the gimbal angles associated with the lower similarity parameter nozzles, and one for the solid plumes.

The right wing was made with the panel integral with a three-component strain-gauged beam to allow root bending moment, root torsion moment and panel normal force to be measured. The .015-inch gap to the orbiter fuselage was sealed. A labyrinth seal minimized flow through the wing isolation gap. The right wing was provided with plain bearing hinged deflectable elevons with the inner and outer panels supported in torsion by individual strain-gauged beams to allow elevon hinge moments to be obtained. The

elevon was made with a cylindrical section lower gap and a conical section upper gap with centerlines on the elevon hinge line so that the elevon gap remained constant with deflection. No attempt was made to simulate the elevon flipper doors. However, the elevon hinge line was sealed after each deflection bracket change. The elevon deflections were individually set by discrete brackets which attached to the elevon panel and to the gauged beam with a .066 – inch square pin through the bracket and the beam, the angle of the square hole in the bracket determining the deflection.

The ET was constructed of four shell-like pieces which fit around the blade strut and ET plenum chamber. They were removable without dismantling the strut and flow system assembly in order to gain access to the tubing from the 77 pressure taps in the ET base and forebody. All significant protuberances of the Light Weight Tank Configuration were simulated. The simulated attach hardware for the SRBs and the Orbiter were non-load bearing.

Each SRB was fabricated as a cylindrical body with the skirt and nozzle attached to the aft end of the cylinder. High-pressure air from a central plenum chamber in the External Tank, was ducted to each side through interstage struts to a single axial passage in each booster, and hence to the SRB plenums and nozzles.

Two sets of nozzles were provided: one set to obtain high-similarity parameter values and the other for lower values. Gimbal angles of zero and two degrees were achieved by inserting calibrated shims between the nozzle and the plenum chamber.

Pressure tubing from the SRB and nozzle exit taps was routed along the outside of the booster body under an access plate and into the External Tank under the fairing at the front of the interstage strut. Both the right and left SRB's had pressure instrumentation. The small protuberances on the SRB body were simulated; these included the external stiffeners on the skirt, aft stiffening rings, cable tunnel front attach lug and camera/ data package.

The SSME solid plume aluminum model consisted of two separate configurations, either of which could be attached to the base of the orbiter after the nozzles were removed. One configuration was machined to approximate the shape of a nozzle plume while the other, the dummy sting, represented a cylindrical body with a shallow cone ($3^{\circ}35'$) extension.

The SRB solid plume model consisted of a conical body with a small disc attached. The model was designed so that the longitudinal position of the cone/disc relative to the SRB base, could be varied.

INSTRUMENTATION

Model-mounted pressure instrumentation consisted of two scanivalve assemblies used to measure up to 373 surface pressures. One scanivalve assembly was mounted on the side of the lower horizontal support beam and was used to measure pressures on the ET and SRB's. The other scanivalve assembly was used to measure Orbiter pressures and was mounted on the upper horizontal support beam for the dual strut installation, or on the lower beam for the single strut configuration. Surface pressure locations are shown in Figures 2d and 2e and are listed in Tables VII. VIII and IX.

Pressure readings in the 4 model plenum chambers and the 10 nozzle exit pressures were read on individual transducers mounted in the tunnel support strut. Temperature readings in the 4 model plenums were made using Chromel-Constantan thermocouples.

The right-hand wing of the Orbiter was mounted on a 3-component strain-gauged beam to measure shear, bending moment and torsion about the wing root. The right-hand elevons were gauged to measure torsion about the hinge. The two model support struts were gauged to measure deflection so that true yaw and pitch angles of the separate components could be determined during the dual strut installation.

TEST FACILITY DESCRIPTION

The Ames Research Center Unitary Plan 11 by 11-Foot Transonic Wind Tunnel is a closed-circuit, air-medium, variable-density facility capable of attaining Mach numbers from 0.4 to 1.4 at Reynolds numbers from 1.7×10^6/ft to 9.4×10^6/ft. The test section is 22 feet long, and models are installed on internal strain-gauge balances mounted to sting-type support systems.

Shadowgraph and Schlieren photographic equipment is available, and pressure transducer instrumentation is provided.

Tunnel operating temperature is 580°R. Extended high Reynolds number runs are restricted by power availability.

TEST PROCEDURES

The test was conducted in three phases: dual strut, single strut, and solid plumes. This last phase employed the single strut configuration with solid plume models replacing the Orbiter and SRB nozzles.

Power calibrations were carried out to determine the settings required for base pressure matching. The plenum chamber pressures were varied parametrically between 300 and 1800 psi and the data compared with the resulting pressure variations on the Orbiter, ET, and SRB bases. The pressures achieved in the plenums as a function of the ARC auxiliary air system pressure are shown in Reference 5. All calibrations were conducted at constant Mach number, $\alpha = -4$ degrees, $\beta = 0$ degree, with the nozzle gimbal angles at their nominal settings, and the elevon deflections held at 10/9 degrees. One complete calibration covering each of the ten test Mach numbers was performed for each basic configuration. In the first one, the SSME base plate was equipped with 22-degree wall angle nozzles. An additional abbreviated calibration covering six Mach numbers from 0.6 to 1.10 was performed in the dual strut phase, with 35-degree nozzles replacing the 22-degree SSME nozzles.

Using the required power settings, a sweep through a 12-point α/β matrix ($\alpha = -8$ degrees to $+4$ degrees, $\beta = -4$ degrees to $+4$ degrees) was performed at each Mach number. Each sweep was repeated with the power turned off. This procedure was used for three sets of elevon deflections: 10/9, 8/9, and 10/5 degrees, with the engine gimbals set at "nominal." An abbreviated 6 point α/β sweep, power-on and power-off, was performed for five combinations of SSME and SRB gimbal angles, keeping the elevon deflections at 10/9 degrees. This entire procedure was duplicated in each of the first two phases.

TEST PROCEDURES (Concluded)

In the third phase, the same 6 point α/β matrix was tested for each of the two SSME solid plume models (C1 and C2), with the SRB plume model, B1, located at three finite distances from the base. The larger SRB model, B2, coupled to the SSME C2 model was tested at only two Mach numbers, viz., 1.25 and 1.40.

The specific combinations of run number, Mach number, model configuration, orientation, and elevon and engine deflections for each phase are shown in the Data Set/Run Number Collation Summary, Table II.

DATA REDUCTION

The data reduction procedures used during test IA300 involved the calculation of pressure coefficients for surface pressures, weighted base pressure coefficients for each component, nozzle pressure ratios and various nozzle parameters, wing loads and elevon hinge moments. The equations used are listed below:

All local static pressures were reduced to pressure coefficient form.

$$CP_i = (P_i x 144 - P_\infty)/q$$

An area-weighted average pressure was computed for the base of each of the launch vehicles elements, i.e., orbiter, ET, and SRB

$$CP_B = \Sigma \left[(CP_i)_B \times Ai/AB \right]$$

where $\Sigma A_i = A_B$

A_i = area weight for ith tap

A_B = base area

Wing Center of Pressure was determined by

$$X_{CP_W} = X_{W_{RC}} - \frac{C_{T_W}}{C_{N_W}} c_W$$

$$Y_{CP_W} = Y_{W_{RC}} + \frac{C_{B_W}}{C_{N_W}} b_W$$

Wing Angular Deflection computed as follows:

Due to bending, $(\theta_w = 0)$

$$\phi_w = K_\Delta \times BM_w$$

The hinge moments for both the inboard and outboard elevons and their coefficients were computed:

$$HM_E = K\left[\frac{mv}{v}\right] + \text{offset} \qquad \text{(see Table VI)}$$

$$C_{h_E} = \frac{HM_E}{q\ S_E\ c_E}$$

Elevon Deflections were computed as follows:

$$\Delta E_{L_I} = K_{\Delta E_I} \times HM_{E_I} \qquad \text{(see Table VI)}$$

$$\Delta E_{L_O} = K_{\Delta E_O} \times HM_{E_O}$$

$$\delta_{E_{L_I}} = \delta_{E_I} + \Delta E_{L_I}$$

$$\delta_{E_{L_O}} = \delta_{E_O} + \Delta E_{L_O}$$

The wing strain gauge balance data were corrected for interactions using the primary gauge sensitivities and the interaction coefficients given by:

$$k_{ij} = \frac{\partial m_i}{\partial m_j} \qquad \text{(see Table V)}$$

$$i = 1, 2, 3$$

$$j = 1, 2, 3$$

where the three values of m are functions of the raw output of the gauges.
Using the output of the three flexures as iterated (M_1, M_2, and M_3) by ARC procedures, and the transfer distances a_m, d, and e_m, the wing normal force, bending and torsion moments, and their coefficients were computed as:

$$N_W = \frac{M_1 - M_2}{a_m} \quad \text{lbf}$$

$$B_W = M_2 + \frac{(M_1 - M_2)d}{a_m} \quad \text{in-lb}$$

$$T_W = M_3 + \frac{(M_1 - M_2)e_m}{a_m} \quad \text{in-lb}$$

$$C_{N_W} = \frac{N_W}{q\ S_W}$$

$$C_{B_W} = \frac{B_W}{q\ S_W\ b_W}$$

$$C_{T_W} = \frac{T_W}{q\ S_W\ c_W}$$

The blowing systems were monitored at two nominal stations, upstream of the nozzle (chamber pressure) and at the nozzle exits.

$$CPR_j = P_{cj}/P_\infty$$

$$EPR_j = P_{ej}/P_\infty$$

A correction was applied to the measurements from the ten nozzle internal exit pressure taps to allow for the distance (ΔX) of the taps from the exit planes.

$$P_{e_j} = P_{e_{j\ meas.}} (k_i)$$

The mass flow rates were computed for each of the five flow-through nozzles. The results for the three SSME nozzles were summed to yield a total flow rate for the SSME System.

$$W_j = 0.53185\ A_T \frac{P_{c_j}}{\sqrt{T_{c_j}}} \quad \text{lb/sec}$$

The value of the similarity parameter (SP) for each flow-through nozzle was computed at every data point

$$SP_j = \frac{M_{P_j}\ \delta_{P_j}}{M_{e_j}^{.25}\ \gamma}$$

where

$$M_{P_j} = \left[\frac{2}{\gamma-1} \left[\left(\frac{P_{c_j}}{P_j} \right)^{\frac{\gamma-1}{\gamma}} - 1 \right] \right]^{\frac{1}{2}}$$

$$M_{e_j} = \left[\frac{2}{\gamma-1} \left[\left(\frac{P_{c_j}}{P_{E_j}} \right)^{\frac{\gamma-1}{\gamma}} - 1 \right] \right]^{\frac{1}{2}}$$

$$\nu = \sqrt{\frac{\gamma+1}{\gamma-1}} \tan^{-1} \sqrt{\frac{\gamma-1}{\gamma+1} (M^2-1)} - \tan^{-1} \sqrt{M^2-1}$$

$$\delta_{P_j} = \nu_{P_j} - \nu_{e_j} + \theta_{w_j}$$

and P_j is the average static pressure on the external surface of the nozzle j

P_{e_j} is the average nozzle exit (internal) pressure of nozzle j.

Data Reduction Constants

Symbol	Full-Scale	Model Scale
A_{B_T}	597.6 ft^2	.05976
A_{B_O}	301.0 ft^2	.03010
A_{B_S}	235.0 ft^2	.02350
b_w	936.68 in	9.3668
c_w	474.81 in	4.7481
ℓ_B	1290.3 in	12.903
S_W	2690.0 ft^2	.2690
$X_{W_{RC}}$	1307.0 in	13.07
$Y_{W_{RC}}$	105.0 in	1.05
S_E	210.0 ft^2	.0210
C_E	90.7 in	.907

Table X displays those data points which were identified as erroneous, subsequent to the initial test processing and data release.

REFERENCES

1. STS82-0843A, "Pretest Information for Test IA300 of the 0.010-Scale 75-OTS Cold Plume Space Shuttle Model in the 11-foot Transonic Leg of the NASA/ARC Unitary Plan Wind Tunnel," January 1983.

2. SD78-SH-0133, "Pretest Information for Test IA138 of the 0.010-Scale 75-OTS Jet Plume Space Shuttle Model in the 9x7-Foot Leg of the NASA/ARC Unitary Plan Wind Tunnel," June 12, 1978.

3. NA-83-5, "Structural Analysis of the .010-Scale SSV Model 75-OTS," January 1983.

4. NA-82-1221, "Structural Analysis of the IA300 Nozzle Verification Test Support Hardware," December 1982.

5. SAS/AERO/83-184, "Test Summary Report on the ADDB Update Cold Plume Test IA300," March 1983.

TABLE I

TEST : IA300

DATE : 22 Aug 83

TEST CONDITIONS

MACH NUMBER	REYNOLDS NUMBER (per unit length)	DYNAMIC PRESSURE (pounds/sq. ft)	STAGNATION TEMPERATURE (degrees Fahrenheit)
0.6	3.5×10^6	410	
0.8	4.0	615	
0.9	4.2	700	
0.95	4.2	740	
1.05	4.4	806	
1.10	4.4	825	
1.15	4.4	854	
1.25	4.4	890	
1.30	4.3	896	
1.40	4.2	900	

BALANCE UTILIZED: 3-Component Wing Balance only

	CAPACITY:	ACCURACY:	COEFFICIENT TOLERANCE:
NF			
SF			
AF			
PM			
RM			
YM			

COMMENTS:

A/15/83

TABLE II

REV 5/27/83

1 of 25

ARC 561-1-11 NOZZLE CALIBRATION DATA

TEST: IA 300

DATA SET/RUN NUMBER COLLATION SUMMARY

DATE: 17 March 1983

DATA SET IDENTIFIER	CONFIGURATION	P_{SRB}		α	β	M	ELEVON IN	ELEVON OUT	NOZZLES BSME GIMB	NOZZLES SRB GIMB	NOZZLES BSME NOZ	NOZZLES SRB NOZ		P_{SRB} ~ psia 0	600	990	1370	0	TEST RUN NUMBERS
RAZ001	DUAL STRUT (22111)	A		-4	0	0.6	10	9	NOM	NOM	22	35		15				→	
2						0.8								16				→	
3						0.9								18				→	
4						0.95								29				→	
5						1.10								19				→	
6						1.25								21				→	
7						1.40								22				→	
														0	440	570	950	0	
RAZ008	DUAL STRUT (22111)	B		-4	0	1.05	10	9	NOM	NOM	22	35		26				→	
09						1.15								27				→	
10						1.30								28				→	

1 7 13 19 25 31 37 43 49 55 61 67 72 76

COEFFICIENTS

IDVAR (1) IDVAR (2) NDV

α OR β SCHEDULES

A) ~ 0, 35, 85, 155, 0

B) ~ 0, 100, 135, 250, 0

NASA-MSFC-MAF

TABLE II (Continued)

ARC 561-1-11 NOZZLE CALIBRATION DATA

2 of 25

TEST: IA 300

DATA SET/RUN NUMBER COLLATION SUMMARY

DATE: 17 March 1983

DATA SET IDENTIFIER	CONFIGURATION	P_{SRB}	α	β	M	ELEVON IN	ELEVON OUT	NOZZLES SSME GIMB	NOZZLES SRB GIMB	NOZZLES SSME NOZ	NOZZLES SRB NOZ	P_{SRB} ~ psia 0	600	990	1370	0
RAZO 11	DUAL STRUT (21111)	A	-4	0	0.6	10	9	NOM	NOM	35	35	163				→
12					0.8							164				→
13					0.9							165				→
14					0.95							166				→
15					1.05							167				→
16					1.10							168				→
												0	-VARIOUS-			0
RAZO 17	SINGLE STRUT (11111)	A	-4	0	0.6	10	9	NOM	NOM	35	35	563				→
18					0.8							571				→
19					0.9							578				→
20					0.95							587				→
21					1.05							594				→
22					1.10							601				→
23					1.15							608				→
24					1.25							615				→
25					1.30							622				→
26					1.40							629				→

TEST RUN NUMBERS

1 7 13 19 25 31 37 43 49 55 61 67 75 76

COEFFICIENTS

IDVAR (1) IDVAR (2) NDV

α OR β SCHEDULES

NASA-MSFC-MAF

TABLE II (Continued)

ARC 561-1-11 ELEVON 3 of 25

TEST: IA300 DATA SET/RUN NUMBER COLLATION SUMMARY DATE: 17 March 1983

DATA SET IDENTIFIER	CONFIGURATION	α		M	P_{SSME}	P_{SRB}	ELEVON IN	ELEVON OUT	NOZZLES SSME GIMB	NOZZLES SRB GIMB	NOZZLES SSME NO.	NOZZLES SRB NO.				BETA -4	BETA 0	BETA 4
RAZ027	DUAL STRUT (22111)	A		1.10	0	0	10	9	NOM	NOM	22	35				33	43	35
28				1.15												39	40	45
29				1.25												46	47	48
30				1.30												56	57	58
31				1.40												59	60	61
32				1.10												36	37	38
33				1.15												65	66	67
34				1.25												49	50	51
35				1.30												53	54	55
36				1.40												62	63	64
37				1.10	0	0	8									68	69	70
38				1.15												74	75	76
39				1.25												80	81	82
40				1.30												86	87	91
41				1.40												92	93	94
42				1.10												72	71	73
43				1.15												78	77	79
44				1.25												84	83	85

TEST RUN NUMBERS

1 7 13 19 25 31 37 43 49 55 61 67 75 76

IDVAR (1) IDVAR (2) NDV

α OR β SCHEDULES: α(A) = 0, ±4, -8 or * -4 only

COEFFICIENTS

NASA-MSFC-MAF

TABLE II (Continued)

ARC 561-1-11 ELEVON 4 of 25

TEST: IA300 DATA SET/RUN NUMBER COLLATION SUMMARY DATE: 17 March 1983

DATA SET IDENTIFIER	CONFIGURATION	α	M	P_{SSME}	P_{SRB}	ELEVON IN	ELEVON OUT	NOZZLES SSME GIMB	NOZZLES SRB GIMB	NOZZLES SSME NOZ	NOZZLES SRB NOZ	BETA -4	BETA 0	BETA 4
RAZ 045	DUAL STRUT (22111)	A	1.30	~	~	8	9	NOM	NOM	22	35	89	88	90
46			1.40	↑	↑	↑	↑					96	95	97
47			1.10	0	0	10	5					101	102	103
48			1.15									110	111	112
49			1.25									113	114	115
50			1.30									119	120	121
51			1.40	↑	↑							128	129	130
52			1.10	~	~							106	105	°104
53			1.15									109	108	107
54			1.25									118	117	116
55			1.30									124	123	122
56			1.40	↑	↑		↑			↑		127	126	125
57	(21111)		0.6	0	0		9			35		170	171	172
58			0.8									173	174	175
59			0.9									183	184	185
60			0.95									189	190	191
61			1.05									195	196	197
62			1.10									*201	202	*203

TEST RUN NUMBERS

COEFFICIENTS

α OR β SCHEDULES

o: α=0 MISSING

NASA-MSFC-MAF

TABLE II (Continued)

ARC 561-1-11 ELEVON 5 of 25

TEST : IA300

DATA SET/RUN NUMBER COLLATION SUMMARY

DATE : 17 March 1983

DATA SET IDENTIFIER	CONFIGURATION	α	M	P_{SSME}	P_{SRB}	ELEVON IN	ELEVON OUT	NOZZLES SSME GIMB	NOZZLES SRB GIMB	NOZZLES SSME NOZ	NOZZLES SRB NOZ	BETA -4	BETA 0	BETA 4
RAZ063	DUALSTRUT (21111)	A	1.25	0	0	10	9	NOM	NOM	35	35	*207	208	*209
64			1.40									*213	214	*215
65			0.6	~	~							180	181	182
66			0.8									176	177	178
67			0.9									187	186	188
68			0.95									193	192	194
69			1.05									199	198	200
70			1.10									*205	204	*206
71			1.25									*211	210	*212
72			1.40									*217	216	*218
73			1.40										▼219	
74			0.6	0	0	8						220	221	225
75			0.8									226	227	228
76			0.9									232	233	234
77			0.95									238	239	240
78			1.05									244	□245	246
79			0.6	~	~							222	223	224
80			0.8									231	□230	229

TEST RUN NUMBERS

1 7 13 19 25 31 37 43 49 55 61 67 75 76

COEFFICIENTS

α OR β SCHEDULES

□: α = −8° MISSING

▼ NOT ON TAPE

NASA-MSFC-MAF

TABLE II (Continued)

ARC 561-1-11 ELEVON 6 of 25

TEST : IA300

DATA SET/RUN NUMBER COLLATION SUMMARY

DATE : 17 March 1983

DATA SET IDENTIFIER	CONFIGURATION	α	M	P_{SSME}	P_{SRB}	ELEVON IN	ELEVON OUT	NOZZLES SSME GIMB	NOZZLES SRB GIMB	NOZZLES SSME NOZ	NOZZLES SRB NOZ	BETA -4	BETA 0	BETA 4
RAZ081	DUAL STRUT (21111)	A	0.9	~	~	8	9	NOM	NOM	35	35	235	236	237
82			0.95									241	242	243
83			1.05									250	248	249
84			1.05									247		
85			0.6	0	0	10	5					251	252	253
86			0.8									258	259	260
87			0.9									264	265	266
88			0.95									270	271	272
89			1.05									279	280	281
90			0.6	~	~							255	256	257
91			0.8									261	262	263
92			0.9									267	268	269
93			0.95									273	274	275
94			1.05									276	277	278
95		-4	0.9										285	
96			1.05										282	
97			0.9										284	
98			1.05										283	

TEST RUN NUMBERS

1 7 13 19 25 31 37 43 49 55 61 67 75 76

COEFFICIENTS IDVAR (1) IDVAR (2) NDV

α OR β

SCHEDULES

NASA-MSFC-MAF

TABLE II (Continued)

ARC 561-1-11 ELEVON 7 of 25

TEST: IA300 DATA SET/RUN NUMBER COLLATION SUMMARY DATE: 17 March 1983

DATA SET IDENTIFIER	CONFIGURATION	α	M	P_{SME}	P_{SRB}	ELEVON IN	ELEVON OUT	NOZZLES SSME GIMB	NOZZLES SRB GIMB	NOZZLES SSME NOZ	NOZZLES SRB NOZ	BETA -4	BETA 0	BETA 4
RAZ099	SINGLE STRUT (11111)	A	0.6	0	0	10	9	NOM	NOM	35	35	569	568	567
100			0.8									572	573	574
101			0.9									581	582	583
102			0.95									591	592	593
103			1.05									598	599	○600
104			1.10									605	606	607
105			1.15									612	613	614
106			1.25									619	620	621
107			1.30									626	627	628
108			1.40									634	635	633
109			0.6	ow	ow							565	564	566
110			0.8									577	576	575
111			0.9									586	585	584
112			0.95									590	589	588
113			1.05									597	596	595
114			1.10									604	603	602
115			1.15									611	610	609
116			1.25									618	617	☐616

TEST RUN NUMBER

1 7 13 19 25 31 37 43 49 55 61 67 72 76

COEFFICIENTS

α OR β SCHEDULES

○ TWO VALUES α = 0

☐ α = -8, -4, 0, 1, 4

NASA-MSFC-MAF

TABLE II (Continued)

ARC 561-1-11 ELEVON 8 of 25

TEST: IA300

DATA SET/RUN NUMBER COLLATION SUMMARY

DATE: 17 March 1983

DATA SET IDENTIFIER	CONFIGURATION	α	M	P_{SSME}	P_{SRB}	ELEVON IN	ELEVON OUT	NOZZLES SSME GIMB	NOZZLES SRB GIMB	NOZZLES SSME NOZ	NOZZLES SRB NOZ	BETA -4	BETA 0	BETA 4
RAZ 117	SINGLE STRUT (11111)	A	1.30	~	~	10	9	NOM	NOM	35	35	625	624	623
118		↓	1.40	↓	↓	↓						631	630	632
119		C	0.6	0	0	8						636	637	638
120			0.8									642	643	644
121			0.9									648	649	650
122			0.95									654	655	656
123			1.05									660	661	662
124			1.10									666	667	668
125			1.15									672	673	674
126			1.25									678	679	680
127			1.30									684	685	686
128			1.40	↓	↓							690	691	692
129			0.6	~	~							641	640	639
130			0.8									647	646	645
131			0.9									653	652	651
132			0.95									659	658	657
133			1.05									665	664	663
134			1.10	↓	↓	↓	↓	↓	↓	↓	↓	671	670	669

TEST RUN NUMBERS

1 7 13 19 25 31 37 43 49 55 61 67 75 76

COEFFICIENTS IDVAR (1) IDVAR (2) NDV

α OR β SCHEDULES c) α = 0 only

NASA-MSFC-MAF

TABLE II (Continued)

ARC 561-1-11 ELEVON 9 of 25

TEST: IA300 DATA SET/RUN NUMBER COLLATION SUMMARY DATE: 17 March 1983

DATA SET IDENTIFIER	CONFIGURATION	α		M	P_{SME}	P_{SRB}	ELEVON IN	ELEVON OUT	NOZZLES SSME GIMB	NOZZLES SRB GIMB	NOZZLES SSME NO.	NOZZLES SRB NO.				BETA -4	BETA 0	BETA 4
RAZ 135	SINGLE STRUT (1 1 1 1 1 1)	C		1.15	on	on	8	9	NOM	NOM	35	35				677	676	675
136				1.25												683	682	681
137				1.30												689	688	687
138				1.40												695	694	693
139				0.6	0	0	10	5								696	697	698
140		A		0.8												707	706	705
141				0.9												708	709	710
142				0.95												718	719	717
143				1.05												721	720	722
144				1.10												729	730	731
145				1.15												732	733	734
146				1.25												743	742	741
147				1.30												744	745	746
148				1.40												755	754	753
149		C		0.6	on	on										701	700	699
150		A		0.8												°702	°703	704
151				0.9												713	712	711
152				0.95												714	715	716

TEST RUN NUMBER

1 7 13 19 25 31 37 43 49 55 61 67 73 76

α OR β SCHEDULES

COEFFICIENTS

0 : α = 0 only

NASA-MSFC-MAF

TABLE II (Continued)

ELEVON

ARC 561-1-11

TEST: IA300

DATA SET/RUN NUMBER COLLATION SUMMARY

DATE: 17 March 1983

DATA SET IDENTIFIER	CONFIGURATION	α		M	P_{BSME}	P_{BRB}	ELEVON IN	ELEVON OUT	NOZZLES BSME GIMB	NOZZLES BRB GIMB	NOZZLES BSME NOZ	NOZZLES BRB NOZ				BETA -4	BETA 0	BETA 4
RAZ 153	SINGLE STRUT (11111)	A		1.05	~	~	10	5	NOM	NOM	35	35				725	724	723
154				1.10												726	Δ 728	727
155				1.15												737	736	735
156				1.25												738	739	740
157				1.30												749	748	747
158				1.40												750	751	752
159				0.9				9								▼ 579		

TEST RUN NUMBERS

1 7 13 19 25 31 37 43 49 55 61 67 75 76

COEFFICIENTS

α OR β SCHEDULES

Δ α = 0, 4

▼ α = 4 MISSING

NDV

NASA-MSFC-MAF

TABLE II (Continued)

ARC 561-1-11

GIMBAL

TEST : IA300

DATA SET/RUN NUMBER COLLATION SUMMARY

DATE : 17 March 1983

DATA SET IDENTIFIER	CONFIGURATION	α	M	P_{SSME}	P_{SRB}	ELEVON IN	ELEVON OUT	NOZZLES SSME GIMB	NOZZLES SRB GIMB	NOZZLES SSME NOZ	NOZZLES SRB NOZ	BETA -4	BETA 0	BETA 4
RAZ 160	DUAL STRUT (22112)	A	1.10	0	0	10	5	NOM	+2	22	35	▼132	133	134
161			1.15										142	
162			1.25									144	145	146
163			1.30										154	
164			1.40									156	157	158
165			1.10	on	on							137	136	135
166			1.15										139	
167			1.25									149	148	147
168			1.30										151	
169			1.40									161	160	159
170		-4	1.15	0	0							143		141
171			1.30	on	on							150		152
172			1.15	on	on							138		140
173			1.30	0	0		9			35		155		153
174	(21112)	A	0.6	0	0							*287	288	*289
175			0.8									*293	294	*295
176			0.9									*299	300	*301
177			0.95									*305	306	*307

TEST RUN NUMBER

1 7 13 19 25 31 37 43 49 55 61 67 72 76

COEFFICIENTS

α OR β SCHEDULES

* α = -4 ONLY

▼ α = -4 MISSING

NASA-MSFC-MAF

TABLE II (Continued)

ARC 561-1-11 GIMBAL 12 of 25

TEST: IA300 DATA SET/RUN NUMBER COLLATION SUMMARY DATE: 17 March 1983

DATA SET IDENTIFIER	CONFIGURATION	α	M	P_{SSME}	P_{SRB}	ELEVON IN	ELEVON OUT	NOZZLES SSME GIMB	NOZZLES SRB GIMB	NOZZLES SSME NOZ	NOZZLES SRB NOZ	BETA -4	BETA 0	BETA 4
RAZ 178	DUALSTRUT (21112)	*A*	1.05	0	0	10	9	NOM	+2	35	35	311	312	313
179			0.6	~	~							292	291	290
180			0.8									298	297	296
181			0.9									304	303	302
182			0.95									310	309	308
183			1.05									316	315	314
184	(21122)		0.6	0	0			+2	+2			319	318	320
185			0.8									326	325	327
186			0.9									332	331	333
187			0.95									338	337	339
188			1.05									344	343	345
189			1.10									350	349	351
190			1.15									356	355	357
191			1.25									362	361	363
192			1.30									368	367	369
193			1.40									377	376	378
194			0.6	~	~							322	321	324
195			0.8									329	328	330

TEST RUN NUMBERS

1 7 13 19 25 31 37 43 49 55 61 67 75 76

α OR β SCHEDULES *A* β=-4 and 4 α=-4 only

COEFFICIENTS

ISVAR (1) ISVAR (2) NDV

NASA-MSFC-MAF

TABLE II (Continued)

ARC 561-1-11

13 of 25

TEST : IA300

DATA SET/RUN NUMBER COLLATION SUMMARY

DATE : 17 March 1983

DATA SET IDENTIFIER	CONFIGURATION	α	M	P_{SSME}	P_{SRB}	ELEVON IN	ELEVON OUT	NOZZLES SSME GIMB	NOZZLES SRB GIMB	NOZZLES SSME NOZ	NOZZLES SRB NOZ	BETA -4	BETA 0	BETA 4
RAZ 196	DUAL STRUT (21122)	*A*	0.9	on	on	10	9	+2	+2	35	35	335	334	336
197			0.95									341	340	342
198			1.05									347	346	348
199			1.10									353	352	354
200			1.15									359	358	360
201			1.25									365	364	366
202			1.30									371	370	372
203			1.40									374	373	375
204	(21132)		0.6	0	0			-5	+2			380	379	381
205			0.8									389	388	390
206			0.9									392	391	393
207			0.95									401	400	402
208			1.05									404	403	405
209			1.10									410	409	411
210			1.15									416	415	417
211			1.25									422	421	423
212			1.30									428	427	429
213			1.40									434	433	435

TEST RUN NUMBERS

1 7 13 19 25 31 37 43 49 55 61 67 75 76

COEFFICIENTS

IDVAR (1) IDVAR (2) NDV

α OR β SCHEDULES

A β = -4 and 4 α = -4 ONLY

NASA-MSFC-MAF

TABLE II (Continued)

ARC 561-1-11

TEST : IA300

DATA SET/RUN NUMBER COLLATION SUMMARY

DATE : 17 March 1983

DATA SET IDENTIFIER	CONFIGURATION	α	M	P_{SSME}	P_{SRB}	ELEVON IN	ELEVON OUT	NOZZLES SSME GIMB	NOZZLES SRB GIMB	NOZZLES SSME NOZ	NOZZLES SRB NOZ	BETA -4	BETA 0	BETA 4
RAZ 214	DUAL STRUT (21132)	*A*	0.6	~	~	10	9	-5	+2	35	35	383	382	384
215			0.8									386	385	387
216			0.9									395	394	396
217			0.95									398	397	399
218			1.05									407	406	408
219			1.10									413	412	414
220			1.15									419	418	420
221			1.25									425	424	426
222			1.30									431	430	432
223			1.40									437	436	438
224	(21131)		0.6	0	0				NOM			441	440	442
225			0.8									447	446	448
226			0.9									453	452	454
227			0.95									459	458	460
228			1.05									465	464	466
229			1.10									471	470	472
230			1.15									477	476	478
231			1.25									483	482	484

TEST RUN NUMBERS

1 7 13 19 25 31 37 43 49 55 61 67 73 76

α OR β SCHEDULES

COEFFICIENTS

A β = -4 and 4 α = -4 ONLY

α = -4 MISSING

IDVAR (1) IDVAR (2) NDV

NASA-MSFC-MAF

TABLE II (Continued)

ARC 561-1-11

TEST : IA300

DATA SET/RUN NUMBER COLLATION SUMMARY

DATE : 17 March 1983

DATA SET IDENTIFIER	CONFIGURATION	α	M	P_{BSME}	P_{SRB}	ELEVON IN	ELEVON OUT	NOZZLES BSME GIMB	NOZZLES SRB GIMB	NOZZLES BSME NOZ	NOZZLES SRB NOZ	BETA -4	BETA 0	BETA 4
RAZ 232	DUAL STRUT (21131)	*A*	1.30	0	0	10	9	-5	NOM	35	35	489	488	490
233			1.40									495	494	496
234			0.6	on	on							444	443	445
235			0.8									450	449	451
236			0.9									456	455	457
237			0.95									462	461	463
238			1.05									468	467	469
239			1.10									474	473	475
240			1.15									480	479	481
241			1.25									486	485	487
242			1.30									492	491	493
243			1.40									498	497	499
244	(21121)		0.6	0	0			2				502	501	503
245			0.8									511	510	512
246			0.9									515	513	516
247			0.95									524	523	525
248			1.05									527	526	528
249			1.10									536	535	537

TEST RUN NUMBER

1 7 13 19 25 31 37 43 49 55 61 67 73 76

ISVAR (1) ISVAR (2) NDV

α OR β SCHEDULES: *A* β = -4 and 4 α = -4 ONLY

COEFFICIENTS

NASA-MSFC-MAF

TABLE II (Continued)

ARC 561-1-11

TEST: IA300

DATA SET/RUN NUMBER COLLATION SUMMARY

DATE: 17 March 1983

DATA SET IDENTIFIER	CONFIGURATION	α	M	P_{SSME}	P_{SRB}	ELEVON IN	ELEVON OUT	NOZZLES SSME GIMB	NOZZLES SRB GIMB	NOZZLES SSME NO3	NOZZLES SRB NO3	BETA -4	BETA 0	BETA 4
RAZ 250	DUAL STRUT (21121)	*A*	1.15	0	0	10	9	2	NOM	35	35	539	538	540
251			1.25									548	547	549
252			1.30									551	550	552
253			1.40									560	559	561
254			0.6	~	~							505	504	506
255			0.8									508	507	509
256			0.9									518	517	519
257			0.95									521	520	522
258			1.05									530	529	531
259			1.10									533	532	534
260			1.15									542	541	543
261			1.25									545	544	546
262			1.30									554	553	555
263			1.40									557	556	558

TEST RUN NUMBER

1 7 13 19 25 31 37 43 49 55 61 67 72 76

COEFFICIENTS

α OR β SCHEDULES

NASA-MSFC-MAF

TABLE II (Continued)

ARC 561-1-11

17 of 25

TEST : IA300

DATA SET/RUN NUMBER COLLATION SUMMARY

DATE : 17 March 1983

DATA SET IDENTIFIER	CONFIGURATION	α	M	P_{SSME}	P_{SRB}	ELEVON IN	ELEVON OUT	NOZZLES SSME GIMB	NOZZLES SRB GIMB	NOZZLES SSME NO.	NOZZLES SRB NO.	BETA -4	BETA 0	BETA 4
RAZ 264	SINGLE STRUT (111/2)	*A*	0.6	0	0	10	5	NOM	+2	35	35	758	757	759
265			0.8									767	766	768
266			0.9									770	769	771
267			0.95									779	778	780
268			1.05									782	781	783
269			1.10									791	790	792
270			1.15									794	793	795
271			1.25									803	802	804
272			1.30									806	805	807
273			1.40									815	814	816
274			0.6	~	~							761	760	762
275			0.8									764	763	765
276			0.9									773	772	774
277			0.95									776	775	777
278			1.05									785	784	786
279			1.10									788	787	789
280			1.15									797	796	798
281			1.25									800	799	801

TEST RUN NUMBER

1 7 13 19 25 31 37 43 49 55 61 67 73 76

COEFFICIENTS

IDVAR (1) IDVAR (2) NDV

α OR β SCHEDULES

NASA-MSFC-MAF

TABLE II (Continued)

ARC 561-1-11

TEST: IA300

DATA SET/RUN NUMBER COLLATION SUMMARY

DATE: 17 March 1983

DATA SET IDENTIFIER	CONFIGURATION	α		M	P_{BSME}	P_{SRB}	ELEVON IN	ELEVON OUT	NOZZLES BSME GIMB	NOZZLES SRB GIMB	NOZZLES BSME NOZ	NOZZLES SRB NOZ	BETA -4	BETA 0	BETA 4
RAZ 282	SINGLE STRUT (11112)	*A*		1.30	on	on	10	5	NOM	+2	35	35	809	808	810
283	↓	↓	↓	1.40	↑	↑	↓	↑	↑	↓	↓	↓	812	811	813
284	(11122)	↓	↓	0.6	0	0	↓	9	+2	↓	↓	↓	819	818	820
285	↓	↓	↓	0.8	↓	↓	↓	↓	↓	↓	↓	↓	828	827	829
286	↓	↓	↓	0.9	↓	↓	↓	↓	↓	↓	↓	↓	831	830	832
287	↓	↓	↓	0.95	↓	↓	↓	↓	↓	↓	↓	↓	841	839	842
288	↓	↓	↓	1.05	↓	↓	↓	↓	↓	↓	↓	↓	844	843	845
289	↓	↓	↓	1.10	↓	↓	↓	↓	↓	↓	↓	↓	853	852	854
290	↓	↓	↓	1.15	↓	↓	↓	↓	↓	↓	↓	↓	856	855	857
291	↓	↓	↓	1.25	↓	↓	↓	↓	↓	↓	↓	↓	865	864	866
292	↓	↓	↓	1.30	↓	↓	↓	↓	↓	↓	↓	↓	868	867	869
293	↓	↓	↓	1.40	↑	↑	↓	↓	↓	↓	↓	↓	877	876	878
294	↓	↓	↓	0.6	on	on	↓	↓	↓	↓	↓	↓	822	821	823
295	↓	↓	↓	0.8	↓	↓	↓	↓	↓	↓	↓	↓	825	824	826
296	↓	↓	↓	0.9	↓	↓	↓	↓	↓	↓	↓	↓	834	833	835
297	↓	↓	↓	0.95	↓	↓	↓	↓	↓	↓	↓	↓	837	836	838
298	↓	↓	↓	1.05	↓	↓	↓	↓	↓	↓	↓	↓	847	846	848
299	↓	↓	↓	1.10	↓	↓	↓	↓	↓	↓	↓	↓	850	849	851

TEST RUN NUMBER

1 7 13 19 25 31 37 43 49 55 61 67 75 76

COEFFICIENTS

α OR β

SCHEDULES

NASA-MSFC-MAF

TABLE II (Continued)

ARC 561-1-11

19 of 25

TEST : IA300

DATA SET/RUN NUMBER COLLATION SUMMARY

DATE : 17 March 1983

DATA SET IDENTIFIER	CONFIGURATION	α		M	P_{SSME}	P_{SRB}	ELEVON IN	ELEVON OUT	NOZZLES SSME GIMB	NOZZLES SRB GIMB	NOZZLES SSME NOZ	NOZZLES SRB NOZ				BETA -4	BETA 0	BETA 4
RAZ 300	SINGLE STRUT (11122	*A*		1.15	~	~	10	9	+2	+2	35	35				859	858	860
301				1.25												862	861	863
302				1.30												871	870	872
303				1.40												874	873	875
304	(11132)			0.6	0	0			-5							880	879	881
305				0.8												889	888	890
306				0.9												892	891	893
307				0.95												902	900	903
308				1.05												905	904	906
309				1.10												914	913	915
310				1.15												917	916	918
311				1.25												926	925	927
312				1.30												929	928	930
313				1.40												938	937	939
314				0.6	~	~										883	882	884
315				0.8												886	885	887
316				0.9												895	894	896
317				0.95												898	897	899

TEST RUN NUMBER

1 7 13 19 25 31 37 43 49 55 61 67 73 76

COEFFICIENTS

α OR β

SCHEDULES

NASA-MSFC-MAF

TABLE II (Continued)

ARC 561-1-11

20 of 25

TEST: IA300

DATA SET/RUN NUMBER COLLATION SUMMARY

DATE: 17 March 1983

DATA SET IDENTIFIER	CONFIGURATION	α	M	P_{SSME}	P_{SRB}	ELEVON IN	ELEVON OUT	NOZZLES SSME GIMB	NOZZLES SRB GIMB	NOZZLES SSME NOZ	NOZZLES SRB NOZ	BETA -4	BETA 0	BETA 4
RAZ 318	SINGLE STRUT (11132)	*A*	1.05	on	on	10	9	-5	+2	35	35	908	907	909
319			1.10									911	910	912
320			1.15									920	919	921
321			1.25									923	922	924
322			1.30									932	931	933
323			1.40									935	934	936
324	(11131)		0.6	0	0				NOM			942	941	943
325			0.8									951	950	952
326			0.9									954	953	955
327			0.95									963	962	964
328			1.05									966	965	967
329			1.10									975	974	976
330			1.15									978	977	979
331			1.25									987	986	988
332			1.30									990	989	991
333			1.40										▼998	
334			0.6	on	on							945	944	946
335			0.8									948	947	949

TEST RUN NUMBERS

1 7 13 19 25 31 37 43 49 55 61 67 75 76

COEFFICIENTS

α OR β

SCHEDULES

▼ NOT ON TAPE

NASA-MSFC-MAF

TABLE II (Continued)

ARC 561-1-11

TEST: IA300

DATA SET/RUN NUMBER COLLATION SUMMARY

DATE: 17 March 1983

DATA SET IDENTIFIER	CONFIGURATION		α	M	P_{SSME}	P_{SRB}	ELEVON IN	ELEVON OUT	NOZZLES SSME GIMB	NOZZLES SRB GIMB	NOZZLES SSME NOZ	NOZZLES SRB NOZ	BETA -4	BETA 0	BETA 4
RAZ 336	SINGLESTRUT (11131)		*A*	0.9	ow	ow	10	9	-5	NOM	35	35	957	956	958
337				0.95									960	959	961
338				1.05									969	968	970
339				1.10									972	971	973
340				1.15									981	980	982
341				1.25									984	983	985
342				1.30									993	992	994
343				1.40									996	995	997
344		(11121)		0.6	0	0			+2				1001	1000	1002
345				0.8									1010	1009	1011
346				0.9									1013	1012	1014
347				0.95									1022	1021	1023
348				1.05									1025	1024	1026
349				1.10									1036	1035	1037
350				1.15									1039	1038	1040
351				1.25									1048	1047	1049
352				1.30									1051	1050	1052
353				1.40									1060	1059	1061

TEST RUN NUMBER

1 7 13 19 25 31 37 43 49 55 61 67 75 76

COEFFICIENTS

α OR β SCHEDULES

RUN NOT ON TAPE

NASA-MSFC-MAF

TABLE II (Continued)

ARC 561-1-11

TEST: IA300

DATA SET/RUN NUMBER COLLATION SUMMARY

DATE: 17 March 1983

DATA SET IDENTIFIER	CONFIGURATION	α		M	P_{SSME}	P_{SRB}	ELEVON IN	ELEVON OUT	NOZZLES SSME GIMB	NOZZLES SRB GIMB	NOZZLES SSME NO.	NOZZLES SRB NO.				BETA -4	BETA 0	BETA 4
RAZ 354	SINGLESTRUT (11121)	A**		0.6	on	on	10	9	+2	NOM	35	35				1004	1003	1005
355				0.8												1007	1006	1008
356				0.9												1016	1015	1017
357				0.95												1019	1018	1020
358				1.05												1028	1027	1029
359				1.10												1033	1030	1034
360				1.15												1042	1041	1043
361				1.25												1045	1044	1046
362				1.30												1054	1053	1055
363				1.40												1057	1056	1058
364		4		1.10												1031		1032

* TEST RUN NUMBER

1 7 13 19 25 31 37 43 49 55 61 67 75 76

COEFFICIENTS

α OR β

SCHEDULES

NASA-MSFC-MAF

TABLE II (Continued)

ARC 561-1-11 SOLID PLUMES 23 of 25

TEST : IA300 DATA SET/RUN NUMBER COLLATION SUMMARY DATE : 17 March 1983

DATA SET IDENTIFIER	CONFIGURATION	α	M	P_{SSME}	P_{SRB}	ELEVON IN	ELEVON OUT	PLUME SSME	PLUME SRB	X inches	BETA -4	BETA 0	BETA 4
RAZ 365	SINGLESTRUT (30112)	*A*	0.6	–	–	10	9	C1	B1	2.50	1084	1083	1085
366			0.8								1087	1086	1088
367			0.9								1090	1089	1091
368			0.95								1093	1092	1094
369			1.05								1096	1095	1097
370			1.10								1099	1098	1100
371	(30113)		0.6							4.50	1103	1102	1104
372			0.8								1106	1105	1107
373			0.9								1109	1108	1110
374			0.95								1112	1111	1113
375			1.05								1115	1114	1116
376			1.10								1118	1117	1119
377	(30111)		0.6							6.25	1065	1064	1066
378			0.8								1068	1067	1069
379			0.9								1071	1070	1072
380			0.95								1074	1073	1075
381			1.05								1077	1076	1078
382			1.10								1080	1079	1081

TEST RUN NUMBER

1 7 13 19 25 31 37 43 49 55 61 67 72 76

COEFFICIENTS ISVAR (1) ISVAR (2) NDV

α OR β

SCHEDULES

NASA-MSFC-MAF

TABLE II (Continued)

ARC 561-1-11 SOLID PLUMES 24 of 25

TEST: IA300 DATA SET/RUN NUMBER COLLATION SUMMARY DATE: 17 March 1983

DATA SET IDENTIFIER	CONFIGURATION	α		M	P_{SSME}	P_{SRB}	ELEVON IN	ELEVON OUT	PLUME SSME	PLUME SRB	X inches					BETA -4	BETA 0	BETA 4
RAZ 383	SINGLESTRUT (30214)	*A*		0.95	—	—	10	9	C2	B1	2.5					1123	1122	1124
384				1.05												1126	1125	1127
385				1.10												1129	1128	1130
386				1.15												1132	1131	1133
387				1.25												1135	°1134	1136
388				1.40												1138	1137	1139
389	(30215)			0.95							4.5					1142	1141	1143
390				1.05												1145	1144	1146
391				1.10												1148	1147	1149
392				1.15												1151	1150	1152
393				1.25												1154	1153	1155
394				1.40												1157	1156	1158
395	(30216)			0.95							6.25					1162	1161	1163
396				1.05												1165	1164	1166
397				1.10												1168	1167	1169
398				1.15												1171	1170	1172
399				1.25												1174	1173	1175
400				1.40												1177	1176	1178

TEST RUN NUMBERS

1 7 13 19 25 31 37 43 49 55 61 67 75 76

COEFFICIENTS 15VAR (1) 15VAR (2) NOV

α OR β SCHEDULES

° DUPLICATE α=-4 pts

NASA-MSFC-MAF

TABLE II (Continued)

ARC 561-1-11 SOLID PLUMES 25 of 25

TEST: IA300 DATA SET/RUN NUMBER COLLATION SUMMARY DATE: 17 March 1983

DATA SET IDENTIFIER	CONFIGURATION	α		M	P_{SSME}	P_{SRB}	ELEVON IN	ELEVON OUT	PLUME SSME	PLUME SRB	X inches					BETA -4	BETA 0	BETA 4
RAZ 401	SINGLE STRUT (30227)	*A*		1.25	—	—	10	9	C2	B2	2.5					1181	1180	1182
402	↓	↓		1.40	↓	↓	↓	↓	↓	↓	↓					1184	1183	1185
403	(30228)	↓		1.25	↓	↓	↓	↓	↓	↓	4.5					1188	1187	1189
404	↓	↓		1.40	↓	↓	↓	↓	↓	↓	↓					1191	1190	1192
405	(30229)	↓		1.25	↓	↓	↓	↓	↓	↓	6.25					1195	1194	1196
406	↓	↓		1.40	↓	↓	↓	↓	↓	↓	↓					1198	1197	1199

TEST RUN NUMBER

1 7 13 19 25 31 37 43 49 55 61 67 75 76

COEFFICIENTS IDVAR (1) IDVAR (2) NDV

α OR β

SCHEDULES

NASA-MSFC-MAF

TABLE II (Concluded)

** FORCE ** (Volume 2)
COEFFICIENT SCHEDULE
(^ WHEN PSRB AND PSSME ARE INDEP. VARIABLES, BETA AND ALPHA APPEAR AS DEP. VARIABLES, AND VICE VERSA.)

D/S First Character											TAB LISTING PAGE NO.	MICROFICHE PAGE NO.
A	^	^	MACH	PT	PO	Q(PSF)	TTR	CONF	RHO	RN/L	1- 324	1- 6
B	^	^	MACH	PET	PSRBR	RPBO	RPBET	RPBSL	RPBSR		325- 648	6- 11
C	^	^	MACH	CPBO	CPBET	CPBSL	CPBSR	MFO	MFSL	MFSR	649- 972	11- 17
D	^	^	MACH	TORB	TET	TSRML	TSRMR	PMTO	PMTS		973-1264	17- 21
E	^	^	CHEI	CHEO	PELI	PELO	BETAO	BETAT	DELB		1265-1588	22- 27
F	^	^	CNW	CPMW	CRMW	WPHI	XCPW	YCPW			1589-1912	27- 32
G	RPE1	RPE2	RPE3	RPE4	RPE5	RPE6	RPE7	RPE8	RPE9	RPE10	1913-2204	33- 37
H	AEEP1	AEEP2	AEEP3	AEEP4	AEEP5	AIEP1	AIEP2	AIEP3	AIEP4	AIEP5	2205-2496	38- 43
I	ME1	ME2	ME3	ME4	ME5	MP1	MP2	MP3	MP4	MP5	2497-2788	43- 47
J	TPM1	TPM2	TPM3	TPM4	TPM5	SP1	SP2	SP3	SP4	SP5	2789-3080	47- 52

PRESSURE (Volume 3)

D/S First Character	COMPONENT DESCRIPTION	TAB LISTING PAGE NO.	MICROFICHE PAGE NO.
A	ORBITER FUSELAGE AND OMS	1- 1941	1- 32
B	BODY FLAP (UPPER)	1942- 2852	33- 47
C	BODY FLAP (LOWER)	2853- 3787	47- 62
D	ORBITER BASE	3788- 5386	63- 88
E	LEFT WING (UPPER SURFACE)	5387- 8923	89-145
F	LEFT WING (LOWER SURFACE)	8924-12460	145-201
G	SSME NOZZLE INTERIOR	12461-13496	202-218
H	SSME NOZZLE EXTERIOR	13497-14407	218-233
I	LEFT OMS NOZZLE	14408-15443	234-250
J	RIGHT OMS NOZZLE	15444-16354	250-265
K	LEFT HAND VERTICAL TAIL	16355-16809	266-273
L	RIGHT HAND VERTICAL TAIL	16810-17230	273-280
M	EXTERNAL TANK	17231-18684	281-304
N	EXTERNAL TANK BASE	18685-19720	304-320
O	LEFT HAND SRB	19721-21174	321-344
P	LEFT HAND SRB BASE	21175-22210	344-360
Q	LEFT HAND SRB NOZZLE INTERIOR	22211-23121	361-375
R	LEFT HAND SRB NOZZLE EXTERIOR	23122-24032	375-390
S	RIGHT HAND SRB	24033-25068	391-407
T	RIGHT HAND SRB BASE	25069-26104	407-424
U	RIGHT HAND SRB NOZZLE INTERIOR	26105-27015	425-439
V	RIGHT HAND SRB NOZZLE EXTERIOR	27016-27926	439-454

TABLE III

ELEVON DEFLECTION MEASUREMENTS
(IA-300)

RUN	NOMINAL DEFLECTIONS	LHS		RHS	
		δE_I	δE_O	δE_I	δE_O
15	10/9	10.1	9.0	9.2	9.8
26	10/9	10.1	9.0	9.7	9.8
68	8/9	7.85	9.0	7.85	9.8
101	10/5	10.0*	5.0*	10.7	5.6
163	10/9	10.0*	9.1	10.7	9.2
220	8/9	8.7	9.1	8.7	9.2
251	10/5	9.6	5.9	10.0	5.9
287	10/9	9.6	8.6	10.0	8.5
563	10/9	10.8	7.6	10.9	8.8
636	8/9	8.0	7.6	7.5	8.2
696	10/5	10.4	5.6	9.9	6.1
818	10/9	9.9	8.9	9.9	9.1

*Not measured.

TABLE IV

NOZZLE DIMENSIONS

SSME

POSITION	GIMBAL	θ_w	D_T	D_E
1	NOMINAL	21.72	.4075	.906
2		21.72	.4068	.907
3		21.72	.4068	.907
1	NOMINAL	35.23	.4412	.916
2		35.23	.4413	.916
3		35.23	.4415	.914
1	2° UP	35.23	.4409	.915
2		35.23	.4412	.913
3		35.23	.4417	.914
1	5° DOWN	35.23	.4411	.913
2		35.23	.4409	.915
3		35.23	.4411	.913

1

2 3

SRB

LHS	N/A	34.86	.7053	1.4630
RHS (Theor.)	N/A	35.0	.7052	1.4565

θ_w: Wall angle (degrees)

D_T: Throat diameter (inches)

D_E: Exit diameter (inches)

TABLE V

WING BALANCE CONSTANTS

	SLOPE		UNITS
	(+)	(-)	
k_{11}	137.7019 (.0072621)	137.9824 (.0072473)	IN-LB/MV/V MV/V·IN-LB
k_{12}	0	0	IN-LB/IN-LB
k_{13}	0.004591	0.021629	IN-LB/IN-LB
k_{21}	0	0	IN-LB/IN-LB
k_{22}	119.6614 (.0083569)	127.1124 (.0078671)	IN-LB/MV/V MV/V·IN-LB
k_{23}	-0.025443	-0.020671	IN-LB/IN-LB
k_{31}	-0.033694	0.067012	IN-LB/IN-LB
k_{32}	-0.009939	-0.118055	IN-LB/IN-LB
k_{33}	222.725 (.0044898)	223.264 (.0044790)	IN-LB/MV/V MV/V·IN-LB

X_1 = 1.3070 in. a_m = 0.5238 in.

X_2 = 1.8308 in. e_m = 1.170 in.

d = 0.7808 in.

NOTE: NUMBERS IN PARENTHSES ARE RECIPROCALS

• : PRIMARY SENSITIVITIES

TABLE VI

ELEVON HINGE MOMENT AND
DEFLECTION CONSTANTS

HINGE MOMENTS

	TE UP	TE DOWN	UNITS
K_I	0.86446	0.87592	IN-LB/MV/V
K_O	2.78000	2.77218	IN-LB/MV/V

DEFLECTIONS

ELEVONS	TE UP	TE DOWN	UNITS
$K_{\Delta E_I}$	0.74928	0.68029	DEG/IN-LB
$K_{\Delta E_O}$	0.70645	0.82079	DEG/IN-LB
WING	UP LOAD	DN. LOAD	UNITS
K_Δ	0.00044	0.00040	DEG/IN-LB

TABLE VII. Orbiter Pressure Instrumentation

a. Fuselage

Tap No.	X_o in	Y_o in	Z_o in	ϕ deg	Tap No.	X_o in	Y_o in	Z_o in	ϕ deg
1	2.65	0	3.0726	0	45	7.80	-1.0575	4.00	90
2	4.15	0	2.8354		46	9.25	-1.0556	4.00	
3	5.00	0	2.7700		47	10.70	-1.0536	4.00	
4	6.25	0	2.7425		48	11.29	-1.0536	4.00	
5	7.80	0	2.7085		49	12.15	-1.0536	4.00	
6	9.25	0	2.6766		50	13.00	-1.0536	4.00	
7	10.70	0	2.6448		51	14.30	-1.1485	4.00	
8	11.29	0	2.6318		52	14.50	-1.1878	4.00	
9	12.15	0	2.6129		64	15.30	-1.4841	4.5402	110
10	13.00	0	2.5976		65	15.30	-1.4866	4.8583	120
11	13.84	0	2.6169		59	13.00	-.5238	4.9073	150
12	14.30	0	2.6601		60	13.75	-.7580	5.3128	
13	14.80	0	2.7138		61	14.30	-.7928	5.3733	
24	6.25	-.4498	2.7642	20	62	13.75	-.2889	5.0281	165
25	7.80	-.4693	2.7105		63	14.30	-.3067	5.1446	165
26	9.25	-.4770	2.6893		17	9.25	0	5.0036	180
27	10.70	-.4399	2.6541		18	10.70	0	5.0036	
28	12.15	-.5006	2.6247		19	13.00	0	5.0036	
29	13.00	-.5056	2.6100		53	10.70	1.0536	4.00	270
30	13.84	-.5006	2.6246		54	11.29	1.0536	4.00	
31	14.30	-.4859	2.6649		55	13.00	1.0536	4.00	
32	14.80	-.4679	2.7145		56	13.75	1.1052	4.00	
43	3.80	-.6361	3.448	90	57	14.30	1.1485	4.00	
44	5.00	-.9985	4.000	90	58	14.50	1.1878	4.00	

Table VII. (Continued)

b. Wing

Tap No	X_o in	Y_o in	η	X/C_w	Tap No	X_o in	Y_o in	η	X/C_w
201	6.942	1.100	.235	.152	223	11.304	1.617	.345	.897
202	7.901	1.100	.235	.252	224	14.763	1.586	.339	968
203	10.779	1.129	.241	.553	225	10.923	1.991	.425	.154
204	12.205	1.109	.237	.702	226	11.389	1.991	.425	.253
205	13.161	1.109	.237	.802	227	12.090	1.991	.425	.402
206	6.944	1.100	.235	.152	228	12.803	1.991	.425	.554
207	7.399	1.100	.235	.252	229	13.687	1.991	.425	.742
208	10.777	1.078	.230	.553	231	14.526	2.025	.432	.921
209	12.204	1.085	.232	.702	232	14.719	1.984	.424	.962
210	13.167	1.105	.236	.302	233	10.920	1.981	.423	.153
211	11.126	1.634	.349	.403	234	11.391	1.981	.423	.253
212	12.091	1.634	.349	.553	235	12.100	1.989	.425	404
213	13.057	1.634	.349	.703	236	12.803	1.989	.425	.554
214	13.589	1.603	.342	.785	239	14.513	2.008	.429	.918
215	14.140	1.618	.346	.871	240	14.712	2.015	.430	.960
216	14.342	1.602	.342	902	241	11.493	2.468	.527	.166
217	14.777	1.602	.342	.970	242	11.886	2.495	.533	.261
218	11.127	1.566	.334	.403	243	12.261	2.495	.533	.356
219	12.091	1.579	.337	.553	244	12.468	2.495	.533	.408
220	13.070	1.590	.339	.705	245	12.865	2.495	.533	.509
221	13.518	1.632	.348	.774	246	13.045	2.495	.533	.554
222	14.106	1.617	.345	.866	247	13.706	2.495	.533	.720

Table VII. (Continued)

b. (Concluded)

Tap No	$X_{o_{in}}$	$Y_{o_{in}}$	η	X/C_w	Tap No	$X_{o_{in}}$	$Y_{o_{in}}$	η	X/C_w
248	14.118	2.532	.541	.825	270	13.202	2.887	.616	.562
249	14.466	2.506	.535	.913	271	13.720	2.899	.619	.707
250	14.648	2.4603	.526	.959	272	14.066	2.905	.620	.807
251	11.481	2.488	.531	.160	273	14.242	2.905	.620	.857
252	11.871	2.488	.531	.259	274	14.580	2.873	.613	.955
253	12.461	2.492	.532	.407	275	12.924	3.405	.727	.401
254	13.053	2.497	.533	.556	276	13.396	3.260	.696	.614
255	13.478	2.485	.531	.663	277	13.685	3.405	.727	.666
256	14.086	2.513	.537	.817	278	14.056	3.415	.729	.794
257	14.436	2.513	.537	.905	279	14.361	3.330	.722	.900
258	14.650	2.526	.540	.960	280	12.914	3.384	.723	.405
259	11.793	2.899	.619	.154	281	13.366	3.422	.731	.548
260	12.153	2.887	.616	.260	282	13.502	3.392	.724	.602
261	12.674	2.887	.616	.410	283	14.0511	3.403	.727	.793
262	13.091	2.897	.619	.527	284	14.337	3.414	.729	.891
263	13.693	2.897	.619	.699	285	13.335	4.190	.895	.403
264	14.087	2.911	.622	.813	286	13.669	4.190	.895	.569
265	14.264	2.911	.622	.864	287	14.023	4.194	.896	.751
266	14.584	2.911	.622	.956	288	14.271	4.182	.893	.878
267	11.811	2.859	.610	.170	289	13.329	4.168	.890	.411
268	12.174	2.859	.610	.274	290	13.665	4.192	.895	.567
269	12.673	2.859	.610	.418	291	14.001	4.195	.896	.740
					292	14.242	4.201	.897	.863

TABLE VII. (Continued)

c. Base

W.L	B.L. −Y₀						℄
Z_0	-1.30	-1.07	-1.03	-.78	-.55	-.38	0
3.02			70	69		68	67
3.40			71				
3.76			72				
4.00							66
4.05						76	
4.10				77			
4.14			73				
4.39		79		74			
4.65	78						
4.78						75	
5.14					80		

Table VII. (Continued)

d. Vertical Tail

IA300 VERTICAL TAIL PRESSURE INSTRUMENTATION

Z_o	η	X_v/C_v						Σ
		0	.06	.15	.30	.52	.83	
530	.095			401 ▲	402 ▲ 404 ○	403 ▲ 405 ○		5
600	.317		406 ▲	407 ▲	408 ▲	409 ▲ 411 ○	410 ▲ 412 ○	7
680	.570		413 ▲	414 ▲ 418 ○	415 ▲ 419 ○	416 ▲ 420 ○	417 ▲ 421 ○	9
720	.697							
755	.808		422 ▲	423 ▲	424 ▲	425 ▲	426 ▲	5
								26

"▲" LEFT-HAND SIDE
"○" RIGHT-HAND SIDE

Table VII. (Continued)

e. Body Flap

η	X/C_{BF}				SURFACE	Σ
	-.10	.20	.60	.95		
.10	38		39	40	UPPER	6
	33		34	35	LOWER	
.50		20		22	UPPER	5
		14	15	16	LOWER	
.90					UPPER	2
	36		37		LOWER	
X/L_B	1.018	1.043	1.0648	1.0680	TOTAL	13

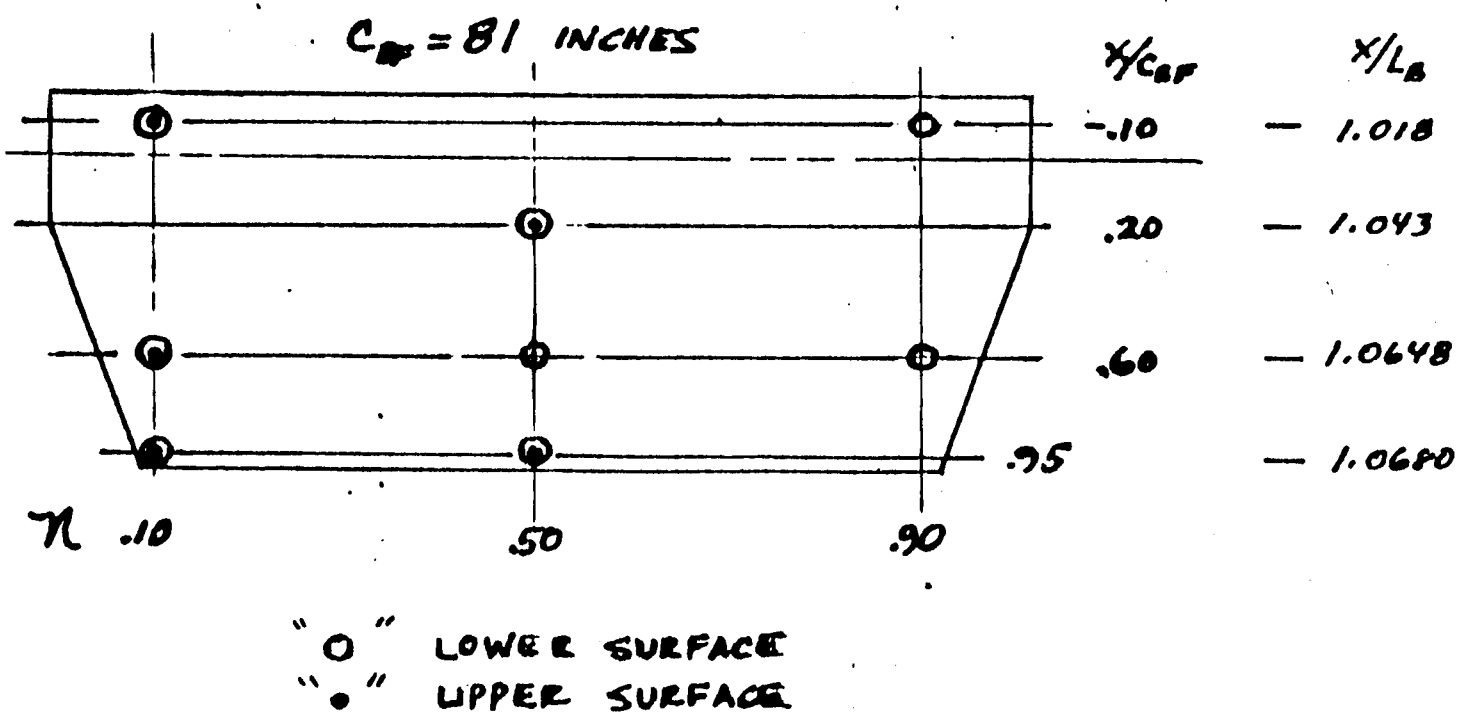

Table VII. (Continued)

f. Main Nozzles

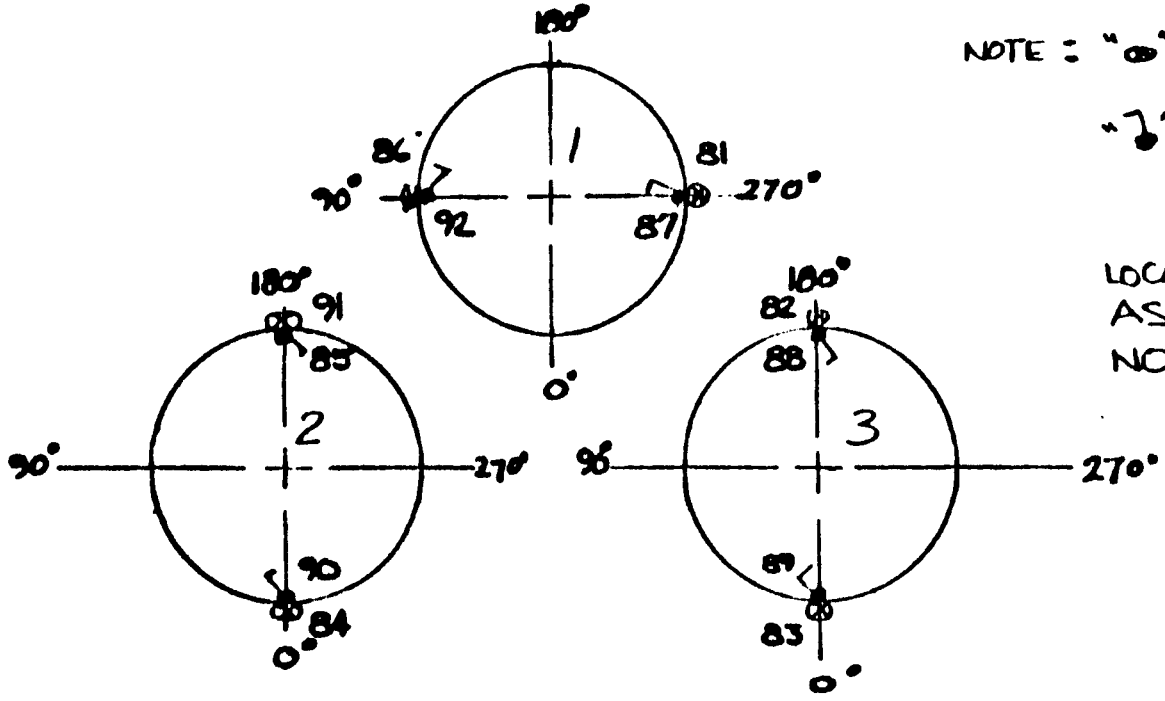

NOTE: "⊗" DENOTES EXTERNAL NOZZLE WALL TAPS
"⊸" DENOTES INTERNAL NOZZLE WALL TAPS

LOCATED TAPS AS CLOSE AS POSSIBLE TO THE NOZZLE EXIT PLANE

TOTAL TAPS 12

VIEW LOOKING FWD

SSME NOZZLE NO.	PRESS. TAP NUMBERS		LOCATION RADIAL ∅
	EXTERNAL	INTERNAL	
1	86	92	90°
	81	87	270°
2	84	90	0°
	91	85	180°
3	83	89	0°
	82	88	180°

Table VII. (Concluded)

g. OMS Nozzles

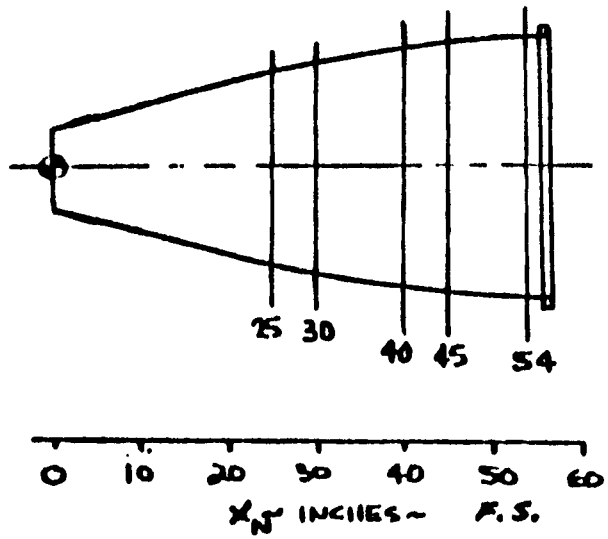

	OMS ENGINE NOZZLE								
	L/H				R/H				
X_N \ ϕ DEG.	120	135	150	180	120	135	150	180	315
25		93							
30					97		98		
40		95							
45					102	94	103	99	101
54	104	96	105	100					

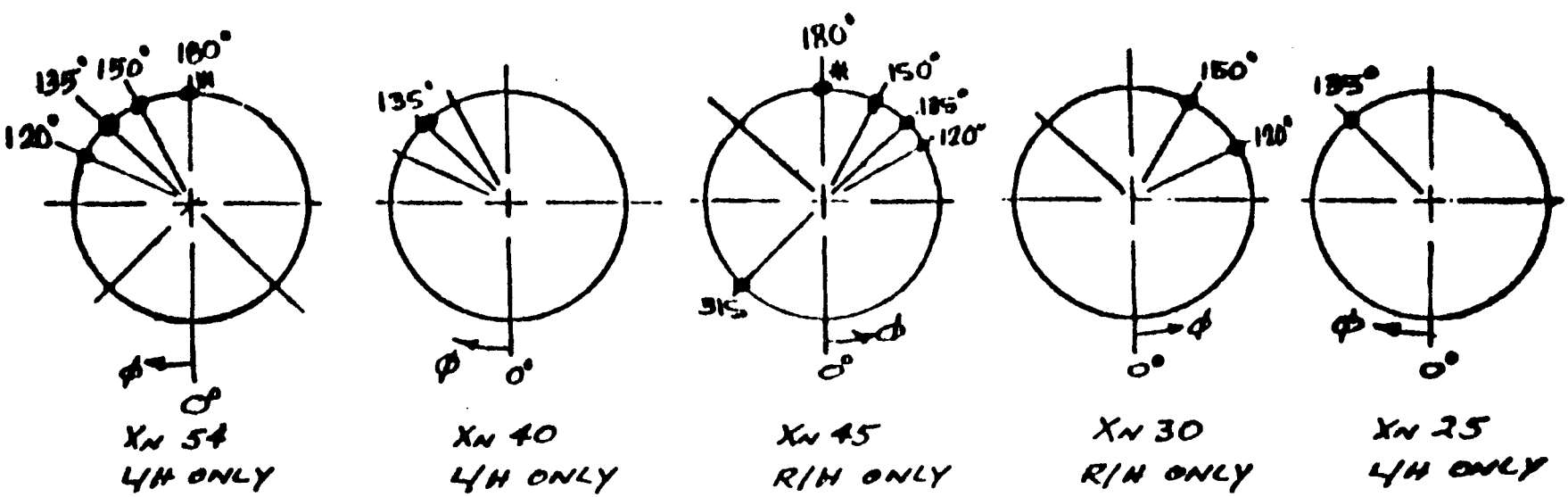

Table VIII. External Tank Pressure Instrumentation

a. Barrel

TANK DIA. 331 F.S.			Xr ~ M.S.										
θ DEG	Zr M.S.	Xr M.S.	10.10	11.60	14.00	15.00	16.00	17.00	17.80	18.60	19.20	19.80	20.95
0	1.655	0										1901	2001
25	1,499	.699										1902	
30	1.433	.827								1703		1903	2003
60	.827	1.433								1704	1804		2004
90	0	1.655							1606	1706	1806	1906	2006
112.5	-.634	1.529							1607				
139	-1.170	1.170							1608	1708	1808	1908	2008
153.5	-1.529	.633	1009	1109	1209	1309			1609	1709		1909	2009
180	-1.655	0	1011	1111	1211	1311	1411	1511	1611	1711	1811	1911	2011
195	-1.529	-.633	1012	1112	1212	1312							
222.5	-1.170	-1.170							1613	1713	1813	1913	2013
247.5	-.633	-1.529							1614	1714			
270	0	-1.655							1615	1715	1815	1915	2015
350	1.629	-.287										1919	2019

Table VIII. (Concluded)

b. Base

RADIAL LOCATION ϕ ~ DEG	RAD. IN.	R_1 1.5656	R_2 1.3902	R_3 1.0509	R_4 .7748	R_5 0
	X_T STA. ~ MS	20.8914	21.1624	21.4477	21.5856	21.7300
0		1502		1546		1574
60			1534			
90		1505		1549	1563	
112.5		1506				
135				1551		
157.5		1508				
180		1509	1539	1553		
202.5		1510				
225				1555		
247.5		1512				
270		1513	1543		1571	
300			1544			
	R/R_T	.9403	.8350	.6312	.4653	0

Table IX. SRB Pressure Instrumentation

a. Barrel

BULL SCALE SRB STA.	Ø RADIAL ~ DEG. 0	45	94	135	180	225	247.5	270	292.5	315	Σ
511											–
671						3015					1
850	3020				3024						2
1050	3030		3032		3034						3
1201	3040				3044	3045				3049	4
1341	3050				3054	3055		3057		3059	5
1450	3060	3061	3062	3063	3064	3065		3067		3069	8
1577					3074			3077			2
1650	3080 4080 Ⓐ	3081 4081 Ⓐ	3082 4082 Ⓐ	3083 4083 Ⓐ	3084 4084 Ⓐ	3085		3087		3089	13
1800	3090 4090 Ⓐ	3091 4091 Ⓐ	3092 4092 Ⓐ	3093 4093 Ⓐ	3094 4094 Ⓐ	3095		3097		3099	13
1832											–
1860	3110 4110 Ⓐ	3111 4111 Ⓐ	3112 4112 Ⓐ	3113 4113 Ⓐ	3114 4114 Ⓐ	3115	3116	3117	3118	3119	15
1890											–
1925	3130	3131	3132	3133	3134	3135		3137		3139	8

NOTE: "Δ" DENOTES LH SRB TAPS ~ 3XXX
"O" DENOTES RH SRB TAPS ~ 4XXX

Table IX. (Concluded)

b. Base, Skirt and Nozzles

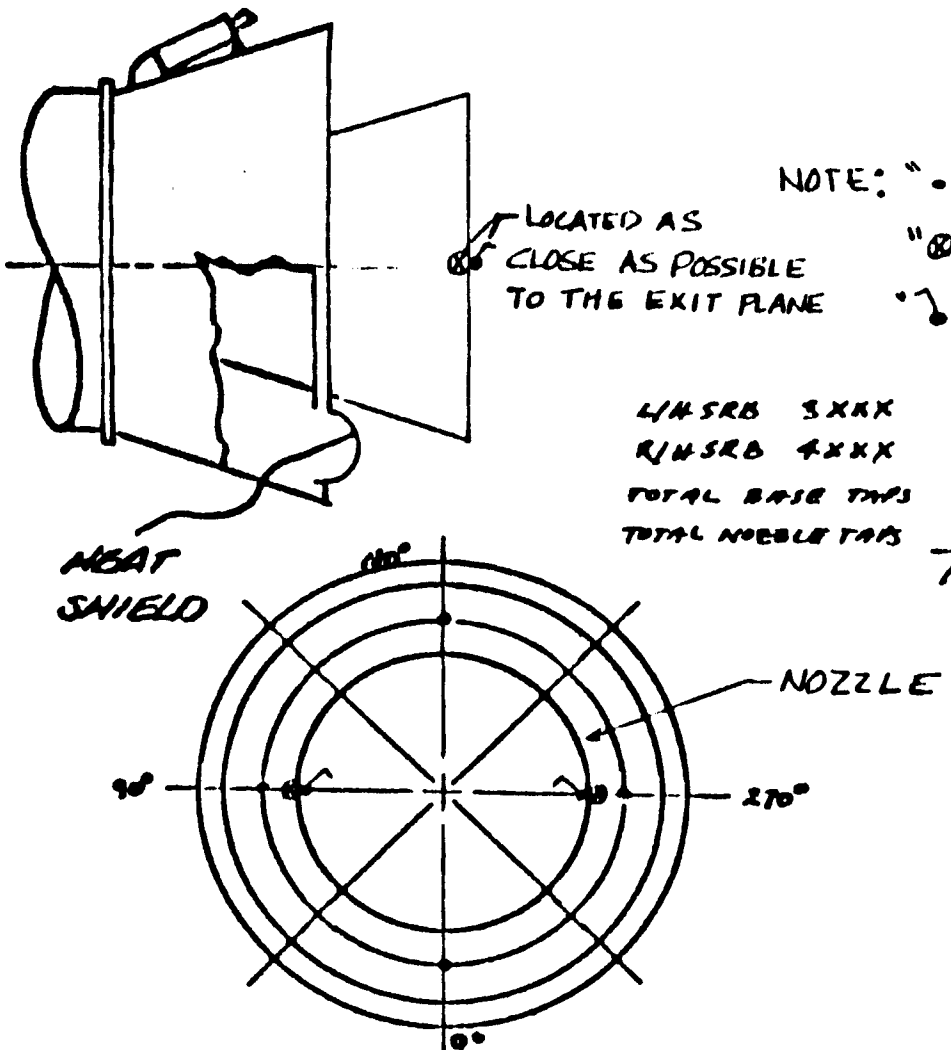

NOTE: "•" DENOTES BASE TAPS
"⊗" DENOTES EXTERNAL NOZZLE WALL TAPS
"↓" DENOTES INTERNAL NOZZLE WALL TAPS

L/H SRB 3XXX
R/H SRB 4XXX
TOTAL BASE TAPS 8
TOTAL NOZZLE TAPS 8
16

LOCATION	ϕ RADIAL ~ DEG.			
	0°	90°	180°	270°
BASE TAPS	3140 4140	3142 4142	3144 4144	3147 4147
EXTERNAL NOZZLE WALL TAPS		3152 4152		3157 4157
INTERNAL NOZZLE WALL TAPS		3162 4162		3167 4167

TABLE X

IA300 Bad Point Data

Component	Identifier	β	α	Tap Number
Orbiter Fuselage	AAZ027→ AAZ098 AAZ160→ AAZ263	ALL	ALL	30
	AAZ069	0	-8	5-16,24-30,47-58 62,63,65
	AAZ079	0	0	5-16,24-32,47-58 63
	AAZ169	0	4	5-16,24-32,47-52,53, 55-58,60-61,63,65
	AAZ184	0	-4	5-16,24-29,47-63,65
	AAZ360	0	-8	ALL
Body Flap (Upper)	BAZ069	0	-8	ALL
	BAZ079	0	0	38
	BAZ159	-4	-8	39
	BAZ184	0	-4	38,39
	BAZ337	4	-4	22
	BAZ339	0	4	22
	BAZ360	0	-8	ALL
Body Flap (Lower)	CAZ027→ CAZ098 CAZ160→ CAZ263	ALL	ALL	35
	CAZ069	0	-8	ALL
	CAZ079	0	0	ALL
	CAZ169	0	4	ALL
	CAZ184	0	-4	ALL
	CAZ337	4	-4	36
	CAZ360	0	-8	ALL
Wing-Upper Surface	EAZ069	0	-8	205,211,215-217, 225-227,232,241-244 249,250,259-266, 275-279,285-288
	EAZ074	4	-8	217,232,249,265, 278,279,287,288
	EAZ079	0	0	205,211-217,225-227 232,241,242,244,245 249,250,259-266, 275-277,279,285-288
	EAZ169	0	4	205,211-217,225-232, 241-250,259-262, 265,266,275,279 285-288

Table X (Continued)

Component	Identifier	β	α	Tap Number
Wing-Upper Surface (Cont'd)	EAZ184	0	-4	205,211-217,225-227 231,232,241-250, 259-266,275-279, 285-288
	EAZ337	4	-4	243
	EAZ339	0	4	243
	EAZ360	0	-8	ALL
	EAZ304→ EAZ406	ALL	ALL	288
	EAZ027→ EAZ098 EAZ160→ EAZ263	ALL	ALL	216
Wing-Lower Surface	FAZ069	0	-8	210,218-224,233-236, 239,240,251-258, 267-274,280-284, 289-292
	FAZ074	4	-8	223,239,257,273,284
	FAZ079			210,218-224,233-236, 239,240,251-258, 267-274,280-284, 289-292
	FAZ169	0	4	ALL
	FAZ184	0	-4	ALL
	FAZ337	4	-4	220-223,282,289
	FAZ099→ FAZ159 FAZ264→ FAZ406	ALL	ALL	258
	FAZ244→ FAZ263	ALL	ALL	252
	FAZ099→ FAZ159	ALL	ALL	282
	FAZ264→ FAZ364	0	-8	ALL
Left OMS Nozzle	IAZ069	0	-8	ALL
	IAZ074	4	-8	ALL
	IAZ079	0	0	93
	IAZ169	0	4	ALL
	IAZ184	0	-4	ALL
	IAZ337	4	-4	ALL
	IAZ339	0	4	ALL
	IAZ360	0	-8	ALL

Table X (Concluded)

Component	Identifier	β	α	Tap Number
Right OMS Nozzle	JAZ069	0	-8	ALL
	JAZ074	4	-8	ALL
	JAZ079	0	0	ALL
	JAZ169	0	4	ALL
	JAZ184	0	-4	ALL
	JAZ337	4	-4	ALL
	JAZ339	0	4	ALL
	JAZ360	0	-8	ALL
Vertical Tail (Left Side)	KAZ337	4	-4	401-403,406-408, 413-415,422-424
	KAZ360	0	-8	ALL
Vertical Tail (Right Side)	LAZ337	4	-4	ALL
	LAZ339	0	4	ALL
	LAZ360	0	-8	ALL
External Tank	MAZ027→ MAZ406	ALL	ALL	1808
	MAZ264→ MAZ406	ALL	ALL	2011,1112,2015
	MAZ069	0	-8	ALL
	MAZ074	4	-8	ALL
	MAZ079	0	0	ALL
	MAZ184	0	-4	1311,1312,1411,1511,1606-1608, 1611,1613-1615,1703,1706, 1708,1711,1713-1715,1806,1808, 1811,1813,1815,1901-1903,1906, 1908,1911,1913,1915,1919,2001, 2003,2006,2008,2011, 2013,2015,2019
	MAZ360	0	-8	ALL
Left Hand SRB	OAZ069	0	-8	ALL
	OAZ074	4	-8	3050,3085,3095, 3115,3135
	OAZ079	0	0	ALL
	OAZ169	0	4	ALL
	OAZ184	0	-4	ALL
	OAZ360	0	-8	ALL
Right Hand SRB	SAZ069	0	-8	ALL
	SAZ079	0	0	ALL
	SAZ169	0	4	ALL
	SAZ184	0	-4	ALL
	SAZ360	0	-8	ALL

Notes:

1. Positive directions of force coefficients, moment coefficients, and angles are indicated by arrows
2. For clarity, origins of wind and stability axes have been displaced from the center of gravity

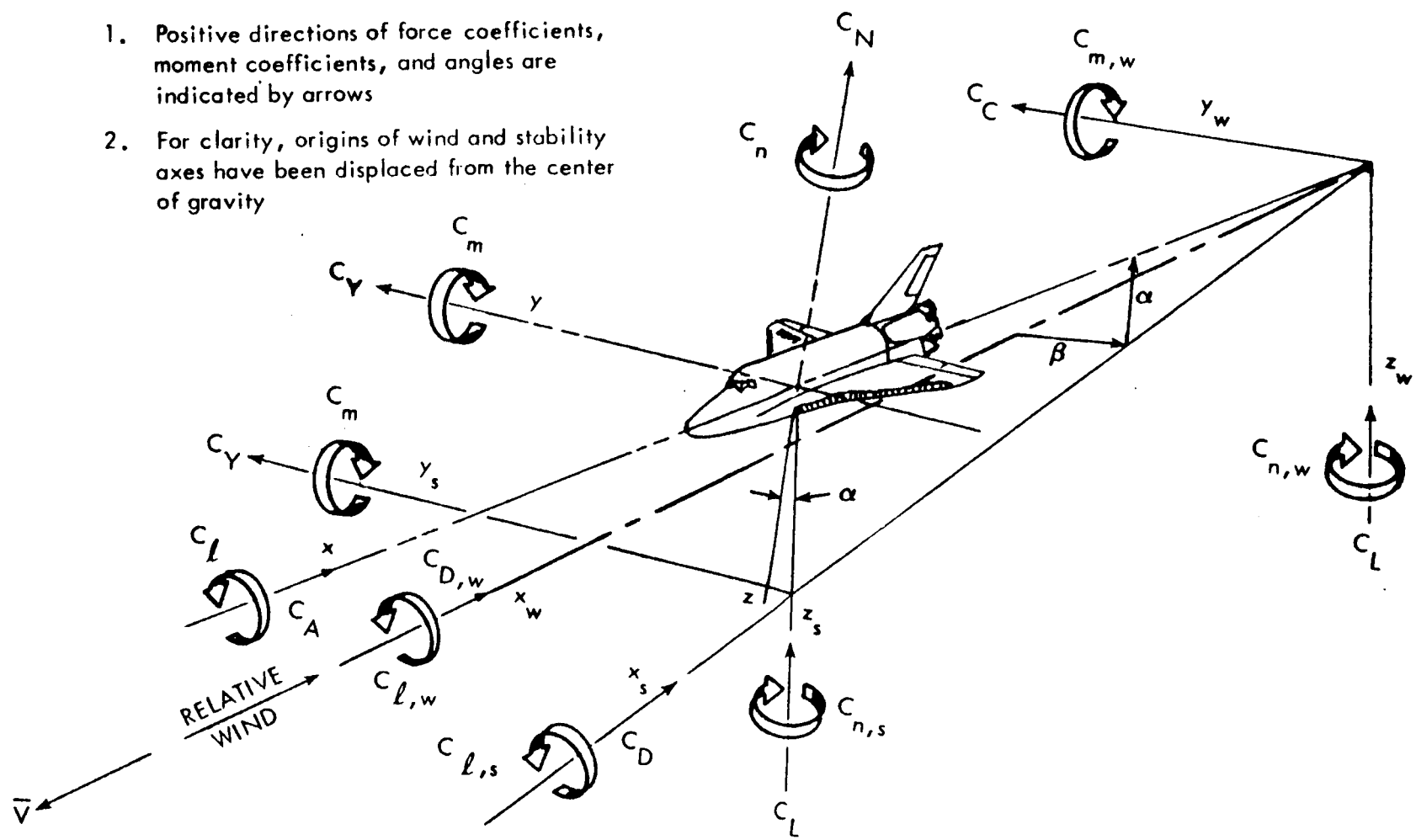

a. Axis Systems Definition

Figure 1. Axis Systems and Sign Conventions

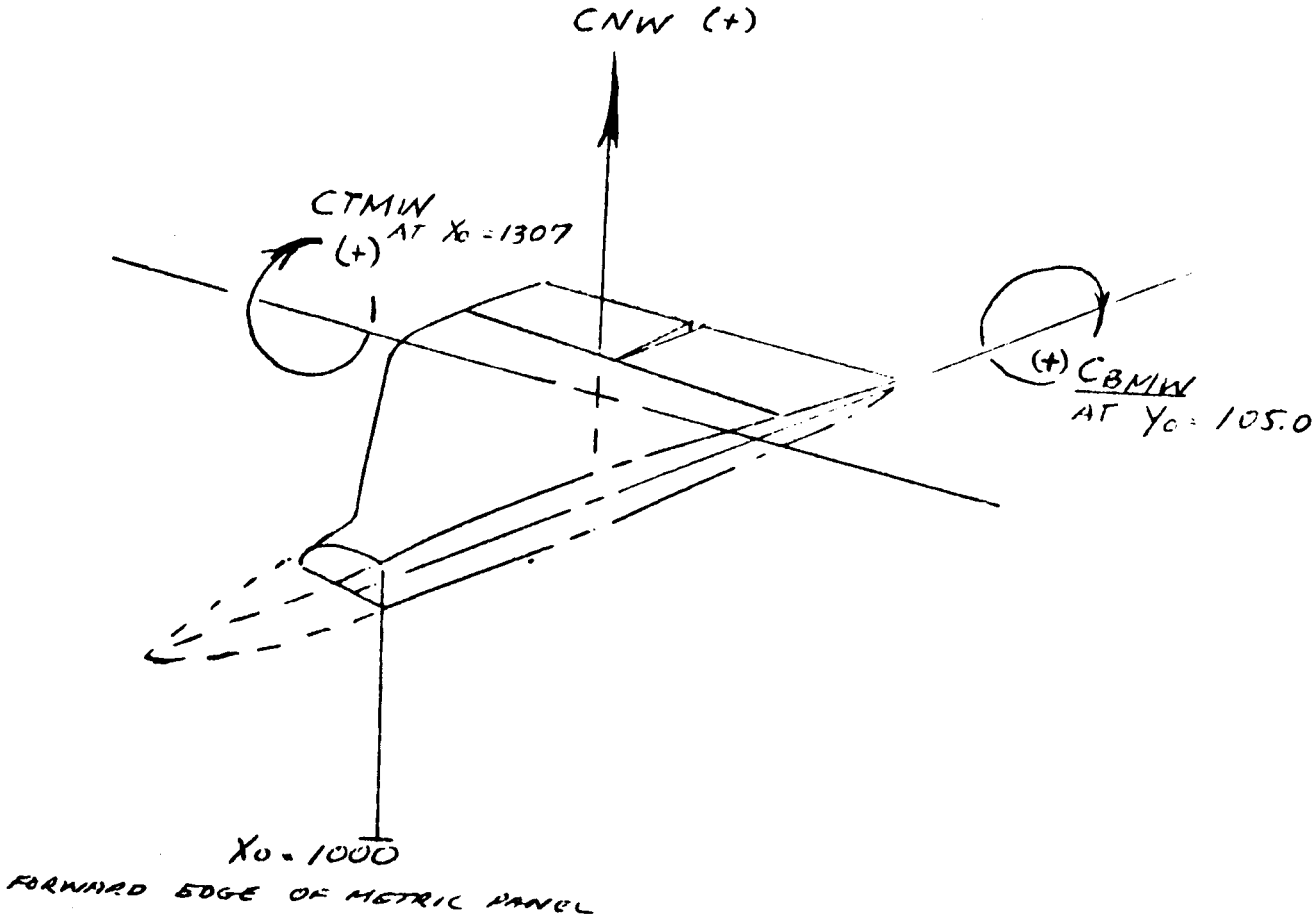

b. Instrumented Wing Panel Coordinate System
Figure 1. Continued.

$$\delta e_L = \frac{\delta e_{L_O} + \delta e_{L_I}}{2}$$

$$\delta e_R = \frac{\delta e_{R_O} + \delta e_{R_I}}{2}$$

$$\delta e = \frac{\delta e_L + \delta e_R}{2}$$

$$\delta a = \frac{\delta e_L - \delta e_R}{2}$$

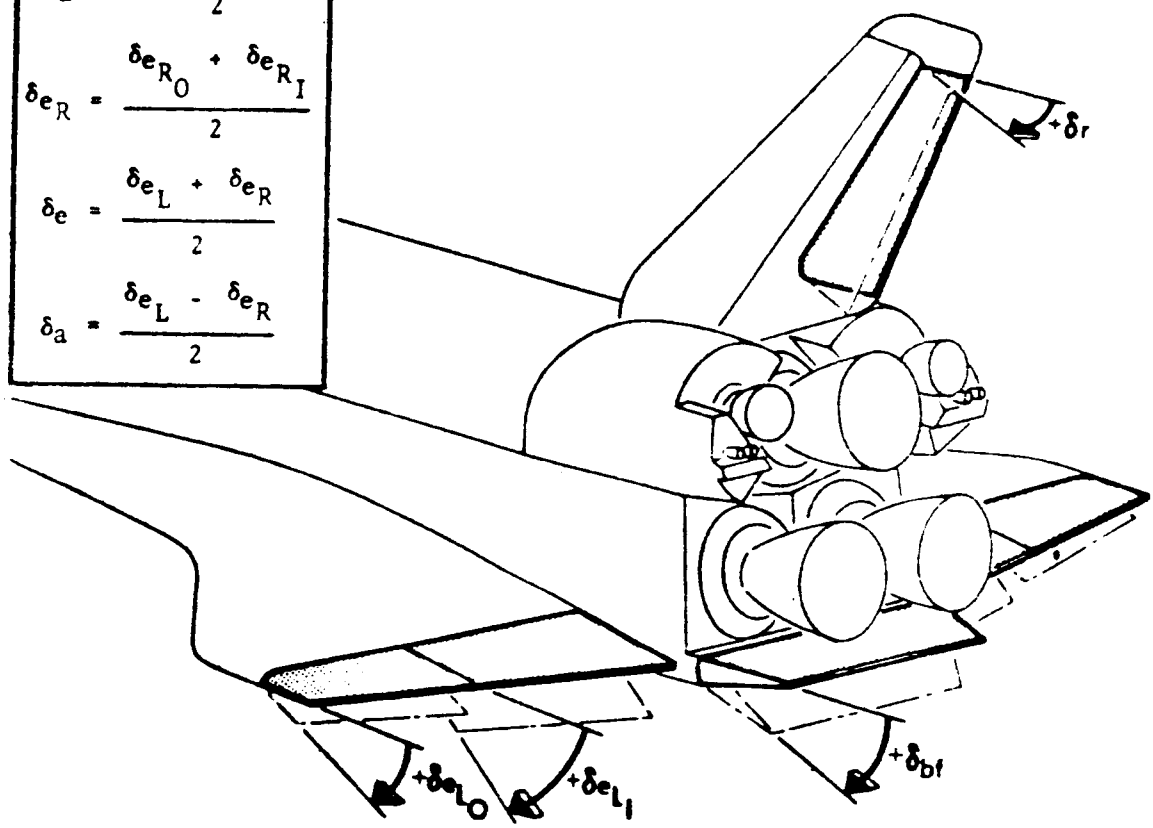

Positive Deflection of	Angle	Aero Forces and Moments	Hinge Moment
Rudder, δr	$+\beta$, $-\psi$	$+C_Y$, $-C_n$	$-C_{h_r}$
Elevon, δe	$-\alpha$, $-\theta$	$-C_m$	C_{h_e}
Right, δe_R	$-\phi$	$-C_\ell$	$-C_{h_{e_R}}$
Left, δe_L	$+\phi$	$+C_\ell$	$-C_{h_{e_L}}$
Aileron, δa	$+\phi$	$+C_\ell$	
Body Flap, δbf	$-\alpha$, $-\theta$	$-C_m$	$-C_{h_{bf}}$

c. Control Surface Deflections
Figure 1. Concluded.

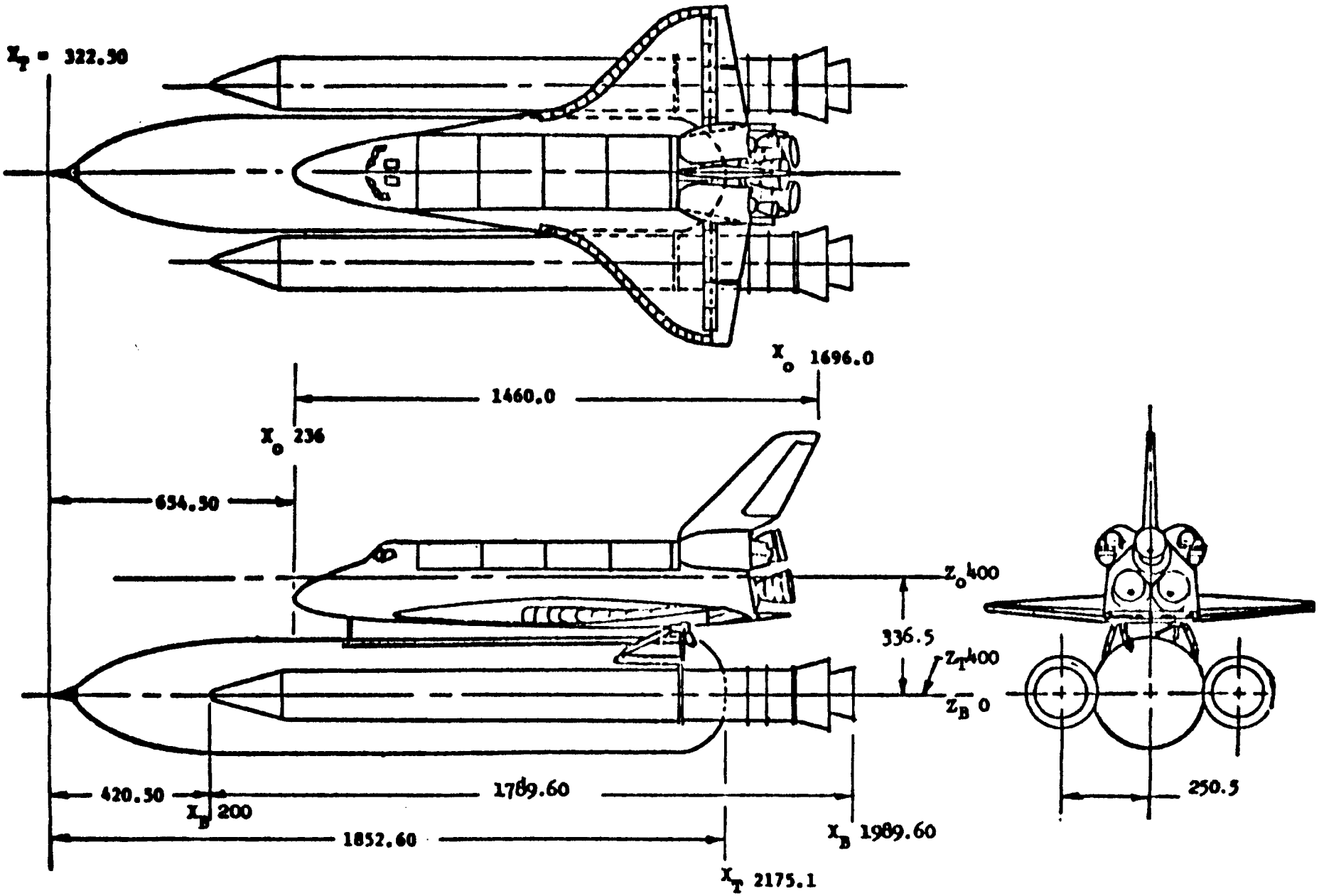

a. Integrated Launch Vehicle Configuration
Figure 2. Model Sketches

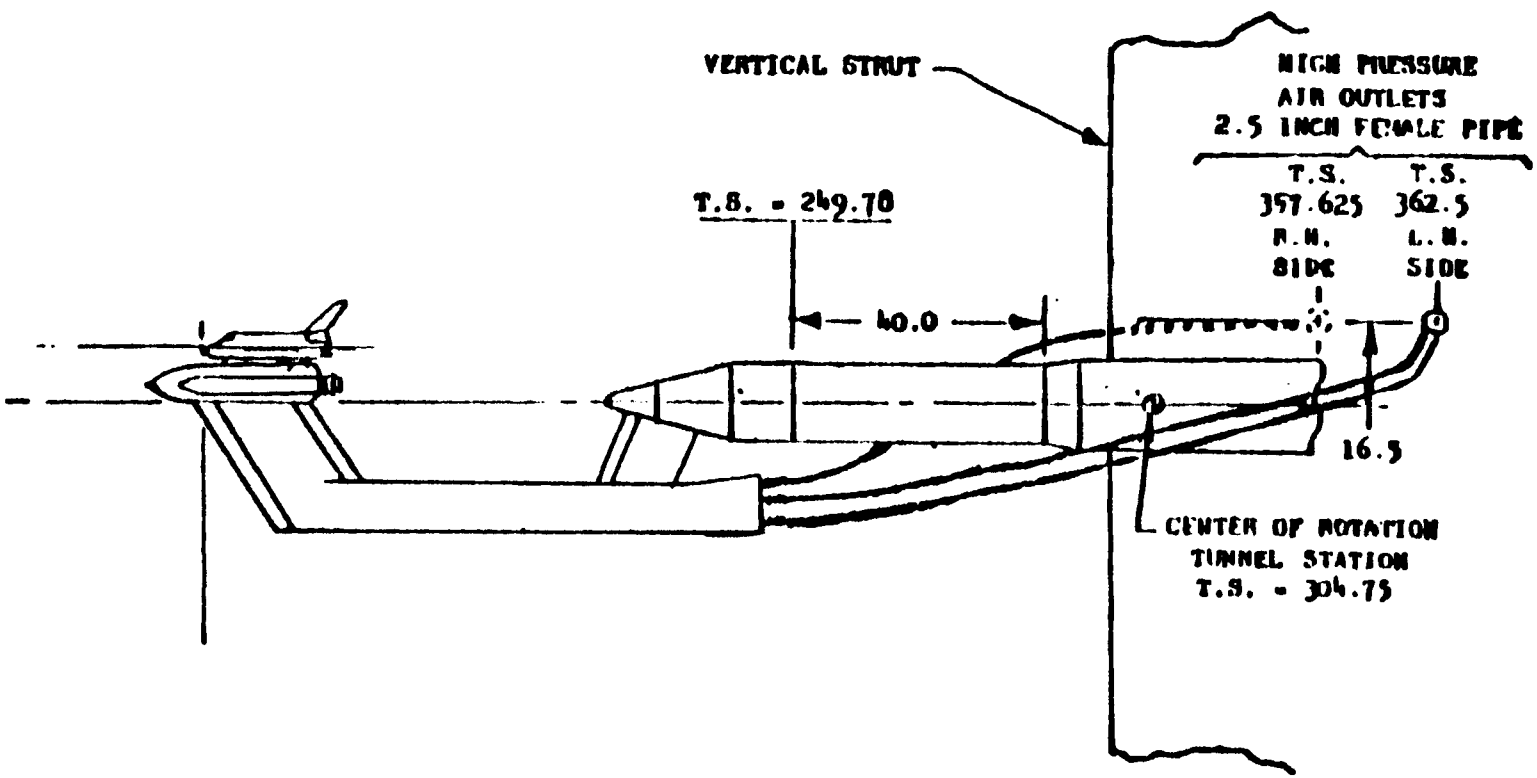

b. Single Strut Installation
Figure 2. (Continued)

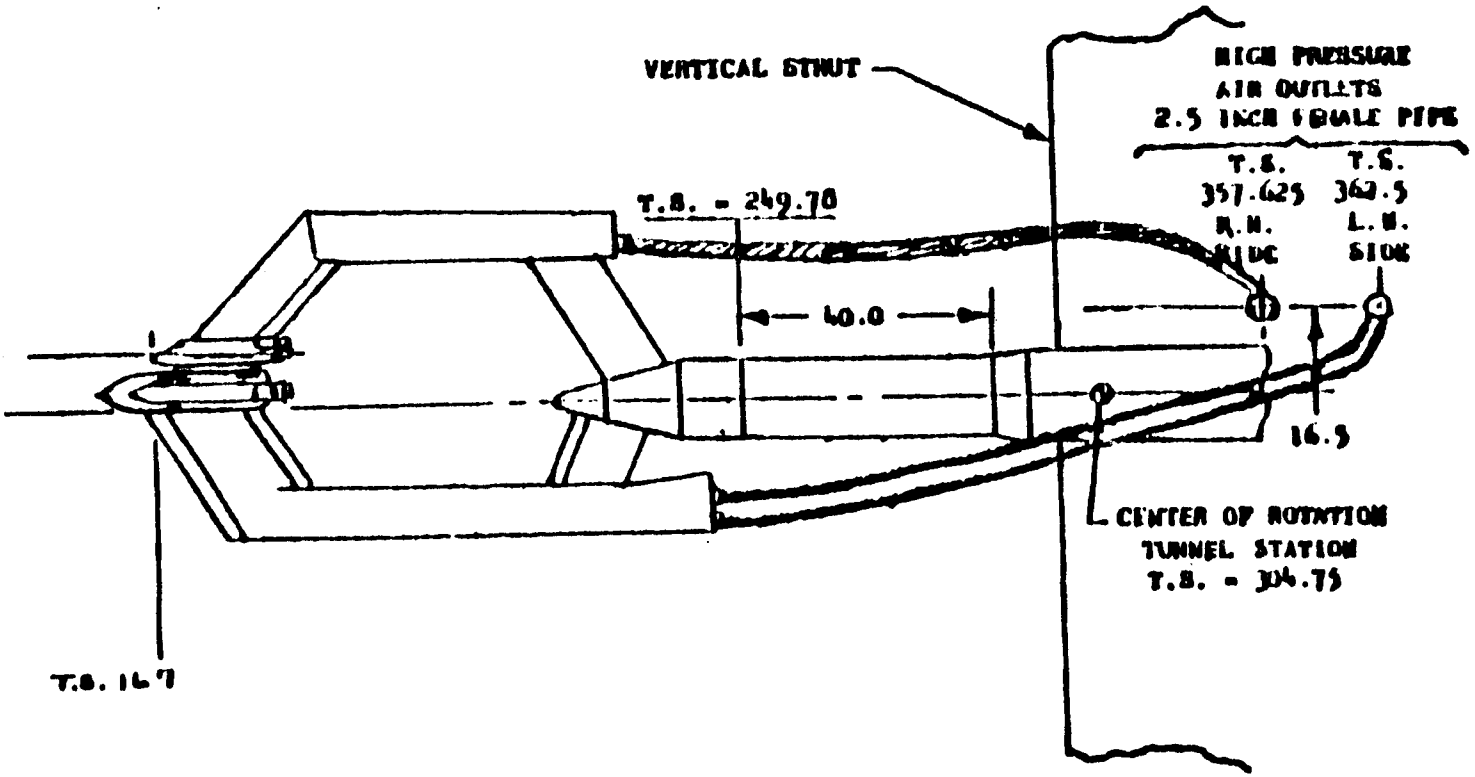

c. Dual Strut Installation

Figure 2. (Continued)

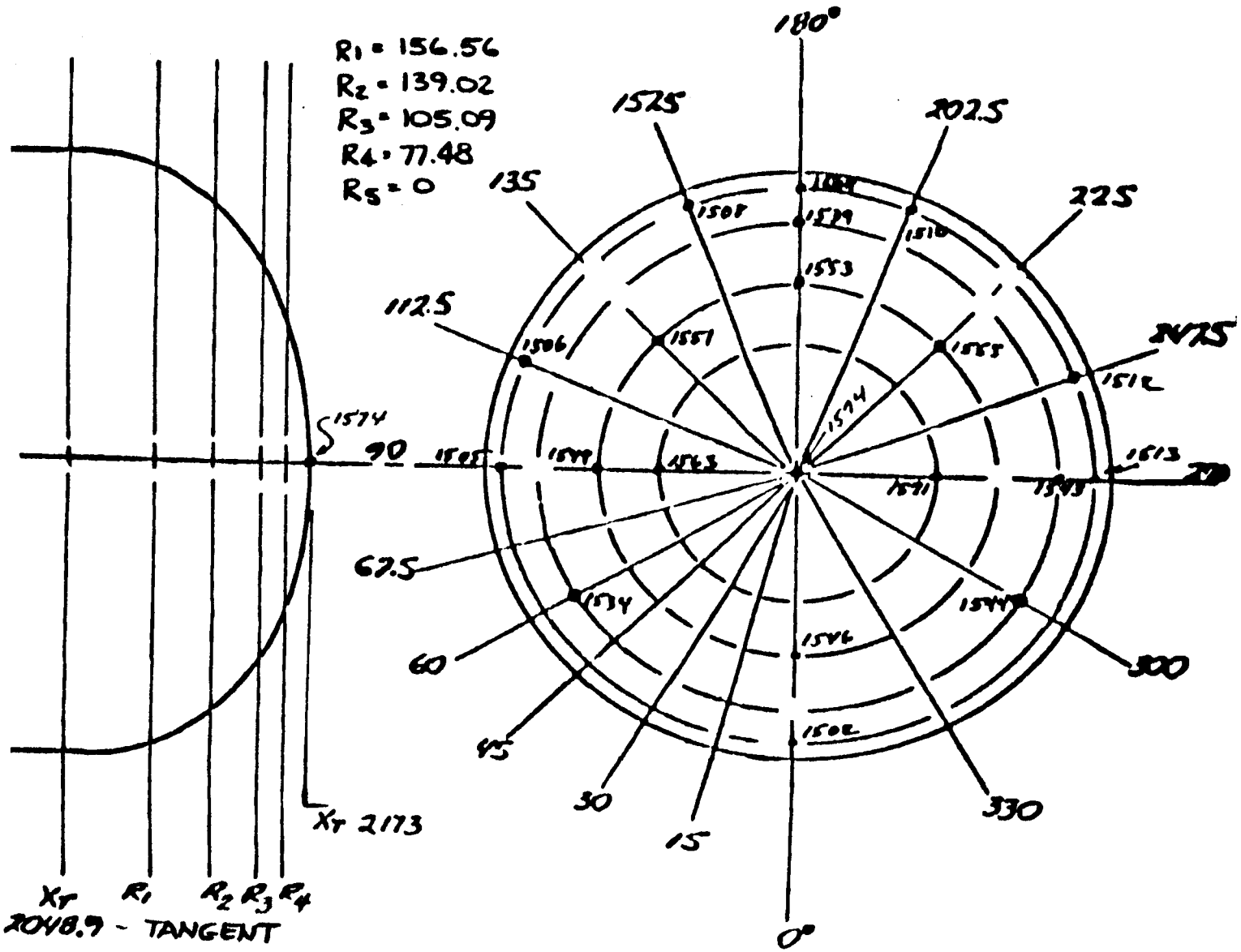

d. External Tank Base

Figure 2. (Continued)

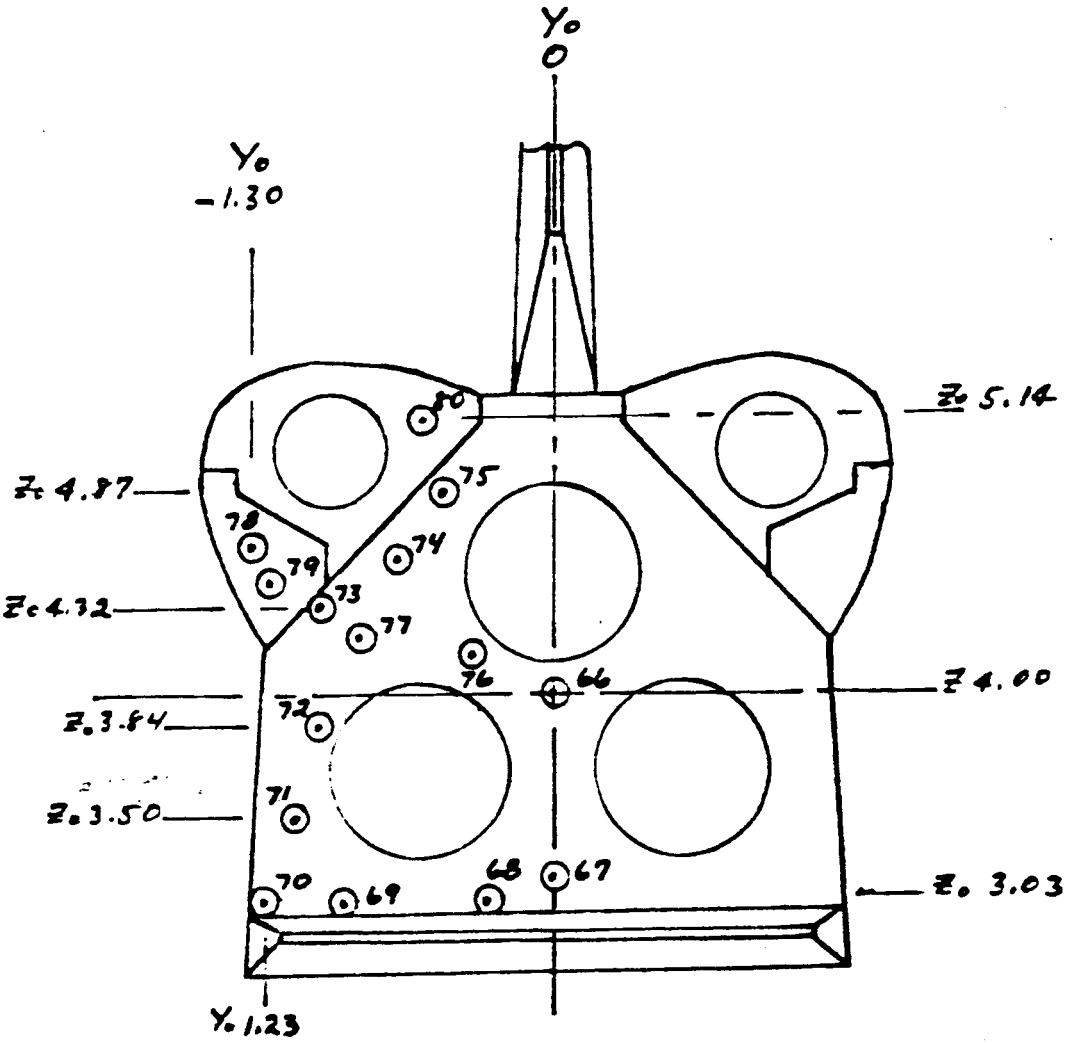

e. Orbiter Base

Figure 2. (Concluded)

a. Single Strut Installation - front quarter view

Figure 3. Model Photographs

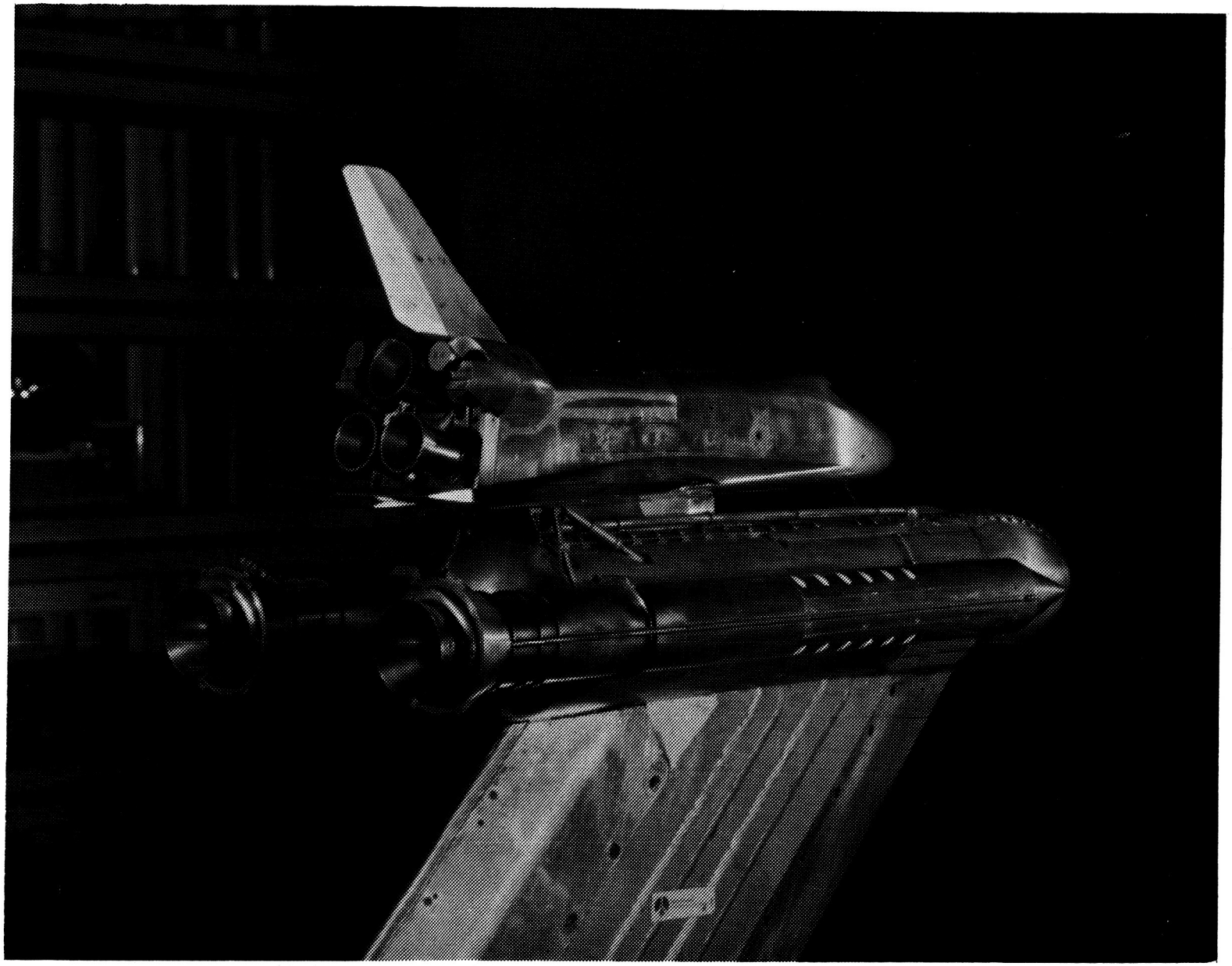

b. Single Strut Installation - rear quarter view

Figure 3. (Continued)

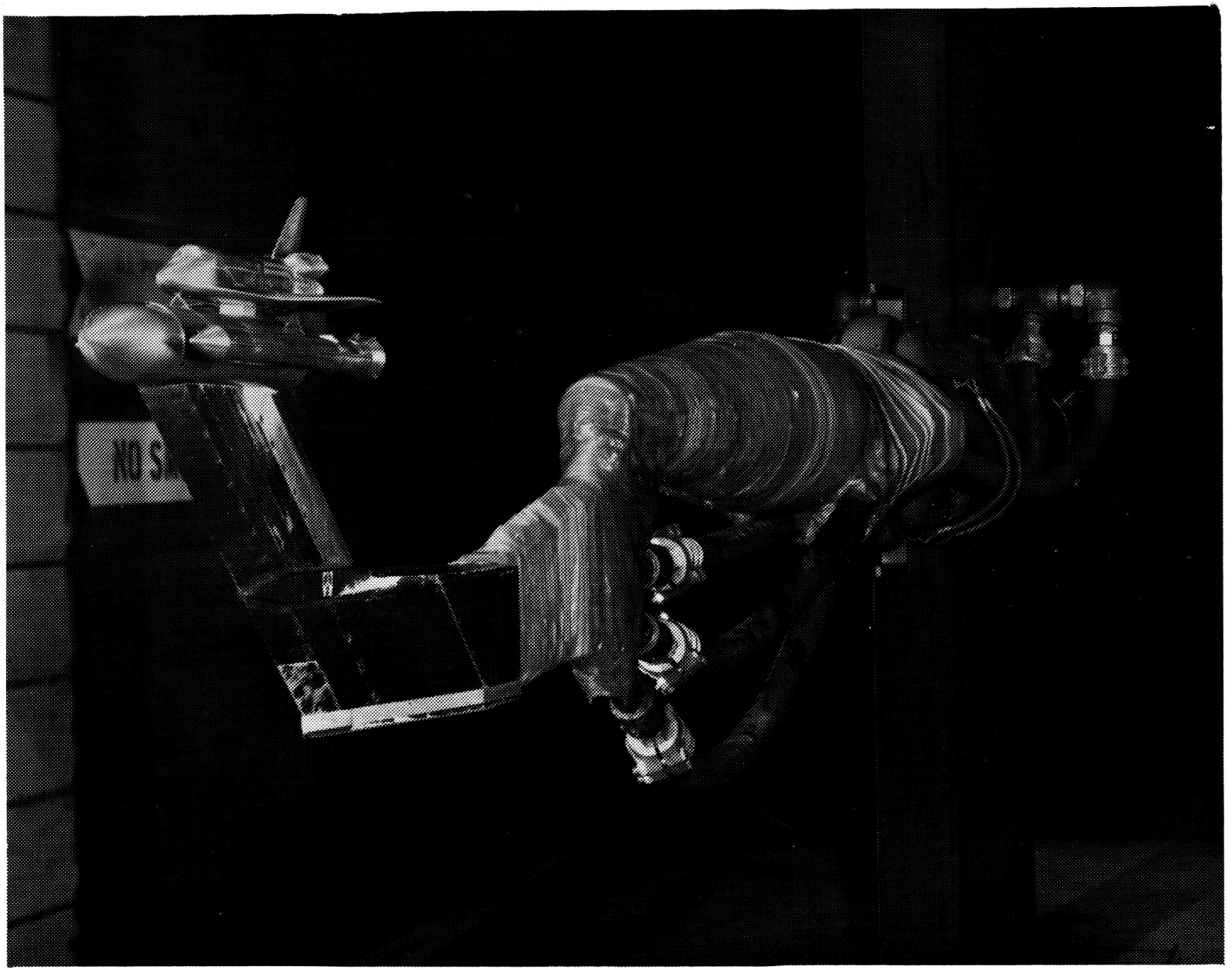

c. Single Strut Installation - overall view

Figure 3. (Continued)

d. Single Strut Installation - detail of interstrut

Figure 3. (Continued)

e. Dual Strut Installation - front quarter view

Figure 3. (Continued)

f. Dual Strut Installation - rear quarter view

Figure 3. (Continued)

g. Dual Strut Installation - side view

Figure 3. (Continued)

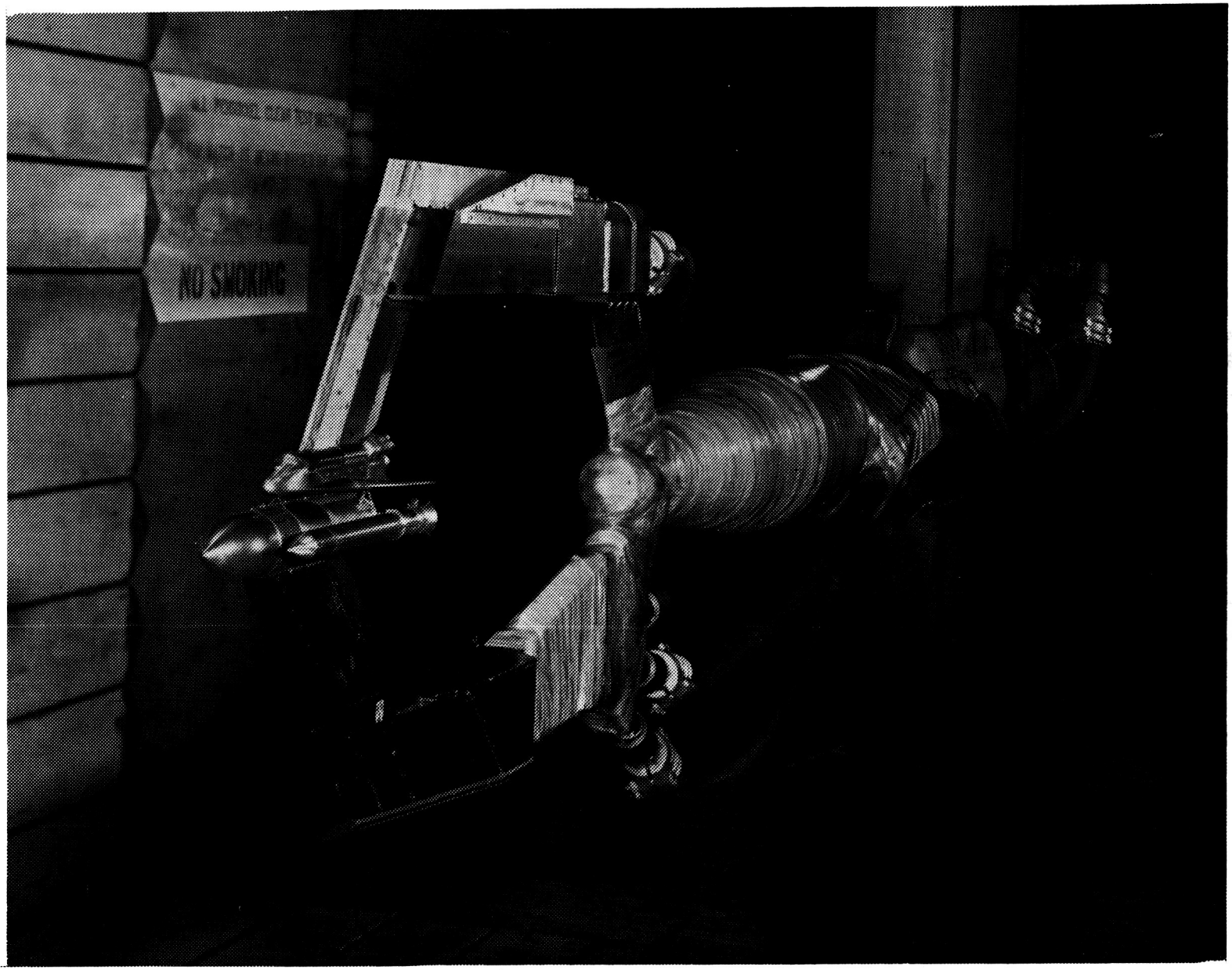

h. Dual Strut Installation - overall view

Figure 3. (Continued)

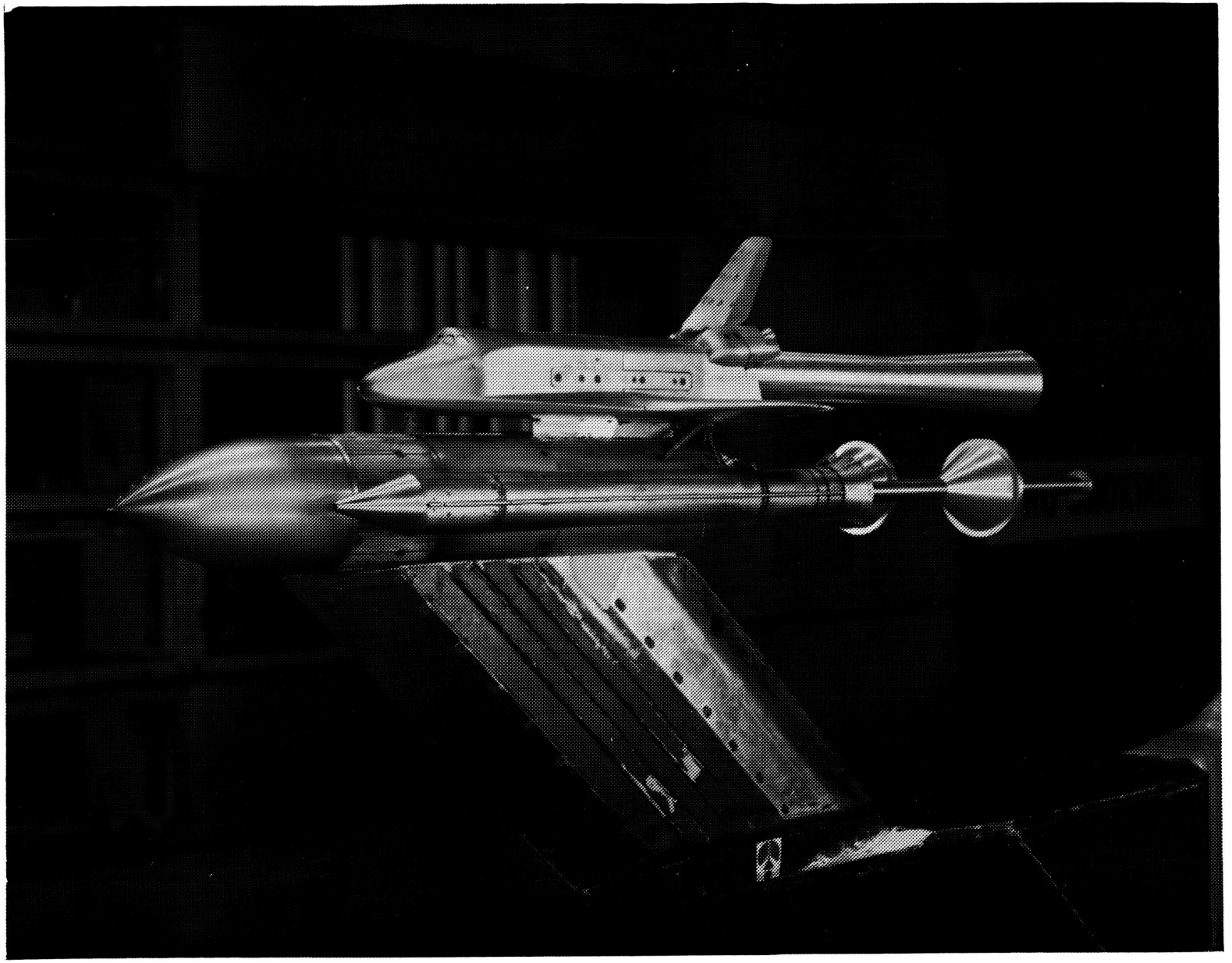

i. Solid Plume Installation - dummy sting (C1) front quarter

Figure 3. (Continued)

j. Solid Plume Installation - dummy sting (C1) rear quarter

Figure 3. (Continued)

k. Solid Plume Installation - simulated plume (C2) front quarter

Figure 3. (Continued)

1. Solid Plume Installation - simulated plume (C2) rear quarter

Figure 3. (Concluded)

Appendix

Tabulated Force Data (Microfiche only Volume II)

(See page 58 for Component breakdown)