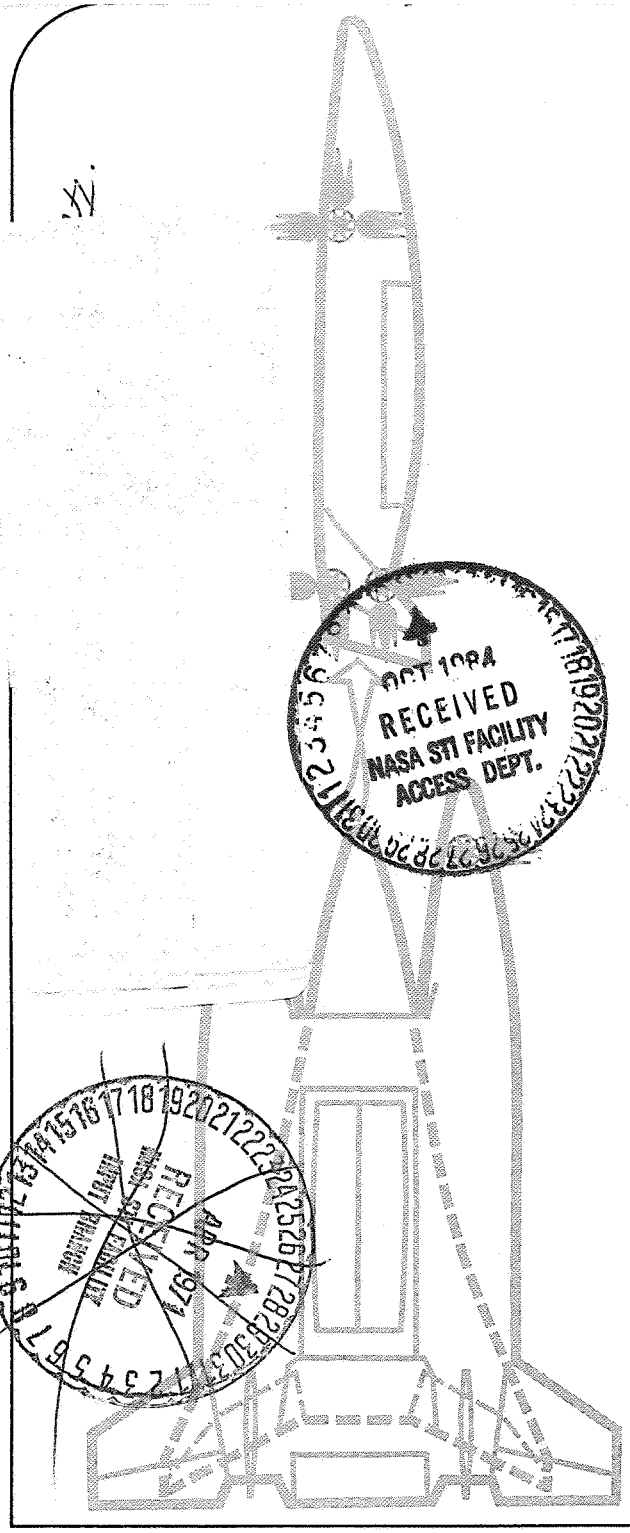

(NASA-CR-118136) SPACE SHUTTLE AUXILIARY PROPULSION IGNITER SYSTEM Monthly Technical Progress Narrative (Rocketdyne) 86 p
N84-75576
Unclas
00/20 22734

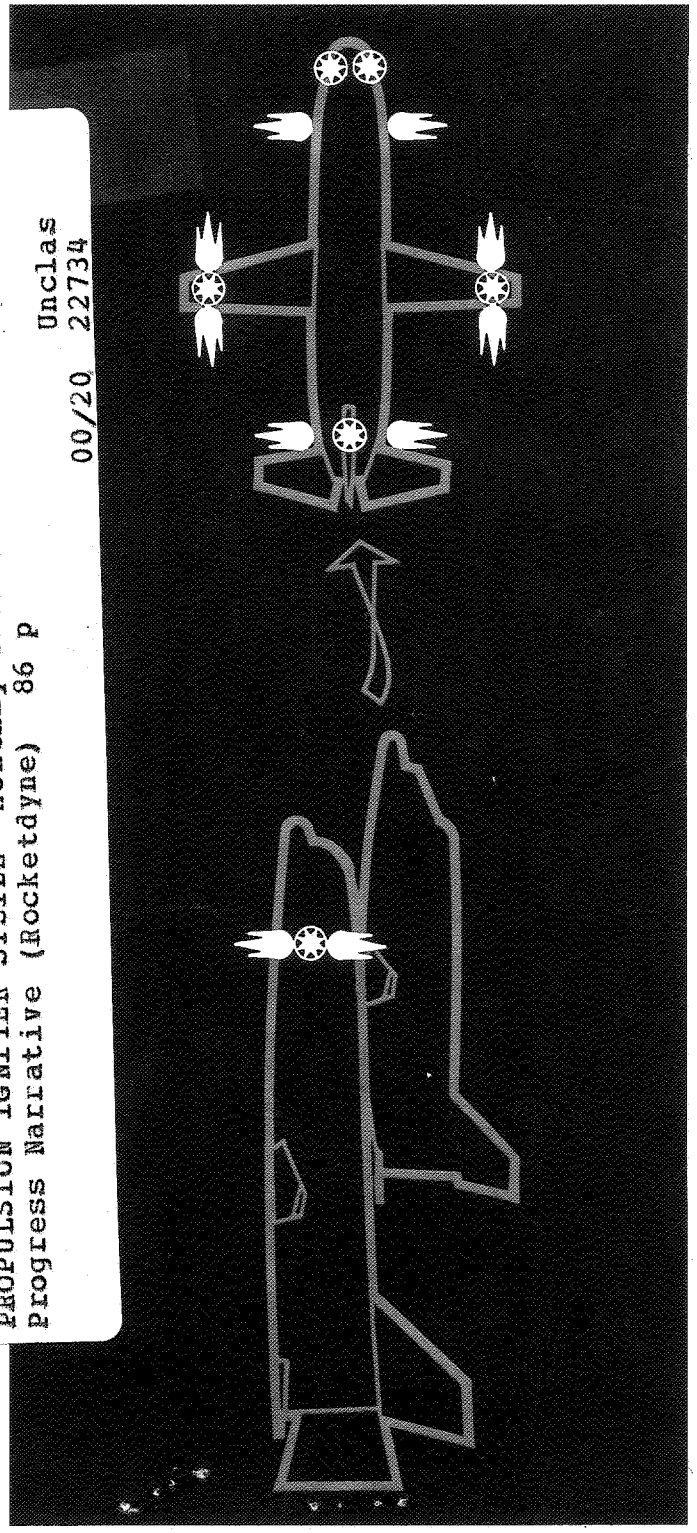

OCT 1984
RECEIVED
NASA STI FACILITY
ACCESS DEPT.

APR 1971
RECEIVED
NASA STI FACILITY
INPUT BRANCH

NAS 3-14351

space shuttle auxiliary propulsion system

APS IGNITION SYSTEM

MONTHLY TECHNICAL PROGRESS NARRATIVE MARCH 1971

Rocketdyne
North American Rockwell
6633 Canoga Avenue,
Canoga Park, California 91304

ASR 71-112

SPACE SHUTTLE AUXILIARY PROPULSION IGNITER SYSTEM

NAS3-14351

EIGHTH MONTHLY TECHNICAL PROGRESS NARRATIVE

MARCH 1971

Prepared for NASA-Lewis Research Center

Cleveland, Ohio 44135

Prepared by

J. R. Lauffer
Principal Engineer

Approved by

S. J. Domokos
Program Manager

Rocketdyne, a Division of North American Rockwell Corporation
6633 Canoga Avenue
Canoga Park, California 91304

INTRODUCTION AND SUMMARY

The objective of this program is to obtain basic ignition data on electric spark and resonance tube ignition methods at operating conditions typical of the Space Shuttle APS and to complete a preliminary design of an optimum ignition system based upon the test results. This technology effort will provide the groundwork input for APS tradeoff studies. It will ensure that specifications established for the APS are realistic and achievable and will provide the basis for an expeditious future engine development program.

The program objectives, scope and schedule are summarized in Fig. 1. This 9-month program consists of parallel efforts at the two chamber pressure levels typical for Space Shuttle APS application, 300 psia (206.9 N/cm^2) and 15 psia (10.35 N/cm^2). Engine thrust level is 1500 pounds (6672 N). The igniter flowrates are approximately 1 percent of the total thruster propellant flowrate.

The program sequence is shown in Fig. 2. The technical effort is conducted in three tasks:

Task I - Igniter Design and Fabrication

Task II - Igniter Tests

Task III - Ignition System Preliminary Design

Task IV includes program management and reports

APS IGNITION SYSTEM PROGRAM

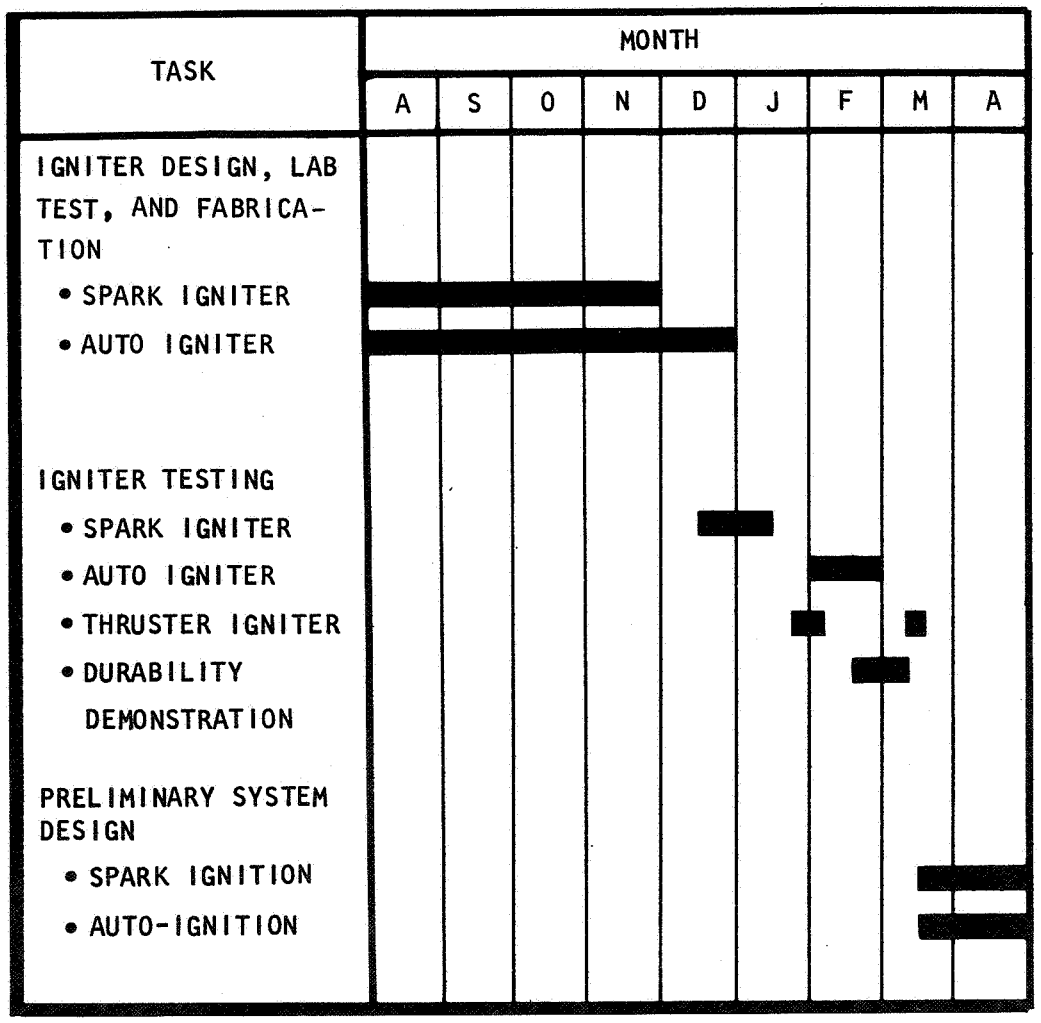

OBJECTIVE

- PROVIDE IGNITION SYSTEM FOR LOW AND HIGH PRESSURE APS THRUSTERS
- EVALUATE SPARK IGNITER AND AUTO-IGNITION

SCOPE

- 9 MONTH EFFORT
- LAB TESTS
- IGNITER TESTS
- THRUSTER IGNITIONS
- PRELIMINARY SYSTEM DESIGN

Rocketdyne
North American Rockwell

space shuttle engine
AUXILIARY PROPULSION SYSTEM

Fig. 1

IGNITION SYSTEM PROGRAM SEQUENCE

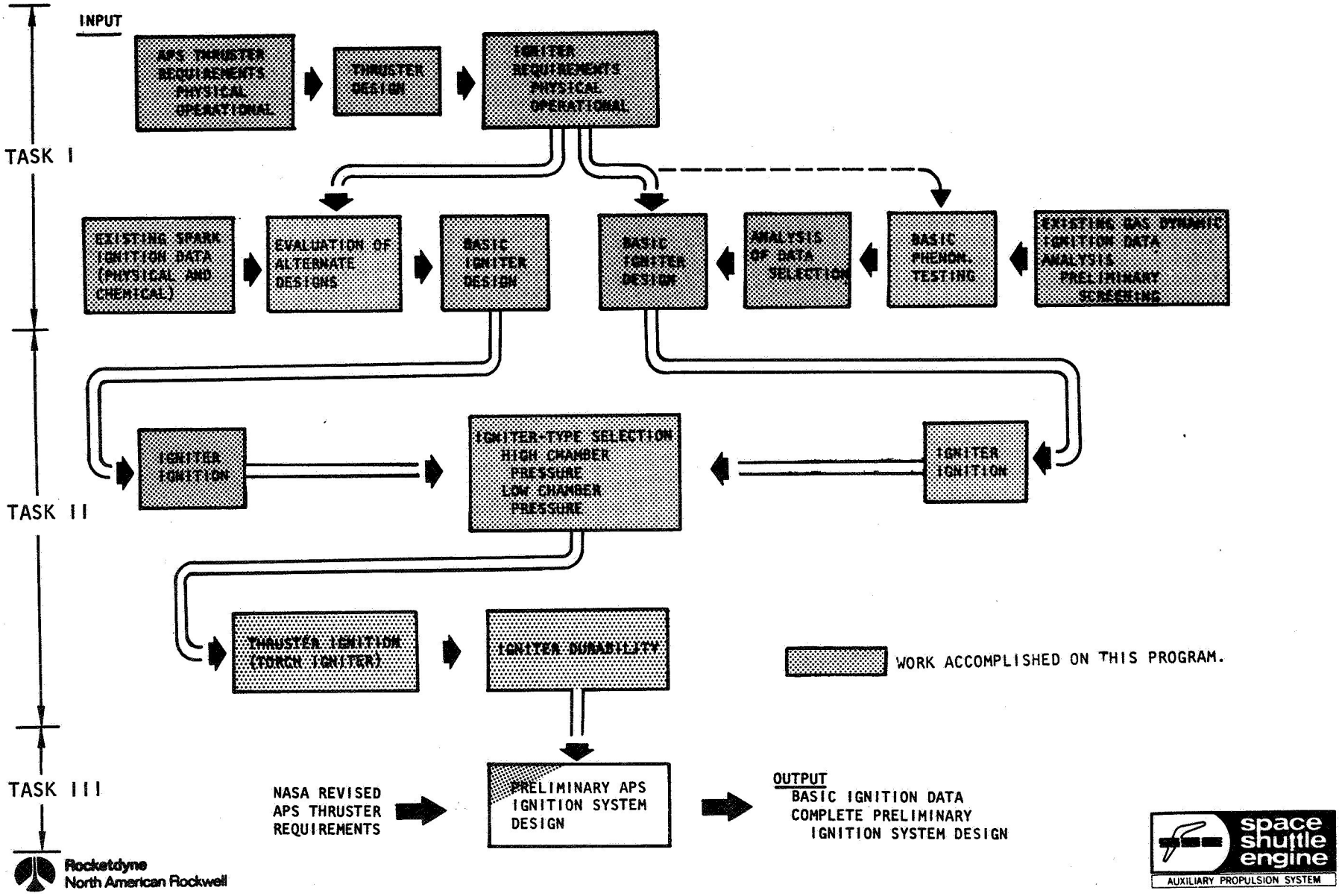

Fig. 2

Contract go-ahead was received 23 July 1970 and efforts during this eighth month of the program were devoted primarily to Task II igniter testing. During this report period, the high-pressure resonance auto-igniter thruster ignition test program was successfully completed. Twenty-eight tests were conducted. Successful ignitions were obtained over a range of igniter mixture ratios and flowrates with ambient and cold thruster propellants. The feasibility of the auto-igniter for the SS/APS thruster was vividly demonstrated.

The spark igniter efforts during this report period were devoted to fabrication and RFI testing of the integrated plug/exciter unit and completion of the testing on the high-pressure spark igniter over a range of propellant inlet conditions. Tests were conducted over a complete matrix with inlet temperatures varying from 200° to 800° R (111° K to 444° K) and inlet pressures varying from 275 to 475 psia (190 to 328 N/cm^2) (including worst case extremes). This test program was initiated 23 February 1971 and was completed during this report period. Satisfactory ignitions were obtained at all combinations of inlet temperatures and pressures with ambient hardware and hardware temperatures down to 400° R (222° K). Three hundred and sixty-two tests were conducted. The high-pressure spark igniter was installed in the high-pressure thruster and testing is being conducted on NAS3-14352. Sixty-seven tests have been conducted to date with very fast response demonstrated (electrical signal to 90 percent thruster chamber pressure in 0.040 sec).

All efforts on Task I and Task II have been completed successfully and effort during the next report period will be devoted entirely to Task III.

DESCRIPTION OF PROGRESS

TASK I - IGNITER DESIGN AND FABRICATION

INTRODUCTION

During this task, analysis and design efforts were conducted for igniters capable of providing reliable ignition for hydrogen/oxygen thrusters operating at the two design points. The efforts on the spark igniter and the auto-igniter were conducted in parallel.

Alternate spark igniter injector and plug location were evaluated on cold-flow tests during Task I to obtain a fundamental understanding of mixture ratio and gas velocity at candidate plug locations for the range of operational variables.

Electrical system equipment was also designed, fabricated and laboratory-tested during Task I. This equipment includes a variable energy power supply, spark plugs and a flight-type, fixed-energy, integrated plug/converter. The variable energy power supply and different spark plug gap configurations were evaluated by laboratory tests in Task I and this hardware was used to establish minimum energy requirements during the initial Task II testing. The design of the flight-type, fixed-energy, integrated plug/exciter was based upon these test results. This integrated plug/exciter was fabricated and tested to determine radiated and conducted RFI. The testing was completed during this report period. The radiated and conducted RFI was below the Mil Spec at all frequencies.

The high- and low-pressure spark igniter designs were submitted for NASA approval and fabrication has been completed. Testing of these igniters has been completed in Task II. Testing of the high-pressure spark igniter and thruster is continuing under NAS3-14352 (Thruster Program).

During Task I, analysis and design efforts were also conducted for resonance igniters capable of providing reliable ignition for hydrogen-oxygen thrusters operating at the two design points.

Basic resonance igniter configurations were established and have been evaluated during Task I on well-instrumented, laboratory-type tests using GH_2/GO_2 propellants. The effects of geometric and operational variables on the ability to obtain elevated temperatures were evaluated. The effects of propellant injection, sequencing and propellant temperature on the ability to obtain and sustain combustion were also evaluated. These data were analyzed and the auto-igniter design and fabrication effort was completed. This igniter was successfully tested on Task II. All auto-ignition efforts on Task I have been successfully completed.

In the following section, the progress during this report period on the spark igniter, integrated plug/exciter unit fabrication and RFI testing are discussed in more detail.

INTEGRAL SPARK PLUG/EXCITER DESIGN AND FABRICATION

Transformer design and fabrication was completed this period followed by complete assembly of the prototype integral spark igniter. Preassembly circuit

testing revealed an energy limitation problem due to switching transistor gain properties. A compromise on delivered energy was allowed to permit unit completion and conduction of the scheduled RFI tests. All components for the second unit were completed and held in the pre-assembly state awaiting delivery of a higher gain switching transistor. Circuit improvements derived from both breadboard test effort and RFI testing were incorporated into the first unit.

Design Evaluation

The breadboard circuit constructed early in the Task I design phase was employed to evaluate final component selections prior to assembly onto the unit printed wiring boards. Component-for-component substitutions are possible with this breadboard. Upon completion of the first design energy storage/transfer transformer, it was coupled into the breadboard for evaluation and circuit trim. The breadboarded circuit, with the exception of filters FL1, 2 and 3 and resistor R10 (added on the actual unit), is presented in Fig. 3.

Initial testing of the circuit with the T1 transformer designed for 15 millijoules delivered energy indicated only 8 millijoules output. Analysis of this problem revealed a fundamental limitation in the particular group of Q2 transistors (Delco DTS804) procured for the program. The explanation and disposition of this problem follows.

Referring to Fig. 8, the basic energy storage/discharge cycle is accomplished by a blocking oscillator circuit. The starting pulse for each cycle is generated by the 200 Hz oscillator (Q3 circuit). The output pulse of this network turns on switch Q2, which permits charging current to flow in the T_1

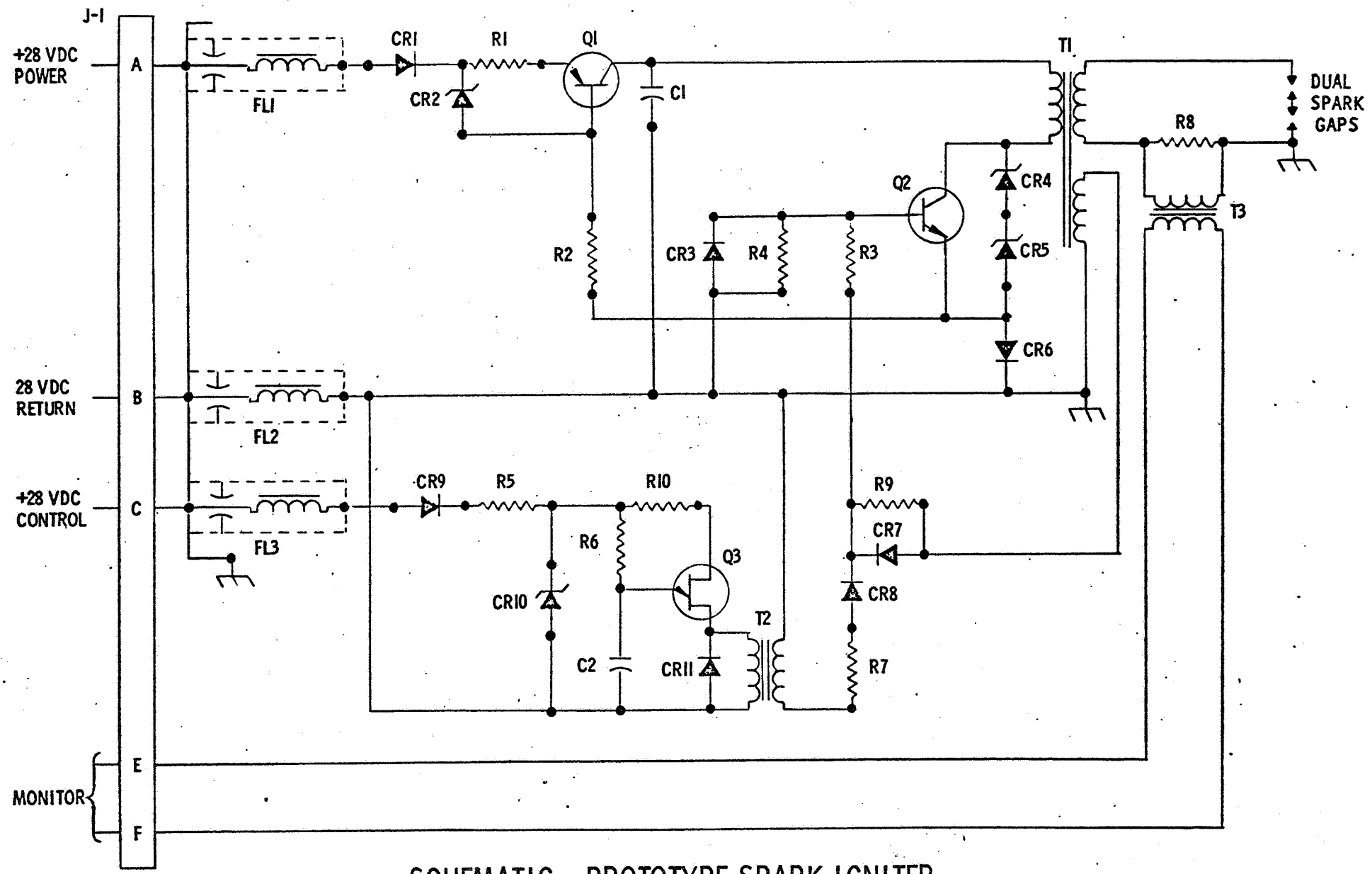

SCHEMATIC - PROTOTYPE SPARK IGNITER

Fig. 3

transformer primary. The feedback winding of T_1 maintains Q2 in a conducting state (through diode CR7 and resistor R3) until the transformer saturates, at which time the transformer action ceases and T_1 feedback current drops to zero, turning off Q2. The energy stored in the core at this point is a function of the peak primary current, the voltage drop across the primary and the charging time minus the volt-amp time integral affected by the feedback winding circuit. The discharge of stored energy through the spark gap starts immediately upon Q2 turn-off, continuing until the gap quench current level is reached. Voltage induced into the T_1 feedback circuit during discharge is prevented from retriggering Q2 by resistor R9.

As described in the February Monthly Progress Report (ASR 71-79), the transformer had been sized to deliver 15 millijoules with a charge time of 2.14 milliseconds and a discharge time of 1.07 milliseconds. When first tested in the breadboard and the delivered energy was measured at 8 millijoules, circuit checks revealed the charge cycle was approximately 1 millisecond, about half that required. Two phenomena were found responsible for this anomoly: (1) the regulator output voltage was falling off more rapidly than calculated, which permitted the feedback voltage to decay below the cutoff threshold of the Q2 switch and (2) the primary current demand was not being satisfied due to the sharp falloff in Q2 gain above 600 milliamperes collector current.

Circuit adjustments were made to increase regulator current (i.e., permitting more of the spark igniter input power to supply the T_1 primary), provide

more feedback current for Q2 (to compensate for Q2 gain decrease) and sustain a higher feedback voltage. A point in adjustment was reached where further changes in these parameters achieved a negating effect on delivered energy. The gain characteristics of available Q2 transistors were such that above 1.6 amperes collector current essentially a unity gain was experienced. At higher currents, the feedback current drain (Q2 base current) energy content exceeded the equivalent stored energy gain; hence, there was less delivered energy in the discharge cycle.

The practical solution to this problem was to procure higher gain Q2 transistors, however the schedule impact was prohibitive. It was therefore decided to assemble the prototype unit with the maximum delivered energy achievable with the "best" Q2 transistor on hand. The resultant delivered energy was 12.2 millijoules, 81 percent of the design goal. For RFI testing, which is the only scheduled program activity for the prototype unit, the discharge characteristic is representative of the 15 millijoule design system. In fact, it is probable that a higher noise content is present in the 12.2-millijoule system as its discharge features a higher peak current (60 ma compared with 40 ma design) and a shorter discharge time (450 u sec compared with 1 msec design).

The constant input current, as a result of the described circuit adjustments, increased from 120 ma to 270 ma. As this level is still far below the 500 ma goal, and additionally represents a temporary deviation only (being correctable with superior switching transistors), it was felt that the compromise was insignificant.

Additional Circuit Improvements

Disassociated from the energy limitation problem described, improvements were added into the prototype spark igniter circuit as a result of breadboard and RFI tests:

1. The monitor circuit consisting of resistor R8 and transformer T3 (refer to Fig. 3) was designed into the unit package as an "add-on" indication. Breadboard evaluation proved the circuit yielded representative instrumentation of the spark discharge and had negligible influence as an energy loss element, less than 0.1 percent. Although no signal conditioning for RFI purposes was incorporated, the simple monitor system was assembled into the prototype unit. The monitor provides a 1.5-volt peak sawtooth wave of duration and decay characteristic identical to the spark discharge current.

2. Although no instabilities in circuit breadboard operation of the prototype unit were noted, prior breadboard work with a smaller energy transformer had indicated a marginal oscillation tendency of the system. This condition was witnessed by occasional retriggering (additional output pulses) of the relaxation oscillator circuit, which quickly degenerated to a high-frequency, no-spark operational mode for the entire system. The cause was traced to feedback into the oscillator circuit in the 28 Vdc return leg at the moment of T1 transformer switching. The R10 resistor was added to attenuate this effect and circuit stability under all operating conditions was restored. The resistor was added as a design insurance measure to the prototype circuit.

3. Input filters provided for in the design but not installed in the original assembly were added during early RFI testing. A discussion of this requirement is presented in the RFI Test section below. It is noted that filters FL1, 2 and 3 were selected from available devices at Rocketdyne and were not optimized for the package nor attenuation characteristics. "Pi" filters in the same package size would be proposed for a final unit as they have nearly twice the insertion loss of the "L" filters used in the 0.15 to 0.4 MHz range. Noise levels measured during RFI tests were nearest specification limit in this frequency range. The "Pi" filters also excel at the high-frequency end (> 10 MHz) where an additional 10-db insertion loss is guaranteed over the "L" devices used.

Spark Igniter Assembly

Following completion of circuit adjustments for achieving maximum delivered energy, the selected electronic components were assembled to printed wiring boards, the energy storage transformer was encapsulated in silicon rubber and unit interwiring assembly completed. The spark igniter sub-assemblies are depicted in Fig. 4 . Now shown is the bracket detail which serves as the transformer mount and spaces the printed wiring assemblies.

After case installation and welding, the internal cavities of the unit were encapsulated with a special foam resin mixture. In order to minimize stresses on the circuit boards and small interconnecting leads, a mixture of syntactic resin (Scotchcast XR-5068) and isotactic foaming resin (Scotchcast 603) were employed in a ratio of 2:1 by weight, respectively. A total of 36 grams

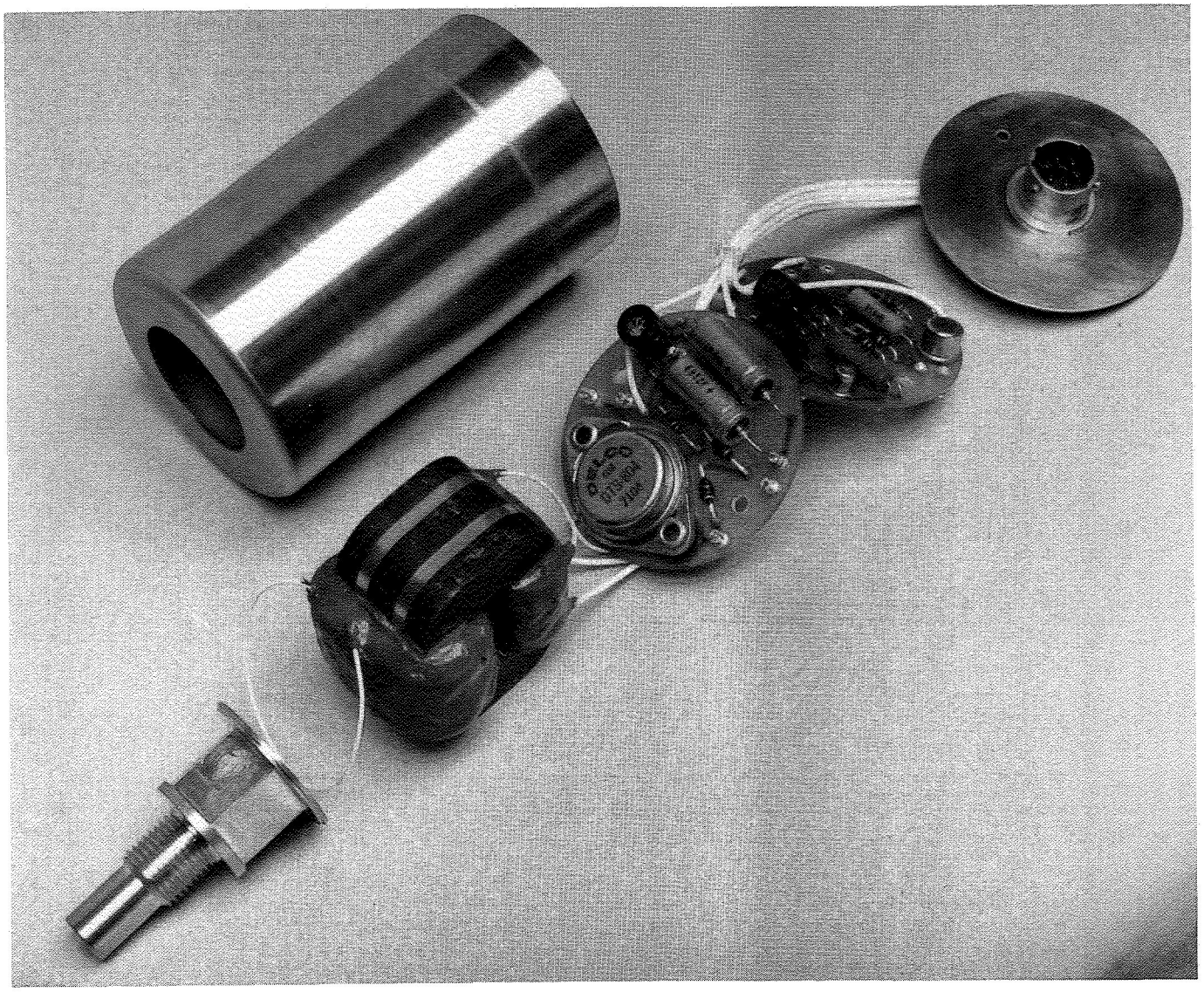

Fig. 4 Prototype Integral Spark Igniter Subassemblies

of material filled the assembly to the design level and after curing, provided a lightweight, structurally rigid module. The compound growth during cure was less than 5 percent.

After joining the input connector lead wires, the connector endplate was welded to the case, essentially completing the assembly (see Fig. 5).

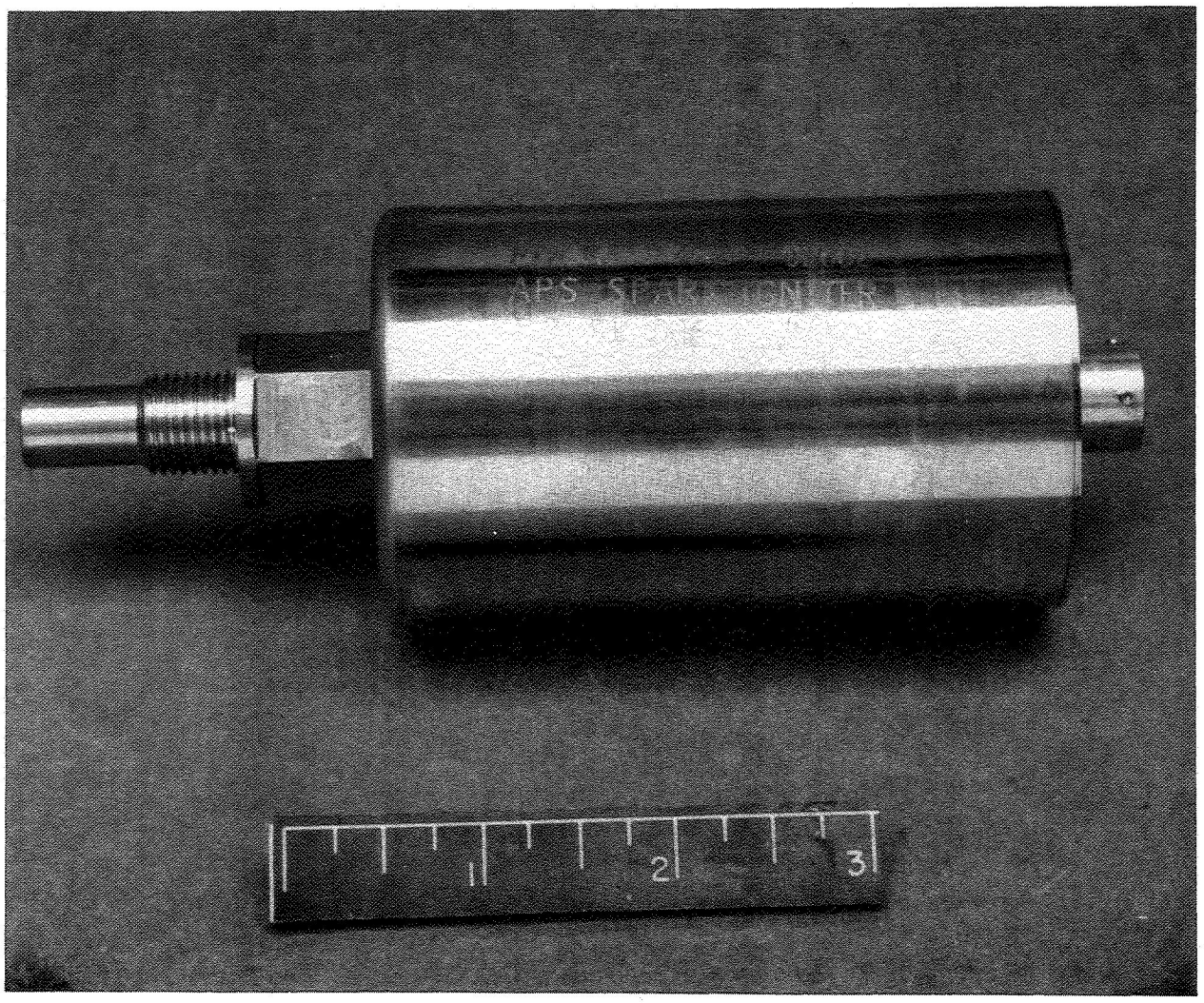

Fig. 5 Prototype Integral Spark Igniter Assembly

SPARK IGNITER RFI TESTING

Broadband radiated and conducted RFI tests per MIL-I-6181D were performed on the high-pressure thruster/igniter system this report period. A prototype integral spark igniter was installed on the Task I high-pressure igniter and subjected to approximately 200 functional cycles while noise generation was monitored. Initial measurements indicated excessive radiated noise levels from the input cabling and filters were added to the spark igniter. Provisions for powerline filters had been made in the unit, but installation was postponed to enable measurement of the filter influence. Following filter addition, all measurements were within specification limits. Successful performance of the RFI tests, with full specification compliance, attained a major goal of the spark igniter program.

Test Installation

The spark igniter RFI test setup was made in the Rocketdyne Development Laboratory screen room. The complete installation is shown in Fig. 6 (radiated measurement with 41-inch (1.04 m) rod antenna shown). The test item, consisting of the integral spark igniter, Task I igniter body, and uncooled thrustor/injector assembly was supported and bonded to the shield plane per MIL-I-6181D. The integral spark igniter was installed in the igniter side location, and all propellant inlets were closed by blind flange. The spark igniter input cable was constructed 24 inches (.61 m) long using unshielded single conductors. This input power/control cable was connected to a dc power supply and control box through line stabilization networks, LSN's. Separate manual switches on the control box were

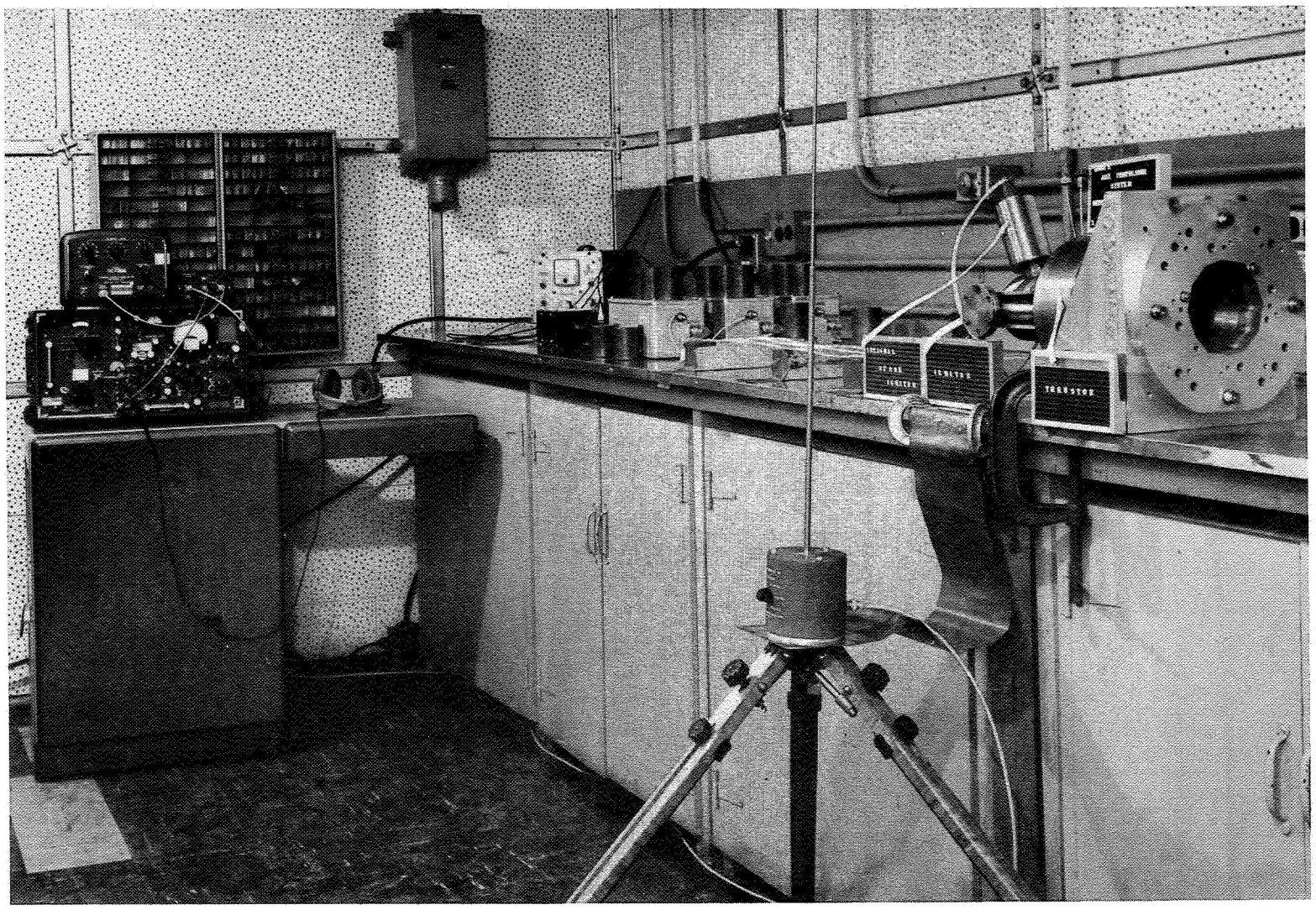

Fig. 6 RFI Test Installation

used to apply power and control signals to the spark igniter.

A time delay network was placed in series with the control lead to facilitate testing and control spark igniter duty cycle. Appropriate antennae/LSN connections were made to the noise monitoring and calibration equipment.

Instrumentation

Noise and field intensity measurements were made using the following principal equipment:

Description	Model	
Tuning Units	Empire Devices	T-A/NF-105 T-1/NF-105 T-2/NF-105
Noise & Field Intensity Meter	Empire Devices	NF-105
Switching Unit	Empire Devices	SW-105
Impulse Generator	Stoddart	91263-1
Vertical Antenna	Empire Devices	VA-105
Dipole Antennae	Empire Devices	DM-105 T1,2,3
50 Ohm Dummy Antennae	Stoddart	90594-2

The equipment was calibrated to secondary standards prior to test commencement.

Test Procedure

Broadband radiated interference measurements, first using the 41-inch (1.04 m) rod antenna and then the resonant dipole antennae were taken prior to broadband

conducted interference measurements using line stabilization networks. Prior to each bandwidth scanned, the ambient noise level was measured. For each tuned antenna band, the band frequency was scanned for maximum impulse levels while the spark igniter was operated. The normal operating ("on") period was approximately 5 seconds. Peak noise levels found during the bandwidth scan were individually retested at resonance and the antenna-induced noise level determined by substitution. Antenna factors for reading correction were those given by the manufacturer, Empire Devices Products Corporation. The broadband impulse frequency range covered for the radiated interference measurements was 0.15 to 400 MHz. Input power to the spark igniter during all radiated interference tests was 28 Vdc.

Broadband conducted interference measurements were made separately on the 28 volt positive and negative (return) power leads and on the 28 volt positive control lead, each of which contained an individual line stabilization network. The two lead LSN's not involved in an interface level measurement were coupled to 50-ohm dummy antennae. The spark igniter was operated at both 28 Vdc and 24 Vdc for the series of conducted interference measurements over the required bandwidth of 0.15 to 25 MHz. Peak noise levels at the detector input were ascertained by the substitution method.

Test Results, Radiated Interference

A plot of peak radiated interference levels detected is included in Fig. 7. Initial testing in the frequency spectrum below 25 MHz indicated noise levels slightly in excess of specification limits (circle plots on the figure).

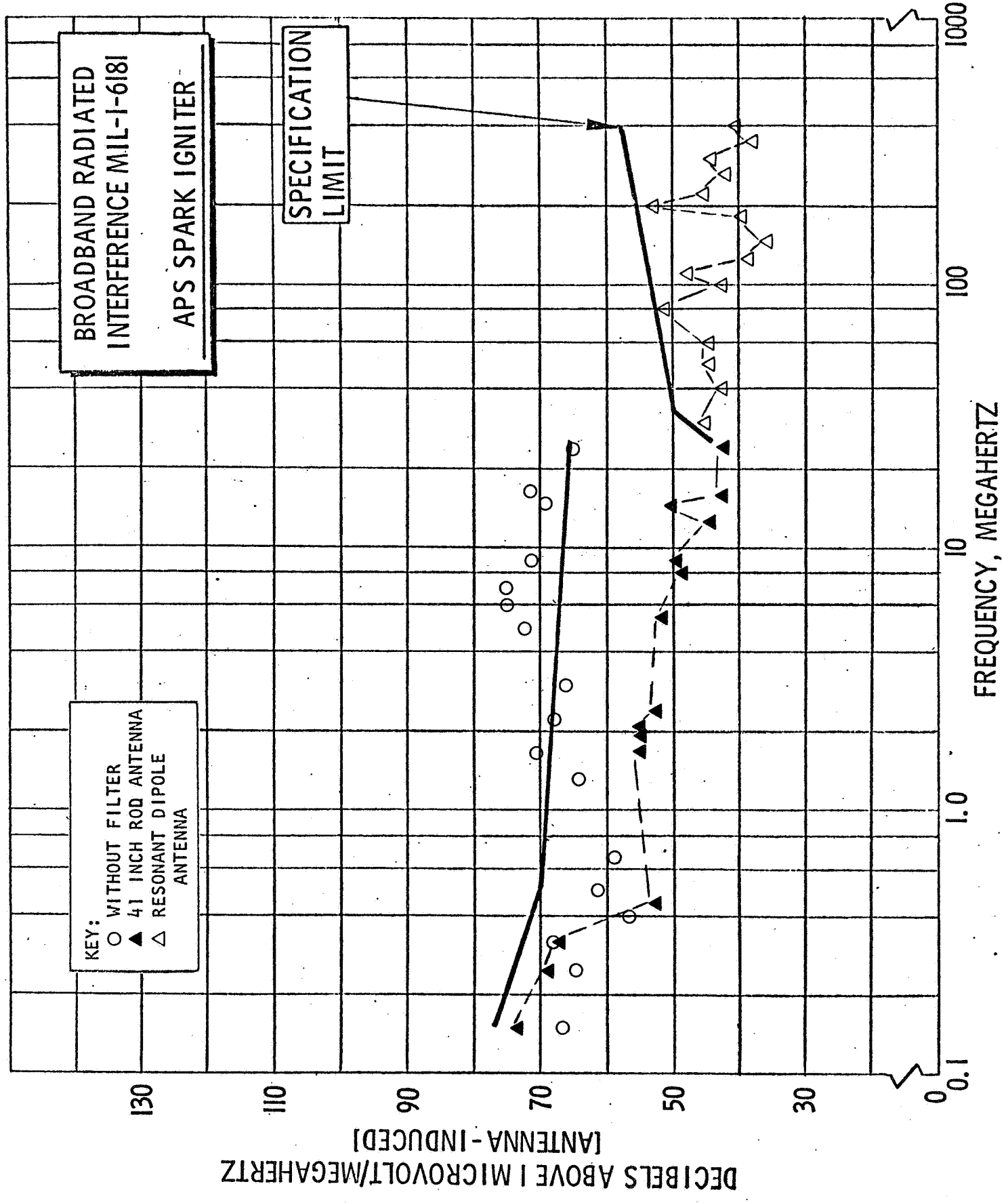
BROADBAND RADIATED
INTERFERENCE MIL-I-6181
APS SPARK IGNITER
SPECIFICATION
LIMIT
KEY:
○ WITHOUT FILTER
▲ 41 INCH ROD ANTENNA
△ RESONANT DIPOLE
ANTENNA
DECIBELS ABOVE 1 MICROVOLT/MEGAHERTZ
[ANTENNA - INDUCED]
130
110
90
70
50
30
0
0.1
1.0
10
100
1000
FREQUENCY, MEGAHERTZ

Fig. 7

Probing with a loop antenna showed the noise source to be the unshielded input cable. The high-frequency content inherent in the spark discharge circuit was traveling back through the unfiltered exciter circuitry and hence emanating from the spark igniter input cable leads. This result was not unanticipated, as input powerline filters were specifically excluded from the spark igniter assembly, although provisions for their incorporation had been made.

Miniature filters (Erie 9000-100 series) were added at the spark igniter input at the 28 volt power, return and control connector terminals, and the monitor output was close-coupled to a 50 K ohm resistor. (It is noted that the simple monitor circuit in the prototype spark igniter was provided for indication purposes only and signal conditioning of the monitor output was not undertaken during the igniter design phase. As the monitor circuit is a separate development item, it was more practical to eliminate the external cable leads than to incorporate circuit improvements.)

With the filtering added and monitor leads eliminated, the radiated interference test was re-performed with all levels below specification limits (triangular data points of the figure). Of particular significance is the wide margin (15 to 20 db) in the 0.5 to 20 MHz range, which blankets the normal communication and telemetry bandwidth used in prior manner aerospace systems.

Screen room background level during all testing was below 30 db.

Test Results, Conducted Interference

A plot of peak-conducted interference levels detected is shown in Fig. 8. All noise levels on the three control and power leads to the spark igniter are well below specification limits with the 28 Vdc negative return (ground) lead indicating slightly higher impulsive noise in the low-frequency end of the spectrum. This effect is not uncommon and is due to both filter design (available filters were used) and the igniter circuit design. For safety reasons, the low potential spark electrode is connected both to the spark igniter case as well as to the power supply ground. Spark discharge generated noise is therefore reflected directly onto the low impedance power supply negative lead.

A common plot is rendered for both the +28 Vdc power and control leads as their detected noise levels were within ± 2 db. The higher of the two levels at each frequency is plotted. Peak noise levels varied only slightly between the readings at 24 Vdc and 28 Vdc power supply voltage. Again, the higher values are plotted in the figure. The negative return lead peak noise was noted to be 4 db higher at 24 Vdc than at 28 Vdc in the 2.0 to 12 MHz band. This is a result of the change in current demand characterizing the spark igniter current regulator. The regulator was set for minimum ripple at 26 Vdc and hence has an over-capacity below this voltage. The result is a 20-50 milliampere level current spike on the power leads as the regulator "cuts off" during each energy storage cycle. This low level current change was noticeable in conducted noise but insignificant with regard to specification limits.

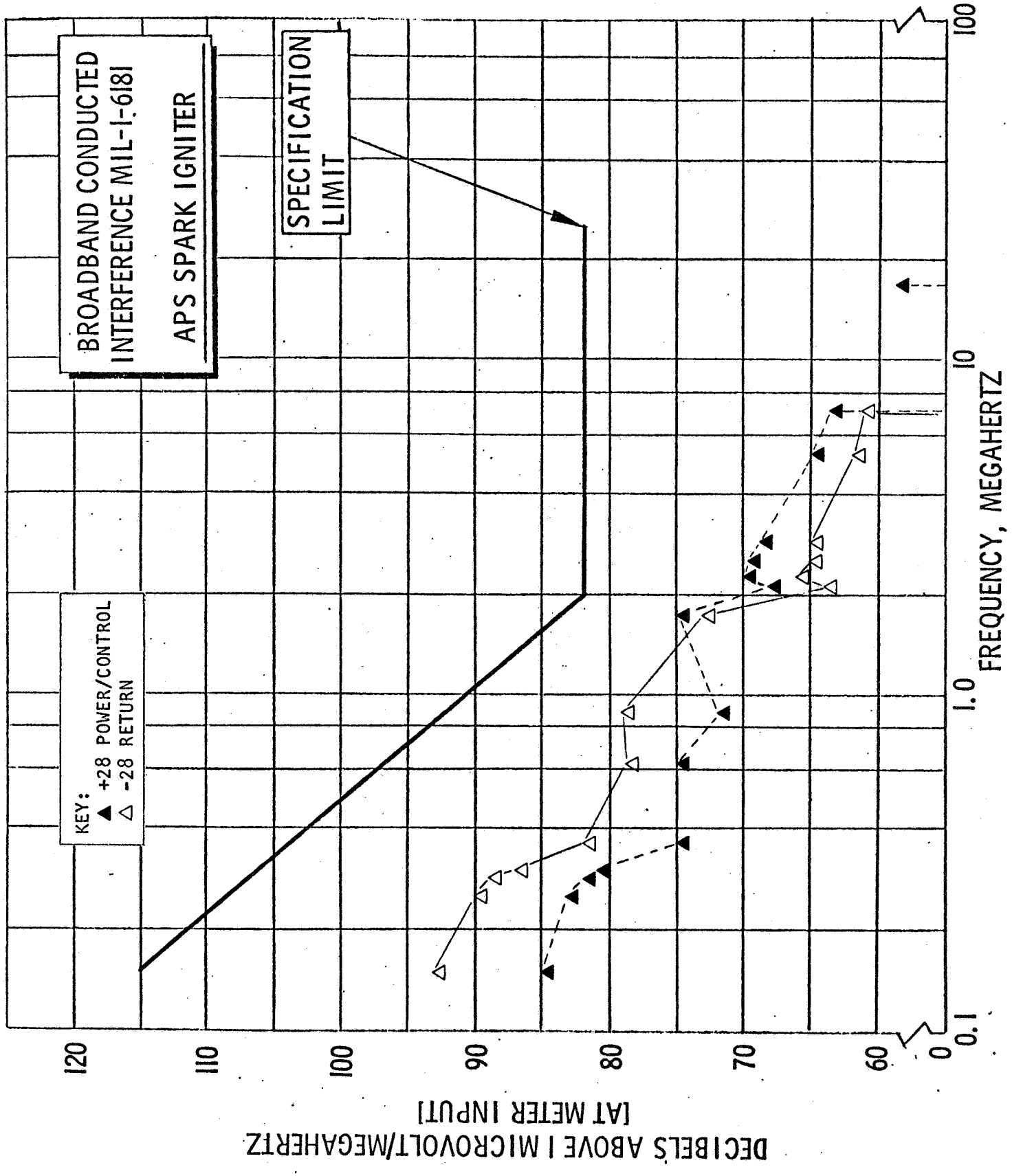
BROADBAND CONDUCTED
INTERFERENCE MIL-I-6181
APS SPARK IGNITER
SPECIFICATION
LIMIT
KEY:
▲ +28 POWER/CONTROL
△ -28 RETURN
120
110
100
90
80
70
60
0
0.1
1.0
10
100
FREQUENCY, MEGAHERTZ
DECIBELS ABOVE 1 MICROVOLT/MEGAHERTZ
[AT METER INPUT]

Fig. 8

Screen room background level during conducted interference measurements was less than 31 db.

All Task I effort was successfully completed. These data will be used during the next report period in the Task III Igniter System Preliminary Design effort.

TASK II - IGNITER TESTS

INTRODUCTION AND SUMMARY

During Task II, a series of hot-firing tests with gaseous hydrogen/gaseous oxygen propellants were conducted using the igniters designed and fabricated in Task I. The original test program was comprised of three different types of testing (igniter only, igniter/thruster ignition, and 2500-test durability).

The igniter only testing was conducted on both high- and low-pressure spark and resonance igniters at the Los Angeles Division to evaluate igniter ignition over the range of propellant inlet conditions. Operating limits, including pressure, temperature and sequencing, were established. These test results will provide design criteria and operating limits for the system design (Task III).

Igniter/thruster ignition tests were conducted at SSFL CTL-4 to assure that igniter energy is sufficient to provide rapid ignition of the main propellants. These test results provided thruster transients (ignition delay) data as a function of igniter flowrate and mixture ratio (energy).

Based upon the previous test results, a final test series was planned during the ninth month of the program to demonstrate igniter durability. However, this portion of the test program was changed by NASA request. A series of igniter only tests were substituted. These tests were conducted

to simulate all possible propellant inlet temperature and pressure extremes. The high-pressure spark igniter is being used on Contract NAS3-14352 and will undergo the 2500-test demonstration on that program during thruster tests.

Effort on Task II was initiated during November. High-pressure and low-pressure spark igniter only testing was completed in January. During February, testing on the low-pressure spark igniter and thruster was successfully completed. The high-pressure spark igniter inlet extremes testing was initiated during late February and completed in March.

During December, effort on Task II was also devoted to auto-igniter test program planning. The auto-igniter test plan was submitted for approval 29 December 1970. Auto-igniter testing was initiated 13 January 1971. The auto-igniter igniter only testing was successfully completed during February. The test plan for auto-igniter/thruster-igniter was submitted and approved. This test effort was successfully conducted during this report period.

In the following section test efforts conducted this report period are summarized.

SPARK IGNITER TESTING (IGNITER ONLY - EXTREMES)

The high-pressure augmented spark igniter (ASI) system limit analysis testing was initiated on 15 February and was completed on 12 March 1971. The test data analysis has been completed and the final results of this test series are presented herein. Operation of the ASI was demonstrated over a very wide range of inlet propellant and initial hardware conditions.

Objective

The high-pressure spark igniter was designed to provide a flowrate of 0.04 lb/sec (0.018 Kg/sec) ($\sim$1 percent of thruster flowrate) at a propellant mixture ratio of 1.0:1 o/f with propellant inlet conditions at 375 psia (259 N/cm^2) and 540° R (300° K). This igniter was previously tested at nominal conditions and at mixture ratios from 0.8 to 1.5 with propellant temperatures from 200° R (111° K) to 800° R (444° K) (propellants at approximately equal inlet temperatures for any given test). The objective of the test series described herein was to utilize the existing spark igniter and demonstrate its ability to function over very wide extremes of inlet propellant temperature and pressure (including worst case conditions).

Proposed vehicle propellant distribution system and thruster data were reviewed. From this review, propellant inlet temperatures [200° R H_2 and 250° R O_2 to 800° R (111° K H_2 and 139° K O_2 to 444° K)] and propellant inlet pressures [275 to 475 psia (190 to 328 N/cm^2)] were established. These conditions are considered representative of the possible extremes from the

propellant distributor system and actually exceed those accpetable by the thruster. Therefore, if the igniter were capable of operating with any propellant inlet condition within this range, it would not place any operational restraints on the allowable propellant inlet conditions.

Facility Description

The igniter test effort was conducted at the Los Angeles Division Thermodynamics Laboratory. A complete description of the facility has been given in the Progress Report for February 1971 (ASR 71-79). Figure 9 is a photograph of the facility while testing with conditioned propellants.

Test Hardware

The design of the high-pressure augmented spark igniter was based on the results of Task I analysis, cold flow, and Task II, igniter evaluation. The igniter hardware was completely illustrated and described in the Progress Report for February 1971 (ASR 71-79). Figures 10 and 11 are photographs of the ASI with ambient and conditioned propellants, respectively.

Test Matrix Summary

The summary of tests conducted during this test effort is presented in Table I. Figures 12 through 23 show the matrix of conditions under which ignition was successfully obtained. A detailed discussion of these tests is presented in the Data Analysis section. The test matrix was developed about the

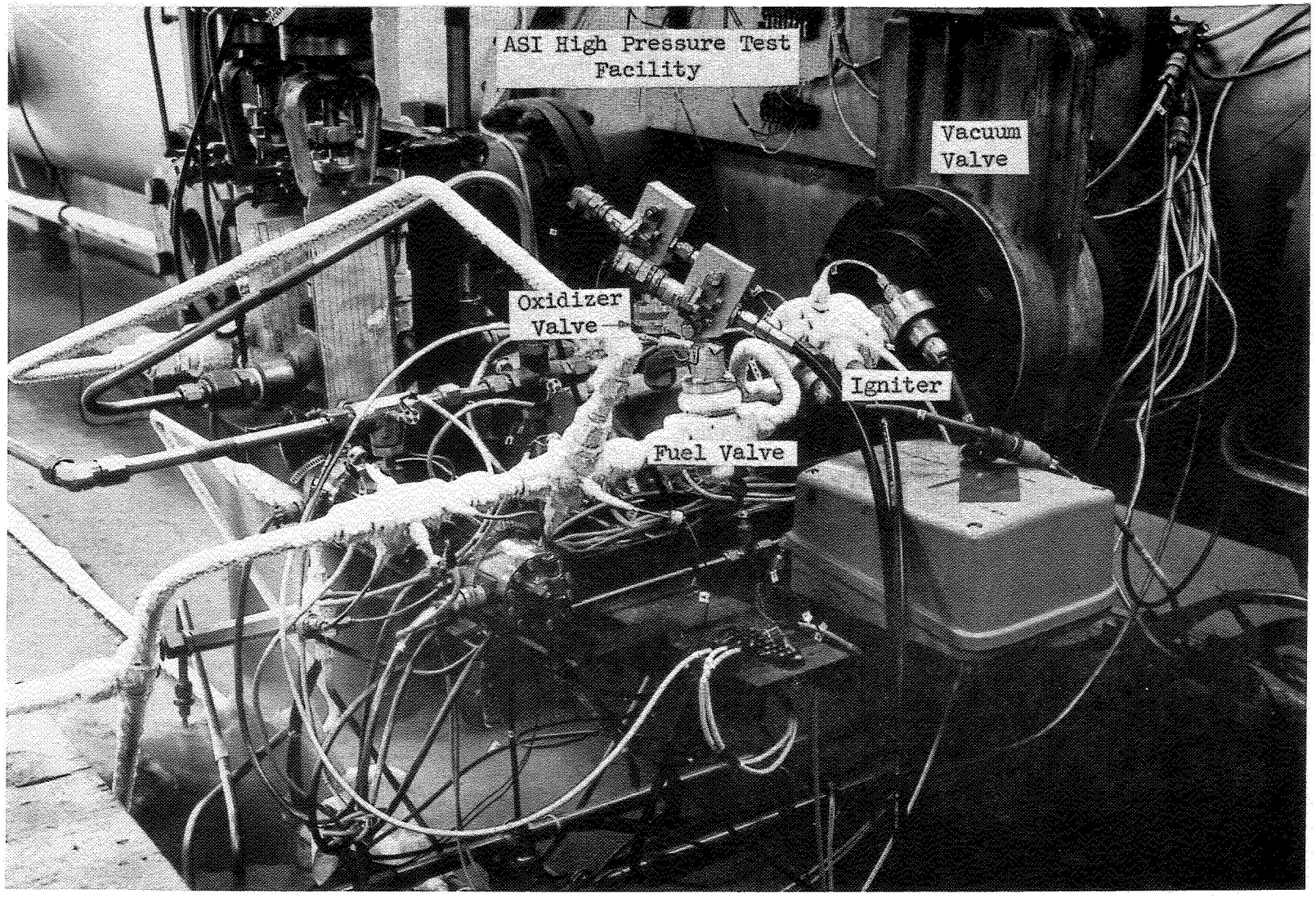
ASI High Pressure Test Facility
Vacuum Valve
Oxidizer Valve
Igniter
Fuel Valve

Fig. 9

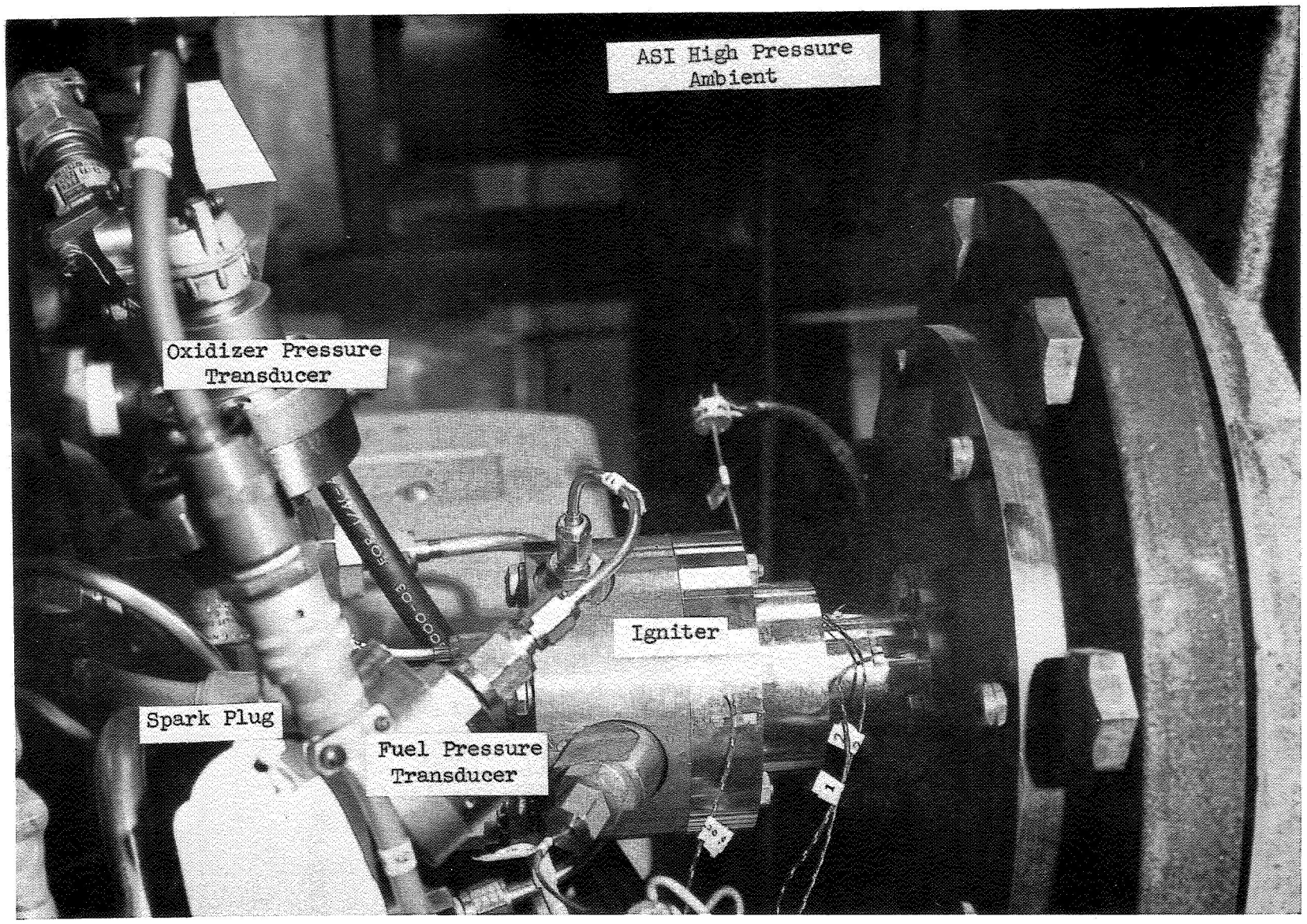
ASI High Pressure
Ambient
Oxidizer Pressure
Transducer
Igniter
Spark Plug
Fuel Pressure
Transducer

Fig. 10

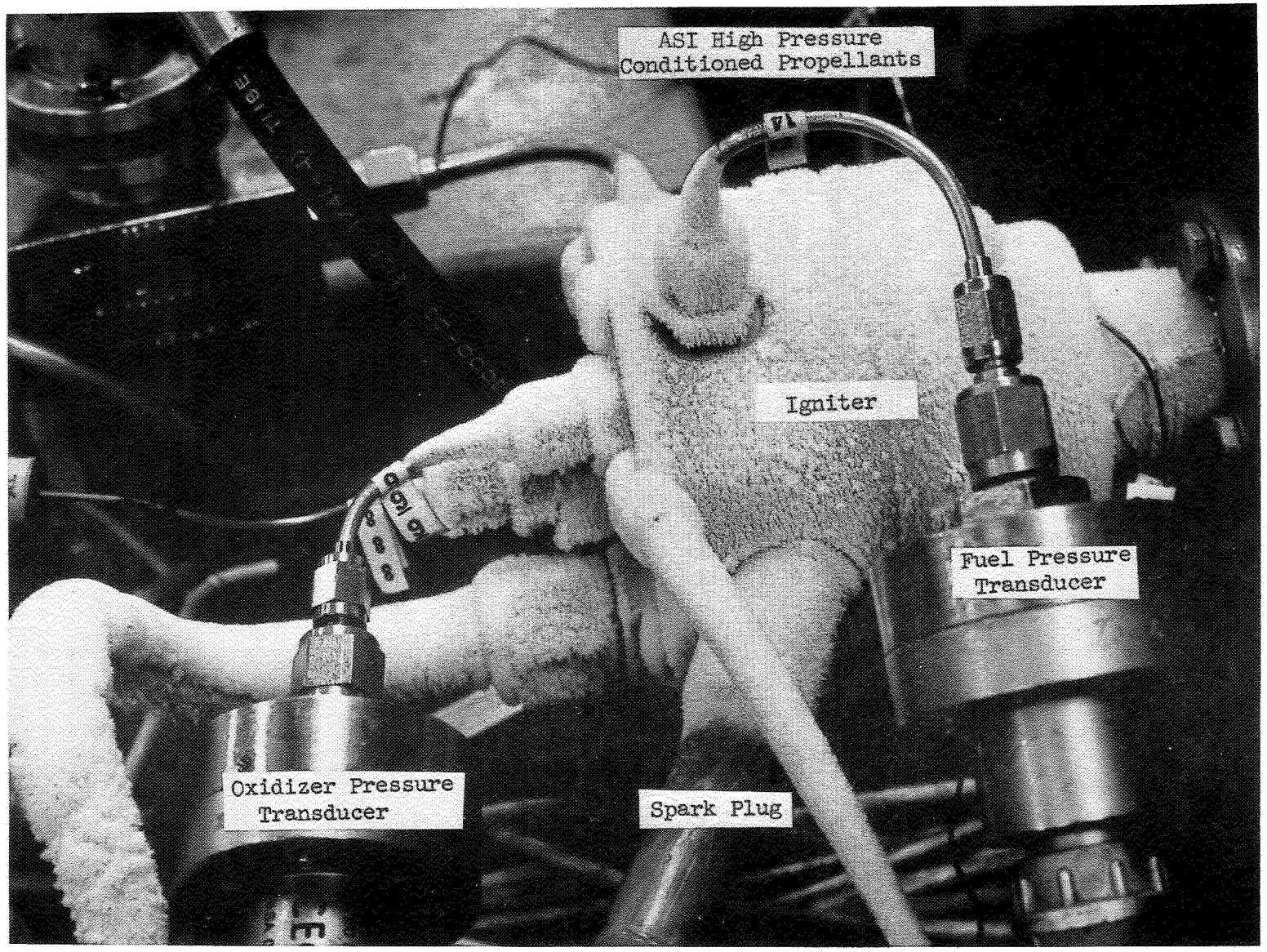
ASI High Pressure
Conditioned Propellants
Igniter
Fuel Pressure
Transducer
Oxidizer Pressure
Transducer
Spark Plug

Fig. 11

nominal design point of: 100 psia (69 N/cm^2) chamber pressure; 1.0:1 mixture ratio, 375 psia (259 N/cm^2) inlet pressure; and ambient inlet temperatures. The excursion of inlet conditions conducted was $\pm$100 psi (69 N/cm^2) in valve inlet pressure and range of 200° R (H_2), 250° R (O_2) to 800° R (O_2, H_2) [111° K (H_2), 139° K (O_2) to 444° K $()_2$, H_2)] in inlet propellant temperature. All the tests conducted were done so with simultaneous oxidizer and fuel valve and spark electrical "on" signals (one signal).

As stated previously under Objective, this test series was conducted to demonstrate the ability of this igniter to function over a very wide range of inlet pressure and temperature conditions (including worst case conditions).

Spark Plug Type. The 0.025-inch (0.064-cm) dual-recess gap spark plug was utilized for tests numbered 1 through 216 installed flush with the igniter inner surface in the center location.

The 0.050-inch (0.128-cm) surface gap plug was used for tests numbered 217 through 296 installed flush with the igniter inner surface in the center location. Tests 297 through 327 used this same surface gap plug but inset by 0.070 inch (0.178 cm) into the igniter body and projecting into the gas stream. Tests 328 through 362 also used this same plug but installed in the side location and inset by 0.070 inch (0.178 cm).

Spark Energy and Rate. As is shown in Table I, the resultant delivered spark energy was varied from 12 to 54 millijoules during this test series. Also as indicated in Table I, the spark rate was changed from 100 to 800 cycles/second.

Data Analysis

During this test effort, 362 tests were conducted over a very wide range of propellant inlet pressure and temperature and spark energy and rate. Nominal test conditions were flowrate of 0.04 lbm/sec (0.018 Kg/sec), mixture ratio of 1.0:1 (o/f), chamber pressure of 100 psia (69 N/cm^2), ambient temperature propellants and hardware, delivered energy of 20 millijoules (modified inductive workhorse unit), and simultaneous valve and spark electrical signal with 0.250-second duration and 0.025-second fuel valve lag.

Based on all the tests conducted, fuel and oxidizer flows started simultaneously and spark lagged at most by 0.006 second and lead by 0.012 second. The average test duration of 0.230 second was obtained with an average fuel lag of 0.026 second during shutdown. Ignition occurred in approximately 0.027 second from start of fuel flow and the propellant valves demonstrated signal-to-start-of-flow times of about 0.008 second. Therefore, 0.035 second was demonstrated as the mean time from valve electrical signal to ignition.

The matrix of tests conducted is presented in Table I, showing the various combinations of propellant inlet pressure and temperature, spark energy and rate with the resultant igniter mixture ratios and initial hardware temperature. Areas of no ignition did occur during cold hardware testing. The ignition results are displayed in Figs. 12 through 23. It was demonstrated during this test effort that ignition was obtained over the complete range of extremes in propellant inlet temperature and pressure, and at hardware temperatures as low as 240° R (139° K).

Dual-Recessed Gas Plug Test Results Analysis. The proposed igniter configuration (dual-recessed gap spark plug, flush-mounted, igniter dome center location) was subjected to the complete matrix of propellant conditions. Ignition attempts under all inlet conditions were 100 percent successful when the igniter hardware temperature was 520° R (289° K) or higher. However, as hardware temperatures were decreased toward 280° R (156° K), successful ignition attempts became sporadic. This decreasing ignition probability as a function of hardware temperature is illustrated in Fig. 24.

The contrasting test results experienced with identical propellant conditions but different hardware temperatures indicated two probable causes:

1) The energy normally present in the spark discharge was reduced due either to thermal losses or to dielectric losses (or both);

2) The propellant flow/mixture conditions in the spark plug electrode area were changed by hardware temperature.

To explore hypothesis 1) above, spark discharge characteristic instrumentation was added to the test setup. Using an oscilloscope, the output high voltage of the workhorse inductive exciter unit was monitored during various igniter test conditions. (Operation of the variable inductive unit and typical output voltage/spark voltage characteristics are presented in the Quarterly Report for November 1970 - January 1971, ASR 71-45.) The spark characteristic voltage during ignition attempts with cold hardware did not consistently exhibit the typical breakdown/sustaining voltage experienced previously. The

voltage was often characterized by an exponential rise with no step changes to indicate gap breakdown. This characteristic voltage difference is illustrated in Fig. 25 .

A subsequent series of special cold-hardware tests were programmed to further evaluate this effect. It was found that with either cold H_2 or cold N_2 (oxygen simulant) flowing, normal spark discharge occurred. However, with combined cold H_2/N_2 flowing, the abnormal voltage characteristic again occurred. Contacts with the National Bureau of Standards Cryogenic Laboratory, Boulder, Colorado, and a literature search failed to yield insight into this phenomenon.

A series of cold-hardware ignition attempts preceded by a plug electrode heating cycle were next conducted to evaluate the thermal loss portion of the hypothesis. In these tests, continuous sparking for 60 seconds with hydrogen flow only was employed prior to oxidizer valve signal. No-ignitions were again experienced, and the test results were deemed inconclusive due to the minimal heating effect of the small energy discharges. While a more efficient plug heating element was being constructed, the second hypothesis (propellant flow affected by hardware temperature) was explored.

Mixed gases enter the recessed electrode area of the dual gap plug by a combination of flow patterns and random molecular movement. To change the existing condition, it was decided to completely change the plug electrode geometry. A 0.050-inch (0.167-cm) single surface gap plug from Task I laboratory testing was used for this purpose. The plug is less efficient than the dual gap

style but has similar breakdown characteristics (GN_2 data). To assure a significant change in the manner in which the spark discharge is presented by the electrodes and hence expose a different gas mixture field to the spark, the plug face was machined to provide an annular well only 0.020 inch (0.05 cm) deep separating the concentric electrodes.

Single Surface Gap Test Results Analysis. The surface gap plug was installed flush-mounted in the igniter center locations and subjected to selected portions of the limits matrix. The results of these tests are presented in Table I and Figs. 12 through 23. The decreasing ignition probability as a function of hardware temperature is presented in the bottom graph of Fig. 26. A slight improvement in ignition success between 400° and 500° R (222° and 278° K) hardware temperature was observed, but the spark discharge characteristics again indicated abnormality when no ignition occurred. The spark-delivered energy and frequency were varied from 12 to 54 millijoules and 100 to 667 cycles/second, respectively, with no marked improvement.

To evaluate a further change in the flow conditions, the surface gap plug was inserted from flush to 0.070 inch (0.178 cm) into the igniter combustion zone. A smaller test sampling of the matrix points was performed, and the results are illustrated in the center graph of Fig. 26. A further improvement in ignition probability was shown with 100 percent success for hardware temperature at and above 380° R (211° K). Ignition was not obtainable below a hardware temperature of 320° R (178° K), where abnormal spark voltage characteristics were prevalent. The spark-delivered energy and rate were varied from 12 to 54 millijoules and 100 to 200 cycles/second, respectively, during this testing.

A special spark plug electrical heating element was installed on the spark plug rear insulator and the heater temperature raised to 855° R (477° K). With the hardware temperature maintained in a cold condition, losses from radiation and convection plus the large heat sink mass of the igniter body prevented raising the plug temperature more than 25° R (13.9° K) above hardware temperature. Ignition attempts with this configuration showed no improvement and are labeled inconclusive. It is felt that a plug heater would be a good concept provided a heating rod could be made integral with the plug and therefore more efficiently transfer the thermal energy to the plug.

Following the above experimentation, the surface gap plug was relocated from the igniter center location to the side location and inset by 0.070 inch (0.178 cm). The results of this experiment are presented in the top graph of Fig. . A sample size approximately equal to that used in the previous test series was taken. This testing shows considerable improvement over the previous testing. Ignitions were obtained at hardware temperatures as low as 240° R (133° K). The probability of ignition below hardware temperatures of 300° R (167° K) was 70 percent and 100 percent above a hardware temperature of 400° R (222° K). The spark-delivered energy and rate were varied from 11 to 33 millijoules and 100 to 200 cycles/second, respectively.

In this final test series, of prime significance was the character of the spark discharge. In <u>all</u> tests a normal voltage characteristic was observed. No-ignitions are therefore attributable solely to the spark energy level applied. Of the two original hypotheses explaining lack of ignition with the initial configuration, the local flow condition change with decreasing hardware temperature was generally substantiated. The insufficient energy/quenching

phenomenon is also a significant factor, as evidenced by the final test series.

CONCLUSIONS AND RECOMMENDATION

Successful ignitions were obtained at all corners of the test matrix with ambient hardware and with hardware temperatures down to 400° R (222° K). The test matrix involved excursions in inlet pressure of 497 psia (343 N/cm^2) to 266 psia (184 N/cm^2) from the nominal of 375 psia (259 N/cm^2) and temperatures of 812° R (451° K) to 205° R (114° K) H_2, 233° R (129° K) O_2 from the nominal of 540° R (300° K). From these inlet conditions, extremes in mixture ratio of 3.27:1 to 0.36:1 (o/f) from the nominal of 1.0:1 (o/f) were successfully tested.

The surface gap plug, inset by 0.070 inch (0.178 cm) and mounted in the side location was demonstrated in this test series to be the optimum configuration for cold propellants and cold hardware.

The above testing indicates the complete reliability of the ASI at hardware temperatures above 400° R (222° K), and the trend of investigation undertaken here has shown improvements in its operation at hardware temperatures below 400° R (222° K) and at fuel and oxidizer inlet propellant temperatures of 213° R (118° K) and 265° R (147° K), respectively.

Based on the above investigation, it is recommended that plug insertion depth be further investigated with both the dual-recess gap plug and surface gap plug. Other plug configurations should also be studied. In addition to type

of plug, one with an integral heater element should be evaluated.

Further cold-flow spark tests should be made with the ASI to better understand the flow characteristics in the dome region and the electrical properties of cold hydrogen, cold oxygen, and mixtures of the two.

TABLE I

ASI HIGH PRESSURE TEST MATRIX

TEST NUMBER	TEST DATE	SPARK DELIVERED ENERGY mj	SPARK DATE	FUEL INLET TEMP		OXIDIZER INLET TEMP		FUEL INLET PRESSURE		OXIDIZER INLET PRESSURE		HARDWARE INITIAL TEMP		MIXTURE RATIO o/f	IGNITION	COMMENT
				R	K	R	K	lb/in^2	N/cm^2	lb/in^2	N/cm^2	R	K			
1	2-24-71	20	200	520	289	518	288	379	261	364	251	518	288	1.00	Yes	Dual recess gap spark plug flush mounted
2				521	289	519	288	381	263	365	252	520	289	1.00	Yes	
3				522	290	518	288	380	262	364	251	526	292	1.00	Yes	
4				521	289	519	288	277	191	271	187	522	290	1.03	Yes	Test 1 - 216
5				522	290	519	288	275	190	270	186	528	293	1.02	Yes	
6				522	290	518	288	274	189	270	186	531	295	1.03	Yes	
7				528	293	519	288	489	337	450	311	527	293	0.98	Yes	
8				530	294	518	288	488	336	450	311	828	460	1.01	Yes	
9				530	294	518*	288	480	331	452	312	533	296	1.02	Yes	
10				531	295	519*	288	485	334	272	188	528	293	0.58	Yes	
11				531	295	519*	288	486	335	272	188	539	299	0.57	Yes	
12				532	296	519	288	485	334	272	188	546	303	0.57	Yes	
13				529	294	519	288	274	189	474	327	532	296	1.83	Yes	
14				531	295	520	289	273	188	473	326	549	305	1.82	Yes	
15		20		530	294	519	288	273	188	472	325	566	314	1.84	Yes	
16		13		260	144	528	293	382	263	364	251	524	291	0.75	Yes	
17				254	141	529	294	383	264	364	251	522	290	0.74	Yes	
18				264	147	531	295	380	262	364	251	520	289	0.75	Yes	
19				258	143	528	293	381	263	364	251	311	173	0.70	No	
20		13		262	146	527	293	379	261	364	251	326	181	0.71	No	
21		12		225	125	526	292	281	194	273	188	321	178	0.67	Yes	
22				230	128	527	293	281	194	273	188	316	176	0.65	No	
23				236	131	526*	292	281	194	273	188	321	178	0.67	No	
24				224	124	526	292	283	195	476	328	321	178	1.17	No	
25				230	128	525	292	278	192	475	328	330	183	1.17	No	
26		12		234	130	525	292	276	192	475	328	334	186	1.24	No	
27		13		264	147	525	292	484	334	474	327	353	196	0.73	No	
28				264	147	524	291	490	338	473	326	360	200	0.73	No	
29				261	145	524	291	490	338	473	326	408	227	0.73	No	
30				267	148	523	291	484	334	473	326	382	212	0.74	No	
31				262	146	523	291	490	338	272	188	398	221	0.41	No	
32				261	145	524	291	490	338	272	188	405	225	0.40	Yes	
33				261	145	523	291	490	338	272	188	410	228	0.40	Yes	
34		13		256*	142	522	290	486	335	272	188	416	231	0.42	Yes	
35		14		254	141	796	442	385	266	369	255	481	267	0.64	Yes	
36		14		261	145	799	444	386	266	368	254	479	266	0.64	Yes	
37		14		244	136	802	446	380	262	369	254	481	267	0.63	Yes	
38		13		225	125	793	441	276	190	270	186	479	266	0.63	Yes	
39		13		228	127	788	438	278	192	271	187	475	264	0.63	Yes	
40		14		261	145	812	451	484	334	473	326	483	268	0.64	Yes	
41		14		264	147	793	441	485	334	473	326	484	269	0.64	Yes	
42		14		261	145	775	431	487	336	471	325	485	269	0.66	Yes	
43		14		261	145	775	431	487	336	472	325	487	271	0.66	Yes	
44		13		219	122	779	433	276	190	472	325	488	271	1.10	Yes	
45		13		224	124	779	433	275	190	471	325	487	271	1.10	Yes	

*Averaged Data **Oxidizer Vent Valve Stuck Open

TABLE I (Continued)

ASI HIGH PRESSURE TEST MATRIX

TEST NUMBER	TEST DATE	SPARK DELIVERED ENERGY mj	SPARK DATE	FUEL INLET TEMP		OXIDIZER INLET TEMP		FUEL INLET PRESSURE		OXIDIZER INLET PRESSURE		HARDWARE INITIAL TEMP		MIXTURE RATIO o/f	IGNITION	COMMENT
				R	K	R	K	lb/in^2	N/cm^2	lb/in^2	N/cm^2	R	K			
46	2-24-71	13	200	228	127	779	433	275	190	471	325	486	270	1.11	Yes	
47		14		258	143	781	434	485	334	269	185	493	274	0.36		
48				261	145	786	437	486	335	269	185	491	273	0.37		
49				261	145	792	440	487	336	269	185	491	273	0.36		
50		13		269	149	272	151	484	334	381	263	500	278	0.91		
51				267	148	287	159	484	334	387	267	500	278	0.76		
52				271	151	295	164	488	336	386	266	499	277	0.73		
53				272	151	308	171	489	337	386	266	497	276	0.72		
54	2-25-71	20		518	288	247	137	379	261	385	265	520	289	**		
55				518	288	254	141	375	259	386	266	529	294	**		
56				521	289	255	142	380	262	384	265	525	292	**		
57				521	289	249	138	488	336	470	324	525	292	**		
58				522	290	250	139	477	329	472	325	538	299	**		
59				523	291	256	142	487	336	456	315	541	301	**		
60				524	291	250	139	273	188	454	313	526	292	**		
61				524	291	247	137	269	186	455	314	546	303	**		
62				524	291	248	138	276	190	457	315	553	307	**		
63				527	293	252	140	486	335	469	323	533	296	**		
64				525	292	248	138	482	332	463	319	529	294	**		
65				526	292	285	158	485	334	478	330	529	294	1.40		
66				526	292	279	155	485	334	479	330	539	299	1.42		
67				526	292	273*	152	486	335	479	330	550	306	1.35		
68				524	291	267	148	278	192	479	330	532	296	2.74		
69				525	292	265	147	277	191	478	330	550	306	2.59		
70				525	292	261	145	276	190	477	329	566	314	3.27		
71				522	299	267*	148	276	190	277	191	539	299	0.74		
72				525	292	261	145	275	190	276	190	546	303	1.20		
73				525	292	260	144	275	190	276	190	552	307	1.24		
74				527	293	244	136	478	330	275	190	541	301	0.68		
75				527	293	239*	133	484	334	277	191	549	305	0.78		
76				527	293	233*	129	486	335	276	190	552	307	0.69		
77		23		761	423	254*	141	483	333	475	328	538	299	**		
78				762	423	250	139	483	333	475	328	573	318	**		
79				759	422	250	139	483	333	469	323	569	316	**		
80				758	421	265	147	483	333	478	330	548	304	**		
81				754	419	262	146	486	335	478	330	584	324	**		
82				751	417	259	144	487	336	477	329	595	331	**		
83				746	414	269	149	483	333	483	333	558	310	1.72		
84				745	414	269	149	481	332	482	332	590	328	1.76		
85				743	413	270	150	481	332	482	332	606	337	1.74		
86				767	426	268	149	487	336	280	193	553	307	0.83		
87				762	423	261	145	490	338	280	193	575	319	0.79		
88				758	421	253*	141	492	339	281	194	587	326	0.78		
89		24		804	447	272	151	279	192	279	192	554	308	1.37		
90				801	445	270	150	284	196	278	192	743	413	1.36		

TABLE I (Continued)

ASI HIGH PRESSURE TEST MATRIX

TEST NUMBER	TEST DATE	SPARK DELIVERED ENERGY mj	SPARK DATE	FUEL INLET TEMP		OXIDIZER INLET TEMP		FUEL INLET PRESSURE		OXIDIZER INLET PRESSURE		HARDWARE INITIAL TEMP		MIXTURE RATIO o/f	IGNITION	COMMENT
				R	K	R	K	lb/in^2	N/cm^2	lb/in^2	N/cm^2	R	K			
91	2-25-71	24	200	800	444	269	149	286	197	279	193	717	398	1.34	Yes	
92				780	433	272	151	381	263	388	268	559	311	1.52		
93				779	433	271	151	386	266	387	267	713	396	1.53		
94				778	432	270	150	388	268	387	267	755	419	1.49		
95				790	439	279	155	272	188	487	336	567	315	2.74		
96				789	438	277	154	276	190	486	335	782	434	2.75		
97				787	437	276	153	278	192	486	335	807	448	2.78		
98		25		791	439	797	443	482	332	470	324	544	302	1.06		
99				788	438	795	442	485	334	470	324	622	346	1.07		
100				789	438	797	443	485	334	470	324	643	357	1.06		
101				784	436	786	437	488	336	272	188	553	307	0.59		
102				782	434	784*	436	495	341	272	188	627	348	0.60		
103				780	433	784	436	497	343	272	188	648	360	0.59		
104				804	447	783	435	275	190	276	190	562	312	1.09		
105				802	446	782	434	278	192	275	190	610	339	1.08		
106				800	444	782	434	278	192	275	190	593	329	1.07		
107				786	437	798	443	383	264	379	261	563	313	1.08		
108				785	436	799	444	386	266	379	261	585	325	1.05		
109				784	436	798	443	388	268	379	261	642	357	1.05		
110				808	449	804	447	280	193	476	328	567	315	1.85		
111				808	449	803	446	280	193	476	328	587	326	1.83		
112				809	449	802	446	280	193	475	328	593	329	1.85		
113		13		264	147	521	289	476	328	476	328	907	504	0.75		
114				259	144	521	289	485	334	476	328	521	289	0.75		
115				259	144	521	289	483	333	475	328	499	277	0.76		
116				260	144	520	289	487	336	259	179	516	287	0.40		
117				260	144	520	289	483	333	274	189	513	285	0.41		
118				262	146	519	288	486	335	273	188	510	283	0.42		
119		12		220	122	518	288	276	190	273	188	508	282	0.72		
120				220	122	518	288	273	188	272	188	507	282	0.73		
121				222	123	518	288	272	188	272	188	504	280	0.72		
122				240	133	518	288	382	263	381	263	504	280	0.74		
123				240	133	517	287	375	259	381	263	501	278	0.75		
124				239	133	517	287	377	260	380	262	499	277	0.75		
125				218	121	516	287	274	189	480	331	498	277	1.28		
126				223	124	517	287	278	192	479	330	497	276	1.24	No	
127				219	122	516	287	279	192	464	320	494	274	1.21	Yes	
128		13		261	145	515	286	379	261	367	253	280	156	0.71	No	
129				256	142	514	286	383	264	373	257	291	162	0.71		
130				247	137	514	286	379	261	373	257	302	168	0.71		
131	2-26-71	12		211	117	276	153	277	191	476	328	521	289	1.62	Yes	
132				215	119	275	153	281	194	467	322	520	289	1.56		
133				216	120	275	153	280	193	467	322	519	288	1.56		
134				213	118	263	146	272	188	268	185	521	289	0.81		
135				216	120	257	143	274	189	267	184	517	287	0.80		
136				217	121	258	143	275	190	268	185	516	287	0.81		

TABLE I (Continued)

ASI HIGH PRESSURE TEST MATRIX

TEST NUMBER	TEST DATE	SPARK DELIVERED ENERGY mJ	SPARK DATE	FUEL INLET TEMP		OXIDIZER INLET TEMP		FUEL INLET PRESSURE		OXIDIZER INLET PRESSURE		HARDWARE INITIAL TEMP		MIXTURE RATIO o/f	IGNITION	COMMENT
				R	K	R	K	lb/in^2	N/cm^2	lb/in^2	N/cm^2	R	K			
137	2-26-71	12	200	235	131	254	141	380	262	376	259	516	287	1.16	Yes	
138				235	131	249	138	386	266	374	258	513	285	1.46		
139		13		237	132	256	142	386	266	378	261	509	283	1.25		
140				256	142	264	147	487	336	487	336	493	274	1.26		
141				259	144	261	145	489	337	485	334	505	281	1.27		
142				250	139	269	149	482	332	484	334	504	280	1.16		
143				250	139	273	152	485	334	487	336	501	278	1.01		
144				256	142	275	153	482	332	487	336	499	277	1.00	No	
145				250	139	255	142	482	332	278	192	501	278	0.51	Yes	
146				256	142	266	148	480	331	278	192	499	277	0.51		
147				249	138	258	143	483	333	277	191	466	259	0.50		
148		12		229	127	275	153	374	258	383	264	500	278	0.91	No	
149				232	129	251	139	377	260	376	259	498	277	**		
150				232	129	265	147	378	261	383	264	501	278	1.00	Yes	
151				234	130	264	147	377	260	382	263	498	277	1.09		
152				231	128	269	149	377	260	382	263	422	234	0.90	No	
153				233	129	269	149	378	261	383	264	431	239	0.89	Yes	
154				236	131	270	150	379	261	382	263	431	239	0.86	No	
155				233	129	268	149	378	261	383	264	433	240	0.92	No	
156				236	131	266	148	386	266	384	265	423	235	0.93	Yes	
157				238	132	266	148	389	268	383	264	491	273	0.93		
158				237	132	270	150	378	261	383	264	394	219	0.88	No	
159				239	133	268	149	386	266	383	264	390	217	0.86	Yes	
160				241	134	264	147	390	269	383	264	448	249	0.90		
161				228	127	268	149	379	261	382	263	333	185	0.88	No	
162				231	128	267	148	385	265	383	264	327	182	0.88	Yes	
163				233	129	266	148	388	268	384	265	366	203	0.90		
164				233	129	269	149	378	261	383	264	280	156	0.83	No	
165				237	132	275	153	385	265	383	264	287	159	0.85	Yes	
166				237	132	266	148	389	268	383	264	319	177	0.89		
167				236	131	269	149	381	263	379	261	297	165	0.88	No	
168				238	132	269	149	382	263	382	263	303	168	0.87		
169				235	131	270	150	379	261	380	262	312	173	0.84		
170				233	129	271	151	382	263	383	264	296	164	0.82		
171				236	131	270	150	388	268	383	264	300	167	0.84	Yes	
172				238	132	269	149	392	270	379	261	317	176	0.85	No	
173	3-3-71	13	300	245	136	517	287	384	265	375	259	515	286	0.73	Yes	
174				247	137	519	288	383	265	374	258	515	286	0.74		
175				248	138	518	288	377	260	374	258	511	284	0.75		
176		12		232	129	519	288	278	192	474	327	510	283	1.29		
177				227	126	521	289	276	190	474	327	507	282	1.27		
178				228	127	519	288	276	190	474	327	509	283	1.28		
179				224	124	519	288	276	190	473	326	415	231	1.20	No	
180				223	124	520	289	277	191	474	327	420	233	1.19		
181				227	126	520	289	277	191	474	327	420	233	1.23	Yes	
182				226	126	520*	289	277	191	474	327	423	235	1.23		

TABLE I (Continued)

ASI HIGH PRESSURE TEST MATRIX

TEST NUMBER	TEST DATE	SPARK DELIVERED ENERGY mj	SPARK DATE	FUEL INLET TEMP		OXIDIZER INLET TEMP		FUEL INLET PRESSURE		OXIDIZER INLET PRESSURE		HARDWARE INITIAL TEMP		MIXTURE RATIO o/f	IGNITION	COMMENT
				R	K	R	K	lb/in^2	N/cm^2	lb/in^2	N/cm^2	R	K			
183	3-3-71	12	300	227	126	521	289	277	191	474	327	432	240	1.24	Yes	
184				228	127	521	289	277	191	474	327	397	221	1.20	No	
185				226	126	521	289	278	192	474	327	399	222	1.20		
186				332	129	521	289	276	190	474	327	401	223	1.23		
187			400	223	124	524	291	278	192	474	327	393	218	1.18		
188				219	122	521	289	278	192	474	327	396	220	1.19		
189				221	123	523	291	275	190	474	327	400	222	1.20	Yes	
190			800	217	121	520*	289	272	188	474	327	396	220	1.21		
191				218*	121	525	292	272	188	475	327	403	224	1.22		
192				216*	120	521	289	271	187	475	327	379	211	1.36	No	
193				217*	121	466*	259	271	187	474*	327	402	223	1.33	Yes	
194				215	119	521	289	270	186	475	327	291	162	1.15	No	
195				214	119	522	290	272	188	475	327	296	164	1.23		
196				217	121	521	289	270	186	474	327	278	154	1.20		
197			667	218	121	522*	290	269	186	475	327	312	173	1.21		
198				220	122	522*	290	270	186	474	327	399	222	1.19		
199				226	126	521	289	269	186	474	327	315	175	1.22		
200		13	200	220	122	525	292	271	187	475	327	321	178	1.18	No	
201				227	126	523	291	272	188	475	327	324	180	1.20		
202		26		220	122	522	290	267	184	474	327	344	191	1.25		
203				218	121	524	291	270	186	475	327	348	193	1.21		
204		35		217	121	523	291	271	187	474	327	353	196	1.20		
205				220	122	522	290	271	187	474	327	355	197	1.22		
206				217	121	522	290	272	188	475	327	364	202	1.21		
207		12		217	121	522	290	273	188	475	327	371	206	1.22		
208				219	122	525	292	273	188	475	327	382	212	1.22		
209				205*	114	516*	287	274	189	475	327	384	213	1.24	Yes	
210				216	120	522	290	273	188	475	327	386	214	1.23		
211				220	122	524	291	273	188	475	328	306	170	1.16	No	
212				222	123	525	292	272	188	475	328	309	172	1.18		
213				221	123	522	290	271	187	475	328	313	174	1.20		
214				221	123	522	290	271	187	476	328	339	188	1.19		
215				221	123	529*	294	274	189	476	328	363	202	1.16		
216				223	124	560*	311	271	187	476	328	331	184	1.18		
217		13		237	132	254	141	380	262	374	258	508	282	1.32	Yes	
218				240	133	261	145	383	264	382	264	506	281	1.09		Surface gap spark plug center flush mounted
219				244	136	265	147	379	262	383	264	505	281	1.03		
220				256	142	268	149	474	327	476	328	506	281	1.20		Test 217 - 296
221				257	143	261	145	481	332	476	328	502	279	1.42		
222				249	138	273*	152	476	328	482	333	496	276	1.04		
223		12		218	121	269	149	274	189	481	332	497	276	1.77		
224				205*	114	264*	147	273	188	481	332	496	276	1.14	No	
225				222	123	273	152	273	188	481	332	495	275	1.77	Yes	
226				217	121	270	150	275	190	481	332	498	277	1.75		
227				218	121	266	148	271	187	275*	190	505	281	0.91		
228				219	122	268	149	266	184	275	190	503	279	0.86		

TABLE I (Continued)

ASI HIGH PRESSURE TEST MATRIX

TEST NUMBER	TEST DATE	SPARK DELIVERED ENERGY mJ	SPARK DATE	FUEL INLET TEMP		OXIDIZER INLET TEMP		FUEL INLET PRESSURE		OXIDIZER INLET PRESSURE		HARDWARE INITIAL TEMP		MIXTURE RATIO o/f	IGNITION	COMMENT
				R	K	R	K	lb/in^2	N/cm^2	lb/in^2	N/cm^2	R	K			
229	3-3-71	12	200	215	119	272	151	266	184	275	190	520	289	0.86	Yes	
230		13		260	144	272	151	477	329	276	190	503	279	0.47		
231				259	144	277	154	480	331	276	190	500	278	0.47		
232				243*	135	260*	144	483	333	276	190	500	278	0.65		
233				234	130	263	146	366	253	383	264	500	278	1.01		
234				232	129	265	147	366	253	383	264	498	277	0.96		
235				234	130	268	149	368	254	383	264	518	288	0.89		
236				233	129	272	151	365	252	383	264	446	248	0.85		
237				236	131	271	151	372	256	383	264	447	248	0.82		
238				239	133	283*	157	373	257	383	264	447	248	0.85		
239				236	131	267	148	373	257	383	264	397	221	0.78	No	
240				231	128	269	149	372	256	383	264	402	223	1.91		
241				237	132	269	149	375	259	382	264	401	223	0.90		
242				234	130	271	151	373	257	382	264	406	226	0.89		
243				239	133	269	149	377	260	383	264	400	222	0.75		
244				239	133	269	149	380	262	383	264	401	223	0.89		
245				232	129	278	154	372	256	383	264	326	181	0.88		
246				235	131	275	153	378	261	382	264	327	182	0.84		
247				238	132	275	153	381	263	383	264	335	186	0.75		
248		12		217	121	538	299	267	184	471	325	508	282	1.23	Yes	
249				217	121	534	297	269	186	471	325	505	281	1.21		
250				215	119	532	296	268	185	471	325	505	281	1.24		
251				216	120	535*	297	268	185	471	325	472	262	1.20		
252			300	215	119	525	292	270	186	471	325	477	265	1.26		
253				215	119	523	291	270	186	471	325	476	264	1.24		
254				218	121	523	291	270	186	472	326	474	263	1.23		
255				213	118	526	292	269	186	471	325	397	221	1.17	No	
256				212	118	520	289	270	186	471	325	395	219	1.17		
257				214	119	518	288	270	186	471	325	397	221	1.16		
258			400	212	118	517	287	269	186	471	325	504	280	1.19		
259				215	119	518	288	270	186	471	325	399	188	1.19		
260				206*	114	499*	277	268	185	471	325	399	188	1.25		
261			667	211*	117	520*	289	270	186	471	325	400	222	1.17		
262				215	119	515	286	268	185	471	325	401	223	1.17		
263				220	123	516	287	268	185	471	325	399	188	1.15		
264			450	218	121	514	286	269	186	471	325	411	228	1.20		
265		17	200	212	118	513	285	272	188	471	325	414	230	1.14		
266				213	118	513	285	270	186	471	325	413	229	1.19		
267				217	121	513	285	267	184	471	325	417	232	1.22		
268		25		197*	109	507*	282	270	186	471	325	415	231	1.18		
269				213	118	514	286	271	187	471	325	419	233	1.20		
270				219*	122	513	285	270	186	471	325	418	232	1.19		
271		35		215*	119	513	285	271	187	471	325	410	228	1.06		
272				212	118	512	284	272	188	471	325	400	222	1.21		
273				215	119	511	284	269	186	471	325	399	188	1.20		
274		12		212	118	511	284	268	185	471	325	402	223	1.23		

TABLE I (Continued)

ASI HIGH PRESSURE TEST MATRIX

TEST NUMBER	TEST DATE	SPARK DELIVERED ENERGY mj	SPARK DATE	FUEL INLET TEMP		OXIDIZER INLET TEMP		FUEL INLET PRESSURE		OXIDIZER INLET PRESSURE		HARDWARE INITIAL TEMP		MIXTURE RATIO o/f	IGNITION	COMMENT
				R	K	R	K	lb/in^2	N/cm^2	lb/in^2	N/cm^2	R	K			
275	3-3-71	12	200	211	117	511	284	270	186	471	325	404	224	1.20	No	
276				211	117	511	284	270	186	470	324	406	226	1.20		
277				211	117	511	284	270	186	471	325	409	227	1.20		
278	3-9-71		100	227	126	517	287	274	189	476	328	519	288	1.29	Yes	
279				224	124	518	288	277	191	476	328	519	288	1.28		
280				224	124	517	287	276	190	476	328	400	222	1.20		
281				221	123	517	287	278	192	476	328	406	226	1.21		
282				223	124	517	287	278	192	476	328	405	225	1.21		
283				220	122	518	288	278	192	476	328	404	224	1.19	No	
284		17		222	123	518	288	279	193	476	328	400	222	1.21		
285				222	123	518	288	279	193	476	328	402	223	1.22	Yes	
286				224	124	518	288	277	191	476	328	407	226	1.24		
287				220	122	517	287	278	192	477	329	371	206	1.16		
288				226	126	518	288	279	193	477	329	339	188	1.18	No	
289				220	122	517	287	275	190	477	329	343	191	1.19		
290				215	119	517	287	270	186	477	329	342	190	1.20		
291		34		219	122	518	288	269	186	477	329	343	191	1.22		
292				220	122	517	287	271	187	468	323	339	188	1.17		
293				218	121	517	287	270	186	468	323	340	189	1.16		
294		54		217	121	519	288	269	186	468	323	343	191	1.14		
295				217	121	520	289	271	187	468	323	346	192	1.17		
296				227	126	514	286	270	186	469	324	507	282	1.22		
297		12		224	124	513	285	271	187	469	324	506	281	1.25	Yes	Surface gap spark plug center inset 0.070 in. (0.1778 cm)
298				223	124	513	285	280	193	468	323	507	282	1.26		
299				222	123	512	284	280	193	469	324	397	221	1.17		
300				223	124	513	285	280	193	469	324	403	224	1.20		Test 297 - 327
301				225	125	513	285	280	193	469	324	404	224	1.21		
302				225	125	513	285	280	193	469	324	336	187	1.14		
303				224	124	514	286	275	190	457	315	349	194	1.17		
304				221	123	513	285	274	189	457	315	354	197	1.17	No	
305				224	124	513	285	276	190	461	318	358	199	1.18		
306		17		220	122	513	285	278	192	461	318	350	194	1.16		
307				224	124	513	285	279	193	462	319	337	187	1.14		
308				221	123	513	285	279	193	461	318	342	190	1.15		
309		54		217	121	514	286	278	192	461	318	350	194	1.17		
310				221	123	513	285	274	189	461	318	353	196	1.17		
311				213	118	514	286	275	190	461	318	335	186	1.18		
312		12	200	221*	123	523*	291	274	189	461	318	336	187	1.16		
313				217	121	512	284	274	189	461	318	334	186	1.16		
314				217	121	512	284	276	190	460	317	339	188	1.10		
315		34		214	119	511	284	275	190	460	317	346	192	1.09		
316		54		214	119	511	284	277	191	460	317	343	191	1.07		
317				217	121	511	284	275	190	472	326	341	189	1.13		
318				251*	139	501*	278	219	151	323	223	343	191	1.11		
319				199	111	511	284	209	144	348	240	347	193	1.13		
320				200	111	511	284	210	145	333	230	348	193	1.04		

TABLE I (Continued)

ASI HIGH PRESSURE TEST MATRIX

TEST NUMBER	TEST DATE	SPARK DELIVERED ENERGY mj	SPARK DATE	FUEL INLET TEMP		OXIDIZER INLET TEMP		FUEL INLET PRESSURE		OXIDIZER INLET PRESSURE		HARDWARE INITIAL TEMP		MIXTURE RATIO o/f	IGNITION	COMMENT
				R	K	R	K	lb/in^2	N/cm^2	lb/in^2	N/cm^2	R	K			
321	3-9-71	54	200			FACILITY	DATA	RECORDING	NG							
322	3-10-71	12	100	218	121	516	287	272	188	473	326	406	226	0.99	Yes	Spark plug heater installed
323				224*	124	516	287	272	188	473	326	399	222	1.04		
324				224	124	516	287	274	189	473	326	404	224	1.12		
325				228	127	516	287	275	190	472	326	341	189	1.12	No	
326				217	121	515	286	276	190	473	326	341	189	1.06		
327		54		217	121	515	286	275	190	473	326	339	188	1.09		Facility Malfunction
328	3-12-71	12		225	125	515	286	279	193	472	326	517	287	1.20	Yes	
329				225	125	515	286	276	190	472	326	517	287	1.23		Surface gap spark plug side
330				226	126	515	286	274	189	472	326	512	284	1.25		location inset 0.070 in. (0.1778 cm)
331				230	128	515	286	274	189	472	326	403	224	1.20		
332				231	128	515	286	275	190	472	326	404	224	1.21		Test 328 - 362
333				230	128	514	286	275	190	471	325	409	227	1.20		
334				221	123	515	286	277	191	472	326	340	189	1.11	No	
335				221	123	514	286	277	191	472	326	346	192	1.13		
336				227	126	514	286	277	191	472	326	341	189	1.15		
337		18		229	127	514	286	277	191	472	326	344	191	1.16		
338		35		227	126	514	286	276	190	472	326	344	191	1.20	Yes	
339				223	124	514	286	276	190	472	326	344	191	1.15		
340				225	125	514	286	277	191	472	326	343	191	1.14	No	
341				219	122	513	285	277	191	472	326	342	190	1.10		
342		12	200	218	121	513	285	274	189	472	326	359	199	1.12		
343		17		217	121	513	285	271	187	472	326	345	192	1.12		
344		34		216	120	513	285	270	186	472	326	344	191	1.14		
345		30		216	120	513	285	271	187	472	326	339	188	1.14		
346				216	120	513	285	272	188	472	326	343	191	1.13	Yes	
347		33	100	214	119	265	147	273	188	481	332	342	190	1.79		
348				213	118	265	147	270	186	481	332	341	189	1.89		
349				213	118	266	148	270	186	480	331	342	190	1.90		
350				214	119	274	152	268	185	479	331	299	166	1.56		
351				214	119	273	152	268	185	479	331	301	167	1.54		
352				217	121	273	152	268	185	479	331	306	170	1.59		
353		12		214	119	268	149	270	186	478	330	315	175	1.69	No	
354				213	118	260	144	271	187	473	326	267	148	2.27		
355		33		212	118	270	150	272	188	474	327	273	152	1.75	Yes	
356				212	118	274	152	271	187	476	328	277	154	1.58		
357				214	119	283	157	272	188	478	330	265	147	1.48		
358				225	125	274	152	269	186	479	331	246	137	1.45	No	
359				225	125	273	152	271	187	479	331	249	138	1.48		
360				226	126	271	151	270	186	477	329	251	139	1.59	Yes	
361				224	124	272	151	272	188	477	329	258	143	1.60		
362				223	124	267	148	271	187	475	328	249	138	1.80		

ASI IGNITER ONLY TESTING
OPERATION LIMIT ANALYSIS

Ignition vs Propellant Inlet Temperature
for Specific Propellant Inlet Temperature
and Hardware Temperature

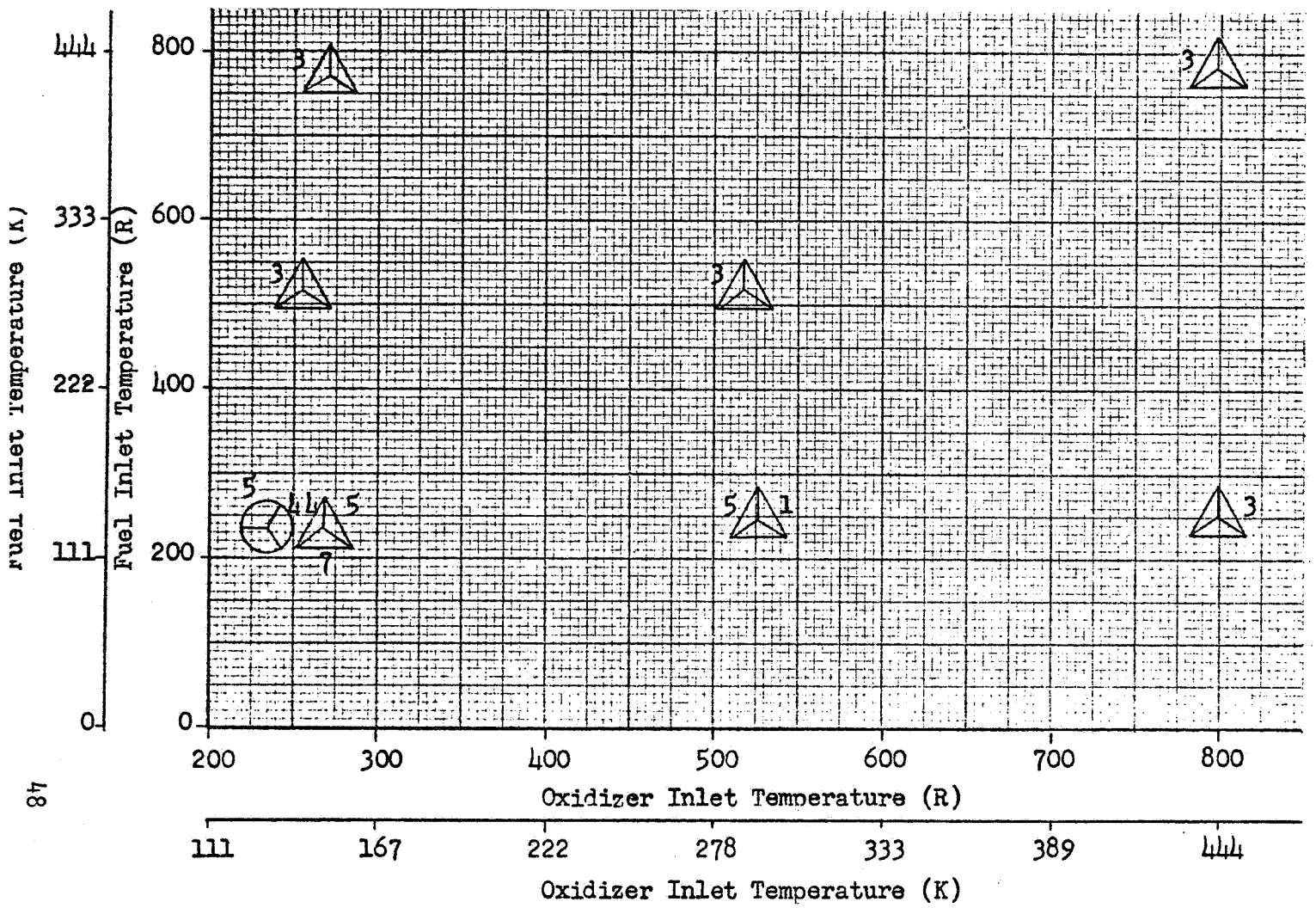

LEGEND

Propellant Inlet Pressure

H_2 lb/in^2	H_2 N/cm^2	O_2 lb/in^2	O_2 N/cm^2
375	259	375	259

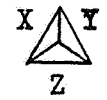

Dual Recess Gap Plug

Number of Ignitions	Hardware Temp. R	Hardware Temp. K
X	500 +	278 +
Y	400-499	222-277
Z	200-399	111-222

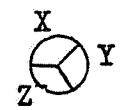

Surface Gap Plug

X	500 +	278 +
Y	400-499	222-277
Z	200-399	111-222

Fig. 12

ASI IGNITER ONLY TESTING
OPERATION LIMIT ANALYSIS

Ignition vs Propellant Inlet Temperature
for Specific Propellant Inlet Temperature
and Hardware Temperature

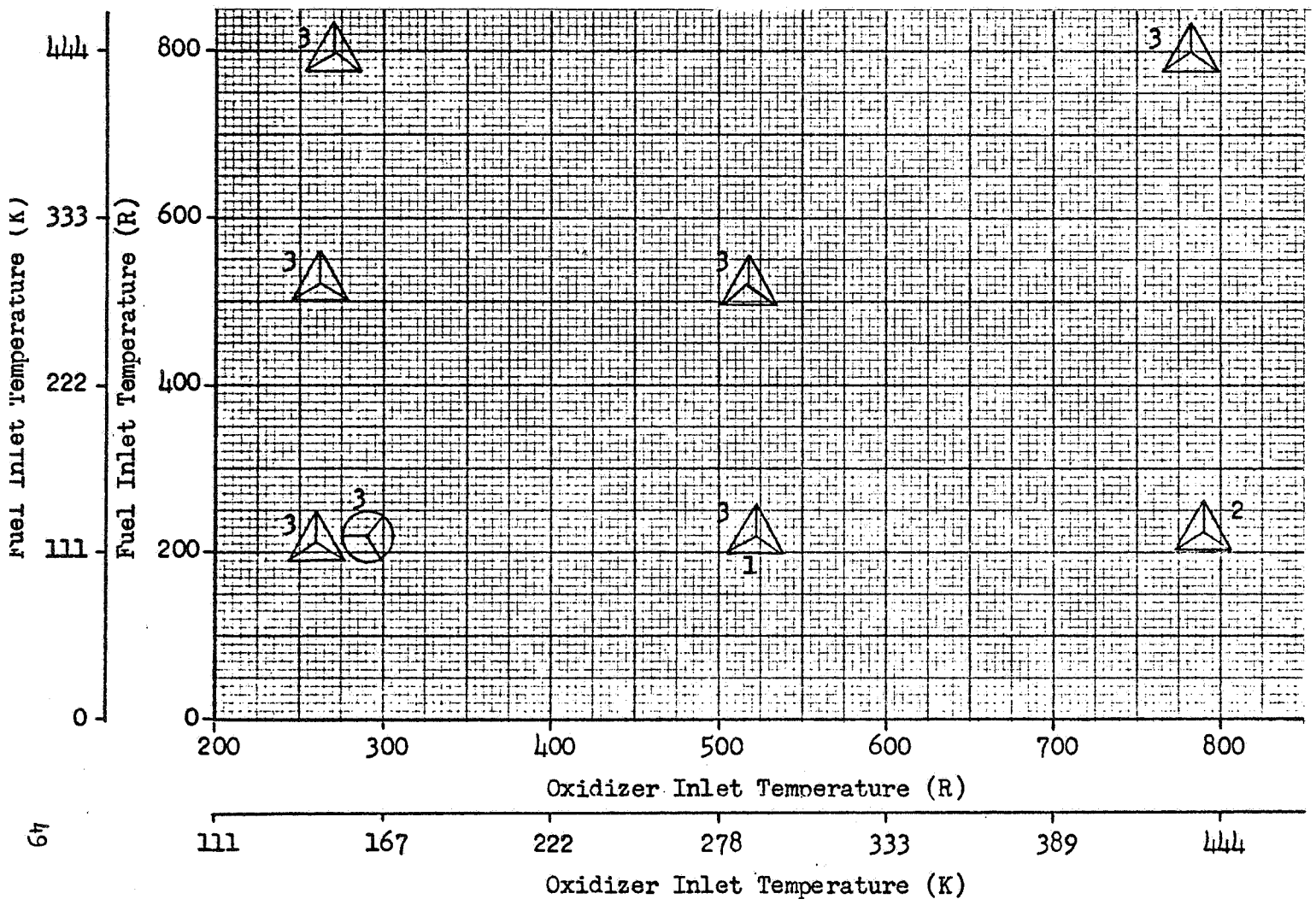

LEGEND

Propellant Inlet Pressure

H_2		O_2	
lb/in^2	N/cm^2	lb/in^2	N/cm^2
275	190	275	190

X Y Z Dual Recess Gap Plug

Number of Ignitions	Hardware Temp. R	Hardware Temp. K
X	500 +	278 +
Y	400-499	222-277
Z	200-399	111-222

X Y Z Surface Gap Plug

X	500 +	278 +
Y	400-499	222-277
Z	200-399	111-222

Fig. 13

ASI IGNITER ONLY TESTING
OPERATION LIMIT ANALYSIS

Ignition vs Propellant Inlet Temperature
for Specific Propellant Inlet Temperature
and Hardware Temperature

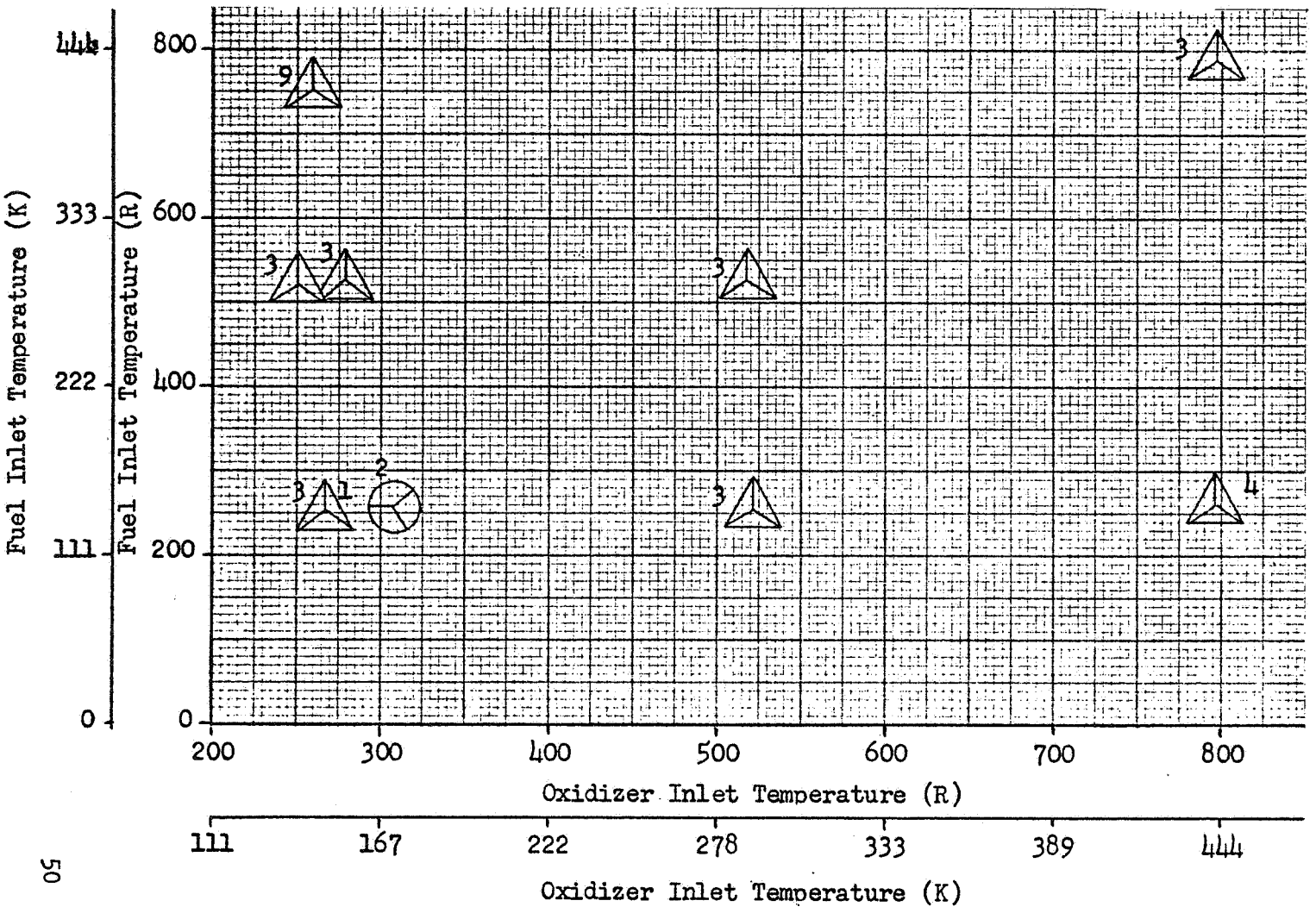

LEGEND

Propellant Inlet Pressure

H_2 lb/in^2	H_2 N/cm^2	O_2 lb/in^2	O_2 N/cm^2
475	328	475	328

Dual Recess Gap Plug

Number of Ignitions	Hardware Temp. R	Hardware Temp. K
X	500 +	278 +
Y	400-499	222-277
Z	200-399	111-222

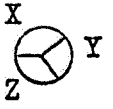

Surface Gap Plug

X	500 +	278 +
Y	400-499	222-277
Z	200-399	111-222

Fig. 14

ASI IGNITER ONLY TESTING
OPERATION LIMIT ANALYSIS

Ignition vs Propellant Inlet Temperature
for Specific Propellant Inlet Temperature
and Hardware Temperature

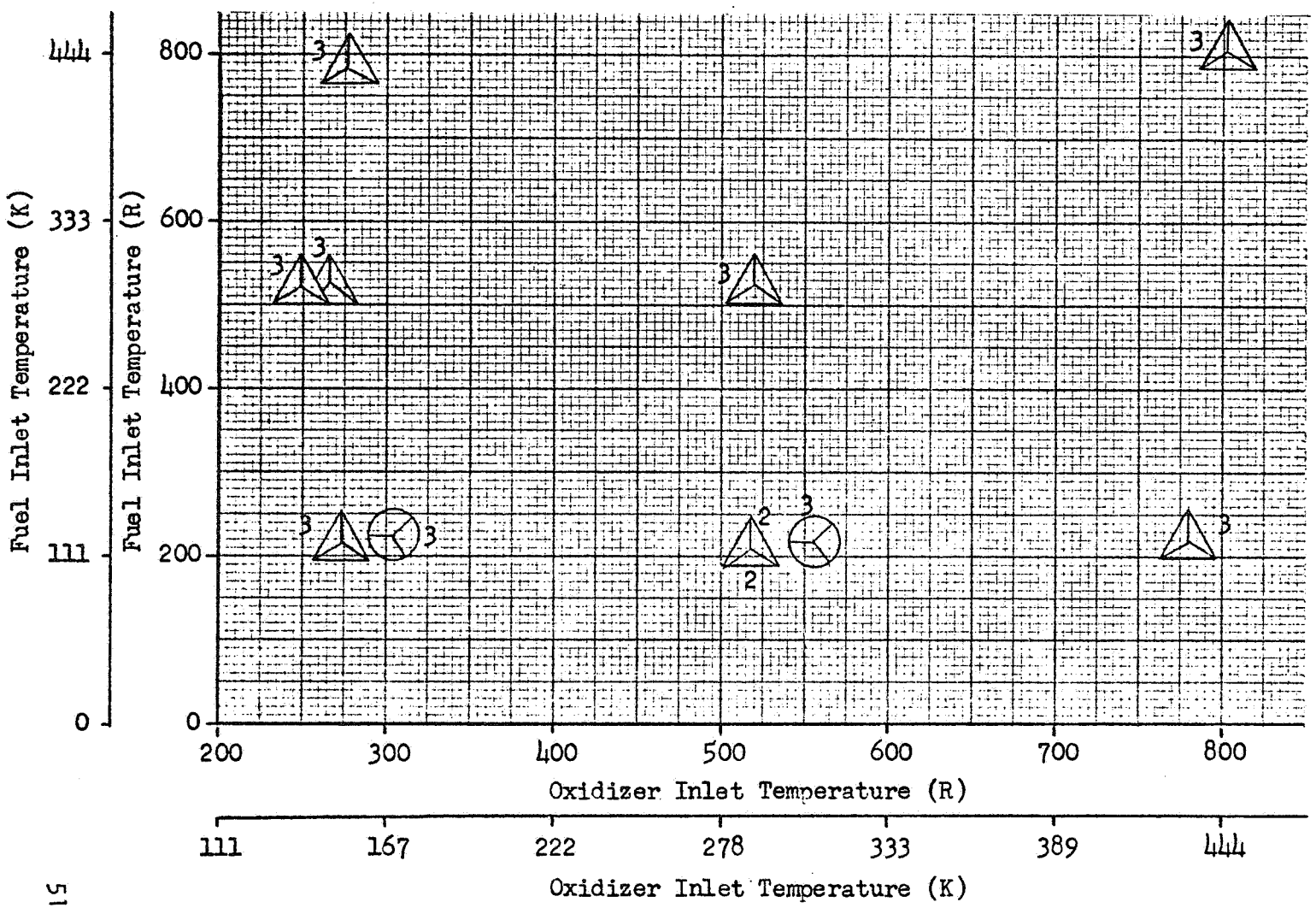

LEGEND

Propellant Inlet Pressure

H_2 lb/in^2	H_2 N/cm^2	O_2 lb/in^2	O_2 N/cm^2
275	190	475	328

X Y Z Dual Recess Gap Plug

Number of Ignitions	Hardware Temp. R	Hardware Temp. K
X	500 +	278 +
Y	400-499	222-277
Z	200-399	111-222

X Y Z Surface Gap Plug

X	500 +	278 +
Y	400-499	222-277
Z	200-399	111-222

Fig. 15

ASI IGNITER ONLY TESTING
OPERATION LIMIT ANALYSIS

Ignition vs Propellant Inlet Temperature
for Specific Propellant Inlet Temperature
and Hardware Temperature

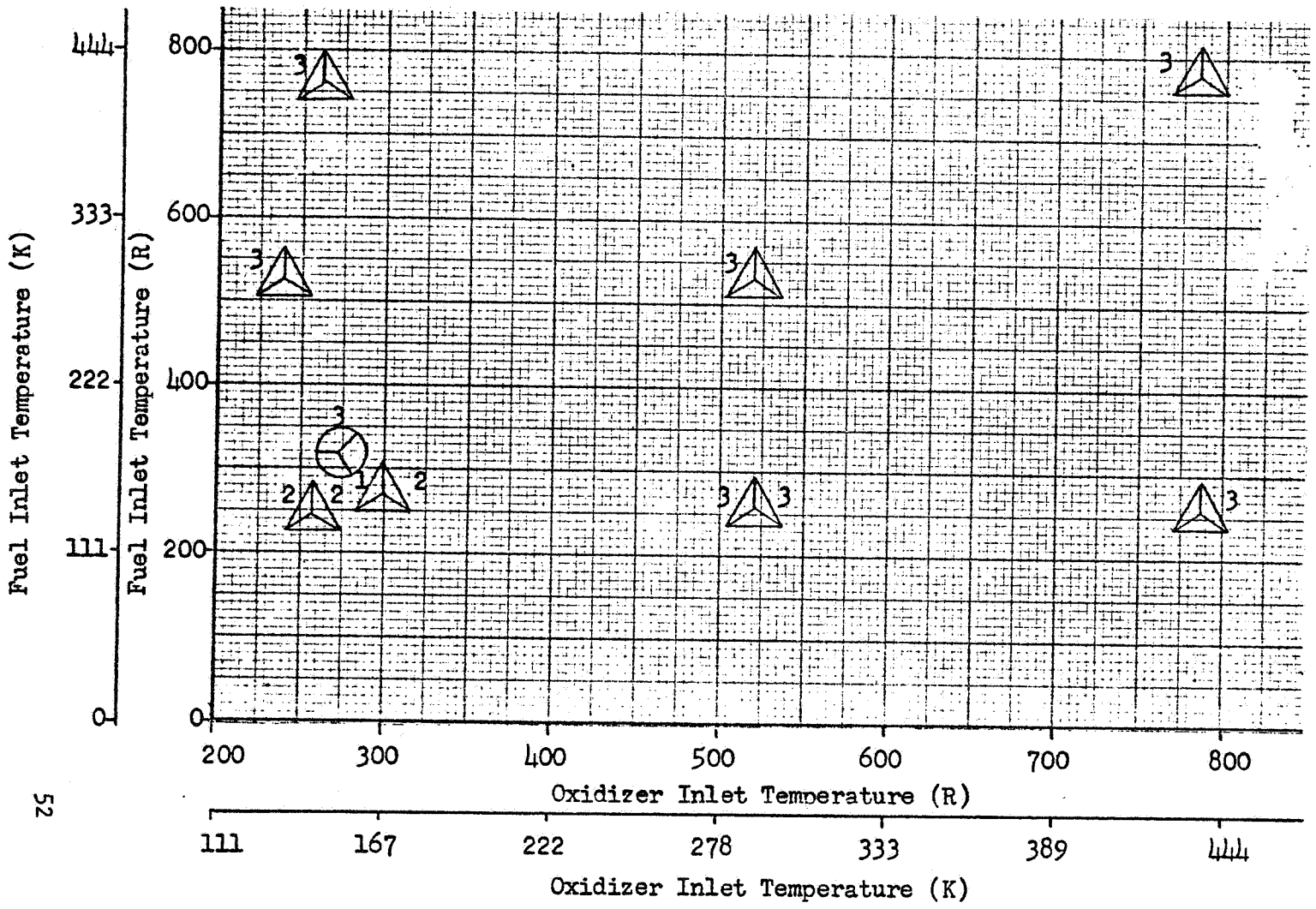

LEGEND

Propellant Inlet Pressure

H_2 lb/in^2	H_2 N/cm^2	O_2 lb/in^2	O_2 N/cm^2
475	328	275	190

X Y Z Dual Recess Gap Plug

Number of Ignitions	Hardware Temp. R	Hardware Temp. K
X	500 +	278 +
Y	400-499	222-277
Z	200-399	111-222

X Y Z Surface Gap Plug

X	500 +	278 +
Y	400-499	222-277
Z	200-399	111-222

Fig. 16

ASI IGNITER ONLY TESTING
OPERATION LIMIT ANALYSIS

Ignition vs Propellant Inlet Pressure
for Specific Propellant Inlet Pressure and
Hardware Temperature

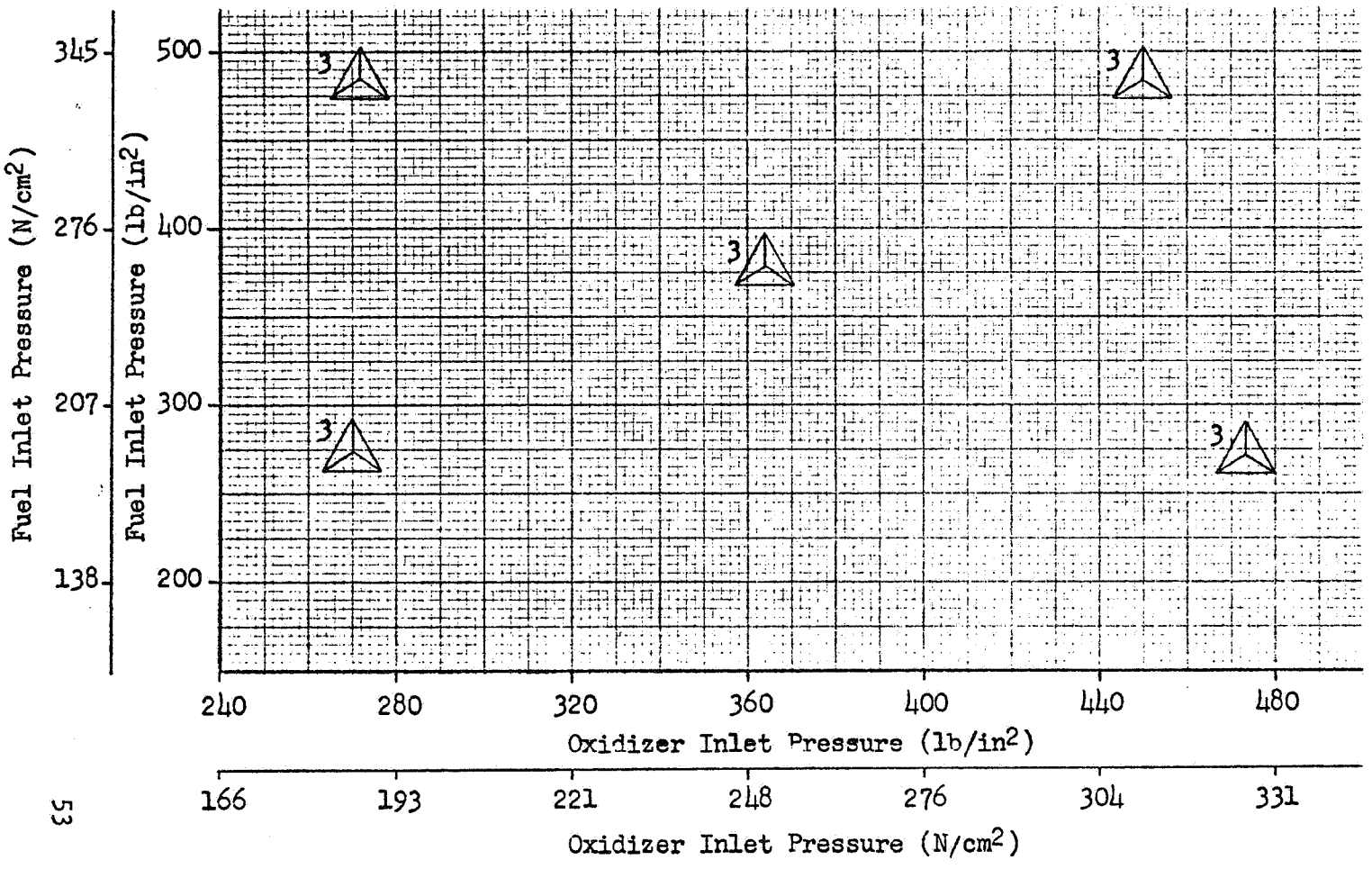

LEGEND

Propellant Inlet Temp.			
H_2		O_2	
R	K	R	K
520	289	520	289

X Y Z Dual Recess Gap Plug

Number of Ignitions	Hardware Temp. R	Hardware Temp. K
X	500 +	278 +
Y	400-499	222-277
Z	200-399	111-222

Fig. 17

PRECEDING PAGE BLANK NOT FILMED

ASI IGNITER ONLY TESTING
OPERATION LIMIT ANALYSIS

Ignition vs Propellant Inlet Pressure
for Specific Propellant Inlet Pressure and
Hardware Temperature

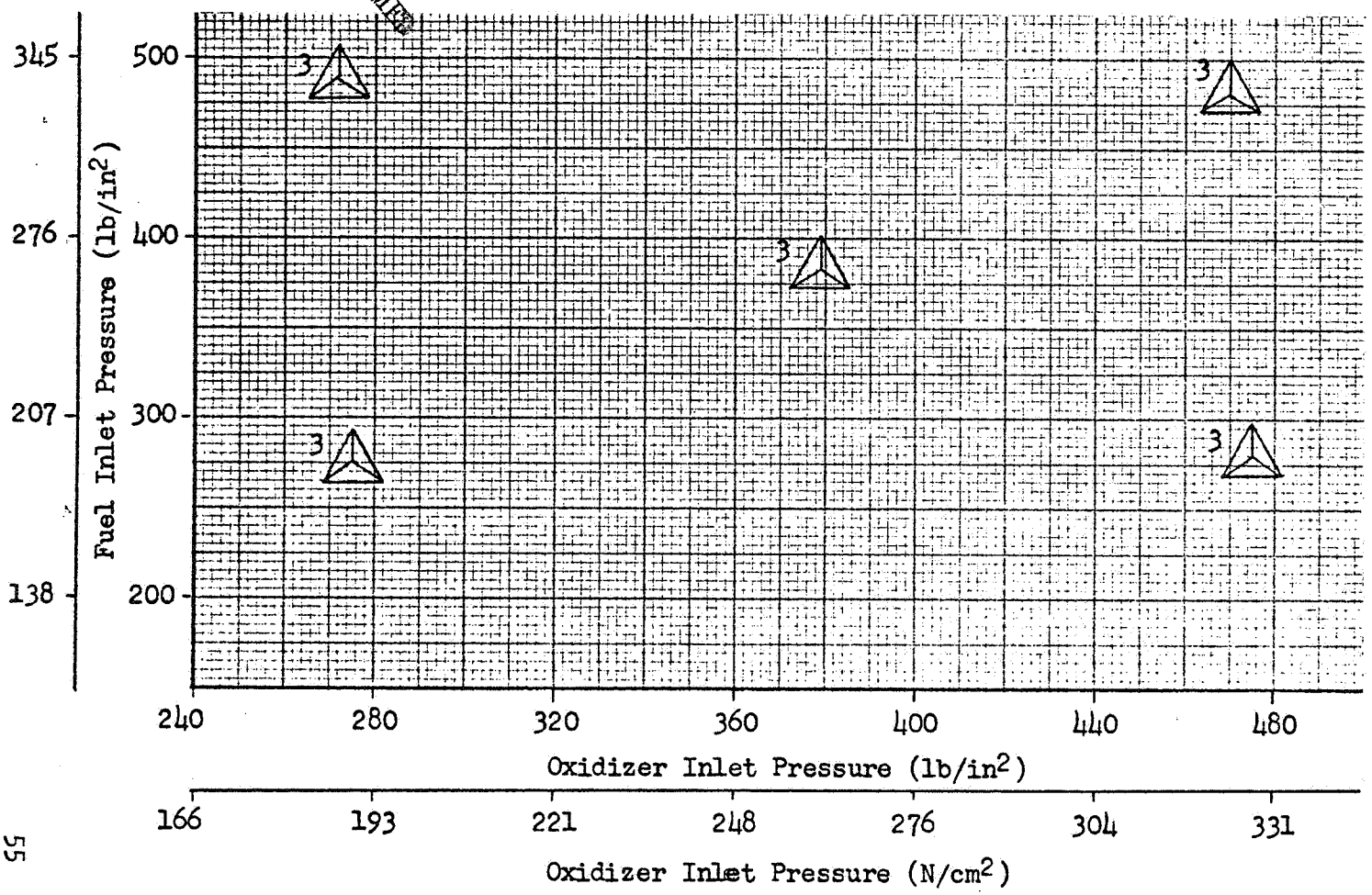

LEGEND

Propellant Inlet Temp.

H_2		O_2	
R	K	R	K
800	444	800	444

X Y Z Dual Recess Gap Plug

Number of Ignitions	Hardware Temp. R	Hardware Temp. K
X	500 +	278 +
Y	400-499	222-277
Z	200-399	111-222

Fig. 19

ASI IGNITER ONLY TESTING
OPERATION LIMIT ANALYSIS

Ignition vs Propellant Inlet Pressure
for Specific Propellant Inlet Pressure and
Hardware Temperature

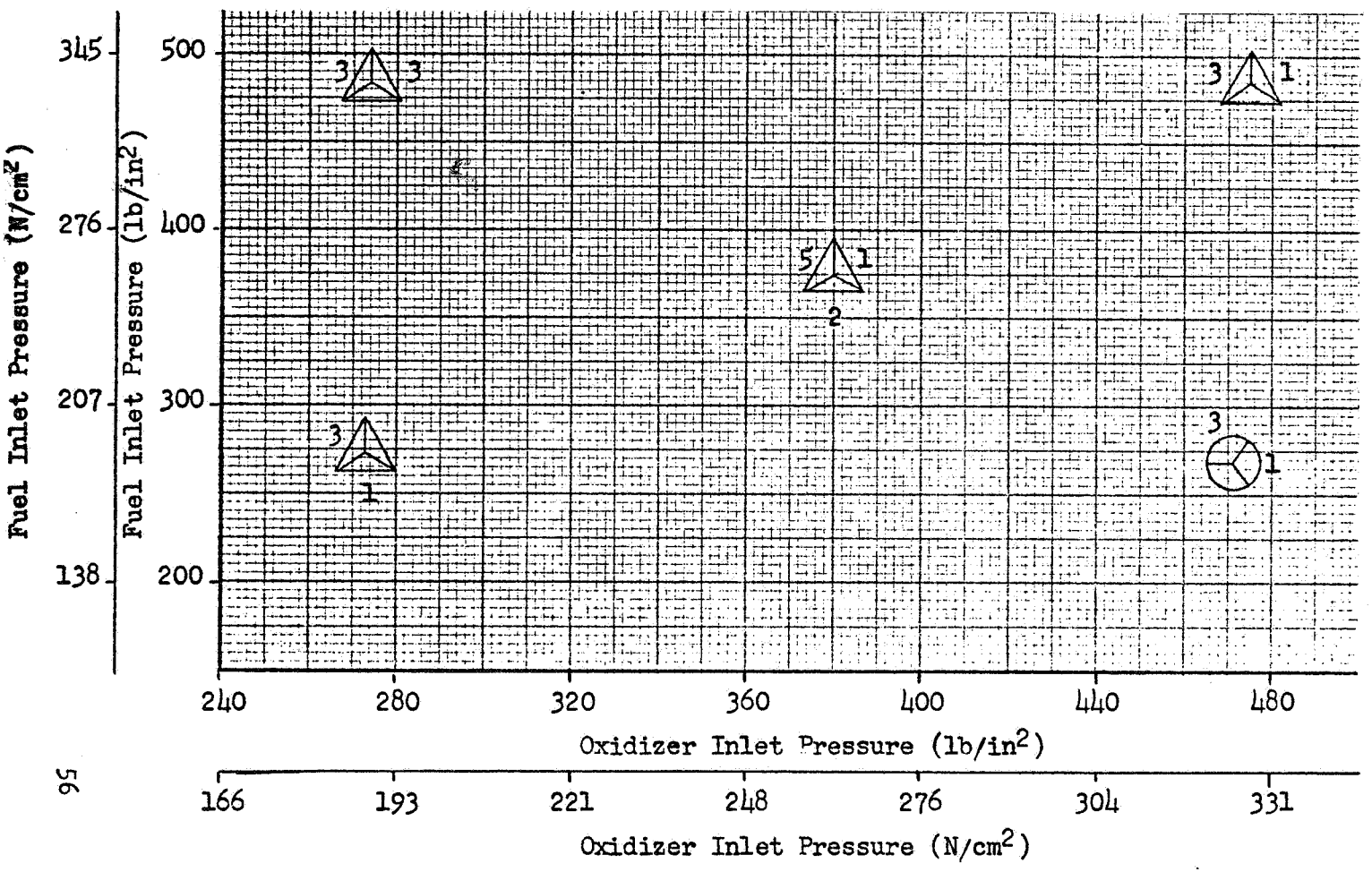

LEGEND

Propellant Inlet Temp.

H_2 R	H_2 K	O_2 R	O_2 K
200	111	520	289

X Y Z Dual Recess Gap Plug

Number of Ignitions	Hardware Temp. R	Hardware Temp. K
X	500 +	278 +
Y	400-499	222-277
Z	200-399	111-222

X Y Z Surface Gap Plug

X	500 +	278 +
Y	400-499	222-277
Z	200-399	111-222

Fig. 20

ASI IGNITER ONLY TESTING
OPERATION LIMIT ANALYSIS

Ignition vs Propellant Inlet Pressure
for Specific Propellant Inlet Pressure and
Hardware Temperature

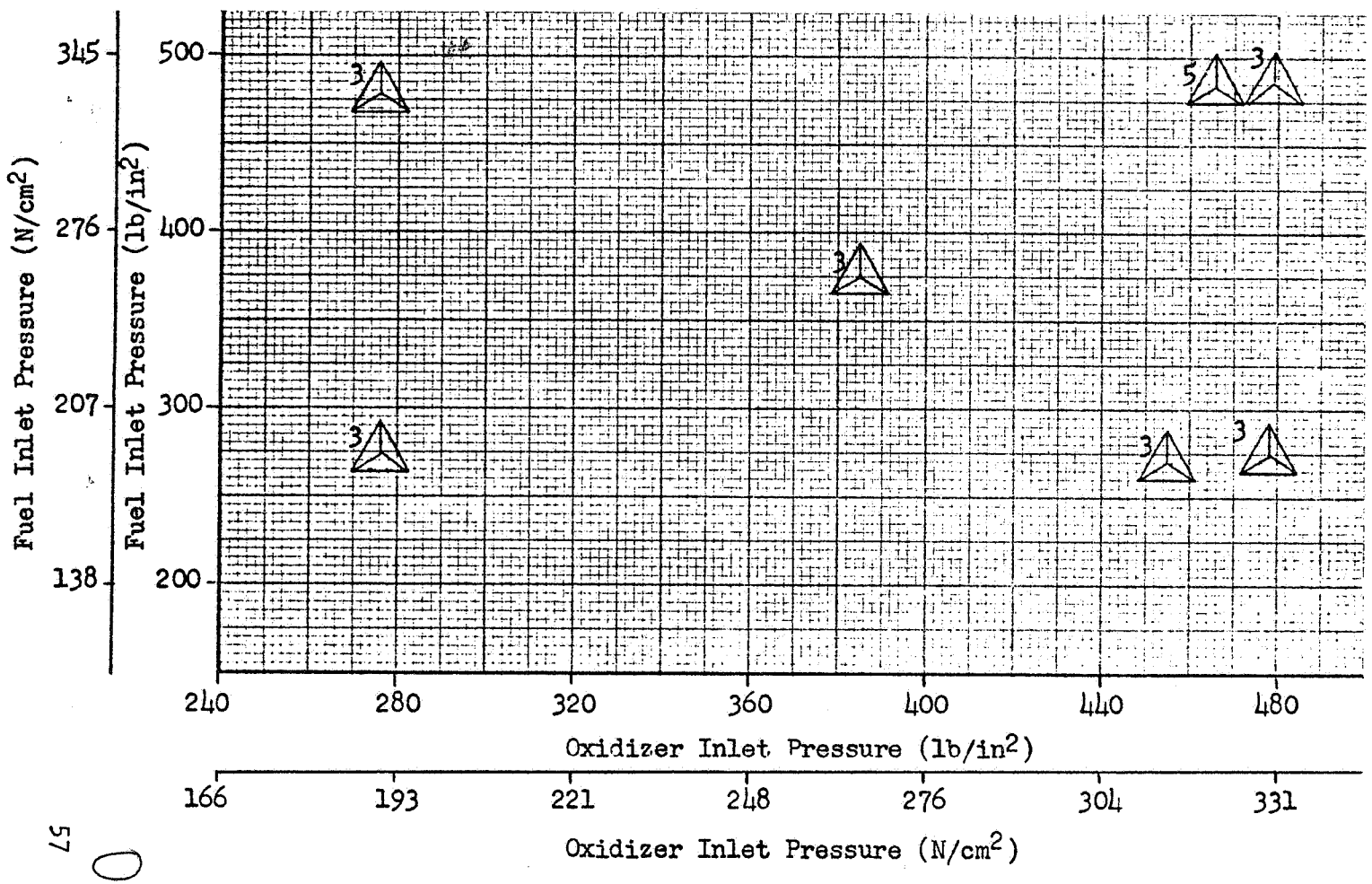

LEGEND

Propellant Inlet Temp.

H_2		O_2	
R	K	R	K
520	289	250	139

X Y Z Dual Recess Gap Plug

Number of Ignitions	Hardware Temp. R	Hardware Temp. K
X	500 +	278 +
Y	400-499	222-277
Z	200-399	111-222

Fig. 21

ASI IGNITER ONLY TESTING
OPERATION LIMIT ANALYSIS

Ignition vs Propellant Inlet Pressure for Specific Propellant Inlet Pressure and Hardware Temperature

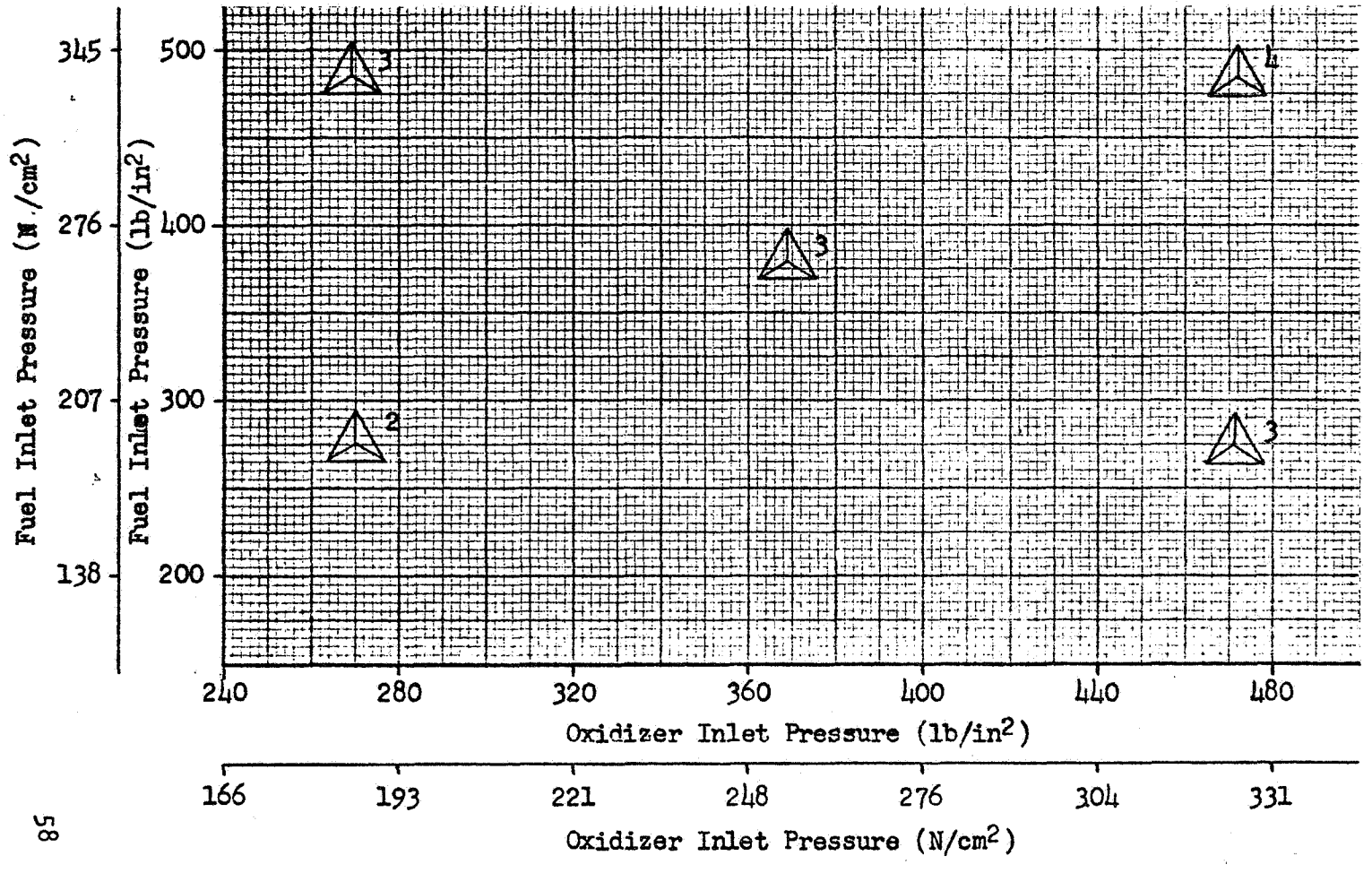

LEGEND

Propellant Inlet Temp.

H_2		O_2	
R	K	R	K
200	111	800	444

X Y Z Dual Recess Gap Plug

Number of Ignitions	Hardware Temp. R	Hardware Temp. K
X	500 +	278 +
Y	400-499	222-277
Z	200-399	111-222

Fig. 22

ASI IGNITER ONLY TESTING
OPERATION LIMIT ANALYSIS

Ignition vs Propellant Inlet Pressure
for Specific Propellant Inlet Pressure and
Hardware Temperature

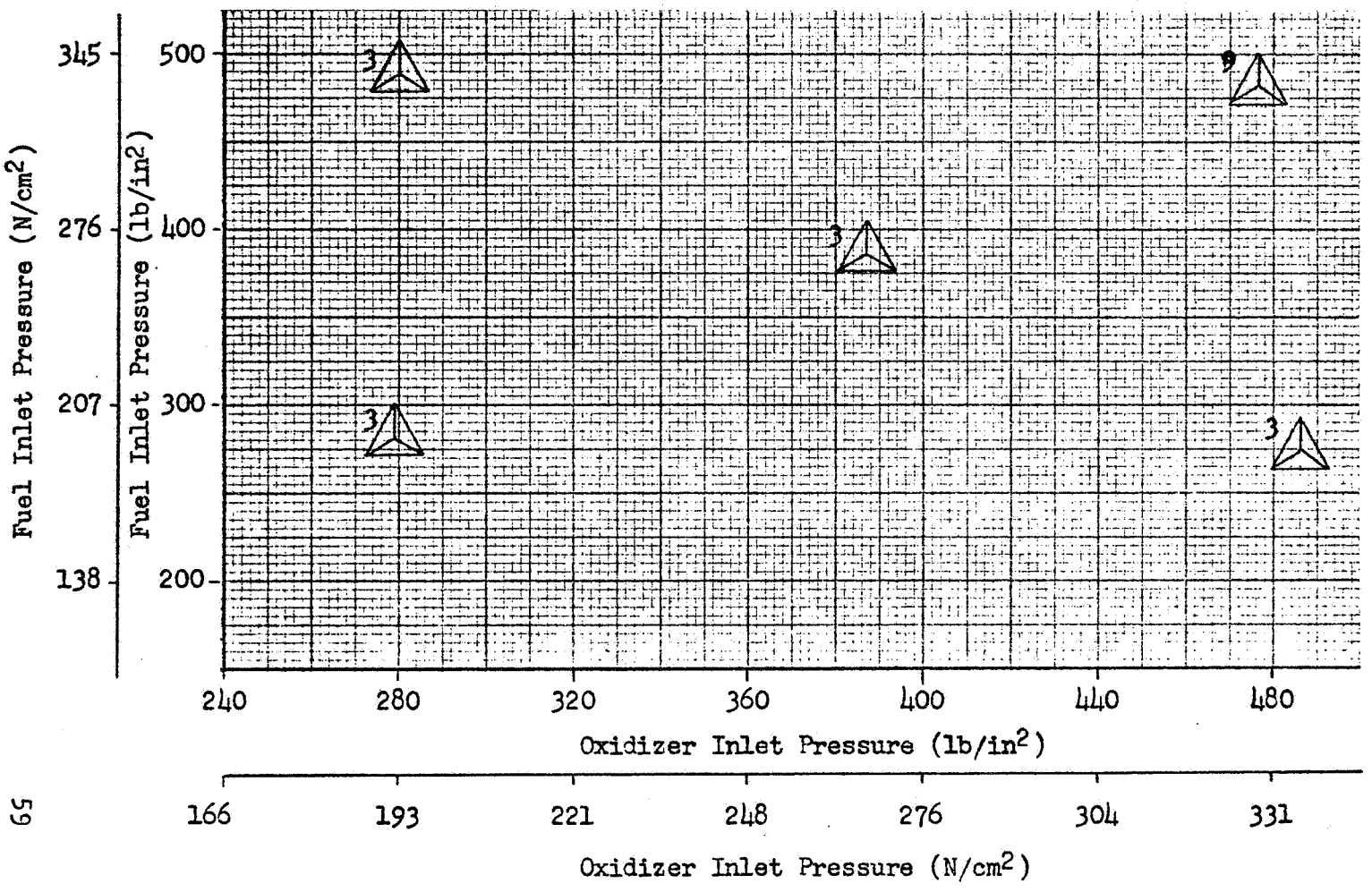

LEGEND

Propellant Inlet Temp.

H_2		O_2	
R	K	R	K
800	444	250	139

X Y Z Dual Recess Gap Plug

Number of Ignitions	Hardware Temp. R	Hardware Temp. K
X	500 +	278 +
Y	400-499	222-277
Z	200-399	111-222

Fig. 23

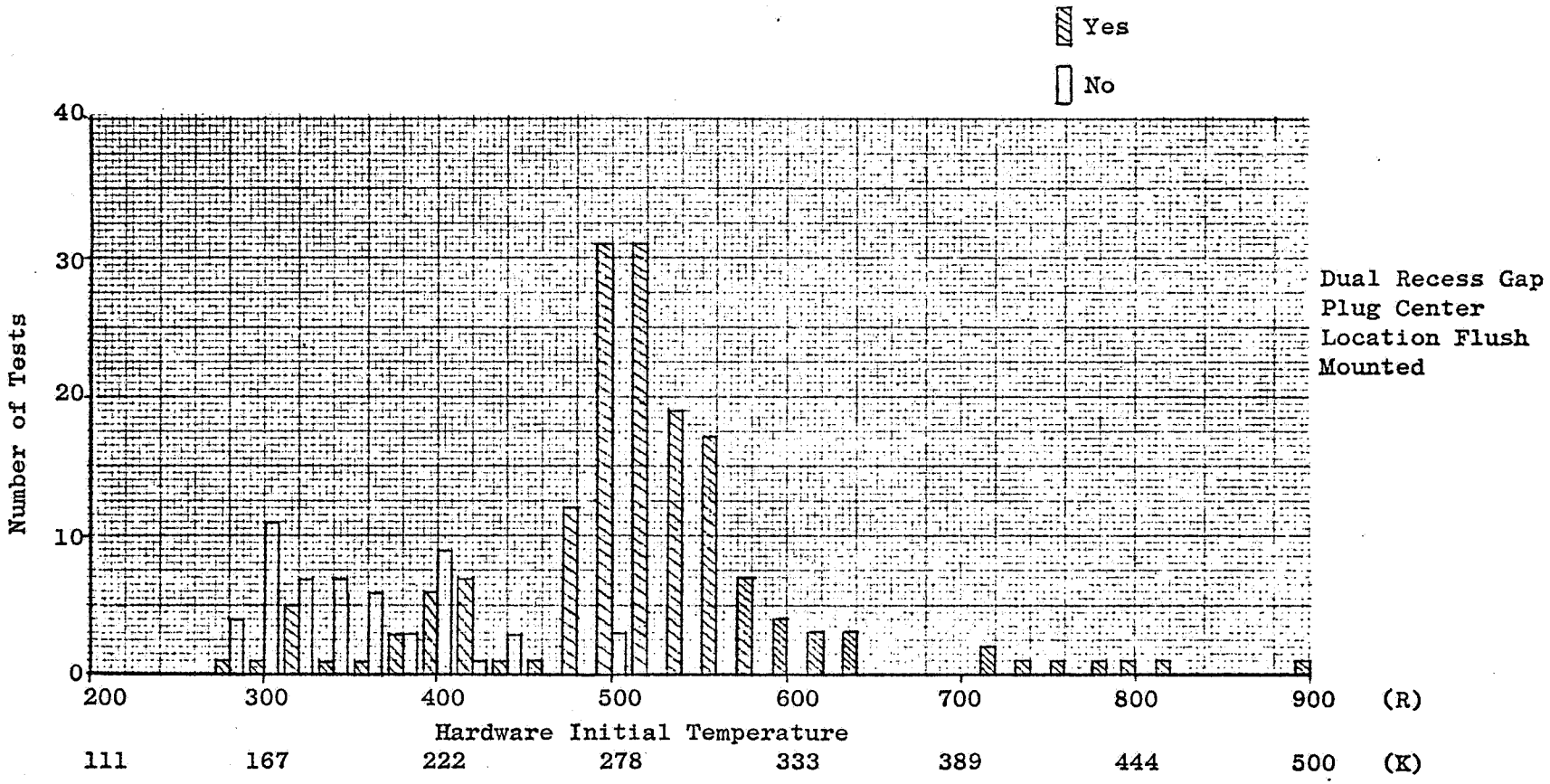

Fig 24. ASI Igniter Only Testing Operation Limit Analysis

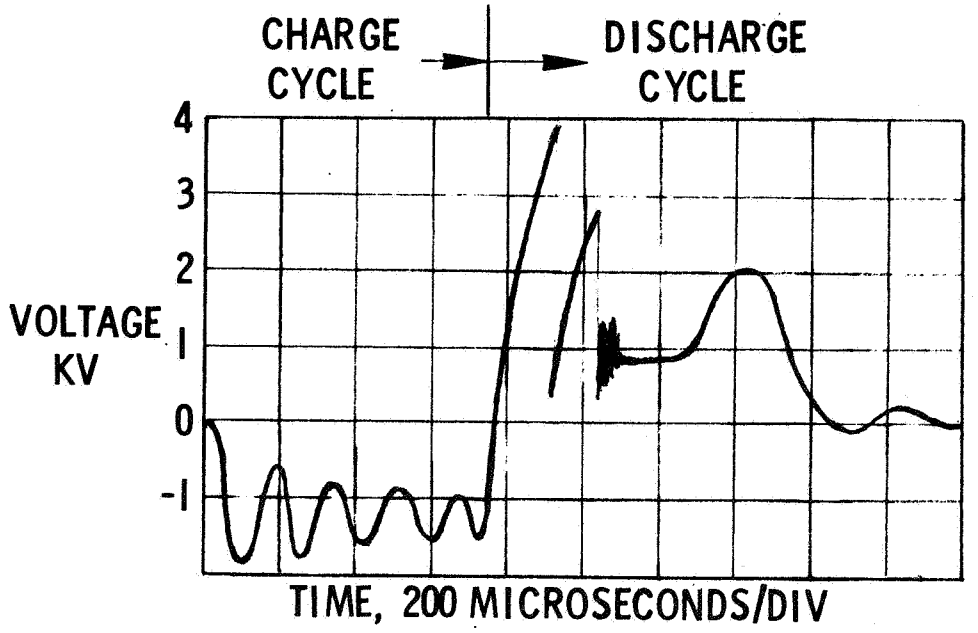

TYPICAL NORMAL VOLTAGE

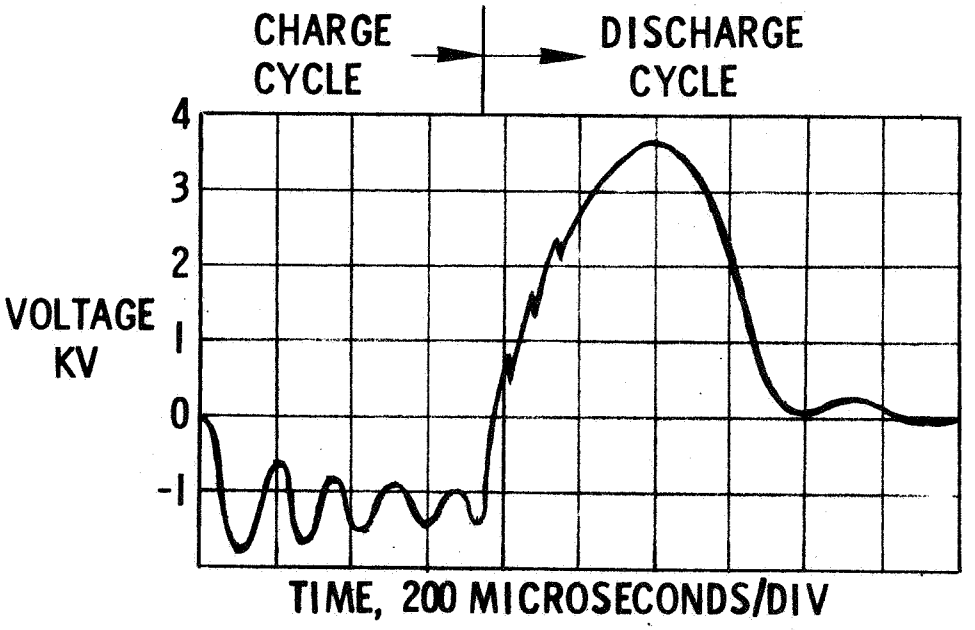

ABNORMAL VOLTAGE

SPARK PLUG VOLTAGE CHARACTERISTICS
DUAL 0.025 RECESSED GAP

Fig. 25

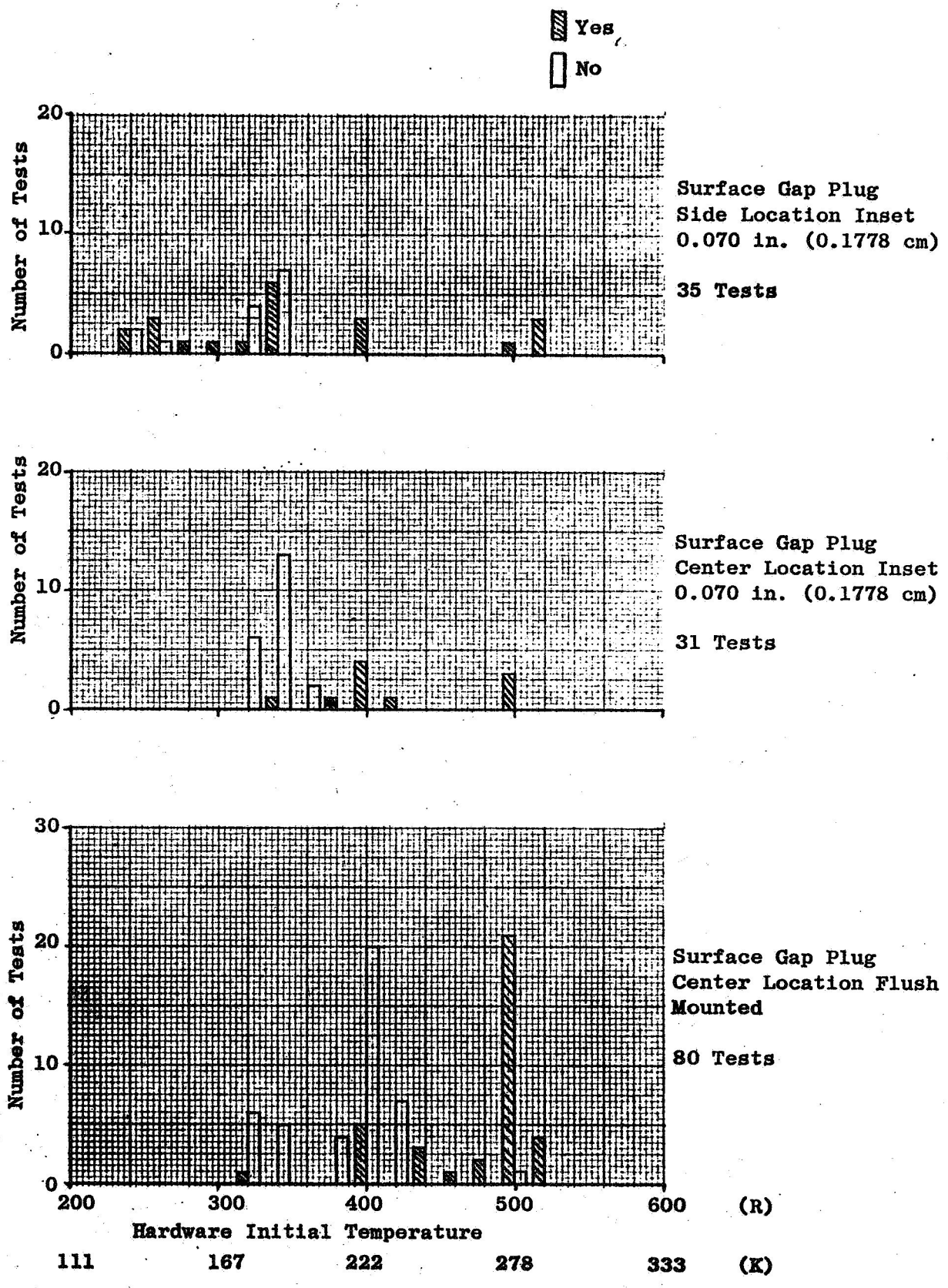

Fig 26 ASI Igniter Only Testing Operation Limit Analysis

AUTO-IGNITER THRUSTER TESTING (HIGH PRESSURE)

The high-pressure resonance igniter and thruster were tested to assure that the igniter energy was sufficient to provide rapid ignition of the main propellants. The testing was successfully completed on 19 March 1971. The thruster was repeatably ignited with the auto-igniter with no external energy being added to the system.

Objective

This test series was performed with a high-pressure resonance igniter assembly, uncooled workhorse thrust chamber and concentric orifice injector to determine the effects of igniter energy on thruster ignition delay. The tests provided thruster transient (ignition delay) data as a function of igniter flowrate and mixture ratio (energy).

The high-pressure resonance igniter was tested with ambient propellants. The uncooled workhorse thrust chamber and the concentric orifice injector (from Contract NAS3-14352) were utilized for all tests with both ambient propellants and cold propellants [259° R hydrogen and 375° R oxygen (139° K hydrogen and 208° K oxygen)] at a chamber pressure of 300 psia (207 N/cm^2) and a mixture ratio of 4.7:1 (o/f).

Igniter flowrate and mixture ratio were systematically varied to determine the effects of igniter energy on thruster ignition delay. All thruster parameters were held constant at nominal conditions.

Test Facility

Testing was conducted at CTL-4, Cell 29, of the Santa Susana Field Laboratory. This facility was designed specifically for carrying out gaseous oxygen/gaseous hydrogen test firings at simulated altitude conditions with ambient temperature and temperature-conditioned propellants. A detailed description of the facility and schematic flow diagram representing one of its two test positions was given in the February 1971 Monthly Progress Report, ASR 71-79. The hardware installation is shown in Fig. 27.

Test Hardware

Igniter. The resonance igniter is comprised of a sonic hydrogen nozzle, a cooled mixing chamber, a resonance cavity, an oxidizer valve, and a cooled throat assembly. A photo and schematic diagram of the igniter are shown in Figs.28 and 29 respectively. The igniter is designed to operate at inlet pressures of 375 psia (259 N/cm^2), a core flowrate of 0.04 lb_m/sec (0.018 Kg/sec) and a mixture ratio of 1.0:1 (o/f). In addition, an oxidizer coolant flow of 0.04 lb_m/sec (0.018 Kg/sec) is used to cool the mixing chamber and throat tube and to augment the igniter throat mixture ratio to 3.0:1 (o/f). This configuration has been tested during igniter only testing at the LAD igniter facility.

In reducing the igniter flow to a half, the igniter chamber and inlet pressures are reduced by a half. The igniter was successfully check-fired during igniter only tests with these conditions. However, when the igniter

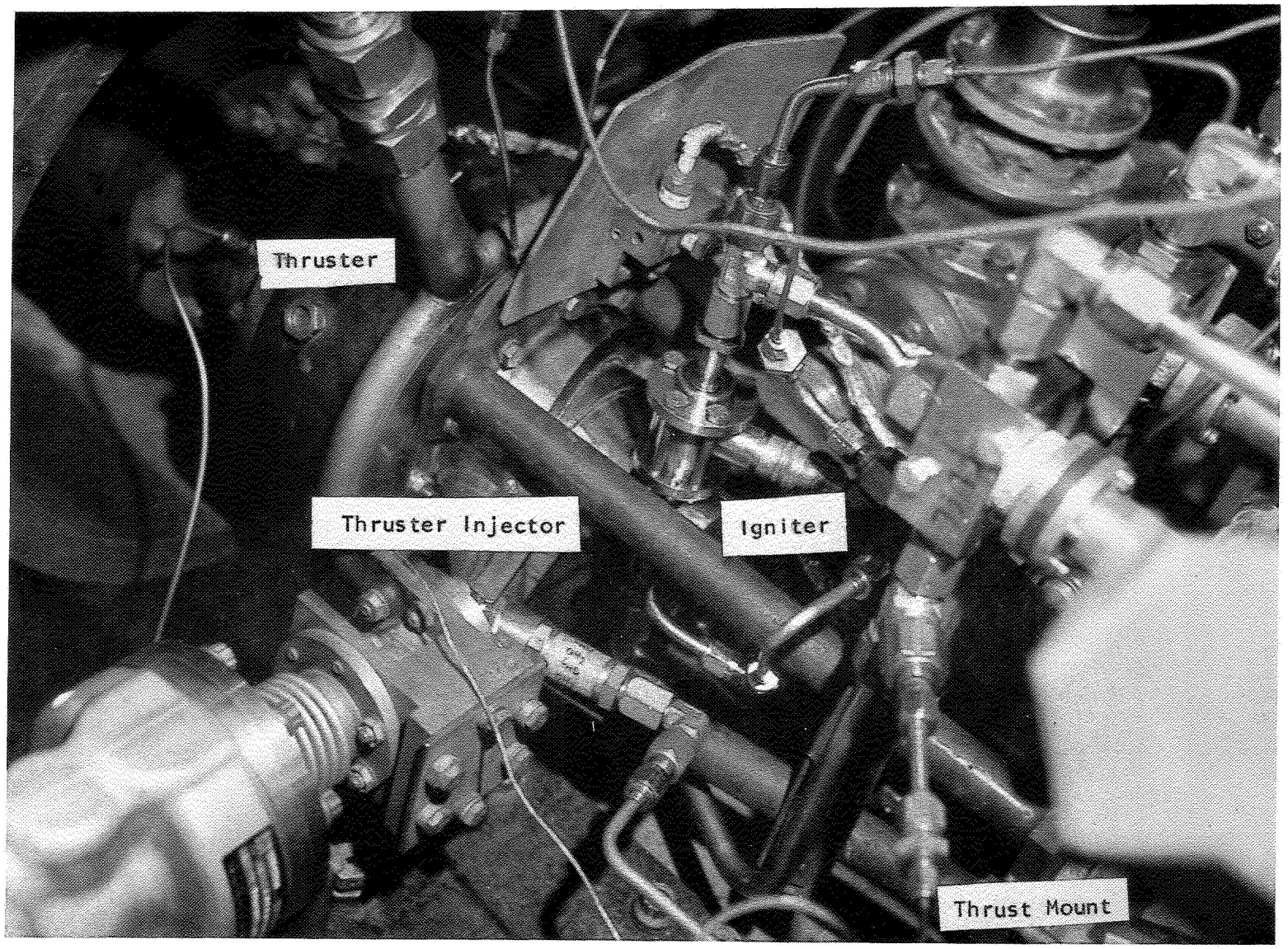

Fig. 27. Auto-Ignition/Thrustor Installation

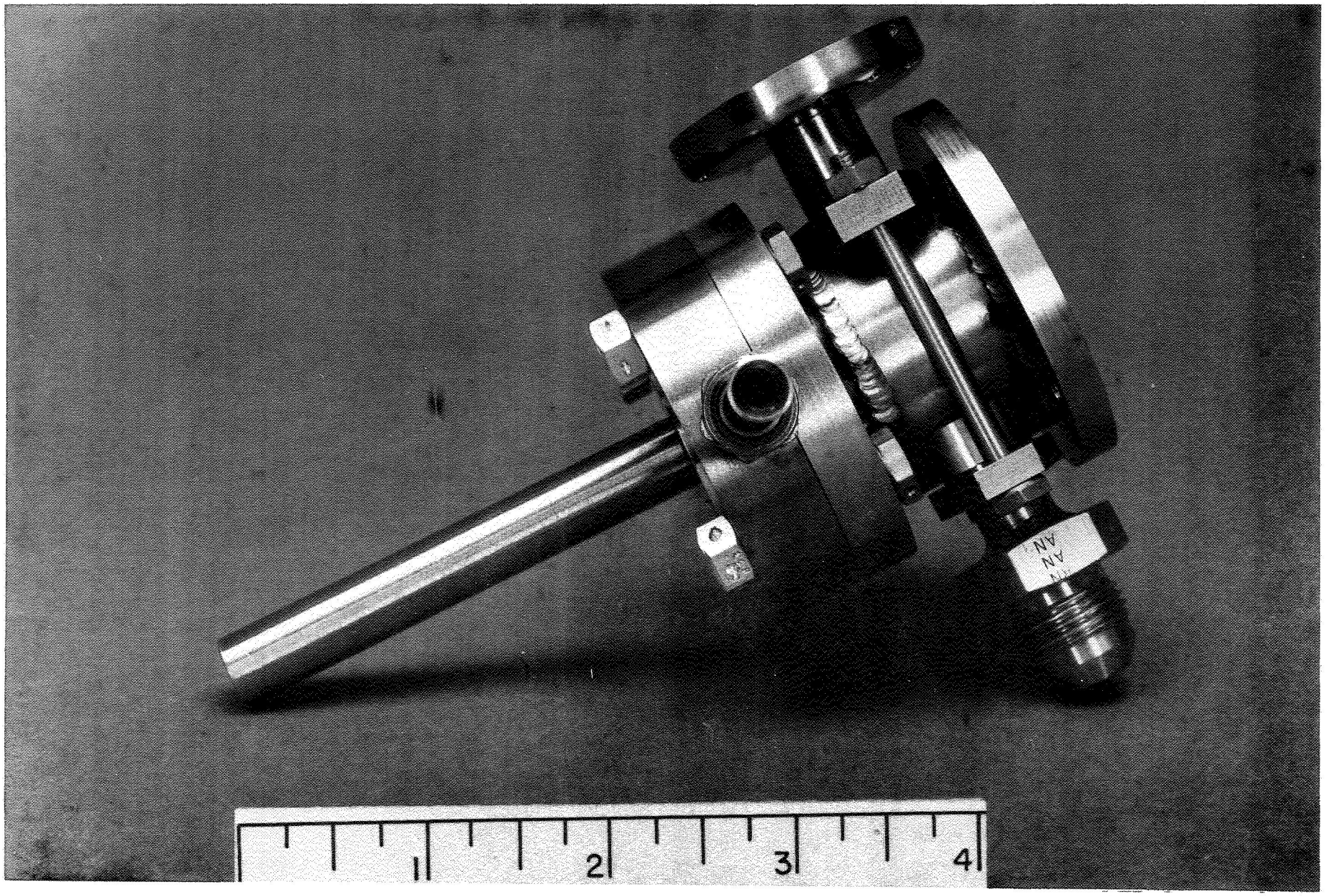

Fig. 28 Auto-Igniter Assembly

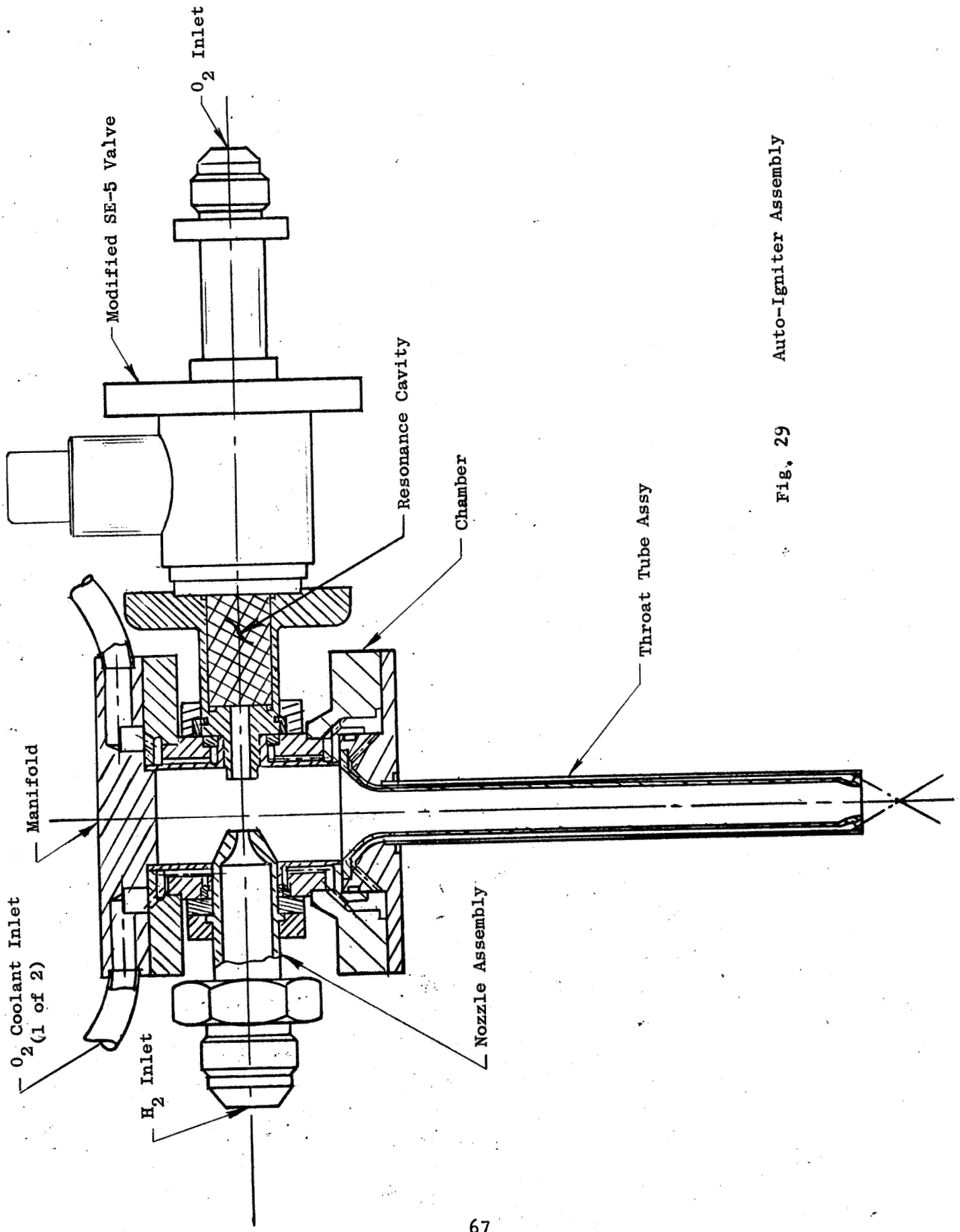

Fig. 29 Auto-Igniter Assembly

is used with a 300-psia (207-N/cm^2) chamber pressure thruster, the reduced inlet pressures are well below the thruster chamber pressure. To prevent back flow of thruster combustion gases into the igniter system, the feed lines were orificed (sonic) to raise the inlet pressure well ab ove the thruster chamber pressure. Since this particular configuration (with orifices) has not been tested, igniter only check-firing were conducted to calibrate the system.

Thruster Assembly. The thruster assembly was made up of an uncooled workhorse thrust chamber and concentric orifice injector. These components have been previously successfully hot-fired on Contract NAS3-14352.

Concentric Orifice Injector. The concentric orifice injector was comprised of the propellant inlets, an oxidizer dome which incorporates a mounting surface for either a spark, catalytic or resonance igniter, an oxidizer distribution plate, an injector body which includes the fuel manifold, a solid copper (OFHC) face and 54 concentric elements. Instrumentation for pressure and temperature measurements are provided for sensing injector operating conditions. Acoustic cavities are located at the periphery of the injector face just inboard of the film coolant injection ring which is incorporated into the thrust chamber design. A complete description of design and operation details were given in the February Monthly Progress Report, ASR 71-79.

Heat Sink Chamber. The heat sink thrust chamber assembly is comprised of a film coolant ring and adapter, chamber spacer and a nozzle. The basic configuration has an injector-to-throat length of 5.00 inches, duplicating the

projected geometry of the subsequent regenerative or dump-cooled flight-type chambers (L* = 14.5). The nozzle is truncated at an area ratio of 3.2. Spacers provide the capability of increasing chamber length to increase L* as required to improve performance. The configuration tested had a 1-inch spacer for an L* of 19. The chamber bodies and spacers are fabricated from OFHC copper billets. Additional details have been provided in the February Monthly Progress Report, ASR 71-79.

Test Summary

The summary of tests conducted during this high-pressure resonance igniter/thruster test effort is presented in Table 11. The test effort consisted of igniter energy evaluation and igniter/thruster response demonstration.

The igniter energy evaluation test series was conducted to evaluate the capability of the igniter to provide rapid ignition of the main propellant flowrate for a range of igniter energy. Igniter energy was varied by changing core flowrates from 0.5 to 1.0 percent of main propellant flow and by changing igniter core mixture ratio from 0.32:1 to 1.02:1 (o/f). Overall igniter mixture ratio varied from 1.64:1 to 2.88:1 (o/f).

The capability of the igniter/thruster to be ignited within the specified time limitation (50 milliseconds) was demonstrated.

TABLE 11

HIGH-PRESSURE RESONANCE IGNITER/THRUSTER TEST MATRIX

Test No.	THRUSTER Chamber Pressure lb/in^2	N/cm^2	Propellant Temperature T_O R	K	T_F R	K	IGNITER $\dot{W}_t$ lb_m/sec	Kg/sec	$\dot{W}_{ign}$* lb_m/sec	Kg/sec	Ign.MR o/f	Total MR o/f	Results
1	290	200	237	298	525	292	.0798	.0359	.0401	.0180	.93	2.83	Effect of Igniter MR on: Thruster Ignition Ambient Propellants
2	290	200	536	298	526	292	.0774	.0348	.0369	.0166	.61	2.39	
3	290	200	536	298	528	293	.0777	.0350	.0364	.0164	.41	2.02	
4	290	200	537	298	526	292	.0785	.0353	.0385	.0173	.83	2.72	
5	289	199	537	298	526	292	.0772	.0347	.0366	.0165	.62	2.42	
6	289	199	538	299	528	293	.0769	.0346	.0350	.0158	.37	2.01	
7	288	199	536	298	526	292	.0768	.0346	.0350	.0158	.37	2.01	
8	289	199	537	298	528	293	.0741	.0333	.0330	.0149	.57	2.52	
9	280	193	415	231	249	138	.0819	.0369	.0427	.0192	1.02	2.88	Effect of Igniter MR on: Thruster Ignition Conditioned Propellants
10	281	194	348	193	239	133	.0792	.0356	.0392	.0176	.85	2.74	
11	302	208	360	200	221	123	.0770	.0347	.0362	.0163	.59	2.37	
12	300	207	365	203	222	123	.0763	.0343	.0346	.0156	.33	1.93	
13**	-	-	396	220	239	133	--	--	--	--	--	--	
14	299	206	363	202	217	121	.0808	.0364	.0408	.0184	.74	2.46	
15	302	208	357	198	357	198	.0812	.0365	.0408	.0184	.59	2.17	
16	301	208	354	197	318	177	.0766	.0345	.0348	.0157	.32	1.90	

* GO_2 coolant flow not included
** No^2 ignition

TABLE II(cont'd)

HIGH-PRESSURE RESONANCE IGNITER/THRUSTER TEST MATRIX

	THRUSTER						IGNITER						
Test No.	Chamber Pressure		Propellant Temperature				$\dot{W}_t$		$\dot{W}_{ign}$*				Results
	lb/in^2	N/cm^2	T_o R	T_o K	T_F R	T_F K	lb_m/sec	Kg/sec	lb_m/sec	Kg.sec	Ign.MR o/f	Total MR o/f	
17	301	208	354	197	219	122	.0385	.0173	.0192	.00864	.81	2.63	Effect of Igniter MR on: Thruster Ignition at reduced Igniter Flow Rate and Conditioned Propellants
18	304	210	355	197	221	123	.0371	.0167	.0194	.00873	.67	2.19	
19	305	210	343	191	213	118	.0351	.0158	.0199	.00896	.51	1.65	
20	303	209	344	191	214	119	.0389	.0175	.0193	.00869	.82	2.83	
21	303	209	349	194	216	120	.0371	.0167	.0196	.00882	.66	2.15	
22	302	208	354	197	204	113	.0345	.0155	.0197	.00887	.51	1.64	

* GO_2 coolant flow not included

Data Analysis

Twenty-two igniter/thruster tests were conducted. In addition to these tests, 6 igniter only tests were conducted to check out igniter operation and calibrate the igniter system prior to thruster ignition testing. The high-pressure APS thruster was successfully and repeatedly ignited during this test series while the igniter mixture ratio and flowrate were varied and thruster propellant inlet temperatures were changed.

The high-pressure resonance igniter/thruster test matrix performed is presented in Table II.

Analysis of the data indicated that there was no effect in the thrust response produced by the changes in mixture ratio at ambient vs conditioned propellant temperatures. And no effect on thrust response was measured during the mixture ratio survey conducted with conditioned propellants and at reduced flowrate.

As is noted in Table II, one no-ignition test was recorded during this test series (Test 13). The test records have been thoroughly reviewed and no revealing evidence as to the cause of the no-ignition was discovered. The records show that neither the igniter nor the thruster ignited. The thruster oxidizer and fuel valve inlet propellant temperatures were recorded as 396° R (220° K) and 239° R (133° K), respectively, which were well within the range of propellant temperatures recorded for tests prior and subsequent to this test. And therefore, they should not have been deleterious. The recorded igniter oxidizer and fuel valve inlet pressures were 424 psia (293 N/cm^2) and 412 psia (284 N/cm^2) which produced an igniter core mixture ratio of 0.69:1 o/f and

total of 2.33:1 o/f. As evidenced by other tests in the series, successful ignitions were obtained at these conditions. However, post-test hardware examination and test results on additional igniter-only testing indicate a potential cause.

Post-test examination of the igniter oxidizer test valve poppet (Teflon) revealed overheating and flowing of the material (Fig. 30). This condition could cause intermittent leakage. Tests conducted on NAS8-25156 on a resonance igniter with a similar valve poppet demonstrated this phenomenon. The valve was overheated, ignitions became erratic, the valve was refurbished and 100-percent reliable ignitions were obtained.

Igniter fuel leads of approximately 0.010 second were used on all the auto-igniter/thruster ignition tests. Resonance cavity temperatures were sufficient to cause flowing of the Teflon seat in the SE-5 test valve. The irregular surface of the valve poppet could cause leakage into the cavity destroying the resonance heating. Future efforts should be conducted with a metal valve poppet and minimize the fuel lead to minimize valve heating.

Advanced resonance igniters are currently being investigated which will eliminate the requirement for a close-coupled oxidizer valve.

During the low flowrate testing, the igniter throat tube assembly was overheated and eroded at the downstream end. The throat tube assembly is clearly illustrated in Fig. 29. Analysis of the test data during the low flowrate

As Fabricated

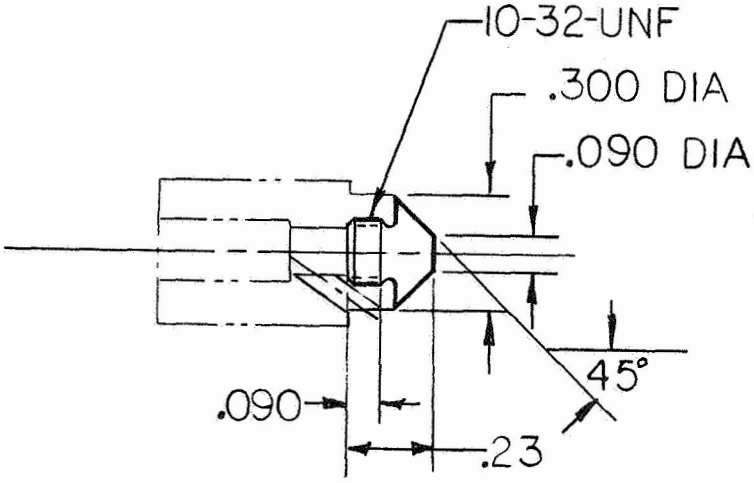

Post-Test Condition

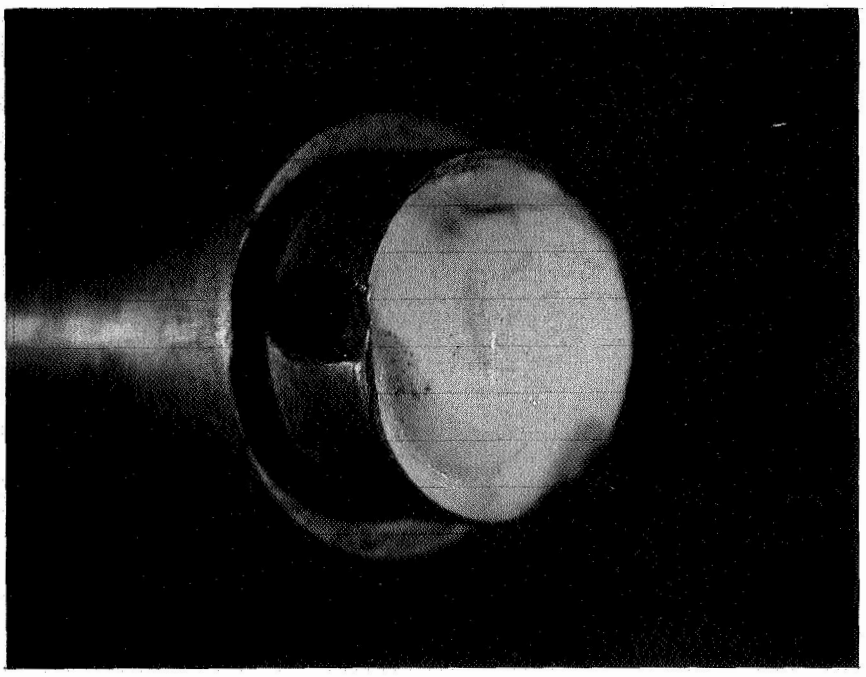

Auto-Igniter/Thruster
Oxidizer Valve Poppet

Fig. 30

testing revealed that the igniter chamber pressures of tests subsequent to the first low flowrate test were approximately one-half the value attained during the first test. Therefore, it is hypothesized that erosion of the throat tube assembly took place or started during the first test and probably progressed during the tests which followed. The cause of erosion is attributed to the condition that the tube coolant flow was reduced in direct proportion to the reduction in the igniter core flowrates. Due to the reduced flowrates, the gas-side convective heat transfer coefficient would be reduced proportionally to the eight-tenths power of the chamber pressure. Therefore, there was a larger reduction in coolant than there was in heat flux. It should be noted that no overheating was experienced on the nominal flowrate tests and the erosion that was experienced on the half nominal flowrate tests did not affect the ignition capability of the igniter.

Conclusions

Twenty-two igniter/thruster tests were conducted with an additional 6 igniter-only tests. This test series demonstrated the capability of the auto-igniter to provide rapid ignition of the main propellant flowrate. The testing demonstrated 90 percent of main thruster thrust within approximately 0.045 seconds from the start of fuel main valve movement. The ignition capability was demonstrated over a range in igniter core mixture ratio of from 0.32:1 to 1.02:1 (o/f) and overall igniter mixture ratio from 1.64:1 to 2.88:1 (o/f) and flowrates from 0.5 to 1.0 percent of main propellant flow. And, main propellant inlet temperatures were varied over a range of from 348° R (193° K) O_2, 217° R (121° K) H_2 to 538° R (299° K) O_2, 528° R (293° K) H_2.

TASK III - IGNITION SYSTEM PRELIMINARY DESIGN

During Task III, the results of Task II testing are being used to conduct a preliminary design of a complete ignition system. This effort is being coordinated with the NASA Project Manager to ensure the latest available thruster designs are incorporated. The operational limits (propellant inlet temperature and pressure) and the required sequencing and geometric constraints obtained from the Task II tests are major design input parameters.

The preliminary designs will be completed for the spark igniter and auto-igniter for the high chamber pressure [300 psia (206.9 N/cm^2)] application. The designs will include a layout of the propellant plumbing, and the mechanical components and the operating characteristics and limitations will be delineated. System weight, volume and propellant usage data will be calculated.

This task was initiated during this report period. For each of the igniter system types, designs are being made for a system which provides ignition only and for a system which provides ignition and pulse mode operation.

SPARK IGNITION SYSTEM

The preliminary design(s) for the spark ignition system are shown in Fig. 31. For the ignition only application, the igniter system is closely integrated with the thruster assembly. The igniter propellants are manifolded to the

PRELIMINARY SPARK IGNITION SYSTEM DESIGN

IGNITION ONLY

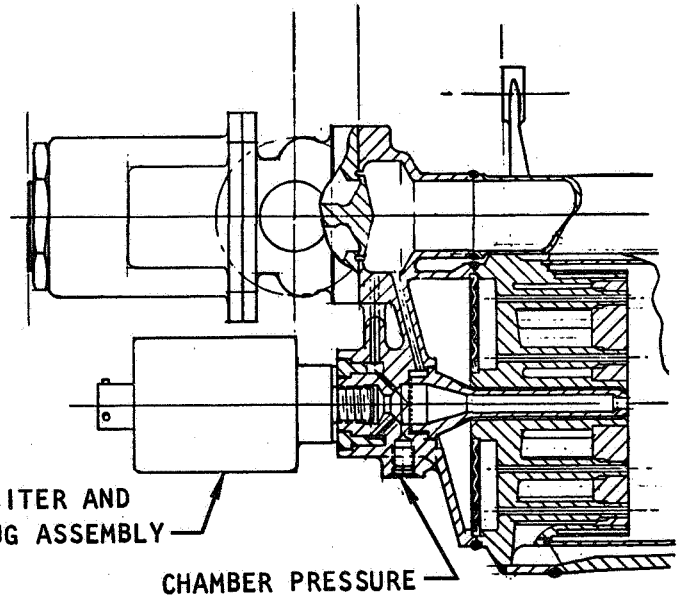

IGNITION AND PULSE MODE

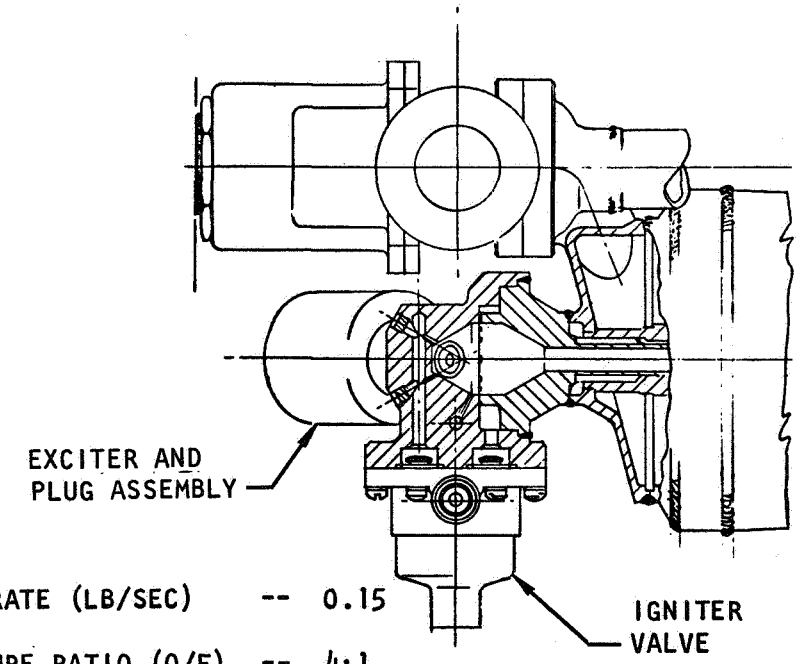

• 0.02	--	FLOWRATE (LB/SEC)	--	0.15
• 4:1	--	MIXTURE RATIO (O/F)	--	4:1
• NONE	--	VALVE POWER (WATTS)	--	30 (PULL IN - 50 MSEC) 6 CONTINUOUS
• 3.5 (100 MSEC)	--	SPARK POWER (WATTS)	--	3.5 (100 MSEC) (EACH)
		SIGNALS		
• SPARK	--	COMMAND	--	VALVE AND SPARK
• CHAMBER PRESSURE	--	MONITOR	--	CHAMBER PRESSURE
• 1.3	--	WEIGHT (LBS)	--	5.4

Fig. 31

igniter immediately downstream of the main propellant valves. (No igniter valves are required.) A single integrated exciter/plug unit is shown; however, a second unit can be installed if reliability analysis indicates a requirement for redundancy. If the igniter is required to perform the ACS function (very small impulse bits), separate igniter valves and higher flowrates are required. This igniter would provide approximately 50 pounds thrust. Electrical power is required for the propellant valve in addition to the spark power.

AUTO-IGNITION SYSTEM

A preliminary auto-ignition system design is also being made for the high-pressure SS/APS thruster application (Fig. 32). For the ignition only application, no electrical power is required. The propellants are manifolded to the auto-igniter immediately downstream of the main propellant valves. Manifold volumes and volumetric flowrates will provide a short hydrogen lead to the auto-igniter. A check valve is employed at the end of the resonance cavity on the current designs. Advanced resonance igniter designs are currently being evaluated which will eliminate the need for the check valve and will potentially operate with any propellant sequencing. If the igniter is required to perform the ACS function (very small impulse bits), separate igniter valves and higher flowrates are required. The igniter proves 50 pounds thrust at an overall mixture ratio of 4.0. The only electrical power required for this system is for valve actuation. This configuration with close-coupled valves is virtually identical to that evaluated experimentally on this program.

The design efforts will be completed during the next report period.

PRELIMINARY AUTO-IGNITION SYSTEM DESIGN

IGNITION ONLY

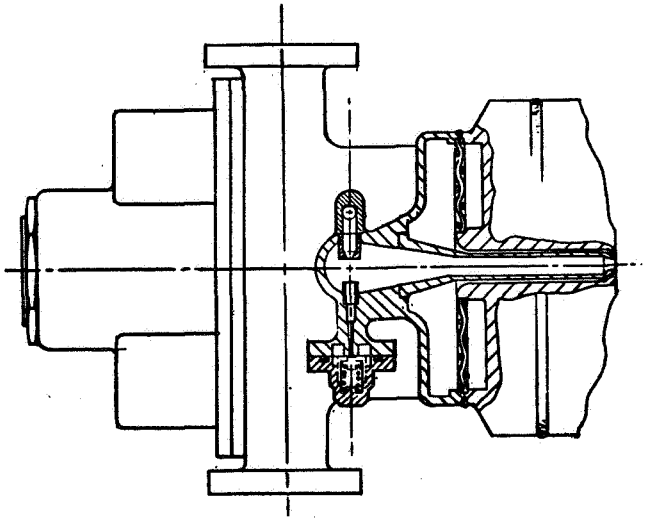

IGNITION AND PULSE MODE

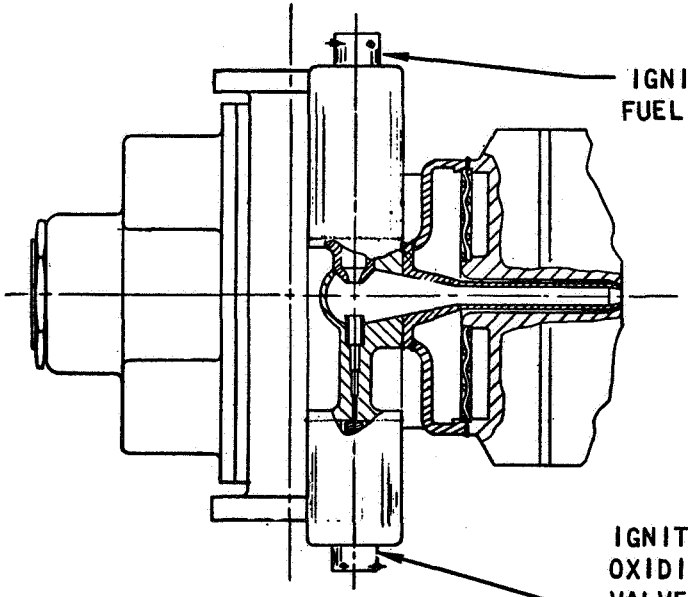

• 0.02	--	FLOWRATE (LB/SEC)	--	0.15
• 4:1	--	MIXTURE RATIO (O/F)	--	4:1
• NONE	--	VALVE POWER (WATTS)	--	30 (PULL IN - 50 MSEC) (EACH) 6 CONTINUOUS
• NONE	--	SPARK POWER (WATTS)	--	NONE
		SIGNALS		
• NONE	--	COMMAND	--	VALVE
• CHAMBER PRESSURE	--	MONITOR	--	CHAMBER PRESSURE
• 0.9	--	WEIGHT (LBS)	--	2.5

Rocketdyne
North American Rockwell

Fig. 32

space shuttle engine
AUXILIARY PROPULSION SYSTEM

TASK IV - REPORTING REQUIREMENTS

In addition to the monthly, quarterly and final reports, a program plan, design reports, and test plans are required in this Task. The program plan, all design reports, and all test plans were submitted as planned. The only submittal during March was the APS Ignition System Monthly Technical Progress Narrative, ASR 71-79, March 1971.

A formal presentation covering the efforts on this contract was presented to the Space Transportation System Propulsion Technology Conference on 7 April 1971 at Marshall Space Flight Center.

PROBLEMS

No major problems have occurred which will affect the overall program technical, schedule or cost status. The overall program schedule and costs are approximately as planned.

WORK TO BE PERFORMED NEXT REPORT PERIOD

TASK I - IGNITER DESIGN AND FABRICATION

All effort on this Task has been completed.

TASK II - IGNITER TESTS

All effort on this Task has been completed.

TASK III - IGNITER SYSTEM PRELIMINARY SYSTEM

Effort on this Task will be completed during the next report period. This effort will continue until 30 April 1971. Based upon the Task II test results, the latest thruster designs, information obtained from vehicle contractors, and system ground rules specified by NASA, spark ignition and resonance auto-ignition system designs will be completed for the high-pressure application.

NATIONAL AERONAUTICS AND SPACE ADMINISTRATION	CONTRACT PROGRESS SCHEDULE	REPORT FOR MONTH ENDING FEBRUARY 1971	FORM APPROVED. BUDGET BUREAU NO. 104-R0007	9. NASA Use Only a. NASA CODE
1. CONTRACT TITLE Space Shuttle Auxiliary	2. CONTRACTOR (Name and address) Rocketdyne Division, North American Rockwell Corp. 6633 Canoga Avenue; Canoga Park, California 91304		3. CONTRACT NO. NAS3-14351	b. PROJECT MGR.
	4. APPROVED (Contractor's Project Manager) [signature]	PREPARATION DATE 3/22/71	5. NASA APPROVED SCHEDULE DATE	c. EVALUATION DATE

6. REPORTING CATEGORY	7. 1970 J A S O N D / 1971 J F M A M	8. TECH. OBJECTIVE % COMP.	d. EXCEPTION CATEGORY e.	f.	g.
TASK I IGNITION DESIGN & FABRICATION					
TASK II IGNITER TESTING					
TASK III IGNITION SYSTEM PRELIM. DESIGN					
TASK IV REPORTS AND PROGRAM MANAGEMENT					

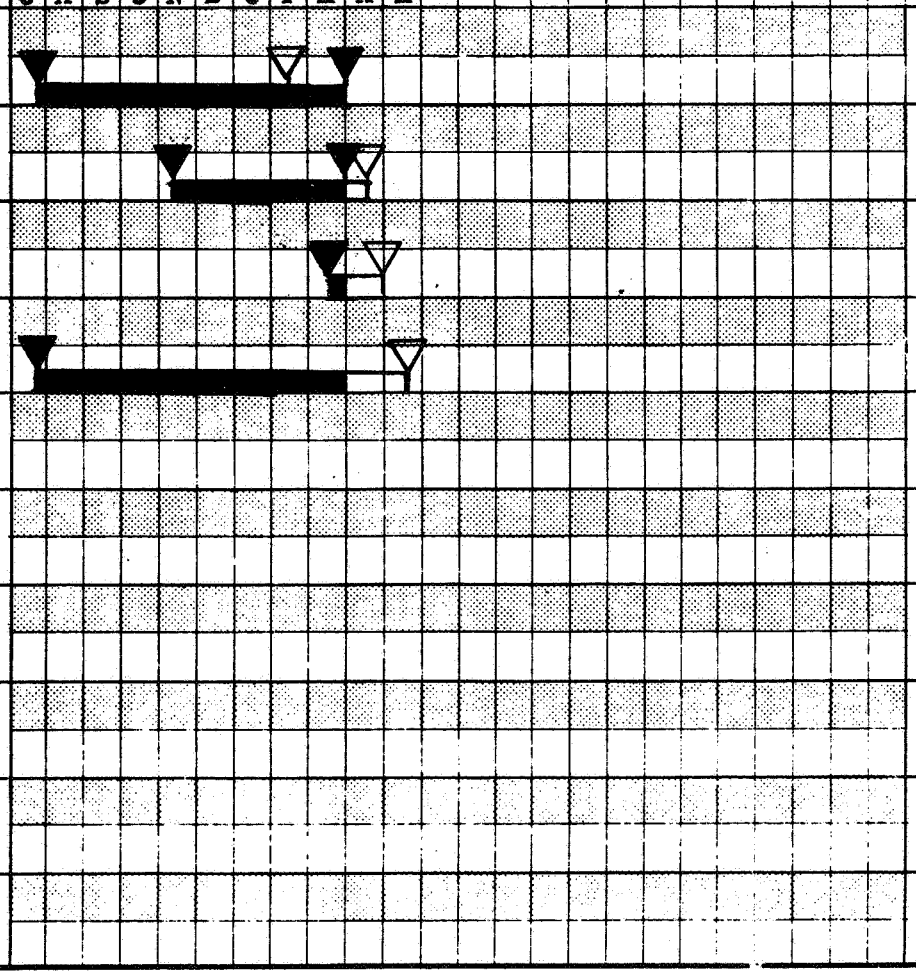

NASA-C-63 (Rev. 1-68)

NASA APPROVED SCHEDULE

CONTRACTOR'S WORKING SCHEDULE