(NASA-RP-1132) AERONAUTICAL FACILITIES CATALOGUE. VOLUME 1: WIND TUNNELS (National Aeronautics and Space Administration) 421 p HC A18/MF A01 CSCL 14B H1/09 N85-18991 Unclas 13581

NASA RP-1132

# AERONAUTICAL FACILITIES CATALOGUE

## Volume 1

# WIND TUNNELS

JANUARY 1985

NASA

NASA RP-1132

# AERONAUTICAL FACILITIES CATALOGUE

## Volume 1

# *WIND TUNNELS*

COMPILED AND EDITED BY

Frank E. Peñaranda

and

M. Shannon Freda

Office of Aeronautics and Space Technology

NASA Scientific and Technical Information Branch 1985
National Aeronautics and Space Administration
Washington, DC

ORIGINAL PAGE IS
OF POOR QUALITY

40 x 80 x 120 Wind Tunnel, NASA Ames Research Center

# ACKNOWLEDGMENTS

The editors wish to thank all of the contributors in the various U.S. government laboratories, industry, and academia for their cooperation and assistance in providing the up-to-date technical information, schematics, and performance charts shown in these volumes. We are grateful to the European nations and Japan who responded to this survey and helped make this a more complete catalogue.

We wish to recognize the outstanding effort and cooperation given to us by the National Aeronautics and Space Administration and Department of Defense scientists and engineers who had the difficult task of reviewing, verifying, and analyzing the information in this catalogue. Their knowledge and experience in their fields made it possible to provide the assessment of comparable facilities as a key feature.

*Wind Tunnels*

| | |
|---|---|
| A. M. Cary, Jr. | *Chief Engineer, High Speed Aerodynamics Division Langley Research Center* |
| Richard J. Margason | *Head, Analytical Methods Branch Langley Research Center* |
| L. W. McKinney | *Assistant Chief, Transonic Aerodynamics Division Langley Research Center* |
| Lado Muhlstein, Jr. | *Assistant Chief, Aerodynamics Division Ames Research Center* |
| Ross G. Roepke | *Chief, Facility Planning Division Arnold Engineering Development Center* |

| | | |
|---|---|---|
| *Airbreathing Propulsion Facilities* | Arthur J. Gnecco | *Chief, Aeronautical Facilities Engineering Branch Lewis Research Center* |
| | Lawrence E. Macioce | *Deputy Division Chief, Aeropropulsion Facilities and Experiments Division Lewis Research Center* |
| | John S. Soileau | *Chief, Propulsion Technology Arnold Engineering Development Center* |
| *Flight Simulation Facilities* | B. R. Ashworth | *Langley Research Center* |
| | Anthony M. Cook | *Assistant Chief (Operations) Flight Systems and Simulation Research Division Ames Research Center* |

*Editors:*

Frank E. Peñaranda
*Director of Facilities*

M. Shannon Freda

*Office of Aeronautics and Space Technology*
*National Aeronautics and Space Administration*
*Washington, D.C. 20546*

*January 1985*

# PREFACE

This catalogue updates and supplements previous surveys conducted on Aeronautical facilities, particularly Wind Tunnels. It is more extensive than previous efforts in that it also includes Flight Simulators and Propulsion Component facilities in addition to the wind tunnel and engine test stand data provided by the other surveys. Moreover, foreign (non-U.S.) facilities information, generally missing from most of the previous compilations, has also been included. Due to its broad coverage, the information in this catalogue has been divided into two volumes: Volume I for Wind Tunnels, and Volume II for Airbreathing Propulsion and Flight Simulation facilities.

The National Aeronautics and Space Administration (NASA) undertook this survey primarily to form a current data base from which to assess its own capabilities and that of the United States in Aeronautical Research and Development, particularly in relation to that of the Western World. This assessment is a continuing one aimed at underscoring where the principal facility strengths and weaknesses exist and where future emphasis must be placed to ensure continued excellence in the research, development, and testing of future aeronautical vehicles and systems.

A secondary objective of this survey was to create a comprehensive guide for users and operators of aeronautical facilities. It is the latter objective that has actually driven the extensive effort behind this catalogue in an attempt to present the available information in the most accurate, understandable, and useful manner. For this reason, several cross-references, tables, and analyses have been included in these two volumes.

All the information contained in these volumes has been provided or verified by the facility owners or operators. The data-gathering process was slow and lengthy to ensure accuracy and thoroughness, although the ultimate product can reflect no more than the effort put in it by the individual contributors. First, a suitable format for presenting the data was designed. The objective was to present the catalogue user with as much "quick-glance" information as possible on the principal features of a facility so as to make a search task simpler. The next step involved a literature search of all previous surveys and reports to form a data base. This data base was transcribed into the new format and sent to the appropriate facility owners/operators for editing and verification. Owners/operators were given the option to either include or exclude their facilities, including currently inactive or standby facilities. However, permanently deactivated facilities have not been listed. Where particular facilities provided by an owner/operator have been omitted, it is very likely that they failed to meet the criteria established for each category of facility.

A special feature of this catalogue is the identification of comparable facilities that may serve as alternatives to a user's research or test needs. A select group of experts from NASA and the Department of Defense in each facility category reviewed the available data for each facility and created the various tables and guides provided in the appropriate locations throughout the catalogue, along with detailed discussions of the criteria used in their evaluations.

Of particular interest in this survey was the inclusion of the major facility capabilities in the rest of the Western World and Japan. Laboratories and government organizations in each of the countries for which some information was already available were solicited for contributions and/or for their verification of the available data. Good responses were received for wind tunnels, and a fair response was received for engine research and test facilities. However, little or no response was received for the flight simulation or propulsion component facilities. The foreign countries covered by this catalogue include Canada, France, the Federal Republic of Germany, Japan, the Netherlands, and the United Kingdom. Although other aeronautical facilities may exist in other countries, either they were not considered major or no information was solicited from those countries.

The editors regret any undetected errors of omission or commission and welcome any corrections, additions, comments, or suggestions for improving future versions of this catalogue.

# CATALOGUE OUTLINE AND STRUCTURE

The complete *Catalogue of Aeronautical Facilities* is composed of two volumes:

Volume I – Wind Tunnels

Volume II – Airbreathing Propulsion and Flight Simul tors

The two volumes are similarly structured and can stand alone or as a set. Each is divided into major sections that cover a specific class of facilities: Wind Tunnels, Engine Research Facilities, Propulsion Component Facilities, and Simulators. Within each major section, the facilities are grouped according to categories or types such as speed regimes for the wind tunnels, turbine, compressors, and combustors for engine component facilities, etc. Additional subgroupings are also provided as appropriate.

The structure of each volume contains the same general features:

- General Table of Contents
- Introduction for Each Major Section
- Explanation of Format and Content of Data Sheets
- Cross-Index of Facilities by Installation
- Individual Sections by Facility Types
  - Comparable Facility Listings
  - Index and Specific Table of Contents
  - Individual Data Sheets
- List of Installation Addresses
- Glossary

## INTRODUCTION

An introduction to each major section presents the overall content of the section, introduces the specific facility groups and subgroups therein, defines the selection criteria used for the inclusion of individual facilities in the catalogue, defines the technical parameters and the format in which those are presented, and provides some performance and statistical comparison charts for the various facility groups.

## CROSS-INDEX

Since facilities in this catalogue are listed by type, a cross-index by installation is included for each major section. Because it contains the most pertinent parameters and characteristics of each facility, this index also serves as a quick-reference guide to facility capabilities.

## INDIVIDUAL SECTIONS

Facilities showing common basic characteristics, such as transonic tunnels or turbofan engine facilities, are grouped and presented in separate sections. Each section contains an overview of the group's overall capabilities, an assessment and guide of comparable facilities, an index and table of contents of the facilities listed therein, and the individual facility data sheets.

## FACILITY DATA SHEETS

The heart of the catalogue is the detailed information that has been gathered on individual facilities and compiled in the logical groups indicated above. Each facility is presented in a two-page format that contains graphical as well as tabular and narrative information. The main page contains a summary or "quick-glance" chart of the most pertinent information concerning that facility, followed by narrative statements elaborating on the technical capabilities and research or test programs associated with it. The identification in each chart of related or comparable facilities that may be used as alternatives for similar research or test purposes is also included, as is a contact point for additional information. The opposite or facing page shows schematic diagrams of the facility's layout, plus pertinent performance charts if the facility owners/operators have made them available.

## LIST OF INSTALLATION ADDRESSES

Supplementary information on the location of each laboratory or installation referenced in this catalogue is provided in the back of each volume in alphabetical order.

## GLOSSARY

Definitions of abbreviations, acronyms, and the less common terminology used in this catalogue are also provided in the back of each volume.

# CONTENTS


| | Page |
|---|---|
| ACKNOWLEDGMENTS | iii |
| PREFACE | v |
| CATALOGUE OUTLINE AND STRUCTURE | vii |
| INTRODUCTION | 1 |
| EXPLANATION OF WIND TUNNEL DATA SHEETS | 11 |
| CROSS-INDEX BY INSTALLATION | 13 |
| SUBSONIC WIND TUNNELS | 29 |
| TRANSONIC WIND TUNNELS | 125 |
| SUPERSONIC WIND TUNNELS | 187 |
| HYPERSONIC WIND TUNNELS | 237 |
| LIST OF INSTALLATION ADDRESSES | 285 |
| GLOSSARY | 287 |

# INTRODUCTION

The Wind Tunnels in this volume are classified according to speed regime and are presented in the following order:

- Subsonic
- Transonic
- Supersonic
- Hypersonic

Because of their dual use, the propulsion wind tunnels are included in both this volume and in the Airbreathing Propulsion volume. In this volume, however, they have been integrated into the appropriate speed regime section but are clearly identified as propulsion tunnels. Tunnels with interchangeable nozzles and/or test sections to achieve several discrete speed ranges and known as trisonic, polysonic, multisonic, etc., have been double-listed under both Transonic and Supersonic since they are applicable to both areas of research/test.

The intent of this wind tunnel survey was to cover the full spectrum of wind tunnels in the United States and abroad and to be as exhaustive as possible in presenting each and every facility that met the established criteria. Considering the demand placed on the various owners/operators to submit the requested information within the time period specified, it is believed that a very good response was received and that the principal wind tunnel capabilities of the United States, Europe, and Japan are well represented in this catalogue. It is also recognized that some good capabilities may also exist in other countries although these have not been listed. Facilities that have been identified as "standby," but still operable, have also been listed since the decision to deactivate a facility is generally guided by workload and not its obsolescence or capability. On the other hand, those that have been clearly identified as dismantled or permanently shut down have been excluded from this catalogue.

For each catagory of wind tunnel, criteria were chosen to determine which tunnels were to be included and which were to be left out. The intent is to present major facilities that are of research or test and development interest, rather than of pedagogical or training value. Generally, the criteria used were size and speed range, although facilities not meeting these strict criteria but possessing certain unique and desirable features have also been included.

The specific criteria used for each category are as follows:

| Wind Tunnel Category | Minimum Test Section Size (ft) | Speed Range (Mach No.) |
|---|---|---|
| Subsonic | 6 | >0.1 |
| Transonic | 4 | – |
| Supersonic | 2 | 1.2 – 3.5 |
| Supersonic | 1 | 3.5 – 5.0 |
| Hypersonic | 1 | >5.0 |

## COMPARABLE FACILITIES

An attempt has been made in this catalogue to provide the user with a directory of facilities that are comparable in capability and use. However, because of the many factors and parameters that must be considered, the basis for making such an evaluation had to be tailored to each category of wind tunnel (speed regime). Even then, the criteria or figures of merit used were limited to the usual technical parameters available, plus whatever special features of a particular tunnel were known. The intent is to give the users a sense of those facilities that could be used as alternatives in meeting their research or test requirements. Therefore, a facility of lesser capability (size, speed, etc.) was never listed as comparable unless it fit within a tolerable range or grouping of defined capabilities. Otherwise, the comparable facility listed is always at least equal to or better than the referenced one.

For large categories such as Subsonic tunnels, for which (except for some special features) the figure of merit is mostly size and/or speed, the entire list is subdivided into groups of facilities having comparable size and speed range and judged to be similar enough for them to be interchangeable by a user. These groups are designated as Group A, B, C, etc., and are listed at the beginning of each speed regime section along with more detailed explanations of the criteria used.

For the higher speed regimes in which other features such as altitude and cryogenic capabilities, throat and test cell configurations, data gathering capability, etc., are also important, the comparable criteria were applied more strictly. The results were much smaller groups of comparable or interchangeable facilities and a very large number of "unique" ones.

*The data sheets* describing each facility were designed to provide the user of the catalogue with the most salient features/capabilities in an easily readable format. The box at the top of the data sheet attempts to capture the most pertinent technical, as well as "management" and other user information at a glance. Careful consideration was given to the selection of those items of information and technical parameters to be displayed in this box. A principal criterion was that for purposes of uniformity, simplicity, and general ease of reference, the format has to be the same for all wind tunnels. Similar consideration was given to selecting the units used to present the technical information—the most difficult decision being whether to use English or metric units of measurement. A compromise was adopted in which the units used are those of the country where the facility is located or what the tradition at a particular facility or installation dictates. When specific units of measurement are part of a title or proper name of the facility, the traditional units have been left unchanged, irrespective of the system adopted for presenting its technical data.

Detailed descriptions and definitions of the format, parameters, and narrative information contained in these sheets are given in pages 10 through 12.

*The schematics and performance charts* shown for most facilities are those supplied by the owners/operators. Attempts were made to have these available for every facility, but it was not always possible. Moreover, since these were generated by the individual owners/operators, no effort was made to make them uniform either in style or quality, although in some instances, illegible or overly cluttered charts or diagrams have been redrawn or cleared up. The principal purpose for including these charts is to aid a prospective user in becoming more familiar with a facility than by just referencing the tabular and narrative information in the data sheets.

*Statistics* on the overall survey of wind tunnels are shown on the following table and figures 1–4. Figures 5–8 give an indication of the premier facilities in each of the four speed regimes with respect to size, Reynolds number capability, propulsion, Mach number range (for Hypersonics only), and other special features worth noting.

MAJOR WIND TUNNELS DISTRIBUTION

| Location | Subsonic | Transonic | Supersonic | Hypersonic | Total |
|---|---|---|---|---|---|
| UNITED STATES | 42 | 26 (6) | 22 (6) | 30 | 120 (6) |
| NASA | 13 | 10 | 8 | 11 | 42 |
| DOD | 2 | 3 | 6 | 7 | 18 |
| Industry | 17 | 13 (6) | 8 (6) | 12 | 50 (6) |
| Academia | 10 | – | – | – | 10 |
| FOREIGN | 34 | 22 (9) | 16 (9) | 9 | 81 (9) |
| Canada | 3 | 1 (1) | 1 (1) | – | 5 (1) |
| France | 5 | 6 (2) | 3 (2) | 4 | 18 (2) |
| Germany | 4 | 4 (1) | 2 (1) | 1 | 11 (1) |
| Japan | 7 | 5 (2) | 3 (2) | 1 | 16 (2) |
| Netherlands | 2 | 1 | 1 | – | 4 |
| United Kingdom | 13 | 5 (3) | 6 (3) | 3 | 27 (3) |
| TOTAL | 76 | 48 (15) | 38 (15) | 39 | 201 (15) |

( ) Represents the number of Polysonic or multiple test section wind tunnels included as both Transonic and Supersonic.

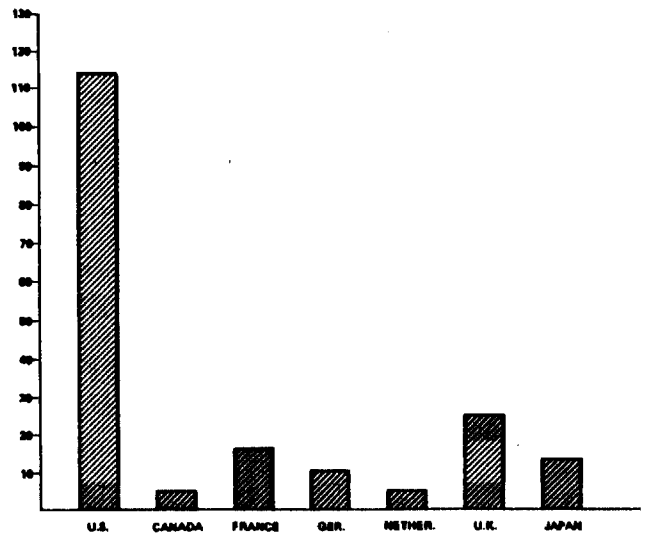


Figure 1. Total wind tunnel population by country.

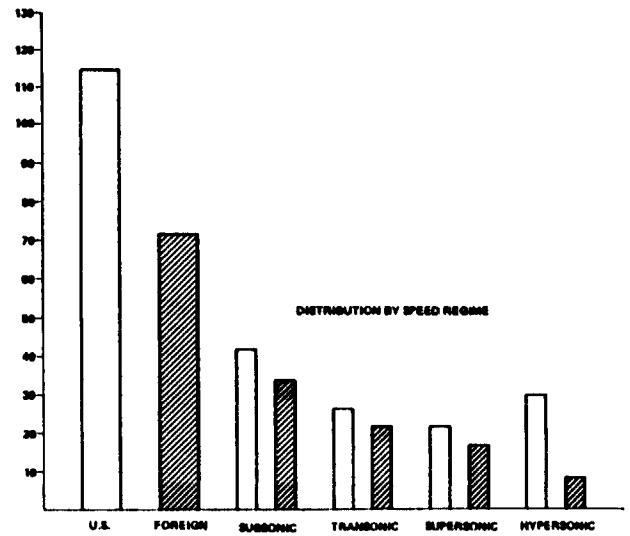


Figure 2. Total wind tunnel population (United States versus foreign).

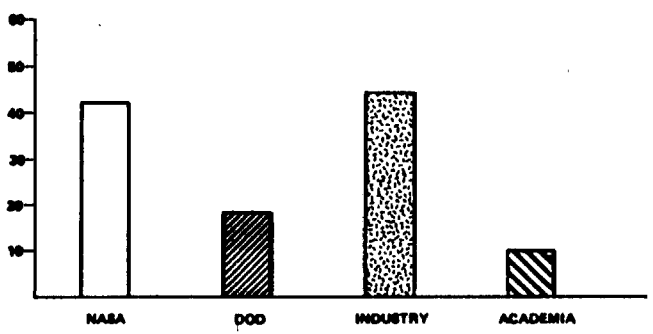


Figure 3. U.S. wind tunnel distribution by owner.

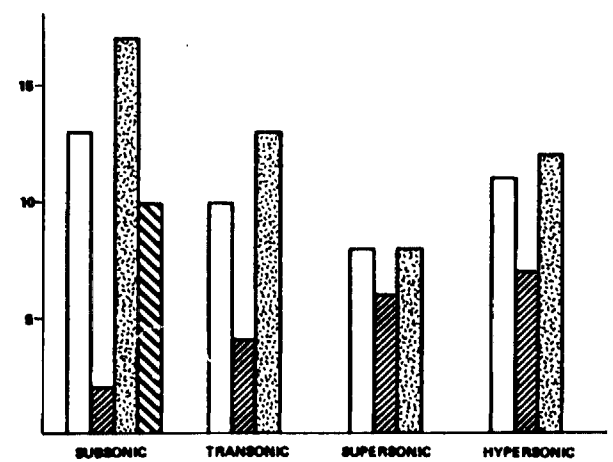


Figure 4. U.S. distribution by owner and speed regime.

# SUBSONIC WIND TUNNELS
## Premier Capabilities

| | SIZE | $R_e$ max | PROPULSION | SPECIAL FEATURES |
|---|---|---|---|---|
| NASA | ARC: 40 x 80 x 120<br>LRC: 30 x 60 | ARC: 40 x 80 x 120<br>12 ft<br>LRC: LTPT | ARC: 80 x 120 | Icing: LeRC AWT (20 ft)<br>IRT (9 x 6)<br>Laser Vel.: ARC 40 x 80 x 120<br>LRC 4 x 7 m<br>Pressure: ARC 12 ft; LRC LTPT<br>Productivity: LRC 4 x 7 m<br>Low Turbulence: ARC 12 ft; LRC LTPT |
| DOD | | | | Flutter: David Taylor 8 x 10 |
| U.S. INDUSTRY | | | Boeing: 9 x 9<br>Rockwell: 7 x 10<br>(simul)<br>McD: 15 x 20<br>(simul) | Icing: Lockheed Icing Tun. (4 x 2.5)<br>Flutter: Northrop 7 x 10<br>Rockwell (L.A.) NAAL<br>Captive Traject: Vought 7 x 10 |
| FOREIGN | Canada: 30 ft<br>Japan: 6 m<br>Neth: DNW (31 ft)<br>U.K.: 5 m | France: F1<br>Germany: HDG<br>KKK<br>Japan: Cryogenic | Canada: 10 x 20<br>France: S-1<br>Neth: DNW | Laser Vel.: France F2<br>Pressure: German HDG; U.K. 5 m<br>Cryogenic: German KKK; Japan Cryogenic<br>Acoustics: France CEPRA 19; Neth. DNW<br>Productivity: France F1; Neth. DNW; U.K. 5m<br>Flutter: Japan Low Speed (TRDI; KHI) |

Figure 5

# TRANSONIC WIND TUNNELS
## Premier Capabilities

| | SIZE | $R_{e_{max}}$ | PROPULSION | SPECIAL FEATURES |
|---|---|---|---|---|
| NASA | ARC: 14 ft<br>11 ft<br>LRC: 16 ft<br>TDT (16 ft) | ARC: 11 ft<br>LRC: NTF<br>TDT<br>0.3 m | LRC: 16 ft (simul) | Cryogenic: LRC NTF & 0.3 m<br>Pressure: LRC NTF & 8 ft TPT<br>MSFC 32 in.<br>Laminar Flow: LRC 8 ft TPT<br>Flutter Tests: LRC TDT |
| DOD | AEDC: 16 T | AEDC: 16 T | AEDC: 16 T | Captive Traject: AEDC 4 ft<br>David Taylor 7 x 10 |
| U.S. INDUSTRY | | Calspan: 8 ft<br>Lockheed: 4 ft<br>Lockheed: Comp. Flow<br>McD - Ca: 4 ft<br>McD - StL: 4 ft<br>Rockwell: 7 ft<br>Vought: 4 ft | Grumman: 26 in (simul)<br>Lockheed: Free Jet | Captive Traject: Calspan 8 ft; Vought 4 ft<br>Acoustics: Rockwell 7 ft<br>Pressure: Lockheed Compressible Flow; All 4 ft<br>Cryogenic: McD 1 ft<br>Flutter Tests: Grumman 26 in; Vought 4 ft<br>Rockwell 7 ft |
| FOREIGN | France: S-1 (26 ft) | Canada: NAE<br>France: S-1<br>Germany: 1 m (TWG)<br>India: 4 ft<br>U.K.: 8 ft Bedford<br>4 ft Warton | France: S-1 | Captive Traject: India 4 ft<br>Icing: France S-1<br>Cryogenic: France T-2<br>Flutter: U.K. 4 ft (Warton)<br>Pressure: India 4 ft; U.K. 4 ft |

Figure 6

# SUPERSONIC WIND TUNNELS
## Premier Capabilities

| | SIZE | $R_{e_{max}}$ | PROPULSION | SPECIAL FEATURES |
|---|---|---|---|---|
| NASA | ARC: 9 x 7<br>8 x 7<br>LeRC: 10 x 10<br>8 x 6 | | LeRC: 10 x 10<br>8 x 6 | Captive Traject: ARC 9 x 7<br>8 x 7 |
| DOD | AEDC: 16 S<br>APTU | WAL: Mach 3 | AEDC: 16 S<br>APTU | Captive Traject: AEDC vK-A |
| U.S. INDUSTRY | Rockwell: 7 ft | Boeing: 4 ft<br>Grumman: 15 in<br>Lockheed: 4 ft<br>McD - StL: 4 ft<br>McD - Ca: 4 ft<br>Rockwell: 7 ft<br>Vought: 4 ft | | Captive Traject: Vought 4 ft<br>Acoustics: Rockwell 7 ft<br>Pressure/Blowdown: All 4 ft |
| FOREIGN | France: S-2 (6 ft) | Canada: NAE<br>Netherlands: SST<br>India: 4 ft<br>U.K.: 4 ft (Warton) | | Captive Traject: India 4 ft<br>Pressure/Blowdown: Netherlands SST; India 4 ft; U.K. 4 ft |

Figure 7

# HYPERSONIC WIND TUNNELS

## Premier Capabilities

| | SIZE | $R_{e_{max}}$ | MACH NO. | SPECIAL FEATURES |
|---|---|---|---|---|
| NASA | ARC: 3.5 ft<br>LRC: 8 ft HTT<br>He 5 ft<br>4 ft Scramjet | LRC: Mach 6<br>Mach 20 He | LRC: He - 22 in. ($20^+$)<br>Mach 20 He<br>Nitrogen (18) | Propulsion: LRC 8 ft HTT<br>4 ft Scramjet<br>Aerothermal: LRC 8 ft HTT |
| DOD | AEDC: vK - B&C<br>NSWC: #9 (5 ft) | NSWC: #8<br>#9<br>WAL: Mach 6 | NSWC: #8a (18)<br>WAL: 20 in (14) | Captive Traject: AEDC vK - B&C<br>Aerothermal: AEDC vk-C |
| U.S. INDUSTRY | Calspan: 96 in<br>48 in<br>Grumman: 36 in | Calspan: 96 in<br>48 in | Calspan: 96 in (24)<br>48 in (20)<br>Fluidyne: 20 in (14)<br>Grumman: 36 in (14)<br>Northrop: 30 in (14)<br>Sandia: 18 in (14) | Propulsion: Gen. Applied Sciences Complex |
| FOREIGN | France: C-2 (4 ft) | | France: C-2 (16) | |

( ) Mach #

Figure 8

| | | | | | | |
|---|---|---|---|---|---|---|
| (2) | (1) SUBSONIC WIND TUNNELS | | | | | COMPARABLE FACILITIES |
| | TEST SECTION SIZE: | (4) | SPEED RANGE: (Mach No.) | (8) | | (14) |
| | DATE BUILT/UPGRADED: | (5) | TEMP. RANGE: | (9) | | |
| (3) | REPLACEMENT COST: | (6) | REYNOLDS NO: (Per ft X $10^{-6}$) | (10) | | |
| | OPERATIONAL STATUS: | (7) | DYNAMIC PRES: ($lb/ft^2$) | (11) | | |
| | | | STAGNATION PRES: (psia) | (12) | | |
| | (13) | | | | | |

TESTING CAPABILITIES: Provides detailed information about the facility. Unique features and special instrumentation are discussed, as well as performance capabilities.

DATA ACQUISITION: Describes the type of systems used for data gathering, the number of channels available, and the form of output.

CURRENT PROGRAMS: Outlines in general language the types of testing currently being conducted in the facilities.

PLANNED IMPROVEMENTS: Describes major improvements, rehabilitations, and modifications being made or being planned on the facility up to Fiscal Year 1985.

LOCAL INFORMATION CONTACT: Lists the name, title, address, and phone number of the person to contact for additional information on the facility.

# EXPLANATION OF WIND TUNNEL DATA SHEETS

The box at the top of each data sheet (see opposite page for sample format) is designed to provide a "quick-glance" digest of the facility's most pertinent characteristics. The quantitative information in the center section is divided into two halves. The right portion contains the salient technical parameters depicting the facility's principal capabilities and operating range. The left portion provides some background and operational information. When a wind tunnel has multiple test sections and/or operating ranges, they have been included if space permits. When a tunnel has multiple legs or different operating modes (e.g., cryogenic, pressurized, etc.), a separate data sheet has been included for each leg or mode.

The following descriptions correspond to the numbered boxes on the opposite page:

1. Title of Wind Tunnel Category (Speed Regimes).

2. Name of the Installation where the facility is located, and when not evident, the name of the owner and city (when this distinction is necessary), and/or foreign country.

3. Proper or generic name of the facility, with additional qualifiers or identifiers as appropriate. When the size of a tunnel is included, the units used are those by which the tunnel is best known.

4. *Test Section Size*: The dimensions of the test section are given in the following order: Height (H), Width (W), and Length (L) unless the cross-section diameter is given and indicated by (dia). The units used are either feet or meters except where inches (in.) or centimeters (cm.) may be indicated. When more than one test section is available, each is listed separately.

5. *Date Built/Upgraded*: Self-explanatory.

6. *Replacement Cost*: Best estimate of the current value (1984) of the facility. Cost is in millions of dollars ($M).

7. *Operational Status*: An indication of the facility's current work load. A "backlog" indicates an overflow of work beyond normal operations. The facility operators should be contacted directly to determine the extent of the backlog. When a facility is currently inactive or on standby, it is so indicated, as is operation on a "demand" basis only.

8. *Speed Range*: Listed in Mach number with ft/sec (or m/sec) also indicated for the Subsonic tunnels. Several speed ranges may be listed in concert with different size test sections or for polysonic tunnels.

9. *Temp. Range*: The tunnels' stagnation temperature(s) is shown in °R or °K.

10. *Reynolds No*: Shown in millions ($10^6$) per either feet or meters.

11. *Dynamic Pressure*: A range given in $lb/ft^2$ or kilo-Newtons per square meters ($kN/m^2$).

12. *Stagnation Pressure*: Given in atmospheres or bars. For some atmospheric tunnels, a notation may indicate that the stagnation pressure is "atmospheric plus dynamic pressure."

13. This space is available for supplementary information on the performance range or special conditions of the tunnel.

14. *Comparable Facilities*: Other facilities with similar characteristics and which may be used as alternatives are listed in this space. When the number of comparable facilities is large, only the identity of their comparable group is given. Refer to the Introduction and the beginning of each speed regime section for an explanation of these groupings.

# CROSS-INDEX BY INSTALLATION

U.S. GOVERNMENT INSTALLATIONS

| Page Number | Location and Facility Description | Test Section (ft) | Speed Range (Mach No.) | Reynolds Number (per ft x $10^{-6}$) | Comments |
|---|---|---|---|---|---|
| | U.S.-NASA | | | | |
| | Ames Research Center | | | | |
| | Subsonic Wind Tunnels | | | | |
| 44 | 80 x 120-ft | 80 x 120 | 100 mph | 0 - 1 | High $R_e$, Propulsion |
| 45 | 40 x 80-ft | 40 x 80 | 300 mph | 0 - 3 | High $R_e$ |
| 107 | 12-ft Pressure Tunnel | 11.3 dia | 0.6 | 0 - 9 | High $R_e$, Pressurized |
| 77 | 7 x 10-ft (1) | 7 x 10 | 0 - 0.33 | 0 - 2.6 | V/STOL |
| 78 | 7 x 10-ft (2) Army | 7 x 10 | 0.33 | 0 - 2.6 | Rotorcraft, Army Facility |
| | Transonic Wind Tunnels | | | | |
| 150 | 14-ft | 13.5 x 13.71 | 0.5 - 1.2 | 2.6 - 4.2 | Standby |
| 151 | 11-ft (Unitary) | 11 x 11 | 0.4 - 1.4 | 1.26 - 9.4 | |
| 182 | 2 x 2-ft | 2 x 2 | 0.2 - 1.4 | 0.5 - 8.7 | |
| | Supersonic Wind Tunnels | | | | |
| 201 | 9 x 7-ft (Unitary) | 9 x 7 | 1.55 - 2.5 | 0.8 - 6.5 | Captive Trajectory |
| 203 | 8 x 7-ft (Unitary) | 8 x 7 | 2.4 - 3.5 | 0.6 - 5.0 | Captive Trajectory |
| 207 | 6 x 6-ft | 6 x 6 | 0.25 - 2.2 | 0.5 - 5.0 | |
| | Hypersonic Wind Tunnels | | | | |
| 258 | 3.5-ft Hypersonic | 3.5 dia | 5, 7, 10 Nominal | 0.3 - 7.4 | Standby |
| | Langley Research Center | | | | |
| | Subsonic Wind Tunnels | | | | |
| 46 | 30 x 60-ft | 30 x 60 | 38 - 132 ft/sec | 1 | Open Throat |
| 49 | 4 x 7-m | 14.5 x 21.8 | 318 ft/sec | 2.1 | Moving Ground, V/STOL |
| 79 | 7 x 10-ft | 6.6 x 9.6 | 0.2 - 0.9 | 0.1 - 3.2 | |
| 122 | Low-Turbulence Pressure (LTPT) | 7.5 x 3 | 0.05 - 0.5 | 0.1 - 15 | 2-D, Pressurized |
| 112 | Vertical Spin Tunnel | 20 dia, 25 H | 132 ft/sec | 0.6 | Vertical Spin |

## U.S. GOVERNMENT INSTALLATIONS

| Page Number | Location and Facility Description | Test Section (ft) | Speed Range (Mach No.) | Reynolds Number (per ft x $10^{-6}$) | Comments |
|---|---|---|---|---|---|
| | **Langley Research Center** | | | | |
| | Transonic Wind Tunnels | | | | |
| 148 | 16-ft | 15.5 x 15.5 | 0.2 - 1.3 | 1.2 - 4.2 | Propulsion Integration |
| 155 | 8-ft | 7.1 x 7.1 | 0.2 - 1.4 | 0.1 - 6 | Pressurized |
| 137 | 0.3-m 2-D Test Section | 8 x 24-in | 0.2 - 0.9 | 120 | Cryogenic |
| 186 | 0.3-m Flex Wall Test Section | 13 x 13-in | 0.2 - 1.1 | 120 | Cryogenic |
| 136 | 6 x 28-in | 6 x 28-in | 0.2 - 1.2 | 4.0 - 25 | 2-D |
| 154 | NTF | 8.2 x 8.2 | 0.2 - 1.2 | 145 | Cryogenic, Pressurized |
| 147 | Transonic Dynamics Tunnel (TDT) | 16 x 16 | 0 - 1.2 | 2.8 Air; 8.5 Freon | Flutter |
| | Supersonic Wind Tunnels | | | | |
| 227 | Unitary Tunnel | #1 4 x 4 | 1.47 - 2.86 | 0.5 - 12.2 | |
| | | #2 4 x 4 | 2.29 - 4.63 | 0.5 - 9.5 | |
| | Hypersonic Wind Tunnels | | | | |
| 246 | 8-ft HTT | 8 dia | 4 - 7.2 | 0.3 - 2.2 | Thermal Structures |
| 265 | 20-in Mach 6 | 20 x 20.5 | 6 | 0.5 - 10.5 | |
| 266 | $CF_4$ | 20-in dia | 6 | 0.3 - 0.5 | |
| 256 | Continuous Flow | 31 x 31-in | 10 | 0.4 - 2.4 | |
| 252 | Hypersonic Helium Tunnel | 22-in dia | 17.6 - 22.2 | 1.1 - 11.3 | Aerodynamic Leg |
| 253 | | 22 or 36-in | 20 or 40 | 1.3 - 6.0 | Fluid Mech. Leg |
| 273 | Hypersonic Nitrogen | 6-in dia | 18 | 0.17 - 0.40 | |
| 251 | Mach 20 High $R_e$ Helium | 5 dia | 16.5 - 18 | 1.9 - 15 | |
| 269 | Mach 8 Variable Density Tunnel | 18-in dia | 8 | 0.1 - 12.0 | |
| 274 | Mach 6 High $R_e$ Tunnel | 12-in dia | 6 | 1.8 - 50 | High $R_e$ Blowdown |
| 280 | Scramjet | 4 dia | 4.7 - 6.0 | 0.13 - 5.2 | Propulsion |
| | **Lewis Research Center** | | | | |
| | Subsonic Wind Tunnels | | | | |
| 110 | 9 x 15-ft | 9 x 15 | 0 - 0.2 | 0 - 1.4 | Propulsion |
| | AWT (Proposed) | 20 dia x 56 L | 0.9 | 3.5 | Icing, Propulsion, No Data Sheet |
| 120 | IRT | 6 x 9 | 0 - 0.5 | 3.3 | Icing |

## U.S. GOVERNMENT INSTALLATIONS

| Page Number | Location and Facility Description | Test Section (ft) | Speed Range (Mach No.) | Reynolds Number (per ft x $10^{-6}$) | Comments |
|---|---|---|---|---|---|
| | **Lewis Research Center** | | | | |
| | Supersonic Wind Tunnels | | | | |
| 200 | 10 x 10-ft | Closed 10 x 10 | 2 - 3.5 | 0.12 - 3.4 | Propulsion |
| | | Open 10 x 10 | 2 - 3.5 | 2.1 - 2.7 | |
| 205 | 8 x 6-ft | 8 x 6 | 0.4 - 2 | 3.6 - 4.8 | Propulsion |
| 233 | 1 x 1-ft | 12 x 12-in | 1.6 - 5.0 | 1.5 - 36 | Internal Fluid Dynamics |
| | **Marshall Space Flight Center** | | | | |
| | Transonic Wind Tunnels | | | | |
| 138 | High Reynolds Number | 32-in dia | 0.3 - 3.50 | 7 - 200 | 2-D, High $R_e$, Pressurized |
| | **U.S. DOD** | | | | |
| | **Arnold Engineering Development Center** | | | | |
| | Transonic Wind Tunnels | | | | |
| 149 | 16T | 16 x 16 | 0 - 1.6 | 0.1 - 6.0 | Propulsion, Flutter |
| 167 | 4T | 4 x 4 | 0.1 - 1.3, 1.6 | 2.0 - 6.5 @ M=1.6 | Captive Trajectory |
| | | | 2.0 | 1.3 - 6.1 @ M=2.0 | Supersonic |
| | Supersonic Wind Tunnels | | | | |
| 199 | 16S | 16 x 16 | 1.5 - 4.75 | 0.1 - 2.6 | Propulsion |
| 198 | APTU | 16 dia | 0 - 4.5 | – | Propulsion, Ramjet |
| 229 | von Karman A | 3 x 3 | 1.5 - 6 | 0.3 - 9.2 | Captive Trajectory |
| | Hypersonic Wind Tunnels | | | | |
| 254 | von Karman B | 50-in dia | 6 or 8 | 0.3 - 4.7 | Captive Trajectory |
| 255 | von Karman C | 25 & 50-in dia | 4, 10 | 0.4 - 1.3 @ M=4 | Aerothermal, Captive |
| | | | | 0.3 - 4.7 @ M=10 | Trajectory |
| | **David Taylor Naval Ship R&D Center** | | | | |
| | Subsonic Wind Tunnels | | | | |
| 76 | 8 x 10-ft | 8 x 10 | 30 - 275 ft/sec | 0 - 1.77 | Flutter |
| | Transonic Wind Tunnels | | | | |
| 153 | 7 x 10-ft | 7 x 10 | 0.25 - 1.17 | 1 - 5 | Captive Trajectory |

U.S. GOVERNMENT INSTALLATIONS

| Page Number | Location and Facility Description | Test Section (ft) | Speed Range (Mach No.) | Reynolds Number (per ft x $10^{-6}$) | Comments |
|---|---|---|---|---|---|
| | **Naval Surface Weapons Center** | | | | |
| | Supersonic Wind Tunnels | | | | |
| 234 | Boundary Layer Channel | 12 x 12-in | 3 - 5 | 2 - 24 | Vertical Test Section |
| 223 | Supersonic #2 | 16 x 16-in | 0.3 - 5 | 0.5 - 21 | Open Jet |
| | Hypersonic Wind Tunnels | | | | |
| 270 | Hypersonic #6 | 17 - 22-in dia | 5 - 8 | 0.6 - 50 | |
| 250 | Hypersonic #8A | 24-in dia | 18 | 0.2 - 0.6 | |
| 249 | Hypersonic #9 | 5 dia | 10, 14.5 | 0.06 - 20 | |
| | **Wright Aeronautical Laboratories** | | | | |
| | Subsonic Wind Tunnels | | | | |
| 114 | Vertical Tunnel | 12 x 15 | 0 - 150 | 0 - 0.91 | |
| | Supersonic Wind Tunnels | | | | |
| 235 | Mach 3 High $R_e$ | 8.2 x 8-in | 3 | 10 - 100 | High $R_e$ |
| | Hypersonic Wind Tunnels | | | | |
| 266 | 20-in | 20-in dia | 12, 14 | 0.4 - 1.0 | |
| 275 | Mach 6 High $R_e$ | 20-in dia, 20-in L | 6 | 10 - 30 | High $R_e$ |

## U.S. INDUSTRY

| Page Number | Location and Facility Description | Test Section (ft) | Speed Range (Mach No.) | Reynolds Number (per ft x $10^{-6}$) | Comments |
|---|---|---|---|---|---|
| | **Boeing Vertol** | | | | |
| 48 | Subsonic Wind Tunnels<br>20 x 20-ft V/STOL | 20 x 20 | 0.325 | 0 - 2.3 | Rotorcraft |
| | **Boeing-Seattle** | | | | |
| 111 | Subsonic Wind Tunnels<br>9 x 9-ft | 9 x 9 | 0.36 | 2 | |
| 100 | Low Speed Research | 8 x 5 | 0.18 | 1.2 | Propulsion |
| 152 | Transonic Wind Tunnels<br>Transonic | 8 x 12 | 0 - 1.15 | 0 - 4 | |
| 224 | Supersonic Wind Tunnels<br>4-ft | 4 x 4 | 1.2 - 4 | 6 - 17 | 2-D Transonic Insert |
| | **Calspan** | | | | |
| 156 | Transonic Wind Tunnels<br>8-ft | 8 x 8 | 0 - 1.35 | 0 - 12.5 | Captive Trajectory, Pressurized |
| 236 | Supersonic Wind Tunnels<br>Ludwieg Tube | 60-in dia Free Jet | 1.2 - 4.5 | 0.04 - 18 | |
| 247 | Hypersonic Wind Tunnels<br>96-in Shock Tunnel | Variable 24 to 96-in dia | 6.5 - 24 | 0.001 - 75 | High $R_e$ |
| 248 | 48-in Shock Tunnel | Variable 24 to 48-in dia | 5.5 - 20 | 0.004 - 50 | High $R_e$ |
| | **FluiDyne** | | | | |
| 164 | Transonic Wind Tunnels<br>66-in | 66 x 66-in | 0 - 1.0 | 0 - 4.5 | |
| 267 | Hypersonic Wind Tunnels<br>20-in | 20-in dia | 11, 14 | 0.7 - 2.2 | Standby |

U.S. INDUSTRY

| Page Number | Location and Facility Description | Test Section (ft) | Speed Range (Mach No.) | Reynolds Number (per ft x $10^{-6}$) | Comments |
|---|---|---|---|---|---|
| | **General Applied Science** | | | | |
| | Hypersonic Wind Tunnels | | | | |
| 281 | High Temp Storage Heater | 25 x 25-in | 0.1 - 12 | 0 - 15 | Propulsion |
| 282 | VAH | 15 x 15-in | 2.7 - 8.0 | 0 - 17 | Propulsion |
| 283 | HPB | 13 x 13-in | 0.1 - 7.0 | 0 - 30 | Propulsion |
| | **General Dynamics** | | | | |
| | Subsonic Wind Tunnels | | | | |
| 73 | 8 x 12-ft | 8 x 12 | 0.37 | 2.5 | |
| 60 | w/Tandem V/STOL | 16 x 20 | 0.2 - 0.08 | 0.1 - 0.6 | |
| | **Grumman** | | | | |
| | Subsonic Wind Tunnels | | | | |
| 90 | 7 x 10-ft | 7 x 10 | 0.18 | 1.73 | Propulsion Simulation |
| | Transonic Wind Tunnels | | | | |
| 180 | 26-in | 26 in Slotted Oct | 0.20 - 1.27 | 2.10 - 27.8 | Flutter, Propulsion Simulation |
| | Supersonic Wind Tunnels | | | | |
| 232 | 15-in | 15 x 15-in | 1.75, 2.2, 2.5, 3, 3.5, 4 | 10 - 60 | |
| | Hypersonic Wind Tunnels | | | | |
| 259 | 36-in | 36-in dia | 8, 10, 14 | 0.2 - 4.5 | Standby |
| | **Lockheed-CA** | | | | |
| | Subsonic Wind Tunnels | | | | |
| 74 | 8 x 12-ft | 8 x 12 | 0 - 293 ft/sec | 1.7 | Ground Effects |
| 120 | Icing Tunnel | 4 x 2.5 | 88 - 308 ft/sec | 2 | Icing |
| | Transonic Wind Tunnels | | | | |
| 161 | Free Jet | 6 x 7 | 0.2 - 2.65 | 0 - 12 | Propulsion |
| 169/210 | 4-ft Trisonic | 4 x 4 | 0.2 - 5.0 | 2 - 30 | High $R_e$, Polysonic |

## U.S. INDUSTRY

| Page Number | Location and Facility Description | Test Section (ft) | Speed Range (Mach No.) | Reynolds Number (per ft x $10^{-6}$) | Comments |
|---|---|---|---|---|---|
| | **Lockheed-CA** | | | | |
| | Hypersonic Wind Tunnels | | | | |
| 260 | 30-in | 30-in dia Free Jet | 8, 10 | 0.42 - 2.2 | Standby |
| | **Lockheed-GA** | | | | |
| | Subsonic Wind Tunnels | | | | |
| 55 | Low Speed | #1 30 x 26 | 14 - 146 ft/sec | 0 - 1 | |
| | | #2 16 x 23 | 29 - 293 ft/sec | 0 - 2 | |
| | Transonic Wind Tunnels | | | | |
| 139 | Compressible Flow | 20 x 28 | 0.2 - 1.3 | 5 - 55 | 2-D, Pressurized |
| | **McDonnell Douglas-El Sequndo** | | | | |
| | Transonic Wind Tunnels | | | | |
| 170/211 | 4-ft Trisonic | 4 x 4 | 0.2 - 5.0 | 0.25 - 30 | High $R_e$, Polysonic |
| 140 | 1-ft | 1 x 1 | 0.5 - 1.2 | 20 - 60 | 2-D, Cryogenic Mode |
| | Hypersonic Wind Tunnels | | | | |
| 263 | 2-ft | 24-in dia Free Jet | 6, 8, 10 | 1.2 - 11.2 | Standby |
| | **McDonnell Douglas-St. Louis** | | | | |
| | Subsonic Wind Tunnels | | | | |
| 85 | Low Speed | 8.5 x 12 | 0 - 0.3 | 0.2 - 2 | |
| 62 | Mini Speed or Interim V/STOL | 15 x 20 | 0 - 0.10 | 0 - 0.75 | Propulsion Simulation |
| | Transonic Wind Tunnels | | | | |
| 171/212 | Polysonic | 4 x 4 | 0.2 - 5.8 | 0.1 - 50 | High $R_e$, Polysonic |
| | **Northrop** | | | | |
| | Subsonic Wind Tunnels | | | | |
| 80 | 7 x 10-ft | 7 x 10 | 0.37 | 2.4 | Flutter |
| | Transonic Wind Tunnels | | | | |
| 181/219 | 24-in Trisonic | 2 x 2 | 0.4 - 1.35, 1.5, 2, 2.2, 3 | 0.2 - 30 | Polysonic |

U.S. INDUSTRY

| Page Number | Location and Facility Description | Test Section (ft) | Speed Range (Mach No.) | Reynolds Number (per ft x $10^{-6}$) | Comments |
|---|---|---|---|---|---|
| | **Northrop** | | | | |
| | Hypersonic Wind Tunnels | | | | |
| 261 | 30-in | 30-in dia Free Jet | 6, 10, 14 | 0.02 - 3.5 | Standby |
| | **Rockwell International-Columbus** | | | | |
| | Subsonic Wind Tunnels | | | | |
| 88 | 7 x 10-ft | 7 x 10 | 370 ft/sec | 2.1 | Propulsion Simulation |
| 63 | w/Tandem V/STOL | 16 x 14 | 115 ft/sec | 0.8 | V/STOL |
| | **Rockwell International-Los Angeles** | | | | |
| | Subsonic Wind Tunnels | | | | |
| 87 | NAAL | 8 x 11 | 0.28 | 2 | Flutter |
| | Transonic Wind Tunnels | | | | |
| 160/206 | 7-ft | 7 x 7 | 0.1 - 3.5 | 2 - 19 | High $R_e$, Polysonic, Flutter, Acoustics |
| | **Sandia Laboratories** | | | | |
| | Hypersonic Wind Tunnels | | | | |
| 272 | 18-in | 18-in dia | 5, 8, 14 | 0.2 - 9.7 | |
| | **United Technologies** | | | | |
| | Subsonic Wind Tunnels | | | | |
| 97 | 4 x 6-ft | 4 x 6 | 0.13 | 0.9 | |
| 54 | Large Subsonic | #1 18 Oct, 40 L | 0.26 | 1.6 | |
| | | #2 8 Oct, 16 L | 0.9 | 4.5 | |
| | **Vought Corporation** | | | | |
| | Subsonic Wind Tunnels | | | | |
| 81 | 7 x 10-ft | 7 x 10 | 44 - 337 ft/sec | 2.5 | Captive Trajectory, |
| 58 | w/Tandem V/STOL | 15 x 20 | 14 - 76 ft/sec | 0.06 - 0.5 | Moving Ground, V/STOL |
| 61 | Large Ground Effects Facility | 12 x 16 | 51 ft/sec | 0.32 | V/STOL, Ground Effects |
| | Transonic Wind Tunnels | | | | |
| 172/215 | High Speed | 4 x 4 | 0.2 - 5.0 | 2 - 38 | High $R_e$, Polysonic, Captive Trajectory Flutter |

## U.S. UNIVERSITIES

| Page Number | Location and Facility Description | Test Section (ft) | Speed Range (Mach No.) | Reynolds Number (per ft x $10^{-6}$) | Comments |
|---|---|---|---|---|---|
| | GALICIT | | | | |
| | Subsonic Wind Tunnels | | | | |
| 70 | 10-ft | 10 dia x 10 L | 0.02 - 2.2 | 0.12 - 1.40 | |
| | Georgia Institute of Technology | | | | |
| | Subsonic Wind Tunnels | | | | |
| 92 | 7 x 9-ft | 7 x 9 | 0 - 0.22 | 0 - 1.6 | |
| 101 | Low Turbulence | 3.5 x 3.5 | 73 ft/sec | 0.5 | |
| | Massachusetts Institute of Technology | | | | |
| | Subsonic Wind Tunnels | | | | |
| 117 | Acoustic | 7.5 x 5 | 15 - 88 ft/sec | 0.1 - 0.6 | Acoustic |
| 104 | Wright Bros. | 7.5 x 10 Elliptical | Up to 0.36 @ 0.25 bar | Up to 2.25 @ 1.5 bar | Pressurized |
| | Texas A&M University | | | | |
| | Subsonic Wind Tunnels | | | | |
| 82 | 7 x 10-ft | 7 x 10 | 0 - 2.5 | 0 - 1.9 | High Pressure Air for Powered Models |
| | University of Oklahoma | | | | |
| | Subsonic Wind Tunnels | | | | |
| 103 | Subsonic Wind Tunnel | 4 x 6 | 30 - 265 ft/sec | 0.2 - 1.6 | |
| | University of Washington | | | | |
| | Subsonic Wind Tunnels | | | | |
| 75 | 8 x 12-ft | 8 x 12 | 0 - 302 ft/sec | 0 - 1.8 | |
| | Virginia Polytechnic Institute | | | | |
| | Subsonic Wind Tunnels | | | | |
| 123 | 6 x 6-ft | 6 x 6 | 250 ft/sec | 1.5 | Curved Flow/Stability |
| | Wichita State University | | | | |
| | Subsonic Wind Tunnels | | | | |
| 91 | 7 x 10-ft | 7 x 10 | 0 - 264 | 0 - 1.8 | |

## FOREIGN INSTALLATIONS

| Page Number | Location and Facility Description | Test Section (ft) | Speed Range (Mach No.) | Reynolds Number (per ft x $10^{-6}$) | Comments |
|---|---|---|---|---|---|
| | **CANADA** | | | | |
| | Subsonic Wind Tunnels | | | | |
| 56 | 9 x 9-m | 30 x 30 | 180 ft/sec | 0.3 | |
| 109 | 10 x 20-ft | 20 x 10 | 205 ft/sec | 0 - 1.3 | Propulsion |
| 83 | 2 x 3-m | 6 x 9 | 322 ft/sec | 0.6 | |
| | Transonic Wind Tunnels | | | | |
| 141/165/208 | NAE 5 x 5-ft Blowdown | | | | |
| 141/165/208 | 3-Dimensional | 5 x 5 | 0.1 - 4.25 | 24 @ M = 2.25 | High $R_e$, Polysonic |
| 141/165/208 | 2-Dimensional | 5 x 1.75 | 0.1 - 0.95 | 47 @ M = 0.95 | High $R_e$, 2-D |
| | **FRANCE** | | | | |
| | Subsonic Wind Tunnels | | | | |
| 116 | CEPRA 19 | #1 6 dia, 36 L | 327 ft/sec | Up to 6.6 | 2-D, Anechoic |
| | | #2 9 dia, 36 L | 287 ft/sec | Up to 4.1 | 3-D, Anechoic |
| 106 | F1 | 11 x 15 | 409 ft/sec | <5.7 | High $R_e$ |
| 124 | F2 | 4 x 5 | 327 ft/sec | 1.8 | |
| 47/146 | S1-MA | 26 dia, 45 L | 0 - 1 | 2.5 @ M = 0.5 | Subsonic Test Section |
| 89 | S2-CH | 9 dia, 16 L | 393 ft/sec | 2.5 | |
| 113 | SV4 | 13 dia | 130 ft/sec | 0.8 | Vertical Spin |
| | Transonic Wind Tunnels | | | | |
| 146 | S1-MA | 26 dia, 45 L | 0 - 1 | 4.1 @ M = 1 | Transonic Test Section |
| 166 | S2-MA | #1 5.8 - 5.7 | 0.1 - 1.3 | 1.6 - 8.9 | Transonic Test Section |
| 177 | S3-MA | #1 2.6 - 1.8 | 0.1 - 1.1 | 19.5 | Transonic Test Section, 2-D Insert |
| 175 | S3-CH | 2.9 x 2.6 | 0.3 - 1.10 | 3.6 | |
| 142 | T-2 | 1.3 x 1.3 | Up to 0.9 w/ adaptive walls | 51 | High $R_e$, Cryogenic |
| 174 | Sigma 4 | 2.7 x 2.7 | 0.3 - 2.8 | | |
| | Supersonic Wind Tunnels | | | | |
| 231 | C-4 | 1.3 x 1.3 | 1.35 - 4.3 | 3.0 - 9.7 | |
| 204 | S2-MA | #2 6.2 - 5.7 | 1.5 - 3.1 | 1.6 - 8.9 | Supersonic Test Section |
| 216 | S3-MA | #2 2.6 - 2.5 | 1.2, 1.5, 2, 3.4, 4.5 | 19.5 | Supersonic Test Section |

PAGE 22 INTENTIONALLY BLANK

PRECEDING PAGE BLANK NOT FILMED

## FOREIGN INSTALLATIONS

| Page Number | Location and Facility Description | Test Section (ft) | Speed Range (Mach No.) | Reynolds Number (per ft x $10^{-6}$) | Comments |
|---|---|---|---|---|---|
| | **FRANCE** | | | | |
| | Hypersonic Wind Tunnels | | | | |
| 257 | C-2 | 3.9 dia | 8 - 16 | 0.3 | |
| 277 | R2-CH | #1 7.5-in dia | 3.0 - 4.0 | 0.5 | |
| | | #2 12-in dia | 5.0 - 7.0 | 0.5 | |
| 276 | R3-CH | #1 13-in dia | 3.0 - 7.0 | 0.6 | |
| | | #2 13-in dia | 10 | 0.6 | |
| 264 | S4-MA | 2.2 | 6 | 0.9 - 8.2 | |
| | **GERMANY** | | | | |
| | Subsonic Wind Tunnels | | | | |
| 69 | 3.25 x 2.8-m (NWB) | 10 x 9 | Open 246 ft/sec | 0.3 | |
| | | | Closed 295 ft/sec | 1.8 | |
| 71 | 3 x 3-m (NWG) | 9 x 9 | 213 ft/sec | 1.3 | |
| 108 | High Pressure (HDG) | 2 x 2 | 114 ft/sec | 60 | High $R_e$, Pressurized |
| 118 | KKK | 7.8 x 7.8 | 100K : 0.35 | 10 | Cryogenic |
| | Transonic Wind Tunnels | | | | |
| 176 | 1-m (TWG) | 3 x 3 | 0.5 - 2.0 | 54 @ M = 1.0 | High $R_e$ |
| 183 | High Speed (HKG) | #1 2 x 2 | 1.22 - 2.5 | | |
| | | #2 2 x 2 | 0.4 - 0.95 | 4.4 @ M = 0.95 | |
| 143 | Transonic Tunnel (TWB) | 1 x 2 | 0.3 - 0.95 | 3.6 - 25 | 2-D |
| | Supersonic Wind Tunnels | | | | |
| 226 | High Speed (HMK) | 11 x 11-in | 0.4 - 0.7 | 50 | High $R_e$ |
| | | Fixed Nozzle | 1.57 - 4.15 | | |
| 179/220 | Trisonic Tunnel (TMK) | 23 x 23-in | 0.5 - 4.5 | 1.8 - 24 | Polysonic |
| | Hypersonic Wind Tunnels | | | | |
| 262 | H2K | 24-in dia | 4.5 - 11.2 | 9 @ M = 6<br>0.3 @ M = 11.2 | Standby |
| | **INDIA** | | | | |
| | Transonic Wind Tunnels | | | | |
| 168/209 | 1.2-m | 4 x 4 | 0.2 - 4.0 | 24.4 | Captive Trajec...y, Polysonic |

FOREIGN INSTALLATIONS

| Page Number | Location and Facility Description | Test Section (ft) | Speed Range (Mach No.) | Reynolds Number (per ft x $10^{-6}$) | Comments |
|---|---|---|---|---|---|
| | **JAPAN** | | | | |
| | Subsonic Wind Tunnels | | | | |
| 50 | 6-m (NAL) | #1 21 x 18 | 198 ft/sec | 1.2 | |
| | | #2 18 x 15 | 230 ft/sec | 1.5 | |
| 67 | 3.5-m (KHI) | Closed #1 11 x 11 | 0 - 114 ft/sec | 0.74 | |
| | | Open #2 8 x 9 | 0 - 196 ft/sec | 1.36 | |
| 96 | 2-m (Mitsubishi) | 6 x 6.5 | 278 ft/sec | 1.8 | |
| 84 | Convertible Tunnel (TRDI) | #1 11 x 11 | 50 - 190 ft/sec | 1.4 | |
| | | #2 20 x 20 | 30 - 60 ft/sec | 1.4 | |
| | | #3 13 Oct | 50 - 110 ft/sec | 1.4 | |
| 119 | Cryogenic (U. of Tsukubu) | 1.6 x 1.6 | 44 - 212 ft/sec | 60 | High $R_e$, Cryogenic |
| 86 | Low Speed (TRDI) | 8.2 dia x 11.5 L | 50 - 190 ft/sec | 1.4 | Flutter |
| 99 | Low Speed (FHI) | 6.56 x 6.56 | 0 - 197 ft/sec | 1.5 | Flutter |
| | Transonic Wind Tunnels | | | | |
| 162 | 2-m (NAL) | 6.5 x 6.5 | 0.3 - 1.4 | 1.5 - 6 | |
| 185/221 | 2 x 2-ft (FHI) | 2 x 2 | 0.2 - 4.0 | 3.2 - 3.5 | Polysonic |
| 184/222 | 60-cm Trisonic (Mitsubishi) | 2 x 2 | 0.4 - 4.0 | 4.5 - 19 | Polysonic |
| 144 | 2-D (KHI) | 1.3 x 0.32 | 0.4 - 1.2 | 4.6 - 14.4 | 2-D |
| 145 | RENO (NAL) | 11.8 x 39.4-in | 0.2 - 1.15 | 14 @ M = 0.8 | 2-D |
| | Supersonic Wind Tunnels | | | | |
| 225 | 1-m (NAL) | 3.28 x 3.28 | 1.4 - 4.0 | 9 - 18 | |
| | Hypersonic Wind Tunnels | | | | |
| – | 50-cm | 1.6 dia | 5, 7, 9, 11 | | No Data Sheet |
| | **NETHERLANDS** | | | | |
| | Subsonic Wind Tunnels | | | | |
| | DNW | | | | |
| 51 | 9.5 x 9.5-m | 31 x 31 | 203 ft/sec | 1.2 | Interchangeable Test |
| 52 | 8 x 6-m | 20 x 26 | Closed 0.32 | 0.22 | Sections, Acoustics |
| | | | Open 0.24 | 0.7 | |
| 53 | 6 x 6-m | 20 x 20 | 475 ft/sec | 1.8 | |
| 102 | 3 x 2.25-m (LST) | 9 x 6 | 278 ft/sec | 1.5 | |

FOREIGN INSTALLATIONS

| Page Number | Location and Facility Description | Test Section (ft) | Speed Range (Mach No.) | Reynolds Number (per ft x $10^{-6}$) | Comments |
|---|---|---|---|---|---|
| | **NETHERLANDS** | | | | |
| | Transonic Wind Tunnels | | | | |
| 163 | HST | 5.2 - 6.5 | 0 - 1.27 | 12 @ M = 0.5 | |
| | Supersonic Wind Tunnels | | | | |
| 213 | SST | 4 x 4 | 1.2 - 4.0 | 30 @ M = 2.5 | |
| | **UNITED KINGDOM** | | | | |
| | Subsonic Wind Tunnels | | | | |
| 115 | 24-ft (Farnborough) | 23.7 dia | 168 ft/sec | 0.7 | Anechoic |
| 57 | 18-ft (Warton) | 18 x 18 | 38 - 71 ft/sec | 0.2 - 0.4 | V/STOL |
| 59 | 15-ft (Hatfield) | 15 x 15 | 0 - 140 ft/sec | 0 - 0.9 | |
| 105 | 5-m (Farnborough) | 13 x 16 | 0.33 | 5.4 | High $R_e$, Pressurized |
| 65 | 13 x 9-ft (Weybridge) | 9 x 13 | 200 - 300 ft/sec | 0 - 2.2 | |
| 68 | 12 x 10-ft (Filton) | 10 x 12 | 0 - 278 ft/sec | 0 - 1.8 | |
| 66 | 13 x 9-ft (Bedford) | 9 x 13 | 16 - 297 ft/sec | 0.9 - 1.9 | |
| 64 | 11.5 x 8.5-ft (Farnborough) | 8.5 x 11.5 | 16 - 365 ft/sec | 2.2 | |
| 72 | 9 x 7-ft (Woodford) | 7 x 9 | 88 ft/sec | 0 - 4.3 | |
| 93 | 9 x 7-ft (Hatfield) | 6.7 x 8.7 | 0 - 250 ft/sec | 0 - 1.6 | |
| 95 | 2.7 x 2.1 (Warton) | 6 x 8 | 0 - 218 ft/sec | 0.03 - 1.5 | |
| 94 | 7 x 5-ft (Brough) | 5 x 7 | 278 ft/sec | 1.6 - 3 | |
| 98 | 3 x 2-ft (Weybridge) | 2 x 3 | 0.40 - 0.92 | 2.6 - 4.5 | |
| | Transonic Wind Tunnels | | | | |
| 158/202 | 8-ft (Bedford) | 8 x 8 | 0.1 - 0.9 | 11 @ M = 0.9 | Transonic Mode |
| | | | 1.35 - 2.5 | 3.4 @ M = 2.5 | Supersonic Mode |
| 159 | 8 x 6-ft (Farnborough) | 6 x 8 | 0 - 1.25 | 7.3 @ M = 0.3 | |
| | | | | 2.7 @ M = 1.25 | |
| 173/214 | 4-ft (Warton) | 4 x 4 | 0.4 - 4.0 | 24 | High $R_e$, Polysonic, Flutter |
| 178/218 | 27 x 27-in (Brough) | 27 x 27-in | 0.1 - 2.5 | 0.8 - 20 | |
| 157 | TWT (Bedford) | 8 x 9 | 0 - 1.4 | 1.5 - 5.5 | |

## FOREIGN INSTALLATIONS

| Page Number | Location and Facility Description | Test Section (ft) | Speed Range (Mach No.) | Reynolds Number (per ft x $10^{-6}$) | Comments |
|---|---|---|---|---|---|
| | UNITED KINGDOM | | | | |
| | Supersonic Wind Tunnels | | | | |
| 228 | 3 x 4-ft (Bedford) | 3 x 4 | 2.5 - 5.0 | 12 @ M = 4.5 | |
| 217 | 30 x 27-in (Woodford) | 30 x 27-in | 1.6 - 3.5 | 17 @ M = 1.6<br>9 @ M = 3.5 | |
| 230 | SWT (Bedford) | 2.5 x 2.25 m | 1.4 - 3.0 | 1.0 - 4.3 | |
| | Hypersonic Wind Tunnels | | | | |
| 271 | Guided Weapons | 1.4 x 1.4 | 1.7 - 6.0 | – | |
| 279 | M4T (Bedford) | 1.0 x 1.33 | 4.0 - 5.0 | 23 - 14 | |
| 278 | M7T (Bedford) | 1.0 dia | 7.0 | 10 - 15 | |

# SUBSONIC WIND TUNNELS

PRECEDING PAGE BLANK NOT FILMED

PAGE 28 INTENTIONALLY BLANK

# SUBSONIC WIND TUNNELS

## ASSESSMENT OF COMPARABLE CAPABILITIES

Of the hundreds of subsonic wind tunnels in the world today, most are small, with characteristic test sections smaller than 6 feet (~2 meters) and speeds less than Mach 0.2. Although it is recognized that many of those facilities are used for fundamental research and/or pedagogical purposes, they do not represent the principal capabilities in low speed Aeronautical R&D, and with few exceptions, have not been included in this catalogue. For the remaining tunnels, the assessment of comparable capabilities has been primarily based on size and speed, although tunnels with special features such as propulsion and pressure capabilities have also been identified and listed separately. Other factors such as flow quality, specialized test apparatus, and measuring devices were not considered due to the general lack of this information.

Several groups based on size and special features have been constructed to differentiate as much as possible those tunnels having sufficient commonality to be characterized as comparable facilities. All the tunnels have been accommodated within one of the given groups, and except for those listed as having acoustical properties, no tunnel appears in more than one group:

| Group | Characteristics |
|---|---|
| A | >30 ft |
| B1 | 12 to 30 ft; max. Mach No. >0.2 |
| B2 | 12 to 30 ft; max. Mach No. <0.2 |
| C | 8 to 12 ft |
| D | <8 ft |
| E | Pressure |
| F | Propulsion |
| G | Vertical spin |
| H | Acoustic |
| J | Unique features |

PRECEDING PAGE BLANK NOT FILMED

PAGE 30 INTENTIONALLY BLANK

Tunnels listed in Groups A through D are considered to be "upward comparable," such that a tunnel listed in a higher group (A) is comparable to, and can be used as an alternate to, a tunnel in a lower group (D). The exceptions are those tunnels in Group B2, which must be compared on an individual basis due to their slow speed.

Some general observations on the foregoing groups of tunnels are:

- Group A: In this group of the largest wind tunnels in the world, the United States owns all three facilities. The Ames 40 x 80 x 120-ft complex is the major V/STOL and helicopter test facility, while the Langley 30 x 60 tunnel permits full-scale general aviation aircraft testing and provides a unique "free-flight" model testing capability.

- Group B1: This group of large-sized tunnels represents modern, state-of-the-art facilities built to support powered, V/STOL model tests and to obtain force and moment measurements. The Netherland's DNW tunnel, the premier facility in this category, is also capable of providing acoustic testing and good flow characteristics for flow field surveys and vortex flow measurement. The Langley 4 x 7-meter and the Boeing-Vertol 20 x 20-ft tunnels also offer good flow qualities, followed by the Lockheed-GA 16 x 23-ft and the Japanese NAL tunnels.

- Group B2: These tunnels are similar in size to those in Group B1, but with speeds usually less than Mach 0.1. Many of these are actually test sections built in tandem with smaller test sections (Group C) in which the bulk of the tunnel's work is conducted. Flow quality for these big tunnels is generally poor.

- Group C: This very large group of moderate-sized tunnels provides the "workhorse" facilities for industry's unpowered model configuration test and development and for government/university fundamental investigations. Although there are many capable facilities in this group, there are none that clearly rise above the others.

- Group D: This group of more modest facilities is representative of the very large population of small subsonic tunnels in the world today. They are generally of moderate cost, available mostly in academic institutions and small research establishments, and do not represent unique or premier facilities.

- Group E: The tunnels listed in this group represent the most advanced subsonic wind tunnels with respect to flow quality, Reynolds number, and generally versatile test capability. The premier facilities are the French ONERA F-1, the United Kingdom's RAE 5-meter, and the NASA Ames's 12-ft tunnels. The French and British tunnels have an edge in that they are more modern and capable of better productivity due to their more efficient test section setup and rapid-change features.

- All Other Groups: Self-evident.

## HIGH REYNOLDS NUMBER TUNNELS

The following table lists those subsonic tunnels having high Reynolds number capabilities. The value indicated is the total Reynolds number for a chord length (c) equal to 1/10 the square root of the test section area ($A_{TS}$):

$$R_{e_{max}} = R_e c \quad \text{where } c = 1/10 \sqrt{A_{TS}}$$

Only tunnels having an $R_e c$ value of greater than $7 \times 10^6$ have been listed.

| Tunnel | Location | $R_e c \times 10^{-6}$ |
|---|---|---|
| Low Turbulence Pressure | NASA–Langley | 30 |
| 40 x 80 ft | NASA–Ames | 17 |
| High Pressure (HDG) | Germany–Göttingen | 12 |
| 12-ft Pressure | NASA–Ames | 10 |
| 80 x 120 | NASA–Ames | 9.8 |
| Cryogenic | Japan–Tsukuba | 9.8 |
| 5 m | U.K.–RAE Farnborough | 7.8 |
| KKK | Germany–DFVLR, Köln-Porz | 7.8 |
| F1 | France–ONERA Fauga | 7.3 |

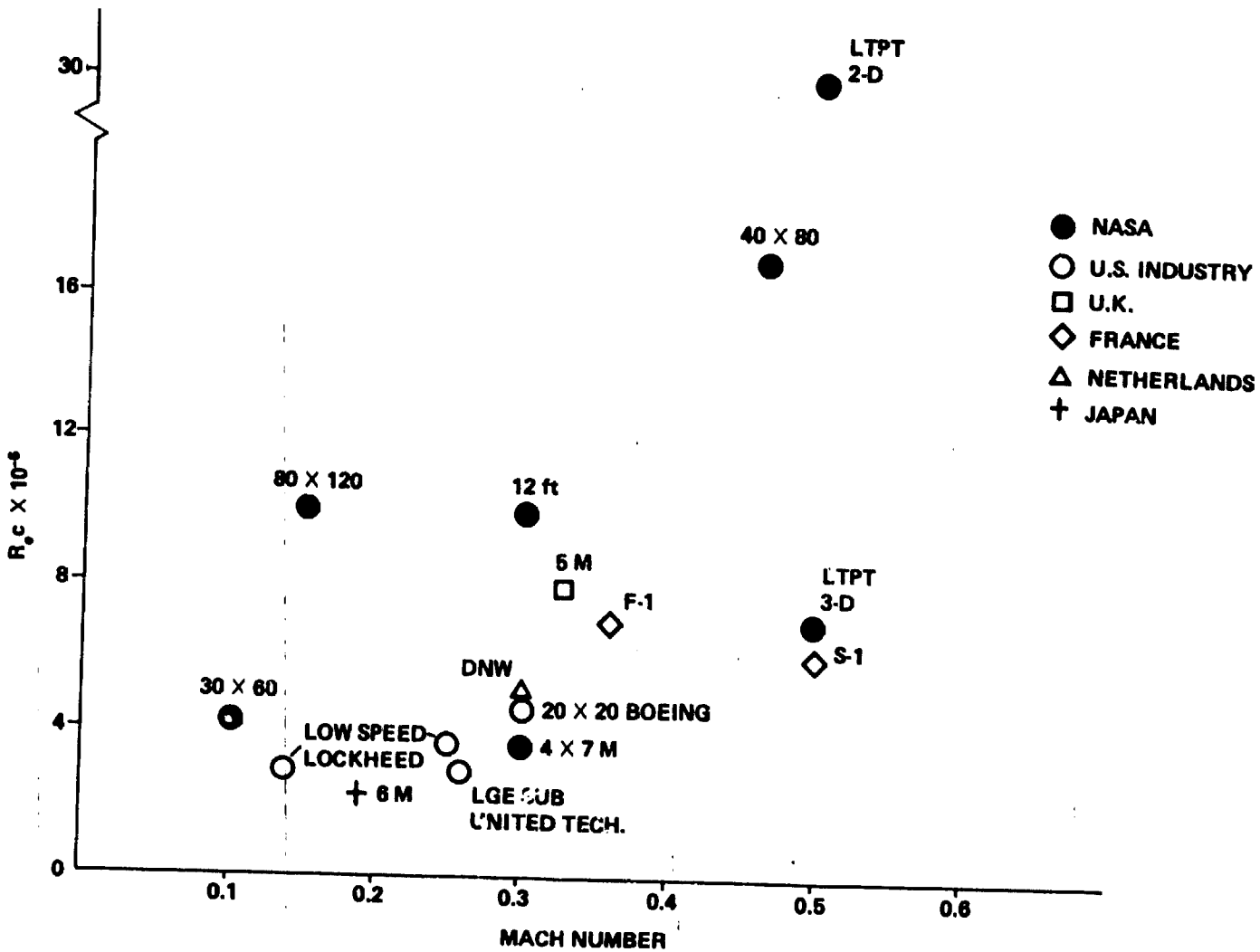


Figure 9. Comparison of major subsonic wind tunnels.

## COMPARABLE SUBSONIC TUNNELS

| Page Number | Facility Name | Installation |
|---|---|---|
| | GROUP A (>30 ft) | |
| 44 | 80 x 120-ft | NASA–Ames |
| 45 | 40 x 80-ft | NASA–Ames |
| 46 | 30 x 60-ft | NASA–Langley |
| | GROUP B1 (12-30 ft; Mach >0.2) | |
| 47 | S-1 MA | France–ONERA, Modane |
| 48 | 20 x 20-ft V/STOL | Boeing Vertol |
| 49 | 4 x 7-m | NASA–Langley |
| 50 | 6-m Low Speed Tunnel | Japan–National Aerospace Laboratory |
| 51/52/53 | DNW | Netherlands–Netherlands Research Laboratories |
| 54 | Large Subsonic | United Technologies Research Center |
| 55 | Low Speed (TS #1) | Lockheed–Georgia |
| | GROUP B2 (12-30 ft; Mach <0.2) | |
| 56 | 9 x 9-m | Canada–National Research Council |
| 57 | 18-ft | United Kingdom–BA, Warton |
| 58 | 15 x 20-ft V/STOL | Vought |
| 59 | 15-ft | United Kingdom–BA, Hatfield |
| 60 | 16 x 20-ft V/STOL | General Dynamics–Convair Division |
| 61 | Large Ground Effects Facility | Vought |
| 55 | Low Speed Wind Tunnel TS #2 | Lockheed–Georgia |
| 62 | Mini Speed or Interim V/STOL | McDonnell Douglas–St. Louis |
| 63 | Subsonic Wind Tunnel with V/STOL | Rockwell–Columbus |

| Page Number | Facility Name | Installation |
|---|---|---|
| | GROUP C (7 x 10-12 ft; Continuous Flow) | |
| 64 | 11.5 x 8.5-ft | United Kingdom–RAE, Farnborough |
| 54 | Large Subsonic | United Technologies Research Center |
| 65 | 13 x 9-ft Low Speed Tunnel | United Kingdom–BAc, Weybridge |
| 66 | 13 x 9-ft | United Kingdom–RAE, Bedford |
| 67 | 3.5-m | Japan–KHI |
| 68 | 10 x 12-m | United Kingdom–BAc, Filton |
| 69 | 3.25 x 2.8-m (NWB) | Germany–DFVLR, Braunschweig |
| 70 | 10-ft Subsonic Tunnel | GALCIT–California Institute of Technology |
| 56 | 9 x 9-ft | Canada–National Research Council |
| 71 | 3 x 3-m (NWG) | Germany–DFVLR, Gottingen |
| 72 | 9 x 7-ft Low Speed Tunnel | United Kingdom–BAe, Woodford |
| 73 | 8 x 12-ft | General Dynamics Convair |
| 74 | 8 x 12-ft | Lockheed–California |
| 75 | 8 x 12-ft | University of Washington |
| 76 | 8 x 10-ft | DOD–David Taylor |
| 77 | 7 x 10-ft (1) | NASA–Ames |
| 78 | 7 x 10-ft (2) | NASA–Ames/Army |
| 79 | 7 x 10-ft | NASA–Langley |
| 80 | 7 x 10-ft | Northrop |
| 81 | 7 x 10-ft | Vought |
| 82 | 7 x 10-ft | Texas A & M University |
| 83 | 2 x 3-m | Canada–National Research Council |
| 84 | Convertible Tunnel (TS #1) | Japan–TRDI |
| 85 | Low Speed Wind Tunnel | McDonnell Douglas–St. Louis |
| 86 | Low Speed Wind Tunnel | Japan–TRDI |
| 87 | NAFL | Rockwell–Los Angeles |
| 88 | Subsonic Wind Tunnel | Rockwell–Columbus |
| 89 | S2-CH | France–ONERA, Chalais-Meudon |

| Page Number | Facility Name | Installation |
|---|---|---|
| | GROUP D (< 7 x 10 ft) | |
| 90 | 7 x 10-ft | Grumman |
| 91 | 7 x 10-ft | Wichita State University |
| 92 | 7 x 9-ft | Georgia Institute of Technology |
| 93 | 7 x 9-ft | United Kingdom–BAc, Hatfield |
| [illegible] | 7 x 5-ft Low Speed Tunnel | United Kingdom–BAc, Brough |
| 95 | 2.7 x 2.1 Low Speed Tunnel | United Kingdom–BA, Warton |
| 96 | 2-m Low Speed Tunnel | Japan–Mitsubishi |
| 97 | 4 x 6-ft | United Technologies Research Center |
| 98 | 3 x 2-ft High Speed Tunnel | United Kingdom–BA, Weybridge |
| 99 | Low Speed Wind Tunnel | Japan–Fuji Heavy Industries |
| 100 | Low Speed Research Tunnel | Boeing–Seattle |
| 101 | Low Turbulence Tunnel | Georgia Institute of Technology |
| 102 | LST 3 x 2.25-m | Netherlands–Netherlands Research Laboratories |
| 103 | Subsonic Wind Tunnel | University of Oklahoma |
| 104 | Wright Brothers Tunnel | Massachusetts Institute of Technology |
| | GROUP E–PRESSURE TUNNELS | |
| 105 | 5-m Low Speed Tunnel | United Kingdom–RAE, Farnborough |
| 106 | F1 | France–ONERA, Le Fauga |
| 107 | 12-ft Pressure Tunnel | NASA–Ames |
| 122 | Low Turbulence Pressure Tunnel | NASA–Langley |
| 108 | High Pressure Tunnel (HDG) | Germany–DFVLR, Gottingen |
| | GROUP F–PROPULSION TUNNELS | |
| 109 | 20 x 10-ft | Canada–National Research Council |
| 110 | 9 x 15-ft | NASA–Lewis |
| 111 | 9 x 9-ft A & B | Boeing–Seattle |

| Page Number | Facility Name | Installation |
|---|---|---|
| | GROUP G–VERTICAL FLOW SPIN TUNNELS | |
| 112 | 20-ft Vertical Spin Tunnel | NASA–Langley |
| 113 | SV4 | France–ONERA, IMF/Lille |
| 84 | Convertible Tunnel (Test Section 3) | Japan–TRDI |
| 114 | Vertical Wind Tunnel | DOD–Wright Aeronautical Laboratories |
| | GROUP H–ACOUSTIC | |
| 45 | 40 x 80-ft | NASA–Ames |
| 115 | 24-ft Low Speed Tunnel | United Kingdom–RAE, Farnborough |
| 53 | DNW (6 x 6-m) | Netherlands–NRL and DFVLR |
| 54 | 18/8-ft Large Subsonic | United Technologies Research Center |
| 49 | 4 x 7-m | NASA–Langley |
| 110 | 9 x 15-ft with V/STOL | NASA–Lewis |
| 77 | 7 x 10-ft | NASA–Ames |
| 116 | CEPRA 19 | France–ONERA, Saclay |
| 117 | Acoustic Tunnel | Massachusetts Institute of Technology |
| | GROUP J–UNIQUE FEATURES | |
| 118 | Cryogenic Tunnel (KKK) | Germany–DFVLR, Koln-Porz |
| 119 | Cryogenic Tunnel | Japan–University of Tsukuba |
| 120 | 6 x 9-ft Icing Research Tunnel | NASA–Lewis |
| 121 | Icing Wind Tunnel | Lockheed–California |
| 123 | 6 x 6-ft Stability Tunnel | Virginia Polytechnic Institute |
| 124 | F2 | France–ONERA, Le Fauga |

## SUBSONIC WIND TUNNELS

| Page Number | Location and Facility Description | Test Section (ft) | Speed Range (ft/sec) | Reynolds Number (per ft x $10^{-6}$) | Comments |
|---|---|---|---|---|---|
| | **U.S. NASA** | | | | |
| | Ames Research Center | | | | |
| 44 | 80 x 120-ft | 80 x 120 | M = 0.15 | 0 - 1 | High $R_e$, Propulsion |
| 45 | 40 x 80-ft | 40 x 80 | M = 0.45 | 0 - 3 | High $R_e$ |
| 107 | 12-ft Pressure | 11.3 dia | M = 0.6 | 0 - 9 | High $R_e$, Pressurized |
| 77 | 7 x 10-ft (1) | 7 x 10 | M = 0 - 0.33 | 0 - 2.6 | V/STOL |
| 78 | 7 x 10-ft (2) | 7 x 10 | M = 0.33 | 0 - 2.6 | Rotorcraft, Army Facility |
| | Langley Research Center | | | | |
| 46 | 30 x 60-ft | 30 x 60 | 38 - 132 | 1 | Open Throat |
| 49 | 4 x 7-m | 14.5 x 21.8 | 318 | 2.1 | Moving Ground, V/STOL |
| 79 | 7 x 10-ft | 6.6 x 9.6 | M = 0.2 - 0.9 | 0.1 - 3.2 | |
| 122 | Low-Turbulence Pressure (LTPT) | 7.5 x 3 | M = 0.05 - 0.5 | 0.1 - 15 | 2-D, Pressurized |
| 112 | Vertical Spin Tunnel | 20 dia, 25 height | 90 ft/sec | 0.6 | Vertical Spin |
| | Lewis Research Center | | | | |
| 110 | 9 x 15-ft | 9 x 15 | M = 0 - 0.2 | 0 - 1.4 | Propulsion |
| | AWT (Proposed) | 20 dia | M = 0.9 | 3.5 | Icing, Propulsion, No Data Sheet |
| 120 | IRT | 6 x 9 | M = 0 - 0.5 | 3.3 | Icing |
| | **U.S. DOD** | | | | |
| | David Taylor Naval Ship R&D Center | | | | |
| 76 | 8 x 10-ft | 8 x 10 | 30 - 275 | 0 - 1.77 | Flutter |
| | Wright Aeronautical Laboratories | | | | |
| 114 | Vertical Tunnel | 12 x 15 | 0 - 150 | 0 - 0.91 | |
| | **U.S. INDUSTRY** | | | | |
| | Boeing Vertol | | | | |
| 48 | 20 x 20-ft V/STOL | 20 x 20 | M = 0.325 | 0 - 2.3 | |
| | Boeing-Seattle | | | | |
| 111 | 9 x 9-ft | 9 x 9 | M = 0.36 | 2 | Propulsion |
| 100 | Low Speed Research | 8 x 5 | M = 0.18 | 1.2 | |

## SUBSONIC WIND TUNNELS

| Page Number | Location and Facility Description | Test Section (ft) | Speed Range (ft/sec) | Reynolds Number (per ft x $10^{-6}$) | Comments |
|---|---|---|---|---|---|
| | **U.S. INDUSTRY** | | | | |
| | General Dynamics | | | | |
| 73 | 8 x 12-ft | 8 x 12 | M = 0.37 | 2.5 | |
| 60 | w/Tandem V/STOL | 16 x 20 | M = 0.2 - 0.08 | 0.1 - 0.6 | |
| | Grumman | | | | |
| 90 | 7 x 10-ft | 7 x 10 | M = 0.18 | 1.73 | Propulsion Simulation |
| | Lockheed-CA | | | | |
| 74 | 8 x 12-ft | 8 x 12 | 0 - 293 | 1.7 | Ground Effects |
| 121 | Icing Tunnel | 4 x 2.5 | 88 - 308 | 2 | Icing |
| | Lockheed-GA | | | | |
| 55 | Low Speed | #1 30 x 26 | 146 | 0 - 1 | |
| | | #2 16 x 23 | 293 | 0 - 2 | |
| | McDonnell Douglas-St. Louis | | | | |
| 85 | Low Speed | 8.5 x 12 | M = 0 - 0.3 | 0.2 - 2 | |
| 62 | Mini Speed or Interim V/STOL | 15 x 20 | M = 0 - 0.10 | 0 - 0.75 | Propulsion Simulation |
| | Northrop | | | | |
| 80 | 7 x 10-ft | 7 x 10 | M = 0.37 | 2.4 | Flutter |
| | Rockwell-Columbus | | | | |
| 88 | 7 x 10-ft | 7 x 10 | 370 | 2.1 | Propulsion Simulation |
| 63 | w/Tandem V/STOL | 16 x 14 | 115 | 0.8 | V/STOL |
| | Rockwell-Los Angeles | | | | |
| 87 | NAAL | 8 x 11 | M = 0.28 | 2 | Flutter |
| | United Technologies | | | | |
| 97 | 4 x 6-ft | 4 x 6 | M = 0.13 | 0.9 | |
| 54 | Large Subsonic | #1 18 Oct, 40 L | M = 0.26 | 1.6 | |
| | | #2 8 Oct, 16 L | M = 0.9 | 4.5 | |
| | Vought | | | | |
| 81 | 7 x 10-ft | 7 x 10 | 44 - 337 | 2.5 | Captive Trajectory, |
| 58 | w/Tandem V/STOL | 15 x 20 | 14 - 76 | 0.06 - 0.5 | Moving Ground, V/STOL |
| 61 | Large Ground Effects Facility | 12 x 16 | 51 | 0.32 | V/STOL, Ground Effects |

## SUBSONIC WIND TUNNELS

| Page Number | Location and Facility Description | Test Section (ft) | Speed Range (ft/sec) | Reynolds Number (per ft x $10^{-6}$) | Comments |
|---|---|---|---|---|---|
| | **U.S. UNIVERSITIES** | | | | |
| | GALICIT | | | | |
| 70 | 10-ft | 10 dia, 10 L | M = 0.02 - 0.22 | 0.12 - 1.40 | |
| | Georgia Institute of Technology | | | | |
| 92 | 7 x 9-ft | 7 x 9 | M = 0 - 0.22 | 0 - 1.6 | |
| 101 | Low Turbulence | 3.5 x 3.5 | 73 | 0.5 | |
| | Massachusetts Institute of Technology | | | | |
| 117 | Acoustic | 7.5 x 5 | 15 - 88 | 0.1 - 0.6 | Acoustic |
| 104 | Wright Brothers | 7.5 x 10 Elliptical Test Section | Up to 0.36 @ 0.25 bar | Up to 2.25 @ 1.5 bar | Pressurized |
| | Texas A&M University | | | | |
| 82 | 7 x 10-ft | 7 x 10 | M = 0 - 2.5 | 0 - 1.9 | High Pressure Air for Powered Models |
| | University of Oklahoma | | | | |
| 103 | Subsonic Tunnel | 4 x 6 | 30 - 265 | 0.2 - 1.6 | |
| | University of Washington | | | | |
| 75 | 8 x 12-ft | 8 x 12 | 0 - 302 | 0 - 1.8 | |
| | Virginia Polytechnic Institute | | | | |
| 123 | 6 x 6-ft | 6 x 6 | 250 | 1.5 | Curved Flow/Stability |
| | Wichita State | | | | |
| 91 | 7 x 10-ft | 7 x 10 | 0 - 264 | 0 - 1.8 | |
| | **CANADA** | | | | |
| 56 | 9 x 9-m | 30 x 30 | 180 | 0.3 | |
| 109 | 10 x 20-ft | 20 x 10 | 205 | 0 - 1.3 | Propulsion |
| 83 | 2 x 3-m | 6 x 9 | 322 | 0.6 | |
| | **FRANCE** | | | | |
| 116 | CEPRA 19 | #1 6 dia, 36 L | 327 | Up to 6.6 | 2-D, Anechoic Tunnel |
| | | #2 9 dia, 36 L | 287 | Up to 4.1 | 3-D, Anechoic Tunnel |

SUBSONIC WIND TUNNELS

| Page Number | Location and Facility Description | Test Section (ft) | Speed Range (ft/sec) | Reynolds Number (per ft x $10^{-6}$) | Comments |
|---|---|---|---|---|---|
| | **FRANCE** | | | | |
| 106 | F1 | 11 x 15 | 409 | 5.7 | High $R_e$ |
| 123 | F2 | 4 x 5 | 327 | 1.8 | |
| 47 | S-1 MA | 26 dia | M = 0 - 1 | 2.5 @ M = 0.5 | Also Transonic |
| 89 | S2-CH | 9 dia, 16 L | 393 | 2.5 | |
| 113 | SV4 | 13 dia | 130 (max) | 0.8 | Vertical Spin |
| | **GERMANY** | | | | |
| 69 | 3.25 x 2.8-m (NWB) | 10 x 9 | Open 246 | 0.3 | |
| | | | Closed 295 | 1.8 | |
| 71 | 3 x 3-m (NWG) | 9 x 9 | 213 | 1.3 | |
| 108 | High Pressure (HDG) | 2 x 2 | 114 | 60 | High $R_e$, Pressurized |
| 118 | KKK | 7.8 x 7.8 | 100K : M = 0.35 | 10 | Cryogenic |
| | **JAPAN** | | | | |
| 50 | 6-m (NAL) | #1 21 x 18 | 198 | 1.2 | |
| | | #2 18 x 15 | 230 | 1.5 | |
| 67 | 3.5-m (KHI) | Closed 11 x 11 | 0 - 114 | 0.74 | |
| | | Open 8 x 9 | 0 - 196 | 1.36 | |
| 96 | 2-m (Mitsubishi) | 6 x 6.5 | 278 | 1.8 | |
| 84 | Convertible Tunnel (TRDI) | #1 11 x 11 | 50 - 190 | 1.4 | |
| | | #2 20 x 20 | 30 - 60 | 1.4 | |
| | | #3 13 Oct | 50 - 110 | 1.4 | Vertical Spin |
| 119 | Cryogenic (U. of Tsukubu) | 1.6 x 1.6 | 44 - 212 | 60 | High $R_e$, Cryogenic |
| 86 | Low Speed (TRDI) | 8.2 dia x 11.5 L | 50 - 190 | 1.4 | Flutter |
| 99 | Low Speed (KHI) | 6.56 x 6.56 | 0 - 197 | 1.5 | Flutter |
| | **NETHERLANDS** | | | | |
| | DNW | | | | |
| 51 | 9.5 x 9.5-m | 31 x 31 | 203 | 1.2 | |
| 52 | 8 x 6-m | 20 x 26 | Closed M = 0.32 | 2.2 | Interchangeable Test Sections, Acoustics |
| | | | Open M = 0.24 | 1.7 | |
| 53 | 6 x 6-m | 20 x 20 | 475 | 1.8 | |
| 102 | 3 x 2.25-m (LST) | 9 x 6 | 278 | 1.5 | |

SUBSONIC WIND TUNNELS

| Page Number | Location and Description Facility | Test Section (ft) | Speed Range (ft/sec) | Reynolds Number (per ft x $10^{-6}$) | Comments |
|---|---|---|---|---|---|
| | UNITED KINGDOM | | | | |
| 115 | 24-ft (Farnborough) | 23.7 dia | 168 | 0.7 | Anechoic |
| 57 | 18-ft (Warton) | 18 x 18 | 38 - 71 | 0.2 - 0.4 | V/STOL |
| 59 | 15-ft (Hatfield) | 15 x 15 | 0 - 140 | 0 - 0.9 | |
| 105 | 5-m (Farnborough) | 13 x 16 | M = 0.33 | 5.4 | High $R_e$, Pressurized |
| 65 | 13 x 9-ft (Weybridge) | 9 x 13 | 200 - 300 | 0 - 2.2 | |
| 68 | 12 x 10-ft (Filton) | 10 x 12 | 0 - 278 | 0 - 1.8 | |
| 66 | 13 x 9-ft (Bedford) | 9 x 13 | 16 - 297 | 0.09 - 1.9 | |
| 64 | 11.5 x 8.5-ft (Farnborough) | 8.5 x 11.5 | 16 - 365 | 2.2 | |
| 72 | 9 x 7-ft (Woodford) | 7 x 9 | 88 | 0 - 4.3 | |
| 93 | 9 x 7-m (Hatfield) | 8.7 x 6.7 | 0 - 250 | 0 - 1.6 | |
| 95 | 2.7 x 2.1 (Warton) | 6 x 8 | 0 - 218 | 0.03 - 1.5 | |
| 94 | 7 x 5-ft (Brough) | 5 x 7 | 278 | 1.6 - 3 | |
| 98 | 3 x 2-ft (Weybridge) | 2 x 3 | M = 0.40 - 0.92 | 2.6 - 4.5 | |

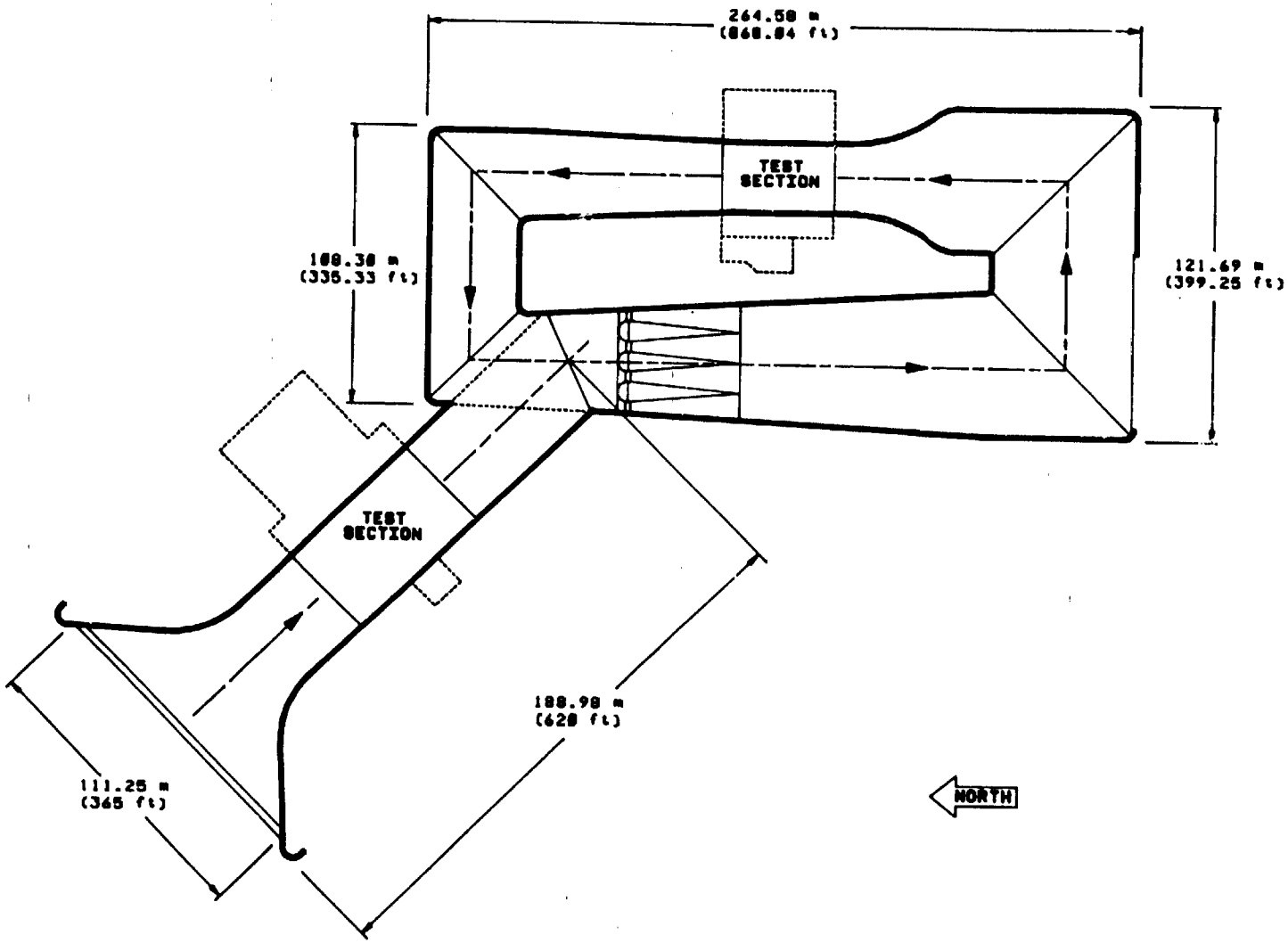
264.58 m
(868.04 ft)
TEST
SECTION
102.38 m
(336.33 ft)
121.69 m
(399.25 ft)
TEST
SECTION
188.98 m
(620 ft)
111.25 m
(365 ft)
NORTH

| NASA-Ames Research Center | SUBSONIC WIND TUNNELS | | COMPARABLE FACILITIES |
|---|---|---|---|
| | **TEST SECTION SIZE:** 80 x 120 x 190 ft | **SPEED RANGE: (Mach No.)** 0.15 (168 ft/sec) | None |
| | **DATE BUILT/UPGRADED:** 1982 | **TEMP. RANGE:** Ambient | |
| 80 x 120-Ft Subsonic Wind Tunnel | **REPLACEMENT COST:** $222M including 40 x 80 | **REYNOLDS NO: (Per ft X $10^{-6}$)** 0 - 1.1 | |
| | **OPERATIONAL STATUS:** Operational Fiscal Year 1987 | **DYNAMIC PRES: (lb/ft$^2$)** 0 - 34 | |
| | | **STAGNATION PRES: (psia)** Atmospheric | |
| | Indraft, continuous flow, closed-throat wind tunnel | | |

TESTING CAPABILITIES: The 80 x 120-ft Wind Tunnel and the 40 x 80-ft Wind Tunnel share the same drive system, so only one tunnel can be operated at a time. The tunnel is used for full-scale, low-speed V/STOL powered lift investigators and full-scale rotorcraft systems. High-lift devices for takeoff and landing of conventional aircraft are also examined at low forward speed.

DATA ACQUISITION: Data are recorded, processed, and displayed using a distributed data system composed of PDP 11 series and VAX 11/780 processors, which are housed within the 40 x 80-ft Wind Tunnel. Data are transmitted via fiber optics. Graphic displays and hard copy printouts are being implemented at this time. The number of channels available is: up to 1000 for static data and up to 250 for dynamic data. The total sample rate is 1 000 000 samples per second.

CURRENT PROGRAMS: V/STOL aircraft research, augmentor research, high-lift research, and full-scale rotorcraft research.

PLANNED IMPROVEMENTS:

LOCAL INFORMATION CONTACT: Jerry V. Kirk, Chief, Low Speed Wind Tunnel Investigations Branch, (415) 965-5045.

45A

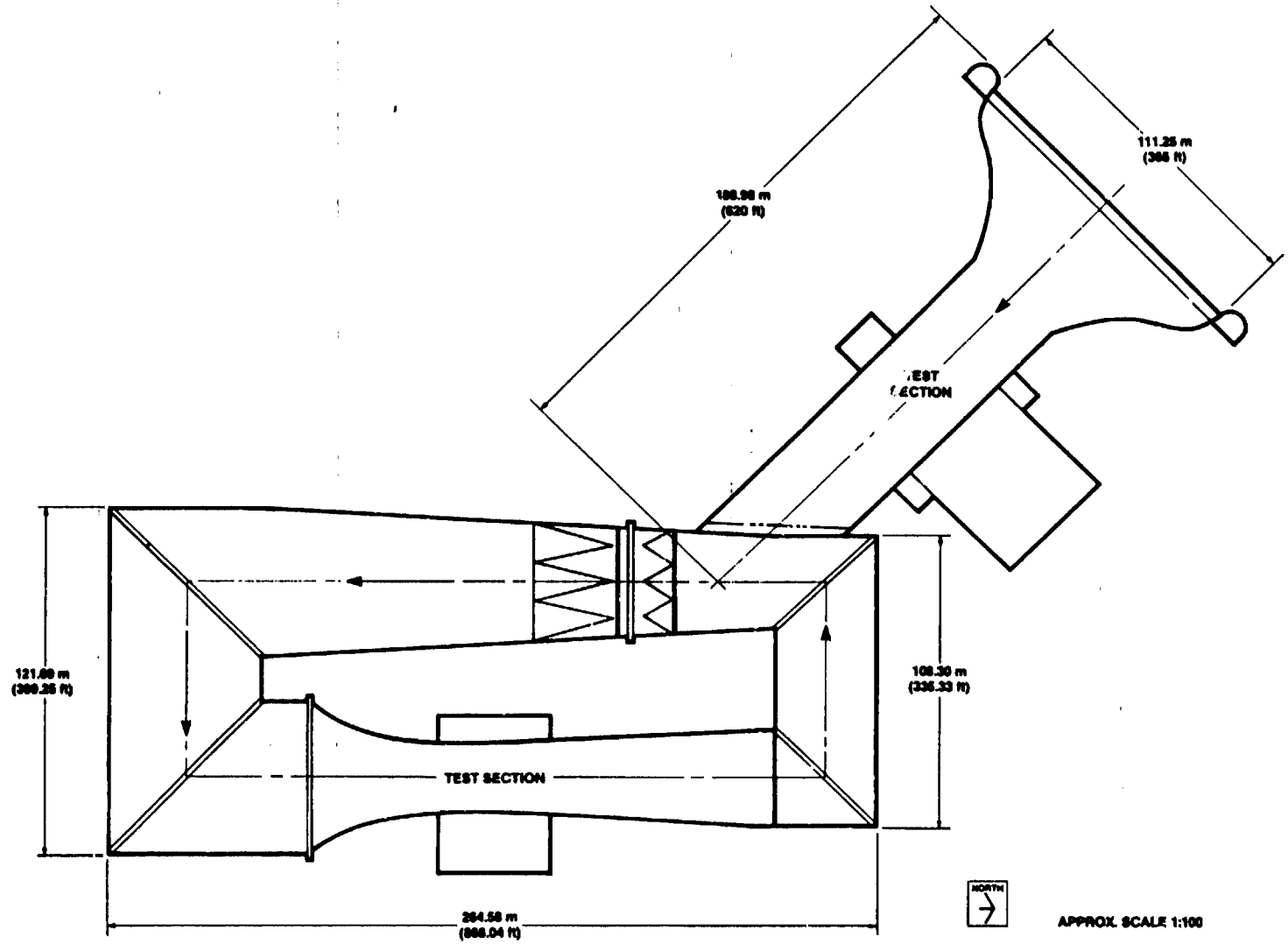

111.25 m
(365 ft)
(620 ft)
TEST SECTION
121.60 m
(399.25 ft)
108.30 m
(335.33 ft)
TEST SECTION
264.58 m
(868.04 ft)
NORTH
APPROX. SCALE 1:100

| NASA-Ames Research Center | SUBSONIC WIND TUNNELS | | COMPARABLE FACILITIES |
|---|---|---|---|
| | TEST SECTION SIZE: 39 x 79 ft | SPEED RANGE: (Mach No.) 0.45 (504 ft/sec) | None |
| | DATE BUILT/UPGRADED: 1944/1982 | TEMP. RANGE: Ambient | |
| 40 x 80-Ft Subsonic Wind Tunnel | REPLACEMENT COST: $222M including 80 x 120 | REYNOLDS NO: (Per ft X $10^{-6}$) 0 - 3.0 | |
| | OPERATIONAL STATUS: Fiscal Year 1986 | DYNAMIC PRES: (lb/ft$^2$) 0 - 305 | |
| | | STAGNATION PRES: (psia) Atmospheric | |
| | Closed circuit, single return, continuous flow, closed throat | | |

TESTING CAPABILITIES: The 40 x 80-ft Wind Tunnel and 80 x 120-ft Wind Tunnel share the same drive system, so only one can be operated at a time. The tunnel is used for large-scale or full-scale aircraft and rotorcraft research. Measurements taken include force and moment, pressure, dynamic stability, and acoustic signatures. The tunnel is also used extensively for V/STOL powered lift investigations. Full/large-scale propulsion systems are run in the tunnel to determine engine/airframe interactions.

DATA ACQUISITION: Data are recorded, processed, and displayed using a distributed data system composed of PDP 11 series and VAX 11/780 processors, which are housed within the facility. Graphic displays and hard copy printouts are being implemented at this time. The number of channels available is: up to 1000 for static data and up to 250 for dynamic data. The total sampling rate is 1 000 000 samples per second.

CURRENT PROGRAMS: Rotorcraft research for civil and military application; V/STOL powered lift research (augmentor, RALS, etc.).

PLANNED IMPROVEMENTS: Acoustic measurement capability improvements by lowering tunnel background noise and further lowering the turbulence level using antiturbulence screens ahead of the test section.

LOCAL INFORMATION CONTACT: Jerry V. Kirk, Chief, Low Speed Wind Tunnel Investigations Branch, (415) 965-5045.

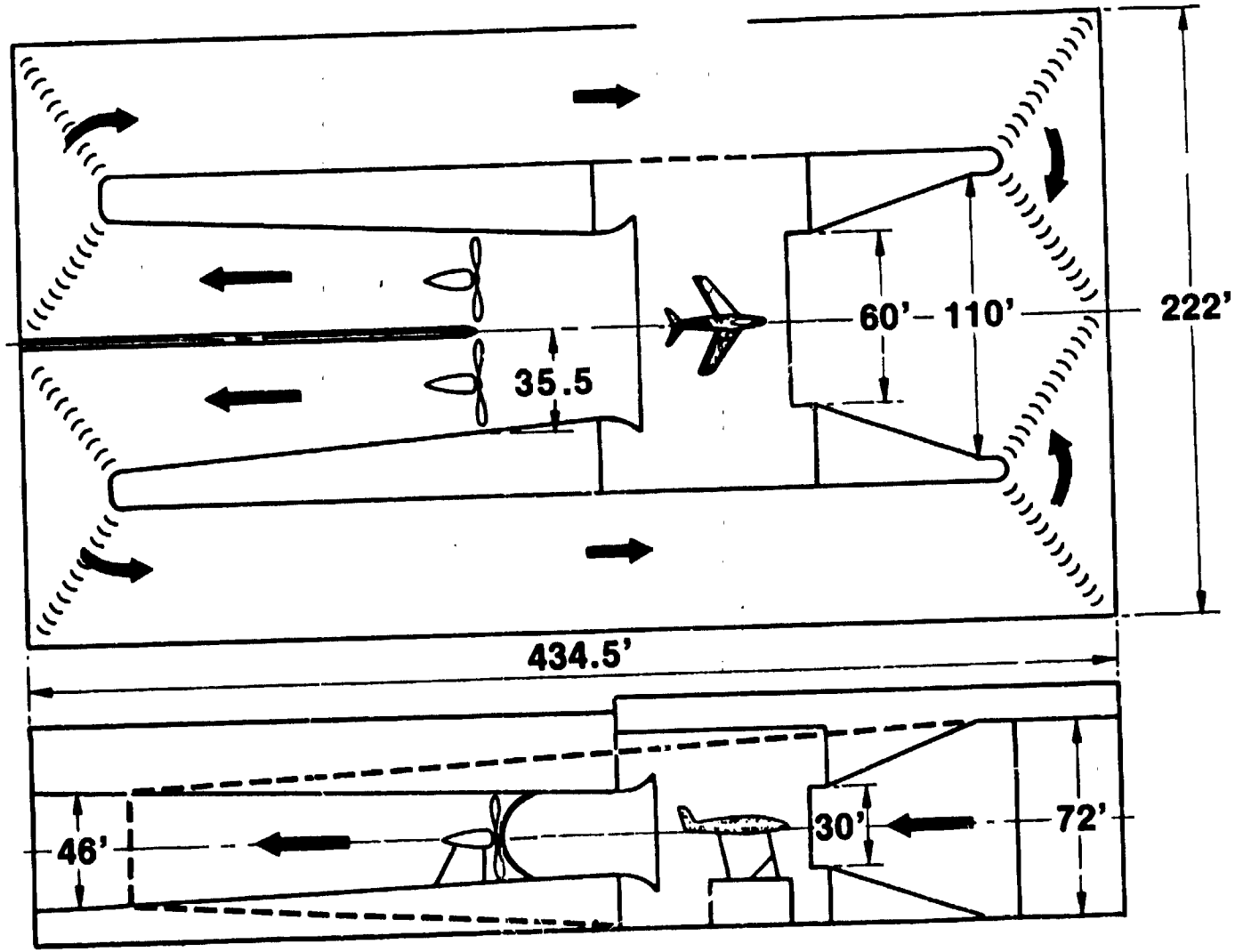
60'
110'
222'
35.5
434.5'
46'
30'
72'

| NASA-Langley Research Center | SUBSONIC WIND TUNNELS | | COMPARABLE FACILITIES |
|---|---|---|---|
| | **TEST SECTION SIZE:** 30 x 60 x 56 ft | **SPEED RANGE:** (Mach No.) 0.03 - 0.11 (38 - 132 ft/sec) | None |
| | **DATE BUILT/UPGRADED:** 1930/1973/1984 | **TEMP. RANGE:** Ambient | |
| 30 x 60-Ft Wind Tunnel | **REPLACEMENT COST:** $19M | **REYNOLDS NO:** (Per ft X $10^{-6}$) 0 - 1 | |
| | **OPERATIONAL STATUS:** 2 shifts per day (backlog) | **DYNAMIC PRES:** (lb/ft$^2$) 0 - 30 | |
| | | **STAGNATION PRES:** (psia) Atmospheric | |
| | Closed circuit, double return, continuous flow, open throat<br>Model size: Span - 40-ft, weight - 15 000 lb | | |

TESTING CAPABILITIES: Equipped for free-flight model test, the tunnel has shielded struts for the 6-component scale balance used for large-scale model tests. There are a variety of smaller model mounts for use with small models having internal balances. Auxiliary equipment consists of 1000- and 500-hp dc motors for power supply to models, as well as 2 lb/sec at 500 psi and 15 lb/sec at 300 psi compressed-air supplies. The facility will accommodate models with a wing span of up to 40 ft and weight of 15 000 lb. This facility is powered by two 4-bladed, 35.5-ft diameter fans, each driven by a 4000-hp electric motor.

DATA ACQUISITION: Sixty-five channels of information of data can be recorded on the data acquisition system and reduced off-site.

CURRENT PROGRAMS: Main research is directed at the study of the low-speed aerodynamics, static and dynamic stability and control, and associated flow characteristics of military and general aviation and commuter aircraft configurations.

PLANNED IMPROVEMENTS: Fiscal Year 1984 - Modifications to 30 x 60-ft tunnel and data acquisition system. Estimated cost is $4.4M. Completion of modifications is scheduled for 1986.

LOCAL INFORMATION CONTACT: Joseph L. Johnson, Jr., Flight Dynamics Branch, (804) 865-2184.

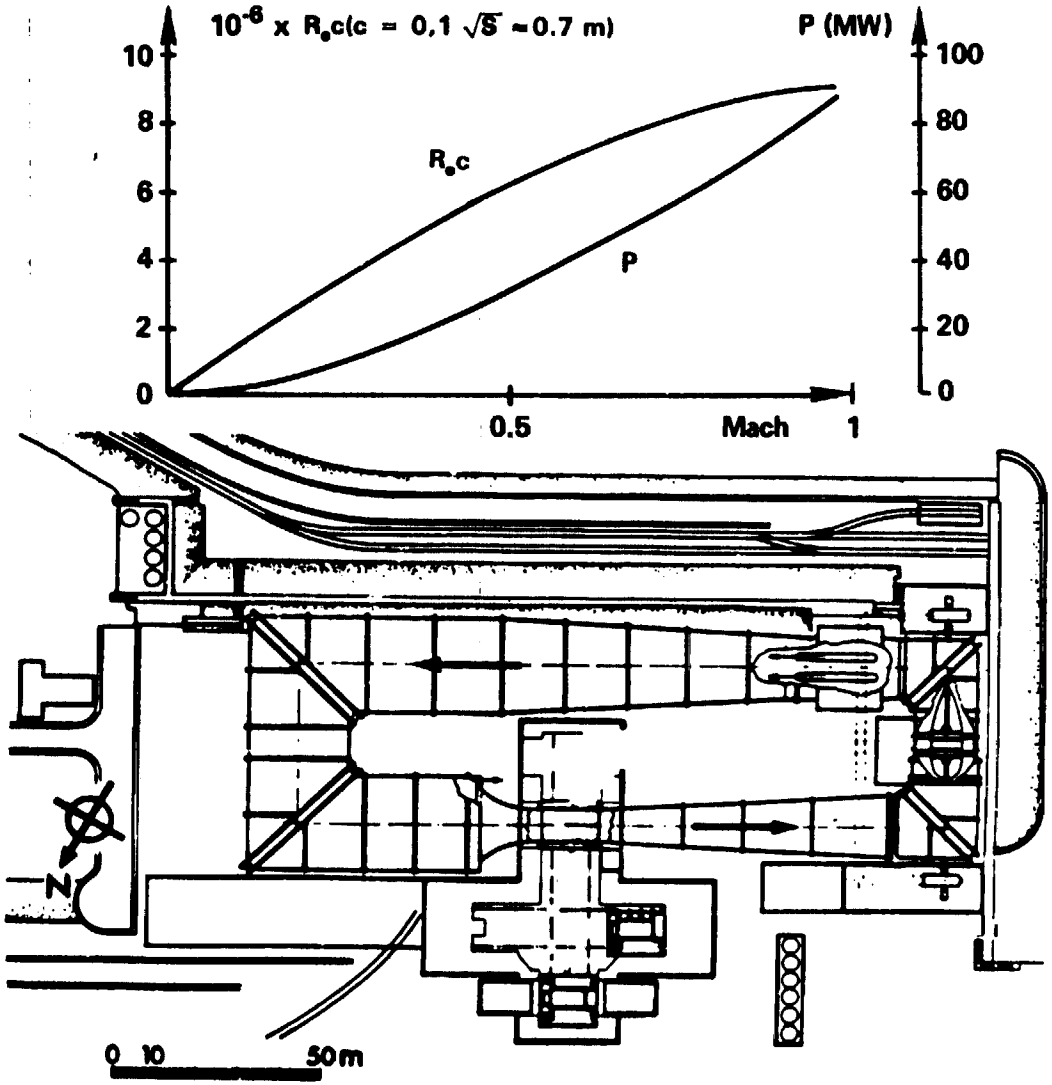
$10^{-6}$ x $R_e c$(c = 0,1 $\sqrt{S}$ ≈0.7 m)
P (MW)
10
8
6
4
2
0
100
80
60
40
20
0
$R_e c$
P
0.5
Mach
1
N
0 10
50m

| | SUBSONIC WIND TUNNELS | | COMPARABLE FACILITIES |
|---|---|---|---|
| ONERA Modane, France | TEST SECTION SIZE: 8-m dia | SPEED RANGE: (Mach No.) Up to 1 Lowest speed (2.5 m/sec) | Group B1 |
| | DATE BUILT/UPGRADED: 1952 | TEMP. RANGE: 263 - 333 K | |
| S1 MA | REPLACEMENT COST: | REYNOLDS NO: (Per m X $10^{-6}$) 13.5 | |
| | OPERATIONAL STATUS: 1 or 2 shifts | DYNAMIC PRES: ($kN/m^2$) 0 - 33 | |
| | | STAGNATION PRES: (bars) 0.91 | |
| | Continuous flow; 3 interchangeable test sections, cooling by atmospheric air exchange; 88 MW (2 fans) maindrive powered by water turbines | | |

TESTING CAPABILITIES: All conventional aerodynamic measurements on large scale (up to full scale) complete- or half-models including flow survey, wake, and boundary layers measurements. Basic sting support varies angle-of-attack 40° and sideslip ±10°, and turntables up to 360° Jet engines, full-scale missiles, powered models by air and TPS (60 b, up to 25 kg/sec; basic: 10 kg/sec), propellers (900 kW), and helicopter rotor test rig (550 kW). Air intake measurements; unsteady testing; icing and deicing (in winter); flight mechanic rig, canopy ejection, store launching, parachute, canopy rain visibility, and engine noise.

1st cart: 4 walls added for a reduced semirectangular (H: 6,3; L: 6,7) slotted (4 slots in "corners") test section mainly devoted to high angle-of-attack large combat transonic aircraft and large half models
2nd cart: Devoted to low-speed tests (150 m/sec). Equipped with a ground floor using boundary-layer bleed
3rd cart: Store launching, icing, propellers and helicopter rotors, large commercial aircraft, engines, and missiles

DATA ACQUISITION: Global forces, local forces, pressures (individual, scanned, unsteady) temperature displacements, deformation, flow, and skin visualizations. Basically 64 analog and digital channels, extension possible with steady or unsteady channels, possibility of very high speed PCM. Local HP-1000 computer for data acquisition and testing devices survey. Local real-time computation by VAX-782.

CURRENT PROGRAMS: Civil aircraft, combat aircraft development, and performance control. Engine, propellers, and helicopter tests; engine and missiles full-scale tests; structures compartment; and nonaeronautic tests.

PLANNED IMPROVEMENTS: Continuous increase of computer-controlled testing devices and improvement of instrumentation.

LOCAL INFORMATION CONTACT: M. Giachetto, ONERA, Centre de Modane-Avrieux, BP 25-73 500 Modane, France.

- 25% AIR EXCHANGE OPENING
- TEST SECTION TOTAL PRESSURE = 2116.8 PSF
- TEST SECTION TOTAL TEMPERATURE = 360°R

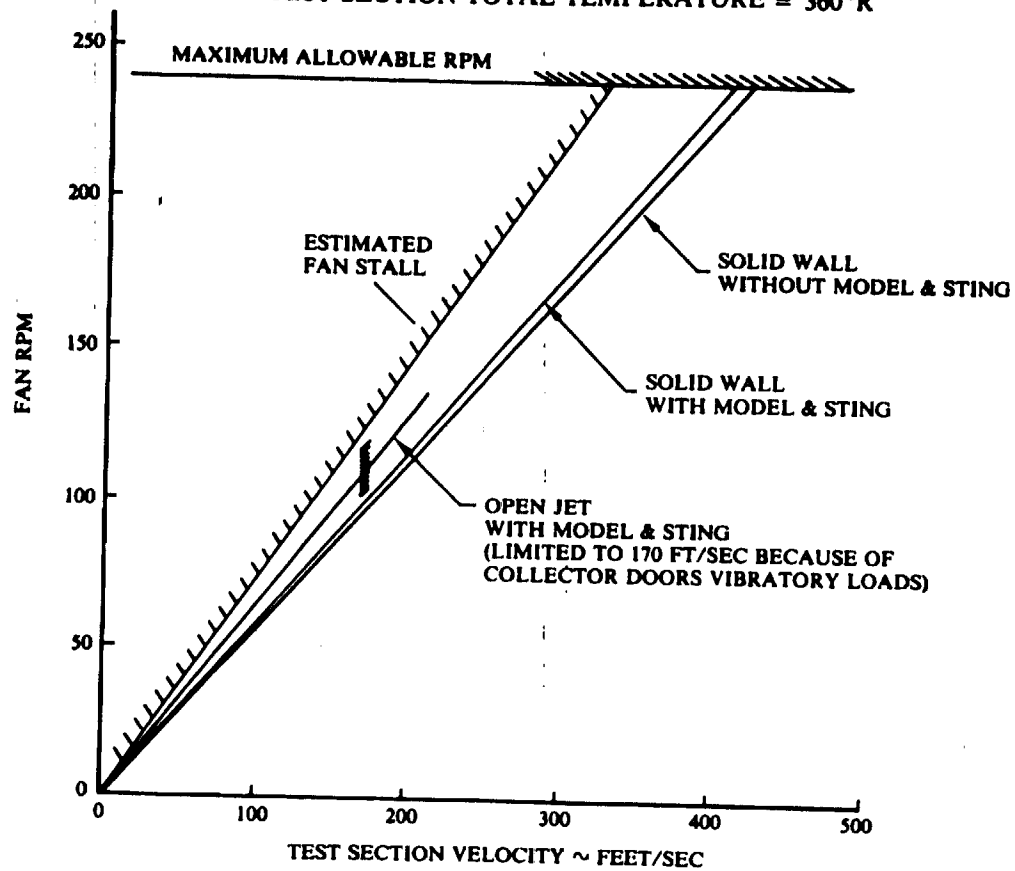


EFFECT OF TEST SECTION CONFIGURATION ON FAN PERFORMANCE

| Boeing Vertol Co. | SUBSONIC WIND TUNNELS | | COMPARABLE FACILITIES |
|---|---|---|---|
| | **TEST SECTION SIZE:** 20 x 20 x 45 ft closed<br>20 x 20 x 22 ft open | **SPEED RANGE:** (Mach No.) 0.33 (364 ft/sec) | Group B1<br>Group H |
| | **DATE BUILT/UPGRADED:**<br>1968: Data Sys. 1980: Rescreen 1982 | **TEMP. RANGE:** 510° - 590°R | |
| 20 x 20-Ft V/STOL Wind Tunnel | **REPLACEMENT COST:** $40M | **REYNOLDS NO:** (Per ft X $10^{-6}$) 0 - 2.3 | |
| | **OPERATIONAL STATUS:**<br>2000 to 3000 hr/yr<br>Running 2nd and 3rd shift | **DYNAMIC PRES:** ($lb/ft^2$) 0 - 157 | |
| | | **STAGNATION PRES:** (psia) Atmospheric | |
| | Closed circuit, single return, continuous flow, V/STOL Tunnel, moving-belt ground plane, solid/slotted walls. Separate 20 x 20 Test Cell for run up. Air Exchange System. | | |

TESTING CAPABILITIES: Walls removable, solid or slotted, in any combination. 100 KT Moving Belt Ground Plane. Sting-mounted models 1500-lb variable attitude, 6000-lb fixed attitude weight limit. Pedestal and yaw table mounts. 20 lb/sec, 1000 psi air supply and air turbines for pneumatic models; 400-hp electric rotor drives. Power supplies for variable frequency constant torque electric motors, hydraulic power systems, and helicopter rotor control systems. Strobe lights, microphones, and ballistic shield. Slotted walls with or without acoustic lining. Tunnel has 39-ft diameter 9-bladed fan, 15 000 hp. Facilities to design, fabricate, instrument, and calibrate powered dynamic models.

DATA ACQUISITION: One hundred channel real-time simultaneous steady-state and dynamic data. 100 kHz sampling. Up to 10 harmonics on 100 channels on line. On-line spectral analysis and 16 oscilloscope safety-of-flight monitors.

CURRENT PROGRAMS: Fixed wing, in ground effect, powered models, high angle of attack. Rotary wing single and tandem rotor helicopters, tilt wing, tilt rotor, and vectored jet aircraft. Performance, stability and control, loads, airframe, and rotor Froude and Mach-scaled dynamic similitude.

PLANNED IMPROVEMENTS: Fiscal Year 1984 - Increased dynamic data channels.

LOCAL INFORMATION CONTACT: David Bevan, Boeing Vertol, (215) 522-3964.

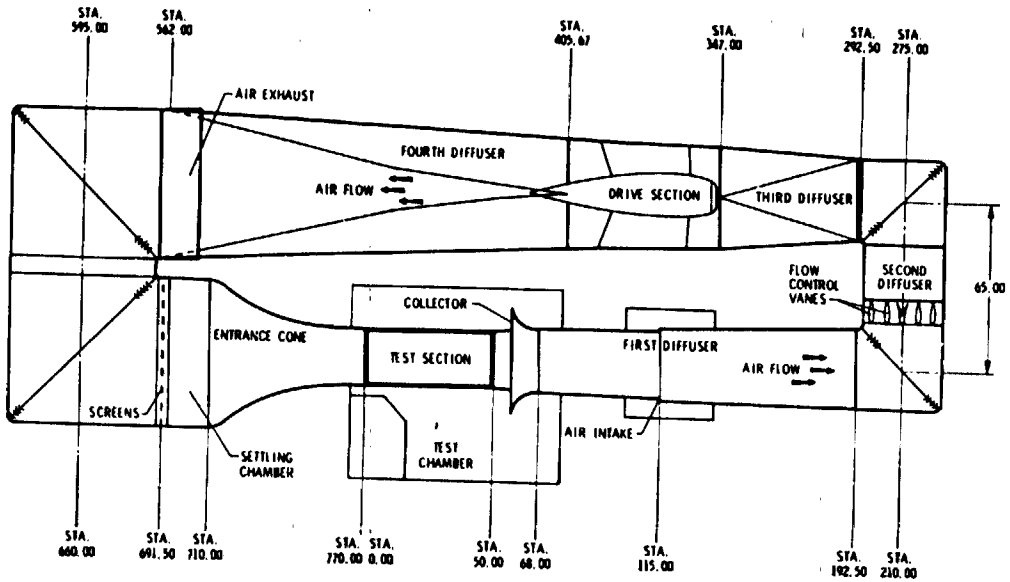


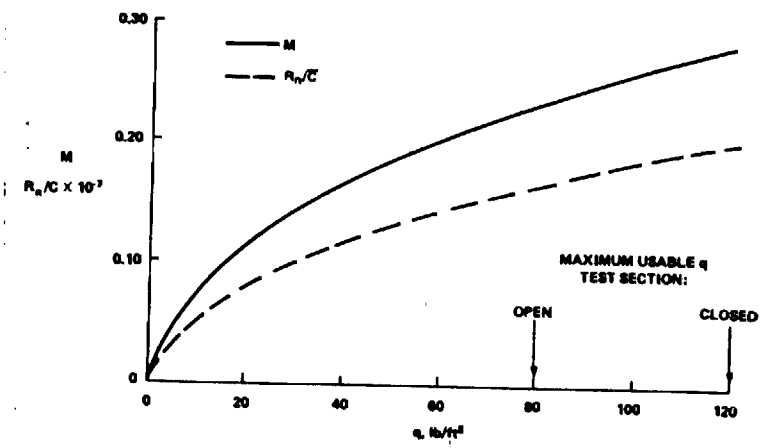


NASA LANGLEY 4 X 7-M TUNNEL

| | SUBSONIC WIND TUNNELS | | COMPARABLE FACILITIES |
|---|---|---|---|
| NASA-Langley Research Center | **TEST SECTION SIZE:** 14.5 x 21.8 x 20 ft | **SPEED RANGE:** (Mach No.) 0 - 0.28 (318 ft/sec) | Group B1<br>Group H |
| | **DATE BUILT/UPGRADED:** 1970/1984 | **TEMP. RANGE:** 490° - 620°R | |
| 4 x 7-M Low-Speed Tunnel | **REPLACEMENT COST:** $17.8M | **REYNOLDS NO:** (Per ft X $10^{-6}$) 0 - 2.1 | |
| | **OPERATIONAL STATUS:** 2 shifts per day (backlog) | **DYNAMIC PRES:** (lb/ft$^2$) 0 - 120 | |
| | | **STAGNATION PRES:** (psia) Atmospheric | |
| | Boundary-layer suction, moving-belt ground board, closed or open throat, single return, test-section size permits use of optimum-size power models | | |

TESTING CAPABILITIES: This tunnel is used for force, moment, and pressure studies of full-span and semispan powered and unpowered advanced fighter aircraft (see CURRENT PROGRAMS). For ground effect tests, a moving-belt ground board with boundary-layer suction and variable-speed capabilities for operation at test-section flow velocities can be installed. A universal model support system uses a three-joint rotary sting. This system is mounted on a horizontal turntable with ±165° of rotation. Models can be powered with either high-pressure air or variable frequency electric systems. The tunnel can be operated as a closed tunnel or with slotted walls or as one or more open configurations by removing the sidewalls and ceiling. This tunnel has a contraction ratio of 9 to 1, and the facility is powered by an 8000-hp drive system.

DATA ACQUISITION: The data acquisition system consists of two duplicate systems. Each system is capable of reading 96 analog channels, 16 digital channels, and 1024 pressure scanner ports and controlling up to 10 scanivalve steppers. Each system uses a computer to control the acquisition process, to record the data on magnetic tape and disk, and to print or display computed parameters. Real-time parameters are available on several CRT devices for test control.

CURRENT PROGRAMS: Advanced fighter, rotorcraft, and STOL and V/STOL aircraft. Also, research and laminar flow control, wake vortex, and advanced turboprops.

PLANNED IMPROVEMENTS: Future modifications for Aeroacoustic Research.

LOCAL INFORMATION CONTACT: Delwin R. Croom, Subsonic Aerodynamics Branch, (804) 865-3611.

| | SUBSONIC WIND TUNNELS | | COMPARABLE FACILITIES |
|---|---|---|---|
| National Aerospace Laboratory, Japan | TEST SECTION SIZE: #1 6.5 x 5.5 m closed<br>#2 5.6 x 4.6 m open | SPEED RANGE: (Mach No.) #1 Up to 0.18 (up to 60 m/sec)<br>#2 Up to 0.21 (up to 70 m/sec) | Group B1 |
| | DATE BUILT/UPGRADED: | TEMP. RANGE: Ambient | |
| 6-M Low-Speed Wind Tunnel LS | REPLACEMENT COST: | REYNOLDS NO: (Per m X $10^{-6}$) #1 4.0<br>#2 4.8 | |
| | OPERATIONAL STATUS: | DYNAMIC PRES: ($kN/m^2$) #1 4.4<br>#2 6.0 | |
| | | STAGNATION PRES: (bars) Atmospheric | |
| | Closed circuit, single return, semiclosed or open test section, continuous flow, vertical strut support<br>Model size: Span - 3 m, weight: 500 kg | | |

TESTING CAPABILITIES: The tunnel has struts for the 6-component pyramid-type external balance for model tests of V/STOL and conventional airplanes. Auxiliary equipment for the powered model tests consists of 10 kf/sec (max) at 20 $kg/m^2$ compressed-air supply. Half-model test is also possible. The facility can accommodate a model with a wing span up to 3 m and weighing 500 kg. This facility is powered by a 10-bladed, 9-m diameter blower driven by a 3000-kW electric motor.

DATA ACQUISITION: Thirty-eight channels of information can be recorded on the data acquisition system and reduced off-site.

CURRENT PROGRAMS: Main research is directed at the study of the low-speed aerodynamics of STOL planes, static and dynamic stability, and associated flow characteristics of airplanes with high-energy efficiency.

PLANNED IMPROVMENTS:

LOCAL INFORMATION CONTACT:

| | SUBSONIC WIND TUNNELS | | COMPARABLE FACILITIES |
|---|---|---|---|
| NLR and DFVLR, Noordoost-polder, Netherlands | TEST SECTION SIZE: 9.5 x 9.5 x 15 m | SPEED RANGE: (Mach No.) 0 - 0.18 (0 - 62 m/sec) | Group B1 |
| | DATE BUILT/UPGRADED: 1976 | TEMP. RANGE: Ambient | |
| DNW 9.5 x 9.5 | REPLACEMENT COST: | REYNOLDS NO: (Per m X $10^{-6}$) 3.9 | |
| | OPERATIONAL STATUS: | DYNAMIC PRES: ($kN/m^2$) 0 - 2.21 | |
| | | STAGNATION PRES: (bars) 1 | |
| | Closed circuit, return, single-stage, slotted walls, breather flaps, continuous flow, three interchangeable test sections | | |

TESTING CAPABILITIES: The largest low-speed tunnel in Western Europe is used for aerodynamic and aeroacoustic tests on aircraft helicopter and nonaeronautical projects. The closed-circuit air exchange tunnel is powered by a variable speed fan driven by a 12.7-MW motor at a maximum speed of 0.5 M. The interchangeable test sections can be prepared in the parking hall adjacent to the tunnel circuit. Models are prepared in large model assembly rooms. The particular model/test section combination is determined by the requirements of each investigation. The test section provides good flow quality (local flow angularity of ±0.1° and turbulence about 0.1%). The open test section provides low background noise in the largest anechoic test chamber in the world. Each test section has a sting support with large angle ranges (±45° and ±30°) and vertical movement compressed high-pressure air for model engine simulators, and a 6-component platform balance.

DATA ACQUISITION: Two computer systems are used. The first system, called MARS, is coupled to the tunnel for tunnel operation and control of data acquisition and reduction. The second system, called VENUS, consists of a main computer and satellite computers. The satellite computers are located in the different model preparation rooms or test sections and support a particular investigation. Data can be acquired on up to 100 channels for each satellite computer.

CURRENT PROGRAMS: General low-speed aircraft aerodynamics, high-lift devices, and V/STOL aerodynamics; engine/airframe interference; airframe, engine, and rotor noise; rotor aerodynamics; and flutter and dynamics test.

PLANNED IMPROVEMENTS:

LOCAL INFORMATION CONTACT:

| | SUBSONIC WIND TUNNELS | | COMPARABLE FACILITIES |
|---|---|---|---|
| NLR and DFVLR Noordoost-polder, Netherlands | TEST SECTION SIZE: 6 x 8 x 16 m | SPEED RANGE: (Mach No.) 0 - 0.32 closed<br>0 - 0.24 open | Group B1<br><br>Group H - for open test section |
| | DATE BUILT/UPGRADED: 1980 | TEMP. RANGE: Ambient | |
| DNW 8 x 6 | REPLACEMENT COST: | REYNOLDS NO: (Per m X $10^{-6}$) 7.52 closed<br>5.47 open | |
| | OPERATIONAL STATUS: | DYNAMIC PRES: ($kN/m^2$) 7.41 closed<br>3.92 open | |
| | | STAGNATION PRES: (bars) 1 | |
| | Closed circuit, return, single-stage fan, slotted walls, breather flaps, continuous flow, three interchangeable test sections, open jet | | |

TESTING CAPABILITIES: The largest low-speed tunnel in Western Europe is used for aerodynamic and aeroacoustic tests on aircraft helicopter and nonaeronautical projects. The closed-circuit air exchange tunnel is powered by a variable speed fan driven by a 12.7-MW motor at a maximum speed of 0.5 M. The interchangeable test sections can be prepared in the parking hall adjacent to the tunnel circuit. Models are prepared in large model assembly rooms. The particular model/test section combination is determined by the requirements of each investigation. The test section provides good flow quality (local flow angularity of ±0.1° and turbulence about 0.1%). The open test section provides low background noise in the largest anechoic test chamber in the world. Each test section has a sting support with large angle ranges (±45° and ±30°) and vertical movement compressed high-pressure air for model engine simulators, and a 6-component platform balance.

DATA ACQUISITION: Two computer systems are used. The first system, called MARS, is coupled to the tunnel for tunnel operation and control of data acquisition and reduction. The second system, called VENUS, consists of a main computer and satellite computers. The satellite computers are located in the different model preparation rooms or test sections and support a particular investigation. Data can be acquired on up to 100 channels for each satellite computer.

CURRENT PROGRAMS: General low-speed aircraft aerodynamics, high-lift devices, and V/STOL aerodynamics; engine/airframe interference; airframe, engine, and rotor noise; rotor aerodynamics; and flutter and dynamics test.

PLANNED IMPROVEMENTS:

LOCAL INFORMATION CONTACT:

| | SUBSONIC WIND TUNNELS | | COMPARABLE FACILITIES |
|---|---|---|---|
| NRL and DFVLR Noordoost-polder, Netherlands | TEST SECTION SIZE: 6 x 6 m | SPEED RANGE: (Mach No.) 0 - 0.43 (0 - 145 m/sec) | Group B1<br>Group H |
| | DATE BUILT/UPGRADED: | TEMP. RANGE: Ambient | |
| DNW 6 x 6 | REPLACEMENT COST: | REYNOLDS NO: (Per m X $10^{-6}$) 0 - 9.9 | |
| | OPERATIONAL STATUS: | DYNAMIC PRES: ($kN/m^2$) 0 - 12.9 | |
| | | STAGNATION PRES: (bars) 1 | |
| | Closed circuit, return, single-stage fan, slotted walls, breather flaps, continuous flow, three interchangeable test sections | | |

TESTING CAPABILITIES: The largest low-speed tunnel in Western Europe is used for aerodynamic and aeroacoustic tests on aircraft helicopter and nonaeronautical projects. The closed-circuit air exchange tunnel is powered by a variable speed fan driven by a 12.7-MW motor at a maximum speed of 0.5 M. The interchangeable test sections can be prepared in the parking hall adjacent to the tunnel circuit. Models are prepared in large model assembly rooms. The particular model/test section combination is determined by the requirements of each investigation. The test section provides good flow quality (local flow angularity of ±0.1° and turbulence about 0.1%). The open test section provides low background noise in the largest anechoic test chamber in the world. Each test section has a sting support with large angle ranges (±45° and ±30°) and vertical movement compressed high-pressure air for model engine simulators, and a 6-component platform balance.

DATA ACQUISITION: Two computer systems are used. The first system, called MARS, is coupled to the tunnel for tunnel operation and control of data acquisition and reduction. The second system, called VENUS, consists of a main computer and satellite computers. The satellite computers are located in the different model preparation rooms or test sections and support a particular investigation. Data can be acquired on up to 100 channels for each satellite computer.

CURRENT PROGRAMS: General low-speed aircraft aerodynamics, high-lift devices, and V/STOL aerodynamics; engine/airframe interference; airframe, engine, and rotor noise; rotor aerodynamics; and flutter and dynamics test.

PLANNED IMPROVEMENTS:

LOCAL INFORMATION CONTACT:

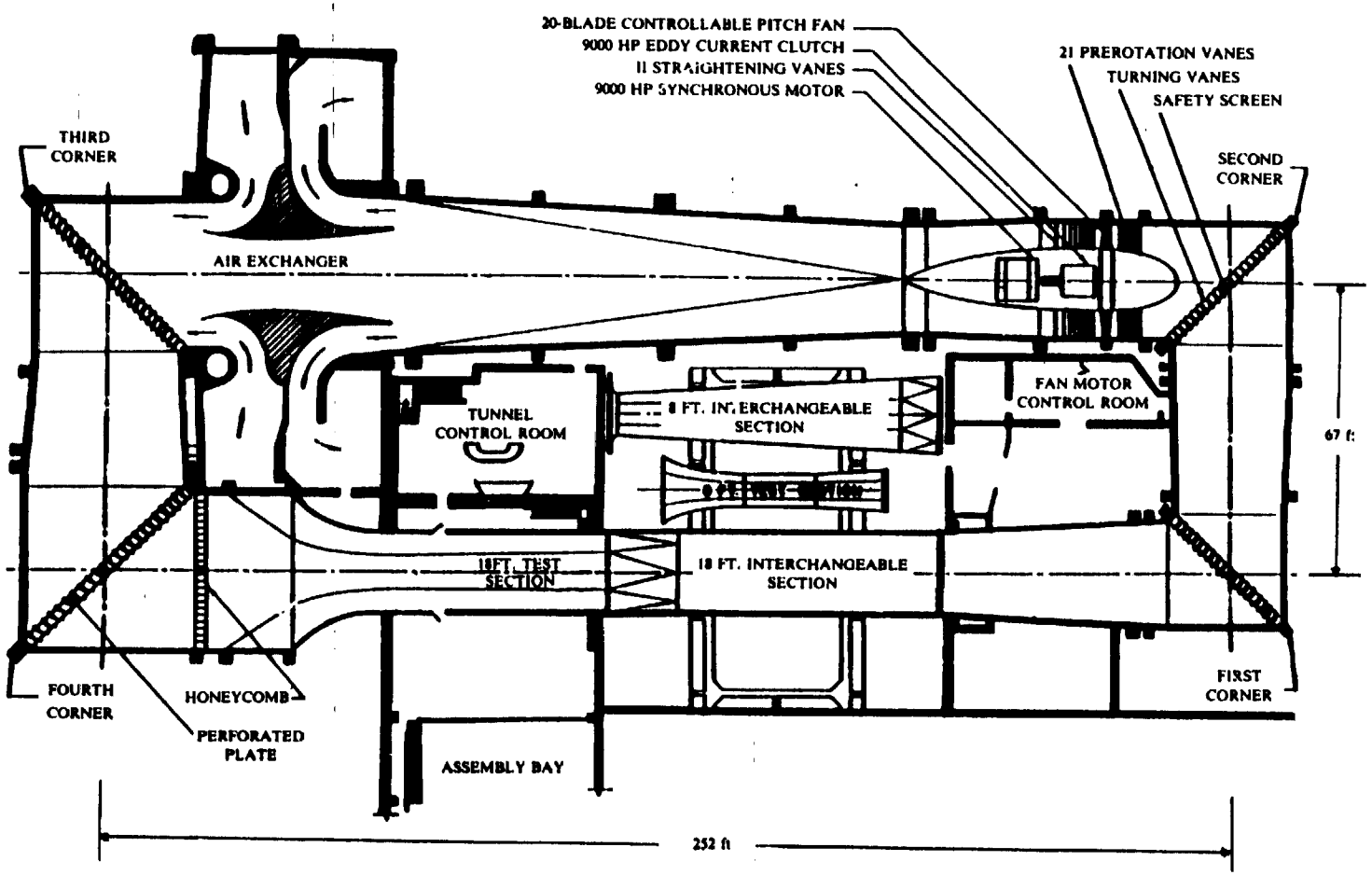
20-BLADE CONTROLLABLE PITCH FAN
9000 HP EDDY CURRENT CLUTCH
11 STRAIGHTENING VANES
9000 HP SYNCHRONOUS MOTOR
21 PREROTATION VANES
TURNING VANES
SAFETY SCREEN
THIRD CORNER
SECOND CORNER
AIR EXCHANGER
TUNNEL CONTROL ROOM
8 FT. INTERCHANGEABLE SECTION
FAN MOTOR CONTROL ROOM
67 ft
18FT. TEST SECTION
18 FT. INTERCHANGEABLE SECTION
FOURTH CORNER
HONEYCOMB
PERFORATED PLATE
FIRST CORNER
ASSEMBLY BAY
252 ft

| United Technologies Research Center East Hartford, Conn. | SUBSONIC WIND TUNNELS | | COMPARABLE FACILITIES |
|---|---|---|---|
| | **TEST SECTION SIZE:** 18 oct/8 oct x 16 x 40 ft | **SPEED RANGE:** (Mach No.) 0.26 - 0.9 (291 - 1008 ft/sec) | 18-ft - Group B1 Group H<br>8-ft - Group C |
| | **DATE BUILT/UPGRADED:** 1945 | **TEMP. RANGE:** 500° - 560°/500° - 590°R | |
| Large Subsonic Wind Tunnel 18/8-Ft<br>Interchangeable Test Section | **REPLACEMENT COST:** | **REYNOLDS NO:** (Per ft X $10^{-6}$) 0 - 1.6<br>0 - 4.5 | |
| | **OPERATIONAL STATUS:** 1 shift per day extended as required | **DYNAMIC PRES:** ($lb/ft^2$) 0 - 90<br>0 - 709 | |
| | | **STAGNATION PRES:** (psia) Atmospheric | |
| | Closed circuit, single return, continuous flow | | |

TESTING CAPABILITIES: Equipped for a variety of low-speed and high-subsonic speed programs in the interchangeable 18-/8-ft test sections. Conventional full-model airplane and helicopter tests conducted with models mounted to external 6-component balance providing remote pitch/yaw control. Aerodynamic model components such as inlets, nozzles, rotors also tested. Nonaerodynamic tests of wind turbines, buildings, etc., are conducted. Special apparatus available for two-dimensional near-sonic airfoil tests (approx 1-ft chord) and for high-power propeller tests (cruise and takeoff). Variety of variable frequency electric power, pressure/vacuum pneumatic, and other services available. Full range of flow visualization tests conducted as well as laser velocimetry (2-component) testing. Tunnel powered by 9000 hp constant speed motor driving a 26-bladed, 20-ft diameter fan through eddy current clutch.

DATA ACQUISITION: Twenty-five channels of steady information (8 from press/temp scanners) with individual channel amplifiers and signal conditioners plus 14 digital channels. Computer-controlled data scanning matrix for multiple sampling. Various on-line hard copy and displays. Data records on floppy disks for off-line reprocessing.

CURRENT PROGRAMS: General-purpose subsonic testing for large variety and type of models.

PLANNED IMPROVEMENTS: Studying acoustic testing in 18-ft test section.

LOCAL INFORMATION CONTACT: Anthony Fasano, UTRC - Test Facilities, (203) 727-7275.

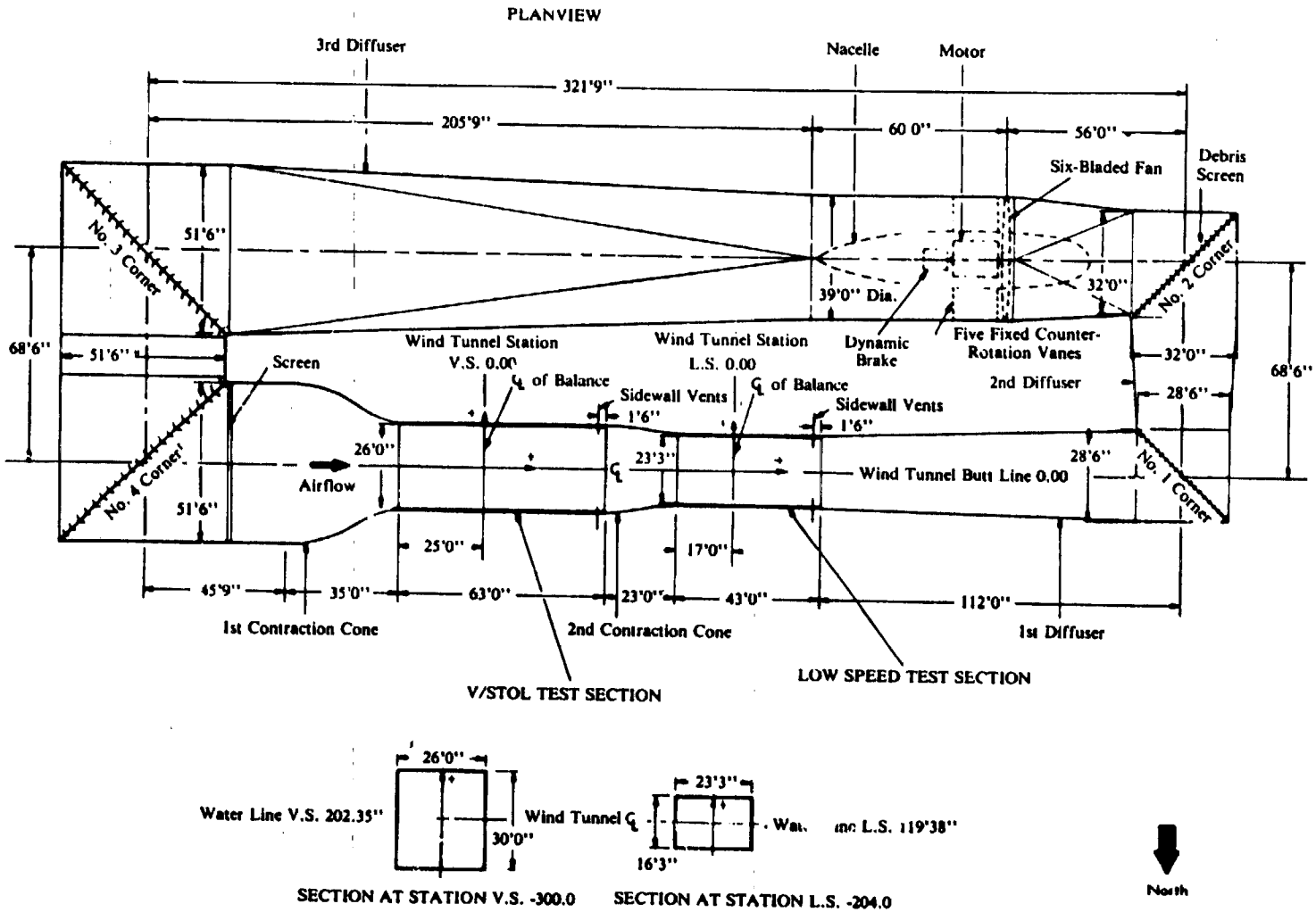


**General Arrangement Low Speed Wind Tunnel**

| | SUBSONIC WIND TUNNELS | | COMPARABLE FACILITIES |
|---|---|---|---|
| Lockheed-Georgia Co. Marietta, Ga. | **TEST SECTION SIZE:** 30 x 26 x 63 ft<br>16.25 x 23.25 x 43 ft | **SPEED RANGE:** (Mach No.) 0.13; 0.26<br>(146; 293 ft/sec) | 30 x 26 - Group B1<br>16 x 23 - Group B2 |
| | **DATE BUILT/UPGRADED:** 1967 | **TEMP. RANGE:** Ambient | |
| Low-Speed Wind Tunnel (LSWT) | **REPLACEMENT COST:** $25M | **REYNOLDS NO:** (Per ft X $10^{-6}$) 0 - 1<br>0 - 2 | |
| | **OPERATIONAL STATUS:**<br>1.5 - 2 shifts per day | **DYNAMIC PRES:** ($lb/ft^2$) 0.5 - 25<br>2 - 100 | |
| | | **STAGNATION PRES:** (psia) Atmospheric | |
| | Closed circuit, single return, continuous flow, closed throat, tandem test sections | | |

TESTING CAPABILITIES: A 6-component pyramidal external balance system is installed under each of the two sections. Models can be supported in either test section using any of several available support systems. Auxiliary equipment consists of two 600-hp motor-generator sets with output frequency controllable from 60 to 400 Hz and a volts per cycle ratio, which can be regulated from 0.4 to 2.0. In addition, a 4500-hp air compressor can supply 20 lb/sec at 300 psi to the model. The facility main-drive motor is a 9000-hp electric motor directly coupled to a fixed-pitch, 6-bladed fan of 30-ft diameter.

DATA ACQUISITION: Data acquisition and reduction on-site.

CURRENT PROGRAMS: Low-speed investigations in aerodynamics, stability and control, and propulsion integration for aircraft and automotive models.

PLANNED IMPROVEMENTS:

LOCAL INFORMATION CONTACT: Gerald A. Pounds, Group Engineer, Wind Tunnels Test Group, (404) 424-4158.

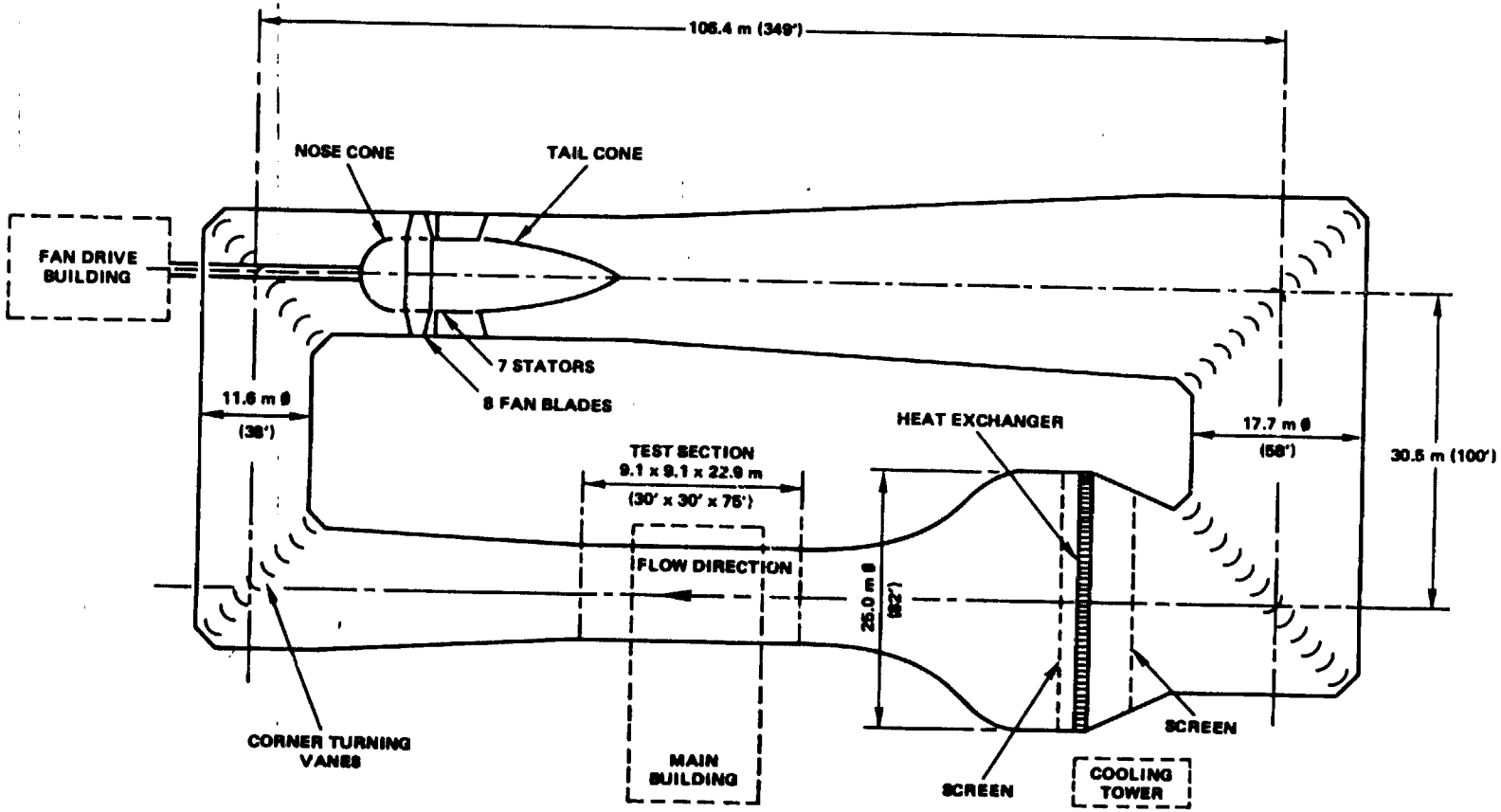
106.4 m (349')
NOSE CONE
TAIL CONE
FAN DRIVE BUILDING
7 STATORS
8 FAN BLADES
11.6 m ø
(38')
HEAT EXCHANGER
17.7 m ø
(58')
30.5 m (100')
TEST SECTION
9.1 x 9.1 x 22.9 m
(30' x 30' x 75')
FLOW DIRECTION
25.0 m ø
(82')
CORNER TURNING VANES
MAIN BUILDING
SCREEN
SCREEN
COOLING TOWER

| National Research Council, Canada | SUBSONIC WIND TUNNELS | | COMPARABLE FACILITIES |
|---|---|---|---|
| | TEST SECTION SIZE: 30 x 30 x 75 ft | SPEED RANGE: (Mach No.) 0 - 0.16 (0 - 180 ft/sec) | Group B2 |
| | DATE BUILT/UPGRADED: 1970 | TEMP. RANGE: Ambient | |
| 9 x 9-M Low-Speed Wind Tunnel | REPLACEMENT COST: $20M | REYNOLDS NO: (Per ft X $10^{-6}$) 0 - 1 | |
| | OPERATIONAL STATUS: 1 shift per day | DYNAMIC PRES: (lb/ft$^2$) 0 - 40 | |
| | | STAGNATION PRES: (psia) Atmospheric | |
| | Closed circuit, single return, continuous flow, closed throat | | |

TESTING CAPABILITIES: The facility will accommodate aircraft models with wing spans up to about 24 ft, or full-size automobiles or small trucks. A system of spires and roughness blocks are available to simulate wind shear layer as well as a 24-ft diameter floor turntable at the downstream end of the test section for testing wind effects on scaled model buildings. Auxiliary equipment consists of four 200-hp variable frequency sets for supplying dc power as well as a compressed air supply from 0 to 15 lb/sec at pressures from 300 to 250 psi, respectively. The wind tunnel is powered by an 8-bladed, 38-ft diameter fan driven by a 9200-hp dc motor.

DATA ACQUISITION: The 64 analog and 24 digital channels of data are acquired via a NEFF driver system, and the data processing and displays are handled by the DEC RSX-11M operating system with a PDP 11-44 computer.

CURRENT PROGRAMS: The main use of the tunnel is involved with low-speed aerodynamic research and development on model aircraft and full-size surface vehicles, as well as with the study of wind effects on various architectural and engineering structures.

PLANNED IMPROVEMENTS: Extension of building to increase working space and office space is scheduled to be completed in 1985. Estimated cost is $1.3M (Can). Extended shift operations are planned for late 1984.

LOCAL INFORMATION CONTACT: Yoshi Nishimura, Operations Manager, 9 Meter Wind Tunnel, Low Speed Aerodynamics Laboratory, National Research Council, Montreal Road, Ottawa, Ontario, Canada, K1A OR6, (613) 998-3121.

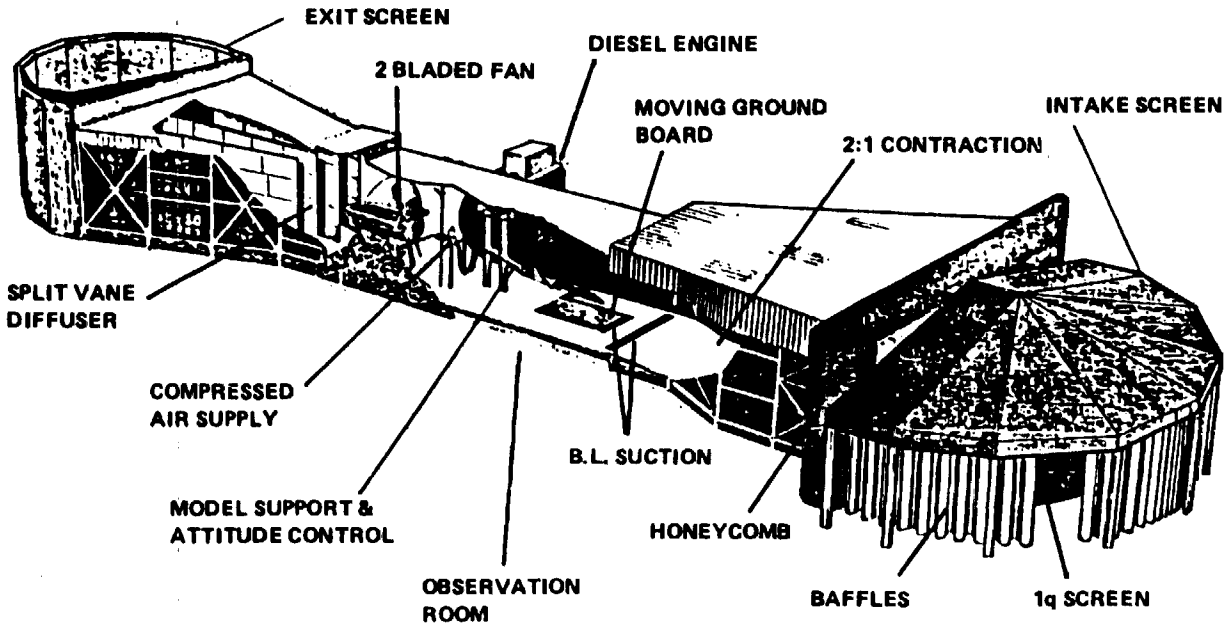
EXIT SCREEN
2 BLADED FAN
DIESEL ENGINE
MOVING GROUND BOARD
2:1 CONTRACTION
INTAKE SCREEN
SPLIT VANE DIFFUSER
COMPRESSED AIR SUPPLY
B.L. SUCTION
MODEL SUPPORT & ATTITUDE CONTROL
HONEYCOMB
OBSERVATION ROOM
BAFFLES
1q SCREEN

| British Aerospace Warton | SUBSONIC WIND TUNNELS | | COMPARABLE FACILITIES |
|---|---|---|---|
| | TEST SECTION SIZE: 5.0 x 5.5 m | SPEED RANGE: (Mach No.) 0.035 - 0.065 (12 - 22 m/sec) | Group B2 |
| | DATE BUILT/UPGRADED: 1963/1975/1980 | TEMP. RANGE: Ambient | |
| 18-Ft V/STOL Wind Tunnel | REPLACEMENT COST: $3.2M | REYNOLDS NO: (Per m X $10^{-6}$) 0.8 - 1.5 | |
| | OPERATIONAL STATUS: Active | DYNAMIC PRES: ($kN/m^2$) 0.09 - 0.30 | |
| | | STAGNATION PRES: (bars) Atmospheric | |
| | Straight through circuit to atmosphere, shielded intake and exit, solid walls. Working section floor and roof concrete, brick walls. Contraction and diffuser steel frame, plywood clad. | | |

TESTING CAPABILITIES: Powered by 220-kW diesel engine, using 2-bladed fan. Blade pitch can be varied to give speeds less than 12 m/sec. Contraction ratio 2, one screen, honeycomb. Speed uniform to ±0.5%, upwash and sidewash within 0.3°. Sting mounting, incidence -11° - +85°, sideslip ±30°, and roll -90° - +180°. Height adjustment from floor to upper half of working section. Full-width boundary layer removal, 1.5 m wide moving ground belt 25 m/sec. Several internal strain-gage balances, 6 components, normal force 2.0 kN maximum. Rolling rig, ±60 rpm about wind axis, model mass limit 60 kg, incidence ±90°, sideslip by pitch and roll. Six-component internal strain-gage balance gives damping due to rate of roll. Air supplies 240 $m^3$ at 40 bars supplied from 1.2-m blowdown tunnel. Mass flows only limited by pipework and model design to 4 kg/sec. Thrust and mass flow calibration rigs.

DATA ACQUISITION: Dedicated minicomputer (DEC PDP8), linked to site CPU for reduction and storage. Computer store of 15-year output, fully indexed retrieval.

CURRENT PROGRAMS: Used for aircraft design and development, flight test support, new project assessment, and aerodynamic research by major manufacturer of combat aircraft. Fully active on flexible program allowing quick reaction to new demands from within our own organization. Fully staffed for design and manufacture of models, rigs, and strain-gage balances, as well as for calibration, testing, and analysis.

PLANNED IMPROVEMENTS: Dedicated minicomputer to be replaced during 1984 with DEC PDP 11 for on-line reduction and plotting. Additional intake screen. Maintenance and replacement of lifed items for long-term active operation.

LOCAL INFORMATION CONTACT: K. Emslie, Chief Wind Tunnel Engineer (W175), British Aerospace, Aircraft Group, Warton Aerodrome, Preston, Lancashire, U.K., PR4 1AX, (0772-63333, ext. 369, Telex 67627).

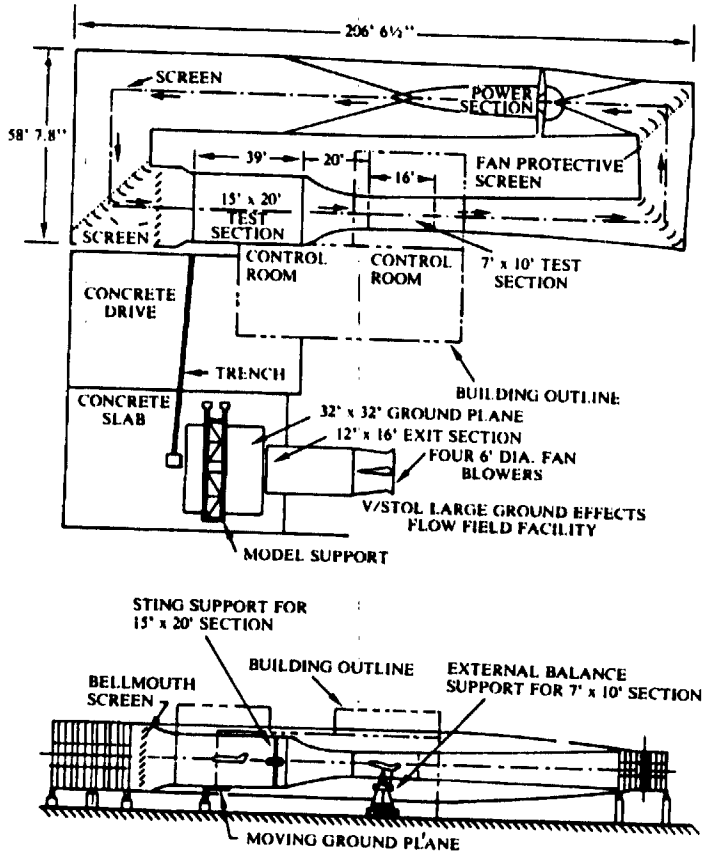


VOUGHT 7 x 10-FT AND 15 x 20-FT LOW SPEED WIND TUNNEL AND LARGE GROUND EFFECTS FLOW FIELD FACILITY

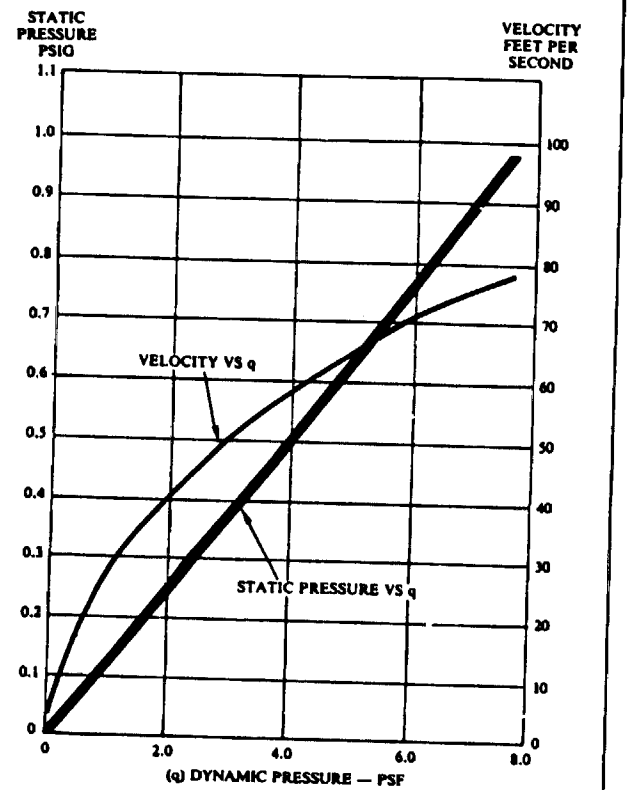


PRESSURE AND VELOCITY VARIATION WITH DYNAMIC PRESSURE IN THE 15 x 20-FOOT TEST SECTION

| | SUBSONIC WIND TUNNELS | | COMPARABLE FACILITIES |
|---|---|---|---|
| Vought Corp. | **TEST SECTION SIZE:** 15 x 20 x 39 ft | **SPEED RANGE: (Mach No.)** 0.01 - 0.06 (14 - 76 ft/sec) | Group B2 |
| | **DATE BUILT/UPGRADED:** Modification to 7 x 10-ft/1965 | **TEMP. RANGE:** 500° - 610°R | |
| 7 x 10-Ft and 15 x 20-Ft Subsonic Wind Tunnel | **REPLACEMENT COST:** $10M | **REYNOLDS NO: (Per ft X $10^{-6}$)** 0.063 - 0.49 | |
| | **OPERATIONAL STATUS:** Normally 1 shift per day - can be extended to 2 shifts | **DYNAMIC PRES: ($lb/ft^2$)** 0.25 - 7 | |
| | | **STAGNATION PRES: (psia)** Atmospheric plus dynamic | |
| V/STOL | Closed circuit, single return, continuous flow, tandem V/STOL, free drop, gas ingestion, sting support, 10 x 12-ft moving ground belt in floor of test section | | |

TESTING CAPABILITIES: This facility is equipped for force measurements with internal balances, powered models, jet simulation, dynamic stability, ground effects, automotive, and wind loads on buildings and other structures. Model mounting consists of various sting or strut systems. Auxiliary model power sources include two 50-kW variable frequency generator sets, a 90 gpm, 5000 psi hydraulic system, and 500-psi heated air of rates up to 20 lb/sec. The adjacent, open-air Ground Effects Facility is equipped for force and pressure measurements on V/STOL configuration and hover in and out of ground effects without wall interference over a 32 x 32-ft ground plane. An overhead support allows adjustment of model attitude and height above the ground plane. All tunnel data systems and power sources are also available at the hover site. A four-fan, 500-hp, 12 x 16-ft, 0-30 knot, crosswind generator allows hover testing in the presence of controlled wind speeds of 0-30 knots from any azimuth.

DATA ACQUISITION: Sixty-four low-level analog data channels may be recorded with 16-bit resolution and processed by an on-line, on-site digital computer and plotter system. Two 5-digit angle encoder channels and four 5-digit frequency counters may also be recorded by direct digital entry into the computer. High-speed movie cameras, oscillographs, and FM analog tape recording are available.

CURRENT PROGRAMS: Low-speed aerodynamic characteristics of V/STOL and conventional aircraft, missiles, helicopters, ground effects, automobiles, buildings and other structures, windmill, and parachute testing.

PLANNED IMPROVEMENTS: Replace and update computer system, additional software development for facility control.

LOCAL INFORMATION CONTACT: J. M. Cooksey, Wind Tunnel Laboratories, (214) 266-3234.

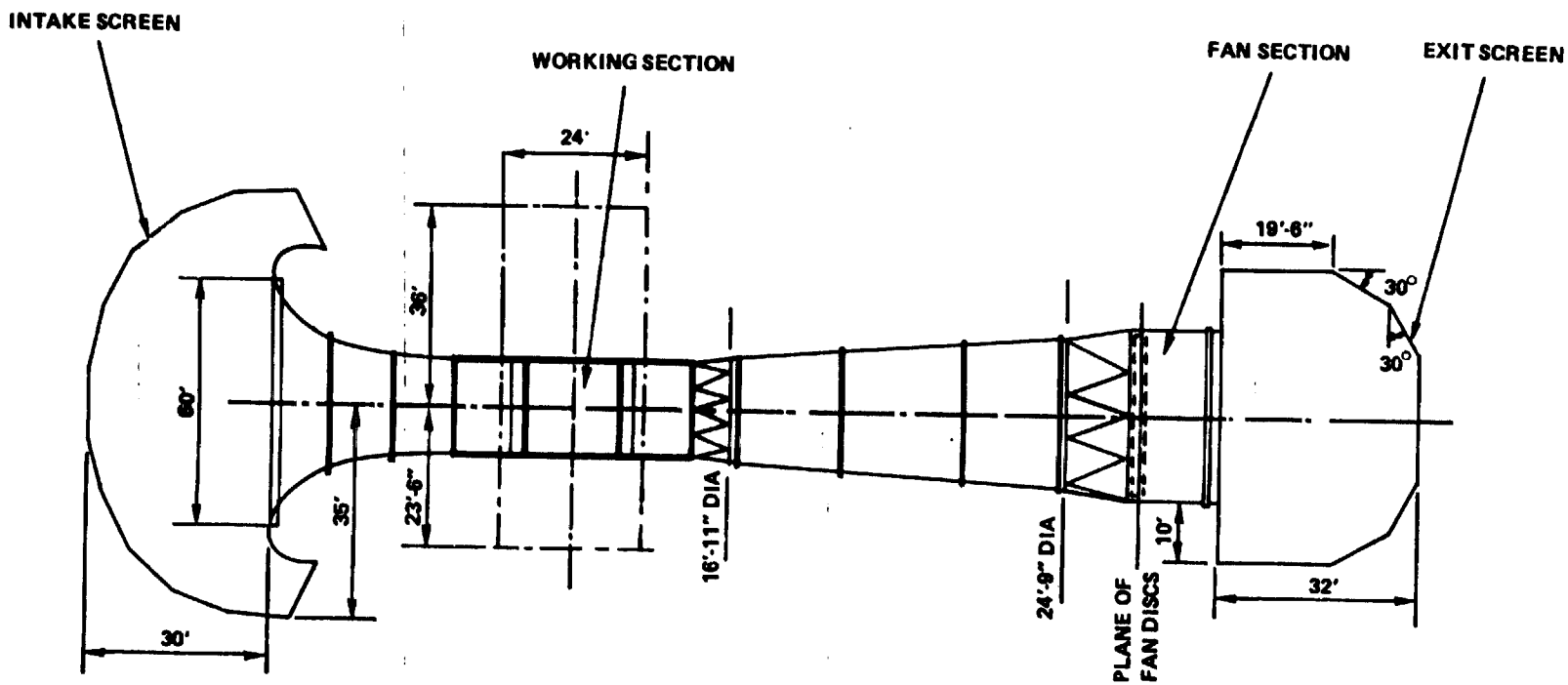
INTAKE SCREEN
WORKING SECTION
FAN SECTION
EXIT SCREEN
24'
36'
60'
35'
23'-6"
30'
16'-11" DIA
24'-9" DIA
PLANE OF
FAN DISCS
10'
19'-6"
30°
30°
32'

| British Aerospace Hatfield | SUBSONIC WIND TUNNELS | | COMPARABLE FACILITIES |
|---|---|---|---|
| | TEST SECTION SIZE: 15 x 15 x 40 ft | SPEED RANGE: (Mach No.) 0 - 0.125 (0 - 140 ft/sec) | Group B1 |
| | DATE BUILT/UPGRADED: 1964 | TEMP. RANGE: Ambient | |
| 15-Ft Wind Tunnel | REPLACEMENT COST: | REYNOLDS NO: (Per ft X $10^{-6}$) 0 - 0.9 | |
| | OPERATIONAL STATUS: 1 shift per day | DYNAMIC PRES: (lb/ft$^2$) 0 - 23 | |
| | | STAGNATION PRES: (psia) Atmospheric | |
| | Open circuit, closed throat, continuous flow, 6-component mechanical balance | | |

TESTING CAPABILITIES: The tunnel is powered by seven 100-hp electric motors driving 10-ft diameter fans at the downstream end. The virtual-center underfloor balance is equipped with a variety of mounting systems for complete models, and half models with the wing in a vertical plane. A variable height ground board/reflection plane is built into the tunnel floor, and another is available for mounting in the vertical or horizontal plane as required. Compressed-air supplies up to 20 lb/sec at about 100 psig, and suction of 11 000 ft$^3$/min at 20 in Hg is available.

DATA ACQUISITION: Digital signals from the mechanical balance and analog signals from various devices such as pressure transducers and strain gages are processed and fed to the Wind Tunnel Department's own computer for on-line computation and presentation.

CURRENT PROGRAMS:

PLANNED IMPROVEMENTS:

LOCAL INFORMATION CONTACT: H. C. Farley, British Aerospace Aircraft Group, Hatfield, (Hatfield (07072) 62300, ext. 11).

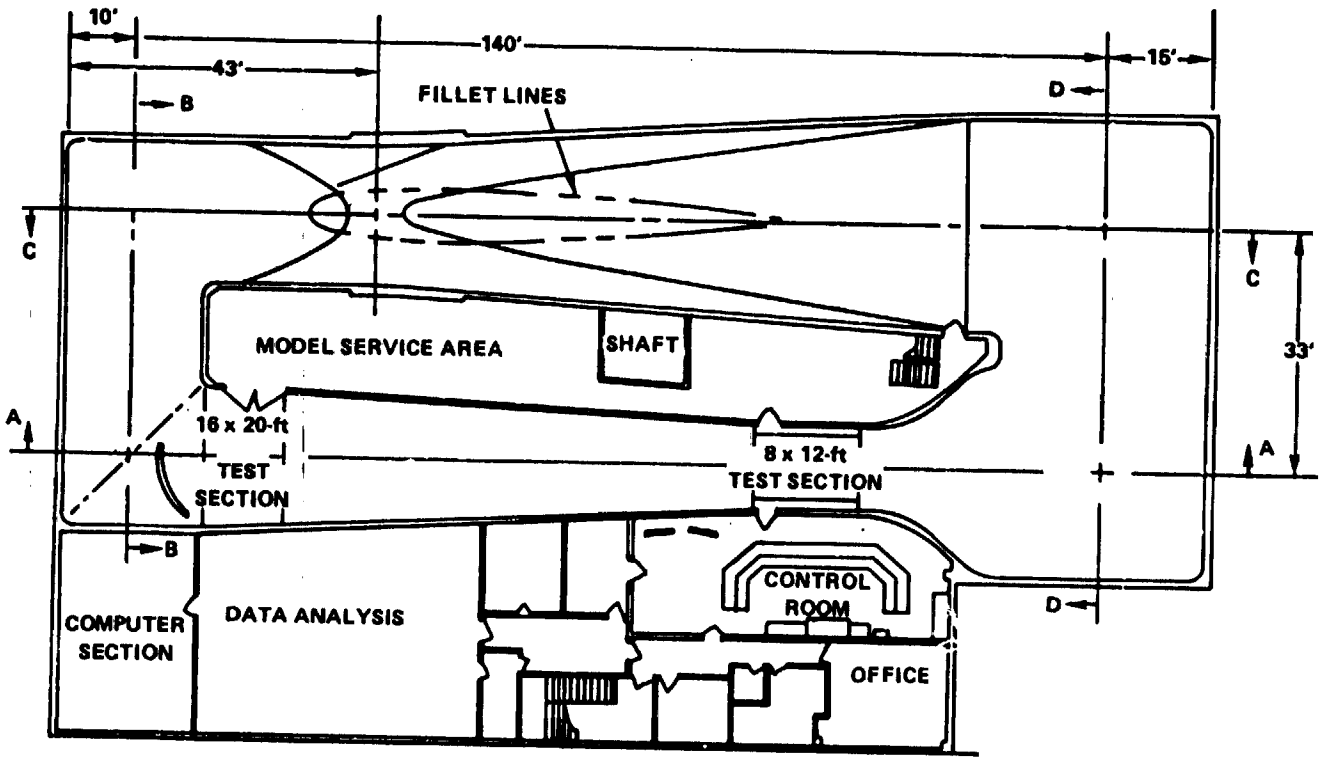
10'
140'
15'
43'
B
FILLET LINES
D
C
C
33'
MODEL SERVICE AREA
SHAFT
A
16 x 20-ft
TEST
SECTION
8 x 12-ft
TEST SECTION
A
B
CONTROL
ROOM
D
COMPUTER
SECTION
DATA ANALYSIS
OFFICE

| General Dynamics Corp. San Diego | SUBSONIC WIND TUNNELS | | COMPARABLE FACILITIES |
|---|---|---|---|
| | **TEST SECTION SIZE:** 16 x 20 x 24 ft | **SPEED RANGE:** (Mach No.) 0.02 - 0.08 (22 - 89 ft/sec) | Group B2 |
| | **DATE BUILT/UPGRADED:** 1961 | **TEMP. RANGE:** Ambient | |
| 8 x 12-Ft Subsonic Wind Tunnel with Tandem V/STOL | **REPLACEMENT COST:** $5M | **REYNOLDS NO:** (Per ft X $10^{-6}$) 0.1 - 0.55 | |
| | **OPERATIONAL STATUS:** 1 shift per day | **DYNAMIC PRES:** (lb/ft$^2$) 0.5 - 10 | |
| | | **STAGNATION PRES:** (psia) Atmospheric | |
| | Closed circuit, single return, continuous flow, moving ground plane | | |

TESTING CAPABILITIES: This test section is intended for use with models having high-energy lift systems. Allows testing of reasonably large-scale models with minimum tunnel wall interference effects. Also allows vertical translation for ground effects models.

DATA ACQUISITION: Fifty channels of information can be recorded by the system currently being used.

CURRENT PROGRAMS: No current programs in progress.

PLANNED IMPROVEMENTS: None at this time.

LOCAL INFORMATION CONTACT: Stanley A. Griffin, Chief of Aerotest, (619) 692-2358 or A. Edward Brady, Test Engineering, (619) 692-8286.

| | SUBSONIC WIND TUNNELS | | COMPARABLE FACILITIES |
|---|---|---|---|
| Vought Corp. | **TEST SECTION SIZE:** 12 x 16 x 32 ft | **SPEED RANGE:** (Mach No.) 0.04 (51 ft/sec) | Group B2 |
| | **DATE BUILT/UPGRADED:** 1978 | **TEMP. RANGE:** Ambient | |
| Vought Large Ground Effects Facility (LGEF) | **REPLACEMENT COST:** $500K | **REYNOLDS NO:** (Per ft X $10^{-6}$) 0 - 0.325 | |
| | **OPERATIONAL STATUS:** Operational | **DYNAMIC PRES:** (lb/ft$^2$) 0 - 3.0 | |
| | | **STAGNATION PRES:** (psia) Atmospheric | |
| | Open-circuit, free jet, open air, continuous flow, 32 x 32-ft elevated ground plane, four 125-hp, 6-ft fans, inlet guide vane speed control. Overhead gantry-type model support with pitch, yaw, roll, and height control | | |

TESTING CAPABILITIES: Hover testing of powered models of V/STOL configurations to investigate ground effects of proximity to plane surfaces, deck edges, superstructure, gratings, without wall-induced recirculation, with and without winds. Internal balance force measurements, pressure measurements, flow field visualizations. Suitable for general aerodynamic testing within the speed range of 0-35 mph. Model power sources available include: high-pressure air, 500 psi, up to 20 lb/sec, with temperature control to 200° - 250°F; variable frequency electrical, 2 sets, each 50 kW; and hydraulic supply, 90 gpm, 5000 psi.

DATA ACQUISITION: Sixty-four low-level analog data channels may be recorded with 16-bit resolution and processed by an on-site, on-line computer and plotting system. High-speed movie cameras, oscillographs, and FM analog tape recording are also available.

CURRENT PROGRAMS: Investigation of ground effects and wind effects on the aerodynamic characteristics in hover of V/STOL configuration.

PLANNED IMPROVEMENTS:

LOCAL INFORMATION CONTACT: J. M. Cooksey, Wind Tunnel Laboratories, (214) 266-3234.

| | SUBSONIC WIND TUNNELS | | COMPARABLE FACILITIES |
|---|---|---|---|
| McDonnell Douglas Corp. St. Louis | **TEST SECTION SIZE:** 15 x 20 x 20 ft | **SPEED RANGE:** (Mach No.) 0.10 (112 ft/sec) | Group B2 |
| | **DATE BUILT/UPGRADED:** 1970/1980 | **TEMP. RANGE:** 570°R | |
| Mini Speed Wind Tunnel or Interim V/STOL | **REPLACEMENT COST:** | **REYNOLDS NO:** (Per ft X $10^{-6}$) 0 - 0.75 | |
| | **OPERATIONAL STATUS:** 3 shifts per day | **DYNAMIC PRES:** (lb/ft$^2$) 0 - 18 | |
| | | **STAGNATION PRES:** (psia) | |
| | Continuous flow, single return, open or closed circuit, moving ground plane, hot gas ingestion | | |

TESTING CAPABILITIES: This facility is a modification to the existing Low-Speed Wind Tunnel (LSWT) by an addition of a separate circuit to the LSWT. Forces and moments from the pyramidal balance load cells, pressure tests, jet effects, ejection, inlet, and various flow visualization tests are conducted in the MSWT. Associated equipment includes a helium bubble generator, tufts, oil flow equipment, full photographic coverage and closed-circuit television, TV tape recording, smoke and steam-nitrogen, and high alpha support system, all of which are available. A 6-inch pipeline delivers 600 psig air from Polysonic Wind Tunnel compressor to MSWT; rates range from 20 lb/sec at 300 psig to 8 lb/sec at 500 psig. An indirect-fired gas heater is available for heating this air to 850°F. Hot and cold 600 psig air mixing system is installed that provides both remote pressure and temperature control for propulsion simulation. Two single-stage air ejectors with induced flow rates of 5 and 13 lb/sec are used to provide suction flow.

DATA ACQUISITION: The data acquisition system consists of two stand-alone DATUM, Inc., Nova 3D computer based units, each with 150 analog input channels and 14 digital input channels. Data processing is performed on System Engineering Laboratories Model 32/75 general-purpose high-speed 32-bit computer.

CURRENT PROGRAMS: Main emphasis is directed at the study of low-speed aerodynamics, stability and control, and flow characteristics by continuous running on fighter and transport aircraft configurations.

PLANNED IMPROVEMENTS:

LOCAL INFORMATION CONTACT: Aerodynamic & Propulsion Labs, McDonnell Aircraft Co., St. Louis, MO 63166, (314) 232-4816.

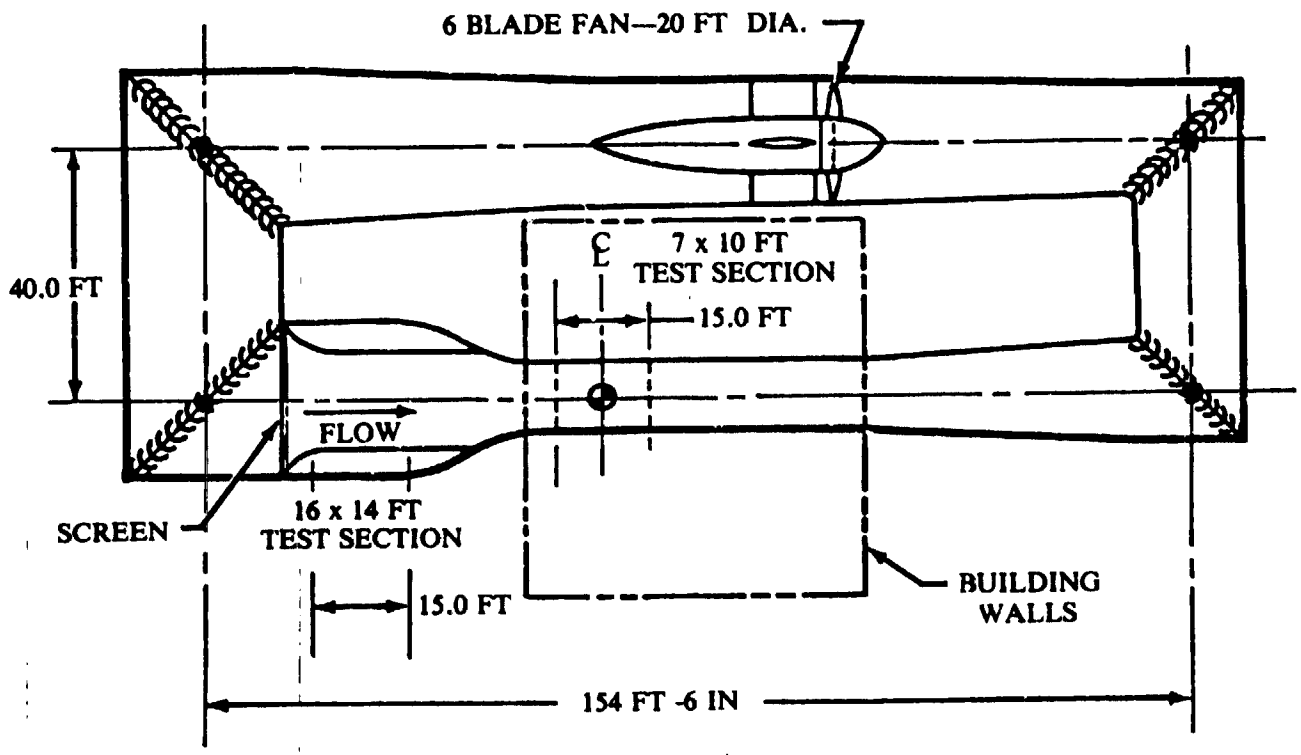
6 BLADE FAN—20 FT DIA.
40.0 FT
℄
7 x 10 FT
TEST SECTION
15.0 FT
FLOW
SCREEN
16 x 14 FT
TEST SECTION
15.0 FT
BUILDING
WALLS
154 FT -6 IN

| Rockwell International Corp. Columbus, Ohio | SUBSONIC WIND TUNNELS | | COMPARABLE FACILITIES |
|---|---|---|---|
| | **TEST SECTION SIZE:** 16 x 14 x 15 ft | **SPEED RANGE:** (Mach No.) 0.10 (115 ft/sec) | Group B2 |
| | **DATE BUILT/UPGRADED:** 1959/1966/1968/1982 | **TEMP. RANGE:** 500° - 570°R | |
| Subsonic Wind Tunnel with Tandem V/STOL | **REPLACEMENT COST:** $7M | **REYNOLDS NO:** (Per ft X $10^{-6}$) 0 - 0.76 | |
| | **OPERATIONAL STATUS:** Single shift operation | **DYNAMIC PRES:** (lb/ft$^2$) 0 - 16 | |
| | | **STAGNATION PRES:** (psia) 14.7 - 16.17 | |
| | Closed circuit, single return, continuous flow | | |

TESTING CAPABILITIES: Designed primarily for force and pressure testing in the very low speed regime. Six-component force data of full-span models are obtained from internal balances using sting/strut mounting. Semispan installations use a 5-component post balance support. An auxiliary air supply (17 lb/sec at 450 psi) is available for model power. An air suction system capable of pumping 4800 cfm at 3.9 psia is also available. A remotely actuated translating ground board provides high data acquisition rates for ground effects testing. Flow field survey work is supported by remotely controlled translating rakes, flow angularity probes, and a 3-channel hot wire/hot film anemometry system.

DATA ACQUISITION: Fifty channels of signal conditioning/amplification are available. Data are recorded and reduced on-line by a dedicated IBM 1800 computer system located in the tunnel control room.

CURRENT PROGRAMS: Primarily powered lift model investigations of near hover and transition flight. Recent research testing has included investigations of body forces induced by multiple jet configurations in ground effect.

PLANNED IMPROVEMENTS:

LOCAL INFORMATION CONTACT: John Federspiel, (614) 239-2401.

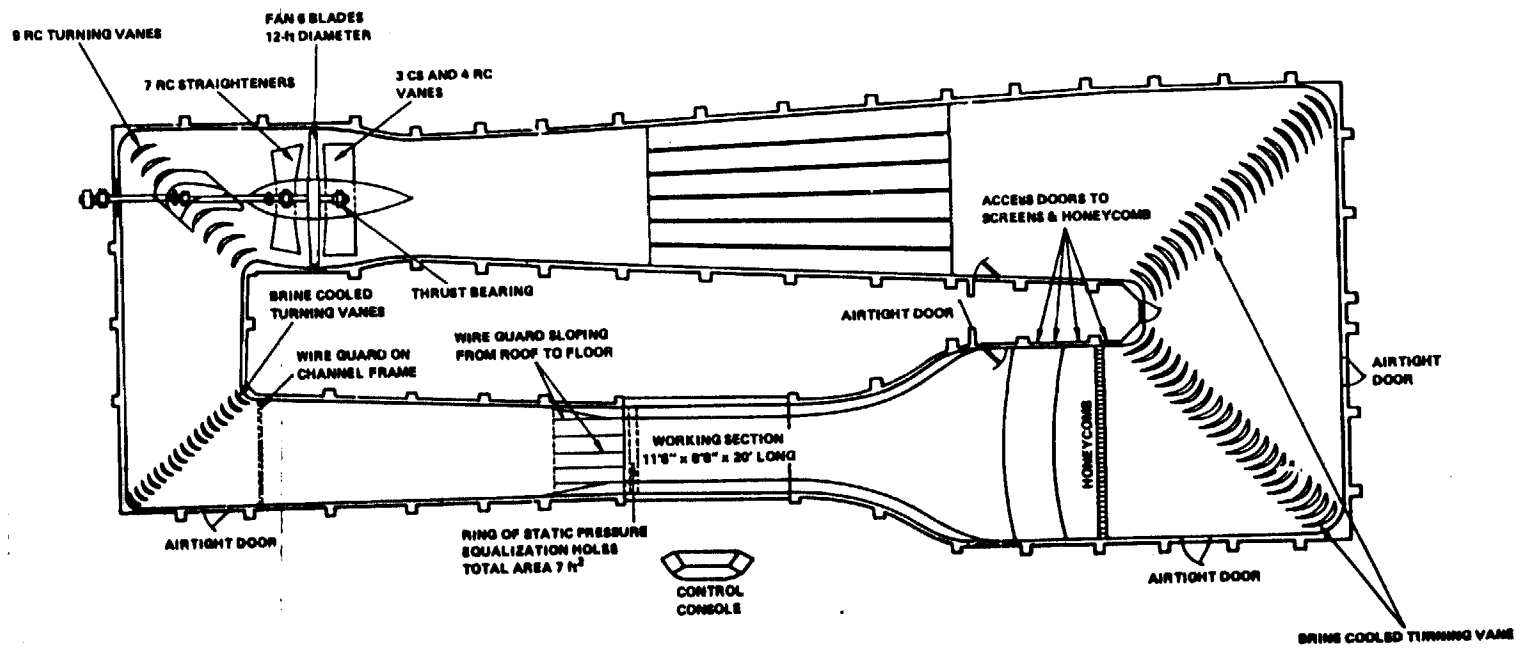
9 RC TURNING VANES
FAN 6 BLADES
12-ft DIAMETER
7 RC STRAIGHTENERS
3 CS AND 4 RC
VANES
THRUST BEARING
BRINE COOLED
TURNING VANES
WIRE GUARD ON
CHANNEL FRAME
WIRE GUARD SLOPING
FROM ROOF TO FLOOR
WORKING SECTION
11'6" x 8'8" x 20' LONG
RING OF STATIC PRESSURE
EQUALIZATION HOLES
TOTAL AREA 7 ft²
CONTROL
CONSOLE
AIRTIGHT DOOR
ACCESS DOORS TO
SCREENS & HONEYCOMB
AIRTIGHT DOOR
HONEYCOMB
AIRTIGHT
DOOR
AIRTIGHT DOOR
BRINE COOLED TURNING VANE

| Royal Aircraft Establishment Farnborough, United Kingdom | SUBSONIC WIND TUNNELS | | COMPARABLE FACILITIES |
|---|---|---|---|
| | TEST SECTION SIZE: 3.5 x 2.6 m | SPEED RANGE: (Mach No.) 0.01 - 0.32 (5 - 110 m/sec) | Group C |
| | DATE BUILT/UPGRADED: 1944/1968 | TEMP. RANGE: Ambient | |
| 11½ x 8½-Ft Tunnel | REPLACEMENT COST: | REYNOLDS NO: (Per m X $10^{-6}$) Up to 7.5 | |
| | OPERATIONAL STATUS: Active | DYNAMIC PRES: ($kN/m^2$) Up to 7.3 | |
| | | STAGNATION PRES: (bars) 1 | |
| | Continuous flow, roof, underfloor, and sting balances, return circuit | | |

TESTING CAPABILITIES: Overhead 3-component balance, underfloor 6-component virtual-center balance, and sting-support system. Auxiliary air supplies for model blowing.

DATA ACQUISITION: Six-channel system for use with balances.

CURRENT PROGRAMS: General low-speed research on aircraft and weapons.

PLANNED IMPROVEMENTS:

LOCAL INFORMATION CONTACT: Superintendent, AE2 Division, Aerodynamics Department, (0252) 24461, ext. 5377.

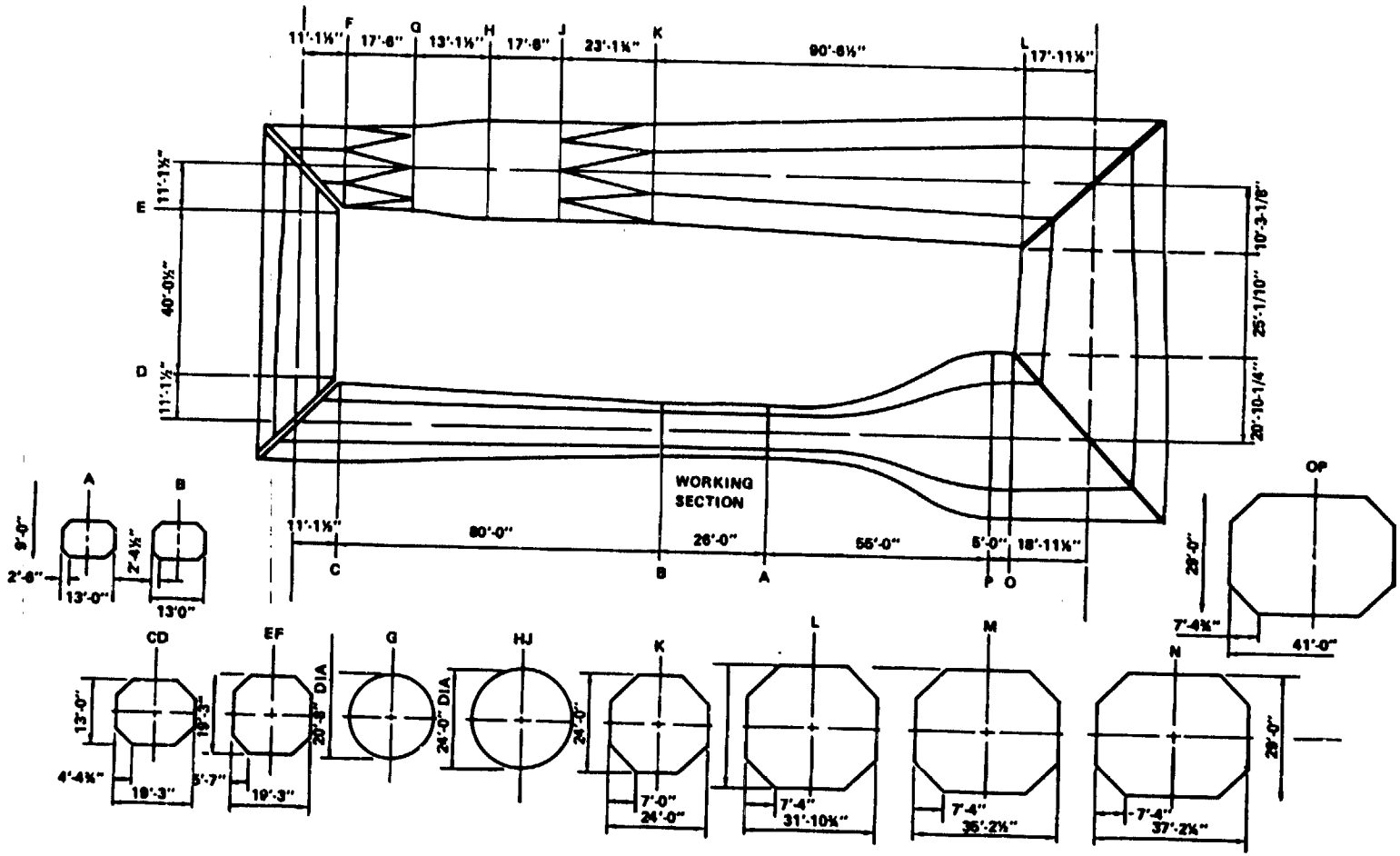
11'-1½"
F
17'-8"
G
13'-1½"
H
17'-8"
J
23'-1¼"
K
90'-6½"
L
17'-11½"
E
11'-1½"
40'-0½"
D
11'-1½"
10'-3-1/8"
25'-1/10"
20'-10-1/4"
WORKING SECTION
11'-1½"
C
80'-0"
B
26'-0"
A
55'-0"
P
5'-0"
O
18'-11½"
A
B
9'-0"
2'-6"
13'-0"
2'-4½"
13'0"
CD
13'-0"
4'-4½"
19'-3"
EF
19'-3"
5'-7"
19'-3"
G
20'-8" DIA
HJ
24'-0" DIA
K
24'-0"
7'-0"
24'-0"
L
7'-4"
31'-10½"
M
7'-4"
36'-2½"
N
7'-4"
37'-2½"
28'-0"
OP
28'-0"
7'-4½"
41'-0"

| British Aerospace PLC Aircraft Group Weybridge, Surrey KT13 OSF | SUBSONIC WIND TUNNELS | | COMPARABLE FACILITIES |
|---|---|---|---|
| | **TEST SECTION SIZE:** 9 x 13 ft | **SPEED RANGE:** (Mach No.) 0.18 - 0.27 (200 - 300 ft/sec) | Group C |
| | **DATE BUILT/UPGRADED:** 1950/1970/1980 | **TEMP. RANGE:** Ambient | |
| 13 x 9-Ft Low-Speed Wind Tunnel | **REPLACEMENT COST:** | **REYNOLDS NO:** (Per ft X $10^{-6}$) 0 - 2.2 | |
| | **OPERATIONAL STATUS:** Full-double day shift | **DYNAMIC PRES:** (lb/ft$^2$) 0 - 145 | |
| | | **STAGNATION PRES:** (psia) Atmospheric | |
| | Closed circuit, single return, continuous flow, closed test section. Model size: span - 9 ft overhead electromechanical balance. Underfloor strain-gage balance. | | |

TESTING CAPABILITIES: A single-stage, 7-bladed, 24-ft (7.3-m) diameter fan driven through a bevel reduction gear-box electric motors developing 2200 hp. The test section is 13 x 9-ft (4 x 2.7-m) rectangular with large corner fillets. Turntables of 7-ft (2.13-m) diameter are installed in both roof and floor, their rotational axes being on the centerline of the balance. Main balances are overhead 6-component virtual-center balance and underfloor 5-component half-model balance.

DATA ACQUISITION: Dedicated PDP 11/60 on-line data acquisition, multitasking with graph plotting and background computation roles. Recording 16 digital and/or 16 analog inputs.

CURRENT PROGRAMS:

PLANNED IMPROVEMENTS:

LOCAL INFORMATION CONTACT: D. Light, Head of Wind Tunnels, (Weybridge 45522, ext. 6604, Telex: 27111).

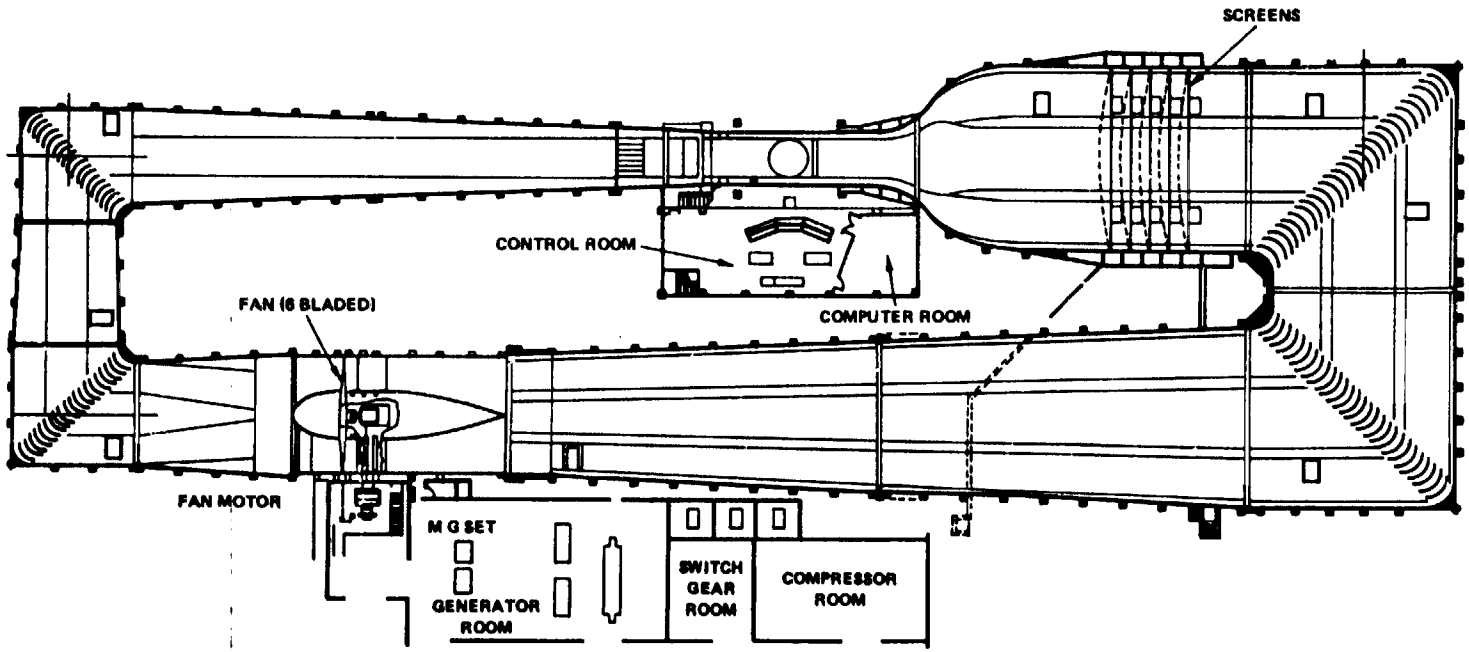
SCREENS
CONTROL ROOM
FAN (6 BLADED)
COMPUTER ROOM
FAN MOTOR
M G SET
GENERATOR ROOM
SWITCH GEAR ROOM
COMPRESSOR ROOM

| Royal Aircraft Establishment (RAE) Bedford, United Kingdom | SUBSONIC WIND TUNNELS | | COMPARABLE FACILITIES |
|---|---|---|---|
| | TEST SECTION SIZE: 4 x 2.7 x 9.1 m | SPEED RANGE: (Mach No.) 0.01 - 0.27 (5 - 91 m/sec) | Group C |
| | DATE BUILT/UPGRADED: 1953/1968 | TEMP. RANGE: Ambient | |
| 13 x 9-Ft Low-Speed Wind Tunnel | REPLACEMENT COST: | REYNOLDS NO: (Per m X $10^{-6}$) 0.3 - 6.3 | |
| | OPERATIONAL STATUS: Active | DYNAMIC PRES: ($kN/m^2$) 0.015 - 5.1 | |
| | | STAGNATION PRES: (bars) 1 | |
| | Continuous flow, roof and floor balances, high incidence sting, dynamic rigs, return circuit | | |

TESTING CAPABILITIES: Complete and half models can be supported on: (1) 6-component overhead mechanical balance; (2) 4-component underfloor mechanical balance; and (3) various sting rigs for internal balance models. There are also special rigs for dynamic stability tests. Longitudinal turbulence level is better than 0.05%, lateral and vertical turbulence level is better than 0.10%. The tunnel is powered by a 1.1-MW motor driving a 30-ft diameter fan. Auxiliary air can be supplied to models at 25 atmospheres and at 10 lb/sec. Suction at 3 lb/sec is also available.

DATA ACQUISITION: Thirty-two channels of information can be recorded for any desired depth of analysis off-line and also partially analyzed on-line so that test progress can be monitored.

CURRENT PROGRAMS: Study of the low-speed aerodynamics of generalized research models and of flight vehicle configurations, including dynamic stability measurements.

PLANNED IMPROVEMENTS: Installation of 6-component underfloor virtual-center load cell balance.

LOCAL INFORMATION CONTACT: Superintendent, AE2 Division, (0252) 24461, ext. 5377.

| | SUBSONIC WIND TUNNELS | | COMPARABLE FACILITIES |
|---|---|---|---|
| Kawasaki Heavy Industries (KHI), Japan | **TEST SECTION SIZE:**<br>#1 3.5 x 3.5 x 6 m closed<br>#2 2.5 x 3 m open | **SPEED RANGE:** (Mach No.) 0 - 0.10 closed<br>0 - 0.18 open | Group C<br>Group D |
| | **DATE BUILT/UPGRADED:** 1938/1967 | **TEMP. RANGE:** Ambient | |
| 3.5-M Wind Tunnel | **REPLACEMENT COST:** | **REYNOLDS NO:** (Per ft X $10^{-6}$) 0 - 0.74 closed<br>0 - 1.36 open | |
| | **OPERATIONAL STATUS:**<br>Active | **DYNAMIC PRES:** ($lb/ft^2$) 0 - 15.7 closed<br>0 - 54 open | |
| | | **STAGNATION PRES:** (psia) Atmospheric | |
| | Either closed or open test section is available. | | |

TESTING CAPABILITIES: External 6- component balance with strut mount or internal 6-component balance with sting mount is for open test section. External 6-component balance with strut mount for closed test section. Compressed air supplies 4 lb/sec at 300 psi. Model propeller/helicopter blade driving systems are 10-hp and 100-hp motors.

DATA ACQUISITION: On-line, 40-channel data acquisition system.

CURRENT PROGRAMS: Low-speed aerodynamic research, static stability and control, and airplane, helicopter, and missile development program.

PLANNED IMPROVEMENTS:

LOCAL INFORMATION CONTACT: Takashi Miyatake, Manager of Aerodynamic Engineering Section, (0583) 82-5111.

| British Aerospace Civil Division Filton Site | SUBSONIC WIND TUNNELS | | COMPARABLE FACILITIES |
|---|---|---|---|
| | **TEST SECTION SIZE:** 10 x 12 x 26 ft | **SPEED RANGE:** (Mach No.) 0 - 0.25 (0 - 279 ft/sec) | Group C |
| | **DATE BUILT/UPGRADED:** 1954/55 | **TEMP. RANGE:** Ambient | |
| 12 x 10-Ft | **REPLACEMENT COST:** | **REYNOLDS NO:** (Per ft X $10^{-6}$) 0 - 1.8 | |
| | **OPERATIONAL STATUS:** 1 shift per day | **DYNAMIC PRES:** ($lb/ft^2$) 0 - 43 | |
| | | **STAGNATION PRES:** (psia) Atmospheric | |
| | Closed circuit, continuous flow<br>Model size: Span - 10 ft | | |

TESTING CAPABILITIES: Model supported by 1 or 2 shielded struts from 6-component virtual-center mechanical balance. The facility is powered by a single, 7-bladed, 22-ft diameter fan driven by 1950-hp electric motors. An alternative 30-ft wide x 25-ft high working section is available in the return circuit for speeds up to 30 mph. Suitable for large floor mounted models. Auxiliary equipment consists of a 280 psi compressed-air system capable of continuous running at 1 lb/sec or, for example, at 2 lb/sec for 25 minutes at 200 psi.

DATA ACQUISITION: Computerized on-line data acquisition system for the 6-component balance. In addition, up to 30 channels of steady-state or dynamic data can be acquired. The pressure measurement system incorporates 10 scanivalves and can record and analyze data up to 400 pressure tappings. For dynamic analysis, a complete Fast Fourier Transform computer system is available.

CURRENT PROGRAMS:

PLANNED IMPROVEMENTS:

LOCAL INFORMATION CONTACT: D. L. Matthews, Wind Tunnel Department, (Bristol 693831, ext. 236).

| DFVLR Braunschweig, Germany | SUBSONIC WIND TUNNELS | | COMPARABLE FACILITIES |
|---|---|---|---|
| | TEST SECTION SIZE: 3.25 x 2.8 x 6.2 m | SPEED RANGE: (Mach No.) 0 - 0.22 (0 - 75 m/sec) open<br>0 - 0.26 (0 - 90 m/sec) closed | Group C |
| | DATE BUILT/UPGRADED: 1960/1983 | TEMP. RANGE: Ambient | |
| 3.25 x 2.8-M Subsonic Wind Tunnel (NWB) | REPLACEMENT COST: | REYNOLDS NO: (Per m X $10^{-6}$) 0 - 5 open<br>0 - 6 closed | |
| | OPERATIONAL STATUS: 1 shift per day | DYNAMIC PRES: ($kN/m^2$) 0 - 3.4 open<br>0 - 5.0 closed | |
| | | STAGNATION PRES: (bars) Atmospheric | |
| | Continuous flow, closed circuit, open jet or closed test section | | |

TESTING CAPABILITIES: The facility is equipped with different model mounts for use with models with internal balances. The pressure measurement system enables the registration up to 900 pressure stations. Auxiliary system supplies a maximum mass flow of 4.8 kg/sec at 3.5 bars or 3.7 kg/sec at 9 bars in pressure operation and between 4.3 kg/sec at 0.9 bar and 0.8 kg/sec at 0.2 bar in suction operation. Special test rigs are available for jettison tests, automotive tests, and dynamic tests on oscillating and rotating models. The facility is powered by a 6-bladed, 1400-kW electric motor.

DATA ACQUISITION: Recorded data reduced and plotted on-line.

CURRENT PROGRAMS: Low-speed aerodynamics and flow characteristics of airplanes, automobiles, buildings, etc., as well as static dynamic stability of aircraft configurations.

PLANNED IMPROVEMENTS: Installation of an external 6-component balance and a gust producing device.

LOCAL INFORMATION CONTACT: Dr. Gerhard Kausche, DFVLR Windtunnel Division, Flughafen, D-3300 Braunschweig, (0531-395-2450).

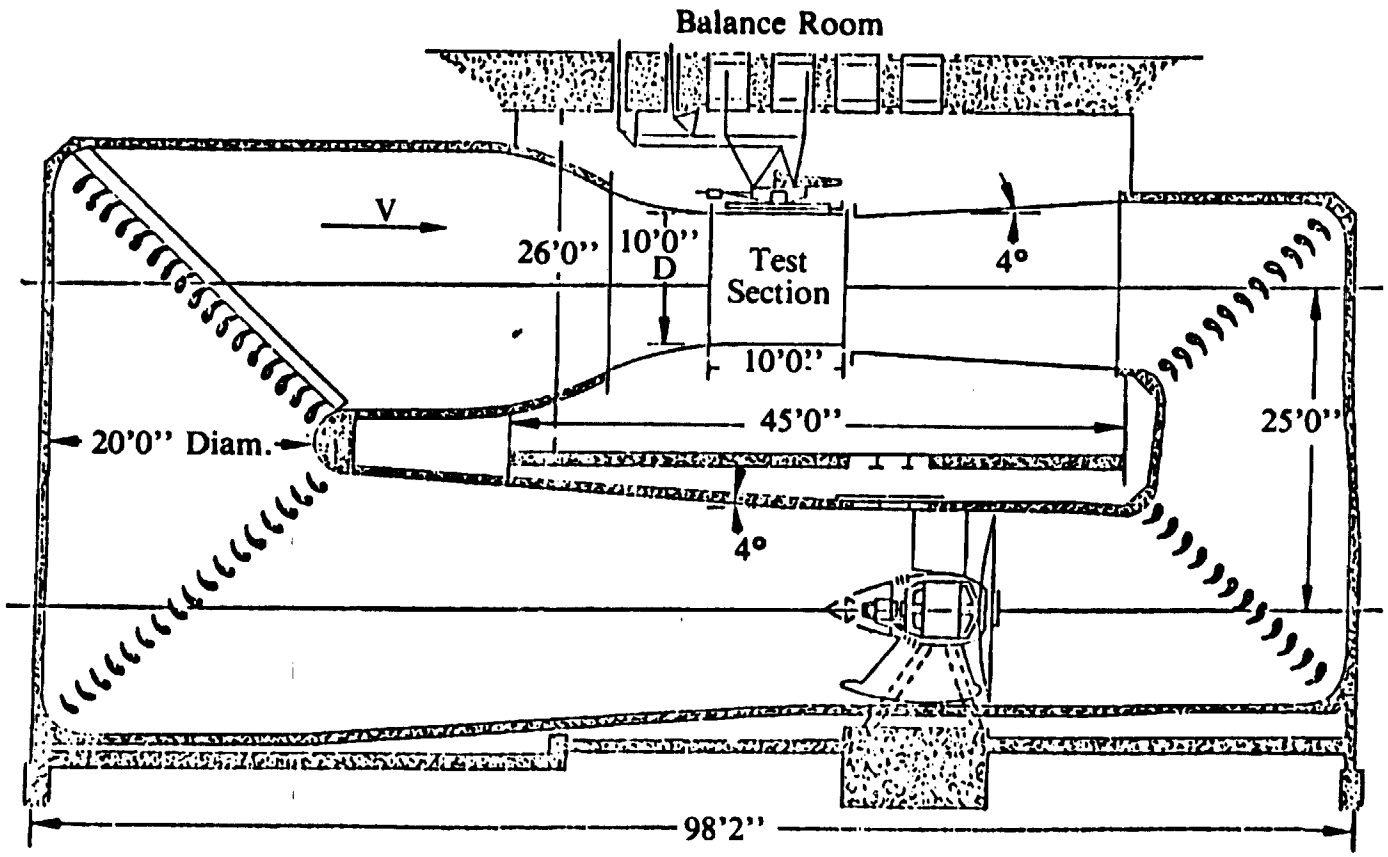
Balance Room
V
26'0''
10'0''
D
Test
Section
4°
10'0''
45'0''
20'0'' Diam.
25'0''
4°
98'2''

| GALCIT California Institute of Technology, Pasadena | SUBSONIC WIND TUNNELS | | COMPARABLE FACILITIES |
|---|---|---|---|
| | **TEST SECTION SIZE:** 10 x 10 ft | **SPEED RANGE:** (Mach No.) 0.02 - 0.22 (22 - 246 ft/sec) | Group B1<br>Group C |
| | **DATE BUILT/UPGRADED:** 1929/1941/1970/1983 | **TEMP. RANGE:** 500° - 580°R | |
| 10-Ft Subsonic Wind Tunnel | **REPLACEMENT COST:** $16M | **REYNOLDS NO:** (Per ft X $10^{-6}$) 0.12 - 1.40 | |
| | **OPERATIONAL STATUS:** 1 shift per day | **DYNAMIC PRES:** ($lb/ft^2$) 0.5 - 70 | |
| | | **STAGNATION PRES:** (psia) Atmospheric | |
| | Closed circuit, single return, continuous flow | | |

TESTING CAPABILITIES: Normal aircraft-type test bodies supported by single, twin, or 3-point wind-shielded strut system connecting to external 6-component balance system. Several ground planes available, including a choked flow boundary layer suction system and a plane incorporating a flush yaw table and built-in 6-component strain-gage balance. Motor dynamometer and variable frequency generating equipment available for powered model testing. 1 + lb/sec air for suction or blowing available. Flow visualization and simulated stack gas problems undertaken using $LN_2$ and pollution dispersion studies using $SF_6$ as a tracer with ion capture equipment available.

DATA ACQUISITION: Automatic 6-component force and moment data system with on-line final data printout and plotting currently in design and installation stages for both external balance and strain-gage balance systems.

CURRENT PROGRAMS:

PLANNED IMPROVEMENTS:

LOCAL INFORMATION CONTACT: William H. Bettes, Director, Experimental Facilities, GALCIT, (213) 356-4795.

| DFVLR Göttingen, West Germany | SUBSONIC WIND TUNNELS | | COMPARABLE FACILITIES |
|---|---|---|---|
| | TEST SECTION SIZE: 3 x 3 x 6 m | SPEED RANGE: (Mach No.) 0 - 0.19 (0 - 65 m/sec) | Group C |
| | DATE BUILT/UPGRADED: 1958 | TEMP. RANGE: Ambient | |
| 3 x 3-M Subsonic Wind Tunnel (NWG) | REPLACEMENT COST: | REYNOLDS NO: (Per m X $10^{-6}$) 0 - 4.1 | |
| | OPERATIONAL STATUS: 1 shift per day | DYNAMIC PRES: ($kN/m^2$) 2.4 | |
| | | STAGNATION PRES: (bars) Atmospheric | |
| | Closed circuit, open test section, continuous flow, powered by one 6-bladed fan with dc motor, maximum model span 2 m | | |

TESTING CAPABILITIES: Model support for vertical or rear stings and internal balance. Mobile ground plat- with boundary layer suction. Compressed-air supply continuously 1.5 kg/sec (21 bars) and intermitting from a 200-bar, 40 $m^3$ storage. Small ac motor to drive model propellers and model engines. Computer-controlled traversing mechanism for probes to measure external flow.

DATA ACQUISITION: Forty channels integrating digital voltmeters, acquisition system connected to local computer for real-time data reduction. Results are presented on a printer and a graphic display in the control room of the wind tunnel. Connection of local computer with DFVLR computing center.

CURRENT PROGRAMS: Testing of aircraft and automobile models for European industry and research programs of different DFVLR institutes including aeroelastic problems.

PLANNED IMPROVEMENTS: New model support with better control capabilities by computer. New test rig for half models.

LOCAL INFORMATION CONTACT: Dr. Wolfgang Lornez-Meyer, DFVLR Windtunnel Division, Bunsenstrasse 10, D-3400 Göttingen, (0551/709-2179).

| BAe Woodford | SUBSONIC WIND TUNNELS | | COMPARABLE FACILITIES |
|---|---|---|---|
| | TEST SECTION SIZE: 2.74 x 2.13 x 5.5 m | SPEED RANGE: (Mach No.) 0 - 0.176 (0 - 60 m/sec) | Group C |
| | DATE BUILT/UPGRADED: 1949/1955 | TEMP. RANGE: Ambient | |
| 9 x 7-Ft Low-Speed Tunnel | REPLACEMENT COST: | REYNOLDS NO: (Per m × $10^{-6}$) 0 - 4.3 | |
| | OPERATIONAL STATUS: | DYNAMIC PRES: ($kN/m^2$) 0 - 2.2 | |
| | | STAGNATION PRES: (bars) Atmospheric | |
| | Closed circuit, continuous flow | | |

TESTING CAPABILITIES: Equipped with overhead semiautomatic 6-component mechanical balance. Sting-mounting system with strain-gage balance also available. Compressed-air supply 2.5 lb/sec at 100 psi. The tunnel is driven by a single 12-ft diameter fan powered by a 500-hp electric motor.

DATA ACQUISITION:

CURRENT PROGRAMS:

PLANNED IMPROVEMENTS:

LOCAL INFORMATION CONTACT:

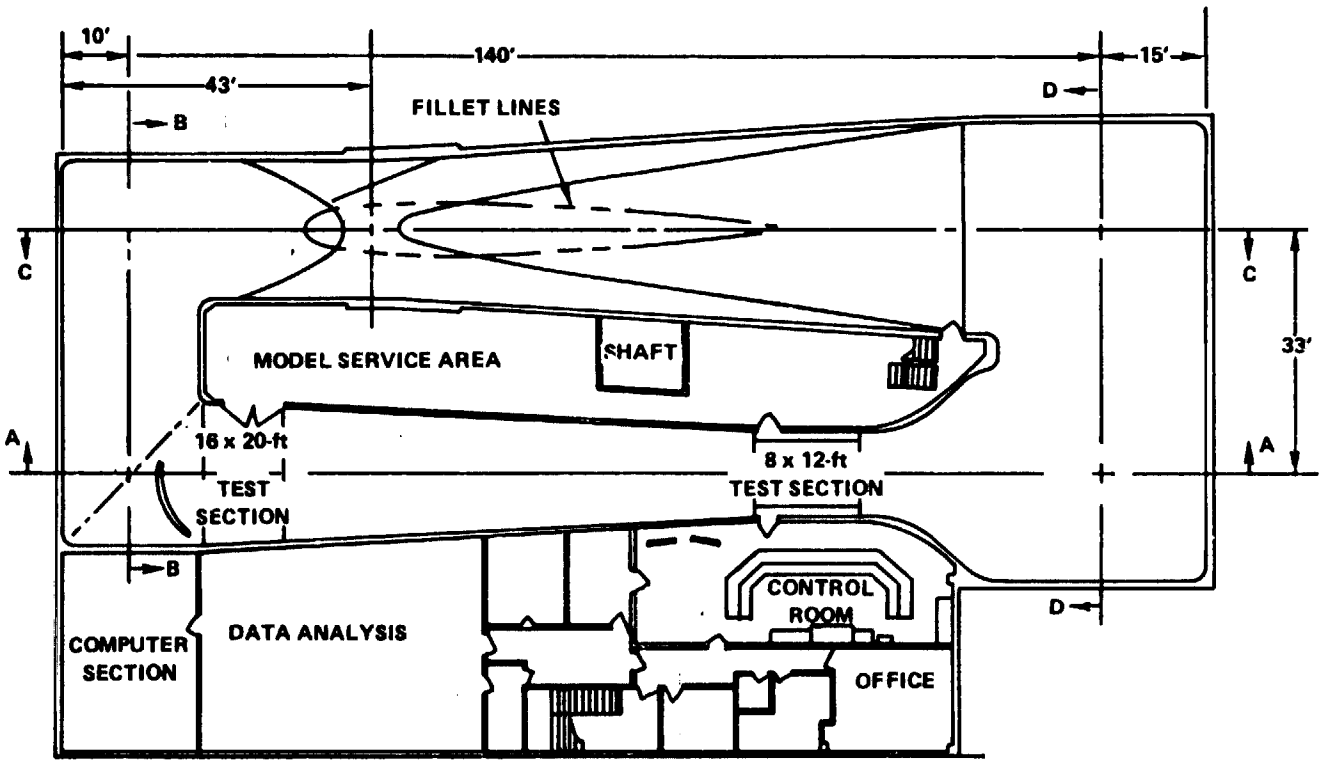
10'
140'
15'
43'
B
FILLET LINES
D
C
C
33'
MODEL SERVICE AREA
SHAFT
A
A
16 x 20-ft
TEST
SECTION
8 x 12-ft
TEST SECTION
B
CONTROL
ROOM
D
COMPUTER
SECTION
DATA ANALYSIS
OFFICE

C-2

| General Dynamics Corp. San Diego | SUBSONIC WIND TUNNELS | | COMPARABLE FACILITIES |
|---|---|---|---|
| | TEST SECTION SIZE: 8 x 12 x 15 ft | SPEED RANGE: (Mach No.) 0.04 - 0.37 (44 - 414 ft/sec) | Group C |
| | DATE BUILT/UPGRADED: 1947/1961 | TEMP. RANGE: Ambient | |
| 8 x 12-Ft Subsonic Wind Tunnel | REPLACEMENT COST: $5M | REYNOLDS NO: (Per ft X $10^{-6}$) 0.25 - 2.5 | |
| | OPERATIONAL STATUS: 1 shift per day, capable of extended shifts | DYNAMIC PRES: (lb/ft$^2$) 2 - 200 | |
| | | STAGNATION PRES: (psia) Atmospheric | |
| | Closed circuit, single return, continuous flow, tandem V/STOL, moving ground plane, Q-reducer | | |

TESTING CAPABILITIES: A variety of shielded struts are available for mounting large models on the 6-component external balance. Also available are various stings and internal balances for mounting models. An external air source will supply 550 psi air at 2 ½ lb/sec. A Q-reducer is available for dynamic testing. Flow viz is used quite extensively with an ultraviolet light source available for photographs. A laminated wood 6-bladed propeller 20-in diameter driven by a 2250-hp synchronous motor is used for the tunnel drive.

DATA ACQUISITION: Fifty channels of information can be recorded by the system currently being used.

CURRENT PROGRAMS: Main emphasis is on aerodynamic stability and control studies. Also performed are dynamic testing, pressure studies, and various types of visual flow studies.

PLANNED IMPROVEMENTS: Upgrading of data acquisition system and computer system, including time-sharing and on-line data. Currently, a study is being undertaken to determine the feasibility of increasing the Mach number range to approximately 0.7.

LOCAL INFORMATION CONTACTS: Stanley A. Griffin, Chief of Aerotest, (619) 692-2358 or A. Edward Brady, Test Engineering, (619) 692-8286.

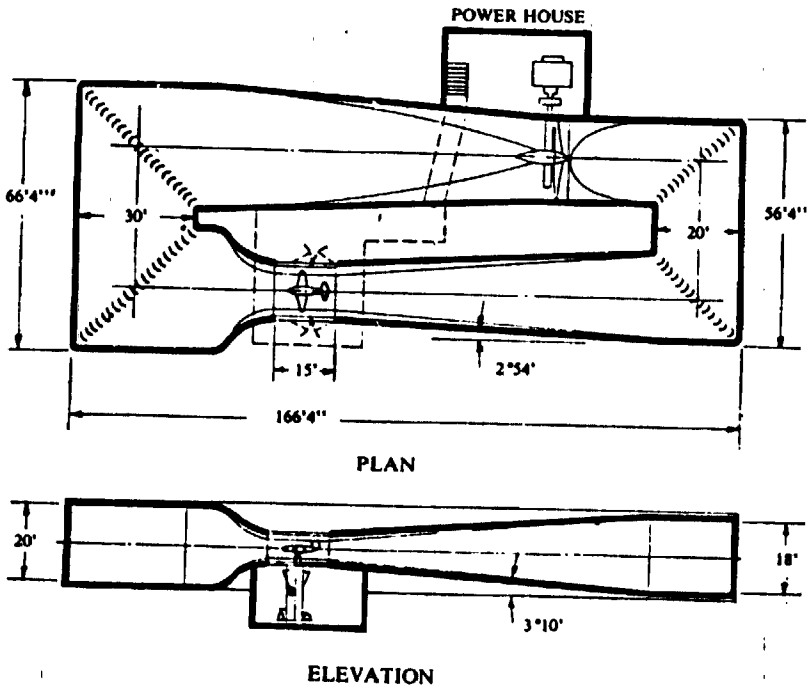


OPERATING CHART
LFL 8' x 12' LOW SPEED WIND TUNNEL

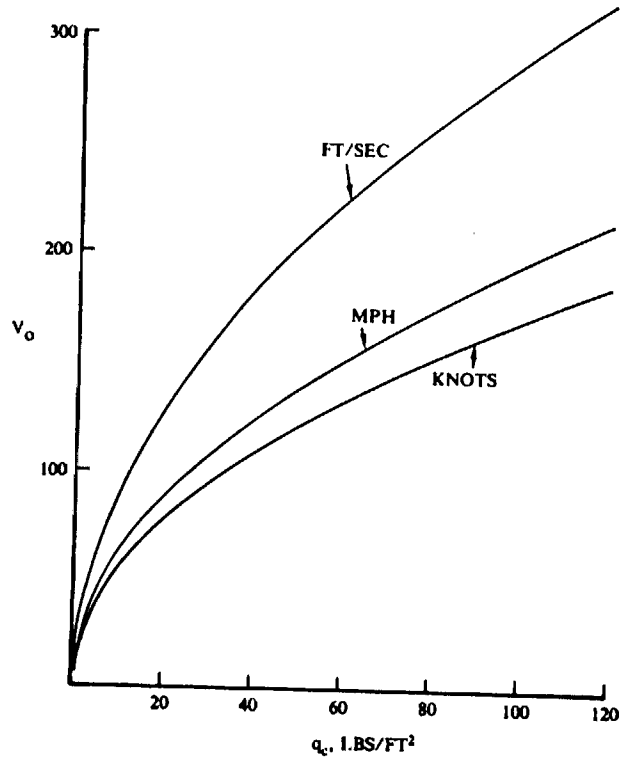

| | SUBSONIC WIND TUNNELS | | COMPARABLE FACILITIES |
|---|---|---|---|
| Lockheed-California Co. Burbank, Calif. | TEST SECTION SIZE: 8 x 12 x 15 ft | SPEED RANGE: (Mach No.) 0 - 0.26 (0 - 293 ft/sec) | Group C |
| | DATE BUILT/UPGRADED: 1941/1973 | TEMP. RANGE: Ambient | |
| 8 x 12-Ft Subsonic Wind Tunnel | REPLACEMENT COST: $10M | REYNOLDS NO: (Per ft X $10^{-6}$) 0 - 1.7 | |
| | OPERATIONAL STATUS: 1 shift per day (backlog) | DYNAMIC PRES: (lb/ft$^2$) 0.5 - 100 | |
| | | STAGNATION PRES: (psia) Atmospheric | |
| | Closed circuit, closed throat, single return, continuous flow | | |

TESTING CAPABILITIES: Models may be mounted in the test section in a variety of ways: (1) single strut, (2) three-pronged fork, (3) sting, (4) floor, or (5) wall mount. Models may also be suspended from the ceiling of the test section. The facility is powered by a 1250-hp, 900 rpm maximum synchronous motor that drives a fixed-pitch, 6 bladed, 20-ft-diameter propeller. Auxiliary equipment consists of variable frequency electrical power source to power models (200 hp at 0 to 400 Hz). A 12-ft-long ground board spans the tunnel width and is used for determining the effect of ground proximity.

DATA ACQUISITION: Data are acquired using a Preston (32 channels, 64 inputs) system and converted to digital output through use of an IBM Series/1 computer. Printed output, plotted output, and CRT displays are all available. Output information on a run is available within 5 minutes of the run completion. A Perkin-Elmer Model 10 tape transport is available for making taped copies of computed data for later use at the convenience of the customer.

CURRENT PROGRAMS: Main research is directed at the study of the low-speed aerodynamics and associated flow characteristics of military and commercial aircraft configurations.

PLANNED IMPROVEMENTS: Methods of improving the air flow quality through the test section are being studied.

LOCAL INFORMATION CONTACT: Lockheed-California Company, Attn: Edward Whitfield, Flight Sciences Laboratory, Dept. 74-73, Bldg. 202, Plt. 2, P.O. Box 551, Burbank, CA 91520, (213) 847-6121, ext. 221.

| University of Washington | SUBSONIC WIND TUNNELS | | COMPARABLE FACILITIES |
|---|---|---|---|
| | **TEST SECTION SIZE:** 8 x 12 x 10 ft | **SPEED RANGE: (Mach No.)** 0 - 0.26 (0 - 302 ft/sec) | Group C |
| | **DATE BUILT/UPGRADED:** 1936/1953/1977/1982 | **TEMP. RANGE:** Ambient | |
| 8 x 12-Ft Subsonic Wind Tunnel | **REPLACEMENT COST:** $15K | **REYNOLDS NO: (Per ft X $10^{-6}$)** 0 - 1.9 | |
| | **OPERATIONAL STATUS:** 2 shifts per day, 6 days a week if required | **DYNAMIC PRES: ($lb/ft^2$)** 0.5 - 100.0 | |
| | | **STAGNATION PRES: (psia)** Atmospheric plus dynamic | |
| | Closed circuit, double return, continuous flow<br>Model size: Span - 9.6 ft | | |

TESTING CAPABILITIES: Six-component external balance. Full scale L = ±2500 lb, D = SF = ±250 lb, all moments ±5000 in-lb. Variable frequency power supply 2-125KVA, 3-phase alternators, frequency 0 - 450 Hz. Output voltage 0.75 - 1.50 volts/Hz. Maximum current 130 amps can be run in parallel if desired. High-pressure air supply continuous 1.3 lb/sec at 1440 psig. Intermittent storage tanks up to 20 lb/sec, run and pump up time is a function of mass flow and pressures used. Balance struts can be removed from test section, if desired, to give a clean test section.

DATA ACQUISITION: Thirty channels standard can be expanded to 60 if required. Data acquisition and reduction on one computer and data analysis on second computer, both are on-site and controlled by tunnel. Small micro used to present semicorrected data in real time for test direction.

CURRENT PROGRAMS:

PLANNED IMPROVEMENTS:

LOCAL INFORMATION CONTACT: William H. Rae, Jr., Kirsten Wind Tunnel Office, (206) 543-0439.

## SCHEMATIC

NOTE: DASHED LINES SHOW RADII TANGENCIES AND TRANSITION LINES

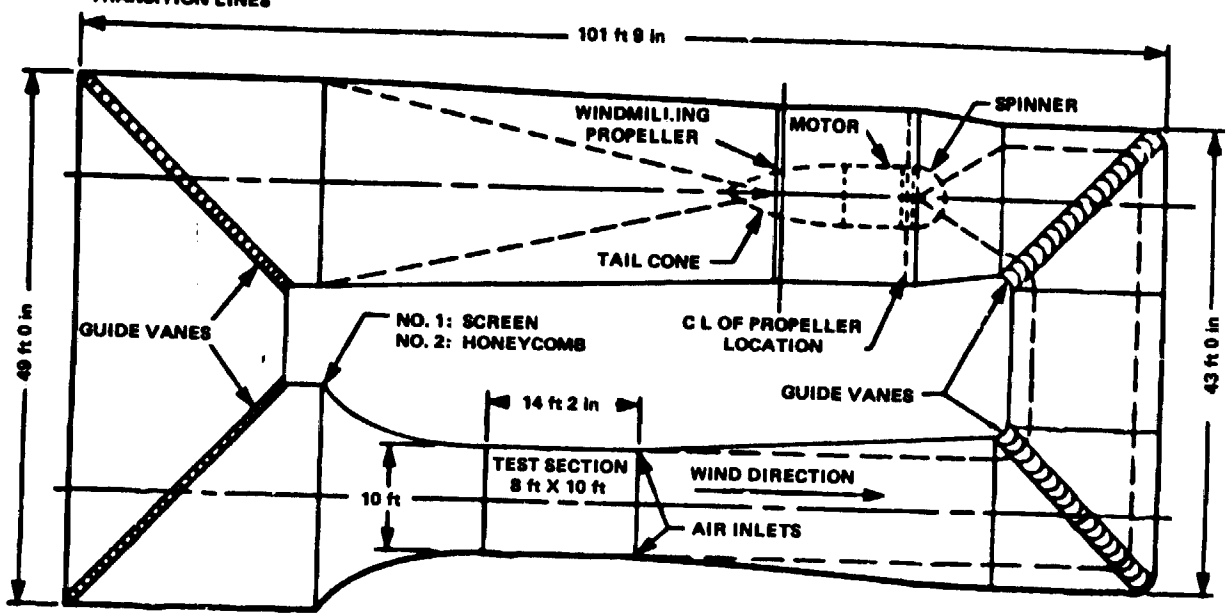

| | SUBSONIC WIND TUNNELS | | COMPARABLE FACILITIES |
|---|---|---|---|
| David Taylor Naval Ship R&D Center (DTNSRDC) | **TEST SECTION SIZE:** 8 x 10 x 14 ft | **SPEED RANGE:** (Mach No.) 0.02 - 0.25 (30 - 275 ft/sec) | Group C |
| | **DATE BUILT/UPGRADED:** 1943/1953/1983 | **TEMP. RANGE:** 550°R | |
| 8 x 10-Ft Subsonic Wind Tunnel | **REPLACEMENT COST:** $6M | **REYNOLDS NO:** (Per ft X $10^{-6}$) 0 - 1.77 | |
| | **OPERATIONAL STATUS:** 1 shift per day | **DYNAMIC PRES:** (lb/ft$^2$) 0 - 90 | |
| | | **STAGNATION PRES:** (psia) Atmospheric | |
| | Closed circuit, single return, continuous flow, closed throat<br>Model size: Span - 8 ft, weight - 4000 lb | | |

TESTING CAPABILITIES: The tunnel is capable of force and moment, pressure, store separation, ground plane, and flutter-type tests. External mechanical balance systems are available for measurement of aerodynamic forces and moments on large models. A wide variety of internally mounted strain-gage balances are also available. Auxiliary instrumentation and automatic readout equipment are available for propeller and jet-powered models as well as miscellaneous components. Two variable frequency power system terminals (150 hp, 400 Hz, 1.2 volts/cycle) and a high-pressure air supply (2 lb/sec at 200 psi) are available for powered model testing. Models are sting strut (single, dual, and triple) and turntable mounted.

DATA ACQUISITION: Seventy-two channels of information can be recorded on the data acquisition system. Limited on-line data reduction is available. Final data reduction will be done at main computer facility.

CURRENT PROGRAMS: A study of low-speed aerodynamics of aircraft, rotorcraft, surface effect ships, submarines, high-lift systems, etc.

PLANNED IMPROVEMENTS: Fiscal Year 1985 - Install a 12 x 15-ft low-speed section in back leg of transonic wind tunnel.

LOCAL INFORMATION CONTACT: A. E. Johnson, Subsonic Wind Tunnel Coordinator, (202) 227-1670.

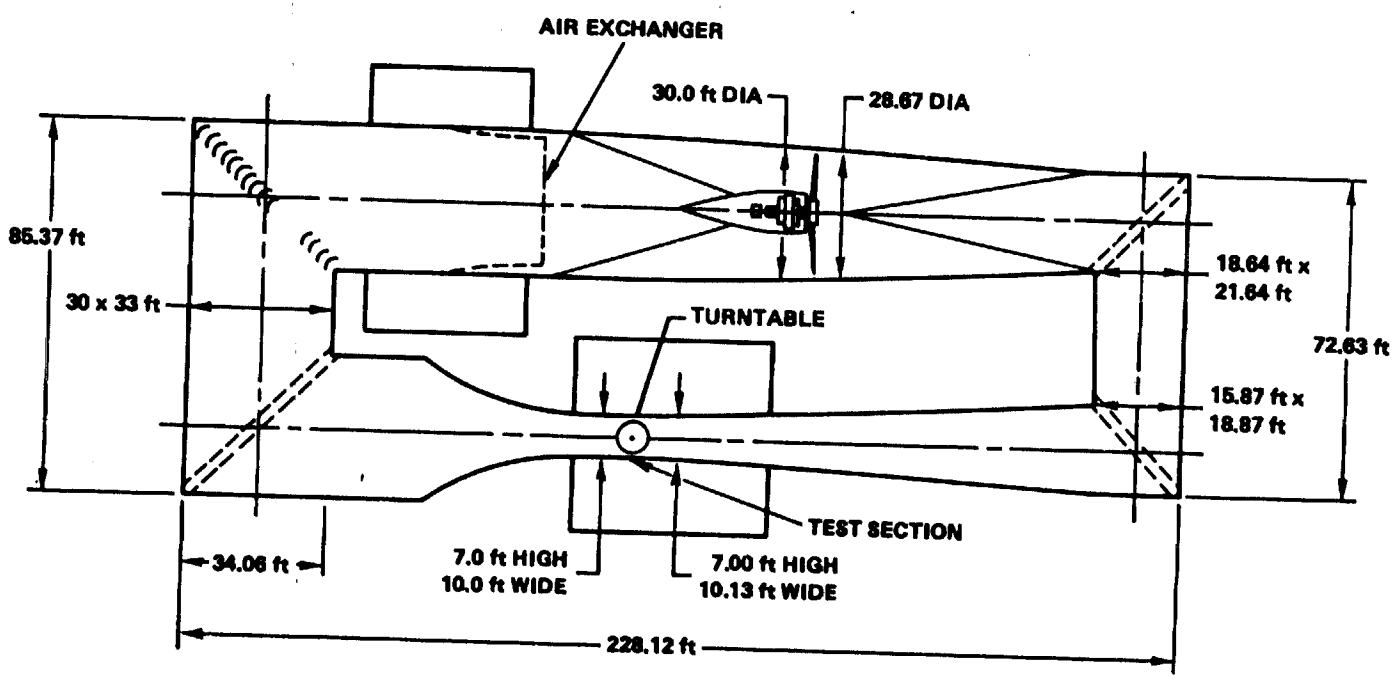
AIR EXCHANGER
30.0 ft DIA
28.67 DIA
85.37 ft
30 x 33 ft
18.64 ft x
21.64 ft
TURNTABLE
72.63 ft
15.87 ft x
18.87 ft
TEST SECTION
34.06 ft
7.0 ft HIGH
10.0 ft WIDE
7.00 ft HIGH
10.13 ft WIDE
228.12 ft

| NASA-Ames Research Center | SUBSONIC WIND TUNNELS | | COMPARABLE FACILITIES |
|---|---|---|---|
| | **TEST SECTION SIZE:** 7 x 10 x 16 ft | **SPEED RANGE: (Mach No.)** 0 - 0.33 (0 - 370 ft/sec) | Group C<br>Group H |
| | **DATE BUILT/UPGRADED:** 1941/1974/1982 | **TEMP. RANGE:** Ambient | |
| 7 x 10-Ft Subsonic Wind Tunnel | **REPLACEMENT COST:** $3.9M | **REYNOLDS NO: (Per ft X $10^{-6}$)** 0 - 2.6 | |
| | **OPERATIONAL STATUS:** 1 shift per day | **DYNAMIC PRES: ($lb/ft^2$)** 0 - 164 | |
| | | **STAGNATION PRES: (psia)** Atmospheric | |
| | Closed circuit, single return, continuous flow wind tunnel | | |

TESTING CAPABILITIES: The 7- by 10-ft Wind Tunnel number one has three interchangeable test sections: (1) hard wall for force and pressure measurements; (2) soft wall for acoustic measurements; and (3) an open-throat test section for far-field acoustic measurements. The tunnel is acoustically treated to reduce background noise for making acoustic measurements. Rotorcraft, V/STOL, and conventional aircraft models are tested routinely. Laser velocimeters are extensively used in this tunnel.

DATA ACQUISITION: Data are recorded, processed, and displayed using a data system composed of PDP 11/34 processors housed within the facility. Data channels available are: 240 for static data and 60 for dynamic data. The total sample rate is 30 000 samples per second.

CURRENT PROGRAMS: Rotorcraft research for civil and military application, V/STOL powered lift research, and conventional aircraft high-lift research.

PLANNED IMPROVEMENTS: Larger computer/control room, improvements to the force measuring system, and remote actuation of the air exchange louvers to permit better seeding of the tunnel for laser measurements.

LOCAL INFORMATION CONTACT: Jerry V. Kirk, Chief, Low Speed Wind Tunnel Investigations Branch, (415) 965-5045.

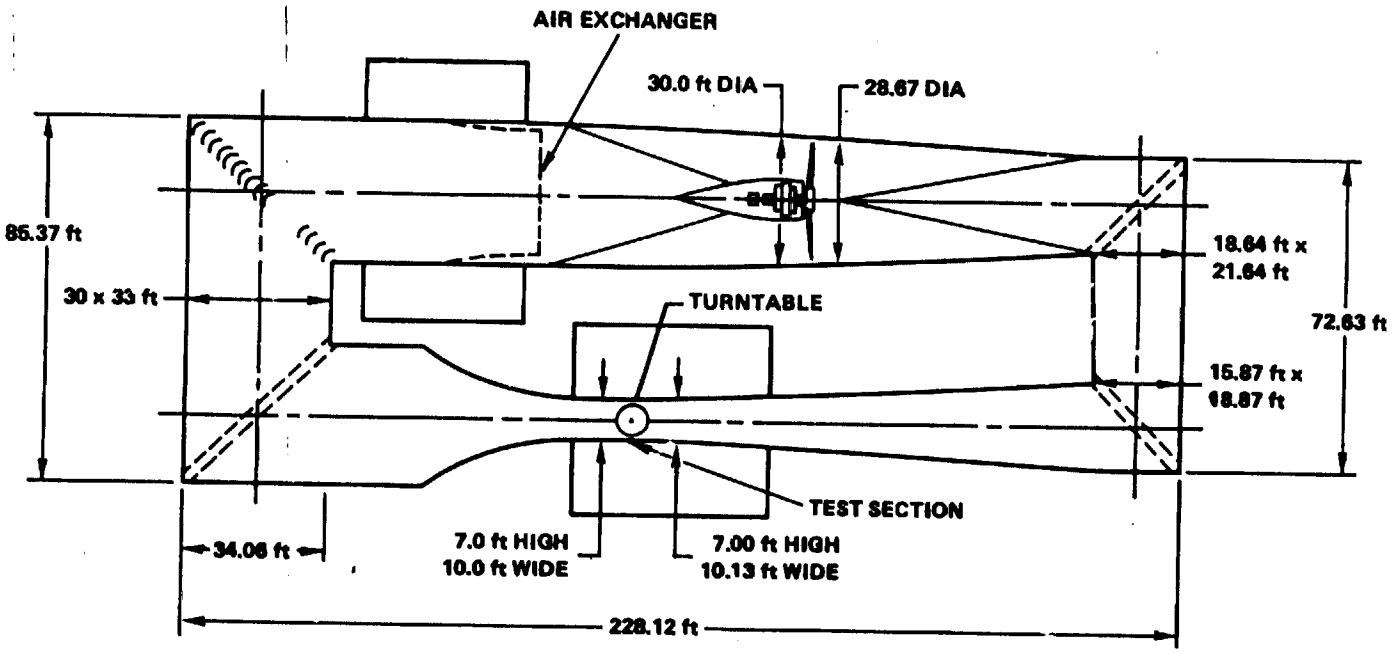
AIR EXCHANGER
30.0 ft DIA
28.67 DIA
85.37 ft
30 x 33 ft
18.64 ft x
21.64 ft
72.63 ft
TURNTABLE
15.87 ft x
18.87 ft
TEST SECTION
34.06 ft
7.0 ft HIGH
10.0 ft WIDE
7.00 ft HIGH
10.13 ft WIDE
228.12 ft

| U.S. Army Aeromechanics Laboratory, NASA-Ames Research Center | SUBSONIC WIND TUNNELS | | COMPARABLE FACILITIES |
|---|---|---|---|
| | TEST SECTION SIZE: 7 X 10 X 15 ft | SPEED RANGE: (Mach No.) 0 - 0.33 | Group C |
| | DATE BUILT/UPGRADED: 1941/1965/1977 | TEMP. RANGE: Ambient | |
| 7 X 10-Ft Subsonic Wind Tunnel #2 | REPLACEMENT COST: $4M | REYNOLDS NO: (Per ft X $10^{-6}$) 0 - 2.1 | |
| | OPERATIONAL STATUS: 1 shift per day | DYNAMIC PRES: (lb/ft$^2$) 0 - 150 | |
| | | STAGNATION PRES: (psia) Atmospheric | |
| | Closed circuit, single return, continuous flow wind tunnel | | |

TESTING CAPABILITIES: Primary use of the Aeromechanics Laboratory 7 X 10-ft Wind Tunnel #2 has been for, but not limited to, aerodynamic research in support of low-speed aircraft and V/STOL configurations. The tunnel is equipped with a high-pressure air system and a model motor variable frequency power source. Several options are available for measuring model loads and for mounting models.

DATA ACQUISITION: The tunnel uses two basic modes of data acquisition. Dynamic data are collected by various tape recording instrumentation. Static data gathering and processing on-line are performed through the Teledyne data acquisition system, which consists of a DEC PDP-11/34A and peripherals.

CURRENT PROGRAMS: Rotor research for military and civil applications and basic flow studies of vortices using a laser velocimeter.

PLANNED IMPROVEMENTS: Improvement of tunnel air flow by modification of air exchanger and the propulsion sections. Upgrade of static data acquisition system.

LOCAL INFORMATION CONTACT: Georgene H. Laub, Chief, Aeromechanics Laboratory Research Support Division, (415) 965-6214.

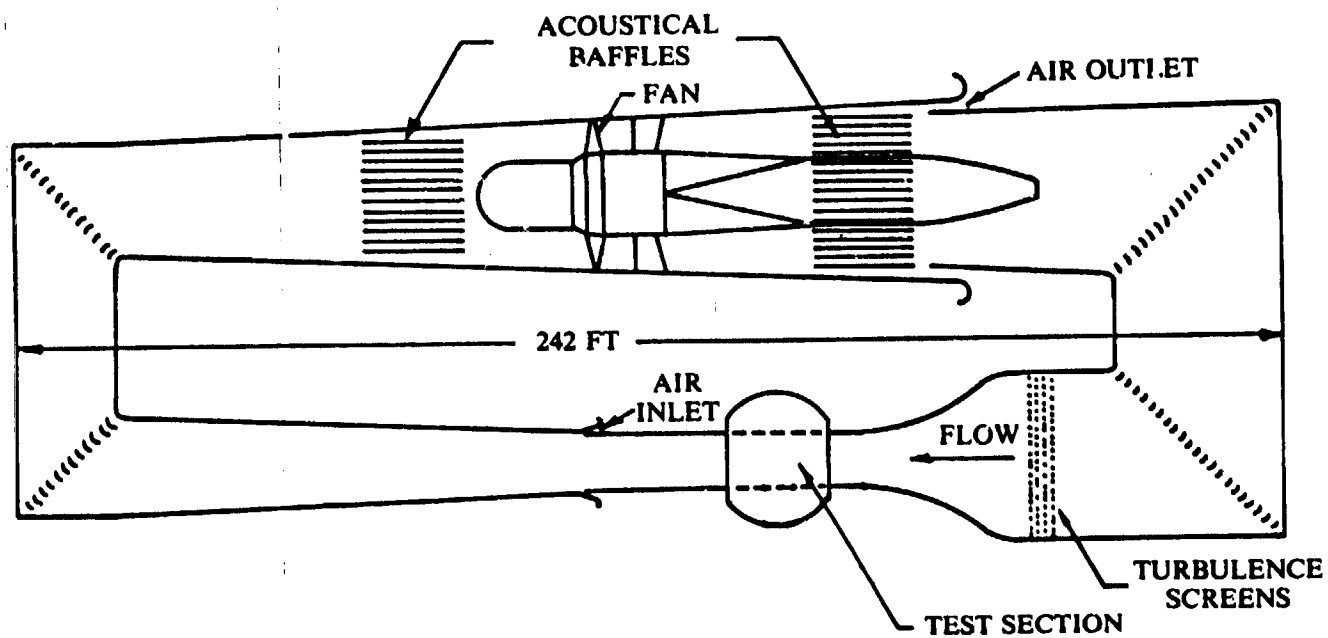
ACOUSTICAL
BAFFLES
FAN
AIR OUTLET
242 FT
AIR
INLET
FLOW
TURBULENCE
SCREENS
TEST SECTION

| NASA-Langley Research Center | SUBSONIC WIND TUNNELS | | COMPARABLE FACILITIES |
|---|---|---|---|
| | TEST SECTION SIZE: 6.6 x 9.6 x 10 ft | SPEED RANGE: (Mach No.) 0.2 - 0.9 (224 - 1008 ft/sec) | Group C |
| | DATE BUILT/UPGRADED: 1945 | TEMP. RANGE: 490° - 620°R | |
| 7 x 10-Ft High-Speed Wind Tunnel | REPLACEMENT COST: $14M | REYNOLDS NO: (Per ft X $10^{-6}$) 0.1 - 3.2 | |
| | OPERATIONAL STATUS: 1 shift per day (backlog) | DYNAMIC PRES: ($lb/ft^2$) Variable | |
| | | STAGNATION PRES: (psia) Atmospheric | |
| | Closed circuit, single return, continuous flow, closed throat<br>Model size: Span - 5 ft | | |

TESTING CAPABILITIES: This facility is used for static and dynamic studies of aerodynamic characteristics of aircraft and spacecraft models. Model mounting consists of a low to moderate angle-of-attack performance sting system, a low to high angle-of-attack combined pitch-roll stability sting system, a sidewall turntable, forced oscillation apparatus, and other specialized systems. The facility is powered by a 1400 hp electric main-drive motor.

DATA ACQUISITION: This facility is equipped with a digital data acquisition, display, and control system operated by a dedicated on-site Xero Sigma 3 computer. Data reduction is accomplished in real time on-site as well as in batch mode off-site.

CURRENT PROGRAMS: Experimental studies in support of theory verification and application of separated vortex flow phenomena and attached supercritical flow to advanced tactical configurations as well as subsonic and supersonic transports.

PLANNED IMPROVEMENTS: None.

LOCAL INFORMATION CONTACT: Charles H. Fox, Jr., or Jarrett K. Huffman, NTF Aerodynamics Branch, (804) 865-2556.

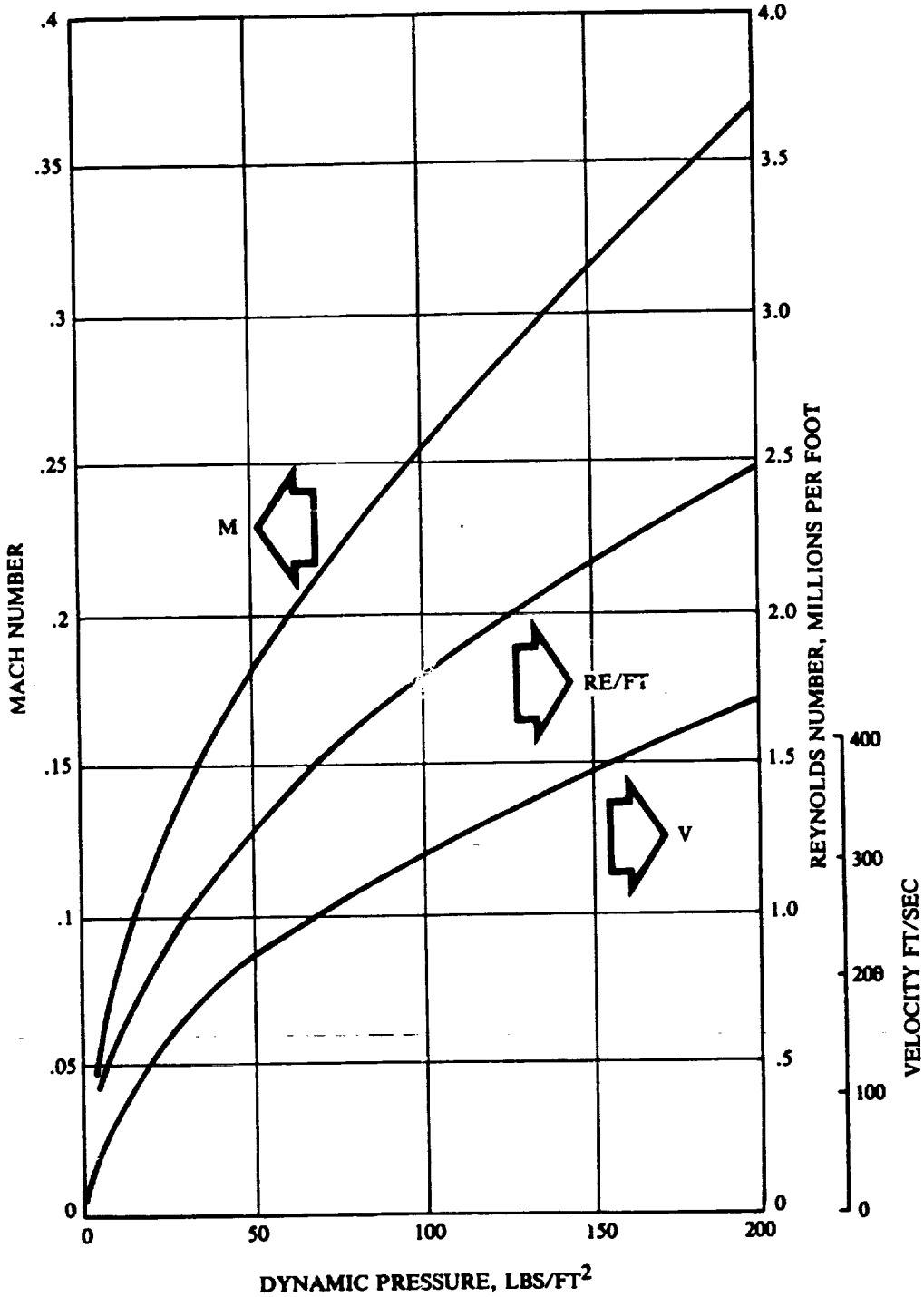
MACH NUMBER
.4
.35
.3
.25
.2
.15
.1
.05
0
M
RE/FT
V
REYNOLDS NUMBER, MILLIONS PER FOOT
4.0
3.5
3.0
2.5
2.0
1.5
1.0
.5
0
VELOCITY FT/SEC
400
300
200
100
0
0
50
100
150
200
DYNAMIC PRESSURE, LBS/FT$^2$

80A

| Northrop Corp. Aircraft Division | SUBSONIC WIND TUNNELS | | COMPARABLE FACILITIES |
|---|---|---|---|
| | **TEST SECTION SIZE:** 7 x 10 x 20 ft | **SPEED RANGE: (Mach No.)** 0.37 (414 ft/sec) | Group C |
| | **DATE BUILT/UPGRADED:** 1956 | **TEMP. RANGE:** 540° - 580°R | |
| 7 x 10-Ft Subsonic Wind Tunnel | **REPLACEMENT COST:** $10M | **REYNOLDS NO: (Per ft X $10^{-6}$)** 0 - 2.4 | |
| | **OPERATIONAL STATUS:** 1 - 2 shifts as work load requires | **DYNAMIC PRES: (lb/ft$^2$)** 0 - 200 | |
| | | **STAGNATION PRES: (psia)** Atmospheric | |
| | Closed circuit, single return, continuous flow, auxiliary air supplies | | |

TESTING CAPABILITIES: Primarily designed for testing of sting-supported aircraft models using internal balances. A support system provides continuous pitch motion from -15° to +90° angle of attack. The pitch support rotates with the turntable in the tunnel floor to provide ±25° sideslip through the entire angle-of-attack range. A remote roll mechanism is available to extend that range. The support can be translated vertically for ground height variation at fixed angle of attack. The 12- to 1-contraction ratio and 7 screens provide a turbulence factor of 1.021. High-pressure air supplies (up to 3200 psia) provide air for powered model testing, whereas an exhauster capable of 10 lb/sec provides inlet simulation for propulsion models. Free store drop and flutter capabilities are available.

DATA ACQUISITION: Modern (1981) computerized acquisition system. 128 channels, scanivalves, dedicated on-site computer, graphics CRT, high-speed pen plotter. Forty channel Digital Distortion Analyzer (DDA) available for inlet distortion tests.

CURRENT PROGRAMS: Low-speed development directed toward current and future fighter and trainer aircraft.

PLANNED IMPROVEMENTS: Fiscal Year 1984 - New main-drive motor; replacement of settling chamber screens.

LOCAL INFORMATION CONTACT: Fred W. Peitzman, Manager Wind Tunnel Test (Orgn. 3844/64), (213) 970-4584.

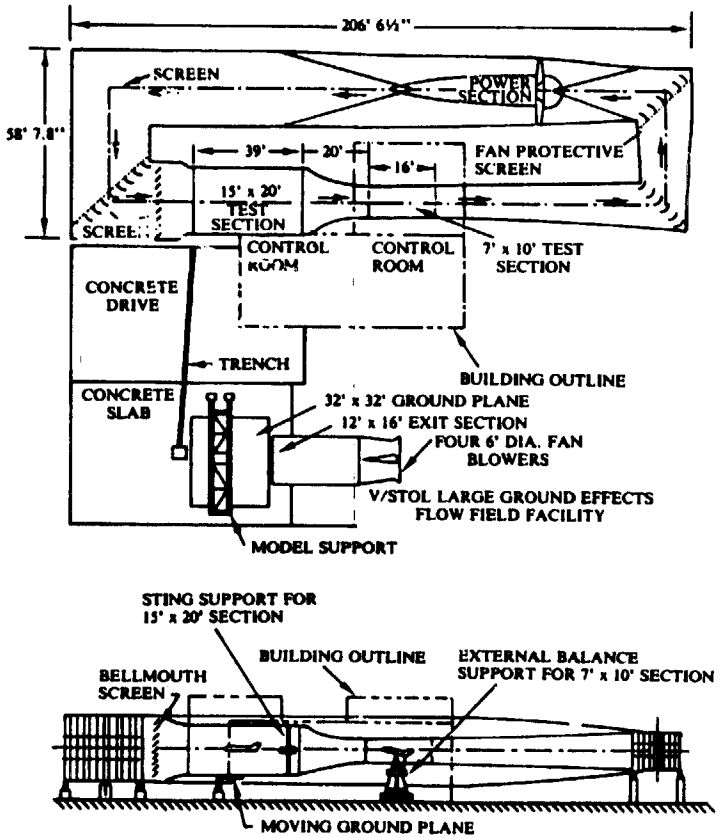


VOUGHT 7 x 10-FT AND 15 x 20-FT LOW SPEED WIND TUNNEL AND LARGE GROUND EFFECTS FLOW FIELD FACILITY

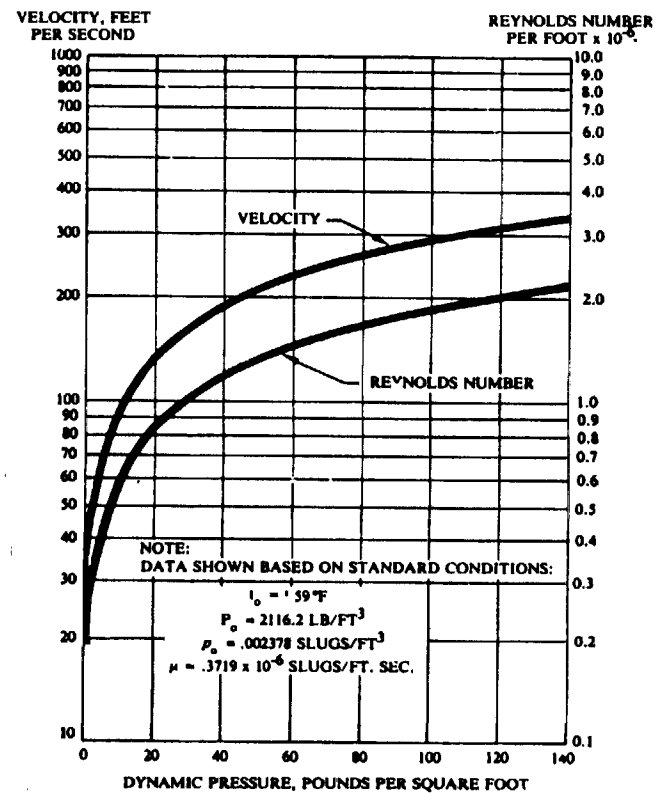

| | SUBSONIC WIND TUNNELS | | COMPARABLE FACILITIES |
|---|---|---|---|
| Vought Corp. | **TEST SECTION SIZE:** 7 x 10 x 16 ft | **SPEED RANGE: (Mach No.)** 0.03 - 0.3 (44 - 337 ft/sec) | Group C |
| | **DATE BUILT/UPGRADED:** 1954/1965/1978 | **TEMP. RANGE:** 500° - 610°R | |
| 7 x 10-Ft and 15 x 20-Ft Subsonic Wind Tunnel | **REPLACEMENT COST:** $10M | **REYNOLDS NO: (Per ft X $10^{-6}$)** 0.26 - 2.25 | |
| | **OPERATIONAL STATUS:** 1 shift per day - can be extended to 2 shifts | **DYNAMIC PRES: ($lb/ft^2$)** 2 - 135 | |
| | | **STAGNATION PRES: (psia)** Atmospheric plus dynamic | |
| | Closed circuit, single return, continuous flow, closed throat, tandem V/STOL, captive trajectory, free drop, two-dimensional insert, ground board, outdoor Ground Effects Facility | | |

TESTING CAPABILITIES: This facility is equipped for force measurements with external or internal balances, powered models, jet simulation, dynamic stability, ground effects, automotive, and wind loads on buildings and other structures. Model mounting consists of single, dual, or triple strut; or flight path simulator system. Auxiliary model power sources include two 50-kW variable frequency generator sets, a 90 gpm, 5000 psi hydraulic system, and 500-psi heated air of rates up to 20 lb/sec. The adjacent, open-air Ground Effects Facility is equipped for force and pressure measurements on V/STOL configuration and hover in and out of ground effects without wall interference over a 32 x 32-ft ground plane. An overhead support allows adjustment of model attitude and height above the ground plane. All tunnel data systems and power sources are also available at the hover site. A 4-fan, 500-hp, 12 x 16-ft, 0-30 knot, crosswind generator allows hover testing in the presence of controlled wind speeds of 0-30 knots from any azimuth.

DATA ACQUISITION: Sixty-four low-level analog data channels may be recorded with 16-bit resolution and processed by an on-line, on-site digital computer and plotter system. Six 5-digit external balance channels, two 5-digit angle encoder channels, and four 5-digit frequency counters may also be recorded by direct digital entry into the computer. High-speed movie cameras, oscillographs, and FM analog tape recording are available.

CURRENT PROGRAMS: Low-speed aerodynamic characteristics of aircraft, missiles, helicopters, automobiles, buildings and other structures, aircraft store and missile-submunition separation, windmill, and parachute testing.

PLANNED IMPROVEMENTS: Replace and update computer system, additional software development for CTS testing.

LOCAL INFORMATION CONTACT: J. M. Cooksey, Wind Tunnel Laboratories, (214) 266-3234.

| Texas A&M University | SUBSONIC WIND TUNNELS | | COMPARABLE FACILITIES |
|---|---|---|---|
| | TEST SECTION SIZE: 7 x 10 x 12 ft | SPEED RANGE: (Mach No.) 0.25 (280 ft/sec) | Group C |
| | DATE BUILT/UPGRADED: 1959/1981-84 | TEMP. RANGE: Ambient | |
| 7 x 10-Ft Subsonic Wind Tunnel | REPLACEMENT COST: $7-10M | REYNOLDS NO: (Per ft $\times 10^{-6}$) 0 - 1.9 | |
| | OPERATIONAL STATUS: 1 shift per day (backlog) | DYNAMIC PRES: (lb/ft$^2$) 0 - 100 | |
| | | STAGNATION PRES: (psia) Atmospheric plus dynamic | |
| | Closed circuit, single return, continuous flow. Contraction ratio 10.4:1 digital readout, 6-component balance - high-pressure air system for powered models (2PPS flow rate at 600 PSF) | | |

TESTING CAPABILITIES: Dynametrics, 6-component external balance; optical encoder readout to computer. Shielded struts and bayonet mounting systems for variety of models. Sting support for internal balance use; two TASK balances available. Synchronous motor, 1500 hp; speed control by electric pitch, 4-bladed prop to provide smooth, stable settings at all dynamic pressures from 0 to 100 psf. High-pressure air provided by two 3500 psi 4-stage compressors, 820 ft$^3$ storage tank. Continuous flow capability at 2 pps, 600 psi for powered model testing.

DATA ACQUISITION: Six-component external balance, 6-component internal balances, up to 288 pressure measurements using Validyne transducers, and scanivalves available. Perkin-Elmer minicomputer, Tektronix, and Hewlett-Packard plotters provide on-site, real-time data reduction, printout, and plotting after each run. Video camera and recorder system; various Polaroid and still cameras; and high-speed movie cameras available.

CURRENT PROGRAMS: Variety of R&D tests of general aviation aircraft, military aircraft, space vehicles, automotive vehicles, buildings, offshore platforms, antennas, and other structures. Data include forces and moments for performance, stability and control, plus pressures, oil flow, smoke, minitufts flow visualization.

PLANNED IMPROVEMENTS: Fiscal Years 1983-1984 - Rehab instrument lab, shops; refurbish with new equipment. Expand data acquisition with next generation computer. Obtain new electronic scanning pressure system. Enlarge laboratory for model checkout, nozzle calibrations, etc.

LOCAL INFORMATION CONTACT: Oran Nicks, Research Engineer, Aerospace Engineering Department, Texas A&M University, College Station, TX 77843 (409) 845-1028.

| | SUBSONIC WIND TUNNELS | | COMPARABLE FACILITIES |
|---|---|---|---|
| National Research Council, Canada | **TEST SECTION SIZE:** 6 x 9 x 15 ft | **SPEED RANGE:** (Mach No.) 0 - 0.29 (0 - 323 ft/sec) | Group C |
| | **DATE BUILT/UPGRADED:** 1939/1960 | **TEMP. RANGE:** Ambient | |
| 2 x 3-M Wind Tunnel | **REPLACEMENT COST:** $3M | **REYNOLDS NO:** (Per ft X $10^{-6}$) 0 - 2 | |
| | **OPERATIONAL STATUS:** 1 shift per day | **DYNAMIC PRES:** (lb/ft$^2$) 0 - 120 | |
| | | **STAGNATION PRES:** (psia) Atmospheric | |
| | Closed circuit, continuous flow<br>Model size: Span - 7 ft, weight - 1000 lb | | |

TESTING CAPABILITIES: Tunnel has 6-component automatic weight balance for model tests. Auxiliary equipment consists of variable frequency power supplies (50 and 200 hp) to models, as well as 11 lb/sec at 300-psi compressed-air supplies. This facility is powered by a 4-bladed, 15-ft fan driven by a 2000-hp electric motor.

DATA ACQUISITION: Thirty-two channels of analog data can be digitized and analyzed on-site in addition to external balance data. On-line capability for typical tests.

CURRENT PROGRAMS: Low-speed aerodynamics, static stability and control, and associated flow characteristics of military, general aviation and commuter aircraft configurations, aeroelastic characteristics of tall buildings and bridges, and drag reduction of surface vehicles.

PLANNED IMPROVEMENTS:

LOCAL INFORMATION CONTACT: R. J. Templin, Head, Low Speed Aerodynamics Laboratory, National Research Council, Canada, Montreal Road, Ottawa, Ontario, Canada, K1A OR6, (613) 993-2423.

| | SUBSONIC WIND TUNNELS | | COMPARABLE FACILITIES |
|---|---|---|---|
| TDRI, Japan | **TEST SECTION SIZE:** #1 10.8 x 10.8 x 14.8 ft<br>#2 19.7 x 19.7 x 20.5 ft<br>#3 13 (octagon) x 14 ft | **SPEED RANGE: (Mach No.)** #1 0.04 - 0.17<br>#2 0.03 - 0.05<br>#3 0.04 - 0.10 | Group C - Test Section #1<br>Group B2 - Test Section #2<br>Group G - Test Section #3 |
| | **DATE BUILT/UPGRADED:** 1971 | **TEMP. RANGE:** Ambient | |
| Convertible Wind Tunnel | **REPLACEMENT COST:** $5M | **REYNOLDS NO: (Per ft X $10^{-6}$)** 0 - 1.4 | |
| | **OPERATIONAL STATUS:** Active | **DYNAMIC PRES: (lb/ft$^2$)** 0 - 60 | |
| | | **STAGNATION PRES: (psia)** Atmospheric | |
| | Horizontal tunnel: Continuous single, single return, jet open (#1), jet closed (#2); Model size (at #1): Span - 8 ft, weight - 1000 lb<br>Vertical tunnel: Continuous single, open-circuit, jet open (#3) | | |

TESTING CAPABILITIES: Horizontal tunnel: There are two horizontal test sections: The first test section is used for the usual 6-component force tests due to a strut-type balance, and the second test section is used for large model tests.

Vertical tunnel: The spin test section is used for the free-spin tests and the rotary aerodynamic tests due to a rotary balance apparatus.

This facility is powered by a 10-bladed, 5.5-m diameter fan, and the maximum power is 1900 kW.

DATA ACQUISITION: Ten channels of information can be recorded on the data acquisition system and reduced on-site with a minicomputer.

CURRENT PROGRAMS: Horizontal tunnel: Main research is directed at the study of the low-speed aerodynamics of military aircraft and the low-speed wind tunnel testing techniques.

Vertical tunnel: Main research is directed at the study of the rotary aerodynamics of military aircraft during spin motions, and the spin test techniques.

PLANNED IMPROVEMENTS: The wind tunnel noise reduction program is now proceeding.

LOCAL INFORMATION CONTACT: Hideki Kuwano, the First Division, (0425) 24-2411, ext. 257.

| | SUBSONIC WIND TUNNELS | | COMPARABLE FACILITIES |
|---|---|---|---|
| McDonnell Douglas Corp. St. Louis | TEST SECTION SIZE: 8.5 x 12 x 18 ft | SPEED RANGE: (Mach No.) 0.3 (336 ft/sec) | Group C |
| | DATE BUILT/UPGRADED: 1954 | TEMP. RANGE: 570°R | |
| Low-Speed Wind Tunnel | REPLACEMENT COST: $3.5M | REYNOLDS NO: (Per ft X $10^{-6}$) 0.2 - 2 | |
| | OPERATIONAL STATUS: Up to 3 shifts per day | DYNAMIC PRES: (lb/ft$^2$) 1 - 120 | |
| | | STAGNATION PRES: (psia) Atmospheric | |
| | Closed circuit, single return, continuous flow, free drop | | |

TESTING CAPABILITIES: This facility is capable of force and moment, pressure, flutter, inlet, two-dimensional, and dynamic separation testing. The tunnel is equipped with an external pyramidal balance and internal strain-gage balances. Model mounting consists of single-dual-triple struts, sting, and other special types of supports. A water spray system has been used for rain simulation testing. A pneumatic (using auxiliary air supply) auxiliary model power supply is available (6-70 hp; 3-200 hp). An auxiliary evacuation system (18 lb/sec at ½ atmosphere) for drawing air from the tunnel circuit is being used. Steam-nitrogen, helium bubble generator, tufts, and oil flow equipment are available for flow visualization. Also, an auxiliary high-pressure (600 psi) air heater has been installed with output temperatures up to 850°F and flow rate to 12 lb/sec. A new 15-valve mixing system with remote control of pressure and temperature allows mixing of hot and cold air.

DATA ACQUISITION: The data acquisition system consists of two stand-alone DATUM, Inc., Nova 3D computer-based units, each with 150 analog input channels and 14 digital input channels. Data processing is performed on System Engineering Laboratories Model 32/75 general-purpose high-speed 32-bit computer.

CURRENT PROGRAMS: Emphasis is on study of low-speed aerodynamics, stability and control, and flow characteristics by continuous running on fighter and transport aircraft configurations.

PLANNED IMPROVEMENTS:

LOCAL INFORMATION CONTACT: Aerodynamics & Propulsion Labs, McDonnell Aircraft Co., St. Louis, MO 63166, (314) 232-4816.

| TRDI, Japan | SUBSONIC WIND TUNNELS | | COMPARABLE FACILITIES |
|---|---|---|---|
| | **TEST SECTION SIZE:** 8.2-ft dia x 11.5 L | **SPEED RANGE: (Mach No.)** 0.04 - 0.17 (50 - 190 ft/sec) | Group C |
| | **DATE BUILT/UPGRADED:** 1961 | **TEMP. RANGE:** Ambient | |
| Low-Speed Wind Tunnel | **REPLACEMENT COST:** $2M | **REYNOLDS NO: (Per ft X $10^{-6}$)** 0 - 1.4 | |
| | **OPERATIONAL STATUS:** Active | **DYNAMIC PRES: (lb/ft$^2$)** 0 - 60 | |
| | | **STAGNATION PRES: (psia)** Atmospheric | |
| | Continuous single, single return, jet open and closed<br>Model size: Span - 6 ft, weight - 250 lb | | |

TESTING CAPABILITIES: This wind tunnel has two types of the model-support system: a sting support and a wire support. The sting-support system is used for the 6-component force tests and high AOA tests up to 90°. The wire-support system is usually used for the external store separation tests and the flutter tests. This facility is powered by a 10-bladed, 3.6-m diameter fan, and the maximum power is 450 kW.

DATA ACQUISITION: Nine channels of information can be recorded on the data acquisition system and reduced on-site with HP-9825.

CURRENT PROGRAMS: Main research is directed at the study of the high AOA aerodynamic characteristics, low-speed aerodynamics of military aircraft, and the low-speed wind tunnel testing techniques.

PLANNED IMPROVEMENTS: None.

LOCAL INFORMATION CONTACT: Hideki Kuwano, the First Division, (0425) 24-2411, ext. 257.

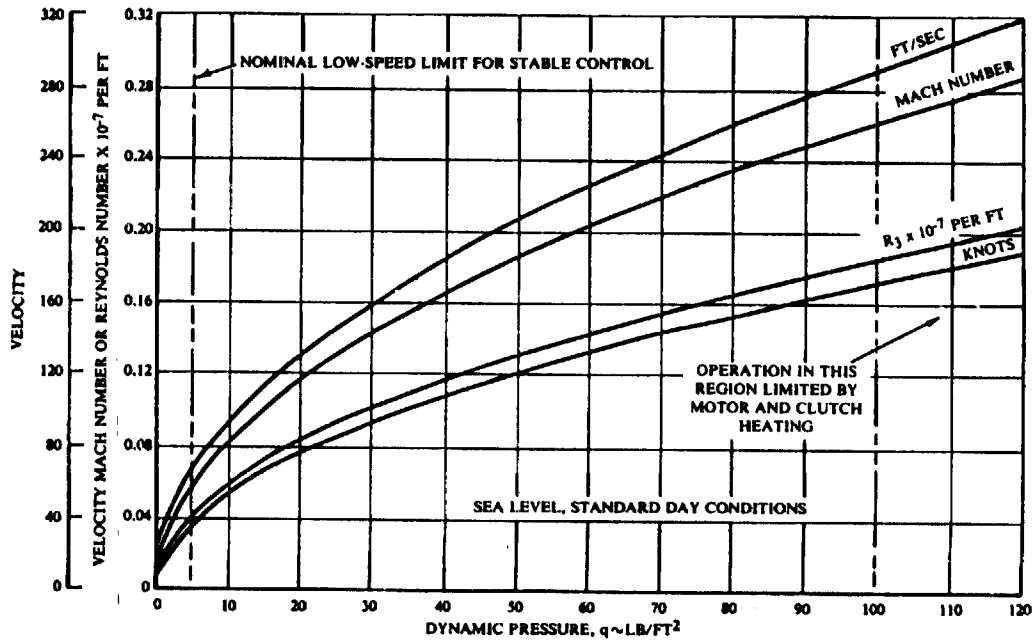
NOMINAL LOW-SPEED LIMIT FOR STABLE CONTROL
FT/SEC
MACH NUMBER
$R_3 \times 10^{-7}$ PER FT
KNOTS
OPERATION IN THIS REGION LIMITED BY MOTOR AND CLUTCH HEATING
SEA LEVEL, STANDARD DAY CONDITIONS
VELOCITY
VELOCITY MACH NUMBER OR REYNOLDS NUMBER X $10^{-7}$ PER FT
DYNAMIC PRESSURE, q~LB/FT$^2$
0
40
80
120
160
200
240
280
320
0.04
0.08
0.12
0.16
0.20
0.24
0.28
0.32
10
20
30
40
50
60
70
80
90
100
110
120

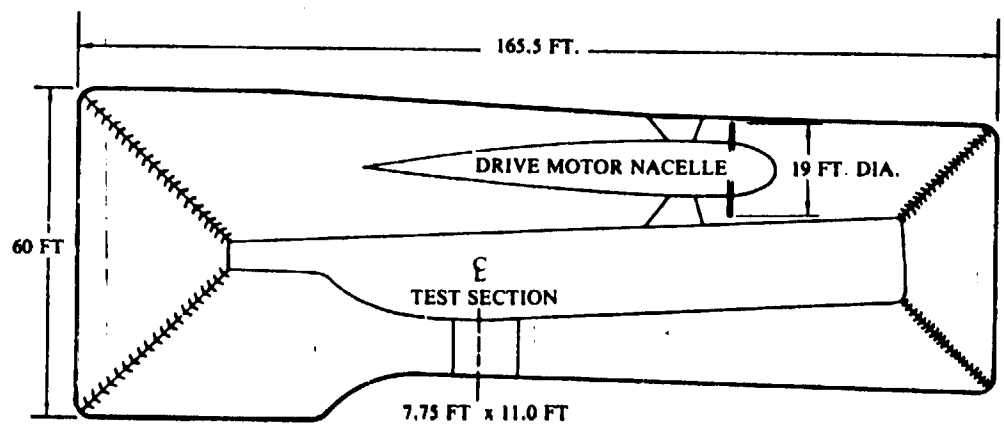
165.5 FT.
DRIVE MOTOR NACELLE
19 FT. DIA.
60 FT
℄
TEST SECTION
7.75 FT x 11.0 FT

| | SUBSONIC WIND TUNNELS | | COMPARABLE FACILITIES |
|---|---|---|---|
| Rockwell International Corp. Los Angeles, Calif. | TEST SECTION SIZE: 7.75 x 11 x 12 ft | SPEED RANGE: (Mach No.) 0.28 (313 ft/sec) | Group C |
| | DATE BUILT/UPGRADED: 1942/1960/1965/1971 | TEMP. RANGE: 570°R | |
| NAAL Low-Speed Wind Tunnel | REPLACEMENT COST: $8.5M | REYNOLDS NO: (Per ft X $10^{-6}$) 0 - 2.0 | |
| | OPERATIONAL STATUS: Single shift | DYNAMIC PRES: ($lb/ft^2$) 0 - 120 | |
| | | STAGNATION PRES: (psia) Atmospheric | |
| | Continuous operation | | |

TESTING CAPABILITIES: Six-component force testing is accomplished using internal balances for sting-mounted models or a subfloor external balance for strut-mounted or semispan models. The entire external balance rotates in yaw with the model, so that measurements are made directly in the stability-axis system. Flutter models may be cable-supported, and a quick-acting Q-reducer prevents loss of models due to divergence. Two Hoffman centrifugal blowers are available for pulling air through inlet models. Scanivalves are used for measuring large numbers of pressures. Store ejection tests may be photographed by high-speed cameras both inside and outside the tunnel.

DATA ACQUISITION: A 50-channel ASTRODATA system records data on tape, which is physically carried to a dedicated Data General NOVA computer in the same building for reduction. On-line plotting of coefficients is available in the control room.

CURRENT PROGRAMS: B-1B flight test support, advanced developments, and occasional tests for outside companies and Flight Dynamics Laboratory have been recently scheduled.

PLANNED IMPROVEMENTS: Some upgrading of data acquisition equipment will take place in 1984. Replacement of entire facility expected in a few years because of loss of land lease.

LOCAL INFORMATION CONTACT: A. L. Clarke, Manager, Wind Tunnels, (213) 647-3450.

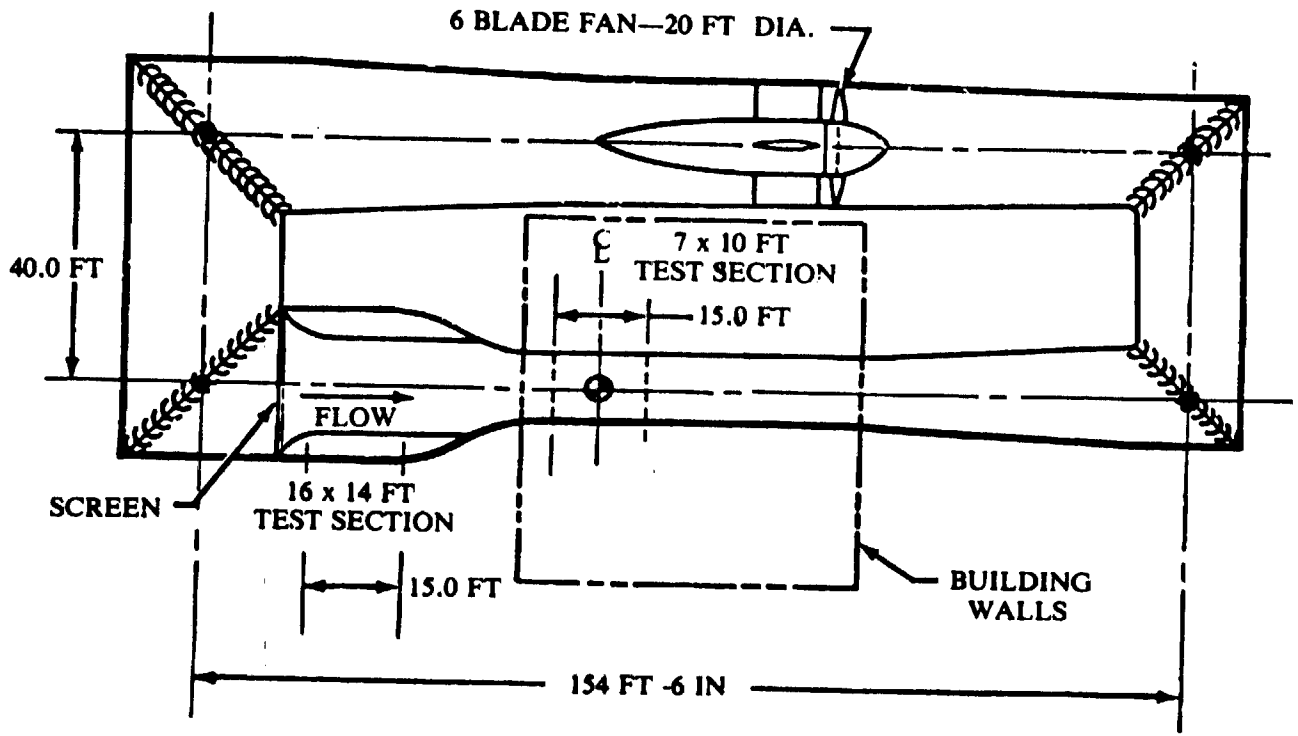
6 BLADE FAN—20 FT DIA.
40.0 FT
7 x 10 FT
TEST SECTION
15.0 FT
FLOW
SCREEN
16 x 14 FT
TEST SECTION
15.0 FT
BUILDING
WALLS
154 FT -6 IN

| Rockwell International Corp. Columbus, Ohio | SUBSONIC WIND TUNNELS | | COMPARABLE FACILITIES |
|---|---|---|---|
| | **TEST SECTION SIZE:** 7 x 10 x 15 ft | **SPEED RANGE:** (Mach No.) 0.33 (370 ft/sec) | Group C |
| | **DATE BUILT/UPGRADED:** 1959/1966/1968/1982 | **TEMP. RANGE:** 500° - 570°R | |
| Subsonic Wind Tunnel | **REPLACEMENT COST:** $7M | **REYNOLDS NO:** (Per ft X $10^{-6}$) 0 - 2.15 | |
| | **OPERATIONAL STATUS:** Single shift operation | **DYNAMIC PRES:** (lb/ft$^2$) 0 - 155 | |
| | | **STAGNATION PRES:** (psia) 14.7 - 16.1 | |
| | Closed circuit, single return, continuous flow, Tandem V/STOL | | |

TESTING CAPABILITIES: Includes aerodynamic force and moment, pressure, flow visualization, and dynamic store ejection tests. An external pyramid force balance is used for strut-mounted full span and for semispan models. A strut-mounted sting/internal balance system is also available. An auxiliary air supply (17 lb/sec at 450 psi) is available for model power or jet simulation. For electrically driven propellers, a 100-kW, 0-350 Hz system is available. A wide array of pressure and velocity instrumentation is used for detailed flow measurements.

DATA ACQUISITION: Fifty channels of signal conditioning/amplification are available. Data are recorded and reduced on-line by a dedicated IBM 1800 computer system located in the tunnel control room.

CURRENT PROGRAMS: Standard aerodynamic force and moment investigations of current aircraft designs, particularly high angle of attack and powered lift systems for the V/STOL and STOL regimes.

PLANNED IMPROVEMENTS:

LOCAL INFORMATION CONTACT: John Federspiel, (614) 239-2401.

| | SUBSONIC WIND TUNNELS | | COMPARABLE FACILITIES |
|---|---|---|---|
| ONERA Chalais-Meudon, France | TEST SECTION SIZE: 3-m dia x 5 L | SPEED RANGE: (Mach No.) up to 0.35 (up to 120 m/sec) | Group C |
| | DATE BUILT/UPGRADED: 1964 | TEMP. RANGE: Ambient | |
| S2 - Ch | REPLACEMENT COST: | REYNOLDS NO: (Per m X $10^{-6}$) Up to 8.2 | |
| | OPERATIONAL STATUS: 1 shift, 1600 hr per year | DYNAMIC PRES: ($kN/m^2$) Up to 8.8 | |
| | | STAGNATION PRES: (bars) Atmospheric | |
| | Continuous flow, open circuit in a large hall, electric motor (1500 kW), closed test section | | |

TESTING CAPABILITIES: Forces measurement on 6-component balance; pressure measurements, flow visualization, and laser velocimeter (2 Dim, 15-W LDV). Special helicopter rotor rig, hydraulically driven, for D = 1.5-m rotors.

DATA ACQUISITION: Solar 16-65.

CURRENT PROGRAMS: Helicopter testing, aircraft and missile 6-component testing, and free dropping of stores for separation trajectory analysis.

PLANNED IMPROVEMENTS: Quasi-anechoic capability with wall treatment and 3 Dim LDV.

LOCAL INFORMATION CONTACT: J. P. Chevallier, Division Aerodynamique Experimentale, ONERA 92195, Meudon Principal Cedex, (1) 534.75.01.

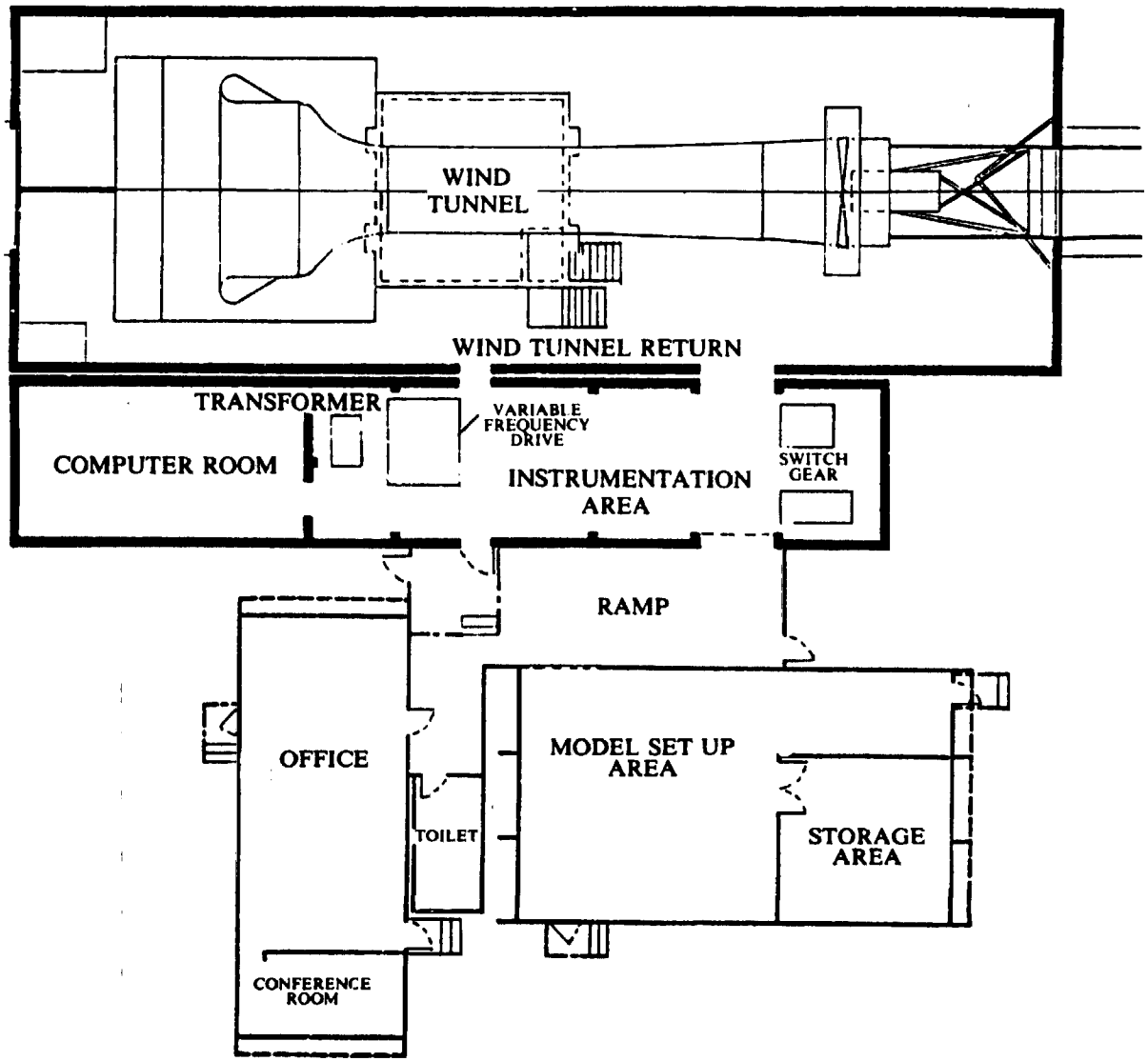
WIND
TUNNEL
WIND TUNNEL RETURN
TRANSFORMER
VARIABLE
FREQUENCY
DRIVE
COMPUTER ROOM
INSTRUMENTATION
AREA
SWITCH
GEAR
RAMP
OFFICE
MODEL SET UP
AREA
TOILET
STORAGE
AREA
CONFERENCE
ROOM

| Grumman Aerospace Corp. | SUBSONIC WIND TUNNELS | | COMPARABLE FACILITIES |
|---|---|---|---|
| | **TEST SECTION SIZE:** 7 x 10 x 20 ft | **SPEED RANGE:** (Mach No.) 0.18 (201 ft/sec) | Group D |
| | **DATE BUILT/UPGRADED:** Constructed 1949, continual upgrade | **TEMP. RANGE:** Ambient | |
| 7 x 10-Ft Subsonic Wind Tunnel | **REPLACEMENT COST:** $1.2M | **REYNOLDS NO:** (Per ft $\times 10^{-6}$) 0 - 1.73 | |
| | **OPERATIONAL STATUS:** 12 hours per day, 7 days a week | **DYNAMIC PRES:** ($lb/ft^2$) 0 - 46 | |
| | | **STAGNATION PRES:** (psia) Atmospheric | |
| | Open circuit, open return, continuous flow | | |

TESTING CAPABILITIES: All types of aerodynamic and propulsion investigations are performed for both propeller and jet aircraft. Limited wind engineering and automotive studies have also been conducted. Run rates range from 8 per hour for sting-mounted models without propulsion simulation to 1 per hour for strut-mounted propeller-driven models.

Model Support Systems: 1, 2, and 3 point strut and floor mount to external balance (±45°); sting support (±15°); and high-attitude sting support (0° - 90°) 1984.

Propulsion Simulation Systems: Vacuum (5 lb/sec at -7.5 psig); pressure (8 lb/sec at 500 psig); variable frequency alternator (4-engine capability); balance crossover systems; and 4, 10, and 1.5-in flowmeters.

Other Systems: Floor boundary layer bleed, solid ground plane, 2-D wall inserts with force and pressure capability and blowing, color video, smoke probe, 35-mm system, scanivalve and solid-state PSI systems, remotely actuated control surfaces, and monitor and shutdown of turbine simulators.

DATA ACQUISITION: Seventy-two channel, automated control, real-time displays, on-line data reduction, color graphics system.

CURRENT PROGRAMS:

PLANNED IMPROVEMENTS:

LOCAL INFORMATION CONTACT: Fritz Blomback, Section Head of Aerotest, (516) 575-3685.

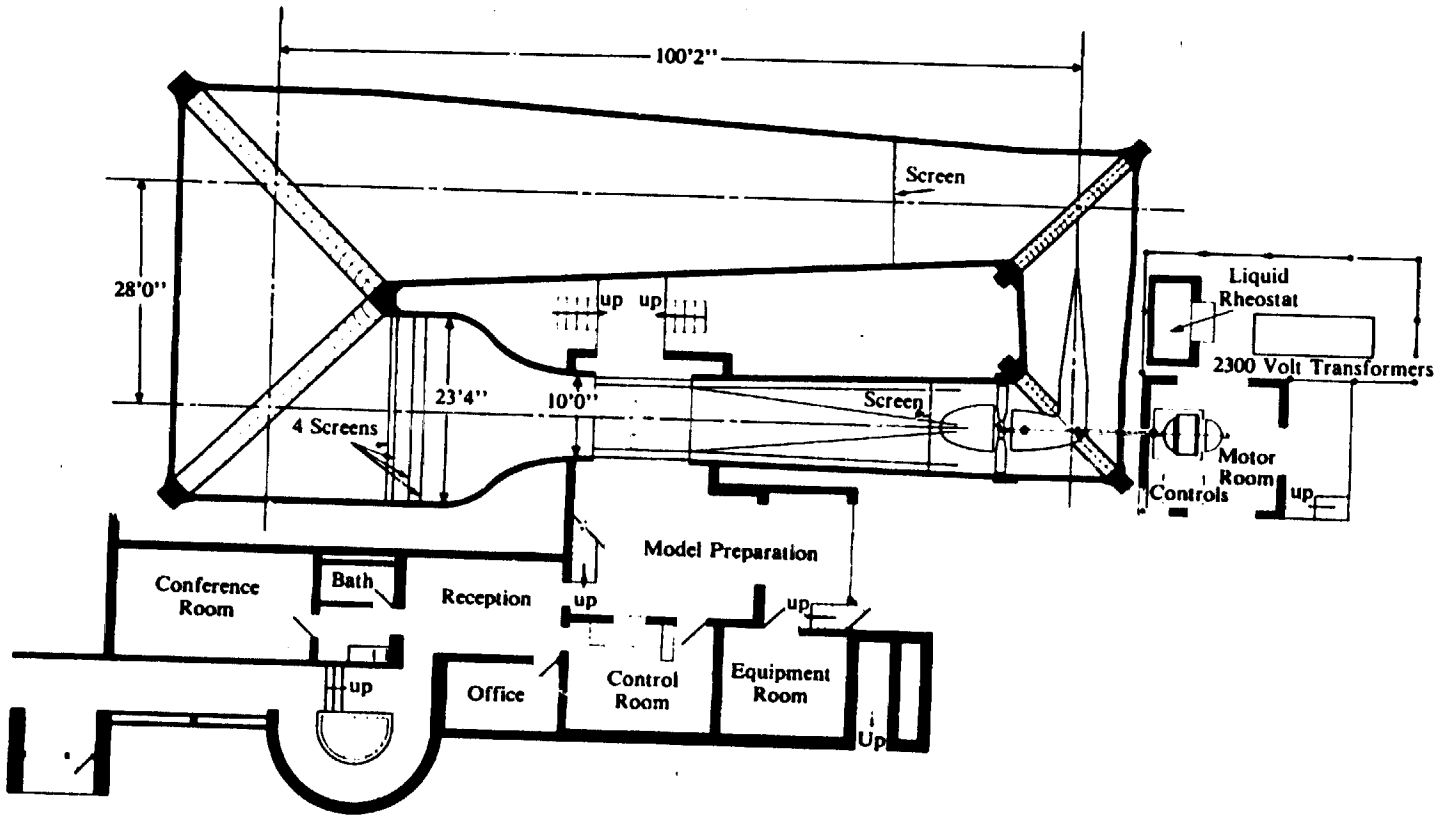
100'2"
Screen
28'0"
up
up
Liquid
Rheostat
2300 Volt Transformers
23'4"
10'0"
Screen
4 Screens
Motor
Room
Controls
up
Model Preparation
Conference
Room
Bath
Reception
up
up
up
Office
Control
Room
Equipment
Room
Up

| | SUBSONIC WIND TUNNELS | | COMPARABLE FACILITIES |
|---|---|---|---|
| Wichita State University | **TEST SECTION SIZE:** 7 x 10 x 12 ft | **SPEED RANGE:** (Mach No.) 0.23 (264 ft/sec) | Group C |
| | **DATE BUILT/UPGRADED:** 1947/1949/1952/1962/1977 | **TEMP. RANGE:** Ambient | |
| 7 x 10-Ft Wind Tunnel | **REPLACEMENT COST:** 1947 construction cost $155K | **REYNOLDS NO:** (Per ft X $10^{-6}$) 0 - 1.8 | |
| | **OPERATIONAL STATUS:** 1 shift per day, 5 days a week | **DYNAMIC PRES:** ($lb/ft^2$) 0 - 85 | |
| | | **STAGNATION PRES:** (psia) Atmospheric | |

TESTING CAPABILITIES: Force and moment tests use a 6-component external pyramid balance located below the test section. Model-mounting systems include one, two, three, and four strut, floor-mounting reflection plane and two-dimensional inserts, 3-ft span, and up to 2-ft chord airfoil sections. Types of testing include force, moment, pressure, and flow visualization on aircraft, automobile, building, building material, airfoil section, and wind turbine models. The wind tunnel is driven by a 4-bladed, 11-ft variable-pitch propeller powered by a 1500-hp wound-rotor induction motor.

DATA ACQUISITION: Test data are recorded and reduced on-line, using a Hewlett-Packard 1000 series computer. The system has 32 channels, 16 digital and 16 single ended, high-level analog.

CURRENT PROGRAMS: Main research is to support the educational programs of undergraduate and graduate students, and faculty research and to provide local industry and individuals with a facility to test and evaluate their products and/or ideas.

PLANNED IMPROVEMENTS: Replace liquid rheostat on drive motor with a solid-state rpm control.

LOCAL INFORMATION CONTACT: Marvin L. Davidson, Wind Tunnel Supervisor, (316) 689-3404.

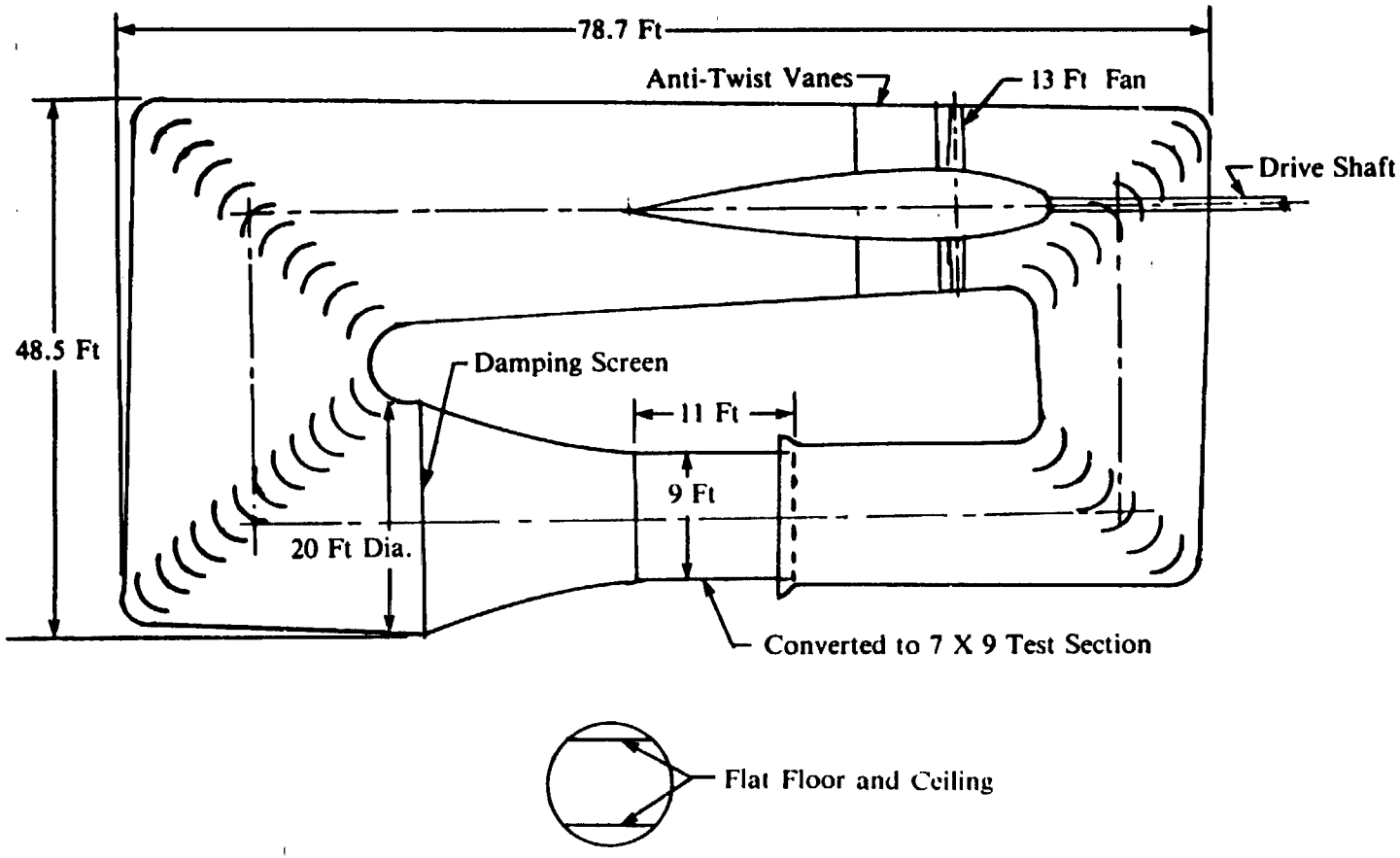


**Georgia Tech 7'x9' Tunnel**

| Georgia Institute of Technology | SUBSONIC WIND TUNNELS | | COMPARABLE FACILITIES |
|---|---|---|---|
| | TEST SECTION SIZE: 7 x 9 x 11 ft | SPEED RANGE: (Mach No.) 0.22 (250 ft/sec) | Group D |
| | DATE BUILT/UPGRADED: 1931/1955/1983 | TEMP. RANGE: Ambient | |
| 7 x 9-Ft Subsonic Wind Tunnel | REPLACEMENT COST: $1.5M | REYNOLDS NO: (Per ft X $10^{-6}$) 0 - 1.6 | |
| | OPERATIONAL STATUS: Intermittent operation | DYNAMIC PRES: (lb/ft$^2$) 0 - 74 | |
| | | STAGNATION PRES: (psia) Atmospheric | |
| | Closed circuit, single return, continuous flow | | |

TESTING CAPABILITIES: Equipped for usual aerodynamic testing with 3-point support, panel models. An HP A700 computer is dedicated to the 6-component external balance. The facility also has available a laser velocimeter with its own computer. Test section is also equipped with an overhead helicopter rotor drive system accommodating rotors up to 4 ft in diameter. This facility has a 4-bladed, 13-ft fan driven by a 600-hp motor and eddy current clutch giving a stepless speed control. This tunnel has just been converted from a 9-ft diameter test section to a 7 x 9 section.

DATA ACQUISITION:

CURRENT PROGRAMS: This facility will be used to conduct research on problems of helicopter forward flight, flutter models, etc.

PLANNED IMPROVEMENTS: Recalibrated in 1983.

LOCAL INFORMATION CONTACT: Prof. John J. Harper, School of Aerospace Engineering, (404) 894-3021.

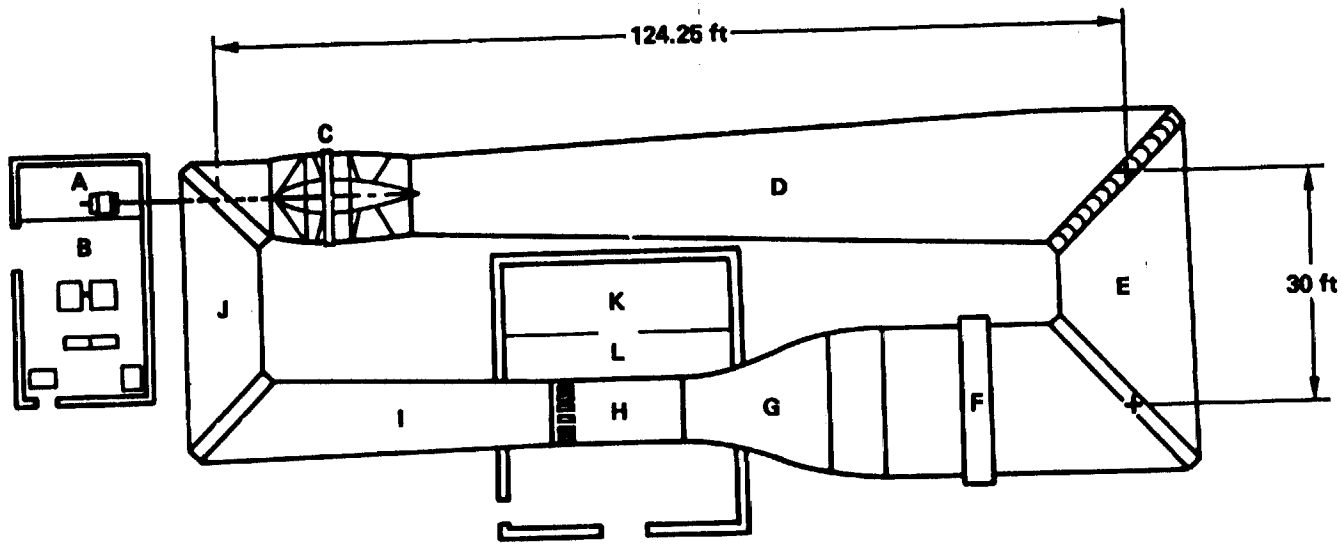


A – FAN MOTOR
B – MOTOR ROOM
C – FAN SECTION
D – THIRD DIFFUSER
E – FOURTH DIFFUSER
F – SCREEN SECTION
G – 5:1 CONTRACTION
H – WORKING SECTION
I – FIRST DIFFUSER
J – SECOND DIFFUSER
K – HEATING PLANT
L – CONTROL BLOCK

| British Aerospace Hatfield | SUBSONIC WIND TUNNELS | | COMPARABLE FACILITIES |
|---|---|---|---|
| | TEST SECTION SIZE: 6.7 x 8.7 x 18.5 ft | SPEED RANGE: (Mach No.) 0 - 0.22 (0 - 250 ft/sec) | Group D |
| | DATE BUILT/UPGRADED: 1954 | TEMP. RANGE: Ambient to ambient + 475°R (uncontrolled) | |
| 9 x 7-Ft Wind Tunnel | REPLACEMENT COST: | REYNOLDS NO: (Per ft X $10^{-6}$) 0 - 1.6 | |
| | OPERATIONAL STATUS: 1 shift per day | DYNAMIC PRES: ($lb/ft^2$) 0 - 74 | |
| | | STAGNATION PRES: (psia) Atmospheric plus dynamic | |
| | Closed circuit, closed throat, continuous flow, 6-component mechanical balance | | |

TESTING CAPABILITIES: The tunnel is powered by a 500-hp electric motor driving a 12-ft diameter fan. Models are mounted by a 3-strut system onto an underfloor mechanical balance. Compressed-air supplies up to 10 lb/sec at 100 psig, and suction of 2500 $ft^3$/min at 25 in is available. A variable height ground board and a reflection plane for half models are available.

DATA ACQUISITION: Digital signals from the mechanical balance and analog signals from various devices such as pressure transducers and strain gages are processed and fed to the Wind Tunnel Department's own computer for on-line computation and presentation.

CURRENT PROGRAMS:

PLANNED IMPROVEMENTS:

LOCAL INFORMATION CONTACT: H. C. Farley, British Aerospace Aircraft Group, Hatfield, (Hatfield (07072) 62300 ext. 11).

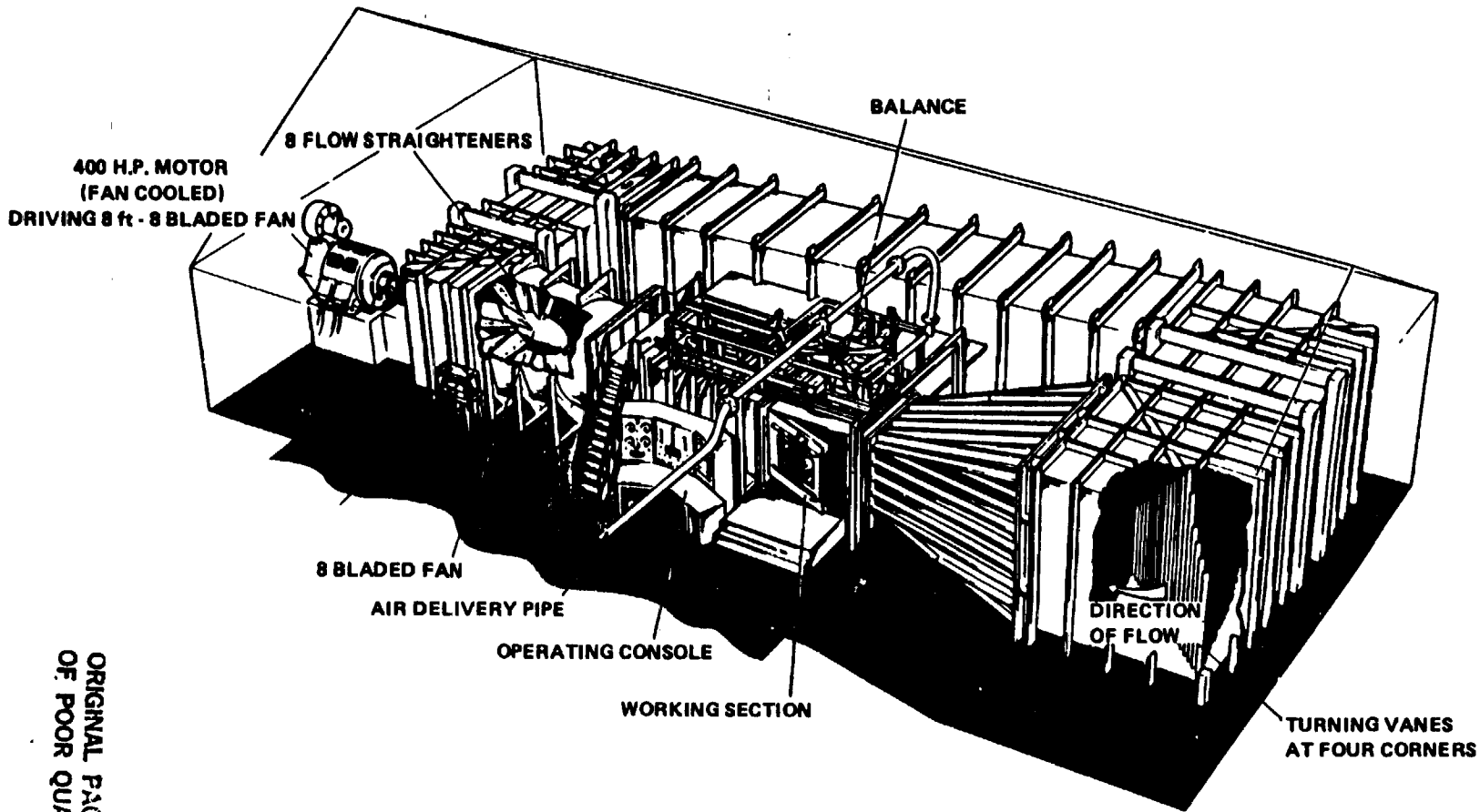


ORIGINAL PAGE IS
OF POOR QUALITY

| British Aerospace Brough, England | SUBSONIC WIND TUNNELS | | COMPARABLE FACILITIES |
|---|---|---|---|
| | TEST SECTION SIZE: 2.1 x 1.5 m | SPEED RANGE: (Mach No.) 0 - 0.25 (0 - 85 m/sec) | Group D |
| | DATE BUILT/UPGRADED: 1937/1952/1964/1975/1984 | TEMP. RANGE: Ambient to 323 K | |
| 7 x 5-Ft Low-Speed Tunnel | REPLACEMENT COST: $1.2M | REYNOLDS NO: (Per m X $10^{-6}$) $5.4 \times 10^6$/m | |
| | OPERATIONAL STATUS: Single shift | DYNAMIC PRES: (kN/m$^2$) 4.4 | |
| | | STAGNATION PRES: (bars) $\cong 1$ | |
| | Closed circuit continuous. Working section vented to atmosphere downstream. Overhead mechanical balance. Floor and roof boundary layer suction system for 2D models. 230 m$^3$ air at 30 bars for blown models. | | |

TESTING CAPABILITIES: Full- and half-model tests at 76 m/sec continuous and 85 m/sec intermittently. Blowing and suction systems for 2D and 3D blown wing models.

DATA ACQUISITION: Dedicated 16-bit microcomputer for data logging, post-run data reduction, and plotting. Multiscanivalve capability.

CURRENT PROGRAMS: 2D boundary layer research, aircraft development plus occasional nonaerospace testing.

PLANNED IMPROVEMENTS: New operator console and standardized instrumentation data bus.

LOCAL INFORMATION CONTACT:

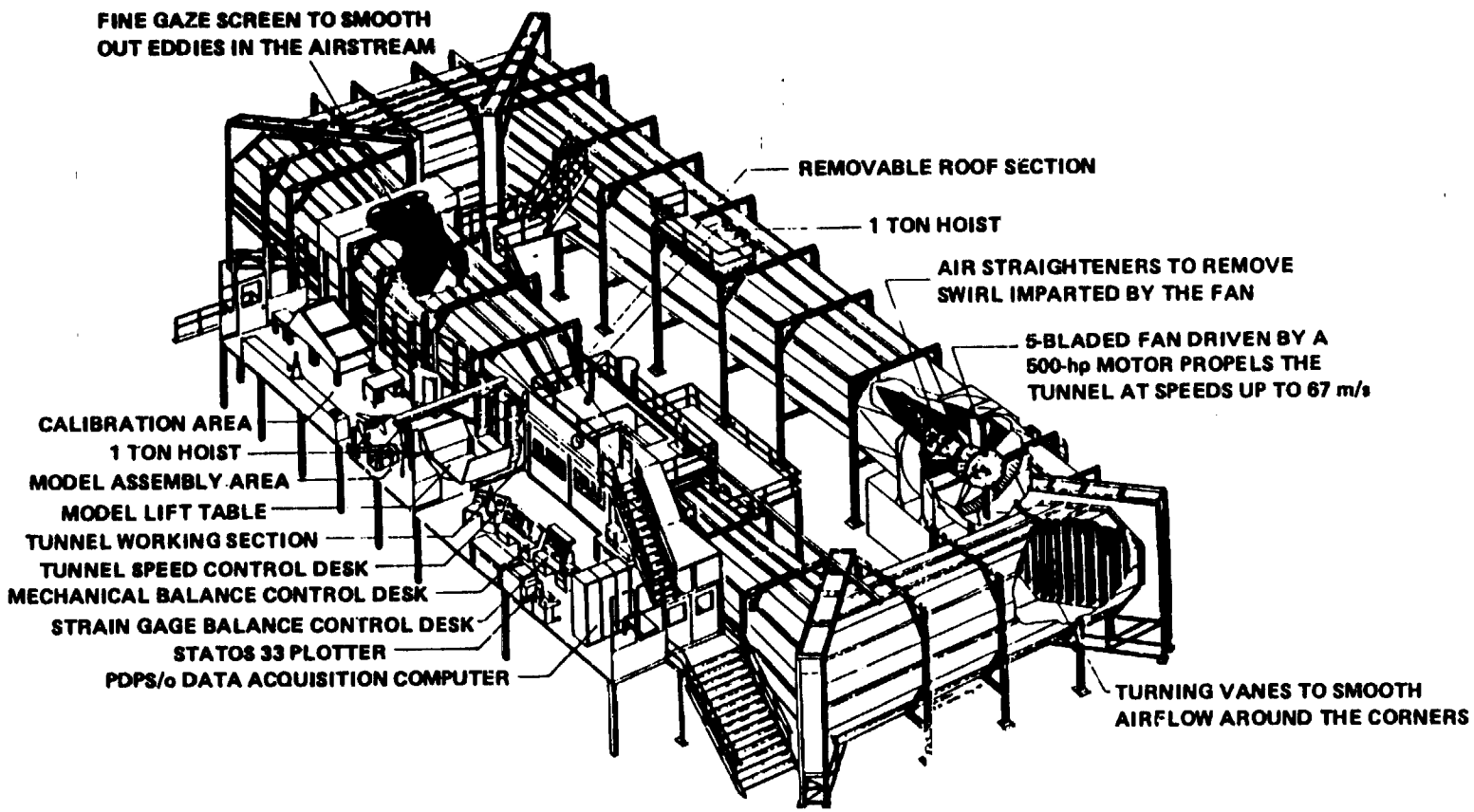
FINE GAZE SCREEN TO SMOOTH OUT EDDIES IN THE AIRSTREAM
REMOVABLE ROOF SECTION
1 TON HOIST
AIR STRAIGHTENERS TO REMOVE SWIRL IMPARTED BY THE FAN
5-BLADED FAN DRIVEN BY A 500-hp MOTOR PROPELS THE TUNNEL AT SPEEDS UP TO 67 m/s
CALIBRATION AREA
1 TON HOIST
MODEL ASSEMBLY AREA
MODEL LIFT TABLE
TUNNEL WORKING SECTION
TUNNEL SPEED CONTROL DESK
MECHANICAL BALANCE CONTROL DESK
STRAIN GAGE BALANCE CONTROL DESK
STATOS 33 PLOTTER
PDPS/o DATA ACQUISITION COMPUTER
TURNING VANES TO SMOOTH AIRFLOW AROUND THE CORNERS

| British Aerospace Warton | SUBSONIC WIND TUNNELS | | COMPARABLE FACILITIES |
|---|---|---|---|
| | TEST SECTION SIZE: 2.1 x 2.7 m | SPEED RANGE: (Mach No.) 0.003 - 0.197 (1 - 67 m/sec) | Group D |
| | DATE BUILT/UPGRADED: 1948/1960/1975/1981 | TEMP. RANGE: Ambient | |
| 2.7 x 2.1-M Low-Speed Wind Tunnel | REPLACEMENT COST: $4.8M | REYNOLDS NO: (Per m $\times 10^{-6}$) 0.1 - 5.0 | |
| | OPERATIONAL STATUS: Active | DYNAMIC PRES: ($kN/m^2$) 3.2 | |
| | | STAGNATION PRES: (bars) Atmospheric plus dynamic | |
| | Closed circuit, continuous flow, single return, solid walls. Steel construction, enclosed building. | | |

TESTING CAPABILITIES: Powered by 380-kW dc motor, from ac/dc generator, using 5-bladed fan. 5° diffuser, contraction ratio 5, one screen. Speed uniform to ±0.13%, upwash and sidewash within 0.43°. Turbulence level 0.25%. Mechanical balance, platform type, 5.1-kN normal force, 3 struts, 6 weighbeams with load cells.
Two sting mounting systems: Large models, incidence -3° - +30°, sideslip -6° - +17°
Small models, incidence -5° - +95°, sideslip -15° - +40°
Several internal strain-gage balances, 6 components, normal force 3.3 kN maximum. Air supplies 1.0 kg/sec at 7 bars, storage 23 $m^3$ at 30 bars.

DATA ACQUISITION: Dedicated minicomputer (DEC PDP 11/24), on-line reduction and plotting. Computer store of 15-year output, fully indexed retrieval.

CURRENT PROGRAMS: Used for aircraft design and development, flight test support, new project assessment, and aerodynamic research by major manufacturer of combat aircraft. Fully active on flexible program allowing quick reaction to new demands from within our own organization. Fully staffed for design and manufacture of models, rigs, and strain-gage balances, as well as for calibration, testing, and analysis.

PLANNED IMPROVEMENTS: Maintenance and replacement of lifed equipment for long-term active operation.

LOCAL INFORMATION CONTACT: K. Emslie, Chief Wind Tunnel Engineer (W175), British Aerospace, Aircraft Group, Warton Aerodrome, Preston, Lancashire, U.K., PR4 1AX, (0772-633333 Ext. 369, Telex 67627).

| | SUBSONIC WIND TUNNELS | | COMPARABLE FACILITIES |
|---|---|---|---|
| Mitsubishi Heavy Industries, Ltd., Japan | **TEST SECTION SIZE:** 1.8 x 2.0 x 2.5 m | **SPEED RANGE:** (Mach No.) 0.05 - 0.23 (20 - 85 m/sec) | Group D |
| | **DATE BUILT/UPGRADED:** 1928/1957/1971/1983 | **TEMP. RANGE:** Ambient | |
| 2-M Low-Speed Wind Tunnel | **REPLACEMENT COST:** $4.3M | **REYNOLDS NO:** (Per m X $10^{-6}$) 1.4 - 6.0 | |
| | **OPERATIONAL STATUS:** 10 hours per day | **DYNAMIC PRES:** (kN/m$^2$) 0.245 - 4.428 | |
| | | **STAGNATION PRES:** (bars) Atmospheric | |
| | Closed circuit, single return, continuous flow<br>Model size: Span - 1.2 m, weight - 30 kg | | |

TESTING CAPABILITIES: Six-component force test, pressure distribution test, half-model test, power effect (air intake or exhaust) test, wake measurement test, and flow visualization test. Two types of supporting models are available: sting support and strut support. Usable balance types are those of internal 6-component and sidewall. The range of angle of attack is from -23° to 23° when sting-support system is adopted, and from -13° to 22° when strut system is used. The yaw angle range of the strut-support system is from -90° to 90°. The power effect equipment has a capability to produce the pressurized air (cold) up to 8 kg/cm$^2$ and weight flow rate of 2 kg/sec. The tunnel is powered by a 450-kW dc motor with 8-bladed, 3-m diameter, variable pitch fans. The data acquisition/processing and tunnel control system was upgraded in 1983 to enable model attitude setting, flow velocity control, data acquisition, and data processing all automatically.

DATA ACQUISITION: Eighteen-channel force data and five-channel pressure data can be recorded simultaneously. The IBM Series 1 computer processes the data on-line with output by plotter, printer, graphic display, and character display.

CURRENT PROGRAMS: Research and development of aircraft, missile, and helicopter.

PLANNED IMPROVEMENTS: High angle-of-attack support system in 1984.

LOCAL INFORMATION CONTACT: Haruo Sakai, Manager, Aerodynamics Research Section, First Engineering Department, Nagoya Aircraft Works, (052) 611-2111, ext. 247.

| United Technologies Research Center East Hartford, Conn. | SUBSONIC WIND TUNNELS | | COMPARABLE FACILITIES |
|---|---|---|---|
| | **TEST SECTION SIZE:** 4 x 6 x 8 ft | **SPEED RANGE:** (Mach No.) 0.13 (145 ft/sec) | Group D |
| | **DATE BUILT/UPGRADED:** 1944 | **TEMP. RANGE:** 520° - 560°R | |
| 4 x 6-Ft Subsonic Wind Tunnel | **REPLACEMENT COST:** | **REYNOLDS NO:** (Per ft X $10^{-6}$) 0 - 0.9 | |
| | **OPERATIONAL STATUS:** Standby | **DYNAMIC PRES:** (lb/ft$^2$) 0 - 24 | |
| | | **STAGNATION PRES:** (psia) Atmospheric plus dynamic | |
| | Closed circuit, single return, continuous flow | | |

TESTING CAPABILITIES: Equipped for 6-component load aerodynamic tests at remotely controlled pitch and yaw angles with load data obtained from tunnel external balance and processed on-line by a dedicated acquisition system and off-site computer. Provides ceiling sector apparatus for independent mounting of helicopter rotor, which is pitched slaved to a helicopter fuselage mounted from the tunnel balance. Variable frequency electric power and various pneumatic services are available. The tunnel is powered by a 75-hp motor.

DATA ACQUISITION: Ten-channel data acquisition system with individual channel amplifiers and signal conditioners, dedicated computer control, and off-site computer batch processor.

CURRENT PROGRAMS: Main emphasis is on 1/10- to 1/15-scale powered and unpowered helicopter performance and stability programs. A variety of miscellaneous programs are also conducted.

PLANNED IMPROVEMENTS:

LOCAL INFORMATION CONTACT: Anthony Fasano, UTRC - Test Facilities, (203) 727-7275.

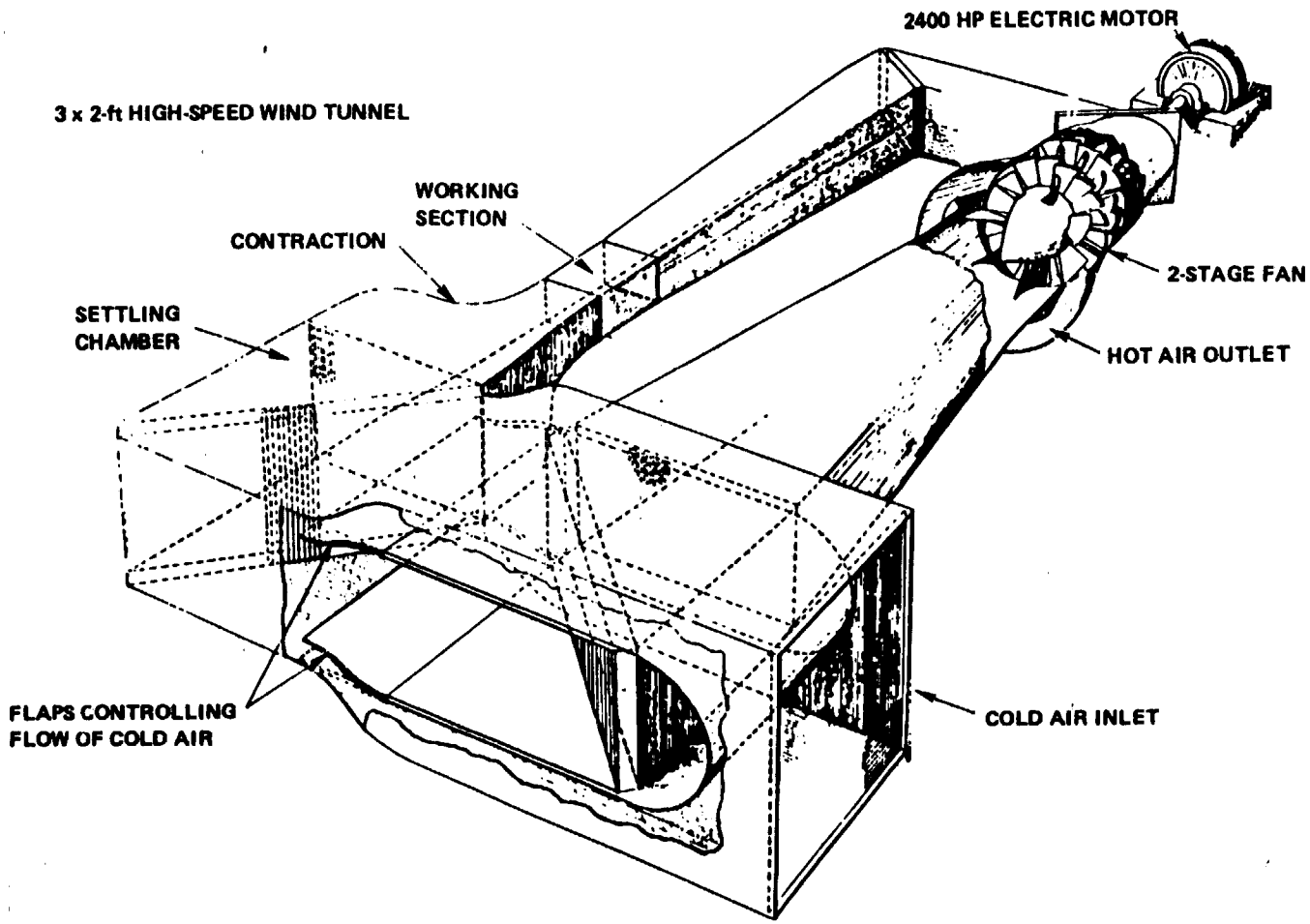
2400 HP ELECTRIC MOTOR
3 x 2-ft HIGH-SPEED WIND TUNNEL
WORKING SECTION
CONTRACTION
SETTLING CHAMBER
2-STAGE FAN
HOT AIR OUTLET
FLAPS CONTROLLING FLOW OF COLD AIR
COLD AIR INLET

| British Aerospace PLC Aircraft Group Weybridge, Surrey KT13 OSF | SUBSONIC WIND TUNNELS | | COMPARABLE FACILITIES |
|---|---|---|---|
| | **TEST SECTION SIZE:** 2 x 3 x 5 ft | **SPEED RANGE: (Mach No.)** 0.40 - 0.92 (447 - 1027 ft/sec) | Group D |
| | **DATE BUILT/UPGRADED:** 1950/1970/1980 | **TEMP. RANGE:** Ambient | |
| 3 x 2-Ft High-Speed Wind Tunnel | **REPLACEMENT COST:** | **REYNOLDS NO: (Per ft X $10^{-6}$)** 2.6 - 4.5 | |
| | **OPERATIONAL STATUS:** Active | **DYNAMIC PRES: (lb/ft$^2$)** 200 - 700 | |
| | | **STAGNATION PRES: (psia)** Atmospheric | |
| | Closed circuit, single return, continuous flow, closed test section cooling by air exchange. Underfloor strain-gage balance. Sting balances. | | |

TESTING CAPABILITIES: A two-stage 7-ft (2.1-m) diameter fan is driven through the second corner by a 2200-hp electric motor. The test section is 2 x 3-ft (0.6 x 0.9 m) rectangular with floor turntable. Underfloor 4-component strain-gage balances for half models; sting balances for complete models.

DATA ACQUISITION: Dedicated PDP 11/60 on-line data acquisition, multitasking with graph plotting and background computation roles. Recording 16 digital and/or 16 analog inputs.

CURRENT PROGRAMS:

PLANNED IMPROVEMENTS:

LOCAL INFORMATION CONTACT: D. Light, Head of Wind Tunnels, (Weybridge 45522, ext. 6604, Telex: 27111).

| Fuji Heavy Industries, Japan | SUBSONIC WIND TUNNELS | | COMPARABLE FACILITIES |
|---|---|---|---|
| | TEST SECTION SIZE: 6.56 x 6.56 x 9.5 ft | SPEED RANGE: (Mach No.) 0 - 0.176 (0 - 197 ft/sec) | Group D |
| | DATE BUILT/UPGRADED: 1969 | TEMP. RANGE: Ambient | |
| FHI Low-Speed Wind Tunnel | REPLACEMENT COST: $2M | REYNOLDS NO: (Per ft X $10^{-6}$) 0 - 1.5 | |
| | OPERATIONAL STATUS: Essentially 1 shift per day | DYNAMIC PRES: ($lb/ft^2$) 0 - 46 | |
| | | STAGNATION PRES: (psia) Atmospheric | |
| | Closed circuit, single return, continuous flow, open throat<br>Model size: Span - 5.3 ft, weight - 200 lb | | |

TESTING CAPABILITIES: The 3 model support systems are equipped for static tests and tandem strut with 6-component balance, wire suspension with balance, and sting with internal balance. Auxiliary equipment consists of 5-hp model motors for power supply to models, 30 $kg/cm^2$ $10m^3$ compressed-air supply, pressure measurements (scanivalves), etc. This facility is available for static test (force and pressure measurement test), low-speed flutter test, airfoil test (with end-plate), external store ejection test, etc.

DATA ACQUISITION: A Hewlett-Packard 1000 series computer and front-end are used for data acquisition of up to 16 analog input channels. On-line data acquisition/reduction programs provide almost instantaneous numerical and graphical results.

CURRENT PROGRAMS: Mainly used for the study of the low-speed aerodynamics, static and dynamic stability, and control of military and general aviation and transport aircraft configurations. Rarely used for the nonaeronautical model tests such as automobiles or containers.

PLANNED IMPROVEMENTS: Powering up the drive motor of the fan is scheduled.

LOCAL INFORMATION CONTACT: Akitoshi Nagao, General Manager, FHI Aircraft Engineering Division, 1-1-11 Yonan Utsunomiya, Tochigi 320, Japan, (0286-58-1111).

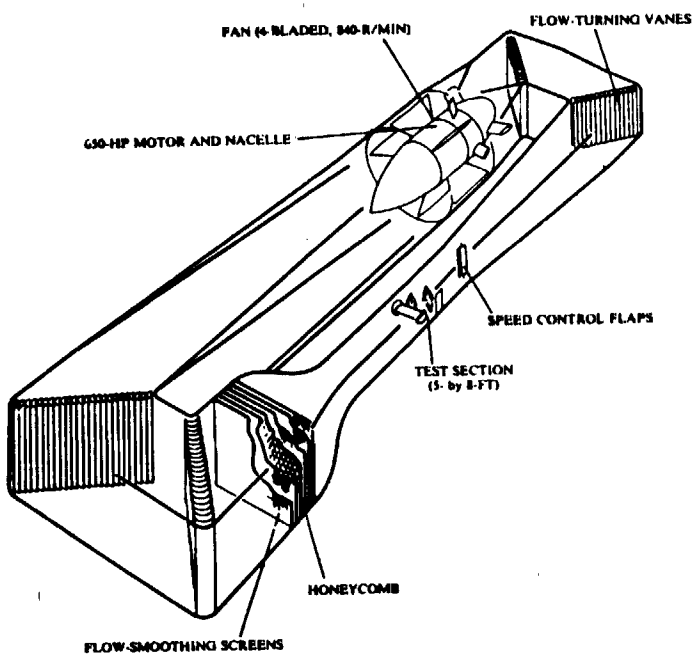
FAN (4-BLADED, 840-R/MIN)
FLOW-TURNING VANES
650-HP MOTOR AND NACELLE
SPEED CONTROL FLAPS
TEST SECTION
(5- by 8-FT)
HONEYCOMB
FLOW-SMOOTHING SCREENS

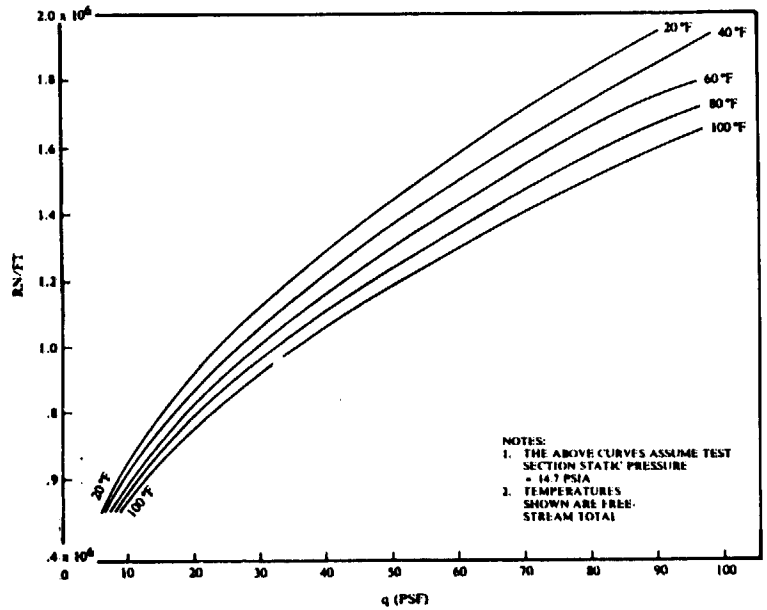
2.0 x 10^6
1.8
1.6
1.4
1.2
1.0
.8
.9
.4 x 10^6
RN/FT
0
10
20
30
40
50
60
70
80
90
100
q (PSF)
20 °F
40 °F
60 °F
80 °F
100 °F
20 °F
100 °F
NOTES:
1. THE ABOVE CURVES ASSUME TEST SECTION STATIC PRESSURE = 14.7 PSIA
2. TEMPERATURES SHOWN ARE FREE-STREAM TOTAL

| Boeing Commercial, Seattle | SUBSONIC WIND TUNNELS | | COMPARABLE FACILITIES |
|---|---|---|---|
| | **TEST SECTION SIZE:** 8 x 5 x 20 ft | **SPEED RANGE:** (Mach No.) 0.18 (201 ft/sec) | Group D |
| | **DATE BUILT/UPGRADED:** 1968/1976/1981 | **TEMP. RANGE:** 530° - 560°R | |
| Low-Speed Research Tunnel | **REPLACEMENT COST:** $5M | **REYNOLDS NO:** (Per ft × $10^{-6}$) 0 - 1.18 | |
| | **OPERATIONAL STATUS:** 3 shifts per day | **DYNAMIC PRES:** (lb/ft$^2$) 1 - 50 | |
| | | **STAGNATION PRES:** (psia) 14.7 - 15.1 | |
| | Closed circuit, single return, continuous flow, with variable test section width from 5 to 3 ft | | |

TESTING CAPABILITIES: Models can be mounted from both walls, wall or floor by a strut, or sting mounted. Models mounted from both walls and by the strut use the 6-component external balance; and the sting-mounted models use internal balances. Auxiliary equipment consists of an air supply of 1000 psi with a maximum flow rate of 850 lb at 15 lb/sec, vortex generators on the sidewalls, a Laser Anemometer Adaptive Rapid Scanning System (LAARSS), and wake pressure survey apparatus. This facility is powered by 4 variable-pitch fiberglass foam blades on a 12-ft-diameter fan driven by a 650-hp induction motor. Boundary layer thickness can be reduced by blowing through 8 slots in the walls of the test section.

DATA ACQUISITION: One hundred channels of data can be obtained and processed by the Digital Equipment Corporation PDP 11/70 and displayed on a graphic scope with hard copies being made almost immediately. Also acquisition by the Phoenix multiplexer and ADC of 40 analog voltage channels and 6 scanivalve with up to 48 channels each is processed by the Hewlett-Packard 9845T Desktop Computer and plotted within 10 seconds from start of acquisition.

CURRENT PROGRAMS: Main research is directed at the study of low-speed aerodynamics, static and dynamic stability and control, and associated flow characteristics of aircraft.

PLANNED IMPROVEMENTS: None at this time.

LOCAL INFORMATION CONTACT: Chief of Wind Tunnel, (206) 655-2298.

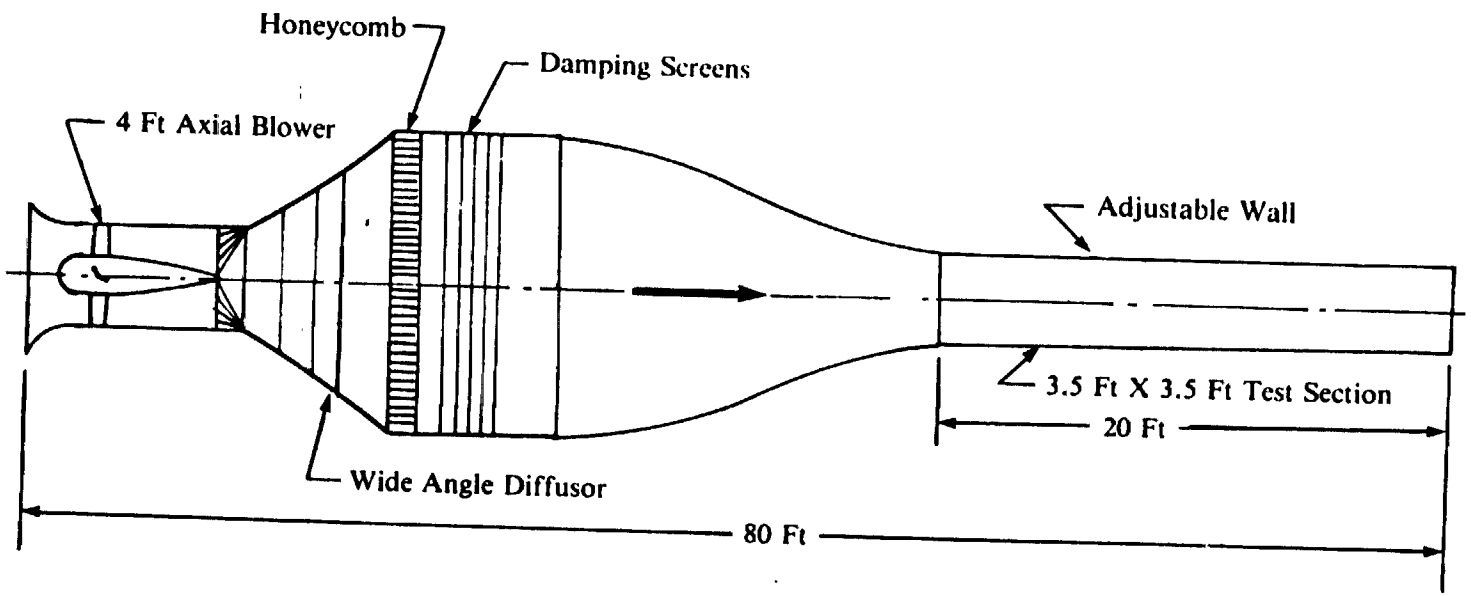


**Georgia Tech Low Turbulence Tunnel**

| | SUBSONIC WIND TUNNELS | | COMPARABLE FACILITIES |
|---|---|---|---|
| Georgia Institute of Technology | TEST SECTION SIZE: 3.5 x 3.5 x 20 ft | SPEED RANGE: (Mach No.) 0.06 (73 ft/sec) | Group D |
| | DATE BUILT/UPGRADED: 1956 | TEMP. RANGE: Ambient | |
| Low Turbulence Tunnel | REPLACEMENT COST: $300K | REYNOLDS NO: (Per ft X $10^{-6}$) 0.5 | |
| | OPERATIONAL STATUS: Active | DYNAMIC PRES: (lb/ft$^2$) 0 - 6.4 | |
| | | STAGNATION PRES: (psia) Atmospheric | |
| | Low Turbulence Tunnel, Eiffel type, continuous flow, closed throat | | |

TESTING CAPABILITIES: Used primarily for boundary layer research; test section has an adjustable sidewall. A small 3-component external balance is available for models up to 24 in span. Hot wire anemometry with attendant computer available. Tunnel is powered by a 40-hp, 4-ft axial flow fan.

DATA ACQUISITION:

CURRENT PROGRAMS: Corner flows (wing-body junction) and other in-house research.

PLANNED IMPROVEMENTS:

LOCAL INFORMATION CONTACT: Dr. Howard M. McMahon, School of Aerospace Engineering, (404) 894-3065.

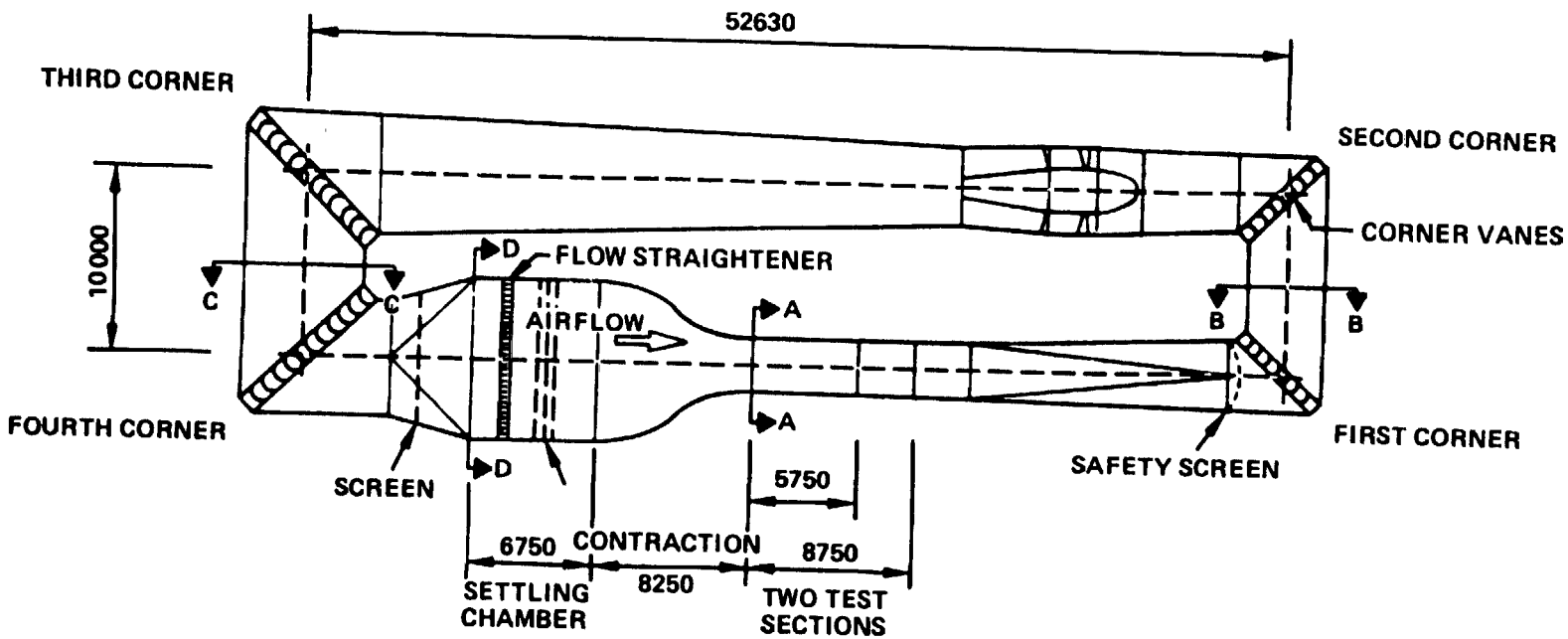
52630
THIRD CORNER
SECOND CORNER
CORNER VANES
10000
C
C
D
FLOW STRAIGHTENER
AIRFLOW
A
B
B
FOURTH CORNER
A
FIRST CORNER
SCREEN
D
SAFETY SCREEN
5750
6750
CONTRACTION
8750
8250
SETTLING CHAMBER
TWO TEST SECTIONS

| Netherlands Research Laboratory, Netherlands | SUBSONIC WIND TUNNELS | | COMPARABLE FACILITIES |
|---|---|---|---|
| | TEST SECTION SIZE: 3 x 2.25 m | SPEED RANGE: (Mach No.) 0 - 0.25 (0 - 85 m/sec) | Group D |
| | DATE BUILT/UPGRADED: 1982 | TEMP. RANGE: Ambient | |
| LST 3 x 2.25-M Subsonic Wind Tunnel | REPLACEMENT COST: | REYNOLDS NO: (Per m X $10^{-6}$) 0 - 6.0 | |
| | OPERATIONAL STATUS: 1 shift per day | DYNAMIC PRES: ($kN/m^2$) 0 - 4 M/S | |
| | | STAGNATION PRES: (bars) Atmospheric | |

TESTING CAPABILITIES: This tunnel is used for three-dimensional, two-dimensional, and half-model testing. Models may be supported by wire, strut, or sting for 3-D tests. A ground plane is mounted between the sidewalls for ground effect tests. Powered models use either electrically driven propellers or pneumatically driven fans or jets. Boundary layer blowing is used for 2-D tests. The tunnel is also used for flow visualization, boundary layer investigations, and turbulence measurements.

DATA ACQUISITION: Steady measurements: 64 data channels including up to 16 scanivalves. Unsteady measurements: Special-purpose system records with phase and amplitude for up to 100 analog and 100 digital channels. Data processing is performed by a HP-1000/45 dedicated computer. This local system carries out the following tasks: computation of operating parameters, verification of the validity of the present run (Quick Look), computation of the final results, and serving as the link to the communication processor and from here to the central CYBER computer. From here test results can be used for aerodynamic analysis through cross-plotting (EDIPAS). Results are presented in the form of tables, plots, tapes, and computer generated microfiches.

CURRENT PROGRAMS: Force and moment measurements, pressure measurements, flow visualization, instationary measurements and flutter tests, and engine simulation tests.

PLANNED IMPROVEMENTS:

LOCAL INFORMATION CONTACT: J. Mannée, Head Incompressible Aerodynamics Department, Fluid Dynamics Division.

| University of Oklahoma | SUBSONIC WIND TUNNELS | | COMPARABLE FACILITIES |
|---|---|---|---|
| | **TEST SECTION SIZE:** 4 x 6 x 11 ft (cross sect.-approx. ellipse) | **SPEED RANGE:** (Mach No.) 0.02 - 0.23 (30 - 265 ft/sec) | Group D |
| | **DATE BUILT/UPGRADED:** 1940/1984 | **TEMP. RANGE:** Ambient | |
| Subsonic Wind Tunnel | **REPLACEMENT COST:** $1M | **REYNOLDS NO:** (Per ft X $10^{-6}$) 0.2 - 1.6 | |
| | **OPERATIONAL STATUS:** Currently being upgraded | **DYNAMIC PRES:** ($lb/ft^2$) 1.25 - 83.5 | |
| | | **STAGNATION PRES:** (psia) Atmospheric | |
| | Continuous flow, closed circuit, split return, closed throat, 3:1 contraction<br>Model size: Span - 60 in | | |

TESTING CAPABILITIES: The facility is powered by a 400-hp electric motor, which drives a 3-bladed, 7-ft propeller of variable pitch. The blade pitch is actuated by a hydraulic system. Experimentation has included aerodynamic data by use of a 6-component pyramidal balance, model pressure distributions, velocity profiles with hot-wire anemometry, and turbulence-level measurements.

DATA ACQUISITION:

CURRENT PROGRAMS: Student laboratory programs. Research is envisioned for aerodynamic simulations and fundamental studies: turbulence structure, instabilities, separation, and transition.

PLANNED IMPROVEMENTS: Added screens for improved turbulence level (turbulence factor 1.35 without screens), enlargement of control room, on-line with OU computer network, 2-color LDV system, and upgraded balance system.

LOCAL INFORMATION CONTACT: Profs. Paavo Sepri or Omer Savas, AMNE, (405) 325-5011.

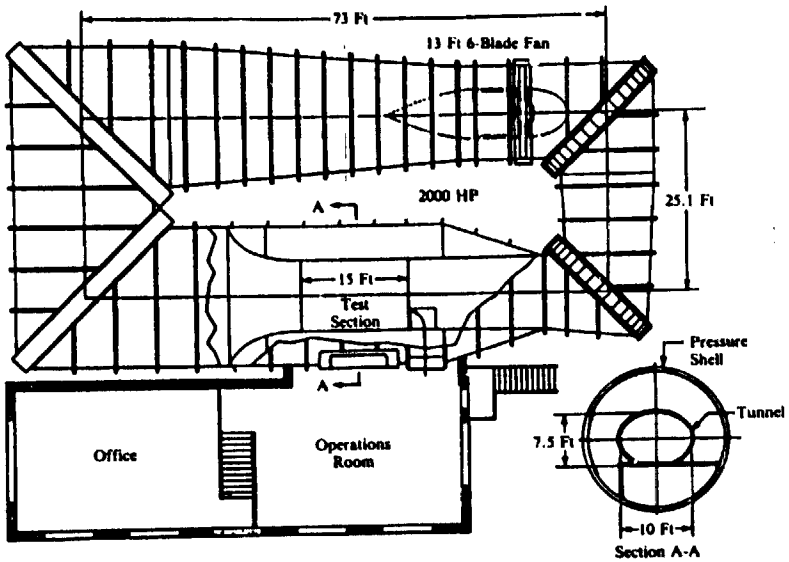


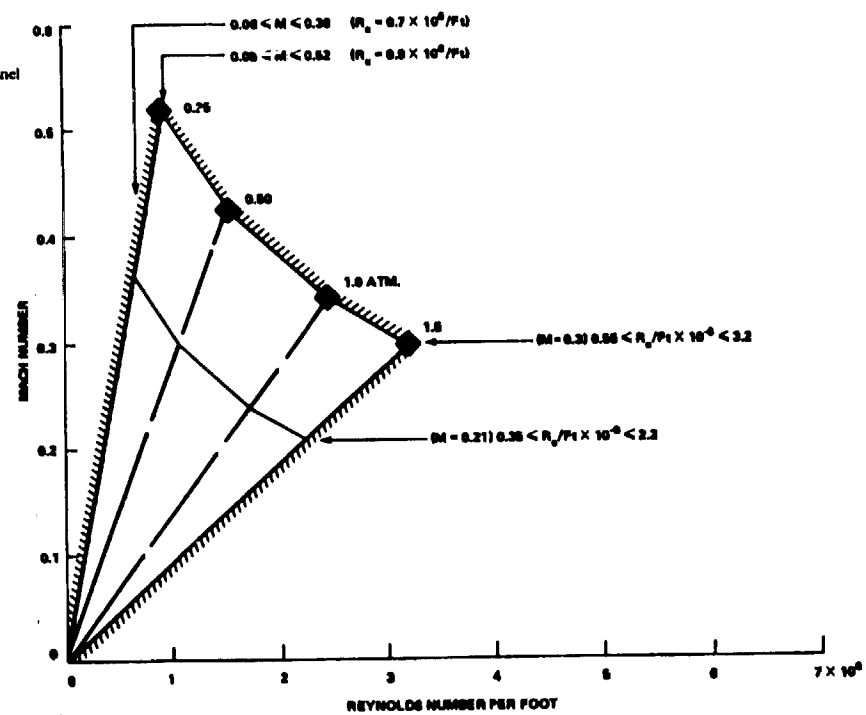


PRESENT PRESSURIZATION ENVELOPE FOR WBF

| | SUBSONIC WIND TUNNELS | | COMPARABLE FACILITIES |
|---|---|---|---|
| Massachusetts Institute of Technology | **TEST SECTION SIZE:** 7.5 x 10 x 15 ft (elliptical section) | **SPEED RANGE: (Mach No.)** Up to 0.36 at 0.25 bar<br>Up to 0.25 at 1 bar<br>Up to 0.21 at 1.5 bars | Group D |
| | **DATE BUILT/UPGRADED:** 1939/1982/1983 | **TEMP. RANGE:** Ambient | |
| Wright Brothers Tunnel | **REPLACEMENT COST:** $20M | **REYNOLDS NO: (Per ft X $10^{-6}$)** Up to 0.7 at 0.25 bar<br>Up to 1.8 at 1.0 bar<br>Up to 2.2 at 1.5 bars | |
| | **OPERATIONAL STATUS:** 1 shift per day (backlog) | **DYNAMIC PRES: (lb/ft$^2$)** 0 - 107 | |
| | | **STAGNATION PRES: (bars)** 0.25 - 1.5 | |
| | Closed circuit, continuous flow, closed throat, elliptic cross section, pressure shell | | |

TESTING CAPABILITIES: Equipped with 6-component pyramidal mechanical balance modernized in 1982. Wing spans up to 8 ft and lift forces to 3000 lb. Series of 6-component strain-gage internal balances for smaller models (up to 100 lb lift). Facility powered by a 6-bladed, 13-ft diameter fan driven by a 2000-hp electric motor. Auxiliary air supplies: continuous 4.8, 1.5, 0.5, and 0.07 lb/sec at 3, 60, 100, and 2000 psi, respectively, 800 cfs vacuum for 4 psia or greater; intermittent 10 lb/sec from 1160 and 230 lb of air stored at 100 and 2000 psi, respectively. Gust generator system: horizontal and longitudinal gusts, approximately sinusoidal to 60 Hz, strength inversely proportional to air speed.

DATA ACQUISITION: Forty channels of data recorded and reduced on-site. Scanivalve and hot wire equipment. DEC PDP 11/23 and 11/44 systems.

CURRENT PROGRAMS: Flowfield research studies of unsteady and viscous phenomena, aircraft configuration stability, and wind effect study of building and structure complexes.

PLANNED IMPROVEMENTS: Circuit pressurization for operations over 0.25 - 4.0 atmosphere range ($0 < M < 0.55$) with air ($R_e$/ft $< 5. \times 10^6$) by 1985; with freon ($R_e$/ft $< 20. \times 10^6$).

LOCAL INFORMATION CONTACT: Prof. Judson R. Baron, Department of Aero and Astro, (617) 253-4329.

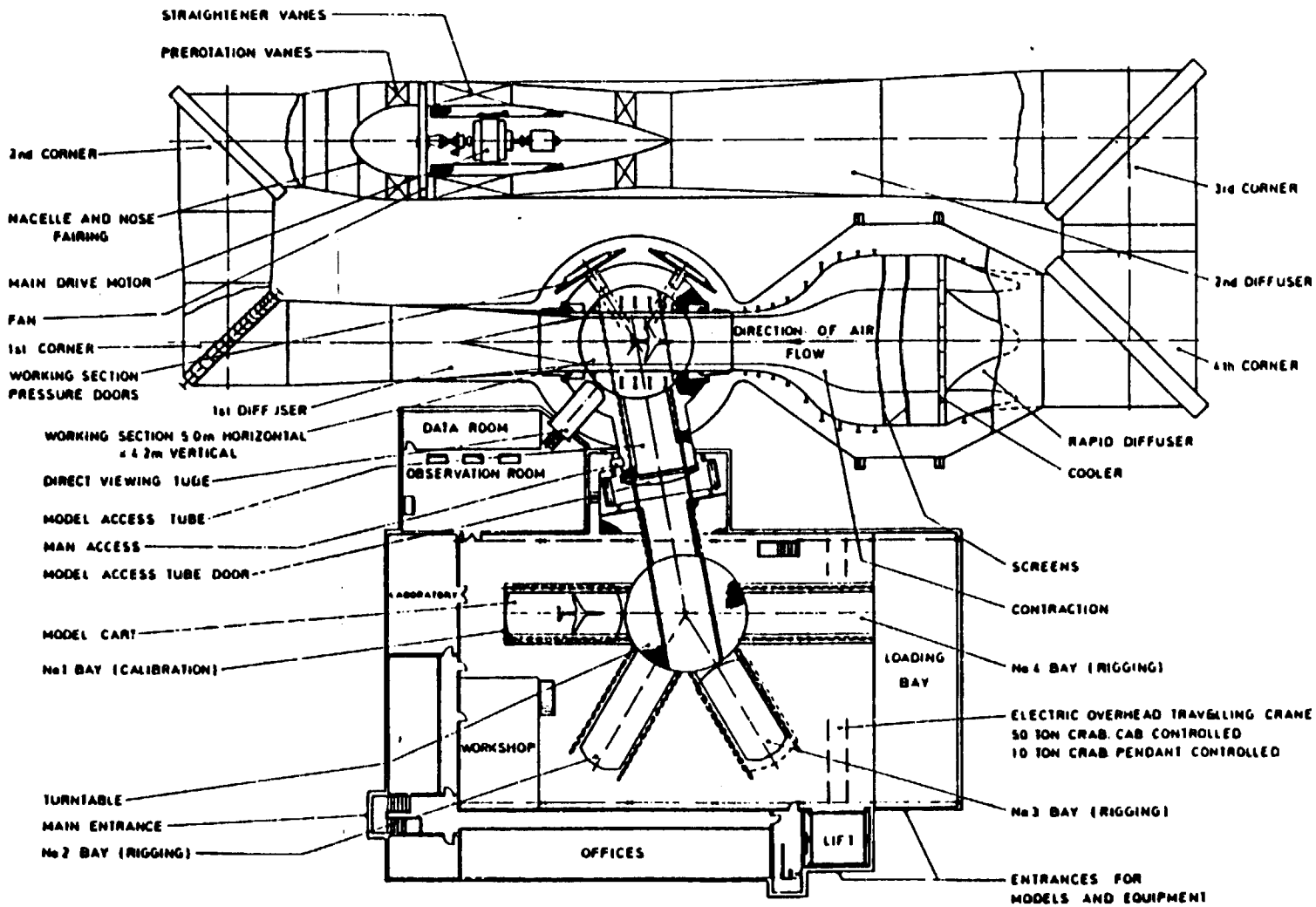
STRAIGHTENER VANES
PREROTATION VANES
2nd CORNER
NACELLE AND NOSE FAIRING
MAIN DRIVE MOTOR
FAN
1st CORNER
WORKING SECTION PRESSURE DOORS
1st DIFFUSER
WORKING SECTION 5.0m HORIZONTAL x 4.2m VERTICAL
DIRECT VIEWING TUBE
MODEL ACCESS TUBE
MAN ACCESS
MODEL ACCESS TUBE DOOR
MODEL CART
No1 BAY (CALIBRATION)
TURNTABLE
MAIN ENTRANCE
No 2 BAY (RIGGING)
DATA ROOM
OBSERVATION ROOM
LABORATORY
WORKSHOP
OFFICES
LIFT
LOADING BAY
DIRECTION OF AIR FLOW
3rd CORNER
2nd DIFFUSER
4th CORNER
RAPID DIFFUSER
COOLER
SCREENS
CONTRACTION
No 4 BAY (RIGGING)
ELECTRIC OVERHEAD TRAVELLING CRANE
50 TON CRAB CAB CONTROLLED
10 TON CRAB PENDANT CONTROLLED
No 3 BAY (RIGGING)
ENTRANCES FOR MODELS AND EQUIPMENT

| Royal Aircraft Establishment Farnborough, United Kingdom | SUBSONIC WIND TUNNELS | | COMPARABLE FACILITIES |
|---|---|---|---|
| | TEST SECTION SIZE: 4.2 x 5 m | SPEED RANGE: (Mach No.) 0 - 0.33 (0 - 133 m/sec) | Group E |
| | DATE BUILT/UPGRADED: 1978 | TEMP. RANGE: Ambient to 313 K | |
| 5-M Low-Speed Wind Tunnel | REPLACEMENT COST: | REYNOLDS NO: (Per m X $10^{-6}$) Up to 18.0 | |
| | OPERATIONAL STATUS: Active | DYNAMIC PRES: ($kN/m^2$) Up to 16.0 | |
| | | STAGNATION PRES: (bars) 1 - 3 | |
| | Strut and sting rigs, continuous flow, interchangeable model carts, return circuit (conventional), run time: 15 min | | |

TESTING CAPABILITIES: Models are supported on mobile carts that become the test-suction floor. There are three carts: (1) the sting support cart with a range of 38° obtained using a circular arc quadrant and with an unturned strain-gage balance, (2) mechanical balance cart that has a 6-component virtual-center mechanical balance under the floor, and (3) a general-purpose cart for miscellaneous tests including tunnel calibration. Model carts can be interchangeable in about 30 minutes. The test section can be isolated from the pressurized circuit or repressurized in about 6 minutes. There are also special rigs for high-incidence tests, measurement of full-scale store drag, and a low-drag support for accurate drag measurements. Auxiliary air can be supplied to models at 22 atmospheres and 7.9 kg/sec. Suction at 4.2 $m^3$/sec is also available.

DATA ACQUISITION: Modular system based on multiple minicomputers arranged in a two-tier network. Independent front-end packages (FEPs) are dedicated to particular wind tunnel tasks.

CURRENT PROGRAMS: Research on aircraft, helicopters (excluding rotor blades), and weapons and work in support of development.

PLANNED IMPROVEMENTS:

LOCAL INFORMATION CONTACT: Superintendent, AE2 Division, Aerodynamics Department, (0252) 24461, ext. 5377.

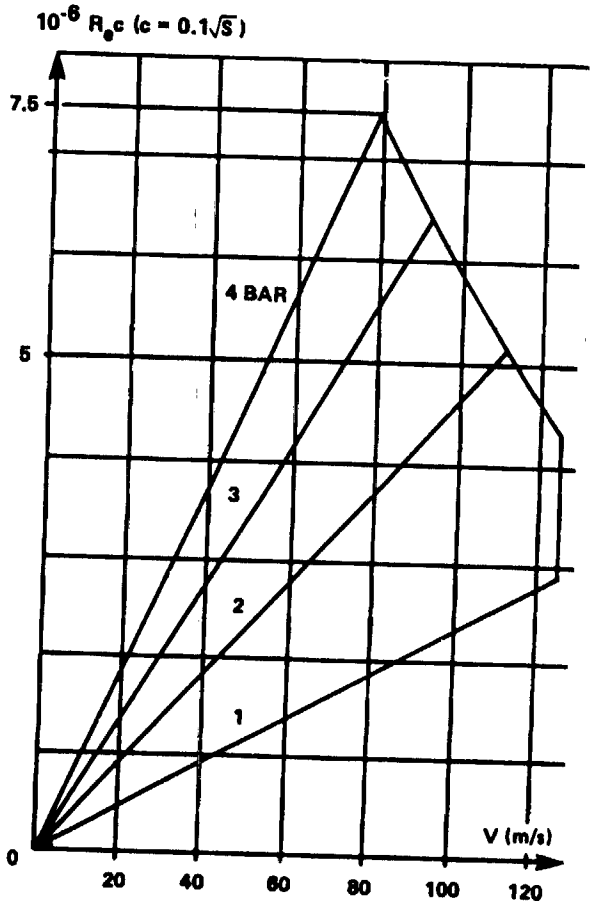
$10^{-6}$ $R_e c$ ($c = 0.1\sqrt{S}$)
7.5
5
0
4 BAR
3
2
1
V (m/s)
20
40
60
80
100
120

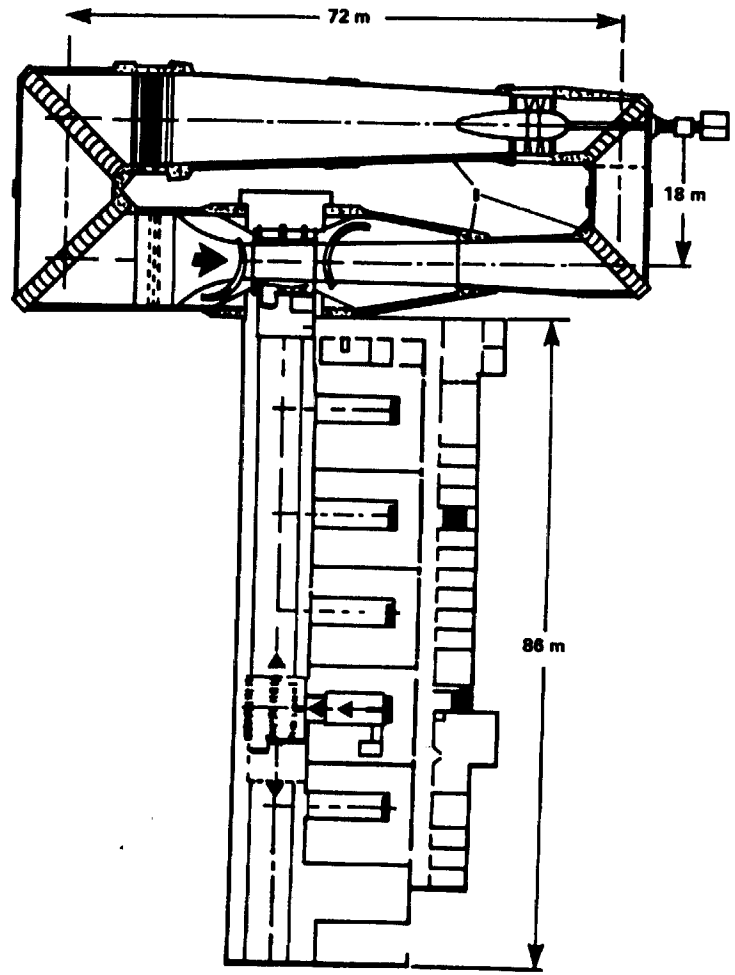
72 m
18 m
86 m

| ONERA<br>Le Fauga,<br>France | SUBSONIC WIND TUNNELS | | COMPARABLE FACILITIES |
|---|---|---|---|
| | TEST SECTION SIZE: 3.5 x 4.5 x 10 m | SPEED RANGE: (Mach No.) 0 - 0.37 (0 - 125 m/sec) | Group E |
| | DATE BUILT/UPGRADED: 1977 | TEMP. RANGE: 263 - 313 K | |
| F1 | REPLACEMENT COST: | REYNOLDS NO: (Per m $\times 10^{-6}$) <18.8 | |
| | OPERATIONAL STATUS: single shift | DYNAMIC PRES: ($kN/m^2$) 14 | |
| | | STAGNATION PRES: (bars) 1 - 4 | |
| | Continuous flow, 4-mobile test section floor, model support (i.e., test rig) and data acquisition system removable using one cart; water cooler, 9.5-MW (variable pitch fan) powered by electrical motor, pressurized concrete envelope with quick cart pressure doors enclosure | | |

TESTING CAPABILITIES: Quadrant for sting mounting in 1st test rig: angle-of-attack variation 42° ±10° and roll - sideslip up to 15° by fixed, cranked sting rotation. Turntable and wall balance in 2nd and 3rd test rigs for half-model and 3 struts support. Floor angle-of-attack system for vertical strut. 2D insert (1 - 1.5 - 2 m width). Large air intake testing rig; four degrees-of-freedom flow survey device (on particular for 2D). Facility concept allowing quick changes of test rig and model (constant rpm fan, full preparation, calibrations, and checks in cells including measurements and partial depressurization of the tunnel, only in the test section cart region). Pressurization from 11b compressor and intermediate storage. High, dry, and heated compressed air 120b allowable (3 kg/sec continuous, up to 12 kg/sec) for engine simulation (TPS). Smoke and lighted laser-plane method for flow visualization and laser velocimetry possible.

DATA ACQUISITION: Global and local forces, pressures (individual, scanned, unsteady), hot wires, temperature displacements, skin, and flow visualizations. All conventional aerodynamic measurements. Basically 68 analog and 24 numerical channels (steady and unsteady) and one HP-1000 computer per test rig for data acquisition and testing devices survey. Real-time computation and results by one VAX 11/782 also connected to preparation cells.

CURRENT PROGRAMS: Civil or combat aircraft development and performance control on complete or half-scaled models for low-speed configurations. Research programs, aeroelastic testing, and intake testing.

PLANNED IMPROVEMENTS: Development of new test devices (models with propellers with electric motors already under test) and methods.

LOCAL INFORMATION CONTACT: M. Masson, ONERA, Centre du Fauga-Mauzac, 31410 NOE, France.

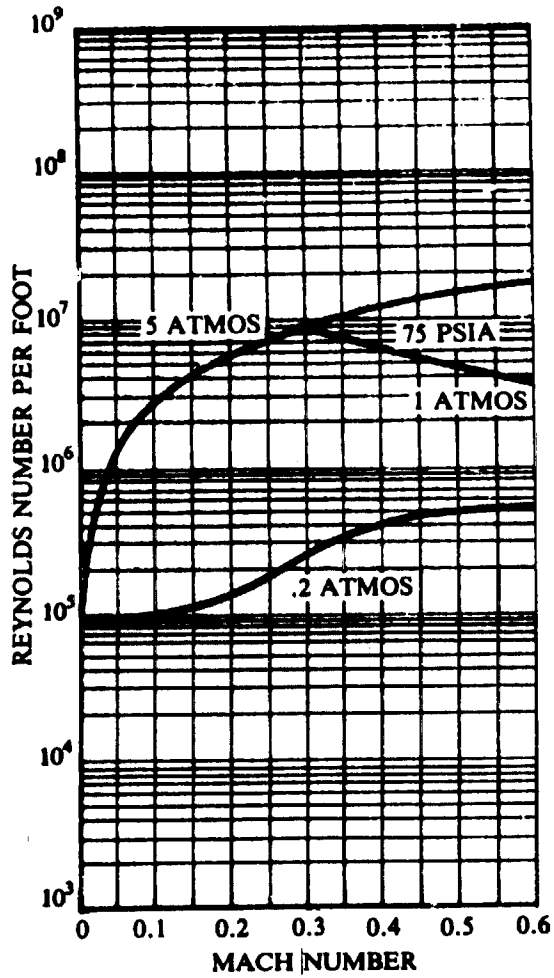


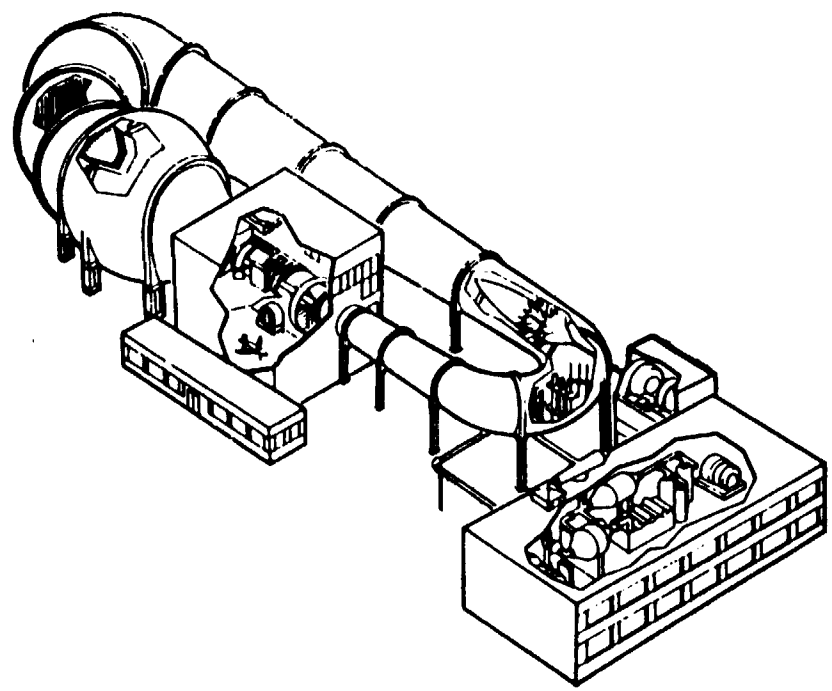

FACILITY PERFORMANCE DATA

| NASA-Ames Research Center | SUBSONIC WIND TUNNELS | | COMPARABLE FACILITIES |
|---|---|---|---|
| | **TEST SECTION SIZE:** 11.3 x 18 ft | **SPEED RANGE:** (Mach No.) 0.6 (672 ft/sec) | Group E<br>For nonpressurized tests<br>Group B1 |
| | **DATE BUILT/UPGRADED:** 1946 | **TEMP. RANGE:** 500° - 610°R | |
| 12-Ft Pressure Tunnel | **REPLACEMENT COST:** $38M | **REYNOLDS NO:** (Per ft X $10^{-6}$) 0 - 9 | |
| | **OPERATIONAL STATUS:** 2 shifts per day | **DYNAMIC PRES:** (lb/ft$^2$) 0 - 600 | |
| | | **STAGNATION PRES:** (psia) 0.2 - 73 | |
| | Closed circuit, single return, variable density, closed throat, wind tunnel with exceptionally low turbulence | | |

TESTING CAPABILITIES: The facility is used primarily for high Reynolds number testing, including the development of high-lift systems for commercial transports, high angle-of-attack testing of maneuvering aircraft, and high Reynolds number research. A variety of tests can be conducted using the various model-support systems available. These include a strut with variable pitch capability, a high angle-of-attack turntable system, a dual-strut turntable mechanism for high-lift testing, a semispan mounting system, and two-dimensional model-type mountings. Internal strain-gage balances are used for force and moment testing. Facilities for measuring multiple steady or fluctuating pressures are available. Temperature-controlled auxiliary high-pressure (3000 psi) air is available.

DATA ACQUISITION: Data are acquired through Teledyne equipment, using Programmable Amplifier/Filter Units (PPAFUs). Pressures can be recorded using either conventional scanivalves or Electronic Scanners of Pressures (ESOPs). Analog input data can be recorded on 170 channels with a maximum total sample rate of 60 000 samples per second. Digital input data can be recorded on an additional 48 channels. Some real-time processing is available through a DEC PDP 11/70 computer. Main computations are performed through a centrally located IBM 4341. In 1985, data will be processed through a DEC VAX stand-alone computer.

CURRENT PROGRAMS: Determination of aircraft spin characteristics, commercial aircraft development, and Tilt Nacelle research.

PLANNED IMPROVEMENTS: Improved graphic display system. Increase data acquisition rate to 125 000 samples per second.

LOCAL INFORMATION CONTACT: Daniel P. Bencze, Chief, Experimental Investigations Branch, (415) 965-5848 or William R. Hofstetter, (415) 965-5875.

| DFVLR Göttingen, West Germany | SUBSONIC WIND TUNNELS | | COMPARABLE FACILITIES |
|---|---|---|---|
| | TEST SECTION SIZE: 0.6 x 0.6 x 0.75 m open<br>0.6 x 0.6 x 1.0 m closed | SPEED RANGE: (Mach No.) 0.10 (35 m/sec) | Group E |
| | DATE BUILT/UPGRADED: 1981 | TEMP. RANGE: Ambient | |
| High-Pressure Subsonic Wind Tunnel (HDG) | REPLACEMENT COST: | REYNOLDS NO: (Per m X $10^{-6}$) up to 200 | |
| | OPERATIONAL STATUS: 1 shift per day | DYNAMIC PRES: ($kN/m^2$) ~ 7.5 | |
| | | STAGNATION PRES: (bars) up to 100 | |

TESTING CAPABILITIES: Very high pressure tunnel for high Reynolds number investigations. Tunnel has interchangeable test sections. Circuit is cooled by dripping water over exterior. Model support for rear stings. Six-component strain-gage balances. Piezobalance for steady and unsteady force measurements on two-dimensional profiles (especially on technical arrangements like cylinders).

DATA ACQUISITION: Ten channels integrating digital voltmeters; acquisition system connected to local computer for real-time data reduction. Results are presented on a printer. Connection of local computer with DFVLR computing center.

CURRENT PROGRAMS: Testing of models at high Reynolds number in steady and unsteady mode. Oil flow visualization technique used at different renumbers on simple bodies of revolution.

PLANNED IMPROVEMENTS: Installation of high-speed data acquisition system. Flow visualization by liquid crystals.

LOCAL INFORMATION CONTACT: Dr. Wolfgang Lorenz-Meyer, DFVLR Windtunnel Division, Bunsenstrasse 10, D-3400 Göttingen, (0551/709-2179).

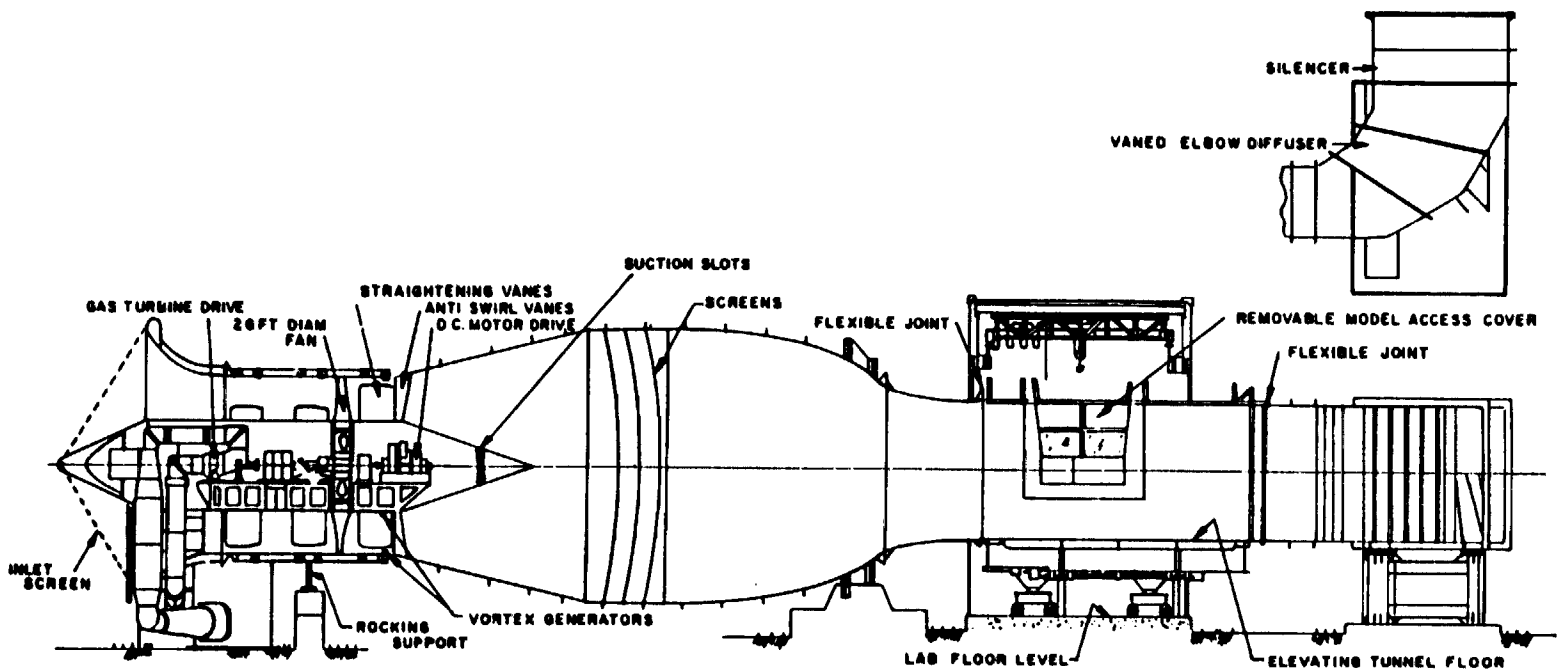
SILENCER
VANED ELBOW DIFFUSER
SUCTION SLOTS
STRAIGHTENING VANES
ANTI SWIRL VANES
D.C. MOTOR DRIVE
SCREENS
GAS TURBINE DRIVE
26 FT DIAM FAN
FLEXIBLE JOINT
REMOVABLE MODEL ACCESS COVER
FLEXIBLE JOINT
INLET SCREEN
ROCKING SUPPORT
VORTEX GENERATORS
LAB FLOOR LEVEL
ELEVATING TUNNEL FLOOR

| National Research Council, Canada | SUBSONIC WIND TUNNELS | | COMPARABLE FACILITIES |
|---|---|---|---|
| | **TEST SECTION SIZE:** 20 x 10 x 40 ft | **SPEED RANGE: (Mach No.)** 0.007 - 0.184 (7.34 - 205 ft/sec) | Group F |
| | **DATE BUILT/UPGRADED:** 1962/1967 | **TEMP. RANGE:** Ambient | |
| 10 x 20-Ft Propulsion Tunnel | **REPLACEMENT COST:** $7M | **REYNOLDS NO: (Per ft X $10^{-6}$)** 0 - 1.3 | |
| | **OPERATIONAL STATUS:** 1 shift per day | **DYNAMIC PRES: (lb/ft$^2$)** 0 - 50 | |
| | | **STAGNATION PRES: (psia)** Atmospheric | |
| | Open circuit, continuous flow, closed test section; capable of testing balance-mounted power plant arrangements; large compressed-air supplies | | |

TESTING CAPABILITIES: Originally designed for the testing of V/STOL propulsion systems involving reaction jets. Balance-mounted turbomachinery models of capacities up to several thousand horsepower can be energized using an off-site 5-MW air compressor delivering up to 32 lb/sec at 7 atm. Alternatively, the same equipment can be used to apply suction to models. The 5-component weighbeam balance system can support model weights up to 2 tons. Lift, drag, and pitching moment limits are ±4000, ±2000, and ±5000 lb.ft. A 16-bladed, 26-ft diameter fan located at tunnel entry is driven by a 1000-hp dc motor (up to 90 mph) or by an 8000-hp free gas turbine supplied by an externally housed turbojet (up to 140 mph).

DATA ACQUISITION: Twenty channels of information can be recorded on the data acquisition system and reduced off-site.

CURRENT PROGRAMS: In recent years, the unique characteristics of the facility have been increasingly used in industrial problem areas unrelated to its original purpose. In addition to aeronautical applications, these have included surface transport (full-scale automobiles, snowmobiles, etc.), industrial aerodynamics, wind engineering, etc.

PLANNED IMPROVEMENTS: An additional 7.5-MW compressor is currently being installed with the potential to augment existing compressed-air supplies by 60 lb/sec. Operational, late 1984. Cost, $3.2M. Preliminary planning on a test-section reconstruction to provide optional 20-ft wide x 10-ft high configuration and upgraded data acquisition system has been completed. Estimated cost $1.6M.

LOCAL INFORMATION CONTACT: R. A. Tyler, Head, Gas Dynamics Laboratory, National Research Council of Canada, Ottawa, Ontario, K1A OR6, (613) 993-2442.

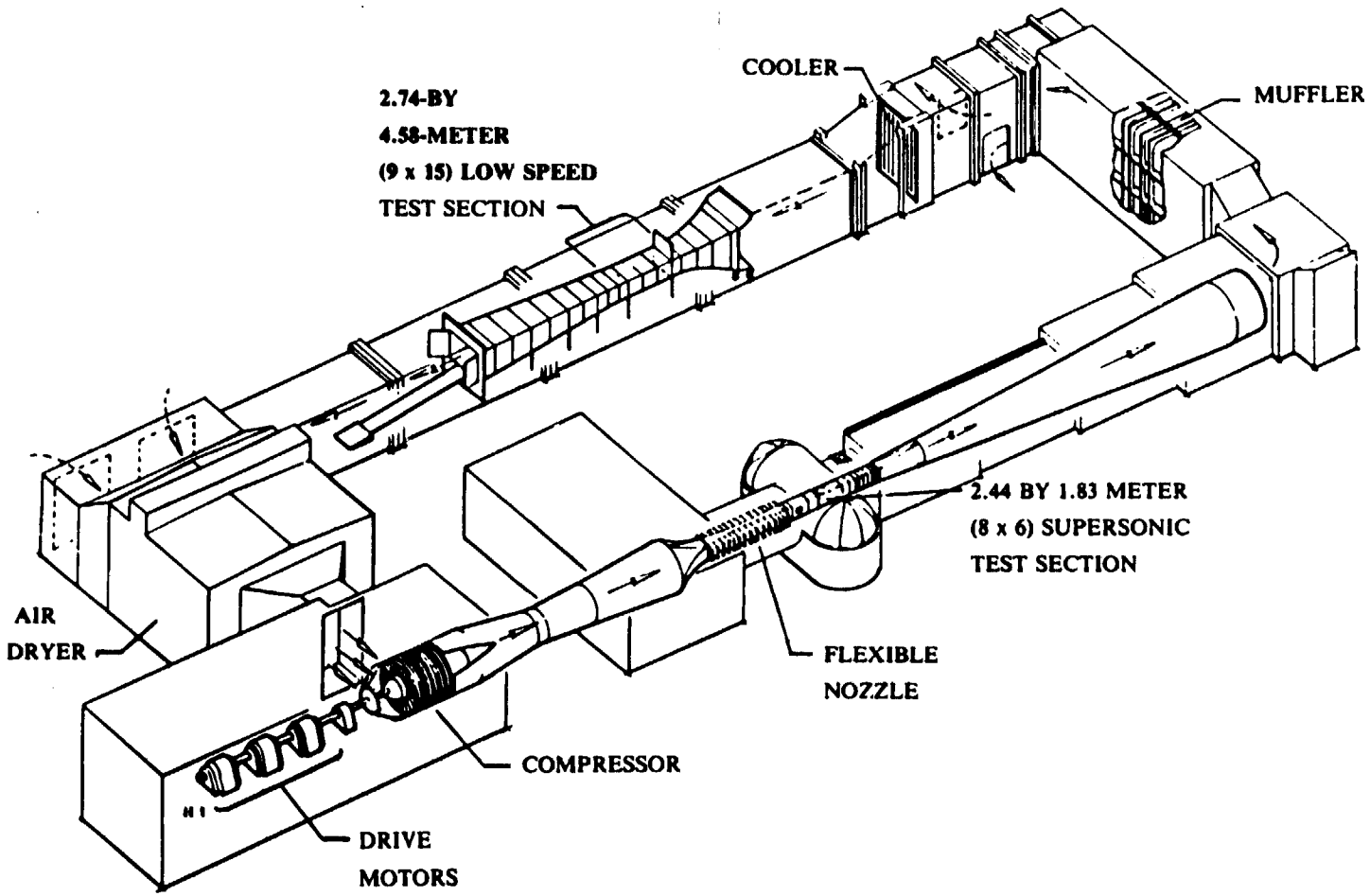
COOLER
MUFFLER
2.74-BY
4.58-METER
(9 x 15) LOW SPEED
TEST SECTION
2.44 BY 1.83 METER
(8 x 6) SUPERSONIC
TEST SECTION
AIR
DRYER
FLEXIBLE
NOZZLE
COMPRESSOR
DRIVE
MOTORS

| NASA-Lewis Research Center | SUBSONIC WIND TUNNELS | | COMPARABLE FACILITIES |
|---|---|---|---|
| | **TEST SECTION SIZE:** 9 x 15 x 28 ft | **SPEED RANGE:** (Mach No.) Up to 0.2 (224 ft/sec) | Group B2 for non-propulsion, non-acoustical tests Group H |
| | **DATE BUILT/UPGRADED:** 1968 | **TEMP. RANGE:** 550°R | |
| 9 x 15-Ft V/STOL Tunnel | **REPLACEMENT COST:** $9M test section only | **REYNOLDS NO:** (Per ft X $10^{-6}$) 0 - 1.4 | |
| | **OPERATIONAL STATUS:** 2-shift operations at 2 runs per week (backlog) | **DYNAMIC PRES:** ($lb/ft^2$) 0 - 72 | |
| | | **STAGNATION PRES:** (psia) Atmospheric | |
| | Acoustic tunnel for turbomachinery, continuous flow, part of 8 x 6-ft wind tunnel return leg. | | |

TESTING CAPABILITIES: Used for low subsonic testing of propulsion system components at high angles of attack. Heavy emphasis is placed on the testing of components used in VTOL propulsion systems. The tunnel is used extensively for testing the noise characteristics of inlets.

DATA ACQUISITION: Data are recorded and processed through a dedicated VAX 11/780 computer and a centrally (shared) IBM-370 computer system. Alphanumeric and graphic displays can be tailored to the users' requirements in real time.

CURRENT PROGRAMS: VISTOL ejector thrust augmentation tests, tactical fighter thrust, performance and acoustic tests, and VISTOL test at high angle of attack.

PLANNED IMPROVEMENTS: Installation of advanced data system (ESCORT III), color graphics.

LOCAL INFORMATION CONTACT: Arthur J. Gnecco, Chief, Aeronautics Facilities and Engineering Branch, (216) 433-4000, ext. 5579, FTS 8-294-5579.

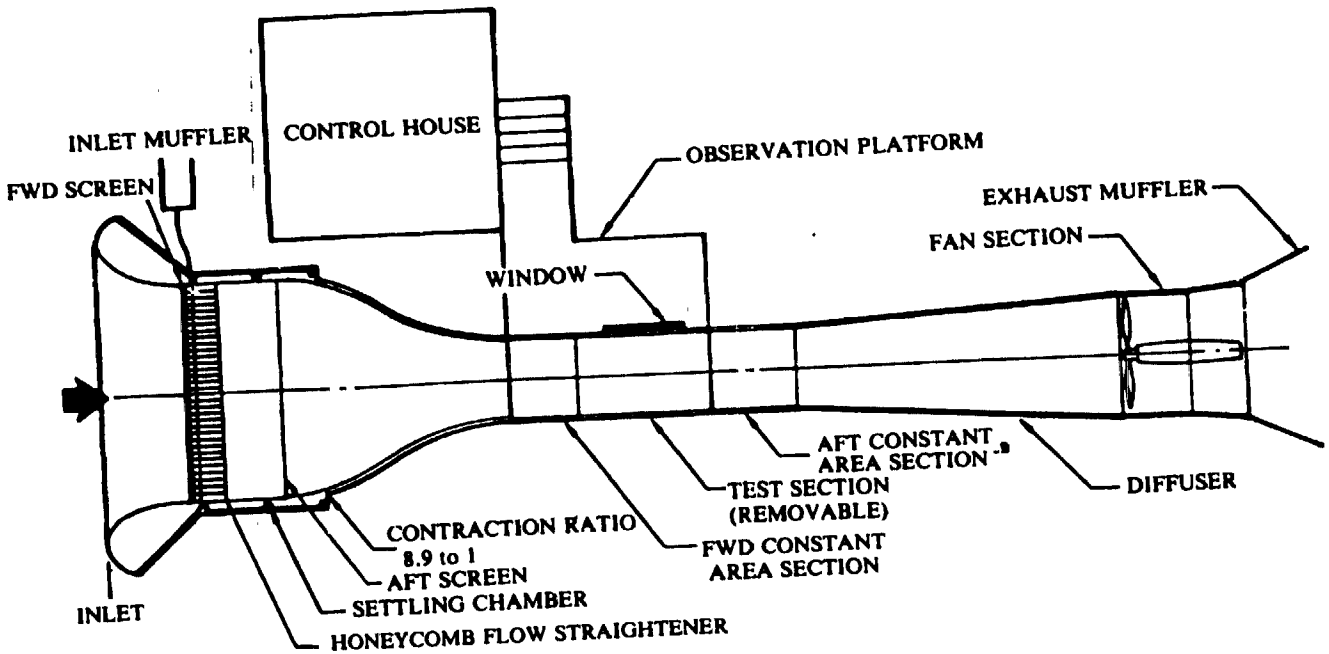
CONTROL HOUSE
INLET MUFFLER
FWD SCREEN
OBSERVATION PLATFORM
EXHAUST MUFFLER
FAN SECTION
WINDOW
AFT CONSTANT AREA SECTION
TEST SECTION (REMOVABLE)
DIFFUSER
CONTRACTION RATIO 8.9 to 1
FWD CONSTANT AREA SECTION
AFT SCREEN
SETTLING CHAMBER
INLET
HONEYCOMB FLOW STRAIGHTENER

| Boeing Commercial, Seattle | SUBSONIC WIND TUNNELS | | COMPARABLE FACILITIES |
|---|---|---|---|
| | TEST SECTION SIZE: 9 x 9 x 14.5 ft | SPEED RANGE: (Mach No.) 0.36 (403 ft/sec) | Group F |
| | DATE BUILT/UPGRADED: 1967 - 1969 | TEMP. RANGE: Ambient | |
| 9 x 9-Ft Low-Speed Wind Tunnel (2 Tunnels, A and B) | REPLACEMENT COST: | REYNOLDS NO: (Per ft X $10^{-6}$) 0 - 2.26 | |
| | OPERATIONAL STATUS: Daylight hours only | DYNAMIC PRES: ($lb/ft^2$) 0 - 127 | |
| | | STAGNATION PRES: (psia) Atmospheric | |
| | Open circuit, nonreturn, continuous flow, propulsion | | |

TESTING CAPABILITIES: Models can be sting, horizontal, or vertical ground plane mounted. Each tunnel has a continuous air supply of various flow rates and pressures, can produce products of combustion of 15 lb/sec at 1000° F maximum, a vacuum from 1.5 lb/sec at 2 psia to 12 lb/sec at ambient, and can produce steam at 10 lb/sec superheated at 100 psi and 325° F. Each tunnel is powered by an Allison 501-D13 turboprop engine producing 3000 hp. Tunnel A has extensive internal acoustic treatment, a removable anechoic test section with traversing microphone, and another test section for propulsion thrust reverser reingestion testing. Tunnel B has a wall-mounted pitch mechanism designed for 15-in-diameter inlet models, an inlet suction source provided by a J-47 turbojet engine, and a 6-component balance. Testing in Tunnel A consists of nozzle noise testing, thrust reverser reingestion tests, and half or full-size models with simulated engine inlet and exhaust conditions. Testing in Tunnel B consists of inlet testing, aerodynamic testing, and models using flow through, blown, or turbopowered simulator nacelles.

DATA ACQUISITION: Two hundred analog channels, 50 digital channels, and 4 scanivalves are available per tunnel. The system is controlled by PDP 8 computers. Data are available immediately.

CURRENT PROGRAMS: Main research is directed at the study of engine inlets, thrust reversers, and nozzle development.

PLANNED IMPROVEMENTS: None at this time.

LOCAL INFORMATION CONTACT: Chief of Propulsion Labs, (206) 655-9416.

ORIGINAL PAGE IS
OF POOR QUALITY

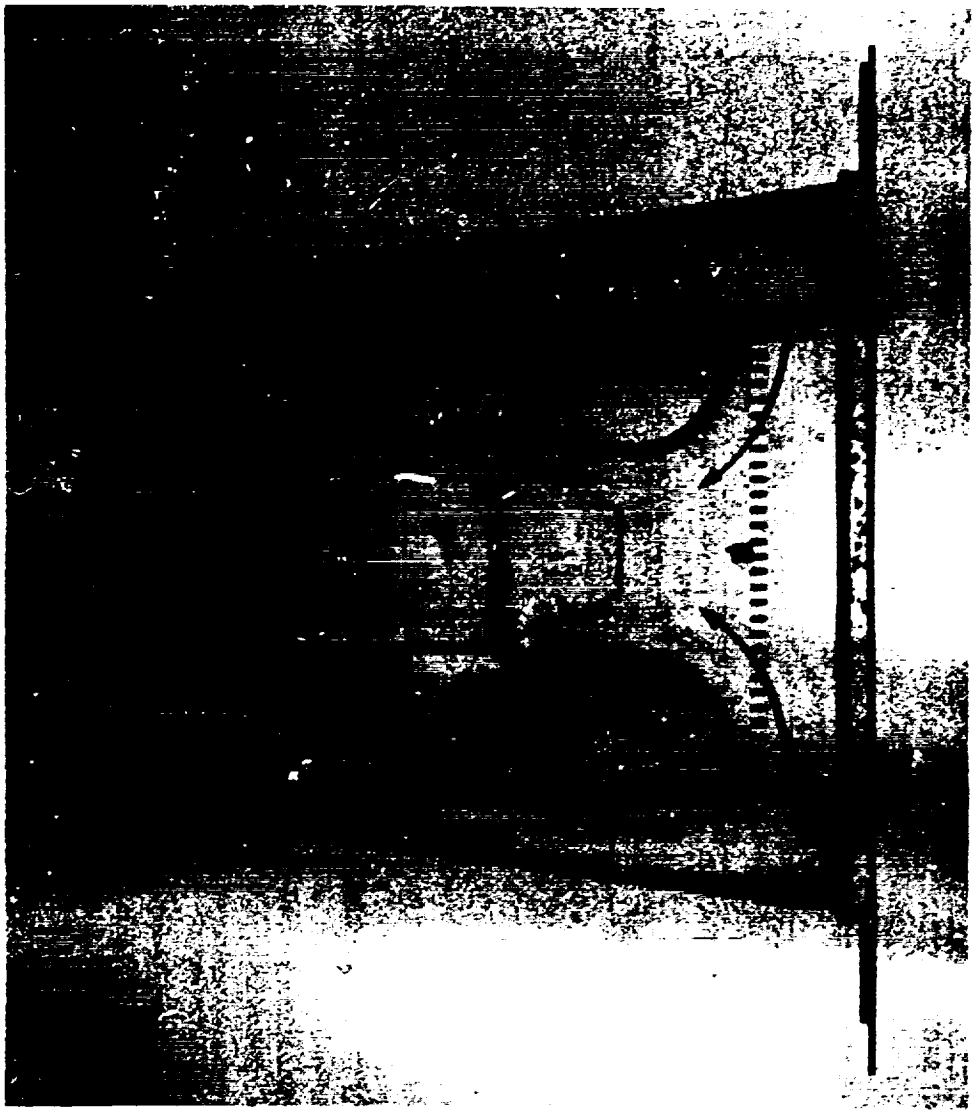

| NASA-Langley Research Center | SUBSONIC WIND TUNNELS | | COMPARABLE FACILITIES |
|---|---|---|---|
| | TEST SECTION SIZE: 20-ft dia x 25 height | SPEED RANGE: (Mach No.) 0.08 (90 ft/sec) | Group G |
| | DATE BUILT/UPGRADED: 1940/1984 | TEMP. RANGE: Ambient | |
| 20-Ft Vertical Spin Tunnel | REPLACEMENT COST: $1.4M | REYNOLDS NO: (Per ft X $10^{-6}$) 0 - 0.62 | |
| | OPERATIONAL STATUS: 2.5 shifts per day (backlog) | DYNAMIC PRES: (lb/ft$^2$) 0 - 10 | |
| | | STAGNATION PRES: (psia) Atmospheric | |
| | Acceleration capability: 15-ft per sec$^2$ Test medium: Air<br>Deceleration capability: 25-ft per sec$^2$<br>Vertical annular return, continuous flow, closed throat | | |

TESTING CAPABILITIES: The spin tunnel is used to investigate spin characteristics of airplanes by testing free-spinning dynamically scaled models. Spin recovery characteristics are studied by remotely actuating the aerodynamic controls of models to predetermine positions. Force and moment testing is performed using a gooseneck rotary arm model support, which permits angles of attack and slideslip from 0° to 360°. Motion picture records are used to record the spinning and recovery characteristics in the spin tunnel tests. Force and moment data from the rotary balance tests are recorded in coefficient form and stored on flexible disk. This facility is powered by a 1300-hp main drive.

DATA ACQUISITION: HP 9845 computer on the rotary balance.

CURRENT PROGRAMS: Free-spinning tests on military trainer and fighter aircraft. Rotary balance tests on general aviation as well as on a fighter aircraft.

PLANNED IMPROVEMENTS: Fiscal Year 1984 - Rehabilitation of 20-ft Vertical Spin Tunnel.

LOCAL INFORMATION CONTACT: James S. Bowman, Jr., Flight Dynamics Branch, (804) 856-2521.

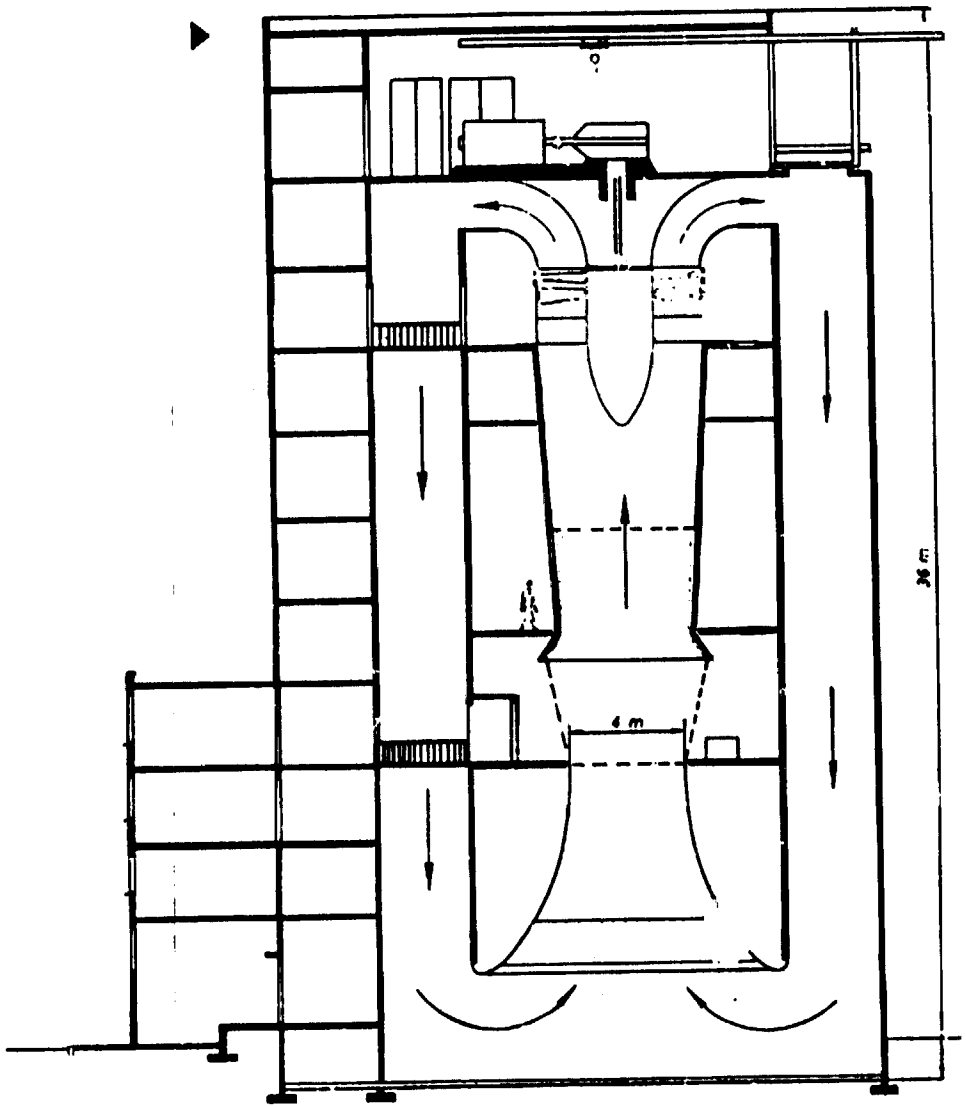
36 m
4 m

| | SUBSONIC WIND TUNNELS | | COMPARABLE FACILITIES |
|---|---|---|---|
| ONERA IMF/LILLE, France | TEST SECTION SIZE: 4-m diameter | SPEED RANGE: (Mach No.) 0.12 (40 m/sec max) | Group G |
| | DATE BUILT/UPGRADED: 1966 | TEMP. RANGE: Atmospheric | |
| SV4 Spin Tunnel | REPLACEMENT COST: | REYNOLDS NO: (Per m X $10^{-6}$) Up to 2.7 | |
| | OPERATIONAL STATUS: Active | DYNAMIC PRES: ($kN/m^2$) Up to 1.0 | |
| | | STAGNATION PRES: (bars) 1 | |
| | Continuous flow, annular return circuit, open-jet test section<br>Electric motor: 460 kW | | |

TESTING CAPABILITIES: The spin tunnel is used to investigate spin characteristics of airplane by testing free spinning of dynamically scaled models (Froude criteria). The test section can be equipped with a new rotary balance rig for studying the dynamic derivatives on the same models, as well as the steady characteristics, up to very large angles-of-attack/sideslip combinations.

DATA ACQUISITION: Recording of onboard instrumentation (accelerometers . . .) and control surfaces position; correlation with flight measurements.

CURRENT PROGRAMS:

PLANNED IMPROVEMENTS:

LOCAL INFORMATION CONTACT: Marc Pianko, Director, ONERA/IMF Lille, 5 Bd Paul Painlevé, 59000 LILLE, France, (20) 53.61.32.

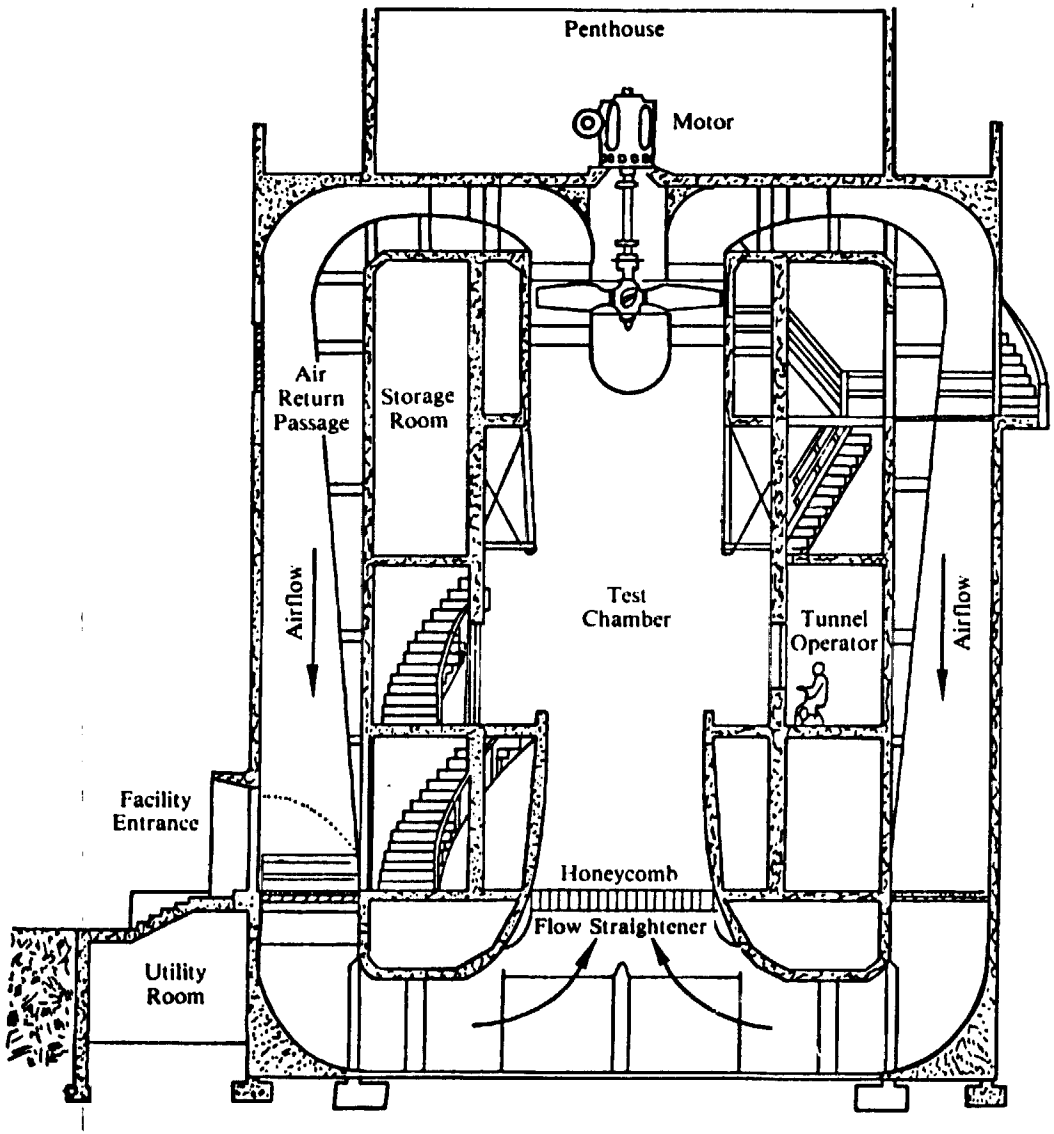
Penthouse
Motor
Air
Return
Passage
Storage
Room
Airflow
Test
Chamber
Tunnel
Operator
Airflow
Facility
Entrance
Honeycomb
Flow Straightener
Utility
Room

| | SUBSONIC WIND TUNNELS | | COMPARABLE FACILITIES |
|---|---|---|---|
| Wright Aeronautical Laboratories, Wright-Patterson AFB | TEST SECTION SIZE: 12 x 15 ft | SPEED RANGE: (Mach No.) 0 - 0.13 (0 - 150 ft/sec) | Group G |
| | DATE BUILT/UPGRADED: 1943 | TEMP. RANGE: Ambient | |
| Vertical Wind Tunnel | REPLACEMENT COST: $2.25M | REYNOLDS NO: (Per ft X $10^{-6}$) 0 - 0.91 | |
| | OPERATIONAL STATUS: 1 shift per day | DYNAMIC PRES: ($lb/ft^2$) 0 - 26 | |
| | | STAGNATION PRES: (psia) Atmospheric | |
| | Vertical, closed, circuit, annular return, open jet tunnel | | |

TESTING CAPABILITIES: This closed-circuit, vertical wind tunnel allows free-float testing of aircraft, store, and parachute models. Various support systems are available: truss model support, cable mounts, and strut for load cells and stings.

DATA ACQUISITION: Minicomputer with 30 channels for input data. High-speed motion picture and still-photographic coverage available. Videotape recording equipment available.

CURRENT PROGRAMS: This unique facility is currently used to determine aerodynamic forces and moments of aircraft models, drag and stability characteristics of parachutes, and the spin and recovery characteristics of flight vehicles. It is also used for free-fall training classes.

PLANNED IMPROVEMENTS: Installation of additional antiswirl vanes, a symmetrical cone at the center, and turbulence reduction screens will reduce the overall turbulence intensities and provide a more uniform flow at the test section (May 1984 - approximate cost $1000).

LOCAL INFORMATION CONTACT: 1st Lt. Wendell M. Baker, AFWAL/FIMM, (513) 255-5042.

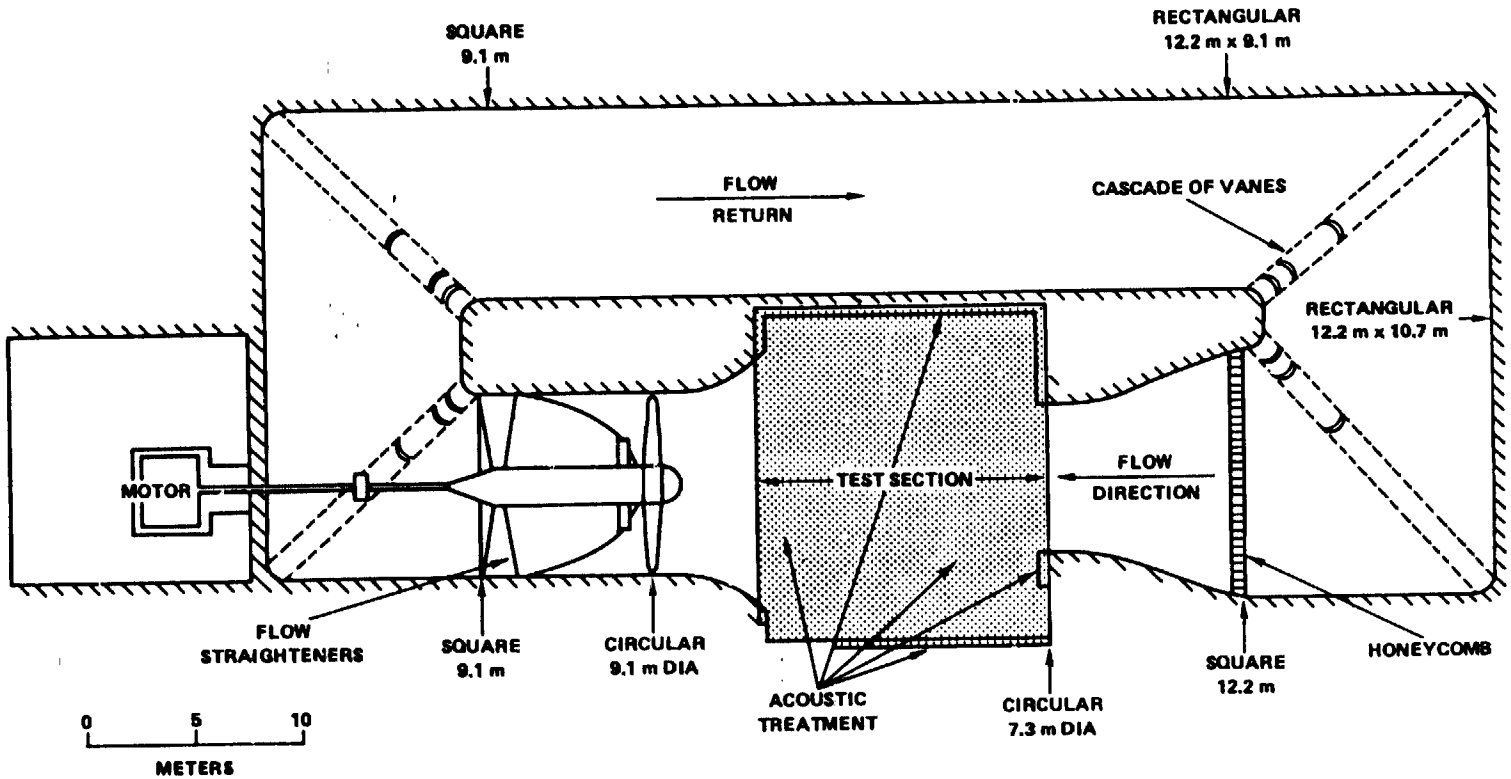
SQUARE
9.1 m
RECTANGULAR
12.2 m x 9.1 m
FLOW
RETURN
CASCADE OF VANES
RECTANGULAR
12.2 m x 10.7 m
MOTOR
TEST SECTION
FLOW
DIRECTION
FLOW
STRAIGHTENERS
SQUARE
9.1 m
CIRCULAR
9.1 m DIA
ACOUSTIC
TREATMENT
CIRCULAR
7.3 m DIA
SQUARE
12.2 m
HONEYCOMB
0
5
10
METERS

| | SUBSONIC WIND TUNNELS | | COMPARABLE FACILITIES |
|---|---|---|---|
| CEPr and ONERA Saclay, France | **TEST SECTION SIZE:** 2 or 3 m diameter<br>11 m | **SPEED RANGE:** (Mach No.) <0.29 (D = 2 m)<br><0.18 (D = 3 m) | Group H |
| | **DATE BUILT/UPGRADED:** 1979 | **TEMP. RANGE:** Ambient | |
| CEPRA 19 Anechoic Tunnel | **REPLACEMENT COST:** | **REYNOLDS NO:** (Per m X $10^{-6}$) Up to 6.6 (D = 2 m)<br>Up to 4.1 (D = 3 m) | |
| | **OPERATIONAL STATUS:** Operational | **DYNAMIC PRES:** ($kN/m^2$) Up to 5.7 (D = 2 m)<br>Up to 2.2 (D = 3 m) | |
| | | **STAGNATION PRES:** (bars) Atmospheric | |
| | Continuous flow, open circuit, open-jet test circuit inside a large anechoic chamber | | |

TESTING CAPABILITIES: Specially dedicated to acoustic testing driven by a centrifugal exhauster on an electric motor (W = 7 MW). Tests conducted by a joint team ONERA/CEPr; data acquisition system for noise analysis on and around the models. Helicopter rotor rig ($D_r$ = 1,5 m).

DATA ACQUISITION:

CURRENT PROGRAMS: Noise around submarine models, helicopter rotors, and engine exhaust (high bypass ratio, afterburning engine, etc.); noise around full-scale small jet engines.

PLANNED IMPROVEMENTS:

LOCAL INFORMATION CONTACT: M. Fayot, Centre d'Essais des Propulseurs de Saclay, 91406 ORSAY Cedex, France, (6) 941.81.50.

| | SUBSONIC WIND TUNNELS | | COMPARABLE FACILITIES |
|---|---|---|---|
| Massachusetts Institute of Technology | **TEST SECTION SIZE:** 7.5 x 5 x 10 ft | **SPEED RANGE:** (Mach No.) 0.01 - 0.07 (15 - 88 ft/sec) | Group D for non-acoustic testing Group H |
| | **DATE BUILT/UPGRADED:** 1940/1970 | **TEMP. RANGE:** Ambient | |
| Acoustic Tunnel | **REPLACEMENT COST:** $500K | **REYNOLDS NO:** (Per ft X $10^{-6}$) 0.1 - 0.6 | |
| | **OPERATIONAL STATUS:** 1 shift per day | **DYNAMIC PRES:** ($lb/ft^2$) 0 - 9 | |
| | | **STAGNATION PRES:** (psia) Atmospheric | |
| | Continuous flow, anechoic test section (open jet) | | |

TESTING CAPABILITIES: Equipped with 3-component wire balance, variable angle-of-attack system. Wing spans up to 4 ft and lift forces to 50 lb. Facility powered by 100-hp motor. A 4000-rpm, 100-hp hydraulic motor and pedestal with a multichannel slip ring assembly and thrust balance for helicopter blade testing is available, as well as a mast sights testing device. Ground plane for wind study of building and structure complexes.

DATA ACQUISITION: Multichannel strain-gage amplifiers with digital readout. Video equipment to record tuft/smoke studies. Sound-level analyzers for acoustic data.

CURRENT PROGRAMS: Flowfield and configuration research investigations, academic and sponsored. Largely focused on aerodynamic noise.

PLANNED IMPROVEMENTS:

LOCAL INFORMATION CONTACT: Allan R. Shaw, Department of Aero and Astro, (617) 253-4924.

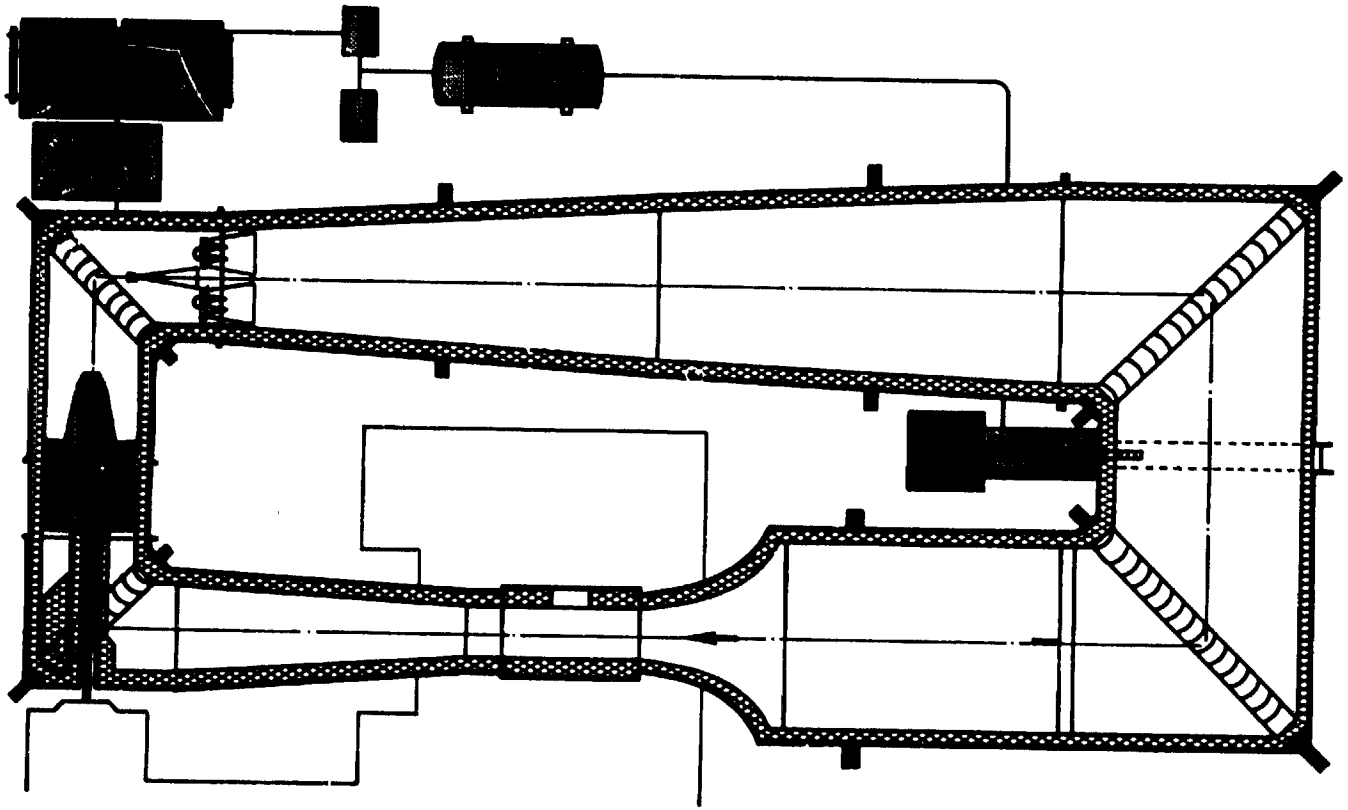

| DFVLR Köln-Porz, Germany | SUBSONIC WIND TUNNELS | | COMPARABLE FACILITIES |
|---|---|---|---|
| | TEST SECTION SIZE: 2.4 x 2.4 x 5.4 m | SPEED RANGE: (Mach No.) 100 K: 0.35 300 K: 0.29 | Cryogenic Wind Tunnel University of Tsukuba, Japan |
| | DATE BUILT/UPGRADED: 1984 | TEMP. RANGE: 100 - 300 K | |
| Cryogenic Subsonic Wind Tunnel (KKK) | REPLACEMENT COST: | REYNOLDS NO: (Per m X $10^{-6}$) 36 | |
| | OPERATIONAL STATUS: Active, October 1984 | DYNAMIC PRES: ($kN/m^2$) 9 | |
| | | STAGNATION PRES: (bars) Atmospheric | |
| | Closed circuit; continuous flow; model size; span - 1.5 m; Reynolds number increase to 36 x $10^6$ at 100 K | | |

TESTING CAPABILITIES: Tunnel can be used for force, moment, and pressure investigations of full-span or part-span models or components. Warm-up rooms, like a lock and a model conditioning room, allow model changes while maintaining cryo temperatures in the tunnel circuit. Tunnel is intended to complement ETW capabilities.

DATA ACQUISITION:

CURRENT PROGRAMS:

PLANNED IMPROVEMENTS:

LOCAL INFORMATION CONTACT: Dr. Günter Viehweger, DFVLR Windtunnel Division, D-5000 Köln 90, Linder Höhe, (02203-601-2295).

| | SUBSONIC WIND TUNNELS | | COMPARABLE FACILITIES |
|---|---|---|---|
| University of Tsukuba, Japan | TEST SECTION SIZE: 0.5 x 0.5 m | SPEED RANGE: (Mach No.) 0.09 - 0.19 (30 - 65 m/sec) | KKK - DFVLR, West Germany |
| | DATE BUILT/UPGRADED: 1982 | TEMP. RANGE: 100 - 300 K | |
| Cryogenic Wind Tunnel | REPLACEMENT COST: | REYNOLDS NO: (Per m X $10^{-8}$) $10^5$ - $10^7$ (Reference length 50 mm) | |
| | OPERATIONAL STATUS: | DYNAMIC PRES: ($kN/m^2$) 0.54 - 60 | |
| | | STAGNATION PRES: (bars) Up to 8 | |
| | Closed circuit, continuous flow, inside thermal shielded | | |

TESTING CAPABILITIES: Models can be set in the test section. Model angle to the flow can be controlled by worm and worm wheel mechanism from outside. Temperature and velocity can be measured by use of traversing mechanism, which is controlled from outside.

DATA ACQUISITION: Fifty temperature outputs and 50 pressure outputs can be taken and analyzed from outside.

CURRENT PROGRAMS: Main research is now directed at the study of low-speed and high Reynolds number aerodynamics, especially at the study of drag and vortex shedding of two-dimensional body (circular cylinder and square cylinder).

PLANNED IMPROVEMENTS:

LOCAL INFORMATION CONTACT: Tsutomu Adachi, Institute of Engineering Mechanics, University of Tsukuba, Japan.

LEWIS RESEARCH CENTER

# ICING RESEARCH TUNNEL, SHOP AND OFFICE

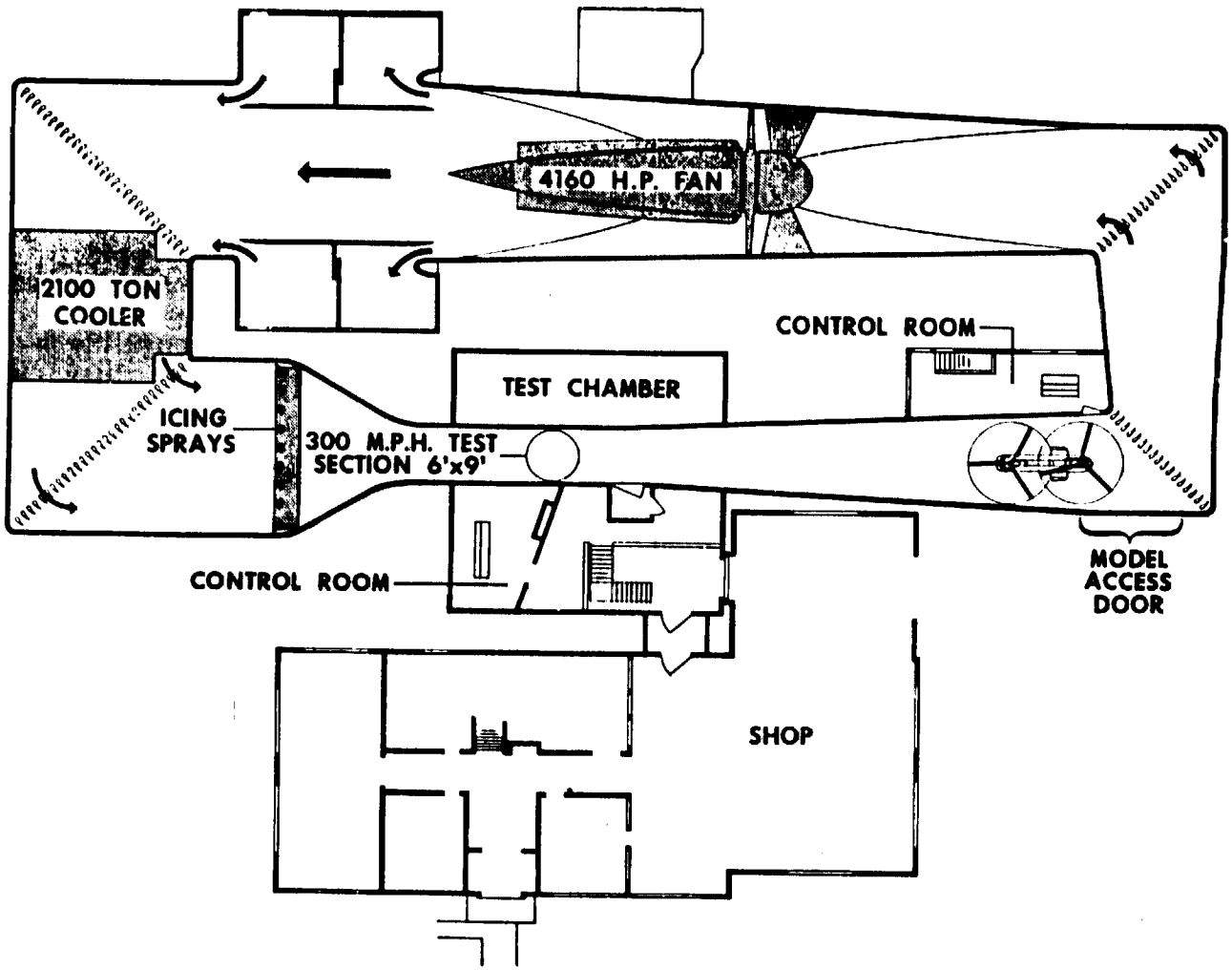

| NASA-Lewis Research Center | SUBSONIC WIND TUNNELS | | COMPARABLE FACILITIES |
|---|---|---|---|
| | TEST SECTION SIZE: 6 x 9 x 20 ft | SPEED RANGE: (Mach No.) 0.5 (560 ft/sec) | Icing Wind Tunnel Lockheed, GA |
| | DATE BUILT/UPGRADED: 1944/1984 | TEMP. RANGE: 440° - 540°R | |
| 6 x 9-Ft Icing Research Tunnel (IRT) | REPLACEMENT COST: $40M | REYNOLDS NO: (Per ft X $10^{-6}$) 0 - 3.3 | |
| | OPERATIONAL STATUS: 2 shift operations at 3 runs per week (backlog) | DYNAMIC PRES: (lb/ft$^2$) 0 - 230 | |
| | | STAGNATION PRES: (psia) Atmospheric | |
| | Closed circuit, single return, continuous flow, closed throat | | |

TESTING CAPABILITIES: The 6 x 9-ft IRT is used to study the effects of icing on aircraft components, such as airfoils, engine inlets, and helicopter rotor blades. Detailed studies of basic icing phenomena and icing instrumentation are also performed. Instrumentation is available for measuring cloud parameters and for determining drag characteristics of airfoils. Equipment for testing oscillating airfoils is also available.

DATA ACQUISITION: A minicomputer-based data acquisition system is available at the facility. The system provides alphanumeric displays of critical parameters plus the ability for limit-checking. Research data points are recorded on a central data collector. Recorded data can be processed by the IBM-370 central computer for use in the control room or for post-run analysis.

CURRENT PROGRAMS: Icing scaling tests, testing of anti-icing and deicing systems, development of icing instrumentation, icing certification tests, ice modeling, and ice tolerance testing of various aircraft components.

PLANNED IMPROVEMENTS: Fiscal Year 1984 - Extend the icing envelope and controlled conditions and provide a new fan drive system, control room modifications, and building rehabilitation.

LOCAL INFORMATION CONTACT: Arthur J. Gnecco, Chief, Aeronautic Facilities and Engineering Branch, (216) 433-4000, ext. 5579, FTS 8-294-5579.

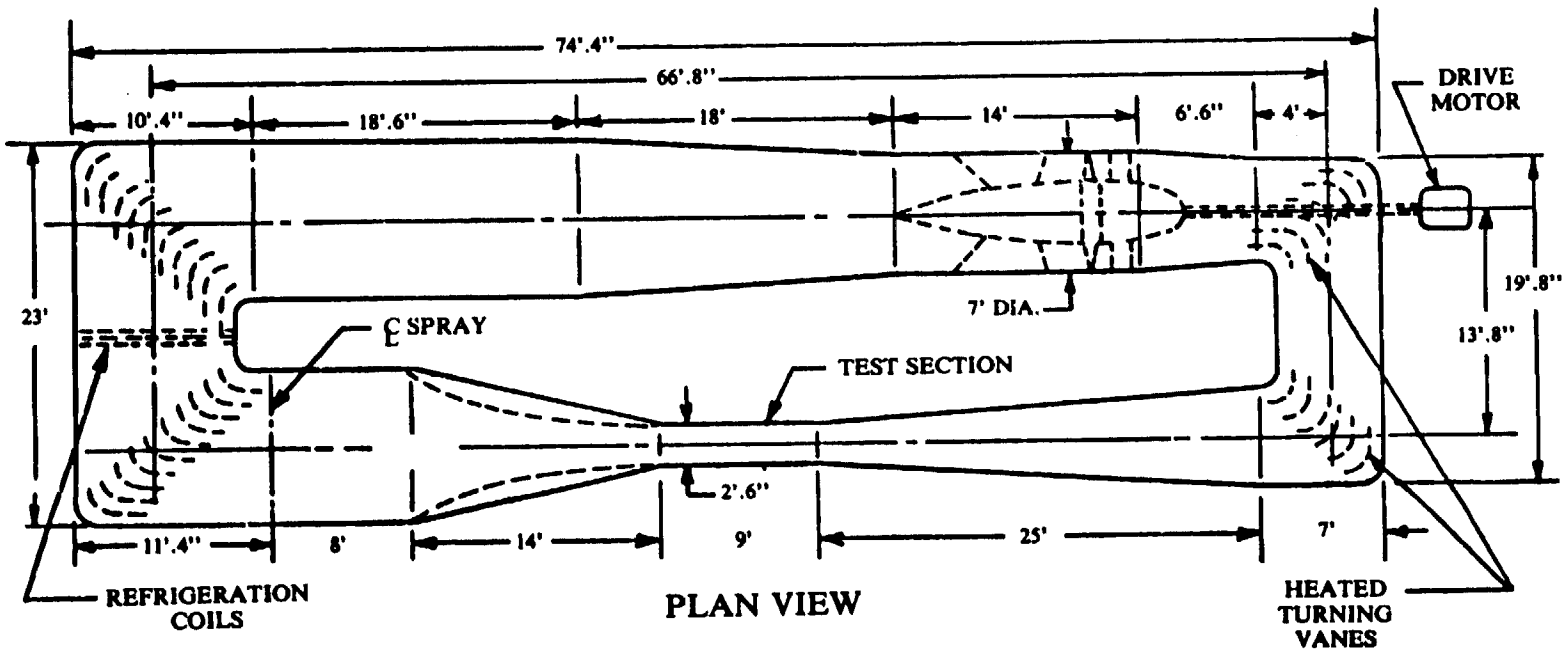
74'.4"
66'.8"
10'.4"
18'.6"
18'
14'
6'.6"
4'
DRIVE MOTOR
23'
19'.8"
13'.8"
7' DIA.
℄ SPRAY
TEST SECTION
2'.6"
11'.4"
8'
14'
9'
25'
7'
REFRIGERATION COILS
HEATED TURNING VANES

PLAN VIEW

| | SUBSONIC WIND TUNNELS | | COMPARABLE FACILITIES |
|---|---|---|---|
| Lockheed-California Co. Burbank, Calif. | TEST SECTION SIZE: 4 x 2.5 x 9 ft | SPEED RANGE: (Mach No.) 0.07 - 0.27 (88 - 308 ft/sec) | IRT - NASA LeRC |
| | DATE BUILT/UPGRADED: 1953 | TEMP. RANGE: 460° - 490°R | |
| Icing Wind Tunnel | REPLACEMENT COST: $2.5M | REYNOLDS NO: (Per ft X $10^{-6}$) 0 - 2 | |
| | OPERATIONAL STATUS: Standby | DYNAMIC PRES: (lb/ft$^2$) 5 - 130 | |
| | | STAGNATION PRES: (psia) Atmospheric | |
| | Closed circuit, single return, continuous flow | | |

TESTING CAPABILITIES: Typical test articles include ice detector probes, airspeed probes, wing sections to 8-in thickness, and small inlets. Suction is available to 3.3 lb/sec. A water spray system allows icing clouds to be simulated. The tunnel is powered by a 200-hp induction motor, which drives a 4-bladed fan, 7 ft in diameter. The tunnel speed is controlled by changing the pitch of the fan blades.

DATA ACQUISITION: Chart Recorders

CURRENT PROGRAMS:

PLANNED IMPROVEMENTS:

LOCAL INFORMATION CONTACT: Lockheed-California Company, Attn: Edward Whitfield, Flight Sciences Laboratory, Dept. 74-73, Bldg. 202, Plt. 2, P.O. Box 551, Burbank, CA 91520, (213) 847-6121, ext. 221.

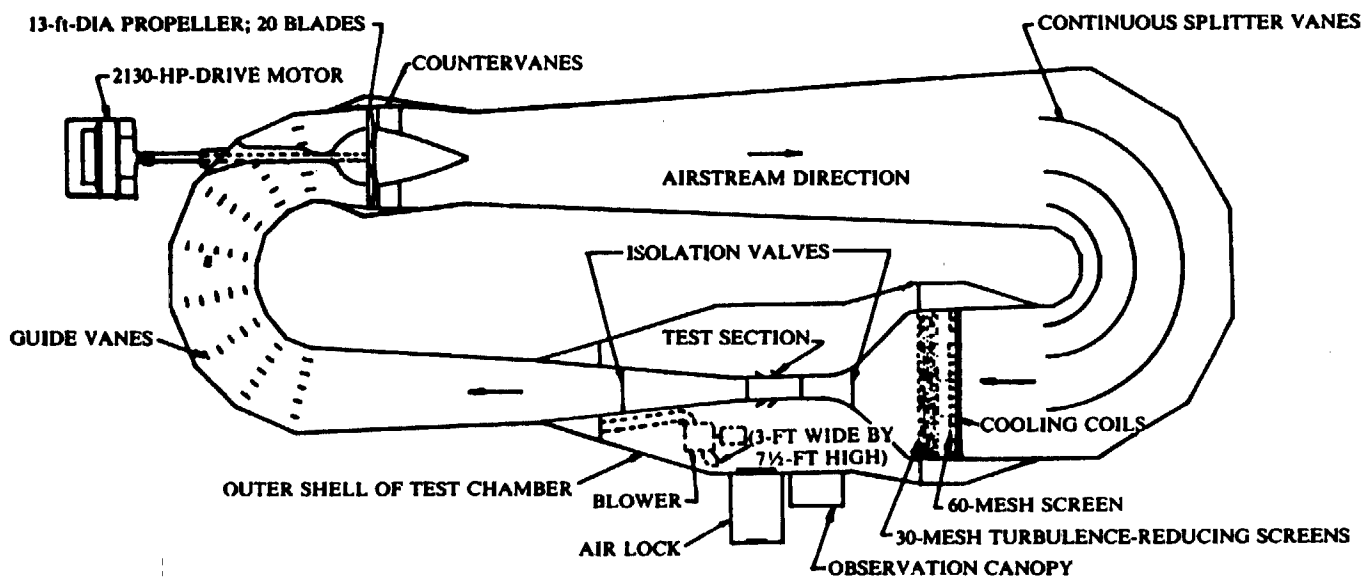
13-ft-DIA PROPELLER; 20 BLADES
2130-HP-DRIVE MOTOR
COUNTERVANES
CONTINUOUS SPLITTER VANES
AIRSTREAM DIRECTION
ISOLATION VALVES
GUIDE VANES
TEST SECTION
(3-FT WIDE BY 7½-FT HIGH)
COOLING COILS
OUTER SHELL OF TEST CHAMBER
BLOWER
AIR LOCK
60-MESH SCREEN
30-MESH TURBULENCE-REDUCING SCREENS
OBSERVATION CANOPY

| NASA-Langley Research Center | SUBSONIC WIND TUNNELS | | COMPARABLE FACILITIES |
|---|---|---|---|
| | TEST SECTION SIZE: 7.5 x 3 x 7.2 ft | SPEED RANGE: (Mach No.) 0.05 - 0.5 (56 - 560 ft/sec) | None |
| | DATE BUILT/UPGRADED: 1940/1981 | TEMP. RANGE: 520° - 580°R | |
| Low-Turbulence Pressure Tunnel | REPLACEMENT COST: $9M | REYNOLDS NO: (Per ft X $10^{-6}$) 0.1 - 15 | |
| | OPERATIONAL STATUS: 1 shift per day (backlog) | DYNAMIC PRES: (lb/ft$^2$) 4 - 785 | |
| | | STAGNATION PRES: (psia) 1 - 147 | |
| | Model size: 3-ft span airfoil (2D); 2-ft span airfoil (3D); closed circuit, single return, continuous flow, closed throat | | |

TESTING CAPABILITIES: In this tunnel, two-dimensional airfoil models usually span the 3-ft-wide test section with a chord of about 2 ft. Three-dimensional models can be tested with spans of about 2 ft.

DATA ACQUISITION: MODCOMP Classic Data Acquisition System.

CURRENT PROGRAMS: High-lift models at high Reynolds number, low Reynolds number airfoils for RPVs, natural laminar flow airfoils for low-speed applications, low aspect ratio model tests at high Reynolds numbers (space shuttle), and basic studies (Juncture flow, Taylor - Goertler Instab.)

PLANNED IMPROVEMENTS: Fiscal Year 1987 - Modifications to Low Turbulence Pressure Tunnel.

LOCAL INFORMATION CONTACT: Robert J. McGhee, Airfoil Aerodynamics Branch, (804) 865-4514.

| | SUBSONIC WIND TUNNELS | | COMPARABLE FACILITIES |
|---|---|---|---|
| Virginia Polytechnic Institute | TEST SECTION SIZE: 6 x 6 x 25 ft | SPEED RANGE: (Mach No.) 0.22 (250 ft/sec) | None |
| | DATE BUILT/UPGRADED: 1940/1953/1958/1975 | TEMP. RANGE: Ambient | |
| 6 x 6-Ft Wind Tunnel<br><br>Stability Wind Tunnel | REPLACEMENT COST: $5M | REYNOLDS NO: (Per ft X $10^{-6}$) 1.5 | |
| | OPERATIONAL STATUS: 1 shift per day | DYNAMIC PRES: (lb/ft$^2$) 75 | |
| | | STAGNATION PRES: (psia) Atmospheric | |
| | Continuous flow, three test sections; for straight flow, curved flow, and rolling flow. Tunnel originally designed for curved and rolling flow dynamic stability tests | | |

TESTING CAPABILITIES: Equipped for strut or sting-mounted standard wind tunnel testing with 6-component balances. Use of curved or rolling flow test sections allows 6-component strut or sting-mount tests of dynamic stability. Curved flow tests use screens to model dynamic pressure gradient. Tunnel is powered by bladed 14-ft diameter fan and 600-hp dc motor. Very low free stream turbulence (~ 0.05% or less) makes possible delicate boundary layer testing.

DATA ACQUISITION: Forty channels of data can be recorded on computer data acquisition systems for real-time data reduction on-site. Note: Scanivalve system occupies only one of the 40 channels.

CURRENT PROGRAMS: Wide range of current programs including low-speed aircraft aerodynamics and dynamic stability testing, boundary layer stability testing and flow visualization, testing of wind effects on buildings and structures, and testing of flowfields around ships.

PLANNED IMPROVEMENTS:

LOCAL INFORMATION CONTACT: James F. Marchman III, Aerospace and Ocean Engineering Department, (703) 961-6804.

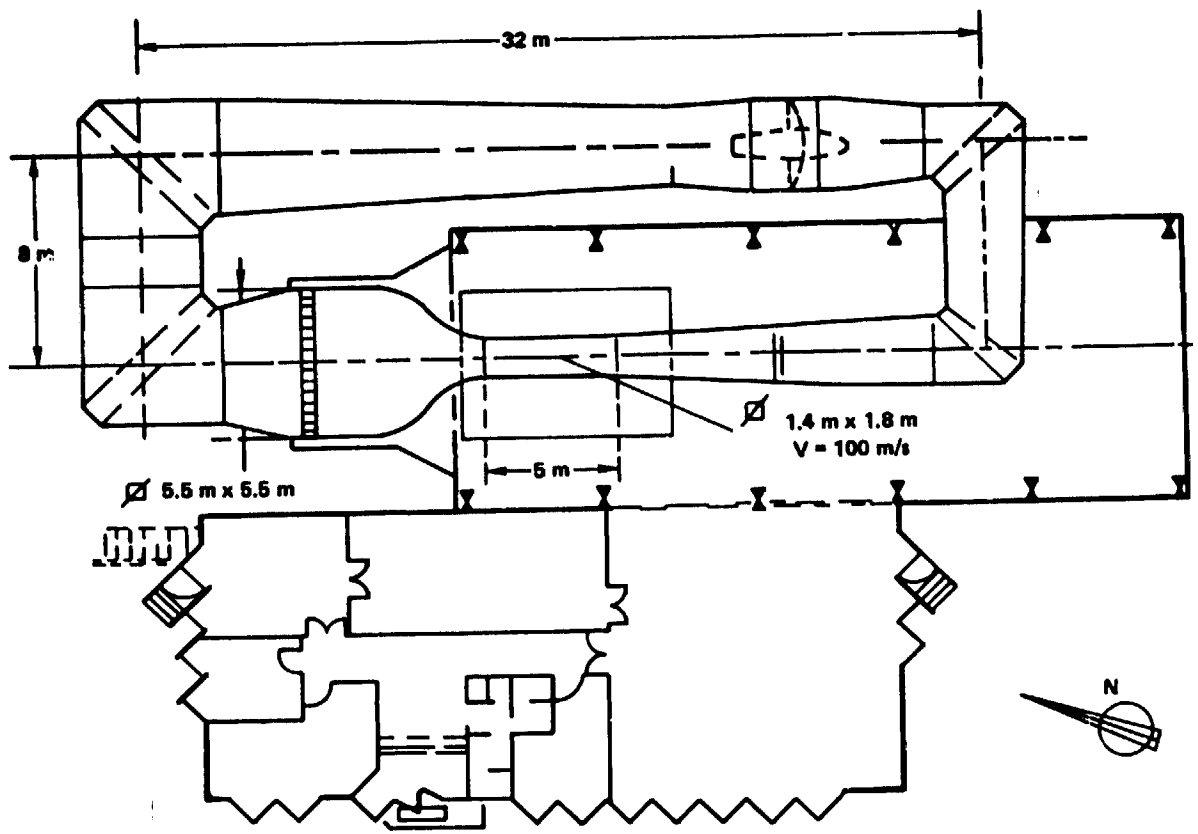
32 m
8 m
Ø 1.4 m x 1.8 m
V = 100 m/s
5 m
Ø 5.5 m x 5.5 m
N

| ONERA Le Fauga, France | SUBSONIC WIND TUNNELS | | COMPARABLE FACILITIES |
|---|---|---|---|
| | TEST SECTION SIZE: 1.4 x 1.8 x 5 m | SPEED RANGE: (Mach No.) 0 - 0.29 (0 - 100 m/sec) | None |
| | DATE BUILT/UPGRADED: 1983 | TEMP. RANGE: 313 K | |
| F2 | REPLACEMENT COST: | REYNOLDS NO: (Per m X $10^{-6}$) 6 | |
| | OPERATIONAL STATUS: 1 shift per day | DYNAMIC PRES: ($kN/m^2$) 5.8 | |
| | | STAGNATION PRES: (bars) $\simeq 1$ | |
| | Continuous flow, quick access to test section, full optical access around model, 0.7 kW (far variable RPM) powered by electrical motor, water cooler, low turbulence level. Designed for low-speed aerodynamic basic research using conventional measurements flow visualizations and laser velocimeter 3D | | |

TESTING CAPABILITIES: Contraction ratio 12 and low-turbulence equipment in settling chamber. Traveling crane supporting forward-scatter laser velocimeter along the 4-glassed walls of test section and seismically protected. Three degrees-of-freedom flow survey device. Smoke and laser-lighted plane flow visualization. Easy model and mounting preparation and run of the tunnel. Full or parts of aircraft and missile models. Boundary layer and flow survey.

DATA ACQUISITION: Pressure, forces, temperature, hot wires, skin, and flow visualization. HP computer with connection line to Chatillon.

CURRENT PROGRAMS: Aerodynamic research.

PLANNED IMPROVEMENTS: Three-component laser velocimeter in 1985.

LOCAL INFORMATION CONTACT: M. Afchain, ONERA - Centre du Fauga-Mauzac, 31410 NOE, France.

# TRANSONIC WIND TUNNELS

PRECEDING PAGE BLANK NOT FILMED

# TRANSONIC WIND TUNNELS

## ASSESSMENT OF COMPARABLE CAPABILITIES

The wind tunnels presented in this section are those meeting the traditional requirements that they have ventilated test section walls and have a speed range passing through the transonic region. Tunnels with the appropriate speed range but lacking the ventilated wall characteristic are excluded from this section, but are listed under Supersonics. Multiple speed tunnels (trisonic and polysonics) are listed both here and in the Supersonic section, as are those tunnels with dual characteristics or changeable test sections to provide transonic as well as supersonic velocities.

The listed tunnels have been classified into two broad categories: 2-dimensional (2-D) and 3-dimensional (3-D) tunnels. The latter have been further grouped according to size in order to differentiate between the large number of tunnels in the group. For comparability purposes, four groups were generated as follows:

| Group | Characteristics |
|---|---|
| 2-D | 2-dimensional tunnels |
| 3-D: | 3-dimensional tunnels |
| $3\text{-}D_1$ | >11 ft |
| $3\text{-}D_2$ | 7 to 11 ft |
| $3\text{-}D_3$ | <7 ft |

As with the Subsonic groups, all tunnels listed in a particular group are judged to be comparable on the basis that they are useable for the same general type testing, except when some unique capability is noted.

Within the 3-D group, tunnels are "upward" comparable (that is, larger tunnels are considered alternatives for smaller ones but not conversely). Also, no tunnel is listed in more than one group.

The major transonic wind tunnels in terms of size, Reynolds number, and flow quality, are located in the United States and are primarily owned by NASA and DOD. The National Transonic Facility (NTF) represents the only tunnel in the world having full-scale Reynolds number capability. The Langley Research Center's 8-ft Transonic Pressure Tunnel (TPT) has been modified to obtain the best known flow quality; the AEDC 16T has propulsion as well as high angle of attack capability; and the Ames 11-ft and Calspan 8-ft tunnels are the workhorses for United

PAGE 126 INTENTIONALLY BLANK

States industry. The only large transonic tunnel in Europe is the S-1 in France, but there are some high Reynolds number facilities in Canada, Germany, India, and the United Kingdom in addition to the S-1.

## HIGH REYNOLDS NUMBER TUNNELS

The following table lists those Transonic tunnels with high Reynolds number capabilities. As with the Subsonic tunnels, the value indicated is the maximum Reynolds number based on a chord length (c) equal to 1/10 the square root of the test section area ($A_{TS}$).

| Tunnel | Location | $R_e c \times 10^{-6}$ |
|---|---|---|
| NTF | NASA–Langley | 120 |
| High $R_e$ | NASA–Marshall | 53 |
| 4-ft Polysonic | McDonnell Douglas–St. Louis | 20 |
| 1-m (TWG) | Germany – DFVLR, Göttingen | 16 |
| 4-ft High Speed | Vought | 15 |
| NAE 2-D | Canada–NRC | 14 |
| 0.3-m | NASA–Langley | 14 |
| TDT | NASA–Langley | 14 |
| 7-ft | Rockwell–Los Angeles | 13 |
| NAE 3-D | Canada–NRC | 12 |
| 4-ft Trisonic | Lockheed–California | 12 |
| 4-ft Trisonic | McDonnell Douglas–El Segundo | 12 |
| Compressible Flow | Lockheed–Georgia | 11 |
| S-1 MA | France–ONERA, Modane | 11 |
| 16-ft | DOD–AEDC | 10 |
| 11-ft | NASA–Ames | 10 |
| 8-ft | Calspan | 10 |
| 1.2-m | India–Bangalore | 10 |
| 4 x 4-ft | United Kingdom–Warton | 10 |
| 8-ft | United Kingdom–Bedford | 9 |

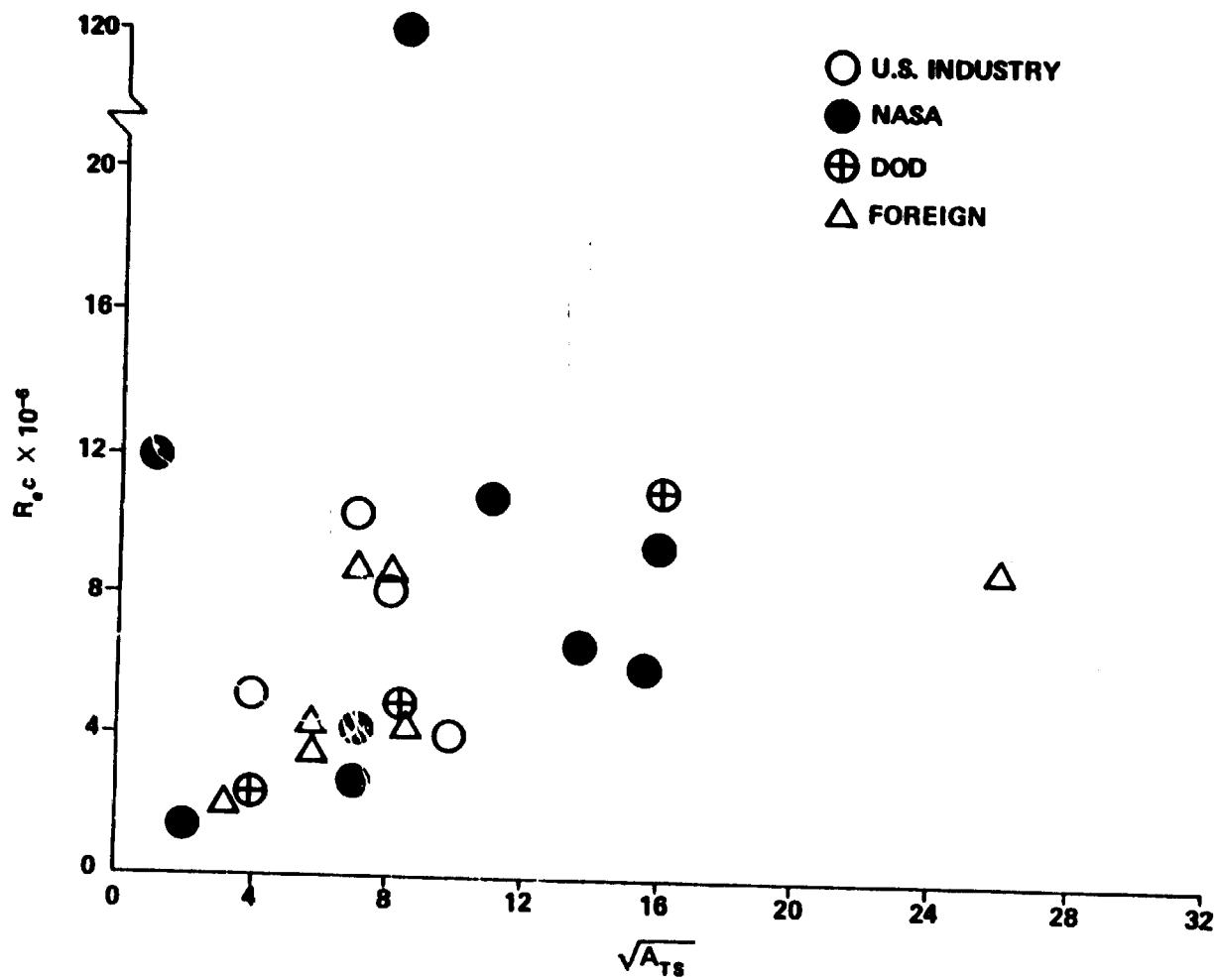


Figure 10. Transonic tunnels.

## TRANSONIC CAPABILITY*

| Page Number | Facility Name | Installation |
|---|---|---|
| | **2-D** | |
| 136 | 6 x 28-in | NASA–Langley |
| 137 | 0.3-m TCT (2-D Insert) | NASA–Langley |
| 138 | High Reynolds Number Tunnel | NASA–Marshall |
| 139 | Compressible Flow Tunnel | Lockheed–Georgia |
| 140 | 1-ft | McDonnell Douglas–California |
| 141 | NAE 5-ft (2-D) | Canada–NRC |
| 142 | T-2 | France–ONERA, Tolouse |
| 143 | TWB | Germany–DFVLR Braunschweig |
| 144 | 2-D | Japan–KHI |
| 145 | RENO | Japan–NAL |
| | **$3\text{-}D_1$ (3-D >10-ft)** | |
| 146 | S1-MA | France–ONERA, Modane |
| 147 | TDT | NASA–Langley |
| 148 | 16-ft | NASA–Langley |
| 149 | 16T | DOD–AEDC |
| 150 | 14-ft | NASA–Ames |
| 151 | 11-ft | NASA–Ames |
| | **$3\text{-}D_2$ (3-D 7 to 10-ft)** | |
| 152 | Transonic Wind Tunnel | Boeing–Seattle |
| 153 | 7 x 10-ft | DOD–David Taylor |
| 154 | NTF | NASA–Langley |
| 155 | 8-ft TPT | NASA–Langley |
| 156 | 8-ft | Calspan |
| 157 | 9 x 8-ft TWT | United Kingdom–ARA, Bedford |
| 159 | 8 x 6-ft | United Kingdom–RAE, Farnborough |
| 160 | 7-ft Trisonic | Rockwell |

*In order of appearance.

| Page Number | Facility Name | Installation |
|---|---|---|
| | 3-$D_3$ (3-D <7-ft) | |
| 161 | Free Jet (6 x 7) | Lockheed–California |
| 162 | 2-m | Japan–NAL |
| 163 | HST | Netherlands–NLR |
| 164 | 66-in | FluiDyne |
| 165 | NAE–5 x 5 ft | Canada–NRC |
| 166 | S2–MA | France–ONERA, Modane |
| 167 | 4T | DOD–AEDC |
| 169 | 4-ft Trisonic | Lockheed–California |
| 170 | 4-ft Trisonic | McDonnell Douglas–El Segundo |
| 171 | Polysonic (4-ft) | McDonnell Douglas–St. Louis |
| 172 | High Speed (4-ft) | Vought |
| 173 | 1.2-m | United Kingdom–BA, Warton |
| 174 | Sigma 4 | France–Inst. Aero. Tech., St. Cyr |
| 175 | S3-CH | France–ONERA, Chalais |
| 176 | 1-m (TWG) | Germany–DFVLR, Göttingen |
| 177 | S3-MA | France–ONERA, Modane |
| 178 | 27-in | United Kingdom–Brough |
| 179 | Trisonic Tunnel (TMK) | Germany–DFVLR, Köln |
| 180 | 26-in | Grumman |
| 181 | 24-in | Northrop |
| 182 | 2 x 2 | NASA–Ames |
| 183 | High Speed (HKG) | Germany–DFVLR, Göttingen |
| 184 | 60-cm Trisonic | Japan–Mitsubishi |
| 186 | 0.3-m (Flexible Wall Insert) | NASA–Langley |

## TRANSONIC WIND TUNNELS

| Page Number | Location and Facility Description | Test Section (ft) | Speed Range (Mach No.) | Reynolds Number (per ft x $10^{-6}$) | Comments |
|---|---|---|---|---|---|
| | **U.S. NASA** | | | | |
| | Ames Research Center | | | | |
| 150 | 14-ft | 13.5 x 13.7 | 0.5 - 1.2 | 2.6 - 4.2 | Standby |
| 151 | 11-ft (Unitary) | 11 x 11 | 0.4 - 1.4 | 1.26 - 9.4 | |
| 182 | 2 x 2-ft | 2 x 2 | 0.2 - 1.4 | 0.5 - 8.7 | |
| | Langley Research Center | | | | |
| 148 | 16-ft | 15.5 x 15.5 | 0.2 - 1.3 | 1.2 - 4.2 | Propulsion Integration |
| 155 | 8-ft TPT | 7.1 x 7.1 | 0.2 - 1.3 | 0.6 - 6 | Pressurized |
| 137 | 0.3-m 2-D Test Section | 8 x 24-in | 0.2 - 0.9 | 120 | Cryogenic |
| 186 | 0.3-m Flex Wall Test Section | 13 x 13-in | 0.2 - 1.1 | 120 | Cryogenic |
| 136 | 6 x 28-in | 6 x 28-in | 0.2 - 1.2 | 4.0 - 25 | 2-D |
| 154 | NTF | 8.2 x 8.2 | 0.2 - 1.2 | 145 | Cryogenic, Pressurized |
| 147 | Transonic Dynamics Tunnel (TDT) | 16 x 16 | 0 - 1.2 | 2.8 Air<br>8.5 Freon | Flutter |
| | Marshall Space Flight Center | | | | |
| 138 | High $R_e$ | 32-in dia | 0.3 - 3.50 | 7 - 200 | 2-D, High $R_e$, Pressurized |
| | **U.S. DOD** | | | | |
| | Arnold Engineering Development Center | | | | |
| 149 | 16T | 16 x 16 | 0 - 1.6 | 0.1 - 6.0 | Propulsion, Captive Trajectory |
| 167 | 4T | 4 x 4 | 0.1 - 1.3, 1.6, 2.0 | 2.0 - 6.5 @ M = 1.6<br>1.3 - 6.1 @ M = 2 | Captive Trajectory |
| | David Taylor Naval Ship R&D Center | | | | |
| 153 | 7 x 10-ft | 7 x 10 | 0.25 - 1.17 | 1 - 5 | Captive Trajectory |
| | **U.S. INDUSTRY** | | | | |
| | Boeing, Seattle | | | | |
| 152 | Transonic | 8 x 12 | 0 - 1.15 | 0 - 4 | |
| | Calspan | | | | |
| 156 | 8-ft | 8 x 8 | 0 - 1.35 | 0 - 12.5 | Captive Trajectory, Pressurized |

## TRANSONIC WIND TUNNELS

| Page Number | Location and Facility Description | Test Section (ft) | Speed Range (Mach No.) | Reynolds Number (per ft x $10^{-6}$) | Comments |
|---|---|---|---|---|---|
| | **U.S. INDUSTRY** | | | | |
| | FluiDyne | | | | |
| 164 | 66-in | 66 x 66-in | 0 - 1.0 | 0 - 4.5 | |
| | Grumman | | | | |
| 180 | 26-in | 26 in Slotted Oct | 0.20 - 1.27 | 2.10 - 27.8 | Flutter, Propulsion Simulation |
| | Lockheed-CA | | | | |
| 161 | Free Jet | 6 x 7 | 0.2 - 2.65 | 0 - 12.0 | Propulsion |
| 169 | 4-ft Trisonic | 4 x 4 | 0.2 - 5.0 | 2 - 30 | High $R_e$, Polysonic |
| | Lockheed-GA | | | | |
| 139 | Compressible Flow | 20 x 28-in | 0.2 - 1.3 | 5 - 55 | 2-D, Pressurized |
| | McDonnell Douglas-El Segundo | | | | |
| 170 | 4-ft Trisonic | 4 x 4 | 0.2 - 5.0 | 0.25 - 30 | Polysonic |
| 140 | 1-ft | 1 x 1 | 0.5 - 1.2 | 20 - 60 | 2-D, Cryogenic Mode |
| | McDonnell Douglas-St. Louis | | | | |
| 171 | Polysonic | 4 x 4 | 0.2 - 5.8 | 4 - 50 | Polysonic |
| | Northrop | | | | |
| 181 | 24-in Trisonic | 2 x 2 | 0.4 - 1.35<br>1.5, 2, 2.2, 3 | 0.2 - 30 | Polysonic |
| | Rockwell-Los Angeles | | | | |
| 160 | 7-ft | 7 x 7 | 0.1 - 3.5 | 2 - 19 | Flutter, Acoustic, Polysonic |
| | Vought | | | | |
| 172 | High Speed | 4 x 4 | 0.2 - 5.0 | 2 - 38 | Captive Trajectory, Flutter, Polysonic |
| | **CANADA** | | | | |
| 141/165 | NAE 5 x 5-ft Blowdown | | | | |
| 165 | 3-Dimensional | 5 x 5 | 0.1 - 4.25 | 24 @ M = 2.25 | High $R_e$, Polysonic |
| 141 | 2-Dimensional | 5 x 1.75 | 0.1 - 0.95 | 47 @ M = 0.95 | 2-D, High $R_e$ |

TRANSONIC WIND TUNNELS

| Page Number | Location and Facility Description | Test Section (ft) | Speed Range (Mach No.) | Reynolds Number (per ft x $10^{-6}$) | Comments |
|---|---|---|---|---|---|
| | FRANCE | | | | |
| 146 | S-1 MA | 26 dia x 45 L | 0 - 1 | 4.1 @ M = 1 | Also listed as Subsonic |
| 166 | S-2 MA | #1 5.8 x 5.7 | 0.1 - 1.3 | 1.6 - 8.9 | Transonic Test Section |
| 177 | S-3 MA | #1 2.6 x 1.8 | 0.1 - 1.1 | 19.5 | Transonic Test Section, 2-D Insert |
| 175 | S3-CH | 2.9 x 2.6 | 0.3 - 1.10 | 3.6 | |
| 142 | T-2 | 1.3 x 1.3 | Up to 0.9 w/ adaptive walls | 51 | High $R_e$, Cryogenic |
| 174 | SIGMA 4 | 3 x 3 | 0.3 - 2.8 | – | |
| | GERMANY | | | | |
| 176 | 1-m (TWG) | 3 x 3 | 0.5 - 2.0 | 54 @ M = 1.0 | High $R_e$ |
| 183 | High Speed (HKG) | #1 2 x 2 | 1.22 - 2.5 | | |
| | | #2 2 x 2 | 0.4 - 0.95 | 4.4 @ M = 0.95 | |
| 143 | Transonic Tunnel (TWB) | 1 x 2 | 0.3 - 0.95 | 3.6 - 25 | 2-D Test Section |
| 179 | Trisonic Tunnel (TMK) | 23 x 23 in | 0.5 - 4.5 | 1.8 - 24 | Polysonic |
| | INDIA | | | | |
| 168 | 1.2-m | 4 x 4 | 0.2 - 4.0 | 24.4 | Captive Trajectory, Polysonic |
| | JAPAN | | | | |
| 162 | 2-m (NAL) | 6.5 x 6.5 | 0.3 - 1.4 | 1.5 - 6 | |
| 185 | 2 x 2-ft (KHI) | 2 x 2 | 0.2 - 4.0 | 3.2 - 3.5 | Polysonic |
| 184 | 60-cm Trisonic (Mitsubishi) | 2 x 2 | 0.4 - 4.0 | 4.5 - 19 | Polysonic |
| 144 | 2-D (KHI) | 1.3 x 0.32 | 0.4 - 1.2 | 4.6 - 14.4 | 2-D |
| 145 | RENO (NAL) | 11.8 x 39.4 in | 0.2 - 1.15 | 14 @ M = 0.8 | 2-D |
| | NETHERLANDS | | | | |
| 163 | HST | 5.2 x 6.5 | 0 - 1.27 | 12 @ M = 0.5 | |

## TRANSONIC WIND TUNNELS

| Page Number | Location and Facility Description | Test Section (ft) | Speed Range (Mach No.) | Reynolds Number (per ft x $10^{-6}$) | Comments |
|---|---|---|---|---|---|
| | UNITED KINGDOM | | | | |
| 158 | 8-ft (Bedford) | 8 x 8 | 0.1 - 0.9 | 11.6 @ M = 0.9 | Transonic Mode |
| 159 | 8 x 6-ft (Farnborough) | 6 x 8 | 0 - 1.25 | 7.3 @ M = 0.3<br>2.7 @ M = 1.25 | |
| 173 | 4-ft (Warton) | 4 x 4 | 0.4 - 4.0 | 24 | High $R_e$, Polysonic, Flutter |
| 178 | 27 x 27-in (Brough) | 27 x 27-in | 0.1 - 2.5 | 0.8 - 20 | Polysonic |
| 157 | TWT (Bedford) | 8 x 9 | 0 - 1.4 | 1.5 - 5.5 | |

C-3

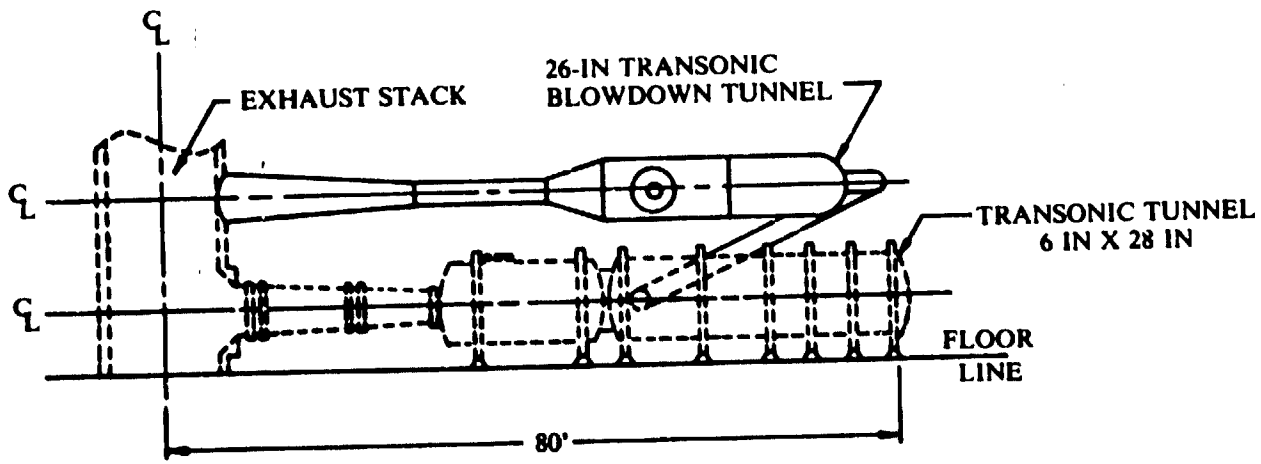
℄
EXHAUST STACK
26-IN TRANSONIC
BLOWDOWN TUNNEL
℄
TRANSONIC TUNNEL
6 IN X 28 IN
℄
FLOOR
LINE
80'

| | TRANSONIC WIND TUNNELS | | COMPARABLE FACILITIES |
|---|---|---|---|
| NASA–Langley Research Center | TEST SECTION SIZE: 6 x 28 in | SPEED RANGE: (Mach No.) 0.2 - 1.2 | 2-D |
| | DATE BUILT/UPGRADED: 1938 | TEMP. RANGE: Ambient | |
| 6 x 28-In Transonic Wind Tunnel | REPLACEMENT COST: $4M | REYNOLDS NO: (Per ft X $10^{-6}$) 4.0 - 25 | |
| | OPERATIONAL STATUS: 1 shift per day (backlog) | DYNAMIC PRES: (lb/ft$^2$) 60 - 5000 | |
| | | STAGNATION PRES: (psia) 29.4 - 88.2 | |
| | Model size: 0.5-ft chord airfoil /typical); Test medium: Air; 2-D blowdown, slotted upper and lower walls; Run time: 30 - 300 sec | | |

TESTING CAPABILITIES: This is a two-dimensional transonic tunnel with solid sidewalls and slotted upper and lower walls. It operates on dry blowdown air using the Low-Turbulence Pressure Tunnel as a supply vessel.

DATA ACQUISITION: MODCOMP Classic Data Acquisition System.

CURRENT PROGRAMS: Supercritical airfoils for helicopter rotors, supercritical propeller airfoil tests, and two-dimensional high-speed airfoils for general aviation.

PLANNED IMPROVEMENTS: Fiscal Year 1985 - Modifications to 6 x 28-in Transonic Tunnel to provide improved flow quality at an estimated cost of $170K.

LOCAL INFORMATION CONTACT: John B. Peterson, Airfoil Aerodynamics Branch, (804) 865-4514.

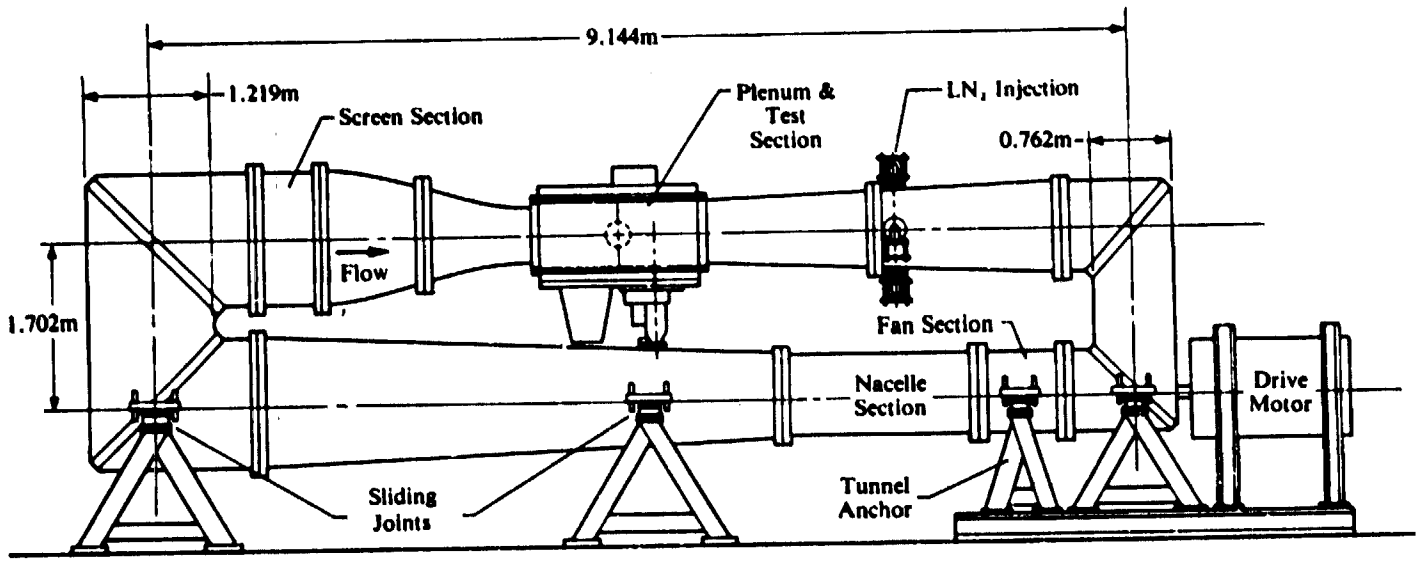
9.144m
1.219m
Screen Section
Plenum &
Test
Section
LN, Injection
0.762m
Flow
1.702m
Fan Section
Nacelle
Section
Drive
Motor
Sliding
Joints
Tunnel
Anchor

| NASA–Langley Research Center | TRANSONIC WIND TUNNELS | | COMPARABLE FACILITIES |
|---|---|---|---|
| | TEST SECTION SIZE: 8 x 24 in | SPEED RANGE: (Mach No.) 0.2 - 0.9 | 2-D |
| | DATE BUILT/UPGRADED: 1973/1978 | TEMP. RANGE: 630° - 144°R | |
| 0.3-M Transonic Cryogenic Tunnel<br>2-Dimensional Insert | REPLACEMENT COST: $2.6M for entire complex | REYNOLDS NO: (Per ft X $10^{-6}$) 120 | |
| | OPERATIONAL STATUS: 2 shifts per day (backlog) | DYNAMIC PRES: ($lb/ft^2$) ≅4320 (max) | |
| | | STAGNATION PRES: (psia) 17.64 - 88.2 | |
| | Test medium: Nitrogen; Model chord: 15.3 cm<br>Continuous flow, flexible wall insert | | |

TESTING CAPABILITIES: This facility provides a unique operating envelope with varying temperature, pressure and Mach number capability, enabling independent studies of: Mach number, aeroelastic, and Reynolds number effects. The tunnel can operate at extremely high Reynolds numbers (about 120 million per ft) and, with 2-D airfoils installed simulates flight equivalent conditions.

DATA ACQUISITION: One hundred ninety-two Analog Channels on MODCOMP Data Acquisition System. On-line and off-line data reduction capabilities.

CURRENT PROGRAMS: This tunnel is currently being used for airfoil testing at high Reynolds numbers, development of test techniques for cryogenic wind tunnels, condensation studies to establish cryogenic tunnel operating envelopes and special studies in direct support of the NTF.

PLANNED IMPROVEMENTS: Fiscal Year 1987 - Modifications to 0.3-m Transonic Cryogenic Tunnel.

LOCAL INFORMATION CONTACT: Edward J. Ray, Experimental Techniques Branch, (804) 865-3225.

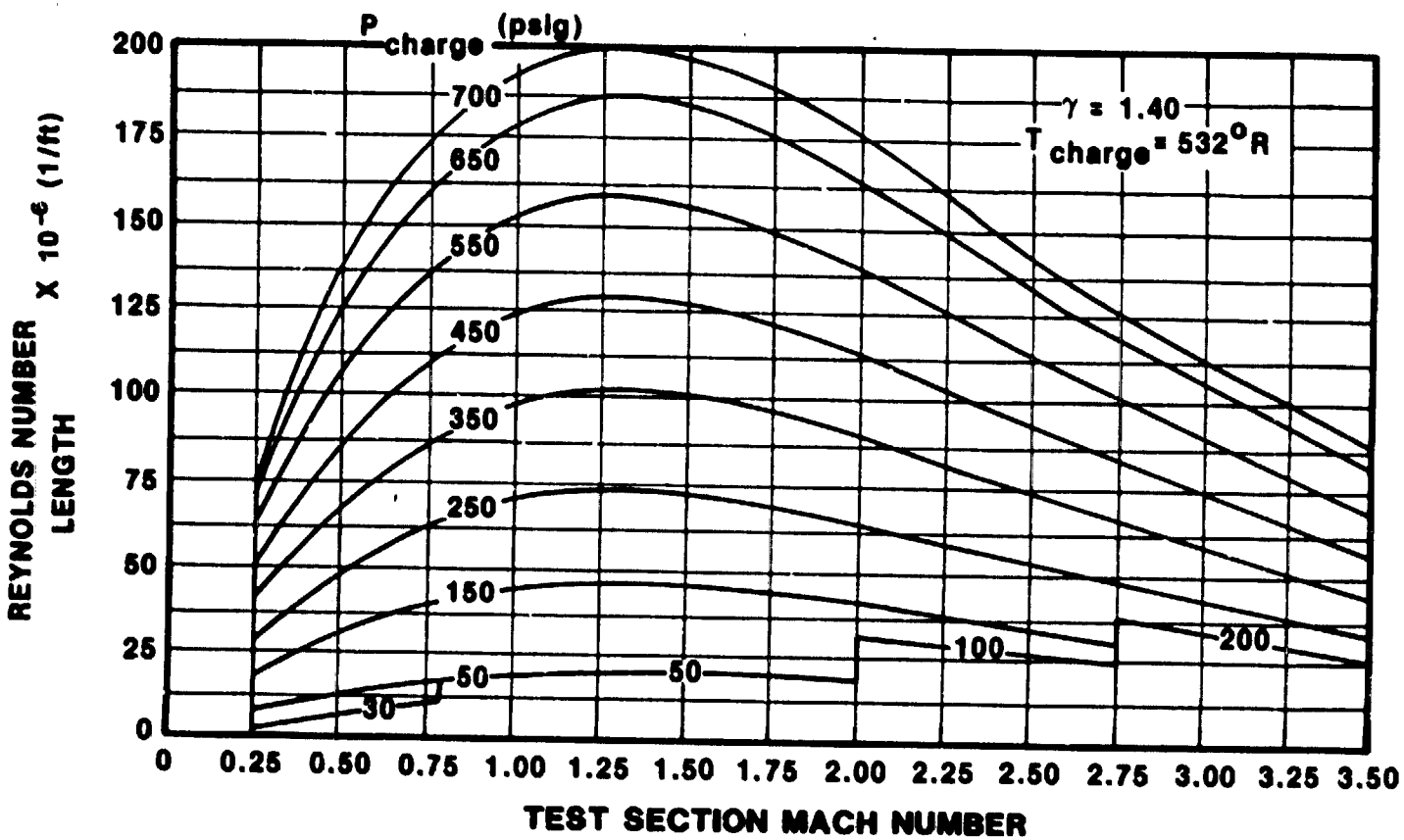


HRWT TEST SECTION REYNOLDS NUMBER, MACH NUMBER, AND CHARGE PRESSURE OPERATIONAL ENVELOPE

| | TRANSONIC WIND TUNNELS | | COMPARABLE FACILITIES |
|---|---|---|---|
| NASA–Marshall Space Flight Center | TEST SECTION SIZE: $32^D$ x 26 in | SPEED RANGE: (Mach No.) 0.3 - 3.50 | 2-D |
| | DATE BUILT/UPGRADED: 1969 | TEMP. RANGE: Ambient | |
| High Reynolds Number Wind Tunnel | REPLACEMENT COST: $2M | REYNOLDS NO: (Per ft X $10^{-6}$) 7 - 200 | |
| | OPERATIONAL STATUS: 1 shift per day | DYNAMIC PRES: (lb/ft$^2$) 3900 - 98 500 | |
| | | STAGNATION PRES: (psia) 49 - 640 | |
| | Ludwieg tube impulse-type wind tunnel; two interchangeable test sections. Run time: 0.2 - 0.6 sec; Model length: 30 in - span: 18 in | | |

TESTING CAPABILITIES: The High Reynolds Number Wind Tunnel is essentially a high-pressure tunnel designed around the Ludwieg tube operating principle. Air is stored in constant diameter supply tube. A run is initiated by rupturing a multilayer Mylar diaphragm, which allows the air to flow through the test section into a receiver sphere from which it is exhausted to the atmosphere. This tunnel provides the capability for measuring model forces and pressure distributions at unit Reynolds numbers as high as 200 x $16^6$ per ft. Maximum stagnation pressure ranges from 550 to 650 psi depending on Mach number, and stagnation temperature is near ambient. One test section having variable porosity perforated walls and choking flaps permits testing at supersonic Mach numbers of 1.4, 1.7, 2.0, 2.75, and 3.5. The 50-ft-diameter receiver sphere with a perforated inlet pipe attenuates the tunnel noise to an acceptable level. The run time in this tunnel ranges between 200 and 600 msec depending on pressure. All data are acquired and reduced by an on-line nomputer. For flow visualization, the tunnel is equipped with a spark shadowgraph system in the supersonic speed range.

DATA ACQUISITION: Computer-controlled 40 low-level channels, multiplexer, and analog-to-digital converter. On-line computer with CRT terminal.

CURRENT PROGRAMS:

PLANNED IMPROVEMENTS:

LOCAL INFORMATION CONTACT: A. Richard Felix, Experimental Aerophysics Branch, (205) 453-1844 or Hal S. Gwin, Experimental Aerophysics Branch, (205) 453-1844.

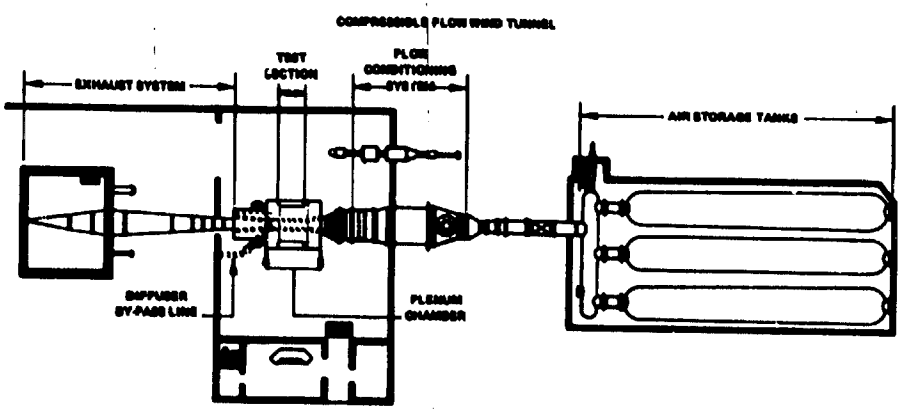


**Dynamic Pressure Envelope**

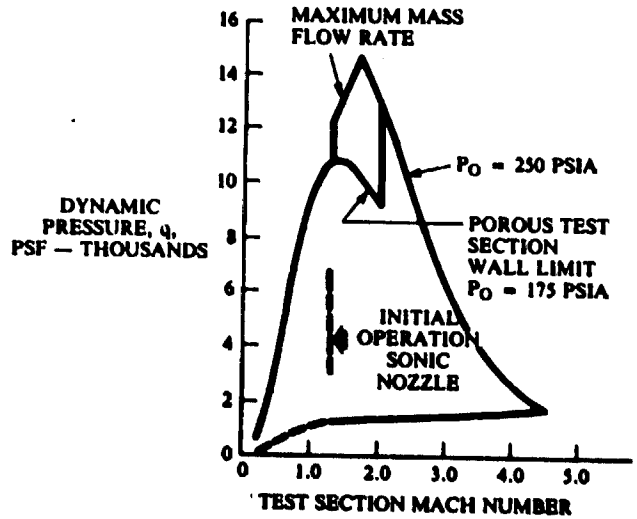


**Reynolds Number Envelope**

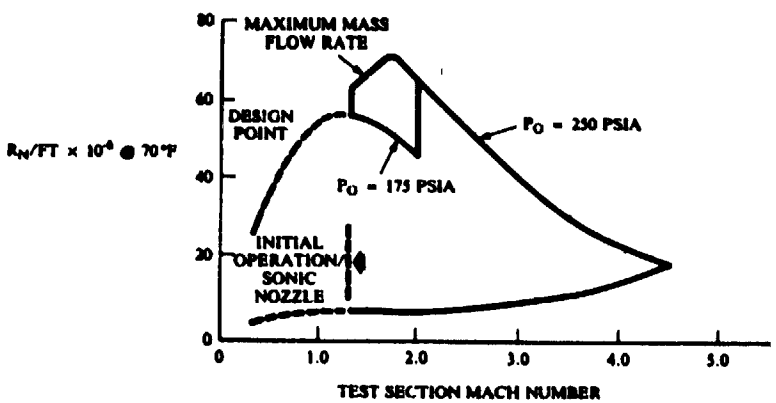


**Stagnation Pressure Envelope**

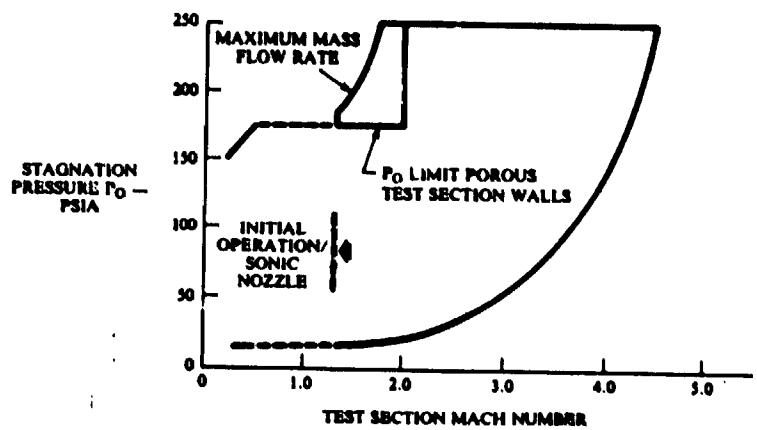

| | TRANSONIC WIND TUNNELS | | COMPARABLE FACILITIES |
|---|---|---|---|
| Lockheed-Georgia Co. Marietta, Ga. 30063 | **TEST SECTION SIZE:** 20 x 28 x 72 in | **SPEED RANGE:** (Mach No.) 0.2 - 1.3 | 2-D |
| | **DATE BUILT/UPGRADED:** 1970 | **TEMP. RANGE:** Ambient | |
| Compressible Flow Wind Tunnel (CFWT) | **REPLACEMENT COST:** $7.5M | **REYNOLDS NO:** (Per ft X $10^{-6}$) 5 - 55 | |
| | **OPERATIONAL STATUS:** 1 to 1.5 shifts operation | **DYNAMIC PRES:** (lb/ft$^2$) 80 - 10 760 | |
| | | **STAGNATION PRES:** (psia) 20 - 175 | |
| | Blowdown, 600 psi to atmosphere; variable porosity test section walls (0 - 10% open area) | | |

TESTING CAPABILITIES: Multiple test section options including: (1) two-dimensional solid sidewalls and variable porosity top and bottom test section walls, models typically 20-in span and 7-in chord; (2) semispan floor-mounted semispan models on solid floor with boundary layer removal upstream of model, models typically 17-in semispan; and (3) full span - computer-controlled sting system, models typically 15-in span. Wall-mounted pressure rails available for all test-section configurations to measure pressures near the test-section walls. These rail pressures may be used to evaluate wall boundary conditions.

DATA ACQUISITION: Data acquisition and reduction on-site.

CURRENT PROGRAMS:

PLANNED IMPROVEMENTS:

LOCAL INFORMATION CONTACT: Gerald A. Pounds, Group Engineer, Wind Tunnels Test Group, (404) 424-4158.

| | TRANSONIC WIND TUNNELS | | COMPARABLE FACILITIES |
|---|---|---|---|
| McDonnell Douglas Corp. El Segundo, Calif. | TEST SECTION SIZE: 12 x 12 x 36 in | SPEED RANGE: (Mach No.) 0.5 - 1.2 | 2-D |
| | DATE BUILT/UPGRADED: 1959/1978 | TEMP. RANGE: 180° - 600°R | |
| 1-Ft Trisonic Wind Tunnel<br>Cryogenic Mode | REPLACEMENT COST: $0.5M | REYNOLDS NO: (Per ft X $10^{-6}$) 20 - 60 | |
| | OPERATIONAL STATUS: Planned to be moved to McDonnell Aircraft in St. Louis in 1984 | DYNAMIC PRES: ($lb/ft^2$) 750 - 2900 | |
| | | STAGNATION PRES: (psia) 22 - 58 | |
| | Intermittent flow, blowdown to atmosphere | | |

TESTING CAPABILITIES: The 1-ft Cryogenic Wind Tunnel (1CWT) is a blowdown facility that can operate in either of two modes. In the cryogenic mode, low temperatures are obtained by spray cooling the air with liquid nitrogen. In recent years, this facility has been used as a pilot tunnel to develop cryogenic technology.

DATA ACQUISITION: Sixty-four channels of information can be recorded on the data acquisition system. Data are reduced on-line and available in tabular and plotted form between runs.

CURRENT PROGRAMS: Facility was last operated in 1982. Plans are to relocate this facility to McAir in St. Louis in 1984.

PLANNED IMPROVEMENTS:

LOCAL INFORMATION CONTACT: Richard W. Cole, Aerodynamics Staff, (213) 593-5127.

ORIGINAL PAGE IS
OF POOR QUALITY

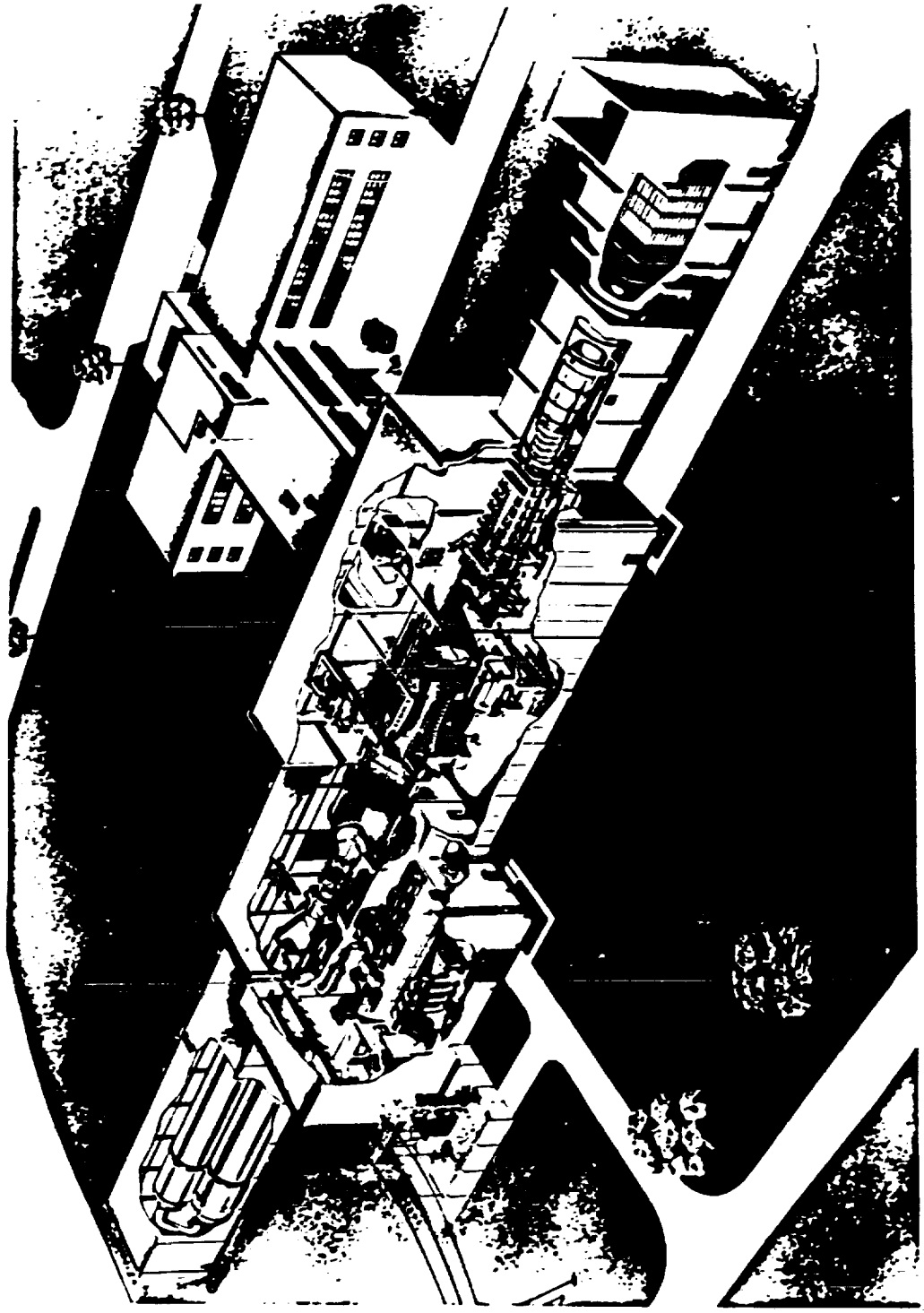

| National Research Council (NAE) | TRANSONIC WIND TUNNELS | | COMPARABLE FACILITIES |
|---|---|---|---|
| | **TEST SECTION SIZE:** 3D: 5 x 5 x 16 ft<br>2D: 5 x 1¼ x 12 ft | **SPEED RANGE:** (Mach No.) 3D: 0.1 - 4.25<br>2D: 0.1 - 0.95 | 2-D<br>3-$D_3$ |
| | **DATE BUILT/UPGRADED:** 1962/1969/1978/1984 | **TEMP. RANGE:** Ambient | |
| 5 x 5-Ft Blowdown Wind Tunnel | **REPLACEMENT COST:** $24M | **REYNOLDS NO:** (Per ft X $10^{-6}$) 3D: 24 at Mach 2.25<br>2D: 47 at Mach 0.95 | |
| | **OPERATIONAL STATUS:** Single shift | **DYNAMIC PRES:** ($lb/ft^2$) 3D: 4600 at Mach 2.25 (max)<br>2D: 7900 at Mach 0.95 (max) | |
| | | **STAGNATION PRES:** (psia) 3D: 20 - 220<br>2D: 20 - 180 | |
| | The facility is operated by the High Speed Aerodynamics Laboratory of the National Aeronautical Establishment. Available on a fee-for-service basis. | | |

TESTING CAPABILITIES: Being of the intermittent type, the wind tunnel has an air-storage capacity of 55 000 $ft^3$, which is being charged by a 11 000-hp compressor/dryer plant delivering air at a pressure of 320 psia and with an absolute humidity of 0.0002 lb $H_2O$ per lb of air. The transonic test section (20.5% open perforated walls), when in use, is in tandem with the flexible nozzle section. The 2-D test section assembles in the transonic test section, which can also be adapted for reflexion plane (half-model) testing. Compressed air (10 lb/sec at 250 psi) for model blowing can be accommodated both in the 2-D and half-model mode of operation. The laboratory includes a design office and machine shop and thus undertakes model construction to a limited extent.

DATA ACQUISITION: Ninety-six channels of conditioned data can be recorded and processed on-site. The system is expandable to accommodate additional FM and RMS channels.

CURRENT PROGRAMS: The facility is heavily used by domestic and foreign aerospace industry. Main emphasis of the laboratory research program is on subsonic and transonic aerodynamics; high-lift systems, drag reduction schemes such as area rule with lift and skin friction manipulation, computational fluid dynamics, wall interference, buffet, and flutter.

PLANNED IMPROVEMENTS: To facilitate changeover from 3-D to 2-D mode of operation and vice versa, interchangeable test sections will be constructed that can be easily installed in the plenum chamber of the existing transonic test section. Completion scheduled for 1986 at an estimated cost of $3M. Increased on-site computer capacity scheduled for 1985 at an estimated cost of $0.5M. Extended shift (10-hr day) operation planned for late 1985.

LOCAL INFORMATION CONTACT: Lars H. Öhman, High Speed Aerodynamics Laboratory, NAE, NRC, Ottawa, K1A OR6 (613) 998-3243.

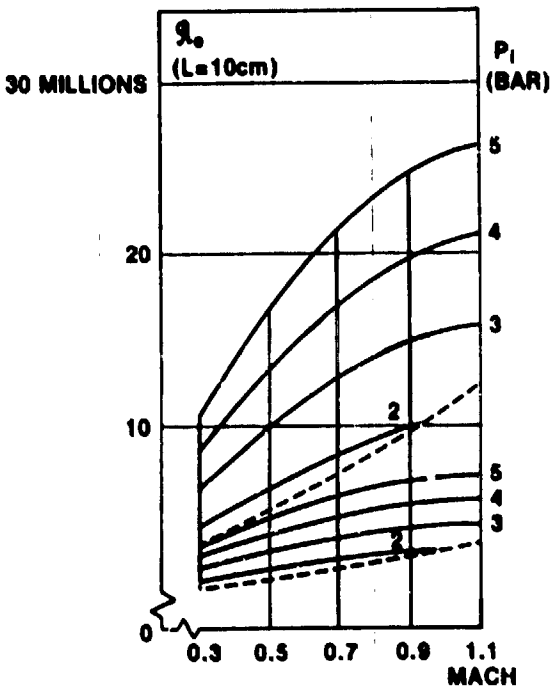


OPERATING ENVELOPE

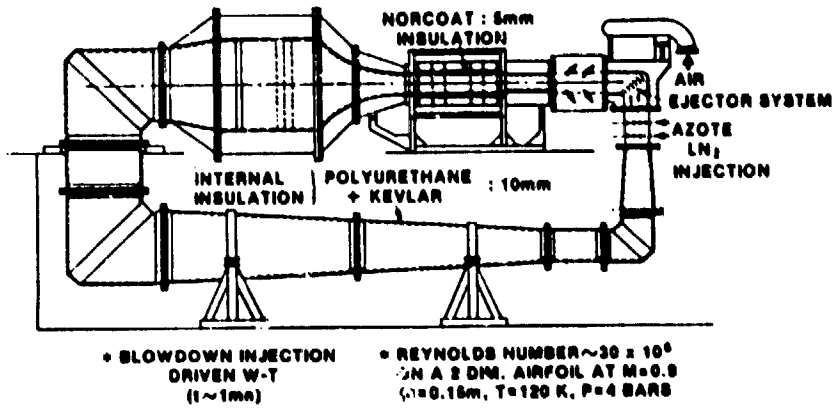

| ONERA/CERT Toulouse Center | TRANSONIC WIND TUNNELS | | COMPARABLE FACILITIES |
|---|---|---|---|
| | TEST SECTION SIZE: 0.4 x 0.4 x 1.6 m | SPEED RANGE: (Mach No.) Up to 0.9 with adaptive walls | 2-D |
| | DATE BUILT/UPGRADED: 1975/1983 | TEMP. RANGE: 300 - 120 K | |
| T - 2 | REPLACEMENT COST: | REYNOLDS NO: (Per m X $10^{-6}$) 51 | |
| | OPERATIONAL STATUS: Operational | DYNAMIC PRES: ($kN/m^2$) | |
| | | STAGNATION PRES: (bars) 1.7 - 5 | |
| | Closed return circuit, ejector driven blowdown tunnel (run duration: 1 min); adaptive walls; cryogenic temperatures through GN2 injection | | |

TESTING CAPABILITIES: Research on two-dimensional wing sections at high Reynolds numbers and negligible walls corrections made with cryogenic temperatures and adaptive walls.

DATA ACQUISITION: Two local computers (HP - 1000) used: (1) for tunnel testing management (precooling of the model, model injection in the test section, starting and control of the air-driven ejector system and of the liquid nitrogen, etc.); and (2) for data acquisition.

CURRENT PROGRAMS: Basic 2 Dim tests on calibration models (CAST 7 and 10) including Reynolds number effects through stagnation pressure and temperature variations.

PLANNED IMPROVEMENTS: GN2 driven ejector system and lower ambient humidity.

LOCAL INFORMATION CONTACT: Dr. R. Michel Cert/Derat, BP 4025 - 31055 Toulouse Cedex, France, (61) 25 21 88, Telex 521 596 F ONECERT.

| DFVLR Braunschweig, Germany (FRG) | TRANSONIC WIND TUNNELS | | COMPARABLE FACILITIES |
|---|---|---|---|
| | TEST SECTION SIZE: 0.34 - 0.60 m | SPEED RANGE: (Mach No.) 0.3 - 0.95 | 2-D |
| | DATE BUILT/UPGRADED: 1965/1972 | TEMP. RANGE: 250 - 270 K | |
| Transonic Tunnel (TWB) | REPLACEMENT COST: | REYNOLDS NO: (Per m X $10^{-6}$) 12 - 85 | |
| | OPERATIONAL STATUS: 1 shift per day | DYNAMIC PRES: ($kN/m^2$) 10 - 50 | |
| | | STAGNATION PRES: (bars) 1.4 - 5.6 | |
| | Blowdown, transonic test section with slotted top and bottom walls, open-area ratio of 2.35% | | |

TESTING CAPABILITIES: Two-dimensional test section for airfoil chord lengths up to 250 mm. Measurement of airfoil surface pressures; top and bottom wall pressures and wake measurements. Flow visualization by color schlieren method.

DATA ACQUISITION: Multiport pressure measurement system with 192 transducers. On-line data reduction.

CURRENT PROGRAMS: Testing of transonic airfoil designs, especially for transport aircraft, helicopter, and propeller blades.

PLANNED IMPROVEMENTS: Installation of adaptive walls (2D).

LOCAL INFORMATION CONTACT: Dr. Gerhard Kausche, DFVLR Windtunnel Division, Flughafen, D-3300 Braunschweig, (0531-395-2450).

| KHI, Japan | TRANSONIC WIND TUNNELS | | COMPARABLE FACILITIES |
|---|---|---|---|
| | TEST SECTION SIZE: 0.4 x 0.1 x 1 m | SPEED RANGE: (Mach No.) 0.4 - 1.2 | 2-D |
| | DATE BUILT/UPGRADED: 1976 | TEMP. RANGE: Ambient | |
| Two-Dimensional Wind Tunnel | REPLACEMENT COST: N/A | REYNOLDS NO: (Per ft X $10^{-6}$) 4.6 - 14.4 | |
| | OPERATIONAL STATUS: 1 shift per day | DYNAMIC PRES: (lb/ft$^2$) 2.2 - 17.7 | |
| | | STAGNATION PRES: (psia) 0.16 - 0.3 | |
| | Blowdown, run time: 15 - 20 sec | | |

TESTING CAPABILITIES: Pressure measurement and schlieren photography.

DATA ACQUISITION: On-line 40-channel data acquisition system.

CURRENT PROGRAMS: Fundamental research of airfoils.

PLANNED IMPROVEMENTS:

LOCAL INFORMATION CONTACT: Takashi Miyatake, Manager, Aerodynamic Engineering Section, (0583) 82-5111.

| National Aerospace Laboratory Tokyo, Japan | TRANSONIC WIND TUNNELS | | COMPARABLE FACILITIES |
|---|---|---|---|
| | **TEST SECTION SIZE:** 39.4 x 11.8 in | **SPEED RANGE:** (Mach No.) 0.2 - 1.15 | 2-D |
| | **DATE BUILT/UPGRADED:** 1979 | **TEMP. RANGE:** Ambient | |
| RENO | **REPLACEMENT COST:** Original cost: $6.26M | **REYNOLDS NO:** (Per ft X $10^{-6}$) 49 at Mach 0.8 | |
| | **OPERATIONAL STATUS:** 1 shift per day | **DYNAMIC PRES:** (lb/ft$^2$) 7200 (max) | |
| | | **STAGNATION PRES:** (psia) 28.4 - 170.6 | |
| | Intermittent blowdown, 2-D test section with slotted upper and lower walls and solid sidewalls, running time of 9 - 100 sec. Model size: Chord length of 9.84 in | | |

TESTING CAPABILITIES: An angle-of-attack range is from -15° to 25°. Measurement of pressure distribution on the model and wake survey is conducted. A pair of 0.25-m diameter glass windows mounted on sidewalls provides optical observation. Tunnel operation is automated and controlled by one person.

DATA ACQUISITION: Forty-eight analog channels and twelve digital channels of data can be recorded on the data acquisition system with HP-2113B minicomputer and reduced immediately after the tunnel run.

CURRENT PROGRAMS: Development tests on transonic wing section are being carried out.

PLANNED IMPROVEMENTS:

LOCAL INFORMATION CONTACT:

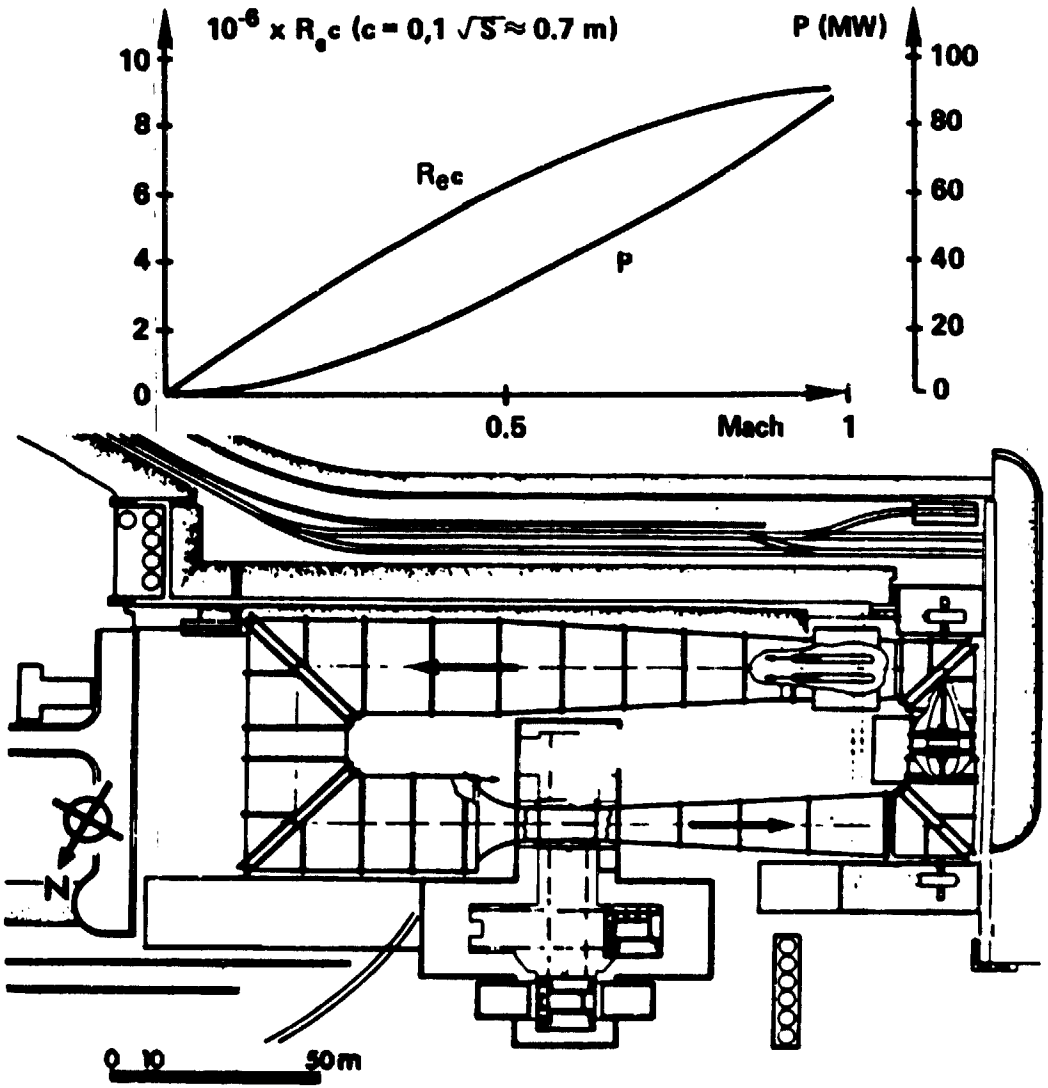
$10^{-6} \times R_e c$ ($c = 0{,}1\sqrt{S} \approx 0.7$ m)
P (MW)
10
8
6
4
2
0
100
80
60
40
20
0
$R_{ec}$
P
0.5
Mach
1
N
0 10 50m

| | TRANSONIC WIND TUNNELS | | COMPARABLE FACILITIES |
|---|---|---|---|
| ONERA Modane, France | TEST SECTION SIZE: 8-m dia | SPEED RANGE: (Mach No.) Up to 1 Lowest speed (2.5 m/sec) | 3-$D_1$ |
| | DATE BUILT/UPGRADED: 1952 | TEMP. RANGE: 263 - 333 K | |
| S1 MA | REPLACEMENT COST: | REYNOLDS NO: (Per m X $10^{-6}$) 13.5 | |
| | OPERATIONAL STATUS: 1 or 2 shifts | DYNAMIC PRES: ($kN/m^2$) 0 - 33 | |
| | | STAGNATION PRES: (bars) 0.91 | |
| | Continuous flow; 3 interchangeable test sections, cooling by atmospheric air exchange; 88 MW (2 fans) maindrive powered by water turbines | | |

TESTING CAPABILITIES: All conventional aerodynamic measurements on large scale (up to full scale) complete- or half-models including flow survey, wake, and boundary layers measurements. Basic sting support varies angle-of-attack 40° and sideslip ±10°, and turntables up to 360°. Jet engines, full-scale missiles, powered models by air and TPS (60 b, up to 25 kg/sec; basic: 10 kg/sec), propellers (900 kW), and helicopter rotor test rig (550 kW). Air intake measurements; unsteady testing; icing and deicing (in winter); flight mechanic rig, canopy ejection, store launching, parachute, canopy rain visibility, and engine noise.

1st cart: 4 walls added for a reduced semirectangular (H: 6,3; L: 6,7) slotted (4 slots in "corners") test section mainly devoted to high angle-of-attack large combat transonic aircraft and large half-models
2nd cart: Devoted to low-speed tests (150 m/sec). Equipped with a ground floor using boundary-layer bleed
3rd cart: Store launching, icing, propellers and helicopter rotors, large commercial aircraft, engines, and missiles

DATA ACQUISITION: Global forces, local forces, pressures (individual, scanned, unsteady) temperature displacements, deformation, flow, and skin visualizations. Basically 64 analog and digital channels, extension possible with steady or unsteady channels, possibility of very high speed PCM. Local HP-1000 computer for data acquisition and testing devices survey. Local real-time computation by VAX-782.

CURRENT PROGRAMS: Civil aircraft, combat aircraft development, and performance control. Engine, propellers, and helicopter tests; engine and missiles full-scale tests; structures compartment; and nonaeronautic tests.

PLANNED IMPROVEMENTS: Continuous increase of computer-controlled testing devices and improvement of instrumentation.

LOCAL INFORMATION CONTACT: M. Giachetto, ONERA, Centre de Modane-Avrieux, BP 25-73 500 Modane, France.

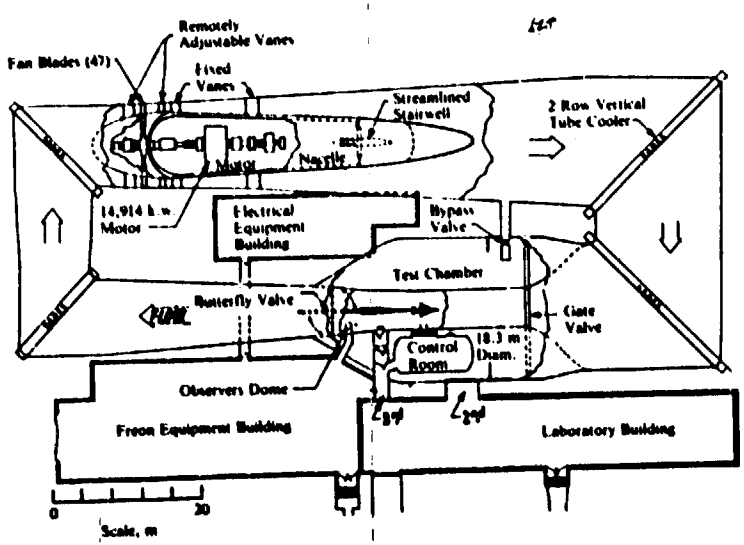


NASA Langley Transonic Dynamics Tunnel

**Performance Envelope**

50 Percent Density Increase

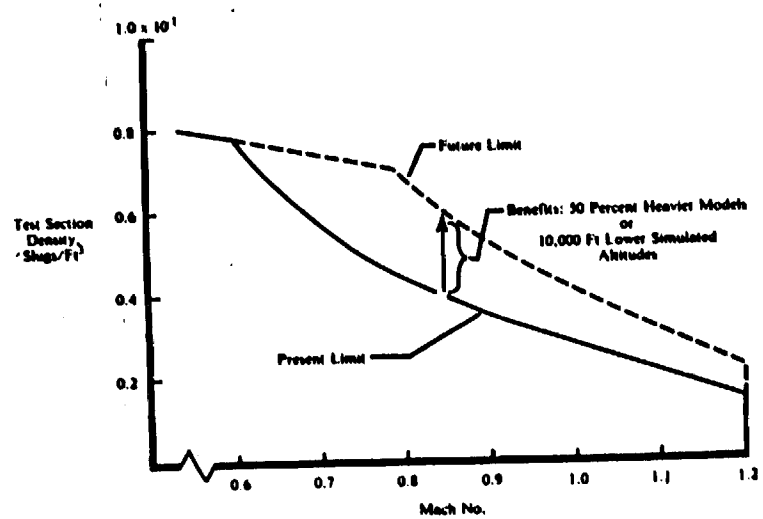

| NASA–Langley Research Center | TRANSONIC WIND TUNNELS | | COMPARABLE FACILITIES |
|---|---|---|---|
| | TEST SECTION SIZE: 16 x 16 x 30 ft | SPEED RANGE: (Mach No.) 0 - 1.2 | $3\text{-}D_1$ |
| | DATE BUILT/UPGRADED: 1959/1980/1983 | TEMP. RANGE: Ambient - 590°R | |
| Transonic Dynamics Tunnel (TDT) | REPLACEMENT COST: $57M | REYNOLDS NO: (Per ft X $10^{-6}$) (Air) 2.8 (Freon 12) 8.5 | |
| | OPERATIONAL STATUS: 1.5 shifts per day (backlog) | DYNAMIC PRES: ($lb/ft^2$) 0 - 350 | |
| | | STAGNATION PRES: (psia) 2.94 - 14.7 | |
| | Test medium: Freon 12 or air<br>Continuous flow, closed circuit, variable density pressure, free flight capability, low dynamic pressure per unit $R_N$, slotted throat, single return | | |

TESTING CAPABILITIES: Dedicated to aeroelasticity research, the TDT can test cable mounted, sidewall mounted, sting mounted, or floor mounted models. Using any of the four basic model support systems, it is capable of testing dynamic models of sufficient size to allow simulation of important structural properties of airplanes, rotorcraft, and spacecraft. The tunnel has gust simulation capability.

DATA ACQUISITION: An on-site data acquisition system with 250 channels enhances the dynamic aspects of the facility by providing almost real-time data acquisition and data reduction.

PLANNED IMPROVEMENTS: Fiscal Year 1983 - Increase density capability by 50% at transonic Mach numbers. R&D Fiscal Year 1983 - Replace data acquisition system with modernized system having real-time data acquisition, display, and Fiscal Year 1984 analyses capabilities.

CURRENT PROGRAMS:

LOCAL INFORMATION CONTACT: Robert V. Doggett, Jr., Head, Configuration Aeroelasticity Branch, (ext. 2661). Alternate: Bryce M. Kepley, (ext. 2661).

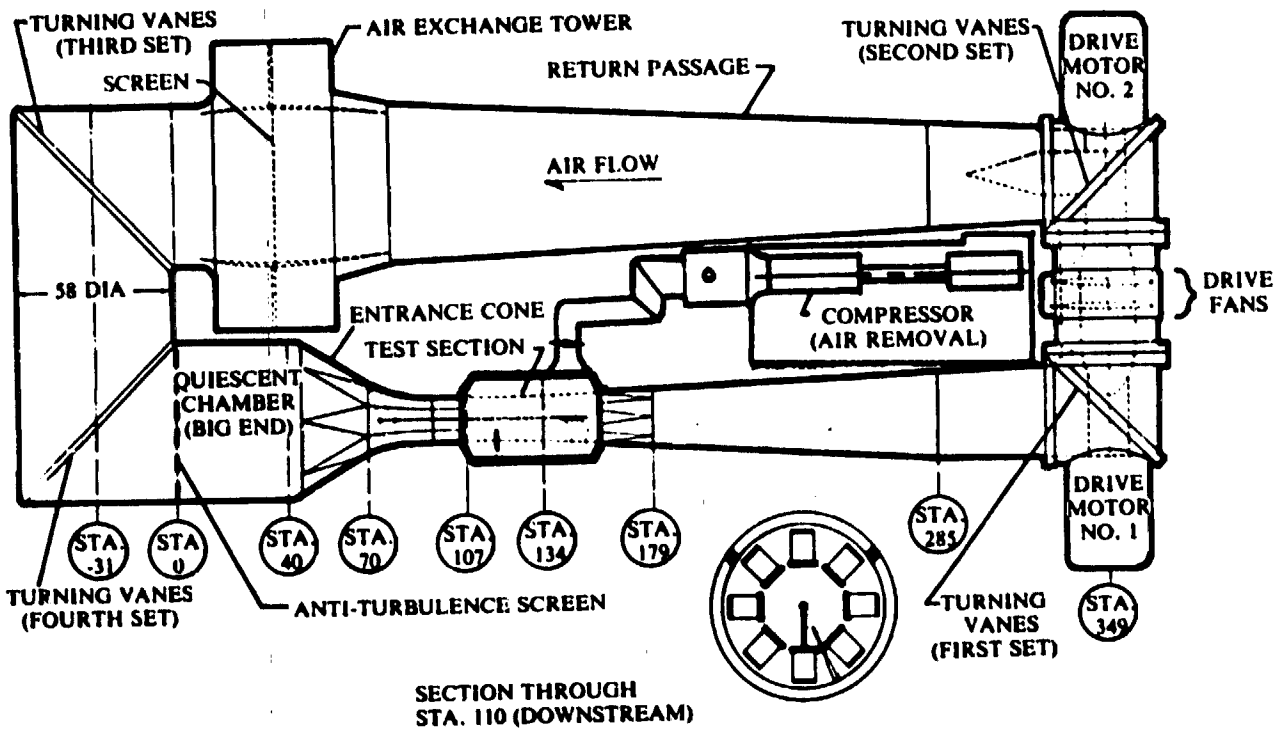
TURNING VANES
(THIRD SET)
SCREEN
AIR EXCHANGE TOWER
RETURN PASSAGE
TURNING VANES
(SECOND SET)
DRIVE
MOTOR
NO. 2
AIR FLOW
58 DIA
ENTRANCE CONE
TEST SECTION
COMPRESSOR
(AIR REMOVAL)
DRIVE
FANS
QUIESCENT
CHAMBER
(BIG END)
STA. -31
STA 0
STA. 40
STA. 70
STA. 107
STA. 134
STA. 179
STA. 285
DRIVE
MOTOR
NO. 1
TURNING VANES
(FOURTH SET)
ANTI-TURBULENCE SCREEN
TURNING
VANES
(FIRST SET)
STA. 349
SECTION THROUGH
STA. 110 (DOWNSTREAM)

| NASA–Langley Research Center | TRANSONIC WIND TUNNELS | | COMPARABLE FACILITIES |
|---|---|---|---|
| | **TEST SECTION SIZE:** 15.5 x 15.5 x 8 to 22 ft | **SPEED RANGE:** (Mach No.) 0.2 - 1.3 | $3\text{-}D_1$ |
| | **DATE BUILT/UPGRADED:** 1941/1975/1985 | **TEMP. RANGE:** 510° - 650°R | |
| 16-Ft Transonic Wind Tunnel | **REPLACEMENT COST:** $83M | **REYNOLDS NO:** (Per ft X $10^{-6}$) 1.2 - 4.2 | |
| | **OPERATIONAL STATUS:** 2 shifts per day (backlog) | **DYNAMIC PRES:** (lb/ft$^2$) 57 - 905 | |
| | | **STAGNATION PRES:** (psia) Atmospheric | |
| | Continuous flow, closed circuit, single return, slotted octagonal test section, propulsion, simulation capability, slotted throat<br>Test medium: Air | | |

TESTING CAPABILITIES: This tunnel is used for force, moment, pressure, and propulsion-airframe integration studies. Model mounting consists of sting, sting-strut, and fixed-strut arrangements. Propulsion simulation studies can be made using dry, cold, high-pressure air. The high-pressure (15 lb/sec at 1000 psi) air system and model mounting ground test stand. The test-section length is 22 ft for speeds up to Mach number 1.0 and 8 ft for speeds above Mach number 1.0. The tunnel is equipped with an air exchanger with adjustable intake and exit vanes to provide some temperature control. This facility has a main drive of 60 000 hp. A 36 000-hp compressor provides test-section plenum suction.

DATA ACQUISITION: Data are recorded with 128 channels of input on a MODCOMP Classic Data Acquisition/Reduction System in real-time operational mode.

CURRENT PROGRAMS: Program activities are intended to study propulsion integration characteristics for advanced aircraft, including inlet and nozzle integration for fighter aircraft; pylon and nacelle integration for turbofan and turboprop transport aircraft.

PLANNED IMPROVEMENTS: Fiscal Year 1985 - Modifications to 16-ft Transonic Tunnel for improved productivity and research capability; Fiscal Year 1986 - Repairs to remove loose paint and recoat the tunnel interior.

LOCAL INFORMATION CONTACT: Charles E. Mercer, Propulsion Aerodynamics Branch, (804) 865-2674.

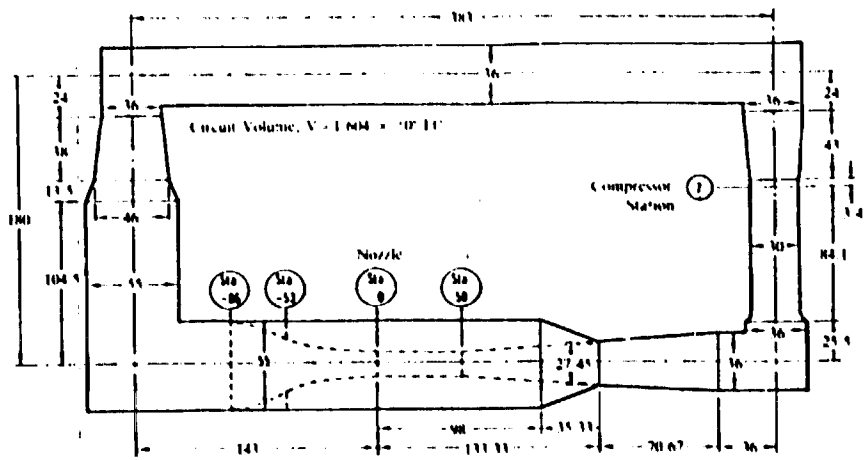


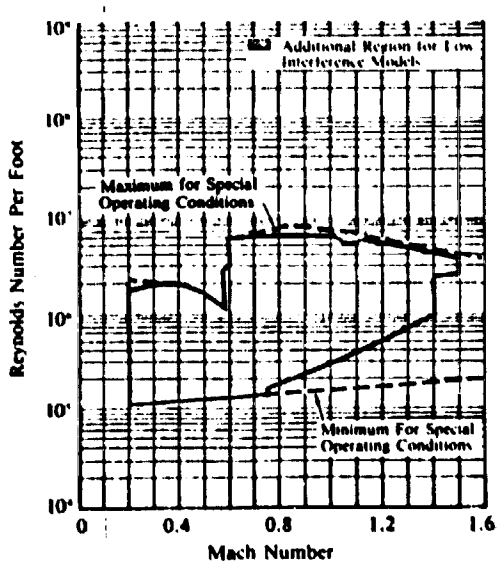


| | |
|---|---|
| Mach Range: | 0.2 - 1.6 |
| Reynolds Number (× 10⁶/ft): | 0.1 - 7.5 |
| Total Pressure (Psia): | 0.83 - 27.8 |
| Dynamic Pressure (psf): | 3.3 - 1300 |
| Total Temperature (°F): | 410 - 620 |
| Run Time: | Continuous |

| | TRANSONIC WIND TUNNELS | | COMPARABLE FACILITIES |
|---|---|---|---|
| Arnold Engineering Development Center | TEST SECTION SIZE: 16 x 16 x 40 ft | SPEED RANGE: (Mach No.) 0 - 1.6 | $3\text{-}D_1$ |
| | DATE BUILT/UPGRADED: 1952 | TEMP. RANGE: 540° - 620°R | |
| 16-Ft Transonic Propulsion Wind Tunnel (16T) | REPLACEMENT COST: $300M | REYNOLDS NO: (Per ft X $10^{-6}$) 0.1 - 6.0 | |
| | OPERATIONAL STATUS: Active, heavily scheduled | DYNAMIC PRES: (lb/ft$^2$) 1.0 - 1000 | |
| | | STAGNATION PRES: (psia) 3 - 26.3 | |
| | Closed circuit, single return, variable density, continuous flow, free drop, propellant scavenging<br>Special feature: Propulsion | | |

TESTING CAPABILITIES: The tunnel is used for both aerodynamic and propulsion decelerator deployment system testing. For aerodynamic testing, the tunnel is used for force and moment, pressure, dynamic stability, decelerator deployment, internal duct flow, jet effects, and flutter buffet tests. Full-scale tests of operating propulsion systems permit investigations of engine operations in conjunction with their inlets and controls. Removable test sections are contained in 2 test carts that can be transported to a remote model installation building for test article build-up. The test section is equipped with inclined-hole perforated walls. Supersonic conditions are provided by movable sidewall flexible nozzle plates positioned by 15 pairs of electrically driven actuators. The tunnel is equipped with a scavenging scoop aft of the test sections for exhausting engine combustion products. Auxiliary air up to 90 lb/sec at 2900 psi is available for cold flow jet simulation testing.

DATA ACQUISITION: Digital Equipment Corporation DEC-10 for supervisory control and data management, DEC PDP-15 digital data acquisition system, Computer Automation LSI-2 as digital multiplexer and control, PDP 11/34 digital pressure system, Vector General DD2 graphics system, and Amdahl 5860 central computer.

CURRENT PROGRAMS:

PLANNED IMPROVEMENTS: PDP 11/60 process control 1984, high angle automated sting, captive trajectory store separation system, and flow improvement modifications.

LOCAL INFORMATION CONTACT: Flight Mechanics Directorate, Deputy for Operations, AEDC/DOF, Arnold AFS TN 37389, (615) 455-2611, ext. 5280 or 6051.

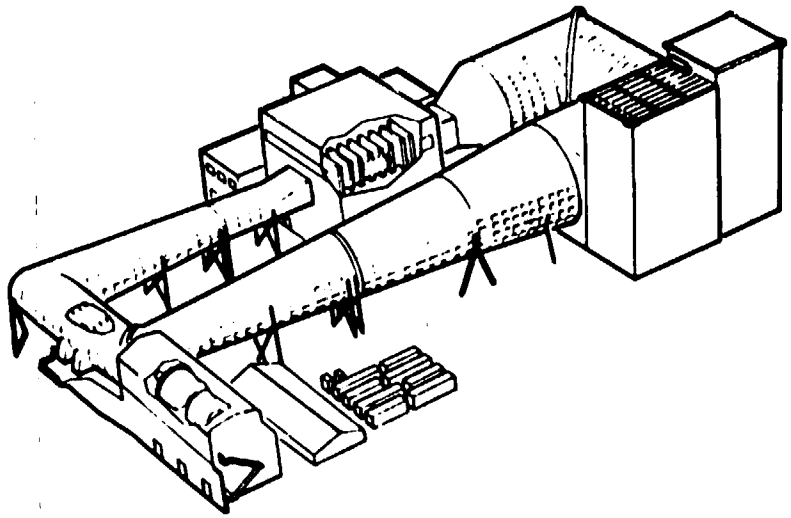

## FACILITY PERFORMANCE DATA

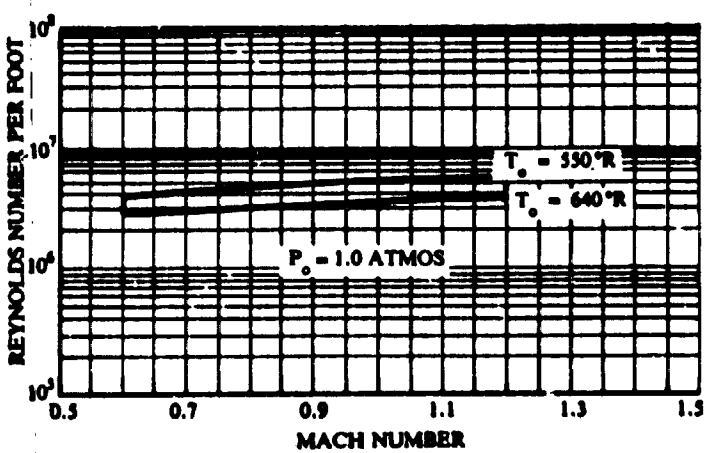

| | TRANSONIC WIND TUNNELS | | COMPARABLE FACILITIES |
|---|---|---|---|
| NASA–Ames Research Center | TEST SECTION SIZE: 13.5 x 13.71 x 33.75 ft | SPEED RANGE: (Mach No.) 0.5 - 1.2 | $3\text{-}D_1$ |
| | DATE BUILT/UPGRADED: 1956 | TEMP. RANGE: 550° - 640°R | |
| 14-Ft Transonic Wind Tunnel | REPLACEMENT COST: $58M | REYNOLDS NO: (Per ft X $10^{-6}$) 2.6 - 4.2 | |
| | OPERATIONAL STATUS: Standby | DYNAMIC PRES: ($lb/ft^2$) 320 - 885 | |
| | | STAGNATION PRES: (psia) 14.70 | |
| | Closed circuit, single return, atmospheric, continuous flow wind tunnel | | |

TESTING CAPABILITIES: The facility is used primarily for performance and stability and control testing of aircraft configurations. For conventional steady-state testing, models are supported on a cantilevered sting via a strut with variable pitch capability. A turntable is also available for semispan models. Internal strain-gage balances are used for force and moment testing. Temperature-controlled auxiliary high-pressure (3000 psi) air is available.

DATA ACQUISITION: Currently, data are acquired through a Data General NOVA computer system and processed through an IBM 4341 central computer. Analog input data can be recorded on 128 channels with a maximum total sample rate of 300 000 samples per second. Digital input data can be recorded on an additional 48 channels.

CURRENT PROGRAMS: Turboprop Development and Aero Optics Tests.

PLANNED IMPROVEMENTS: Upgrade data acquisition system and computing for commonality with other Ames facilities ($400K).

LOCAL INFORMATION CONTACT: Daniel P. Bencze, Chief, Experimental Investigations Branch, (415) 965-5848 or William Hofstetter, (415) 965-5875.

## SCHEMATIC

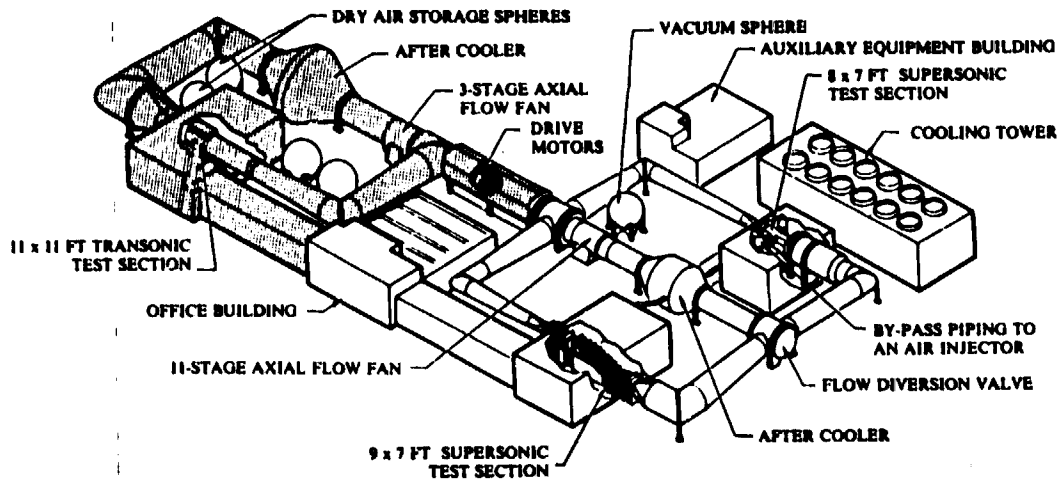


## FACILITY PERFORMANCE DATA

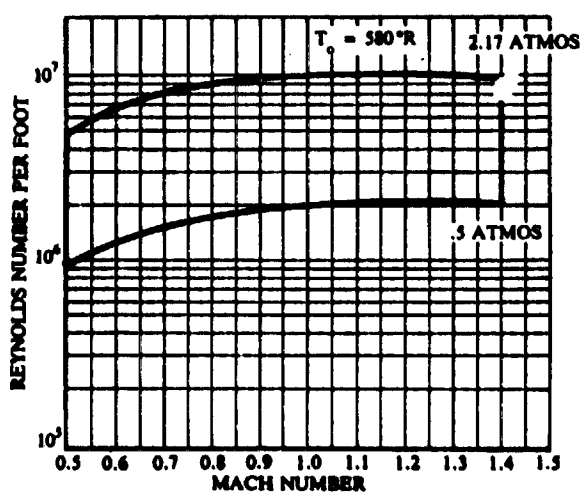

| | TRANSONIC WIND TUNNELS | | COMPARABLE FACILITIES |
|---|---|---|---|
| NASA–Ames Research Center | TEST SECTION SIZE: 11 x 11 x 22 ft | SPEED RANGE: (Mach No.) 0.4 - 1.4 | $3\text{-}D_1$ |
| | DATE BUILT/UPGRADED: 1956 | TEMP. RANGE: 530° - 585°R | |
| 11-Ft Transonic Wind Tunnel | REPLACEMENT COST: $146M for Unitary Plan Tunnels | REYNOLDS NO: (Per ft X $10^{-6}$) 1.26 - 9.4 | |
| | OPERATIONAL STATUS: 3 shifts per day, Unitary Plan Wind Tunnels | DYNAMIC PRES: (lb/ft$^2$) 150 - 2000 | |
| | | STAGNATION PRES: (psia) 7.35 - 31.9 | |
| | Closed circuit, single return, variable density, continuous flow wind tunnel. Interchangeability of models between Unitary test sections allows testing across wide range of conditions | | |

TESTING CAPABILITIES: This tunnel is part of the Unitary Plan Tunnel complex consisting of three legs and test sections. Only one tunnel can be operated at a time. The tunnel is used primarily for force, moment, and pressure tests of aircraft configurations or specific aircraft components. Limited aeroacoustic and nonsteady aerodynamic tests are conducted. Internal strain-gage balances are used for measuring forces and moments. The support strut has simultaneous variable pitch and yaw capability (±15°). A floor support and balance is available for semispan testing. Facilities for measuring multiple steady or fluctuating pressures are available. Temperature-controlled auxiliary air (3000 psi) is available with flow capability to 50 lb/sec (at 1500 psi) each of two separately controllable systems.

DATA ACQUISITION: Data are acquired through Teledyne equipment using Programmable Amplifier/Filter Units (PAFUs). Pressures can be recorded using conventional scanivalves or Electronic Scanners of Pressures (ESOPs). Analog input data can be recorded on 250 channels with a maximum total sample rate of 60 000 channels per second. Digital input data can be recorded on an additional 32 channels. Some real-time processing is available through a DEC PDP 11/70 computer. Main computations are performed through a centrally located IBM 4341. In 1985, data will be processed through a DEC/VAX stand-alone computer.

CURRENT PROGRAMS: Space vehicle refinements, NASA V/STOL Configuration development, and DOD aircraft development commercial transport development.

PLANNED IMPROVEMENTS: Improve graphics display systems and model buildup facilities. Increase data acquisition rate to 125 000 samples per second.

LOCAL INFORMATION CONTACT: Daniel P. Bencze, Chief, Experimental Investigations Branch, (415) 965-5848.

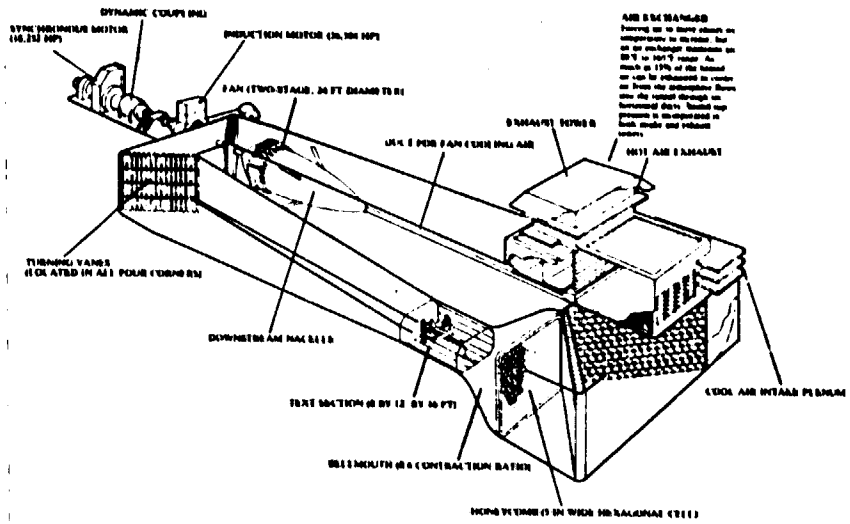
DYNAMIC COUPLING
INDUCTION MOTOR
FAN (TWO-STAGE, 24 FT DIAMETER)
EXHAUST TOWER
HOT AIR EXHAUST
TURNING VANES
(LOCATED IN ALL FOUR CORNERS)
DOWNSTREAM NACELLE
COOL AIR INTAKE PLENUM
BELLMOUTH (8:1 CONTRACTION RATIO)
HONEYCOMB (5 IN WIDE HEXAGONAL CELL)

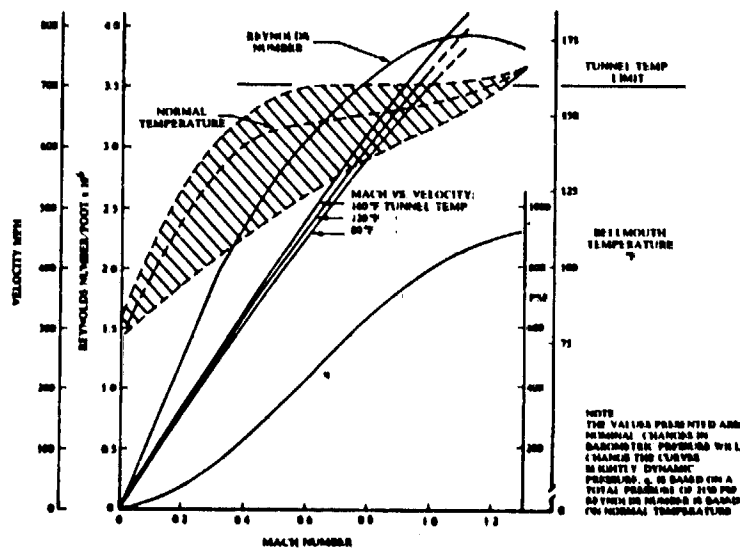
REYNOLDS NUMBER
NORMAL TEMPERATURE
TUNNEL TEMP LIMIT
MACH VS VELOCITY:
140°F TUNNEL TEMP
120°F
80°F
BELLMOUTH TEMPERATURE °F
VELOCITY MPH
REYNOLDS NUMBER/FOOT x 10^6
MACH NUMBER
NOTE
THE VALUES PRESENTED ARE NOMINAL CHANGES IN BAROMETRIC PRESSURE WILL CHANGE THE CURVES SLIGHTLY. DYNAMIC PRESSURE, q, IS BASED ON A TOTAL PRESSURE OF 2150 PSF. REYNOLDS NUMBER IS BASED ON NORMAL TEMPERATURE

| Boeing Commercial Airplane Co. Seattle, Wash. | TRANSONIC WIND TUNNELS | | COMPARABLE FACILITIES |
|---|---|---|---|
| | TEST SECTION SIZE: 8 x 12 x 14.5 ft | SPEED RANGE: (Mach No.) 0 - 1.15 | $3\text{-}D_2$ |
| | DATE BUILT/UPGRADED: 1944/1953/1968/1980 | TEMP. RANGE: 540° - 620°R | |
| Transonic Wind Tunnel | REPLACEMENT COST: $50M | REYNOLDS NO: (Per ft X $10^{-6}$) 0 - 4 | |
| | OPERATIONAL STATUS: 3 shifts per day | DYNAMIC PRES: (lb/ft$^2$) 0 - 900 | |
| | | STAGNATION PRES: (psia) Atmospheric | |
| | Closed circuit, single return, continuous flow | | |

TESTING CAPABILITIES: Models can be sting, plate, or floor mounted. Force and moment data can be obtained using internal strain-gage balances (sting mount) or the 6-component main external force and moment balance (plate and floor mount). Auxiliary equipment consists of 8 lb/sec at 300 psi and 20 lb/sec at 1000 psi air supplies, turbo-powered simulator to provide engine thrust, two shadowgraph systems to show Mach waves, Laser Angle Meter (LAM) to measure angle of attack, and various probes to measure tunnel characteristics. This facility is powered by a 2-stage fan with 36 fixed pitch rotor blades for each stage and 33 stator blades after each set of rotor blades, and driven by a 36 000-hp induction motor and a 18 000-hp synchronous motor.

DATA ACQUISITION: Two hundred channels of data with a sampling rate of 1000 samples per channel per second can be recorded, and fully reduced data plots can be displayed on three graphic scopes with hard copies of both plots and tabulations being made almost immediately. The system is controlled by the Digital Equipment Corporation PDP 11/70 computer.

CURRENT PROGRAMS: Main research is directed at the study of aerodynamic characteristics and their improvement for advanced commercial and military aircraft, both propeller and jet powered.

PLANNED IMPROVEMENTS: None at this time.

LOCAL INFORMATION CONTACT: Chief of Wind Tunnels, (206) 655-2298.

# Schematic

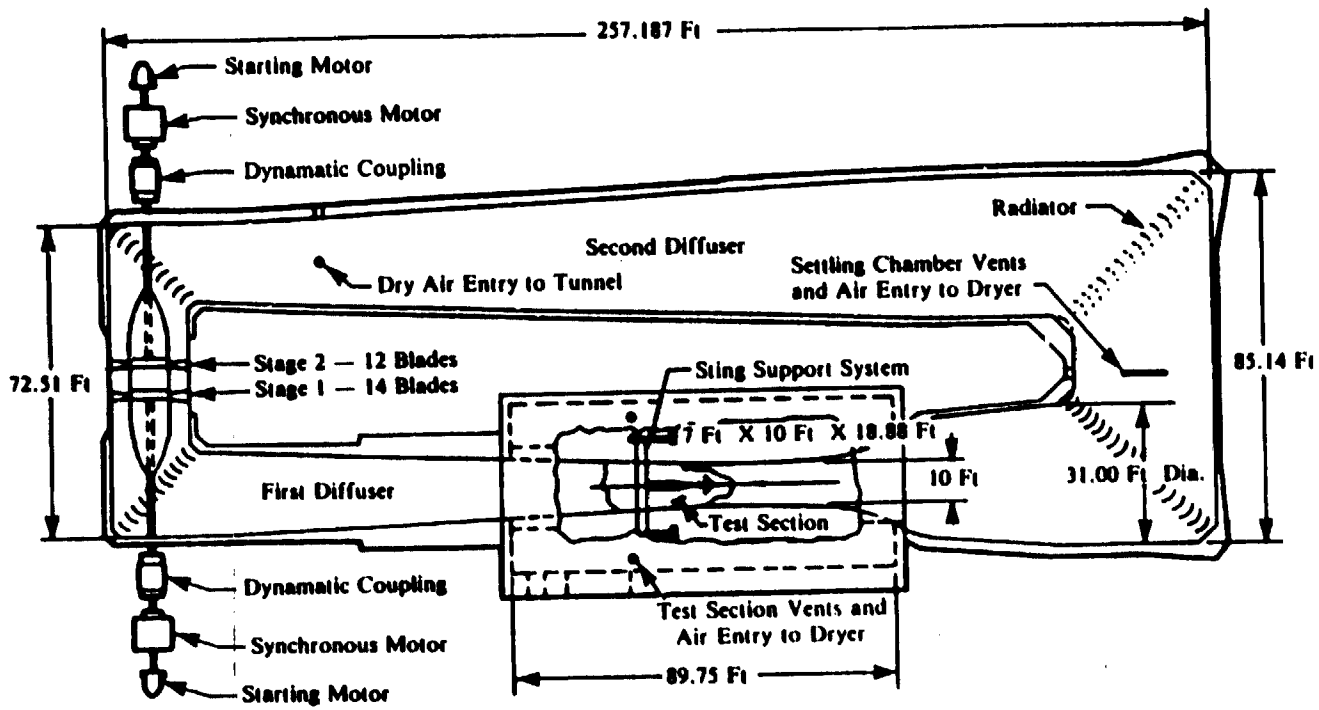
257.187 Ft
Starting Motor
Synchronous Motor
Dynamatic Coupling
Radiator
Second Diffuser
Dry Air Entry to Tunnel
Settling Chamber Vents
and Air Entry to Dryer
72.51 Ft
Stage 2 — 12 Blades
Stage 1 — 14 Blades
Sting Support System
85.14 Ft
7 Ft X 10 Ft X 18.88 Ft
10 Ft
31.00 Ft Dia.
First Diffuser
Test Section
Dynamatic Coupling
Test Section Vents and
Air Entry to Dryer
Synchronous Motor
89.75 Ft
Starting Motor

| David Taylor Naval Ship R&D Center (DTNSRDC) | TRANSONIC WIND TUNNELS | | COMPARABLE FACILITIES |
|---|---|---|---|
| | TEST SECTION SIZE: 7 x 10 x 19 ft | SPEED RANGE: (Mach No.) 0.25 - 1.17 | $3\text{-}D_2$ |
| | DATE BUILT/UPGRADED: 1956/1979/1983 | TEMP. RANGE: 530° - 610°R | |
| 7 x 10-Ft Transonic Wind Tunnel | REPLACEMENT COST: $25M | REYNOLDS NO: (Per ft X $10^{-6}$) 1 - 5 | |
| | OPERATIONAL STATUS: 1 shift per day | DYNAMIC PRES: ($lb/ft^2$) 50 - 900 | |
| | | STAGNATION PRES: (psia) 4.4 - 22 | |
| | Closed circuit, continuous flow, variable pressure, captive trajectory<br>Model size: 4 ft long, support system ±3000 lb capacity | | |

TESTING CAPABILITIES: This facility is capable of force and moment, pressure, store separation, two-dimensional airfoil, boundary layer control, aerodynamic flutter, buffet studies, point prediction, and grid techniques for determining separation trajectories; and 5-gang 48-port scanivalve system for pressure test can all be tested at this facility. This tunnel has a main sting-type, support system consisting of a cantilevered boom mounted on a vertical strut that provides remote position of a model in two degrees of freedom. A sting-type missile support system with six remotely controlled degrees of freedom permits the testing of a missile or store in proximity to the parent aircraft allowing store/separation and trajectory prediction tests to be performed. A wide variety of strain-gage balances are available for force testing. A two-dimensional airfoil testing system is also available for use. Windows are provided in the test section sidewalls to permit model observation (visual and/or TV) and photography along with the use of a schlieren system. A 2 lb/sec, 120 psi auxiliary air supply is available, and 20 lb/sec at 3000 psi is available from 4375 $ft^3$ bottle field.

DATA ACQUISITION: Ninety-six analog channels of information can be recorded on a real-time data acquisition system. The system consists of Hewlett-Packard Minicomputer and Preston Amplifiers.

CURRENT PROGRAMS: Static aerodynamics of aircraft, missiles, rotorcraft, store separation (point reduction, grid, and dynamic drops), 2-D airfoil testing, and magnus effects.

PLANNED IMPROVEMENTS: Fiscal Year 1985 - Low-speed test section (12 x 15 ft) in back leg of 7 x 10-ft wind tunnel; Fiscal year 1986 - Computer control drive and model support system.

LOCAL INFORMATION CONTACT: Dale Chaddock, Transonic Wind Tunnel Coordinator, (202) 227-1670.

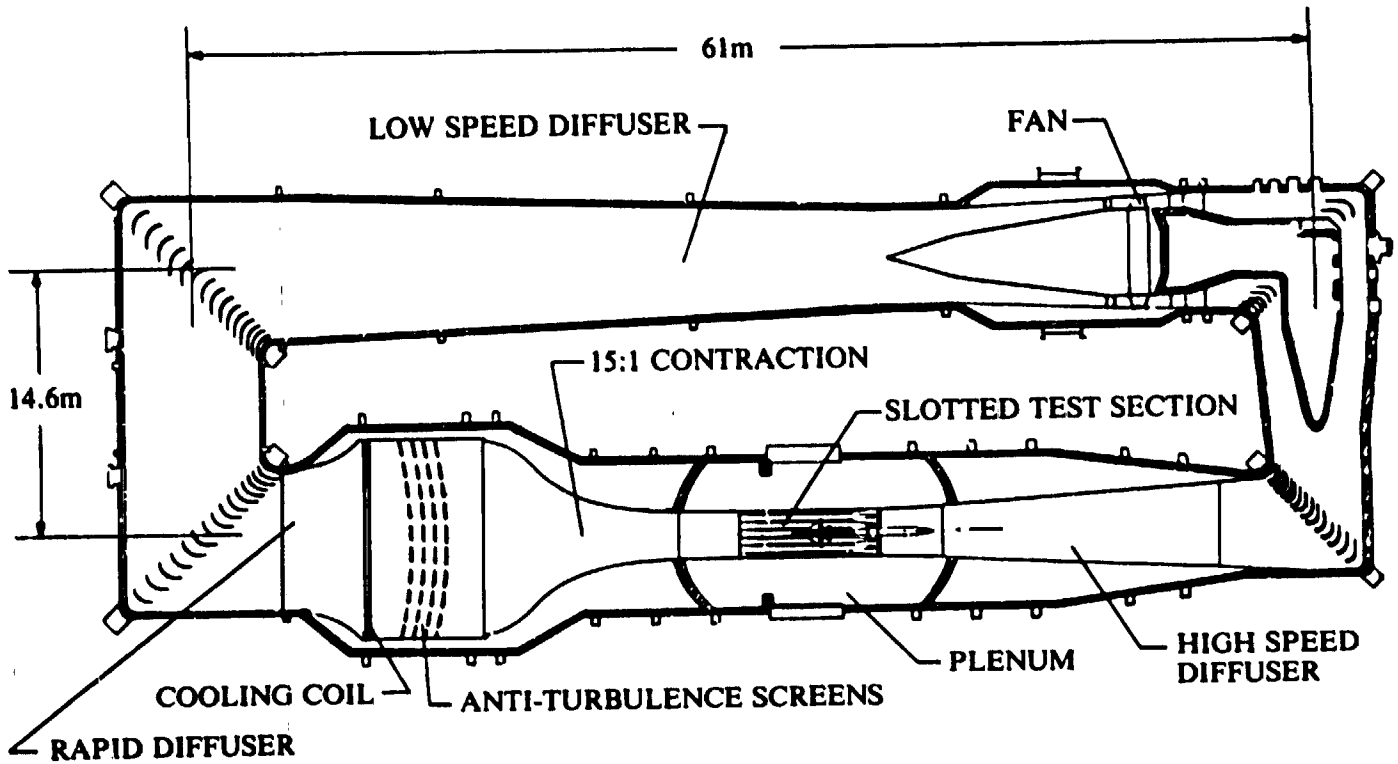
61m
LOW SPEED DIFFUSER
FAN
14.6m
15:1 CONTRACTION
SLOTTED TEST SECTION
PLENUM
HIGH SPEED DIFFUSER
COOLING COIL
ANTI-TURBULENCE SCREENS
RAPID DIFFUSER

| NASA–Langley Research Center | TRANSONIC WIND TUNNELS | | COMPARABLE FACILITIES |
|---|---|---|---|
| | **TEST SECTION SIZE:** 8.2 x 8.2 x 25 ft | **SPEED RANGE:** (Mach No.) 0.2 - 1.2 | $3\text{-}D_2$ |
| | **DATE BUILT/UPGRADED:** New 1982 | **TEMP. RANGE:** 612° - 140°R | |
| National Transonic Facility (NTF) | **REPLACEMENT COST:** $136M | **REYNOLDS NO:** (Per ft X $10^{-6}$) 145 | |
| | **OPERATIONAL STATUS:** 2 shifts per day (backlog) | **DYNAMIC PRES:** (lb/ft$^2$) Up to 7000 | |
| | | **STAGNATION PRES:** (psia) 14.5 - 130 | |
| | Continuous flow, closed circuit, pressurized slotted test section walls, full-scale Reynolds number simulation<br>Test medium: Air and nitrogen | | |

TESTING CAPABILITIES: An aft-mounted sting provides support to three-dimensional models while the model pitch can range from -11° to 19° exit and roll from -180° to 180°. Sideslip angles are achieved by combinations of pitch and roll angles. Available: model assembly and checkout rooms, model carts, model deformation, and angle-of-attack systems.

DATA ACQUISITION: The data system can acquire up to 256 analog channels from a NEFF 200 data acquisition unit and 2560 pressures from 5 electronically scanned pressure measurement systems.

CURRENT PROGRAMS: Currently undergoing facility checkout/shakedown. Facility aerodynamic calibration to commence late in 1983.

PLANNED IMPROVEMENTS: Fiscal Year 1986 - Additional model support will permit pitch angles to ±45°, ±15° yaw, and ±180° roll.

LOCAL INFORMATION CONTACT: W. E. Bruce, Jr., Head, NTF Operations Branch, (804) 865-2701.

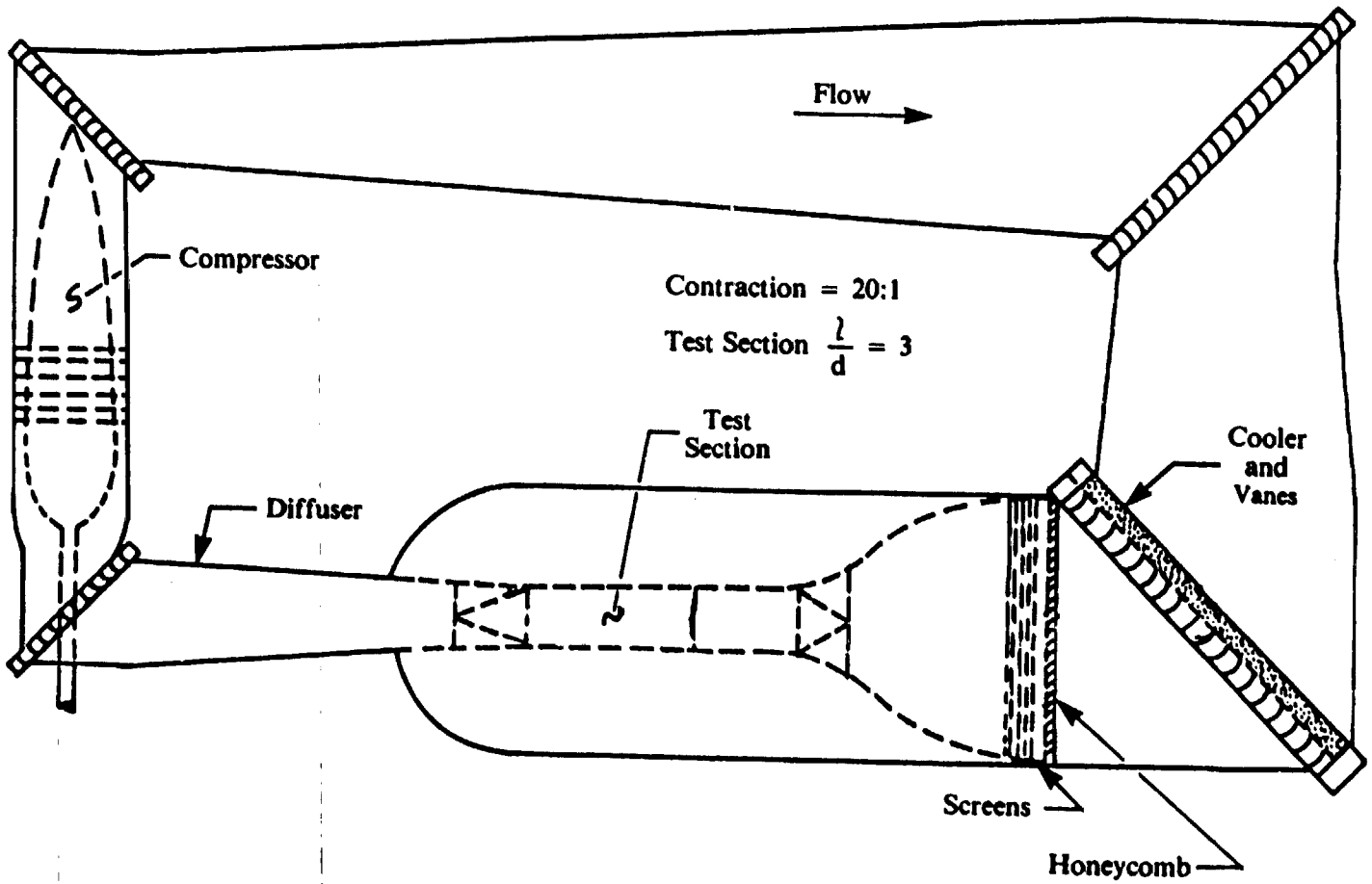
Flow
Compressor
Contraction = 20:1
Test Section $\frac{l}{d}$ = 3
Test Section
Cooler and Vanes
Diffuser
Screens
Honeycomb

| NASA–Langley Research Center | TRANSONIC WIND TUNNELS | | COMPARABLE FACILITIES |
|---|---|---|---|
| | TEST SECTION SIZE: 7.1 x 7.1 x 18 ft | SPEED RANGE: (Mach No.) 0.2 - 1.3 | 3-D$_2$ |
| | DATE BUILT/UPGRADED: 1953/1980 | TEMP. RANGE: 560° - 580°R | |
| 8-Ft Transonic Pressure Wind Tunnel | REPLACEMENT COST: $40M | REYNOLDS NO: (Per ft X $10^{-6}$) 0.1 - 6 | |
| | OPERATIONAL STATUS: 1 shift per day (backlog) | DYNAMIC PRES: (lb/ft$^2$) 6 - 1260 | |
| | | STAGNATION PRES: (psia) 1.5 - 29.5 | |
| | Closed circuit, continuous flow, single return, variable density, slotted throat<br>Test medium: Air | | |

TESTING CAPABILITIES: A sting-type model support system with an angle range of about ±120° and tunnel wall mounts are available. There is a schlieren system for low visualization. The test section is slotted for about 5% porosity in the transonic configuration for which the most extensive calibration exists. The stagnation pressure can be varied from below 0.25 atmosphere at any Mach number to 2.0 atmospheres at the 0.2 Mach number. At the higher Mach numbers, up to 1.3, the pressure is limited by the available power, 25 000 hp. The stagnation temperature is controlled by water-cooled fans upstream of the settling chamber. Tunnel air can be dried to a dew point appropriate to the Mach number by a dryer using silica gel desiccant. Available for powered engines, 350 psi air.

DATA ACQUISITION: Data are acquired through up to 128 channels into a dual MODCOMP acquisition and data reduction system with ESP fast pressure scan capability. ESP currently 960 channels expandable to 1024. Scanivalve capability retained, 1128 channels.

CURRENT PROGRAMS: 2D-swept laminar flow control with special foam liner.

PLANNED IMPROVEMENTS: Fiscal Year 1984 - Replace 6.9 kV switchgear.

LOCAL INFORMATION CONTACT: C. W. Brooks, Jr., Airfoil Aerodynamics Branch, (804) 865-2631.

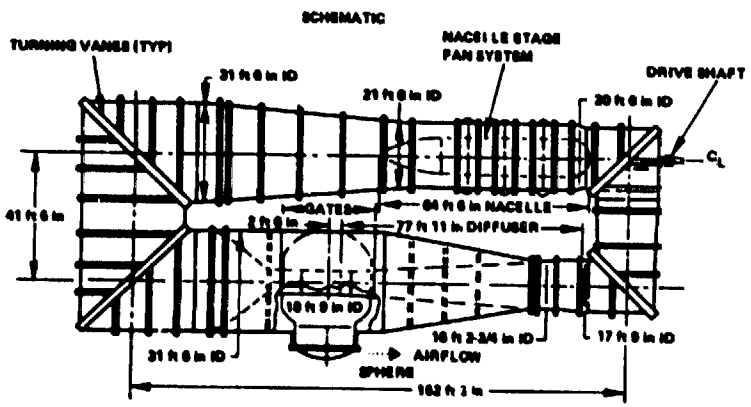
SCHEMATIC
TURNING VANES (TYP)
31 ft 6 in ID
21 ft 6 in ID
NACELLE STAGE
FAN SYSTEM
DRIVE SHAFT
20 ft 6 in ID
$C_L$
41 ft 6 in
GATES
2 ft 6 in
64 ft 6 in NACELLE
77 ft 11 in DIFFUSER
16 ft 9 in ID
16 ft 2-3/4 in ID
17 ft 9 in ID
31 ft 6 in ID
AIRFLOW
SPHERE
162 ft 2 in

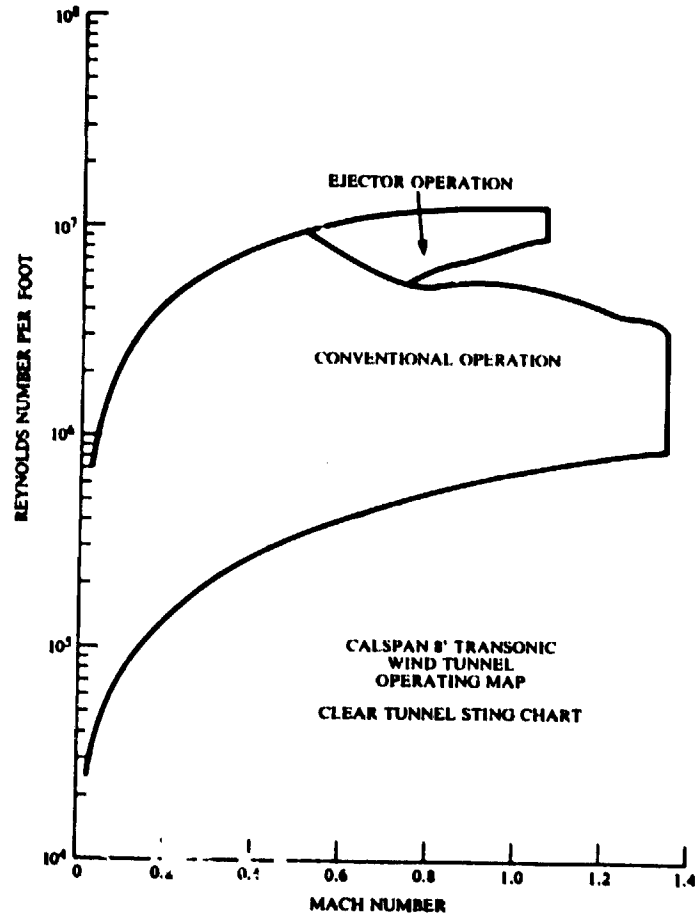
EJECTOR OPERATION
CONVENTIONAL OPERATION
CALSPAN 8' TRANSONIC
WIND TUNNEL
OPERATING MAP
CLEAR TUNNEL STING CHART
REYNOLDS NUMBER PER FOOT
$10^8$
$10^7$
$10^6$
$10^5$
$10^4$
0
0.4
0.6
0.8
1.0
1.2
1.4
MACH NUMBER

| Calspan Corporation Buffalo, NY | TRANSONIC WIND TUNNELS | | COMPARABLE FACILITIES |
|---|---|---|---|
| | **TEST SECTION SIZE:** 8 x 8 x 18.75 ft | **SPEED RANGE:** (Mach No.) 0 - 1.35 | $3\text{-}D_2$ |
| | **DATE BUILT/UPGRADED:** Completed 1947, modernized to transonic 1956 | **TEMP. RANGE:** 520° - 620°R | |
| 8-Ft Transonic Wind Tunnel | **REPLACEMENT COST:** | **REYNOLDS NO:** (Per ft X $10^{-6}$) 0 - 12.5 | |
| | **OPERATIONAL STATUS:** Operational | **DYNAMIC PRES:** (lb/ft$^2$) 0 - 2600 | |
| | | **STAGNATION PRES:** (psia) 1.5 - 47.8 | |
| | Closed circuit, single return, variable density, continuous flow, ejector augmentation for high Reynolds number (limited test time operations) captive trajectory | | |

TESTING CAPABILITIES: Closed circuit, variable density facility with perforated wall transonic test section, and auxiliary axial-flow compressor for plenum evacuation. Interchangeable test section carts provide sting, reflection plane, or blade-mounting capabilities. Ejector augmentation system allows short-duration operation at high Reynolds number ($5 \times 10^6 \rightarrow 12 \times 10^6$ per ft) and transonic Mach numbers. Ejector system also supplies high-pressure air for jet exhaust and powered fan-jet simulations. Six-degree-of-freedom dual sting mechanism is available for store separation studies. Flow visualization techniques include schlieren and oil flow, the latter recorded photographically and in real time on closed-circuit TV and videotape.

DATA ACQUISITION: Fifty channels, including signal conditioning and A/D conversion. Data management by DEC PDP 11/34 minicomputer; data processing by two DEC PDP 11/70 minicomputers. Two Versatec 1200-A electrostatic plotters. Tabulated and plotted data generally available on-line; magnetic tape available at conclusion of test.

CURRENT PROGRAMS: Tunnel available on contract for any appropriate aerodynamic research or development program. Most testing involves performance, stability and control, and loads investigations of commercial and military aircraft configurations, and missiles. Also low-speed, flutter, and fan-jet engine simulation testing; much effort in recent years on store separation studies.

PLANNED IMPROVEMENTS: (1) Renovate reflection plane turntable, (2) PSI multiplexed solid-state pressure instrumentation, (3) additional high-capacity internal strain-gage balances, and (4) significant increase in computer and plotting capacity.

LOCAL INFORMATION CONTACT: Charles Reid, Department Head, Transonic Wind Tunnel, Calspan Corporation, Box 400, Buffalo, NY 14225, (716) 631-6724.

| Aerospace Research Association Bedford, United Kingdom | TRANSONIC WIND TUNNELS | | COMPARABLE FACILITIES |
|---|---|---|---|
| | TEST SECTION SIZE: 8 x 9 ft | SPEED RANGE: (Mach No.) 0 - 1.4 | $3\text{-}D_2$ |
| | DATE BUILT/UPGRADED: 1956 | TEMP. RANGE: Up to 580°R | |
| Transonic Wind Tunnel TWT | REPLACEMENT COST: | REYNOLDS NO: (Per ft X $10^{-6}$) 1.5 - 5.5 | |
| | OPERATIONAL STATUS: 14 hours per day | DYNAMIC PRES: ($lb/ft^2$) 0 - 900 | |
| | | STAGNATION PRES: (psia) 11.8 - 17.6 | |
| | Closed circuit, continuous flow | | |

TESTING CAPABILITIES: Complete models of aircraft and missiles generally with rear-mounted sting. Semispan models with floor mounting, turbine-powered simulators, isolated cowl rig, afterbody rigs, store trajectory simulators, high-pressure air capability, and Mach simulation tank ground test facility for model duct flows and TPS.

DATA ACQUISITION: Sixty-four channels with duplex capability. Up to 100 balance components and up to 24 scanivalves plus various other transducers. Force data can be recorded in continuous or "move and pause" modes. Full on-line processing and display on printer and color graphics.

CURRENT PROGRAM:

PLANNED IMPROVEMENTS: Isolated installed propeller testing (1985) and full computer-controlled model movement (1984).

LOCAL INFORMATION CONTACT: E. C. Carter, Chief Aerodynamicist, (0234 50561).

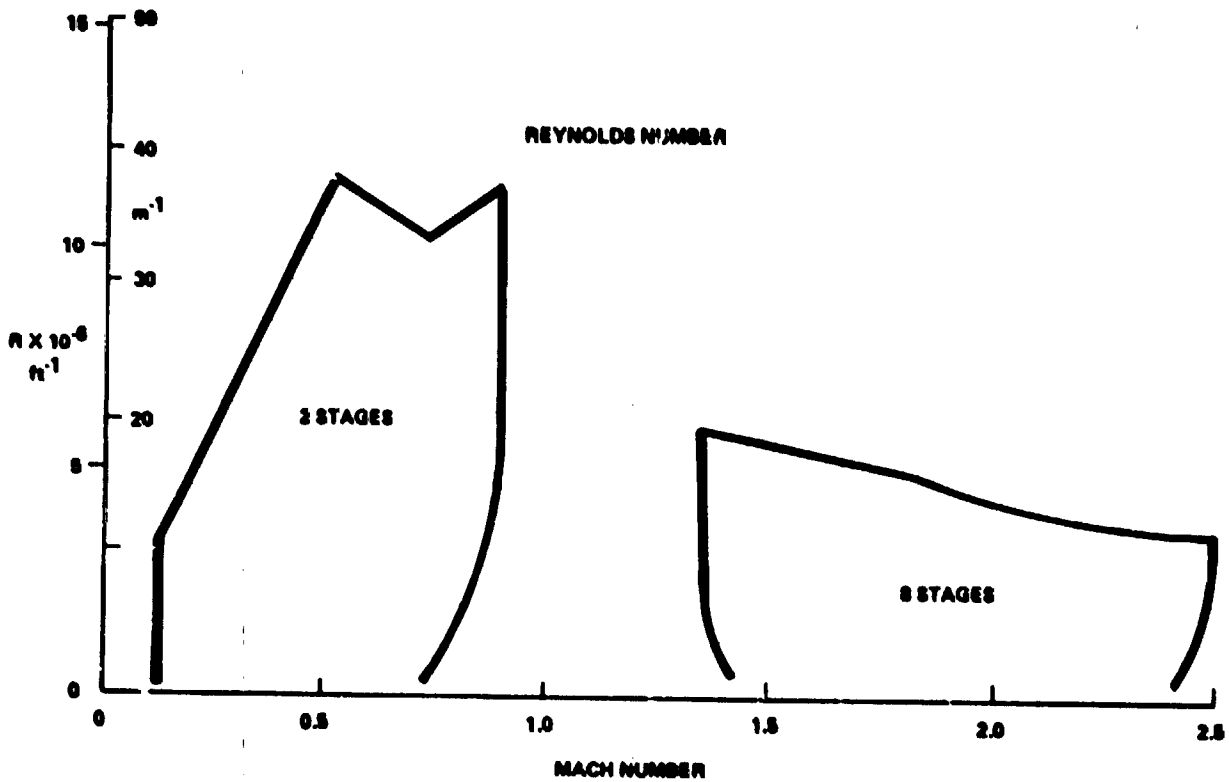
REYNOLDS NUMBER
2 STAGES
8 STAGES
R X 10^-6
ft^-1
m^-1
15
10
5
0
50
40
30
20
0
0.5
1.0
1.5
2.0
2.5
MACH NUMBER

| Royal Aircraft Establishment Bedford, United Kingdom | TRANSONIC WIND TUNNELS | | COMPARABLE FACILITIES |
|---|---|---|---|
| | TEST SECTION SIZE: 2.5 x 2.25 m | SPEED RANGE: (Mach No.) 0.1 - 0.9<br>1.35 - 2.5 | $3\text{-}D_2$ |
| | DATE BUILT/UPGRADED: 1957 | TEMP. RANGE: 315 K | |
| 8-Ft Transonic Wind Tunnel | REPLACEMENT COST: | REYNOLDS NO: (Per m X $10^{-6}$) 38 at Mach 0.9<br>11 at Mach 2.5 | |
| | OPERATIONAL STATUS: In regular use | DYNAMIC PRES: ($kN/m^2$) Up to 90 subsonic<br>Up to 60 supersonic | |
| | | STAGNATION PRES: (bars) 0.1 - 4.0 subsonic<br>0.1 - 1.3 supersonic | |
| | Continuous flow, flexible nozzle, and closed circuit can be used as a subsonic variable pressure tunnel with Mach number controlled by a variable sonic throat downstream of the test section. | | |

TESTING CAPABILITIES: Axial flow compressor with 2 stages for subsonic and 8 stages for supersonic operation. Total drive power 68 MW. Rear-sting support for models giving ±22.5° of pitch with full 360° of roll. Sidewall-mounted half-model balance support system, -15° - +35° of pitch. Support system for two-dimensional wings spanning the tunnel. High-pressure air supply. Storage capacity 90 $m^3$ at 262 bars supplying a line at 69 bars (1000 psig).

DATA ACQUISITION: Up to 32 low-level analog signals, 300 digital signals, and 24 pressure scanning switches. Dedicated Hewlett-Packard computer system giving on-line reduction and presentation of data.

CURRENT PROGRAMS:

PLANNED IMPROVEMENTS:

LOCAL INFORMATION CONTACT: Superintendent AE3 Division, Aerodynamics Department, Bedford (0234) 55241, ext. 7440.

| Royal Aircraft Establishment Farnborough, United Kingdom | TRANSONIC WIND TUNNELS | | COMPARABLE FACILITIES |
|---|---|---|---|
| | TEST SECTION SIZE: 1.8 x 2.4 m | SPEED RANGE: (Mach No.) 0 - 1.25 | $3\text{-}D_2$ |
| | DATE BUILT/UPGRADED: 1942 modified/1955/1956 | TEMP. RANGE: 328 K | |
| 8 x 6-Ft Transonic Wind Tunnel | REPLACEMENT COST: | REYNOLDS NO: (Per m X $10^{-6}$) 24 at Mach 0.3, 9 at Mach 1.25 | |
| | OPERATIONAL STATUS: 1 to 2 shifts per day | DYNAMIC PRES: ($kN/m^2$) 36 (max) | |
| | | STAGNATION PRES: (bars) 0.1 - 3.5 | |
| | Continuous flow, closed circuit, annular return, single-stage fan; slotted walls; 12 000-hp fan drive with 8000-hp plenum chamber suction drive | | |

TESTING CAPABILITIES: Sting and half-model balances available, quadrant with straight and cranked stings tc cover high range of angles of attack. Ample compressed-air supplies available at working section. Three-phase variable-frequency supply for large electric motors (e.g., propellers). Twin-sting for weapon trajectories, flow surveys, etc. Computer-based data acquisition, on-line processing and display strain-gage balances, Midwood manometers, and scanivalve/transducer system. The 8000-hp plenum-chamber compressor also drives a 2 x 1.5-ft Transonic Wind Tunnel.

DATA ACQUISITION:

CURRENT PROGRAMS: Research on aircraft and weapons including boundary layer surveys and flowfield traverses.

PLANNED IMPROVEMENTS:

LOCAL INFORMATION CONTACT: Superintendent AE1 Division, Aerodynamics Department, Farnborough (0252) 24461, ext. 4338.

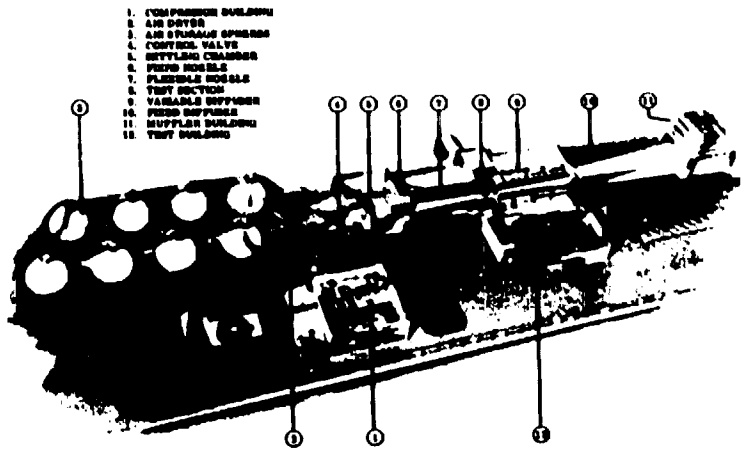

Rockwell International Trisonic Wind Tunnel

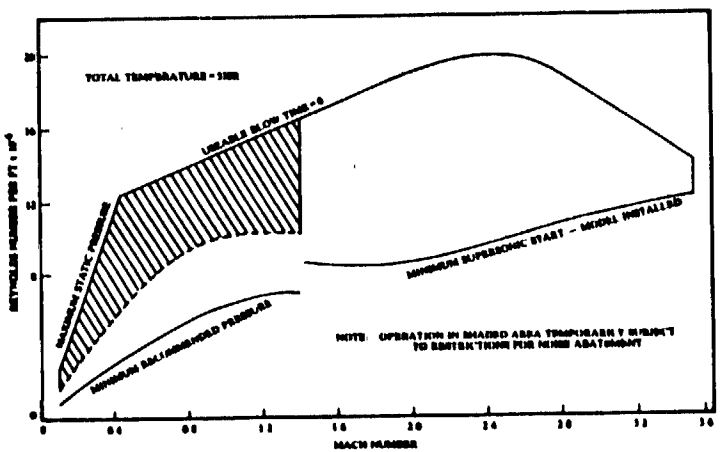

| | TRANSONIC WIND TUNNELS | | COMPARABLE FACILITIES |
|---|---|---|---|
| Rockwell International Corp. Los Angeles | **TEST SECTION SIZE:** 7 x 7 x 23 ft | **SPEED RANGE:** (Mach No.) 0.1 - 3.5 | $3\text{-}D_2$ |
| | **DATE BUILT/UPGRADED:** 1958/1960/1968/1971/1983 | **TEMP. RANGE:** 530°R | |
| 7-Ft Trisonic Wind Tunnel | **REPLACEMENT COST:** $17M | **REYNOLDS NO:** (Per ft X $10^{-6}$) 2 - 19 | |
| | **OPERATIONAL STATUS:** Currently operating 2 shifts per day, 5 days per week | **DYNAMIC PRES:** (lb/ft$^2$) 20 - 3600 | |
| | | **STAGNATION PRES:** (psia) 18 - 110 | |
| | Intermittent blowdown to atmosphere. Blow time: 5 - 70 sec; Pumpup time: 15 - 50 min | | |

TESTING CAPABILITIES: The facility has the capability of accommodating 6-component force tests using internal balances, inlet and nozzle studies, pressure distribution tests using electronically scanned pressure modules or electropneumatic scanivalves, flutter and acoustic tests, and model component deployment tests. The upstream portion of the tandem test sections has schlieren windows and is used for supersonic testing; the downstream portion is perforated (19.7% porosity) for transonic and subsonic testing. Mach numbers of 1.4 and above are set by a flexible plate nozzle; below 1.3, adjustable diffuser walls and servo-controlled choking flaps control the Mach number in the test section.

DATA ACQUISITION: Currently using a 120-channel ASTRODATA system with an IBM 1800 for data reduction. A new setup consisting of a Cyber II data acquisition system and an IBM Series/I computer is on site and will be on-line in early 1984.

CURRENT PROGRAMS: B-1B flight test support, advanced developments, and tests for other companies such as McDonnell Douglas, SAAB of Sweden, Honeywell, and others are currently scheduled.

PLANNED IMPROVEMENTS: Integration of data acquisition modernization (see above), improved model angle-of-attack measurement, increased auxiliary air/vacuum pumping capacity, and sting roll pod.

LOCAL INFORMATION CONTACT: A. L. Clarke, Manager, Wind Tunnels, (213) 647-3450.

| | TRANSONIC WIND TUNNELS | | COMPARABLE FACILITIES |
|---|---|---|---|
| Lockheed-California Co. | TEST SECTION SIZE: 6 x 7 x 20 ft | SPEED RANGE: (Mach No.) 0.2 - 2.65 | $3\text{-}D_3$ |
| | DATE BUILT/UPGRADED: 1965 | TEMP. RANGE: 540° - 1400°R | |
| Free-Jet Propulsion Tunnel | REPLACEMENT COST: $0.8M | REYNOLDS NO: (Per ft × $10^{-6}$) 0 - 12.0 | |
| | OPERATIONAL STATUS: Standby | DYNAMIC PRES: (lb/ft$^2$) 0 - 6000 | |
| | | STAGNATION PRES: (psia) | |
| | Intermittent blowdown to atmosphere, hot gas ingestion | | |

TESTING CAPABILITIES: This tunnel permits simultaneous aerodynamic and propulsion studies with combustion capability. Thrust levels to 10 000 lb may be accommodated, dependent on pressure altitude required. Testing is not limited to propulsion devices but includes any type of airflow or combustion device that requires a discharge at altitude or ambient pressure. Pressure altitudes from site elevation to 180 000 ft are possible with extension to 300 000 ft for static ignition tests. Time to climb to 150 000 ft in 1 min is readily obtained, and special provisions can be made to reduce this to about 15 sec.

DATA ACQUISITION: Fifty channels of information can be recorded and reduced on-site with a return time of 2 to 5 min to run (blow).

CURRENT PROGRAMS:

PLANNED IMPROVEMENTS:

LOCAL INFORMATION CONTACT: Lockheed-California Company, Attn: Edward Whitfield, Flight Sciences Laboratory, Dept. 74-73, Bldg. 202, Plt. 2, P.O. Box 551, Burbank, CA 91520, (213) 847-6121, ext. 221.

| National Aerospace Laboratory Tokyo, Japan | TRANSONIC WIND TUNNELS | | COMPARABLE FACILITIES |
|---|---|---|---|
| | TEST SECTION SIZE: 2.0 x 2.0 x 4.13 m | SPEED RANGE: (Mach No.) 0.3 - 1.4 | $3\text{-}D_3$ |
| | DATE BUILT/UPGRADED: 1960 | TEMP. RANGE: 318 - 333 K | |
| 2-M Transonic Wind Tunnel HS | REPLACEMENT COST: $200M | REYNOLDS NO: (Per m X $10^{-6}$) 5 - 20 | |
| | OPERATIONAL STATUS: 1 shift per day | DYNAMIC PRES: ($kN/m^2$) 1.9 - 42 | |
| | | STAGNATION PRES: (bars) 0.4 - 1.5 | |
| | Continuous flow, 19.6 contraction ratio with three 14-mesh screens, closed circuit, single-return, 30 000-hp drive motors | | |

TESTING CAPABILITIES: Equipped with three test section carts: the first one is for complete-model test with sting-strut support. The four walls are perforated at 20% open-area ratio with 12-mm diameter normal holes. The second one is for half-model test with the same wall configuration as above, and the third one is for complete-model test but with 60° slant holes at 8% open-area ratio. For near sonic and supersonic tests, an auxiliary suction system with a 16 000-hp power unit is used in combination with a nozzle and second throat settings to establish desired Mach numbers.

DATA ACQUISITION: Sixty-four A/D converter channels are available in three data acquisition speed ranges: 8 channels for high-speed (100 kHz) acquisition, 32 channels for medium-speed (45 kHz) acquisition, and 24 channels for low-speed (33 kHz) acquisition. Test data before balance-drift corrections are processed on-line by a computer system attached to the wind tunnel.

CURRENT PROGRAMS: Most of the testing time is directed to data acquisition for aerodynamic design of airplanes and other configurations under development and for calibration of aerodynamic computational methods.

PLANNED IMPROVEMENTS:

LOCAL INFORMATION CONTACT:

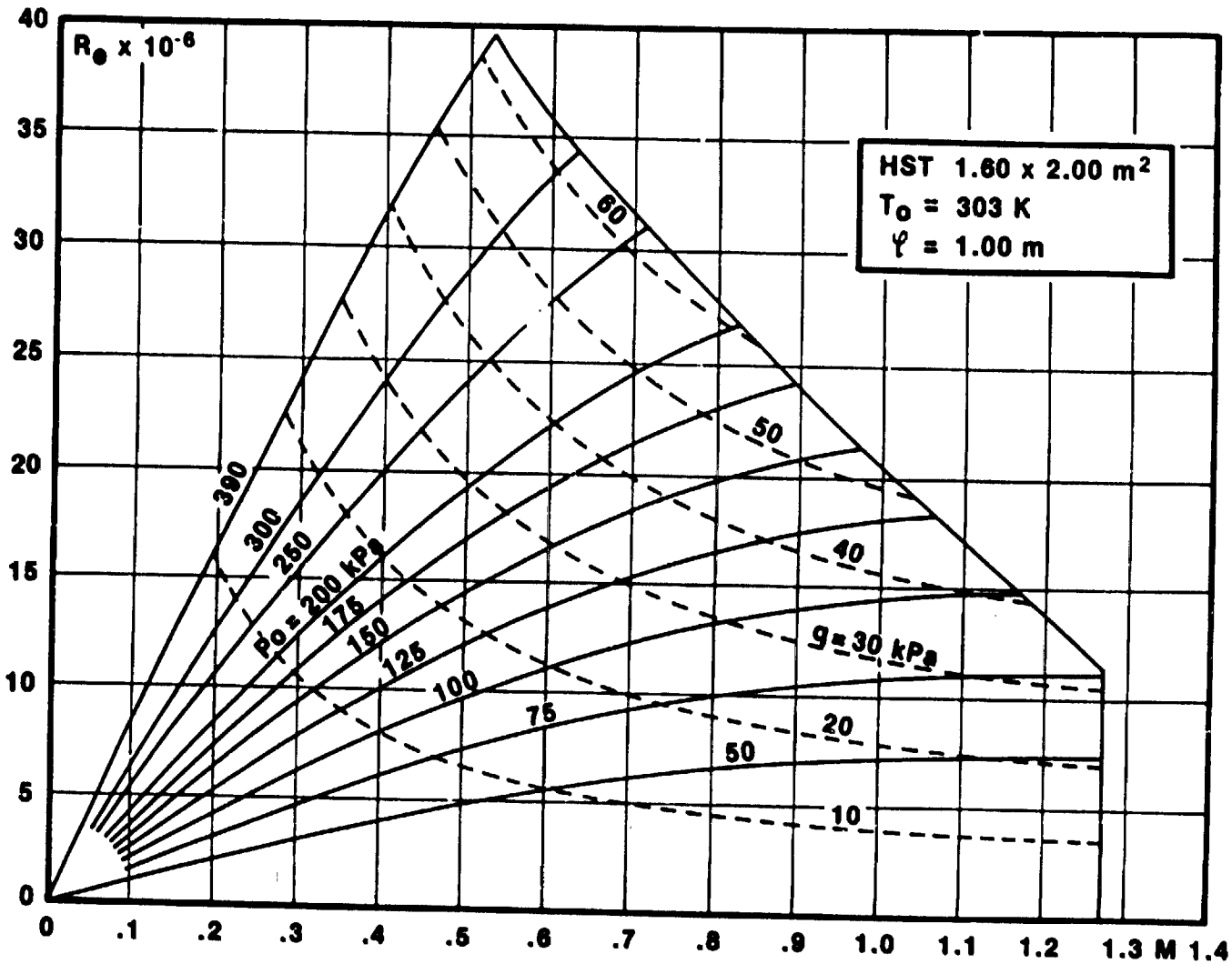
$R_e \times 10^{-6}$
HST 1.60 x 2.00 m²
$T_o$ = 303 K
ℓ = 1.00 m
390
300
250
$p_o$ = 200 kPa
175
150
125
100
75
50
20
10
60
50
40
q = 30 kPa
0
5
10
15
20
25
30
35
40
0
.1
.2
.3
.4
.5
.6
.7
.8
.9
1.0
1.1
1.2
1.3 M 1.4

| Netherlands Research Laboratory Amsterdam, Netherlands | TRANSONIC WIND TUNNELS | | COMPARABLE FACILITIES |
|---|---|---|---|
| | TEST SECTION SIZE: 1.6 x 2.0 x 2.7 m | SPEED RANGE: (Mach No.) 0 - 1.27 | $3\text{-}D_3$ |
| | DATE BUILT/UPGRADED: 1958/1980 | TEMP. RANGE: 294 - 334 K | |
| HST | REPLACEMENT COST: | REYNOLDS NO: (Per m X $10^{-6}$) 8 at Mach 0.1<br>39.5 at Mach 0.53 | |
| | OPERATIONAL STATUS:<br>1 shift per day, approx. 40 polars per day (dependent on type of test) | DYNAMIC PRES: ($kN/m^2$) | |
| | | STAGNATION PRES: (bars) 0.125 - 4.0 | |
| | Continuous flow, closed circuit, slotted walls | | |

TESTING CAPABILITIES: The 4-stage axial compressor can deliver up to 20 000 hp. The tunnel covers the velocity range up to Mach number 1.27, and because the tunnel pressure can be varied considerably, a large range of Reynolds numbers can be achieved. The HST has excellent flow quality over its entire velocity range. Incidence range of the transonic model support is 30°. Vertical ranges from -0.56 to +0.35 mm from zero position (test section centerline). Yaw angle range is from -2° to +15°. All movements described are remotely controlled. Several of these ranges can be shifted by adapters. The tunnel can be equipped with a subsonic model support, a sidewall model support (for half-span models), and a two-dimensional model support.

DATA ACQUISITION: Forty-eight channels. Data processing is performed through a HP-1000/45 dedicated computer. This local system carries out the following tasks: computation of operating parameters, verification of the validity of the present run (Quick Look), computation of the final results, and serving as the link to the communication processor and from here to the central CYBER computer. From here test results can be used for aerodynamic analysis through cross-plotting (EDIPAS). Results are presented in the form of tables, plots, tapes, and computer generated microfiches.

CURRENT PROGRAMS: Force and moment measurements, pressure measurements distribution, direction, wake, and mass flow visualization (oil and acenaphthene techniques), schlieren and shadow techniques, instationary measurements (harmonic and random oscillations), and flutter tests.

PLANNED IMPROVEMENTS:

LOCAL INFORMATION CONTACT: J. J. van der Zwaan, Head Compressible Aerodynamics Department, Fluid Dynamics Division.

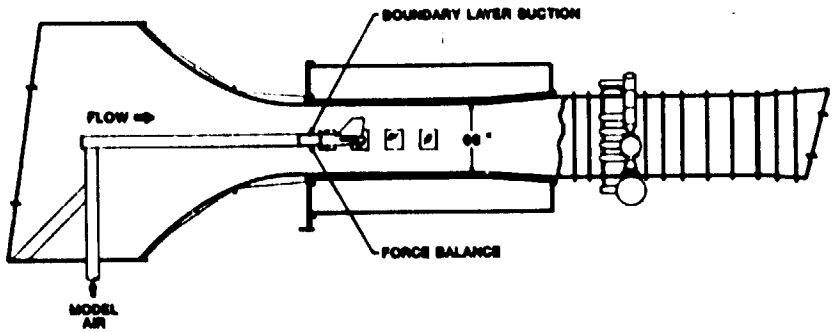
BOUNDARY LAYER SUCTION
FLOW
FORCE BALANCE
MODEL
AIR

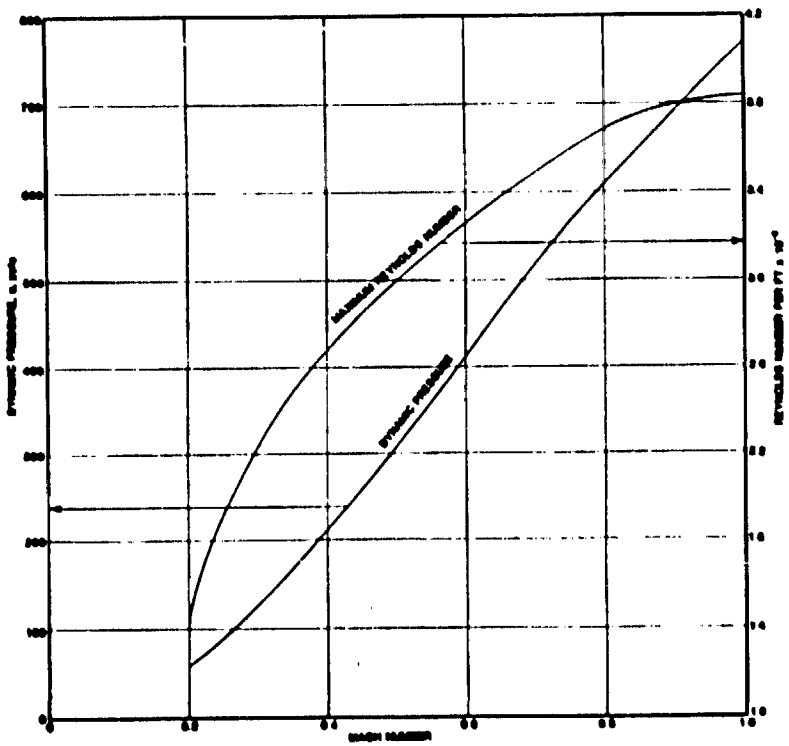
DYNAMIC PRESSURE
MACH NUMBER

| FluiDyne Engineering Corporation Minneapolis, Minn. | TRANSONIC WIND TUNNELS | | COMPARABLE FACILITIES |
|---|---|---|---|
| | TEST SECTION SIZE: 66 x 66 x 240 in | SPEED RANGE: (Mach No.) 0 - 1.0 | $3\text{-}D_3$ |
| | DATE BUILT/UPGRADED: 1969 | TEMP. RANGE: 500° - 650°R | |
| 66-In Transonic Wind Tunnel | REPLACEMENT COST: $1M original $2.5M replacement | REYNOLDS NO: (Per ft × $10^{-6}$) 0 - 4.5 | |
| | OPERATIONAL STATUS: 1 shift per day | DYNAMIC PRES: (lb/ft$^2$) 0 - 770 | |
| | | STAGNATION PRES: (psia) 14.5 | |
| | Ejector driven, open circuit, intermittent (exhaust nozzle and boattail thrust - minus - drag, inlet drag); special feature: Propulsion | | |

TESTING CAPABILITIES: The tunnel is driven by air ejectors downstream of the test section and can achieve velocities greater than Mach 1. It is used most frequently to measure exhaust nozzle and afterbody performance, both isolated and installed. Thrust - minus - drag is determined by force measurement; pressure distributions can be measured at the same time. Similar instrumentation is available for tests measuring inlet drag, and a multicomponent, external force balance system is available for general external aerodynamic studies. Pressure is measured with an electronically scanned multiple transducer system.

DATA ACQUISITION:

CURRENT PROGRAMS:

PLANNED IMPROVEMENTS:

LOCAL INFORMATION CONTACT: Dr. James S. Holdhusen, Executive Vice President, (612) 544-2721.

ORIGINAL PAGE IS
OF POOR QUALITY

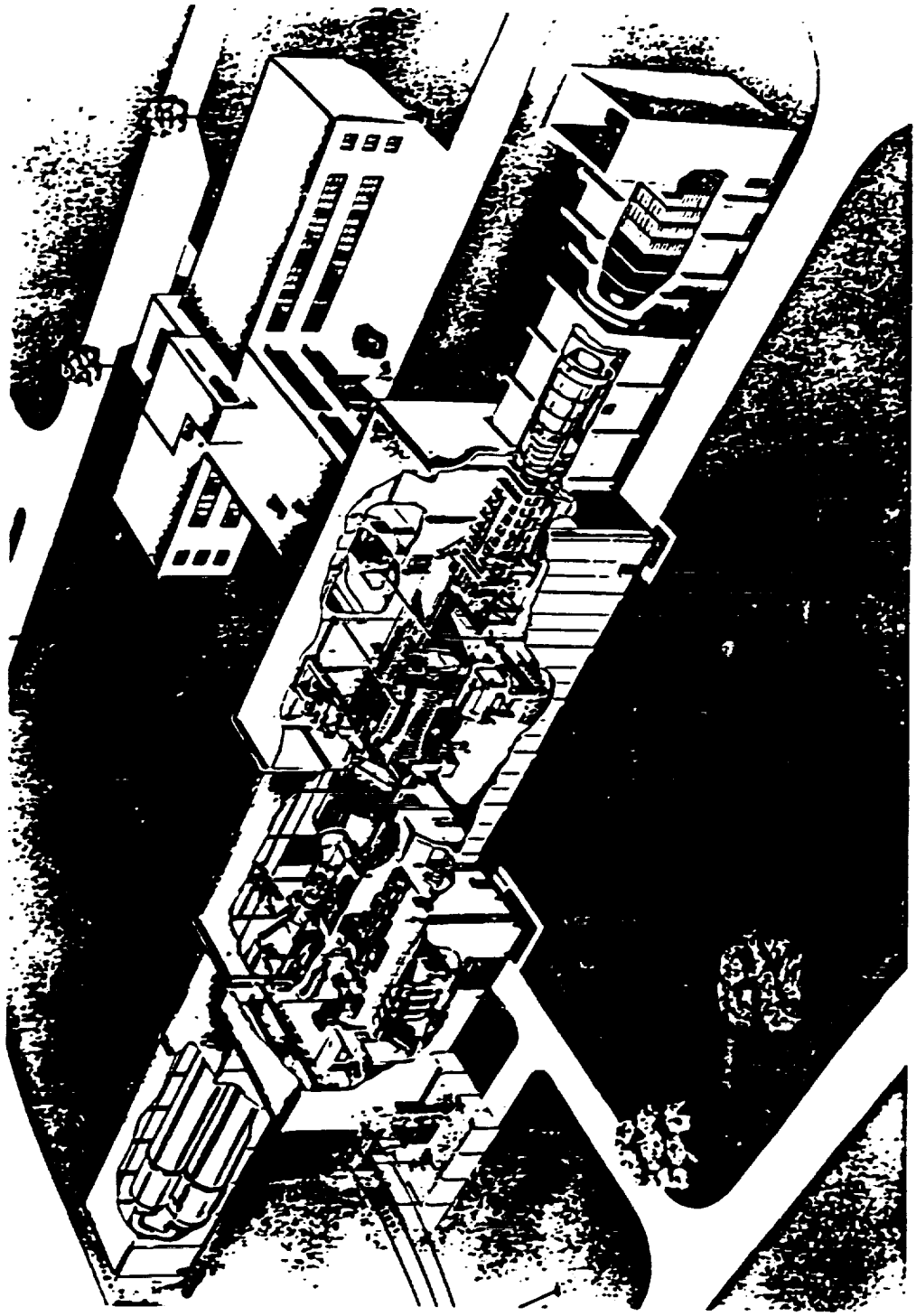

| | TRANSONIC WIND TUNNELS | | COMPARABLE FACILITIES |
|---|---|---|---|
| National Research Council (NAE) | TEST SECTION SIZE: 3D: 5 x 5 x 16 ft<br>2D: 5 x 1¼ x 12 ft | SPEED RANGE: (Mach No.) 3D: 0.1 - 4.25<br>2D: 0.1 - 0.95 | Group 2-D<br>Group 3-$D_3$ |
| | DATE BUILT/UPGRADED: 1962/1969/1978/1984 | TEMP. RANGE: Ambient | |
| 5 x 5-Ft Blowdown Wind Tunnel | REPLACEMENT COST: $24M | REYNOLDS NO: (Per ft X $10^{-6}$) 3D: 24 at Mach 2.25<br>2D: 47 at Mach 0.95 | |
| | OPERATIONAL STATUS: Single shift | DYNAMIC PRES: ($lb/ft^2$) 3D: 4600 at Mach 2.25 (max)<br>2D: 7900 at Mach 0.95 (max) | |
| | | STAGNATION PRES: (psia) 3D: 20 - 220<br>2D: 20 - 180 | |
| | The facility is operated by the High Speed Aerodynamics Laboratory of the National Aeronautical Establishment. Available on a fee-for-service basis. | | |

TESTING CAPABILITIES: Being of the intermittent type, the wind tunnel has an air-storage capacity of 55 000 $ft^3$, which is being charged by a 11 000-hp compressor/dryer plant delivering air at a pressure of 320 psia and with an absolute humidity of 0.0002 lb $H_2O$ per lb of air. The transonic test section (20.5% open perforated walls), when in use, is in tandem with the flexible nozzle section. The 2-D test section assembles in the transonic test section, which can also be adapted for reflexion plane (half-model) testing. Compressed air (10 lb/sec at 250 psi) for model blowing can be accommodated both in the 2-D and half-model mode of operation. The laboratory includes a design office and machine shop and thus undertakes model construction to a limited extent.

DATA ACQUISITION: Ninety-six channels of conditioned data can be recorded and processed on-site. The system is expandable to accommodate additional FM and RMS channels.

CURRENT PROGRAMS: The facility is heavily used by domestic and foreign aerospace industry. Main emphasis of the laboratory research program is on subsonic and transonic aerodynamics; high-left systems, drag reduction schemes such as area rule with lift and skin friction manipulation, computational fluid dynamics, wall interference, buffet, and flutter.

PLANNED IMPROVEMENTS: To facilitate changeover from 3-D to 2-D mode of operation and vice versa, interchangeable test sections will be constructed that can be easily installed in the plenum chamber of the existing transonic test section. Completion scheduled for 1986 at an estimated cost of $3M. Increased on-site computer capacity scheduled for 1985 at an estimated cost of $0.5M. Extended shift (10-hr day) operation planned for late 1985.

LOCAL INFORMATION CONTACT: Lars H. Öhman, High Speed Aerodynamics Laboratory, NAE, NRC, Ottawa, K1A OR6 (613) 998-3243.

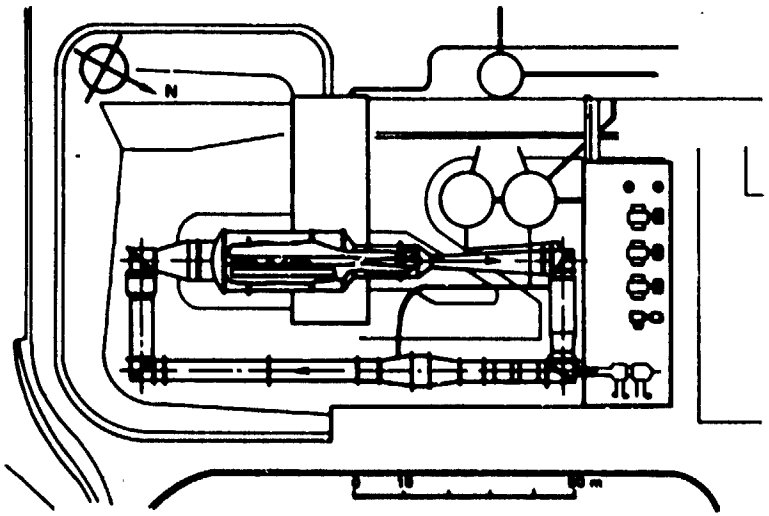
N
L
10
20 m

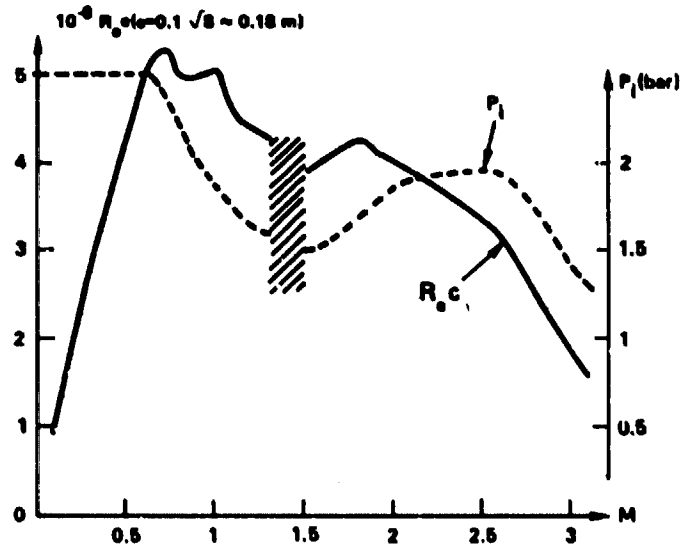
$10^{-6}$ $R_e$(l=0.1 √S ~ 0.18 m)
5
4
3
2
1
0
$P_i$(bar)
2
1.5
1
0.5
$P_i$
$R_e c$
0.5
1
1.5
2
2.5
3
M

| ONERA Modane Test Center, France | TRANSONIC WIND TUNNELS | | COMPARABLE FACILITIES |
|---|---|---|---|
| | TEST SECTION SIZE: Transonic: 1.77 x 1.75 m<br>Supersonic: 1.935 x 1.75 m | SPEED RANGE: (Mach No.) 0.1 - 1.3<br>1.5 - 3.1 | $3\text{-}D_3$ - for Test Section #1 |
| | DATE BUILT/UPGRADED: 1961 | TEMP. RANGE: 0 - 318 K | |
| S2 MA | REPLACEMENT COST: | REYNOLDS NO: (Per m X $10^{-6}$) 5.5 - 29.4 | |
| | OPERATIONAL STATUS:<br>1 to 2 shifts per day | DYNAMIC PRES: ($kN/m^2$) 68 | |
| | | STAGNATION PRES: (bars) 0.5 - 2.5 | |
| | Continuous flow twin transonic and supersonic test sections in the same plenum, water cooler, 57 MW (16 stages) compressor powered by 4 water turbines, pressurized envelope | | |

TESTING CAPABILITIES: Model support: angle-of-attack variation 24° continuous up to 0.6°/sec, roll 360° - 0.2 or 4°/sec. Sideslip or high angle-of-attack "elbow" 25°. Sidewall turret ±180°, 0.18°, or 0.67°/sec. "Six-degrees-of-freedom" support for store separation studies, compressed heated dry-air supply 50 b 3 kg/sec continuously, up to 25 kg/sec - 150 b air supply. Numerous different supports and sting balances. Perforated transonic test section, permeability up to 6%. Mach number change by compressor speed. Asymmetrical supersonic nozzle associated with supersonic test section. Mach number variation by translation of the part of the nozzle associated with a moving floor. Second throat behind the quadrant in the diffuser. Two parallel shadow channels. Pressurization from 9 b dry-air storage, vacuum pump and storage.

DATA ACQUISITION: Global and local forces, pressures (individual, scanned, unsteady), temperature displacements, skin visualizations, and shadow pictures. All conventional aerodynamic measurements. Basically 64 analog and digital channels. Extension possible with steady or unsteady channels. Local HP-1000 computer for data acquisition and testing device survey. Local real-time computation by VAX-782.

CURRENT PROGRAMS: Civil and comb. aircraft or missiles development, and performance control on complete or half-scaled models, TPS engine simulation, all aeroelastic testing (dynamic stability and flutter), store trajectory studies, flow and wake surveys, and air intake tests.

PLANNED IMPROVEMENTS: Continuous increase of computer-controlled testing devices and improvement of instrumentation.

LOCAL INFORMATION CONTACT: Charpin, ONERA Centre de Modane Avrieux BP 25, 73 500 Modane, France.

## Schematic

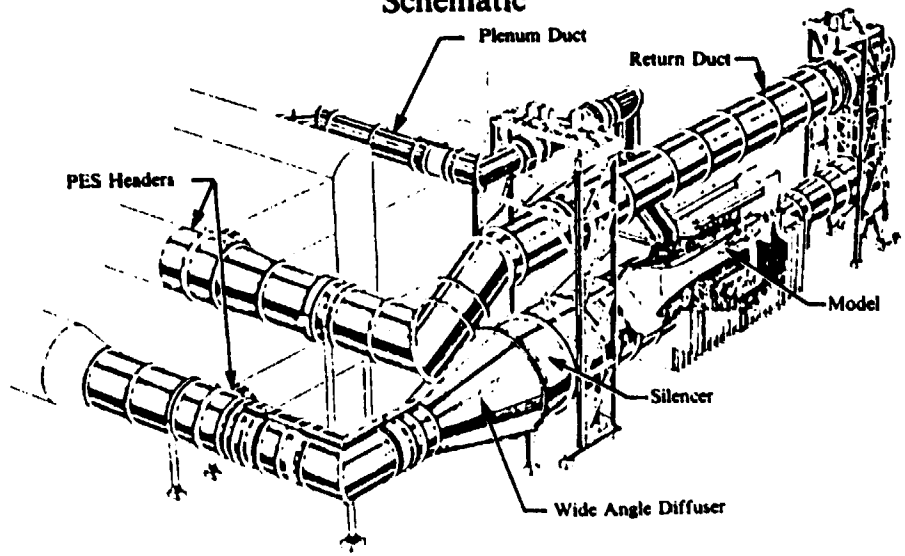


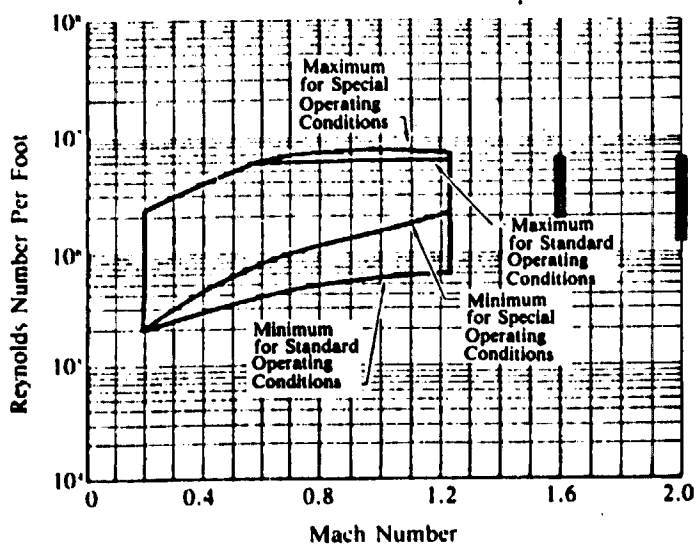


| | |
|---|---|
| Mach Range: | 0.2 - 1.3; 1.6, 2.0 |
| Reynolds Number (× $10^6$/ft): | 0.2 - 7.7 |
| Total Pressure (psia): | 2.08 - 25.69 |
| Dynamic Pressure (psf): | 8.2 - 1580 |
| Total Temperature (°R): | 530 - 610 |
| Run Time: | Continuous |

ORIGINAL PAGE IS
OF POOR QUALITY

| | TRANSONIC WIND TUNNELS | | COMPARABLE FACILITIES |
|---|---|---|---|
| Arnold Engineering Development Center, TN | TEST SECTION SIZE: 4 x 4 x 12.5 ft | SPEED RANGE: (Mach No.) 0.1 - 1.3, 1.6, 2.0 | $3\text{-}D_3$ |
| | DATE BUILT/UPGRADED: 1968 | TEMP. RANGE: 540° - 600°R | |
| 4-Ft Transonic Propulsion Wind Tunnel (4T) | REPLACEMENT COST: $6M | REYNOLDS NO: (Per ft X $10^{-6}$) 2.0 - 6.5 at Mach 1.6; 1.3 - 6.1 at Mach 2.0 | |
| | OPERATIONAL STATUS: Active, fully utilized | DYNAMIC PRES: ($lb/ft^2$) 20 - 1400 | |
| | | STAGNATION PRES: (psia) 3.0 - 23.6 | |
| | Closed circuit, single return, variable density, continuous flow, captive trajectory, free drop | | |

TESTING CAPABILITIES: The tunnel is used for force and moment, pressure, dynamic stability, magnus, internal duct flow, jet effects, buffet, store drop, and captive trajectory store separation testing. The test-section walls are equipped with variable porosity inclined-hole walls. A fixed contour sonic nozzle is used to provide test conditions up to M = 1.3. Removable insert nozzle blocks are used to provide M = 1.6 and M = 2.0 conditions. Shadowgraph and motion picture coverage is available. Up to 20 lb/sec airflows at high pressure are available for cold flow jet simulation testing.

DATA ACQUISITION: DEC-10 for supervisory control and data management, LSI-2 digital multiplexer and control, PDP 11/40 digital data acquisition system, DEC GT-42 and PDP 11.39 for graphics, PDP 11/60 automated model positioning and control, and Amdahl 5860 central computer.

CURRENT PROGRAMS:

PLANNED IMPROVEMENTS: None.

LOCAL INFORMATION CONTACT: Flight Mechanics Directorate, Deputy for Operations, AEDC/DOF, Arnold AFS TN 37389, (615) 455-2611. ext. 5280 or 6051.

| National Aeronautical Laboratory, Bangalore, India | TRANSONIC WIND TUNNELS | | COMPARABLE FACILITIES |
|---|---|---|---|
| | TEST SECTION SIZE: 1.2 X 1.2 m | SPEED RANGE: (Mach No.) 0.2 - 4.0 | $3\text{-}D_s$ |
| | DATE BUILT/UPGRADED: | TEMP. RANGE: | |
| 4-Ft Tunnel | REPLACEMENT COST: | REYNOLDS NO: (Per m X $10^{-6}$) 80 | |
| | OPERATIONAL STATUS: | DYNAMIC PRES: ($kN/m^2$) | |
| | | STAGNATION PRES: (bars) 1.5 - 8.0 | |
| | Blowdown, buffet, flutter, stage separation, captive trajectory, heat transfer, force, pressure, schlieren windows, flow visualization | | |

**TESTING CAPABILITIES:**

**DATA ACQUISITION:**

**CURRENT PROGRAMS:**

**PLANNED IMPROVEMENTS:**

**LOCAL INFORMATION CONTACT:**

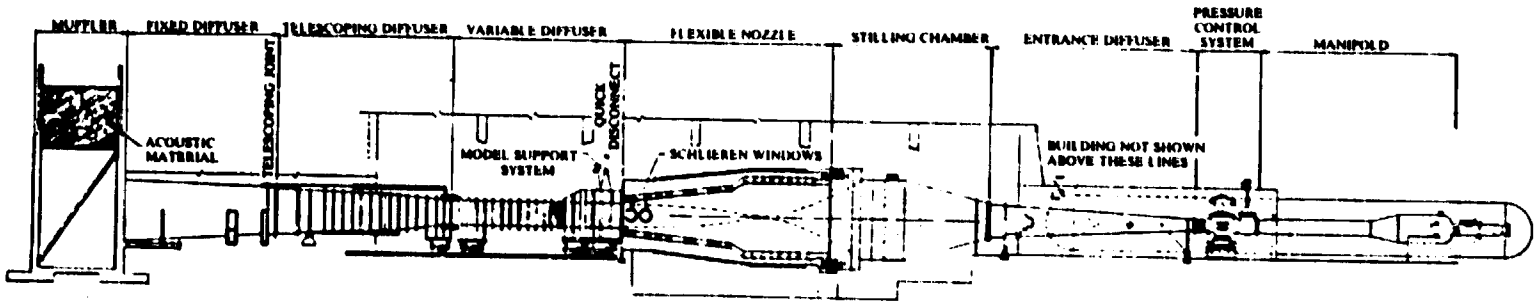


WEST ELEVATION

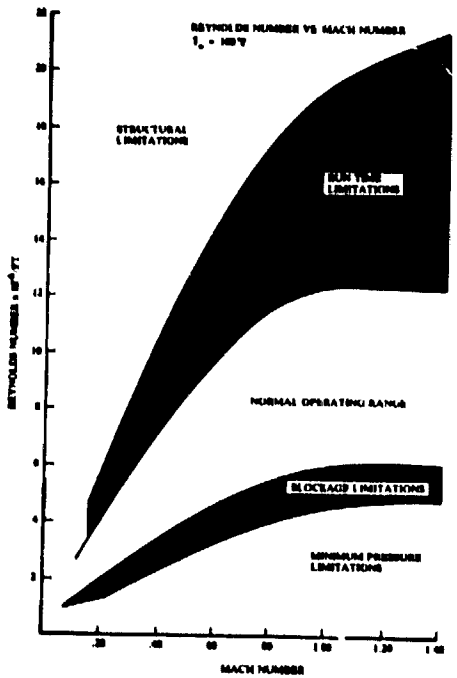


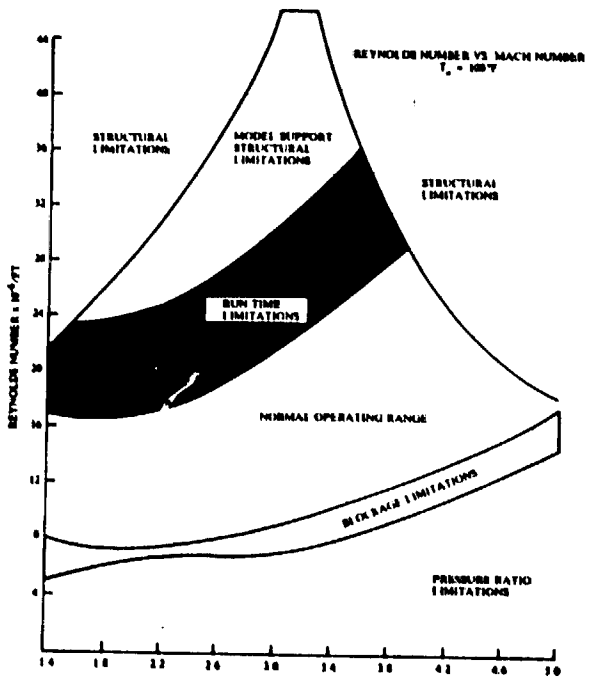

| Lockheed-California Co. Burbank, Calif. | TRANSONIC WIND TUNNELS | | COMPARABLE FACILITIES |
|---|---|---|---|
| | TEST SECTION SIZE: 4 x 4 x 14 ft | SPEED RANGE: (Mach No.) 0.2 - 5.0 | $3\text{-}D_3$ |
| | DATE BUILT/UPGRADED: 1960/1966/1975/1981 | TEMP. RANGE: 540° - 580°R | |
| 4-Ft Trisonic Wind Tunnel | REPLACEMENT COST: $20M | REYNOLDS NO: (Per ft X $10^{-6}$) 2 - 30 | |
| | OPERATIONAL STATUS: 1 shift per day (backlog) | DYNAMIC PRES: (lb/ft$^2$) 500 - 3600 | |
| | | STAGNATION PRES: (psia) 320 (max) | |
| | Intermittent blowdown to atmosphere<br>Model size: 17 in$^2$ cross-sectional area | | |

TESTING CAPABILITIES: Most tests are done by use of an internal balance and a sting mount. The removable transonic test section used for transonic and subsonic tests has a 22% porosity walls, floor, and ceiling. A 2-D test channel is available for installation in the transonic section reducing the test area to 15 in width by 48 in height. The tank charging compressor is driven by a 7000-hp synchronous motor. The charging rate is 20 lb/sec at 600 psi. Air is stored in 8 tanks at 600 psi with a total volume about 50 000 ft$^3$. Transonic test-section plenum air evacuation is accomplished by dumping the air to the atmosphere or alternately using an exhauster system consisting of two centrifugal pumps powered by a 11 000-hp synchronous motor. A run (blow) will have a duration of 15 to 20 sec, and repump takes from 15 to 20 min.

DATA ACQUISITION: Fifty channels of information can be recorded and reduced on-site with a return time of 2 to 5 min per run (blow).

CURRENT PROGRAMS: The programs run at this facility range from aerodynamics of aircrafts, missiles, and helicopter to propulsion system development.

PLANNED IMPROVEMENTS: Work is currently being done to improve the airflow quality through the test section.

LOCAL INFORMATION CONTACT: Lockheed-California Company, Attn: Edward Whitfield, Flight Sciences Laboratory, Dept. 74-73, Bldg. 202, Plt. 2, P.O. Box 551, Burbank, CA 91520, (213) 847-6121, ext. 221.

| | TRANSONIC WIND TUNNELS | | COMPARABLE FACILITIES |
|---|---|---|---|
| McDonnell Douglas Corp. El Segundo, Calif. | TEST SECTION SIZE: 4 x 4 x 12 ft | SPEED RANGE: (Mach No.) 0.2 - 5.0 | $3\text{-}D_3$ |
| | DATE BUILT/UPGRADED: 1959/1981 | TEMP. RANGE: 520° - 610°R | |
| 4-Ft Trisonic Wind Tunnel | REPLACEMENT COST: | REYNOLDS NO: (Per ft X $10^{-6}$) 0.25 - 30 | |
| | OPERATIONAL STATUS: Standby | DYNAMIC PRES: ($lb/ft^2$) 4 - 2600 | |
| | | STAGNATION PRES: (bars) 0.5 - 20 | |
| | Intermittent blowdown to atmosphere or vacuum | | |

TESTING CAPABILITIES: The 4-ft Trisonic Wind Tunnel is a blowdown facility that has two modes of operation, ambient or cryogenic. For supersonic testing, only the ambient operation can be used. The Cryogenic Mode is not available. This facility uses an air ejector system to reduce starting loads to workable levels.

DATA ACQUISITION: Sixty-four channels of information can be recorded and reduced on-line with tabulated and plotted data available within 5 to 10 min of a run.

CURRENT PROGRAMS: Facility was last operated in 1982. McDonnell Douglas has no plans for future use and has therefore offered this facility for sale.

PLANNED IMPROVEMENTS:

LOCAL INFORMATION CONTACT: Richard W. Cole, Aerodynamics Staff, (213) 593-5127.

| McDonnell Douglas Corp. St. Louis | TRANSONIC WIND TUNNELS | | COMPARABLE FACILITIES |
|---|---|---|---|
| | TEST SECTION SIZE: 4 x 4 x 9 ft | SPEED RANGE: (Mach No.) 0.2 - 5.8 | $3\text{-}D_3$ |
| | DATE BUILT/UPGRADED: | TEMP. RANGE: 560° - 695°R | |
| Polysonic Wind Tunnel | REPLACEMENT COST: | REYNOLDS NO: (Per ft X $10^{-6}$) 0.1 - 50 | |
| | OPERATIONAL STATUS: | DYNAMIC PRES: ($lb/ft^2$) 210 - 7500 | |
| | | STAGNATION PRES: (psia) 10 - 400 | |
| | Intermittent blowdown to atmosphere, free drop<br>Run time: 10 sec - 3 min | | |

TESTING CAPABILITIES: The Polysonic Wind Tunnel reproduces most aerodynamic phenomena encountered by aerospace vehicles at speeds from subsonic through low hypersonic at various altitudes. Sea-level conditions can be maintained to Mach number 2.0. Downstream ejectors used primarily to reduce model loads also are used to provide high-altitude simulation when required. Primary model support system is sting mounted and supported from a circular arc sector with center of rotation on tunnel $C_L$. Angle of attack: over a total of 42° for any predetermined run. Adapter available for combined pitch and yaw by ±90° of roll control. High-pressure air up to 9000 psi is available for boundary layer control, jet effects, a large family of primary model balances, and miniature store balances; and some specialized balances are available for almost any model support application. The PSWT is used for testing at speeds from subsonic through hypersonic. It is used for conducting conventional force and pressure tests, plus flutter, jet effects, free ejections, pressure recovery, engine inlet, proximity, aeroelastic, reflection plane, and various flow visualization tests.

DATA ACQUISITION: A stand-alone Datum Inc. Nova 3-D accommodates up to 150 analog input channels and 14 digital input channels of signal information from force, pressure, temperature, or position sensors.

CURRENT PROGRAMS:

PLANNED IMPROVEMENTS:

LOCAL INFORMATION CONTACT:

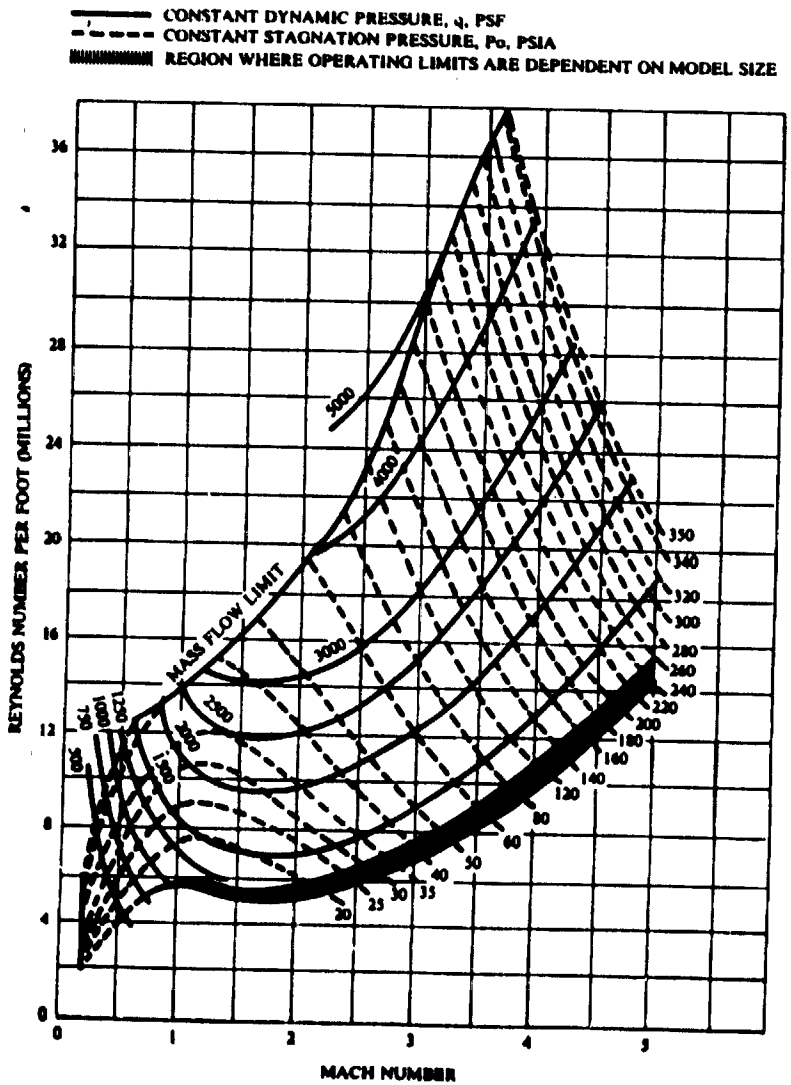


VARIATION OF REYNOLDS NUMBER WITH MACH NUMBER FOR To — 100°F

| | TRANSONIC WIND TUNNELS | | COMPARABLE FACILITIES |
|---|---|---|---|
| Vought Corp. | TEST SECTION SIZE: 4 x 4 x 5 ft | SPEED RANGE: (Mach No.) 0.2 - 5.0 | $3\text{-}D_3$ |
| | DATE BUILT/UPGRADED: 1958/1972/1975 | TEMP. RANGE: 540° - 620°R | |
| High-Speed Wind Tunnel | REPLACEMENT COST: $25M | REYNOLDS NO: (Per ft X $10^{-6}$) 2 - 38 | |
| | OPERATIONAL STATUS: 2 shifts per day | DYNAMIC PRES: ($lb/ft^2$) 150 - 5000 | |
| | | STAGNATION PRES: (psia) 19.8 - 367.5 | |
| | Intermittent blowdown to atmosphere, captive trajectory, rotory derivatives, free-drop, 40 atmospheres, 30 000 $ft^3$ storage. 8000-hp main drive, valve noise treatment, honeycomb, 10 screens | | |

TESTING CAPABILITIES: Equipped for force and moment, pressure, inlet performance, flutter, buffet, dynamic stability, jet effects (hot and cold), captive trajectory, and free-drop store separation testing of aircraft and missile configurations. Computer control of tunnel pressure programs, constant Reynolds number (pressure as function of temperature), model roll/pitch support system, inlet test systems, and CTS system. Auxiliary air at pressures up to 500 psi for flow rates to 18 lb/sec (to 130 in/sec flow rates at lower pressures).

DATA ACQUISITION: 110-channel data (individual amplifier) acquisition and processing system, with on-site, on-line computer, and plotting system. Up to 110 individual pressure transducers are used for inlet testing and similar pressure measurement requirement. Scanivalve and electronically scanned module-type pressure equipment are also used. Analog (FM) tape recorders, oscillographs, high-speed movie cameras, and video recorder are used.

CURRENT PROGRAMS: Force and moment (internal balances), dynamic stability inlet, pressure, store and submunition separation testing (CTS or free-drop), and flutter testing of aircraft, spacecraft, and missile configurations.

PLANNED IMPROVEMENTS: Computer system replacement planned for 1985-1986 with an estimated cost of $200K.

LOCAL INFORMATION CONTACT: J. M. Cooksey, Manager, Wind Tunnel Laboratories, (214) 266-3234.

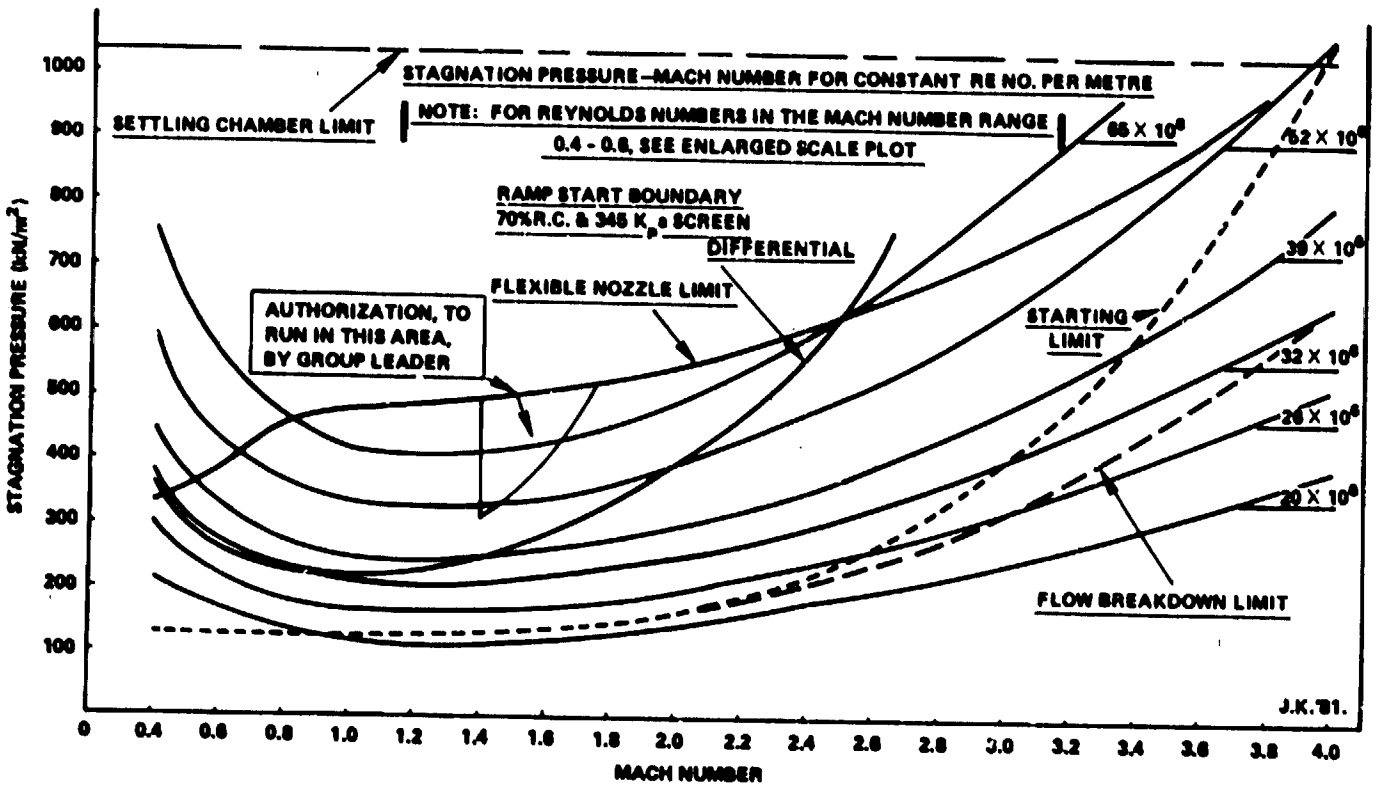
STAGNATION PRESSURE–MACH NUMBER FOR CONSTANT RE NO. PER METRE
SETTLING CHAMBER LIMIT
NOTE: FOR REYNOLDS NUMBERS IN THE MACH NUMBER RANGE 0.4 - 0.8, SEE ENLARGED SCALE PLOT
RAMP START BOUNDARY 70%R.C. & 345 K$_p$ a SCREEN
DIFFERENTIAL
FLEXIBLE NOZZLE LIMIT
AUTHORIZATION, TO RUN IN THIS AREA, BY GROUP LEADER
STARTING LIMIT
FLOW BREAKDOWN LIMIT
65 X 10$^6$
52 X 10$^6$
39 X 10$^6$
32 X 10$^6$
26 X 10$^6$
20 X 10$^6$
STAGNATION PRESSURE (kN/m$^2$)
1000
900
800
700
600
500
400
300
200
100
0
0.4
0.6
0.8
1.0
1.2
1.4
1.6
1.8
2.0
2.2
2.4
2.6
2.8
3.0
3.2
3.4
3.6
3.8
4.0
MACH NUMBER
J.K.'81.

| | TRANSONIC WIND TUNNELS | | COMPARABLE FACILITIES |
|---|---|---|---|
| British Aerospace, Warton | TEST SECTION SIZE: 1.22 x 1.22 x 5.0 m | SPEED RANGE: (Mach No.) 0.4 - 4.0 | $3\text{-}D_3$ |
| | DATE BUILT/UPGRADED: 1959/1972/1980 | TEMP. RANGE: Ambient | |
| 4-Ft Blowdown Wind Tunnel | REPLACEMENT COST: $16M | REYNOLDS NO: (Per m X $10^{-6}$) 80 (max) | |
| | OPERATIONAL STATUS: 20% overtime, periods of double shift | DYNAMIC PRES: ($kN/m^2$) | |
| | | STAGNATION PRES: (bars) 4 Transonic, 10 at Mach 4 | |
| | Blowdown from 360 $m^3$ storage at 40 bars<br>Run time: 7 - 40 sec (Mach No. and Stagnation Pressure dependent)<br>Typical recharge time: 40 min | | |

TESTING CAPABILITIES: Supersonic nozzle and flexible roof and floor can be set to any Mach number. Transonic working section, 19% perforations, diffuser suction on plenum chamber, second throat control of Mach number. Full range of stagnation pressures used regularly.

Equipped for: (1) six-component tests, two sting-mounting carts, internal SG balances; (2) pressure plotting, 300 points typical; (3) afterbody drag measurements, wing tip stings, transonic and supersonic; (4) store load and store jettison testing; (5) roll damping derivatives, rolling sting, transonic only, 300 rpm; and (6) flutter measurements, damping, or destructive.

DATA ACQUISITION: Fifty analog, 6 digital, and 6 scanivalve channels on a PDP 11 based data acquisition and control system. Dedicated VAX 11/780 for data reduction (fully corrected, plotted, and tabulated data in 2 to 10 min after run). Computer store of 15-year results, indexed retrieval.

CURRENT PROGRAMS: Used for aircraft design and development, flight test support, new project assessment, and aerodynamic research by major manufacturer of combat aircraft. Fully active on flexible program allowing quick reaction to new demands from within our own organization. Fully staffed for design and manufacture of models, rigs and strain-gage balances and for calibration, testing and analysis.

PLANNED IMPROVEMENTS: None necessary in near future. Maintenance for long-term active operation.

LOCAL INFORMATION CONTACT: K. Emslie, Chief Wind Tunnel Engineer (W175), British Aerospace, Aircraft Group, Warton Aerodrome Preston, Lancashire, UK PR4 1AX, (0772-633333 ext. 369, Telex 67627).

| | TRANSONIC WIND TUNNELS | | COMPARABLE FACILITIES |
|---|---|---|---|
| Institut Aerotechnique de ST CYR, France | TEST SECTION SIZE: 0.85 x 0.85 m | SPEED RANGE: (Mach No.) 0.3 - 2.8 | $3\text{-}D_3$ |
| | DATE BUILT/UPGRADED: 1960 | TEMP. RANGE: Ambient | |
| Sigma 4 | REPLACEMENT COST: | REYNOLDS NO: (Per m X $10^{-6}$) | |
| | OPERATIONAL STATUS: 1 shift, 2000 hours per year | DYNAMIC PRES: ($kN/m^2$) | |
| | | STAGNATION PRES: (bars) Atmospheric | |
| | Blowdown open circuit; induction driven (with water steam generator): 70 bars, 520K; run duration: about 60 sec | | |

TESTING CAPABILITIES: Transonic perforated test section; variable supersonic Mach numbers through sliding half bodies on lateral walls in the convergent section.

DATA ACQUISITION: Solar 16-40 local computer.

CURRENT PROGRAMS: Aircraft and missiles models testing for preliminary design studies of French manufacturers.

PLANNED IMPROVEMENTS: New dryer.

LOCAL INFORMATION CONTACT: Menard, Institut Aerotechnique - 15 rue Marat, 78210 St CYR L'ECOLE, (3) 045 00 09 - Telex 698 349 F IATCNAM.

| ONERA Chalais Meudon, France | TRANSONIC WIND TUNNELS | | COMPARABLE FACILITIES |
|---|---|---|---|
| | TEST SECTION SIZE: 0.9 x 0.8 x 1.75 m Pseudo-octagonal | SPEED RANGE: (Mach No.) 0.3 - 1.10 | $3\text{-}D_3$ |
| | DATE BUILT/UPGRADED: 1947/1983 | TEMP. RANGE: ~300 K | |
| S3 - Ch | REPLACEMENT COST: | REYNOLDS NO: (Per m X $10^{-6}$) 12 | |
| | OPERATIONAL STATUS: 1 shift, 1600 hr per year | DYNAMIC PRES: ($kN/m^2$) | |
| | | STAGNATION PRES: (bars) Atmospheric | |
| | Continuous flow, return circuit; built as a pilot-tunnel of S1 Modane (Scaled 1/8th) | | |

TESTING CAPABILITIES: Forces and pressure measurements on complete or half models, 6-component balances, schlieren visualizations, and special rig for engine nozzles simulation on axial balance located in the settling chamber.

DATA ACQUISITION: SOLAR 16.45 local computer and A/D converter.

CURRENT PROGRAMS: Jet-engine nozzle testing and interaction wing/nacelle, inlet testing, blade tip research, new fighter preliminary study.

PLANNED IMPROVEMENTS: New electric motor and fan ($M < 1.3$) and new test section.

LOCAL INFORMATION CONTACT: J. P. Chevallier, Division Aerodynamique Experimentale, ONERA, 92195 Meudon Principal Cedex, France, (1) 534 75 01.

| DFVLR Göttingen, West Germany (FRG) | TRANSONIC WIND TUNNELS | | COMPARABLE FACILITIES |
|---|---|---|---|
| | TEST SECTION SIZE: 1 x 1 m | SPEED RANGE: (Mach No.) 0.5 - 2.0 | $3\text{-}D_3$ |
| | DATE BUILT/UPGRADED: 1963/1966 | TEMP. RANGE: 300 K | |
| 1-M Transonic Wind Tunnel (TWG) | REPLACEMENT COST: | REYNOLDS NO: (Per m X $10^{-6}$) 18 at Mach 1.0 | |
| | OPERATIONAL STATUS: Continuous operation 4 hours per day | DYNAMIC PRES: ($kN/m^2$) 60 at Mach 1.0 | |
| | | STAGNATION PRES: (bars) 0.2 - 1.6 | |
| | Flexible nozzle, continuous flow, closed circuit, in tandem with a supersonic test section | | |

TESTING CAPABILITIES: Model support for vertical or rear stings. Six-component strain-gage balances (DFVLR and TASK), and piezo balances. Three-component strain-gage half-model balances. Experimental setup for measurements on two-dimensional profiles. Traversing mechanism for jettison of external stores. Mechanism for adjusting the angle of bank and the angle of yaw. Pressure measurements with scanivalve, CEC-stathem-pressure transducers, and PSI system. Other measurements schlieren-system recorded by TV and flow visualization by colored liquid.

DATA ACQUISITION: DC amplifiers, integrating digital voltmeters, and real-time and off-line data reduction. Results are presented by printer, graphic display, and hard copy in the control room.

CURRENT PROGRAMS: Aerodynamic investigations on flight vehicles and aircraft for industry and research. Collecting of data for systematic flight vehicle development for the institutes of DFVLR.

PLANNED IMPROVEMENTS: New test section (1m x 1m) with slotted walls.

LOCAL INFORMATION CONTACT: Dr. Wolfgang Lorenz-Meyer, DFVLR Windtunnel Division, Bunsenstrasse 10, D-3400 Göttingen, (0551/709-2179).

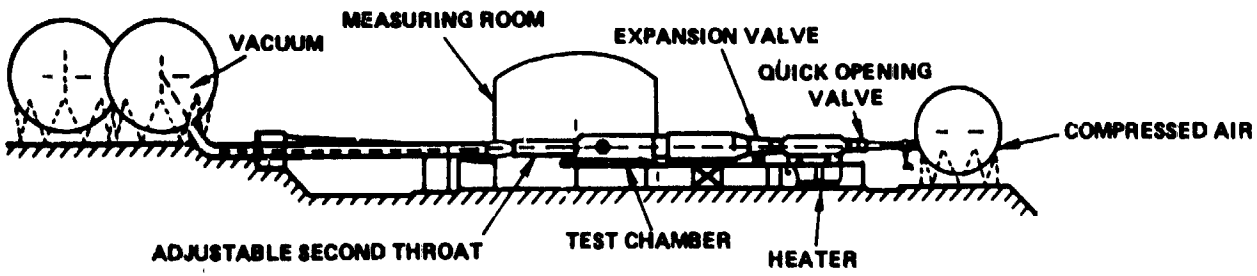


Reynolds number, relative to 1/10 of square root of cross section: between $0.03 \times 10^6$ to $4.5 \times 10^6$ according to test conditions (speed, temperature, pressure), as shown in the following graphs:

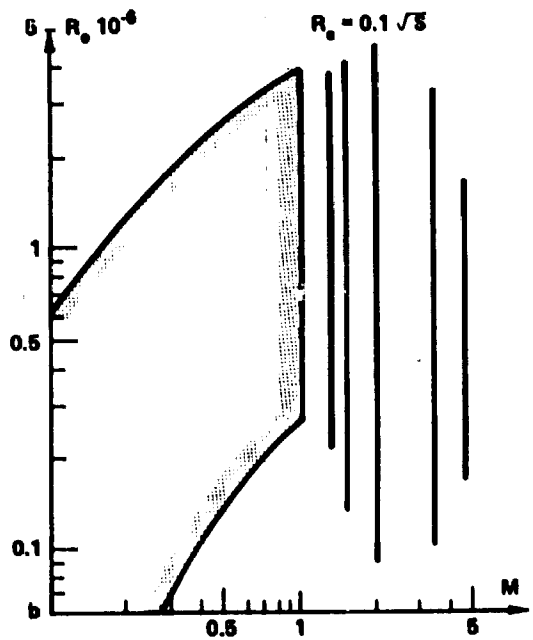

| | TRANSONIC WIND TUNNELS | | COMPARABLE FACILITIES |
|---|---|---|---|
| ONERA<br>Modane, France | TEST SECTION SIZE: Transonic 0.78 x 0.56 m<br>Supersonic 0.80 x 0.76 m | SPEED RANGE: (Mach No.) 0.1 - 1.1<br>1.2, 1.5, 2, 3.4, 4.5 | $3\text{-}D_3$ - for<br>Test Section #1 |
| | DATE BUILT/UPGRADED: 1959 | TEMP. RANGE: 0 - 623 K depending on the nozzle | |
| S3 MA | REPLACEMENT COST: | REYNOLDS NO: (Per m X $10^{-6}$) 64 | |
| | OPERATIONAL STATUS:<br>1 shift per day | DYNAMIC PRES: ($kN/m^2$) 3 - 158 | |
| | | STAGNATION PRES: (bars) 0.2 - 4<br>0.2 - 7.5 | |
| | | | |

TESTING CAPABILITIES: One side of the tunnel completely opens between settling chamber and quadrant to give quick access to the model or to remove the nozzle. Quadrant can also be quickly removed. Model holder is available in supersonic to avoid problems choking the nozzle. Sixty and 150 b dry compressed air is available for models. Wall turntable, schlieren through 0 800 optical access, and rain erosion simulator. Civil, combat aircraft, missile, conventional aerodynamic measurements, heat transfer, rain erosion, and trajectography - 2D, laser velocimetry. Intermittent, blowdown 10 - 1000 sec depending on Mach number and stagnation pressure. Subsonic and transonic insert (special insert for 2D tests), fixed nozzle for supersonic. Total storage 5500 $m^3$ for 9 b dry compressed air or 9 b compressed air and 0.03 b vacuum. Electrical powered dry heat exchanger. Second throat. Exit to atmosphere or vacuum.

DATA ACQUISITION: Forces, pressures, temperature displacements, and skin visualization. Basically 40 analog and digital channels with possible extension to 64 channels steady or unsteady. Local HP 1000 computer for data acquisition and wind tunnel survey. Real-time computation by line to VAX-750 and return of results.

CURRENT PROGRAMS: Numerous configurations of missiles, and rockets.

PLANNED IMPROVEMENTS: Supersonic variable nozzle M 1.65 - 3.84 in 1985.

LOCAL INFORMATION CONTACT: M. Grandjaques, ONERA Modane Test Center; BP 25, 73 500 Modane, France.

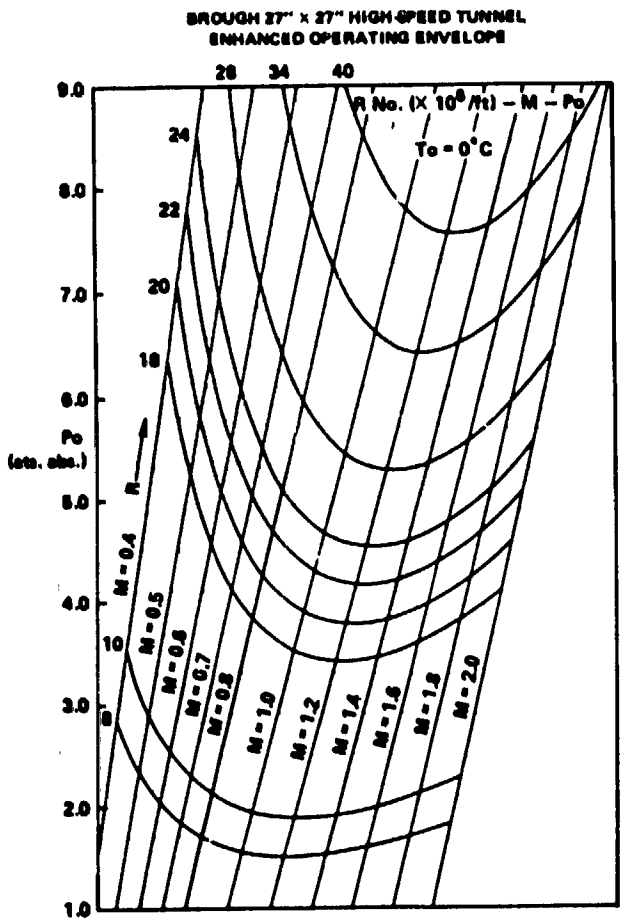


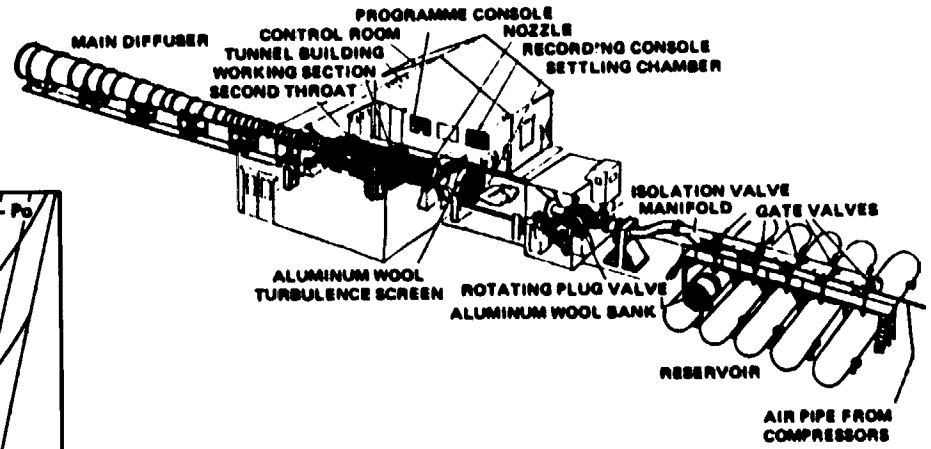


HIGH-SPEED WIND TUNNEL – GENERAL LAYOUT

| British Aerospace Brough, England | TRANSONIC WIND TUNNELS | | COMPARABLE FACILITIES |
|---|---|---|---|
| | TEST SECTION SIZE: 0.68 x 0.68 x 2.1 m | SPEED RANGE: (Mach No.) 0.1 - 2.5 | $3\text{-}D_3$ |
| | DATE BUILT/UPGRADED: 1958/1963/1984 | TEMP. RANGE: 273 K | |
| 27 x 27-In Transonic/ Supersonic Blowdown Tunnel | REPLACEMENT COST: $24M | REYNOLDS NO: (Per m X $10^{-6}$) 2.9 - 66 (148) | |
| | OPERATIONAL STATUS: 1 shift per day | DYNAMIC PRES: ($kN/m^2$) 0.8 - 174 (428) | |
| | | STAGNATION PRES: (bars) 1.2 - 4.0 (9.0) | |
| | Currently (1984) being uprated to operate at 9.0 bar stagnation pressure. Enhanced operating parameters shown in parentheses. Weapon releases performed using the accelerated model concept. | | |

TESTING CAPABILITIES: 22% porosity working section (normal holes), interchangeable nozzles for M = 1.4 - 2.5. Tunnel operation by computer control of Mach number and Reynolds number. Tunnel used for overall 6-degree force measurements, flutter, weapon jettisons, buffet, and flow visualization on full, half, and part models.

DATA ACQUISITION: Computer-controlled data logging of 24 channels with immediate post-run data reduction. Multiscanivalve capability.

CURRENT PROGRAMS: These include novel methods of weapon release, overall forces on advanced STOVL configurations, and other combat aircraft. Flutter technique development and in-service weapon clearance/aiming problems.

PLANNED IMPROVEMENTS: Tunnel enhancement to 9 bar capability by 1985 (≈ $480K).

LOCAL INFORMATION CONTACT:

| DFVLR Köln-Porz, Germany | TRANSONIC WIND TUNNELS | | COMPARABLE FACILITIES |
|---|---|---|---|
| | TEST SECTION SIZE: 0.6 x 0.6 m | SPEED RANGE: (Mach No.) 0.5 - 4.5 | 3-D$_s$ |
| | DATE BUILT/UPGRADED: 1966 | TEMP. RANGE: Total ambient - 530 K | |
| Trisonic Tunnel (TMK) | REPLACEMENT COST: | REYNOLDS NO: (Per m X $10^{-6}$) 6 - 80 | |
| | OPERATIONAL STATUS: 1 shift per day | DYNAMIC PRES: (kN/m$^2$) 100 for Mach > 1 | |
| | | STAGNATION PRES: (bars) 1.2 - 26 | |
| | Intermittent blowdown, flexible nozzle; running time: 60 sec, closed/perforated test sections | | |

TESTING CAPABILITIES: The tunnel has a closed test section and a changeable transonic test section with perforated walls. Maximum running time is between 1 and 2 min depending on Mach number. There are different model mounts including a side strut for an angle-of-attack range of ±90° in supersonic flow. Typical model size: length 0.5 m and span 0.2 m. For jet simulation tests, a 10 m$^3$, 300 bar pressure reservoir is available.

DATA ACQUISITION: Forty channel A/D converter input and on-line data reduction.

CURRENT PROGRAMS: Main research is directed at the investigation of the aerodynamics of missiles and missile components: dynamic stability, wings, and bodies at high angles of attack.

PLANNED IMPROVEMENTS:

LOCAL INFORMATION CONTACT: DFVLR Windtunnel Division, Linder Höhe, D-5000 Köln 90, Dipl.-Ing. Helmut Esch, (02203-601-2345).

TUNNEL PARAMETER CURVES
BASED ON $T_0 = 460°R$ AND TEST SECTION HEIGHT

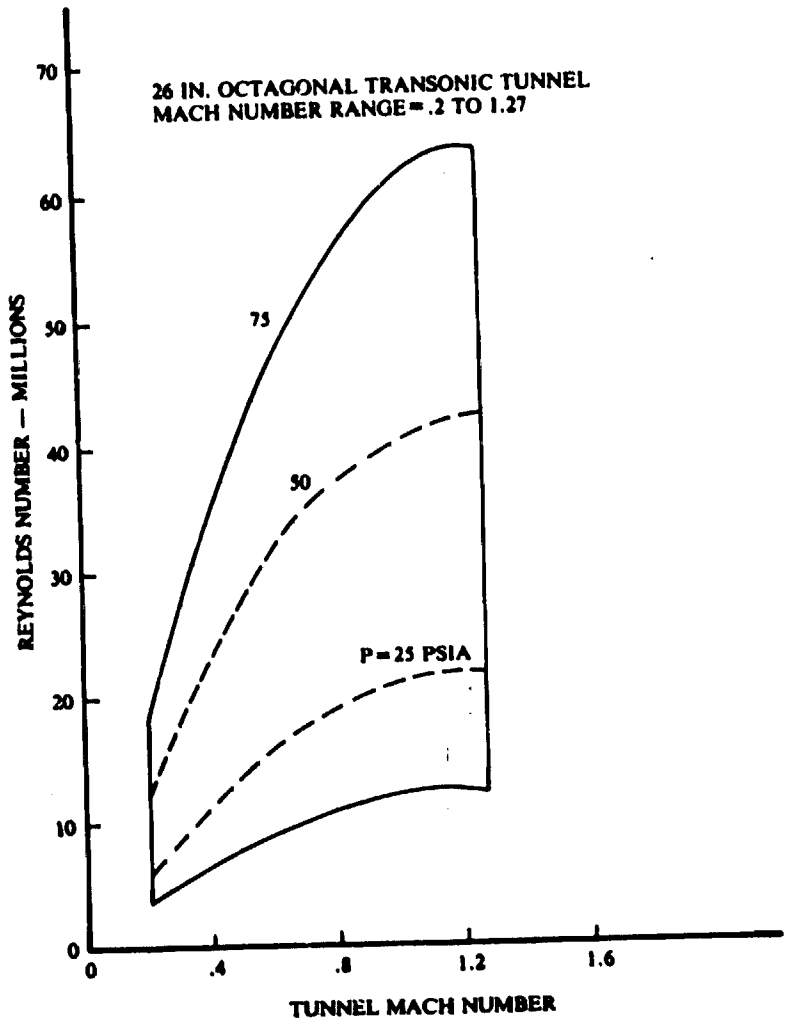

| Grumman Aerospace Corp. Bethpage, N.Y. | TRANSONIC WIND TUNNELS | | COMPARABLE FACILITIES |
|---|---|---|---|
| | **TEST SECTION SIZE:** 2.17-ft slotted octagonal | **SPEED RANGE:** (Mach No.) 0.20 - 1.27 | $3\text{-}D_3$ |
| | **DATE BUILT/UPGRADED:** 1957/1967/1969/1971 | **TEMP. RANGE:** 460° - 500°R | |
| 26-In Transonic Wind Tunnel | **REPLACEMENT COST:** $3.5M | **REYNOLDS NO:** (Per ft X $10^{-6}$) 2.10 - 27.8 | |
| | **OPERATIONAL STATUS:** 1 shift per day | **DYNAMIC PRES:** (lb/ft$^2$) 144 - 4584 | |
| | | **STAGNATION PRES:** (psia) 20 - 75 | |
| | Intermittent blowdown to atmosphere; boundary layer removal system top and two sidewalls. Mach control continuously variable via downstream gate and servo controlled flap system. Special feature: High Reynolds number | | |

TESTING CAPABILITIES: Tests include force, pressure, and flutter of complete or component models. This is a highly automated facility with a relatively high daily run rate for its modest air production plant. A special centerline air supply and support system is available for blown back-end tests of propulsion models, which permits thrust-drag determination and/or back-end drag to be measured directly via a second-force balance system. A special inlet test rig also permits isolated inlet drag and internal performance testing. A 2-D airfoil test rig is also available. Flutter models are sidewall mounted on a special support system. A flush-mounted wall balance is also available for component model force testing with model wall mounted. A tunnel wall boundary layer removal system is available for use with sidewall-supported model testing. Tunnel is capable of multi Mach number runs in one blow.

DATA ACQUISITION: One hundred channels of data can be accommodated. A dedicated computer-controlled data acquisition control and data reduction system is used. Complete data turnaround is typically 5 min per run.

CURRENT PROGRAMS:

PLANNED IMPROVEMENTS: New data acquisition and control system to be installed in 1984-1985. Tunnel test-section improvements to be made in 1984-1985.

LOCAL INFORMATION CONTACT: F. Blomback Grumman Aerotest Department, (516) 575-3685.

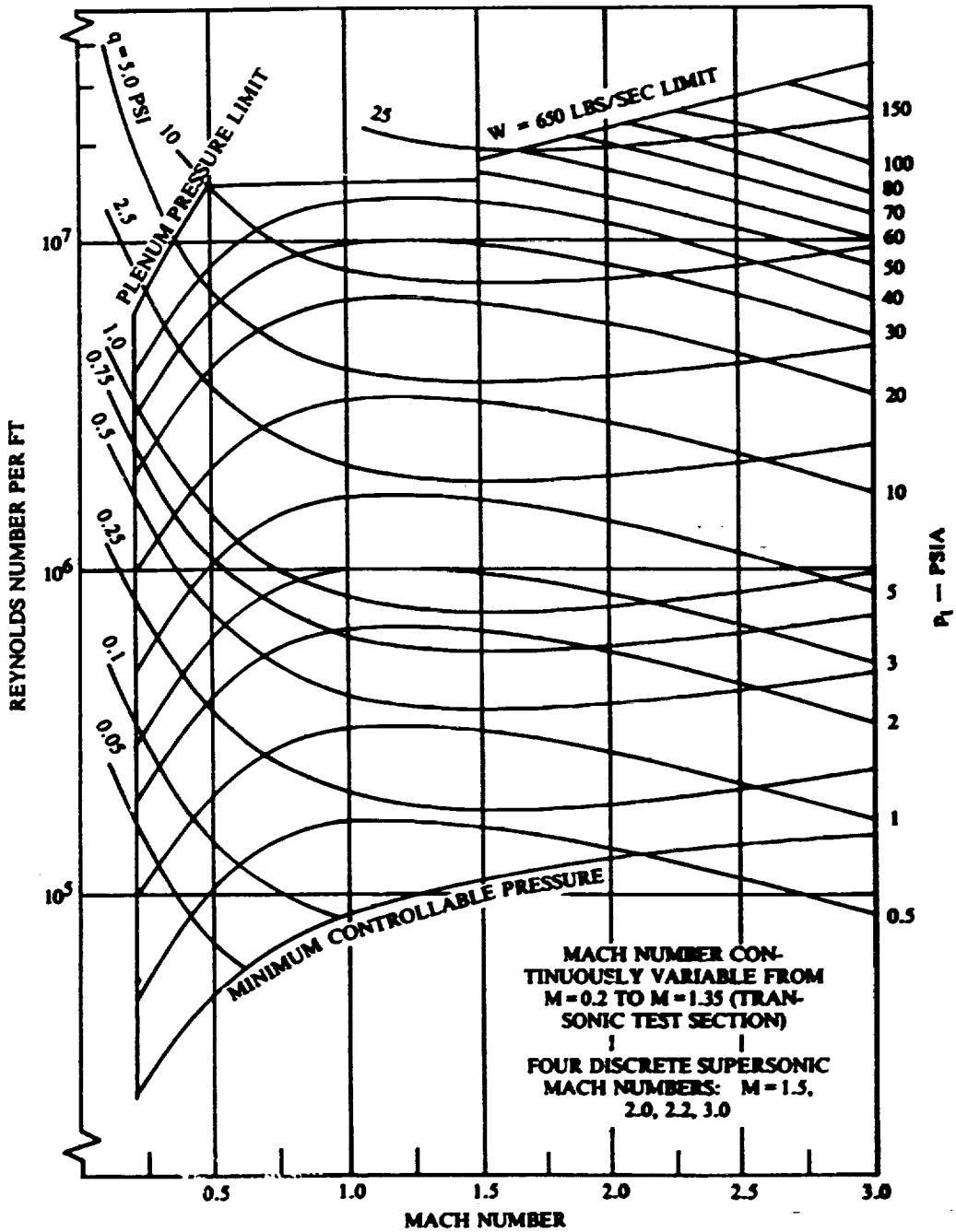
q = 5.0 PSI
10
PLENUM PRESSURE LIMIT
25
W = 650 LBS/SEC LIMIT
2.5
1.0
0.75
0.5
0.25
0.1
0.05
MINIMUM CONTROLLABLE PRESSURE
MACH NUMBER CONTINUOUSLY VARIABLE FROM M = 0.2 TO M = 1.35 (TRANSONIC TEST SECTION)
FOUR DISCRETE SUPERSONIC MACH NUMBERS: M = 1.5, 2.0, 2.2, 3.0
REYNOLDS NUMBER PER FT
$10^7$
$10^6$
$10^5$
MACH NUMBER
0.5
1.0
1.5
2.0
2.5
3.0
$p_1$ — PSIA
150
100
80
70
60
50
40
30
20
10
5
3
2
1
0.5

181A

| | TRANSONIC WIND TUNNELS | | COMPARABLE FACILITIES |
|---|---|---|---|
| Northrop Corp. Aircraft Division | TEST SECTION SIZE: 2 x 2 ft | SPEED RANGE: (Mach No.) 0.4 - 1.35 and 1.5, 2, 2.2, 3 | $3\text{-}D_3$ |
| | DATE BUILT/UPGRADED: 1962/1979 | TEMP. RANGE: 460° - 520°R | |
| 24-In Trisonic Wind Tunnel | REPLACEMENT COST: $4M | REYNOLDS NO: (Per ft X $10^{-6}$) 0.2 - 30 | |
| | OPERATIONAL STATUS: 1 shift testing approximately 6 months per year | DYNAMIC PRES: ($lb/ft^2$) 40 - 3600 | |
| | | STAGNATION PRES: (psia) 1 - 150 | |
| | Intermittent blowdown to atmosphere or vacuum, from 3200 psia air supply<br>Special feature: High Reynolds number | | |

TESTING CAPABILITIES: Interchangeable sections incorporating the nozzle and test section provide the Mach numbers below:

0.4 —→ 1.35 Transonic Test Section with 10% porous slotted-hole walls
1.5, 2.0, 3.0 Fixed block supersonic nozzles
2.2 Liner in M = 1.5 nozzle

The tunnel sting support-system section is common to all nozzles and can quickly be withdrawn back along rails from the test section to provide excellent access to the model for model changes. Six-component internal strain-gage balances are used for force measurements and individual transducers for pressures. Typical fighter model scale for force testing is 0.03, whereas inlet models up to 0.20 scale can be tested for inlet and ramp bleed system development. Typical run time is 30 sec with run frequency of one per hour.

DATA ACQUISITION: Automated control of model motion/data acquisition to make effective use of short run time. 256 channels, dedicated on-site computer, graphics CRT, and high-speed pen plotter.

CURRENT PROGRAMS: High-speed development directed toward current and future fighter and trainer aircraft.

PLANNED IMPROVEMENTS: M = 1.6 liner for transonic test section.

LOCAL INFORMATION CONTACT: Fred W. Peitzman, Manager Wind Tunnel Test (Orgn. 3844/64), (213) 970-4584.

SCHEMATIC

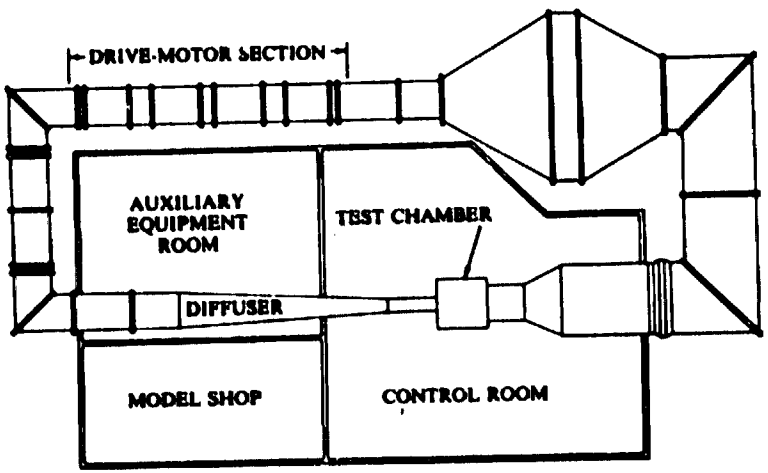


FACILITY PERFORMANCE DATA

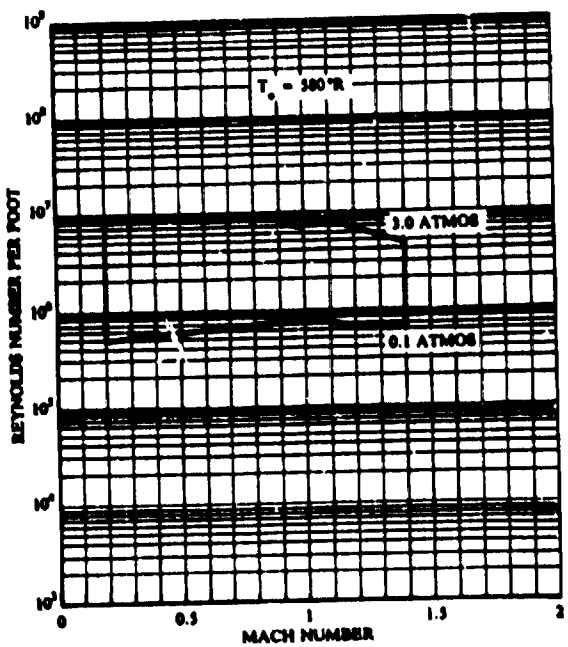

| NASA–Ames Research Center | TRANSONIC WIND TUNNELS | | COMPARABLE FACILITIES |
|---|---|---|---|
| | TEST SECTION SIZE: 2 x 2 x 5 ft | SPEED RANGE: (Mach No.) 0.2 - 1.4 | $3\text{-}D_3$ |
| | DATE BUILT/UPGRADED: 1951 | TEMP. RANGE: 540° - 580°R | |
| 2 x 2-Ft Transonic Wind Tunnel | REPLACEMENT COST: $9M | REYNOLDS NO: (Per ft X $10^{-6}$) 0.5 - 8.7 | |
| | OPERATIONAL STATUS: 1 shift per day | DYNAMIC PRES: (lb/ft$^2$) 60 - 2175 | |
| | | STAGNATION PRES: (psia) 2.35 - 44 | |
| | Closed circuit, single return, variable density, continuous flow wind tunnel | | |

TESTING CAPABILITIES: The 2- by 2-ft Transonic Wind Tunnel (TWT) is primarily used for NASA-sponsored aerodynamic research. Conventional, steady-state models can be installed on a sting using an internal strain-gage balance to measure forces and moments. Two-dimensional airfoils and three-dimensional wings can be installed via wall mounts. A probe on a sting can be used for wake and streamline studies. Facilities for measuring multiple steady or fluctuating pressure are available. Auxiliary high-pressure (3000 psi) air is available.

DATA ACQUISITION: Data are acquired through a Data General NOVA system and processed with the NOVA in stand-alone mode or through an IBM 4341 central computer. Analog input data can be recorded on 64 channels with a maximum total sample rate of 500 000 samples per second. Digital input data can be recorded on an additional 32 channels.

CURRENT PROGRAMS: Airfoil Research Adaptive Wall Test Section Development, Laser Velocimetry, and Holography Studies.

PLANNED IMPROVEMENTS: Installation of an adaptive wall to actively control the flow through the floor and ceiling to eliminate wall interference.

LOCAL INFORMATION CONTACT: Daniel P. Bencze, Chief, Experimental Investigations Branch, (415) 965-5848 or William R. Hofstetter, (415) 965-5875.

| | TRANSONIC WIND TUNNELS | | COMPARABLE FACILITIES |
|---|---|---|---|
| DFVLR Göttingen, West Germany (FRG) | TEST SECTION SIZE: (1) 0.75 x 0.75 m (2) 0.71 x 0.725 m | SPEED RANGE: (Mach No.) (1) 1.22 - 2.5 (2) 0.4 - 0.95 | 3-$D_3$ |
| | DATE BUILT/UPGRADED: 1959 | TEMP. RANGE: 300 K | |
| High-Speed Wind Tunnel (HKG) | REPLACEMENT COST: | REYNOLDS NO: (Per m X $10^{-6}$) 14.6 at Mach 0.95 | |
| | OPERATIONAL STATUS: 3 tests per hour | DYNAMIC PRES: ($kN/m^2$) 35 at Mach 0.95 | |
| | | STAGNATION PRES: (bars) 1 | |
| | Intermittent: Run time: 15 - 30 sec adjustable nozzle | | |

TESTING CAPABILITIES: Model support for vertical or rear stings. Six-component strain-gage balances (TASK and DFVLR) and piezo balances. Capabilities for jettison of external stores. Pressure measurements with scanivalve, CEC-statham-pressure transducers and PSI-system. Jet simulation even with original engines (800 N, ~1 sec), thrust and aerodynamic loads measured separately and simultaneously. Flow visualization by laser, smoke, colored liquid, and schlieren.

DATA ACQUISITION: DC amplifiers, integrating digital voltmeters, and off-line operation. Possibility to get off-line results (before the next test begins).

CURRENT PROGRAMS: Aerodynamic investigation of flight vehicles and aircraft for industry and research.

PLANNED IMPROVEMENTS: New test section (DAM) of circular cross-section ($\phi$ = 800 mm) with flexible adjustable walls. The rubber tube is adjusted by 8 step motors in 8 sections (64 in total), calculations for adjustment performed by a one-step method. Implementation and first measurements have been done from December 1983 to February 1984. The adaption procedure is fully automated. Further improvements of this facility will be automatic Mach number and angle-of-attack control.

LOCAL INFORMATION CONTACT: Dr. Wolfgang Lorenz-Meyer, DFVLR Windtunnel Division, Bunsenstrasse 10, D-3400 Göttingen, (0551/709-2179).

| | TRANSONIC WIND TUNNELS | | COMPARABLE FACILITIES |
|---|---|---|---|
| Mitsubishi Heavy Industries, Ltd., Japan | TEST SECTION SIZE: 0.6 x 0.6 x 2.8 m | SPEED RANGE: (Mach No.) 0.4 - 4.0 | $3\text{-}D_3$ |
| | DATE BUILT/UPGRADED: 1968/1979/1982 | TEMP. RANGE: Ambient | |
| 60-M Trisonic Wind Tunnel | REPLACEMENT COST: $13M | REYNOLDS NO: (Per m X $10^{-6}$) 15 - 65 | |
| | OPERATIONAL STATUS: 10 hours per day | DYNAMIC PRES: ($kN/m^2$) 29.4 - 156 | |
| | | STAGNATION PRES: (bars) 11.77 (maximum) | |
| | Intermittent blowdown (20 sec at M = 1.0 and 35 sec at M = 2.5) | | |

TESTING CAPABILITIES: Six-component force test, pressure distribution test, half-model test, flutter test (semispan wing and empennage), static aeroelastic test, air intake test including unsteady pressure measurement, power effect test, and flow visualization test. Angle-of-attack range is from -13° to 13° when sting support system is used. Internal six-component balance is used for force measurement of complete aircraft model test and sidewall five-component balance for half-model test. The air storage sphere has an 8-m diameter with air pressure up to 15 $kg/cm^2$ G. The tunnel upgrading in 1982 improved the flow angularity and turbulence level as well as Mach number precise control.

DATA ACQUISITION: Thirty-two channel force and pressure data can be recorded simultaneously. The IBM system 7 processes the data on-line with output by plotter, printer, graphic display, and character display.

CURRENT PROGRAMS: Research and development of aircraft, missile, and rocket.

PLANNED IMPROVEMENTS: High angle-of-attack support system in 1984; compressor replacement in 1986.

LOCAL INFORMATION CONTACT: Haruo Sakai, Manager, Aerodynamics Research Section, First Engineering Department, Nagoya Aircraft Works, (052) 611-2111, ext. 247.

| | TRANSONIC WIND TUNNELS | | COMPARABLE FACILITIES |
|---|---|---|---|
| Fuji Heavy Industries, Japan | TEST SECTION SIZE: 2 x 2 ft | SPEED RANGE: (Mach No.) 0.2 - 4.0 | $3\text{-}D_3$ |
| | DATE BUILT/UPGRADED: 1981 | TEMP. RANGE: Atmospheric at stagnation | |
| 2 x 2-Ft High-Speed Wind Tunnel | REPLACEMENT COST: $5.5M | REYNOLDS NO: (Per ft X $10^{-6}$) 3.2 - 3.5 | |
| | OPERATIONAL STATUS: 1 shift per day | DYNAMIC PRES: (lb/ft$^2$) 140 - 800 | |
| | | STAGNATION PRES: (psia) Atmospheric | |
| | Intermittent indraft tunnel, open circuit, closed test section (supersonic), 6% perforated test section (transonic)<br>Intermittent time: 20 min; Run time: 10 - 30 sec | | |

TESTING CAPABILITIES: Two model support systems are equipped: sting with 6-component internal balance for the full-model tests and side-wall with 3-component balance for the half-model tests. Oil flow and schlieren techniques are available for flow visualization tests, and 10 kg/cm$^2$, 2.5 m$^3$ compressed-air supply is equipped to simulate exhaust jet flow, as well as pressure measurement equipments (scanivalves). When varying test Mach numbers over supersonic region, the fixed nozzle blocks are changed from what is desired. (It takes about 1 hr, and three supersonic nozzle blocks (2.0, 3.0 and 4.0) are equipped.)

DATA ACQUISITION: A Hewlett-Packard 1000 series computer and front-end are used for data acquisition of up to 17 analog channels, and two programmable logic controllers are used for wind tunnel and model position control. On-line data acquisition/reduction programs provide almost instantaneous numerical and graphical results.

CURRENT PROGRAMS: The facility is used for the study of the transonic and supersonic aerodynamics of military and transport aircraft and rocket configurations.

PLANNED IMPROVEMENTS: Additional supersonic nozzle blocks are scheduled.

LOCAL INFORMATION CONTACT: Akitoshi Nagao, General Manager, FHI Aircraft Engineering Division, 1-1-11 Younan Utsunomiya Tochigi, 320, Japan, (0286-58-111).

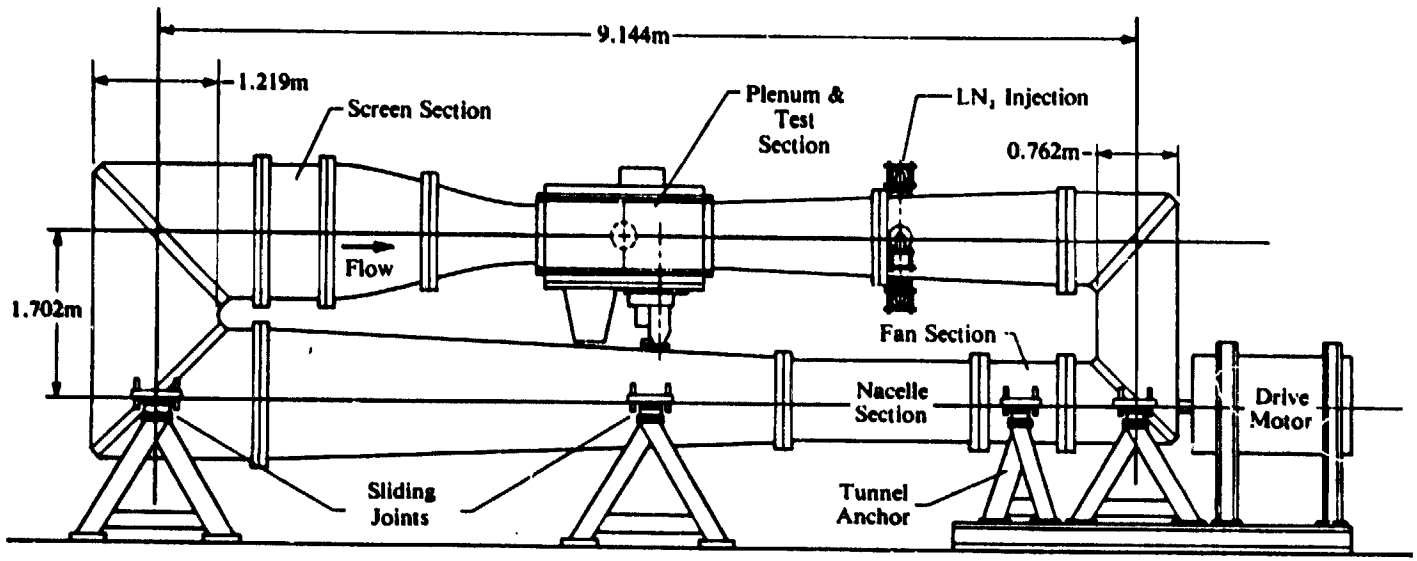
9.144m
1.219m
Screen Section
Plenum & Test Section
LN, Injection
0.762m
Flow
1.702m
Fan Section
Nacelle Section
Drive Motor
Sliding Joints
Tunnel Anchor

| NASA–Langley Research Center | TRANSONIC WIND TUNNELS | | COMPARABLE FACILITIES |
|---|---|---|---|
| | TEST SECTION SIZE: 13 x 13 in | SPEED RANGE: (Mach No.) 0.2 - 1.1 | $3\text{-}D_3$ |
| | DATE BUILT/UPGRADED: 1973/1978 | TEMP. RANGE: 630° - 144°R | |
| 0.3-M Transonic Cryogenic Wind Tunnel<br>Flexible Wall Insert | REPLACEMENT COST: $2.7 for entire complex | REYNOLDS NO: (Per ft X $10^{-6}$) 120 | |
| | OPERATIONAL STATUS: 2 shifts per day (backlog) | DYNAMIC PRES: ($lb/ft^2$) 4320 | |
| | | STAGNATION PRES: (psia) 17.64 - 88.2 | |
| | Continuous flow, cryogenic pressurized tunnel, variable test section size<br>Test medium: Nitrogen; Model chord: 33.0 cm | | |

TESTING CAPABILITIES: This facility provides the unique three-parameter operating envelope that is characteristic of variable pressure and variable temperature. In addition, the tunnel ceiling and floor can be shaped to minimize the erroneous wall effects. A boundary layer central apparatus will be incorporated to enable sidewall boundary layer removal.

DATA ACQUISITION: One hundred ninety-two Analog Channels on MODCOMP Data Acquisition system. On-line and off-line data reduction capabilities.

CURRENT PROGRAMS: The flexible wall insert is scheduled to be installed in the tunnel sometime near the end of Fiscal Year 1984. It will be used for airfoil testing at high Reynolds numbers, development of advanced test techniques and studies.

PLANNED IMPROVEMENTS: Fiscal Year 1987 - Modifications to 0.3-m Transonic Cryogenic Tunnel (1242).

LOCAL INFORMATION CONTACT: Charles L. Ladson, Asst. Head, Experimental Techniques Branch, (804) 865-3711.

# SUPERSONIC WIND TUNNELS

# SUPERSONIC WIND TUNNELS

## ASSESSMENT OF COMPARABLE CAPABILITIES

In contrast to the Subsonic and Transonic tunnels, the assessment of comparable capabilities for the Supersonic tunnels was done on an individual basis to account for the many factors and facility characteristics critical in this speed regime. Individual features and capabilities such as size, speed range, temperature range, and Reynolds number were compared in determining the similarities of the various tunnels. Only those tunnels possessing similar capabilities across all of the features were considered comparable. In some cases, more capable facilities are referenced as alternatives, but never the converse. Overall, more facilities are considered "unique" in this speed regime than in the subsonic and transonic groups.

Each facility's data sheet identifies the individual facilities that are judged comparable. These sheets have been organized according to size and, in addition, have been grouped according to comparable capabilities so that all comparable tunnels appear sequentially.

As indicated in the Transonic section, multiple speed tunnels such as polysonic and trisonic, or those which discretely cover the transonic and supersonic speeds, are listed under both categories.

The United States (NASA and DOD) owns the largest supersonic wind tunnels, with U.S. industry having the highest Reynolds number capability; particularly in their 4-ft polysonic tunnels. Except for size, foreign tunnels are roughly comparable to those of the United States, providing maximum Reynolds number capability near the mean level for this speed regime. (See figure 11.) Most U.S. and foreign facilities also provide a broad and variable Mach number range and are actively utilized.

## HIGH REYNOLDS NUMBER TUNNELS

Those tunnels having high Reynolds number capability have been identified and listed in the following table. The value indicated is the maximum Reynolds number based on a chord length (c) equal to the square root of the test section area ($A_{TS}$):

$$R_{e_{max}} = R_e \times c \quad \text{where} \quad c = \sqrt{A_{TS}}$$

This standard differs from the one used for the Subsonic and Transonic tunnels, which was based on a chord length one-tenth (1/10) of the square root of the test section area. Therefore, for a tunnel listed in both the transonic and supersonic sections, the $R_e c$ value for the latter will appear ten times larger than for the former.

PAGE 188 INTENTIONALLY BLANK



PRECEDING PAGE BLANK NOT FILMED

| Tunnel | Location | $R_e c \times 10^{-6}$ |
|---|---|---|
| 4-ft Polysonic | McDonnell Douglas | 200 |
| 4-ft High Speed | Vought | 150 |
| 7-ft | Rockwell–California | 130 |
| NAE 3-D | Canada–NRC | 120 |
| 4-ft Trisonic | McDonnell Douglas–El Segundo | 120 |
| 4-ft Trisonic | Lockheed–Georgia | 120 |
| 4-ft SST | Netherlands | 120 |
| 4-ft | India–Bangalore | 100 |
| 4-ft | United Kingdom | 95 |
| Ludwieg Tube | Calspan | 80 |
| 15-in | Grumman | 75 |
| Mach 3 | DOD–WAL | 70 |
| 4-ft | Boeing–Seattle | 70 |

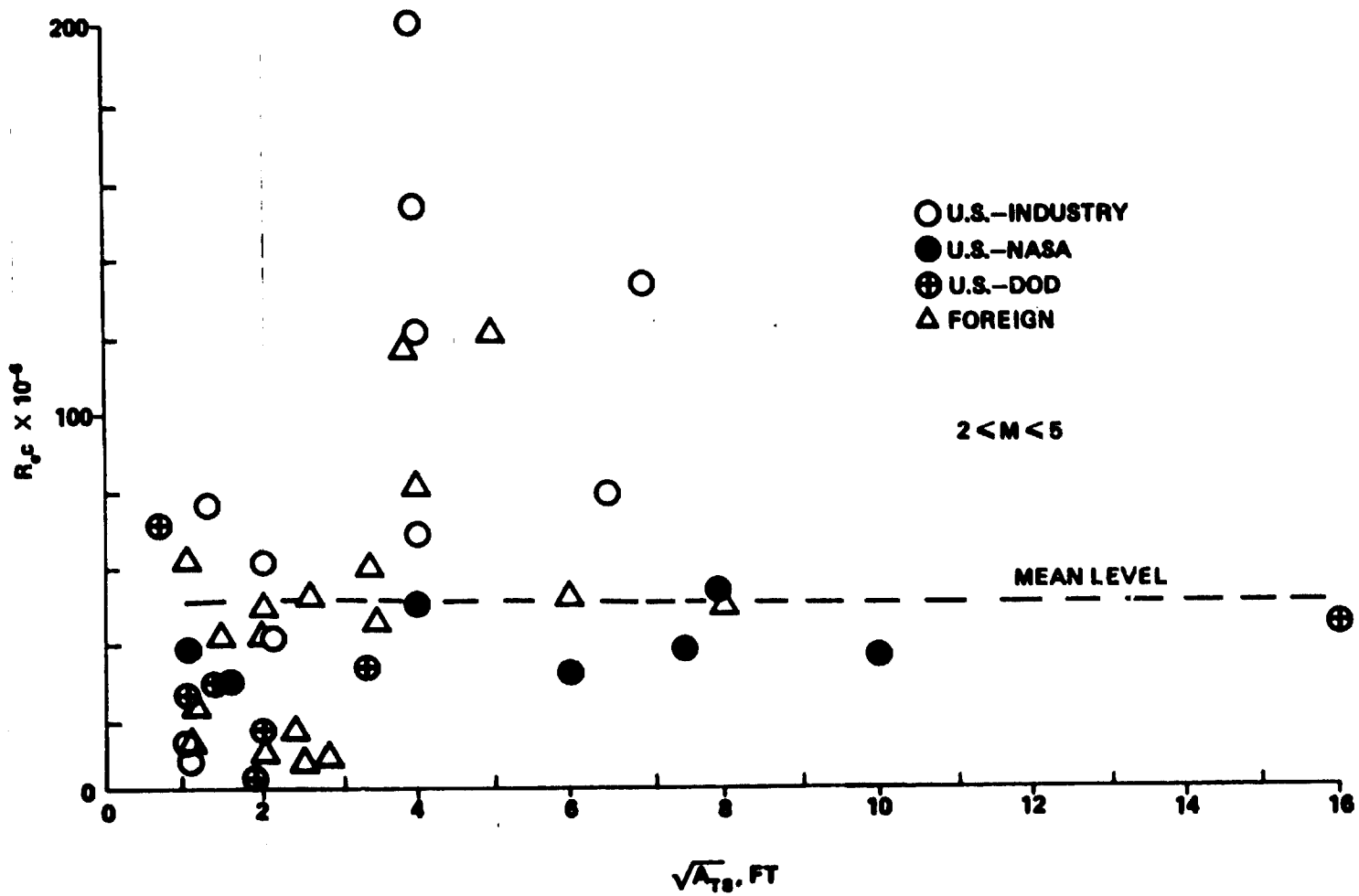


Figure 11. Supersonic tunnels.

## SUPERSONIC CAPABILITY*

| Page Number | Facility Name | Installation |
|---|---|---|
| 198 | APTU | DOD–AEDC |
| 199 | 16S | DOD–AEDC |
| 200 | 10 x 10-ft | NASA–Lewis |
| 201 | 9 x 7-ft | NASA–Ames |
| 202 | 8-ft | United Kingdom–Bedford |
| 203 | 8 x 7-ft | NASA–Ames |
| 204 | S2-MA | France–ONERA, Modane |
| 205 | 8 x 6-ft | NASA–Lewis |
| 206 | 7-ft | Rockwell–Los Angeles |
| 207 | 6 x 6-ft | NASA–Ames |
| 208 | NAE 5 x 5-ft | Canada–National Research Council |
| 209 | 4-ft | India–Bangalore |
| 210 | 4-ft | Lockheed–California |
| 211 | 4-ft-Trisonic | McDonnell Douglas–El Segundo |
| 212 | Polysonic (4-ft) | McDonnell Douglas–St. Louis |
| 213 | SST (4-ft) | Netherlands |
| 214 | 4-ft | United Kingdom–Warton |
| 215 | High Speed (4-ft) | Vought |
| 216 | S3-MA (Supersonic) | France–ONERA, Modane |
| 217 | 30 x 27-in | United Kingdom–Woodford |
| 218 | 27 x 27-in | United Kingdom–Brough |
| 219 | 24-in | Northrop |
| 220 | Trisonic (TMK) | Germany–DFVLR |
| 221 | 2 x 2-ft | Japan–Fuji Heavy Industries |

*In order of appearance.

PRECEDING PAGE BLANK NOT FILMED

| Page Number | Facility Name | Installation |
|---|---|---|
| 222 | 60-cm | Japan–Mitsubishi |
| 223 | Supersonic #2 | DOD–NSWC |
| 224 | 4-ft | Boeing–Seattle |
| 225 | 1-m | Japan–National Aerospace Laboratory |
| 226 | High Speed (HMK) | Germany–DFVLR |
| 227 | Unitary Tunnel | NASA–Langley |
| 228 | 3 x 4-ft | United Kingdom–Bedford |
| 229 | von Karman A | DOD–AEDC |
| 230 | SWT | United Kingdom–Bedford |
| 231 | C-4 | France–L.R.B.A. French Army |
| 232 | 15-in | Grumman |
| 233 | 1 x 1-ft | NASA–Lewis |
| 234 | Boundary Layer | DOD–NSWC |
| 235 | Mach 3 High Reynolds Number | DOD–WAL |
| 236 | Ludwieg Tube | Calspan |

## SUPERSONIC WIND TUNNELS

| Page Number | Location and Facility Description | Test Section (ft) | Speed Range (Mach No.) | Reynolds Number (per ft x $10^{-6}$) | Comments |
|---|---|---|---|---|---|
| | **U.S. NASA** | | | | |
| | Ames Research Center | | | | |
| 201 | 9 x 7-ft (Unitary) | 9 x 7 | 1.55 - 2.5 | 0.8 - 6.5 | Captive Trajectory |
| 203 | 8 x 7-ft (Unitary) | 8 x 7 | 2.4 - 3.5 | 0.6 - 5.0 | Captive Trajectory |
| 207 | 6 x 6-ft | 6 x 6 | 0.25 - 2.2 | 0.5 - 5.0 | |
| | Langley Research Center | | | | |
| 227 | Unitary Tunnel | #1 4 x 4 | 1.47 - 2.86 | 0.5 - 12.2 | |
| | | #2 4 x 4 | 2.29 - 4.63 | 0.5 - 9.5 | |
| | Lewis Research Center | | | | |
| 200 | 10 x 10-ft | Closed 10 x 10 | 2 - 3.5 | 0.12 - 3.4 | Propulsion |
| | | Open 10 x 10 | 2 - 3.5 | 2.1 - 2.7 | |
| 205 | 8 x 6-ft | 8 x 6 | 0.4 - 2.0 | 3.6 - 4.8 | Propulsion |
| 233 | 1 x 1-ft | 1 x 1 | 1.6 - 5.0 | 1.5 - 36 | Internal Fluid Dynamics |
| | **U.S. DOD** | | | | |
| | Arnold Engineering Development Center | | | | |
| 199 | 16S | 16 x 16 | 1.5 - 4.75 | 0.1 - 2.6 | Propulsion |
| 198 | APTU | 16 dia | 0 - 4.5 | – | Propulsion, Ramjet |
| 229 | von Karman A | 3.3 x 3.3 | 1.5 - 6 | 0.3 - 9.2 | Captive Trajectory |
| | Naval Surface Weapons Center | | | | |
| 234 | Boundary Layer | 12 x 12-in | 3 - 5 | 0.2 - 24 | Vertical Test Section |
| 223 | Supersonic #2 | 16 x 16-in | 0.3 - 5 | 0.5 - 21 | Open Jet |
| | Wright Aeronautical Laboratories | | | | |
| 235 | Mach 3 High $R_e$ | 8.2 x 8-in | 3 | 10 - 100 | High $R_e$ |
| | **U.S. INDUSTRY** | | | | |
| | Boeing-Seattle | | | | |
| 224 | 4-ft | 4 x 4 | 1.2 - 4 | 6 - 17 | 2-D Transonic Insert |
| | Calspan | | | | |
| 236 | Ludwieg Tube | 60-in dia Free Jet | 1.2 - 4.5 | 0.04 - 18 | |

## SUPERSONIC WIND TUNNELS

| Page Number | Location and Facility Description | Test Section (ft) | Speed Range (Mach No.) | Reynolds Number (per ft x $10^{-6}$) | Comments |
|---|---|---|---|---|---|
| | **U.S. INDUSTRY** | | | | |
| 232 | Grumman 15-in | 15 x 15-in | 1.75, 2.2, 2.5, 3, 3.5, 4 | 10 - 60 | |
| 210 | Lockheed-CA 4-ft Trisonic | 4 x 4 | 0.2 - 5.0 | 2 - 30 | High $R_e$, Polysonic |
| 211 | McDonnell Douglas-El Segundo 4-ft Trisonic | 4 x 4 | 0.2 - 5.0 | 0.25 - 30 | High $R_e$, Polysonic |
| 212 | McDonnell Douglas-St. Louis Polysonic | 4 x 4 | 0.5 - 5.8 | 2 - 50 | High $R_e$, Polysonic |
| 219 | Northrop 24-in Trisonic | 2 x 2 | 0.4 - 1.35<br>1.5, 2, 2.2, 3 | 0.2 - 30 | Polysonic |
| 206 | Rockwell-Los Angeles 7-ft | 7 x 7 | 0.1 - 3.5 | 2 - 19 | High $R_e$, Polysonic, Flutter, Acoustic |
| 215 | Vought High Speed | 4 x 4 | 0.2 - 5.0 | 2 - 38 | High $R_e$, Polysonic, Captive Trajectory, Flutter |
| | **CANADA** | | | | |
| 208 | NAE 5 x 5-ft Blowdown 3-D | 5 x 5 | 0.1 - 4.25 | 24 @ M = 2.25 | High $R_e$, Polysonic |
| | **FRANCE** | | | | |
| 231 | C-4 | 1.3 x 1.3 | 1.35 - 4.3 | 3.0 - 9.7 | Supersonic Test Section |
| 204 | S2-MA | #1 6.2 x 5.7 | 1.5 - 3.1 | 1.6 - 8.9 | Supersonic Test Section |
| 216 | S3-MA | #2 2.6 x 2.5 | 1.2, 1.5, 2, 3.4, 4.5 | 19.5 | |
| | **GERMANY** | | | | |
| 226 | High Speed (HMK) | 11 x 11-in Fixed Nozzle | 0.4 - 0.7<br>1.57 - 4.15 | 50 | High $R_e$ |
| 220 | Trisonic Tunnel (TMK) | 23 x 23-in | 0.5 - 4.5 | 1.8 - 24 | Polysonic |

## SUPERSONIC WIND TUNNELS

| Page Number | Location and Facility Description | Test Section (ft) | Speed Range (Mach No.) | Reynolds Number (per ft x $10^{-6}$) | Comments |
|---|---|---|---|---|---|
| | **INDIA** | | | | |
| 209 | 1.2-m | 4 x 4 | 0.4 - 1.0 | 24.4 | Captive Trajectory, Polysonic |
| | **JAPAN** | | | | |
| 225 | 1-m (NAL) | 3.28 x 3.28 | 1.4 - 4.0 | 9 - 18 | |
| 221 | 2 x 2-ft (FHI) | 2 x 2 | 0.2 - 4.0 | 3.2 - 3.5 | Polysonic |
| 222 | 60-cm Trisonic (Mitsubishi) | 2 x 2 | 0.4 - 4.0 | 4.5 - 19 | Polysonic |
| | **NETHERLANDS** | | | | |
| 213 | SST | 4 x 4 | 1.2 - 4.0 | 30 @ M = 2.5 | High $R_e$, Pressurized |
| | **UNITED KINGDOM** | | | | |
| 202 | 8-ft (Bedford) | 8 x 8 | 0.1 - 0.9<br>1.35 - 2.5 | 6 @ M = 1.4 | Supersonic Mode |
| 214 | 4-ft (Warton) | 4 x 4 | 0.4 - 4.0 | 24 | High $R_e$, Polysonic, Flutter |
| 228 | 3 x 4-ft (Bedford) | 3 x 4 | 2.5 - 5.0 | 12 @ M = 4.5 | |
| 217 | 30 x 27-in (Woodford) | 27 x 30-in | 1.6 - 3.5 | 17 @ M = 1.6<br>9 @ M = 3.5 | |
| 218 | 27 x 27-in (Brough) | 27 x 27-in | 0.1 - 2.5 | 0.8 - 20 | Polysonic |
| 230 | SWT (Bedford) | 2.5 x 2.25 m | 1.4 - 3.0 | 1.0 - 4.3 | |

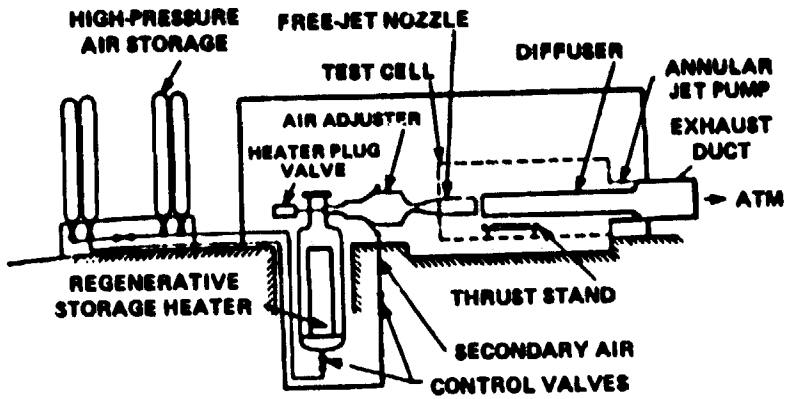


a. Schematic of APTU

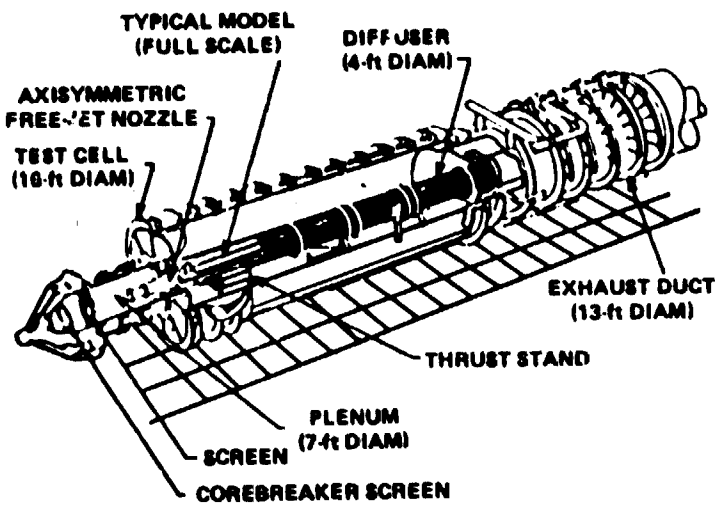


b. Typical Ramjet Installation for Free-Jet Test

| | SUPERSONIC WIND TUNNELS | | COMPARABLE FACILITIES |
|---|---|---|---|
| Arnold Engineering Development Center | TEST SECTION SIZE: Cell: 16D x 42 ft<br>Nozzles diam: 2 to 3.5 ft | SPEED RANGE: (Mach No.) Up to 4.5 vitiated air | None |
| | DATE BUILT/UPGRADED: 1972/1980 | TEMP. RANGE: 2000°R | |
| Aerodynamic and Propulsion Test Unit (APTU)<br>Ramjet Test Facility | REPLACEMENT COST: $30M | REYNOLDS NO: (Per ft X $10^{-6}$) N/A | |
| | OPERATIONAL STATUS:<br>Operational | DYNAMIC PRES: (lb/ft$^2$) 400 - 10 000 | |
| | | STAGNATION PRES: (psia) 300 | |
| | Blowdown, variable density, intermittent flow, vitiation heated, true temperature, free-jet tunnel | | |

TESTING CAPABILITIES: APTU is a blowdown, free-jet wind tunnel for testing airbreathing propulsion systems, primarily ramjet and ducted-rocket engines, at simulated flight conditions. Air is heated to produce true-temperature flight conditions by vitiation (combustion of butane in the test gas) and oxygen replenishing (to 21%). The tunnel may be used also for aerothermal and thermostructural-type testing. Capable of producing sea-level flight conditions to Mach 2.6, Mach 4.5 at altitude.

DATA ACQUISITION: Astrodata model 4121-101, SDS Sigma 2 computer, and computer-controlled data system.

CURRENT PROGRAMS:

PLANNED IMPROVEMENTS: Direct connect capability and sting model support system.

LOCAL INFORMATION CONTACT: Flight Mechanics Directorate, Deputy for Operations, AEDC/DOF, Arnold AFS TN 37389, (615) 455-2611, ext. 5280 or 6051.

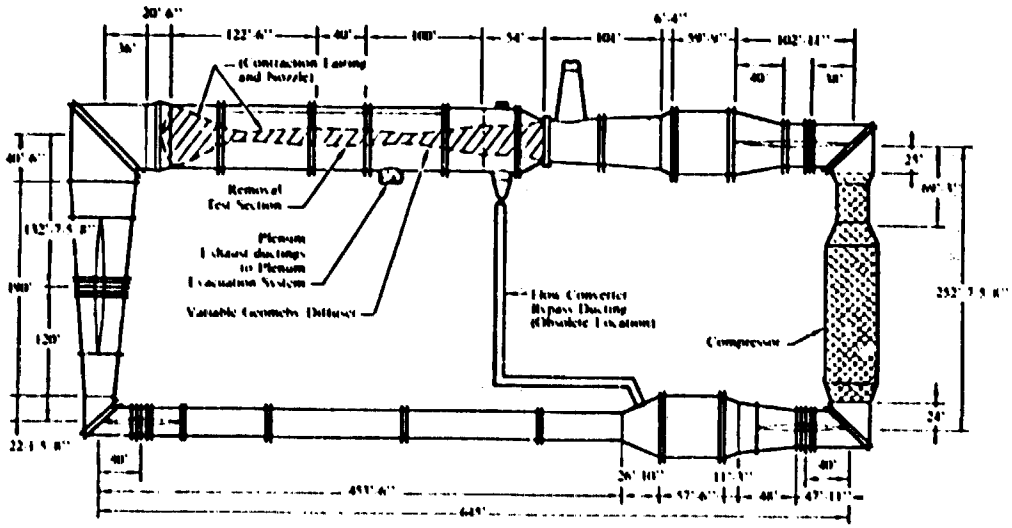


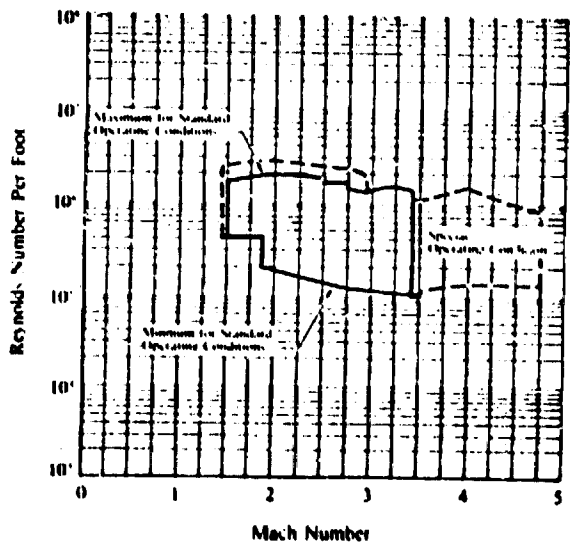


| | |
|---|---|
| Mach Range: | 1.5 – 4.75 |
| Reynolds Number (× $10^6$/ft): | .1 – 2.6 |
| Total pressure (psia): | 1.4 – 16.0 |
| Dynamic Pressure (psf): | 30 – 570 |
| Total Temperature (°R): | 560 – 1110 |
| Run Time: | Continuous |

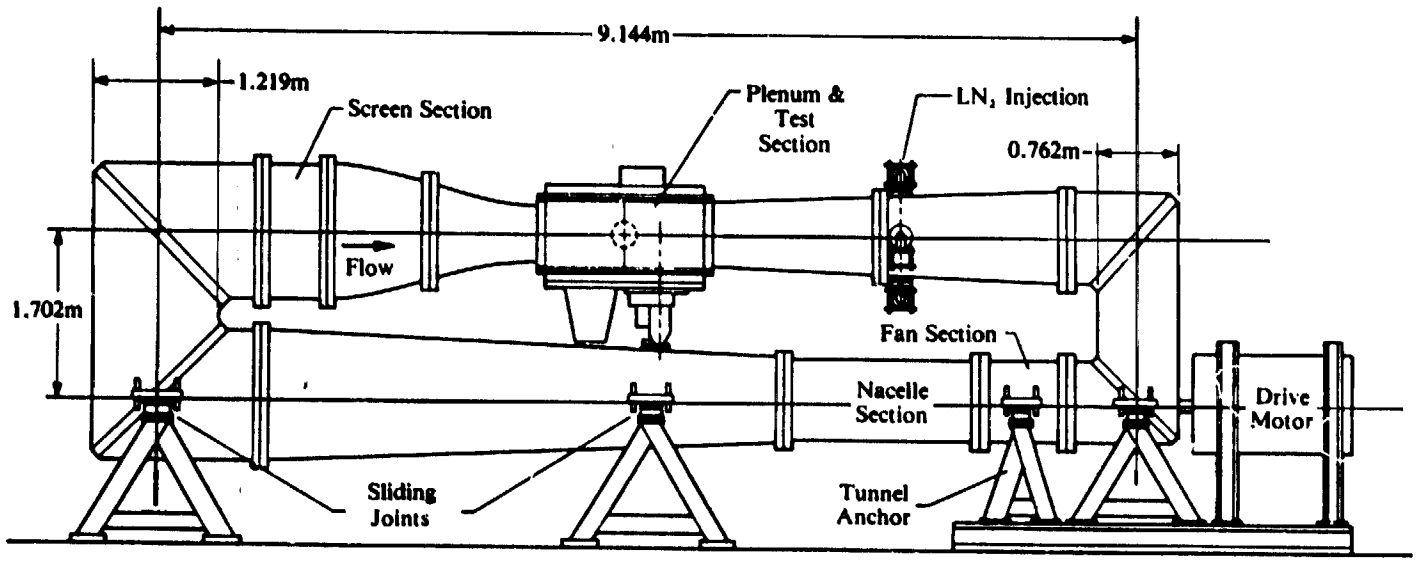
9.144m
1.219m
Screen Section
Plenum &
Test
Section
LN₂ Injection
0.762m
Flow
1.702m
Fan Section
Nacelle
Section
Drive
Motor
Sliding
Joints
Tunnel
Anchor

| NASA–Langley Research Center | TRANSONIC WIND TUNNELS | | COMPARABLE FACILITIES |
|---|---|---|---|
| | TEST SECTION SIZE: 13 x 13 in | SPEED RANGE: (Mach No.) 0.2 - 1.1 | $3\text{-}D_s$ |
| | DATE BUILT/UPGRADED: 1973/1978 | TEMP. RANGE: 630° - 144°R | |
| 0.3-M Transonic Cryogenic Wind Tunnel<br>Flexible Wall Insert | REPLACEMENT COST: $2.7 for entire complex | REYNOLDS NO: (Per ft X $10^{-6}$) 120 | |
| | OPERATIONAL STATUS:<br>2 shifts per day (backlog) | DYNAMIC PRES: (lb/ft$^2$) 4320 | |
| | | STAGNATION PRES: (psia) 17.64 - 88.2 | |
| | Continuous flow, cryogenic pressurized tunnel, variable test section size<br>Test medium: Nitrogen; Model chord: 33.0 cm | | |

TESTING CAPABILITIES: This facility provides the unique three-parameter operating envelope that is characteristic of variable pressure and variable temperature. In addition, the tunnel ceiling and floor can be shaped to minimize the erroneous wall effects. A boundary layer central apparatus will be incorporated to enable sidewall boundary layer removal.

DATA ACQUISITION: One hundred ninety-two Analog Channels on MODCOMP Data Acquisition system. On-line and off-line data reduction capabilities.

CURRENT PROGRAMS: The flexible wall insert is scheduled to be installed in the tunnel sometime near the end of Fiscal Year 1984. It will be used for airfoil testing at high Reynolds numbers, development of advanced test techniques and studies.

PLANNED IMPROVEMENTS: Fiscal Year 1987 - Modifications to 0.3-m Transonic Cryogenic Tunnel (1242).

LOCAL INFORMATION CONTACT: Charles L. Ladson, Asst. Head, Experimental Techniques Branch, (804) 865-3711.

# SUPERSONIC WIND TUNNELS

# SUPERSONIC WIND TUNNELS

## ASSESSMENT OF COMPARABLE CAPABILITIES

In contrast to the Subsonic and Transonic tunnels, the assessment of comparable capabilities for the Supersonic tunnels was done on an individual basis to account for the many factors and facility characteristics critical in this speed regime. Individual features and capabilities such as size, speed range, temperature range, and Reynolds number were compared in determining the similarities of the various tunnels. Only those tunnels possessing similar capabilities across all of the features were considered comparable. In some cases, more capable facilities are referenced as alternatives, but never the converse. Overall, more facilities are considered "unique" in this speed regime than in the subsonic and transonic groups.

Each facility's data sheet identifies the individual facilities that are judged comparable. These sheets have been organized according to size and, in addition, have been grouped according to comparable capabilities so that all comparable tunnels appear sequentially.

As indicated in the Transonic section, multiple speed tunnels such as polysonic and trisonic, or those which discretely cover the transonic and supersonic speeds, are listed under both categories.

The United States (NASA and DOD) owns the largest supersonic wind tunnels, with U.S. industry having the highest Reynolds number capability; particularly in their 4-ft polysonic tunnels. Except for size, foreign tunnels are roughly comparable to those of the United States, providing maximum Reynolds number capability near the mean level for this speed regime. (See figure 11.) Most U.S. and foreign facilities also provide a broad and variable Mach number range and are actively utilized.

## HIGH REYNOLDS NUMBER TUNNELS

Those tunnels having high Reynolds number capability have been identified and listed in the following table. The value indicated is the maximum Reynolds number based on a chord length (c) equal to the square root of the test section area ($A_{TS}$):

$$R_{e_{max}} = R_e \times c \quad \text{where} \quad c = \sqrt{A_{TS}}$$

This standard differs from the one used for the Subsonic and Transonic tunnels, which was based on a chord length one-tenth (1/10) of the square root of the test section area. Therefore, for a tunnel listed in both the transonic and supersonic sections, the $R_e c$ value for the latter will appear ten times larger than for the former.

PRECEDING PAGE BLANK NOT FILMED

PAGE 188 INTENTIONALLY BLANK

| Tunnel | Location | $R_e c \times 10^{-6}$ |
|---|---|---|
| 4-ft Polysonic | McDonnell Douglas | 200 |
| 4-ft High Speed | Vought | 150 |
| 7-ft | Rockwell–California | 130 |
| NAE 3-D | Canada–NRC | 120 |
| 4-ft Trisonic | McDonnell Douglas–El Segundo | 120 |
| 4-ft Trisonic | Lockheed–Georgia | 120 |
| 4-ft SST | Netherlands | 120 |
| 4-ft | India–Bangalore | 100 |
| 4-ft | United Kingdom | 95 |
| Ludwieg Tube | Calspan | 80 |
| 15-in | Grumman | 75 |
| Mach 3 | DOD–WAL | 70 |
| 4-ft | Boeing–Seattle | 70 |

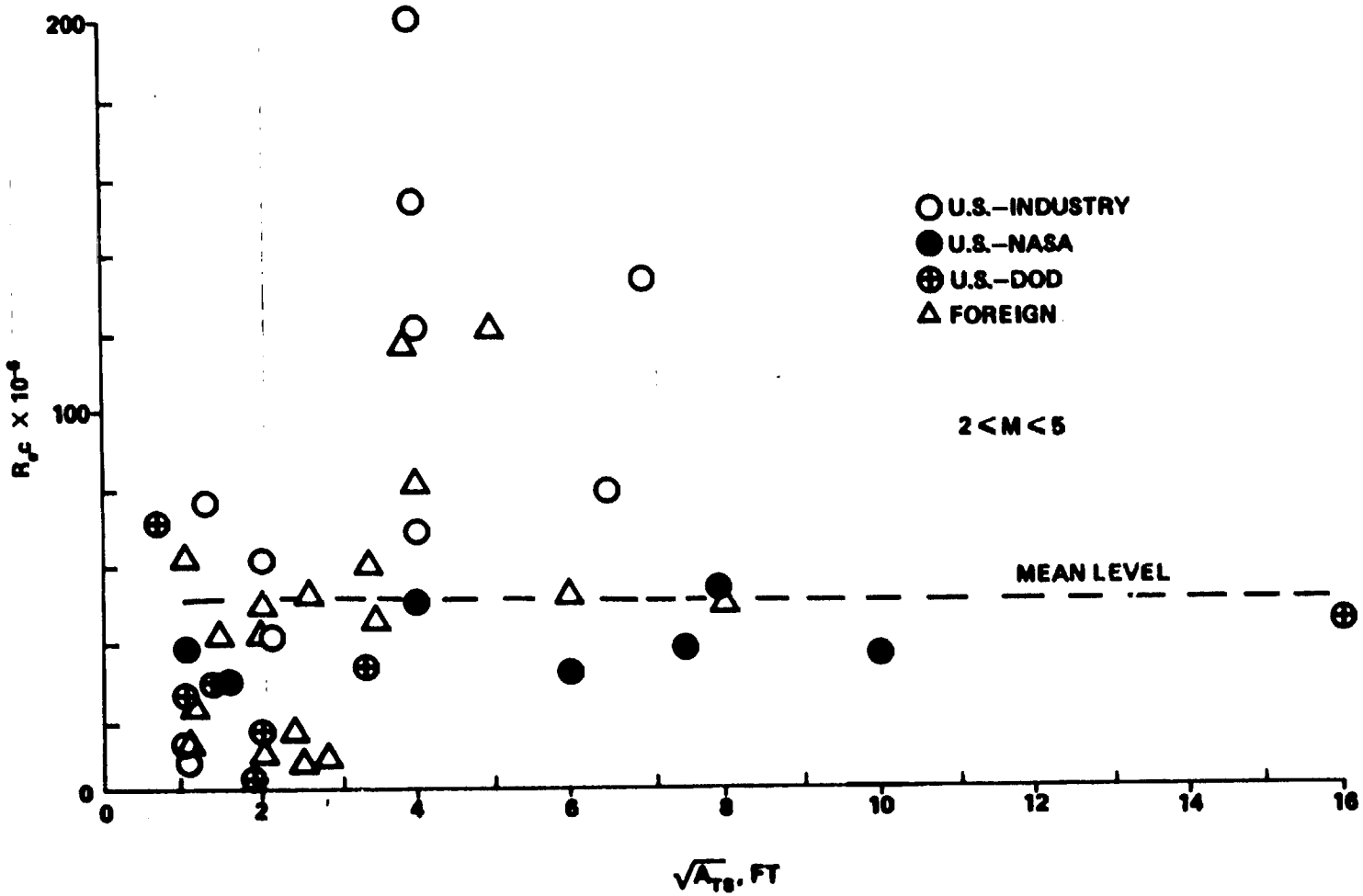


Figure 11. Supersonic tunnels.

## SUPERSONIC CAPABILITY*

| Page Number | Facility Name | Installation |
|---|---|---|
| 198 | APTU | DOD–AEDC |
| 199 | 16S | DOD–AEDC |
| 200 | 10 x 10-ft | NASA–Lewis |
| 201 | 9 x 7-ft | NASA–Ames |
| 202 | 8-ft | United Kingdom–Bedford |
| 203 | 8 x 7-ft | NASA–Ames |
| 204 | S2-MA | France–ONERA, Modane |
| 205 | 8 x 6-ft | NASA–Lewis |
| 206 | 7-ft | Rockwell–Los Angeles |
| 207 | 6 x 6-ft | NASA–Ames |
| 208 | NAE 5 x 5-ft | Canada–National Research Council |
| 209 | 4-ft | India–Bangalore |
| 210 | 4-ft | Lockheed–California |
| 211 | 4-ft-Trisonic | McDonnell Douglas–El Segundo |
| 212 | Polysonic (4-ft) | McDonnell Douglas–St. Louis |
| 213 | SST (4-ft) | Netherlands |
| 214 | 4-ft | United Kingdom–Warton |
| 215 | High Speed (4-ft) | Vought |
| 216 | S3-MA (Supersonic) | France–ONERA, Modane |
| 217 | 30 x 27-in | United Kingdom–Woodford |
| 218 | 27 x 27-in | United Kingdom–Brough |
| 219 | 24-in | Northrop |
| 220 | Trisonic (TMK) | Germany–DFVLR |
| 221 | 2 x 2-ft | Japan–Fuji Heavy Industries |

*In order of appearance.



PRECEDING PAGE BLANK NOT FILMED

| Page Number | Facility Name | Installation |
|---|---|---|
| 222 | 60-cm | Japan–Mitsubishi |
| 223 | Supersonic #2 | DOD–NSWC |
| 224 | 4-ft | Boeing–Seattle |
| 225 | 1-m | Japan–National Aerospace Laboratory |
| 226 | High Speed (HMK) | Germany–DFVLR |
| 227 | Unitary Tunnel | NASA–Langley |
| 228 | 3 x 4-ft | United Kingdom–Bedford |
| 229 | von Karman A | DOD--AEDC |
| 230 | SWT | United Kingdom- Bedford |
| 231 | C-4 | France--L.R.B.A. French Army |
| 232 | 15-in | Grumman |
| 233 | 1 x 1-ft | NASA–Lewis |
| 234 | Boundary Layer | DOD–NSWC |
| 235 | Mach 3 High Reynolds Number | DOD–WAL |
| 236 | Ludwieg Tube | Calspan |

## SUPERSONIC WIND TUNNELS

| Page Number | Location and Facility Description | Test Section (ft) | Speed Range (Mach No.) | Reynolds Number (per ft x $10^{-6}$) | Comments |
|---|---|---|---|---|---|
| | **U.S. NASA** | | | | |
| | Ames Research Center | | | | |
| 201 | 9 x 7-ft (Unitary) | 9 x 7 | 1.55 - 2.5 | 0.8 - 6.5 | Captive Trajectory |
| 203 | 8 x 7-ft (Unitary) | 8 x 7 | 2.4 - 3.5 | 0.6 - 5.0 | Captive Trajectory |
| 207 | 6 x 6-ft | 6 x 6 | 0.25 - 2.2 | 0.5 - 5.0 | |
| | Langley Research Center | | | | |
| 227 | Unitary Tunnel | #1 4 x 4 | 1.47 - 2.86 | 0.5 - 12.2 | |
| | | #2 4 x 4 | 2.29 - 4.63 | 0.5 - 9.5 | |
| | Lewis Research Center | | | | |
| 200 | 10 x 10-ft | Closed 10 x 10 | 2 - 3.5 | 0.12 - 3.4 | Propulsion |
| | | Open 10 x 10 | 2 - 3.5 | 2.1 - 2.7 | |
| 205 | 8 x 6-ft | 8 x 6 | 0.4 - 2.0 | 3.6 - 4.8 | Propulsion |
| 233 | 1 x 1-ft | 1 x 1 | 1.6 - 5.0 | 1.5 - 36 | Internal Fluid Dynamics |
| | **U.S. DOD** | | | | |
| | Arnold Engineering Development Center | | | | |
| 199 | 16S | 16 x 16 | 1.5 - 4.75 | 0.1 - 2.6 | Propulsion |
| 198 | APTU | 16 dia | 0 - 4.5 | – | Propulsion, Ramjet |
| 229 | von Karman A | 3.3 x 3.3 | 1.5 - 6 | 0.3 - 9.2 | Captive Trajectory |
| | Naval Surface Weapons Center | | | | |
| 234 | Boundary Layer | 12 x 12-in | 3 - 5 | 0.2 - 24 | Vertical Test Section |
| 223 | Supersonic #2 | 16 x 16-in | 0.3 - 5 | 0.5 - 21 | Open Jet |
| | Wright Aeronautical Laboratories | | | | |
| 235 | Mach 3 High $R_e$ | 8.2 x 8-in | 3 | 10 - 100 | High $R_e$ |
| | **U.S. INDUSTRY** | | | | |
| | Boeing-Seattle | | | | |
| 224 | 4-ft | 4 x 4 | 1.2 - 4 | 6 - 17 | 2-D Transonic Insert |
| | Calspan | | | | |
| 236 | Ludwieg Tube | 60-in dia Free Jet | 1.2 - 4.5 | 0.04 - 18 | |

## SUPERSONIC WIND TUNNELS

| Page Number | Location and Facility Description | Test Section (ft) | Speed Range (Mach No.) | Reynolds Number (per ft x $10^{-6}$) | Comments |
|---|---|---|---|---|---|
| | **U.S. INDUSTRY** | | | | |
| 232 | Grumman 15-in | 15 x 15-in | 1.75, 2.2, 2.5, 3, 3.5, 4 | 10 - 60 | |
| 210 | Lockheed-CA 4-ft Trisonic | 4 x 4 | 0.2 - 5.0 | 2 - 30 | High $R_e$, Polysonic |
| 211 | McDonnell Douglas-El Segundo 4-ft Trisonic | 4 x 4 | 0.2 - 5.0 | 0.25 - 30 | High $R_e$, Polysonic |
| 212 | McDonnell Douglas-St. Louis Polysonic | 4 x 4 | 0.5 - 5.8 | 2 - 50 | High $R_e$, Polysonic |
| 219 | Northrop 24-in Trisonic | 2 x 2 | 0.4 - 1.35<br>1.5, 2, 2.2, 3 | 0.2 - 30 | Polysonic |
| 206 | Rockwell-Los Angeles 7-ft | 7 x 7 | 0.1 - 3.5 | 2 - 19 | High $R_e$, Polysonic, Flutter, Acoustic |
| 215 | Vought High Speed | 4 x 4 | 0.2 - 5.0 | 2 - 38 | High $R_e$, Polysonic, Captive Trajectory, Flutter |
| | **CANADA** | | | | |
| 208 | NAE 5 x 5-ft Blowdown 3-D | 5 x 5 | 0.1 - 4.25 | 24 @ M = 2.25 | High $R_e$, Polysonic |
| | **FRANCE** | | | | |
| 231 | C-4 | 1.3 x 1.3 | 1.35 - 4.3 | 3.0 - 9.7 | Supersonic Test Section |
| 204 | S2-MA | #1 6.2 x 5.7<br>#2 2.6 x 2.5 | 1.5 - 3.1 | 1.6 - 8.9 | Supersonic Test Section |
| 216 | S3-MA | | 1.2, 1.5, 2, 3.4, 4.5 | 19.5 | |
| | **GERMANY** | | | | |
| 226 | High Speed (HMK) | 11 x 11-in Fixed Nozzle | 0.4 - 0.7<br>1.57 - 4.15 | 50 | High $R_e$ |
| 220 | Trisonic Tunnel (TMK) | 23 x 23-in | 0.5 - 4.5 | 1.8 - 24 | Polysonic |

## SUPERSONIC WIND TUNNELS

| Page Number | Location and Facility Description | Test Section (ft) | Speed Range (Mach No.) | Reynolds Number (per ft x $10^{-6}$) | Comments |
|---|---|---|---|---|---|
| | **INDIA** | | | | |
| 209 | 1.2-m | 4 x 4 | 0.4 - 1.0 | 24.4 | Captive Trajectory, Polysonic |
| | **JAPAN** | | | | |
| 225 | 1-m (NAL) | 3.28 x 3.28 | 1.4 - 4.0 | 9 - 18 | |
| 221 | 2 x 2-ft (FHI) | 2 x 2 | 0.2 - 4.0 | 3.2 - 3.5 | Polysonic |
| 222 | 60-cm Trisonic (Mitsubishi) | 2 x 2 | 0.4 - 4.0 | 4.5 - 19 | Polysonic |
| | **NETHERLANDS** | | | | |
| 213 | SST | 4 x 4 | 1.2 - 4.0 | 30 @ M = 2.5 | High $R_e$, Pressurized |
| | **UNITED KINGDOM** | | | | |
| 202 | 8-ft (Bedford) | 8 x 8 | 0.1 - 0.9<br>1.35 - 2.5 | 6 @ M = 1.4 | Supersonic Mode |
| 214 | 4-ft (Warton) | 4 x 4 | 0.4 - 4.0 | 24 | High $R_e$, Polysonic, Flutter |
| 228 | 3 x 4-ft (Bedford) | 3 x 4 | 2.5 - 5.0 | 12 @ M = 4.5 | |
| 217 | 30 x 27-in (Woodford) | 27 x 30-in | 1.6 - 3.5 | 17 @ M = 1.6<br>9 @ M = 3.5 | |
| 218 | 27 x 27-in (Brough) | 27 x 27-in | 0.1 - 2.5 | 0.8 - 20 | Polysonic |
| 230 | SWT (Bedford) | 2.5 x 2.25 m | 1.4 - 3.0 | 1.0 - 4.3 | |

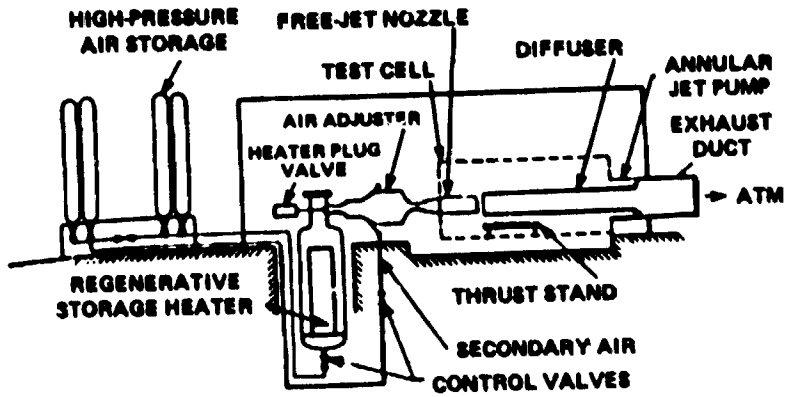


a. Schematic of APTU

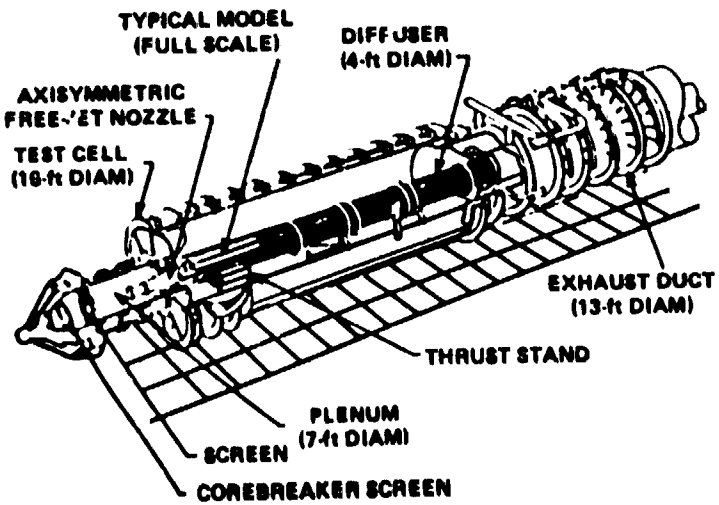


b. Typical Ramjet Installation for Free-Jet Test

| Arnold Engineering Development Center | SUPERSONIC WIND TUNNELS | | COMPARABLE FACILITIES |
|---|---|---|---|
| | TEST SECTION SIZE: Cell. 16D x 42 ft<br>Nozzles diam: 2 to 3.5 ft | SPEED RANGE: (Mach No.) Up to 4.5 vitiated air | None |
| | DATE BUILT/UPGRADED: 1972/1980 | TEMP. RANGE: 2000°R | |
| Aerodynamic and Propulsion Test Unit (APTU)<br>Ramjet Test Facility | REPLACEMENT COST: $30M | REYNOLDS NO: (Per ft X $10^{-6}$) N/A | |
| | OPERATIONAL STATUS:<br>Operational | DYNAMIC PRES: (lb/ft$^2$) 400 - 10 000 | |
| | | STAGNATION PRES: (psia) 300 | |
| | Blowdown, variable density, intermittent flow, vitiation heated, true temperature, free-jet tunnel | | |

TESTING CAPABILITIES: APTU is a blowdown, free-jet wind tunnel for testing airbreathing propulsion systems, primarily ramjet and ducted-rocket engines, at simulated flight conditions. Air is heated to produce true-temperature flight conditions by vitiation (combustion of butane in the test gas) and oxygen replenishing (to 21%). The tunnel may be used also for aerothermal and thermostructural-type testing. Capable of producing sea-level flight conditions to Mach 2.6, Mach 4.5 at altitude.

DATA ACQUISITION: Astrodata model 4121-101, SDS Sigma 2 computer, and computer-controlled data system.

CURRENT PROGRAMS:

PLANNED IMPROVEMENTS: Direct connect capability and sting model support system.

LOCAL INFORMATION CONTACT: Flight Mechanics Directorate, Deputy for Operations, AEDC/DOF, Arnold AFS TN 37389, (615) 455-2611, ext. 5280 or 6051.

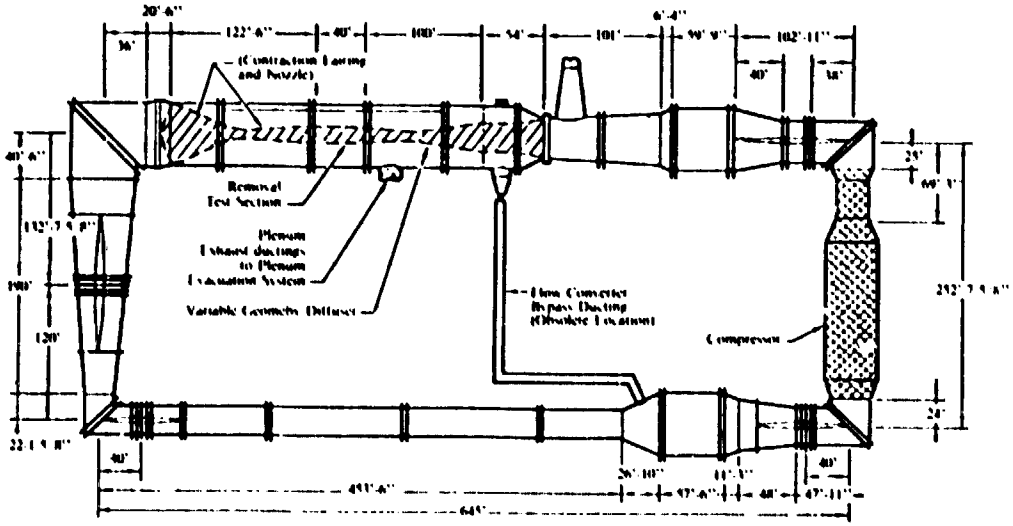


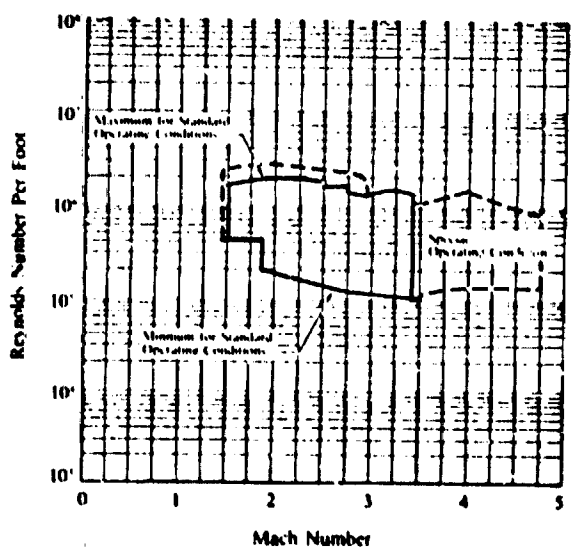


| | |
|---|---|
| Mach Range: | 1.5 – 4.75 |
| Reynolds Number (× 10⁶/ft): | .1 – 2.6 |
| Total pressure (psia): | 1.4 – 16.0 |
| Dynamic Pressure (psf): | 30 – 570 |
| Total Temperature (°R): | 560 – 1110 |
| Run Time: | Continous |

| | SUPERSONIC WIND TUNNELS | | COMPARABLE FACILITIES |
|---|---|---|---|
| Arnold Engineering Development Center | TEST SECTION SIZE: 16 x 16 x 40 ft | SPEED RANGE: (Mach No.) 1.5 - 4.75 | None |
| | DATE BUILT/UPGRADED: 1954 | TEMP. RANGE: 580° - 1080°R | |
| 16-Ft Supersonic Propulsion Wind Tunnel (16S) | REPLACEMENT COST: $550M | REYNOLDS NO: (Per ft X $10^{-6}$) 0.1 - 2.6 | |
| | OPERATIONAL STATUS: Active, lightly scheduled | DYNAMIC PRES: ($lb/ft^2$) 30 - 580 | |
| | | STAGNATION PRES: (psia) 3.0 - 12.5 | |
| | Closed circuit, single return, variable density, continuous flow, hot gas ingestion | | |

TESTING CAPABILITIES: The tunnel is used for both aerodynamic and propulsion system testing. For aerodynamic testing, the tunnel is used for force and moment, pressure, dynamic stability, internal duct flow, jet effects, and buffet tests. Full-scale tests of operating aircraft propulsion systems permit investigations of engine operations in conjunction with inlets and controls. Removable test sections are contained in test carts that can be transported to a remote model installation building for test article buildup. The flexible plate nozzle sidewalls are positioned by 28 pairs of hydraulic actuators. The tunnel is equipped with a scavenging scoop aft of the test section to capture engine exhaust products. Auxiliary air flows up to 90 lb/sec at 2900 psi can be provided for cold flow jet simulation testing.

DATA ACQUISITION: Digital Equipment Corporation DEC-10 for supervisory control and data management, DEC PDP-15 digital data acquisition system, Computer Automation LSI-2 as digital multiplexer and control, PDP 11/34 digital pressure system, Vector General DD2 graphics system, and Amdahl 5860 central computer.

CURRENT PROGRAMS:

PLANNED IMPROVEMENTS: None.

LOCAL INFORMATION CONTACT: Flight Mechanics Directorate, Deputy for Operations, AEDC/DOF, Arnold AFS TN 37389, (615) 455-2611, ext. 5280 or 6051.

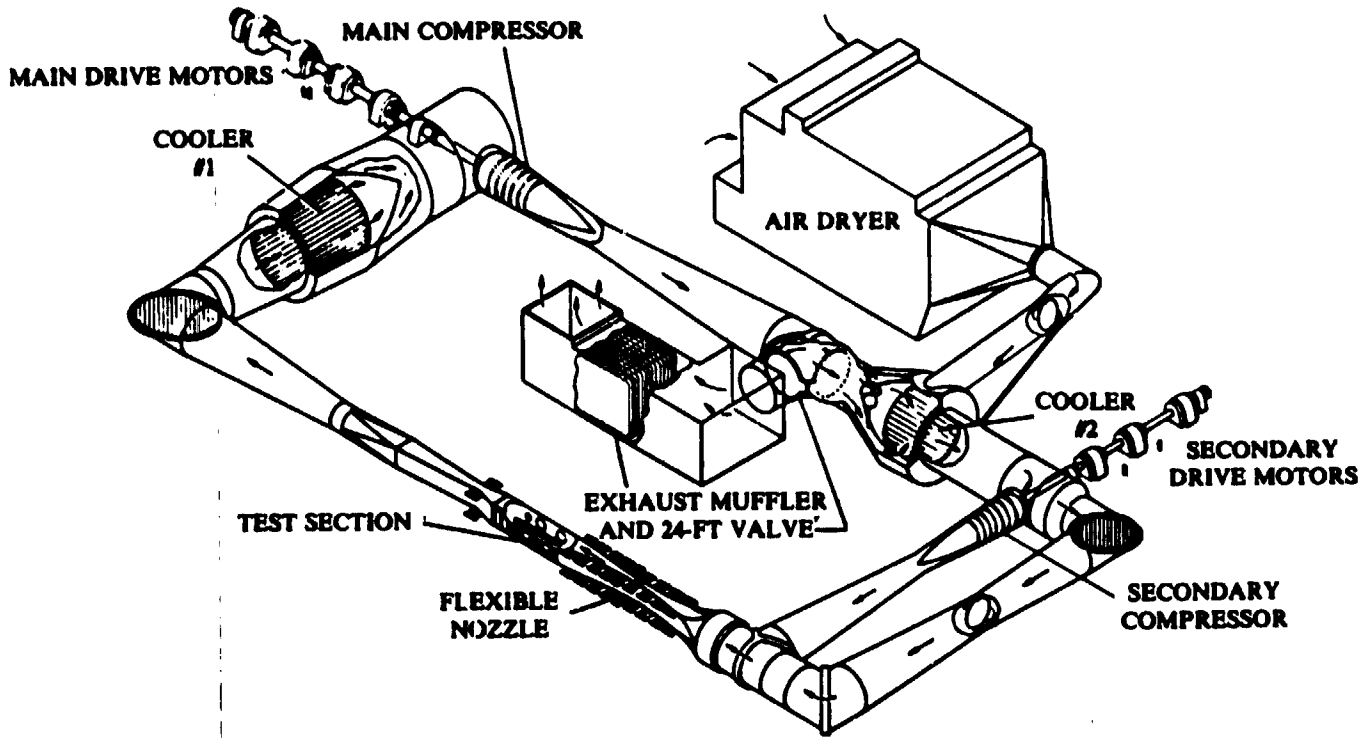
MAIN COMPRESSOR
MAIN DRIVE MOTORS
COOLER #1
AIR DRYER
COOLER #2
SECONDARY DRIVE MOTORS
EXHAUST MUFFLER AND 24-FT VALVE
TEST SECTION
FLEXIBLE NOZZLE
SECONDARY COMPRESSOR

| NASA–Lewis Research Center | SUPERSONIC WIND TUNNELS | | COMPARABLE FACILITIES |
|---|---|---|---|
| | **TEST SECTION SIZE:** 10 x 10 x 10 ft | **SPEED RANGE: (Mach No.)** Closed: 2 - 3.5 Open: 2 - 3.5 | 16S - DOD AEDC<br>8 x 7-Ft - NASA ARC (nonpropulsion) |
| | **DATE BUILT/UPGRADED:** 1955 | **TEMP. RANGE:** Closed: 500° - 750°R Open: 520° - 1150°R | |
| 10 x 10-Ft Supersonic Wind Tunnel<br><br>Propulsion Unitary Plan | **REPLACEMENT COST:** $70M | **REYNOLDS NO: (Per ft X $10^{-6}$)** Closed: 0.12 - 3.4 Open: 2.1 - 2.7 | |
| | **OPERATIONAL STATUS:** 2-shift operations at 3 runs per week (backlog) | **DYNAMIC PRES: ($lb/ft^2$)** Closed: 20 - 720 Open: 500 - 600 | |
| | | **STAGNATION PRES: (psia)** 1.4 - 34.7 | |
| | Open and closed circuit, single or nonreturn, variable density, continuous flow<br>50 000- to 150 000-ft subsonic test capability<br>M = 0.002 - 0.36 | | |

TESTING CAPABILITIES: This tunnel is used for internal flow, pressure, force testing of propulsion systems, and propulsion components, as well as related airframe interaction tests. Internal strain-gage balances are used for measuring force and moments. Propulsion cycle (open circuit) is used for testing burning propulsion systems generating combustion products. Aerodynamic cycle (closed circuit) is used for other tests. Facilities for measuring multiple steady or fluctuating pressures are available.

DATA ACQUISITION: Data are recorded and processed through a dedicated VAX 11/780 computer and centrally (shared) IBM-370 computer system. Alphanumeric and graphic displays can be tailored to the user's requirements in real time.

CURRENT PROGRAMS: Design of advanced propulsion system, support of the Space Transport System programs, support of Advanced Turboprop Program (ATP), code verification test of internal flow of supersonic inlets, and support of DOE.

PLANNED IMPROVEMENTS: Improve data acquisition system to include on-line, real-time color graphics, increased automation of tunnel testing and color schlieren.

LOCAL INFORMATION CONTACT: Arthur J. Gnecco, Chief, Aeronautics Facilities and Engineering Branch, (216) 433-4000, ext. 5579, FTS 8-294-5579.

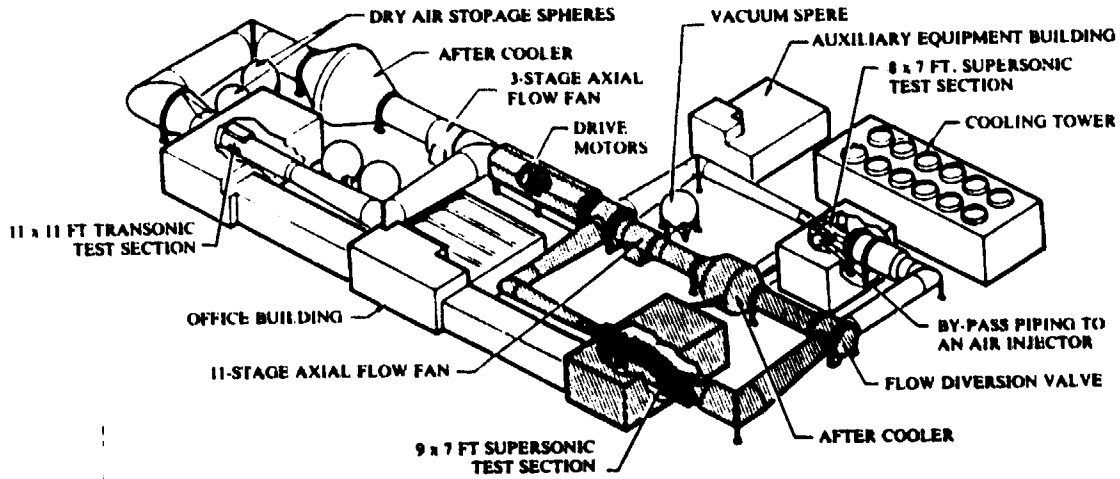


FACILITY PERFORMANCE DATA

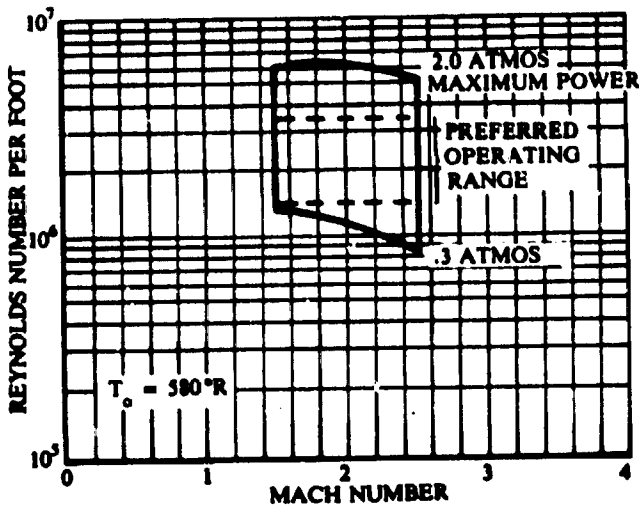

| NASA–Ames Research Center | SUPERSONIC WIND TUNNELS | | COMPARABLE FACILITIES |
|---|---|---|---|
| | **TEST SECTION SIZE:** 9 x 7 x 10 ft | **SPEED RANGE:** (Mach No.) 1.55 - 2.5 | None |
| | **DATE BUILT/UPGRADED:** 1956 | **TEMP. RANGE:** 520° - 610°R | |
| 9 x 7-Ft Supersonic Wind Tunnel | **REPLACEMENT COST:** $146M for Unitary Plan Tunnels | **REYNOLDS NO:** (Per ft X $10^{-6}$) 0.8 - 6.5 | |
| | **OPERATIONAL STATUS:** 3 shifts per day, Unitary Plan Tunnels | **DYNAMIC PRES:** (lb/ft$^2$) 200 - 1450 | |
| | | **STAGNATION PRES:** (psia) 4.41 - 28.8 | |
| | Closed circuit, single return, variable density, continuous flow wind tunnel. Interchangeability of models between Unitary test sections allows testing across a wide range of conditions. | | |

TESTING CAPABILITIES: The 9- by 7-ft Supersonic Wind Tunnel (SWT) is part of the Unitary Plan Wind Tunnel complex consisting of three legs and test sections. Only one tunnel can be operated at a time. The tunnel is used primarily for force, moment, and pressure tests of aircraft configurations or specific aircraft components. Internal strain-gage balances are used for measuring forces and moments. The support strut has simultaneously variable pitch and yaw capability (±15°). Facilities for measuring multiple steady or fluctuating pressures are available. Temperature-controlled auxiliary high-pressure air (3000 psi) is available with flow capability to 50 lb/sec (at 1500 psi) in each of two separately controllable systems.

DATA ACQUISITION: Data are acquired through Teledyne equipment using Programmable Amplifier Filter Units (PAFUs). Pressures can be recorded using conventional scanivalves or Electronic Scanners of Pressures (ESOPs). Analog input data can be recorded on 130 channels with a maximum total sample rate of 60 000 samples per second. Digital input data can be recorded on an additional 48 channels. Some real-time processing is available through a DEC PDP 11/70 computer. Main computations are performed through a centrally located IBM 4341 or through a DEC VAX stand-alone computer.

CURRENT PROGRAMS: Space Vehicle refinements, Aircraft Propulsion Simulator Integration, and NASA V/STOL configuration development.

PLANNED IMPROVEMENTS: Improve graphics display systems and model buildup facilities. Increase data acquisition rate to 125 000 samples per second.

LOCAL INFORMATION CONTACT: Daniel P. Bencze, Chief, Experimental Investigations Branch, (415) 965-5848 or William Hofstetter, (415) 965-5875.

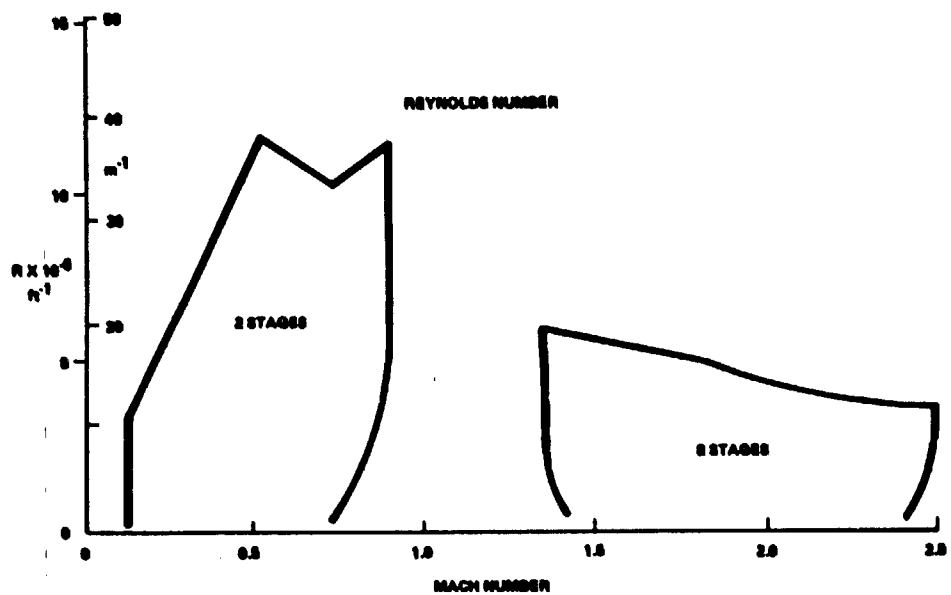
REYNOLDS NUMBER
2 STAGES
3 STAGES
R X 10^-6
ft^-1
m^-1
MACH NUMBER
0
0.5
1.0
1.5
2.0
2.5
5
10
15
20
30
40
50

| | SUPERSONIC WIND TUNNELS | | | COMPARABLE FACILITIES |
|---|---|---|---|---|
| Royal Aircraft Establishment Bedford, United Kingdom | TEST SECTION SIZE: 2.5 x 2.25 m | SPEED RANGE: (Mach No.) | 0.1 - 0.9<br>1.35 - 2.5 | 9 x 7-Ft - NASA ARC |
| | DATE BUILT/UPGRADED: 1957 | TEMP. RANGE: | 315 K | |
| 8-Ft Transonic Wind Tunnel | REPLACEMENT COST: | REYNOLDS NO: (Per m X $10^{-6}$) | 38 at Mach 0.9<br>11 at Mach 2.5 | |
| | OPERATIONAL STATUS: In regular use | DYNAMIC PRES: ($kN/m^2$) | Up to 90 subsonic<br>Up to 60 supersonic | |
| | | STAGNATION PRES: (bars) | 0.1 - 4.0 subsonic<br>0.1 - 1.3 supersonic | |
| | Continuous flow, flexible nozzle, and closed circuit can be used as a subsonic variable pressure tunnel with Mach number controlled by a variable sonic throat downstream of the test section. | | | |

TESTING CAPABILITIES: Axial flow compressor with 2 stages for subsonic and 8 stages for supersonic operation. Total drive power 68 MW. Rear-sting support for models giving ±22.5° of pitch with full 360° of roll. Sidewall-mounted half-model balance support system, -15° - +35° of pitch. Support system for two-dimensional wings spanning the tunnel. High-pressure air supply. Storage capacity 90 $m^3$ at 262 bars supplying a line at 69 bars (1000 psig).

DATA ACQUISITION: Up to 32 low-level analog signals, 300 digital signals, and 24 pressure scanning switches. Dedicated Hewlett-Packard computer system giving on-line reduction and presentation of data.

CURRENT PROGRAMS:

PLANNED IMPROVEMENTS:

LOCAL INFORMATION CONTACT: Superintendent AE3 Division, Aerodynamics Department, Bedford (0234) 55241, ext. 7440.

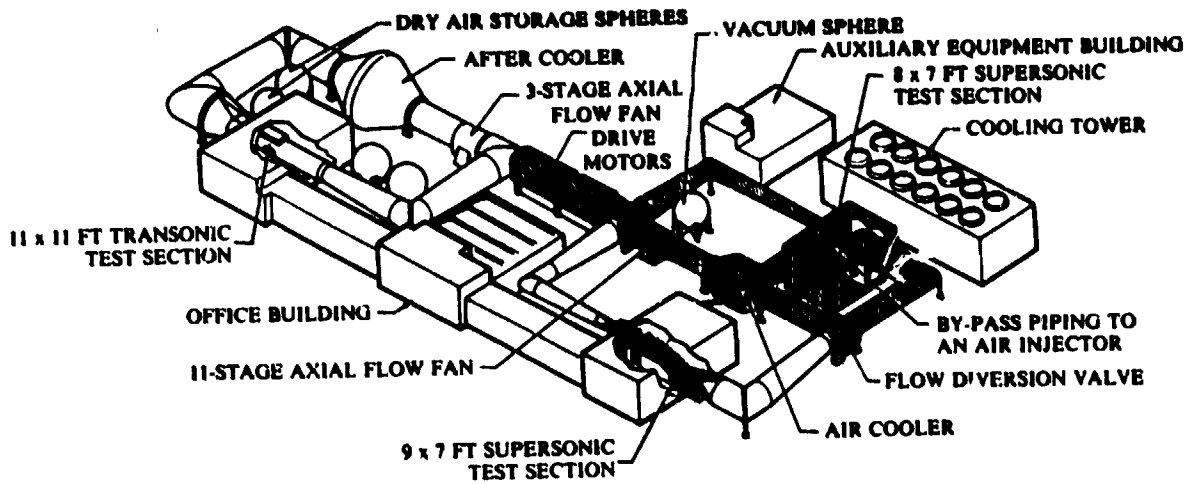


FACILITY PERFORMANCE DATA

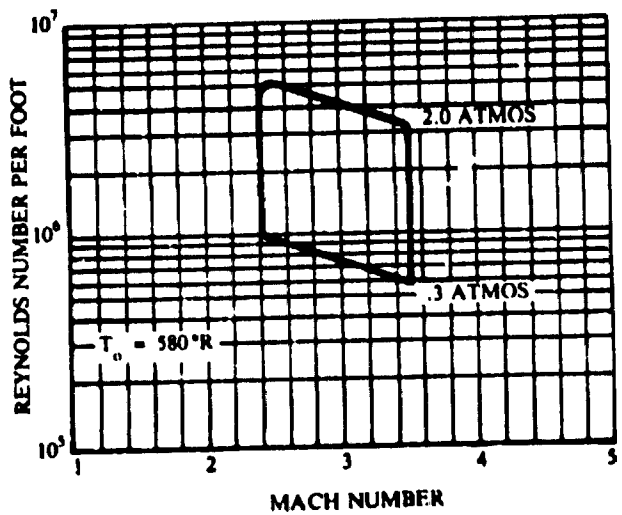

| | SUPERSONIC WIND TUNNELS | | COMPARABLE FACILITIES |
|---|---|---|---|
| NASA–Ames Research Center | **TEST SECTION SIZE:** 8 x 7 x 16 ft | **SPEED RANGE: (Mach No.)** 2.4 - 3.5 | None |
| | **DATE BUILT/UPGRADED:** 1956 | **TEMP. RANGE:** 520° - 610°R | |
| 8 x 7-Ft Supersonic Wind Tunnel | **REPLACEMENT COST:** $146M for Unitary Plan Tunnels | **REYNOLDS NO: (Per ft X $10^{-6}$)** 0.6 - 5.0 | |
| | **OPERATIONAL STATUS:** 3 shifts per day, Unitary Plan Tunnels | **DYNAMIC PRES: (lb/ft$^2$)** 100 - 1000 | |
| | | **STAGNATION PRES: (psia)** 4.41 - 29.4 | |
| | Closed circuit, single return, variable density, continuous flow wind tunnel. Interchangeability of models between Unitary test sections allows testing across a wide range of conditions. | | |

TESTING CAPABILITIES: This tunnel is part of the Unitary Plan Wind Tunnel complex consisting of three legs and test sections. Only one tunnel can be operated at a time. The tunnel is used primarily for force, moment, and pressure tests of aircraft configurations or specific aircraft components. Limited aeroacoustic and nonsteady aerodynamic tests are conducted. Internal strain-gage balances are used for measuring forces and moments. The support strut has both variable pitch and yaw capability (±15°). Facilities for measuring multiple steady or fluctuating pressures are available. Auxiliary air (3000 psi) is available with flow capability to 50 lb/sec (at 1500 psi) in each of two separately controllable systems.

DATA ACQUISITION: Data are acquired through Teledyne equipment using Programmable Amplifier/Filter Units (PAFUs). Pressures can be recorded using conventional scanivalves or Electronic Scanners of Pressures (ESOPs). Analog input data can be recorded on 130 channels with a maximum total sample rate of 60 000 samples per second. Digital input data can be recorded on an additional 48 channels. Some real-time processing is available through a DEC PDP 11/70 computer. Main computations are performed through a centrally located IBM 4341. In 1985, data will be processed through a DEC/VAX stand-alone computer.

CURRENT PROGRAMS: Currently unscheduled.

PLANNED IMPROVEMENTS: Improve model buildup facilities graphic display system and increase data acquisition rate to 125 000 samples per second.

LOCAL INFORMATION CONTACT: Daniel P. Bencze, Chief, Experimental Investigations Branch, (415) 965-5848 or William R. Hofstetter, (415) 965-5875.

204A

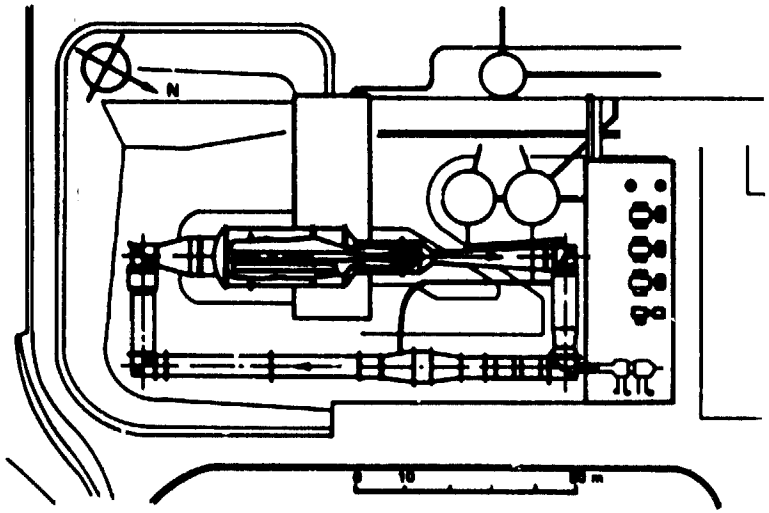


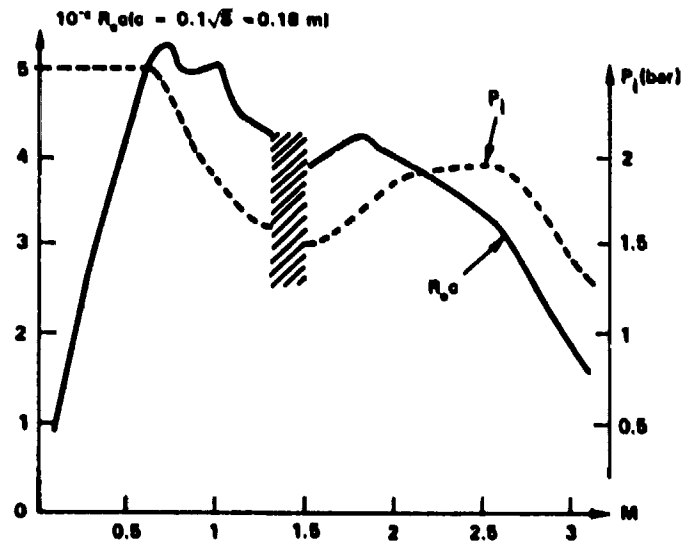

| ONERA Modane, France | SUPERSONIC WIND TUNNELS | | COMPARABLE FACILITIES |
|---|---|---|---|
| | TEST SECTION SIZE: Transonic 1.77 x 1.75 m<br>Supersonic 1.935 x 1.75 m | SPEED RANGE: (Mach No.) 0.1 - 1.3<br>1.5 - 3.1 | Unitary Tunnel - NASA ARC |
| | DATE BUILT/UPGRADED: 1961 | TEMP. RANGE: 0 - 318 K | |
| S2 MA | REPLACEMENT COST: | REYNOLDS NO: (Per m X $10^{-6}$) 5.5 - 29.4 | |
| | OPERATIONAL STATUS:<br>1 to 2 shifts per day | DYNAMIC PRES: ($kN/m^2$) | |
| | | STAGNATION PRES: (bars) 0.5 - 2.5 | |
| | Continuous flow twin transonic and supersonic test sections in the same plenum, water-cooler, 57 MW (16 stages) compressor powered by 4 water-turbines, pressurized envelope. | | |

TESTING CAPABILITIES: Model support: angle-of-attack variation 24° continuous up to 0.6°/sec, roll 360°, 0.2° or 4°/sec. Sideslip or high angle-of-attack "elbow" 25°. Sidewall turret ±180°, 0.18°, or 0.67°/sec, "six-degrees-of-freedom" support for store separation studies, compressed heated dry-air supply 50 b 3 kg/sec continuously, and up to 25 kg/sec - 150 b air supply. Numerous different supports and sting balances. Perforated transonic test section, permeability up to 6%. Mach number change by compressor speed. Asymmetrical supersonic nozzle associated with supersonic test section. Mach number variation by translation of the part of the nozzle associated with a moving floor. Second throat behind the quadrant in the diffuser. Two parallel shadow channels. Pressurization from 9 b dry-air storage - vacuum pump and storage.

DATA ACQUISITION: Global and local forces, pressures (individual, scanned, unsteady) temperature displacements, skin visualizations, and shadowpictures. All conventional aerodynamic measurements. Basically 48 analog and digital channels. Extension possible with steady or unsteady channels. Local HP-1000 computer for data acquisition and testing devices survey. Local real-time computation by VAX-782.

CURRENT PROGRAMS: Civil and combat aircraft or missiles development and performance control on complete or half-scaled models, TPS engine simulation, all aeroelastic testing (dynamic stability and flutter), store trajectory studies, flow and wake surveys, and air intake tests.

PLANNED IMPROVEMENTS: Continuous increase of computer-controlled testing devices and improvement of instrumentation.

LOCAL INFORMATION CONTACT: Charpin, ONERA Centre de Modane Avrieux BP 25, 73 500 Modane, France.

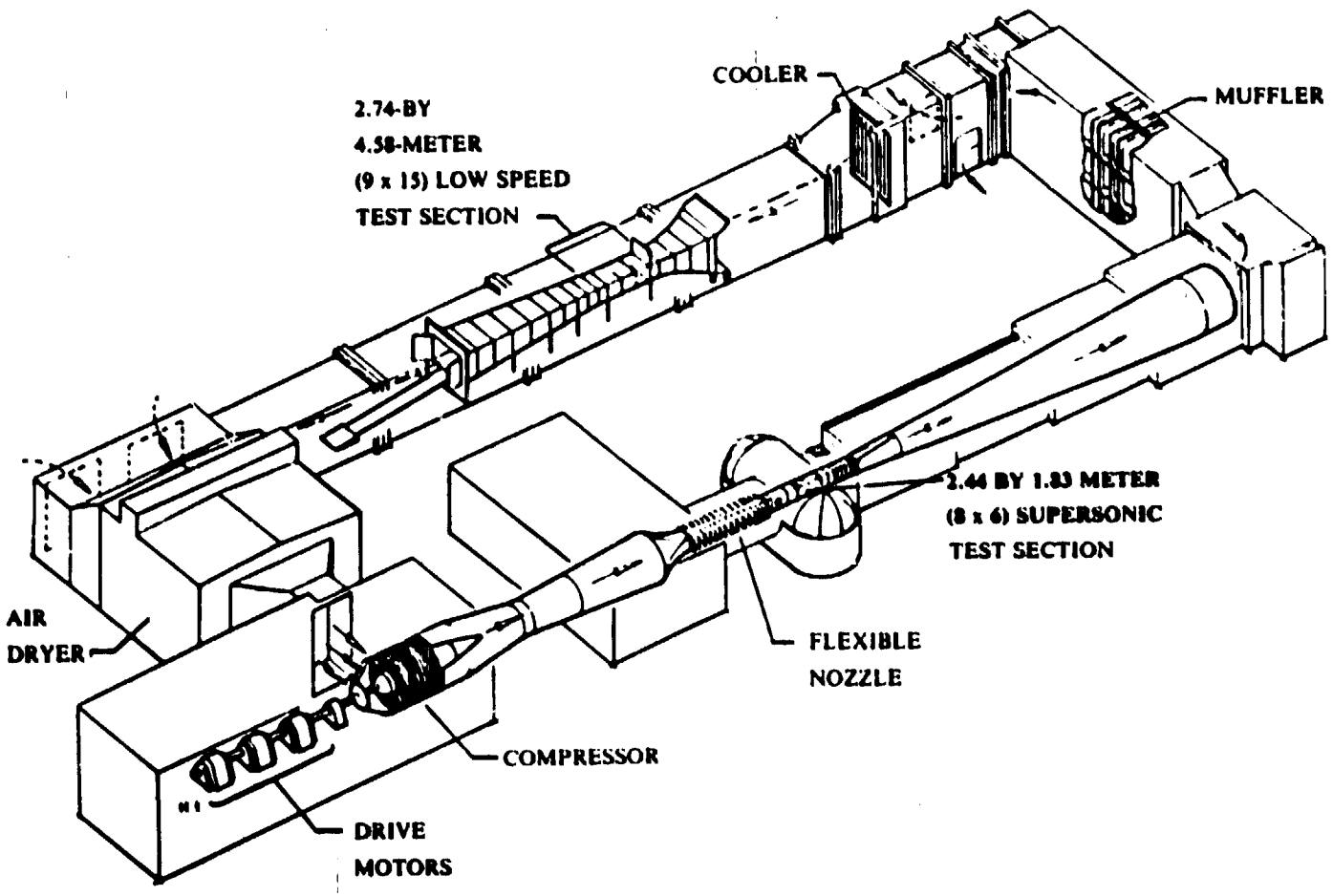
COOLER
MUFFLER
2.74-BY
4.58-METER
(9 x 15) LOW SPEED
TEST SECTION
2.44 BY 1.83 METER
(8 x 6) SUPERSONIC
TEST SECTION
AIR
DRYER
FLEXIBLE
NOZZLE
COMPRESSOR
DRIVE
MOTORS

| NASA–Lewis Research Center | SUPERSONIC WIND TUNNELS | | COMPARABLE FACILITIES |
|---|---|---|---|
| | TEST SECTION SIZE: 8 x 6 x 39 ft | SPEED RANGE: (Mach No.) 0.4 - 2.0 | 6 x 6-Ft - NASA ARC<br>11-Ft - NASA ARC<br>16-Ft - NASA ARC (nonpropulsion) |
| | DATE BUILT/UPGRADED: 1948 | TEMP. RANGE: 560° - 700°R | |
| 8 x 6-Ft Supersonic Wind Tunnel | REPLACEMENT COST: <66M | REYNOLDS NO: (Per ft X $10^{-6}$) 3.6 - 4.8 | |
| | OPERATIONAL STATUS: 2-shift operations at 3 runs per week (backlog) | DYNAMIC PRES: ($lb/ft^2$) 200 - 1240 | |
| | | STAGNATION PRES: (psia) 15.3 - 25 | |
| Propulsion | Open cycle wind tunnel with propulsion capability; closed cycle for aerodynamic testing | | |

TESTING CAPABILITIES: The tunnel is used for transonic testing of internal flow, pressure, force testing of propulsion systems, and propulsion system components, as well as related airframe interaction tests. Internal strain-gage balances are used for measuring force and moment. Propulsion cycle (open circuit) is used for testing burning propulsion systems generating combustion products. Aerodynamic cycle (closed circuit) is used for other tests. Facilities for measuring multiple steady or fluctuating pressures are available.

DATA ACQUISITION: Data are recorded and processed through a dedicated VAX 11/780 computer and a centrally (shared) IBM-370 computer system. Alphanumeric and graphic displays can be tailored to the users' requirements in real time.

CURRENT PROGRAMS: Turboprop aeroelastics and acoustics testings, support of the Space Transportation System Program, performance of supersonic drag devices at supersonic speeds, Turboprop Counter Rotation Performance and Noise Tests, and dynamic performance of advanced supersonic inlets.

PLANNED IMPROVEMENTS: Installation of improved on-line data systems including color alpha/numeric and color graphics CRT displays.

LOCAL INFORMATION CONTACT: Arthur J. Gnecco, Chief, Aeronautic Facilities and Engineering Branch, (216) 433-4000, ext. 5579, FTS 8-294-5579.

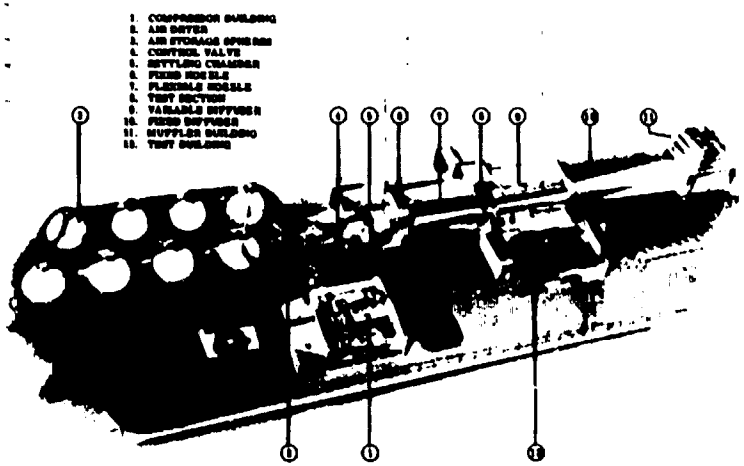


Rotkwich International Trisonic Wind Tunnel

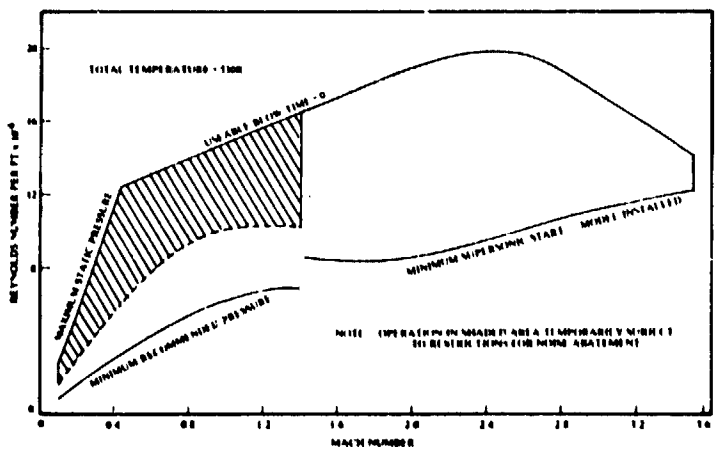


ORIGINAL PAGE IS
OF POOR QUALITY

| | SUPERSONIC WIND TUNNELS | | COMPARABLE FACILITIES |
|---|---|---|---|
| Rockwell International Corp. Los Angeles | TEST SECTION SIZE: 7 x 7 x 23 ft | SPEED RANGE: (Mach No.) 0.1 - 3.5 | NTF - LaRC |
| | DATE BUILT/UPGRADED: 1958/1960/1968/1971/1983 | TEMP. RANGE: 530°R | |
| 7-Ft Trisonic Wind Tunnel | REPLACEMENT COST: $17M | REYNOLDS NO: (Per ft X $10^{-6}$) 2 - 19 | |
| | OPERATIONAL STATUS: Currently operating 2 shifts per day, 5 days per week | DYNAMIC PRES: (lb/ft$^2$) 20 - 3600 | |
| | | STAGNATION PRES: (psia) 18 - 110 | |
| | Intermittent blowdown to atmosphere. Blow time: 5 - 70 sec; Pumpup time: 15 - 50 min | | |

TESTING CAPABILITIES: The facility has the capability of accommodating 6-component force tests using internal balances, inlet and nozzle studies, pressure distribution tests using electronically scanned pressure modules or electropneumatic scanivalves, flutter and acoustic tests, and model component deployment tests. The upstream portion of the tandem test sections has schlieren windows and is used for supersonic testing; the downstream portion is perforated (19.7% porosity) for transonic and subsonic testing. Mach numbers of 1.4 and above are set by a flexible plate nozzle; below 1.3, adjustable diffuser walls and servo-controlled choking flaps control the Mach number in the test section.

DATA ACQUISITION: Currently using a 120-channel ASTRODATA system with an IBM 1800 for data reduction. A new setup consisting of a Cyber II data acquisition system and an IBM Series/I computer is on site and will be on-line in early 1984.

CURRENT PROGRAMS: B-1B flight test support, advanced developments, and tests for other companies such as McDonnell Douglas, SAAB of Sweden, Honeywell, and others are currently scheduled.

PLANNED IMPROVEMENTS: Integration of data acquisition modernization (see above), improved model angle-of-attack measurement, increased auxiliary air/vacuum pumping capacity, and sting roll pod.

LOCAL INFORMATION CONTACT: A. L. Clarke, Manager, Wind Tunnels, (213) 647-3450.

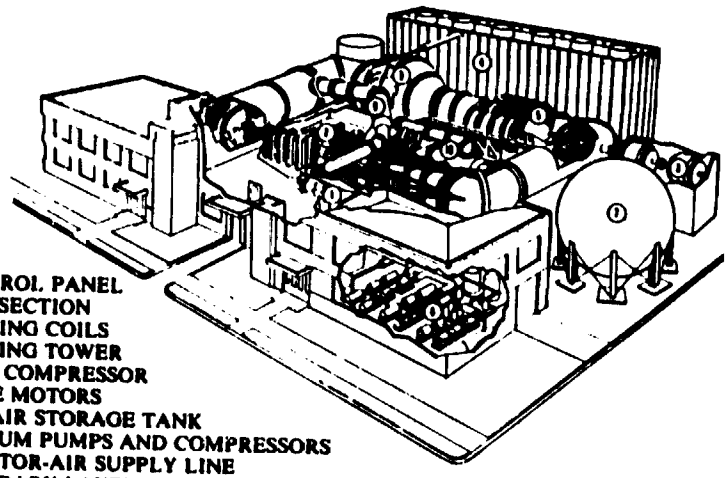

1. CONTROL PANEL
2. TEST SECTION
3. COOLING COILS
4. COOLING TOWER
5. MAIN COMPRESSOR
6. DRIVE MOTORS
7. DRY-AIR STORAGE TANK
8. VACUUM PUMPS AND COMPRESSORS
9. INJECTOR-AIR SUPPLY LINE
10. BOUNDARY-LAYER-REMOVAL SYSTEM

## FACILITY PERFORMANCE DATA

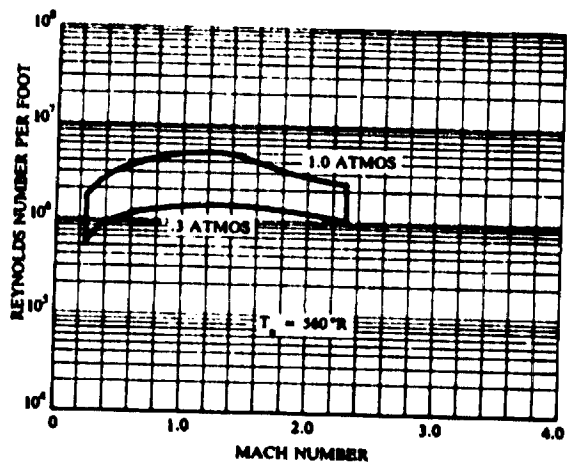

| NASA–Ames Research Center | SUPERSONIC WIND TUNNELS | | COMPARABLE FACILITIES |
|---|---|---|---|
| | TEST SECTION SIZE: 6 x 6 x 14.4 ft | SPEED RANGE: (Mach No.) 0.25 - 2.2 | None |
| | DATE BUILT/UPGRADED: 1948 | TEMP. RANGE: 540° - 580°R | |
| 6 x 6-Ft Supersonic Wind Tunnel | REPLACEMENT COST: $41.3M | REYNOLDS NO: (Per ft X $10^{-6}$) 0.5 - 5.0 | |
| | OPERATIONAL STATUS: 1 shift per day | DYNAMIC PRES: (lb/ft$^2$) 200 - 900 | |
| | | STAGNATION PRES: (psia) 4.41 - 14.7 | |
| | Closed circuit, single return, variable density, continuous flow wind tunnel | | |

TESTING CAPABILITIES: The facility is used primarily for conventional force and moment testing of aircraft and missiles as well as basic research. For conventional steady-state testing, models are supported on a cantilevered sting via a strut with variable pitch capability. Strain-gage balances are used for measuring forces and moments. Facilities for measuring multiple steady or fluctuating pressures are available.

DATA ACQUISITION: Currently data are acquired using a Beckman 210 Medium Speed recorder and processed through an IBM 4341 central computer. Analog input data can be recorded on 50 channels with a maximum total sample rate of 10 samples per second. In 1984, data will be acquired through Teledyne equipment and processed real time using a DEC PDP 11/70. Analog input data will be recorded on 50 channels with a maximum total sample rate of 60 000 samples per second. Digital input data will be recorded on an additional 48 channels. In 1985, all computing will be done by DEC VAX computer.

CURRENT PROGRAMS: Cylinder flow studies, 3-D Wing Studies, laser velocimetry development, and missile development.

PLANNED IMPROVEMENTS: Upgrade data acquisition system and computing and increase data acquisition rate to 125 000 samples per second.

LOCAL INFORMATION CONTACT: Daniel P. Bencze, Chief, Experimental Investigations Branch, (415) 965-5848 or William R. Hofstetter, (415) 965-5875.

ORIGINAL PAGE IS
OF POOR QUALITY

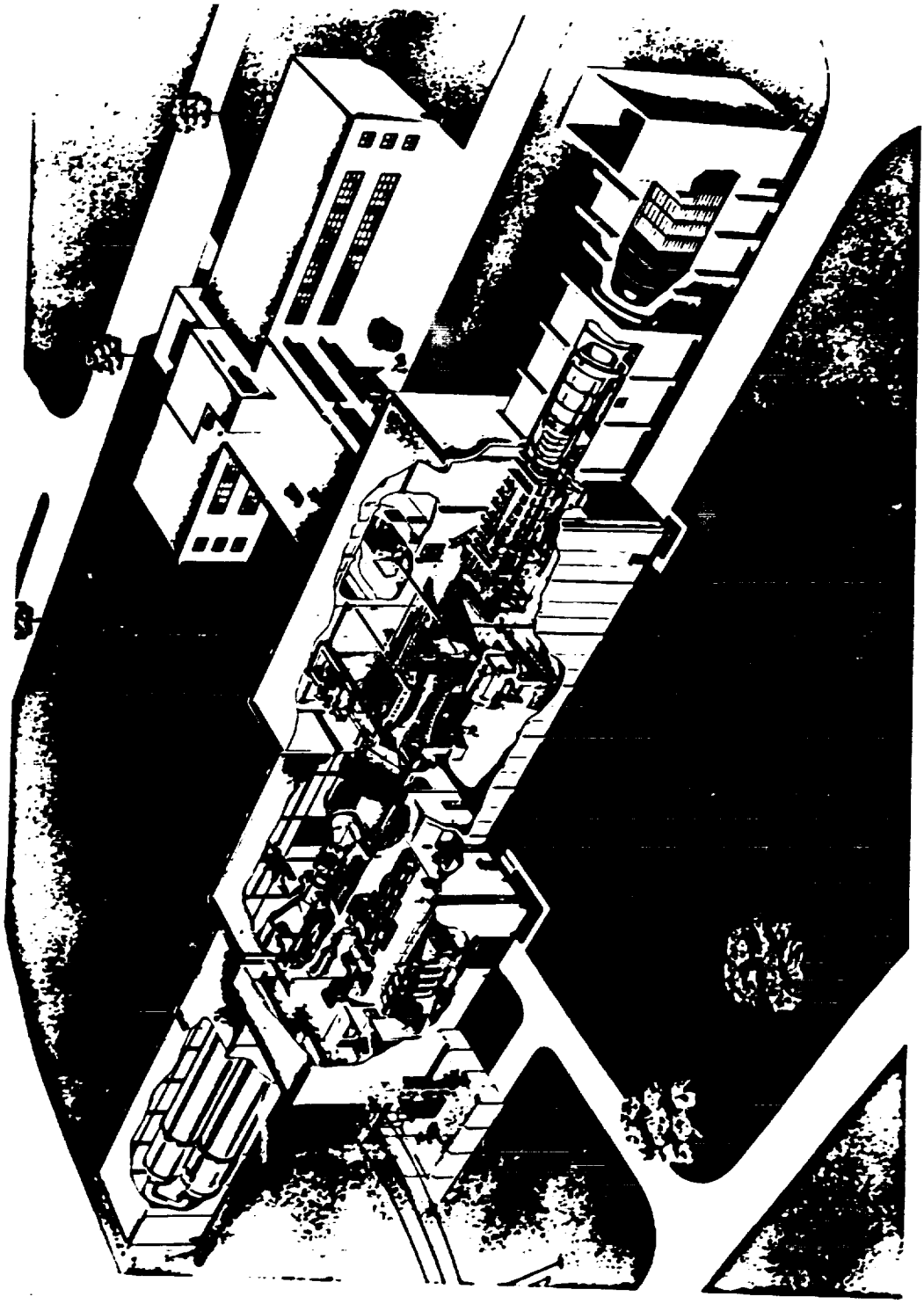

| | SUPERSONIC WIND TUNNELS | | COMPARABLE FACILITIES |
|---|---|---|---|
| National Research Council (NAE) | TEST SECTION SIZE: 3D: 5 x 5 x 16 ft<br>2D: 5 x 1¼ x 12 ft | SPEED RANGE: (Mach No.) 3D: 0.1 - 4.25<br>2D: 0.1 - 0.95 | 7-Ft - Rockwell, Los Angeles<br><br>All 4-Ft polysonic tunnels |
| | DATE BUILT/UPGRADED: 1962/1969/1978/1984 | TEMP. RANGE: Ambient | |
| 5 x 5-Ft Blowdown Wind Tunnel | REPLACEMENT COST: $24M | REYNOLDS NO: (Per ft X $10^{-6}$) 3D: 24 at Mach 2.25<br>2D: 47 at Mach 0.95 | |
| | OPERATIONAL STATUS: Single shift | DYNAMIC PRES: ($lb/ft^2$) 3D: 4600 at Mach 2.25 (max)<br>2D: 7900 at Mach 0.95 (max) | |
| | | STAGNATION PRES: (psia) 3D: 20 - 220<br>2D: 20 - 180 | |
| | The facility is operated by the High Speed Aerodynamics Laboratory of the National Aeronautical Establishment. Available on a fee-for-service basis. | | |

TESTING CAPABILITIES: Being of the intermittent type, the wind tunnel has an air-storage capacity of 55 000 $ft^3$, which is being charged by a 11 000-hp compressor/dryer plant delivering air at a pressure of 320 psia and with an absolute humidity of 0.0002 lb $H_2O$ per lb of air. The transonic test section (20.5% open perforated walls), when in use, is in tandem with the flexible nozzle section. The 2-D test section assembles in the transonic test section, which can also be adapted for reflexion plane (half-model) testing. Compressed air (10 lb/sec at 250 psi) for model blowing can be accommodated both in the 2-D and half-model mode of operation. The laboratory includes a design office and machine shop and thus undertakes model construction to a limited extent.

DATA ACQUISITION: Ninety-six channels of conditioned data can be recorded and processed on-site. The system is expandable to accommodate additional FM and RMS channels.

CURRENT PROGRAMS: The facility is heavily used by domestic and foreign aerospace industry. Main emphasis of the laboratory research program is on subsonic and transonic aerodynamics; high-lift systems, drag reduction schemes such as area rule with lift and skin friction manipulation, computational fluid dynamics, wall interference, buffet, and flutter.

PLANNED IMPROVEMENTS: To facilitate changeover from 3-D to 2-D mode of operation and vice versa, interchangeable test sections will be constructed that can be easily installed in the plenum chamber of the existing transonic test section. Completion scheduled for 1986 at an estimated cost of $3M. Increased on-site computer capacity scheduled for 1985 at an estimated cost of $0.5M. Extended shift (10-hr day) operation planned for late 1985.

LOCAL INFORMATION CONTACT: Lars H. Öhman, High Speed Aerodynamics Laboratory, NAE, NRC, Ottawa, K1A OR6 (613) 998-3243.

| | SUPERSONIC WIND TUNNELS | | COMPARABLE FACILITIES |
|---|---|---|---|
| National Aeronautical Laboratory, Bangalore, India | TEST SECTION SIZE: 1.2 x 1.2 m | SPEED RANGE: (Mach No.) 0.2 - 4.0 | All 4-Ft polysonic tunnels |
| | DATE BUILT/UPGRADED: | TEMP. RANGE: | |
| 1.2 - M Tunnel | REPLACEMENT COST: | REYNOLDS NO: (Per m X $10^{-6}$) 80 | |
| | OPERATIONAL STATUS: | DYNAMIC PRES: ($kN/m^2$) | |
| | | STAGNATION PRES: (bars) 1.5 - 8.0 | |
| | Blowdown, buffet, flutter, stage separation, captive trajectory, heat transfer, force, pressure, schlieren windows, flow visualization | | |

TESTING CAPABILITIES:

DATA ACQUISITION:

CURRENT PROGRAMS:

PLANNED IMPROVEMENTS:

LOCAL INFORMATION CONTACT:

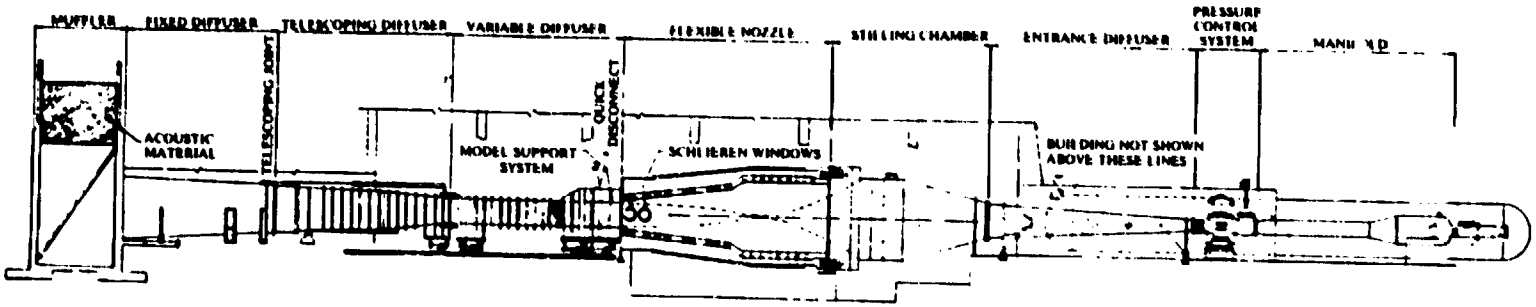


WEST ELEVATION

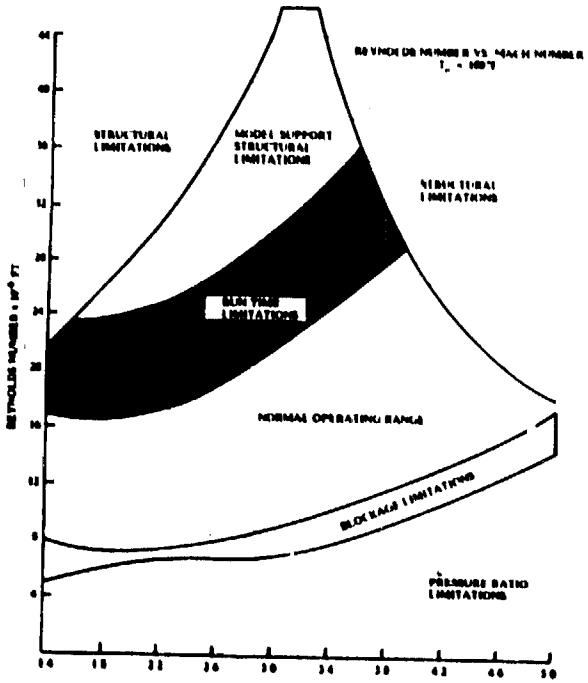


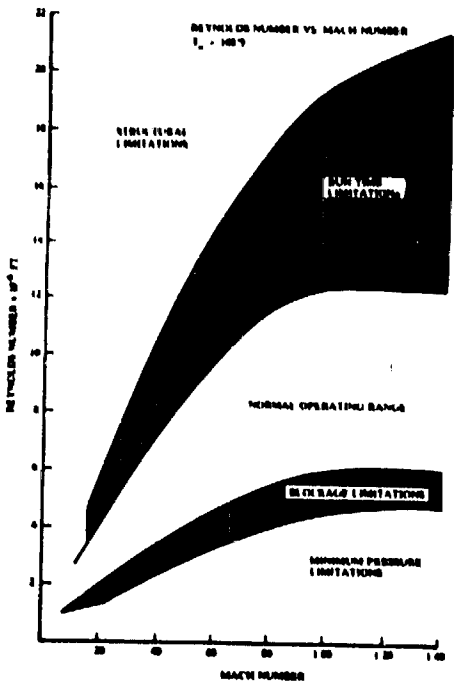

| | SUPERSONIC WIND TUNNELS | | COMPARABLE FACILITIES |
|---|---|---|---|
| Lockheed-California Co. Burbank, Calif. | TEST SECTION SIZE: 4 x 4 x 14 ft | SPEED RANGE: (Mach No.) 0.2 - 5.0 | All 4-Ft polysonic tunnels |
| | DATE BUILT/UPGRADED: 1960/1966/1975/1981 | TEMP. RANGE: 540° - 580° R | |
| 4-Ft Trisonic Wind Tunnel | REPLACEMENT COST: $20M | REYNOLDS NO: (Per ft X $10^{-6}$) 2 - 30 | |
| | OPERATIONAL STATUS: 1 shift per day (backlog) | DYNAMIC PRES: ($lb/ft^2$) 500 - 3600 | |
| | | STAGNATION PRES: (psia) 320 (max) | |
| | Intermittent blowdown to atmosphere<br>Model size: 17 $in^2$ cross-sectional area | | |

TESTING CAPABILITIES: Most tests are done by use of an internal balance and a sting mount. The removable transonic test section used for transonic and subsonic tests has a 22% porosity walls, floor, and ceiling. A 2-D test channel is available for installation in the transonic section reducing the test area to 15 in width by 48 in height. The tank charging compressor is driven by a 7000-hp synchronous motor. The charging rate is 20 lb/sec at 600 psi. Air is stored in 8 tanks at 600 psi with a total volume about 50 000 $ft^3$. Transonic test-section plenum air evacuation is accomplished by dumping the air to the atmosphere or alternately using an exhauster system consisting of two centrifugal pumps powered by a 11 000-hp synchronous motor. A run (blow) will have a duration of 15 to 20 sec, and repump takes from 15 to 20 min.

DATA ACQUISITION: Fifty channels of information can be recorded and reduced on-site with a return time of 2 to 5 min per run (blow).

CURRENT PROGRAMS: The programs run at this facility range from aerodynamics of aircrafts, missiles, and helicopter to propulsion system development.

PLANNED IMPROVEMENTS: Work is currently being done to improve the airflow quality through the test section.

LOCAL INFORMATION CONTACT: Lockheed-California Company, Attn: Edward Whitfield, Flight Sciences Laboratory, Dept. 74-73, Bldg. 202, Plt. 2, P.O. Box 551, Burbank, CA 91520, (213) 847-6121, ext. 221.

| | SUPERSONIC WIND TUNNELS | | COMPARABLE FACILITIES |
|---|---|---|---|
| McDonnell Douglas Corp. El Segundo, Calif. | TEST SECTION SIZE: 4 x 4 x 12 ft | SPEED RANGE: (Mach No.) 0.2 - 5.0 | All 4-Ft polysonic tunnels |
| | DATE BUILT/UPGRADED: 1959/1981 | TEMP. RANGE: 520° - 610°R | |
| 4-Ft Trisonic Wind Tunnel | REPLACEMENT COST: | REYNOLDS NO: (Per ft X $10^{-6}$) 0.25 - 30 | |
| | OPERATIONAL STATUS: Standby | DYNAMIC PRES: (lb/ft$^2$) 4 - 2600 | |
| | | STAGNATION PRES: (psia) $7.3 \times 10^{-4}$ - $2.9 \times 10^{-1}$ | |
| | Intermittent blowdown to atmosphere or vacuum | | |

TESTING CAPABILITIES: The 4-ft Trisonic Wind Tunnel is a blowdown facility that has two modes of operation, ambient or cryogenic. For supersonic testing, only the ambient operation can be used. The Cryogenic Mode is not available. This facility uses an air ejector system to reduce starting loads to workable levels.

DATA ACQUISITION: Sixty-four channels of information can be recorded and reduced on-line with tabulated and plotted data available within 5 to 10 min of a run.

CURRENT PROGRAMS: Facility was last operated in 1982. McDonnell Douglas has no plans for future use and has therefore offered this facility for sale.

PLANNED IMPROVEMENTS:

LOCAL INFORMATION CONTACT: Richard W. Cole, Aerodynamics Staff, (213) 593-5127.

| | SUPERSONIC WIND TUNNELS | | COMPARABLE FACILITIES |
|---|---|---|---|
| McDonnell Douglas Corp. St. Louis | TEST SECTION SIZE: 4 x 4 x 9 ft | SPEED RANGE: (Mach No.) 0.5 - 5.8 | All 4-Ft polysonic tunnels |
| | DATE BUILT/UPGRADED: | TEMP. RANGE: 530° - 710°R | |
| Polysonic Wind Tunnel | REPLACEMENT COST: | REYNOLDS NO: (Per ft X $10^{-6}$) 2 - 50 | |
| | OPERATIONAL STATUS: | DYNAMIC PRES: ($lb/ft^2$) 250 - 6500 | |
| | | STAGNATION PRES: (psia) | |
| | Intermittent blowdown to atmosphere, free drop | | |

TESTING CAPABILITIES: The Polysonic Wind Tunnel reproduces most aerodynamic phenomena encountered by aerospace vehicles at speeds from subsonic through low hypersonic at various altitudes. Sea-level conditions can be maintained to Mach number 2.0. Downstream ejectors used primarily to reduce model loads, also are used to provide high-altitude simulation when required. Primary model support system is sting mounted and supported from a circular arc sector with center of rotation on tunnel $C_L$. Angle of attack: over a total of 42° for any predetermined run. Adapter available for combined pitch and yaw by ±90° of roll control. High-pressure air up to 9000 psi is available for boundary layer control, jet effects, a large family of primary model balances, and miniature store balances; and some specialized balances are available for almost any model support application. The PSWT is used for testing at speeds from subsonic through hypersonic. It is used for conducting conventional force and pressure tests, plus flutter, jet effects, free ejections, pressure recovery, engine inlet, proximity, aeroelastic, reflection plane, and various flow visualization tests.

DATA ACQUISITION: A stand-alone Datum Inc. Nova 3-D accommodates up to 150 analog input channels and 14 digital input channels of signal information from forces, pressure, temperature, or position sensors.

CURRENT PROGRAMS:

PLANNED IMPROVEMENTS:

LOCAL INFORMATION CONTACT:

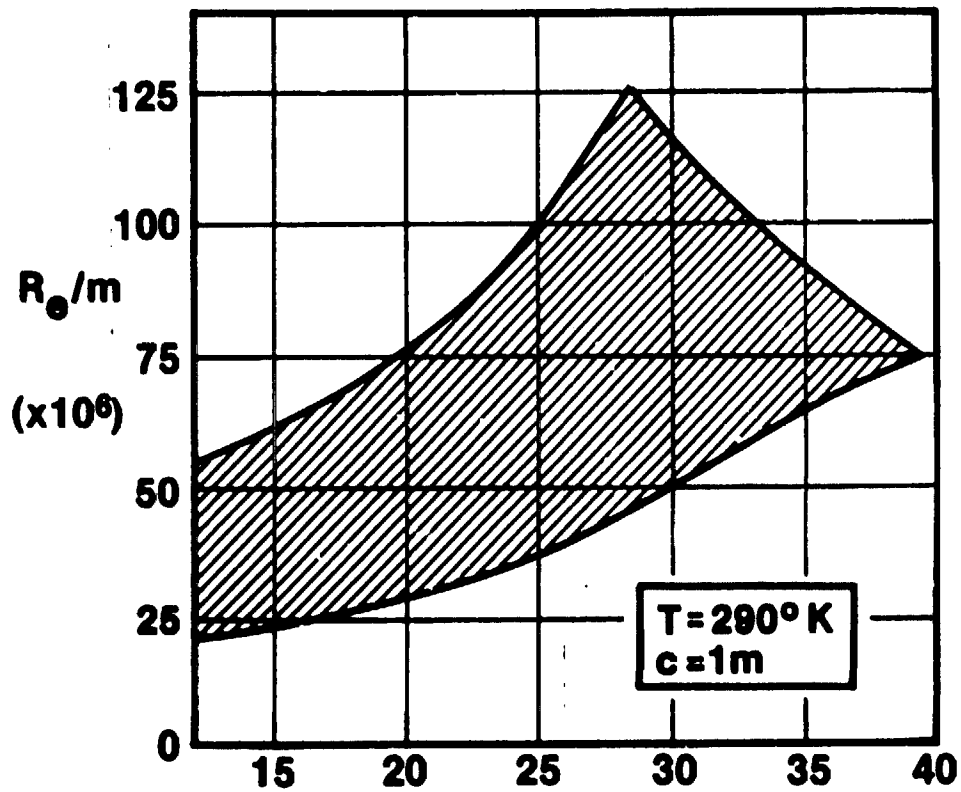


THE REYNOLDS NUMBER AS A FUNCTION OF THE MACH NUMBER

| Netherlands Research Laboratory Amsterdam, Netherlands | SUPERSONIC WIND TUNNELS | | COMPARABLE FACILITIES |
|---|---|---|---|
| | TEST SECTION SIZE: 1.2 x 1.2 m | SPEED RANGE: (Mach No.) 1.2 - 4.0 | All 4-Ft polysonic tunnels |
| | DATE BUILT/UPGRADED: 1960 | TEMP. RANGE: Stagnation stabilized at 294 K | |
| SST | REPLACEMENT COST: | REYNOLDS NO: (Per m X $10^{-6}$) 100 at Mach 2.5 | |
| | OPERATIONAL STATUS: 1 shift per day, approx. 10 blowdown runs per day | DYNAMIC PRES: ($kN/m^2$) 75.65 - 117 | |
| | | STAGNATION PRES: (bars) 1.5 - 15.0 | |
| | Blowdown, flexible walls; run time: 10 - 40 sec | | |

TESTING CAPABILITIES: A compressed air vessel, charged by two compressors and containing 600 $m^3$ dry air at 41 atmospheres, feeds the tunnel at a dew point of 491°R. Mach number distribution along the test section centerline is very good and, within certain limits, is not affected by the choice of the dynamic pressure. Mach number repeatability is ±0.005 M. Stagnation pressure repeatability is better than 0.5%. The model support allows a yaw range of 12°. Lateral adjustment of the model support is possible from +20 to -200 mm, zero position being the test section centerline. Incidence range is 21° total, mainly used from -6° to +15°. Roll range extends from +90° to -180°. In most cases, complete models are used, designed for measuring forces and moments and/or for measuring pressures. In the latter, special scanners can be mounted, scanning 96 pressures in about 3 sec. Jet simulation models can also be tested.

DATA ACQUISITION: Data are collected through 24 input channels, the first eight of which can handle up to eight subscanners. Data processing is carried out through a HP-1000/45 dedicated computer system. This system provides the parameters for tunnel adjustment, verification of the present run, and computation of the final results, presented in tables, plots, and on tape. At the same time transmission to the central CDC CYBER computer is possible.

CURRENT PROGRAMS: Within the speed range of the SST, stationary measurements are in the majority. The main goal is to establish forces, moments, and pressures during continuous measurements within the run. The varying angle of incidence is covered by advance programming. Establishing mass flow is another way of testing, either with the use of rakes or with special duct extensions.

PLANNED IMPROVEMENTS:

LOCAL INFORMATION CONTACT: J. H. van der Zwaan, Head Compressible Aerodynamics Department, Fluid Dynamics Division.

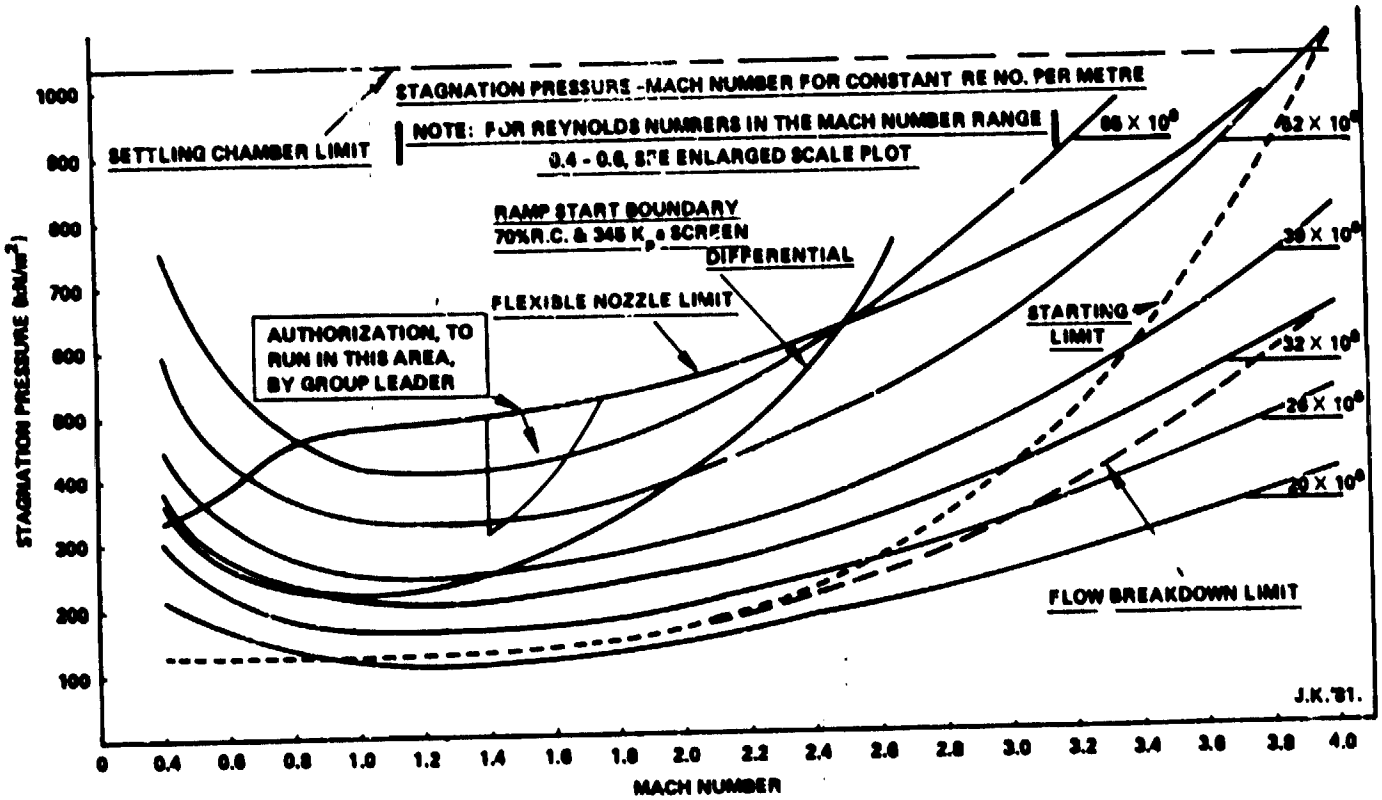
STAGNATION PRESSURE - MACH NUMBER FOR CONSTANT RE NO. PER METRE
NOTE: FOR REYNOLDS NUMBERS IN THE MACH NUMBER RANGE 0.4 - 0.8, SEE ENLARGED SCALE PLOT
SETTLING CHAMBER LIMIT
RAMP START BOUNDARY
70%R.C. & 345 K$_p$ SCREEN
DIFFERENTIAL
FLEXIBLE NOZZLE LIMIT
AUTHORIZATION, TO RUN IN THIS AREA, BY GROUP LEADER
STARTING LIMIT
FLOW BREAKDOWN LIMIT
66 X 10$^6$
52 X 10$^6$
36 X 10$^6$
32 X 10$^6$
26 X 10$^6$
20 X 10$^6$
J.K.'81.
STAGNATION PRESSURE (kN/m$^2$)
1000
900
800
700
600
500
400
300
200
100
0
0.4
0.6
0.8
1.0
1.2
1.4
1.6
1.8
2.0
2.2
2.4
2.6
2.8
3.0
3.2
3.4
3.6
3.8
4.0
MACH NUMBER

| British Aerospace, Warton | SUPERSONIC WIND TUNNELS | | COMPARABLE FACILITIES |
|---|---|---|---|
| | **TEST SECTION SIZE:** 1.22 x 1.22 x 5.0 m | **SPEED RANGE:** (Mach No.) 0.4 - 4.0 | All 4-Ft polysonic tunnels |
| | **DATE BUILT/UPGRADED:** 1959/1972/1980 | **TEMP. RANGE:** Ambient | |
| 4-Ft Blowdown Wind Tunnel | **REPLACEMENT COST:** $16M | **REYNOLDS NO:** (Per m X $10^{-6}$) 80 (max) | |
| | **OPERATIONAL STATUS:** 20% overtime, periods of double shift | **DYNAMIC PRES:** ($kN/m^2$) | |
| | | **STAGNATION PRES:** (bars) 4 Transonic 10 at Mach 4 | |
| | Blowdown from 360 $m^3$ storage at 40 bars<br>Run time: 7 - 40 sec (Mach No. and Stagnation Pressure dependent)<br>Typical recharge time: 40 min | | |

TESTING CAPABILITIES: Supersonic nozzle and flexible roof and floor can be set to any Mach number. Transonic working section, 19% perforations, diffuser suction on plenum chamber, second throat control of Mach number. Full range of stagnation pressures used regularly.

Equipped for: (1) six-component tests, two sting-mounting carts, internal SG balances; (2) pressure plotting, 300 points typical; (3) afterbody drag measurements, wing tip stings, transonic and supersonic; (4) store load and store jettison testing; (5) roll damping derivatives, rolling sting, transonic only, 300 rpm; and (6) flutter measurements, damping or destructive.

DATA ACQUISITION: Fifty analog, 6 digital, and 6 scanivalve channels on a PDP 11 based data acquisition and control system. Dedicated VAX 11/780 for data reduction (fully corrected, plotted, and tabulated data in 2 to 10 min after run). Computer store of 15-year results, indexed retrieval.

CURRENT PROGRAMS: Used for aircraft design and development, flight test support, new project assessment, and aerodynamic research by major manufacturer of combat aircraft. Fully active on flexible program allowing quick reaction to new demands from within our own organization. Fully staffed for design and manufacture of models, rigs and strain-gage balances and for calibration, testing and analysis.

PLANNED IMPROVEMENTS: None necessary in near future. Maintenance for long-term active operation.

LOCAL INFORMATION CONTACT: K. Emslie, Chief Wind Tunnel Engineer (W175), British Aerospace, Aircraft Group, Warton Aerodrome Preston, Lancashire, UK PR4 1AX, (0772-63333, ext. 369, Telex 67627).

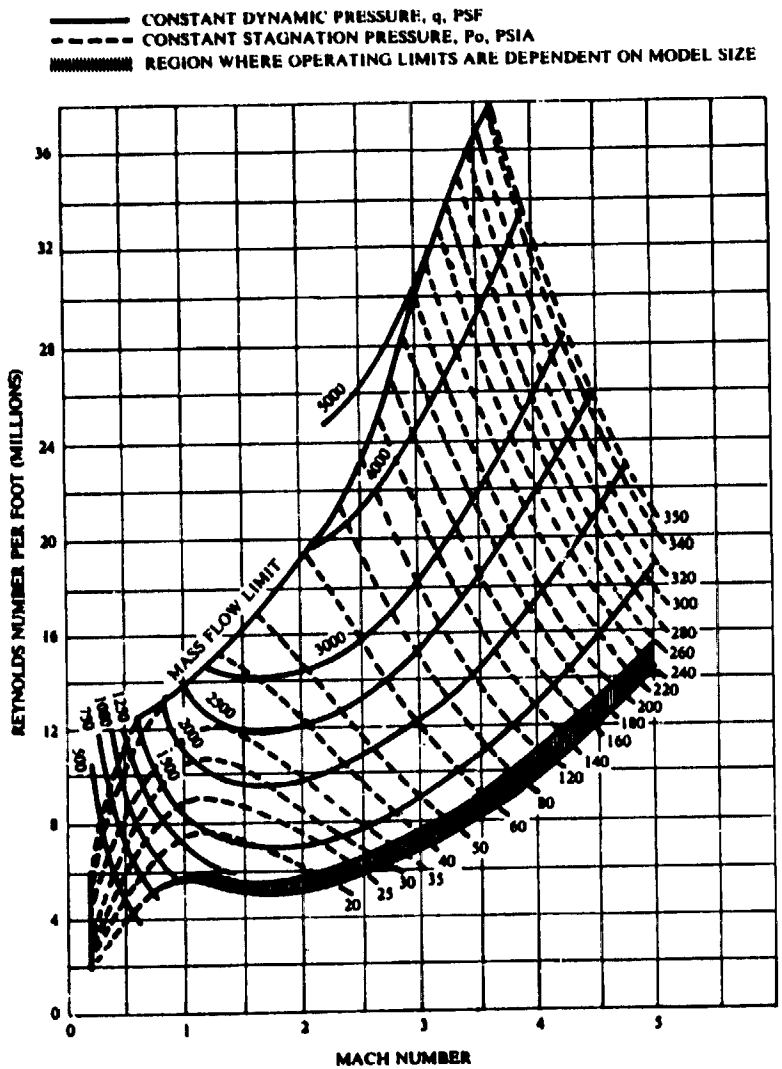


VARIATION OF REYNOLDS NUMBER WITH MACH NUMBER FOR To — 100°F

| | SUPERSONIC WIND TUNNELS | | COMPARABLE FACILITIES |
|---|---|---|---|
| Vought Corp. | TEST SECTION SIZE: 4 x 4 x 5 ft | SPEED RANGE: (Mach No.) 0.2 - 5.0 | All 4-Ft polysonic tunnels |
| | DATE BUILT/UPGRADED: 1958/1972/1975 | TEMP. RANGE: 540° - 620°R | |
| High-Speed Wind Tunnel | REPLACEMENT COST: $25M | REYNOLDS NO: (Per ft X $10^{-6}$) 2 - 38 | |
| | OPERATIONAL STATUS: 2 shifts per day | DYNAMIC PRES: (lb/ft$^2$) 150 - 5000 | |
| | | STAGNATION PRES: (psia) 19.8 - 367.5 | |
| | Intermittent blowdown to atmosphere, captive trajectory, rotory derivatives, free-drop, 40 atmospheres, 30 000 ft$^3$ storage. 8000-hp main drive, valve noise treatment, honeycomb, 10 screens | | |

TESTING CAPABILITIES: Equipped for force and moment, pressure, inlet performance, flutter, buffet, dynamic stability, jet effects (hot and cold), captive trajectory, and free-drop store separation testing of aircraft and missile configurations. Computer control of tunnel pressure programs, constant Reynolds number (pressure as function of temperature), model roll/pitch support system, inlet test systems, and CTS system. Auxiliary air at pressures up to 500 psi for flow rates to 18 lb/sec (to 130 in/sec flow rates at lower pressures).

DATA ACQUISITION: 110-channel data (individual amplifier) acquisition and processing system, with on-site, on-line computer, and plotting system. Up to 110 individual pressure transducers are used for inlet testing and similar pressure measurement requirement. Scanivalve and electronically scanned module-type pressure equipment are also used. Analog (FM) tape recorders, oscillographs, high-speed movie cameras, and video recorder are used.

CURRENT PROGRAMS: Force and moment (internal balances), dynamic stability inlet, pressure, store and submunition separation testing (CTS or free-drop), and flutter testing of aircraft, spacecraft, and missile configurations.

PLANNED IMPROVEMENTS: Computer system replacement planned for 1985 - 1986 with an estimated cost of $200K.

LOCAL INFORMATION CONTACT: J. M. Cooksey, Manager, Wind Tunnel Laboratories, (214) 266-3234.

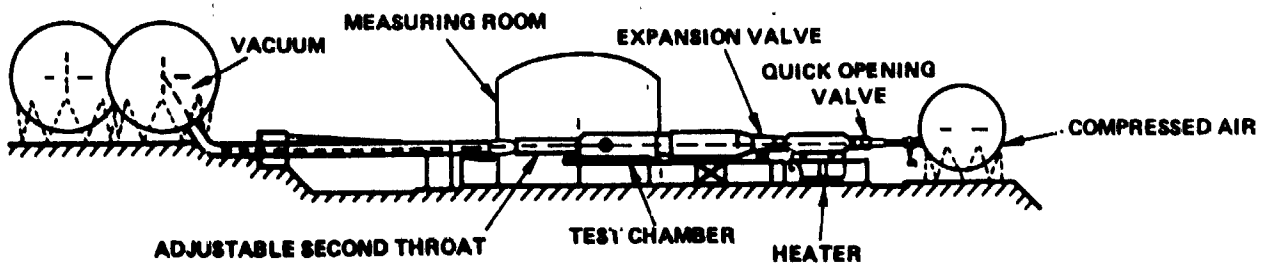


Reynolds number, relative to 1/10 of square root of cross-section: between $0.03 \times 10^6$ to $4.5 \times 10^6$ according to test conditions (speed, temperature, pressure), as shown in the following graphs:

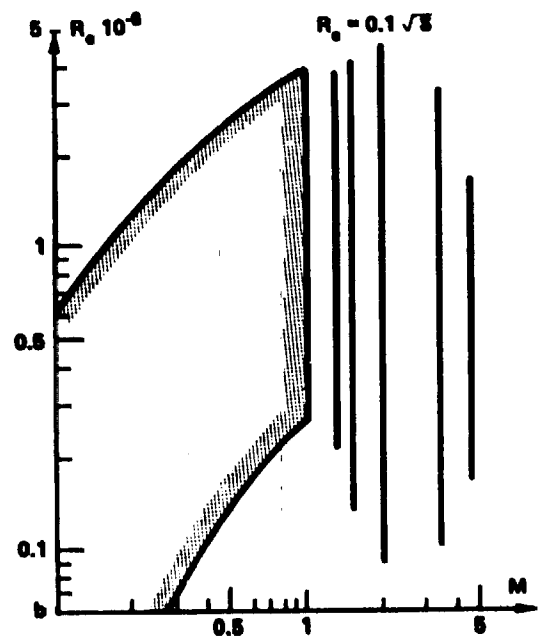

| ONERA Modane, France | SUPERSONIC WIND TUNNELS | | COMPARABLE FACILITIES |
|---|---|---|---|
| | TEST SECTION SIZE: Transonic 0.78 x 0.56 m<br>Supersonic 0.80 x 0.76 m | SPEED RANGE: (Mach No.) 0.1 - 1.1<br>1.2, 1.5, 2, 3.4, 4.5 | For Test Section #2 All 4-Ft polysonic tunnels |
| | DATE BUILT/UPGRADED: 1959 | TEMP. RANGE: 0 - 623 K depending on the nozzle | |
| S3 MA | REPLACEMENT COST: | REYNOLDS NO: (Per m X $10^{-6}$) 64 | |
| | OPERATIONAL STATUS:<br>1 shift per day | DYNAMIC PRES: ($kN/m^2$) 3 - 158 | |
| | | STAGNATION PRES: (bars) 0.2 - 4<br>0.2 - 7.5 | |
| | | | |

TESTING CAPABILITIES: One side of the tunnel completely opens between settling chamber and quadrant to give quick access to the model or to remove the nozzle. Quadrant can also be quickly removed. Model holder is available in supersonic to avoid problems choking the nozzle. Sixty and 150 b dry compressed air is available for models. Wall turntable, schlieren through 0 800 optical access, and rain erosion simulator. Civil, combat aircraft, missile, conventional aerodynamic measurements, heat transfer, rain erosion, and trajectography - 2D, laser velocimetry. Intermittent, blowdown 10 - 1000 sec depending on Mach number and stagnation pressure. Subsonic and transonic insert (special insert for 2D tests), fixed nozzle for supersonic. Total storage 5500 $m^3$ for 9 b dry compressed air or 9 b compressed air and 0.03 b vacuum. Electrical powered dry heat exchanger. Second throat. Exit to atmosphere or vacuum.

DATA ACQUISITION: Forces, pressures, temperature displacements, and skin visualization. Basically 40 analog and digital channels with possible extension to 64 channels steady or unsteady. Local HP 1000 computer for data acquisition and wind tunnel survey. Real-time computation by line to VAX-750 and return of results.

CURRENT PROGRAMS: Numerous configurations of missiles, and rockets.

PLANNED IMPROVEMENTS: Supersonic variable nozzle M 1.65 - 3.84 in 1985.

LOCAL INFORMATION CONTACT: M. Grandjaques, ONERA Modane Test Center; BP 25, 73 500 Modane, France.

| BAe Woodford | SUPERSONIC WIND TUNNELS | | COMPARABLE FACILITIES |
|---|---|---|---|
| | TEST SECTION SIZE: 0.76 x 0.69 m | SPEED RANGE: (Mach No.) 1.6 - 3.5 | All 4-Ft polysonic tunnels |
| | DATE BUILT/UPGRADED: 1955 | TEMP. RANGE: Ambient | |
| 30 x 27-In Supersonic Tunnel | REPLACEMENT COST: | REYNOLDS NO: (Per m X $10^{-6}$) 56 at Mach 1.6<br>30 at Mach 3.5 | |
| | OPERATIONAL STATUS: | DYNAMIC PRES: ($kN/m^2$) | |
| | | STAGNATION PRES: (bars) 1.5 at Mach 1.6<br>5 at Mach 3.5 | |
| | Intermittent, closed working section; also used as open jet tunnel | | |

TESTING CAPABILITIES: Conventional testing of sting-mounted models. The diffuser of this tunnel provides a 3-ft diameter open jet at speeds up to Mach number 1.0, which is used for ad hoc testing, primarily of full-scale components.

DATA ACQUISITION:

CURRENT PROGRAMS:

PLANNED IMPROVEMENTS:

LOCAL INFORMATION CONTACT:

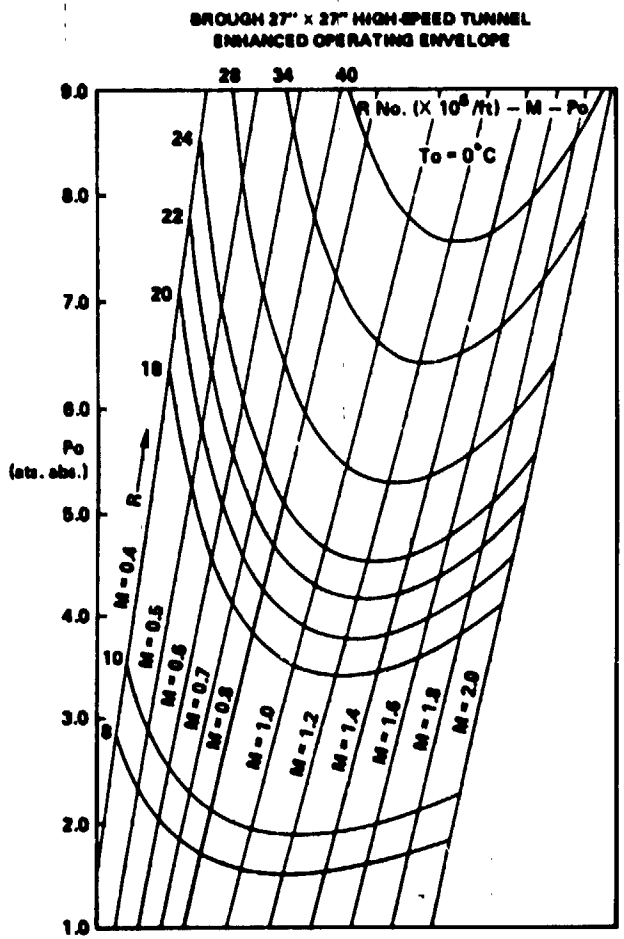


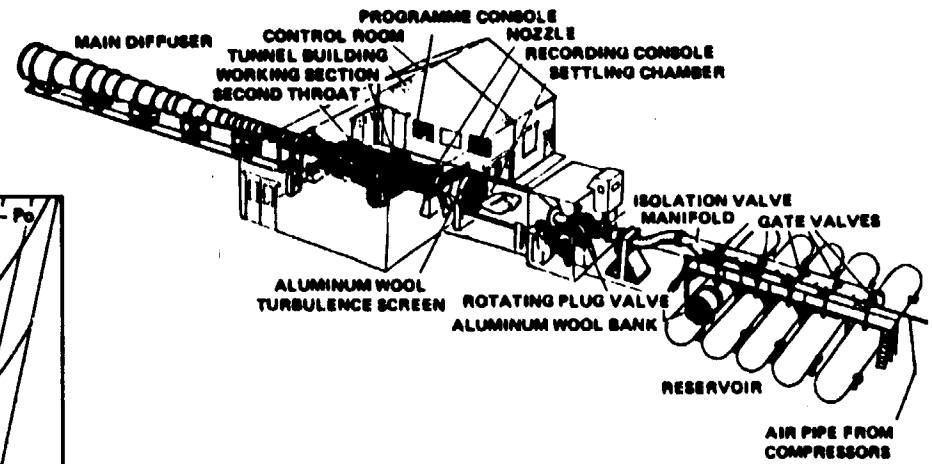


HIGH-SPEED WIND TUNNEL – GENERAL LAYOUT

| British Aerospace Brough, England | SUPERSONIC WIND TUNNELS | | COMPARABLE FACILITIES |
|---|---|---|---|
| | TEST SECTION SIZE: 0.68 x 0.68 x 2.1 m | SPEED RANGE: (Mach No.) 0.1 - 2.5 | 24-In - Northrop |
| | DATE BUILT/UPGRADED: 1958/1963/1984 | TEMP. RANGE: 273 K | |
| 27 x 27-In Transonic/ Supersonic Blowdown Tunnel | REPLACEMENT COST: $24M | REYNOLDS NO: (Per m X $10^{-6}$) 2.9 - 66 (148) | |
| | OPERATIONAL STATUS: 1 shift per day | DYNAMIC PRES: ($kN/m^2$) 0.8 - 174 (428) | |
| | | STAGNATION PRES: (bars) 1.2 - 4.0 (9.0) | |
| | Currently (1984) being uprated to operate at 9.0 bar stagnation pressure. Enhanced operating parameters shown in parentheses. Weapon releases performed using the accelerated model concept. | | |

TESTING CAPABILITIES: 22% porosity working section (normal holes), interchangeable nozzles for M = 1.4 - 2.5. Tunnel operation by computer control of Mach number and Reynolds number. Tunnel used for overall 6-degree force measurements, flutter, weapon jettisons, buffet, and flow visualization on full, half, and part models.

DATA ACQUISITION: Computer-controlled data logging of 24 channels with immediate post-run data reduction. Multiscanivalve capability.

CURRENT PROGRAMS: These include novel methods of weapon release, overall forces on advanced STOVL configurations, and other combat aircraft. Flutter technique development and in-service weapon clearance/aiming problems.

PLANNED IMPROVEMENTS: Tunnel enhancement to 9 bar capability by 1985 (≈$480K).

LOCAL INFORMATION CONTACT:

219A

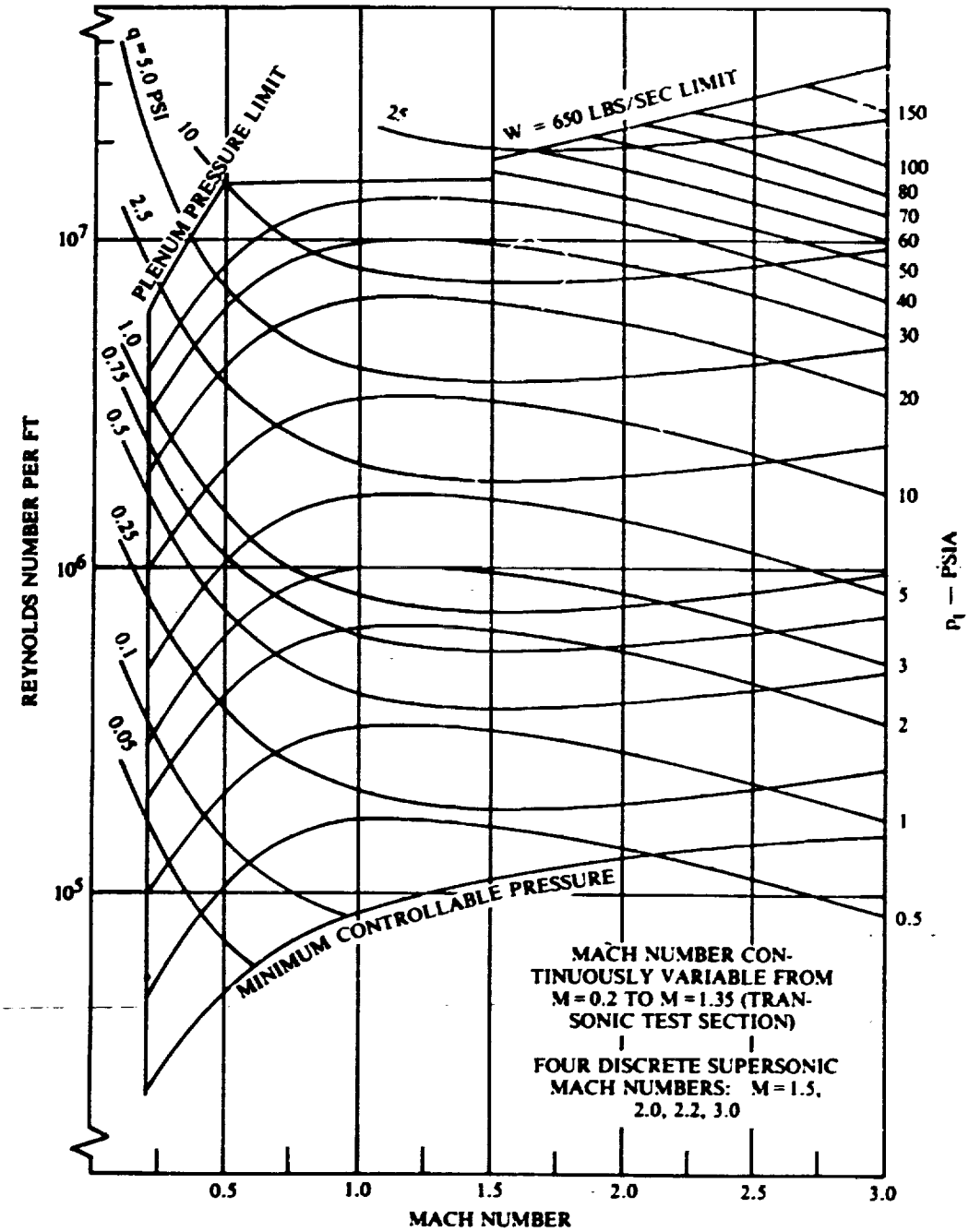
q = 5.0 PSI
10
2.5
1.0
0.75
0.5
0.25
0.1
0.05
PLENUM PRESSURE LIMIT
2.5
W = 650 LBS/SEC LIMIT
MINIMUM CONTROLLABLE PRESSURE
MACH NUMBER CONTINUOUSLY VARIABLE FROM M = 0.2 TO M = 1.35 (TRANSONIC TEST SECTION)
FOUR DISCRETE SUPERSONIC MACH NUMBERS: M = 1.5, 2.0, 2.2, 3.0
REYNOLDS NUMBER PER FT
$10^7$
$10^6$
$10^5$
MACH NUMBER
0.5
1.0
1.5
2.0
2.5
3.0
$p_1$ — PSIA
150
100
80
70
60
50
40
30
20
10
5
3
2
1
0.5

| | SUPERSONIC WIND TUNNELS | | | COMPARABLE FACILITIES |
|---|---|---|---|---|
| Northrop Corp. Aircraft Division | TEST SECTION SIZE: 2 x 2 ft | SPEED RANGE: (Mach No.) | 0.4 - 1.35 and 1.5, 2, 2.2, 3 | Unique |
| | DATE BUILT/UPGRADED: 1962/1979 | TEMP. RANGE: | 460° - 520°R | |
| 24-In Trisonic Wind Tunnel | REPLACEMENT COST: $4M | REYNOLDS NO: (Per ft X $10^{-6}$) | 0.2 - 30 | |
| | OPERATIONAL STATUS: 1 shift testing approximately 6 months per year | DYNAMIC PRES: ($lb/ft^2$) | 40 - 3600 | |
| | | STAGNATION PRES: (psia) | 1 - 150 | |
| | Intermittent blowdown to atmosphere or vacuum, from 3200 psia air supply<br>Special feature: High Reynolds number | | | |

TESTING CAPABILITIES: Interchangeable sections incorporating the nozzle and test section provide the Mach numbers below:

0.4 ⟶ 1.35 Transonic Test Section with 10% porous slotted-hole walls
1.5, 2.0, 3.0 Fixed block supersonic nozzles
2.2 Liner in M = 1.5 nozzle

The tunnel sting support-system section is common to all nozzles and can quickly be withdrawn back along rails from the test section to provide excellent access to the model for model changes. Six-component internal strain-gage balances are used for force measurements and individual transducers for pressures. Typical fighter model scale for force testing is 0.03, whereas inlet models up to 0.20 scale can be tested for inlet and ramp bleed system development. Typical run time is 30 sec with run frequency of one per hour.

DATA ACQUISITION: Automated control of model motion/data acquisition to make effective use of short run time. 256 channels, dedicated on-site computer, graphics CRT, and high-speed pen plotter.

CURRENT PROGRAMS: High-speed development directed toward current and future fighter and trainer aircraft.

PLANNED IMPROVEMENTS: M = 1.6 liner for transonic test section.

LOCAL INFORMATION CONTACT: Fred W. Peitzman, Manager Wind Tunnel Test (Orgn. 3844/64), (213) 970-4584.

| DFVLR Köln-Porz, Germany | SUPERSONIC WIND TUNNELS | | COMPARABLE FACILITIES |
|---|---|---|---|
| | TEST SECTION SIZE: 0.6 x 0.6 m | SPEED RANGE: (Mach No.) 0.5 - 4.5 | All 4-Ft polysonic tunnels |
| | DATE BUILT/UPGRADED: 1966 | TEMP. RANGE: Total ambient - 530 K | |
| Trisonic Tunnel (TMK) | REPLACEMENT COST: | REYNOLDS NO: (Per m X $10^{-6}$) 6 - 80 | |
| | OPERATIONAL STATUS: 1 shift per day | DYNAMIC PRES: ($kN/m^2$) 100 for Mach > 1 | |
| | | STAGNATION PRES: (bars) 1.2 - 26 | |
| | Intermittent blowdown, flexible nozzle; running time: 60 sec, closed/perforated test sections | | |

TESTING CAPABILITIES: The tunnel has a closed test section and a changeable transonic test section with perforated walls. Maximum running time is between 1 and 2 min depending on Mach number. There are different model mounts including a side strut for an angle-of-attack range of ±90° in supersonic flow. Typical model size: length 0.5 m and span 0.2 m. For jet simulation tests, a 10 $m^3$, 300 bar pressure reservoir is available.

DATA ACQUISITION: Forty channel A/D converter input and on-line data reduction.

CURRENT PROGRAMS: Main research is directed at the investigation of the aerodynamics of missiles and missile components: dynamic stability, wings, and bodies at high angles of attack.

PLANNED IMPROVEMENTS:

LOCAL INFORMATION CONTACT: DFVLR Windtunnel Division, Linder Höhe, D-5000 Köln 90, Dipl.-Ing. Helmut Esch, (02203-601-2345).

| | SUPERSONIC WIND TUNNELS | | COMPARABLE FACILITIES |
|---|---|---|---|
| Fuji Heavy Industries, Japan | TEST SECTION SIZE: 2 x 2 ft | SPEED RANGE: (Mach No.) 0.2 - 4.0 | 2 x 2-Ft - NASA ARC<br>2 x 2-Ft - High Speed Göttingen |
| | DATE BUILT/UPGRADED: 1981 | TEMP. RANGE: Atmospheric at stagnation | |
| 2 x 2-Ft High-Speed Wind Tunnel | REPLACEMENT COST: $5.5M | REYNOLDS NO: (Per ft X $10^{-6}$) 3.2 - 3.5 | |
| | OPERATIONAL STATUS: Essentially 1 shift per day | DYNAMIC PRES: ($lb/ft^2$) 140 - 800 | |
| | | STAGNATION PRES: (psia) Atmospheric | |
| | Intermittent indraft tunnel, open circuit, closed test section (supersonic), 6% perforated test section (transonic)<br>Intermittent time: 20 min. Run time: 10 - 30 sec | | |

TESTING CAPABILITIES: Two model support systems are equipped: sting with 6-component internal balance for the full-model tests and side-wall with 3-component balance for the half-model tests. Oil flow and schlieren techniques are available for flow visualization tests, and 10 $kg/cm^2$, 2.5 $m^3$ compressed-air supply is equipped to simulate exhaust jet flow, as well as pressure measurement equipments (scanivalves). When varying test Mach numbers over supersonic region, the fixed nozzle blocks are changed from what is desired. (It takes about 1 hr, and three supersonic nozzle blocks (2.0, 3.0 and 4.0) are equipped.)

DATA ACQUISITION: A Hewlett-Packard 1000 series computer and front-end are used for data acquisition of up to 17 analog channels, and two programmable logic controllers are used for wind tunnel and model position control. On-line data acquisition/reduction programs provide almost instantaneous numerical and graphical results.

CURRENT PROGRAMS: The facility is used for the study of the transonic and supersonic aerodynamics of military and transport aircraft and rocket configurations.

PLANNED IMPROVEMENTS: Additional supersonic nozzle blocks are scheduled.

LOCAL INFORMATION CONTACT: Akitoshi Nagao, General Manager, FHI Aircraft Engineering Division, 1-1-11 Younan Utsunomiya Tochigi, 320, Japan, (0286-58-111).

| | SUPERSONIC WIND TUNNELS | | COMPARABLE FACILITIES |
|---|---|---|---|
| Mitsubishi Heavy Industries, Ltd., Japan | TEST SECTION SIZE: 0.6 x 0.6 x 2.8 m | SPEED RANGE: (Mach No.) 0.4 - 4.0 | All 4-Ft polysonic tunnels |
| | DATE BUILT/UPGRADED: 1968/1979/1982 | TEMP. RANGE: Ambient | |
| 60-cm Trisonic Wind Tunnel | REPLACEMENT COST: $13M | REYNOLDS NO: (Per m X $10^{-6}$) 15 - 65 | |
| | OPERATIONAL STATUS: 10 hours per day | DYNAMIC PRES: ($kN/m^2$) 29.4 - 156 | |
| | | STAGNATION PRES: (bars) 11.77 (maximum) | |
| | Intermittent blowdown (20 sec at M =1.0 and 35 sec at M = 2.5) | | |

TESTING CAPABILITIES: Six-component force test, pressure distribution test, half-model test, flutter test (semispan wing and empennage), static aeroelastic test, air intake test including unsteady pressure measurement, power effect test, and flow visualization test. Angle-of-attack range is from -13° to 13° when sting support system is used. Internal six-component balance is used for force measurement of complete aircraft model test and sidewall five-component balance for half-model test. The air storage sphere has an 8-m diameter with air pressure up to 15 $kg/cm^2$ G. The tunnel upgrading in 1982 improved the flow angularity and turbulence level as well as Mach number precise control.

DATA ACQUISITION: Thirty-two channel force and pressure data can be recorded simultaneously. The IBM system 7 processes the data on-line with output by plotter, printer, graphic display, and character display.

CURRENT PROGRAMS: Research and development of aircraft, missile, and rocket.

PLANNED IMPROVEMENTS: High angle-of-attack support system in 1984; compressor replacement in 1986.

LOCAL INFORMATION CONTACT: Haruo Sakai, Manager, Aerodynamics Research Section, First Engineering Department, Nagoya Aircraft Works, (052) 611-2111, ext. 247.

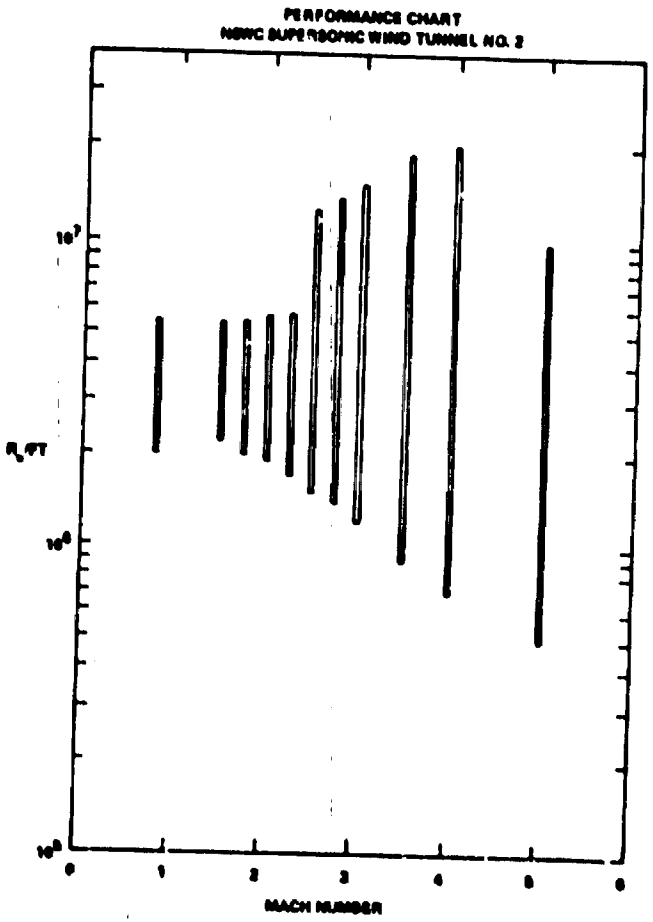
PERFORMANCE CHART
NSWC SUPERSONIC WIND TUNNEL NO. 2
$R_e$/FT
$10^7$
$10^6$
$10^5$
0
1
2
3
4
5
6
MACH NUMBER

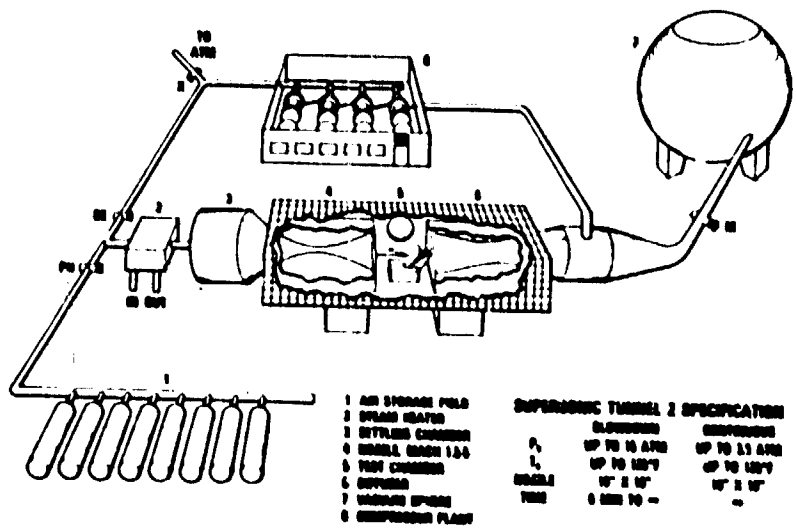
TO ATM
1 AIR STORAGE FIELD
2 STEAM HEATER
3 SETTLING CHAMBER
4 NOZZLE MACH 1.3-5
5 TEST CHAMBER
6 DIFFUSER
7 VACUUM SPHERE
8 COMPRESSOR PLANT
SUPERSONIC TUNNEL 2 SPECIFICATION
BLOWDOWN
CONTINUOUS
UP TO 15 ATM
UP TO 3.5 ATM
UP TO 120°F
UP TO 120°F
NOZZLE
TIME

| | SUPERSONIC WIND TUNNELS | | COMPARABLE FACILITIES |
|---|---|---|---|
| Naval Surface Weapons Center | TEST SECTION SIZE: 16 x 16-in cross section; rhombus leng. = 18 - 76 ft | SPEED RANGE: (Mach No.) 0.3 - 5.0 | All 4-Ft polysonic tunnels |
| | DATE BUILT/UPGRADED: 1941/1949/1962 | TEMP. RANGE: 650°R | |
| NSWC Supersonic Wind Tunnel No. 2 | REPLACEMENT COST: $7M | REYNOLDS NO: (Per ft X $10^{-6}$) 0.5 - 21 | |
| | OPERATIONAL STATUS: 1 shift per day, flexible schedule | DYNAMIC PRES: ($lb/ft^2$) 35 - 2500 | |
| | | STAGNATION PRES: (psia) 4.41 - 221 | |
| | Open jet test section; blowdown or continuous flow operation. Model size is dependent on test rhombus length and model blockage area. | | |

TESTING CAPABILITIES: Facility is suitable for many types of testing. Internally mounted 6-component force and moment balances, magnus force and moment balances with high-speed air turbines for spinning models, and pitch and roll damping rigs are available. Also, two 48-pressure transducer banks, which can be internally mounted in the test cell, are available for pressure testing. Several optical diagnostic techniques are in routine use in this tunnel. A schlieren and spark shadowgraph system for determining shock shapes and locations, a 3-D Laser Doppler Velocimeter (LDV) for mapping flowfield velocities, and a Laser Holographic Interferometry (LHI) system for measuring densities have been well developed. The compressor system for this facility consists of four single compressors that can be operated either in series or parallel. Facility air is stored in two interconnected storage systems with a total capacity of approximately 40 000 lb of air.

DATA ACQUISITION: Low-level multiplexer provides sampling of 128 inputs in group of up to 16. Data are reduced off-line. However, digital display of any six input channels can be accomplished by on-line X-Y plotters. The LDV and LHI systems have their own data acquisition and reduction capability.

CURRENT PROGRAMS: Current research emphasis is on supersonic flow past tactical and strategic missile configurations. Specific research areas include tactical missile high angle-of-attack flowfields, boundary layer turbulence measurements, and LDV air-breathing propulsion inlets studies.

PLANNED IMPROVEMENTS:

LOCAL INFORMATION CONTACT: Robert L. P. Voisinet, Aerodynamics Branch (K24), (202) 394-1736.

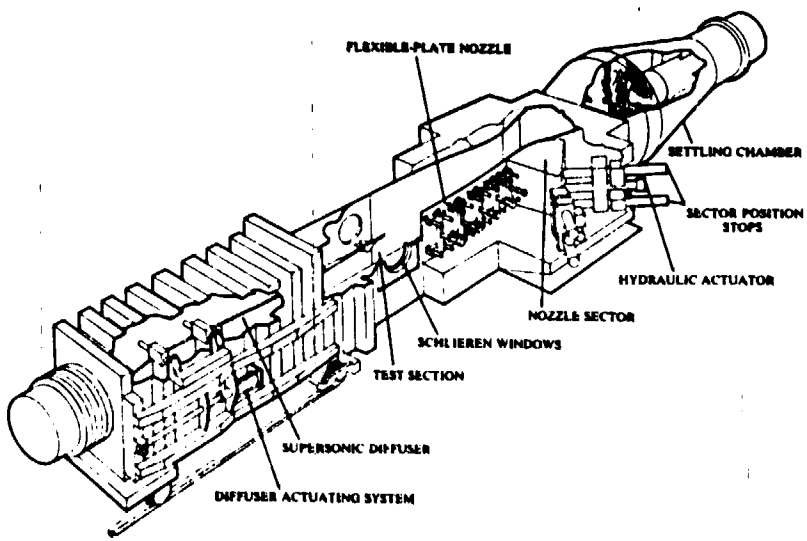
FLEXIBLE-PLATE NOZZLE
SETTLING CHAMBER
SECTOR POSITION STOPS
HYDRAULIC ACTUATOR
NOZZLE SECTOR
SCHLIEREN WINDOWS
TEST SECTION
SUPERSONIC DIFFUSER
DIFFUSER ACTUATING SYSTEM

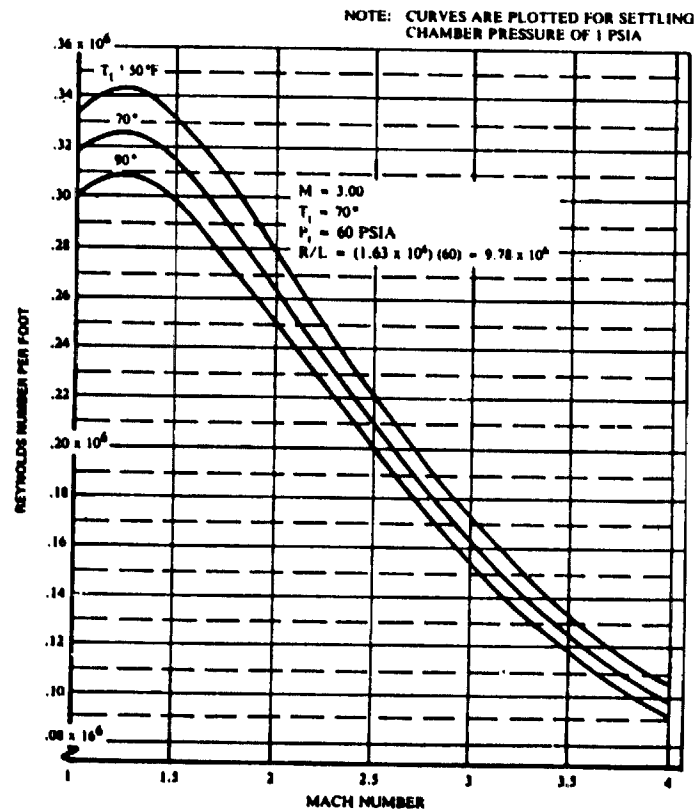
NOTE: CURVES ARE PLOTTED FOR SETTLING CHAMBER PRESSURE OF 1 PSIA
$T_1$ = 50°F
70°
90°
M = 3.00
$T_1$ = 70°
$P_1$ = 60 PSIA
R/L = (1.63 x 10⁶) (60) = 9.78 x 10⁶
REYNOLDS NUMBER PER FOOT
.36 x 10⁶
.34
.32
.30
.28
.26
.24
.22
.20 x 10⁶
.18
.16
.14
.12
.10
.08 x 10⁶
1
1.5
2
2.5
3
3.5
4
MACH NUMBER

| Boeing Commercial Airplane Co. Seattle | SUPERSONIC WIND TUNNELS | | COMPARABLE FACILITIES |
|---|---|---|---|
| | TEST SECTION SIZE: 4 x 4 x 4 ft and 1 x 3 ft transonic insert | SPEED RANGE: (Mach No.) 1.2 - 4 | All 4-Ft polysonic tunnels |
| | DATE BUILT/UPGRADED: 1957/1962/1968 | TEMP. RANGE: 525°R | |
| 4-Ft Supersonic Wind Tunnel | REPLACEMENT COST: $20M | REYNOLDS NO: (Per ft X $10^{-6}$) 6 - 17 | |
| | OPERATIONAL STATUS: 3 shifts per day | DYNAMIC PRES: ($lb/ft^2$) 1200 - 3200 | |
| | | STAGNATION PRES: (psia) 20 - 115 | |
| | Intermittent blowdown to atmosphere | | |

TESTING CAPABILITIES: Models can be mounted on a strut from the wall or floor and by a sting mounted on a vertical strut spanning the tunnel. This tunnel can be used to test force models, pressure models, models with ignited rockets or engine inlets, multiple kerosene burning engines, airfoil flutter models, and models of component parts. This facility has an air-storage capability of 50 000 $ft^3$ at 145 psi. This air provides a run time of 7 - 45 sec depending on Mach number desired. The air can be restored to operating levels within 7 - 45 min using the normal compressor and within 2 - 15 min using all compressors available. An auxiliary air supply of 20 lb/sec at 1000 psia is available. A 1 x 3 transonic insert is available for 2D airfoil development up to Mach number 1.0.

DATA ACQUISITION: One hundred channels of data can be obtained and processed by the Digital Equipment Corporation PDP 11/70, and fully reduced data are displayed on a graphic scope with hard copies of both plots and tabulation being made almost immediately.

CURRENT PROGRAMS: Main research is directed at the study of aerodynamic characteristics and their improvement for supersonic aircraft.

PLANNED IMPROVEMENTS: None at this time.

LOCAL INFORMATION CONTACT: Chief of Wind Tunnels, (206) 655-2298.

| National Aerospace Laboratory, Tokyo, Japan | SUPERSONIC WIND TUNNELS | | COMPARABLE FACILITIES |
|---|---|---|---|
| | TEST SECTION SIZE: 1.0 - 1.0 m | SPEED RANGE: (Mach No.) 1.4 - 4.0 | 4-Ft Supersonic Wind Tunnel - Boeing |
| | DATE BUILT/UPGRADED: 1961 | TEMP. RANGE: Ambient | |
| 1-M Wind Tunnel | REPLACEMENT COST: $6M | REYNOLDS NO: (Per ft $\times 10^{-6}$) 9 - 18 | |
| | OPERATIONAL STATUS: 1 shift per day | DYNAMIC PRES: (lb/ft$^2$) 1430 - 1840 | |
| | | STAGNATION PRES: (psia) 23 - 185 | |
| | Blowdown; Run time: 30 - 60 sec with varying model incidence | | |

TESTING CAPABILITIES: (1) force movements: 6-component strain-gage balances; (2) pressure measurements: scanivalves; (3) other movements: dynamic stability parameters by forced oscillation method and free-flight technique; (4) flow visualizations: color schlieren, vapor screen, and oil streaks; and (5) other equipment: jet simulation with air up to 20 atmospheres.

DATA ACQUISITION: Thirty two AD channels and twelve digital inputs are recorded and reduced in on-line operation (ECLIPSE-S 140).

CURRENT PROGRAMS: Basic and projected research for space vehicles and other fundamental configurations.

PLANNED IMPROVEMENTS:

LOCAL INFORMATION CONTACT:

| DFVLR Köln-Porz, Germany | SUPERSONIC WIND TUNNELS | | COMPARABLE FACILITIES |
|---|---|---|---|
| | TEST SECTION SIZE: 0.3 x 0.3 m fixed nozzles | SPEED RANGE: (Mach No.) 0.4 - 0.7, 1.57 - 4.15 | 4-Ft Supersonic - Boeing |
| | DATE BUILT/UPGRADED: 1960/1964 | TEMP. RANGE: Stagnation temp. 300 - 550 K | |
| High-Speed Wind Tunnel (HMK) | REPLACEMENT COST: | REYNOLDS NO: (Per m X $10^{-6}$) 163 | |
| | OPERATIONAL STATUS: 1 shift per day | DYNAMIC PRES: ($kN/m^2$) | |
| | | STAGNATION PRES: (bars) 2 - 35 | |
| | Intermittent, blowdown | | |

TESTING CAPABILITIES: The facility has a closed test section with fixed nozzle blocks.

DATA ACQUISITION: Sixty pressure channels (Preston) and twenty-four additional data channels can be recorded and reduced on-line.

CURRENT PROGRAMS: Laser doppler velocimetry.

PLANNED IMPROVEMENTS: Extension of data acquisition and reduction.

LOCAL INFORMATION CONTACT: DFVLR Windtunnel Division, Linder Höhe, D-5000 Köln 90, Dipl.-Ing. Helmut Esch, (02203-601-2345).

## LANGLEY UNITARY PLAN WIND TUNNEL SCHEMATIC

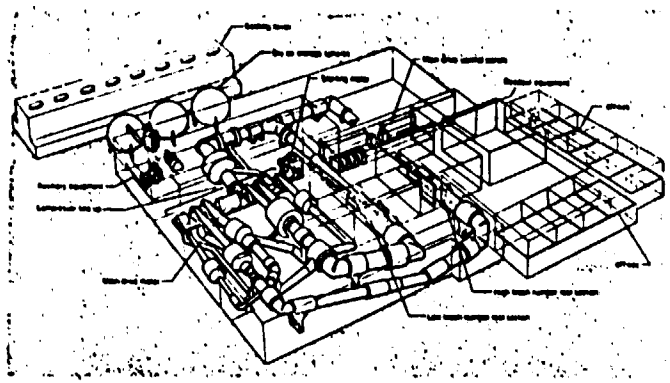

## FACILITY PERFORMANCE DATA

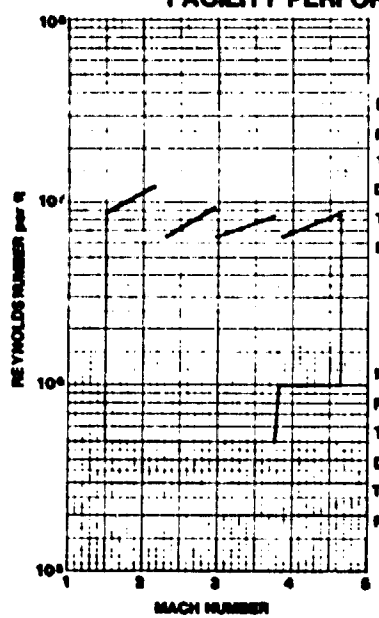


### TEST SECTION 1

| | |
|---|---|
| MACH RANGE | 1.47 – 2.86 |
| REYNOLDS NUMBER (x $10^6$/ft) | .50 – 12.2 |
| TOTAL PRESSURE (psia) | 3 – 87 |
| DYNAMIC PRESSURE (psf) | 90 – 2670 |
| TOTAL TEMPERATURE (°R) | 560 – 760 |
| RUN TIME | CONTINUOUS |

### TEST SECTION 2

| | |
|---|---|
| MACH RANGE | 2.29 – 4.63 |
| REYNOLDS NUMBER (x $10^6$/ft) | .50 – 9.5 |
| TOTAL PRESSURE (psia) | 3 – 150 |
| DYNAMIC PRESSURE (psf) | 90 – 1710 |
| TOTAL TEMPERATURE (°R) | 560 – 760 |
| RUN TIME | CONTINUOUS |

| | SUPERSONIC WIND TUNNELS | | COMPARABLE FACILITIES |
|---|---|---|---|
| NASA–Langley Research Center | TEST SECTION SIZE: Tunnel #1 and #2 4 x 4 x 7 ft | SPEED RANGE: (Mach No.) #1 1.47 - 2.86 #2 2.29 - 4.63 | von Karman A - DOD AEDC |
| | DATE BUILT/UPGRADED: Tunnel #1 and #2 1954/1979 | TEMP. RANGE: #1 560° - 760°R #2 560° - 760°R | |
| Unitary Wind Tunnel | REPLACEMENT COST: $150M | REYNOLDS NO: (Per ft X $10^{-6}$) #1 0.5 - 12.2 #2 0.5 - 9.5 | |
| | OPERATIONAL STATUS: 2 shifts per day (backlog) | DYNAMIC PRES: ($lb/ft^2$) #1 90 - 2670 #2 90 - 1710 | |
| | | STAGNATION PRES: (psia) #1 56.94 max #2 150 max | |
| | Continuous flow, closed circuit, variable density, variable Mach number, variable temperature<br>Test medium: Dry air | | |

TESTING CAPABILITIES: The normal operating temperature in the tunnel is approximately 125°F with heat bursts of 300°F available for heat-transfer studies. Model mounting provisions consist of various sting arrangements, including axial, lateral, and rotary movement and sidewall support. A schlieren system, oil flow visualization, and vapor screen are available in both test sections. The tunnel has sliding block-type nozzles that allow continuous variation in Mach number while on-line. The facility is equipped with a local dry-air supply system to ensure low dewpoint during tests and a cooling system sufficient to maintain stagnation temperatures down to 100°F. The facility has six centrifugal compressors powered by two drive motors totaling 100 000 hp.

DATA ACQUISITION: The facility is equipped with high-speed data acquisition and on-line data reduction systems with real-time graphic displays for aerodynamic coefficients. The system has 100 analog and 40 digital channels; 64 samples per second maximum.

CURRENT PROGRAMS: Missile and aircraft performance; stability and control research and development of current and future systems. Basic fluid mechanics research including flow visualization, flow property measurement, and heat transfer.

PLANNED IMPROVEMENTS: New data acquisition system.

LOCAL INFORMATION CONTACT: W. A. Corlett, Unitary Wind Tunnel Section, (804) 865-318.

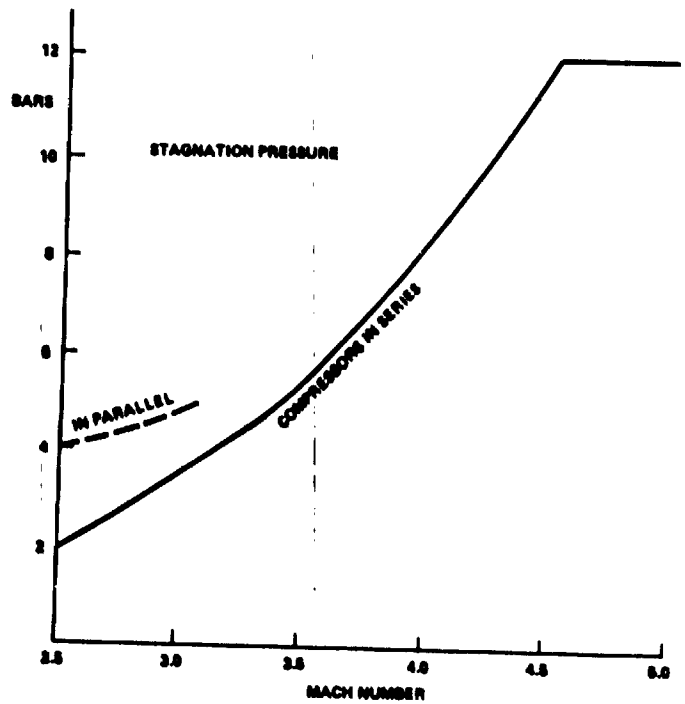
BARS
12
10
8
6
4
2
STAGNATION PRESSURE
IN PARALLEL
COMPRESSORS IN SERIES
2.5
3.0
3.5
4.0
4.5
5.0
MACH NUMBER

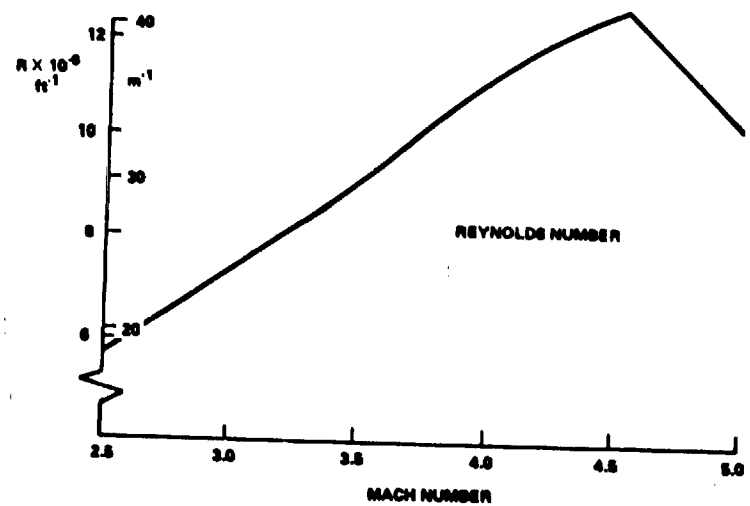
R X 10^-6
ft^-1
m^-1
12
10
8
6
40
30
20
REYNOLDS NUMBER
2.5
3.0
3.5
4.0
4.5
5.0
MACH NUMBER

| Royal Aircraft Establishment Bedford, United Kingdom | SUPERSONIC WIND TUNNELS | | COMPARABLE FACILITIES |
|---|---|---|---|
| | TEST SECTION SIZE: 0.91 x 1.22 m | SPEED RANGE: (Mach No.) 2.5 - 5.0 | Unitary Tunnel - NASA LaRC |
| | DATE BUILT/UPGRADED: 1960/1965/1977 Reopened 1983 | TEMP. RANGE: 423 K | |
| 3 x 4-Ft Supersonic Wind Tunnel | REPLACEMENT COST: | REYNOLDS NO: (Per m X $10^{-6}$) 42 at Mach 4.5 | |
| | OPERATIONAL STATUS: In regular use | DYNAMIC PRES: ($kN/m^2$) 10 - 100 | |
| | | STAGNATION PRES: (bars) 0.4 - 12.0 | |
| | Continuous flow, flexible nozzle, return circuit | | |

TESTING CAPABILITIES: Two 18-stage axial flow and two 8-stage centrifugal compressors that can be run in parallel or series. Total drive power 66 MW. Rear-sting support for models giving -5° to +27° of pitch with full 360° or roll. Interchangeable support carts. Sidewall mounting of models possible using schlieren window cutout. High-pressure air supply. Storage capacity 90 $m^3$ at 262 bars supplying a line at 69 bars (1000 psig).

DATA ACQUISITION: Up to 32 low-level analog signals, 300 digital signals, and 24 pressure scanning switches. Dedicated Hewlett-Packard computer system giving on-line reduction and presentation of data.

CURRENT PROGRAMS:

PLANNED IMPROVEMENTS:

LOCAL INFORMATION CONTACT: Superintendent AE3 Division, Aerodynamics Department, Bedford (0234) 55241, ext. 7440.

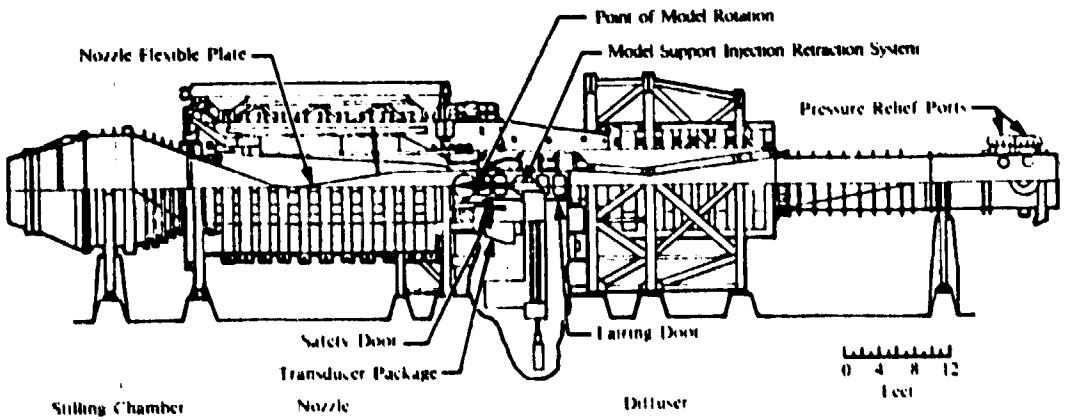


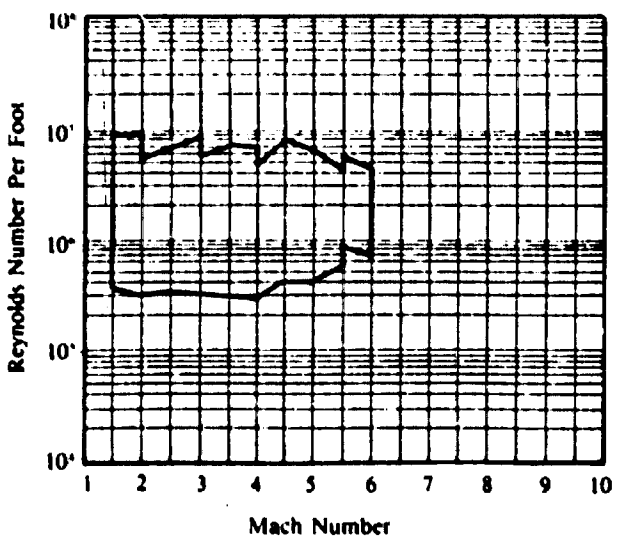


| | |
|---|---|
| Mach Range: | 1.5 – 6 |
| Reynolds Number (× 10⁶/ft): | .3 – 9.2 |
| Total Pressure (Psia): | 1.5 – 200 |
| Dynamic Pressure (psf): | 49 – 1800 |
| Total Temperature (°R): | 530 – 750 |
| Run Time: | Continous |

| | SUPERSONIC WIND TUNNELS | | COMPARABLE FACILITIES |
|---|---|---|---|
| Arnold Engineering Development Center | TEST SECTION SIZE: 3.3 x 3.3 x 7 ft | SPEED RANGE: (Mach No.) 1.5 - 6 | None |
| | DATE BUILT/UPGRADED: 1954 | TEMP. RANGE: 530° - 750°R | |
| von Karman Facility, Supersonic Wind Tunnel (A) | REPLACEMENT COST: $60M | REYNOLDS NO: (Per ft X $10^{-6}$) 0.3 - 9.2 | |
| | OPERATIONAL STATUS: Active, lightly scheduled | DYNAMIC PRES: (lb/ft$^2$) 50 - 1800 | |
| | | STAGNATION PRES: (psia) 1.5 - 200 | |
| | Closed circuit, variable density, continuous flow, tunnel with captive trajectory store separation system, model injection system, schlieren, shadowgraphs, and high-speed cameras | | |

TESTING CAPABILITIES: The tunnel is used for force and moment, pressure, heat transfer, dynamic stability, cold flow jet effects, and free-flight tests. The tunnel is equipped with flexible plate nozzles positioned with automated electrical actuators. A model injection system permits on-line model access and retraction for heat transfer testing. Auxiliary air (17 lb/sec at 3000 psia) is available.

DATA ACQUISITION: DEC 10 supervisory control and data management, Amdahl 5860 central computer, PDP 11/40 model attitude, and PDP 11/34 IR camera processor.

CURRENT PROGRAMS:

PLANNED IMPROVEMENTS: None.

LOCAL INFORMATION CONTACT: Flight Mechanics Directorate, Deputy for Operations, AEDC/DOF, Arnold AFS TN 37389, (615) 455-2611, ext. 5280 or 6051.

| ARA Bedford, United Kingdom | SUPERSONIC WIND TUNNELS | | COMPARABLE FACILITIES |
|---|---|---|---|
| | TEST SECTION SIZE: 2.25 x 2.5 ft | SPEED RANGE: (Mach No.) 1.4 - 3.0 | von Karman A - DOD AEDC |
| | DATE BUILT/UPGRADED: 1959 | TEMP. RANGE: 580°R | |
| SWT | REPLACEMENT COST: | REYNOLDS NO: (Per ft X $10^{-6}$) 1.0 - 4.3 | |
| | OPERATIONAL STATUS: Operational | DYNAMIC PRES: (lb/ft$^2$) 900 - 355 | |
| | | STAGNATION PRES: (psia) 5.88 - 20.58 | |
| | Closed circuit, continuous flow | | |

**TESTING CAPABILITIES:** Complete models of aircraft and missiles, intake testing, and schlieren and shadowgraph facilities.

**DATA ACQUISITION:** Thirty-two channels for balance components, transducers, thermocouples, and scanivalves.

**CURRENT PROGRAMS:**

**PLANNED IMPROVEMENTS:**

**LOCAL INFORMATION CONTACT:** E. C. Carter, Chief Aerodynamicist, (0234 50681).

| L.R.B.A. French Army Aerodynamic Center Vernon, France | SUPERSONIC WIND TUNNELS | | COMPARABLE FACILITIES |
|---|---|---|---|
| | TEST SECTION SIZE: 0.4 x 0.4 m | SPEED RANGE: (Mach No.) 1.35 - 4.3 | von Karman A - DOD AEDC |
| | DATE BUILT/UPGRADED: 1951 | TEMP. RANGE: 300 K | |
| Tunnel C - 4 | REPLACEMENT COST: | REYNOLDS NO: (Per m X $10^{-6}$) 10 - 32 | |
| | OPERATIONAL STATUS: 1 shift per day | DYNAMIC PRES: ($kN/m^2$) | |
| | | STAGNATION PRES: (bars) 1.1 - 10 | |
| | Continuous flow/closed and pressurized circuit | | |

TESTING CAPABILITIES: Equipped with 8 dedicated 2 Dim supersonic nozzles and one adjustable nozzle for M = 1.8 - 2.2 forces and pressures measurement, and schlieren visualization. Driven by two compressors powered by 13.5 MW electric motors. Updated data acquisit'on system for local treatment.

DATA ACQUISITION:

CURRENT PROGRAMS: Mainly development testing on tactical and ballistic missiles.

PLANNED IMPROVEMENTS:

LOCAL INFORMATION CONTACT: M. Desgardin, Laboratoire de Recherches Balistiques et Aérodynamiques (L.R.B.A.), 27200, Vernon, France, (32) 51 07 40, Telex 77817.

TUNNEL PARAMETER CURVES
BASED ON $T_0$ = 460 °R AND TEST SECTION HEIGHT

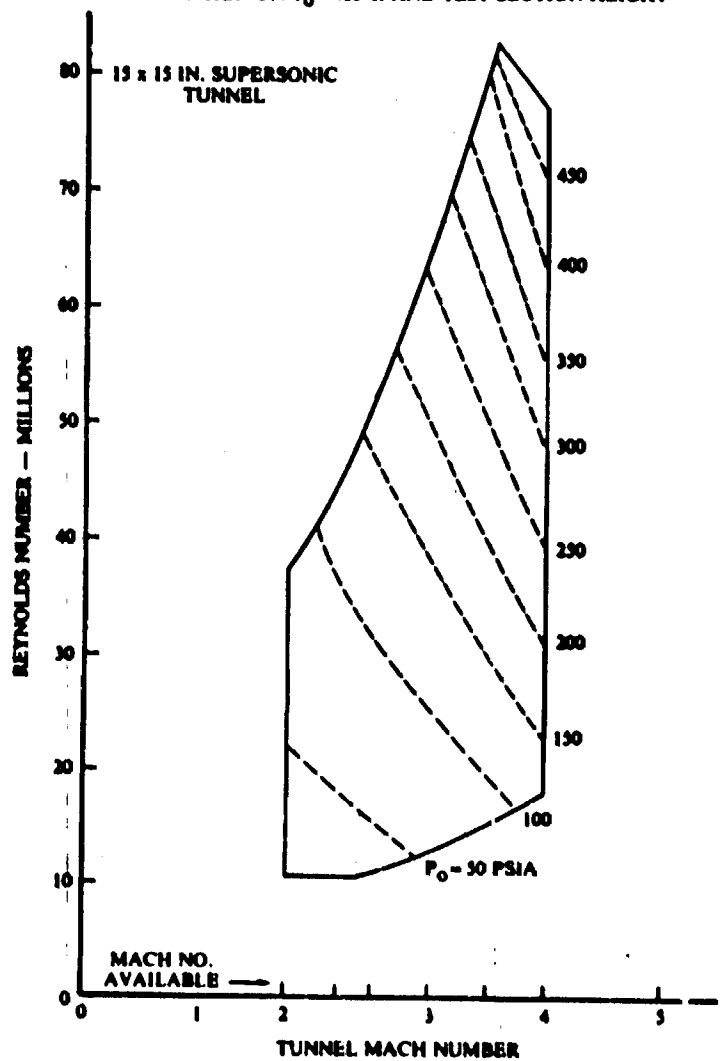

| | SUPERSONIC WIND TUNNELS | | COMPARABLE FACILITIES |
|---|---|---|---|
| Grumman Aerospace Corp. | TEST SECTION SIZE: 15 x 15 in | SPEED RANGE: (Mach No.) 1.75, 2.2, 2.5 3, 3.5, 4 | 4-Ft - Boeing, Seattle |
| | DATE BUILT/UPGRADED: 1957/1967/1969/1971 | TEMP. RANGE: 460° - 500°R | |
| 15-In Supersonic Wind Tunnel | REPLACEMENT COST: $3.5M | REYNOLDS NO: (Per ft X $10^{-6}$) 10 - 60 | |
| | OPERATIONAL STATUS: 1 shift per day | DYNAMIC PRES: (lb/ft$^2$) 2377 - 5310 | |
| | | STAGNATION PRES: (psia) 41 - 500 | |
| | Intermittent blowdown to atmosphere; fixed nozzle blocks/Mach number model restraint system for tunnel start/stop during force testing | | |

TESTING CAPABILITIES: Tests include force and pressure of complete or component models. This is a highly automated facility with a relatively high daily run rate for its modest air production plant. A special 15 x 22-ft test section for M = 2.20 testing is available. A centerline-mounted inlet test rig permits isolated inlet drag and internal performance testing. A special nozzle/thrust reverser test rig can be installed in place of the supersonic nozzle/test section and exhaust diffuser, which permits force and pressure testing of large-scale high-bypass nozzle and thrust reverser systems.

DATA ACQUISITION: One hundred channels of data can be accommodated. A dedicated computer-controlled data acquisition control and data reduction system is used. Complete data turnaround is typically 5 min per run. Schlieren flow visualization system is available.

CURRENT PROGRAMS:

PLANNED IMPROVEMENTS: A new data acquisition and control system to be installed in 1984-1985. A 1200°F jet fuel burner system for heated core flow tests of large-scale high-bypass nozzle and thrust reverser models is also planned for implementation in 1984.

LOCAL INFORMATION CONTACT: F. Blomback Grumman Aero Test Department, (516) 575-3685.

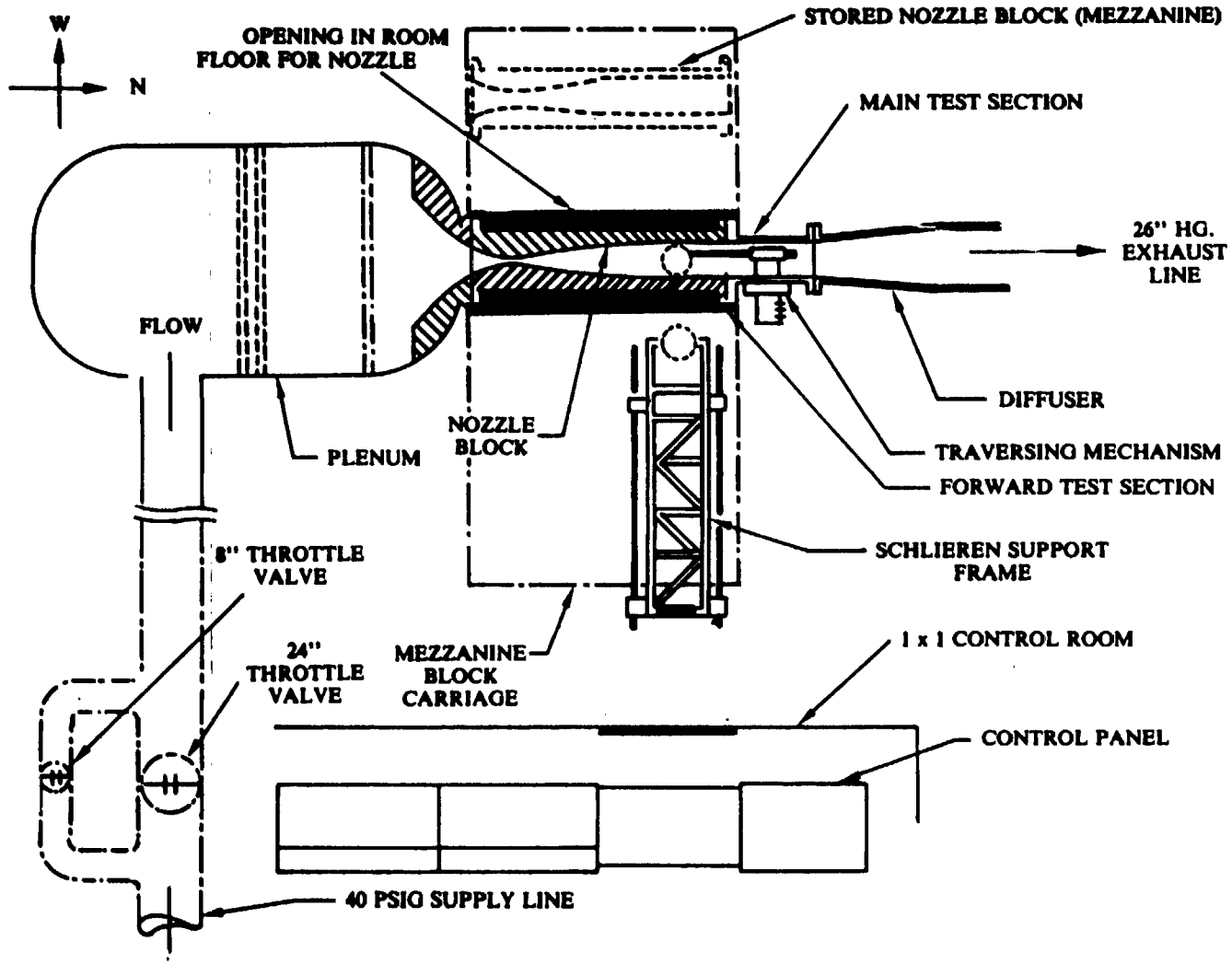
W
N
OPENING IN ROOM FLOOR FOR NOZZLE
STORED NOZZLE BLOCK (MEZZANINE)
MAIN TEST SECTION
26" HG. EXHAUST LINE
FLOW
DIFFUSER
NOZZLE BLOCK
PLENUM
TRAVERSING MECHANISM
FORWARD TEST SECTION
8" THROTTLE VALVE
SCHLIEREN SUPPORT FRAME
24" THROTTLE VALVE
MEZZANINE BLOCK CARRIAGE
1 x 1 CONTROL ROOM
CONTROL PANEL
40 PSIG SUPPLY LINE

| NASA–Lewis Research Center | SUPERSONIC WIND TUNNELS | | COMPARABLE FACILITIES |
|---|---|---|---|
| | TEST SECTION SIZE: 12 x 12 x 26 in | SPEED RANGE: (Mach No.) 1.6 - 5.0 | None listed |
| | DATE BUILT/UPGRADED: 1954/1981/1983 | TEMP. RANGE: 565°R | |
| 1 x 1-Ft Variable Mach Number Wind Tunnel | REPLACEMENT COST: | REYNOLDS NO: (Per ft X $10^{-6}$) 1.5 - 36 | |
| | OPERATIONAL STATUS: 2-shift operations at 3 runs per week (backlog) | DYNAMIC PRES: ($lb/ft^2$) 595 - 2428 | |
| | | STAGNATION PRES: (psia) 5 - 12.5 | |
| | Continuous flow | | |

TESTING CAPABILITIES: The 1 x 1-ft Supersonic Wind Tunnel is used for detailed fundamental investigations of supersonic flow and boundary layer tests derived from the internal fluid dynamics of propulsion system components. The data are used for computer code verification. Pressure, temperature and flow visualization tests are performed. Laser systems are used for velocity measurements and flow visualizations. Facilities for measuring multiple steady or fluctuating pressures are available.

DATA ACQUISITION: Data are recorded and processed through a central IBM-370 computer system. Alphanumeric data are tailored to the users' requirements.

CURRENT PROGRAMS: Normal shock stability, LVD seeding, corner flow streamline tracking, 3D shock layer interaction with bleed flow, and LVD normal shock boundary layer interaction.

PLANNED IMPROVEMENTS: Improved laser positioning system.

LOCAL INFORMATION CONTACT: Arthur J. Gnecco, Chief, Aeronautic Facilities and Engineering Branch, (216) 433-4000, ext. 5579, FTS 8-294-5579.

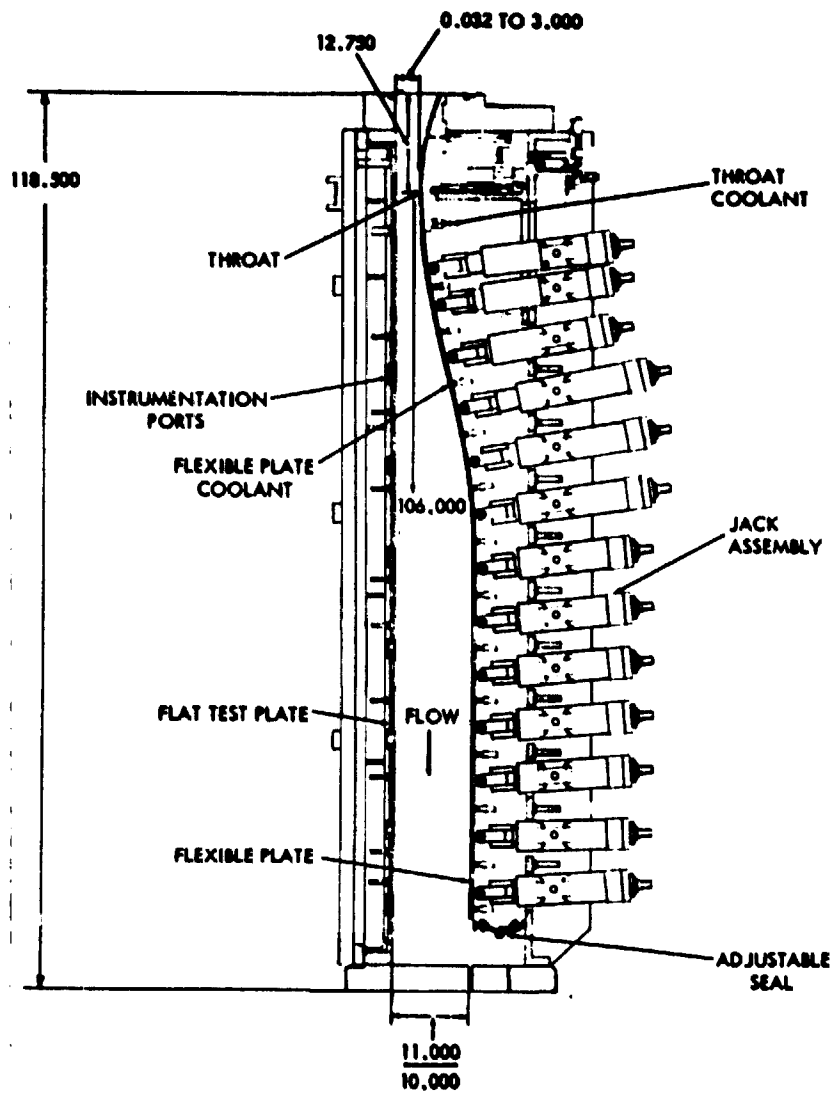
0.032 TO 3.000
12.750
118.500
THROAT COOLANT
THROAT
INSTRUMENTATION PORTS
FLEXIBLE PLATE COOLANT
106.000
JACK ASSEMBLY
FLAT TEST PLATE
FLOW
FLEXIBLE PLATE
ADJUSTABLE SEAL
11.000
10.000

| Naval Surface Weapons Center | SUPERSONIC WIND TUNNELS | | COMPARABLE FACILITIES |
|---|---|---|---|
| | TEST SECTION SIZE: 12 x 12 in | SPEED RANGE: (Mach No.) 3 - 5 | 1 x 1-Ft - NASA LeRC |
| | DATE BUILT/UPGRADED: 1964 | TEMP. RANGE: 560° - 1460°R | |
| NSWC Boundary Layer Channel | REPLACEMENT COST: $6M | REYNOLDS NO: (Per ft X $10^{-6}$) 0.2 - 24 | |
| | OPERATIONAL STATUS: 1 shift per day operation | DYNAMIC PRES: (lb/ft$^2$) 180 - 1500 | |
| | | STAGNATION PRES: (psia) 7.35 - 147 | |
| | Vertical, blowdown tunnel with flow in the gravity direction. Boundary layer thickness can be between 1 and 3 in. | | |

TESTING CAPABILITIES: The Boundary Layer Channel is a variable contour supersonic half-nozzle, designed specifically to conduct research of the supersonic boundary layer over a flat plate. It consists of a vertical flat wall, which is the working surface, and a flexible plate, which is adjusted by jacks to prescribed shape for a desired Mach number in the test section. Instrumentation includes temperature and pressure probes, skin friction balances, laser Doppler Velocimeter, heat transfer gages, and Preston probes. Boundary layer properties with and without pressure gradients, mass addition, and/or heat transfer can be investigated.

DATA ACQUISITION: Dependent on the instrumentation used in the test. Generally, data are recorded on tape and reduced off-site.

CURRENT PROGRAMS: No programs currently conducted.

PLANNED IMPROVEMENTS:

LOCAL INFORMATION CONTACT: Robert L. P. Voisinet, Aerodynamics Branch (K24), (202) 394-1736.

| Wright Aeronautical Laboratories, Wright-Patterson AFB | SUPERSONIC WIND TUNNELS | | COMPARABLE FACILITIES |
|---|---|---|---|
| | TEST SECTION SIZE: 8.2 x 8 x 23.2 in | SPEED RANGE: (Mach No.) 3 | None |
| | DATE BUILT/UPGRADED: 1968 | TEMP. RANGE: Ambient | |
| Mach 3 High Reynolds Number Facility | REPLACEMENT COST: $1M | REYNOLDS NO: (Per ft X $10^{-6}$) 10 - 100 | |
| | OPERATIONAL STATUS: 1 shift per day (backlog) | DYNAMIC PRES: (lb/ft$^2$) 1600 - 14000 | |
| | | STAGNATION PRES: (psia) 65 - 570 | |
| | Intermittent blowdown, closed jet<br>Model size: 0.5 - 1.0 ft long | | |

TESTING CAPABILITIES: Test articles may be strut or wall mounted. Run times to 100 sec are possible, with high-pressure supply capacity imposing the limit. The model does not retract and must therefore be able to withstand the tunnel stop and start loads. A pitch sector is available, capable of ±15° motion. Instrumentation parts are installed along the test section and diffuser, providing almost 10 ft of length for wall-mounted tests.

DATA ACQUISITION: A 45-channel pressure system is available. Thermocouple hot boxes and amplifiers for other transducers are available. A wall-mounted boundary layer probe is part of the tunnel equipment. Hot-wire anemometers are being developed for boundary layer studies. A total of 128 channels of data may be transmitted at 100 samples per second. Data acquisition and reduction are accomplished on-site.

CURRENT PROGRAMS: The facility is used to study laser interactions with various materials and develop laser countermeasures. Shock-wave boundary layer interaction studies have been conducted. A detailed study of wall roughness effects is underway.

PLANNED IMPROVEMENTS: Data collection upgrade to 50 channels at 1000 cycles per second.

LOCAL INFORMATION CONTACT: Melvin L. Buck, Aeromechanics Division, AFWAL/FIM, (513) 255-6156.

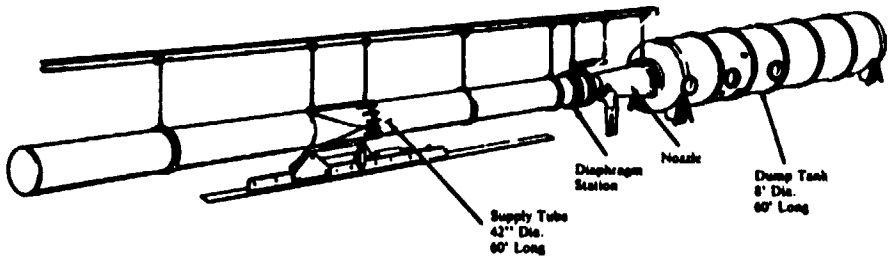
Supply Tube
42" Dia.
60' Long
Diaphragm
Station
Nozzle
Dump Tank
8' Dia.
60' Long

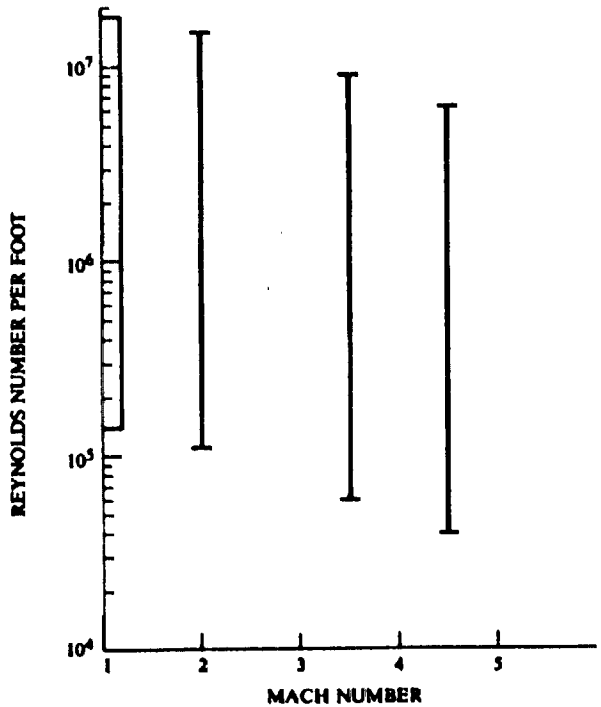
REYNOLDS NUMBER PER FOOT
$10^7$
$10^6$
$10^5$
$10^4$
1
2
3
4
5
MACH NUMBER

| | SUPERSONIC WIND TUNNELS | | COMPARABLE FACILITIES |
|---|---|---|---|
| Calspan Corp. | TEST SECTION SIZE: 60-in dia free jet | SPEED RANGE: (Mach No.) 1.2 - 4.5 | None |
| | DATE BUILT/UPGRADED: 1963/1967 | TEMP. RANGE: 450° - 970°R | |
| Ludwieg Tube Wind Tunnel | REPLACEMENT COST: $1M | REYNOLDS NO: (Per ft X $10^{-6}$) 0.04 - 18 | |
| | OPERATIONAL STATUS: 1 shift per day | DYNAMIC PRES: (lb/ft$^2$) 10 - 3270 | |
| | | STAGNATION PRES: (psia) 1.0 - 82 | |
| | Short duration, conical and contoured nozzles | | |

TESTING CAPABILITIES: This facility was built for studying base heating and plume recirculation effects. It has been used extensively to study supersonic turbulent jet mixing and shock-wave turbulent boundary layer interactions. Hot-firing gaseous and solid propellant rocket motors have been used in base heating studies. Measurement capabilities include forces and moments, pressures, heat transfer rates, optical radiation (UV to IR), and gas species concentrations. The facility consists of a 42-in diameter by 60-ft long supply tube and diaphragm section that is connected to an 8-ft diameter by 60-ft long tank by any of 4 nozzles. These nozzles include a 32-in diameter, perforated wall transonic nozzle, a 42-in exit diameter Mach 2 conical nozzle, and two 60-in exit diameter contoured nozzles for Mach 3.5 and 4.5. The supply tube can be heated to about 1000°R to provide total temperature from 450° to 970°R. The steady-flow test time is about 90 msec.

DATA ACQUISITION: Data are recorded on a 128-channel minicomputer-based digital data acquisition system, which samples each channel at 20 kHz. The system provides data reduction and data plotting on-site.

CURRENT PROGRAMS: Main research is directed at rocket plumes and jet mixing; however, many specialized types of tests are conducted in this facility, including blast wave interactions with jet engines.

PLANNED IMPROVEMENTS:

LOCAL INFORMATION CONTACT: Dr. Paul V. Marrone, Head of Physical Sciences Department, (716) 631-6716.

# HYPERSONIC WIND TUNNELS

# HYPERSONIC WIND TUNNELS

As with the Supersonic tunnels, the assessment of comparable capabilities for the Hypersonic tunnels was done on an individual basis rather than by groups. Following the same rigorous criteria applied to the Supersonic tunnels, most of the listed Hypersonic facilities are considered unique, although some comparable ones have been identified. In such cases, only a larger or more capable facility is listed as comparable, so that a reciprocal comparability between the same two facilities may not necessarily exist. The individual data sheets have been organized according to size and Mach number range, with those tunnels identified as comparable listed sequentially.

Overall, the U.S. capabilities (particulary NASA's) dominate this speed regime. This is true for size, Mach number range, and Reynolds number capability, with the Calspan shock tunnels offering the highest Reynolds number. The foreign facilities included in this survey generally do not match the U.S. capabilities in extremes of Mach numbers or Reynolds number. However, many of the Hypersonic facilities listed, particularly those owned by U.S. industry, are on standby status and would require significant refurbishment for renewed operations.

## HIGH REYNOLDS NUMBER TUNNELS

The following table identifies those Hypersonic tunnels considered as high Reynolds number facilities. The same comparison standard was used as in the Supersonic tunnels. The maximum Reynolds number value is calculated on the basis of a chord length (c) equal to the square root of the test section area: $c = \sqrt{A_{TS}}$

| Tunnel | Location | $R_e c \times 10^{-6}$ |
|---|---|---|
| 96-in shock | Calspan | 139 |
| 48-in shock | Calspan | 92 |
| Hypervelocity #9 | DOD–NSWC | 92 |
| Hypersonic #8 | DOD–NSWC | 85 |
| Mach 20 He | NASA–Langley | 69 |
| Mach 6 high $R_e$ | NASA–Langley | 45 |
| Mach 6 high $R_e$ | DOD–WAL | 28 |
| 3.5-ft | NASA–Ames | 24 |

PRECEDING PAGE BLANK NOT FILMED

PAGE 238 INTENTIONALLY BLANK

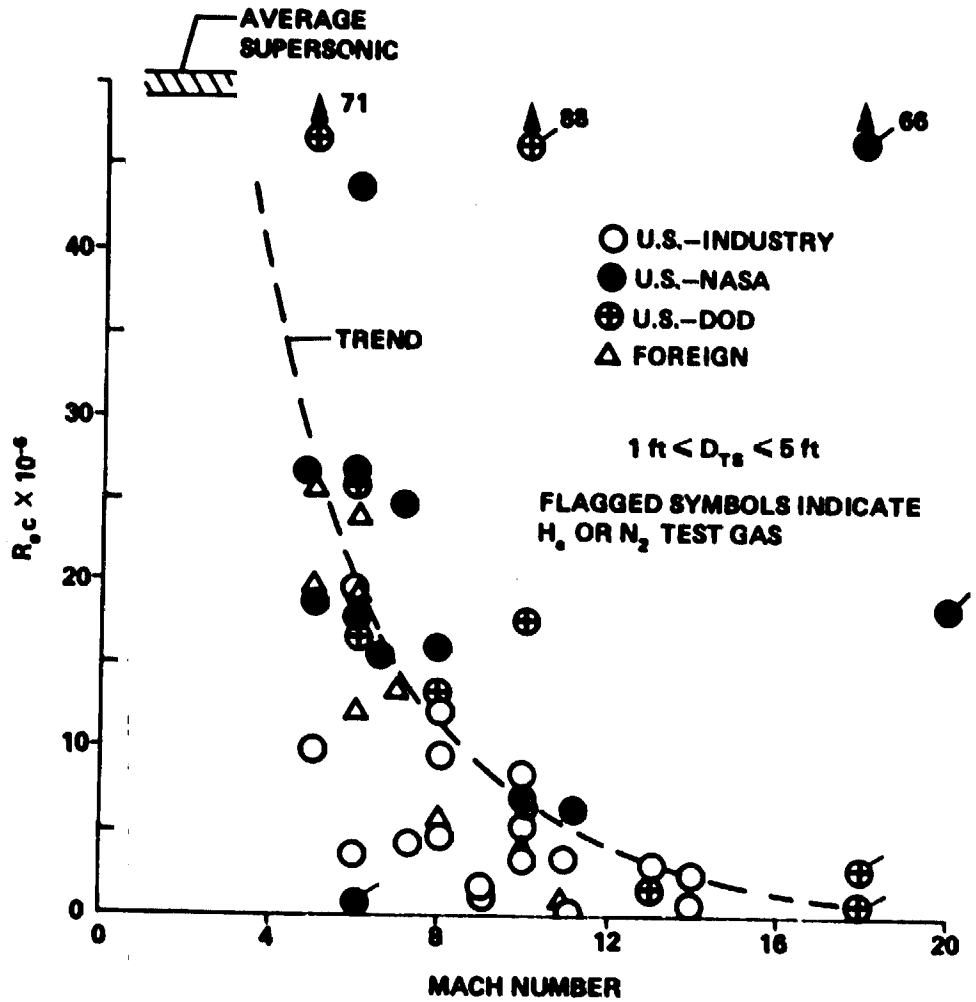


Figure 12. Hypersonic tunnels.

## HYPERSONIC CAPABILITY*

| Page Number | Facility Name | Installation |
|---|---|---|
| 246 | 8-ft HTT | NASA–Langley |
| 247 | 96-in Shock Tunnel | Calspan |
| 248 | 48-in Shock Tunnel | Calspan |
| 249 | Hypervelocity #9 | DOD–NSWC |
| 250 | Hypervelocity #8A | DOD–NSWC |
| 251 | Mach 20 High Reynolds Number He | NASA–Langley |
| 252/253 | Hypersonic Helium | NASA–Langley |
| 254 | von Karman B | DOD–AEDC |
| 255 | von Karman C | DOD–AEDC |
| 256 | Continuous Flow | NASA–Langley |
| 257 | C-2 | France–L.R.B.A. French Army |
| 258 | 3.5-ft | NASA–Ames |
| 259 | 36-in | Grumman |
| 260 | 30-in | Lockheed–California |
| 261 | 30-in | Northrop |
| 262 | H2K | Germany–DFVLR |
| 263 | 2-ft | McDonnell Douglas–El Segundo |
| 264 | S4-MA | France–ONERA, Modane |
| 265 | 20-in Mach 6 | NASA–Langley |
| 266 | $CF_4$ | NASA–Langley |
| 267 | 20-in | FluiDyne |
| 268 | 20-in | DOD–WAL |

*In order of appearance.

| Page Number | Facility Name | Installation |
|---|---|---|
| 269 | Mach 8 Variable Density | NASA–Langley |
| 270 | Hypersonic #8 | DOD–NSWC |
| 271 | Guided Weapons Tunnel | United Kingdom–Warton |
| 272 | 18-in | Sandia Laboratories |
| 273 | Hypersonic Nitrogen | NASA–Langley |
| 274 | Mach 6 High Reynolds Number | NASA–Langley |
| 275 | Mach 6 High Reynolds Number | DOD–WAL |
| 276 | R3-CH | France–ONERA, Chalais-Meudon |
| 277 | R2-CH | France–ONERA, Chalais-Meudon |
| 278 | M7T | United Kingdom–Bedford |
| 279 | M4T | United Kingdom–Bedford |
| 280 | Scramjet | NASA–Langley |
| 281 | High Temperature Storage Heater | General Applied Science |
| 282 | VAH | General Applied Science |
| 283 | HPB | General Applied Science |

## HYPERSONIC WIND TUNNELS

| Page Number | Location and Facility Description | Test Section (ft) | Speed Range (Mach No.) | Reynolds Number (per ft x $10^{-6}$) | Comments |
|---|---|---|---|---|---|
| | **U.S. NASA** | | | | |
| | Ames Research Center | | | | |
| 258 | 3.5 Hypersonic | 3.5 dia | 5, 7, 10 | 0.3 - 7.4 | Standby |
| | Langley Research Center | | | | |
| 246 | 8-ft HTT | 8 dia | 5.8 - 7.3 | 0.3 - 2.2 | Thermal Structures |
| 265 | 20-in Mach 6 | 20 x 20.5-in | 6 | 0.5 - 10.5 | |
| 266 | $CF_4$ | 20-in dia | 6 | 0.3 - 0.8 | |
| 256 | Continuous Flow | 31 x 31-in | 10 | 0.4 - 2.4 | |
| 252/253 | Hypersonic Helium Tunnel | 22-in dia | 17.6 - 22.2 | 1.1 - 11.3 | Aerodynamic Leg |
| | | 22 or 36-in | 20 or 40 | 1.3 - 6.0 | Fluid Mech. Leg |
| 273 | Hypersonic Nitrogen | 16-in dia | 18 | 0.17 - 0.40 | |
| 251 | Mach 20 High $R_e$ Helium | 5 dia | 16.5 - 18 | 1.9 - 15 | |
| 269 | Mach 8 Variable Density Tunnel | 18-in dia | 8 | 0.1 - 12.0 | |
| 274 | Mach 6 High $R_e$ Tunnel | 12-in dia | 6 | 1.8 - 50 | High $R_e$ Blowdown |
| 280 | Scramjet | 4 dia | 4.7 - 6.0 | 0.13 - 5.2 | Propulsion |
| | **U.S. DOD** | | | | |
| | Arnold Engineering Development Center | | | | |
| 254 | von Karman B | 50-in dia | 6 or 8 | 0.3 - 4.7 | Captive Trajectory |
| 255 | von Karman C | 25 & 50-in dia | 4, 10 | 0.4 - 1.3 @ M = 4<br>0.3 - 4.7 @ M = 10 | Captive Trajectory, Aerothermal |
| | Naval Surface Weapons Center | | | | |
| 270 | Hypersonic #8 | 17 - 22-in dia | 5 - 8 | 0.6 - 50 | High $R_e$ |
| 250 | Hypersonic #8A | 24-in dia | 18 | 0.2 - 0.6 | |
| 249 | Hypervelocity #9 | 5 dia | 10 - 14.5 | 0.06 - 20 | |
| | Wright Aeronautical Laboratories | | | | |
| 268 | 20-in | 20-in dia | 12, 14 | 0.4 - 1.0 | |
| 275 | Mach 6 High $R_e$ | 12-in dia | 6 | 1.0 - 30 | High $R_e$ |

## HYPERSONIC WIND TUNNELS

| Page Number | Location and Facility Description | Test Section (ft) | Speed Range (Mach No.) | Reynolds Number (per ft x $10^{-6}$) | Comments |
|---|---|---|---|---|---|
| | **U.S. INDUSTRY** | | | | |
| | Calspan | | | | |
| | Ludwieg Tube | 60-in dia Free Jet | 1.2 - 4.5 | 0.04 - 18 | |
| 247 | 96-in Shock Tunnel | Variable 24 to 96-in dia | 6.5 - 24 | 0.001 - 75 | High $R_e$ |
| 248 | 48-in Shock Tunnel | Variable 24 to 48-in dia | 5.5 - 20 | 0.004 - 50 | High $R_e$ |
| | FluiDyne | | | | |
| 267 | 20-in | 20-in dia | 11 - 14 | 0.7 - 2.2 | Standby |
| | General Applied Science | | | | |
| 281 | High Temp Storage Heater | 25 x 25-in | 0.1 - 12 | 0 - 15 | Propulsion |
| 282 | VAH | 15 x 15-in | 2.7 - 8.0 | 0 - 17 | Propulsion |
| 283 | HPB | 13 x 13-in | 0.1 - 7.0 | 0 - 30 | Propulsion |
| | Grumman | | | | |
| 259 | 36-in | 36-in dia | 8, 10, 14 | 0.2 - 4.5 | Standby |
| | Lockheed-CA | | | | |
| 260 | 30-in | 30-in dia Free Jet | 8, 10 | 0.42 - 2.2 | Standby |
| | McDonnell Douglas-CA | | | | |
| 263 | 2-ft | 2 dia Free Jet | 6, 8, 10 | 1.2 - 11.2 | Standby |
| | Northrop | | | | |
| 261 | 30-in | 30-in dia Free Jet | 6, 10, 14 | 0.02 - 3.5 | Standby |
| | Sandia Laboratories | | | | |
| 272 | 18-in | 18-in dia | 5, 8, 14 | 0.2 - 9.7 | |
| | **FRANCE** | | | | |
| 257 | C-2 | 3.9 dia | 8 - 16 | 0.3 | |
| 277 | R2-CH | #1 7.5-in dia | 3.0 - 4.0 | 0.5 | |
| | | #2 13-in dia | 5.0 - 7.0 | 0.5 | |

## HYPERSONIC WIND TUNNELS

| Page Number | Location and Facility Description | Test Section (ft) | Speed Range (Mach No.) | Reynolds Number (per ft x $10^{-6}$) | Comments |
|---|---|---|---|---|---|
| | **FRANCE** | | | | |
| 276 | R3-CH | #1 13-in dia<br>#2 13-in dia | 3.0 - 7.0<br>10 | 0.6<br>0.6 | |
| 264 | S4-MA | 2.2 | 6 | 0.9 - 8.2 | |
| | **GERMANY** | | | | |
| 262 | H2K | 24-in dia | 4.5 - 11.2 | 9 @ M = 6<br>0.3 @ M = 11.2 | Standby |
| | **JAPAN** | | | | |
| — | 50-cm | 1.6 dia | 5, 7, 9, 11 | – | No Data Sheet |
| | **UNITED KINGDOM** | | | | |
| 271 | Guided Weapons | 1.4 x 1.4 | 1.7 - 6.0 | – | |
| 279 | M4T (Bedford) | 1.0 - 1.33 | 4.0 - 5.0 | 23 - 14 | |
| 278 | M7T (Bedford) | 1.0 dia | 7.0 | 10 - 15 | |

## SCHEMATIC

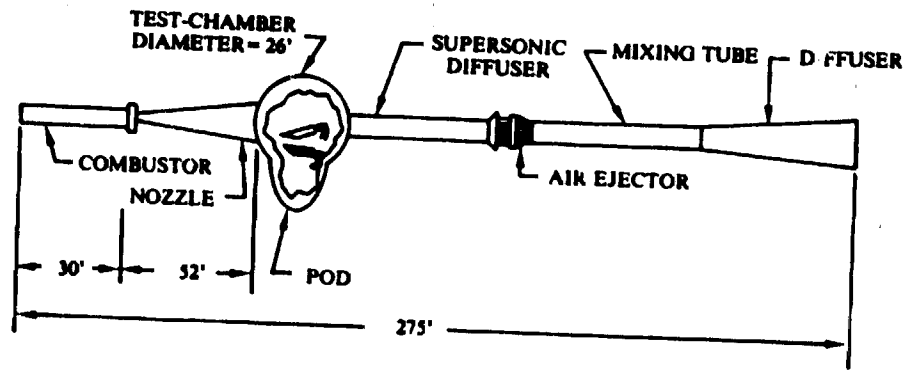


## FACILITY PERFORMANCE DATA

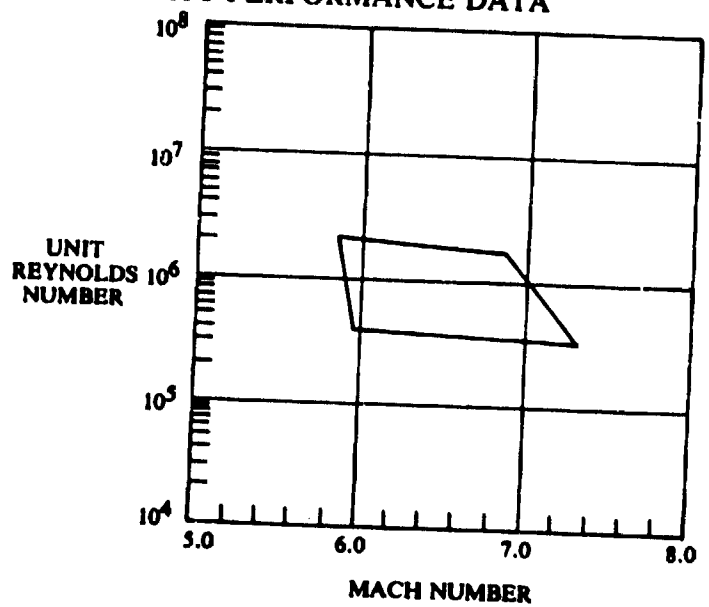

| NASA–Langley Research Center | HYPERSONIC WIND TUNNELS | | COMPARABLE FACILITIES |
|---|---|---|---|
| | TEST SECTION SIZE: 8.0$^{D}$ x 12 ft | SPEED RANGE: (Mach No.) 4 - 7.2 | None |
| | DATE BUILT/UPGRADED: 1964/1980/1985 | TEMP. RANGE: 2400° - 3600°R | |
| 8-Ft High Temperature Tunnel | REPLACEMENT COST: $41M | REYNOLDS NO: (Per ft X $10^{-6}$) 0.3 - 2.2 | |
| | OPERATIONAL STATUS: 1 shift per day (backlog) | DYNAMIC PRES: (lb/ft$^2$) 250 - 1800 | |
| | | STAGNATION PRES: (psia) 1500 -2400 | |
| | Open jet blowdown<br>Run time: 15 -120 sec<br>Test medium: Combustion product/methane and air | | |

TESTING CAPABILITIES: This is a blowdown-type facility that achieves the required energy level for flight simulation by burning methane in air under pressure and using the resulting combustion products as the test medium. The nozzle is a conical-contoured, axisymmetrical design with an exit diameter of 8 ft. Model mounting is semispan or sting with insertion after the tunnel is started. A single-stage air ejector is used as a downstream pump to permit low-pressure or high-altitude simulation.

DATA ACQUISITION: 100 Channel Beckman System, 5-Hz filter, 40 samples per second maximum. Also high-speed data acquisition and on-line data reduction system with real-time graphics display of reduced data, 250 channels, 10-Hz filter, 4 samples per second maximum (Xerox 530 sys).

CURRENT PROGRAMS: Detailed flow and heating phenomena associated with wavy, curved and intersecting surfaces and gaps formed by control surfaces or component interfaces. Studies of flight weight thermal protection systems-advanced carbon and superalloy prepackaged concepts.

PLANNED IMPROVEMENTS: Oxygen enrichment for combustion capability and engine testing; additional Mach 4 and 5 nozzles.

LOCAL INFORMATION CONTACT: Carl Pearson, Aerothermal Loads Branch, (804) 865-3423.

Schematic

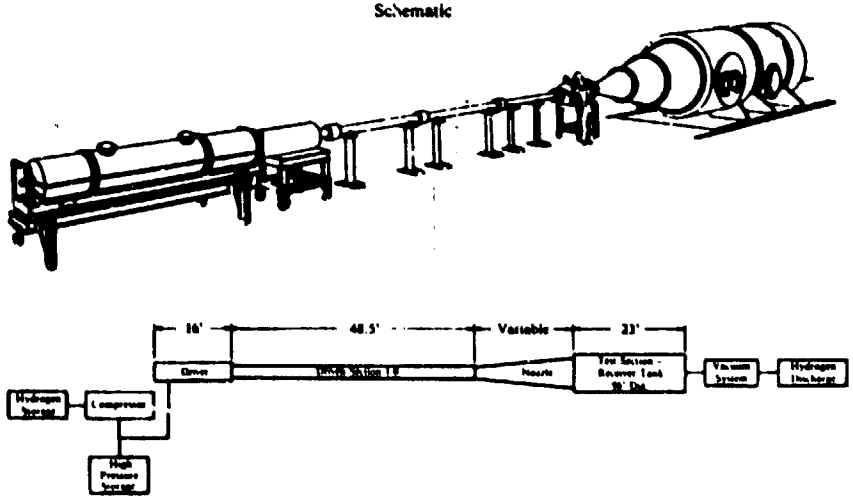


Facility Performance Data

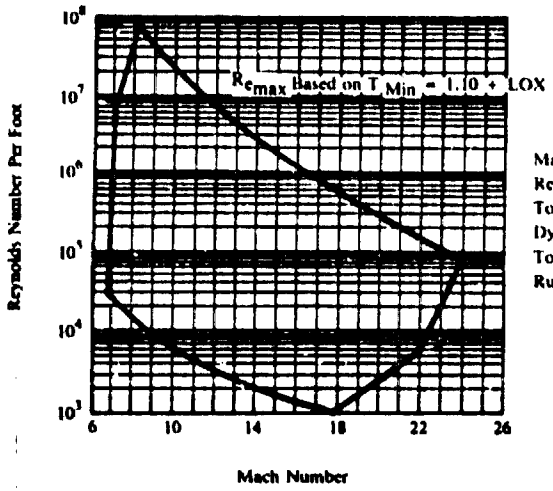


| | |
|---|---|
| Mach Range: | 6.5 - 24 |
| Reynolds Number ($\times 10^6$/ft): | .001 - 75 |
| Total Pressure (psia): | 1000 - 20,000 |
| Dynamic Pressure (psf): | To 20,000 |
| Total Temperature (°R): | 1300 - 11,500 |
| Run Time (milliseconds): | 2 - 6 |

| Calspan Corp. | HYPERSONIC WIND TUNNELS | | COMPARABLE FACILITIES |
|---|---|---|---|
| | TEST SECTION SIZE: Variable 24 in to 96 in dia | SPEED RANGE: (Mach No.) 6.5 - 24 | None |
| | DATE BUILT/UPGRADED: 1963 | TEMP. RANGE: 1300° - 11 500°R | |
| 96-In Hypersonic Shock Tunnel | REPLACEMENT COST: $3M | REYNOLDS NO: (Per ft X $10^{-6}$) 0.001 - 75 | |
| | OPERATIONAL STATUS: | DYNAMIC PRES: (lb/ft$^2$) Up to 20 000 | |
| | | STAGNATION PRES: (psia) 1000 - 20 000 | |
| | Shock tunnel, conical and contoured nozzles | | |

TESTING CAPABILITIES: Force and moment, pressure, heat transfer, and skin friction measurements are routinely made on hypersonic configurations. Tests have also been conducted in the field of blast-wave effects, microwave-plasma interaction, and wake phenomena including the scattering of microwaves from the wake. Models are sting mounted and attached to a vibration-isolated sector that provide for variation of the angle of attack. Auxiliary test equipment consists of: schlieren and shadowgraph systems, high-speed movie system, dielectric test section, electron beam, microwave interferometer, and pulse doppler radar (X-band). This is a shock-tube-driven wind tunnel with a 96-in diameter test section and an 18- to 36-in diameter core. The shock tube is chambered having an area ratio of 1.56. A 5-in ID driver is 16 ft long and is externally heated by a resistance heater to 1260°R. A 4-in ID driven tube is 48.5 ft long. A hydrogen-nitrogen or helium-air mixture is used as the driver gas. Air is generally the driven gas, although other gases may be used. Four axisymmetric nozzles are available: a 24-in exit diameter nozzle contoured for Mach number 8; a 48-in exit diameter nozzle contoured for Mach number 16; and 48- and 72-in exit diameter conical nozzles (10-1/2° half-angle). The test gas volume before the run is 4.24 ft$^3$ with 20 000 psia behind the reflected shock; the driver gas volume is 2.2 ft$^3$ with a maximum pressure of 30 000 psia.

DATA ACQUISITION: Data are recorded on either a 48-channel NAVCOR digital data acquisition system and reduced on a HP 9836 computer, or on a 128-channel minicomputer-based digital data system, or on both systems when more than 128 channels are required.

CURRENT PROGRAMS: The main research effort is directed at force and moment, pressure, heat transfer, and skin friction measurements on all types of hypersonic vehicles and spacecraft.

PLANNED IMPROVEMENTS:

LOCAL INFORMATION CONTACT: Dr. Paul V. Marrone, Head of Physical Sciences Department, (716) 631-6716.

Schematic

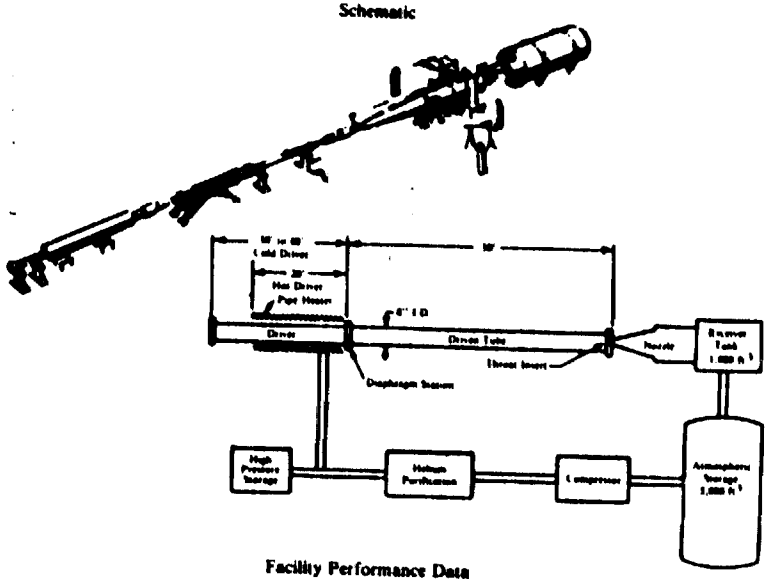


Facility Performance Data

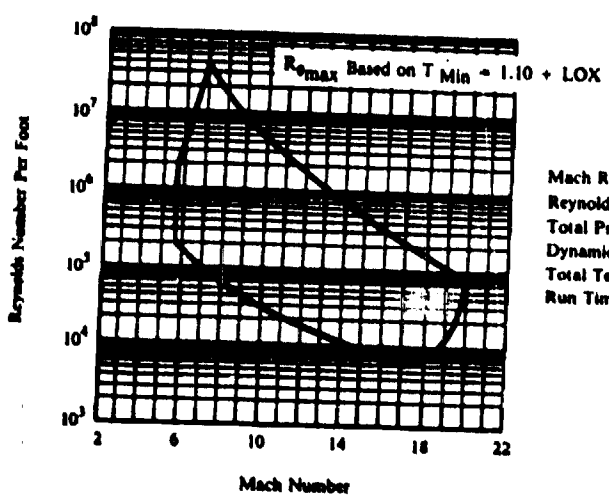


| | |
|---|---|
| Mach Range: | 5.5 – 20 |
| Reynolds Number ($\times 10^6$/ft): | .006 – 40 |
| Total Pressure (psia): | 200 – 5400 |
| Dynamic Pressure (psf): | To 5750 |
| Total Temperature (°R): | 1100 – 5800 |
| Run Time (milliseconds): | 4 – 13 |

| | HYPERSONIC WIND TUNNELS | | COMPARABLE FACILITIES |
|---|---|---|---|
| Calspan Corp. | TEST SECTION SIZE: Variable 24 in to 48 in dia | SPEED RANGE: (Mach No.) 5.5 - 20 | None |
| | DATE BUILT/UPGRADED: 1959 | TEMP. RANGE: 1100° - 5800°R | |
| 48-In Hypersonic Shock Tunnel | REPLACEMENT COST: $1.5M | REYNOLDS NO: (Per ft X $10^{-6}$) 0.004 - 50 | |
| | OPERATIONAL STATUS: 1 shift per day | DYNAMIC PRES: ($lb/ft^2$) Up to 5700 | |
| | | STAGNATION PRES: (psia) 200 - 5400 | |
| | Shock tunnel, conical and contoured nozzles | | |

TESTING CAPABILITIES: Force and moment, pressure, heat transfer, and skin friction measurements are routinely made on hypersonic configurations. Tests have also been conducted with an electron beam apparatus to measure the density profile in a laminar boundary layer. Models are sting mounted and attached to a vibration-isolated sector that provide for variation of the angle of attack. Schlieren and shadowgraph systems are available for flow visualization. This is a shock-tube-driven wind tunnel with a 48-in diameter test section. The shock tube has a constant internal diameter of 8-in with a 20-ft long driver and a 50-ft long driven tube. The driver is externally heated by a resistance heater to 1460°R and can be loaded with mixtures of helium and air to a maximum pressure of 6000 psia. Four nozzles are available: a 24-in exit diameter nozzle contoured for Mach number 8; a 24-in exit diameter conical nozzle (10-1/2° half-angle); a 48-in exit diameter nozzle contoured for Mach number 16; and a 48-in exit diameter conical nozzle (10-1/2° half-angle). The test gas volume before the run is 17.5 $ft^3$ with a maximum pressure behind reflected shock of 5400 psia. The driver gas volume is 6.98 $ft^3$ at a maximum pressure of 6000 psia.

DATA ACQUISITION: Data are recorded on either a 48-channel NAVCOR digital data acquisition system and reduced on a HP 9836 computer, or on a 128-channel minicomputer-based digital data system, or on both systems when more than 128 channels are required.

CURRENT PROGRAMS: The main research effort is directed at force and moment, pressure, heat transfer, and skin friction measurements on all types of hypersonic vehicles and spacecraft.

PLANNED IMPROVEMENTS:

LOCAL INFORMATION CONTACT: Dr. Paul V. Marrone, Head of Physical Sciences Department, (716) 631-6715.

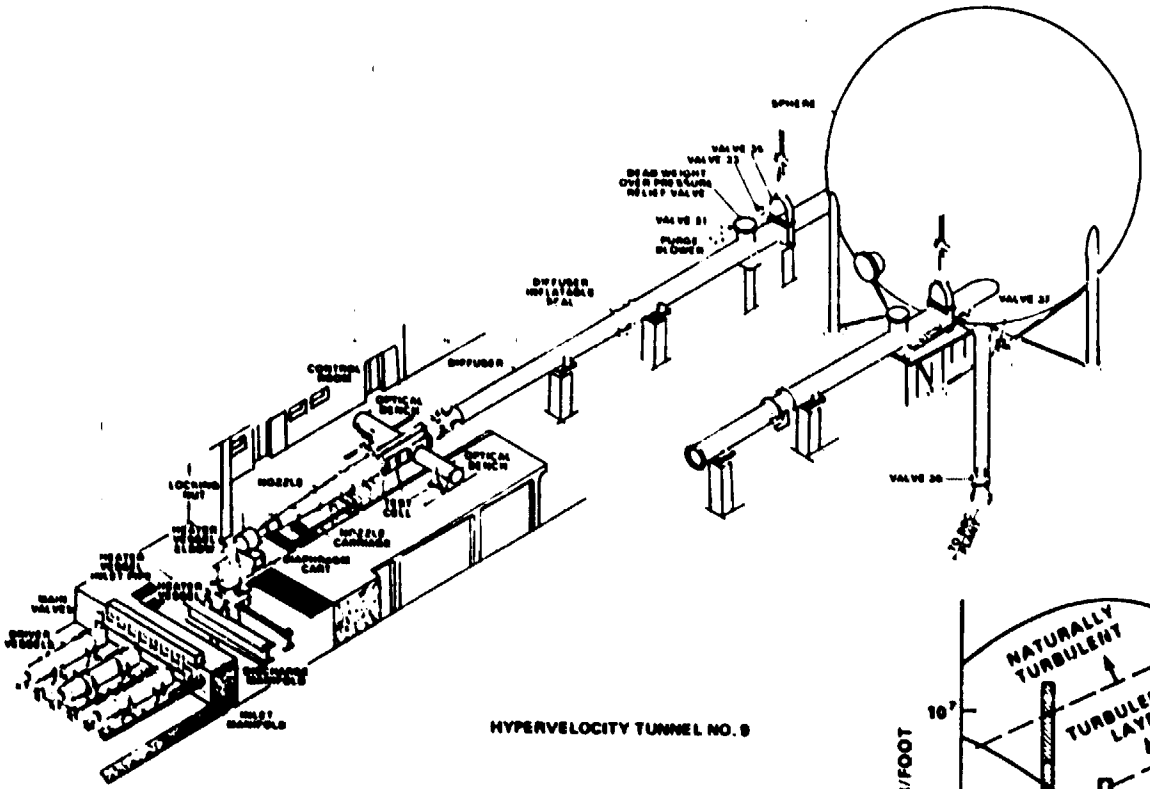

HYPERVELOCITY TUNNEL NO. 9

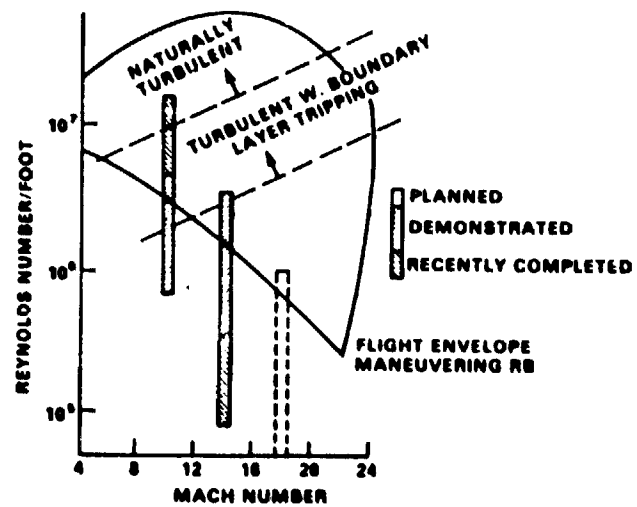

| | HYPERSONIC WIND TUNNELS | | COMPARABLE FACILITIES |
|---|---|---|---|
| Naval Surface Weapons Center | TEST SECTION SIZE: 5-ft diameter | SPEED RANGE: (Mach No.) 10.0, 14.5 | None |
| | DATE BUILT/UPGRADED: 1976/present | TEMP. RANGE: 1960°- 3660°R | |
| Hypervelocity Wind Tunnel No. 9 | REPLACEMENT COST: $15M | REYNOLDS NO: (Per ft × $10^{-6}$) 0.06 - 20 | |
| | OPERATIONAL STATUS: 1 shift per day | DYNAMIC PRES: ($lb/ft^2$) 4.32 | |
| | | STAGNATION PRES: (psia) 0.06 - 50 | |
| | Blowdown, nitrogen<br>Model length 6 ft, 18-in base diameter | | |

TESTING CAPABILITIES: Equipped for testing full-scale reentry bodies, maneuvering reentry bodies, and oversize nosetips. Instrumentation includes up to 6-component internal force and moment balances maximum ratings of 6000 to 4 lb, pressure transducers ranges from 0.0001 to 200 psia, steady state and 25-200 psia fluctuating (using analog recording), heat transfer using Gardon calorimeters, and coaxial thermocouples or backfaced thermocouples. Pitching of model at 50 deg/sec. Doglegged sting for yaw testing or high angle of attack. Photographic data up to 20 000 fps on 16-mm film and 10 fps on 70-mm (schlierens) (color also available). Shadowgraph and holography are available. Blowing through model up to 23 lb/sec is available.

DATA ACQUISITION: 128 channels of information of data can be recorded on the data acquisition system with full scale from 0.1mV up to 5V with on-line stripcharts and microcomputer for "quick-look" data reduction.

CURRENT PROGRAMS: Study of reentry body (ballistic and maneuvering) heat transfer, pressures, and static stability. Boundary layer and flowfield profiles also have been obtained. Pulsating shocks on indented nosetips, jet interaction effects of maneuvering control bodies.

PLANNED IMPROVEMENTS: Skin friction measurements on bodies, total temperature boundary layer probes, data acquisition modification to 256 channels capable of 1000 samples per second.

LOCAL INFORMATION CONTACT: Robert L. P. Voisinet, Aerodynamics Branch (K24), (202) 394-1736.

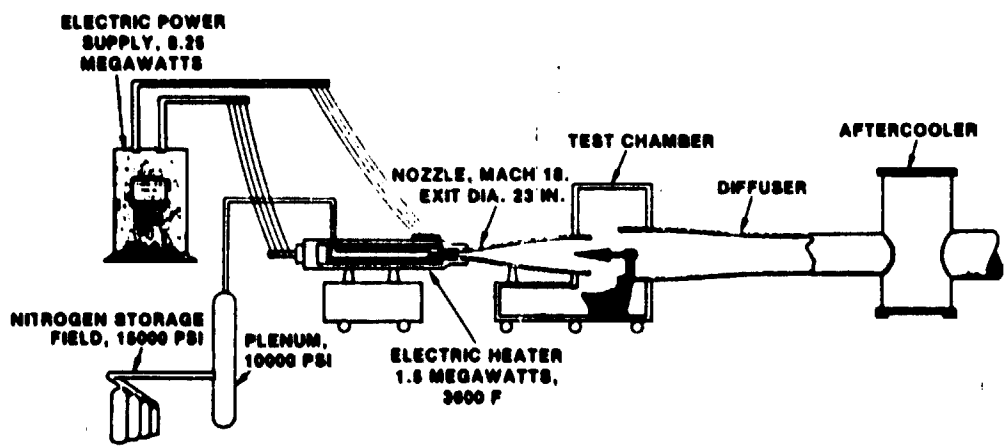
ELECTRIC POWER
SUPPLY, 8.25
MEGAWATTS
NOZZLE, MACH 18,
EXIT DIA. 23 IN.
TEST CHAMBER
DIFFUSER
AFTERCOOLER
NITROGEN STORAGE
FIELD, 15000 PSI
PLENUM,
10000 PSI
ELECTRIC HEATER
1.5 MEGAWATTS,
3000 F

| | HYPERSONIC WIND TUNNELS | | COMPARABLE FACILITIES |
|---|---|---|---|
| Naval Surface Weapons Center | TEST SECTION SIZE: 24-in dia | SPEED RANGE: (Mach No.) 18 | None |
| | DATE BUILT/UPGRADED: 1971 | TEMP. RANGE: 3700°R | |
| Hypersonic Research Wind Tunnel No. 8A | REPLACEMENT COST: $7.7M | REYNOLDS NO: (Per ft X $10^{-6}$) 0.2 - 0.6 | |
| | OPERATIONAL STATUS: 1 shift per day operation | DYNAMIC PRES: ($lb/ft^2$) 55 - 110 | |
| | | STAGNATION PRES: (psia) 3000 - 8800 | |
| | Blowdown type using nitrogen gas, approx. 4-min; Run time, approx. 8-in diameter test core | | |

TESTING CAPABILITIES: The NSWC Hypersonic Research Tunnel No. 8A is a blowdown, hot flow facility used to investigate very high Mach number phenomena associated with reentry at high altitudes. Typical model diameters are 3 in. Models can be pitched to angles of attack in the range between -15° and +60°, either manually or preprogrammed automatically. Model roll position adapter is available. Heat transfer, force and moment, pressure, and oil flow measurements can be made.

DATA ACQUISITION: The primary data acquisition system has 128 analog data channels. Full-scale input voltages range from 2.5 mV to 5 volts. Stripchart recorders, plotters, and tape recorders are available for data collection, to be reduced off-site.

CURRENT PROGRAMS: Current programs address the high-altitude aerodynamic phenomena such as side force due to outgassing from the heatshield and the stability of a reentry body with different ablated nosetips.

PLANNED IMPROVEMENTS:

LOCAL INFORMATION CONTACT: Robert L. P. Voisinet, Aerodynamics Branch (K24), (202) 394-1736.

# SCHEMATIC

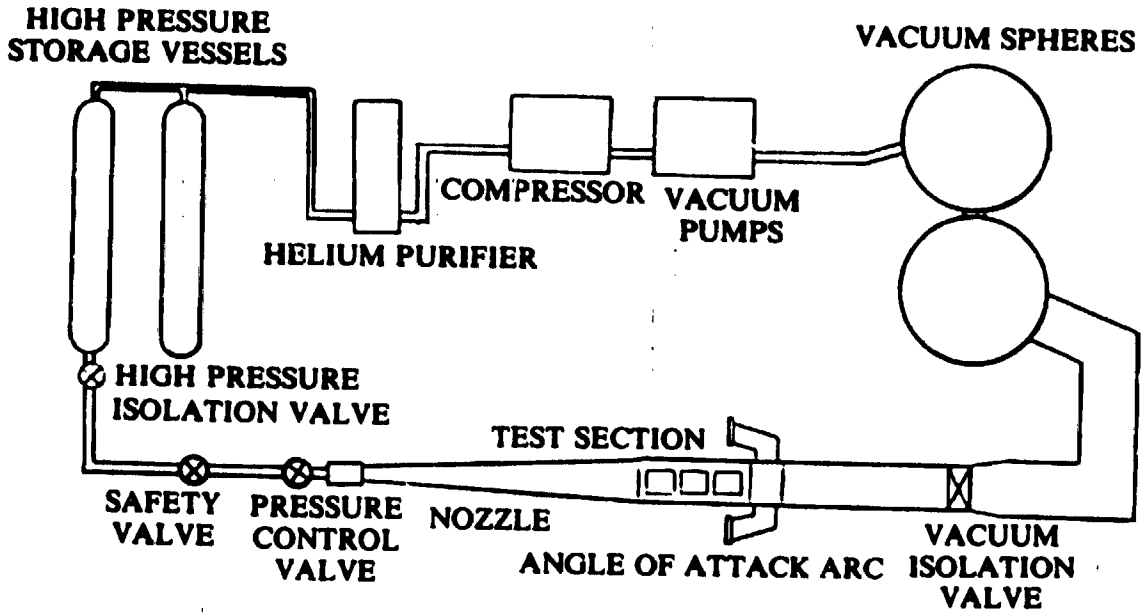
HIGH PRESSURE
STORAGE VESSELS
VACUUM SPHERES
COMPRESSOR
VACUUM
PUMPS
HELIUM PURIFIER
HIGH PRESSURE
ISOLATION VALVE
TEST SECTION
SAFETY
VALVE
PRESSURE
CONTROL
VALVE
NOZZLE
ANGLE OF ATTACK ARC
VACUUM
ISOLATION
VALVE

| NASA–Langley Research Center | HYPERSONIC WIND TUNNELS | | COMPARABLE FACILITIES |
|---|---|---|---|
| | TEST SECTION SIZE: 5 ft | SPEED RANGE: (Mach No.) 16.5 - 18 | None |
| | DATE BUILT/UPGRADED: 1952/1983 | TEMP. RANGE: Ambient | |
| Mach 20 High Reynolds Number Helium Tunnel | REPLACEMENT COST: $49M for entire complex | REYNOLDS NO: (Per ft X $10^{-6}$) 1.9 - 15.0 | |
| | OPERATIONAL STATUS: 1 shift per day (backlog) | DYNAMIC PRES: ($lb/ft^2$) 40 - 620 | |
| | | STAGNATION PRES: (psia) 300 - 2000 | |
| | Run time: 5.0 sec; Test medium: Helium Blowdown to vacuum | | |

TESTING CAPABILITIES: Model can be sting or strut mounted. A sequence of 3 spark schliurens can be taken with adjustable time delay between photographs. Electron beamflow visualization is also available.

DATA ACQUISITION: 100 Channel Beckman System, 5-Hz filter, 40 samples per second maximum. HP 9825 is connected to the NEFF 620 system, which has 16 channels. A new HP 2250 is connected to the existing HP 1000 and is currently being checked out.

CURRENT PROGRAMS: Three-dimensional Turbulent Boundary Layer Study; measurement in a cavity beneath a turbulent boundary layer; nonintrusive density measurements by Rayleigh Scattering.

PLANNED IMPROVEMENTS:

LOCAL INFORMATION CONTACT: Dennis M. Bushnell, Head Viscous Flow Branch, (804) 865-4546.

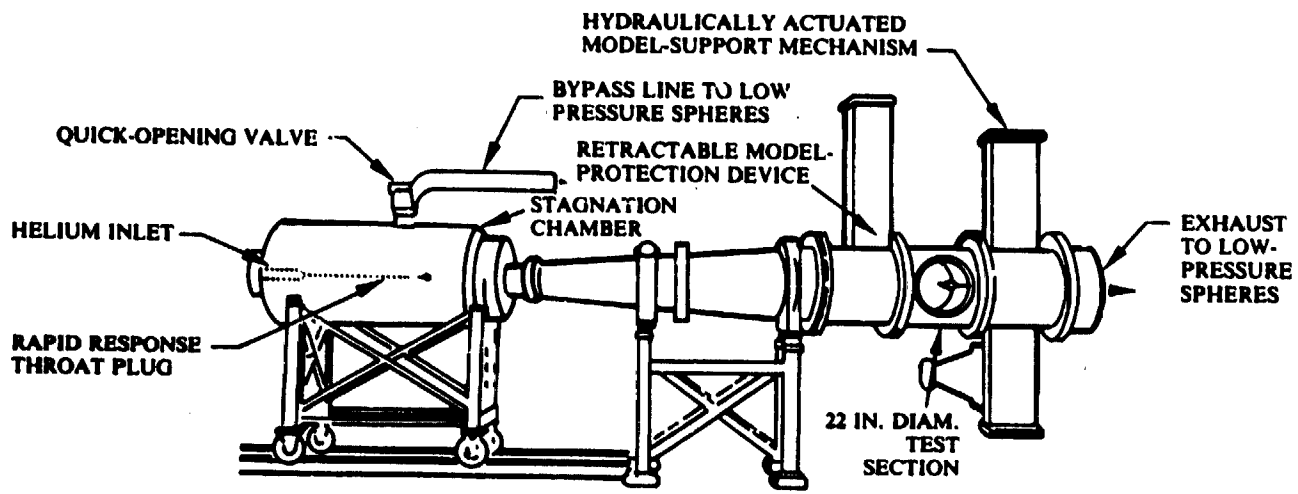
HYDRAULICALLY ACTUATED
MODEL-SUPPORT MECHANISM
BYPASS LINE TO LOW
PRESSURE SPHERES
QUICK-OPENING VALVE
RETRACTABLE MODEL-
PROTECTION DEVICE
STAGNATION
CHAMBER
HELIUM INLET
EXHAUST
TO LOW-
PRESSURE
SPHERES
RAPID RESPONSE
THROAT PLUG
22 IN. DIAM.
TEST
SECTION

| | HYPERSONIC WIND TUNNELS | | COMPARABLE FACILITIES |
|---|---|---|---|
| NASA–Langley Research Center | TEST SECTION SIZE: 22.5-in diameter | SPEED RANGE: (Mach No.) 17.6 - 22.2 | Mach 20 High Reynolds Number Helium Tunnel - NASA LaRC |
| | DATE BUILT/UPGRADED: 1958 | TEMP. RANGE: Ambient - 860°R | |
| Hypersonic Helium Tunnel<br>Aerodynamics Leg | REPLACEMENT COST: $49M for entire complex | REYNOLDS NO: (Per ft X $10^{-6}$) 1.1 - 11.3 | |
| | OPERATIONAL STATUS: 1 shift per day (backlog) | DYNAMIC PRES: (lb/ft$^2$) 144 - 600 | |
| | | STAGNATION PRES: (psia) 500 - 3000 | |
| | Run time: 40 sec; Test medium: Purified helium<br>Intermittent, blowdown | | |

TESTING CAPABILITIES: Models are sting mounted to strut systems with an angle-of-attack range of ±18°; bent stings extend the range. Sideslip angles are set at constant values (prebent stings) for sweeps through the angle-of-attack range. Force and moment data are obtained using a photo-optical system at discrete angles, in a continuous mode at fixed angles, or in a continuous mode continually sweeping. An electron beam illuminates the flow for three-dimensional flow-visualization studies. Test cores are 8 to 10 in in diameter. Model size is limited to approximately 6 in for angles up to 60° and 12 in up to 30°. Three contoured nozzles (design Mach numbers 18, 22, and 26) are available. A 67-kW resistance heater is in line to provide temperatures up to 400°F for heat transfer testing. Only the M = 22 nozzle (22-in leg) is fully calibrated and has been in use for 20 years at a 90% occupancy level.

DATA ACQUISITION: 100 Channel Beckman System, filtered to 1 Hz; 40 samples per second maximum.

CURRENT PROGRAMS: Aerodynamic forces and moment, pressure distribution, heat transfer, flow visualization, flow field surveys for advanced aerospace transportation concepts including Space Shuttle, shuttle derivatives, concepts beyond shuttle, aerobreaking orbit-to-orbit transports, and OEX support.

PLANNED IMPROVEMENTS: Modifications to Hypersonic Facilities Complex.

LOCAL INFORMATION CONTACT: W.C. Woods, Vehicle Analysis Branch, (804) 865-2483.

FLUID MECHANICS LEG
LANGLEY HYPERSONIC HELIUM TUNNEL

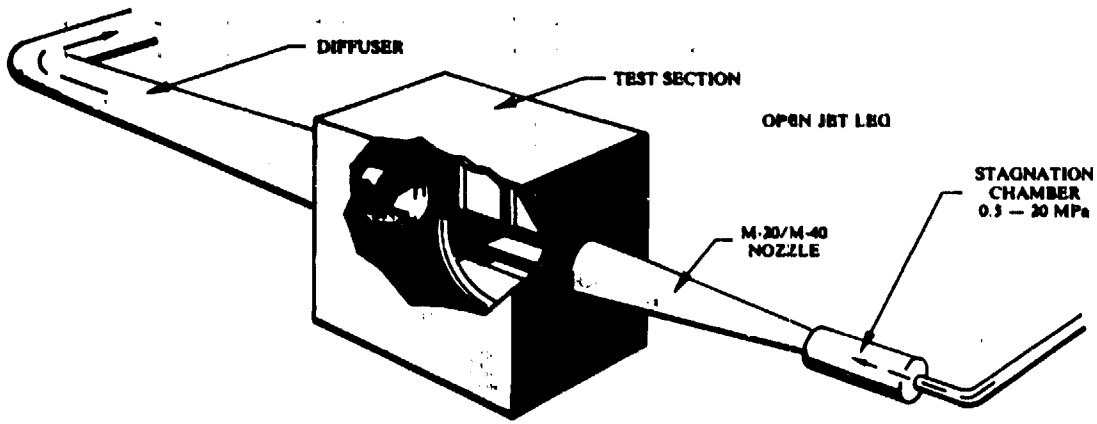

| NASA – Langley Research Center | HYPERSONIC WIND TUNNELS | | COMPARABLE FACILITIES |
|---|---|---|---|
| | TEST SECTION SIZE: 22 or 36 in (M = 20 noz) (M = 40 noz) | SPEED RANGE: (Mach No.) 20 or 40 | None |
| | DATE BUILT/UPGRADED: 1969 | TEMP. RANGE: Ambient - 860°R | |
| Hypersonic Helium Tunnel<br>Fluid Mechanics Leg | REPLACEMENT COST: $49M for entire complex | REYNOLDS NO: (Per ft X $10^{-6}$) 1.3 - 6.0 | |
| | OPERATIONAL STATUS: 1 shift per day (backlog). The aerodynamics leg and fluid mechanics leg cannot run simultaneously. | DYNAMIC PRES: (lb/ft$^2$) 144 - 600 | |
| | | STAGNATION PRES: (psia) 1000 - 2000 | |
| | Test medium: Purified helium; Run time: 20 sec<br>Open jet blowdown | | |

TESTING CAPABILITIES: Models are sting mounted to strut systems with an angle-of-attack range of ±18°; bent stings extend the range. Sideslip angles are set at constant values (prebent stings) for sweeps through the angle-of-attack range. Force and moment data are obtained using a photo-optical system at discrete angles, in a continuous mode at fixed angles or in a continuous mode continually sweeping. An electron beam illuminates the flow for three-dimensional flow-visualization studies. Test cores are 8 to 10 in in diameter. Model size is limited to approximately 6 in for angles up to 60° and 12 in up to 30°. Two nozzles (design Mach numbers 22 and 40) are available for the open jet leg. A 67-kW resistance heater is in line to provide temperatures up to 400°F for heat transfer testing (both legs) and M = 40 testing (open jet leg).

DATA ACQUISITION: 100 Channel Beckman System, filtered to 1 Hz, 40 samples per second maximum.

CURRENT PROGRAMS: Aerodynamic forces and moments, pressure distribution, heat transfer, flow visualization, flow field surveys for advanced aerospace transportation concepts including Space Shuttle, shuttle derivatives, concepts beyond shuttle aerobreaking orbit-to-orbit transports, and OEX support.

PLANNED IMPROVEMENTS: Fiscal Year 1988 – Modifications to Hypersonic Facilities Complex.

LOCAL INFORMATION CONTACT: W.C. Woods, Vehicle Analysis Branch, (804) 965-2483.

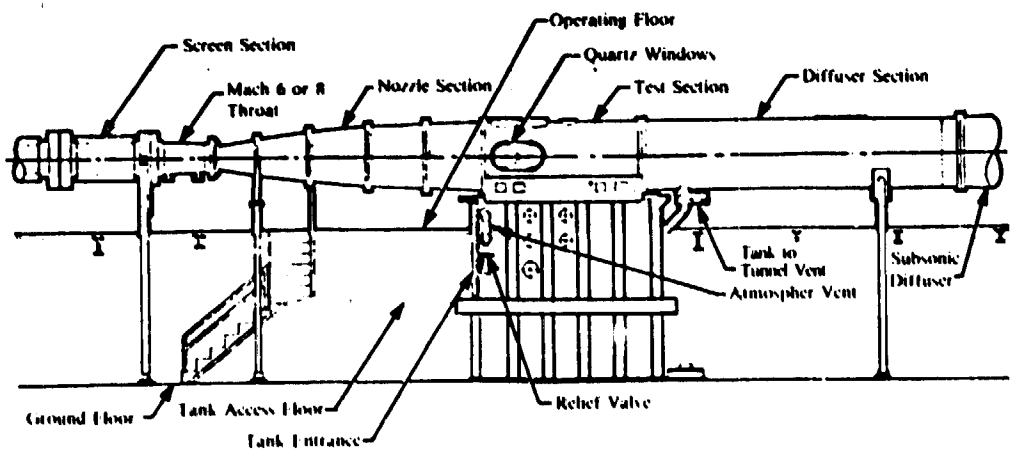
Screen Section
Mach 6 or 8 Throat
Nozzle Section
Operating Floor
Quartz Windows
Test Section
Diffuser Section
Tank to Tunnel Vent
Atmosphere Vent
Subsonic Diffuser
Ground Floor
Tank Access Floor
Tank Entrance
Relief Valve

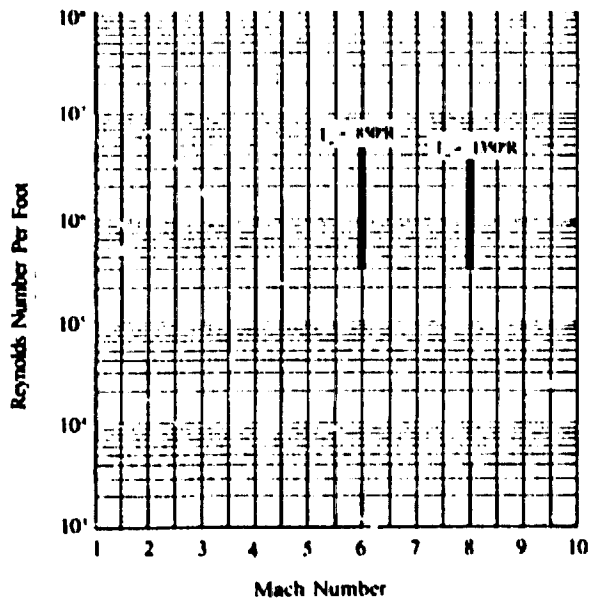
Reynolds Number Per Foot
Mach Number
1
2
3
4
5
6
7
8
9
10

| Arnold Engineering Development Center, von Karman Facility | HYPERSONIC WIND TUNNELS | | COMPARABLE FACILITIES |
|---|---|---|---|
| | TEST SECTION SIZE: 50-in diameter | SPEED RANGE: (Mach No.) 6 or 8 | None |
| | DATE BUILT/UPGRADED: 1954 | TEMP. RANGE: 700° - 1350°R | |
| Hypersonic Wind Tunnel (B) | REPLACEMENT COST: $47M | REYNOLDS NO: (Per ft X $10^{-6}$) 0.3 - 4.7 | |
| | OPERATIONAL STATUS: Active, lightly scheduled | DYNAMIC PRES: (lb/ft$^2$) 49 - 600 | |
| | | STAGNATION PRES: (psia) 20 - 850 | |
| | Continuous flow, closed circuit, variable density tunnel with interchangeable contoured axisymmetric nozzles, model injection system, and captive trajectory store separation system | | |

TESTING CAPABILITIES: The tunnel is used for force and moment, pressure, heat transfer, dynamic stability, free-flight, and cold flow jet effects testing. The model injection system permits insertion of the test article into an established flow and retraction for cooling the test article during heat transfer tests. Schlieren, shadowgraphs, and high-speed cameras are provided.

DATA ACQUISITION: DEC 10 supervisory control and data management, Amdahl 5860 central computer, PDP 11/40 model attitude, and PDP 11/34 IR camera processor.

CURRENT PROGRAMS:

PLANNED IMPROVEMENTS: None.

LOCAL INFORMATION CONTACT: Flight Mechanics Directorate, Deputy for Operations, AEDC/DOF, Arnold AFS TN 37389, (615) 455-2611, ext. 5280 or 6051.

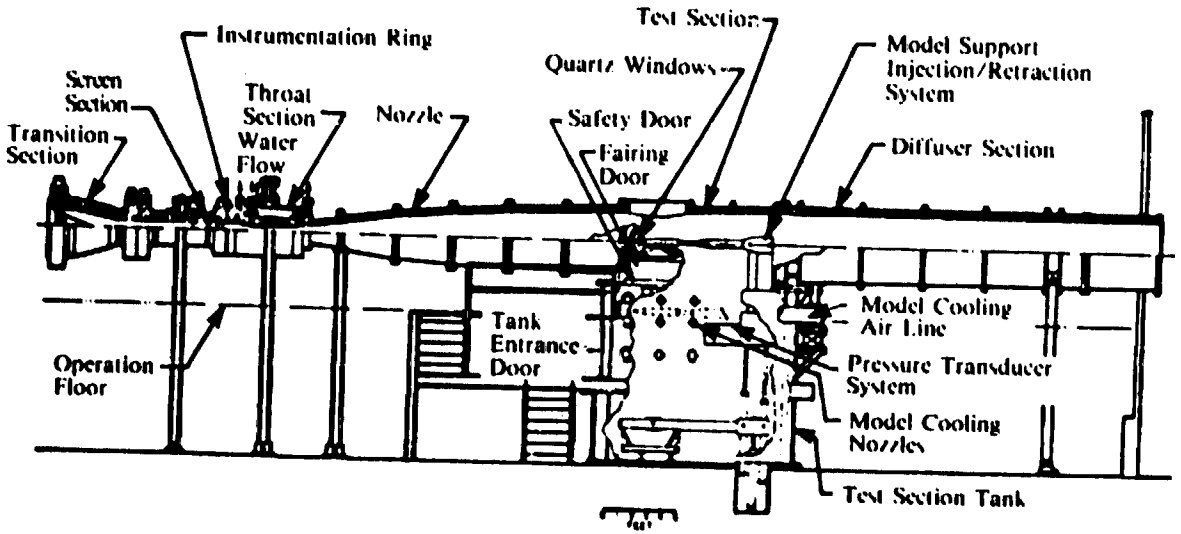
Instrumentation Ring
Screen Section
Transition Section
Throat Section
Water Flow
Nozzle
Test Section
Quartz Windows
Safety Door
Fairing Door
Model Support Injection/Retraction System
Diffuser Section
Tank Entrance Door
Operation Floor
Model Cooling Air Line
Pressure Transducer System
Model Cooling Nozzles
Test Section Tank

| | HYPERSONIC WIND TUNNELS | | COMPARABLE FACILITIES |
|---|---|---|---|
| Arnold Engineering Development Center, von Karman Facility | TEST SECTION SIZE: 25 and 50-in diameter | SPEED RANGE: (Mach No.) 4, 10 | None |
| | DATE BUILT/UPGRADED: | TEMP. RANGE: 1650° - 2250°R | |
| Hypersonic Wind Tunnel (C) | REPLACEMENT COST: $44M | REYNOLDS NO: (Per ft X $10^{-6}$) 0.4 - 1.3 at Mach 4; 0.3 - 4.7 at Mach 10 | |
| | OPERATIONAL STATUS: Active, lightly scheduled | DYNAMIC PRES: ($lb/ft^2$) 4.8 - 14.7 at Mach 4; 40 - 475 at Mach 10 | |
| | | STAGNATION PRES: (psia) 65 - 2000 at Mach 4; 2000 at Mach 10 | |
| | Continuous flow, closed circuit, variable density, interchangeable contoured nozzle tunnel with model injection system, and captive trajectory store separation model support system | | |

TESTING CAPABILITIES: The tunnel is used for force and moment, pressure, heat transfer, dynamic stability, free-flight, cold flow jet effects, and aerothermal and thermal structure-type testing. Interchangeable contour nozzles permit testing at Mach number 10 and in a 50-in diameter aerodynamic flow or at Mach number 4.0 in a 25-in diameter flow at flight-matched temperature conditions. The M = 4 aerothermal modifications permit full-scale flight environmental testing of tactical missiles for materials/structural, component performance, bore site, heat transfer, and operational functioning-type tests. A schlieren, shadowgraph, and high-speed cameras are provided.

DATA ACQUISITION: DEC 10 supervisory control and data management, Amdahl 5860 central computer, PDP 11/40 model attitude, and PDP 11/34 IR camera processor.

CURRENT PROGRAMS:

PLANNED IMPROVEMENTS: Higher enthalpy capability for aerothermal and propulsion testing.

LOCAL INFORMATION CONTACT: Flight Mechanics Directorate, Deputy for Operations, AEDC/DOF, Arnold AFS TN 37389, (615) 455-2611, ext. 5280 or 6051.

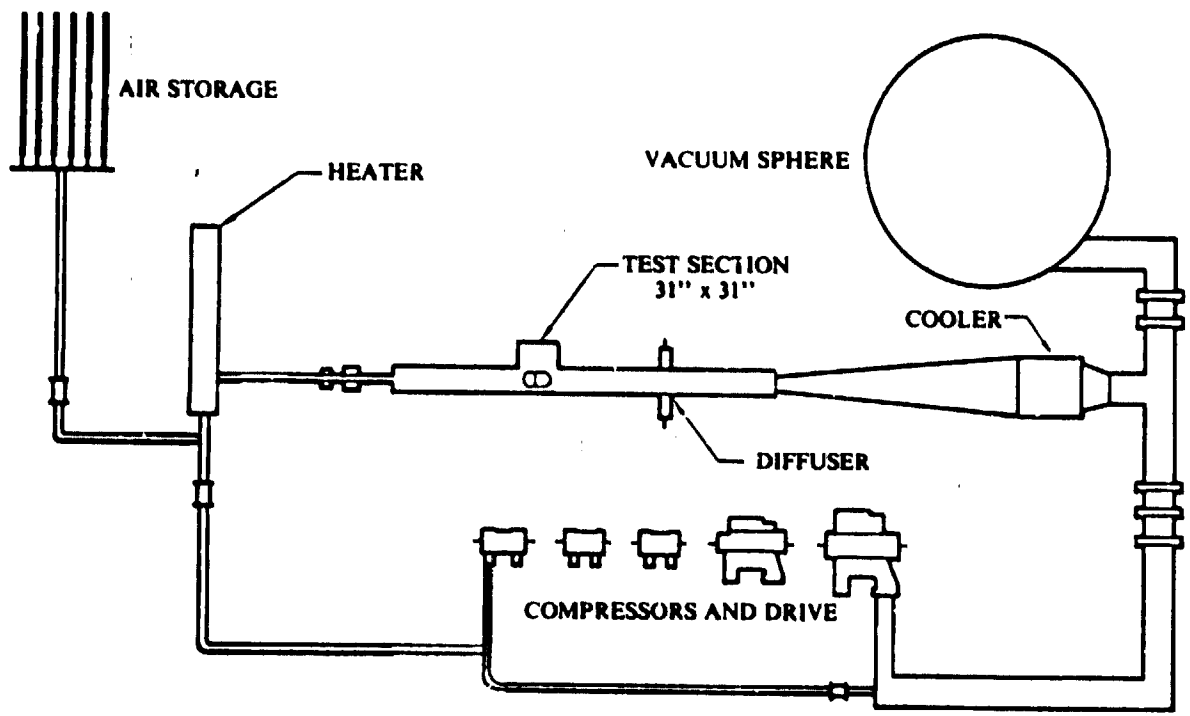
AIR STORAGE
HEATER
VACUUM SPHERE
TEST SECTION
31" x 31"
COOLER
DIFFUSER
COMPRESSORS AND DRIVE

| NASA–Langley Research Center | HYPERSONIC WIND TUNNELS | | COMPARABLE FACILITIES |
|---|---|---|---|
| | TEST SECTION SIZE: 31 x 31 in | SPEED RANGE: (Mach No.) 10 | von Karman - DOD<br>AEDC |
| | DATE BUILT/UPGRADED: 1962/1984 | TEMP. RANGE: 1810°R | |
| Continuous Flow Hypersonic Tunnel (1251A) | REPLACEMENT COST: $23.9M | REYNOLDS NO: (Per ft X $10^{-6}$) 0.4 - 2.4 | |
| | OPERATIONAL STATUS:<br>1 shift per day (backlog) | DYNAMIC PRES: (lb/ft$^2$) 60 - 400 | |
| | | STAGNATION PRES: (psia) 250 - 1800 | |
| | Intermittent blowdown to vacuum or continuous flow<br>Run time: Continuous/blowdown for 1 min<br>Test medium: Air | | |

TESTING CAPABILITIES: A sidewall-mounted model injection system permits access to the model while the tunnel is running and allows rapid injection into the flow for heat transfer tests. Pressure and force tests are also performed. Free stream Mach number 10 is achieved in a 31-in-square test section. The tunnel can run continuously by a series of compressors but is now usually operated in a blowdown mode for energy conservation. Electric resistance heaters are used to prevent air condensation.

DATA ACQUISITION: NEEF 620 A/D system, 128 channels, 100 samples per second maximum, hp 9845 B controller.

CURRENT PROGRAMS: Hypersonic aerodynamics of entry vehicles, shuttle development and enhancement, development of advanced space transportation systems, and planetary probe gas dynamics.

PLANNED IMPROVEMENTS:

LOCAL INFORMATION CONTACT: T. A. Blackstock, Aerodynamics Branch, (804) 865-3984.

| L.R.B.A. French Army Aero-Ballistic Center Vernon, France | HYPERSONIC WIND TUNNELS | | COMPARABLE FACILITIES |
|---|---|---|---|
| | TEST SECTION SIZE: 1.2-m diameter | SPEED RANGE: (Mach No.) 8 - 16 | None |
| | DATE BUILT/UPGRADED: 1961 | TEMP. RANGE: 800 K with nitrogen | |
| C - 2 | REPLACEMENT COST: | REYNOLDS NO: (Per m X $10^{-6}$) 1 | |
| | OPERATIONAL STATUS: Operational | DYNAMIC PRES: ($kN/m^2$) | |
| | | STAGNATION PRES: (bars) Up to 600 | |
| | Blowdown (about 5 to 10 msec), reflected-shocks concept; also used with helium for very high Mach numbers (up to 30) | | |

TES . ING CAPABILITIES: Forces and pressures/temperatures measurements on ballistic missiles; schlieren visualizations.

DATA ACQUISITION:

CURRENT PROGRAMS: Mainly development testing on reentry bodies.

PLANNED IMPROVEMENTS:

LOCAL INFORMATION CONTACT: Desgardin, L.R.B.A., 27200 Vernon, France, (32) 51.07.40.

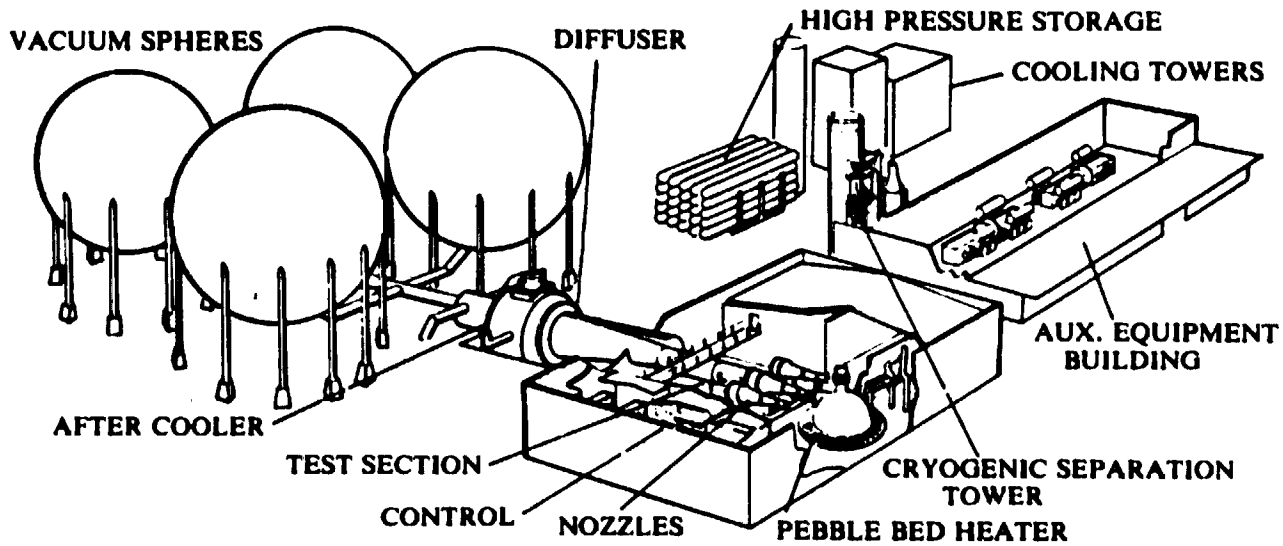
VACUUM SPHERES
DIFFUSER
HIGH PRESSURE STORAGE
COOLING TOWERS
AUX. EQUIPMENT BUILDING
AFTER COOLER
TEST SECTION
CONTROL
NOZZLES
CRYOGENIC SEPARATION TOWER
PEBBLE BED HEATER

| | HYPERSONIC WIND TUNNELS | | COMPARABLE FACILITIES |
|---|---|---|---|
| NASA-Ames Research Center | TEST SECTION SIZE: 3.5 D x 10 ft | SPEED RANGE: (Mach No.) 5, 7, 10 (nominal) | None |
| | DATE BUILT/UPGRADED: 1960/1972 | TEMP. RANGE: 1200° - 3460°R | |
| 3.5-Ft Hypersonic Wind Tunnel | REPLACEMENT COST: $35M | REYNOLDS NO: (Per ft X $10^{-6}$) 0.3 - 7.4 | |
| | OPERATIONAL STATUS: Standby | DYNAMIC PRES: (lb/ft$^2$) 170 - 1600 | |
| | | STAGNATION PRES: (psia) 44 - 1955 | |
| | Run time: 0.5 - 4 min<br>Closed-circuit intermittent blowdown to vacuum | | |

TESTING CAPABILITIES: This wind tunnel uses interchangeable contoured axisymmetric nozzles to achieve the test Mach numbers. Heat is supplied to the test gas by a storage heater containing aluminum oxide pebbles, preheated by burning natural gas. Aerodynamic force and moment and heating data are obtained on models inserted remotely into the test stream. Remotely actuated angle of attack can be varied between ±20°. Shadowgraph and high-speed cameras are available for flow visualization.

DATA ACQUISITION: Data are acquired through Teledyne equipment using Programmable Amplifier/Filter Units (PAFUs) and Newport preamplifiers beginning in 1984. The number of input channels is 228, and the maximum sampling rate is 60 000 samples per second. Some real-time data processing is available through a DEC PDP 11/70. Post-run processing of data will be performed on the same PDP 11/70.

CURRENT PROGRAMS: Facility on standby.

PLANNED IMPROVEMENTS: Refurbishment of ceramic in heater core.

LOCAL INFORMATION CONTACT: Frank Centolanzi, Chief, Thermo-Physics Facilities Branch, (415) 965-5269.

OPERATION ENVELOPE FOR
36 - INCH HYPERSONIC WIND TUNNEL

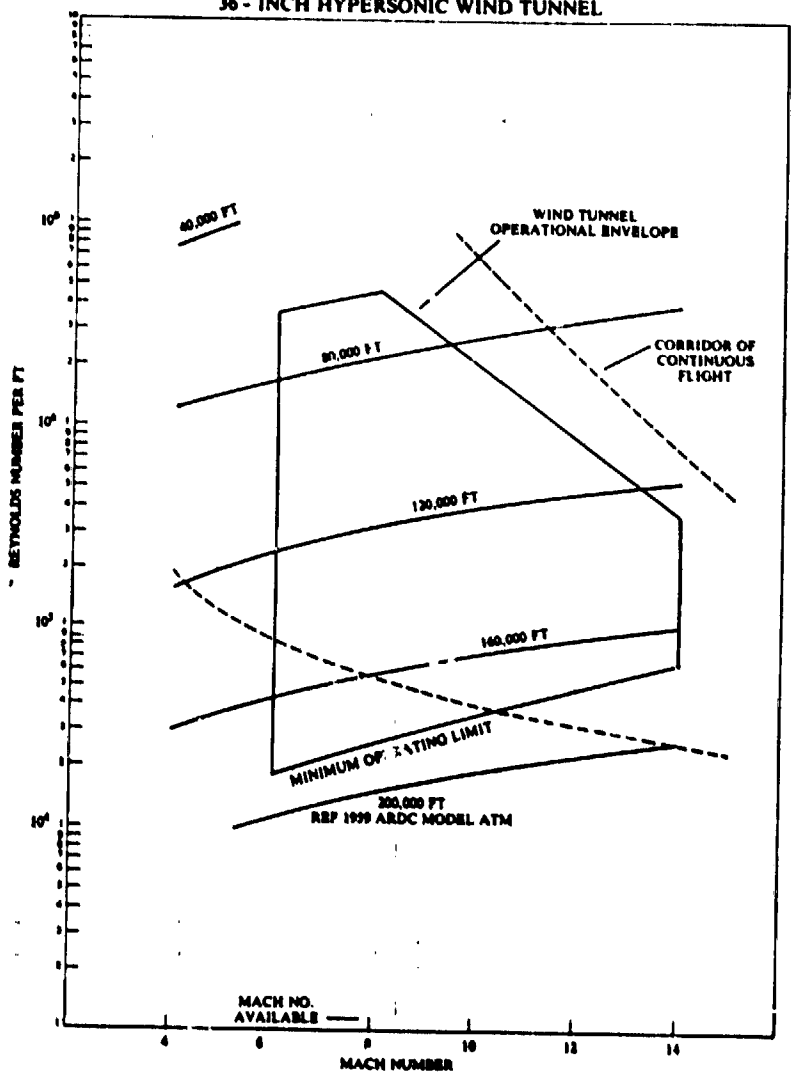

| Grumman Aerospace Corp. | HYPERSONIC WIND TUNNELS | | COMPARABLE FACILITIES |
|---|---|---|---|
| | TEST SECTION SIZE: 36-in diameter | SPEED RANGE: (Mach No.) 8, 10, 14 | None |
| | DATE BUILT/UPGRADED: 1962/1967 | TEMP. RANGE: 1000° - 3000°R | |
| 36-In Hypersonic Wind Tunnel | REPLACEMENT COST: $5M | REYNOLDS NO: (Per ft X $10^{-6}$) 0.2 - 4.50 | |
| | OPERATIONAL STATUS: Standby | DYNAMIC PRES: (lb/ft$^2$) 105 - 793 | |
| | | STAGNATION PRES: (psia) 50 - 2000 | |
| | Intermittent blowdown to vacuum, direct contact gas-fired pebble bed heater, fixed axisymmetric nozzles, model injection system | | |

TESTING CAPABILITIES: Tests include heat transfer, force, and pressure. Model injection system is ideally suited for heat transfer testing via thin skin T.C. and heat paint techniques. The large test-section size permits relatively large models to be tested at reasonably high Reynolds numbers. Typical run rate is 2 runs per hour.

DATA ACQUISITION: One hundred channels of data can be accommodated. Special automatic cameras for heat paint transfer testing. Schlieren flow visualization system available.

CURRENT PROGRAMS: Facility vacuum system and pebble bed heater currently are used to support tests in transonic or supersonic tunnels, auxiliary nozzle thrust stands, and large-scale isolated inlet indraft performance testing.

PLANNED IMPROVEMENTS: None.

LOCAL INFORMATION CONTACT: F. Blomback Grumman Aero Test Department, (516) 575-3685.

| Lockheed-California Co. | HYPERSONIC WIND TUNNELS | | COMPARABLE FACILITIES |
|---|---|---|---|
| | TEST SECTION SIZE: 30-in diameter | SPEED RANGE: (Mach No.) 8.0, 10.0 | 36-In Hypersonic Tunnel - Grumman |
| | DATE BUILT/UPGRADED: 1965 | TEMP. RANGE: 1400°R | |
| 30-In Hypersonic Wind Tunnel | REPLACEMENT COST: $1M | REYNOLDS NO: (Per ft X $10^{-6}$) 0.42 - 2.2 | |
| | OPERATIONAL STATUS: Standby | DYNAMIC PRES: (lb/ft$^2$) 60 - 300 | |
| | | STAGNATION PRES: (psia) 600 (max) | |
| | Intermittent blowdown to exhaust system | | |

TESTING CAPABILITIES: Normal run time is 3 to 5 min. The air is supplied to the tunnel from the storage tanks that also supply the 4 x 4 transonic tunnel. The model support system can be rotated laterally through 90° by a remotely controlled hydraulic cylinder when it is desired to keep the model out of the airflow until the test conditions are fully established.

DATA ACQUISITION: Fifty channels of information can be recorded and reduced on-site with a return time of 2 to 5 min per run (blow).

CURRENT PROGRAMS:

PLANNED IMPROVEMENTS: Fifty channels of information can be recorded and reduced on-site with a return time of 2 to 5 min per run (blow).

LOCAL INFORMATION CONTACT: Lockheed-California Company, Attn: Edward Whitfield, Flight Sciences Laboratory, Dept. 74-73, Bldg. 202, Plt. 2, P.O. Box 551, Burbank, CA 91520, (213) 847-6121, ext. 221.

# PERFORMANCE ENVELOPE ON AVAILABLE NOZZLES IN THE NORAIR HYPERSONIC FACILITY

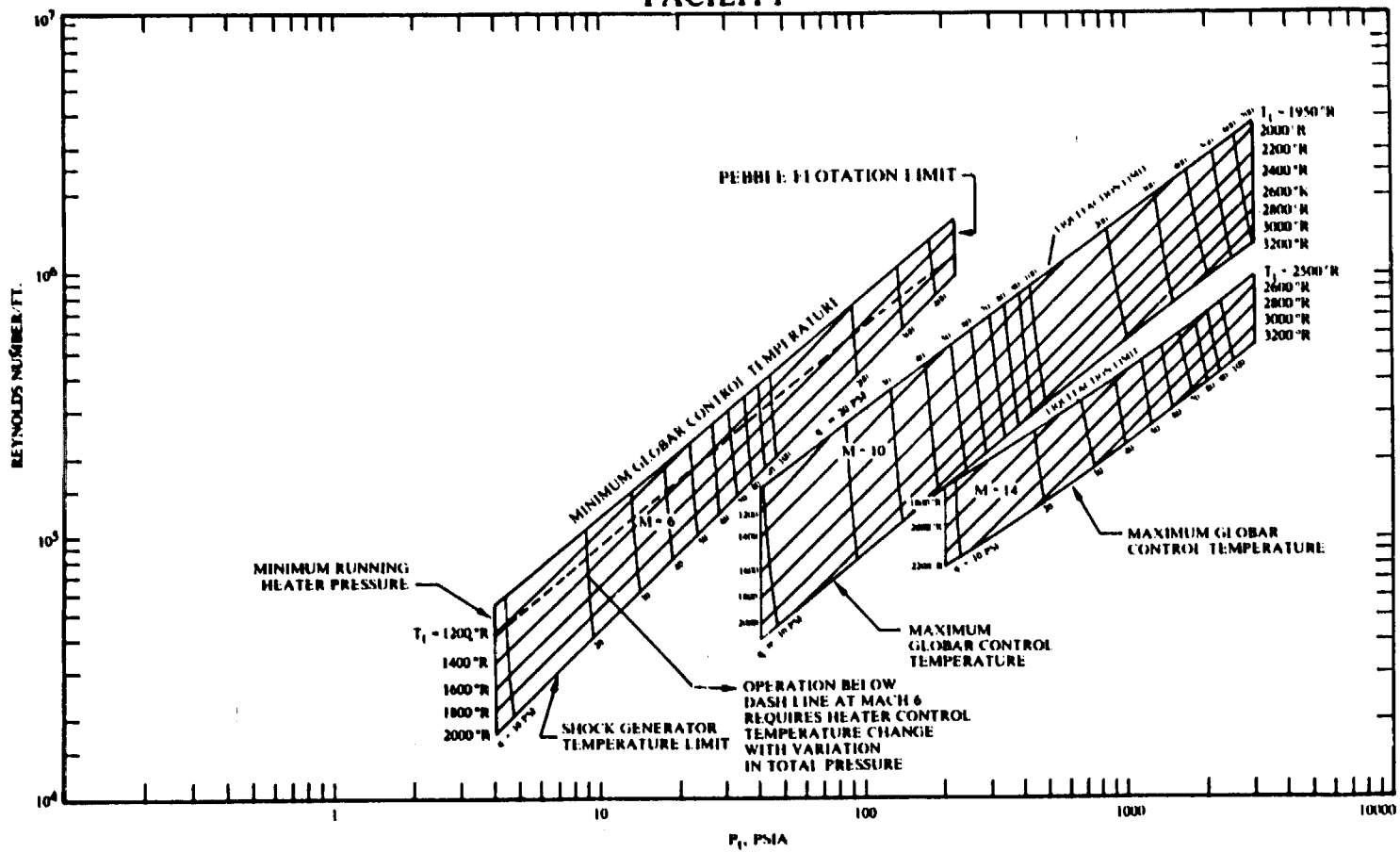

| Northrop Corporation, Aircraft Division | HYPERSONIC WIND TUNNELS | | COMPARABLE FACILITIES |
|---|---|---|---|
| | **TEST SECTION SIZE:** 30-in diam free jet | **SPEED RANGE: (Mach No.)** 6, 10, 14 | None |
| | **DATE BUILT/UPGRADED:** 1962 | **TEMP. RANGE:** 1200° - 3200°R | |
| 30-In Hypersonic Wind Tunnel | **REPLACEMENT COST:** $4M | **REYNOLDS NO: (Per ft X $10^{-6}$)** 0.02 - 3.5 | |
| | **OPERATIONAL STATUS:** Inactive - last run in 1970 - all components still available but many in storage | **DYNAMIC PRES: (lb/ft$^2$)** 10 - 600 | |
| | | **STAGNATION PRES: (psia)** 4 - 1300 | |
| | Intermittent blowdown to 100 000 ft$^3$ vacuum sphere from 2000 ft$^3$, 3200 psia air supply | | |

TESTING CAPABILITIES: Blowdown operation with approximately 30-sec run duration. Conical nozzles with interchangeable free jet or closed jet test cabins. Free-jet cabin incorporates support system to inject model into hypersonic stream after flow has been initiated. Schlieren system.

DATA ACQUISITION: 256 channels, dedicated on-site computer, graphics CRT, and high-speed pen plotter.

CURRENT PROGRAMS: None.

PLANNED IMPROVEMENTS: None.

LOCAL INFORMATION CONTACT: Fred W. Peitzman, Manager Wind Tunnel Test (Orgn. 3844/64), (213) 970-4584.

| DFVLR Köln-Porz, Germany | HYPERSONIC WIND TUNNELS | | COMPARABLE FACILITIES |
|---|---|---|---|
| | TEST SECTION SIZE: 0.6-m diameter | SPEED RANGE: (Mach No.) 4.5 - 11.2 | 30-In Hypersonic Tunnel - Northrop Corp. |
| | DATE BUILT/UPGRADED: 1971 | TEMP. RANGE: Up to 1000 K (max) | |
| Hypersonic Wind Tunnel (H2K) | REPLACEMENT COST: | REYNOLDS NO: (Per m $\times 10^{-6}$) 30 at Mach 6; 1 at Mach 11.2 | |
| | OPERATIONAL STATUS: Standby | DYNAMIC PRES: ($kN/m^2$) Up to 80 at Mach 6 | |
| | | STAGNATION PRES: (bars) 1.5 - 50 | |
| | Blowdown, interchangeable nozzle; Running time: 40 sec | | |

TESTING CAPABILITIES: The tunnel has an open test section in a cylindrical test chamber of 2-m diameter. There are 4 contoured nozzles for Mach numbers 4.5 (diameter: 0.36 m), 6, 8.7, and 11.2 (diameter: 0.6 m; uniform core: 0.4 m).

DATA ACQUISITION: Forty-channel A/D converter input and on-line data reduction.

CURRENT PROGRAMS: There are no activities at the present.

PLANNED IMPROVEMENTS:

LOCAL INFORMATION CONTACT: DFVLR Windtunnel Division, Linder Höhe, D-5000 Köln 90, Dipl.-Ing. Helmut Esch, (02203-601-2345).

| | HYPERSONIC WIND TUNNELS | | COMPARABLE FACILITIES |
|---|---|---|---|
| McDonnell Douglas Aircraft Co. El Segundo, Calif. | TEST SECTION SIZE: 24-in diameter | SPEED RANGE: (Mach No.) 6, 8, 10 | Hypersonic #8 - DOD NSWC |
| | DATE BUILT/UPGRADED: 1961 | TEMP. RANGE: 850° - 2470°R | |
| 2-Ft Hypersonic Wind Tunnel | REPLACEMENT COST: $10M | REYNOLDS NO: (Per ft X $10^{-6}$) 1.2 - 11.2 | |
| | OPERATIONAL STATUS: Standby | DYNAMIC PRES: (lb/ft$^2$) 288 - 1440 | |
| | | STAGNATION PRES: (psia) 250 - 2250 | |
| | Intermittent blowdown to vacuum | | |

TESTING CAPABILITIES: The 2-ft Hypersonic Wind Tunnel is a blowdown facility with 60-sec run duration at most test conditions. A pebble bed heater is used to heat the air. A supersonic ejector system is used to reduce atmospheric back pressure. Run rates of 1.5 per hour are normal.

DATA ACQUISITION: Sixty-four channels of information can be recorded on the data acquisition system. Data are reduced on-line and available to user between runs.

CURRENT PROGRAMS: Facility was last operated in 1975 at Hypersonic Mach numbers. A major refurbishment of the facility control system would be required prior to operation. McDonnell Douglas has no plans for future operation of this facility and is therefore offering it for sale.

PLANNED IMPROVEMENTS:

LOCAL INFORMATION CONTACT: Richard M. Cole, Aerodynamics Staff, (213) 593-5127.

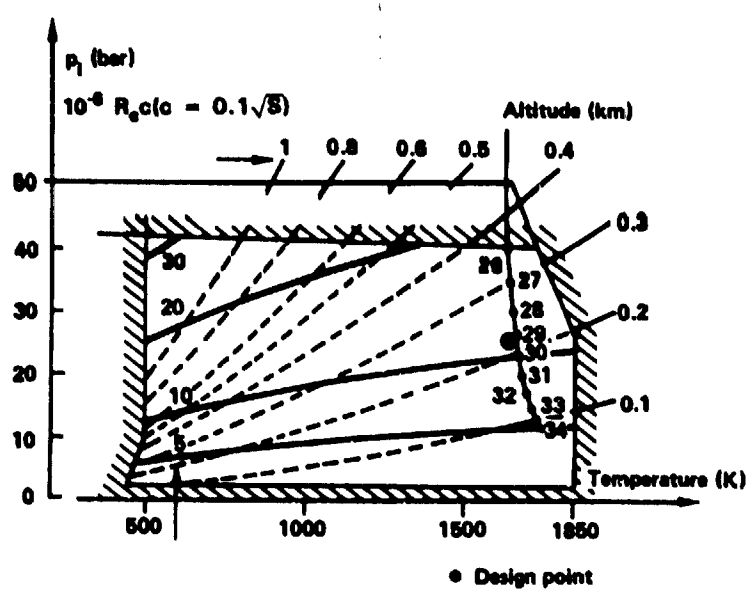


Nozzle Mach 6: D = 0.68 m

| ONERA Modane, France | HYPERSONIC WIND TUNNELS | | COMPARABLE FACILITIES |
|---|---|---|---|
| | TEST SECTION SIZE: ϕ0.68 m | SPEED RANGE: (Mach No.) 6 | 2-Ft Hypersonic - McDonnell Douglas, CA |
| | DATE BUILT/UPGRADED: 1967 | TEMP. RANGE: 493 - 1843 K | |
| S4 MA | REPLACEMENT COST: | REYNOLDS NO: (Per m X $10^{-6}$) 3 - 27 | |
| | OPERATIONAL STATUS: 1 shift when requested | DYNAMIC PRES: ($kN/m^2$) 7 - 67 | |
| | | STAGNATION PRES: (bars) 3 - 42 | |
| | Intermittent, blowdown (up to 90 sec)<br>Propane heated pebble-bed exchanger. Upstream storage (29 $m^3$; 400 b)<br>Ejection to atmosphere or vacuum tank (4000 $m^3$; 0.03 b) | | |

TESTING CAPABILITIES: Possibility of use as a heated high-speed air mass flow generator (56 kg/sec, 400 K, 60 sec): ramjet, hypersonic intakes, and ablation. Only Mach 6 nozzle available - free stream, model supporting table angle of attack ±14°, sideslip ±14°; and kerosene and hydrogen model supply.

DATA ACQUISITION: Pressures, temperatures, forces, and thermal fluxes with fast response transducers; 40 analog channels; local HP-1000 computer; and computation on central VAX-750.

CURRENT PROGRAMS: Classified.

PLANNED IMPROVEMENTS:

LOCAL INFORMATION CONTACT: M. Gaillard, Modane Test Center, B.P. 25, 73500 Modane, France.

SCHEMATIC

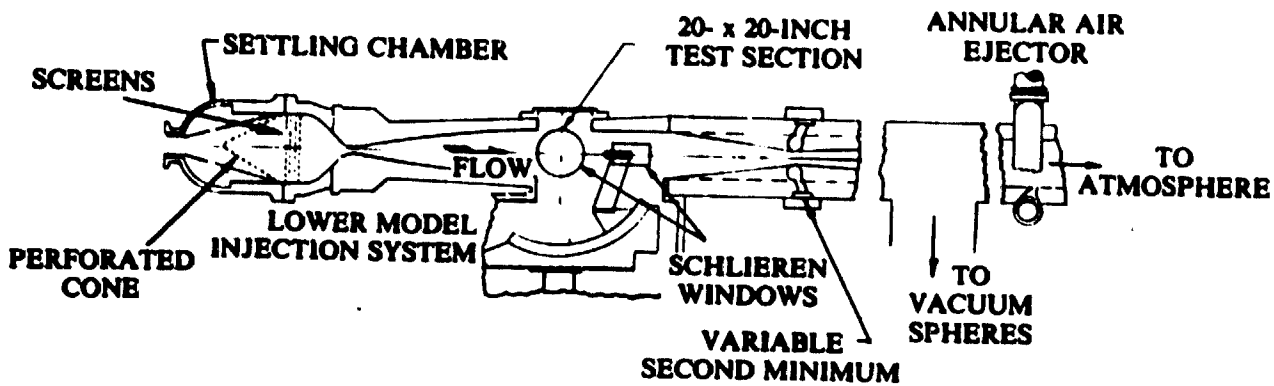
SCREENS
SETTLING CHAMBER
20- x 20-INCH
TEST SECTION
ANNULAR AIR
EJECTOR
FLOW
TO
ATMOSPHERE
PERFORATED
CONE
LOWER MODEL
INJECTION SYSTEM
SCHLIEREN
WINDOWS
TO
VACUUM
SPHERES
VARIABLE
SECOND MINIMUM

| NASA–Langley Research Center | HYPERSONIC WIND TUNNELS | | COMPARABLE FACILITIES |
|---|---|---|---|
| | TEST SECTION SIZE: 20 x 20.5 in | SPEED RANGE: (Mach No.) 6 | 2-Ft Hypersonic Tunnel - McDonnell Douglas, CA |
| | DATE BUILT/UPGRADED: 1958/1982 | TEMP. RANGE: 810° - 1018° R | |
| 20-In Mach 6 Wind Tunnel | REPLACEMENT COST: $38.1M replacement cost for building 1247D | REYNOLDS NO: (Per ft X $10^{-6}$) 0.5 - 10.5 | |
| | OPERATIONAL STATUS: 1 shift per day (backlog) | DYNAMIC PRES: (lb/ft$^2$) 69 - 1264 | |
| | | STAGNATION PRES: (psia) 30 - 550 | |
| | Blowdown exhausted to vacuum/to atmosphere using ejector, Test medium: Air Run time: 3 min to vacuum/17 min to ejector | | |

TESTING CAPABILITIES: This tunnel can measure heat transfer, pressures, forces and moments, skin friction, equilibrium temperatures, temperatures, boundary layer, and flow profiles and has separate system to provide gases for model engine exhaust simulation. The nozzle blocks are two-dimensional and contoured, terminating in a test section 20 x 20.5 in; the usable test core is approximately 16 x 16 in. The flow exhausts through a movable second minimum either to atmosphere with the aid of an annular ejector or to a 40-, 60-, and 100-ft diameter vacuum sphere. A model injection system beneath the facility allows models up to 5 ft long to be rapidly injected into the moving airstream with angle of attack and yaw angle variation. A flow probing mechanism with three degrees of freedom is available.

DATA ACQUISITION: 100 Channel Beckman System - various combinations of pressure, temperature, force, etc. 96 channels HP 2250, off-site data reduction.

CURRENT PROGRAMS: Space Shuttle, hypersonic missile configuration development, entry probe development, scramjet engine development, high-speed reconnaissance vehicle development, and basic fluid mechanics research.

PLANNED IMPROVEMENTS: Fiscal Year 1988 - Modifications to Hypersonic Facilities Complex, Fiscal Year 1984 CPU upgrade to data acquisition, and schlieren camera.

LOCAL INFORMATION CONTACT: S. Stack, Advanced Concepts Performance Aerodynamics Branch, (804) 865-3294.

# HYPERSONIC CFy TUNNEL SYSTEM BLOCK DIAGRAM

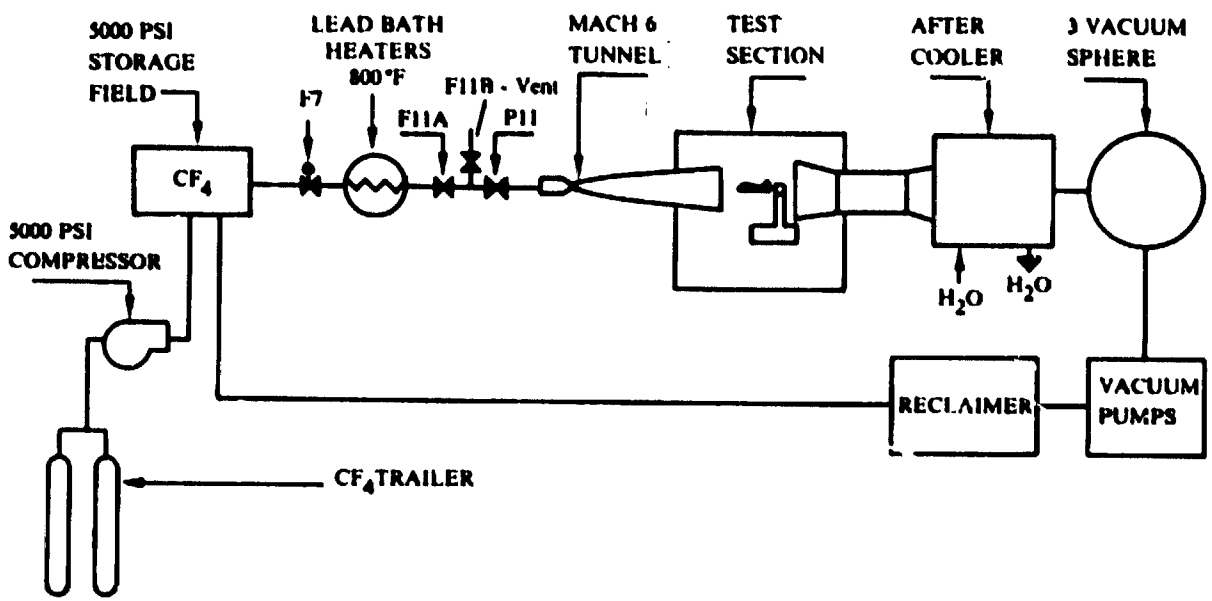

| NASA–Langley Research Center | HYPERSONIC WIND TUNNELS | | COMPARABLE FACILITIES |
|---|---|---|---|
| | TEST SECTION SIZE: 20-in diameter | SPEED RANGE: (Mach No.) 6 | None |
| | DATE BUILT/UPGRADED: 1972 | TEMP. RANGE: 1060° - 1260°R | |
| Hypersonic $CF_4$ Tunnel | REPLACEMENT COST: $8M | REYNOLDS NO: (Per ft X $10^{-6}$) 0.3 - 0.5 | |
| | OPERATIONAL STATUS: 1 shift per day (backlog) | DYNAMIC PRES: ($lb/ft^2$) 0.5 - 1.5 | |
| | | STAGNATION PRES: (psia) 1000 - 2500 | |
| | Run time: 7 - 20 sec; Test medium: Freon 14<br>Real gas simulation blowdown tunnel | | |

TESTING CAPABILITIES: $CF_4$ (Tetrafluoromethane test gas) yields a normal shock density ratio of about 12, permitting simulation of real gas effects at entry speeds for Earth and the terrestrial planets. A model injection system permits heat transfer studies. The test gas is reclaimed using a liquid nitrogen recovery system. Stagnation temperature is achieved with a storage-type lead bath heater. Pressure and aerodynamic force test capability is available.

DATA ACQUISITION: NEFF 620 A/D system, 128 channels, 100 samples per second maximum, HP 9845 B controller.

CURRENT PROGRAMS: Aerobraking configuration studies; shuttle and shuttle modification studies.

PLANNED IMPROVEMENTS: Fiscal Year 1988 - Modifications to Hypersonic Facilities Complex.

LOCAL INFORMATION CONTACT: Raymond E. Midden, Aerothermodynamics Branch, (804) 865-3984.

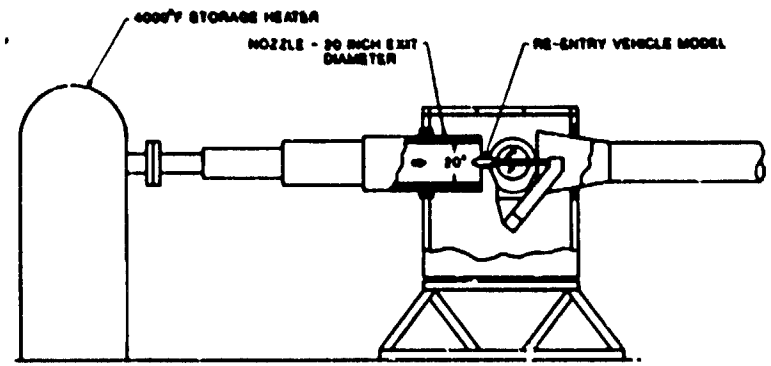
4000°F STORAGE HEATER
NOZZLE - 30 INCH EXIT DIAMETER
RE-ENTRY VEHICLE MODEL
10°

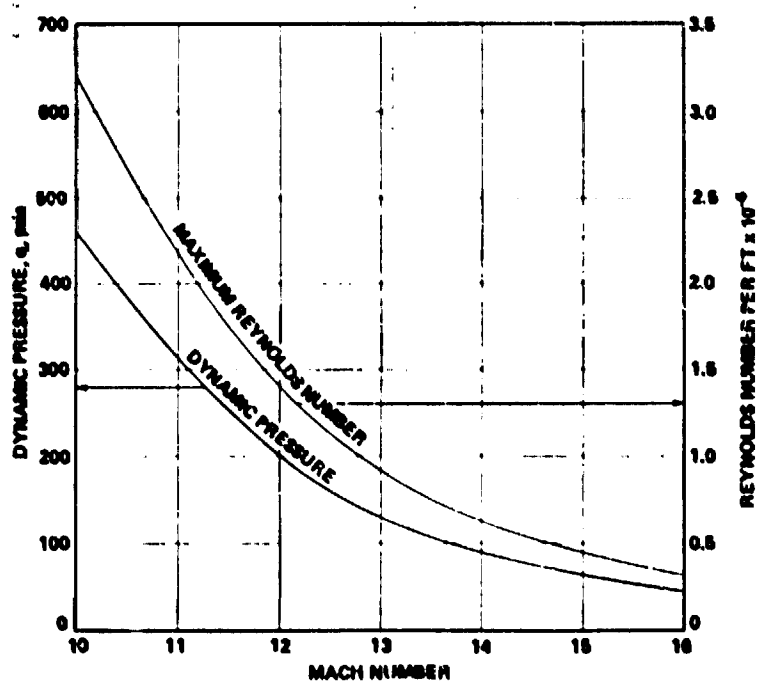
DYNAMIC PRESSURE, q, psia
REYNOLDS NUMBER PER FT x 10⁻⁶
MACH NUMBER
MAXIMUM REYNOLDS NUMBER
DYNAMIC PRESSURE
0
100
200
300
400
500
600
700
0
0.5
1.0
1.5
2.0
2.5
3.0
3.5
10
11
12
13
14
15
16

| FluiDyne Engineering Corp. | HYPERSONIC WIND TUNNELS | | COMPARABLE FACILITIES |
|---|---|---|---|
| | TEST SECTION SIZE: 20-in dia x 28 in | SPEED RANGE: (Mach No.) 11, 14 | None |
| | DATE BUILT/UPGRADED: 1959/1963 | TEMP. RANGE: 1500° - 4400°R | |
| 20-In Hypersonic Wind Tunnel | REPLACEMENT COST: $2M | REYNOLDS NO: (Per ft X $10^{-6}$) 0.7 - 2.2 | |
| | OPERATIONAL STATUS: Standby | DYNAMIC PRES: ($lb/ft^2$) 90 - 320 | |
| | | STAGNATION PRES: (psia) 2000 | |

TESTING CAPABILITIES: A zirconia storage heater discharges air at 2000 psi and 4000°F into axisymmetric nozzles to produce Mach numbers 11 to 14 in this hypersonic wind tunnel. Test duration is such that conventional force, pressure, and temperature instrumentation (developed for lower speed facilities) can be used in the hypersonic speed range. This wind tunnel has been used primarily to test scale models of reentry vehicles. Tests can be made with oscillating models to measure the pitch damping rate, both with and without ablation.

DATA ACQUISITION:

CURRENT PROGRAMS:

PLANNED IMPROVEMENTS:

LOCAL INFORMATION CONTACT: Dr. James S. Holdhusen, Executive Vice President, (612) 544-2721.

| | HYPERSONIC WIND TUNNELS | | COMPARABLE FACILITIES |
|---|---|---|---|
| Wright Aeronautical Laboratories, Wright-Patterson AFB | **TEST SECTION SIZE:** $20^D$ x 30 in | **SPEED RANGE:** (Mach No.) 12, 14 | 20-In Hypersonic Wind Tunnel - FluiDyne |
| | **DATE BUILT/UPGRADED:** 1960 | **TEMP. RANGE:** 1800° - 2000°R | |
| 20-In Hypersonic Wind Tunnel | **REPLACEMENT COST:** $1.75M | **REYNOLDS NO:** (Per ft X $10^{-6}$) 0.4 - 1.0 | |
| | **OPERATIONAL STATUS:** 1 shift per day (backlog) | **DYNAMIC PRES:** (lb/ft$^2$) 40 - 120 | |
| | | **STAGNATION PRES:** (psia) 800 - 1600 | |
| | Intermittent blowdown to vacuum, open jet, electric resistance heater<br>Model size: 1 ft long | | |

TESTING CAPABILITIES: Equipped for strut-mounted force, pressure, and heat transfer models. Run times of 3 to 5 min with cycle time of 10 to 15 min to recover vacuum. Model support retracts for tunnel start and stop. Pitch sector traverses ±20°. Overhead probe drive installed with automatic drive in x-y-z direction.

DATA ACQUISITION: A water-cooled balance, 3/4-in diam x 5.8 in long is available, rated at 5 lb axial, 16 lb normal, and 10 lb side force. A 30-channel pressure system is available. Thermocouple hot boxes and amplifiers for other transducers are available. A total of 128 channels of data may be transmitted at 100 samples per second. Data acquisition and reduction are accomplished on-site.

CURRENT PROGRAMS: A principal program is the development of a parametric data base for ballistic reentry vehicles. Flowfield diagnostic instruments are being developed for lee side vortex tracking.

PLANNED IMPROVEMENTS: Computer control of overhead probe drive and data collection upgrade to 50 channels at 1000 cycles per second.

LOCAL INFORMATION CONTACT: Melvin L. Buck, Aeromechanics Division, AFWAL/FIM, (513) 255-6156.

SCHEMATIC

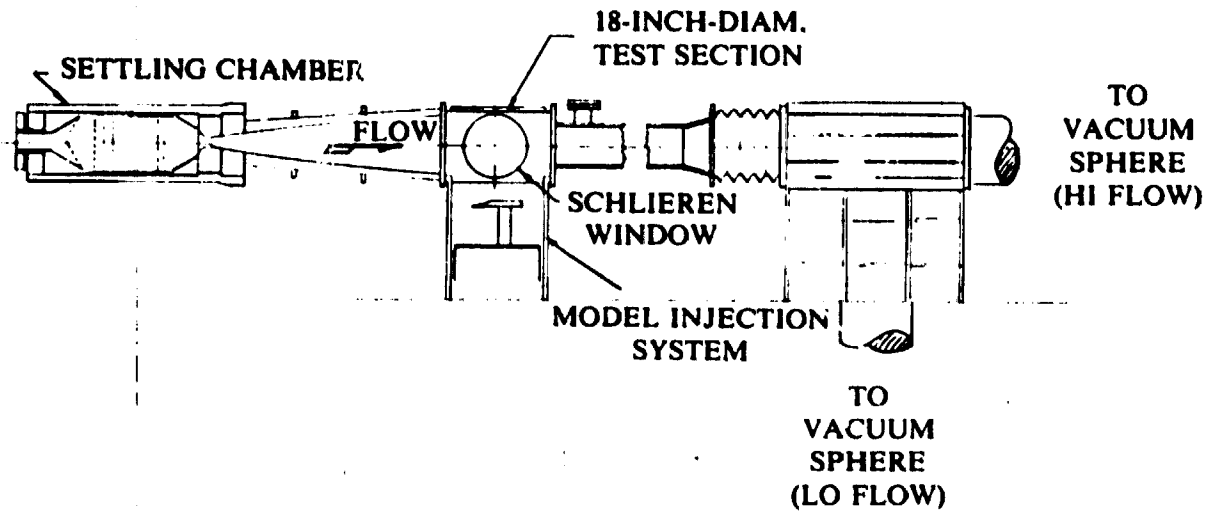
SETTLING CHAMBER
FLOW
18-INCH-DIAM.
TEST SECTION
SCHLIEREN
WINDOW
MODEL INJECTION
SYSTEM
TO
VACUUM
SPHERE
(HI FLOW)
TO
VACUUM
SPHERE
(LO FLOW)

| NASA - Langley Research Center | HYPERSONIC WIND TUNNELS | | COMPARABLE FACILITIES |
|---|---|---|---|
| | **TEST SECTION SIZE:** 18.0-in diameter | **SPEED RANGE:** (Mach No.) 8 | 2-Ft Hypersonic Tunnel - McDonnell Douglas, CA |
| | **DATE BUILT/UPGRADED:** 1952 | **TEMP. RANGE:** 1160° - 1510°R | |
| Mach 8 Variable Density Tunnel | **REPLACEMENT COST:** $38M for entire complex | **REYNOLDS NO:** (Per ft X $10^{-6}$) 0.1 - 12 | |
| | **OPERATIONAL STATUS:** Standby - all systems maintained | **DYNAMIC PRES:** (lb/ft$^2$) 100 - 2643 | |
| | | **STAGNATION PRES:** (psia) 15 - 3000 | |
| | Run time: 1.5 min to vacuum<br>Variable density blowdown<br>Test medium: Air | | |

TESTING CAPABILITIES: This tunnel has instrumentation that can measure heat transfer, pressure, force, and flow visualization data. Pressurized air is used as the test medium, and an electrical resistance heater provides air temperature control. The nozzle is axisymmetric and contoured and terminates in a test section approximately 18 in in diameter; the usable test core size is 4 to 14 in depending on pressure. Exhaust flows through a fixed second minimum either to atmosphere or to a 40-ft diameter vacuum sphere. A model injection system beneath the facility allows models up to 27 in in length to be rapidly injected into the moving airstream with angle of attack and yaw angle variation.

DATA ACQUISITION: 100 Channel Beckman System, off-site reduction, 1-Hz filter, and 40 samples per second maximum.

CURRENT PROGRAMS:

PLANNED IMPROVEMENTS: Fiscal Year 1988 - Modifications to Hypersonic Facilities Complex.

LOCAL INFORMATION CONTACT: A. Schultz, Advanced Concepts Performance Aerodynamics Branch, (804) 865-3294.

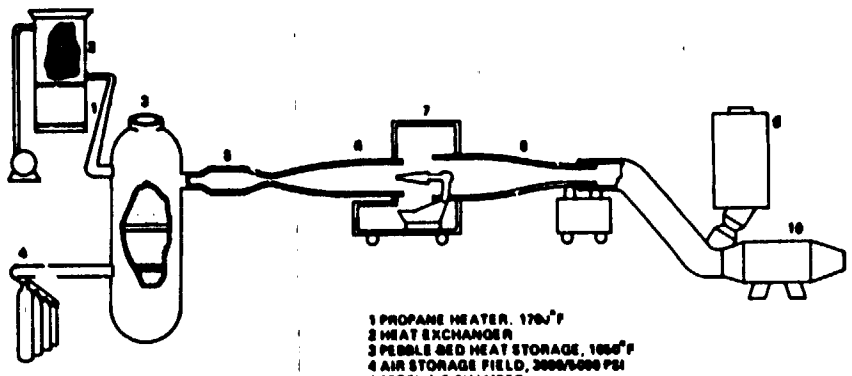

1 PROPANE HEATER, 170J°F
2 HEAT EXCHANGER
3 PEBBLE BED HEAT STORAGE, 1050°F
4 AIR STORAGE FIELD, 3000/5000 PSI
5 SETTLING CHAMBER
6 NOZZLE, MACH 5-8, EXIT DIA. APPROX. 18 IN.
7 TEST CHAMBER
8 DIFFUSER
9 EXHAUST SILENCER
10 AFTERCOOLER

SCHEMATIC VIEW OF THE HYPERSONIC TUNNEL

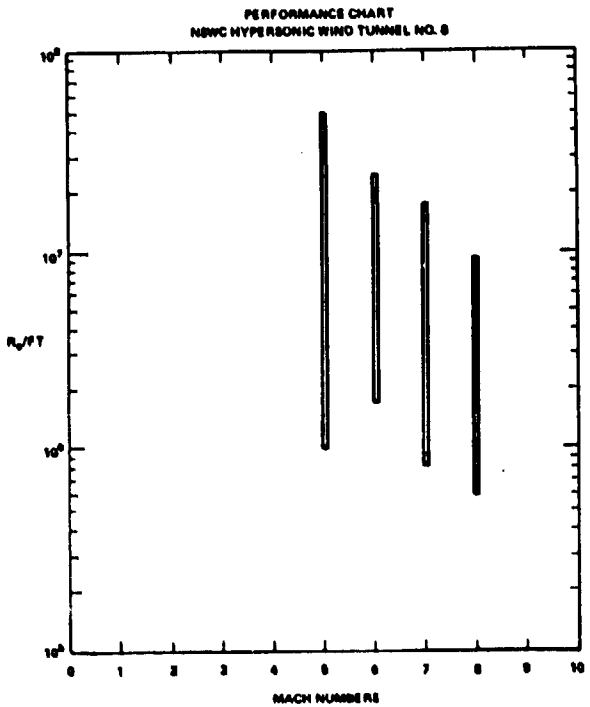

| Naval Surface Weapons Center | HYPERSONIC WIND TUNNELS | | COMPARABLE FACILITIES |
|---|---|---|---|
| | TEST SECTION SIZE: 17 - 22.25-in diameter | SPEED RANGE: (Mach No.) 5 - 8 | None |
| | DATE BUILT/UPGRADED: 1960 | TEMP. RANGE: 600° - 1460°R | |
| Hypersonic Wind Tunnel No. 8 | REPLACEMENT COST: $12M | REYNOLDS NO: (Per ft X $10^{-6}$) 100 - 7000 | |
| | OPERATIONAL STATUS: 1 shift per day operation, available upon request | DYNAMIC PRES: (lb/ft$^2$) 0.7 - 60 | |
| | | STAGNATION PRES: (psia) 73.5 - 2205 | |
| | Blowdown, hot flow<br>Model size: 8-in diameter | | |

TESTING CAPABILITIES: The NSWC Hypersonic Wind Tunnel No. 8 is a high Reynolds number, blowdown-type facility in which accurate aerodynamic and aerothermodynamic measurements can be made in Mach number range of 5 to 8. Run times range from several hours to minutes, depending on Mach number and supply conditions. The tunnel has instrumentation systems capable of measuring aerodynamic forces and moments (static and dynamic), pressures, temperatures, heat transfer rates, and schlieren/shadowgraph flow visualization. Ablation testing using Low Temperature Ablation (LTA) materials can also be accomplished due to the high temperature capability. Free-flight and free-fall techniques can be used for drag dynamic stability studies as well as for base pressure measurements.

DATA ACQUISITION: A high-speed analog-to-digital data acquisition system with 128 data channels is available.

CURRENT PROGRAMS: Navy reentry body research and development and high-performance MaRB research.

PLANNED IMPROVEMENTS: Upgrade data acquisition system in Fiscal Year 1986. Supply pressure "ramping" at rates up to 75 psi/sec available in Fiscal Year 1985.

LOCAL INFORMATION CONTACT: Robert L. P. Voisinet, Aerodynamics Branch (K24), (202) 394-1736.

1. Valve Tie Down
2. Butterfly Stop Valve
3. Cone Control Valve
4. Pressure Vessel with Inlet Diffuser Cone
5. Dummy Heater
6. Heater Matrix
7. Settling Chamber
8. Main Jacks
9. Working Section
10. Model
11. Main Control Console
12. Control Room
13. Data Handling Console
14. Fixed Subsonic Diffuser
15. Transition Piece
16. Diffuser Hydraulic Jacks
17. Moving Diffuser
18. Model Cart
19. Yoke and Quadrant
20. Flexible Nozzle
21. Secondary Main Jacks
22. Pressure Balance System

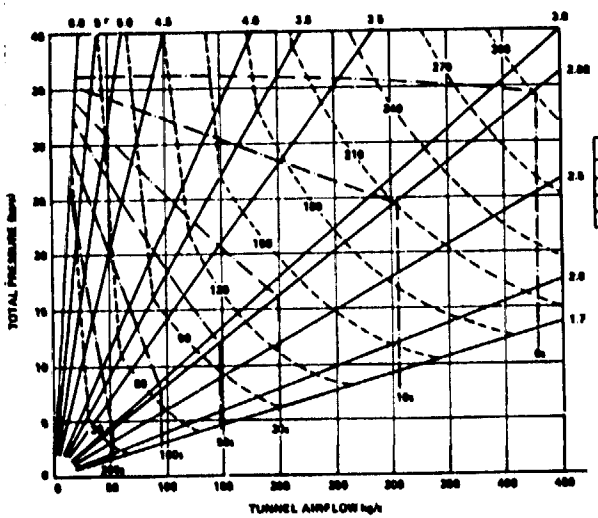


| LEGEND | | |
|---|---|---|
| LINE | QUANTITY | UNITS |
| | Mach No | – |
| | Run Time | sec |
| | Re x 10$^{6}$ | m$^{-1}$ |

PERFORMANCE CURVES FOR THE G.W. WIND TUNNEL

| | HYPERSONIC WIND TUNNELS | | COMPARABLE FACILITIES |
|---|---|---|---|
| British Aerospace Dynamics Group, Warton | TEST SECTION SIZE: 0.457 x 0.457 x 0.6 m | SPEED RANGE: (Mach No.) 1.7 - 6.0 | Hypersonic Tunnel 8 - DOD NSWC |
| | DATE BUILT/UPGRADED: 1961 | TEMP. RANGE: 288 - 473 K total temp. | |
| Guided Weapons Wind Tunnel | REPLACEMENT COST: $8M | REYNOLDS NO: (Per m X $10^{-6}$) | |
| | OPERATIONAL STATUS: Recommissioned during 1984 after operating for some years in a secondary role as a high-speed open jet facility (MO. 1 - 2.0) | DYNAMIC PRES: ($kN/m^2$) 50 - 450 | |
| | | STAGNATION PRES: (bars) 2 - 34 | |
| | Intermittent blowdown from 360 $m^3$ air storage at 40 bars. Storage shared with BAe Warton Division 1.22-m Wind Tunnel. Typical recharge time after G.W.W.T. run is 15 to 30 min. | | |

TESTING CAPABILITIES: Continuously rolling sting (0.16 - 1.0 rev/sec) with integral slip rings carries models via strain-gage internal or rear-sting balances. Pressure plotting performed using external scanivalves or discrete transducers. Heat transfer measurements have been obtained using thermocouples on calorimeter plates. 0.3-m diameter schlieren system traverses 0.6 x 0.3-m window.

DATA ACQUISITION: Purpose-built minicomputer-based system with, currently, provision for 15 analog inputs, 2 synchro inputs, 64 thermocouple inputs (multiplexed into 4 channels), digital input and output channels, and scanivalve drive unit. Up to 250 data points per second recorded and reduced to engineering units locally. On-line VAX 11/780 for processing.

CURRENT PROGRAMS: Project and research force and moment tests on missile shapes for parent company and U.K. government.

PLANNED IMPROVEMENTS: None planned. Future improvements to the facility will depend on the the workload attracted following recent recommissioning.

LOCAL INFORMATION CONTACT: Joe. A. Smith, Head of G.W. Wind Tunnel, W258, British Aerospace P.L.C., Warton Aerodrome, Preston, Lancashire, England PR4 1AX, Preston (0772) 633333, ext. 430, Telex 67627.

1. 3 MW ELECTRIC HEATER
2. HEATER PLATFORM
3. CLAMP AND NOZZLE SUPPORT BRACKET
4. NOZZLE STORAGE AND INSTALLATION REVOLVER
5. TEST SECTION
6. DIFFUSER SUPPORT AND TRAVERSING FRAME
7. BELLOWS ASSEMBLY
8. VACUUM SPHERES
9. TIN CANS FOR HEAT SINK
10. CONCRETE THRUST PAD
11. GATE VACUUM VALVE
12. TUNNEL OVERPRESSURE DUMP STACK
13. DIFFUSER
14. BALANCE CELL
15. NOZZLES
16. 3MW TRANSFORMER
17. 8 INCH SUPPLY LINE AND VALVES

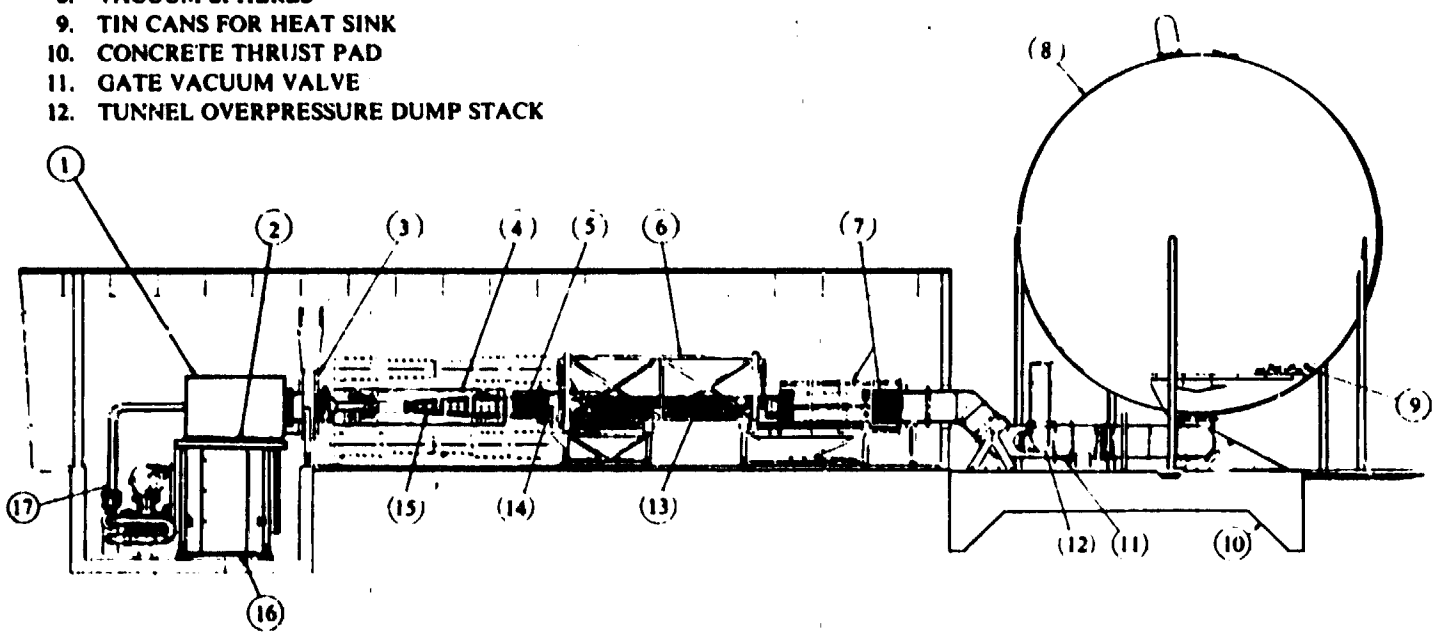

| Sandia National Laboratories | HYPERSONIC WIND TUNNELS | | COMPARABLE FACILITIES |
|---|---|---|---|
| | TEST SECTION SIZE: 18D x 48 in | SPEED RANGE: (Mach No.) 5, 8, 14 | None |
| | DATE BUILT/UPGRADED: 1962/1975 | TEMP. RANGE: 620° - 2500°R | |
| 18-In Hypersonic Wind Tunnel | REPLACEMENT COST: $5M | REYNOLDS NO: (Per ft X $10^{-6}$) 0.2 - 9.7 | |
| | OPERATIONAL STATUS: 1 shift per day | DYNAMIC PRES: (lb/ft$^2$) 0.2 - 6.6 | |
| | | STAGNATION PRES: (psia) 50 - 3000 | |
| | Intermittent blowdown to vacuum | | |

TESTING CAPABILITIES: Equipped for sting-mounted models up to 4-in in diameter. Primary testing mode is 6-component pitch-pause force and moment static stability and model surface pressure distribution, but facility is capable of dynamic stability testing. Angle-of-attack range is -10° to +20°. Nominal testing time is 30 sec with a run frequency of 1 run per hour. A schlieren/shadowgraph system provides flow visualization. The tunnel blows down from 5200 ft$^3$ of 300 psi air (for Mach 5) and from 50 ft$^3$ of 10 000 psi nitrogen (for Mach numbers 8 and 14) to 30 000 ft$^3$ of vacuum storage. Heat is supplied to the test gas by electric screen heaters powered by a 3 MW 3-phase ac transformer. Turbulent flow is obtained at Mach numbers 5 and 8 by grit transition strips. The flow at Mach number 14 is always laminar.

DATA ACQUISITION: Sixteen channels of data can be recorded on the Hewlett-Packard 1000 Series Minicomputer/based Data Acquisition System. The data are reduced at the central computer facility through a high-speed link providing preliminary data and plots within 10 min of testing. A PSI Electronic Pressure Scanning System provides capability for measuring virtually any number of pressures.

CURRENT PROGRAMS: Primary emphasis is directed at static stability and associated flow characteristics of rockets, guided missiles, and ballistic and maneuvering reentry vehicles in support of Department of Energy Military Applications Programs and Department of Defense Reimbursable Programs.

PLANNED IMPROVEMENTS: The tunnel was modernized in 1976 with new 3 MW electric screen heaters and new Mach 5, 8, and 14 nozzles. No further improvements are being contemplated at this time.

LOCAL INFORMATION CONTACT: Donald D. McBride, Supervisor, Experimental Aerodynamics Division, (505) 844-6957.

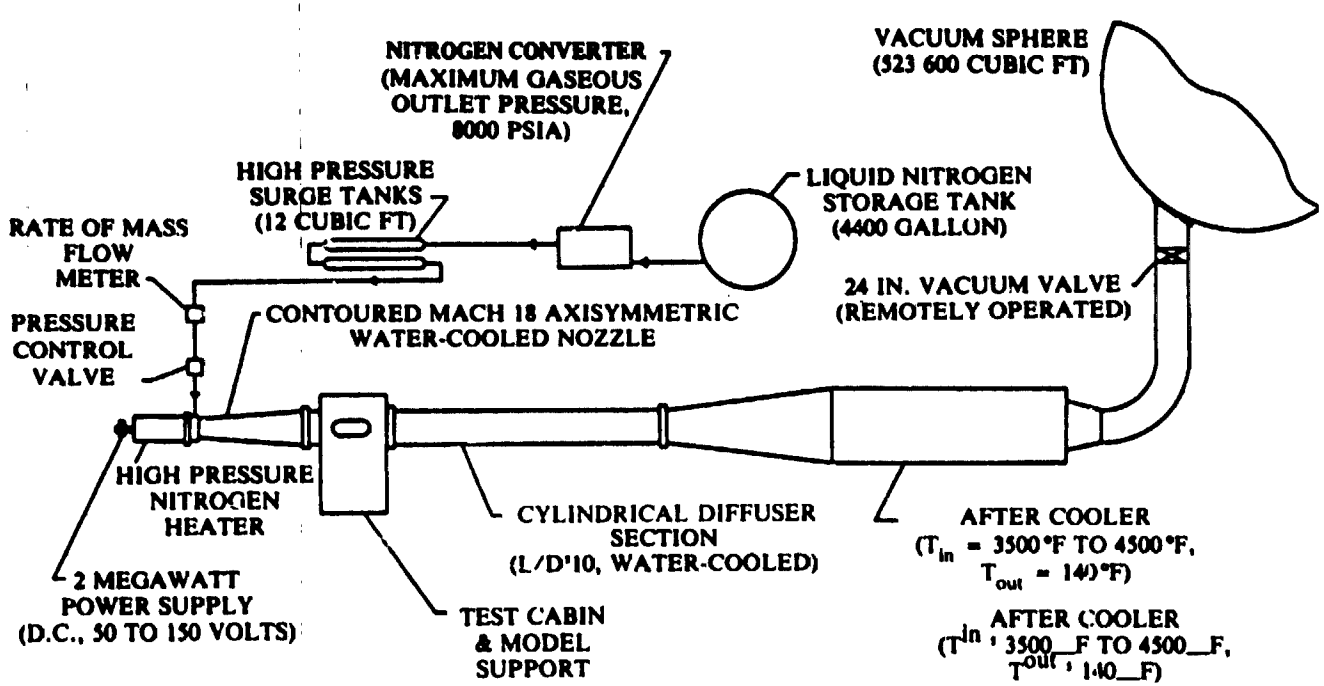
NITROGEN CONVERTER
(MAXIMUM GASEOUS
OUTLET PRESSURE,
8000 PSIA)
VACUUM SPHERE
(523 600 CUBIC FT)
HIGH PRESSURE
SURGE TANKS
(12 CUBIC FT)
LIQUID NITROGEN
STORAGE TANK
(4400 GALLON)
RATE OF MASS
FLOW
METER
24 IN. VACUUM VALVE
(REMOTELY OPERATED)
PRESSURE
CONTROL
VALVE
CONTOURED MACH 18 AXISYMMETRIC
WATER-COOLED NOZZLE
HIGH PRESSURE
NITROGEN
HEATER
CYLINDRICAL DIFFUSER
SECTION
(L/D'10, WATER-COOLED)
AFTER COOLER
($T_{in}$ = 3500°F TO 4500°F,
$T_{out}$ = 140°F)
2 MEGAWATT
POWER SUPPLY
(D.C., 50 TO 150 VOLTS)
TEST CABIN
& MODEL
SUPPORT
AFTER COOLER
($T^{in}$ ' 3500__F TO 4500__F,
$T^{out}$ ' 140__F)

| NASA - Langley Research Center | HYPERSONIC WIND TUNNELS | | COMPARABLE FACILITIES |
|---|---|---|---|
| | TEST SECTION SIZE: 16-in diameter | SPEED RANGE: (Mach No.) 18 | Hypervelocity #9 Research Tunnel - DOD NSWC |
| | DATE BUILT/UPGRADED: 1964 | TEMP. RANGE: 3000° - 3500° R | |
| Hypersonic Nitrogen Tunnel | REPLACEMENT COST: $49M for entire complex | REYNOLDS NO: (Per ft X $10^{-6}$) 0.17 - 0.40 | |
| | OPERATIONAL STATUS: 1 shift per day (backlog) | DYNAMIC PRES: (lb/ft$^2$) 25 - 73 | |
| | | STAGNATION PRES: (psia) 2000 - 6000 | |
| | Test medium: Nitrogen; Run time: In excess of 30 min<br>Open jet, blowdown | | |

TESTING CAPABILITIES: Current test capability includes: the measurement of aerodynamic forces and moments, performance, stability, control of advanced aerospace vehicles, pressure and heating distributions. The facility is composed of 4000-gal liquid nitrogen storage tank, a 6-gal per min cryopump/evaporator system, two 6 ft$^3$ high-pressure surge tanks, a 2 MW power supply, a tungsten grid resistance heater, stagnation chamber-nozzle-test section assembly, an after cooler, and a 100-ft vacuum sphere. The cryopump/evaporator system converts liquid nitrogen from the storage tank to gaseous nitrogen supplied to the surge tanks at pressures up to 8000 psia. From the surge tanks, the gas is supplied to a stagnation chamber where it is heated to about 3000°F. It is then expanded through the water-cooled nozzle (16-in exit diameter) into the open jet test section where a 6-in diameter, M = 18 test core is produced. The gas is decelerated by a water-cooled diffuser, cooled to 140°F by the after cooler, and collected by the 100-ft sphere. The test section is equipped with a programmable 2000 psi hydraulic, quick injection strut system and a programmable precision flow survey mechanism.

DATA ACQUISITION: 100 Channel Beckman System, filtered to 1-Hz, 40 samples per second maximum.

CURRENT PROGRAMS: Advanced aerospace transportation concepts including Space Shuttle, shuttle derivatives, concepts beyond shuttle aerobreaking orbit-to-orbit transports, and OEX support.

PLANNED IMPROVEMENTS: Fiscal Year 1988 - Modifications to Hypersonic Facilities Complex.

LOCAL INFORMATION CONTACT: R.L. Calloway, Vehicle Analysis Branch, (804) 865-2483.

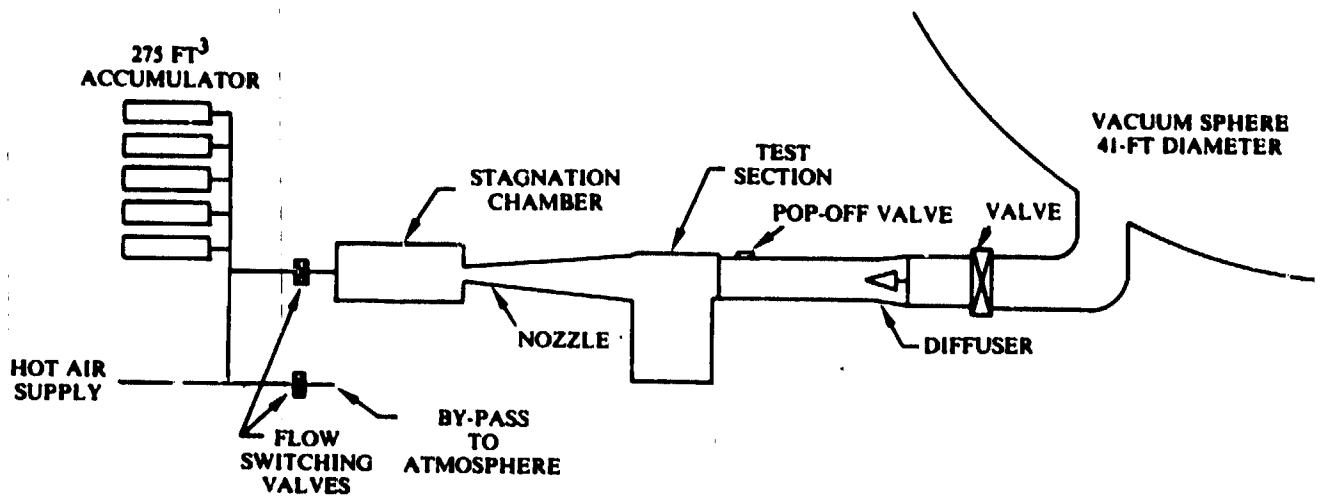
275 FT$^3$
ACCUMULATOR
STAGNATION
CHAMBER
TEST
SECTION
POP-OFF VALVE
VALVE
VACUUM SPHERE
41-FT DIAMETER
NOZZLE
DIFFUSER
HOT AIR
SUPPLY
FLOW
SWITCHING
VALVES
BY-PASS
TO
ATMOSPHERE

| NASA–Langley Research Center | HYPERSONIC WIND TUNNELS | | COMPARABLE FACILITIES |
|---|---|---|---|
| | TEST SECTION SIZE: 12-in diameter | SPEED RANGE: (Mach No.) 6 | Mach 6 High Reynolds Number Facility - DOD Wright Air Labs |
| | DATE BUILT/UPGRADED: 1958 | TEMP. RANGE: 700° - 1060°R | |
| Mach 6 High Reynolds Number Tunnel | REPLACEMENT COST: $38M for entire complex | REYNOLDS NO: (Per ft X $10^{-6}$) 1.8 - 50 | |
| | OPERATIONAL STATUS: 1 shift per day (backlog) | DYNAMIC PRES: (lb/ft$^2$) 115 - 7350 | |
| | | STAGNATION PRES: (psia) 50 - 3200 | |
| | Run time: 5 min (max)<br>High Reynolds number blowdown<br>Test medium: Air | | |

TESTING CAPABILITIES: In this High Reynolds Number Tunnel, the test medium is air heated by electric resistance heaters. Also, the tunnel incorporates an axisymmetric-contoured nozzle with a low flow turning angle to minimize pressure gradient effects on the nozzle wall boundary layer. There are two interchangeable test sections: One test section has schlieren windows and a model injection . .em capable of injecting 4-ft long models for configuration, and heat transfer studies at Reynolds numbers up to 200 million. The other test section is for tunnel-wall boundary layer studies using heat-transfer, skin friction and pitot and total temperature survey measurements over a length of 12 ft and Reynolds numbers up to 1200 million. This facility is capable of fundamental aerodynamic and fluid dynamic studies over a large Reynolds number range at Mach 6.

DATA ACQUISITION: Beckman data reduction system and a HP 1000 minicomputer system.

CURRENT PROGRAMS: Combined Raman-Laser doppler velocimeter development and associated measurements of density, temperature, and velocities in a three-dimensional wake. A particle seeding generator capable of operating at the high pressure and temperature environment of the stagnation chamber is under development.

PLANNED IMPROVEMENTS:

LOCAL INFORMATION CONTACT: Dennis M. Bushnell, Head, Viscous Flow Branch, (804) 865-4546.

| | HYPERSONIC WIND TUNNELS | | COMPARABLE FACILITIES |
|---|---|---|---|
| Wright Aeronautical Laboratories, Wright-Patterson AFB | TEST SECTION SIZE: $12^D$ x 20 ft | SPEED RANGE: (Mach No.) 6 | Mach 6 High Reynolds Number Tunnel - NASA LaRC |
| | DATE BUILT/UPGRADED: 1972 | TEMP. RANGE: 1100°R | |
| Mach 6 High Reynolds Number Facility | REPLACEMENT COST: $1.75M | REYNOLDS NO: (Per ft X $10^{-6}$) 10 - 30 | |
| | OPERATIONAL STATUS: 1 shift per day (backlog) | DYNAMIC PRES: (lb/ft$^2$) 1800 - 5400 | |
| | | STAGNATION PRES: (psia) 700 - 2100 | |
| | Intermittent blowdown, open jet, steel pebble bed storage heater<br>Model size: 1 ft long | | |

TESTING CAPABILITIES: Equipped for strut-mounted force, pressure, and heat transfer models. Run times to 100 sec at mass flux of 90 lbm/sec. Run rates of 15 runs per day are possible, with heater temperature level imposing the limit. Model support retracts for tunnel start and stop. Pitch sector traverses ±20°. Overhead probe drive installed with automatic drive in x-y-z direction.

DATA ACQUISITION: A 45-channel pressure system is available. Thermocouple hot boxes and amplifiers for other transducers are available. Laser anemometers have been used successfully. Hot-wire anemometers are under development. A total of 128 channels of data may be transmitted at 100 samples per second. Data acquisition and reduction are accomplished on-site.

CURRENT PROGRAMS: The principal program in the facility is the measurement of turbulent boundary layer characteristics over rough and smooth walls. Aerodynamic heating tests have been conducted on a variety of reentry configurations.

PLANNED IMPROVEMENTS: Low-pressure operation by attaching exhaust to vacuum system. Computer control of overhead probe drive and data collection upgrade to 50 channels at 1000 cycles per second.

LOCAL INFORMATION CONTACT: Melvin L. Buck, Aeromechanics Division, AFWAL/FIM, (513) 255-6156.

| ONERA Chalais Meudon, France | HYPERSONIC WIND TUNNELS | | COMPARABLE FACILITIES |
|---|---|---|---|
| | TEST SECTION SIZE: #1 0.33-m diameter #2 0.34-m diameter | SPEED RANGE: (Mach No.) #1 3.0 - 7.0 #2 10.0 | Test Section #1 - None<br>Test Section #2 Continuous Flow Hypersonic Tunnel - NASA LaRC |
| | DATE BUILT/UPGRADED: 1963 | TEMP. RANGE: 300 - 1100 K | |
| R3 CH | REPLACEMENT COST: | REYNOLDS NO: (Per m × $10^{-6}$) <2.1 | |
| | OPERATIONAL STATUS: 5 to 6 runs per day | DYNAMIC PRES: ($kN/m^2$) | |
| | | STAGNATION PRES: (bars) Up to 170 | |
| | Blowdown, open jet; Run time: 10 to 35 sec; one line electric heater (M = 10); very quick starting at stabilized conditions | | |

TESTING CAPABILITIES: Force measurements on sting 6-component balance; missile stage separation with jet simulation by air or solid propellant thruster. Heat flux measurements (thermopaints, thermocouples...) and schlieren visualization.

DATA ACQUISITION SYSTEM: SOLAR 16 - 45 local computer (with R3Ch).

CURRENT PROGRAMS: Study of hypersonic aircraft or missiles. Stage separation.

PLANNED IMPROVEMENTS:

LOCAL INFORMATION CONTACT: J.P. Chevallier, Division Aerodynamique Experimentale ONERA, 92195 Meudon Principal Cedex, France, (1) 534 75 01.

| ONERA Chalais Meudon, France | HYPERSONIC WIND TUNNELS | | COMPARABLE FACILITIES |
|---|---|---|---|
| | TEST SECTION SIZE: #1 0.19-m diameter #2 0.33-m diameter | SPEED RANGE: (Mach No.) #1 3.0 - 4.0 #2 5.0 - 7.0 | Test Section #1 3.5-Ft Hypersonic Wind Tunnel - NASA Ames |
| | DATE BUILT/UPGRADED: 1960/1963 | TEMP. RANGE: 300 - 630 K | |
| R2 CH | REPLACEMENT COST: | REYNOLDS NO: (Per m X $10^{-6}$) <1.5 | Test Section #2 R3CH - Meudon, France |
| | OPERATIONAL STATUS: 8 to 10 runs per day | DYNAMIC PRES: ($kN/m^2$) | |
| | | STAGNATION PRES: (bars) 2 - 80 | |
| | Blowdown, open-jet maximum run time: 35 sec - electric heater/accumulation type | | |

TESTING CAPABILITIES: Force measurements on sting 6-component balance; missile stage separation with jet simulation by air or solid propellant thruster. Heat flux measurements (thermopaints, thermocouples...) and schlieren visualization.

DATA ACQUISITION SYSTEM: SOLAR 16 - 45 local computer (with R3Ch).

CURRENT PROGRAMS: Study of hypersonic aircraft or missiles. Stage separation.

PLANNED IMPROVEMENTS:

LOCAL INFORMATION CONTACT: J.P. Chevallier, Division Aerodynamique Experimentale ONERA, 92195 Meudon Principal Cedex, France, (1) 534 75 01.

| | HYPERSONIC WIND TUNNELS | | COMPARABLE FACILITIES |
|---|---|---|---|
| ARA Bedford, United Kingdom | TEST SECTION SIZE: 1.0-ft diameter | SPEED RANGE: (Mach No.) 7.0 | None |
| | DATE BUILT/UPGRADED: 1965 | TEMP. RANGE: 1260° R | |
| M7T | REPLACEMENT COST: | REYNOLDS NO: (Per ft X $10^{-6}$) 10 - 15 | |
| | OPERATIONAL STATUS: Operational | DYNAMIC PRES: ($lb/ft^2$) 1700 - 2600 | |
| | | STAGNATION PRES: (psia) 1470 - 2205 | |
| | Blowdown and atmospheric exhaust | | |

TESTING CAPABILITIES: Sting-mounted force and pressure models, schlieren and shadowgraph, and pitch damping models.

DATA ACQUISITION: Ten channels including a 6-component strain-gage balance, individual pressure transducers, and a scanivalve.

CURRENT PROGRAMS:

PLANNED IMPROVEMENTS:

LOCAL INFORMATION CONTACT: E.C. Carter, Chief Aerodynamicist, (0234 50681).

| | HYPERSONIC WIND TUNNELS | | COMPARABLE FACILITIES |
|---|---|---|---|
| ARA Bedford, United Kingdom | **TEST SECTION SIZE:** 1.0 x 1.33 ft | **SPEED RANGE: (Mach No.)** 4.0 - 5.0 | 4-Ft Trisonic - Lockheed, CA |
| | **DATE BUILT/UPGRADED:** 1965 | **TEMP. RANGE:** 684°R | |
| M4T | **REPLACEMENT COST:** | **REYNOLDS NO: (Per ft X $10^{-6}$)** 23 - 14 | |
| | **OPERATIONAL STATUS:** Operational | **DYNAMIC PRES: ($lb/ft^2$)** 1500 - 3000 | |
| | | **STAGNATION PRES: (psia)** 147 - 294 | |
| | Blowdown and atmospheric exhaust | | |

TESTING CAPABILITIES: Sting-mounted force and pressure models, schlieren and shadowgraph, and pitch damping models.

DATA ACQUISITION: Ten channels including a 6-component strain-gage balance, individual pressure transducers, and a scanivalve.

CURRENT PROGRAMS:

PLANNED IMPROVEMENTS:

LOCAL INFORMATION CONTACT: E.C. Carter, Chief Aerodynamicist, (0234 50681).

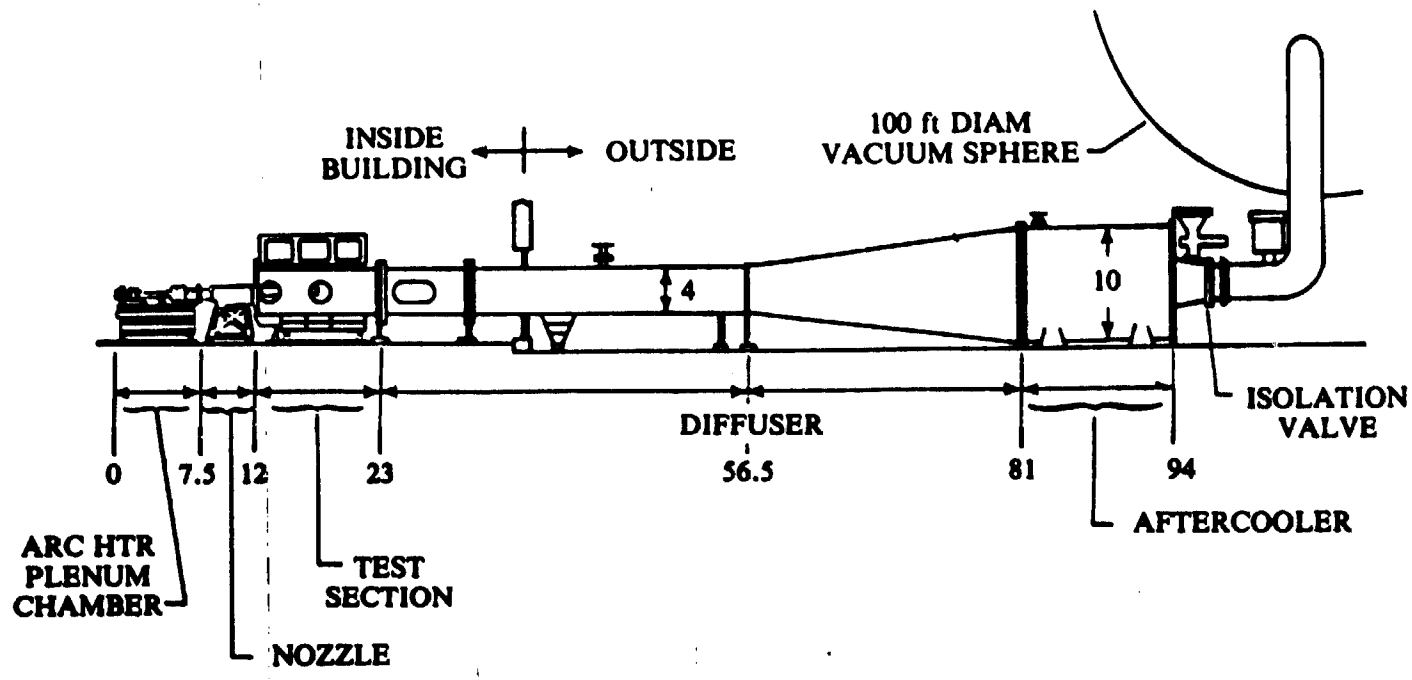


DIMENSIONS ARE IN FEET

| NASA–Langley Research Center | HYPERSONIC WIND TUNNELS | | COMPARABLE FACILITIES |
|---|---|---|---|
| | TEST SECTION SIZE: 4 ft | SPEED RANGE: (Mach No.) 4.7 - 6.0 | None |
| | DATE BUILT/UPGRADED: 1974 | TEMP. RANGE: 1000° - 4000°R | |
| Scramjet Test Facility | REPLACEMENT COST: $49M for entire complex | REYNOLDS NO: (Per ft X $10^{-6}$) 0.13 - 5.2 | |
| | OPERATIONAL STATUS: 1 shift per day (backlog) | DYNAMIC PRES: (lb/ft$^2$) 50 - 600 | |
| | | STAGNATION PRES: (psia) 44.1 - 588 | |
| | Run time: 10 - 60 sec<br>Electric arc heated blowdown<br>Test medium: Air | | |

TESTING CAPABILITIES: The facility is an electric-arc-heated facility that provides a true-temperature, true-velocity flow environment for testing hydrogen-burning scramjet engine models. Facility systems include 2-10 MW dc electric power supplies, a 5000 lb/in$^2$ air supply system, a 1400 lb/in$^2$ deionized cooling water system, a gaseous hydrogen fuel system, a hydraulic model injection system, a 100-ft diameter vacuum sphere, and a 3-stage steam ejector for evacuating the sphere. The test air exhausts from the 11 x 11 in nozzle exist as free jet into a 4-ft diameter test section. Typical model sizes are 9.5 x 7.5 in in cross section by 5 ft long.

DATA ACQUISITION: The present data acquisition system has 217 channels with a maximum data sample rate of 10 per second on each channel. The system is wired directly into Langley's Central Computing Complex.

CURRENT PROGRAMS: Scramjet engine test, parametric inlet model tests, and direct-connect flameholding tests.

PLANNED IMPROVEMENTS: Silane system to use for ignition of hydrogen-air mixture, new data acquisition system.

LOCAL INFORMATION CONTACT: Robert W. Guy, Hypersonic Propulsion Branch, (804) 865-3772.

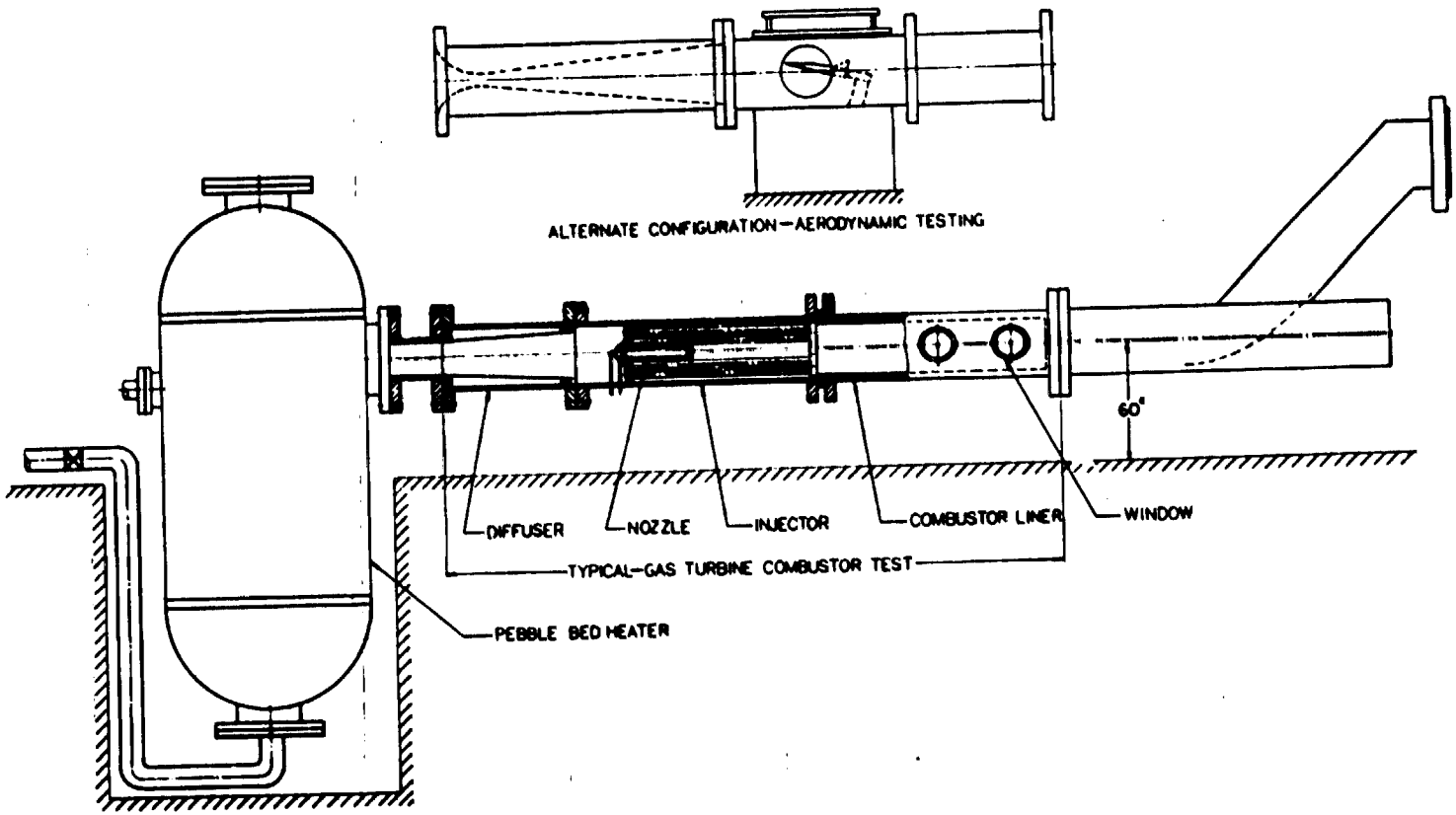
ALTERNATE CONFIGURATION—AERODYNAMIC TESTING
60"
DIFFUSER
NOZZLE
INJECTOR
COMBUSTOR LINER
WINDOW
TYPICAL-GAS TURBINE COMBUSTOR TEST
PEBBLE BED HEATER

| General Applied Science Laboratories Westbury, New York | HYPERSONIC WIND TUNNELS | | COMPARABLE FACILITIES |
|---|---|---|---|
| | TEST SECTION SIZE: Variable up to 25 x 25 x 36 in | SPEED RANGE: (Mach No.) 0.1 - 12 | None |
| | DATE BUILT/UPGRADED: 1964/1975/1982 | TEMP. RANGE: Ambient - 2000°R | |
| High Temperature Storage Heater Propulsion Wind Tunnel | REPLACEMENT COST: $1.3M | REYNOLDS NO: (Per ft X $10^{-6}$) 0 - 15 | |
| | OPERATIONAL STATUS: 1 shift per day | DYNAMIC PRES: (lb/ft$^2$) 0 - 4300 | |
| | | STAGNATION PRES: (psia) 0 - 1500 | |
| | Blowdown type facility utilizing electrically driven storage heater. Can be configurated for either aerodynamic or propulsion testing. | | |

TESTING CAPABILITIES: Test-specific nozzles and test sections adapt to heater for aerodynamic and propulsion experiments. System supplied from 2000 psi, 3500 ft$^3$ air supply system. Supporting systems include liquid and gaseous fuel delivery to the experiment. Test durations range from 1 to 15 min.

DATA ACQUISITION: 156 channels of pressure instrumentation (to 30 psia) and 64 channels of supplementary analog data signals for high pressure, temperature, force, etc., with A/D conversion and on-line transfer to HP-1000 computer for data storage, reduction, and plotting. Instrumentation includes on-line gas sampling and complete emissions measurement capability. Data transfer to off-site locations also available.

CURRENT PROGRAMS: Recent testing has been concerned with direct connect subsonic combustor and fuel nozzle development for turbine and ramjet engine applications.

PLANNED IMPROVEMENTS:

LOCAL INFORMATION CONTACT: Gerald Roffe, (516) 832-2560.

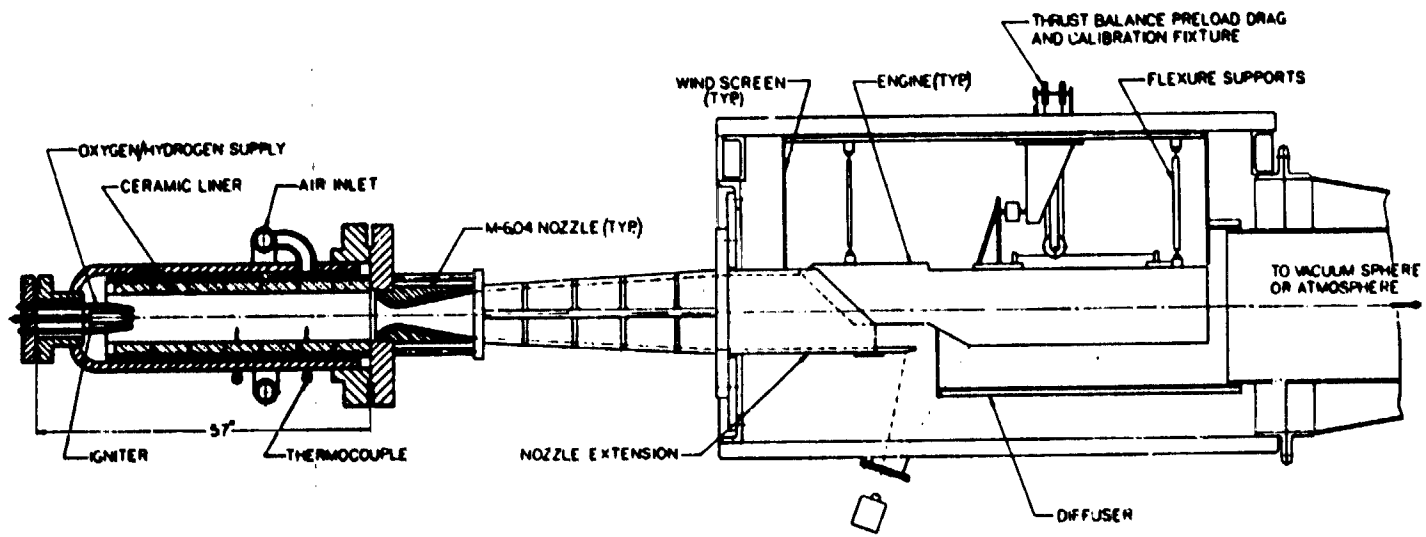
THRUST BALANCE PRELOAD DRAG
AND CALIBRATION FIXTURE
WIND SCREEN
(TYP)
ENGINE (TYP)
FLEXURE SUPPORTS
OXYGEN/HYDROGEN SUPPLY
CERAMIC LINER
AIR INLET
M-604 NOZZLE (TYP)
TO VACUUM SPHERE
OR ATMOSPHERE
57"
IGNITER
THERMOCOUPLE
NOZZLE EXTENSION
DIFFUSER

| General Applied Science Laboratories, Westbury, New York | HYPERSONIC WIND TUNNELS | | COMPARABLE FACILITIES |
|---|---|---|---|
| | TEST SECTION SIZE: Variable 15 x 15 x 48 in, typical | SPEED RANGE: (Mach No.) 2.7 - 8.0 | None |
| | DATE BUILT/UPGRADED: 1965/1979 | TEMP. RANGE: Ambient - 4500°R | |
| High-Pressure Vitiated-Air Heater Propulsion Wind Tunnel (VAH) | REPLACEMENT COST: $1.5M | REYNOLDS NO: (Per ft X $10^{-6}$) 0 - 17 | |
| | OPERATIONAL STATUS: 1 shift per day | DYNAMIC PRES: (lb/ft$^2$) 0 - 5000 | |
| | | STAGNATION PRES: (psia) 0 - 1200 | |
| | Blowdown type facility that can be configured for either aerodynamic or airbreathing propulsion tests | | |

TESTING CAPABILITIES: Can be configured for aerodynamic or propulsion testing by nozzle and test section changes incorporated for specific test programs. Auxiliary equipment includes four independently controlled and regulated fuel delivery circuits to the experiment. Fuel-handling capability includes hydrogen, hydrocarbons, and pyrophoric fuels. Facility is supported by 2000 psia, 3500 ft$^3$ air supply and 40 000 ft$^3$ vacuum sphere. Typical test durations are 15 - 30 sec.

DATA ACQUISITION: 156 channels of pressure instrumentation (to 30 psia) and 64 channels of high pressure (greater than 30 psia), temperature and force data with A/D conversion, and on-line transfer to HP-1000 computer system for data storage reduction and plotting. Data transfer to off-site computer locations also available.

CURRENT PROGRAMS: Main emphasis is directed toward high-speed combustion research for airbreathing propulsion applications in Mach number range from 4 to 8. Test programs have included thrust measurement of subscale ramjet and scramjet engine modules and components, and direct connect combustor development testing.

PLANNED IMPROVEMENTS:

LOCAL INFORMATION CONTACT: E. Sanlorenzo, (516) 832-2563.

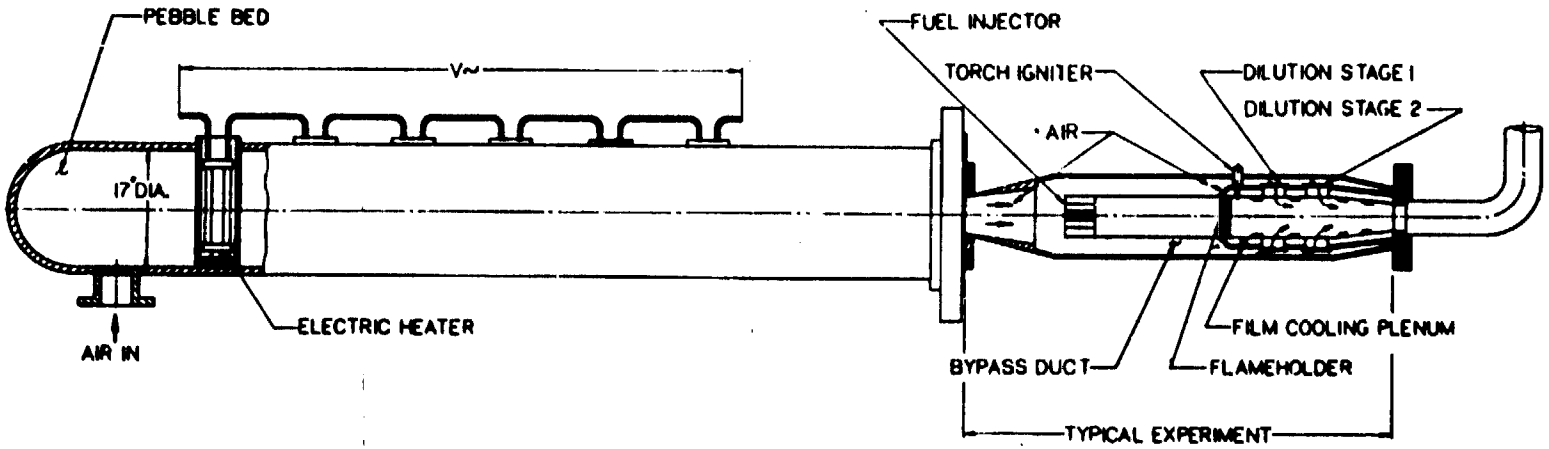
PEBBLE BED
V~
17" DIA.
AIR IN
ELECTRIC HEATER
FUEL INJECTOR
TORCH IGNITER
AIR
DILUTION STAGE 1
DILUTION STAGE 2
FILM COOLING PLENUM
BYPASS DUCT
FLAMEHOLDER
TYPICAL EXPERIMENT

| General Applied Science Laboratories Westbury, New York | HYPERSONIC WIND TUNNELS | | COMPARABLE FACILITIES |
|---|---|---|---|
| | TEST SECTION SIZE: Variable 13 x 13 x 24 in | SPEED RANGE: (Mach No.) 0.1 - 7.0 | None |
| | DATE BUILT/UPGRADED: | TEMP. RANGE: Ambient - 1700°R | |
| High Mass Flow Storage Heater Propulsion Wind Tunnel (HPB) | REPLACEMENT COST: | REYNOLDS NO: (Per ft X $10^{-6}$) 0 - 30 | |
| | OPERATIONAL STATUS: | DYNAMIC PRES: (lb/ft$^2$) 0 - 6000 | |
| | | STAGNATION PRES: (psia) 0 - 1500 | |
| | Electrically driven storage heater blowdown type facility suitable for aerodynamic or propulsion testing | | |

TESTING CAPABILITIES: Test-specific nozzles and test sections adapt to heater for aerodynamic and propulsion experiments. System supplied from 2000 psi, 3500 ft$^3$ air-supply system. Supporting systems include liquid and gaseous fuel delivery to the experiment. Test running time ranges from 1 to 30 min.

DATA ACQUISITION: 156 channels of pressure instrumentation (to 30 psia) and 64 channels of supplementary analog data signals for high pressure, temperature, force, etc., with A/D conversion and on-line transfer to [illegible]-1000 computer for data storage, reduction, and plotting. Instrumentation includes on-line gas sampling and complete emissions measurement capability. Data transfer to off-site computer locations also available.

CURRENT PROGRAMS: Recent [illegible] is directed toward turbine engine combustor development including secondary flow dilution studies and materials testing for advanced combustion.

PLANNED IMPROVEMENTS:

LOCAL INFORMATION CONTACT: Gerald Roffe, (516) 832-2560.

# LIST OF INSTALLATION ADDRESSES

## UNITED STATES INSTALLATIONS

Ames Research Center
National Aeronautics and Space Administration
Moffett Field, CA 94035

Arnold Engineering and Development Center
AEDC/DOTF
Arnold, AFS, TN 37389

Air Force Wright Aeronautical Laboratories
Wright Patterson AFB, OH 45424

AVCO Systems Division
201 Lowell Street
Wilmington, MA 081887

The Boeing Company
Seattle, WA 98124

Boeing Vertol
P.O. Box 16858
Philadelphia, PA 19142

California Institute of Technology
Department of Aeronautics
1202 East California Blvd.
Pasadena, CA 91125

Calspan Corporation
4455 Genesee Street
P.O. Box 400
Buffalo, NY 14225

Department of the Navy
David Taylor Naval Ship Research and Development Center Headquarters
Bethesda, MD 20084

FluiDyne Engineering Corporation
5900 Olson Memorial Highway
Minneapolis, MN 55422

General Dynamics
Convair Division
P.O. Box 80877
San Diego, CA 92138

General Applied Science
925 Merrick Ave
Westbury, NY 11590

George C. Marshall Space Flight Center
National Aeronautics and Space Administration
Marshall Space Flight Center, AL 35812

Georgia Institute of Technology
School of Aerospace Engineering
Atlanta, GA 30332

Grumman Aerospace
Bethpage, Long Island, NY 11714

Langley Research Center
National Aeronautics and Space Administration
Hampton, VA 23665

Lewis Research Center
National Aeronautics and Space Administration
21000 Brookpark Road
Cleveland, OH 44135

Lockheed-California Company
P.O. Box 551
Burbank, CA 91520

Lockheed-Georgia Company
P.O. Box 69
Smyrna, GA 30080

Massachusetts Institute of Technology
Cambridge, MA 02139



PRECEDING PAGE BLANK NOT FILMED

UNITED STATES INSTALLATIONS (Continued)

McDonnell Douglas Corporation
3855 Lakewood Blvd.
Long Beach, CA 90846

Naval Surface Weapons Center
Silver Spring, MD 20910

Northrop Corporation
One Northrop Avenue
Hawthorne, CA 90250

Rockwell International Corporation
North American Aircraft Division
100 North Sepulveda Blvd.
El Segundo, CA 90245

Rockwell International Corporation
North American Aircraft Operations–
Columbus
P.O. Box 1259
Columbus, OH 43216

Sandia Laboratories
Albuquerque, NM 87185

Texas A&M University
College Station, TX 77843

United Technologies Research Center
Silver Lane
East Hartford, CT 06108

University of Oklahoma
Department of Aerospace, Mechanical and
Nuclear Engineering
Norman, OK 73019

University of Washington
Department of Aeronautics and Astronautics
Seattle, WA 98195

Virginia Polytechnic Institute and State
University
Aerospace and Ocean Engineering Department
215 Randolf Hall
Blacksburg, VA 24061

Vought Corporation
Dallas, TX 75265

Wichita State University
Wichita, KS 67208

FOREIGN INSTALLATIONS

Deutsche Forschungs-und
Versuchanstalt fur Luft-und
Raumfahrt e.V (DFVLR)
Postfach 90 60 58
5000 Koln 90

National Aerospace Laboratory (NRL)
P.O. Box 126
1006 BM Amsterdam
Netherlands

National Research Council of Canada (NRC)
Montreal Road
Building M 13A
Ottawa, Ontario K1A0R6
Canada

Ministry of Defence Royal Aircraft Establish-
ment (RAE)
Farnborough Hants G0146TD
United Kingdom

Office National D'Etudes
et de Recherches Aerospaltiales (ONERA)
B.P. No. 72
92322 Chatillon Cedex
France

Scientific Attache
American Embassy Japan
APO San Francisco
96503

# GLOSSARY

| Abbreviation | Definition |
|---|---|
| 2-D | Two Dimensional |
| 3-D | Three Dimensional |
| AEDC | Arnold Engineering Development Center |
| APTU | Aerodynamic and Propulsion Test Unit |
| ARC | Ames Research Center |
| AWT | Altitude Wind Tunnel |
| BA | British Aerospace |
| CA | California |
| CH | Chalais-Meudon, France |
| DFVLR | Deutsche Forschungs-und Versuchsanstalt fur Luft-und Raumfahrt |
| DNW | Duits-Nederlandse Windtunnel/Deutsch Niederlandischer Windkanal |
| DoD | Department of Defense (USA) |
| FHI | Fuji Heavy Industries |
| FY | Fiscal Year |
| GA | Georgia |
| HDG | Hochdruck-Windkanal Göttingen |
| HKG | Hochgeschwindigkeitskanal Göttingen |
| HMK | Hyperschall-Kanal Koln |
| HPB | High Mass Flow Storage Heater Propulsion Wind Tunnel |
| HST | High Speed Tunnel |
| HTT | High Temperature Tunnel (NASA Langley) |
| IRT | Icing Research Tunnel |
| KHI | Kawasaki Heavy Industries |
| LST | Large Subsonic Tunnel |
| LTPT | Low Turbulence Pressure Tunnel |
| LV | Laser Velocimeter |
| LaRC/LRC | Langley Research Center |
| LeRC | Lewis Research Center |
| MA | Modane, France |

| Abbreviation | Definition |
|---|---|
| MIT | Massachusetts Institute of Technology |
| Mo | Missouri |
| MSFC | Marshall Space Flight Center |
| Mod | Modifications |
| NAAL | North American Aeronautics Laboratory |
| NAL | National Aerospace Laboratory |
| NASA | National Aeronautics and Space Administration |
| NRC | National Research Council |
| NTF | National Transonic Facility |
| NWB | Niedergeschwindigkeitswindkanal Braunschweig |
| NWG | Niedergeschwindigkeitswindkanal Göttingen |
| OH | Ohio |
| ONERA | Office National D'Etudes et de Recherches Aerospatiales |
| RAE | Royal Aircraft Establishment |
| $R_e$ | Reynolds Number |
| $R_{e_{max}}$ | Maximum Reynolds Number integrated over typical chord length $R_e \times c$ |
| Rehab | Rehabilitations |
| SWT | Supersonic Wind Tunnel |
| TDT | Transonic Dynamics Tunnel |
| TMK | Trisonikkanal Koln |
| TN | Tennessee |
| TRDI | Technical Research and Development Institute |
| TS | Test Section |
| TWB | Transsonischer Windkanal Braunshweig |
| TWG | Transsonischer Windkanal Göttingen |
| TWT | Transonic Wind Tunnel |
| UTRC | United Technologies Research Center |
| V/STOL | Vertical/Short Take Off and Landing Aircraft |
| VA | Virginia |
| VAH | High Pressure Vitiated Air Heater Propulsion Wind Tunnel |
| WAL | Wright Aeronautical Laboratories |