(NASA-CR-171418) SPACE SHUTTLE INTERACTIVE METEOROLOGICAL DATA SYSTEM STUDY Final Report (Wisconsin Univ.) 34 p HC A03/MF A01 CSCL 04B

N85-21876

Unclas
G3/47 14630

NASA CONTRACTOR
REPORT

NASA CR-171418

SPACE SHUTTLE INTERACTIVE METEOROLOGICAL DATA SYSTEM STUDY

By J. T. Young, Robert J. Fox, John M. Benson,
Joseph P. Rueden, and Robert A. Oehlkers
Space Science and Engineering Center
University of Wisconsin-Madison
Madison, Wisconsin 53715

Final Report

March 1985

Prepared for

NASA-Marshall Space Flight Center
Marshall Space Flight Center, Alabama 35812

TECHNICAL REPORT STANDARD TITLE PAGE

1. REPORT NO. NASA CR-171418	2. GOVERNMENT ACCESSION NO.	3. RECIPIENT'S CATALOG NO.
4. TITLE AND SUBTITLE Space Shuttle Interactive Meteorological Data System Study		5. REPORT DATE March 1985
		6. PERFORMING ORGANIZATION CODE
7. AUTHOR(S) J. T. Young, Robert J. Fox, John M. Benson Joseph P. Rueden, and Robert A. Oehlkers		8. PERFORMING ORGANIZATION REPORT #
9. PERFORMING ORGANIZATION NAME AND ADDRESS Space Science and Engineering Center University of Wisconsin-Madison Madison, Wisconsin		10. WORK UNIT NO.
		11. CONTRACT OR GRANT NO. NAS8-33799
12. SPONSORING AGENCY NAME AND ADDRESS National Aeronautics and Space Administration Washington, DC 20546		13. TYPE OF REPORT & PERIOD COVERED Final Contractor Report
		14. SPONSORING AGENCY CODE

15. SUPPLEMENTARY NOTES

Prepared for Atmospheric Sciences Division, Systems Dynamics Laboratory, NASA/Marshall Space Flight Center, Huntsville, Alabama
Technical Monitors: Dr. Gregory Wilson and Dr. James Arnold

16. ABSTRACT

This study on operational meteorological support requirements for Space Shuttle was accomplished by the University of Wisconsin Space Science and Engineering Center as part of the requirements of contract NAS8-33799 with the NASA/Marshall Space Flight Center's Atmospheric Sciences Division. The work was sponsored by the Space Shuttle Program Office with Dr. Andrew Potter of NASA/Johnson Space Center's Space Sciences Branch functioning as the Project Coordinator. The contract technical monitorship for this study was accomplished by Dr. James Arnold and Dr. Gregory Wilson of NASA/Marshall Space Flight Center's Atmospheric Sciences Division.

Although focused toward the operational meteorological support review and definition of an operational meteorological interactive data display system (MIDDS) requirements for the Space Meteorology Support Group at NASA/Johnson Space Center, the study also addresses the total operational meteorological support requirements and recommends a systems concept for the MIDDS network integration of NASA and Air Force elements to support the National Space Transportation System. The authors have done a very good job in the assembly of their findings and recommendations; however, it should be noted that the elements of the operational meteorological support at the various locations are in a continual state of change and improvement. Also, the findings and recommendations given in this report do not necessarily represent the official position of the NASA.

17. KEY WORDS Space Shuttle Meteorology Interactive Data System	18. DISTRIBUTION STATEMENT Unclassified-Unlimited William W. Vaughan Chief Atmospheric Sciences Division

19. SECURITY CLASSIF. (of this report)	20. SECURITY CLASSIF. (of this page)	21. NO. OF PAGES	22. PRICE
Unclassified	Unclassified	33	NTIS

MSFC - Form 3292 (May 1969)

For sale by National Technical Information Service, Springfield, Virginia 22151

Final Report

on the

Space Shuttle Interactive Meteorological Data System Study

Contract NAS 8 - 33799

Prepared By:

J. T. Young

Robert J. Fox

John M. Benson

Joseph P. Rueden

Robert A. Oehlkers

Space Science and Engineering Center
University of Wisconsin-Madison
Madison, Wisconsin

Prepared For:

Atmospheric Sciences Division
Systems Dynamics Laboratory
NASA/Marshall Space Flight Center
Huntsville, Alabama

Technical Monitors:

Dr. Gregory Wilson

Dr. James Arnold

March 1985

FOREWORD

This study on operational meteorological support requirements for Space Shuttle was accomplished by the University of Wisconsin Space Science and Engineering Center as part of the requirements of contract NAS 8-33799 with the NASA/Marshall Space Flight Center's Atmospheric Sciences Division. The work was sponsored by the Space Shuttle Program Office with Dr. Andrew Potter of NASA/Johnson Space Center's Space Sciences Branch functioning as the Project Coordinator. The contract technical monitorship for this study was accomplished by Dr. James Arnold and Dr. Gregory Wilson of NASA/Marshall Space Flight Center's Atmospheric Sciences Division.

Although focused toward the operational meteorological support review and definition of an operational meteorological interactive data display system (MIDDS) requirements for the Space Meteorology Support Group at NASA/Johnson Space Center, the study also addresses the total operational meteorological support requirements and recommends a systems concept for the MIDDS network integration of NASA and Air Force elements to support the National Space Transportation System. The authors have done a very good job in the assembly of their findings and recommendations, however, it should be noted that the elements of the operational meteorological support at the various locations are in a continual state of change and improvement. Also, the findings and recommendations given in this report do not necessarily represent the official position of the NASA.

(Foreword prepared by NASA/Marshall Space Flight Center)

SPACE SHUTTLE INTERACTIVE METEOROLOGICAL DATA SYSTEM STUDY
TABLE OF CONTENTS

		PAGE
I.	INTRODUCTION	1
II.	BACKGROUND	1
	Study Scope	1
	Methodology	1
III.	FINDINGS	3
	SMG Responsibilities	3
	SMG Relationship to Other Centers	3
	Shuttle Support Centers' Present Systems	4
	Summary	12
IV.	RECOMMENDATIONS	13
	JSC Meteorological Interactive Data Display System	13
	Space Shuttle Weather Network Concept and Topology	21
	Administration	24
	New Technology Integration	25
V.	CONCLUSION	26
VI.	ACKNOWLEDGEMENTS	27
VI.	LIST OF ACRONYMS	27
VII.	REFERENCES	29

I. INTRODUCTION

This report is the product of a study of the Johnson Space Center's (JSC) meteorological support requirements for the Space Shuttle program. The study examined the current data collection and forecast product delivery systems used or planned for the various Shuttle meteorological support centers. The result is a recommendation to upgrade the weather support facilities of each of the Centers to "state of the art" interactive meteorological data collection and product display systems and to inter-connect them in a data communications network.

Meteorological support responsibilities for the Space Shuttle program are distributed amongst Johnson Space Center, Kennedy Space Center (KSC), Vandenberg Air Force Base (VAFB), Consolidated Space Operations Center (CSOC), Air Force Satellite Control Facility (AFSCF), and Edwards Air Force Base (EAFB).

Johnson Space Center is the National Aeronautics and Space Administration's (NASA) level 2 center for its National Space Transportation Program. At JSC the weather support for nearly all weather related activities is provided by the National Oceanographic and Atmospheric Administration's (NOAA) National Weather Service (NWS). The NWS unit at JSC is the Spaceflight Meteorology Group (SMG).

II. BACKGROUND

STUDY SCOPE

The study's scope was limited to three aspects of weather support. First, to define the interactive meteorological display requirements for the SMG. Second, to define the requirements for weather related communications between the various weather support units (WSU). And third, to recommend a system which could satisfy these requirements. This study did not endeavor to examine the quality of forecasting nor the impact of the recommended system on the quality of the forecasts produced by the user. In general, it was agreed by all knowledgeable parties that the existing facilities available to the SMG were so inadequate as to make almost any addition produce a better product. Further, SSEC does not claim to have exhaustively surveyed all possible interactive systems and networks nor to have selected the optimal one. We have attempted to recommend one which is known to us to be within the state of the art and implementable at very low risk.

METHODOLOGY

In the initial stages of the study it became obvious that the weather support at JSC was impacted by the weather support services at each of the other three Centers and therefore it was necessary to conduct a site survey at each Center to become familiar with their current and planned weather support facilities. A schedule was set up for the visit to each Center.

A team of analysts was formed at the SSEC consisting of:

J. T. Young	Meteorology
Bob Fox	Administration and facilities
John Benson	Computer systems
Joe Rueden	Data processing
Bob Oehlkers	Engineering

Two members of the team, Joe Rueden and J. T. Young, conducted the ESMC portion of the JSC site survey during a visit to ESMC the week of 26 March 1984. Since a study of ESMC had previously taken place under an earlier contract with the Air Force (Appendix A) it was only necessary to expand on that knowledge. The main focus of the investigation was the data and product transfers between Centers. The full team conducted a site survey at the JSC during the week of April 16 coordinated by Andrew Potter and Senator Raygor of JSC. The team spent four days at the JSC interviewing the following:

Andrew Potter	Project Coordinator
Senator Raygor	SMG MIC
Dan Bellue	Meteorologist
Mike Collins	Flight dynamics
John Williams	Network communications
Gary Coen	MOCR operations
Hector Garcia	Winds
A. J. Roy	Aircraft operations
Ron Wade	Security
Jay Honeycutt	JSC operations
Joe Engel	Astronaut office
Loren Shriver	Astronaut office
Charles Bolden	Astronaut office
Victor Whitehead	Earth Observations
Michael Helfert	NESDIS

The Air Force Space Division at Los Angeles AFS, CA had developed a system specification for a WSU to be located at the Consolidated Space Operations Center (CSOC) at Falcon AFS, CO. This specification and conversations with the personnel at Space Division were used to evaluate the role of CSOC in the total weather support for the Shuttle Program. A review of the role of CSOC was last updated in a visit to Space Division on 8 May 84.

Joe Rueden and Bob Fox went to Vandenberg AFB, CA on 9 May 84. They received a briefing on the Interactive Meteorological Processing System (IMPS), a system developed at Vandenberg to support Western Launch Site (WLS) missions. They met with:

Lt. Col. Bill Bihner	Commander, Det 30 AWS
Glenn Boire	Systems integration
Bill Benton	IMPS expert

They also reviewed the facilities at the weather support unit and discussed the role of the weather support unit at Vandenberg in range support and particularly Space Shuttle mission support.

III. FINDINGS

SMG RESPONSIBILITIES

Meteorological support for the Space Shuttle program at JSC is provided by the Spaceflight Meteorology Group (SMG). The SMG at the Johnson Space Center is a weather office of the National Weather Service supported by a contract with NASA. The SMG's primary task is to provide weather support to Space Shuttle operations and secondarily support to JSC.

Prior to and during missions, the SMG provides support to the Mission Management Team, advising them of weather related matters which night effect launch, landing, alternates, or payload activities. Typically, informal briefings start about five days before launch. During missions, the SMG's formal responsibility begins with the moment of ignition of the solid rocket boosters (SRB) and continues for the duration of the on-orbit portion through to "wheels stop" following landing. This means that they must prepare forecasts and perform meteorological watch for the Return To Launch Site (RTLS), the TransAtlantic Abort (TAL), the Abort Once Around (AOA), the Abort To Orbit, the eight Contingency Landing Sites (CLS), and the Primary Landing Site (PLS). Crew and Flight Director briefings are scheduled throughout a mission. Following a mission, the SMG provides the weather support for the Shuttle Carrier Aircraft (SCA) ferry operations when it is necessary to return the Shuttle to the Cape following a non-Cape landing.

The SMG's secondary responsibilities include climatological studies for Shuttle and JSC planning groups, aviation weather briefing for NASA aircraft operations, Shuttle flight simulations, and support to the JSC complex for severe storms and hurricanes. Shuttle flight simulation is a task which consumes a large portion of the resources of the SMG. They provide weather data and briefings as for a regular mission. In some cases they simulate weather critical activities which require that they create false weather situations. They are also asked to "replay" missions in which weather was a significant factor.

The SMG is heavily relied upon for support in all of these areas. They must be flexible and conversant in a broad spectrum of weather related fields. As demonstrated later, they are ill-equipped to meet their role because of the support systems and data communications currently available to them.

SMG's RELATIONSHIP TO OTHER CENTERS

The total weather support for the Space Shuttle Program is distributed among three agencies, NASA, Air Force, and NOAA. At KSC the WSU is Detachment 11, 2nd Weather Squadron at Patrick AFB. Detachment 11 operates the Cape Canaveral Forecast Facility (CCFF) to support all Eastern Launch Site (ELS) missions. On any one mission at least two agencies at two Centers are required to share data and forecast products as well as responsibilities for various portions of the mission. Currently the launch site forecast responsibility is divided between the CCFF and the SMG such that the CCFF has full responsibility for the forecast up until

SRB ignition and the SMG handles all contingency landing forecasts as well as the primary landing forecast. When launches are at Vandenberg AFB current plans call for a similar relationship between the WSUs.

Team members have been present at both JSC and ESMC to observe the WSUs in operation during both launches and landings. Current operations require extensive voice communication to coordinate the forecast, transfer observations, and explain data being received by the CCFF data collection systems. We have observed that voice communication is relied upon heavily to transfer important data between SMG and CCFF. In most cases the voice link has several conversations going on simultaneously with the transfer of data which the forecaster must write down by hand. This system is time consuming and is prone to errors and misinterpretations.

Department of Defense (DOD) missions will be controlled from JSC until CSOC is fully implemented. Air Force meteorologists are currently stationed at JSC to work with the SMG to develop the support concepts for DOD missions. They will provide the weather support for DOD missions controlled from JSC. While the CSOC concept of operations has not yet been finalized, our current understanding is that when CSOC is fully implemented those DOD missions controlled by CSOC will be supported by the CSOC WSU. In addition, The Satellite Test Center staff at AFSCF will work closely with the CSOC WSU in developing Shuttle environmental support procedures.

SHUTTLE SUPPORT CENTERS' PRESENT SYSTEMS

At the JSC, the SMG is housed with the Mission Control Center in Building 30. The SMG is manned by six forecasters and one Meteorological Technician. The facilities available to these individuals include one AFOS computer system with two work stations, a COMEDS terminal, a UPI Unifax for a GOESTAP circuit which provides GOES-East, GOES-West, GMS, and METEOSAT imagery, two remote radar circuits to a switchable Enterprise radar display, a facsimile unit for the DIFAX circuit, a pneumatic tube hard-copy distribution system, a 48 channel voice communication console and a 36 channel voice key system, and an auto-control close circuit television camera. They also have a display drop on the video network.

The AFOS and the COMEDS provide conventional surface and upper air observations, station forecasts, and a large number of other products. The AFOS is a system developed by the National Weather Service to handle weather data and weather map distribution for all of its field offices. The system doesn't handle images of any kind. It displays centrally prepared weather maps of observations and forecasts as well as standard surface and upper air reports for the United States. Some of the maps on AFOS are printed for display and scanning by the automatic camera system, while other maps must be hand traced to get them into usable form for display. The forecasters usually don't use AFOS for surface reports, but use the COMEDS as it has a better data base.

COMEDS provides global coverage from its observational data base but it doesn't have the capability for graphic analysis and forecast maps. Typically when observations for key sites are received, they must be handwritten into a log book so that a time sequence record for those

stations will be available. The need to use two computer systems to get the basic data necessary for the SMG to do its job complicates the task, increases the likelihood of error, and slows their reaction time in critical situations.

The GOESTAP circuit is the only source of satellite data currently available to the SMG. This source provides data which are displayed as images on a facsimile hardcopy device. The GOES images are not normally received until 40 minutes after the image was observed from the GOES satellite. The GMS and METEOSAT take over half an hour transmission time for each full image resulting in the loss of GOES images since only one image can be transmitted at a time. GMS and METEOSAT images are received four times a day which means they are of little value for evaluating cloud motions.

The radar display system currently in use is an Enterprise display system set up to display the Galveston, TX radar and the Daytona Beach, FL radar. The operator can choose to display either one exclusively or both on an alternate scan basis. In either case, no time sequencing is possible with this configuration. The display is limited to only the PPI presentation, with color added to help distinguish different reflectivity levels. Displays of these data at other locations is accomplished through a link to the JSC video distribution system.

The DIFAX circuit is their primary source for weather charts generated by NMC.

Hard copy products such as briefing charts, upper air winds reported from ESMC, and other data are distributed to various locations within Building 30 by a pneumatic tube system.

The voice communication systems provide very good access to all weather users associated with Shuttle missions including the forecasters at other Centers. However, and we cannot emphasize this too strongly, it should not be used to communicate critical weather data between Centers.

The auto-control closed circuit television camera system scans the weather maps and satellite images for transmission to video displays throughout JSC on the video distribution network. This video is the primary system for presenting briefings. The display products must be manually posted within the confines of the camera view, limiting the number of products for automatic display to one or two in situations where many may be needed.

The present support facilities for the SMG are manually intensive and prone to error effectively preventing the SMG from providing adequate mission support when the frequency of missions increase to more than one a month. The SMG mission support suffers further from the additional work load associated with Shuttle flight simulations and NASA aviation weather briefings.

ELS Weather System

The ELS weather support unit is the CCFF, which is staffed by the USAF Air Weather Service's Detachment 11, 2nd Weather Squadron. The

Detachment 11 is tasked to provide meteorological, environmental and aerospace support to the ESMC, NASA, and the DOD Manager for Space Shuttle Support Operations. They provide this support to the CCAFS, to Patrick Air Force Base (PAFB), the Kennedy Space Center (KSC), and the entire Eastern Launch Site (ELS) primarily through the CCFF. The CCFF is a 24-hour-a-day forecasting and observing operation for normal facility and airfield support. In addition, it provides specialized forecasts for all missile and space launches, diffusion predictions for toxic fuel operations, and weather services for recovery forces, instrumented aircraft and the range instrumented ships. It is an integrated facility in the sense that the data which are required for its mission are either available in the facility or the products produced by the observing and computing facilities are delivered there. It is not an integrated facility in the sense that these data and products can be effectively displayed, merged and manipulated to produce a fully integrated mission product; the burden of this merging, manipulating and integrating still falls to the mental processes of the duty forecaster. The problems of integrating data from various sources and producing mission support products which use all of the available data in an internally consistent manner have become more acute to the forecasters of Det 11 in the Space Shuttle era. The environmental sensitivities of the Shuttle have increased the temporal and geographic preciseness with which many meteorological variables must be forecast. The need to accomplish this support in a routine, non labor-intensive manner is even greater with Shuttle landings at KSC, and as the Shuttle schedule becomes more routine and frequent.

There are 12 types of data available to the CCFF. Detachment 11 has produced a document, ESMC Pamphlet 105-1, Meteorological Handbook, which describes the current state of the weather support and instrumentation at the ESMC. The following data sources are described in more detail in that document:

1. Lightning Location and Protection (LLP). There are three sensors in this lightning detection system. Their data are collected in a lightning position analyzer, which analyzes the sensor data and determines cloud to ground lightning stroke location and intensity. The output of this analyzer is currently available in the CCFF as a graph on an x-y plotter.

2. Launch Pad Lightning Warning System (LPLWS). This system consists of 34 electric field mills whose output is transmitted via modem links to the ARMS for input to the Cyber 740. Data from the individual field mills in LPLWS can be displayed on strip charts in the CCFF, or, more commonly, the output of the mills is available from the Cyber 740 as printed individual values or collectively as a contoured field on a Tektronics graphics display.

3. Weather Information Network Display System (WINDS). Sixteen instrumented meteorological towers comprise this system. The data from the meteorological sensors on these towers are all transmitted digitally via modem links to the ARMS and hence to the Cyber 740. Processed data are printed in tabular form or may be displayed in the CCFF on an alpha-numeric CRT.

4. A. D. Little Flash Counter. This device is another type of electrostatic field measurement device which is largely been replaced by the LPLWS. Although its output is available in the CCFF on a chart recorder, it is rarely used and is not considered worth including in an integrated data base.

5. Radar Data. The CCFF has a remote control and display capability from a new WSR-74 specially modified for C-band and for high density binning. The new units antenna is located at Patrick Air Force Base, with a real time remote display furnished to the CCFF via wide band communications line. The CCFF also has a dial-up communications capability at 2,400 bits per second which they use most frequently to access the National Weather Service (NWS) WSR-74 (S-band) radar at Daytona Beach. These remote data are displayed at the CCFF on an Enterprise Radar to Television Color Converter.

6. Radiosonde and Rocketsonde Data. These data, from both Cape Canaveral and from downrange launches, are input in raw telemetry form via punched paper tape to a NOVA computer system for data reduction. They can then be transmitted via digital link at 2,400 bits per second in ASCII format to the Cyber 740 for further processing or distribution via a dial-up communications line.

7. Facsimile. The NWS NAFAX facsimile circuit provides hard-copy facsimile charts on a facsimile recorder which are used for wall mounted display.

8. Conventional (teletype) Data. The military CONUS Meteorological Data System (COMEDS) query-response teletype service plus the NWS Service A are available in printed form, as well as an ETR Communication Center pony circuit which carries some downrange data. These data are torn and filed in printed form.

9. Satellite Data. The National Earth Satellite, Data and Information Service (NESDIS) GOESTAP data are received via communication line and processed into hard-copy via a Harris Corporation laserfax. These data are then wall mounted for display.

10. Model Output. Two models are executed on the Cyber 740 for CCFF forecasters. The diffusion prediction model predicts the dispersion of toxic gases which could be released from a fuel spill. It uses the WINDS data as input, and outputs the predictions on the CRT used for the WINDS output. The blast damage assessment prediction model assess potential damage due to the inadvertent detonation of the Space Shuttle during launch. It uses meteorological inputs from the instrumented wind towers and rawinsondes. Output is on a terminal and associated line printer in the CCFF.

11. Jimsphere. Radar data from tracking the Jimsphere are input to the Cyber 740 as a 2,400 bit per second digital data stream. The data are reduced to high resolution wind information in the Cyber.

12. Manual observations. Special observations from personnel on chase planes and helicopters are available, as are observations at critical points such as the shuttle runway on re-entry. The observations are handwritten into a teleautograph.

In addition, there are several proposed or desired data sources which may be available to the CCFF by or shortly after the MIDDS implementation. Of the known additions, none are expected to impact the MIDDS design in any significant way other than to require that the MIDDS incorporate adequate expansion capability. The data sources considered are:

1. Additional towers which may be added to the WINDS expanding the mesoscale network.

2. Profiler Data for sensing upper level winds at high time and vertical resolution.

3. Volumetric Radar is proposed as a modification of the new Enterprise radar.

It is to specifically address these data integration problems that the SSEC is building a Meteorological Interactive Data Display System (MIDDS-I) to be used by the CCFF to integrate the data from the many special meteorological data collection systems used to support the ESMC mission. It also provides interactive access to these data through high quality video and graphics display workstations. This acquisition of a MIDDS-I will improve the support provided by the CCFF. This MIDDS-I will consist of an IBM 4341 computer with appropriate peripherals and workstations in support of a variant of the McIDAS software. Such a system will provide integration of the data sources available to the CCFF into a single data base where the various types of data can be melded and displayed together for forecaster use. It also provides growth for new data sources and for a significant increase in the applications which the forecasters and users of the system are expected to make after they become more familiar with the power and versatility of the system. The MIDDS-I will ingest local meteorological data sources, merge them together with the data base composed of satellite, radar, and conventional meteorological observations, manipulate and integrate the data into forms where they can be displayed alone or in conjunction with correlative data, and then display the required meteorological information quickly and easily for use by the CCFF forecasters.

MIDDS-I has three phases of system implementation. The initial phase consists of the installation of a two forecaster workstation with supporting equipment. This workstation will be interfaced to local data acquisition systems and support the operational mission of the CCFF. However, this initial system will not be fully operational in that it will lack redundancy and will require some processing be done by other computers at the CCAFS. The second phase will consist of a gradual increase in the system capabilities. New capabilities planned include: ingesting the remaining local data sources directly into the MIDDS-I, acquiring a local reception capability for satellite data, adding a briefing workstation, modifying the WSR - 74 radar to provide CAPPI scans to the MIDDS and tailoring the user interface to the specific needs of the CCFF forecasters.

The third phase provides the hardware and procedures necessary to bring the system to a fully operational status

The initial stand alone MIDDS-I capability is scheduled for installation at the end of January 1985. The second phase is partially funded and the third phase has not yet been funded, but full funding is anticipated this year. With the anticipated funding schedule, a fully operational MIDDS-I will be available for ELS support by spring of 1986.

WLS Weather System

The forecaster at the Vandenberg Air Force Base weather station provides a level of support very similar to that provided by the forecaster at CCFF. Support for the unmanned launches currently involves one forecaster 24 hours a day collecting special data of importance to mission safety, monitoring the weather as launch approaches, preparing briefings, as well as preparing special forecasts with pin-point accuracy in both time and space. Since many unique weather factors affect space launch and recovery operations, special observing systems similar to those at ESMC are being used.

The scenario for operational support of the Space Shuttle is expected to be very similar to the CCFF scenario. A team of forecasters will monitor the various data display devices located in the forecast area. Since each of these displays has it's own unique data format and display format, the burden of consolidating the available information is on the forecaster. This requires a considerable amount of time and expertise.

There are 8 types of data available to the forecaster:

1. Weather Information Network Display System (WINDS). Twenty-three instrumented meteorological towers comprise this system. The data from the meteorological sensors on these towers are all transmitted via modem links to a system supplied by SDS Corp. located in a room adjacent to the forecast area. These data are then made available to the forecaster via a printer from the SDS system. Meteorological parameters are also sent to the Base's Cyber via a SEL 32/75 for use in the blast model. The SDS and SEL 32/75 are expected to be phased out as IMPS (with the addition of a Motorola 12000 as I/O front end) picks up this function. IMPS would then forward the data to the Base's Cyber.

2. Radar data. The forecaster currently has a standard PPI and RHI display from a FPS-77 radar system.

3. Radiosonde Data. These data are input by remote keyin from either Pillar Point AFS or VBG in raw telemetry form to a SEL computer system for data reduction. These reduced data are then forwarded to the Base's Cyber.

4. Facsimile. The NWS NAFAX facsimile circuit provides hardcopy facsimile charts on a facsimile recorder which are used for wall mounted display.

5. Conventional (teletype) Data. The military's COMEDS query-response teletype service is used to generate data in printed form which are then torn and filed.

6. Satellite Data. National Earth Satellite, Data and Information Service (NESDIS) GOESTAP data are received via communication line and processed into hard-copy via a Harris Corporation laserfax. These data are then wall mounted for display. In addition, GOESTAP images are re-digitized and fed into a looper to provide the forecaster with animation.

7. Jimsphere. Radar data from tracking the jimsphere are input to Data Center 90, reduced to high resolution wind information, and forwarded to the Base's Cyber. The forecaster primarily uses these data as input to the Blast model.

From this vast sea of data, the forecaster must quickly make forecast decisions and disseminate them. In recognition of the difficulty of this task, WSMC began a project to integrate these data sources in the Integrated Meteorological Processing System (IMPS). This system is based on two SEL 32/7780 computers each on one side of a 600Mb, dual-ported disc chain so as to back each other up. These Data Base Manager systems then connect to Field Processors (COMTALs). Each field processor drives a single display terminal which is the user interface. The terminal can display 8 images or 32 graphics or combinations of the two. It also provides animation, enhancement of imagery and limited roam and zoom capabilities. The existence of IMPS is expected to ease the burden on the forecaster since the objective is to get most data sources input into IMPS. All data sources in IMPS would be accessible from the IMPS terminal. Display formats and projections would be more uniform.

IMPS does have limitations, however. It is our understanding that the SEL 32/7780s maybe close to saturation in its processing ability. Offloading some of the processing (as for WINDS into the Motorola 12000) would help alleviate potential overload problems. The SEL 32/7780s also limit potential expansion for more processing capability. More SEL computers can be added and interfaced together (at additional cost), but a point of diminishing returns is quickly reached. The networking problem overwhelms the job to be done. These factors must be considered when suggesting additional tasks to be performed by IMPS.

As it stands now, IMPS will integrate the following data sources:

1. GOESTAP. In addition to going to the Harris laserfax, IMPS can digitize and store this imagery on its disc. The navigation parameters are currently entered by hand on an 'as needed' basis. Currently only the GOES-West imagery is processed.

2. Jimspheres will be input directly into IMPS, reduced to meteorological parameters, and forwarded to the Base's Cyber.

3. The WINDS system will be interfaced to IMPS at the meterological parameter level.

4. The MSS Nova will be accessed by IMPS to acquire radiosonde information at the meteorological parameter level.

5. COMEDS will be used as the source of conventional data (surface and upper air observations, etc.).

In addition, there are other data sources needed to properly support shuttle operations.

1. Additional towers may be added to the WINDS.

2. Lightning Location and Protection (LLP). There are a number of sensors being installed for determining lightning position, stroke direction, and intensity. The output will be available on an x-y plotter.

3. Real-time GOES Imagery. The current GOESTAP suffers from a delay of approximately 40 minutes, reduced resolution, and difficulty in navigating (earth-locating landmarks) accurately. Real-time GOES data reception should be able to overcome all these problems.

4. Real-time GMS (Japanese version of GOES). The responsibility of the forecaster frequently extends out to the limits of GOES-West coverage. The resolution of the data at the edges of GOES images is poor due to the poor viewing angle. GMS overlaps GOES-West in the Pacific and would provide a valuable extension to the forecaster's view downrange.

5. Volumetric Radar. There is a need for higher quality radar imagery at WSMC because of the sensitivity of the shuttle to precipitation and lightning. The FPS-77 radar now being used at WSMC is not a good candidate for upgrading to volumetric scan operation since it's electronics are not compatible with the volumetric upgrade package and it's precision is less than required. Replacing the radar with a newer, more compatible version would allow this upgrade.

6. Kwajalein and other remote radars. There is a desire for more downrange radar data to aid especially in RTLS and recovery operations.

7. TIROS-N Imagery. These data would be valuable in filling gaps in the GOES coverage. The frequency of GMS is much less than GOES (every 3 hours) and TIROS-N covers a smaller area, but at different times from GMS. The two together give the forecaster a much better idea of actual conditions than either one alone.

8. NMC Products. There is a need for NMC products, model output in particular, to help the forecaster improve the quality of his forecasts.

9. Briefing Products. The ability to exchange briefing products (i.e. graphics and images prepared of their respective systems) with Johnson Space Center (JSC) and the proposed Consolidated

Space Operations Center (CSOC) is considered very important by the forecasters.

There are currently no firm plans to integrate the following data sources into IMPS:

1. Direct ingestion of real-time GOES.

2. Direct ingestion of LLP data.

3. Radar imagery, direct or indirect.

4. Real-time GMS (non-real-time may be available thru GOESTAP).

5. Polar orbiter (TIROS-N) imagery.

6. NMC products, model output.

CSOC Weather System

The Consolidated Space Operations Center (CSOC) is being built at Falcon Air Force Station (FAFS) near Colorado Springs, Colorado. It will be the centralized location for the planning, preparation and control of Department of Defense (DOD) Space Shuttle and satellite missions, and will function as the operational center within the Air Force Satellite Control Network (AFSCN). The CSOC WSU is expected to start operations in 1986 and will support the Satellite Operations Complex portion of CSOC. Shuttle support will not be needed until about 1990. The CSOC WSU will not operate out of JSC. However, CSOC WSU personnel could, in the interim, work out of JSC to support DOD payload operations using SMG facilities. The Eastern and Western Space and Missile Centers (ESMC/WSMC) will be linked to CSOC to facilitate integrated pre-launch space vehicle checkout and to coordinate launch and recovery operations. The CSOC will provide the DOD with the capability to support DOD Space Shuttle missions in the same manner as the Johnson Space Center. One objective of the CSOC is to have interoperability between the STC at AFSCF and CSOC to permit either node to backup the other in case of a natural or other disaster.

A specification for a WSU at CSOC has been prepared and was used by the SSEC team to evaluate the functional requirements for the CSOC WSU. One is referred to that specification (see References) for a description of the planned CSOC WSU.

SUMMARY

Each of the four Center's WSU's has been developed as a separate unit. Each Center's weather needs has determined the configuration of its WSU. As the Space Shuttle program has gone from the test phase to more frequent operational missions, the forecaster's stress has grown. Much of this stress is due to the inadequacy of the support facilities. Frankly, the current mixture of forecaster stress, antiquated forecaster support facilities, and the poor communication and coordination between WSU's could lead to a major disaster. The question is not "Can we build a

system to make a 100% accurate forecast?" The question is, "Can we do something soon to minimize the probability of a disaster?"

Little or no consideration appears to have been given to the long term weather support for our National Space Transportation System by the Government prior to this study. The recommendations which follow should be the first major step toward correcting this situation.

IV. RECOMMENDATIONS

JSC METEOROLOGICAL INTERACTIVE DATA DISPLAY SYSTEM

System Configuration

We recommend a second generation Meteorological Interactive Data Display System (MIDDS-II) be implemented at the Johnson Space Center. This system should acquire real-time global data sources including surface observations, upper air observations, forecast products, satellite imagery (including GOES-East, GOES-West, Meteosat, GMS, and NOAA polar orbiter GAC), limited radar coverage, local data from the ESMC and WSMC and briefing products from MIDDS type systems at Cape Canaveral and Vandenberg. The incoming data should be monitored, stored, retrieved, reformatted, manipulated and displayed. The system should be based on the MIDDS-I at Cape Canaveral. The basic software and system design are already owned by the U.S. Government, representing a substantial cost savings. The additional costs involved are for the hardware acquisition and for developments necessary to uniquely tailor the system to the operational missions of the JSC or add new capability beyond that available in MIDDS-I.

Computer System

We recommend an IBM 4381 computer system to support the data acquisition, data base management, and various workstation functions. The 4381-M1 should initially have eight megabytes of real memory. Real memory can be increased at some future date if required. The IBM 4381 is also recommended for operating and maintenance purposes because of the presence of other IBM 4381 systems at JSC. The 4381-M1 is recommended as opposed to the IBM 4341-M2 contained within the ESMC MIDDS-I because of the larger number of workstations (8) at JSC which require support as opposed to ESMC's (4) workstations. In addition, the acquisition of global data bases of geostationary satellite images, conventional data, forecasts, and radar; and their processing and display would overburden an IBM 4341. The 4381-M1 has about twice the CPU speed of the 4341-M2. Additionally, the 4381-M1 is field upgradable to a 4381-M2 configuration with another approximate 50% increase in CPU speed, if the computing load should increase beyond current expectations.

The details of our recommended configuration are shown in Figure 1. The recommended system should have six channels (upgradable to 12). Two of the channels should be connected to the IBM 3880 disk controller which in turn should be connected to four IBM 3380 disk drives. Each disk drive has a storage capacity of 2.52 gigabytes for a total system storage capability of more than 10 gigabytes. Up to four additional 3380-B4 disk

JSC SYSTEM CONFIGURATION

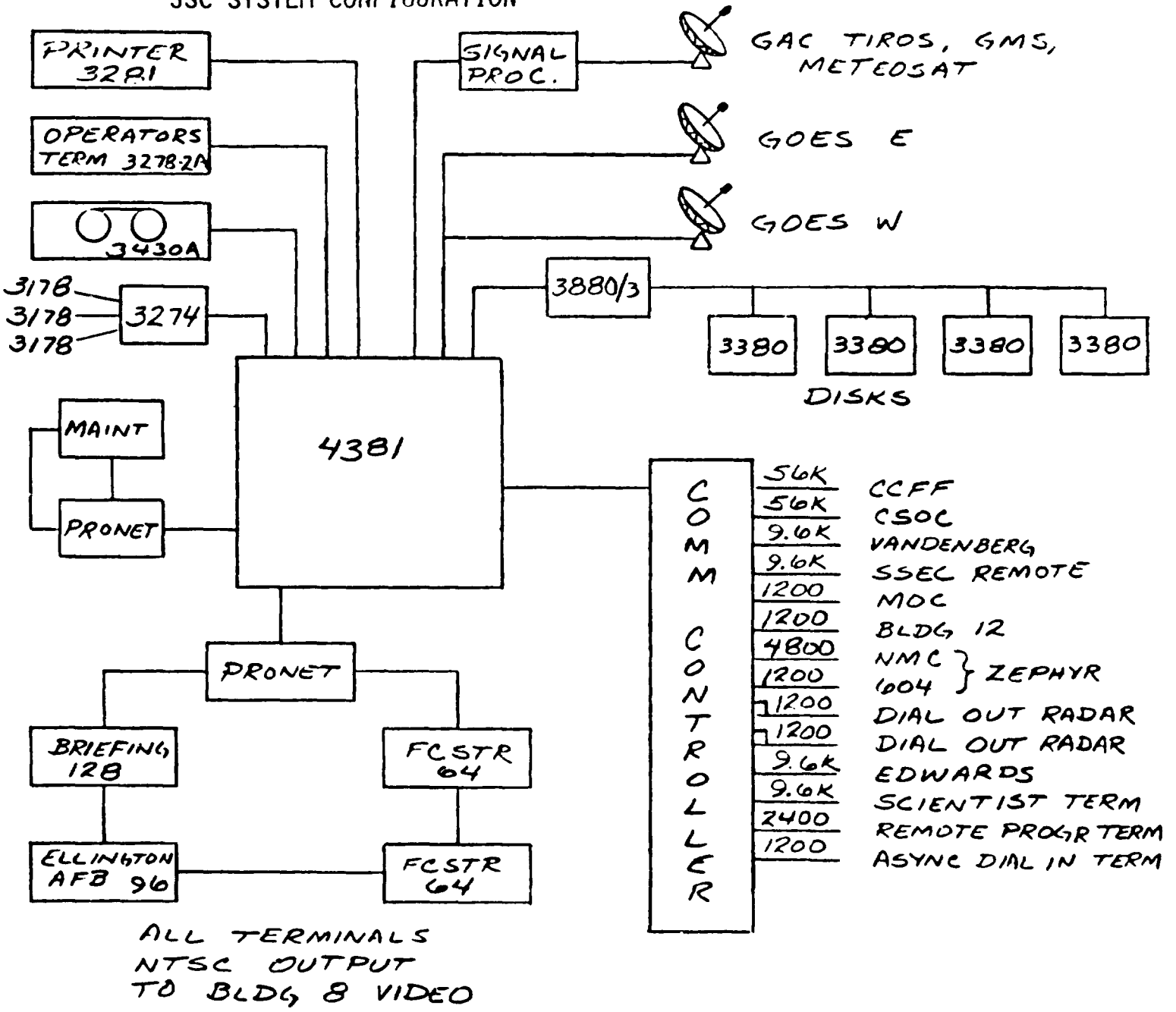

FIGURE 1

drives could be added at some future date if additional storage capacity is needed for a maximum possible system storage of 20 gigabytes.

Another channel should be connected to the tape drive. One IBM 3430 A1 tape drive with controller is recommended. This is a 1600/6250 bpi dual density tape drive with a transport speed of 45 inches/sec. The tape drive will be used for system saves and installation, maintenance, and limited storage and retrieval of historic data sets.

The operator's control terminal should be an IBM 3278-2A CRT. It is used for system diagnostics and computer control functions.

Combined together on the fifth channel is the communications controller, the CRT controller, and the ProNET interfaces for the local area networks which support all but the scientists', Edwards AFB, and maintenance workstations. The IBM 3274 CRT controller is used to support interactive IBM 3178 programmer CRTs. Initially, three programmer terminals are recommended for use by local support personnel. The ProNET interface is a high speed network interface to the workstations. It is a 10 Mbps token passing ring network with nodes at the IBM channel interface and at the workstations. The ProNET/IBM channel interface is built by SSEC and allows up to eight ProNET nodes to be treated as separate logical I/O subchannels. Two ProNET interfaces will be required. This allows up to sixteen video workstations to be connected to the MIDDS. The scientists', Edwards AFB, and maintenance workstations should be connected via the IBM 3705 communications controller.

The IBM 3705 communications controller should be used to provide interfaces to low and medium speed (up to 56 kb/sec.) lines. Conventional surface and upper air data forecast data, and the MIDDS communication network to ESMC, etc. should enter the system through the 3705.

Data Base Description

We recommend that extensive improvements be made to the weather data bases currently available to the SMG. These data should be obtained in as near real-time as is possible and in digital form so that an integrated scientific data base will be available for the forecaster. The data sources recommended are: GOES-East, GOES-West, VAS, GMS, METEOSAT, INSAT, polar orbiting satellite data, Patrick AFB radar, Galveston radar, Daytona beach radar, dial-up radar at all foreign CLS, global surface and upper air observations, and global surface and upper air forecasts. These should be augmented with data and products from other Shuttle WSUs obtained through a network to be described later.

JSC should receive GOES-East and GOES-West stretched digital data directly from those satellites. The hardware needed for direct reception would consist of two 4.5 meter geostationary antennas, preprocessors, and an IBM channel interface. This configuration matches that which is partially implemented at the ESMC. The system will allow simultaneous multiple resolution ingests. Typically, areas which have a high probability of users requiring full resolution, such as the U.S. area, would be ingested at 1 km resolution, while the rest of the globe would be ingested at 4 km resolution. Actual size, resolution, and length of time of retention of ingested areas are a function of disk space management. For

instance, if the U.S. was kept at full 1 km resolution and the globe at 4 km resolution, over 12 hours of U.S. data and 24 hours of global data from both GOES-East and West could be kept on the disks Other combinations of ingest areas and retention times are possible. The extreme case is full global ingest at full resolution where only two hours of data could be stored without increasing disk storage space.

VAS data products and special sensor data is expected to be made available in the GOES data stream in fiscal year 1986. In order to ingest these data it will be necessary to upgrade the GOES electronic processing equipment.

The GMS and METEOSAT weather satellite systems produce images in digital form at slightly lower resolution than the U.S. GOES satellite series. They are available to the JSC forecaster on GOESTAP now. It is possible to get these data in digital form from receiver sites in Honolulu and at Goddard Space Flight Center, respectively. Every effort should be made to obtain these data. They can be integrated into the MIDDS data base, which will greatly enhance the SMG's ability to monitor the weather on a global basis.

The other desirable geostationary meteorological satellite is the Indian INSAT. It beams its signal directly to India, and currently there is no means of accessing the real-time data in any fashion outside of India. Consequently, INSAT has not been considered as a possible data source for JSC. This leaves a gap of about 20-30° longitude in the middle of the Indian Ocean region where real-time geostationary data will not be available. Any coverage in this region will depend on polar orbiting satellite data. Because of the gaps in the geostationary satellite coverage, and because of viewing angle problems at polar latitudes, the JSC system requires a data base of polar orbiter data. While global DMSP data would be highly desirable, it currently is not available outside AFGWC. Should it become available it could be added or substituted into the system. Consequently, we recommend the NOAA (TIROS-N) series of polar orbiter satellites. The NOAA satellites have a five-channel imaging radiometer with a 1 km field of view in all channels (the AVHRR instrument). While a limited area coverage (LAC) mode of the full resolution data can be stored on board the satellite for part (10 minutes) of a single orbit, the only globally available data is the Global Area Coverage (GAC) 4 km field of view. The GAC and LAC data are read out at Gilmore Creek, Alaska, and relayed through DOMSAT to Washington. This data base would be remapped and composited into the projection of interest and displayed, along with any desired supporting graphic displays.

The JSC SMG should have access to radar coverage at Shuttle launch and recovery sites, at alternate landing sites, and local radar coverage. Remote radar access is available through a number of sources. Kavouras, Inc. is the preferred source. This company has a commercial network of remote radar transmitters interfaced to most of the Weather Service radar sites in the eastern United States. Kavouras currently services Daytona Beach, FL, Limon, CO, and Los Angeles, CA, in addition to 64 other radar sites. The radar sites can be dialed up under computer control, either on a schedule, or on demand. The data will be ingested, remapped when appropriate, and displayed in conjunction with other MIDDS products.

Transmitters should be installed at the six alternate landing sites outside the continental U.S. providing that suitable radar systems already exist at those locations. These could be accessed by computer dial-up on an as needed basis.

Grids of numerical forecast products are necessary for the development of JSC unique forecast products within the MIDDS. Numerical forecast grids are currently available from an NMC circuit. This circuit is available directly from NMC or as relayed by commercial firms such as Zephyr Weather Transmission Service. We recommend using this circuit to acquire appropriate forecast products carried on it.

Global observations, forecasts, advisories, bulletins, and discussions in alphanumeric form are available from NMC, FAA, and Air Force teletype circuits. The MIDDS could/should be set up to monitor incoming teletype traffic and ingest desired products. The Air Force Automated Weather Network (AWN) accessed through the Continental U.S. Meteorological Data System (COMEDS) potentially could be used by MIDDS. COMEDS currently can be used manually in a request reply mode, or in a broadcast mode to specific customers of pre-specified products.

The sizes of the data bases have been estimated based on our experience and discussions with the SMG staff regarding their anticipated operating scenarios.

	Visible Data (MBytes)	IR Data (MBytes)	Other Data (MBytes)
GOES-East	240	1150	
GOES-West	240	1150	
Meteosat	300	200	
GMS	100	100	
AVHRR	400	200	
Radar			5
Conventional			10

A total of almost 4.1 gigabytes of real-time data must be provided in disk storage.

Interactive Workstations

Eight interactive video display workstations are recommended for the MIDDS-II. Two workstations are needed by the forecasters to monitor weather situations as they are developing and to prepare products and forecasts. A briefing workstation is needed for continuous real-time display of current weather and forecasts for distribution to the JSC video network. Another workstation is needed to support NASA flight operations at Ellington AFB. A fifth workstation should be installed at Edwards AFB to provide coordinated support when that Air Force Base is supporting Shuttle activities. The sixth workstation is a remote workstation to the Science Support Activities at JSC. The seventh and eighth are maintenance workstations.

The two forecaster workstations should consist of interactive workstations built by SSEC. A workstation as shown in Figure 2 is composed of

WORK STATION COMPONENTS

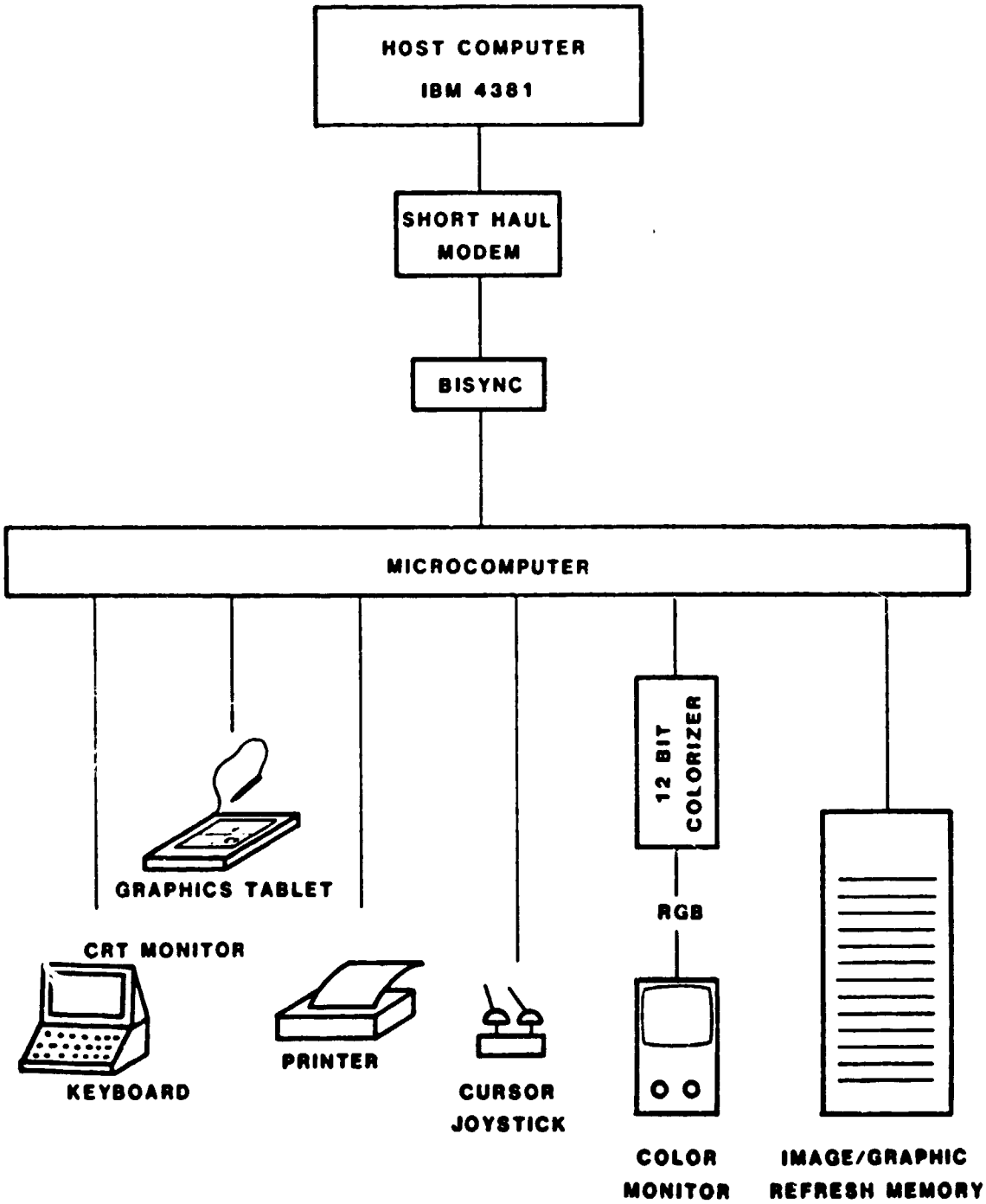

FIGURE 2

a video display with graphic overlay, an alphanumeric CRT, a keyboard, cursor position control joysticks, a command data tablet, a local printer, a NTSC encoder for interfacing the workstation display with the video briefing system, a hard copy image device and a single rack of support electronics. The video displays should have 64 image frames and 32 graphic overlays. This allows multiple loops of radar, satellite visible, and infrared images at various resolutions. Two channels of the image data can be functionally combined, such as the visible satellite image being colored where radar echoes are occurring. The graphics allow concurrent or separate overlays of observations and analyses of winds, electric fields, lightning, etc. on top of the image data. The image is presented as six bit data while the graphics are presented as three bits (7 simultaneous colors). The images have color enhancement tables allowing false coloring of images under user or computer control as well as functional combinations of two images. The graphics also have color enhancement tables allowing user controlled colors for the graphics. The keyboard is used for general command inputs. The command data tablet is used for specialized process-oriented commands. The joysticks are used to manipulate a cursor on the video monitor and for other specialized purposes. Alpha-numeric outputs from the system can be displayed on the CRT or on the local printer. The NTSC encoder is used to convert the RGB television signal into the NTSC signal format used in standard broadcast television.

The briefing workstation should have 128 image frames and 64 graphic frames. It will be connected to the video distribution network and will routinely display current loops of satellite and radar image data in conjunction with overlaying weather analyses. This will be a scheduled operation and will occur automatically unless a forecaster assumes manual control of the workstation to give an individualized briefing.

The workstation for flight operations support should be identical to the forecaster's workstation except that it will be configured with 32 image and 16 graphic frames; it will operate as a remote workstation on the JSC MIDDS.

The Edwards AFB workstation will provide a good basis for forecast coordination and briefing. This workstation is configured like the flight operations workstation above with 32 frames of image memory and 16 frames of graphics memory. The only significant difference between these two workstations is the communications to the mainframe. The Edwards AFB workstation will be configured to operate off the JSC mainframe over a communication circuit at 9.6K bps. The impact of the slower communication will be to slow the image transfer time from about 20 seconds to about 3 minutes.

The Science Support Activities at the JSC requires access to the MIDDS to enhance their research capabilities and to utilize the various data bases in the system. The proposed workstation for the scientists is identical to the Edwards AFB workstation described above.

The components of the workstations are modules and can be placed according to the users needs.

MIDDS-II Implementation Plan

The JSC MIDDS-II implementation effort should be done in several stages. The implementation plan has an initial system capability with follow on enhancements to the system, and an eventual fully operational system. An outline of the five planned implementation phases is given in the following section.

PHASE I - The initial system should ingest GOES-East and GOES-West images at high resolution over the U.S. and at lower resolution for the full disk. It should also ingest and process global surface and upper air observations, and have global forecast products available. The system should have a network capability with the ESMC MIDDS, allowing exchange of data and briefing products. The initial system should consist of the following components:

1. Single computer and peripherals
2. Two forecaster workstations
3. One briefing workstation
4. One workstation to support Ellington AFB operations
5. NMC products receipt
6. Global products receipt
7. Network with ESMC
8. Two GOES antennas

PHASE II - The second stage of implementation of the JSC system should be a global data base augmentation. This should include obtaining additional real-time satellite imagery and accessing selected radar data. With this expanded global data base, a Shuttle following briefing display should be developed. Components of Phase II are:

1. Meteosat data
2. GMS data
3. AVHRR - GAC data
4. Radar - Galveston and Daytona
5. Radar - foreign
6. Shuttle following loop

PHASE III - This stage should develop system extensions. This should include an expanded meteorological watch capability where the computer

monitors critical factors and alerts the forecaster if some action is required. Specialized software should be developed during this phase to tailor the MIDDS to the actual JSC operational requirements. Components of this phase are:

1. Expanded metwatch

2. Workstation software

3. VAS mode AAA data

4. Customized software

PHASE IV - The fourth phase includes the installation of two additional workstations and the upgrading of existing workstations. Components are:

1. Edwards AFB workstation

2. Scientists workstation

3. Workstation upgrades

PHASE V - A complete maintenance facility should be installed during this final phase. This should consist of a functional workstation and two sets of spares at the JSC and an identical workstation at the SSEC.

SPACE SHUTTLE WEATHER NETWORK CONCEPT AND TOPOLOGY

In developing the network concept for the Shuttle total weather support, three factors were considered most important; reliability, information transfer rates, and the expected communication paths.

From the site surveys it was obvious that two types of Centers are involved in the Shuttle Program weather support. Two Centers (ESMC and WSMC) are "data sourcing" in that they collect large quantities of weather data, reduce it to products and disseminate the data and information needed by the user community. Two Centers (JSC and CSOC) are "Management" Centers in that they use the weather data and information provided from other sources to help manage the missions. Therefore the data flow is from the primary launch and landing sites to JSC and/or CSOC. Very little data transfer is required between ESMC and WSMC. JSC and CSOC must have comparable independent weather systems and therefore they will communicate very little weather data routinely. Consequently JSC and CSOC each should communicate directly with ESMC and WSMC. However, a JSC to CSOC link will be valuable for back up during extended periods of outages of either the communications links or processing systems. The recommended MIDDS network is shown in Figure 3. It is expected that launch site radar data, briefing products and limited volumes of other data will be transferred from one location to another. In particular, it is assumed that at most only small geographical areas of satellite image data will be transmitted via the network. The 56K bps links between CSOC, ESMC, and JSC are necessary to provide a bandwidth capable of handling radar images and larger

MIDDS NETWORK LINKS

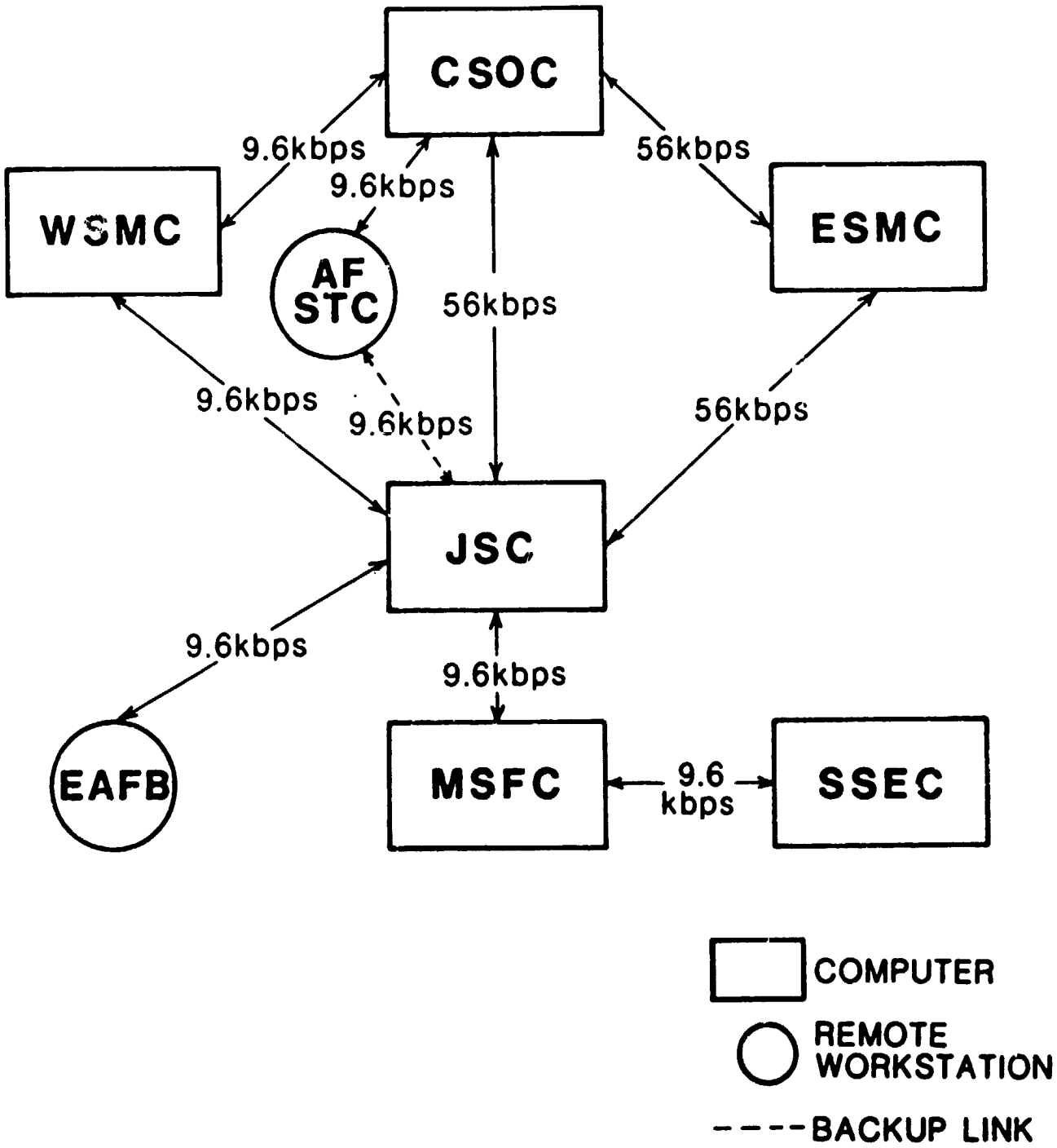

FIGURE 3

products/data volumes when one center is acting as a backup for another. The exception to this backup scenario is the ESMC. Because of the numerous local data inputs utilized during launch and recovery operations, the only effective backup is with a "hot spare."

The IBM System Network Architecture (SNA) is recommended. It is a well established system and is supported by the vendor. With the existing software in the MIDDS-I, data and products can be transferred to other centers on a scheduled basis or by a triggering event. The event driven schedule allows the transfer of radar data, for example, as soon as it is received from the radar. The transfer based on this system will insure the data are distributed to the other centers at the earliest possible moment without human intervention. Data and products can also be transferred on request from the receiving site without disturbing the source systems forecasters. The network can be implemented in phases corresponding to the implementation schedule for each of the MIDDS' sites.

ELS Weather System

As planned, the MIDDS-I does not have the capability to interface with the network via broadband data links. The original concept included only 9.6 Kbps links to a temporary remote workstation at JSC and a maintenance/development workstation at SSEC. Consequently, a communications upgrade is necessary. This upgrade will be an addition to the communication controller to allow the high speed communication on the network and additional networking software.

CSOC Weather System

The CSOC WSU system specification was developed around the use of the Air Force Global Weather Center as its primary source of data. The AFGWC will not be ready to support the CSOC system until 1987 or 1988. In addition, the original CSOC system would not handle all the data sources needed to support the Shuttle Program as discussed here. The specification does not provide for compatible intercenter data and briefing product communication. Functionally the CSOC specification is a subset of that available from the MIDDS.

Therefore, we recommend a MIDDS-III be implemented at the CSOC. This system would acquire real-time global data sources including surface observations, upper air observations, forecast products, satellite imagery from GOES-East and GOES-West, solar-terrestrial environmental data, radar data, local data from Cape Canaveral and Vandenberg AFB, Meteosat, Japanese Geostationary Meteorological Satellite (GMS), and NOAA polar orbiter GAC meteorological satellite data and briefing products from the other MIDDS systems. The incoming data will be monitored, stored, retrieved, reformatted, manipulated and displayed on schedule using the same manner as that employed in the other MIDDS. The system will be based on the MIDDS-I at the CCFF and the recommended MIDDS-II at the JSC.

To support the require for interoperability between STC and CSOC, we recommend a workstation be installed at AFSTC operating remotely off the MIDDS-III. This workstation would be configured with 64 video frames and 32 graphic frames and would operate at 9600 kbps. Normally during DOD missions STC would communicate primarily with CSOC. Should STC need to

function in a backup mode, they would switch to remote operation off the MIDDS-II at JSC.

WSMC Weather System

The WSMC IMPS was designed to support the Range missions. It was specified long before the MIDDS and the network were conceived. IMPS will have difficulty handling the additional data sources important to the Shuttle weather support and will not be able to support the weather network at all. Consequently, the coordination of forecasts and data interpretation will be hindered much as it is now between JSC and ESMC.

Therefore, we recommend a Meteorological Interactive Data Display System be added to the IMPS at the Vandenberg AFB Forecast Facility. This system should ingest GOES direct real-time satellite imagery, LLP lightning location data, dial-up remote radar, GMS imagery, polar orbiter imagery (TIROS-N), and NMC products. The MIDDS would communicate with IMPS on a 9.6K bps serial data communications line. The IMPS could continue to function as the Range system without interference from the network. This concept will also provide WSMC with opportunity to expand the WSU capabilities well beyond that of IMPS alone. The result will be four Shuttle weather support facilities using nearly identical software and hardware systems reducing the communication problems both at the computer level and at the forecaster level.

ADMINISTRATION

The four centers, ELS, WLS, JSC, and CSOC, all have space related missions separate from the Space Shuttle Program which require weather support. The system we have designed takes into account the systems already in place and builds upon them, ties them together, and provides for expansion as the needs of the Shuttle Program change or become better understood. However, this network of systems will not function in the coordinated fashion it was intended to if an administrative concept is not established and empowered with oversight responsibilities.

Management

We recommend the establishment of a Shuttle Weather Management Team (SWMT) which would provide for the logistical support of the total system, coordinate between WSUs, and evaluate and recommend improvements to the various weather facilities which will improve the quality of the service to the Shuttle Program. The SWMT should be housed at JSC and should be co-chaired by a NASA and an Air Force representative who would be responsible to, and take direction from the Shuttle Operations Offices of their respective arms of government. The team would be comprised of the chairpersons and a representative from each of the WSUs on the network. The team should meet at least on a quarterly basis.

Maintenance

If a network such as the one we recommend is implemented, then the hardware and software compatibility among the centers make a maintenance depot concept most appropriate. A long term central maintenance facility

would provide for the training, spare parts, documentation, software compatibility, and configuration control needed to support an operational system as large and complex as the Shuttle Weather network.

We recommend that a hardware depot maintenance facility be established at Patrick AFB and that the software depot maintenance facility be established at Marshall SFC. Patrick AFB is recommended because they have the most experience with MIDDS equipment of any center. They have contract maintenance which is well qualified to assume this role. Marshall SFC is recommended for the software depot for two reasons. First, they have worked with the McIDAS system for many years and have at Marshall an early version of the system. They are quite familiar with the McIDAS concept and the software in particular. Second, they maintain an awareness of new techniques in meteorology and will be in a good position to oversee their implementation in software when appropriate.

Under this concept, local personnel from each center will be trained and supported by the central hardware facility to provide board level maintenance on all system components except the computer mainframe and its peripherals. We recommend that the mainframe be maintained by contract with IBM or other contractor who would also provide spares. Under this concept each center which joins the network with a McIDAS based system will buy two sets of spares. One set will be held at the local center and the second set will be sent to the hardware depot to enlarge the pool of spares available to support the entire system. When a subsystem fails, the local maintenance personnel will isolate the problem to the board level. They will replace the board and send the broken board to the depot for repair. At the same time, a spare from the pool at the depot will be sent to the center to replenish its stock. The software will be maintained in a similar manner. Catastrophic failures will be handled initially by the local center and the depot will provide backup support and training. The depot for software will also maintain configuration control and software documentation on all systems and will install new versions if and when new techniques, repairs and system upgrades require such change. This support could be handled by a contract software firm.

NEW TECHNOLOGY INTEGRATION

The ELS and WLS have been highly instrumented to provide an extensive data base to aid the forecaster. The observations from these systems are very valuable but they do not provide an adequate description of the atmospheric conditions to allow the accuracy required in the shuttle forecasts. The MIDDS systems we have described above will integrate all the current observing systems into a unified data base and provide easy access by the forecaster. The MIDDS systems are easily expandable to include new sensing systems if they are implemented. However, to capitalize on the scientific information in these data streams requires additional work beyond the data base integration and display. Researchers, working with these data sources, have developed computer analysis techniques (objective analyses) for extracting meaningful information about atmospheric conditions from the data. Some of the techniques developed by SSEC are included with the MIDDS systems

New sensing systems (profilers, VAS, doppler radar, etc.) are being developed and tested by the meteorological community for remote sensing of atmospheric conditions important to the Space Shuttle (i.e., upper atmosphere wind shear). Inclusion of new sensing systems and expansion of existing sensing systems at the ELS is being discussed. These unique observing systems (both present and possible future systems) are not well understood by the operational forecast community because they are not generally available. Objective analyses and training aids should be developed for these new sensing systems as well as the current systems. It will be desirable to add new techniques especially for new data sources. Basically this is a technology transfer task.

The activities described above added to the software maintenance role previously discussed fall naturally to the atmospheric science group at MSFC since they are familiar with both the developing scientific sensing systems and the MIDDS system. Under this concept MSFC would maintain configuration control and software documentation for the total MIDDS network system. They would work with scientists who have developed data analysis techniques for the special sensing systems to transfer these techniques into the MIDDS environment, and they would work with the forecasters using these data and data products to help them utilize this information efficiently. Since they manage the configuration of the system they would be in the best position to see to it that these techniques are well integrated into the MIDDS.

The MFSC group currently has a computer system similar to the MIDDS. The hardware changes necessary to prepare them for this task are an IBM 4341, two workstations, a link to the network, a link to SSEC and a remote programmer's terminal. They would draw on the network for all data needed to implement and test new techniques and would not need direct data ingest under this concept. They would stand down during all operational missions to eliminate interference. The link to SSEC would be used to transition from the implementation phase to the operational phase in which MSFC assumes software configuration control. A software training program for the software support personnel would also be implemented.

V. CONCLUSION

We conducted site surveys of each of the major weather facilities providing support to the Space Shuttle program. We have examined the SMG's responsibilities and the resources available to help meet those responsibilities. We find that the SMG lacks the data necessary to meet their responsibilities. They must have extensive communication with other Centers in the form of data and derived products which are not available to them now except as verbal interpretations. The SMG has additional responsibilities beyond the operational mission support which taxes their resources.

We recommend a MIDDS-II system for the SMG at JSC which will be as hardware and software compatible as possible with the MIDDS-I at Cape Canaveral, but which will handle global data bases and global forecast products as well as the products from the MIDDS-I. MIDDS-II will be able to support additional responsibilities such as NASA flight operations, SCA

ferry flights, and simulator exercises using synthesized weather situations. The Network which we recommend will provide SMG and the mission management team with access to the various data products from the ELS in real-time including volumetric radar images, lightning observations, atmospheric electric potential, direct readout of the upper air winds, and any of the other special data collected by the MIDDS-I.

We found that the CSOC will be better served by a MIDDS system than by the computer system which they have specified. The CSOC WSU will operate out of JSC until the CSOC facility is complete at Falcon AFS, CO. Similar systems at each Center will make the transition easier and will reduce the inter-WSU communication difficulties. We recommend a MIDDS-III for CSOC, which will be nearly identical to the MIDDS-II at JSC, and a remote workstation at AFSTC for backup support.

Vandenberg AFB has the IMPS which satisfies many of the WSMC weather support requirements now. We recommend additions to their facility which will provide access to data sources needed to better support Shuttle missions and provide access to the weather systems at the other Centers. These additions are a modest effort which will facilitate the communication and product exchange.

Logistical support for this network of systems should be managed by a joint NASA and Air Force administrative group established at JSC. They should coordinate the hardware and software maintenance facilities which we recommend be implemented at Patrick AFB and Marshall SFC, respectively. These facilities will need enhancements to their existing facilities to enable them to undertake these roles. The SWMT should be the organizer and coordinator of system improvements for Shuttle weather support at all of the Centers.

VI. ACKNOWLEDGEMENTS

We wish to thank the many people who have helped us throughout this study. Unfortunately the list is far to long to allow us to name each person. The reception we received at each of the Centers was sincerely cooperative and supportive. Many of our contacts extended themselves considerably to make our job easier and we truly appreciate their efforts.

VI. LIST OF ACRONYMS

AFB - Air Force Base
AFGWC - Air Force Global Weather Center
AFS - Air Force Station
AFSCF - Air Force Satellite Control Facility
AFSCN - Air Force Satellite Control Network
AFSTC - Air Force Satellite Test Center AOA - Abort Once Around
AWN - Automated Weather Network
AVHRR - Advanced Very High Resolution Radiometer
bpi - bits per inch
bps - bits per second
CCAFS - Cape Canaveral Air Force Station
CCFF - Cape Canaveral Forecast Facility

CLS - Contingency Landing Site
COMEDS - CONUS Meteorological Data System
CONUS - Continental United States
CPU - Central Processing Unit
CSIS - Centralized Storm Information System
CSOC - Consolidated Space Operations Center
CRT - Cathode Ray Tub
DIFAX - Digital Facsimile
DMSP - Defense Meteorological Satellite Program
DOD - Department of Defense
DOMSAT - Domestic Satellite Network
EAFB - Edwards Air Force Base
ELS - Eastern Launch Site
ESMC - Eastern Space and Missile Center
FAA - Federal Aeronautics Administration
FAFS - Falcon Air Force Station
GAC - Global Area Coverage
GMS - Geostationary Meteorological Satellite
GOES - Geostationary Operational Environmental Satellite
IBM - International Business Machine, Inc.
IMPS - Interactive Meteorological Processing System
INSAT - India Satellite
IR - Infrared
JSC - Johnson Space Center
KSC - Kennedy Space Center
LAC - Limited Area Coverage
LLP - Lightning Location and Protection, Inc.
McIDAS - Man Computer Interactive Data Access System
MIDDS - Meteorological Interactive Data Display System
MSFC - Marshall Space Flight Center
MSS - Meteorological Sounding System
NAFAX - National Facsimile
NASA - National Aeronautics and Space Administration
NESDIS - National Earth Satellite, Data, and Information Service
NESS - National Earth Satellite Service (1977-1982)
NHC - National Hurricane Center
NMC - National Meteorological Center
NOAA - National Oceanographic and Atmospheric Administration
NSTS - National Space Transportation System
NTSC - National Television Standards Committee
NWS - National Weather Service
PAFB - Patrick Air Force Base
PLS - Primary Landing Site
PPI - Plan-Position Indicator
PSK - Phase Shift Keying
RGB - Red Green Blue
RTLS - Return To Landing Site
SCA - Shuttle Carrier Aircraft
SFC - Space Flight Center
SMG - Spaceflight Meteorology Group
SNA - System Network Architecture
SRB - Solid Rocket Booster
SSEC - Space Science and Engineering Center
SWMT - Shuttle Weather Management Team
TAL - Trans-Atlantic abort

VAFB - Vandenberg Air Force Base
VAS - VISSR Atmospheric Sounder
VISSR - Visible Infrared Spin Scan Radiometer
VIRGS - VISSR Interactive Registration & Gridding System
WINDS - Weather Information Network Display System
WLS - Western Launch Site
WSMC - Western Space and Missile Center
WSR - Weather Service Radar
WSU - Weather Support Unit

VII. REFERENCES

System Specification for the Weather Support Unit of the Consolidated Space Operations Center, Dec 1983, Spec Number SES-CSOC-00006-2, USAF HQ Space Division, Los Angeles, CA.

Meteorological Handbook, Eastern Missile and Space Center Pamphlet ESMCP 105-1, Sept 1982, USAF HQ Space and Missile Center, Patrick AFB, FL.

4/CAPE/14