N85 72711

REQUIREMENTS FOR INTERCONNECTING CABLES, HARNESSES, AND WIRING

(NHB-5300.4(3G)) REQUIREMENTS FOR INTERCONNECTING CABLES, HARNESSES AND WIRING (National Aeronautics and Space Administration) 92 p

N85-72711

Unclas

00/33 22517

NASA

National Aeronautics and Space Administration

REPRODUCED BY
NATIONAL TECHNICAL INFORMATION SERVICE
U.S. DEPARTMENT OF COMMERCE
SPRINGFIELD, VA. 22161

PREFACE

Date: April 1985

In order to maintain the high standards of the NASA interconnecting cabling and wiring program, this publication:

Prescribes NASA's requirements for assuring reliable cabling and wiring for interconnecting cable and harness assemblies.

Describes and incorporates basic considerations necessary to assure reliable cables and harnesses.

Establishes the supplier's responsibility to train and certify personnel.

Provides for supplier documentation of the fabrication and inspection procedures to be used for NASA work, including supplier innovations and changes in technology.

Provides visual workmanship standards to aid those responsible for determining quality conformance to the established requirements.

NASA installations shall:

Invoke the provisions of this publication in procurements involving interconnecting cabling and wiring for aircraft, spacecraft, launch vehicles, mission essential support equipment, and elements thereof as appropriate to design or project requirements. Appendix A contains definitions for terminology used in this publication. Appendix B contains visual aids applicable to the processes contained in this publication. Appendix C explains some problems in the assembly of coaxial connectors.

Amend, when timely and within cost constraints, existing contracts to invoke the requirements of this publication.

Utilize the provisions of this publication as a basis for fabricating interconnecting cabling and wiring and, as necessary, for training and certifying in-house personnel.

Assure that NASA contractors invoke the provisions of this publication in their subcontracts and purchase orders.

Furnish copies of this publication, in the quantities required, to NASA contractors, subcontractors, and subtier suppliers.

Questions concerning application of this publication to specific procurements shall be referred to the procuring NASA installation or its designated representative.

This publication shall not be rewritten or reissued in any other form.

Milton A. Silveira
Chief Engineer

DISTRIBUTION:

SDL 1 (SIQ)

ORGANIZATION OF THE R&QA MANUAL

OVERALL COVERAGE

The Reliability and Quality Assurance Manual - referred to as the "R&QA Manual" - is the overall generic title which identifies all NASA R&QA management publications published under the basic R&QA subject classification code. The publications are grouped by major subject breakdown and further divided into specific categories identified as Parts. These Parts (not a complete R&QA Manual) are published as individual R&QA publications.

The following list shows the grouping and R&QA publications:

Title

Volume 1 - General Provisions

Title	Number
Reliability Program Provisions for Aeronautical and Space System Contractors	NHB 5300.4(1A) (April 1970)
Quality Program Provisions for Aeronautical and Space System Contractors	NHB 5300.4(1B) (April 1969)
Inspection System Provisions for Aeronautical and Space System Materials, Parts, Components and Services	NHB 5300.4(1C) (July 1971)
Safety, Reliability, Maintainability and Quality Provisions for the Space Shuttle Program	NHB 5300.4(1D-2) (October 1979)
Volume 2 - Government Agency Provisions	
Management of Government Quality Assurance Functions for Supplier Operations	NHB 5330.7 (May 1966)
Quality Assurance Provisions for Government Agencies	NHB 5300.4(2B) (November 1971)
Volume 3 - Standards	
Requirements for Soldered Electrical Connections	NHB 5300.4(3A-1) (December 1976)

Qualified Product Lists Requirements for Microcircuits	(NHB 5300.4(3F) (June 1972)
Requirements for Interconnecting Cables, Harnesses, and Wiring	NHB 5300.4(3G) (April 1985)
Requirements for Crimping and Wire Wrap	NHB 5300.4(3H) (May 1984)
Requirements for Printed Wiring Boards	NHB 5300.4(3I) (May 1984)
Requirements for Conformal Coating and Staking of Printed Wiring Boards and Electronic Assemblies	NHB 5300.4(3J) (April 1985)

DOCUMENT REFERENCING

Each R&QA Manual Part is assigned its own identification number within the basic classification code. The numeric-alpha suffix within a parenthesis identifies the grouping of the publication, that is, the volume and part, such as NHB 5300.4(3A): This number indicates that this is the first "Standards" (Volume 3) publication to be issued.

When a part is revised, the suffix identification will be changed to indicate the revision number, such as NHB 5300.4(3A-1).

In referencing or requesting any R&QA publication, the complete specific NHB number must be used.

PARAGRAPH REFERENCING

1. **Within the R&QA Manual.** The following shows the paragraph numbering system applicable to all R&QA publications.

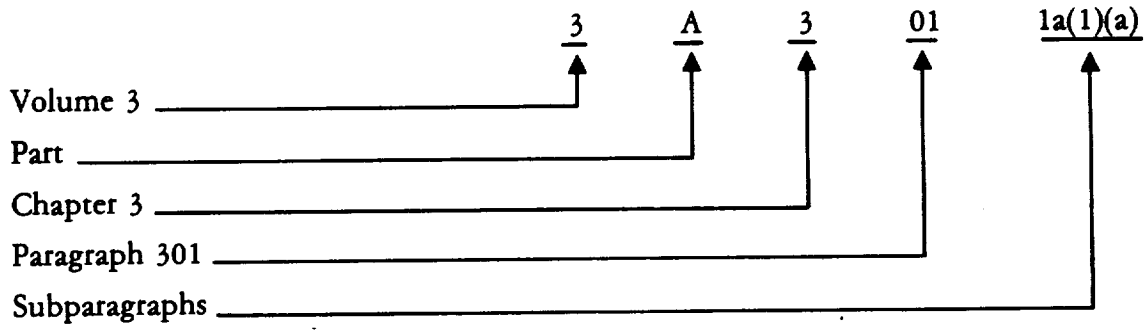

ORGANIZATION OF THE R&QA MANUAL

OVERALL COVERAGE

The Reliability and Quality Assurance Manual - referred to as the "R&QA Manual" - is the overall generic title which identifies all NASA R&QA management publications published under the basic R&QA subject classification code. The publications are grouped by major subject breakdown and further divided into specific categories identified as Parts. These Parts (not a complete R&QA Manual) are published as individual R&QA publications.

The following list shows the grouping and R&QA publications:

Title

Volume 1 - General Provisions

Title	Number
Reliability Program Provisions for Aeronautical and Space System Contractors	NHB 5300.4(1A) (April 1970)
Quality Program Provisions for Aeronautical and Space System Contractors	NHB 5300.4(1B) (April 1969)
Inspection System Provisions for Aeronautical and Space System Materials, Parts, Components and Services	NHB 5300.4(1C) (July 1971)
Safety, Reliability, Maintainability and Quality Provisions for the Space Shuttle Program	NHB 5300.4(1D-2) (October 1979)
Volume 2 - Government Agency Provisions	
Management of Government Quality Assurance Functions for Supplier Operations	NHB 5330.7 (May 1966)
Quality Assurance Provisions for Government Agencies	NHB 5300.4(2B) (November 1971)
Volume 3 - Standards	
Requirements for Soldered Electrical Connections	NHB 5300.4(3A-1) (December 1976)

Qualified Product Lists Requirements for Microcircuits	(NHB 5300.4(3F) (June 1972)
Requirements for Interconnecting Cables, Harnesses, and Wiring	NHB 5300.4(3G) (April 1985)
Requirements for Crimping and Wire Wrap	NHB 5300.4(3H) (May 1984)
Requirements for Printed Wiring Boards	NHB 5300.4(3I) (May 1984)
Requirements for Conformal Coating and Staking of Printed Wiring Boards and Electronic Assemblies	NHB 5300.4(3J) (April 1985)

DOCUMENT REFERENCING

Each R&QA Manual Part is assigned its own identification number within the basic classification code. The numeric-alpha suffix within a parenthesis identifies the grouping of the publication, that is, the volume and part, such as NHB 5300.4(3A): This number indicates that this is the first "Standards" (Volume 3) publication to be issued.

When a part is revised, the suffix identification will be changed to indicate the revision number, such as NHB 5300.4(3A-1).

In referencing or requesting any R&QA publication, the complete specific NHB number must be used.

PARAGRAPH REFERENCING

1. **Within the R&QA Manual.** The following shows the paragraph numbering system applicable to all R&QA publications.

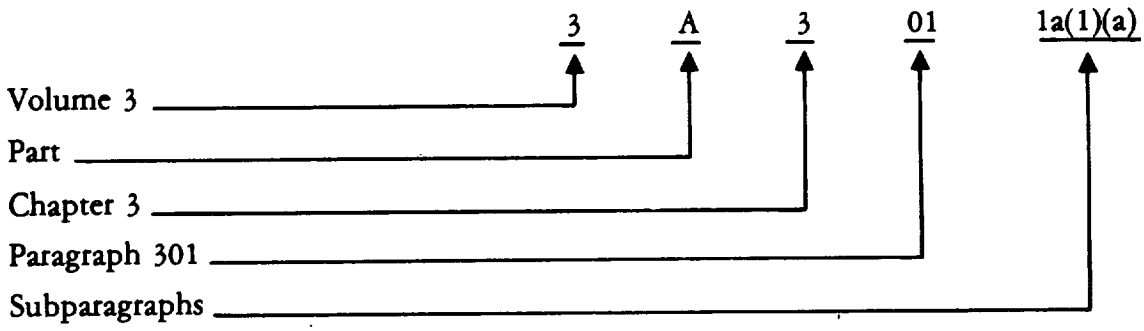

This system provides for referencing any R&QA publication requirement (paragraph) in any other R&QA publication without the need for identifying the NHB number, title, the volume number, or part. However, when referencing a complete Part within another R&QA publication, the specific NHB number must be used.

2. **In Other NASA Documents.** When it is necessary to reference an R&QA publication requirement (paragraph) in any other NASA document, the specific NHB number and paragraph number must be used together as follows: "NHB 5300.4(3A-1), paragraph 3A301-1a(1)(a)," or "paragraph 3A301-2b of NHB 5300.4(3A-1)."

TABLE OF CONTENTS

Par.		Page
	CHAPTER 1. BASIC PRINCIPLES	
3G100	Applicability and Scope	1
3G101	Principles of Reliable Cabling and Wiring	1
3G102	General	2
3G103	Related Documents	2
3G104	Deviation and Waiver Requests	3
3G105	Rework	4
3G106	Definitions	
	CHAPTER 2. SUPPLIER CABLING AND WIRING PROGRAM	
3G200	General	5
3G201	Training and Certification	5
3G202	Maintenance of Certified Status	5
3G203	Recertification	6
3G204	Revocation of Certified Status	6
3G205	Vision Requirements	7
3G206	Workmanship Standards	7
3G207	Documentation	8
	CHAPTER 3. FACILITIES, EQUIPMENT, MATERIALS, AND PARTS	
3G300	Facility Cleanliness	9
3G301	Environmental Conditions	9
3G302	Lighting Requirements	10
3G303	Tool and Equipment Control	10
3G304	In-Process Storage and Handling	10
3G305	Wire Processing and Preparation Tools	11
3G306	Materials Selection	11
3G307	Solvents	11
3G308	Safety Standards	12
	CHAPTER 4. DESIGN REQUIREMENTS	
3G400	General Requirements	13
3G401	Design Criteria	13

Preceding page blank

Par. Page

CHAPTER 5. INTERCONNECTING CABLE/HARNESS FIXTURING

3G500 General 17
3G501 Mockup and Wiring Board Design Parameters 17
3G502 Temporary Identification 17
3G503 Interconnecting Cable and Harness Protection 17

CHAPTER 6. SECURING AND PROTECTING ASSEMBLED WIRES AND PARTS

3G600 General 21
3G601 Lacing for Trunk, Branches, and Breakouts 21
3G602 Fabric Braid Sleeving (Prewoven) 26
3G603 Fabric Braid Directly Woven on Interconnecting Harness or Cable 27
3G604 Spiral Wrap Sleeving 29
3G605 Plastic Straps 30
3G606 Metal Braid Shielding 31
3G607 Plastic Tubing 31
3G608 Installation of Heat-Shrinkable Sleeving 32
3G609 Long Lengths of Shrinkable Sleeving 34
3G610 Shrinkable Part Requirements and Installation 34

CHAPTER 7. STRIPPING INSULATION FROM ELECTRICAL WIRE AND CABLE

3G700 Stripping Round Conductors 37
3G701 Stripping Jackets Over Shields 38
3G702 Stripping Flat Conductor Cable 38
3G703 Acceptance Criteria 38
3G704 Rejection Criteria 38

CHAPTER 8. CABLE SHIELDING AND SHIELD TERMINATION

3G800 General RFI/EMI Practices 39
3G801 Overall Shielding 39
3G802 Terminating Overall Shielding Using RFI/EMI Adapters 40
3G803 Unshielded Wire Exposure and Total Length of Grounding Wires 40
3G804 Shields Terminated by Hand Soldering 40
3G805 Shields Terminated by Crimp Ferrules 43
3G806 Heat-Shrinkable Shield Termination 43
3G807 Group-Grounding of Individual Shield Terminations 43
3G808 Large Compression Ring Grounding 45
3G809 Floating Shield Terminations 47

Par.		Page
3G810	Foil Shield Drain Wire Termination	48
3G811	Acceptance Criteria	48
3G812	Rejection Criteria	49

CHAPTER 9. CONNECTOR ASSEMBLY

3G900	General	51
3G901	Assembly of Crimp-Type Connectors (Including Terminal Junctions)	51
3G902	Assembly of Solder-Type Connectors	52
3G903	Assembly of Environmental and Hermetic Connectors	52
3G904	Assembly (Torquing) of Adapters and Cable Clamps to Connectors	53
3G905	Assembly of RF Connectors and Coaxial Contacts	53
3G906	Inspection and Verification Testing	53

CHAPTER 10. HARNESS IDENTIFICATION

3G1000	Permanent Identification	59
3G1001	Verification of Identification	59

CHAPTER 11. INTERCONNECTING HARNESS AND CABLE CLEANING

3G1100	General	61
3G1101	Cleaning the Harness Assembly	61
3G1102	Cleaning Harness Connectors	61
3G1103	Cleaning Coaxial Connectors (Assembled)	62
3G1104	Quality Inspection Provisions	62

CHAPTER 12. INTERCONNECTING HARNESS AND CABLE HANDLING AND PROTECTION

3G1200	General	63
3G1201	In-Process Protection for Flight and Critical Assemblies	63
3G1202	Completed Interconnecting Harness and Cable Protection for Flight Assemblies	63
3G1203	GSE Interconnecting Harnesses and Cables	64
3G1204	Inspection	64

CHAPTER 13. CONNECTOR MATING

3G1300	General	65
3G1301	Connector Mating and Demating	65
3G1302	Coaxial Connector Mating	66

Par. Page

CHAPTER 14. TESTING AND INSPECTION

3G1400 General 67
3G1401 Testing 67
3G1402 Inspection 68

APPENDIXES

Appendix A Definitions A-1
Appendix B Wire Visual Aids and Illustrations B-1
Appendix C Critical Problems in Coaxial Cable Assembly C-1

Par.		Page
3G810	Foil Shield Drain Wire Termination	48
3G811	Acceptance Criteria	48
3G812	Rejection Criteria	49

CHAPTER 9. CONNECTOR ASSEMBLY

3G900	General	51
3G901	Assembly of Crimp-Type Connectors (Including Terminal Junctions)	51
3G902	Assembly of Solder-Type Connectors	52
3G903	Assembly of Environmental and Hermetic Connectors	52
3G904	Assembly (Torquing) of Adapters and Cable Clamps to Connectors	53
3G905	Assembly of RF Connectors and Coaxial Contacts	53
3G906	Inspection and Verification Testing	53

CHAPTER 10. HARNESS IDENTIFICATION

3G1000	Permanent Identification	59
3G1001	Verification of Identification	59

CHAPTER 11. INTERCONNECTING HARNESS AND CABLE CLEANING

3G1100	General	61
3G1101	Cleaning the Harness Assembly	61
3G1102	Cleaning Harness Connectors	61
3G1103	Cleaning Coaxial Connectors (Assembled)	62
3G1104	Quality Inspection Provisions	62

CHAPTER 12. INTERCONNECTING HARNESS AND CABLE HANDLING AND PROTECTION

3G1200	General	63
3G1201	In-Process Protection for Flight and Critical Assemblies	63
3G1202	Completed Interconnecting Harness and Cable Protection for Flight Assemblies	63
3G1203	GSE Interconnecting Harnesses and Cables	64
3G1204	Inspection	64

CHAPTER 13. CONNECTOR MATING

3G1300	General	65
3G1301	Connector Mating and Demating	65
3G1302	Coaxial Connector Mating	66

Par. Page

CHAPTER 14. TESTING AND INSPECTION

3G1400 General 67
3G1401 Testing 67
3G1402 Inspection 68

APPENDIXES

Appendix A Definitions A-1
Appendix B Wire Visual Aids and Illustrations B-1
Appendix C Critical Problems in Coaxial Cable Assembly C-1

CHAPTER 1: BASIC PRINCIPLES

3G100 APPLICABILITY AND SCOPE

1. **Applicability.** This publication is applicable to NASA programs involving interconnecting cabling and wiring harnesses for aircraft, spacecraft, launch vehicles, mission essential support equipment, and elements thereof, and where invoked contractually in procurements.

2. **Scope.** This publication sets forth requirements for interconnecting cable and harness assemblies that connect electrical/electronic and electromechanical components.

3. **Special Requirements.** Special requirements may exist which are not covered by or are not in conformance with the requirements of this publication. *Design documentation shall contain the detail for such requirements, and they shall take precedence over conflicting portions of this publication when they have been approved in writing by the procuring NASA installation.*

3G101 PRINCIPLES OF RELIABLE CABLING AND WIRING

1. **Factors Controlling Reliability.** Reliable interconnecting cabling and wiring harnesses result from proper design, control of tools, materials, work environments, and careful workmanship by trained and certified personnel.

2. **Fabrication Principles.** All fabrication shall be performed to meet governing engineering documentation.

3. **Splicing.** Splicing of damaged or broken conductors is not permitted.

4. **Design Considerations.** The basic design considerations to assure reliable interconnecting cabling and wiring assemblies are as follows:

   a. The associated materials, parts, and hardware used shall be selected to provide proper fit, function, and support of wiring and cabling.

   b. Tools used shall be those that properly process wires and cables during preparation and assembly without damaging them.

   c. Wires shall not be taut; provision shall be made for stress relief.

d. Wiring installation and connectors shall be assembled, tested, and inspected to verify conformance to requirements.

e. Support of wiring/wire bundles/harnesses shall be designed to control and minimize the transfer of shock and vibration induced loading into the connector/wire terminations and to preclude excessive flexing or pressure over sharp or rough edges.

3G102 GENERAL

1. **Implementation.** NASA quality assurance personnel will advise and assist contractors, suppliers, NASA personnel, and delegated agencies in the proper and effective implementation of the provisions of this publication. Effective implementation includes establishing a system which will identify each inspection point and provide a record.

2. **Changes in Requirements.** When related requirements or changes in requirements are specified, NASA quality assurance personnel will assure that the Government agency delegated to inspect at the supplier's site of fabrication has received full instructions so that the work will be inspected to actual contract requirements.

3. **Nonstandard Processes, Materials, or Parts.** When the supplier intends to use processes, materials, or parts not covered by this publication, the supplier shall document the details of fabrication and inspection, including acceptance and rejection criteria, and shall provide appropriate test data. Such documentation shall be approved by the procuring NASA installation prior to use.

3G103 RELATED DOCUMENTS

1. **Applicable Specifications.** Copies of the following specifications, when required in connection with a specific procurement, may be obtained from the procuring NASA installation or as directed by the contracting officer:

Federal Specifications:

O-T-620, "1,1,1-Trichloroethane Technical, Inhibited (Methyl Chloroform)."

CHAPTER 1: BASIC PRINCIPLES

3G100 APPLICABILITY AND SCOPE

1. **Applicability.** This publication is applicable to NASA programs involving interconnecting cabling and wiring harnesses for aircraft, spacecraft, launch vehicles, mission essential support equipment, and elements thereof, and where invoked contractually in procurements.

2. **Scope.** This publication sets forth requirements for interconnecting cable and harness assemblies that connect electrical/electronic and electromechanical components.

3. **Special Requirements.** Special requirements may exist which are not covered by or are not in conformance with the requirements of this publication. *Design documentation shall contain the detail for such requirements, and they shall take precedence over conflicting portions of this publication when they have been approved in writing by the procuring NASA installation.*

3G101 PRINCIPLES OF RELIABLE CABLING AND WIRING

1. **Factors Controlling Reliability.** Reliable interconnecting cabling and wiring harnesses result from proper design, control of tools, materials, work environments, and careful workmanship by trained and certified personnel.

2. **Fabrication Principles.** All fabrication shall be performed to meet governing engineering documentation.

3. **Splicing.** Splicing of damaged or broken conductors is not permitted.

4. **Design Considerations.** The basic design considerations to assure reliable interconnecting cabling and wiring assemblies are as follows:

   a. The associated materials, parts, and hardware used shall be selected to provide proper fit, function, and support of wiring and cabling.

   b. Tools used shall be those that properly process wires and cables during preparation and assembly without damaging them.

   c. Wires shall not be taut; provision shall be made for stress relief.

d. Wiring installation and connectors shall be assembled, tested, and inspected to verify conformance to requirements.

e. Support of wiring/wire bundles/harnesses shall be designed to control and minimize the transfer of shock and vibration induced loading into the connector/wire terminations and to preclude excessive flexing or pressure over sharp or rough edges.

3G102 GENERAL

1. **Implementation.** NASA quality assurance personnel will advise and assist contractors, suppliers, NASA personnel, and delegated agencies in the proper and effective implementation of the provisions of this publication. Effective implementation includes establishing a system which will identify each inspection point and provide a record.

2. **Changes in Requirements.** When related requirements or changes in requirements are specified, NASA quality assurance personnel will assure that the Government agency delegated to inspect at the supplier's site of fabrication has received full instructions so that the work will be inspected to actual contract requirements.

3. **Nonstandard Processes, Materials, or Parts.** When the supplier intends to use processes, materials, or parts not covered by this publication, the supplier shall document the details of fabrication and inspection, including acceptance and rejection criteria, and shall provide appropriate test data. Such documentation shall be approved by the procuring NASA installation prior to use.

3G103 RELATED DOCUMENTS

1. **Applicable Specifications.** Copies of the following specifications, when required in connection with a specific procurement, may be obtained from the procuring NASA installation or as directed by the contracting officer:

   Federal Specifications:

   O-T-620, "1,1,1-Trichloroethane Technical, Inhibited (Methyl Chloroform)."

Military Specifications:

MIL-STD-826, "Electromagnetic Interference Test Requirements and Test Methods."

MIL-STD-975 (NASA), "Standard Parts List for Flight and Mission Essential Ground Support Equipment."

MIL-E-17555, "Electronic and Electrical Equipment, Accessories, and Repair Parts, Packaging of."

MIL-I-23053, "Insulation Sleeving, Electrical, Heat Shrinkable, General Specification for."

2. **Other Publications:**

NHB 5300.3(3A-1) "Requirements for Soldered Electrical Connections."

NHB 5300.4(3H) "Requirements for Crimping and Wire Wrap" (May 1984).

NHB 8060.1 "Flammability, Odor and Offgassing Requirements and Test Procedures for Materials in Environments that Support Combustion."

OSHA Standards, 29 CFR Part 1910, "Occupational Safety and Health Standards," and state standards as applicable.

Unless otherwise specified, the issue in effect on the date of invitation for bids or requests for proposal shall apply.

3G104 DEVIATION AND WAIVER REQUESTS

1. **Approval of Changes.** This publication requires that:

   a. Written approval shall be obtained from the cognizant NASA Contracting Officer or designated NASA representative for technical changes, deviations, or waivers initiated by the supplier.

   b. All deviation and waiver requests shall be supported by objective evidence, and data substantiating that quality and reliability will not be compromised.

2. **Responsibility.** The prime contractor is responsible for assuring that any departures from this publication are evaluated, coordinated with, and submitted to the procuring NASA installation for approval prior to use or implementation.

3G105 REWORK

Rework is permissible unless excluded by other provisions of the contract. All rework shall meet the requirements of this publication. Rework is not repair. Repair shall be made only in compliance with applicable contractual requirements.

3G106 DEFINITIONS

For the purposes of this publication, the definitions in Appendix A shall apply.

CHAPTER 2: SUPPLIER CABLING AND WIRING PROGRAM

3G200 GENERAL

The supplier shall be responsible for maintaining a cabling and wiring program which meets the requirements of this publication for the types of electrical and electronic assemblies involved. Portions of this publication may be abstracted for the supplier's program.

3G201 TRAINING AND CERTIFICATION

The supplier is responsible for:

1. Assuring that design personnel are familiar with the requirements of this publication and other pertinent requirements of the contract or purchase order.

2. Providing necessary training of assembly and inspection personnel in cabling and wiring design and assembly techniques, equipment, and procedures pertinent to the areas of responsibility of each in performance of duties required to fulfill terms of the contract or purchase order.

3. Assuring that each individual who assembles or inspects cabling and wiring is appropriately skilled in the types of assembly involved in the assigned work.

4. Certifying that each individual who assembles or inspects cabling and wiring is currently qualified to fulfill all requirements of this publication pertaining to the types of assembly involved in the assigned work. Demonstration of proficiency is a prerequisite for such certification. Records or evidence of certification status shall be maintained in the work area.

5. Maintaining appropriate records of training and of certification criteria.

6. Providing each certified employee with a personal record of the dates and types of training received, and certification status.

3G202 MAINTENANCE OF CERTIFIED STATUS

1. **Proficient Workmanship.** The procuring NASA installation, its designated representative, or the supplier may require supplier assembly personnel to demonstrate proficient workmanship on applicable materials and hardware or to be recertified.

2. **Proficient Inspection.** The procuring NASA installation, its designated representative, or the supplier may require supplier inspection personnel to demonstrate proficient inspection performance and knowledge on applicable materials and hardware or to be recertified.

3G203 RECERTIFICATION

1. **Causes for Recertification.** Recertification shall be required when:

   a. Proficiency requirements herein are not met. The need for recertification shall be based on observation of the unsatisfactory quality of articles either fabricated by an assembler or accepted by an inspector.

   b. New techniques have been developed which require different skills.

   c. The type of work requiring certification is interrupted for more than 90 days.

2. **Recertification Procedures.** Procedures for recertification shall include sufficient training or retraining to enable the candidate to demonstrate proficiency in fabricating or inspecting cabling and wiring involved in the assigned work. A proficiency demonstration shall be required of each candidate.

3G204 REVOCATION OF CERTIFIED STATUS

Certification shall be revoked for operators or inspectors when:

1. Certificate holder requires recertification according to paragraph 3G203 and fails to be recertified.

2. Certificate holder fails to meet visual acuity requirements of paragraph 3G205.

3. Supplier training program fails to meet requirements set forth herein or set forth otherwise in the contract.

4. Termination of employment.

3G205 VISION REQUIREMENTS

1. **Supplier Responsibility.** Supplier is responsible for assuring that all personnel who assemble or inspect cabling and wiring meet the following vision test requirements as a prerequisite to training, certification, and recertification. The vision requirements may be met with corrected vision (personal eyeglasses). However, any correction necessary to meet vision requirements shall be documented on the certificate. Where work is performed under a microscope, suitable verification of necessary visual acuity shall be made. The eye tests shall be administered by qualified personnel using standard instruments and techniques. Results of the visual examinations shall be maintained and kept available for review.

2. **Minimum Vision Requirements.** The following are the minimum vision requirements:

   a. Far vision: Snellen Chart 20/50.

   b. Near vision: Jaeger 1 at 14 inches, reduced Snellen 20/20, or equivalent.

   c. Color vision: When color perception is necessary, ability to distinguish red, green, blue, and yellow colors as prescribed in Dvorine Charts, Ishihara Plates, or American Optical Company-Hardy, Rand, Ritter (AOC-HRR) Tests. A practical test, using color-coded wires and/or color-coded electrical parts, as applicable, will be acceptable for color vision testing. The color perception limitations shall be recorded on the individual's certification record.

3G206 WORKMANSHIP STANDARDS

The supplier shall make applicable standards readily available to personnel involved with manufacturing, assembly, installation, and inspection of wires, harnesses and cables. These standards shall be used in the training program and the supplier shall:

1. Furnish visual standards consisting of satisfactory work samples or visual aids which clearly illustrate the quality characteristics for all types of cabling and wiring applicable to the contract or purchase order.

2. Use applicable illustrations in this publication, supplemented as necessary for visual standards. Standards of unacceptable conditions may also be used for clarification or comparison.

3. Use appropriate work samples or visual aids for approved connections other than those illustrated herein.

3G207 DOCUMENTATION

1. **Applicable Documents.** Documents required herein, except as required by paragraph 3G103, shall be submitted to the procuring NASA installation or its designated representative as required by the contract or purchase order. Applicable supplier cabling and wiring documents, or portions thereof, accepted on other NASA contracts shall be included to avoid duplication of effort and notated as to which NASA installation(s) approved the documents and date(s) of approval.

2. **Training and Certification Programs.** The supplier shall describe the training and certification program proposed to satisfy the requirements herein for the types of cabling and wiring to be performed. This description shall include the following, as applicable:

   a. Qualification of instructors.

   b. Procedures for training, including who will be trained and for what function, e.g., fabricator, inspector, or other personnel.

   c. Lesson plan(s).

   d. Hours of instruction.

   e. Procedures for certification and recertification.

   f. Procedures for recording of training, recertification, and method of identifying trained personnel.

   g. Certification criteria.

3. **Process Methods and Procedures.** The supplier shall document the methods and procedures proposed to incorporate the requirements of this publication into the design, fabrication, and inspection, testing, and acceptance of cabling and wiring involved in the contract or purchase order.

CHAPTER 3: FACILITIES, EQUIPMENT, MATERIALS, AND PARTS

3G300 FACILITY CLEANLINESS

The supplier is responsible for maintaining cabling and wiring areas in a clean, orderly condition. Smoking, eating, and drinking at the work stations shall not be permitted.

3G301 ENVIRONMENTAL CONDITIONS

1. **Controlled Environment.** The cabling and wiring area shall have a controlled environment which limits the entry of contamination. The temperature and humidity of this area shall be continuously maintained within the limits defined as the comfort zone in Figure 3-1.

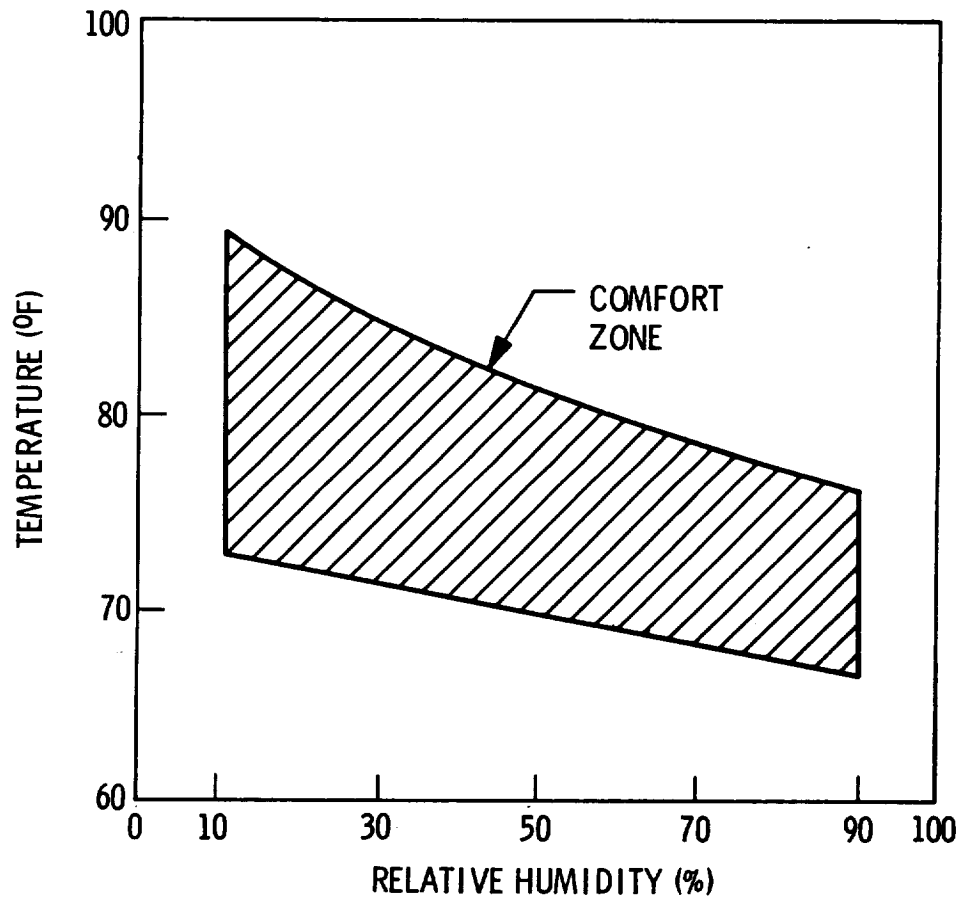

FIGURE 3-1
COMFORT ZONE:
TEMPERATURE VERSUS HUMIDITY REQUIREMENTS

Forced ventilation or exhaust shall be provided in areas where operations such as part cleaning and vapor degreasing are being performed.

When the parts or equipment being processed require more critical environmental conditions than the preceding, the requirements shall be identified and specified in the design documentation. Such requirements will take precedence over the established controlled environments.

2. **Field Operations Requirements.** In field operations where the required controlled conditions cannot be effectively achieved, the requirements of a controlled environment are not applicable. However, the person in charge shall take all possible precautions to limit contamination, high temperatures, and high humidity. These precautions shall be identified in the appropriate documentation.

3G302 LIGHTING REQUIREMENTS

Light intensity shall be a minimum of 100 foot-candles (1076.4 lumens/m^2) on the surface where cabling and wiring are being assembled, inspected or tested.

3G303 TOOL AND EQUIPMENT CONTROL

The supplier shall:

1. Select appropriate tools and equipment for use in cabling and wiring and for preparation thereof.

2. Assure proper function, control, and safety of equipment and tools by calibrating, maintaining, and cleaning them on a regular schedule.

3. Document the cabling and wiring program or reference detailed operating procedures and maintenance schedules for tools and equipment requiring calibration or setup.

4. Maintain records of tool and equipment calibration and verification.

5. Prohibit the presence of unauthorized, defective, or out-of-calibration tools at work stations.

3G304 IN-PROCESS STORAGE AND HANDLING

The supplier shall develop the requirements and implement the procedures necessary to prevent damage and to control conditions that could degrade the reliability of parts and deliverable items. In particular, means shall be provided to prevent damage to or contamination of wires, connectors, and other hardware during handling and storage. Containers shall be compatible with the materials stored in them. Refer to MIL-STD-826 and MIL-E-17555.

3G305 WIRE PROCESSING AND PREPARATION TOOLS

The supplier shall select and use conductor preparation tools as follows:

1. Either precision mechanical tools or thermal strippers shall be selected for insulation stripping. Thermal strippers shall have variable temperature control. The tools shall not nick, ring, gouge, or stretch conductors, or remove plating so that the base metal shows. Superficial scraping of conductors is acceptable providing conductor base material is not exposed.

2. Wire cutting tools that shear the conductor shall be selected in preference to diagonal cutters (dikes) that cut the conductor by bringing two blade edges together. The cutting edges of wire trimming tools shall be maintained sharp and free from nicks and indentations.

3. Torque tools shall be accurately calibrated and shall utilize drive sockets and attachments appropriate for the hardware being torqued.

3G306 MATERIALS SELECTION

Materials used in vacuum or low-pressure compartments shall have low emittance of condensables and noxious or toxic gases, see NHB 8060.1. Materials used shall be subjected to NASA approval.

3G307 SOLVENTS

1. **Solvent Requirements.** Solvents shall be nonconductive and noncorrosive and shall not dissolve or degrade the quality of parts or materials. Solvents shall be properly labeled and shall be maintained in a clean and uncontaminated condition. Solvents showing evidence of contamination or decomposition shall not be used.

CAUTION!

SOLVENTS SHALL NOT BE USED IN ANY MANNER WHICH WILL CARRY TO OR DEPOSIT RESIDUE ON CONTACT SURFACES SUCH AS THOSE IN SWITCHES, POTENTIOMETERS, OR CONNECTORS.

2. **Acceptable Solvents.** The following solvents are acceptable when used for cleaning connectors, hardware, and other materials and parts in cabling and wiring:

   a. Ethyl alcohol, American Chemical Society (ACS) grade, 99.5 percent or 95 percent by volume.

   b. Isopropyl alcohol, best commercial grade, 99 percent pure.

   c. Trichlorotrifluoroethane, clear, 99.8 percent pure.

   d. Any mixtures of the above.

   e. 1,1,1-Trichloroethane, Federal Specification O-T-620.

   Other solvents require approval of the procuring activity.

3. **Cleaning Procedures.** Procedures for cleaning shall be generated before solvent-cleaning is begun.

3G308 SAFETY STANDARDS

All applicable OSHA Safety Standards shall be observed.

CHAPTER 4: DESIGN REQUIREMENTS

3G400 GENERAL REQUIREMENTS

Connectors, wires, and hardware shall be selected from MIL-STD-975 (NASA) or as specified by contract.

Connectors, wires, and hardware shall be assembled, supported, and installed to provide reliable, trouble-free service. In particular, precautions shall be taken to prevent the mismating of connectors, caused by interchanging or by reversing, through one of the following techniques:

1. Use of constraints that locate similar connectors built into interconnecting cables and harnesses so they cannot be interchanged.

2. Selection of different sizes for connectors to be located adjacent to each other.

3. Polarization or dissimilar keying of adjacent, similar connectors.

4. Ensure clarity in marking and coding connectors and training personnel adequately to avoid mistakes in identification.

5. Use of confidence loop circuits to check out proper mated positions.

3G401 DESIGN CRITERIA

The following characteristics shall be considered for any interconnecting cable or harness design and incorporated into the installation design as applicable:

1. Current-carrying capacity of conductors as determined by MIL-HDBK-778, Section 18, Electrical Wire, Cable, and Harness, dated March 15, 1984.

2. Voltage drop considerations (particularly applicable for power circuits).

3. Availability of spare connector contacts (facilitates circuitry changes).

4. Properties of wire insulation (processibility, vacuum stability, solder-iron resistance, etc.).

5. Means of identification of cables, connectors, and wires and the effects of identification markers on environmental requirements.

6. Radio frequency interference/electromagnetic interference (RFI/EMI) shielding requirements.

7. Operation of circuits through critical pressure (require that potentials in excess of 200 Vac or 300 Vdc be terminated in a single-contact, high voltage connector).

8. Electrical wiring of redundant systems, redundant subsystems, or redundant major elements of subsystems shall not be routed in the same bundle or through the same connector with wiring of the other system, subsystem, or subsystem element.

9. Separate handling of radio frequency (RF) signals in coaxial cable and RF connector assemblies.

10. Materials and wiring design to meet NHB 8060.1 (Flammability, Odor and Off-gassing Requirements and Test Procedures for Materials in Environments that Support Combustion).

11. American Wire Gauge (AWG) 24 wire size and larger shall be used for conductors in interconnecting cable and harness assemblies. High strength copper alloy shall be used for AWG 24 and smaller conductors.

12. Torque values applicable for connectors, backshells, and other hardware.

13. Routing harnesses and cables so that they are protected from abrasion, cold flow, and cut-through. They shall not be mounted to fluid lines except for liquid engine applications.

14. The use of parts, wires, materials, and hardware specified in MIL-STD-975 (NASA) is preferred.

15. Selection of hardware that supports interconnecting cables or wire bundles firmly without tightly squeezing or pinching them.

16. Minimizing permanent splicing of wires for circuitry purposes.

17. Protection of all electrical terminations, except shield and ground terminations, to withstand the operating environment.

18. Confining line voltages to connectors with sockets to preclude exposing voltage points when connectors are disconnected.

19. Specifying the use of sealing plugs and unused contacts in environmental connectors.

20. Fabricating cables containing discrete wires in one or more layers by winding the wires together uniformly. Whether successive layers are twisted contrahelically or unidirectionally is optional. Winding shall prevent the introduction of residual twist into individual conductors. The length of lay for each layer shall be between 9 and 16 times the layer diameter.

21. The bend radius data given in Table 4-1 shall apply for bending that occurs in the installed interconnecting harness or cable. (These values do not apply to transitions, breakouts, and bends that have been permanently built into a harness during its assembly on a wiring board.)

TABLE 4-1
BEND RADII FOR COMPLETED INTERCONNECTING CABLE OR HARNESS

Wire Type	Optimum Bend Radius	Minimum Bend Radius
Individual coaxial cable.	10 × OD1/	6 × OD
Overall harness (with coaxial cable or AWG size 8 or larger).	10 × OD	6 × OD
Overall harness (with AWG size 10 or smaller without coaxial cable).	10 × OD	3 × OD

1/ Outside diameter.

22. The use of solder sleeves (where wire insulation temperatures permit) is preferable to crimp rings for terminating individual shields. Crimp rings under mechanical and vibration loads have been susceptible to shorting to adjacent conductors.

23. Cable clamps/supports shall be specified by design and placed at intervals (not exceeding 18 inches between supports) such that the harness/cable vibration and shock will be minimized. Special support design requirements shall be considered for wires and harnesses terminating in high density "terminal junction" devices.

CHAPTER 5: INTERCONNECTING CABLE/HARNESS FIXTURING

3G500 GENERAL

Layout and fixturing shall be provided for all interconnecting cables and harnesses other than very simple ones. Permanent bends and offsets shall be built into harnesses so that the final wire dress will not be under continuous strain and tension after installation. Back shell moldings shall accommodate bends and offsets in wire harnesses as appropriate to avoid continuous stress. Additionally, the layout shall be designed to limit the amount of bending, pulling, and other handling a harness will receive during installation.

3G501 MOCKUP AND WIRING BOARD DESIGN PARAMETERS

Wiring boards and other mockups shall be constructed full size and shall account for all the physical fixtures the interconnecting harness or cable will encounter. Typical harness board hardware and typical fixtures are shown in Figures 5-1 and 5-2 respectively.

3G502 TEMPORARY IDENTIFICATION

Temporary identification markers may be used for in-process identification requirements. The markers shall not leave a contaminating residue, and all markers shall be removed from completed cabling and harnessing.

3G503 INTERCONNECTING CABLE AND HARNESS PROTECTION

The supplier shall establish and implement procedures to protect interconnecting cables and harnesses from damage and degradation. Connectors not being actively assembled shall be individually protected by wrapping them in bubble pack or other physical covering. At the end of the work shift, protective plastic shall be spread over the harnesses in fabrication. Harnesses not in active fabrication (those in temporary storage) shall be covered by protective plastic.

Preceding page blank

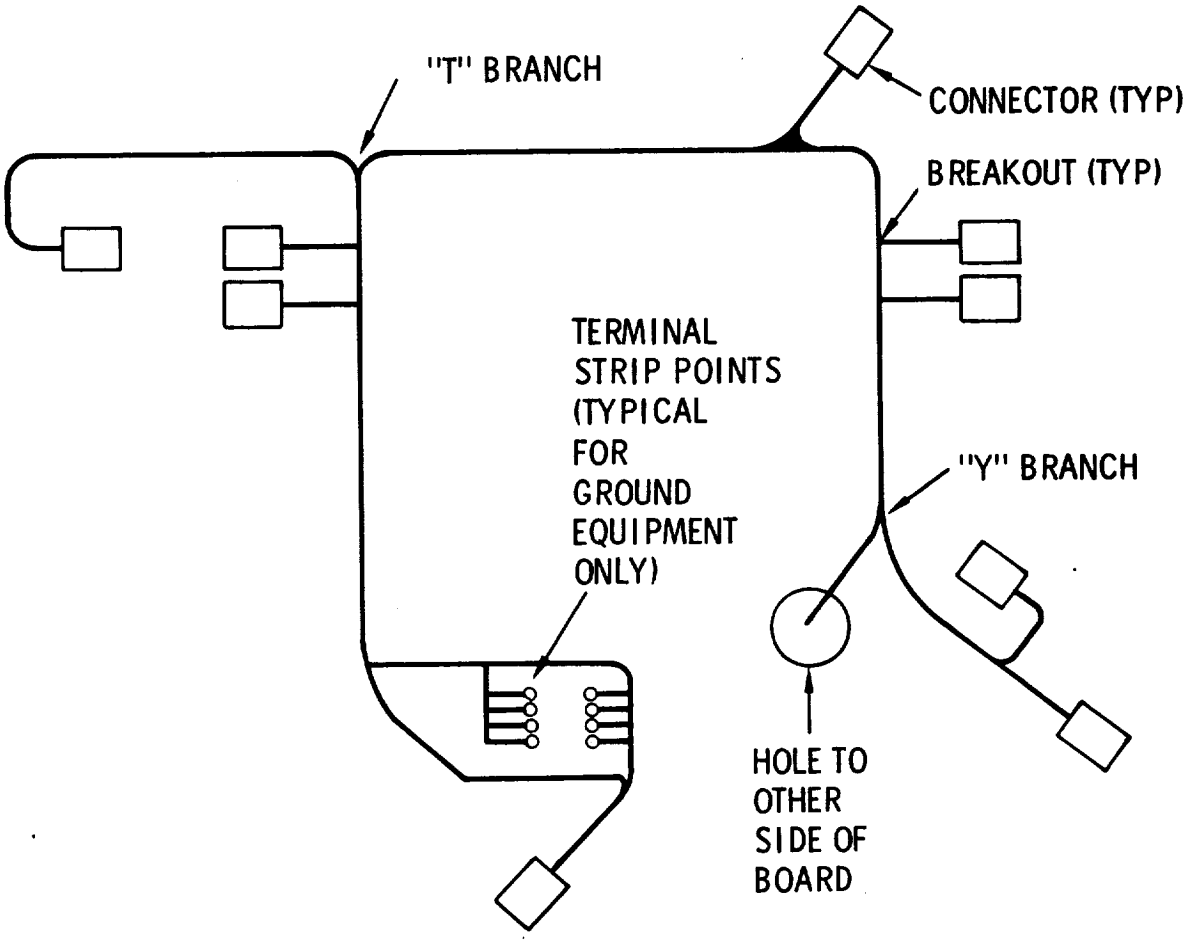

FIGURE 5-1
LINE DRAWING OF TYPICAL HARNESS

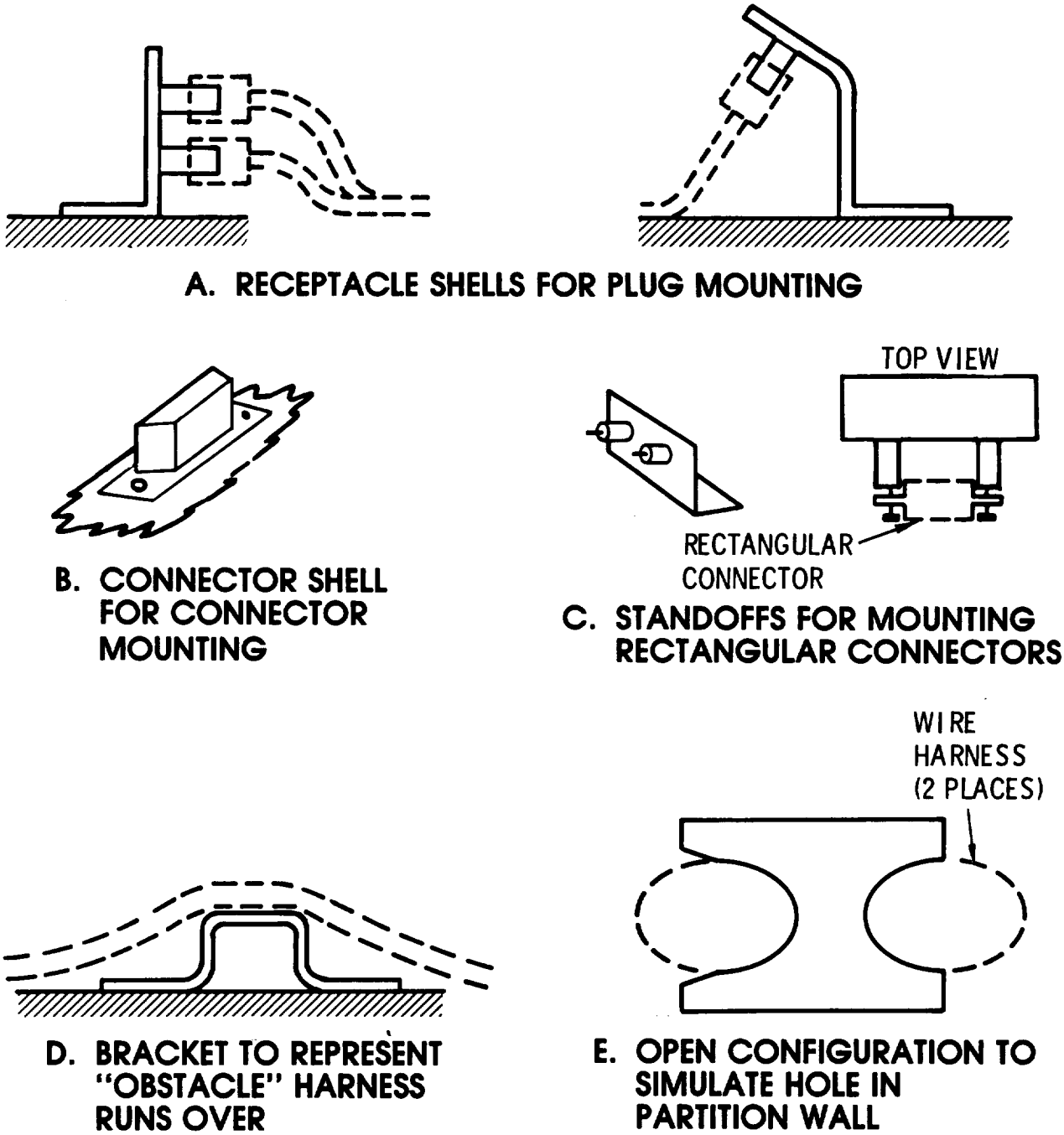

FIGURE 5-2
TYPICAL HARNESS BOARD HARDWARE AND FIXTURES

CHAPTER 6:
SECURING AND PROTECTING ASSEMBLED WIRES AND PARTS

3G600 GENERAL

Wiring shall be assembled in interconnecting cables or harnesses as described herein. Fabrication methods and assembly techniques that assure the production of high quality interconnecting cables and harnesses shall be used. Harness design shall make provision for special performance requirements of any specific harness section (e.g., ease of bending, flexibility in twisting, electrical isolation, and ability to fit into confined spaces). Heat-shrinkable tubing and parts are used for mechanical protection, physical protection, stress relief, electrical insulation, and identification purposes.

3G601 LACING FOR TRUNK, BRANCHES, AND BREAKOUTS

When design documents prescribe the use of continuous lacing, the following requirements shall apply. When knots are staked (see Figure 6-7), the necessary compounds, as well as any special design requirements, shall be specified.

1. **Starting Stitch.** Harnesses laced with single tape shall initially be tied with a starting stitch. Single-tape starting stitches shall be the same as a spot tie with a running end (see item 2 of this paragraph), or as shown in Figure 6-1 View A. Starting stitches for double lacing shall be as shown in Figure 6-1 View B. Starting stitches shall not place strain on wire terminations.

2. **Spot Ties.** Spot ties may consist of a clove hitch followed by a square knot as shown in Figure 6-2. See Table 6-1 for spot tie spacing.

3. **Closing Stitch.** Single or double lacing tape shall be terminated with a closing stitch as shown in Figure 6-3. Lacing shall be terminated at every major breakout or branch and at the extremity of the harness. (Major breakouts normally contain a large percentage of the wire volume, such as 25 to 30 percent or more.) The stitching shall terminate close to the extremity of the harness but shall not strain the wire terminations. Closing and starting stitches at branches and breakouts shall be next to the breakout. An alternate closing stitch method is shown in Figure 6-4. Single or small multiple breakouts of two or three wires need not have closing and starting stitches, but may have running lockstitches on each side (see Figure 6-5).

Preceding page blank

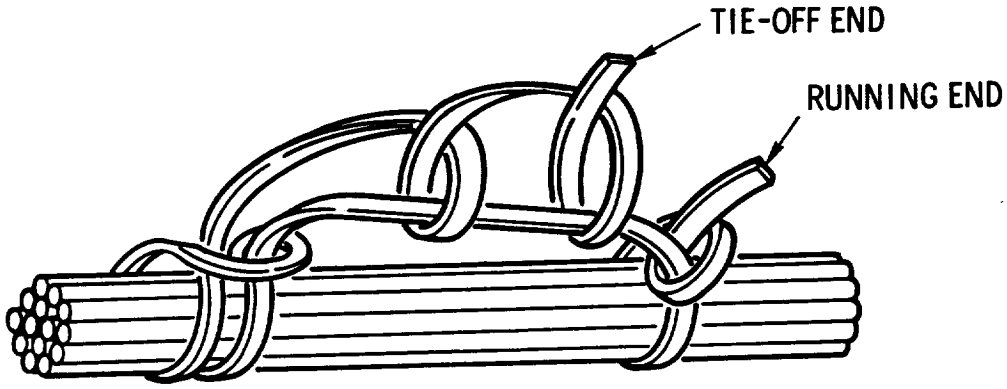

CLOSED END WITH TWO HALF HITCHES

A. STARTING STITCH, SINGLE TAPE

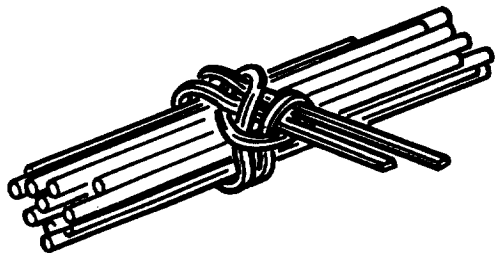

B. STARTING STITCH, DOUBLE TAPE

FIGURE 6-1
STARTING STITCH

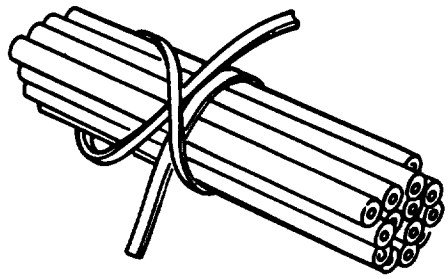

A. CLOVE HITCH

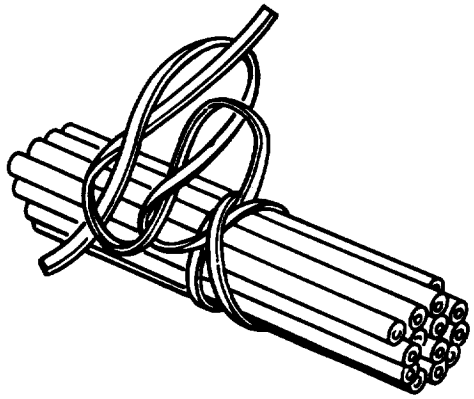

B. CLOVE HITCH AND SQUARE KNOT

FIGURE 6-2
SPOT TIE (TYPICAL)

TABLE 6-1
SPOT TIE, PLASTIC STRAP, AND STITCH SPACING DIMENSIONS

Harness Diameter, Inches (mm)	Maximum Distance Between Harness Ties Inches (mm)
.25 (6.4) or less	.75 (19.1)
.50 (12.7)	1.50 (38.1)
1.00 (25.4)	2.00 (50.8)
Larger than 1 inch (25.4)	3.00 (76.2)

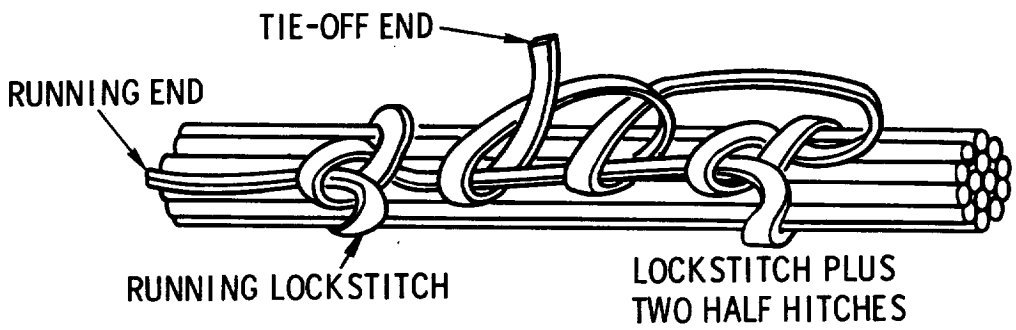

FIGURE 6-3
CLOSING STITCH, SINGLE TAPE ILLUSTRATED

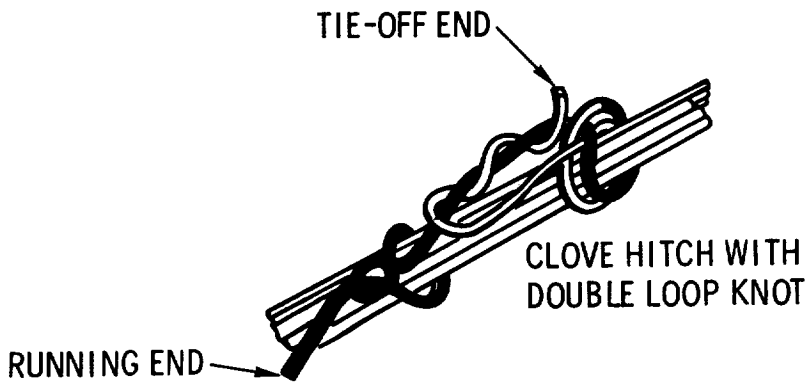

FIGURE 6-4
ALTERNATE CLOSING STITCH, SINGLE TAPE ILLUSTRATED

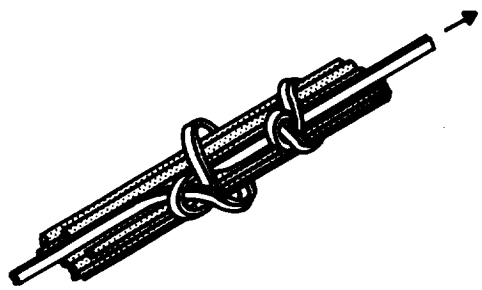

FIGURE 6-5
RUNNING LOCKSTITCH

4. **Running Lockstitch.** Continuous lacing shall be achieved using running lockstitches as shown in Figure 6-5.

5. **Stitch Spacing.** Lacing stitches and spot ties shall be spaced as detailed in Table 6-1. A tie or stitch shall be placed immediately before and immediately after any breakout of the wire or cable from the harness. Dimensions from the connector or connector accessories to start of harness tie are given in Table 6-2.

TABLE 6-2
DISTANCES FROM CONNECTORS OR CONNECTOR ACCESSORIES TO BEGINNING OF HARNESS TIES

Harness-Bundle Diameter	Maximum Distance From Connector or Connector Accessory to Start of First Tie
Less than 1/2 inch (12.7 mm)	2 inches (50.8 mm)
1/2 to 1 inch (12.7 to 25.4 mm)	3 inches (76.2 mm)
1 inch (25.4 mm) or larger	4 inches (101.6 mm)

6. **Flat Stitching.** Flat stitching shall utilize either of the stitches pictured in Figure 6-6.

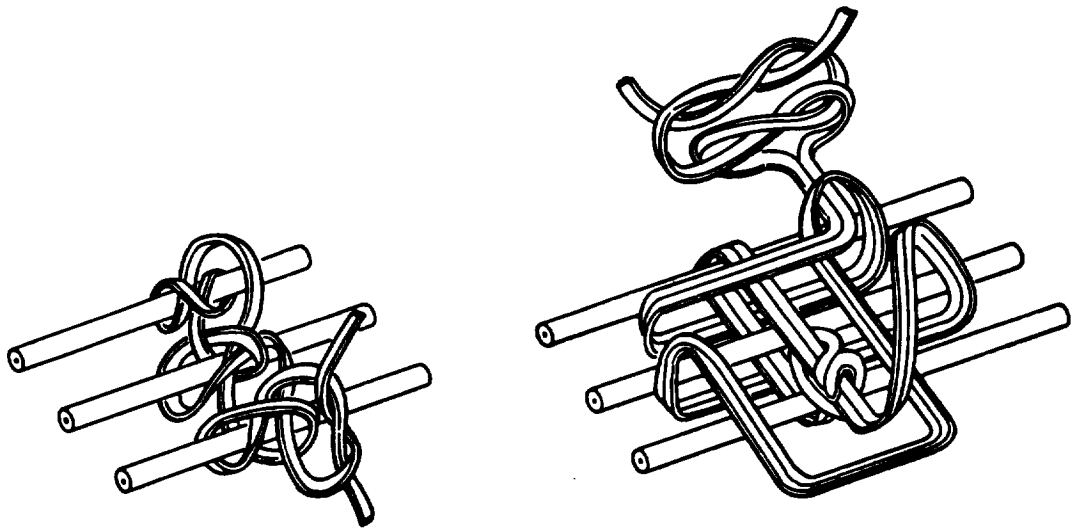

FIGURE 6-6
FLAT LACING STITCHES

7. **Large Breakouts.** Lockstitching shall terminate with a closing stitch before each large breakout or branch of the harness. The lacing shall start anew with a starting stitch on the opposite side of the breakout on each branch.

3G602 FABRIC BRAID SLEEVING (PREWOVEN)

Prewoven fabric (unvarnished) braid sleeving to be installed over wire harness shall be slightly oversized so that it can readily be slid over the bundle. Braided sleeving shall be snugly dressed down over the wire bundle. Continuous braid sleeving shall be secured at the ends by plastic cable straps, spot ties, clamps, shrinkable sleeving, or a potting material. When secured, the covering shall not slide freely. Sleeving shall be trimmed and terminated at a breakout but shall not be punctured or slit to provide openings for breakout. After installation, braided sleeving shall be secured or treated in one of the following ways to eliminate fraying or unraveling:

1. Braided sleeving may be secured by a spot tie or plastic cable strap. The end of the braid shall be tucked under and secured with a spot tie or plastic strap (see Figure 6-7).

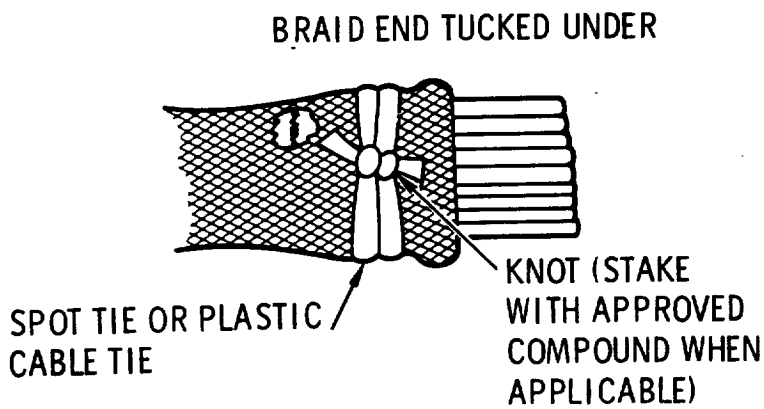

FIGURE 6-7
SECURING FABRIC BRAID SLEEVING

2. The end of the braid may be secured by connector clamps, other hardware, or potting.

3. The ends of glass braids may be bonded using an adhesive. Excessively frayed material shall be trimmed away prior to application of the adhesive. When the adhesive is dry, the braid shall be secured by spot tying or other means so that it does not slip on the wire bundle.

4. Polyamide (nylon) braids (for use on ground service equipment) may have their ends sealed by use of a "hot knife" or similar instrument.

3G603 FABRIC BRAID DIRECTLY WOVEN ON INTERCONNECTING HARNESS OR CABLE

Fabric braids woven directly on interconnecting harnesses or cables may be loose or tight, as necessary to produce the degree of flexibility required. The braid shall be smooth and shall provide coverage that leaves no gaps through which the wires can be seen. No frayed ends shall be visible. All pigtails shall be secured. Braids applied tightly shall not terminate so close to connectors that they stress wires attached to solder cups. Spot ties, plastic straps, lacing, and other temporary holding means shall be removed from wire bundles prior to braid application. Flat tapes may be left under braid if the tape has a low profile. Typical braiding techniques are shown in Figures 6-8, 6-9, and 6-10.

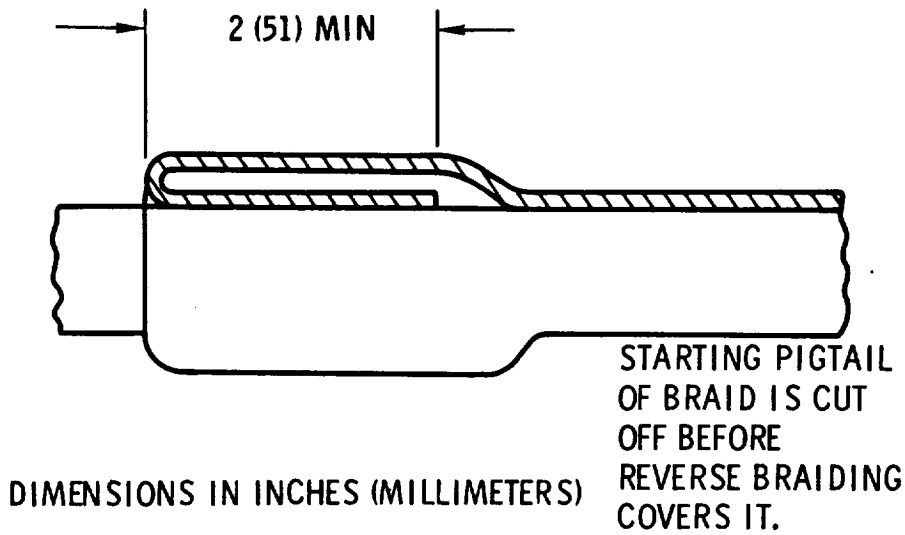

FIGURE 6-8
STARTING LOCK

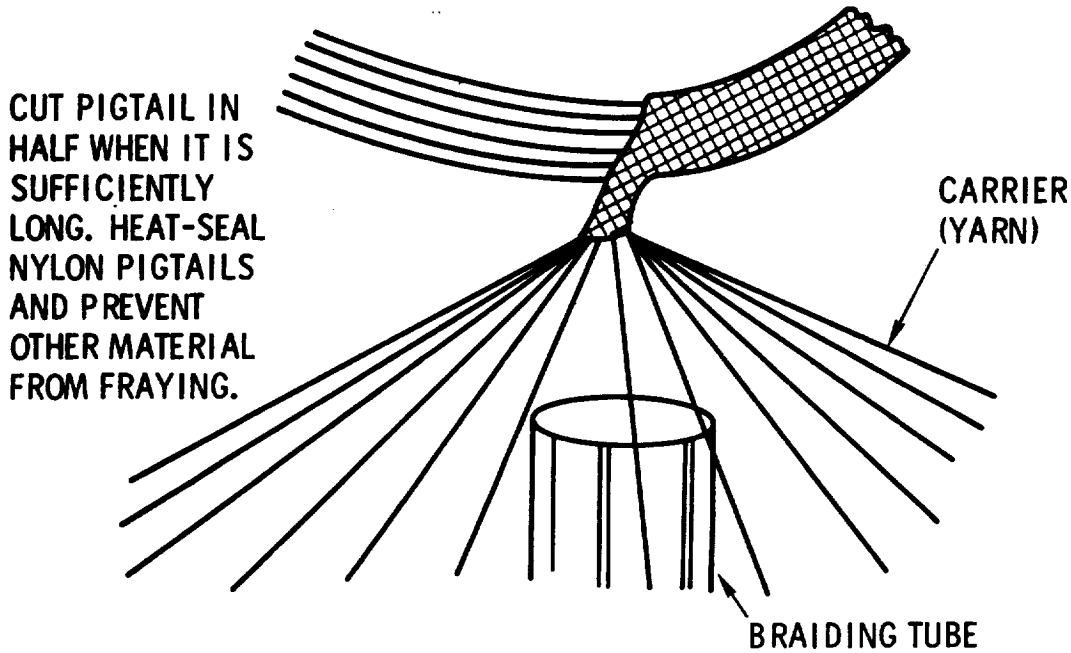

FIGURE 6-9
FORMING ENDING PIGTAIL

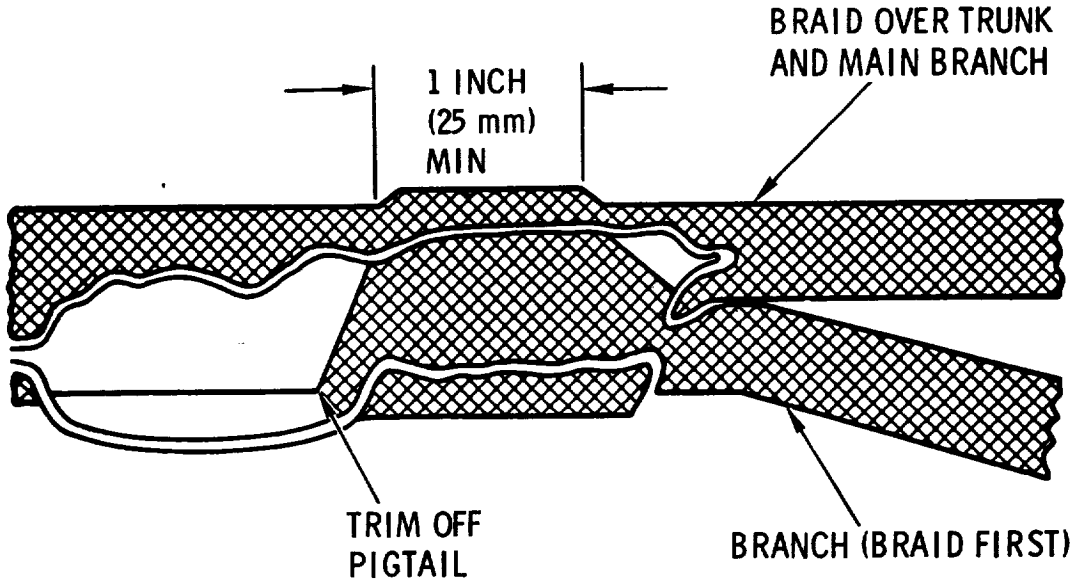

FIGURE 6-10
BRAIDING AT A "BREAKOUT" OR "Y" INTERSECTION

3G604 SPIRAL WRAP SLEEVING

Spiral wrap sleeving shall be installed to make firm contact with the wire bundle. The ends of the spiral wrap shall be trimmed to eliminate sharp edges or points that might damage the insulation. The sleeving may be butted or applied as open spiral (Figure 6-11). When spiral sleeving is applied, the ends of the wire bundle shall be secured by the tie wraps or by other means.

> **NOTE**
>
> DO NOT USE SPIRAL WRAP SLEEVING ON SPACECRAFTS OR LAUNCH VEHICLES.

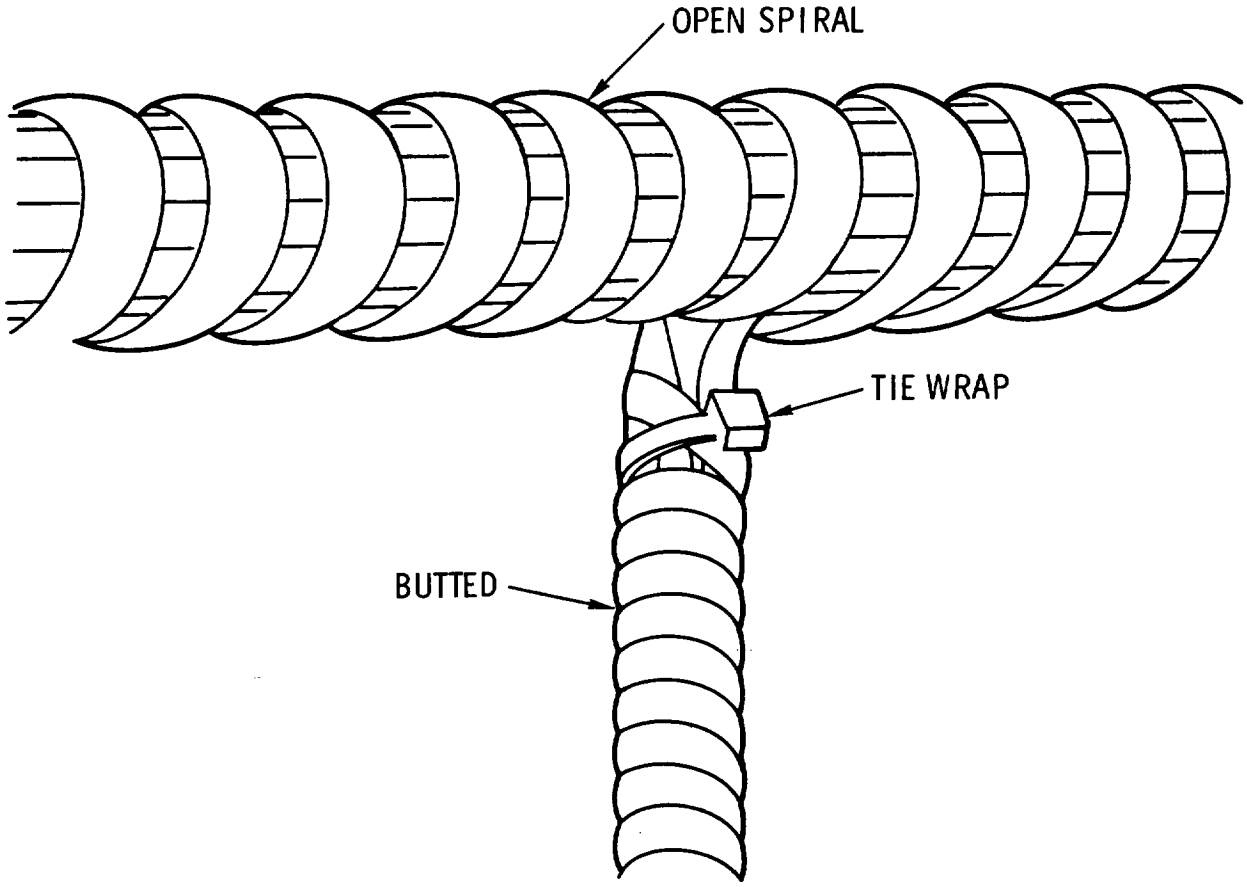

FIGURE 6-11
SPIRAL WRAP SLEEVING

3G605 PLASTIC STRAPS

Installed straps shall be locked to prevent them from loosening or opening. Straps shall be placed on both sides of a breakout; otherwise, spacing between straps shall be as required by Table 6-1. The "ribbed" side of a strap shall always be placed against the wires. Straps shall be tightened so that they do not slide back and forth on the assembly; however, they shall not be so tight as to cause noticeable indentation or distortion of the wires in the harness. Proper strap orientation is shown in Figure 6-12.

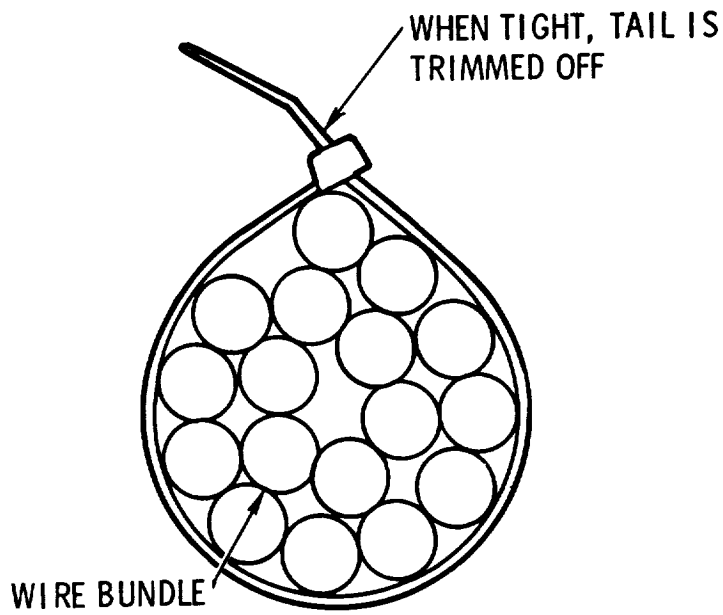

FIGURE 6-12
PLASTIC STRAP ORIENTATION

Plastic straps are usually installed by tooling. Tooling shall be tension-controlled to meet the strap-tightening requirements previously stated. Surplus strap ends shall be trimmed at the back end of the strap head (this is done automatically by most tooling).

3G606 METAL BRAID SHIELDING

Metal braid shielding can either be woven directly over a core or obtained in prebraided form and installed by sliding it over the wire bundle. To prevent potential damage (cold flow) of the underlying wire insulation, a separator (e.g., a tape) shall be applied over the wire bundle to give the wire continuous protection. Prewoven braiding shall be tightened down to contact the separator. Braids shall be terminated as specified by drawing.

3G607 PLASTIC TUBING

Plastic tubing shall be installed on all terminations that are not otherwise insulated or potted, except those at ground potential (e.g., overall shield and coaxial cable terminations). Tubing shall be installed to meet the dimensional requirements of the applicable drawing or specification.

1. **Nonshrinkable Sleeving.** General purpose (nonshrinkable) sleeving and convoluted tubing shall be secured by spot ties or otherwise restrained to prevent them from sliding back and forth over the wire bundle.

2. **Heat-Shrinkable Sleeving.** The heat-shrinkable sleeving selected shall be larger than the maximum diameter of the object being covered, and after shrinking it shall provide a tight fit over the object in the area of maximum diameter. This will cause the sleeving to have a tight mechanical grip on the item it covers. A guide for selecting tubing sizes is given in Table 6-3. There shall be no partially or incompletely shrunken areas. Sleeving may have a slight surface crazing, but it shall be free of cracks, punctures, and charred or burned areas.

TABLE 6-3
SELECTION GUIDE FOR USE OF POLYOLEFIN AND POLYVINYLIDENE FLUORIDE TUBING1/
(DIMENSIONS IN INCHES)

I.D. As Supplied	I.D. Recovered (After Heating)	Cable Diameter	Sleeving Size
.046	.023	.010 to .027	3/64
.063	.031	.028 to .038	1/16
.093	.046	.039 to .054	3/32
.125	.061	.055 to .077	1/8
.187	.093	.078 to .109	3/16
.250	.125	.110 to .156	1/4
.375	.187	.157 to .218	3/8
.500	.250	.218 to .312	1/2
.750	.375	.313 to .437	3/4
1.000	.500	.438 to .625	1
1.500	.750	.626 to .875	1-1/2
2.000	1.000	.876 to 1.250	2
3.000	1.500	1.260 to 1.750	3
4.000	2.000	1.751 to 2.500	4

1/ The 2 to 1 shrink ratios shown apply to commonly used polyolefin tubing (MIL-I-23053/5 and /6) and polyvinylidene fluoride tubing (MIL-I-23053/8). Other shrink sleeving such as fluorinated ethylene propylene (FEP) (MIL-I-23053/11), polyethylene terephthalate (MIL-I-23053/7), and extruded polytetrafluoroethylene (TFE) (MIL-I-23053/12) have different shrink ratios, and the applicable specifications should be consulted.

3G608 INSTALLATION OF HEAT-SHRINKABLE SLEEVING

After the tubing has been placed over the object to be covered, it shall be heated briefly with a hot air gun or by some other method such as placing it in an oven or using radiant heating. The degree of heat used and the exposure time will depend on the size and type of tubing.

CAUTION!

EXTREME CARE SHALL BE EXERCISED TO ASSURE THAT THE AMOUNT OF HEAT APPLIED IS NOT DETRIMENTAL TO THE OBJECT BEING COVERED. WHEN OTHER TEMPERATURE-SENSITIVE MATERIALS AND PARTS ARE IN THE VICINITY, THEY SHALL BE PROTECTED FROM EXPOSURE TO DIRECT HEAT.

A typical shield termination is shown in Figure 6-13. Sleeving coverage dimensions are given in this figure. If a tight fit is required for the minimum diameter, additional sleeving may be required.

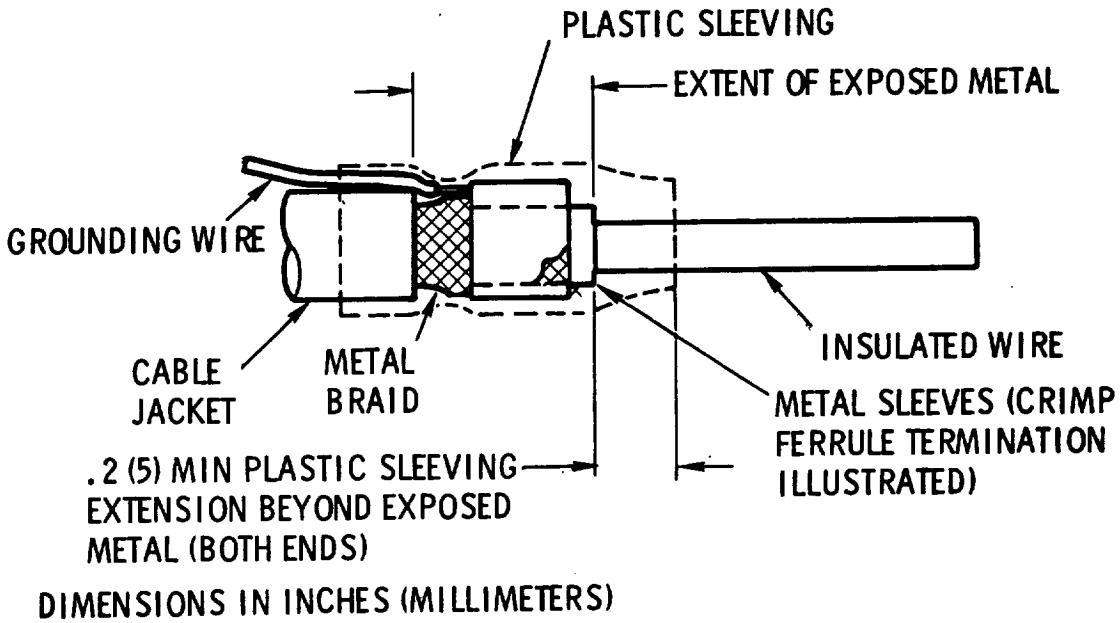

FIGURE 6-13
ILLUSTRATION OF SHRINK SLEEVE INSTALLATION (TYPICAL)

3G609 LONG LENGTHS OF SHRINKABLE SLEEVING

Long lengths of shrinkable sleeving installed over interconnecting harnesses and cables shall provide protective coverage of the designated area without leaving residual stress in the material. The sleeving shall be in contact with the interconnecting harness or cable along its length. One method of controlling endwise shrinkage (reduction in length) of the sleeving during installation is shown in Figure 6-14.

> **WARNING**
>
> MEDIUM TO LONG LENGTHS OF HARNESSES/CABLES WITH SHRINK TUBING ARE EXTREMELY DIFFICULT TO BEND AND COIL WITHOUT DAMAGE.

3G610 SHRINKABLE PART REQUIREMENTS AND INSTALLATION

1. Shrinkable parts shall meet the following requirements (see Figure 6-15 for typical sleeving installation):

   a. They shall be uniformly shrunk to assure a tight fit where required.

   b. The part shall be positioned according to drawing or specification requirements.

   c. The shrinkable sleeving shall firmly grip the item over which it has been installed.

   d. The shrinkable part shall be free of cracks, punctures, blisters, and burned areas.

2. When shrinkable parts are installed, the gripping section of the part is shrunk first. (For example, the gripping-end section of a connector backshell boot is shrunk over the connector before the smaller cable-gripping end is heated.)

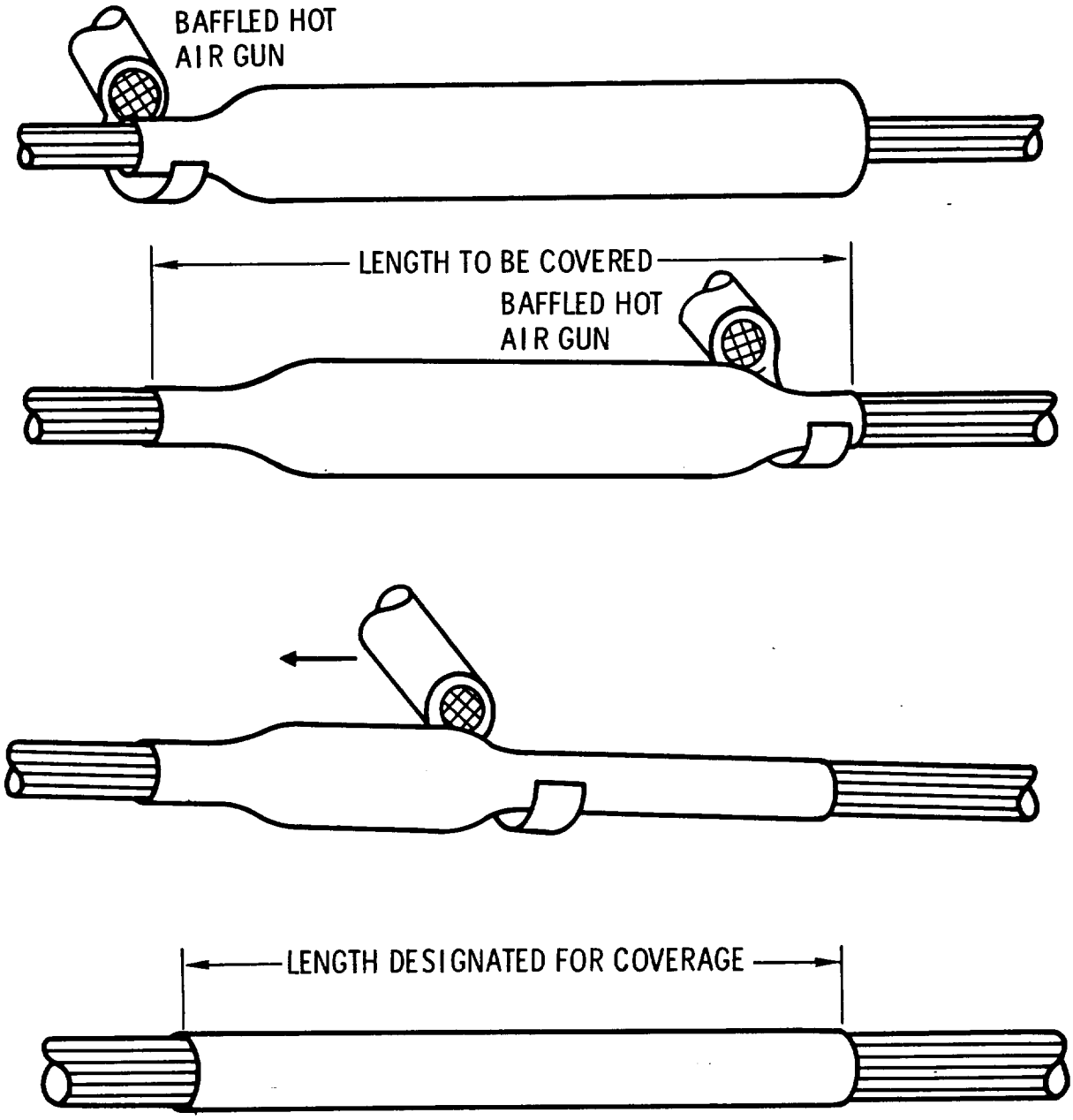

FIGURE 6-14
INSTALLATION OF LONG LENGTHS OF SLEEVING TO
ACHIEVE CONTROLLED DIMENSIONS

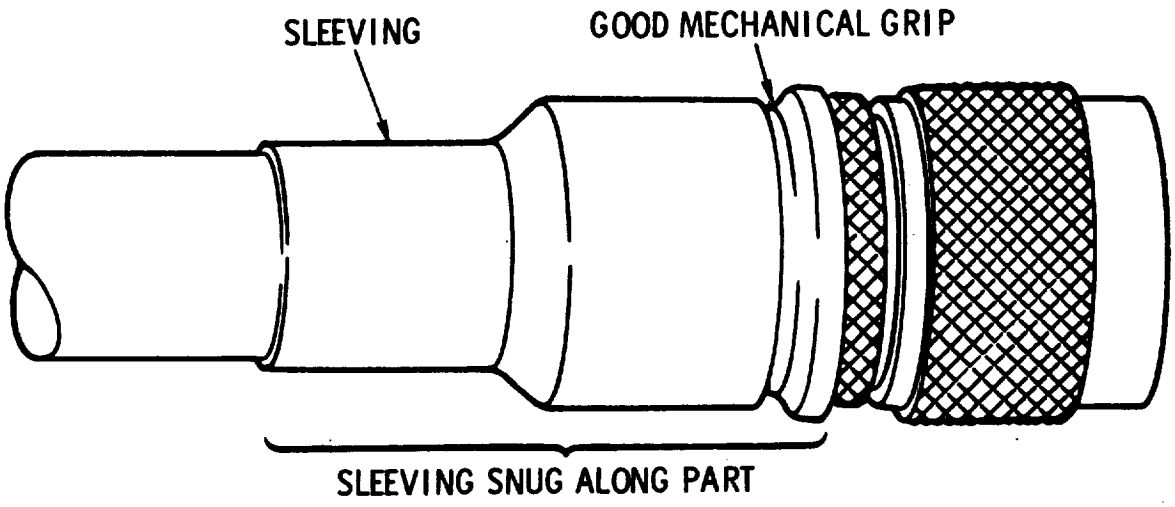

FIGURE 6-15
SLEEVING INSTALLATION (TYPICAL)

CHAPTER 7:
STRIPPING INSULATION FROM ELECTRICAL WIRE AND CABLE

3G700 STRIPPING ROUND CONDUCTORS

Insulated wires shall be prepared in accordance with NHB 5300.4(3A-1). The following applicable information is extracted from NHB 5300.4(3A-1).

1. **Insulation Removal.** Stripping machines or hand tools used to remove conductor insulation shall be of the correct size and in current adjustment and calibration.

2. **Damage to Insulation.** After removal of the insulation segment, the remaining conductor insulation shall not exhibit any damage such as nicks, cuts, crushing, or charring. Conductors with damaged insulation shall not be used. Slight discoloration from thermal stripping is acceptable.

3. **Damage to Conductors.** After removal of the conductor insulation, the conductor shall not be nicked, cut, scraped, or otherwise damaged. Part leads and other conductors which have been reduced in cross-sectional area shall not be used. Damaged wires shall not be used.

4. **Wire Lay.** If disturbed, the lay of wire strands shall be restored as nearly as possible to the original lay. Contact with bare fingers shall be avoided for wires that will subsequently be soldered. However, if contact has been made, the wire shall be cleaned with an approved solvent prior to further processing.

5. **Tinning of Conductors for Solder Cups.** The portion of stranded wires that will eventually become a part of the finished solder connection shall be coated with tin-lead solder and cleaned prior to attachment. Additional flux may be used. The flux shall be applied so that it does not flow under the insulation except for traces carried by solder wicking. Flux shall be removed with cleaning solvent applied so that its flow under the conductor insulation is minimal (by avoiding use of excessive solvent and positioning the conductor so that gravity keeps solvent from flowing under the insulation). Flow (wicking) of solder along the conductor is permitted but shall not mask the conductor strands at the termination end of the insulation.

   Note: For additional information see NHB 5300.4 (3A-1) "Requirements for Soldered Electrical Connections."

3G701 STRIPPING JACKETS OVER SHIELDS

Jackets over shields may be stripped by either thermal or mechanical means. Nicked shield strands shall not exceed 10 percent of the total number of strands. There shall be no severed strands.

3G702 STRIPPING FLAT CONDUCTOR CABLE

Flat conductor cable shall be stripped by mechanical means. Conductors shall not be nicked, gouged, necked down, or severed during stripping.

3G703 ACCEPTANCE CRITERIA

An acceptable stripped conductor shall meet the following requirements:

1. The insulation shall be uniform and shall exhibit no damage except slight discoloration when thermal strippers have been used.

2. The conductor shall be clean, and strands shall be twisted together in the original lay, or as nearly as possible to the original lay.

3. Tinning (when applicable) shall leave strand contour visible where the conductor enters the insulation.

4. Shield strands shall be clean with nicks not exceeding 10 percent of total number of strands.

5. Flat conductors shall be clean and free of damage.

3G704 REJECTION CRITERIA

The following are some characteristics of unsatisfactory wire stripping, any one of which is cause for rejection.

1. Damaged, crushed, cut, or charred insulation.

2. Nicked, gouged, or damaged conductors.

3. Frayed conductor strands.

4. Excessive solder buildup that obscures individual strands on tinned conductors.

5. Severed shield braid strands.

6. Nicked, gouged, or severed flat conductors.

CHAPTER 8: CABLE SHIELDING AND SHIELD TERMINATION

3G800 GENERAL RFI/EMI PRACTICES

Interconnecting cables and harnesses shall be designed and constructed to minimize electromagnetic couplings between wires within the assembly that are sensitive to induced interference. Methods by which program isolation requirements can be achieved are listed in the following text.

1. **Isolation of Signals.** Signals can be isolated by using separate connectors and wire harnesses. When a combination of signals passes through a single connector, wires carrying similar signals can be grouped together and laced separately in the harness.

2. **Wire and Cable Types.** RFI/EMI interference is reduced by certain types of cables. Listed in approximately ascending order, they are:

   a. Twisted pairs.

   b. Shielded wires.

   c. Single-braid coaxial cable.

   d. Double-braid coaxial cable.

   e. Triaxial cable.

3. **RF Transmission.** On RF signal cables, both the inner conductor and outer conductor braid shall be electrically continuous.

4. **Overall Shielding of Interconnecting Cable and Harness.** Copper braid is the most effective RF shielding. Copper-clad, steel-core wire woven into a flat braid is also effective shielding material.

3G801 OVERALL SHIELDING

Shielding braid or foil constructed of uncoated or coated (silver, tin, nickel, etc.) copper shall be used for shielding applications. Note the cold-flow-prevention measures in paragraph 3G606. Alternately, a flat metal braid of copper-clad, steel-core wire with approximately 50 percent overlap may be used as a wrapping.

3G802 TERMINATING OVERALL SHIELDING USING RFI/EMI ADAPTERS

Overall shielding may be terminated to the connector shell through special connector adapters. Continuity from the connector to the adapter to the shield braid is usually made by screwing threaded parts together to predetermined torque values (see Figure 8-1).

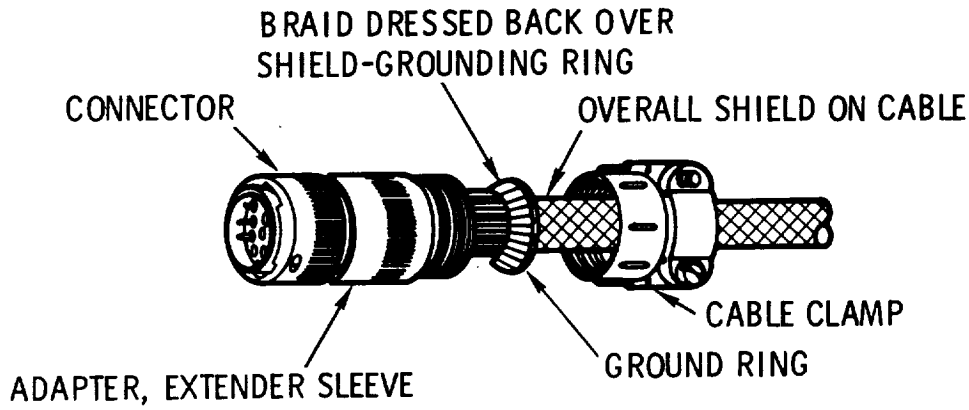

FIGURE 8-1
TERMINATING OVERALL SHIELD IN
RFI ADAPTER (TYPICAL)

3G803 UNSHIELDED WIRE EXPOSURE AND TOTAL LENGTH OF GROUNDING WIRES

Exposed wire beyond a shield termination is subject to induced RFI/EMI interference. Additionally, an excessive length of grounding wire may act as an antenna in picking up interference. Distances to terminations and recommended maximum lengths of grounding wires attached directly to an individual shield are given in Table 8-1, see Figure 8-2. Shield terminations shall be staggered behind the connector/accessory (0.5 inch minimum, 4 inches maximum) to assure minimum buildup of the wire bundle diameter in the shield termination area (see Figure 8-5).

3G804 SHIELDS TERMINATED BY HAND SOLDERING

Soldering methods for grounding shields are applicable to high-temperature insulation (insulation that is not easily damaged by direct contact with a soldering iron with a tip temperature of 700 °F (371 °C)). The grounding wire shall be soldered to the exposed shielding braid at the end of the stripped jacket or at an opening made in the jacket (see Figure 8-3).

TABLE 8-1
SHIELD TERMINATION CONTROL
(Refer to Figure 8-2)

Nature of Circuit	X-Distance, Recommended Maximum Length, Inches (mm)	Y-Distance, Inches (mm)
Interference sensitive[1/]	0.75 (19)	1.5 (38)
Ordinary interference protection	4.0 (101)	6.0 (152)

1/ It may be necessary to use connector metal backshells that provide full isolation to secure better RFI/EMI protection for extremely sensitive circuits.

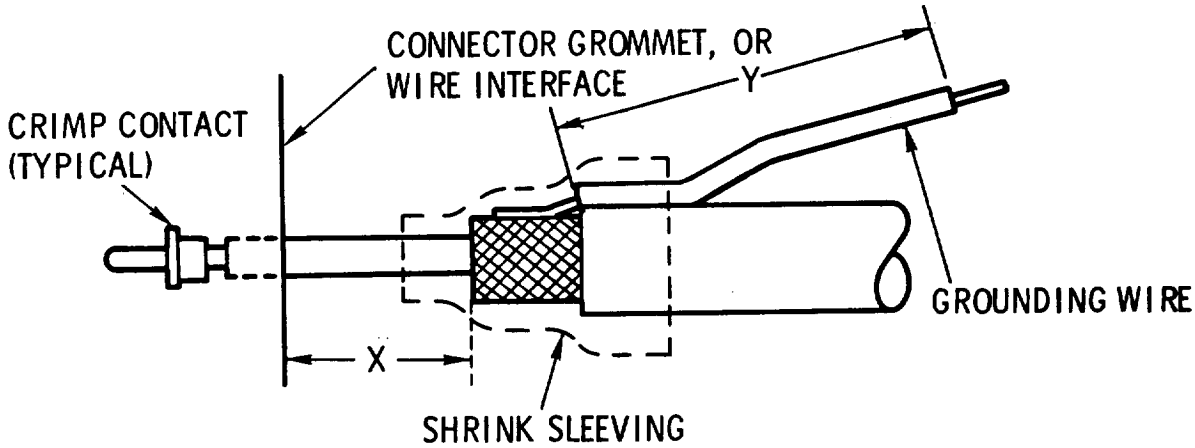

A. GROUND SHIELD TERMINATION

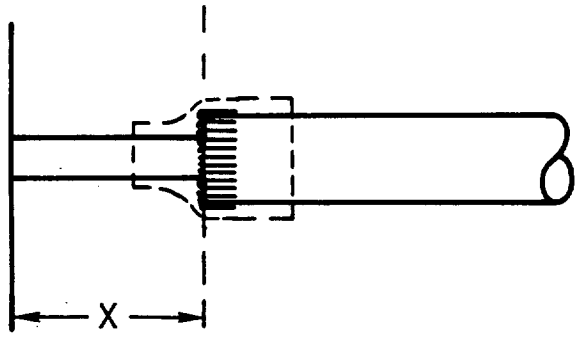

B. FLOATING SHIELD TERMINATION

FIGURE 8-2
UNSHIELDED CONDUCTOR EXPOSURE FOR
INDIVIDUAL SHIELDS

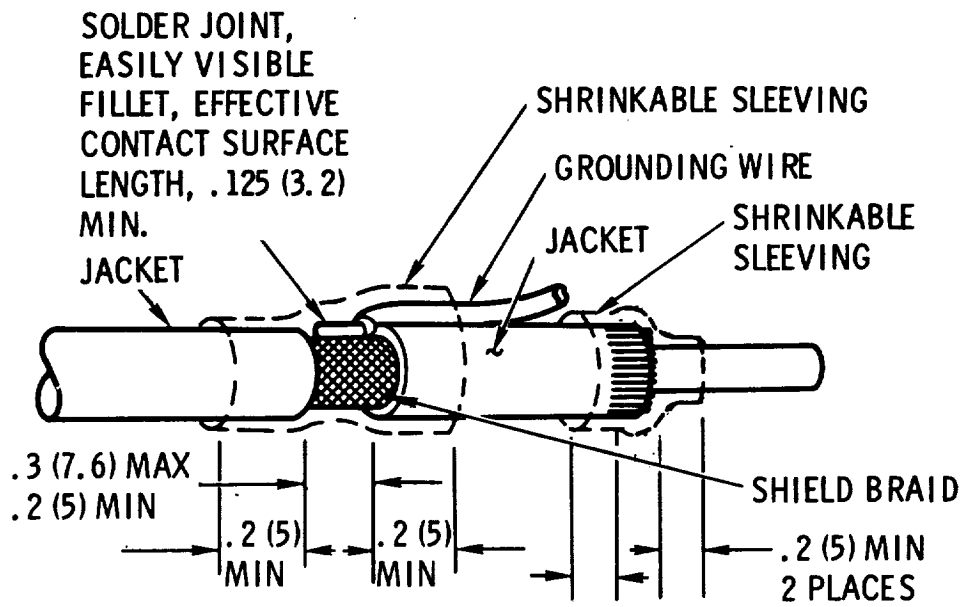

A. ADJACENT TAP GROUNDING

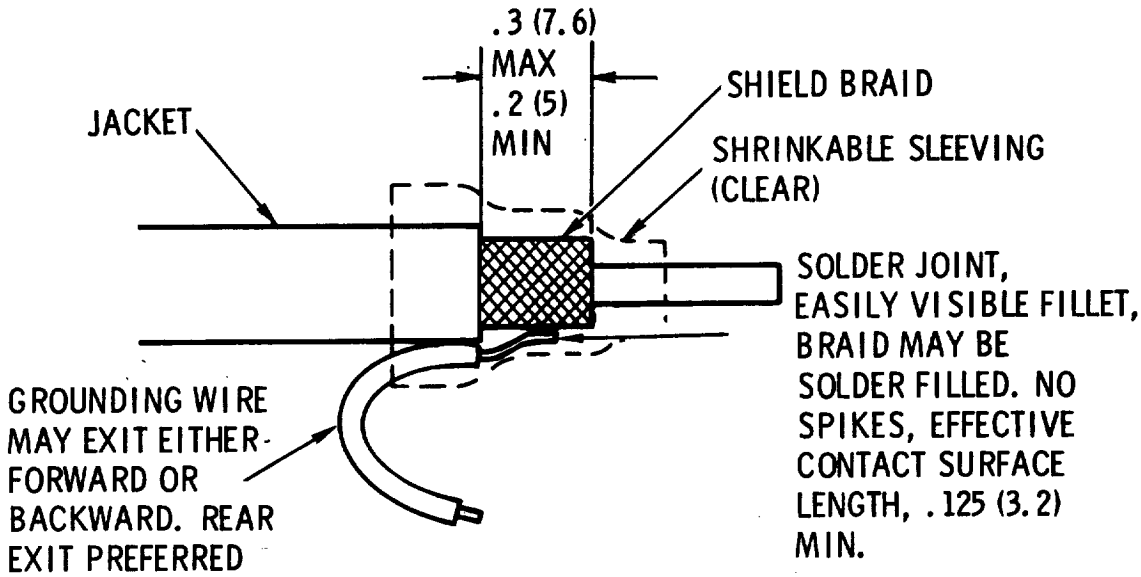

B. TAP GROUNDING, END TERMINATION

DIMENSIONS IN INCHES (MILLIMETERS)

FIGURE 8-3
TAP GROUND METHOD OF TERMINATING SHIELD

3G805 SHIELDS TERMINATED BY CRIMP FERRULES

Shield termination by crimp ferrules shall be in accordance with NHB 5300.4(3H).

3G806 HEAT-SHRINKABLE SHIELD TERMINATION

The method that melts the solder under an insulating sleeve shall be used only with high-temperature insulations and jackets that are not damaged by heat application during assembly. The final termination configuration shall meet the requirements shown in Figure 8-4.

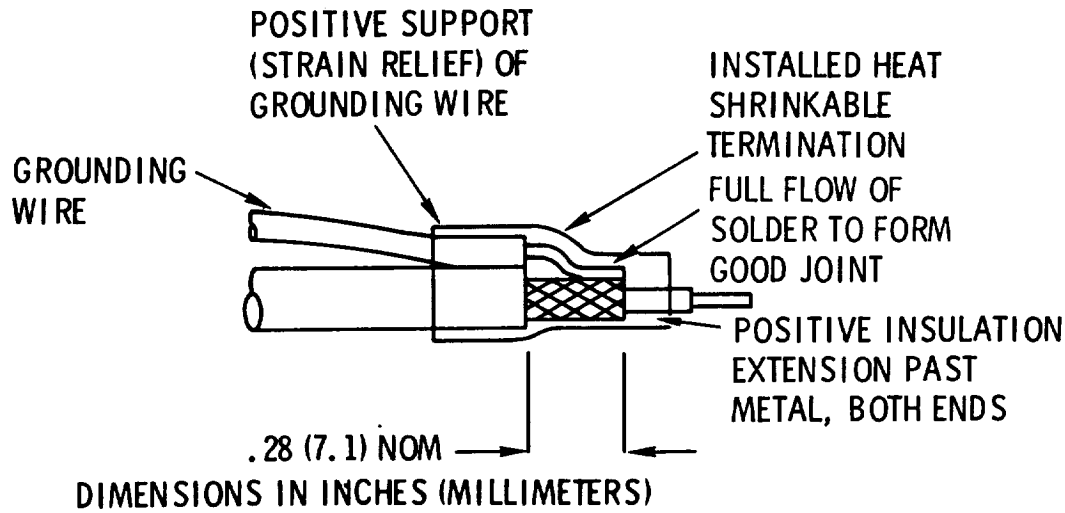

FIGURE 8-4
HEAT SHRINKABLE SHIELD TERMINATION

3G807 GROUP-GROUNDING OF INDIVIDUAL SHIELD TERMINATIONS

When grounding wires of individual cable shields are grounded to one point, they shall be spliced to a common grounding wire. No more than five conductors shall be terminated in one splice. For ordinary RFI/EMI protection, shields shall be terminated within 4 inches (101 mm) of the center conductor termination, and the combined length of shield grounding wires shall not exceed 7.5 inches (191 mm). For interference sensitive circuits, preferred lengths are .75 and 4.5 inches (19.1 and 114 mm) respectively (see Figure 8-5 and Table 8-2). When this does not provide adequate isolation, RFI/EMI connector backshells may be necessary.

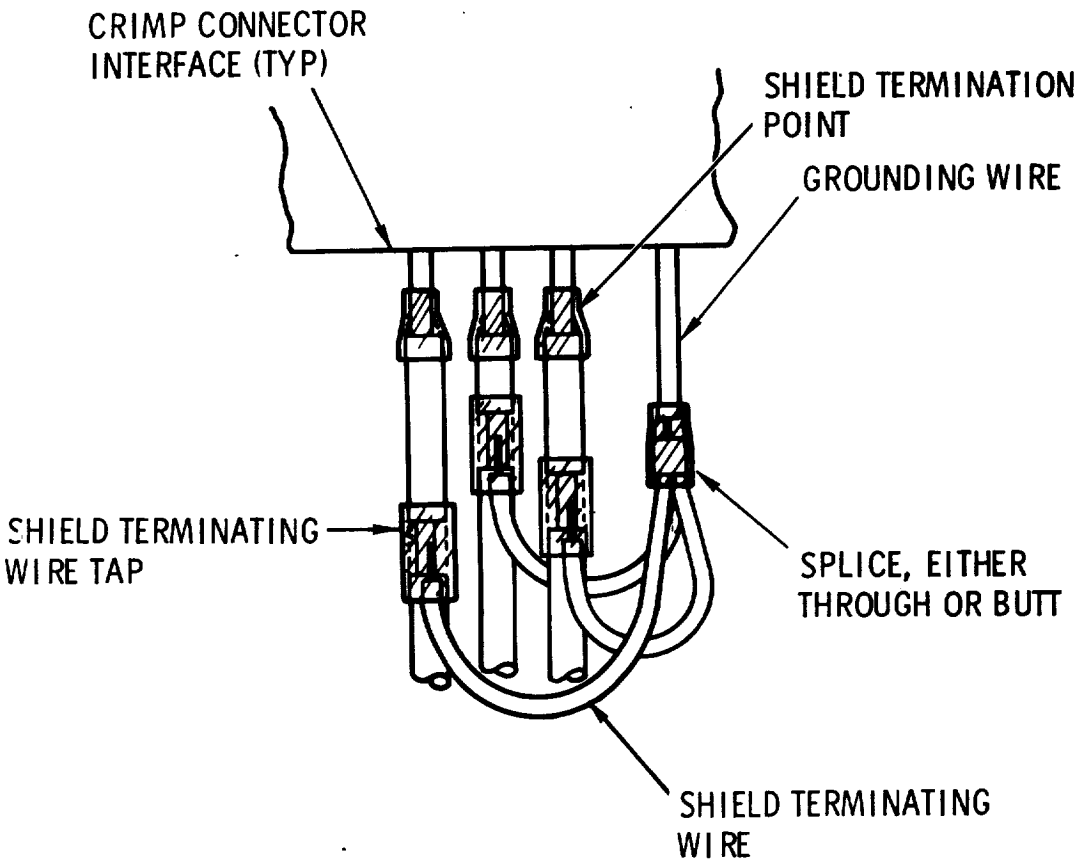

FIGURE 8-5
GROUP GROUNDING OF STAGGERED SHIELDS

TABLE 8-2
SHIELD TERMINATION CONTROL FOR GROUP GROUNDING

Nature of Circuit	X-Distance (Refer to Figure 8-2), Inches (mm)	Total Length for Shield Terminating Wire Plus Grounding Wire, Inches (mm)
Interference sensitive	.75 (19)	4.5 (114)
Ordinary interference protection	4.0 (101)	7.5.(191)

3G808 LARGE COMPRESSION RING GROUNDING

Individual shields and overall shields can be grounded by large compression rings. Shields may be dressed across the inner collector ring either forward (toward the connector) or backward. Grounding wires shall leave the compression ring backward along the wire and dress forward under the ring. The outer compression ring shall be crimped securely over the shields and inner collector ring (see Figure 8-6).

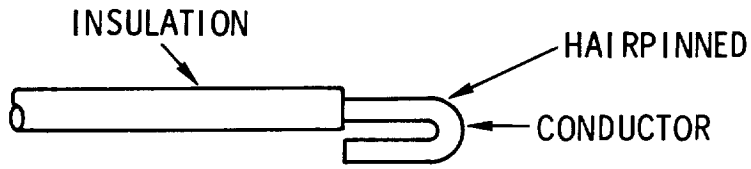

A. PREPARATION OF GROUND WIRE

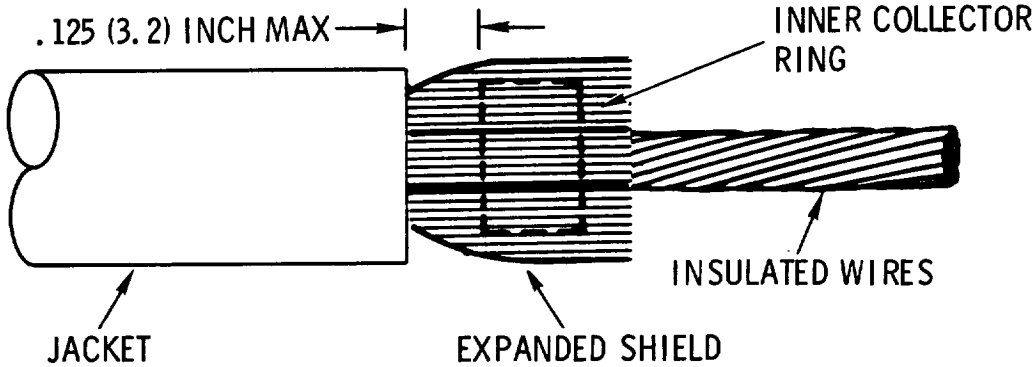

B. PLACEMENT OF COLLECTOR RING FOR OVERALL SHIELD

FIGURE 8-6
LARGE COMPRESSION RING GROUNDING
(TYPICAL APPLICATIONS)

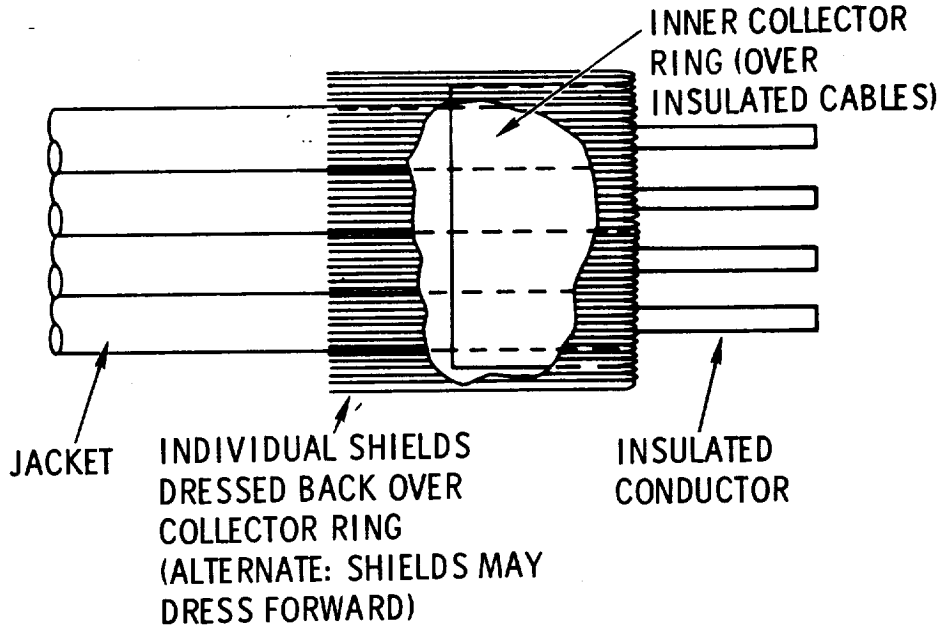

C. DRESSING OF INDIVIDUAL SHIELDS OVER COLLECTOR RING

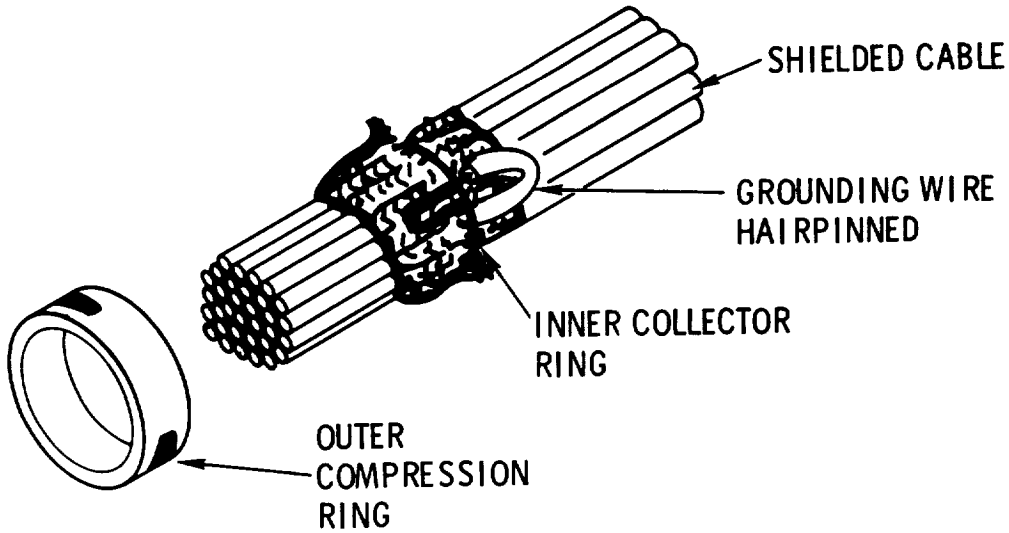

D. PLACEMENT OF HAIRPINNED GROUNDING WIRE PRIOR TO CRIMPING OUTER COMPRESSION RING

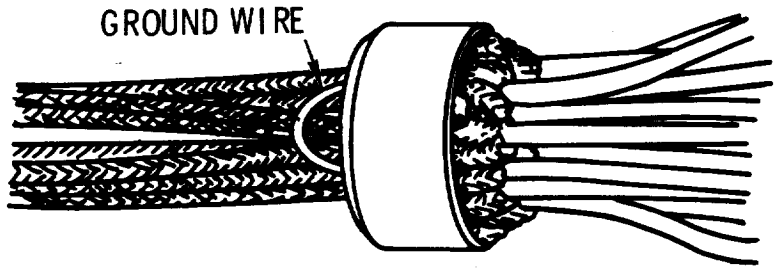

E. ASSEMBLY WITH CRIMPED OUTER COMPRESSION RING

FIGURE 8-6
LARGE COMPRESSION RING GROUNDING
(TYPICAL APPLICATIONS) (CONTINUED)

3G809 FLOATING SHIELD TERMINATIONS

The outer jacket shall be trimmed to expose the shielding braid. The braid shall then be combed out as necessary and folded back over the outer jacket as illustrated in Figure 8-7. Shrinkable sleeving shall be installed over the trim point.

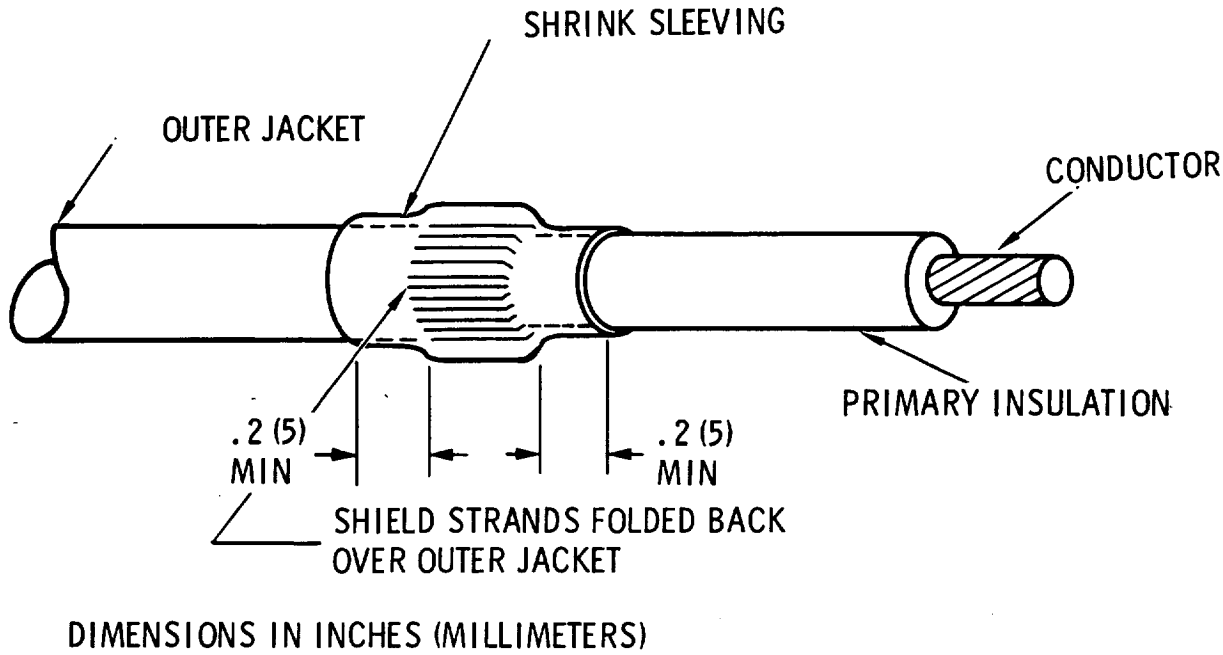

FIGURE 8-7
FLOATING SHIELD TERMINATION

3G810 FOIL SHIELD DRAIN WIRE TERMINATION

Metal foil shields having drain wires shall be terminated by trimming the cable jacket and foil square, insulating the drain wire with sleeving, and then adding an additional sleeve over the trim point as shown in Figure 8-8.

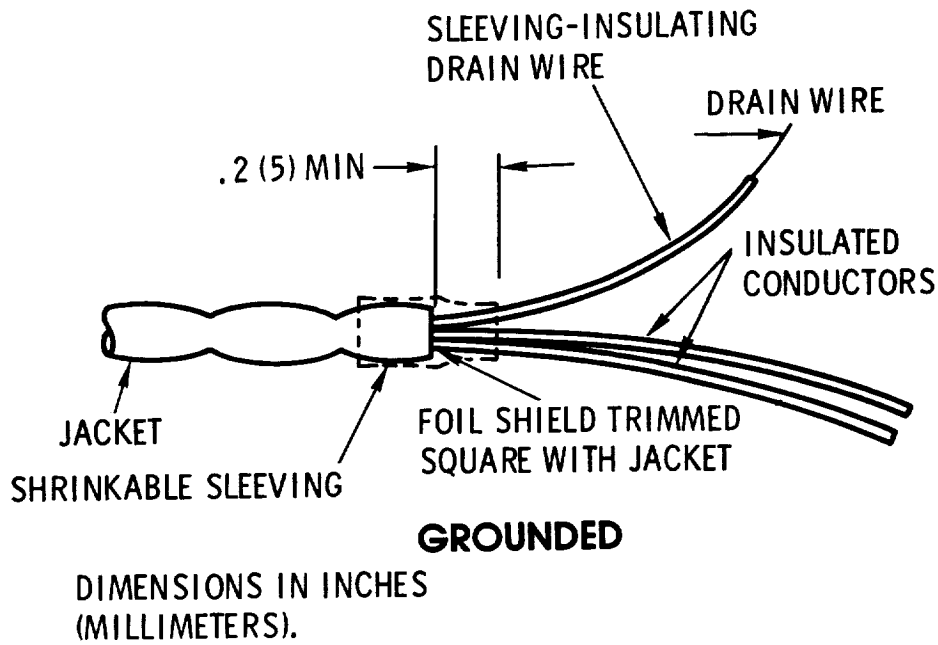

FIGURE 8-8
SHIELD TERMINATIONS

3G811 ACCEPTANCE CRITERIA

An acceptable shield termination shall:

1. Be free of loose strands.
2. Be free of projecting strands.
3. Have wire insulation and a jacket that are free of punctures, cuts, nicks, and deformation.
4. Have metal ferrules (when applicable) that are tightly and symmetrically crimped.
5. Have soldered connections (when applicable) with a bright or satin surface showing evidence of proper flow and filleting to grounding wire.

6. Have insulation sleeving uniformly shrunk, providing proper covering and securing the wires into place.

7. Have no more than slight discoloration on the heat-shrinkable sleeving covering the heat-shrinkable solder preform termination devices.

3G812 REJECTION CRITERIA

The following are some characteristics of unsatisfactory shield terminations and shall be cause for rejection.

1. Loose or projecting strands.

2. Wire insulation with cuts, punctures, or crushing.

3. Metal ferrules crimped with improper alignment.

4. Cracked, charred, or split insulation sleeving.

5. Cracked or fractured solder.

6. Insufficient solder or poor wetting.

7. Electrical acceptance test failure.

8. Excessive number of nicked braid strands.

9. Improper sleeving coverage.

CHAPTER 9: CONNECTOR ASSEMBLY

3G900 GENERAL

Connectors shall be as specified on the engineering drawings. Supplemental processes applicable to connector assembly are as follows:

1. Conductors shall be assembled into crimp contacts in accordance with NHB 5300.4(3H), "Requirements for Crimping and Wire Wrap."

2. Conductors shall be assembled by soldering in accordance with NHB 5300.4(3A-1), "Requirements for Soldered Electrical Connections."

3. Connector backshells shall be potted and molded, as required, in accordance with applicable engineering drawings.

The mating surfaces of all unmated connectors shall be protected by covers during storage, handling, and installation of interconnecting cables and harnesses.

3G901 ASSEMBLY OF CRIMP-TYPE CONNECTORS (INCLUDING TERMINAL JUNCTIONS)

Crimp contacts are assembled to conductors outside of the connector and are subsequently installed into the connector body. When a connector is properly assembled, contacts are captured inside the connector. Retaining clips are one means of securing contacts in place inside connector cavities. When retaining clips are present, contacts shall be fully seated and locked into place by the clip. Improperly seated contacts can "push back" causing intermittent and open circuits. In all instances, the prescribed plastic (not metal) contact insertion and removal tool shall be used to prevent conductor damage.

CAUTION!

ANY DAMAGED PLASTIC TOOL MUST BE DISCARDED IMMEDIATELY AND REPLACED WITH A NEW TOOL. SHOULD PART OF THE TIP OF A PLASTIC TOOL BREAK OFF, ALL PIECES OF THE TIP MUST BE ACCOUNTED FOR. IF ALL PIECES CANNOT BE ACCOUNTED FOR, THE RESPONSIBLE ENGINEERING ACTIVITY SHALL BE NOTIFIED IMMEDIATELY.

The installation of unwired contacts into a connector is optional for flight interconnecting cable/harness assemblies. Terminal junctions shall not have unwired contacts installed in unused cavities. Plastic sealing plugs shall be used in all unwired cavities of environmental connectors whether or not the connectors are potted or molded.

3G902 ASSEMBLY OF SOLDER-TYPE CONNECTORS

Solder-type contacts (e.g., solder cups or tab terminals) are usually nonremovable from the connector insert but may vary from being rigidly held into place to having some float. In all instances, stranded conductors will experience solder-wicking during attachment. The conductor will be rigid up to the point where the wicking stops and flexible beyond it. Wire movement concentrates stresses at the point where wicking stops, and normal harness handling can produce conductor fatigue and failure. Measures taken for stress relief of soldered connectors shall be sufficient to assure that all wire bending will take place in a flexible, unwicked part of the conductor. (See Appendix B.)

CAUTION!

WHERE SOLDER CONTACTS HAVE FLOAT, FLUX MAY RUN DOWN ONTO THE MATING SURFACE OF THE CONTACT DURING SOLDERING. THIS CONTAMINATION CAN CAUSE INTERMITTENT CIRCUITS AND OPEN CIRCUITS WHEN CONNECTORS ARE MATED. ASSEMBLY SEQUENCES SHALL REQUIRE CLEANING OF CONTACT MATING SURFACES, THE SOLDER JOINTS, AND THE REAR SURFACES OF CONNECTORS AFTER SOLDERING OPERATIONS ON THESE TYPES OF CONNECTORS.

3G903 ASSEMBLY OF ENVIRONMENTAL AND HERMETIC CONNECTORS

Requirements for assembly of environmental and hermetic connectors are as follows:

1. Properly installed hermetic connectors provide pressure-sealing capability through the connector from one side to the other. They usually have solder cups and are assembled by soldering. Low wattage solder irons shall be used to prevent cracking of glass seals.

2. When sealing plugs are used in environmental connectors, they shall be fully seated and shall have sufficient extension to permit removal. Wired contacts shall be inserted and removed using approved plastic tooling. The assembler shall check contact seating and locking into an insert by pulling gently on the wire perpendicular to the plane of the connector rear face. Unwired contacts shall be fully seated and locked using an approved plastic insertion tool. When a wire diameter is smaller than the grommet hole, the wire insulation diameter may be increased by using heat shrinkable sleeving.

3G904 ASSEMBLY (TORQUING) OF ADAPTERS AND CABLE CLAMPS TO CONNECTORS

Adapters and cable clamps shall be torqued to connector bodies using calibrated tooling. During assembly (torquing backshells, securing cable clamps, etc.), strain relief members shall not be stressed or forced to rotate. The manufacturer's recommended torque values should be used. Torque requirements shall be stated on the engineering drawing. Torquing shall be verified by the responsible Quality Assurance Organization.

3G905 ASSEMBLY OF RF CONNECTORS AND COAXIAL CONTACTS

Many types of RF connectors and coaxial contacts are available. Electrical performance, together with other considerations, affects the selection of the connector and coaxial cable. Depending on the requirements, assembly procedures vary from normal shop practice for cables operating at less than 1 gigahertz to precision techniques for those operating up to 18 gigahertz. Generally, the following practices shall be observed:

1. The assembly shall be made in accordance with the connector manufacturer's instructions. However, many manufacturers's instructions are not adequate and may cause problems. See Appendix C for discussion of frequently encountered problems.

2. Connectors shall not be modified.

3. Special tools necessary for the fabrication shall be specified on the assembly procedures.

4. Torque values, when applicable, shall be specified on the assembly procedures and carefully applied.

3G906 INSPECTION AND VERIFICATION TESTING

Inspection and verification of assembled connectors shall include but not be limited to the following tests and inspections:

1. **Contact Seating.** Contacts in connectors utilizing retention clips or tines shall be tested 100 percent for seating. In applications in which the engaging (mating) ends of the pins or socket contacts are accessible, push force contact retention testing to the requirements of Table 9-1 shall be performed. Push testing shall utilize a tool that minimizes the possibility of accidental contact bending and applies a controlled, preset pressure to the contact before releasing the force. A typical tool design is shown in Figure 9-1. Socket testing probes shall be undersized compared to mating-pin diameters and shall not cause a mating cycle to take place.

TABLE 9-1
CONTACT RETENTION TEST FORCES

Contact Sizes	Push Test Force Pounds (Newtons)	Pull Test Force Pounds (Newtons)
22, 22D and 22M	4 to 6 (17.8 to 26.7)	3.0 to 5.0 (13.3 to 22.2)1/
20	5.0 to 7.0 (22.2 to 31.1)	3.0 to 5.0 (13.3 to 22.2)1/
16	8.0 to 10 (35.6 to 44.5)	4.0 to 7.0 (17.8 to 31.1)1/
12	10 to 12 (44.5 to 53.4)	4.0 to 7.0 (17.8 to 31.1)1/

1/ Wire shall not be pulled to a force in excess of 80 percent of the specified minimum crimp tensile requirement. This requirement must be met to avoid damage to the wire/contact crimp joint. See Table 9-2.

TABLE 9-2
MAXIMUM PULL TEST FORCE TO PREVENT WIRE BREAKAGE

Conductor Size, AWG	Conductor Material	Tensile Strength Pounds (Newtons) Minimum
28	Copper alloy	3.8 (16.9)
28	Copper	2.5 (11.1)
26	Copper alloy	6.4 (28.5)
26	Copper covered steel	6.4 (28.5)
26	Copper	4.1 (18.3)
24	Copper	6.4 (28.5)

These tensile strength values are 80 percent of the crimp tensile strength values listed in NHB 5300.4 (3H).

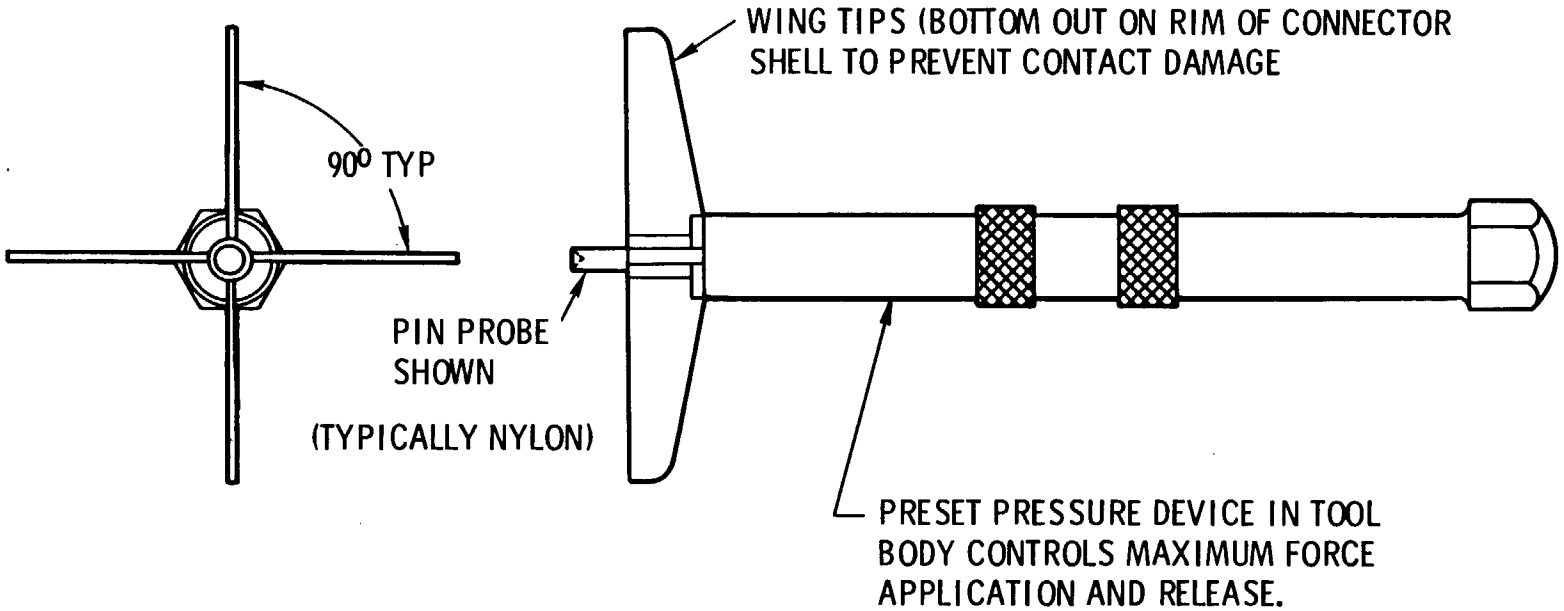

FIGURE 9-1
TYPICAL PUSH TEST TOOL

On terminal junctions and certain insertable crimp-contact connectors, contacts are not exposed for push testing. Pull force contact retention testing shall be performed *only* on devices in which the contact engaging (mating) ends are not accessible. Pull force testing shall be performed by pulling on the wire terminated in the contact to the requirements of Table 9-1. The wires to be pulled (except for shielded wire) shall be free of ties, cable clamps, or any wire-harness holding devices within 5 inches of the terminal junction sealing grommet surface (see Figure 9-2). Pull the insulated wire perpendicular (± 5 °) to the wire exit face of the connector device.

NOTE

IF THE WIRE BREAKOUT TO THE TERMINAL JUNCTION IS LESS THAN 5 INCHES IN LENGTH, THEN TIES AND CLAMPS NEED BE REMOVED ONLY TO THE POINT WHERE THE WIRES LEAVE THE MAIN BUNDLE.

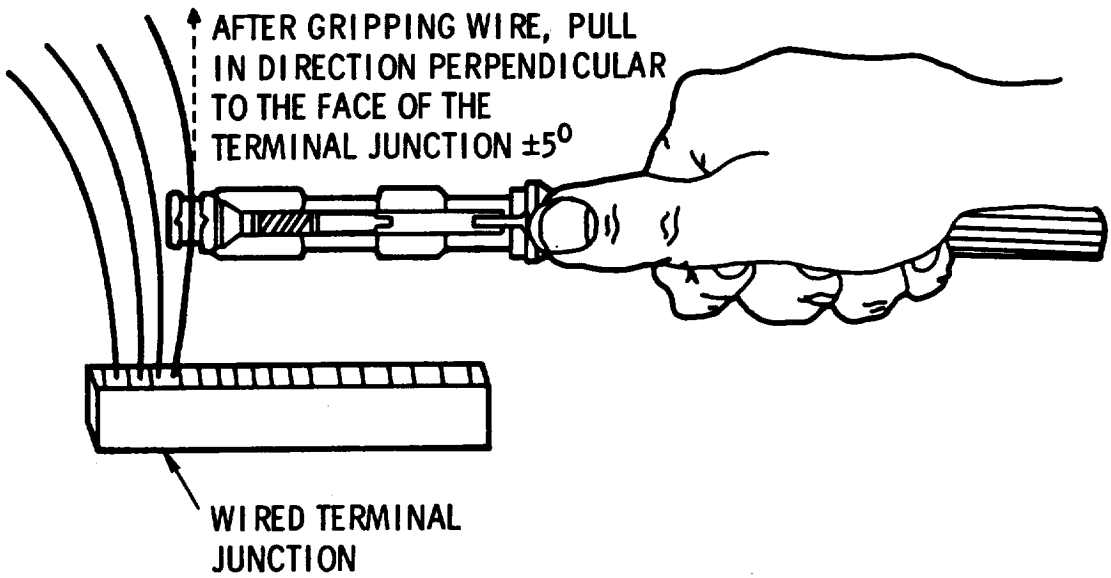

FIGURE 9-2
APPLICATION OF RETENTION TOOL FOR
GRIPPING WIRE (TYPICAL)

CAUTION!

WHEN THE WIRE IS PULLED AT ANY ANGLE EXCEEDING 5 ° FROM THE PERPENDICULAR, THE CONTACT MAY BIND INSIDE THE CONNECTOR AND GIVE A FALSE READING.

When a shielded wire is being pulled, the wire shall be gripped between the sealing grommet of the terminal junction module and the shield termination.

2. **Continuity.** Circuits shall pass continuity testing (see paragraph 3G1401-6 a).

3. **Solder Contacts.** All solder contacts that have float shall be free of flux and other contamination.

4. **Visual Examination.** One hundred percent visual inspection shall be conducted for acceptable soldering, acceptable crimping, proper identification, and freedom from damage.

5. **Coaxial Cable Requirements.** Coaxial cables shall pass electrical requirements (e.g., voltage standing wave ratio (VSWR), insertion loss, and other performance tests specified on the drawing). Additionally, the following testing and inspection shall be conducted, as appropriate.

   a. Verify proper strip length and assembly of center conductor into contact.

   b. Verify proper securing of the outer conductor.

   c. Verify that the center contact location meets requirements for proper mating.

   d. Visually verify undamaged condition of mating surfaces and coupling means.

6. **Torque Verification.** Verify that torque of connector backshells, strain relief clamps, etc., is as specified on the drawings.

CHAPTER 10: HARNESS IDENTIFICATION

3G1000 PERMANENT IDENTIFICATION

The interconnecting cabling and wiring shall be provided with permanent identification. Requirements for identification for various types of cabling and wiring are as follows:

1. **Cable and Harness.** Each cable and each harness shall be permanently identified. The identification marking shall be capable of passing all environmental testing that may be required for the projected use and still be fully legible.

2. **Connectors.** Each connector shall be identified. The identification may be placed directly on the connector or on the cable near the connector. In all cases, identification shall resist abrasion either as applied or with the aid of an overcoat.

3. **Temporary Identification.** All temporary identification shall be removed from each completed harness by the end of the fabrication process.

4. **Locating Tape.** Marking tape used to position and locate harnesses and cables may be either permanent or temporary in nature.

3G1001 VERIFICATION OF IDENTIFICATION

Identification shall be verified visually by the responsible Quality Assurance Organization for correctness, legibility, and proper location.

PAGE 58 INTENTIONALLY BLANK

CHAPTER 11: INTERCONNECTING HARNESS AND CABLE CLEANING

3G1100 GENERAL

Interconnecting flight cable and harness assemblies shall be clean and free of contamination prior to installation on the spacecraft. Cleanliness shall be an ongoing effort. Practices for flight assemblies shall include assembly in a clean environment and the use of protective plastic sheeting or other coverings over harnesses not undergoing active assembly.

3G1101 CLEANING THE HARNESS ASSEMBLY

Particles and debris shall be cleaned from the harness or cable assembly by vacuum-removal methods. Brushing with solvent shall be used as required to remove other contamination. Only approved solvents shall be used. Approved solvents are specified in paragraph 3G307.

3G1102 CLEANING HARNESS CONNECTORS

The following cleaning procedures shall be used with connectors.

1. For solder-type connectors, flux rundown into the mating part of socket contacts shall be removed. Use of ultrasonic cleaning or a solvent jet system that flushes out the inside of a socket contact is necessary. Solvent cleaning by brushing may be used for pin contacts. Contact surfaces of pins, sockets, and connector bodies shall be free of flux residue, solder splash, metal flakes, moisture, and other contaminants that may jeopardize the integrity of the connector system.

2. Crimp-type multipin and coaxial electrical connectors shall be solvent-cleaned by brushing before assembly to the harness or unit cable. Flight connectors located internal to a unit shall be solvent-cleaned before the unit is mated and sealed. Contact surfaces of pins and sockets and the interior surfaces of the connector shall be free of contaminants.

3. The internal surfaces of dust covers and connector covers shall be cleaned by solvent-brushing before the covers are fitted onto cleaned connectors.

4. If necessary, connectors that have been subjected to frequent mating and demating operations during fabrication and test shall receive additional cleaning prior to the final mating. Visual examination of the contact surfaces of connectors shall not reveal the presence of contaminants such as metal flakes or large dust particles. If required, additional cleaning shall be performed by vacuum removal methods and solvent-brushing.

Preceding page blank

PAGE 60 INTENTIONALLY BLANK

3G1103 CLEANING COAXIAL CONNECTORS (ASSEMBLED)

Coaxial connectors may have accumulated contaminants such as metal flakes, dirt, moisture, and other foreign materials. The connector interface shall be cleaned by ultrasonic methods, brushing with solvent, vacuum procedures, or a combination thereof until the contaminants have been removed.

3G1104 QUALITY INSPECTION PROVISIONS

The Quality Assurance Department shall verify that:

1. Fabrication of assemblies is accomplished in a contamination controlled area conforming to the requirements approved by the procuring activity.

2. Procedures defining cleaning, drying, handling and packaging are approved and their requirements being followed.

3. Analysis data confirms that solvents in cleaning tanks are uncontaminated as defined by approved procedures.

4. All completed assemblies are visibly clean when examined at a distance of 16 inches (40 cm) under oblique white light of 100 foot candles (1076.4 lumens/m^2) minimum intensity.

5. Solder-type socket contacts are inspected inside the mating part of the socket using 10-power or greater lighted magnification to verify cleanliness (freedom from flux residue), see Figure 11-1. Contamination may appear as easily visible dull brown coatings or globules.

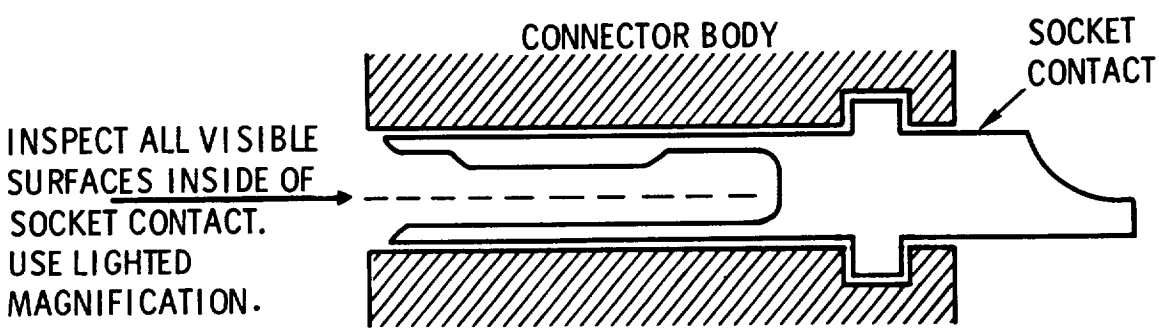

FIGURE 11-1
VISUAL EXAMINATION INSIDE THE SOCKET CONTACT FOR FLUX RESIDUE

CHAPTER 12: INTERCONNECTING HARNESS AND CABLE HANDLING AND PROTECTION

3G1200 GENERAL

Interconnecting harnesses and cables often receive their maximum stresses when they are moved, handled, and installed in their permanent locations. Harnesses shall be handled with considerable care and attention.

3G1201 IN-PROCESS PROTECTION FOR FLIGHT AND CRITICAL ASSEMBLIES

Harness and cable shall be protected during assembly as follows:

1. Keep a large harness mounted on its own wiring board until final inspection.

2. Protect all cable and harness assemblies not on a wiring board or fixture by placing them in a sealed plastic bag or equivalent.

3. Protect harnesses under assembly with a large plastic sheet as appropriate.

3G1202 COMPLETED INTERCONNECTING HARNESS AND CABLE PROTECTION FOR FLIGHT ASSEMBLIES

Completed harnesses and cable shall be protected as follows:

1. Wiring harnesses may either be stored on the wiring board or otherwise protected. When harnesses are removed from a wiring board or handling fixture, they shall be placed in crush-resistant containers or protected by other means such as bubble pack.

2. Overstressing and excessive flexing of wires shall be avoided during connector cleaning and mating-demating operations. This is especially important for solder-type connectors.

3. Clean dust covers shall be used to protect all connectors (including test equipment) when not in use. After the cleanliness of the connector has been verified visually, it shall be protected with a clean dust cover until it is ready for final mating.

4. All connectors shall be protected individually with bubble pack or equivalent clean cushioning material.

3G1203 GSE INTERCONNECTING HARNESSES AND CABLES

Ground service equipment interconnecting harnesses and cables shall be protected and handled in accordance with best commercial practice. At all times during shipping and handling they shall be protected from unnecessary stresses and all abuse.

3G1204 INSPECTION

The responsible Quality Assurance Organization shall verify that the minimum protective measures defined in this chapter have been taken.

CHAPTER 13: CONNECTOR MATING

3G1300 GENERAL

Although most electrical connectors are considered to be durable, each of them has a finite life. During testing and system checkout, certain connectors may be subject to frequent mating and demating. When this situation exists, wear and potential damage can be reduced by the use of "connector-savers" (usually a mating pair of connectors interconnected by a short jumper harness). The connector-saver transfers the wear from the flight connector to nonflight jumper harness connectors. It also prevents uncontrolled (and possibly damaged) test equipment connectors from mating directly with the cable or harness assembly connectors.

3G1301 CONNECTOR MATING AND DEMATING

The following practices and precautions shall be exercised in mating and demating connectors:

1. All flight, qualification, dc power interface, and test equipment connectors that mate with flight and support equipment connectors shall be protected against damage and contamination during mating and demating operations.

2. Mating and demating operations shall be performed with special care to preclude damage to connectors.

3. Harness connectors mated to test tees or breakout boxes shall be provided with strain relief to restrict flexing of connectors and cables.

4. Mate-demate operations between the spacecraft, support equipment connectors, and system test equipment and also in final assembly shall be performed by authorized personnel only.

5. The use of connector savers is recommended. A connector saver can be a short harness jumper that has a mating interface connector to engage the unit. The other end of the harness has the same interface as the unit.

6. Interfacial seals which are not bonded to the connector shall be examined and, if necessary, replaced with new, clean seals prior to final mating.

7. When required, a log of mate and demate operations and a bent pin log shall be kept for flight connectors.

8. Flight connectors shall be torqued as specified in engineering documentation.

3G1302 COAXIAL CONNECTOR MATING

The final mating of coaxial connectors shall be done using the torque values given in Table 13-1.

CAUTION!

THERE SHALL BE NO RELATIVE MOTION OF THE CABLES OR THE CONNECTOR BODIES WHILE THE COUPLING NUT IS BEING TURNED.

TABLE 13-1
MATING TORQUE VALUES FOR COAXIAL CONNECTORS

Connector Type	Coupling Nut Torque Inch-Pounds (Newton-Meters)
SMA	7 to 10 (.8 to 1.1)
PRECISION TNC	8 to 12 (.9 to 1.4)1/
TNC	4 to 6 (.5 to .7)
N	6 to 10 (.7 to 1.1)
SMC	35 to 50 2/ (.3 to .4)
PRECISION N	8 to 12 (.9 to 1.4)1/

1/ Typical values. Use manufacturer's recommendations if different.

2/ Values are in inch-ounces (newton-meters).

CHAPTER 14: TESTING AND INSPECTION

3G1400 GENERAL

Completed interconnecting harnesses and cables shall be verified as meeting all applicable functional, electrical, and design requirements. Visual examination and electrical testing shall be performed as necessary. When a harness has been permanently assembled to electrical or electronic parts, electrical testing shall not overstress the attached components or circuitry.

3G1401 TESTING

1. Testing (acceptance) shall be conducted on all interconnecting cable and harness assemblies immediately following fabrication.

2. All acceptance testing shall be conducted in accordance with test procedures approved by the procuring agency.

3. Records of all acceptance testing shall be complete and shall be traceable to the cable or harness assembly being tested.

4. Adapter cables and/or mating connectors shall be used to conduct any and all electrical tests on interconnecting cable and harness assemblies. Hand probes shall not be used directly in the cable or harness connectors.

5. The electrical acceptance tests on potted-type connectors shall be performed immediately before and immediately after the potting operations.

6. Acceptance testing, as a minimum, shall include the following:

   a. Continuity — Interconnecting cable and harness assemblies shall be tested for point-to-point electrical continuity.

   b. Insulation Resistance — The insulation resistance between each conductor and all other conductors, between each conductor and shields, and between each conductor and connector shell, between shields, and between shields and connector shell/ground except when shields are connected to ground, shall be greater than 100 megohms at an applied voltage of 500 ± 50 Vdc for a minimum of 1 minute.

c. Dielectric Withstanding Voltage (DWV) — The interconnecting cable or harness assembly shall withstand the application of 1050 ± 50 volts rms, 60 Hz or 1500 ± 75 Vdc. Leakage current shall not exceed 1 milliampere when the applied voltage is maintained for not more than 1 minute between the following: (1) each conductor and all other conductors in the cable or harness assembly; (2) each conductor and connector shell; (3) each conductor and shields; (4) between shields; and (5) between shields and connector shell/ground, except when shields are connected to ground. After being applied, the test voltage shall be maintained until it has stabilized at the required potential for at least 2 seconds but no longer than 1 minute. No test readings shall be taken before completion of voltage stabilization and the 2-second waiting period.

> **NOTE**
>
> CABLE OR HARNESS ASSEMBLIES WITH A LARGE CAPACITANCE, E.G., LONG RUNS, A LONG CABLE, OR A HARNESS INCORPORATING SHIELDING SHOULD BE TESTED USING THE DC POTENTIAL OPTION TO AVOID ERRONEOUS INDICATIONS OF FAILURE.

7. Coaxial cable assemblies shall be given appropriate dielectric withstanding voltage, insertion loss, voltage standing wave ratio (VSWR), and time domain reflectrometry (TDR) testing in accordance with and as specified in the engineering documentation.

3G1402 INSPECTION

Inspections shall be made at appropriate points during assembly, at the completion of assembly, and after installation to establish that the appropriate requirements have been met. Inspection may include visual inspection, mechanical measurements, electrical testing, and other methods as deemed necessary. Inspection and testing points shall be specified on the applicable planning documents. Inspection shall utilize approved workmanship standards with accept/reject criteria.

APPENDIX A
DEFINITIONS

The following definitions apply to terms used in wire harness and cable fabrication.

Accessories. Mechanical devices, such as cable clamps, added to connector bodies.

Adapter. An intermediate device to provide for attaching special accessories or to provide special mounting means.

Barrel (Contact Wire Barrel). The section of a contact that accommodates the stripped conductor.

Body, Connector. The main portion of a connector to which contacts and other components are attached.

Braid. A fibrous or metallic group of filaments interwoven to form a protective covering over one or more wires.

Breakout. The separation of a conductor or group of conductors from the main body of wires in a harness.

Bubble Pack. A laminated plastic sheet that is formed with patterned air entrapment ("bubbles"). The "bubbles" provide excellent cushioning for anything enclosed between layers of the material.

Butt Splice. The joining together of two or more conductor ends which have been cut off square with their axes in line and extending from the splice in opposite directions.

Cable. A shielded single conductor or a combination of conductors insulated from one another (multiple conductor).

Cable, Coaxial. A cable in which an insulated conductor is centered inside another. The outer conductor is usually a metal braid or metal sheath. Braided cables usually have an outer insulating jacket over the braid. Coaxial cables are used primarily for transmission of RF signals.

Cable, Shielded. One or more insulated conductors covered with a metallic outer covering, usually a metal braid.

Cable Clamp. A mechanical clamp attached to the wire entrance of a connector to support the cable or wire bundle, provide strain relief, and absorb vibration and shock.

Certification. The act of delegated authority in verifying and documenting that personnel have completed required training, have demonstrated specified proficiency, and have met other specified requirements.

Conductor. A lead or wire, solid or stranded and either bare or insulated, serving as an electrical interconnection between terminations.

Connector, Electric. A device, either a plug or a receptacle, used to terminate or connect the conductors of a harness or cable and provide a means to continue the conductors through a mating connector.

Contact. The conductive element in a connector or other terminal device which mates with a corresponding element for the purpose of transferring electrical energy.

Contact, Crimp. A contact whose crimp barrel is a hollow cylinder that accepts the conductor. After a conductor has been inserted, a tool is used to crimp the contact metal firmly onto the conductor.

Contact Engaging and Separating Force. Force needed either to engage or to separate mating contacts.

Contact, Fixed. A contact permanently included in the insert material.

Contact Float. The overall side play and/or angular displacement of contacts within the insert cavity.

Contact, Insertable/Removable. A contact that can be mechanically joined to or removed from an insert. Usually, special tools are used to insert (lock) the contact into place or remove it.

Contact Inspection Hole. A hole in the cylindrical rear portion of a contact used to check the depth to which a conductor has been inserted. Inspection holes are found in most crimp contacts.

Contact, Pin. Male-type contact designed to slip inside the mating female contact member.

Contact Retainer. A device located on the contact or in the insert to retain the contact in an insert or body. Quite often the device is a metal clip.

Contact Retention. The axial load in either direction which a contact can withstand without being dislodged from its normal position within an insert or body.

Contact, Socket. A female-type contact.

Contact, Solder. A contact which has a solder cup, flat tab, hook, or other design to which conductors are attached by soldering.

Contractor. The individual(s) or concern(s) who enter into a prime contract with the Government.

Coupling Ring. That portion of a plug which aids in the mating and unmating of a plug to a receptacle and which holds the plug to the receptacle.

Cover, Electrical Connector. An item which is specifically designed to cover the mating end of a connector for mechanical and environmental protection during assembly and nonusage.

Crimp. The physical compression (deformation) of a contact barrel around a conductor to make an electrical and mechanical connection to the conductor.

Crimping. A method of mechanically compressing or securing a terminal, splice, or contact to a conductor.

Deviation. A specific authorization, granted before the fact, to depart from a particular requirement of specifications or related documents.

Drain Wire. An uninsulated wire that runs linearly along a foil shield wire or cable and is used to make contact with the shield. Grounding of foil shields is done with drain wires.

Electromagnetic Interference (EMI). The unwanted intrusion of electromagnetic radiation energy whose frequency spectrum extends from subsonic frequency to X-rays.

Extraction Tool. A device used for extracting removable contacts from a connector.

Ferrule. A short metal tube used to make crimp connections to shielded or coaxial cables.

Fillet. A smooth concave buildup of material between two surfaces; e.g., a fillet of solder between a conductor and a solder terminal.

Grommet. An insulator that covers sharp edges of holes through panels and partitions to protect wire insulation from cut-through damage.

Grommet, Connector. An elastomeric seal used on the cable side of a connector to seal the connector against contamination and provide stress relief.

Harness. One or more insulated wires or cables, with or without helical twist; with or without common covering, jacket, or braid; with or without breakouts; assembled with two or more electrical termination devices; and so arranged that as a unit it can be assembled and handled as one assembly.

Insert. The part of a connector that holds the contacts in position and electrically insulates them from each other and the shell.

Insertion Tool. A device used to install contacts into a contact cavity in a connector insert.

Interface. The two surfaces on the contact sides of mating connectors which face each other when mated.

Interfacial Seal. A sealing of mated connectors over the whole area of the interface to provide sealing around each contact.

Jacket. The outermost layer of insulating material of a cable or harness.

Joint. A termination.

Lay Length. The axial length required by a wire component to complete one helical wrap around a cable core or central axis.

Mate. The joining of two connectors.

Molding. The sealing of a connector backshell area or a cable breakout with a compound or material that excludes moisture and provides stress relief. The material is injected into molds which control its configuration.

Plug Connector. An electrical termination assembly constructed to be attached to the end of a cable, coaxial line, or conductor for convenience in joining with another electrical connector, and not designed to be mounted on a bulkhead chassis, or panel. Plug connectors are normally removable from the permanently mounted part.

Polarization. A mechanical arrangement of inserts or shell configurations which prevents the mismating of plugs and receptacles. This allows connectors of the same size to be positioned side by side with no danger of making the wrong connection.

Polarize. To arrange mating connectors so that they can mate in only one way.

Potting. The sealing of a connector backshell area by filling a fitting, potting boot, or temporary form with a compound to exclude moisture and/or to provide wire strain relief.

Potting Compound. An electrically nonconductive compound used to encapsulate and give stress relief to conductors behind connectors.

Pullout Force. The force necessary to separate a conductor from a contact or termination by exerting a pull along the axis of the conductor and the termination.

Radio Frequency (RF). The frequency spectrum from 15 kHz to 100 GHz. Cables are seldom used above 18 GHz.

Radio Frequency Interference (RFI). Electromagnetic radiation in the radio frequency spectrum from 15 kHz to 100 GHz.

Receptacle Connector. An electrical connector with contacts constructed to be electrically connected to conductors or a coaxial cable. The connector is designed to mount on a bulkhead, chassis, or panel.

Repair. Operations performed on a nonconforming article to place it in usable condition. Repair is distinguished from rework in that alternate processes rather than reprocessing are employed.

Rework. The reprocessing of an article or material that will make it conform to drawings, specifications, or contract.

Sealing Plug. A plug which is inserted to fill an unoccupied contact aperture in a connector. Its function is to seal an unoccupied aperture in the assembly, especially in environmental connectors.

Service Loop. The extra wire or cable length required at a breakout to facilitate maintenance and servicing.

Shielded Cable. Cable surrounded by a metallic covering intended to minimize the effects of electrical crosstalk interference or signal radiation.

Shielding. The metal covering surrounding one or more conductors in a circuit to prevent interference or signal radiation.

Solder. A nonferrous, fusible metallic alloy used to join metallic surfaces.

Solder Cup Terminal. A hollow, cylindrical terminal designed to accommodate one or more conductors.

Soldering. The process of joining metallic surfaces through the use of solder without direct fusion of the base metals.

Splice. The joining of two or more conductors to each other.

Staking of Knots. Square knots and closing stitches tied with unimpregnated or teflon-coated lacing tape often loosen. To prevent loosening, a small amount of adhesive (often epoxy) is applied to the knot to permanently secure it.

Stranded Conductor. A conductor composed of a group of smaller wires.

Stress Relief. Method or means to minimize stresses (or strains) to terminations and wiring.

Strip. To remove insulation from a conductor.

Tab Terminal. A flat-surfaced terminal that is broad compared to the metal thickness. Wires are often soldered along the flat surface.

Tang (Connector Backshell). A backshell tang is a tapering metal projection (straight, 45°, or 90° to the axis of the connector) designed to accommodate cable-tie attachments. The cable-ties grip and hold harness wires exiting from the connector, thus providing strain relief for the wires.

Tines. Tines are the members of a contact retention system that capture or "lock" crimp removable contacts into the contact cavities.

Torque Striping. A continuous mark (usually in color) applied from one surface across the joining edge onto a second surface after torquing rotation of the surfaces has been completed. If the parts are disturbed, the line will no longer be continuous but will show an offset.

Waiver. Granted use, or acceptance, of an article which does not meet specified requirements.

Wicking. The flow of molten solder along the strands of multistrand conductors.

Wire. A single metallic conductor of solid, stranded, or tinsel construction, designed to carry current in an electrical circuit. It may be bare or insulated.

Wire Dress. The arrangement of wires and laced harnesses in an orderly manner.

APPENDIX B
WIRE VISUAL AIDS AND ILLUSTRATIONS

WIRING: CONNECTORS, CABLING AND HARNESSING — WIRE DRESS TO CONNECTORS

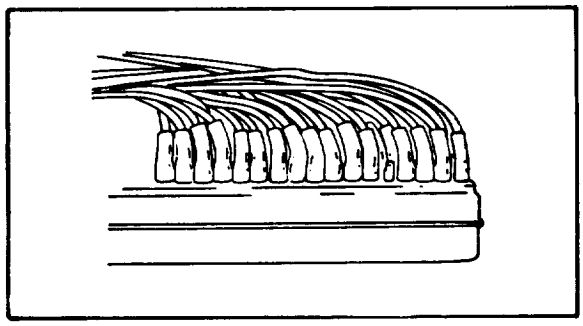

FIGURE B-1

PREFERRED

All wires dressed with even bends to terminate in solder cups.

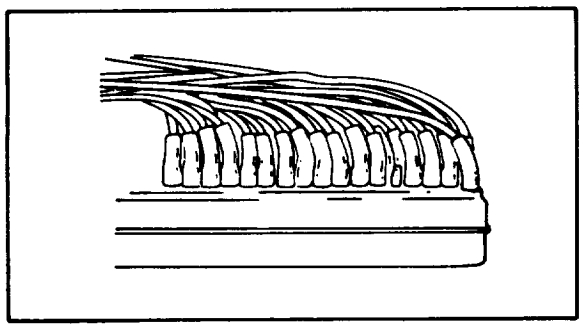

FIGURE B-2

ACCEPTABLE

End wire on the right is tighter than others, but flotation of pin or socket is not affected.

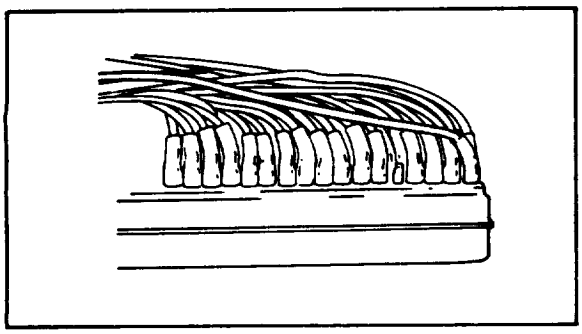

FIGURE B-3

NONCONFORMING

End wire on the right is taut with no stress relief.

WIRING: CONNECTORS, CABLING AND HARNESS — STRESS RELIEF SHRINKABLE SLEEVING ON SOLDER CUPS (SEE PAR. 3G902)

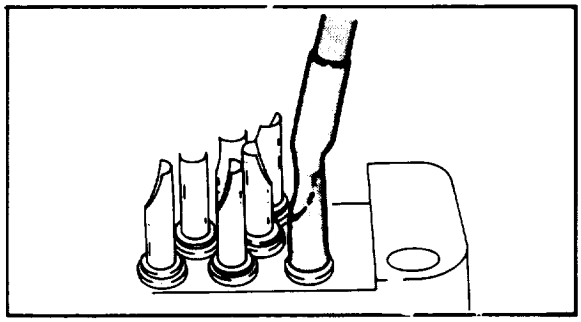

FIGURE B-4

PREFERRED

1. Sleeving on wire covers solder cup and provides support over wire insulation (see controlling specification).
2. Sleeving is fully shrunk over the insulation, wire, and solder cup.
3. Sleeving is sufficiently rigid to provide stress relief and prevent wire bending at the solder joint.

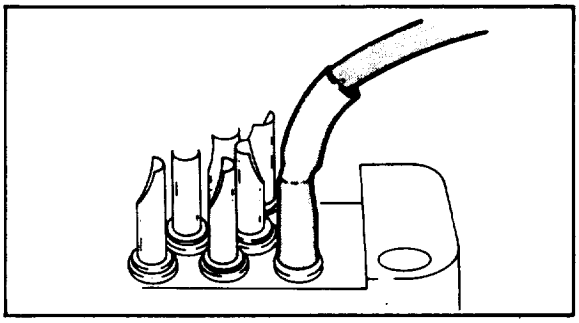

FIGURE B-5

NONCONFORMING

The sleeving is not fully shrunk and permits wire bending and flexing at the joint.

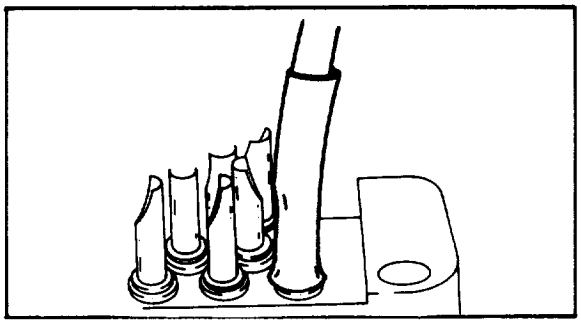

FIGURE B-6

NONCONFORMING

Sleeving is not fully shrunk.

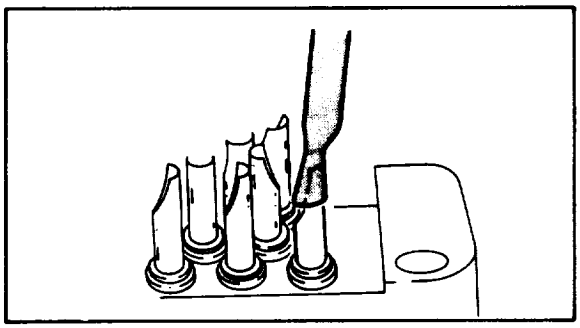

FIGURE B-7

NONCONFORMING

Sleeving does not grip at least half of the cup barrel below the opening.

WIRING: CONNECTORS, CABLING AND HARNESSING, WIRE PREPARATION, MECHANICAL STRIPPING

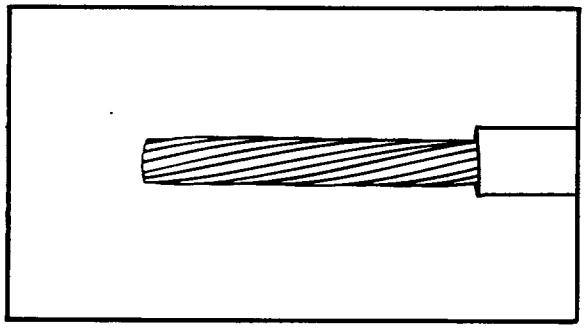

FIGURE B-8

PREFERRED

1. Insulation has been removed from the conductor with no visible damage to the wire strands.
2. Normal lay of wire, if disturbed, shall be retwisted to the original wire lay.

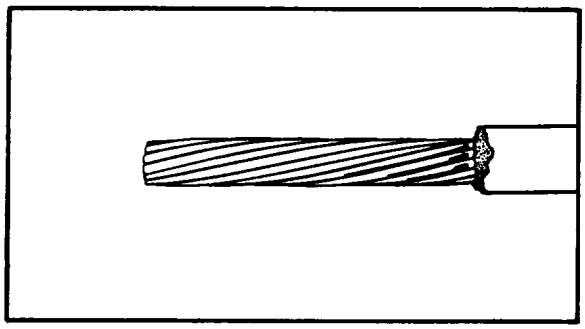

FIGURE B-9

ACCEPTABLE

Minor burnishing and indentation, base metal not exposed.

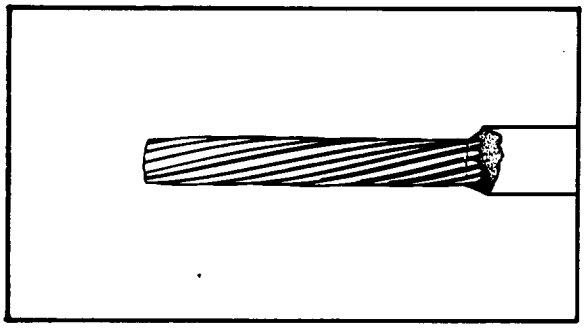

FIGURE B-10

NONCONFORMING

Wire strands show evidence of a nicked condition caused by stripper blades.

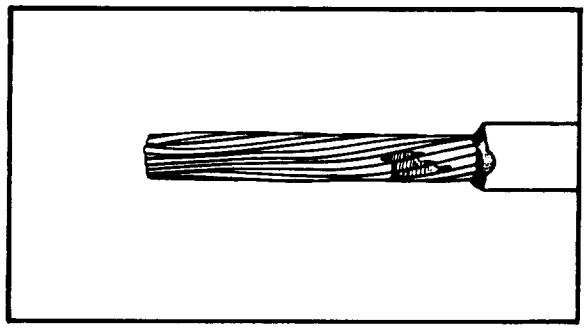

FIGURE B-11

NONCONFORMING

1. Wire strands are gouged and scraped exposing base metal.
2. Original lay of stranding has been straightened and distorted.

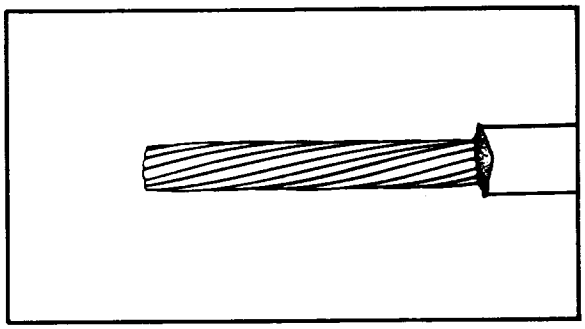

FIGURE B-12

PREFERRED

Insulation stripped by thermal stripping shall have a minimum of edge flash with no damage to the wire strands.

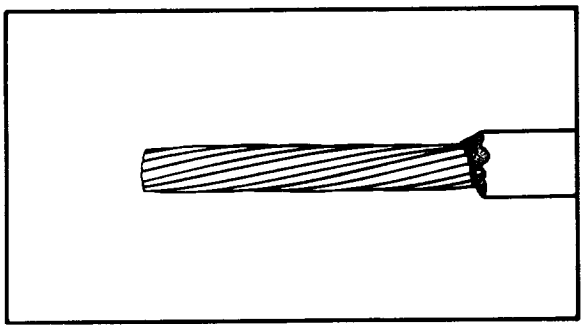

FIGURE B-13

ACCEPTABLE

Mechanical or thermal stripped insulation irregularity is acceptable if it does not exceed 1/4 of the outside diameter of the wire with insulation.

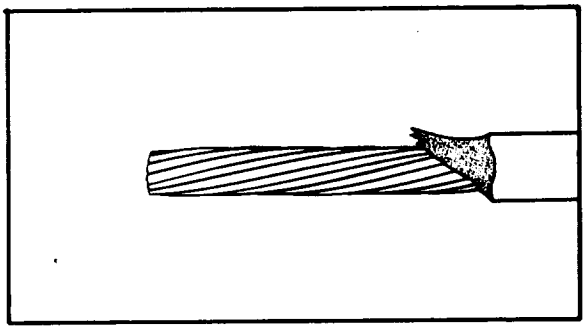

FIGURE B-14

ACCEPTABLE MINIMUM

Edge flash, due to improper stripping, should not exceed wire insulation diameter.

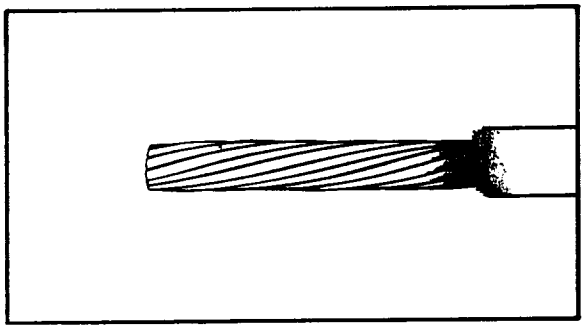

FIGURE B-15

NONCONFORMING

Burned or charred insulation, as shown, is the result of improper application of heat.

WIRING: CONNECTORS, CABLING AND HARNESSING, WIRE PREPARATION, TINNING STRANDED CONDUCTORS

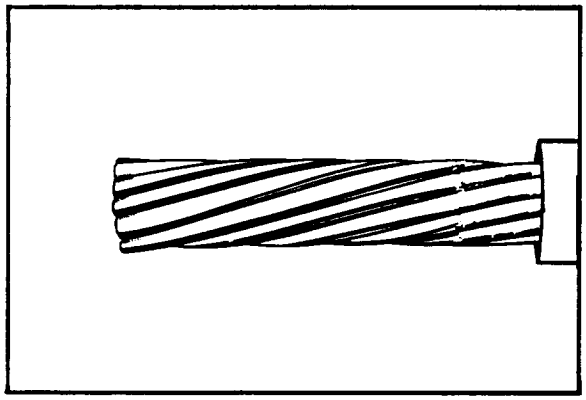

FIGURE B-16

PREFERRED

1. Complete wetting of the tinned area has resulted in a bright, thin, and even tinning of the strands.
2. Tinning has reached insulation, but wicking is minimal.

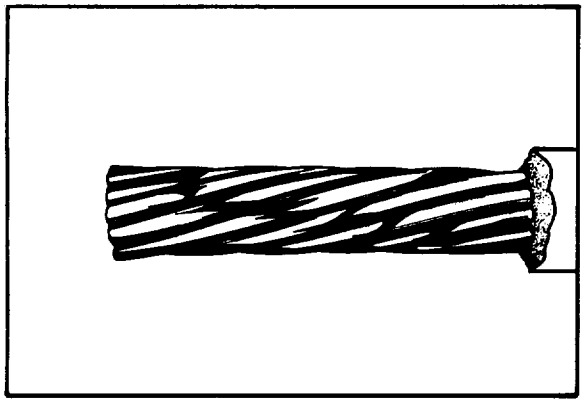

FIGURE B-17

ACCEPTABLE

Traces of solder wicking under insulation, but the contour of the stranding is easily discernible.

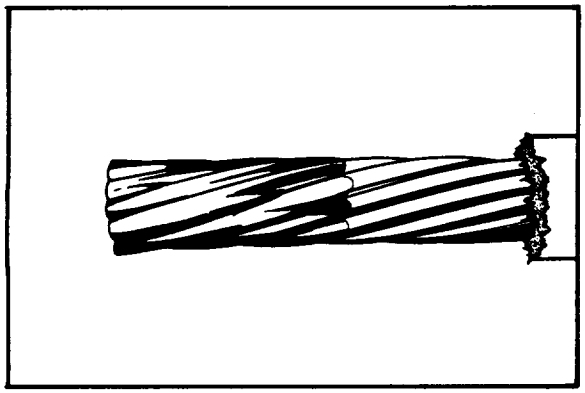

FIGURE B-18

ACCEPTABLE

Length of tinning is determined by type of termination; however, it should be sufficient to prevent separation of strands when wire is wrapped around a terminal.

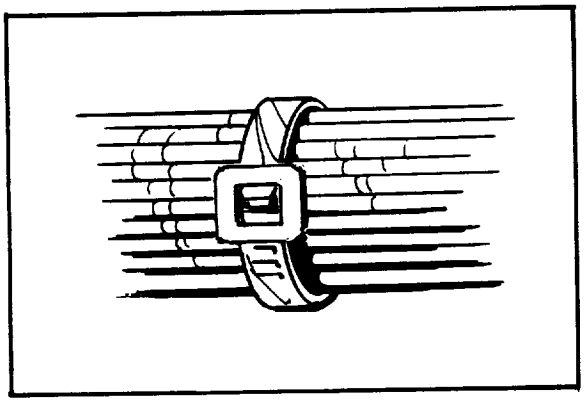

FIGURE B-19

ACCEPTABLE

1. Conductors secured with a plastic strap.
2. When tightened correctly, strap will not move laterally along the bundle under normal handling but can be rotated in place.

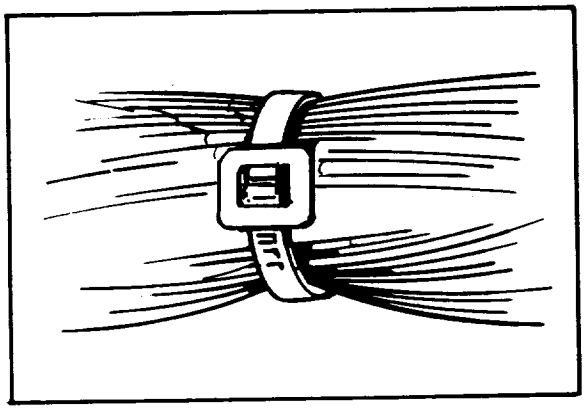

FIGURE B-20

UNACCEPTABLE

Strap is too tight and is deforming the insulation on the wire.

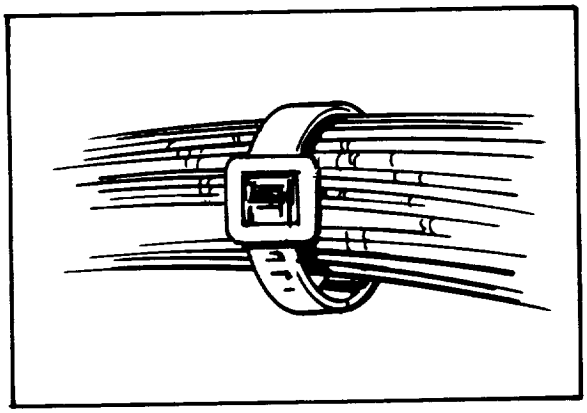

FIGURE B-21

UNACCEPTABLE

Strap is too loose and will slip easily along the bundle with normal handling.

APPENDIX C
CRITICAL PROBLEMS IN COAXIAL CABLE ASSEMBLY

Because of poor connector design, faulty assembly instructions, or wrong choice of materials, certain types of coaxial cable assembly failures occur frequently. Problem areas are as follows:

1. **Plastic Jacket Layer in the Compression System.** Certain manufacturers' RF-connector designs or assembly instructions allow the jacket to be in the clamping system. For example, the metal clamp nut presses against the teflon cable jacket, which presses against the metal braid, which presses against the metal cable barrel of the connector. The problem encountered with this arrangement is that after torquing, the teflon jacket cold-flows, and the connection becomes loose. Intermittent circuits and system failure can result. Either this type of connector should not be used, or the plastic jacket should be trimmed back so that only metal-to-metal compression exists. (See Figure C-1.) If the connector design is such that satisfactory metal-to-metal compression cannot be achieved after torquing, the connector should not be used.

2. **Inadequate Center Conductor to Center Contact Solder Joint.** Certain manufacturers recommend that the center conductor be tinned, and that this tinned conductor be placed in the center contact. Then the solder joint between center conductor and center contact is made by reflowing the tinning in the center contact. Invariably this makes an insufficient solder joint. (See Figure C-2.) A sufficient solder joint is made by placing a small length of rosin core solder in the contact wire well (e.g., .125-inch (3.17-mm) length of .015-inch (.38-mm) diameter solder). The wire well is placed over the center conductor, and the contact is heated to melt the solder and position the contact on the center conductor.

3. **Breakage of Stress-Relief Sleeving.** In assemblies where shrinkable sleeving is used to provide stress relief from a connector ferrule to the cable, there is often a major transition in diameter as shown in Figure C-3. If MIL-I-23053/8 sleeving is used for stress relief, it often cracks at the large diameter of the transition. The use of MIL-I-23053/8 sleeving for these applications should be avoided. A double sleeve of polyolefin (MIL-I-23053/5) will do a good job if outgassing is not important.

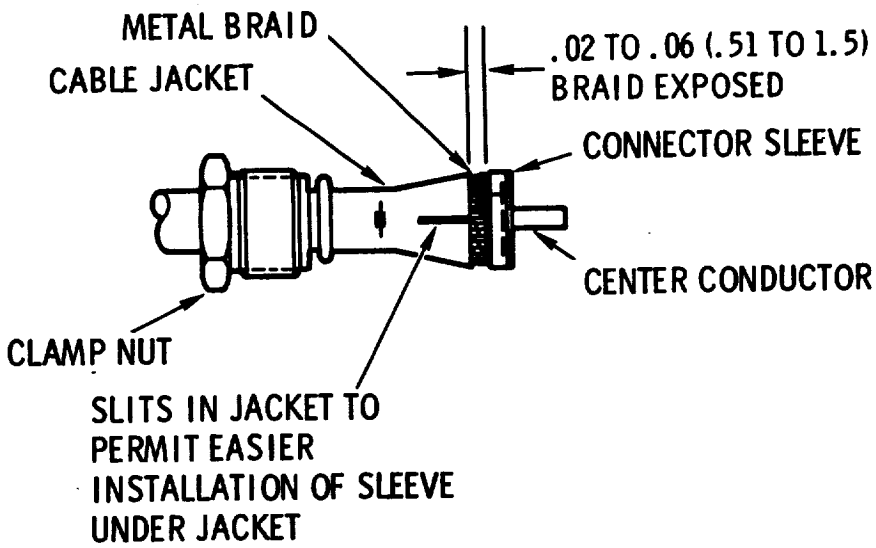

A. INADEQUATE EXPOSURE OF METAL BRAID. JACKET MAY BE IN CLAMPING SYSTEM.

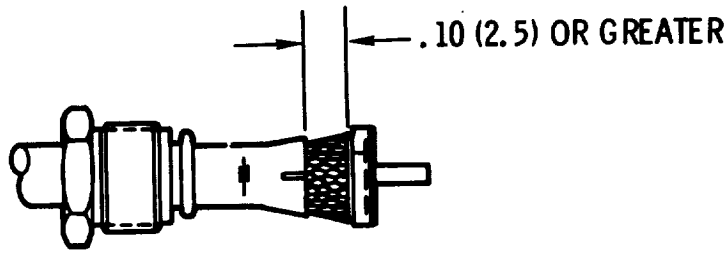

DIMENSIONS IN INCHES (MILLIMETERS)

B. PROPER EXPOSURE OF METAL BRAID SO JACKET WILL NOT BE IN CLAMPING SYSTEM.

FIGURE C-1
ILLUSTRATION OF PROPER TRIMBACK OF JACKET TO ISOLATE IT FROM THE CLAMPING SYSTEM

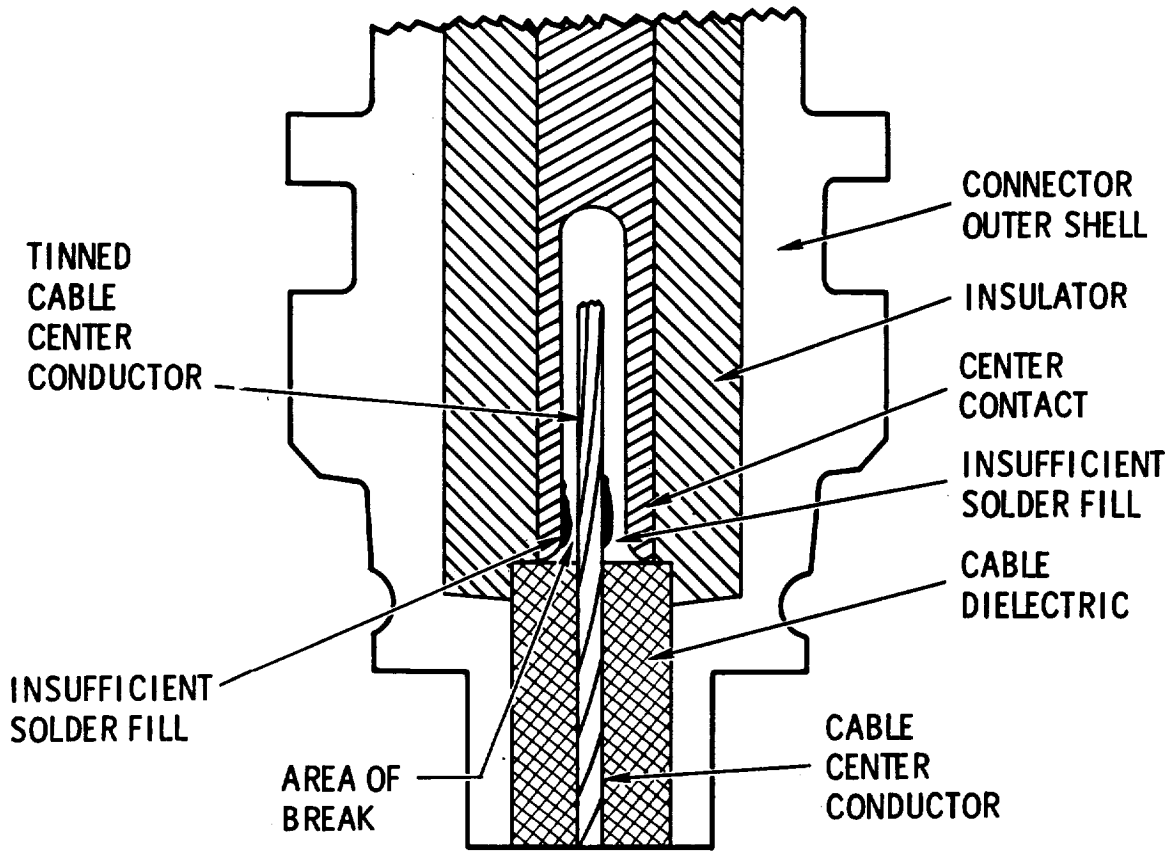

FIGURE C-2
BROKEN SOLDER JOINT CAUSED BY INSUFFICIENT SOLDER FILL

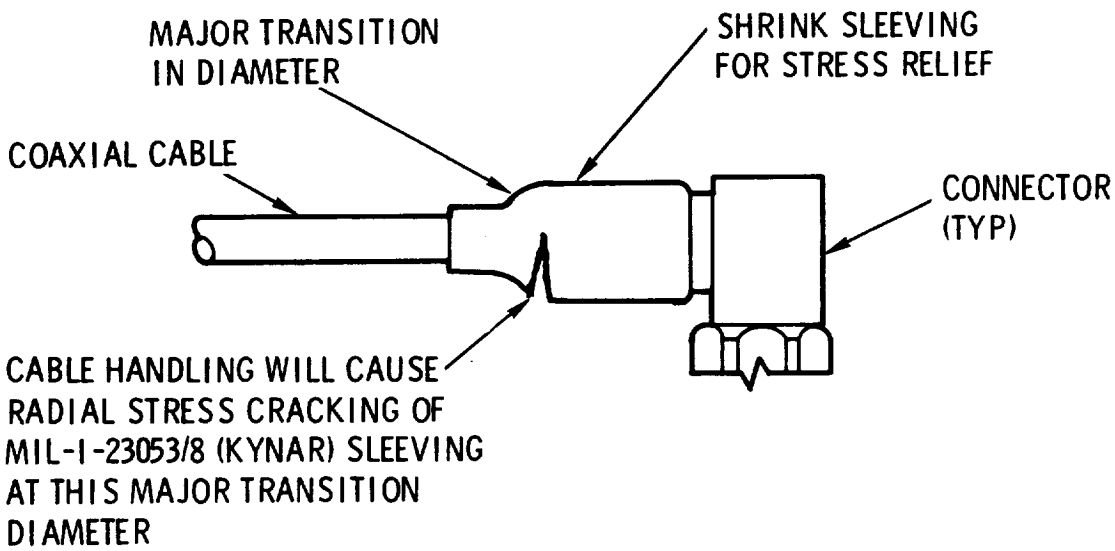

FIGURE C-3
PROBLEM POINT FOR KYNAR STRESS RELIEF SLEEVING

☆U.S. GOVERNMENT PRINTING OFFICE: 1985 476 238 32240