[redacted]

(NASA-CR-53624) PROJECT APOLLO GUIDANCE AND NAVIGATION PROGRAM Monthly Technical Progress Report, 4 Oct. - 9 Nov. 1961 (Massachusetts Inst. of Tech.) 58 p

N87-70043

37009

00/12 Unclas 42951

MASSACHUSETTS INSTITUTE OF TECHNOLOGY

APOLLO

GUIDANCE AND NAVIGATION

Approved Milton B. Trageser Date 1/4/62
MILTON B. TRAGESER, DIRECTOR
APOLLO GUIDANCE AND NAVIGATION PROGRAM

Approved Roger B. Woodbury Date 1/4/62
ROGER B. WOODBURY, ASSOCIATE DIRECTOR
INSTRUMENTATION LABORATORY

[redacted]

LIBRARY COPY

FEB 18 1964

LANGLEY RESEARCH CENTER
LIBRARY, NASA
LANGLEY STATION
HAMPTON, VIRGINIA

(Unclassified Title)

REPORT E-1099

MONTHLY TECHNICAL PROGRESS REPORT

PROJECT APOLLO GUIDANCE
AND
NAVIGATION PROGRAM

Period October 4, 1961
to
November 9, 1961

[redacted]

INSTRUMENTATION LABORATORY

CAMBRIDGE 39, MASSACHUSETTS

COPY # 281 OF 320 COPIES
THIS DOCUMENT CONTAINS 58 PAGES

[redacted]

[redacted]

ACKNOWLEDGEMENT

This report was prepared under the auspices of DSR Project 55-191, sponsored by the Space Task Group of the National Aeronautics and Space Administration through Contract NAS9-153.

[redacted]

The publication of this report does not constitute approval by the National Aeronautics and Space Administration of the findings or the conclusions contained therein. It is published only for the exchange and stimulation of ideas.

[redacted]

MONTHLY PROGRESS REPORT FORMAT

The generation of the monthly progress report will be combined with two other functions. These functions will be carried out at a monthly meeting of all M.I.T. Instrumentation Laboratory staff personnel engaged in the Apollo effort. This meeting has the following objectives:

1. Technical presentations by Laboratory members to NASA representatives and to the Apollo staff will be a means of communication.

2. The NASA representatives will be partially fulfilling their responsibility of monitoring the activities of the contract.

3. The publication of the minutes of this meeting will result in a written monthly progress report.

It is anticipated that the customary agenda for the monthly meetings, and thus the progress report, will consist of a number of status reports and one or more presentations in depth on selected subjects. The first several meetings, however, will consist only of presentations in depth. This type of agenda will persist until most activities have been thus considered.

It is intended that the staff members will not participate substantually in the conversion of the meeting minutes into the written report. It is felt that the advantage of engineering time and effort saved will outweigh the penalty of an imperfect written presentation. Polished technical reports will be published separately, however, as the status of the various efforts warrent.

TABLE OF CONTENTS

	Page
Introduction	1
Apollo Guidance Computer Logical Design	2
Programming the MOD 3C Computer	5
Computer Displays	6
Single-degree-of-freedom Integrating Gyroscope	17
Investigation of the Earth's Limb	36
Upper Atmosphere	39
Re-entry Guidance	43

INTRODUCTION

M. B. Trageser

After greeting the assembly, Mr. Trageser introduced Dr. Alonso by stating that the development of the computer about to be described was started about three years ago for space applications. This computer is based on the criteria for low-power operation and reliability that we have in the Apollo program.

APOLLO GUIDANCE COMPUTER LOGICAL DESIGN

Dr. R. L. Alonso

Dr. Alonso made a quite detailed presentation of the development and operation of the Apollo Guidance Computer, using flip charts. This computer is organized along the lines of a general purpose computer and is essentially a parallel word transfer machine. The main parts of the computer are a memory (which is actually about half of the size of the entire physical machine) an arithmetic unit, addressing unit, and a sequence generator. The memory unit itself is divided into several sections that are physically different. There is a fixed memory which is the largest part and which contains as many as 3500 words of 16 bits each that are wired in and cannot be changed. The erasible memory has about 484 registers of which 20 also serve the function of counters. It has a number of input-output registers as well as some special registers that serve specific functions such as shifting and transformation as is necessary in multiplication. The arithmetic unit has an adder as its primary member and a parity checking and generating circuit. The addressing registers are the means of selecting a particular word from the memory unit, or a particular instruction.

Rather than present the more detailed remarks of its operation any interested party is referred to Instrumentation Laboratory Apollo Report No. E-1077, Preliminary MOD 3C Programmers Manual, by R. Alonso, J. H. Laning, Jr., and H. Blair-Smith, November 1961, the introduction of which follows.

INTRODUCTION OF REPORT E-1077

This manual is intended for those people who have some familiarity with the type of computer of which the Mod 3C is an example. Although the 3C computer is like the one described in R-276*, there are many differences of details and of nomenclature.

The material presented here neither is complete, nor is it entirely firmly established at the present date. It is meant to provide prospective 3C programmers with enough information to code representative programs, to make estimates of storage and speed requirements, and to aid the 3C designers by forcing commitments as to the nature of the IN-OUT system. Furthermore, it is hoped that this manual will bring about comments and questions by those who program. Despite the foregoing remarks which suggest that the design of 3C is still in a fluid state, it should be emphasized that there is no reason at present to suppose that the material described in this report will be changed in any respect in the final design.

A complete listing of all registers in Groups SC, IO, and C (Table 1) and their tentative address assignments is included in Appendix I. Appendix II contains a listing of control pulses, and Appendix III shows all the control pulse sequences. Appendices IV, V, and VI describe, respectively, the Yul system compiler for compilation of 3C programs and preparation of corresponding rope wiring diagrams, a set of interpreted instructions for extra precision arithmetic and vector operations, and finally a representative program in in Yul system language for purposes of illustration.

Note: Instrumentation Laboratory Report R-276 is available as Institute of Aeronautical Sciences Paper FF-29, Design Principles for a General Control Computer, by R. Alonso and J. H. Laning, Jr.

Comments by Mr. Trageser

Please verify the conclusion that for a given ratio between program words and arithmetic (data) words there is some optimum word length which will minimize the number of components in a computer. This optimum word length is based more on educated conjecture than on rigorous analysis.

Dr. Alonso: We can add something to that. The only reason for going to a greater word length is if the computer is not fast enough.

Mr. Trageser: The next presentation is intended to give some insight into the manner in which this computer can be programmed. Dr. Laning has already written a number of programs in the logic of this computer and is developing some experience in the use of this computer from the programmer's viewpoint.

PROGRAMMING THE MOD 3C COMPUTER

Dr. J. H. Laning, Jr.

Dr. Laning discussed the current status of the computer programming effort as elaborated in the previously mentioned Report E-1077, Preliminary Mod 3C Programmer's Manual. Interested persons are referred to this volume for specific information.

Comments by Mr. Trageser

The next presentation by Mr. Eldon Hall will define our approach to the computer displays and interfaces. This first iteration should be put in proper perspective by a preface. This presentation is definitely biased toward a computer man's viewpoint. This interface is in an early stage of definition and will undoubtedly be redefined by later iterations.

[redacted]

COMPUTER DISPLAYS

By: Eldon C. Hall

I will try to present a display concept that can be integrated easily into the computer that Dr. Alonso was discussing, and still provide sufficient flexibility to be modified in the future when the system and operational procedures have been more clearly defined. The fact that this display is quite flexible and compatible with the computer Dr. Alonso presented will become self-evident. In addition, for the amount of display being provided, it is inexpensive in program time, in power, in weight, and in the amount of equipment involved.

The technique employed will provide for up to 64 4-bit output registers, only part of which are required and used in the display proposed here. In addition to display, other outputs can be provided, such as operation of jets, staging signals, proportional control signals (or torquing signals for the platform) if desired, and rate signals for control of the sextant. Also, in the final version, telemetry could be provided, but for the R & D flights the telemetry will probably have to be handled by some other means.

In this first iteration, we provided for both manual or automatic control of the displays, whichever seems more desirable when the operational procedures are selected. The pilot can select display quantities, enter data into the computer, select programs that are already in the computer, and/or change programs such as from mid-course guidance to lunar landing.

[redacted]

The illustration of a suggested display and control panel in Fig. 1 has various output displays, control buttons, mode selection switches, keyboard, and output discrete lights. For example, there is a discrete light labeled "idle", which, when lit, indicates that the computer is running at a very low rate. If the pilot sees any necessity for speeding up the computer, he must initiate the command to do so.

The output displays consist of meters, discrete lights, decimal number lights, and code number to identify the decimal number lights. The control panel incorporates the facility to enter data primarily through the keyboard but also, by proper command via the keyboard, data can be entered from the paper tape reader. The keyboard can be used to select modes of operation, such as IMU erection mode, sextant reading mode, or modes that do nothing more than interrogate various numbers in the computer and display them to the pilot. The discrete lights indicate the computer operating mode.

Consideration must be given to the indication of various malfunctions, some of which might be internal to the computer and some external. For example, if the computer has commanded a jet to operate for torquing the spacecraft and the jet is not functioning, there might be a light to indicate the jet is not operating, while a light on the computer indicates that the command has been given. The pilot would have to investigate the reason for the discrepancy in indication.

For analog data display, there are three meters as indicated in Fig. 1. Each meter has an associated mode switch which defines the output displayed on that meter. This switch programs the computer to

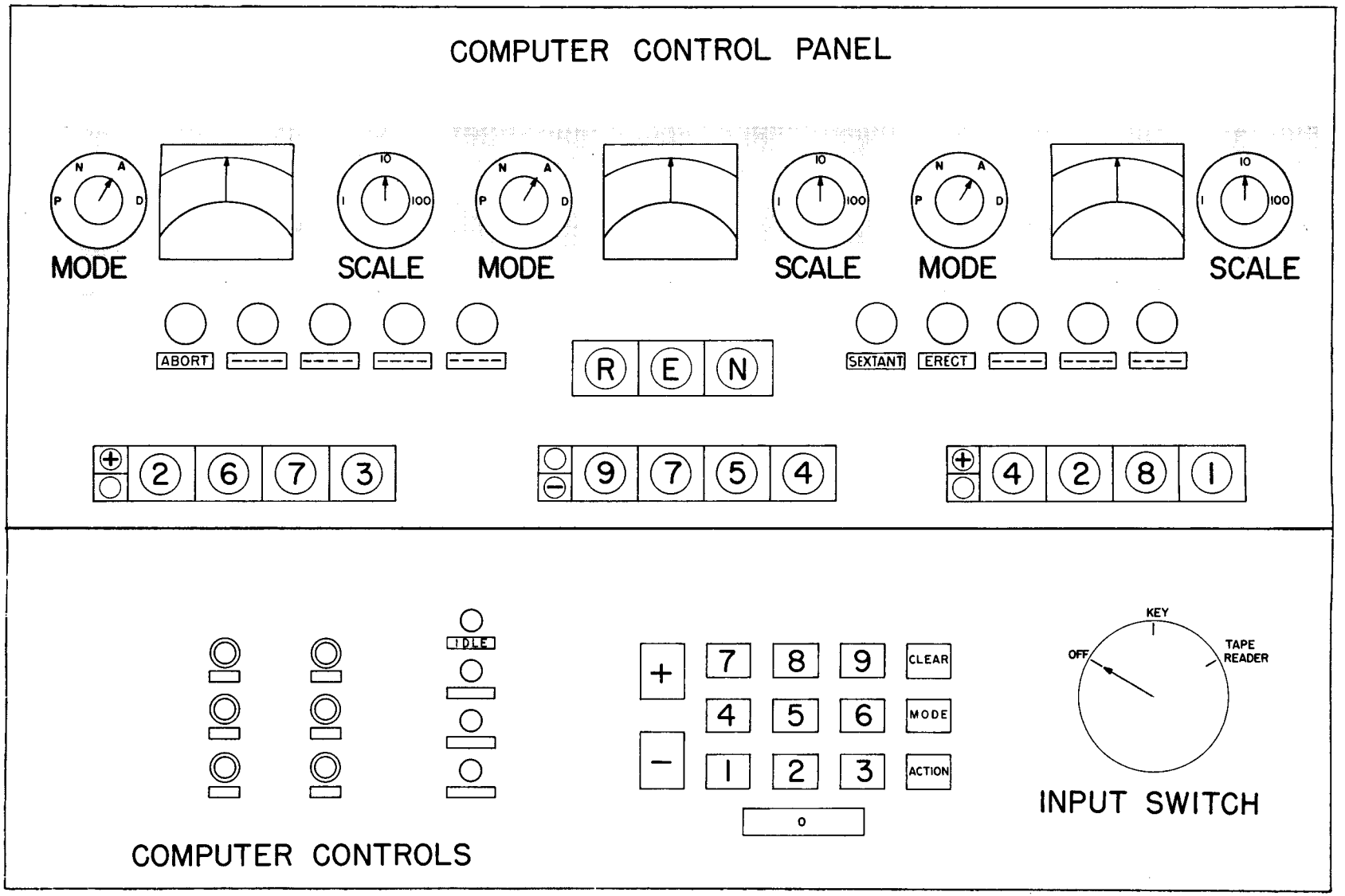

Fig. 1 Computer control panel

read the appropriate number into the meter. There is also a scale switch for use, if necessary, to program the computer to scale the output to the meter. The simplest presentation to the meter will provide one part in sixteen, since there are four bits in the output register, or approximately 7% of full scale. However, by adding another register to each meter, accuracy of about 1/2% can be obtained. If there is any reason to increase or decrease this accuracy, such increase or decrease is possible.

The specific display uses of these meters are not clearly defined in this first iteration, but can include fuel supply or amount of velocity correction still available to the pilot, range and range rate to the lunar surface, etc. Any quantity in the computer erasable memory can be programed to be displayed on the meters.

In the decimal number readouts three 4-digit numbers are provided with a sign digit and a set of 3 code digits to identify the numbers. Each of the three 4-digit numbers will provide an accuracy of one part in 10,000, or by command of the pilot through the keyboard all twelve digits may be used to display one number to very high accuracy. The twelve digit display is more than necessary to display a double precision number contained in the computer. During normal operation the computer can be programed to display a set of quantities automatically. The pilot can command the display of any quantities contained in the erasable memory of the computer by proper code punched into the keyboard. For example, during checkout or possibly during some operational modes the data displayed in the meters may be required to more accuracy than 7%. By selection through the keyboard these numbers may be displayed on the decimal number readout.

Another data display that can easily be incorporated is a tape printer which is not shown in Fig. 1. A printer would be desirable since it could provide a permanent record of computational data. In case of failure a record of this type could be used to assist in manual navigation. No printer was shown at this time because it is felt there is no adequate printer available now. If one is developed it could be integrated into the display at a later time.

To control the computer operation and enter data into the computer there is a keyboard, a punched tape reader, six command buttons and the meter control switches already mentioned. When using the keyboard to enter information into the computer, the pilot would move the input switch to the "key" position to energize the keyboard. He then selects the data entry mode from the keyboard and enters the data and its code to identify the data. The data and its code would be read back to the pilot via the number display for verification before the computer accepts it as valid data to be used in computation. In addition to the keyboard there are six other comman buttons provided which could be used to select modes, energize the display panel to check for malfunctions, change the computer operating speed, etc.

The tape reader can be used as a bulk data storage device for constants, computer checkout problems, initial conditions, etc. The data can be entered by command of the pilot or in a fully automatic mode the computer would interrogate the tape reader to get the data as needed.

The pilot can command the various modes in the computer through command buttons or by code through the keyboard. Examples of modes that could be commanded are erection, sextant, rendezvous, midcourse guidance, landing, etc. The modes used most frequently could be controlled via the command buttons, the others would be controlled by code through the keyboard. The buttons that are programed to control spacecraft functions of various types may be manually operated by the pilot and easily accessable to him. Examples of controls of this type are those required for maneuvering the spacecraft during landing on the moon or earth re-entry.

In checkout mode of operation complete computer checkout and many guidance system checkout programs may be run. Test problems and system exercises may be stored on paper tape and in the fixed memory which would exercise the computer, the display, and other guidance equipment. The existance of a malfunction would be displayed to the pilot.

The computer and display hardware required for these functions (see Fig. 2) is one output register which has a total of 15 bits, seven of which provide the address of the display device. For example, one of the 64 combinations of the seven bit word will address one meter, one will address one of the decimal digits, etc. Associated with each address are four latching relays which are activated by the address. The remaining 8 bits of the 15 bit output registers is used to set the coils of the latching to the "1" or "0" side. The relay contacts provide the signal to activate the display quantity. In the case of a meter a

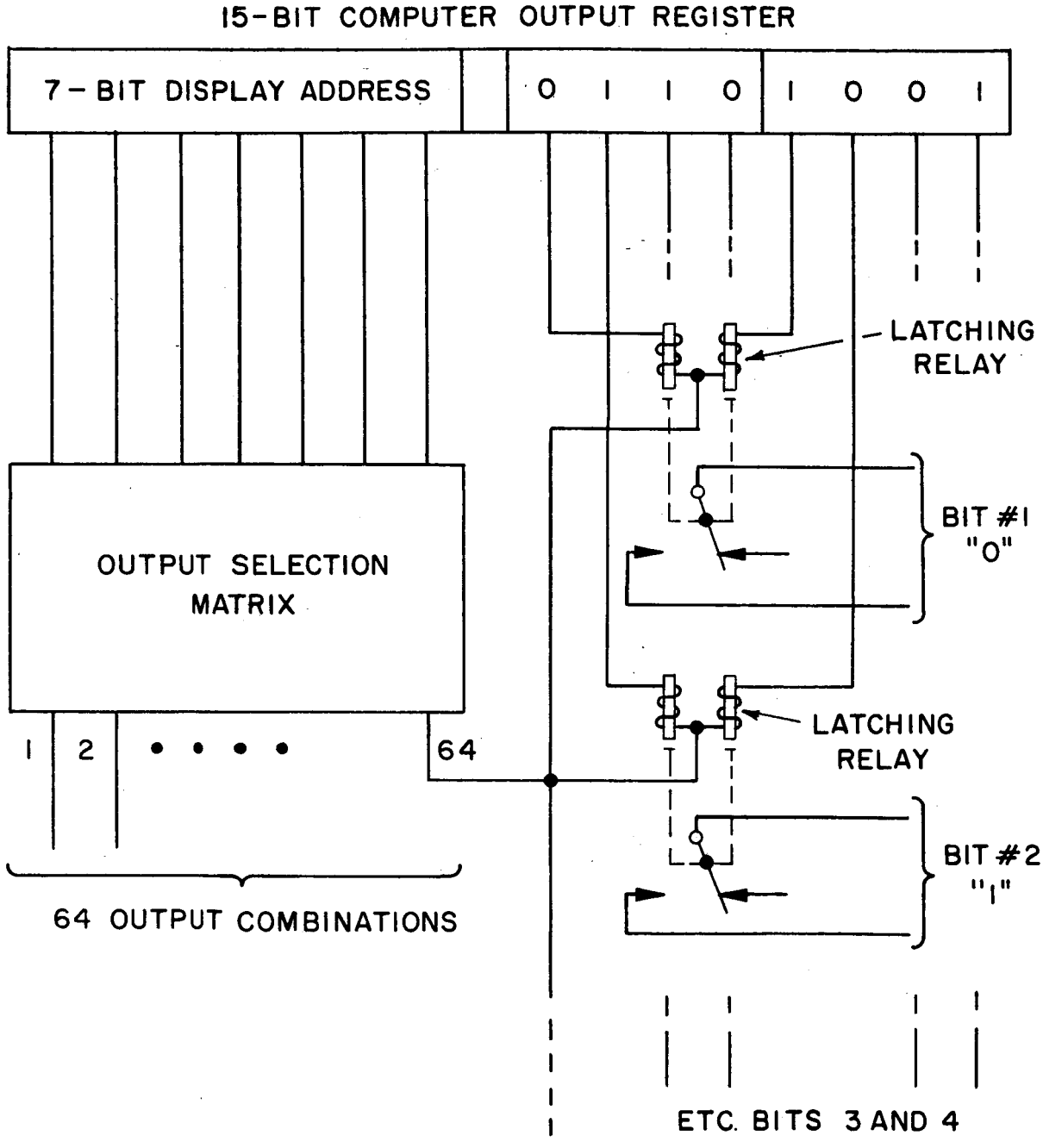

Fig. 2 15-Bit computer output register

resistor ladder network will convert the number stored in the latching relays to a current for operating the meter. In the case of a number readout a decoding network will convert the relays contacts to the appropriate decimal digit. Relays are proposed here because reliable, small latching relays are available and the relay provides storage with no consumption of power. Transistorized circuitry can provide the same function with somewhat increased power. Another advantage for relays is that ground and power isolation is provided by the relay contacts. With transistorized circuits it is hard to achieve the same degree of isolation.

The following is a breakdown of component count, power consumption, weight and program time required to operate each of the displays indicated. In the computer there is the one output register and approximately 22 transistors in the selection matrix that provides the 64 combination. It takes approximately 2 milliseconds of program time to assemble the data and put it into the output register. The computer is then free to return to the main program while the latching relays are being set. In the display, for each of the 18 digits in the number display there are 1 Nixie light, 4 latching relays and 12 transistors for a weight of 1/2 lb. and power of 0.3 watts when the Nixie is on. The total for the 18 digits is then 9 lbs. and 5.4 watts. The meters require essentially no power, have 4 relays and a couple of transistors for a weight of about 1/2 lb. per meter. An external printer, if used, would require a set of 8 relays and a few transistors for a total weight of about 5 lbs. One printer that has already been

developed consumes excessive power but operates at higher speeds than would be required by the Apollo guidance. The discrete lights would each require 1 light, 1 relay, and 1 transistor for a total of about 2 lbs. and 2 watts when all lights are turned on.

For the various inputs proposed there isn't a complete breakdown of parts, power and weight. The tape reader, if manually operated, would not require a motor. If automatic, the motor would add considerable weight and power consumption.

Figure 3 is an artists concept of the display and control equipment integrated into a unit which is about one cubic foot in size. Provided in the assembly are wiring space, cooling ducts, access panels for repair of sub-assembly modules. The advantages of having the hardware and wiring in one integrated assembly are the elimination of big connectors, long wiring cables, and extra equipment at both connectors for isolation and protection against accidental shorting at the connectors. The integrated assembly will provide for easier checkout of the various sub-assemblies.

This presentation of the display and control of the computer provides flexibility in that the display problem is reduced to a computer programming problem. It allows for both manual operation of the guidance system or fully automatic whichever seems more practical as the system and operational procedures develop. As an example, a year from now when the operational procedures have been well-defined and the system design has been determined, any change in the computer to provide the appropriate display quantity is nothing more than a change

[redacted]

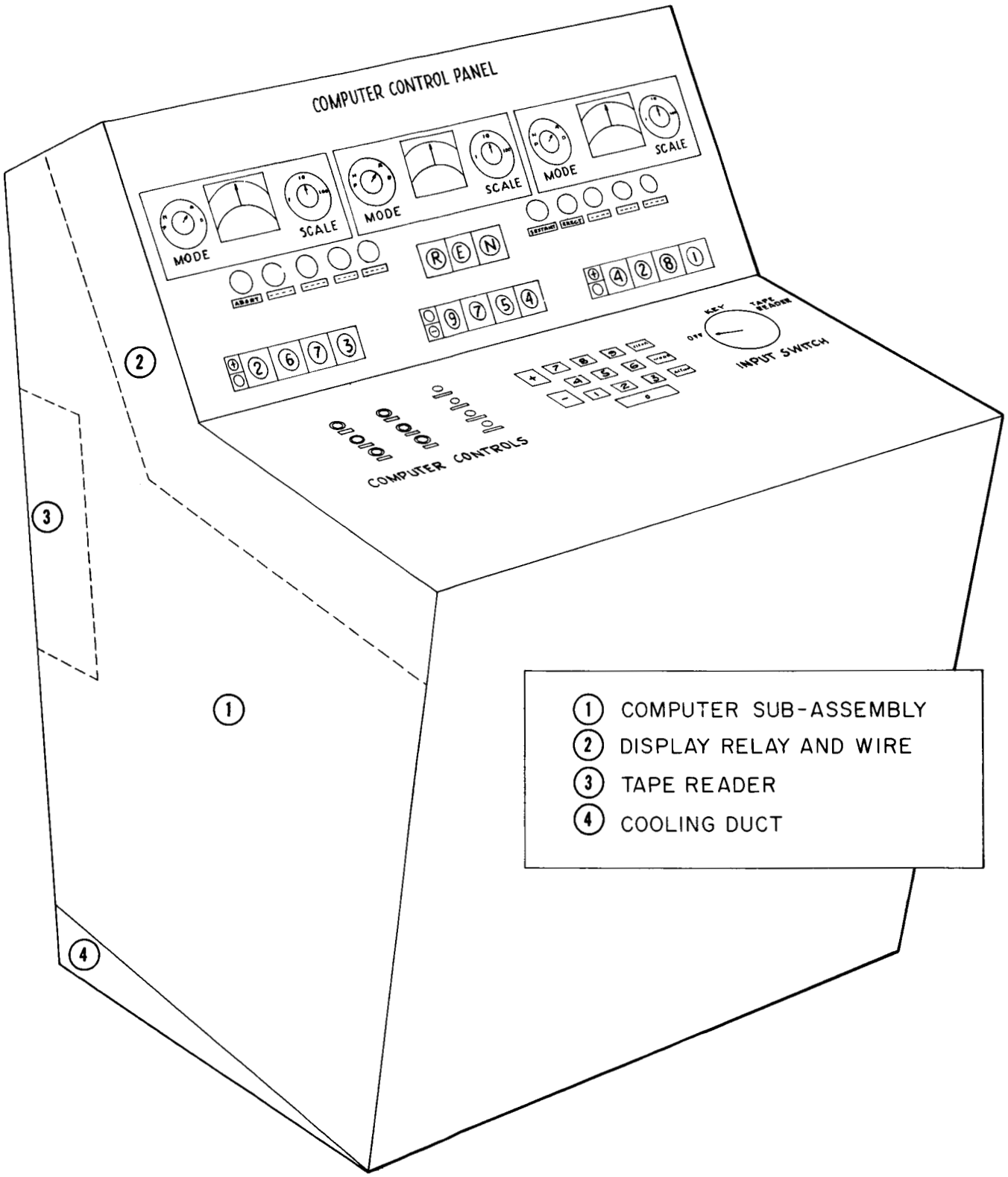

Fig. 3 Artist's concept of computer display and control unit

[redacted]

in the computer program. The design of the final computer will, therefore, not be inhibited by any requirements of the other parts of the system as they are developed. More or less display can be provided at any time, the quantities displayed can be changed as readily as the computer can be programmed, etc. Also other types of outputs may be provided such as signals to operate jets, command the autopilot, communications outputs, etc. These outputs can be represented by binary numbers from 1 bit for discrete signals to as many bits as required for proportional type signals of high accuracy.

Comments by Mr. Trageser

Mr. Trageser then remarked that the gyroscope that has been tentatively selected for use in the earliest flights of the Apollo inertial system AGE 1 must necessarily be one that has been designed.

The next presentation by Mr. Edward Hall is a discussion of a MOD 2 version of the gyro that is flying in the Polaris missile.

[redacted]

SINGLE-DEGREE-OF-FREEDOM INTEGRATING GYROSCOPE

E. J. Hall

I will discuss the development work of our Laboratory on the single-degree-of-freedom size 25 integrating gyroscope, dividing the presentation into three areas, the Mod 1, the Mod 2, and possible reasons for a third model.

The Mod 1 25 IRIG is presently being flown in the Polaris missile system. Its development was during the period 1958-1960. It is an instrument that weighs about 650 grams (1.4 lbs.) and is 2.4 inches in diameter by 3-3/4 inches long. It has an angular momentum of 144,000 cgs units. This means that each dyne-centimeter of uncertainty torque about the output axis corresponds to a drift of about 96 milli-earth rate units (meru).

Figure 1 is a cutaway of the Mod 1, showing the ball-bearing supported gyroscopic element. The torque motor and signal generators are both microsyns, located at either end of the float structure, with the output axis restraint along this axis. A principle feature is the 8-pole magnetic suspension that tends to keep the pivot off the jewels (the jewels, having no function except during cool down when the magnetic suspension is inoperative).

The flotation and damping fluid gives neutral buoyancy to the float structure. However, small temperature differentials (or errors in the fluid density) can give pivot and jewel loading. The magnetic suspension removes this residual loading that would result in output uncertainty torques.

[redacted]

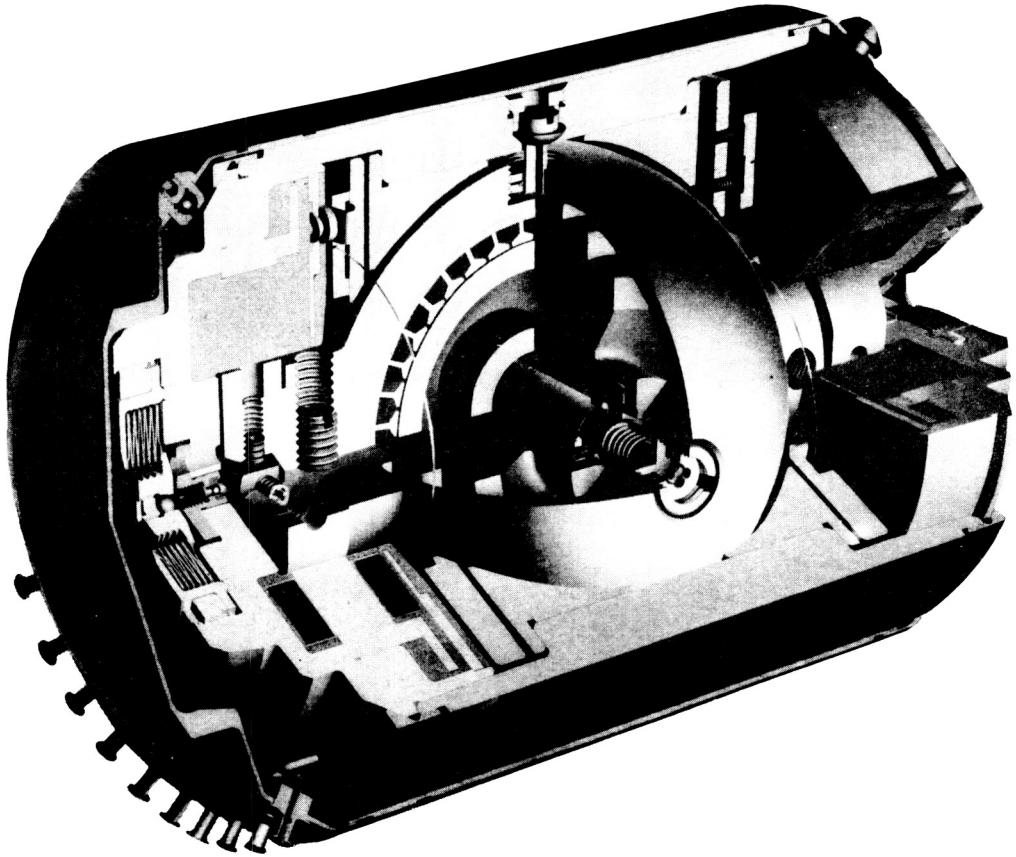

Fig. 1 25 IRIG Mark 45 Mod I

The 25 IRIG is the first gyro to have beryllium as the principle structure material. Beryllium has a ratio of Young's modulus to density (or stiffness per unit weight) of about 23.2. This is almost one degree of magnitude better than for other materials, as shown in Table 1. Beryllium is used for the float structure, main housing, end housing, and damping blocks on this particular gyro.

TABLE 1

Ratio of Young's Modulus to Density per Unit Weight

Material	Ratio
Beryllium	23.2
Aluminum	3.7
Steel	3.7
Titanium	3.5
Magnesium	3.6
Tungsten alloys	2.9

In this design, the motor stator is mounted external to the wheel for several reasons. By placing the winding outside of the wheel cartridge instead of inside, better control of the thermal gradients is obtained and no motor power leads are necessary through the end of the shaft.

A second, and possibly more important reason, is that the external location of the stator winding permits a better method of run-in of the wheel structure. If the wheel shaft is mounted on pivots in a torque-to-balance, closed-loop servo, the torque summation can be used to measure bearing friction. With an internal

winding, the motor torque is combined with the bearing friction and separate evaluation is impossible. This is an important beneficial side effect of this construction.

The damping fluid used in this gyro remains liquid when cooled to room temperature. If the liquid solidified in the bellows (which are used to accommodate the expansion differences between the fluid structure), a vacuum could be created within the hermetic structure in a cooldown, resulting in either a void or the evolution of a gas bubble in the damping gap. This particular problem of temperature sensitivity has plagued gyro builders.

After assembly of the gyro wheel, the correct preload level and compliance of the wheel are obtained by a single adjustment of a differential screw device. The wheel cartridge itself is designed as an anisoelastic device. Ball bearings, as normally designed, tend to be much stiffer (about 5 to 1) in the radial direction than in the axial direction, depending on the ball size and resulting contact angle. In this design the bearings and shaft structure have been selected so that the anisoelastic coefficient of the gyro is less than 1 meru per g^2. The axial and radial compliances are measured on every wheel. This ball bearing design has an additional feature in that the inner race is ground integrally with the shaft structure to reduce tolerances for squareness, parallelism, and roundness.

The magnetic suspension uses a ferrite rotor that is lighter than Hypernik and permits a much higher Q in the magnetic circuit. Aluminum iron is used in the stator core. This suspension gives a stiffness in the radial direction of about 0.8 $g/10^{-4}$ inches radial

displacement. The sensitivity of the float structure is about 50 mg/°F. Therefore, 20 g's on this device with a 2°F differential in floatation temperature results in about 2000 mg load on the suspension. Since we have about 800 mg per 0.0001 inch per side, and the pivot and jewel clearances are a total of 0.0004 inch, the jewel will not touch the pivot at any acceleration up to 20 g's.

Figure 2 is an illustration of drift rate data of a Mod 1 instrument. Since each test takes about one hour, and there are three sets of runs, this figure contains about 18 hours of data. The series of tests in Fig. 2-a were made prior to any cooldown of the instrument; those in Fig. 2-b were made after the first cooldown; and those in Fig. 2-c were made after the second cooldown. This is a typical Polaris acceptance test procedure where the gyro case is placed in four different positions and at two different excitations. In the input axis vertical position, the two microsyn excitation voltages are 5 and 10 volts, Then with the input axis horizontal, separate tests are made with the spin reference axis up, the output axis down, the spin reference axis down, and the output axis up. The data are the actual drift rates in each of these positions. Table 2 shows the results of the tests of Fig. 2.

This is representative data on the Mod 1 instrument that is presently being produced for the Polaris system. Up until about two months ago, A. C. Spark Plug Co., Minneapolis-Honeywell, and Kearfott had delivered 920 IRIG's and 1040 PIG's to the Polaris guidance assembly. Between the interval 27 June 1961 and 25 August 1961, a total of 86 IRIG's were accepted by General Electric

[redacted]

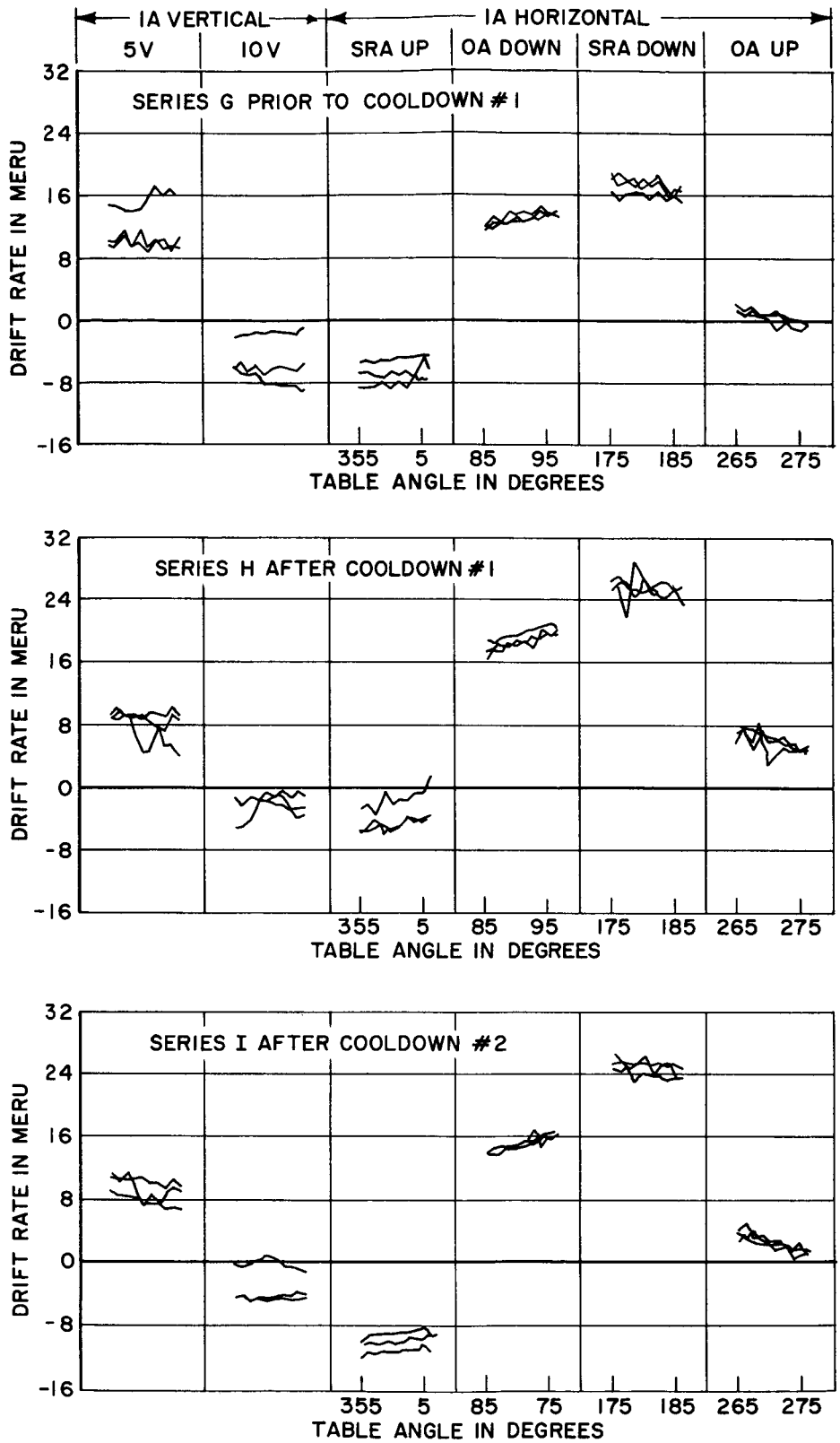

Fig. 2 Acceptance test data -- Unit 27

[redacted]

TABLE 2

Parameter	Average of 3 Series (meru)	Standard Deviation (N = 9) (meru)
RBD	7.77	2.37
ADSRA	-14.60	2.54
ADIA	-11.23	2.24
ID	25.32	3.13
Reaction torque	-17.55	4.49

Company for use in the guidance system. In Table 3 are given the average of the maximum g-sensitive drift rates, the average of the maximum drift rate changes between tests separated by a cool-down, and the standard deviations of both these quantities.

TABLE 3

25 Mod 1 Performance in Industry
(86 IRIG units accepted 6/27/61 to 8/25/61)

Average DD_{max}	13.0 meru
Average AD_{max}	23.7 meru
Standard deviation DD_{max}	6.7 meru
Standard deviation AD_{max}	14.3 meru

In the period from 1960 to the present we have been working on the development of the Mod 2 gyro. Three of these instruments have been built and tested in our Laboratory, and under subcontract A. C. Spark Plug and Minneapolis-Honeywell are each to build ten more to determine the practicality of inclusion in the present Polaris program.

Figure 3 is a cutaway of the Mod 2, which is the same size as the Mod 1 but weighs about 700 grams, slightly more than the Mod 1. The H of the gyro has been increased about 3-1/2 times, from 144,000 to 459,000, which decreases the sensitivity from 96 to 30 meru per dyne cm.

Figure 4 is a cross-sectional view of the Mod 2 that permits a better discussion of the differences from the Mod 1. The wheel is one-piece construction, instead of two-piece, weighs 88 grams, as opposed to 51 grams, and is slightly larger in diameter. The pre-loading scheme makes use of a spacer that can be easily removed and the thickness adjusted to set the pre-load value, and the bearing compliances. The float is larger in diameter and the walls have been thickened to increase the stiffness.

The two principal inclusions have been the ducosyn suspension and the increase in the wheel angular momentum. The advantage of the ducosyn is the separation of the suspension function from the torque or signal function. This is achieved by using a small separately-excited winding at either end to provide the centering of the float structure. The rotor used with the suspension is cylindrical and non-salient. The reaction torque of the suspension is essentially zero. An 8-pole microsyn similar to the Mod 1 is used to provide the signal and torque functions. This arrangement permits the selection of the suspension stiffness based solely on that requirement at a frequency completely divorced from any torque or signal requirements. The stiffness of the Mod 2 is now 2 grams per 0.0001in. The signal generator sensitivity has been so adjusted as to maintain the Mod 1 gyro transfer function.

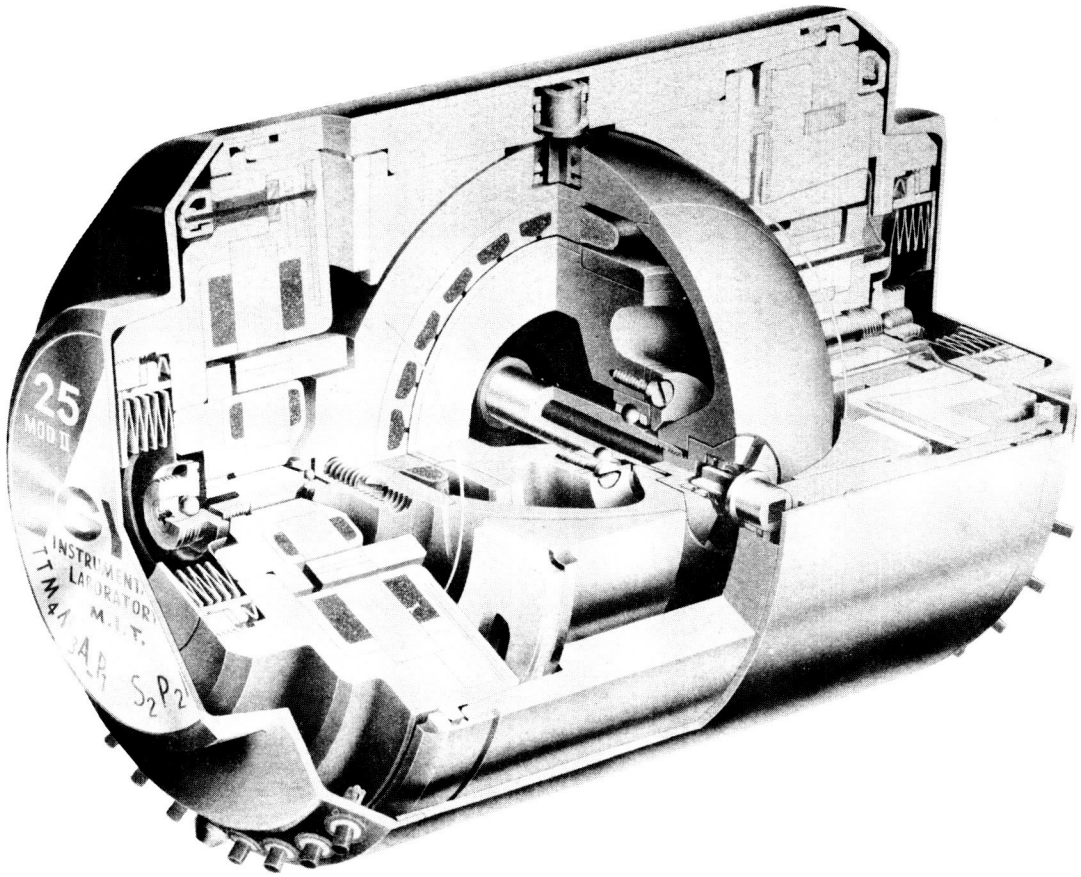

Fig. 3 25 IRIG Mod II

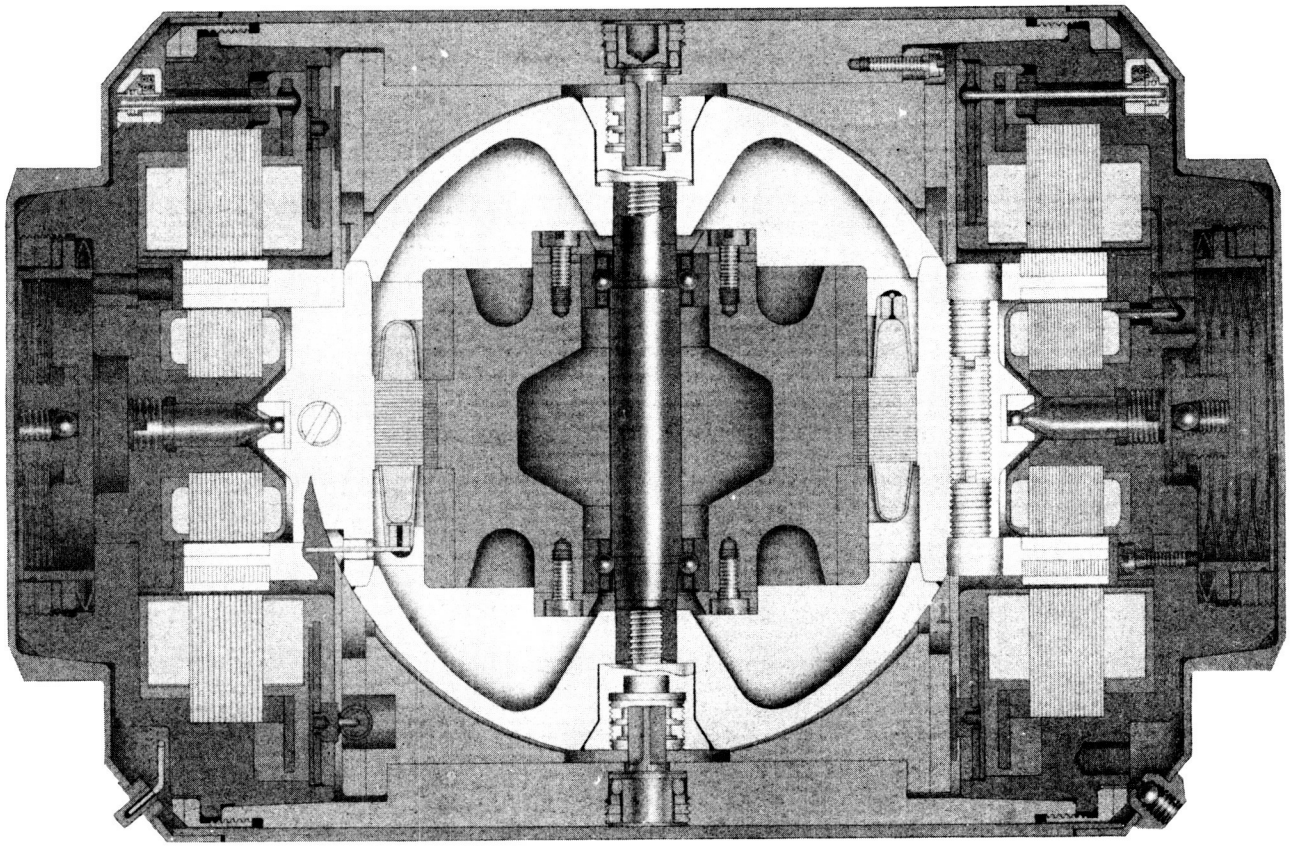

Fig. 4 25 IRIG Mod II

The inclusion of the separate magnetic suspension permits the elimination of several assembly operations. Formerly, to avoid a possible redundancy in the output axis restraint, the mechanical position of the jewels had to be adjusted to a center position relative to the electrical suspension. Now the radial clearance has been increased such that the minor eccentricities resulting from assembly operation can be neglected.

The wheel in the Mod 2 runs at 24,000 rpm, instead of 16,000 rpm. In addition to changing the number of poles in the motor stator, the bearings were redesigned by changing the inner race curvature to reduce the stress levels on the bearing, yet preserve the stiffness of the structure. These wheels are actually running at lower torques in the dynomometer than were the Mod 1 wheels. The latest report from the systems builders indicates that only six Mod 1 wheels have failed to start. While we still have some bearing problems, these occur early in the assembly and testing stage and do not restrict the final float assembly. The bellows have been enlarged to permit total temperature excursion of 180°F. The brominated fluorocarbon damping fluid does not solidify until it is considerably below 0°F.

Figure 5 is a test of the Mod 2 that presents data similar to the Mod 1 data in Fig. 2. The reduction of the drift rate data is shown in the small tabulation. The total bias drift is about -3 meru for the two suspensions, indicating the advantage of the ducosyns.

Figure 6 covers data taken during a Mod 2 test with the input axis parallel to the earth axis (having an input of 1000 meru).

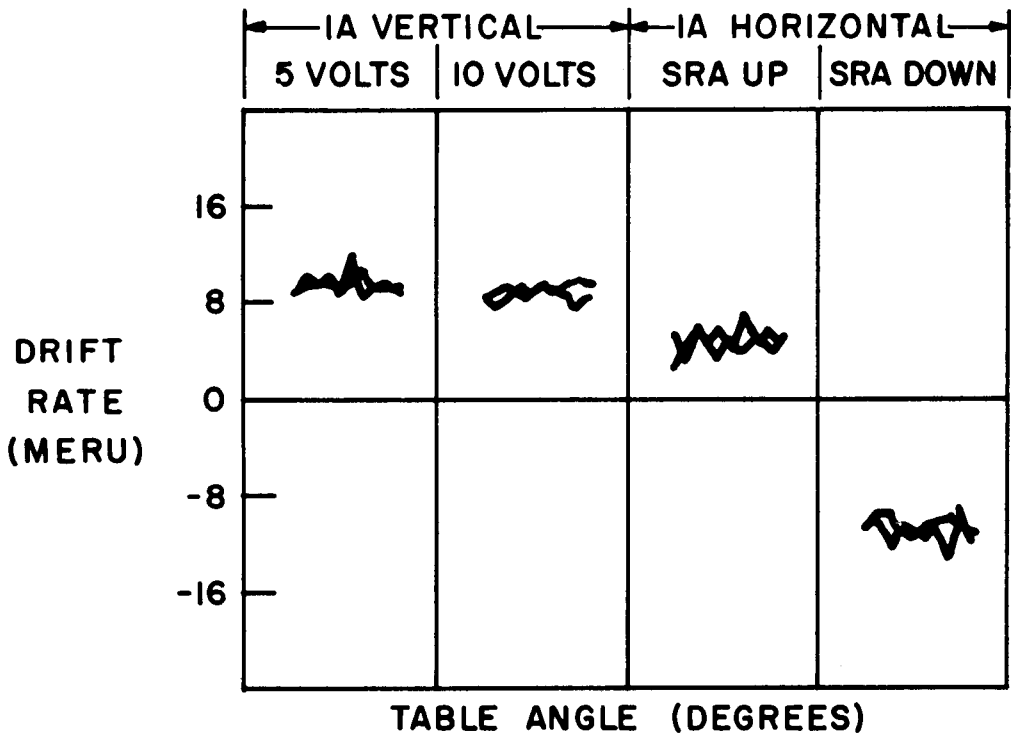

	1	2
BD	-3.2	-3.0
ADSRA	+7.4	+8.0
ADIA	+11.7	+12.2
RT	-1.3	-0.7

Fig. 5 Acceptance test data -- Unit 43

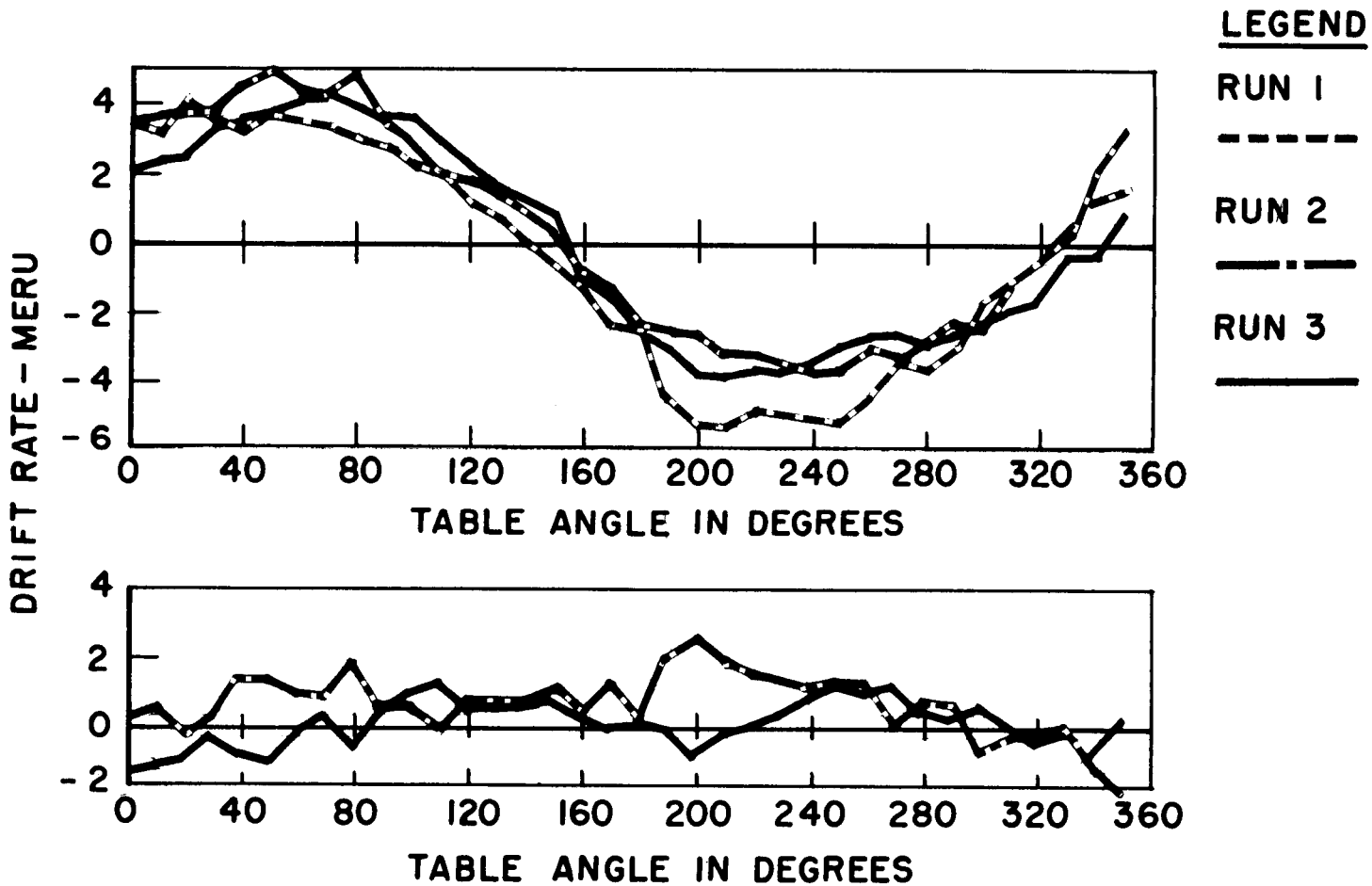

Fig. 6 Drift test (Input Axis parallel to Earth Axis)

A perfect unit would unwind continuously at earth rate, turning 360° in about one day. This chart shows about 72 hours of continuous testing and reflects the deviations from perfect tracking. The sine wave is caused by residual unbalance in the unit of about 6 meru. In the lower portion are the differences between successive runs. For the 72-hour period, the repeatability is within ± 2 meru. This form of data presentation is considered by Andrew Lattanzi*, as the real indication of gyro performance.

In Fig. 7 is shown the integration of the drift deviation of runs 1 and 2 of the curves of Fig. 6.

The next, Fig. 8, is a particular test performed on the same instrument, in which the input axis was vertical to sense the vertical component of earth rate. Proper compensation was fed into the torquer to buck out earth rate and whatever residual torques or spin axis unbalance may have existed. Ideally, the table should not move. In this case, the table was tracked with a theodolite instead of the usual photocell optical system. The results of some 25 hours of test are shown. Superimposed on the chart are slope lines of constant rate. The results would seem to indicate exceptional performance for this particular orientation, in spite of the difficulty of maintaining the compensation at a fixed rate. The data for the last several hours appears to worsen and we cannot be sure whether this was caused by improper compensation or some fault in the gyro itself.

---

*Group Leader-Minicom (responsible for provision of testing services in my group).

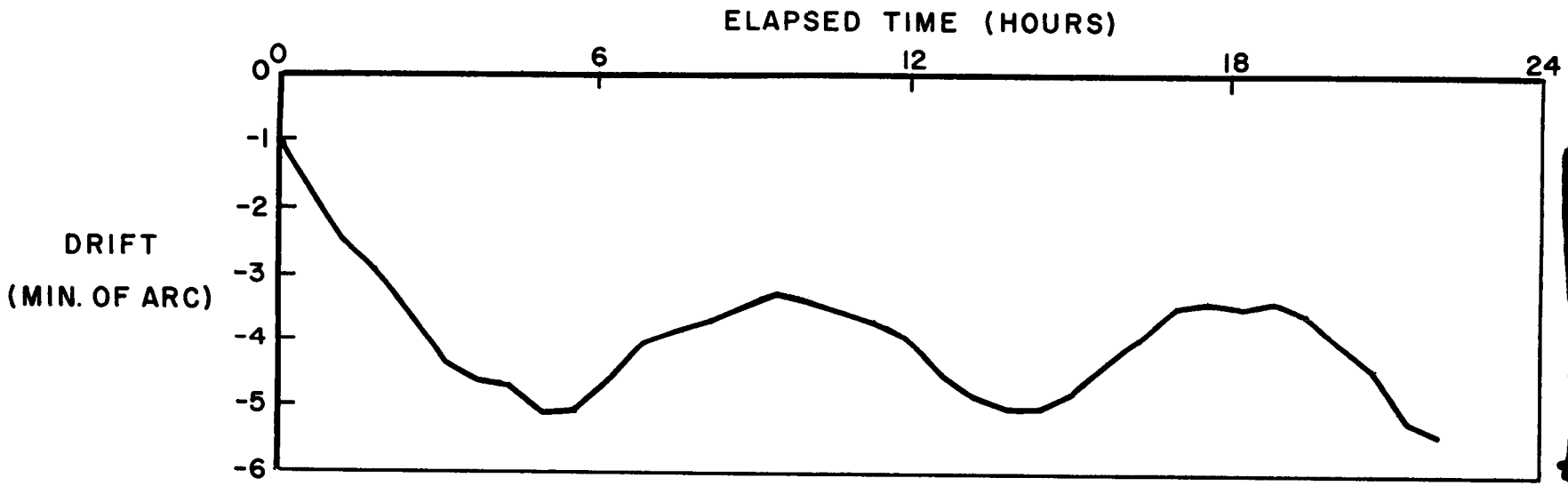

Fig. 7 Drift deviation -- Unit 43

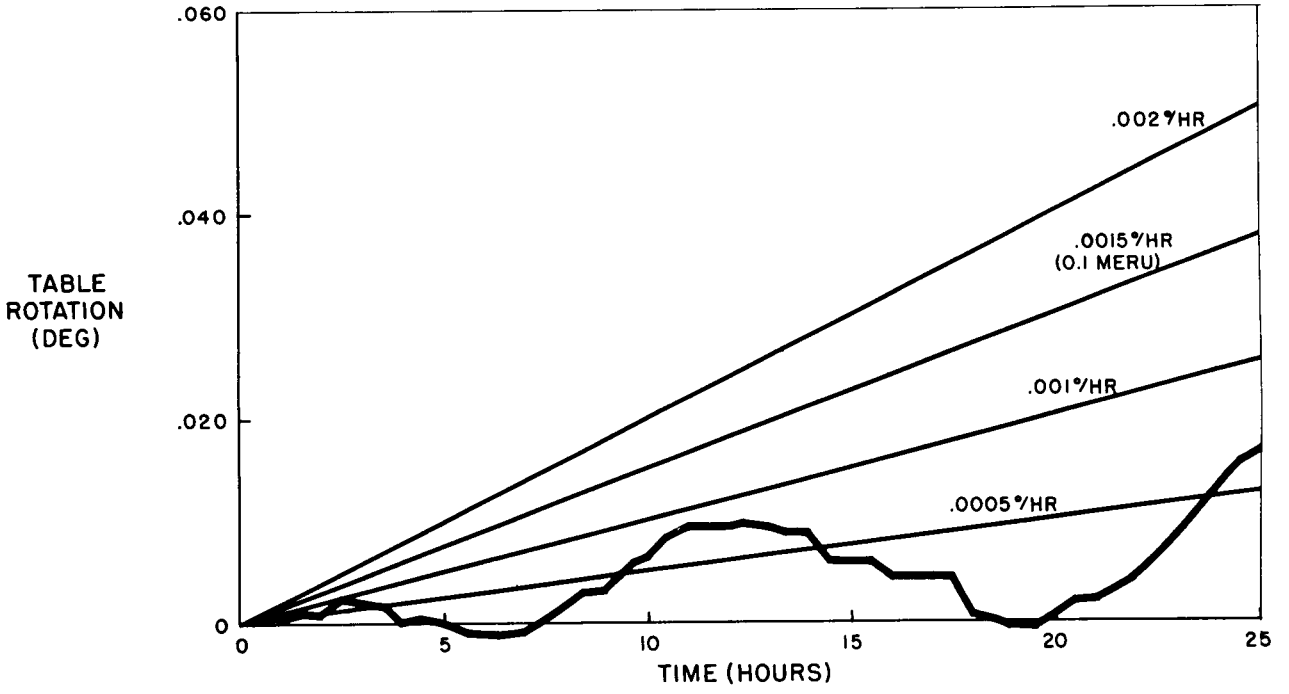

Fig. 8 Drift test (Input Axis vertical, Earth rate compensated) -- Unit 43

Figure 9 shows the data of the preceding test integrated to show the instantaneous drift in degrees per hour.

We have built three Mod 2 instruments, and are now actively engaged in incorporating certain improvements. Among these is the reduction of wheel power. If a long run-up time is permitted, the power requirements can be reduced considerably. Tests run by David Whipple* using a different hysteresis ring with a 3-mil air gap showed that by using the normal 28-volt supply it is possible to reduce the wheel power consumption to 1.2 watts per phase or 2.4 watts total. However, this was using a gyro wheel with a very light pre-load, probably as low as we could consider. With an increased mechanical pre-load and the same voltage supply, the total power would probably be more nearly 3.6 watts, with a run-up time of about 83 seconds.

There is a possibility of increasing the motor electrical efficiency by overexcitation and by this means reduce the wheel power. This does require a little more power initially, and its use would be predicated on the number of times the unit will be started, and whether or not it is better to have a motor of higher initial power drain and low operating power or to have a motor of essentially constant and moderately low power. Mr. Hoag, on page 52 of the AGANI Data Book, hopefully suggests designing a wheel of less than 4 watts, which can probably be done without the overexcitation technique. Another item suggested on this same AGANI page is the

---

*Assistant Director, Instrumentation Laboratory.

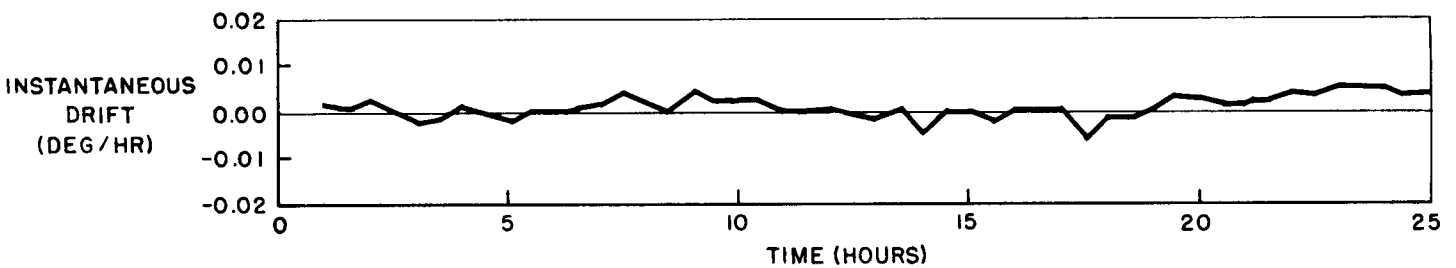

Fig. 9 Drift test (Input Axis vertical, Earth rate compensated) -- Unit 43

development of a V-type torque generator. This is something we shall be attempting to do within the next several months.

Mr. Whipple, Mr. Lattanze, and Mr. Aaronson are present today to answer any questions that you might have.

Q. What suspension excitation frequency was used in the tests indicated?

In answer to that particular question all the test data I have shown today were obtained at 800 cycles, primarily because we were not aware at that time that 4800 cycles is being considered for the advanced Polaris system.

Comments by Mr. Trageser

The next presentation is by Mr. Ben Smith and Dr. M. Petersen. It is a brief progress report on the experiments that we have in mind for better determining the nature of the horizon.

[redacted]

INVESTIGATION OF EARTH'S LIMB

By: B. S. Smith

Since the first monthly meeting, work has continued on the area of defining the earth's limb as it would be observed from an Apollo vehicle at an altitude greater than 200 kilometers. At the first monthly meeting Dr. Petersen derived the theoretical model of the earth's limb, based on pure Rayleigh scattering. Since that time, an attempt has been made to determine the nature of the actual limb as compared to the theoretical.

Our efforts have been concentrated in two areas. The first has been to determine what information has been gathered by others in this field, and the second is the determination of what techniques would be required to gather additional data, if required. Contacts have been made with NASA Space Task Group, the Air Force Cambridge Research Laboratory, and the Army Ballistic Missile Research Laboratory at Aberdeen Proving Grounds.

Several weeks ago discussions were held with Mr. Fred Pierce of STG in an effort to determine whether the data they have obtained could give some idea of the appearance of the earth's limb as a means of measuring position in space during midcourse guidance. The most that could be offered were pictures on 70 mm films taken on the last Mercury flight, and these we had seen. The appearance of the earth's limb in these films generally resembled Dr. Petersen's theoretical model, but since these pictures were not taken for the express purpose of observing the earth's limb, they were not of too much value. A Scout missile, presently being readied at Wallops Island, will contain four sensors, each at a different frequency,

[redacted]

that will study the earth's horizon as the missile moves upward in a spiral course. The resulting data will be available to us after the firing.

We next visited the Air Force Cambridge Research Laboratory, where we talked to Mr. Robert Toolin. Balloons are being sent into the stratosphere by the Air Force to obtain information on sky brightness. Most of this work is being done at an altitude level of about 30 kilometers on balloon flights from Holloman, and in Minnesota. Their work has not been to observe the horizon, but rather to make a photometric study of the sky brightness at vaious levels. They will be glad to put any equipment we might want aboard their next flight. There is room enough for a tape recorder.

We were referred by them to the Army Missile Research Laboratory at Aberdeen, Maryland, where infrared photographic studies of the horizon are being made from balloons at about the same altitude. These flights last about 8 hours, of which about 5 hours are at 30-40 kilometers. We would prefer Project Mercury altitudes or higher.

In talking with Mr. Pierce at STG, he said that there might be a possibility of putting a photometric or photographic system on a future Mercury flight. If photographic, there would be the problem of taking pictures through a window not designed for this purpose.

Dr. Petersen has taken a preliminary trip to Corning Glass Works to discuss glass windows with them. There seems to be some possibility of improving their optical qualities.

[redacted]

We have been looking into spectra other than visual. We are planning to talk to the Ewing Knight Co. in Needham, Mass., to learn what progress they have made in the horizon-scanning field.

Before too long, investigations into the instability of film may lead to the advisability of photoelectric sensing rather than photographic. We should investigate the possibility of mounting the sensing equipment external to the capsule, since the present camera window in the Mercury flights will not be available for our use.

Dr. Petersen has been conducting a study of noctilucent clouds and dust in the upper atmosphere and ozone. He will now report on this study.

[redacted]

UPPER ATMOSPHERE

By: M. Petersen

During the past month the work on this subject has been directed to study and inquiry regarding work that other persons have done that may have bearing on the devising of an optimally useful observing project, either using a MERCURY flight or some other vehicle. The external aspect of the earth's atmosphere and its definition of the sunlit earth's limb may involve several details:

Noctilucent Clouds: These occur in latitudes 50° to 70° N., in the summer months. They are extendedly visible when the sun goes only briefly beyond a zenith distance of 110°; are seen more frequently after midnight than before. They consist, probably, of water substance, but this is not fully agreed. They are known, by polarized light observations to be particulate, of size 0.1 to 1.0 micron, of concentration about 1 per 100 cc. They have been reported in the antarctic, but no reported triangulation observations, which would fix their height and sure identity are recorded. The well established height of northern appearances is 82 Km. very closely. If the clouds are not of water substance, their particles are of non-conductor material rather than metallic. MERCURY flights are not expected to enter the region where these clouds are observed.

Dust in the upper atmosphere: The work of Junge and colleagues, particularly, has established that dust particles, observed up to an altitude of 30 km. have quite constant size distribution in time. Particles range from 0.01 to 6.1 micron, having a maximum in this region of size, (Aitken nuclei); and larger than these, to 1.0 micron with frequency falling off with the square of the radius. Those smaller than 0.1 are evidently of tropospheric origin; the larger ones of stratospheric origin. These are probably formed by oxidation of sulfur; they are very hygroscopic. Particles still larger are of extra-terrestrial origin. Junge's observations are of two modes, first by balloon ascensions, in a locally restricted site but through a variety of altitudes, and secondly by U2 flight in extended N-S courses between 40°S and 70°N. From these flights a total concentration of particles as large as 0.1 micron is found to be about 1/cc. This number of particles, having a mean area less than 10^{-8}, will not suffice to produce optical effects in daytime, though they might in the later twilight, in the opinion of Opik.

Ozone: The role of ozone in affecting horizon perception depends on the following known characteristics: The ozone is principally concentrated in a layer between 20 and 25 km altitude. The ozone causes spectral absorption principally in two regions, in the near ultraviolet between 2000 and 3000 A. At 2500A, the ozone, being equivalent to some 3mm, as compared to the 8 km. reduced height of the entire atmosphere, attenuates the solar flux by some 10^{40} power. This causes the sharp cut-off of the solar spectrum at the earth. In the infra-red there are three local spectral regions of absorption,

4.17, 9.6, and 14.1 microns, of which the 9.6 is much the strongest. These spectral absorptions are beyond the regions of sensitivity of the sensors we now envisage using. They would become significantly involved only if special ultra-violet sensors, or, for longer wavelengths, bolometric devices were used.

A conference between Fred Pierce and Smith and Petersen, instigated by Mr. Pierce's inquiry as to our activity, included a discussion of our finding that visual photometry of the earth's limb would demand skill that an astronaut, under the conditions in the MERCURY capsule, would be unlikely to bring to bear. The alternative of photographic photometry was discussed, and its acceptability as a basis for a MERCURY observing project was considered.

The program is now under way in another group of N. A. S. A. workers, of whom Mr. Curfman was mentioned. Contact with this group discloses that they have a horizon scanning flight at Wallops Island set for November 16,* after which date they will be available for discussion of their procedures. This may provide guidance.

A conference with A. F. C. R. L. atmosphere study guide, Mr. Toolin, disclosed that their photo-electric measures of atmosphere brightness has been done with Cd-S cells behind Viscor filters, giving nearly visual brightness measures. Their present gondola package has its sights all directed downward. They did offer us the use of two channels for some simple additional recording equipment for a January flight. These flights are protractedly borne at nearly 30 km. altitude.

* This flight had not transpired before the publication of this report.

[redacted]

Work in horizon photography by the Ballistic Research Laboratory at Aberdeen Proving Ground was mentioned. It employed infra-red emulsion in a modified camera with 8 objectives viewing the horizon by mirror images from eight azimuths. All camera images were obtained simultaneously on a 9 1/2 inch square film. A conference with the group involved in this work is now impending. Their reaction to the use of other wavelengths in this sort of work is sought.

Contact with Eastman Kodak regarding photographic photometry for our project was made at a recent lecture by their Mr. Sorem. A discussion of the problem of film calibration is needed.

No suitable camera for an astronaut's use in a MERCURY flight, other than ~~the ROBOT~~ has been discovered.

Comments by Mr. Trageser

The desired accuracy is something like 1000 feet; the expected accuracy is somewhat poorer than that. We are not sure just what accuracy we will have but the range of accuracy we expect is between 1000 feet and one mile, as mentioned by Dr. Petersen.

The next and last presentation is a discussion by Mr. D. Lickly on re-entry guidance.

[redacted]

[redacted]

RE-ENTRY GUIDANCE

D. J. Lickly

The re-entry problem itself is rather simply stated: to conclude a successful lunar mission requires a re-entry into the earth's atmosphere from a nearly parabolic orbit and a landing at a prescribed site on the earth's surface.

There are several conditions under which this re-entry is to be made:

There is no thrust available to brake or decelerate the spacecraft.

The velocity at the time of re-entry (which is approximately escape velocity) can only be reduced by the aerodynamic drag of the vehicle through the atmosphere.

The re-entry corridor is defined by two limits, the overshoot boundary and the undershoot boundary. The overshoot boundary is the condition in which the spacecraft skips out of the atmosphere by coming in too shallow to "bite" into enough of the atmosphere to remain in it. This condition is undesirable because the vehicle would then leave the earth's atmosphere and continue on into space, back toward the moon. The undershoot boundary is limited by g's as the spacecraft enters the atmosphere too steeply and subjects the astronaut and equipment to more g's than can be tolerated.

[redacted]

By just a simple ballistic re-entry vehicle it is possible to re-enter. The problem is that the re-entry corridor, i.e., the range of altitudes over which a safe entry can be made, is very, very small. The most obvious means of insuring safe re-entry is to have a spacecraft with variable drag, a system whereby the astronaut could increase the drag near the overshoot boundary and decrease the drag if danger of pulling too many g's exists.

For several reasons, however, it is more convenient to use lift to effect the control rather than variable drag. The lift widens the corridor because near the overshoot limit the astronaut can fly negative lift, while near the undershoot limit he can fly positive lift. Lift also offers several other advantages, such as better control later in the re-entry to allow the astronaut to guide the vehicle toward the landing site, as well as cross-range control, which the modulate drag scheme would not.

Figure 1 is an illustration of the re-entry corridor for a vehicle having a maximum L/D ratio of 0.5. The corridor width is increased to approximately 40 miles, i.e., the difference in the vertical perigee altitudes, as opposed to a corridor width of only a few miles for a simple ballistic vehicle.

The re-entry corridor is many times referred to as the flight path angle measure at some altitude, usually 400,000 feet. This means that the velocity angle must be within the range of -4.8 to -7.5 degrees, or about 2.7-degree range of velocity angle.

Figure 2 is an example of a typical re-entry trajectory, with the entry into the usable atmosphere indicated by the dotted circle.

[redacted]

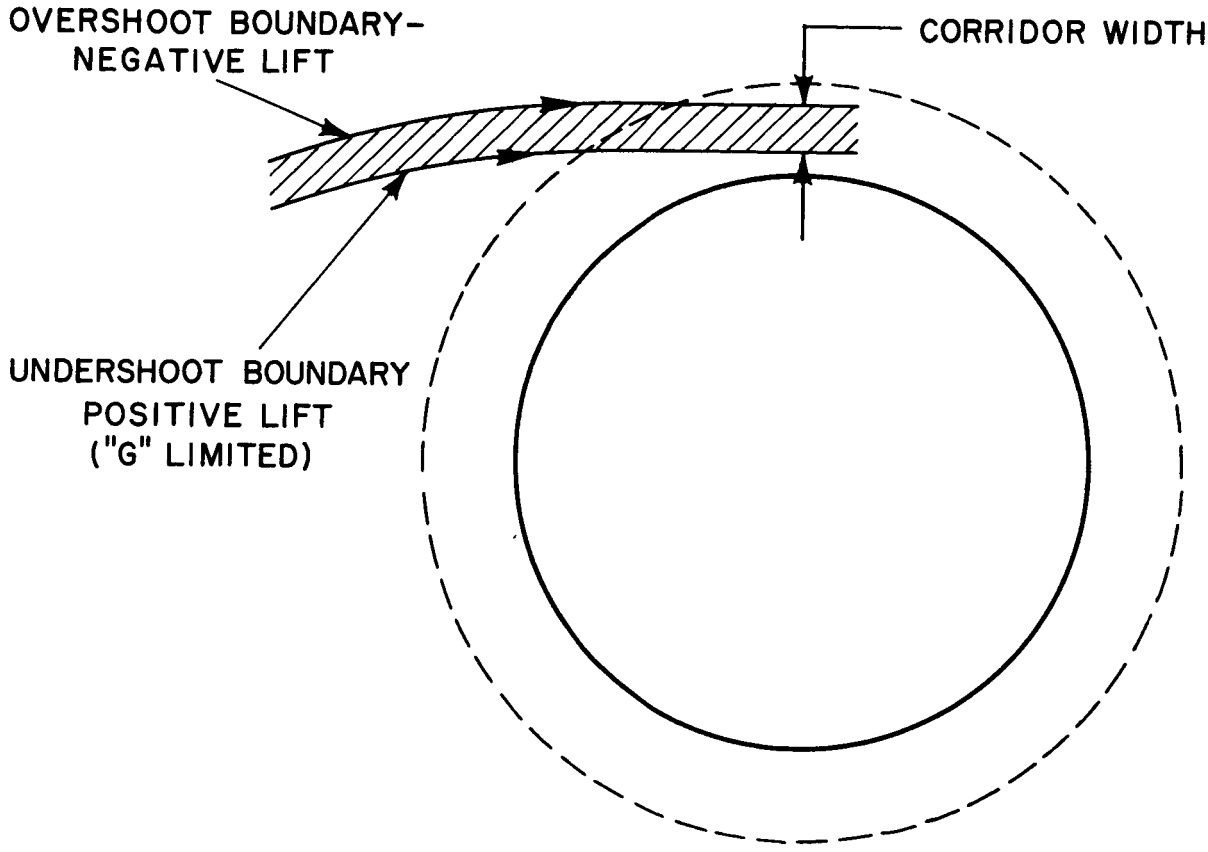

Fig. 1 Re-entry corridor

[redacted]

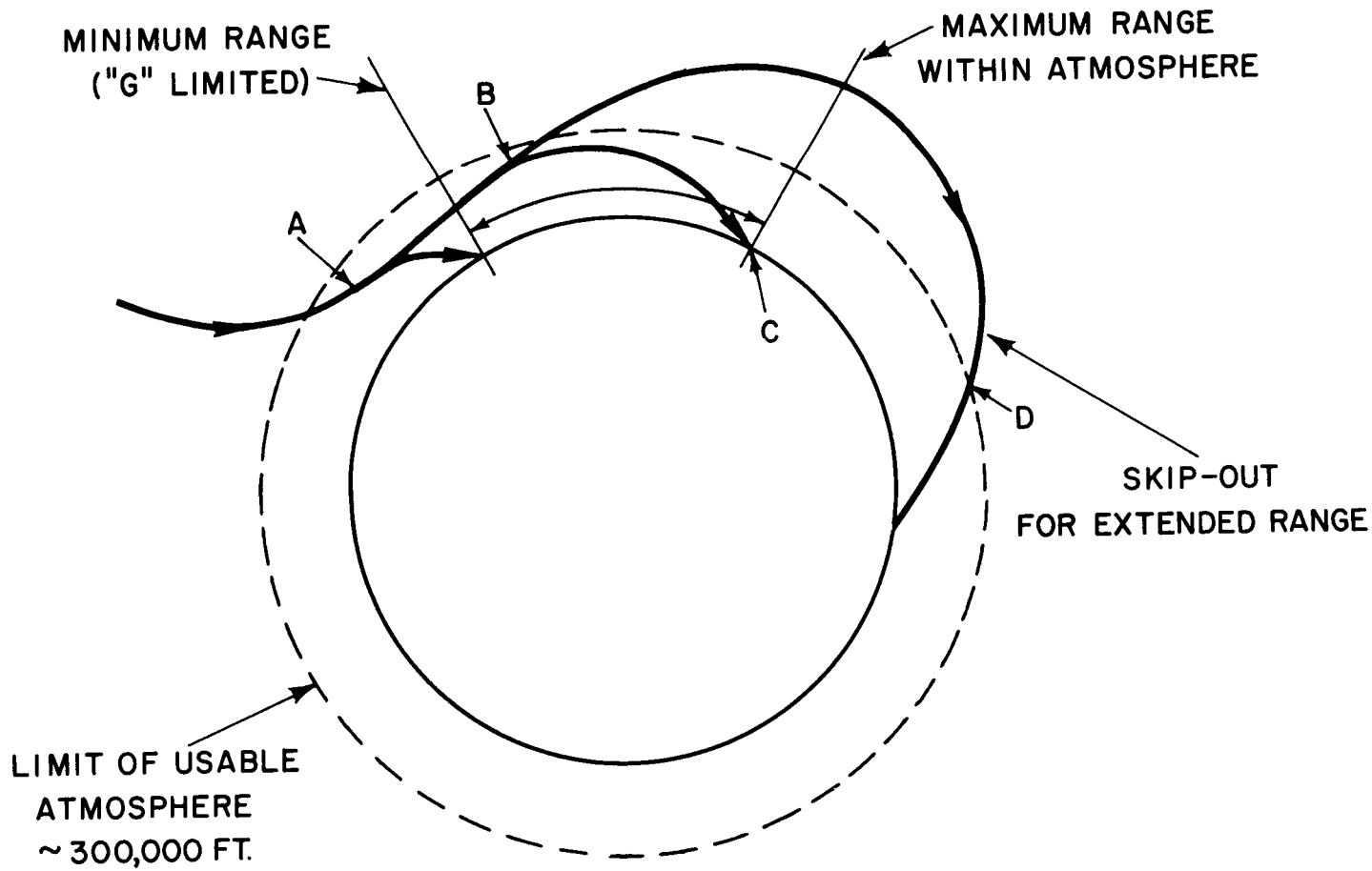

Fig. 2 Re-entry trajectories

A pull-up into nearly horizontal flight permits varying the method of control, depending on the range to the proposed landing site. The minimum range is that which can be obtained with an arbitary g limit and (measured from a 400,000 foot altitude) is about 1000 nautical miles. The maximum range within the atmosphere is approximately 5000 nautical miles. If the range must be extended, i.e., if the target is 8,000 to 10,000 miles beyond the point of re-entry, it is possible to go into a controlled skip-out ballistic path and second re-entry.

Particular note should be made that there is a very great difference between these controlled skip-outs and the overshoot or skipping trajectories mentioned previously. These controlled skip-outs do not widen the re-entry corridor because they are skip-outs from a trajectory that initially started and would have remained in the atmosphere if so desired. The uncontrolled skip-outs have periods of at least a day before they get back and may go as far as a quarter of the distance back toward the moon.

Figure 2 illustrates several phases of a trajectory that will be referred to later. It would be well to define these phases at this time. Point A indicates the normal pull-up upon entering the atmosphere. From point A to point B is a more or less horizontal flight before the descent. From point B to point C is the coasting phase for a longer range, before descent. Point B may also be the start of pull-up to go into a controlled skip, in which case there is a second re-entry later at point D.

Many people have been considering the re-entry problems, particularly the two main problems. The first is the range control problem, i.e., some way of controlling the spacecraft to a predetermined target. The second is some means of controlling the lift vectors, i.e., how to modulate the lift.

The range prediction problem has two main techniques of approach, the nominal controller and the direct range controller.

The nominal controller consists of some nominal trajectory or some abbreviated nominal trajectory. The steering is done by the deviations from the nominal predetermined trajectory that coincide with the range that is required. This nominal trajectory may consist of all the flight variables in the equations of motion versus time history. Not all variables may be required. It is possible that for some specific condition only nominal altitude and nominal lateral position versus time might be required.

There are other more exotic proposals such as body temperature rate versus time as a nominal trajectory. This may seem a little far-fetched to someone familiar only with inertial measurements. There are other combinations of these state variables to use. In essence, they all depend on computing a nominal steering course.

The second or more direct approach is predicting at any time the range one would have reached if a particular mode of operation had been continued. A comparison is made between the predicted range and the desired range. Steering is accomplished on the basis of differences in range. This involves the use of a very high-speed

computer because continual predictions are made until touchdown. The normal equations of motion must be solved, and rather rapidly, by re-iteration to predict the target impact point, to compare this point with the desired site, and, if necessary, to change the L/D ratio, thus requiring further iterations again and again. The iteration rate needed during critical times would even press a 7090. It is possible to substitute approximate analytic equations (such as the Chapman equations) for the regular equations of motions, but again, this involves the iteration process.

For certain conditions the range prediction from subcircular conditions could be made by closed analytic solutions instead of the iterations solutions. These would be used in some analytical format that could be used in one or two equations that would give functionally the range versus the present conditions. There are many equations for subcircular velocity conditions (i.e., below satellite velocities), as well as equations for different phases of the re-entry corridor, which I will discuss later.

The second problem is the lift vector control. One approach is to design a vehicle that can vary the L/D over its full range by changing the angle of attack. This is an easier system to control since it is necessary to account for only the amount of lift required. It has drawbacks from vehicle design considerations, however.

Another approach has been the constant L/D vehicle, in which the orientation vector can be changed by rolling the spacecraft in some manner so that desired positive or negative lift would result. This operation would probably require some limit cycling,

at rather low frequency. Some proposals have been made to have the vehicle rolling from side to side with a lateral limit cycle with proportional pitch, or rolling top and bottom with a certain amount of porportional control to the sides. It might even be possible for certain phases of the re-entry to have a slow continuous roll with modulation changing the rate of roll, as well as all the various hybrid combinations of the aforementioned proposals.

Our studies so far have concerned themselves primarily with the latter, the constant L/D type of re-entry consideration.

Some of the tentative conclusions of our preliminary studies of the re-entry problem are as follows:

1. To avoid the computational requirement of either nominal follower or the differential equation range prediction.
2. To accomplish this requires some closed form description of the trajectory.
3. This closed form description may, and probably will, differ for the various phases the flight, the re-entry, the pull-up, the horizontal, the skip-out, the suborbital glide, etc.

The accuracy required is not the same for all these various phases, i.e., the prediction of range is not required in the pull-up phase to the accuracy required just before landing, since, a large margin of control exists early in the flight. The accuracy required increases as the limit of control becomes more critical. This is an advantage because there are available solutions to the equations

for the final phase of flight, i.e., equilibrium glide equations, that express the range very neatly in closed form. The disadvantage is that the spacecraft is not exactly on an equilibrium glide, because the initial conditions are not exactly the same and the only equilibrium glide possible is at either $\pm(L/D)_{max}$, which would give no margin of control. The actual final phase would be a condition of modulated lift, where the average L/D would be some value that might not be suitable for the equilibrium glide solution. This will have to be determined. It seems reasonable that some method of approximation can be devised that will be satisfactory. If this is possible, it would then be possible also to devise an approximation method for the earlier phases that will give us reasonable predictions of range, since there is about ± 1000 miles of control from the time of attaining circular velocity to the touchdown.

While the foregoing comments cover the main points of our present approach, there are numerous other problems that will be investigated. Some of these are:

1. Lateral range problem
2. Time-of-flight prediction involving the landing site on the rotating earth
3. Tracking information, through radio, radar, etc., to confirm the flight path
4. Control equipment, including backup for emergencies
5. Modes of operation, whether manual, semi-automatic or automatic.

[redacted]

We have just begun to scratch the surface in our investigation. Many problems, almost too innumerable to mention, must be considered. Data on the R & D vehicles' flights must be considered and analyzed, since these vehicles fly entirely different conditions. The re-entry for the test flights should simulate a lunar re-entry as closely as possible as a method of control to see whether or not this is practical.

This has been a resume of our approach to the re-entry problem. If anyone desires any more information, I have some data that may be of interest to them.

[redacted]

[redacted]

DISCUSSION ON MR. LICKLY'S PRESENTATION:

A quite lengthy discussion ensued on the capability of maneuvering the spacecraft to a prescribed site if the initial re-entry is far enough removed from the nominal so that the spacecraft is near the extreme range capability. The point raised was that if sufficient correction or overcorrection were not applied initially, there might be a possibility that the proper touchdown at the prescribed site might never be consumated. Mr. Chilton summed up the discussion by stating that, as he saw it, the accuracy for each prediction phase as mentioned in the presentation must converge to the desired accuracy before going to the next phase. He then questioned the more or less abrupt dismissal of nominal followers and direct range controllers. Mr. Lickly then stated he did not intend to convey that impression. There is a good possibility that some sort of nominal follower will be used during a particular phase, since the updating of data is not as frequent as with direct range prediction, nor does it need the speed of the computer. In answer to another question, Mr. Lickly stated that to use a reference trajectory for the whole re-entry flight would require more storage than for only a portion of the flight, since there would be many more numbers to store. He also stated that he has not programmed the nominal follower technique to ascertain what the complexities might be.

The session was then adjourned.

[redacted]