CR-85312

[redacted]

CLASSIFICATION CHANGE
To UNCLASSIFIED
By authority of [illegible] Date [illegible]
Changed by [illegible]
Classified Document Master Control Station, NASA
Scientific and Technical Information Facility

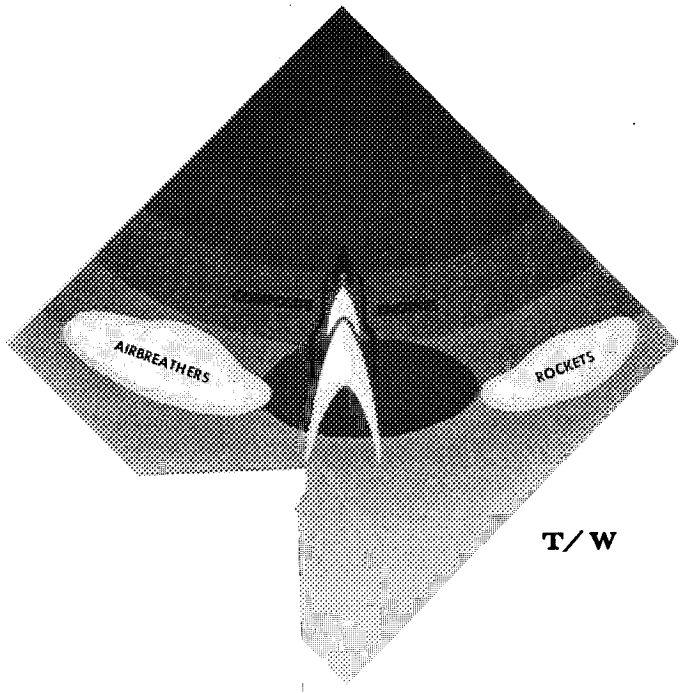

[redacted]

A STUDY OF COMPOSITE PROPULSION SYSTEMS FOR ADVANCED LAUNCH VEHICLE APPLICATIONS

SUMMARY REPORT

VOLUME 1

SEPTEMBER 1966 REPORT NO. 25,194

PREPARED UNDER NATIONAL AERONAUTICS AND SPACE ADMINISTRATION CONTRACT NAS7-377

THE MARQUARDT CORPORATION
ROCKETDYNE
LOCKHEED-CALIFORNIA COMPANY

[redacted]

[redacted]

C67-2065

DATE 16 September, 1966

REPORT 25,194
Volume 1

[redacted]

A STUDY OF COMPOSITE PROPULSION SYSTEMS FOR ADVANCED LAUNCH VEHICLE APPLICATIONS

VOLUME 1: SUMMARY REPORT

Contract: NAS 7-377

Project: 5402

PREPARED BY

William J.D. Escher
Project Engineer

APPROVED BY

Robert E. Fisher
Vice President, Research

CHECKED BY

Bruce J. Flornes
Supervisor, Propulsion
Systems Analysis

[redacted]

[redacted]

[redacted]

THE Marquardt CORPORATION

VAN NUYS, CALIFORNIA

MAC A1198

FOREWORD

This Volume 1 is the first of a series of seven volumes covering a study of composite propulsion systems for advanced launch vehicle applications conducted under National Aeronautics and Space Administration Contract Number NAS 7-377.

This document summarizes the study effort. The objective, method of performance, and the principal findings appear here in condensed form. This volume serves as an introduction to the more detailed results presented in the remaining six volumes and it presents a resume of the study to meet the possible needs of both researchers in propulsion/vehicle/mission areas and management level personnel and other technically oriented individuals not directly concerned with the study subject.

The full report documentation is as follows:

Volume 1--Summary Report

Volume 2--Main Technical Report, Part 1

Volume 3--Main Technical Report, Part 2

Volume 4--Class 0 Engine Fact Sheets, Part 1

Volume 5--Class 0 Engine Fact Sheets, Part 2

Volume 6--Class 1 Engine Information

Volume 7--Class 2 Engine Information

The study was administered by the Project Manager, Headquarters-OART, and technically monitored by NASA engineering personnel from the Marshall and Langley Centers and the Mission Analysis Division (OART at Ames Center).

The Marquardt Corporation, on behalf of the study contractor team, extends its appreciation to the National Aeronautics and Space Administration for the opportunity to explore the principles of composite propulsion systems and to the NASA Project Manager and Project Monitors for their assistance in conducting the study.

TABLE OF CONTENTS

Section		Page
1.0	INTRODUCTION	1
	Composite Propulsion Systems	1
	Advanced Launch Vehicle Applications	2
	Incentive for Conducting the Study	2
	Study Approach	4
2.0	OBJECTIVES	6
3.0	SCOPE	6
	Guidelines	6
	Composite Propulsion System	7
	Advanced Launch Vehicle Systems	8
4.0	APPROACH	8
	Program Structure	9
	Contractor Team Organization	9
	Evaluation Criteria	10
	Comparison Propulsion Systems	10
	Methodology	11
5.0	RESULTS	13
	Class 0 Systems Phase	13
	Class 1 Systems Phase	17
	Class 2 Systems Phase	20
	Technology Assessment Task	27
6.0	CONCLUSIONS	28
--	DISTRIBUTION	29

LIST OF ILLUSTRATIONS

Figure		Page
1.	Elemental Propulsion Systems	1
2.	Composite Propulsion System	1
3.	Baseline Launch Vehicle (With ScramLACE Engine)	3
4.	Engine Specific Impulse and Weight Map	4
5.	Program Structure and Documentation	5
6.	Candidate Composite Propulsion Systems, Class 0	14
7.	Operating Schematics of Class 0 Engines	15
8.	Payload Ranking of Candidate Composite Engines	16
9.	Class 1 Engine Specific Impulse Comparison, Ejector Mode	17
10.	Thrust/Weight Ratio Trends for Class 1 Engines	18
11.	Summary of Payload Performance for Class 1 Systems	19
12.	Class 2 Engine Specific Impulse Comparison, Ejector Mode	21
13.	Class 2 Engine Thrust Comparison, Ejector Mode	21
14.	Supercharged Ejector Ramjet	23
15.	ScramLACE Powerplant	24
16.	Payload Performance for Class 2 Systems	25
17.	Summary of Payload Performance for Class 2 Systems	25

1.0 INTRODUCTION

Composite Propulsion Systems

Composite propulsion systems (as the term is used in this study) are single integrated powerplants made up of both rocket and airbreathing elements. The elemental propulsion systems which provide the basic building blocks for synthesizing composite engines are the familiar rocket and airbreathing systems, which are symbolically illustrated in Figure 1.

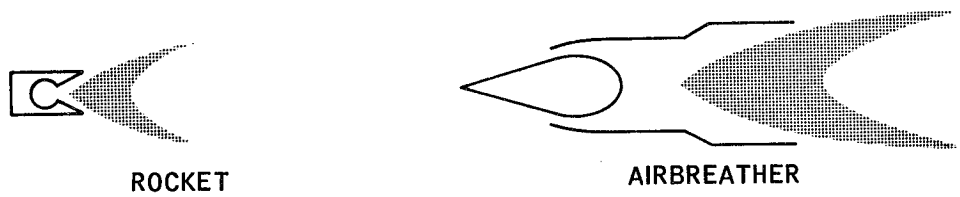

FIGURE 1. Elemental Propulsion Systems

If it is desired to incorporate the features of both elements (rocket and airbreather) in a single vehicle, two approaches are obvious: The elements may be installed either separately or integrally. The former may be termed a combination propulsion system. Thus, to illustrate the contrast, combination propulsion systems incorporate two or more elemental engine types in a nonintegrated installation, i.e., with little or no direct physical or process interaction between engine types within the vehicle's propulsion complement. However, combination systems were not studied in this effort.

If, however, the elements are physically integrated into a single propulsion system, having multi-modal operation capabilities, with cycle process interactions between elements, the result is a composite propulsion system (Figure 2).

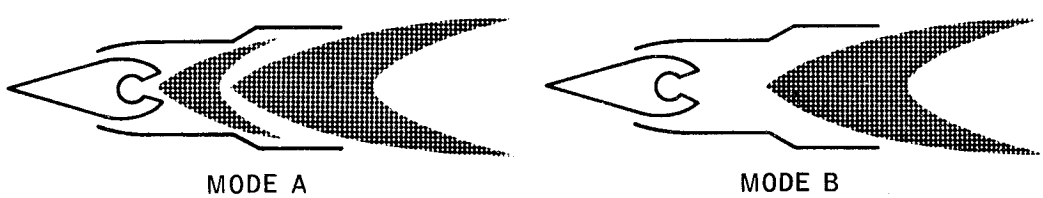

FIGURE 2. Composite Propulsion System

A significant number of diverse composite engine concepts exist which meet the general qualifications discussed so far. Examples are (1) Air Augmented Rocket, (2) Hyperjet (a ramjet with static thrust capability via a closed inlet and oxidizer injection), and (3) Liquid Air Cycle Engine (an airbreathing rocket which capitalizes on the air liquefaction capacity of liquid hydrogen fuel).

Although these listed concepts, as well as a number of other specific composite engine types, have been studied to at least a limited extent in the past, nowhere has there been conducted a systematic, integrated engine/vehicle assessment directed toward the identification of the most effective cycles for advanced launch vehicle applications.

This study was designed to accomplish this needed appraisal of composite propulsion system potential in the light of emerging technological capabilities and current and future missions of interest.

Advanced Launch Vehicle Applications

A particular mission of interest and one wherein the composite propulsion system appeared to be particularly applicable is the advanced orbital launch vehicle system. As will be described, a variety of vehicle configurations and operational approaches (HTO, VTO; two-stage, single stage; fully reusable, minimum recovery) were examined in the performance of the study. The baseline two-stage fully reusable system is presented in Figure 3. A specific composite propulsion system, the ScramLACE concept, is shown. This engine is representative of the more attractive composite engines. It combines an initial phase air augmented air liquefaction/rocket operation with a convertible subsonic/supersonic combustion ramjet high speed acceleration mode. This combination yields particularly favorable payload performance.

Incentive for Conducting the Study

The basic incentive to investigate composite propulsion systems, as applied to advanced launch vehicles, may be qualitatively illustrated as shown in Figure 4. This plot is an engine specific impulse and weight map with the rocket represented as a low specific impulse, very high thrust/weight ratio engine and the airbreather vice versa. The curves on the plot may be interpreted as "equipayload" lines, expressed here in terms of boost stage "growth factor" (launch weight divided by the payload plus upper stage weight). In these terms, proceeding from a high to a low growth factor indicates an increasing payload potential for the launch vehicle. Composite systems, as engines incorporating both airbreathing and rocket componentry and operating mode capability, are expected to be intermediate in terms of both performance and weight as shown in Figure 4. Thus, there is a general implication that composite propulsion systems can offer a potential of competitive, even superior, payload performance.

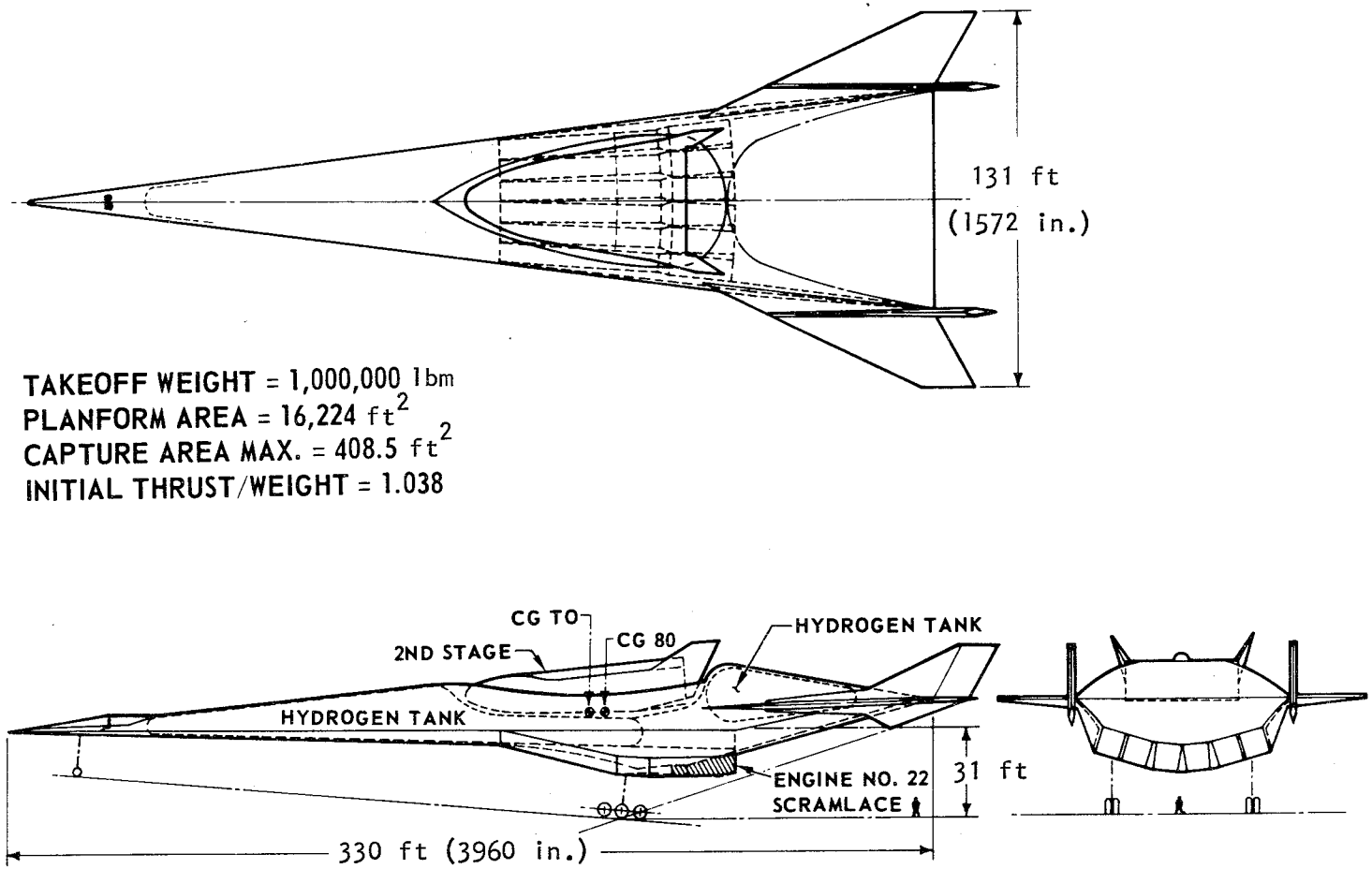

FIGURE 3. Baseline Launch Vehicle (With ScramLACE Engine)

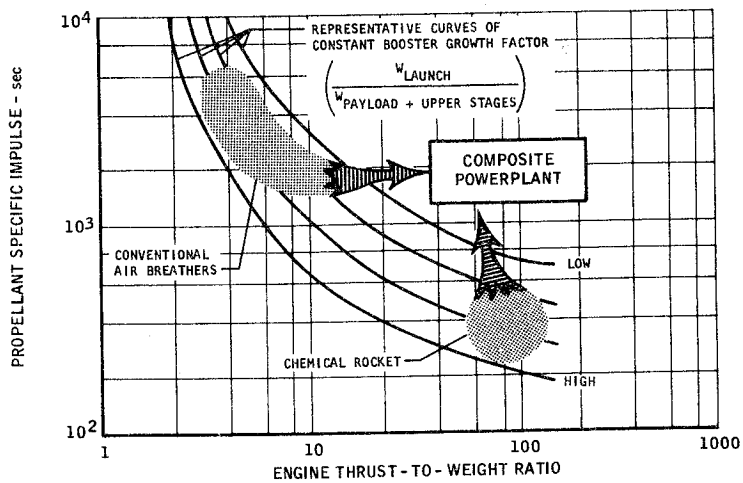

FIGURE 4. Engine Specific Impulse and Weight Map

The goals of this study stem from the basic trade-off in engine performance and engine weight illustrated above. An important function of the study, and an intrinsic feature of the effort, was the generation and documentation of composite propulsion system performance and design data to satisfy the needs of future studies involving this class of powerplant. Such data have not been heretofore available on a broad and systematic basis.

Study Approach

Because a study of composite propulsion systems for advanced launch vehicles inherently involves a diversity of technical skills, encompassing rocket, air-breathing propulsion, and launch vehicle considerations, an association of competent contractors in each of these fields was formed to conduct the study. The contractor team was composed of (1) The Marquardt Corporation--prime contractor; (2) Rocketdyne Division of North American Aviation, Incorporated; and (3) The Lockheed-California Company, a division of the Lockheed Aircraft Corporation.

The study was conducted in three principal phases. Each phase represented a selective reduction in scope but an increase in technical depth. Thus, the study proceeded from the point of analyzing a large number of candidate propulsion systems, each to a limited depth. Each phase included engine performance analysis, conceptual design, weight analysis, and trajectory/vehicle application analysis in order to permit engine system and vehicle system comparisons. The first phase commenced with the generation of 36 candidate engine concepts after evaluation of the possible combination of a number of discrete subsystems and potential operating modes. Initial screening decreased the candidates to two families with 12 representative engines. Two engines were selected for detailed comparison on appropriate vehicles with these engine concepts being representative of two different technology levels, a "near term" and a "potential" basis. Figure 5 symbolically reflects the three-phase nature of the program structure.

"A STUDY OF COMPOSITE PROPULSION SYSTEMS FOR ADVANCED LAUNCH VEHICLE APPLICATION"

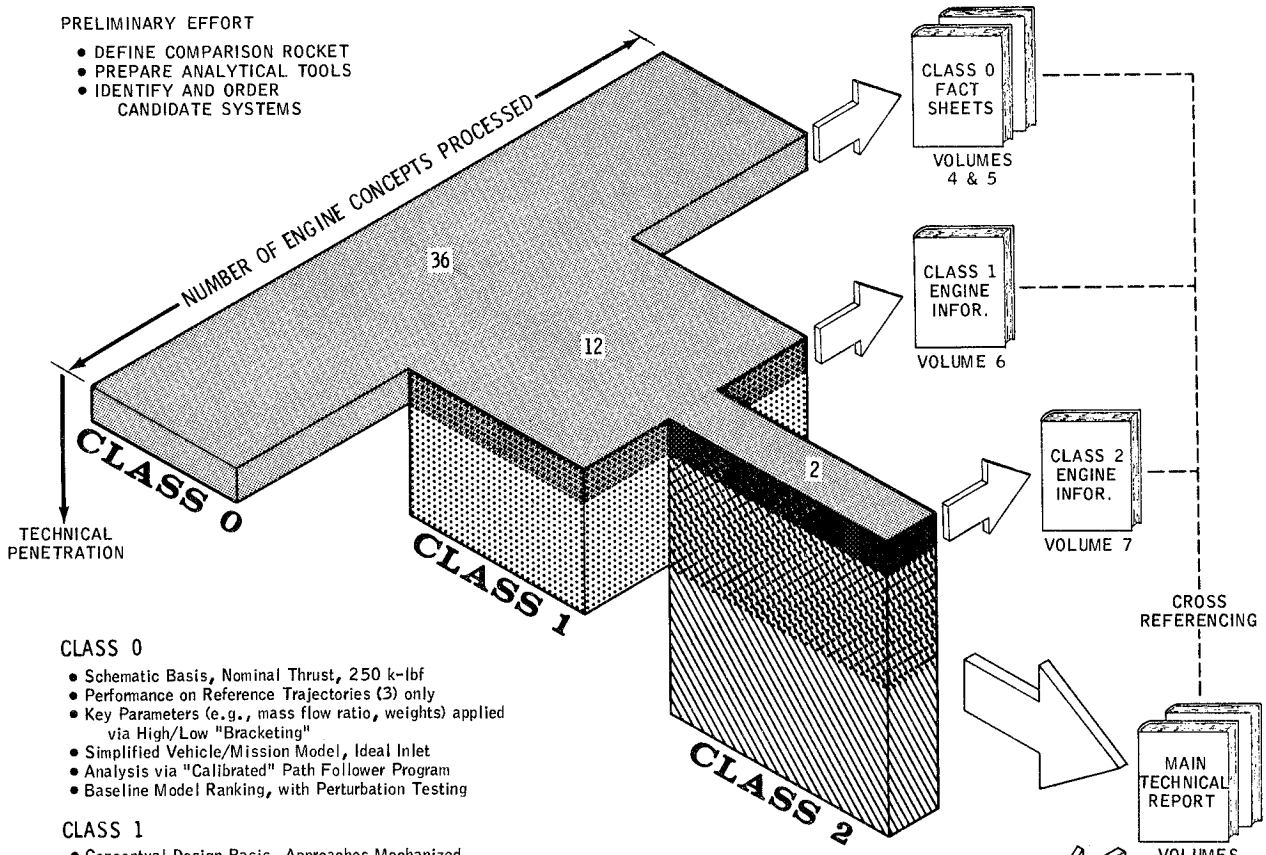

CLASS 0

- Schematic Basis, Nominal Thrust, 250 k-lbf
- Performance on Reference Trajectories (3) only
- Key Parameters (e.g., mass flow ratio, weights) applied via High/Low "Bracketing"
- Simplified Vehicle/Mission Model, Ideal Inlet
- Analysis via "Calibrated" Path Follower Program
- Baseline Model Ranking, with Perturbation Testing

CLASS 1

- Conceptual Design Basis, Approaches Mechanized
- Performance presented Parametrically (Maps)
- Thrust/Weight trends estimated over order of magnitude range (50 - 500 k-lbf)
- Extensive Vehicle Integration and Mission Analysis
- Realistic Inlet Performance
- Vehicle Aerodynamic and Weight Analysis

CLASS 2

- Detailed Conceptual Design Basis, Point Design for Vehicle
- Performance Maps Refined, included Updated Input Data and Subsystem Drive Penalties
- Engine Performance Sensitivity to Component Efficiencies and Operating Point Variations evaluated
- Engine Cooling and Control examined
- Engine/Vehicle Integration intensified
- Vehicle Performance Sensitivity to Engine Performance and Weight variation evaluated
- Engine/Vehicle Alternate Mission capabilities determined
- Comparison Engines (Rocket, Airbreather) fully assessed

FIGURE 5. Program Structure and Documentation

2.0 OBJECTIVES

The specific objectives of this study were as follows:

1. To systematically appraise the significance of composite engines to advanced launch vehicle missions (post-1975)

2. To determine the technological ramifications of composite engines with emphasis on delineation of critical technology requirements

3. To systematically document technical data which would be useful for further studies involving composite engines

The first two objectives formed the nucleus of the original problem statement. They stem directly from the attractive potentials of composite engines due to their relative position in the spectrum of propulsion.

The third objective, on the other hand, represents an intrinsic output of the study program, namely, propulsion system information arranged for effective use by the aerospace community in subsequent studies of composite engine applications.

3.0 SCOPE

This study of composite propulsion systems for advanced launch vehicle applications was concerned with the characteristics and interrelated performance of two classes of systems: (1) composite propulsion systems, and (2) advanced launch vehicle systems. Both of these classes of systems include many possible variations. All of these possible variations were not included in the study reported here.

Therefore, it is appropriate to define the scope of the study as defined by the study guidelines, and to further describe or explain the terms "composite propulsion systems" and "advanced launch vehicle" as they were used in conducting the study. These definitions will permit a clearer understanding and evaluation of the study approach and the results.

Guidelines

The overall guidelines of the study were as follows:

Engine/vehicle performance and technology assessment

Two-stage and single stage to 262 nautical mile orbit (HTO and VTO)

Hydrogen-oxygen propellants

Full mission profile, liftoff to landing with 3 g restraint

1.0 million pound vehicle gross weight

Reusable vehicles, passenger/light cargo payload

1975-1985 engine first availability

Evaluation on payload performance basis

The study is basically propulsion oriented, but it includes a vehicle (or user's) assessment of the engine potentials. Both two-stage and single-stage vehicle concepts were included in the study as a basis for the orbital payload assessment. Also, both horizontal and vertical takeoff concepts were studied. Only the high energy propellant combination hydrogen-oxygen was considered.

The entire propulsion mission profile was investigated. This comprised acceleration propulsion to orbit, deorbit and maneuver propulsion, and finally flyback and landing propulsion to complete the reusable launch vehicle cycle.

The limitation to vehicles having a 1.0 million pound takeoff weight was appropriate to those associated with personnel transport (hence the 3 g restraint) and light cargo ferry operations for orbital service.

The engine first availability (in terms of operational application) was assumed to fall in the decade beginning in 1975. Finally, payload-to-orbit was the single prime criterion for judging the relative merits of the propulsion concepts examined. Cost/effectiveness was not assessed.

Composite Propulsion System

A broad range of individual concepts is technically feasible under the generic heading, composite engine. Typical of the composite powerplant family is the Air Augmented Rocket. As will be seen, this particular family of cycles plays a prominent role in the composite engine as studied here for launch vehicle applications.

At the outset of the study, certain restraints were placed on the selection of elements which made up the candidate composite systems. Those hardware elements which were excluded from the candidate systems were (1) complex multistage air compression machinery, (2) nuclear reactor, and (3) solid propellant rocket.

Eight hardware elements were utilized in synthesizing the candidate composite engine systems explored during the study. These were the inlet, primary thrust chamber and pumps, primary combustor, fan, heat exchanger group, secondary fuel distributor, fuel supply, and oxidizer supply. The latter two elements are integrated in the vehicle. The fuel supply, inlet, and primary combustor are common to all of the composite engines which were studied.

The candidate composite propulsion systems can be either single or multimode operating devices. For example, the cited Air Augmented Rocket, if operated strictly in this mode, would be a single mode system. If, however, the engine switched to a thermodynamically different operating cycle (such as subsonic combustion ramjet operation) then the engine would be termed a multimode device. Both rocket and ramjet operating modes are allowable in a composite engine.

Advanced Launch Vehicle Systems

The composite propulsion systems explored in this study were evaluated upon the basis of their performance as applied to advanced launch vehicles. The study guidelines give a general indication of the classes of vehicle systems which were to be considered. Most of the engine evaluations were conducted with reference to a baseline orbital launch system. Other vehicle system approaches which were investigated included alternative configurations of the baseline, e.g., two-stage wing-body first stages. Single stage concepts were also included per the guidelines.

The baseline composite engine orbital launch system (Figure 3) is a two-stage, horizontal takeoff and landing, nested configuration utilizing liquid hydrogen and oxygen propellants. The first stage provides an aerodynamic pressure field for the inlets of the integrated composite propulsion system installed in the vehicle. The all-rocket second stage vehicle is fully recoverable and reusable and was derived from previous study efforts (Contract NAS 8-11463). It was not perturbed from a design standpoint, but it was scaled in accordance with the first stage capabilities.

The composite systems generally operate on ejector (primary rocket) modes from Mach 0 to as high as Mach 2, where ramjet transition occurs. For systems employing the subsonic combustion ramjet mode, the nominal maximum airbreathing Mach number was 8. For systems employing the Scramjet modes, the transition from subsonic to supersonic combustion occurs at Mach 6, and this high speed mode continues nominally to Mach 10 to 12. Both stages were assumed to return to the base of origin.

4.0 APPROACH

This section provides a brief review of the organizational and technical approach employed in the study. Subsequent parts include the following:

1. The organization and relationships of the study phases

2. The evaluation criteria used throughout the study to selectively evaluate and screen the most promising composite engine concepts, including the propulsion systems used as a basis of comparison for composite engines

3. The methodology employed in executing the study

Program Structure

The overall approach employed in the Composite Engine Study under Contract NAS 7-377 is probably best understood through examination of Figure 5. The figure illustrates the following important points:

1. The work was performed in three associated phases, conducted in series, following an initial preparatory effort.

2. These progressive phases (labeled Classes 0, 1, and 2) processed a decreasing number of engine concepts (generally the more attractive ones) with a successively deeper technical penetration.

3. Documentation developed during each phase of the program provided engine information oriented for effective utilization in subsequent studies.

This program approach was formulated as the best practical means for accomplishing the stated study objectives (Section 2). More specifically:

1. Proceeding from many concepts toward a few that were "best" gave reasonable assurance that no important concepts were left uncovered, and that the composite engine type was reflected to best advantage for assessment of its overall significance to advanced launch vehicles (Objective No. 1).

2. Because significant technical penetration would be practical with only a few systems (i.e., during the Class 2 phase), there was greater assurance that the component and subsystem areas were equitably represented in the critical technology appraisal (Objective No. 2).

3. Separate documentation by phases (Classes 0, 1, 2) provides the user with a range of easily accessible references which are applicable to diversified subsequent study purposes (Objective No. 3).

Contractor Team Organization

The contractor team--consisting of Marquardt, Rocketdyne, and Lockheed--operated in different arrangements during the study, each arrangement being designed to best accomplish the phase of the study then underway. In general, Rocketdyne supported the required rocket analyses, and Lockheed supported the vehicle system analyses.

Evaluation Criteria

The system was evaluated on the basis of orbital payload performance with operational flexibility, technical risk, and system hardware weight as secondary criteria. Each of these criteria is discussed below.

Payload Performance--(Primary Criterion)

Payload delivered to the reference 262 nautical mile circular orbit by a 1.0 million pound gross weight vehicle was the basic numerical ranking factor used for the propulsion systems. Gross payload was assumed to comprise the crew, passengers, and various amounts of cargo; and those ancillary systems and structures necessary to accommodate, sustain, and encapsulate the delivered payload.

Technical Risk--(Secondary Criterion)

The progressive selection of the more attractive composite systems for more detailed examination in successive phases of the study was influenced by qualitative considerations of the relative difficulty and risk involved in the eventual development of the composite engine. This "system achievability" aspect was considered to be a function of both the technical maturity of the concept and the number of discrete technology areas involved (e.g., air liquefaction, Scramjet).

Operational Flexibility--(Secondary Criterion)

Operational flexibility was considered from two aspects, namely,

1. Mission profile adaptability of the concept, i.e., its degree of performance retention with a variability in orbital mission ground rules (e.g., alternate landing base dictate for a returning first stage)

2. Alternate application potential of the concept for other than orbital launch missions, a prominent case being hypersonic cruise usage

Systems Hardware Weight--(Secondary Criterion)

A consideration of cost/effectiveness for composite propulsion systems was made only to the extent of monitoring of overall system hardware weight. The criterion used for this was total vehicle system inert weight per pound of payload delivered.

Comparison Propulsion Systems

During the study, three noncomposite engines were employed as a basis for comparative performance evaluations in advanced launch vehicles. These three comparative engines are described below.

Rocket Engines

Two all-rocket baselines were defined by Rocketdyne for comparison purposes in the study. These were (1) a state of the art rocket, and (2) a very advanced engine. The latter engine was characterized by high combustion chamber pressure, unconventional chamber and nozzle geometry, an advanced operating cycle, and an extremely high uninstalled thrust-to-weight ratio.

The comparison rocket engines were utilized throughout all three phases of the composite engine studies. As noted above, strong emphasis was given to the very advanced concept, since it represents technology advancements which are believed to correspond appropriately to the general class of composite engines and launch vehicles in this study.

Advanced Airbreathing Engine (Turbomachine Based)

Late in the study, it was decided to include a comparison of an advanced airbreathing engine for reference purposes during the Class 2 phase. Available engine performance data were utilized by Lockheed to determine the installed performance of an advanced turboaccelerator type airbreathing engine (specifically, a hydrogen fueled turboramjet). However, the detailed definition of this comparison powerplant remained outside of the scope of the study.

Methodology

For each of the three phases of the study (Figure 5), certain work methods and analytical tools were required to reflect the differences in both breadth and penetration depth which would provide adequate results which could be comparatively evaluated on a uniform basis.

Class 0

In the first phase, the internal propulsion performance of a large number of composite engines and their corresponding thrust-to-weight ratio characteristics were determined. This information, together with appropriate vehicle information, was employed to obtain the relative payload performance, which was the primary evaluation criterion. The problem was one of performing a large number of calculations with a number of simplifying assumptions while simultaneously insuring that the results would be meaningful.

The procedure was to employ a very simple thermodynamic analysis by components and to make weight estimates by major subsystems in order to obtain reasonable first order approximations for all of the candidate engine systems. This information was provided for three arbitrary but reasonable ascent acceleration paths. The vehicle was synthesized through simple relationships coupling vehicle size, volume, and the respective aerodynamic parameters. Payload performance was determined using a simplified computer program which effectively, in a step-by-step fashion, calculated the weight history on one or more of the selected trajectories to achieve the final weight at staging conditions. Payload-to-orbit was

calculated using the same upper stage characteristics corrected only for initial weight. With the aid of sensitivity (perturbation) studies of some of the major factors, a "best" performance was quickly estimated for each launch vehicle engine set.

The primary objective during this portion of the investigation was to screen out the poorest candidate propulsion systems. Those systems having large deficiencies in payload were quickly eliminated and those closely competitive were retained for the next phase.

Class 1

During the second phase, the selected candidate propulsion systems were reanalyzed using a more detailed thermodynamic and weight analysis to provide engine system performance maps covering the ranges of Mach number and altitude likely to be encountered. Particular launch vehicles which had been investigated in other contract studies were examined, together with new configurations, along with appropriate trade-off functions and their sensitivity factors. Each resulting propulsion system-vehicle combination was then "flown" on selected payload ascent flight trajectories.

Although significant changes in the payload performance occurred between the Class 0 and Class 1 study phases, no extraordinary changes in the relative relationships were found. Two composite propulsion systems were identified for the final phase of the study from the results of this phase.

Class 2

For the final phase, the selected engine system concepts were defined to subsystem levels for weight determination and their thermodynamic performances were calculated. Two launch vehicles were described to a detailed conceptual level and integrated to the propulsion systems. The resulting payloads were determined. In order to provide suitable comparisons, an all-rocket launch vehicle using advanced rocket engine technology was carried to the same level of definition. In addition, the optimized payloads were calculated for a corresponding turbomachine type airbreather vehicle.

Although payload delivered to orbit was consistently employed in each phase as the primary evaluation criterion, several other factors, as noted above, were given secondary consideration. These factors included technical risk, system dry-weight-to-payload ratio, and operational flexibility. Also, the rocket and airbreathing (turbomachine-based) systems were evaluated to provide point-of-departure baselines for judging the overall effectiveness of the composite engine approach.

5.0 RESULTS

The principal results of the study were the definition and evaluation of a broad spectrum of composite propulsion systems appropriate to launch vehicle applications. Starting with the identification of those candidate composite systems which qualified under the study ground rules, the technical efforts associated with each of the study phases (Classes 0, 1, 2) proceeded through coordinated performance analyses and design syntheses. The end result was detailed conceptual design level penetration into those composite propulsion systems representing the most promising engine concepts for advanced launch vehicle application.

Class 0 Systems Phase

Propulsion Systems

Consideration of the various modes in which the composite engine components may be operated lead to the generation of 36 candidate engine concepts. Figure 6 identifies each engine with a number and a name and indicates the possible modes of operation together with the approximate velocity range in which each mode is most likely to function. In general, all systems using the terminal subsonic combustion ramjet mode were considered appropriate for operation up to Mach 8 flight speed, whereas those using the supersonic combustion ramjet terminal mode operate up to about Mach 12. Figure 6 also indicates the engine operating mode required following stage separation, including flyback and landing. Schematic diagrams illustrating the physical composition of each of these engines are given in Figure 7.

Net jet thrust and specific impulse characteristics were computed for each engine for three representative ascent trajectories. Although these trajectories were not optimum ascent paths, they were chosen to cover a band of interest and range varying from a typical "hot" airbreather path (lower limit) to a path characteristic of that for a zero-lift advanced rocket trajectory (upper limit).

Vehicle/Missions

The necessary screening process was accomplished by considering each propulsion system thus identified in conjunction with a synthesized launch vehicle to determine the relative orbital payload weights. Several perturbations were required to obtain meaningful results.

The baseline launch vehicle consisted of a two-stage horizontal takeoff and landing (HTOHL) concept, less refined, but similar to that shown in Figure 3. The perturbations were addition of a Scramjet velocity increment (to 12,000 fps), decrease in design vehicle structural fraction, variation in takeoff speed, elimination of first stage flyback and landing provisions, and conversion from a horizontal (HTO) to a vertical takeoff mode (VTO). A preferred trajectory (one of the three) was determined for each Class 0 engine and the effects of thrust loading were established. The results are shown in Figure 8 in the form of orbital payload ranking.

[redacted]

CANDIDATE COMPOSITE PRO

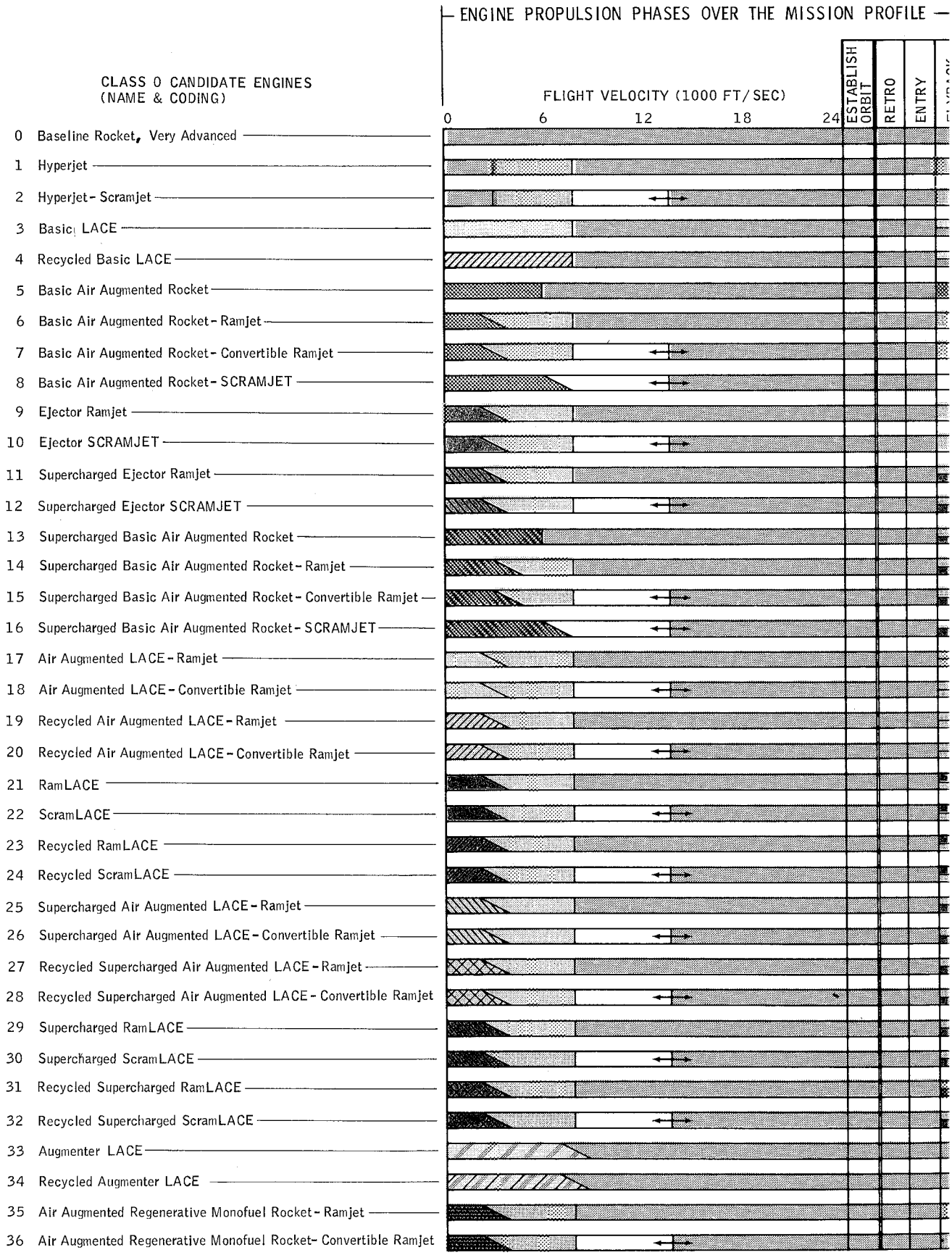

[redacted]

[redacted]

SION SYSTEMS - CLASS 0

GENERAL LEGEND

- STEP MODE CHANGE
- STEP MODE CHANGE, UNCERTAIN SPEED AT CHANGE
- PHASED MODE CHANGE
- RECYCLED H_2 (SUB-COOLED) OPERATION
- SUPERCHARGED CYCLE (SIMPLE FAN)
- SUPERCHARGED CYCLE WITH H_2 RECYCLED
- MISSION - DEPENDENT ALTERNATIVE MODES

ENGINE OPERATING MODES

- ROCKET
- RAMJET - SUBSONIC COMBUSTION
- RAMJET - SUPERSONIC COMBUSTION (SCRAMJET)
- BASIC LACE
- BASIC LACE - RECYCLED H_2
- AIR-AUGMENTED ROCKET, SIMULTANEOUS MIXING AND BURNING CYCLE
- SUPERCHARGED AIR - AUGMENTED ROCKET, SIMULTANEOUS MIXING AND BURNING CYCLE
- AIR - AUGMENTED ROCKET, AFTERBURNING CYCLE
- SUPERCHARGED AIR - AUGMENTED ROCKET, AFTERBURNING CYCLE
- AIR - AUGMENTED LACE, SIMULTANEOUS MIXING AND BURNING CYCLE
- AIR - AUGMENTED LACE, SIMULTANEOUS MIXING AND BURNING CYCLE, RECYCLED H_2
- SUPERCHARGED AIR - AUGMENTED LACE, SIMULTANEOUS MIXING AND BURNING CYCLE
- SUPERCHARGED AIR - AUGMENTED LACE, SIMULTANEOUS MIXING AND BURNING CYCLE, RECYCLED H_2
- AIR - AUGMENTED LACE, AFTERBURNING CYCLE
- AIR - AUGMENTED LACE, AFTERBURNING CYCLE, RECYCLED H_2
- SUPERCHARGED AIR - AUGMENTED LACE, AFTERBURNING CYCLE
- SUPERCHARGED AIR - AUGMENTED LACE, AFTERBURNING CYCLE, RECYCLED H_2
- AIR - AUGMENTED HEATED HYDROGEN ROCKET, SIMULTANEOUS MIXING AND BURNING CYCLE
- AUGMENTER LACE
- AUGMENTER LACE, RECYCLED H_2
- DUCTED FAN, WITH OR WITHOUT PLENUM BURNING

FIGURE 6. Candidate Composite Propulsion Systems, Class 0

[redacted]

[redacted]

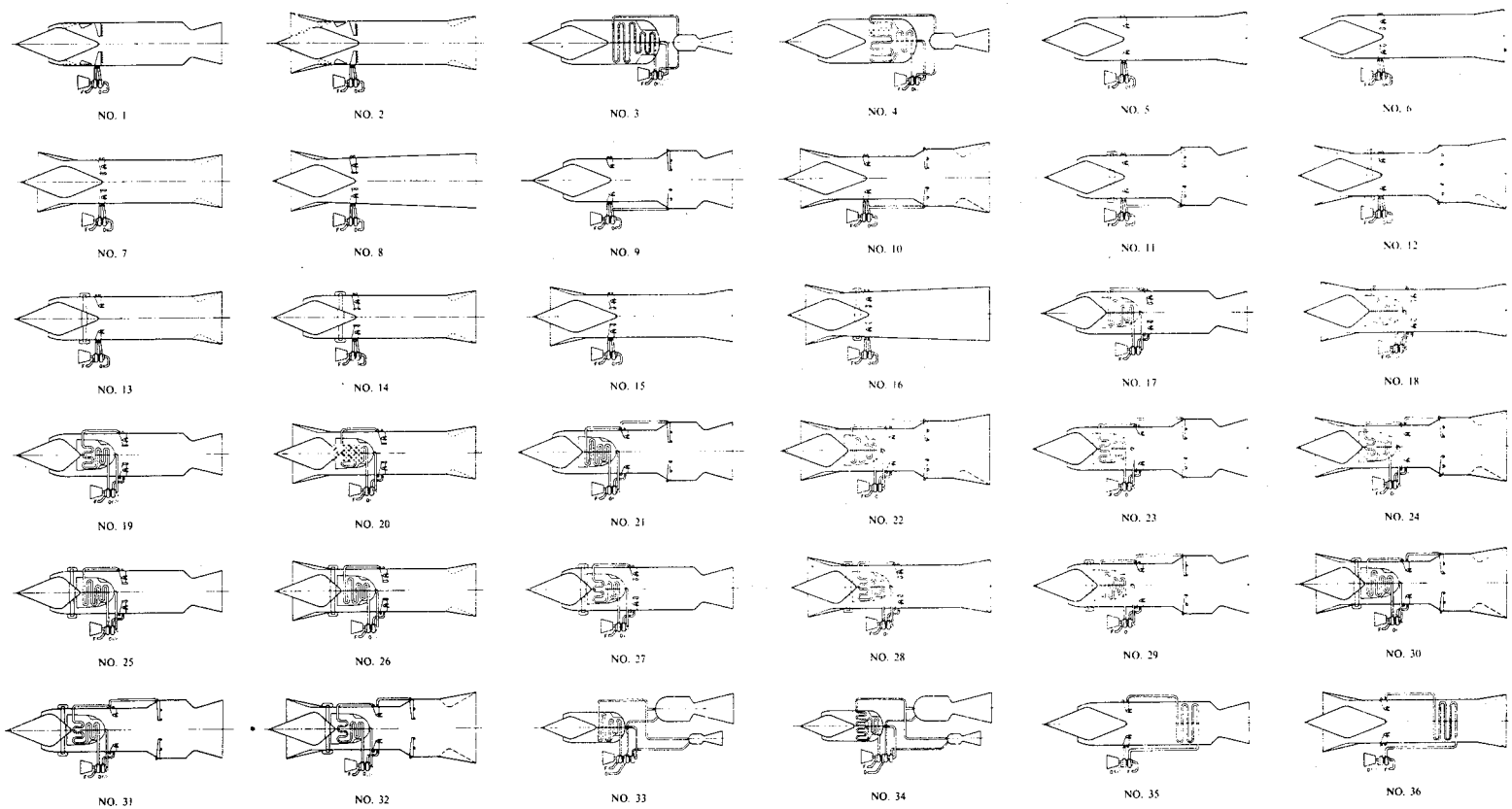

FIGURE 7. Operating Schematics of Class O Engines

[redacted]

ENGINE

- ► 32 Recycled Supercharged ScramLACE
- ► 24 Recycled ScramLACE
- ► 30 Supercharged ScramLACE
- ► 22 ScramLACE
- 28 Recycled Supercharged Air Augmented LACE-Convertible Ramjet
- 20 Recycled Air Augmented LACE-Convertible Ramjet
- 26 Supercharged Air Augmented LACE-Convertible Ramjet
- 18 Air Augmented LACE-Convertible Ramjet
- ► 12 Supercharged Ejector SCRAMJET
- ► 31 Recycled Supercharged RamLACE
- ► 23 Recycled RamLACE
- ► 29 Supercharged RamLACE
- ► 21 RamLACE
- 27 Recycled Supercharged Air Augmented LACE-Ramjet
- 19 Recycled Air Augmented LACE-Ramjet
- 15 Supercharged Basic Air Augmented Rocket-Convertible Ramjet
- 25 Supercharged Air Augmented LACE-Ramjet
- 17 Air Augmented LACE-Ramjet
- ► 10 Ejector SCRAMJET
- 7 Basic Air Augmented Rocket-Convertible Ramjet
- ► 11 Supercharged Ejector Ramjet
- 2 Hyperjet-Scramjet
- 14 Supercharged Basic Air Augmented Rocket-Ramjet
- ► 9 Ejector Ramjet
- 6 Basic Air Augmented Rocket-Ramjet
- 4 Recycled Basic LACE
- 1 Hyperjet
- 34 Recycled Augmenter LACE
- 33 Augmenter LACE
- 16 Supercharged Basic Air Augmented Rocket-SCRAMJET
- 3 Basic LACE
- 13 Supercharged Basic Air Augmented Rocket
- 8 Basic Air Augmented Rocket-SCRAMJET
- 5 Basic Air Augmented Rocket

NOTE: Engines No. 35 & 36 not included

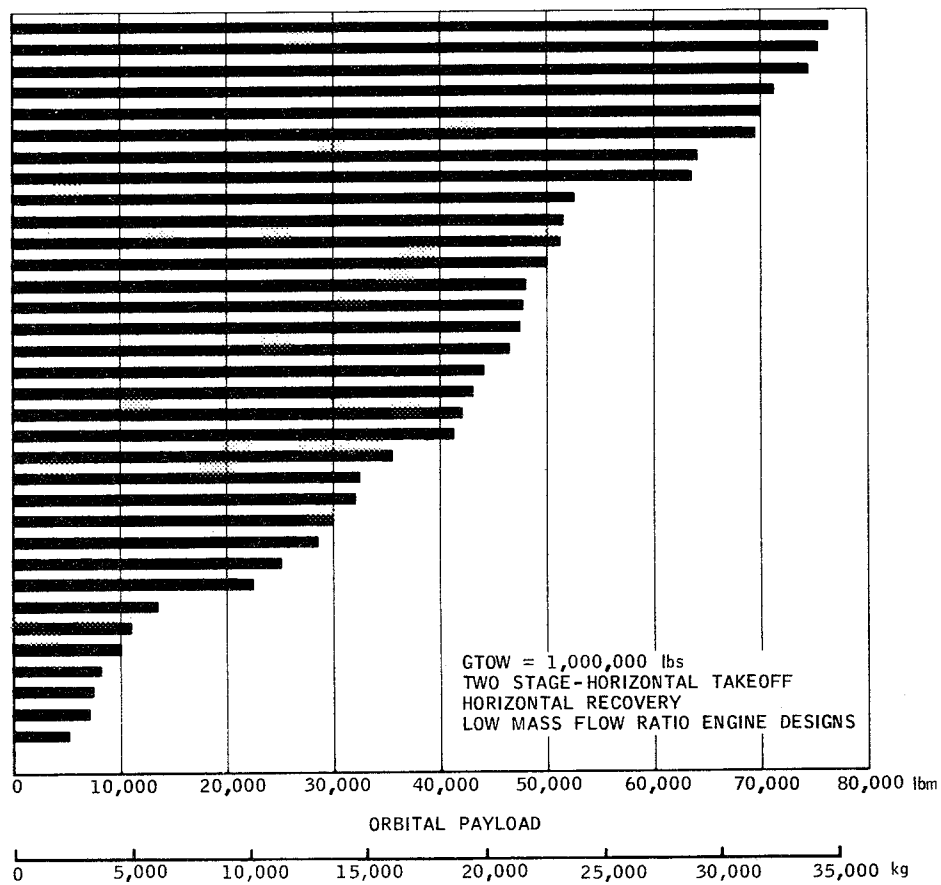

FIGURE 8. Payload Ranking of Candidate Composite Engines

Conclusions

Twelve of the engine concepts were selected for the next phase of the study (Class 1). These are identified in Figure 8 with an arrow in front of the identification number and name. These Class 1 engines are generally characterized as having an afterburning air augmented rocket for initial acceleration and using a subsonic and, in many cases a supersonic ramjet combustion mode (Scramjet) for final acceleration. Eight of the concepts employ an air liquefaction subsystem, whereas the remaining four employ liquid oxygen/liquid hydrogen primary rocket ejector subsystems. Versions including a supercharging fan of low pressure ratio (typically 1.3), a Scramjet mode, and a recycle hydrogen operation were included, since each of these features added a significant payload increment or some increase in operational flexibility.

Class 1 Systems Phase

Propulsion Systems

Inasmuch as the Class 0 engine performance was generated on the basis of three reference trajectories, a much broader parametric analysis was conducted for the Class 1 engines.

For a typical reference trajectory, specific impulse trends for the six initial acceleration modes utilized in the Class 1 engines are given in Figure 9. The paired numbers result from the ramjet or ramjet-plus-Scramjet options existing for the same ejector mode.

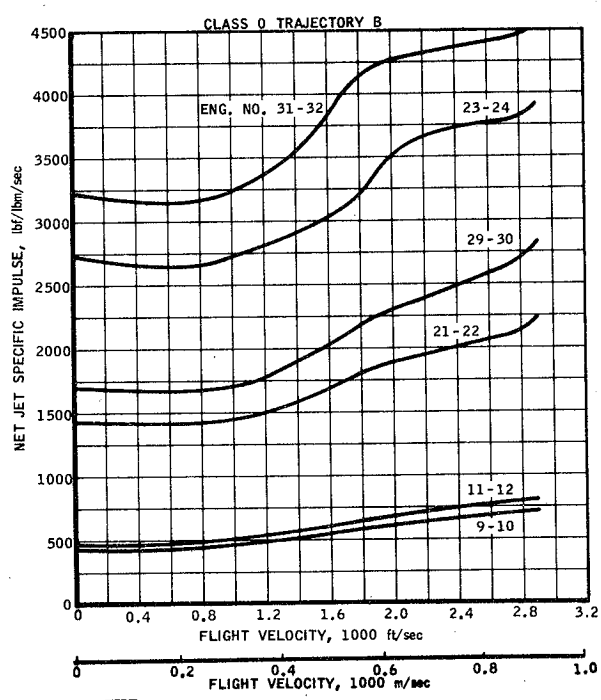

FIGURE 9. Class 1 Engine Specific Impulse Comparison
Ejector Mode

Based on the conceptual design activity, the uninstalled thrust/weight ratios for the Class 1 engines were determined for the following parameters and ranges:

1. Thrust, sea level static = 50,000 to 500,000 lbf
2. Maximum internal pressure (Ramjet mode) = 50 to 250 psia

Comparative Class 1 thrust/weights are shown in Figure 10 for the six non-Scramjet engines.

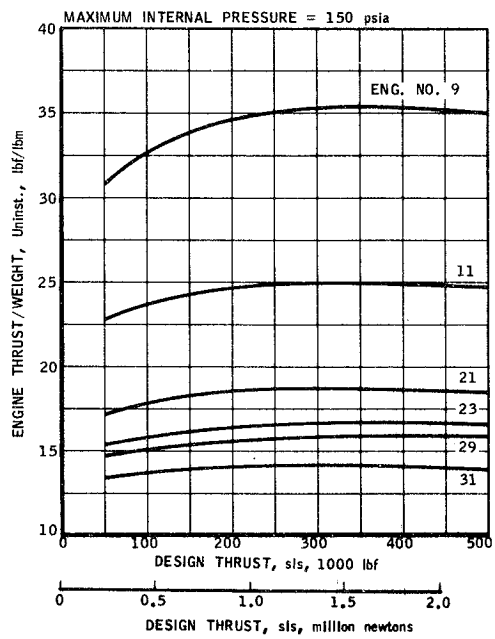

FIGURE 10. Thrust/Weight Ratio Trends for Class 1 Engines

Vehicle/Missions

During this phase, the Lockheed vehicle and mission analyses included engine sizing and physical integration with the vehicle, flight path and planform loading evaluation, vehicle weight studies, and mission operational studies (e.g., runway lengths, engine operating mode transition points). Two-stage vehicle configurations similar to that shown in Figure 3 were established for each of the Class 1 engines. Single stage concepts were also investigated during this phase.

The results of the mission analyses are presented in Figure 11 in terms of orbital payload (upper bar) and system total dry/gross payload weight ratio (lower bar). Attention is directed to the relative performance of the rocket and turbomachine-airbreathing reference systems, Engines Nos. 0 and X, respectively. The mission model utilized for these non-composite systems was consistent with that used for Class 1 system evaluation. In the case of the rocket particularly, there were significant excursions from the baseline first stage vehicle configuration (Figure 3).

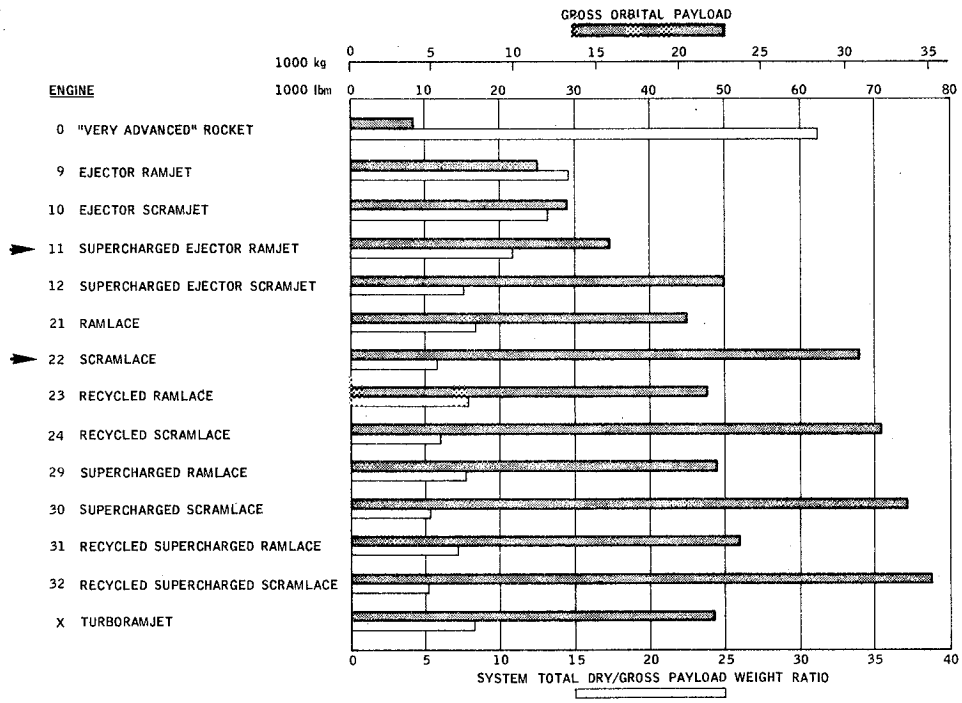

FIGURE 11. Summary of Payload Performance for Class 1 Systems

Conclusions

With these results, two propulsion system concepts were selected for the final study phase. Since one objective of the study was to provide an assessment and evaluation of technology implications, it became obvious that technology constraints would have to enter into the decision process. This resulted in the selection of the two engine concepts: one should incorporate the best features appropriate to a near-term technology system, whereas the other should incorporate the most productive of the far-term technology items.

The Supercharged Ejector Ramjet (Engine No. 11) is shown in Figure 11 to possess a payload capability about four times that of the Very Advanced Rocket system (Engine No. 0) and it was selected for continued evaluation. This engine employs a low pressure ratio fan ahead of an ejector using afterburning and it is intended to operate at flight speeds up to Mach 8. The ScramLACE (Engine No. 22), on the other hand was selected because it was about eight times better in payload capability than the Advanced Rocket and hence it could potentially deliver about twice the payload of the near-term technology Engine No. 11. This propulsion system required both air liquefaction and supersonic combustion technology, both of which can be considered relatively far-term technology. The additional potentials of this basic engine type as depicted by Engines Nos. 24, 30, and 32 consist of relatively small increments and these engine versions may therefore be considered as growth configurations of Engine No. 22. Alternatively, the added features can be viewed as performance insurance means against possible degradation which may occur if such a system were to proceed into preliminary development.

The relative standing of the rocket system was significantly improved in the final Class 2 phase, as will be shown. This improvement resulted from a more complete assessment of vehicle operational modes, primarily vertical take-off and sled-launch considerations.

Class 2 Systems Phase

Propulsion System

The parametric propulsion system maps from the previous phase (Class 1) were refined to reflect such items as turbopump drive penalties and an improved assessment of off-design operation of the air liquefaction heat exchanger. In addition, a sensitivity analysis was performed to provide indication of the variation of both the specific impulse and thrust performance over the full flight profile, as they would be affected by the more important subsystem components and process efficiencies. The sensitivity assessment included some 20 engine parameters which were perturbed both above and below the selected design values. Figure 12 indicates representative specific impulse results for the two engines as they are influenced by several inlet pressure recovery schedules during the initial acceleration regime.

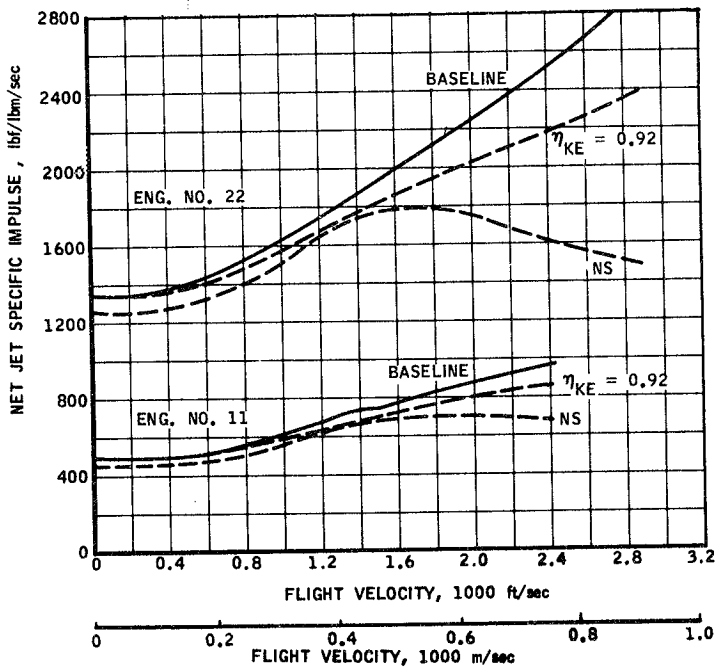

FIGURE 12. Class 2 Engine Specific Impulse Comparison, Ejector Mode

Corresponding thrust trends are presented in Figure 13, for which the inlet pressure recovery schedules were varied as indicated.

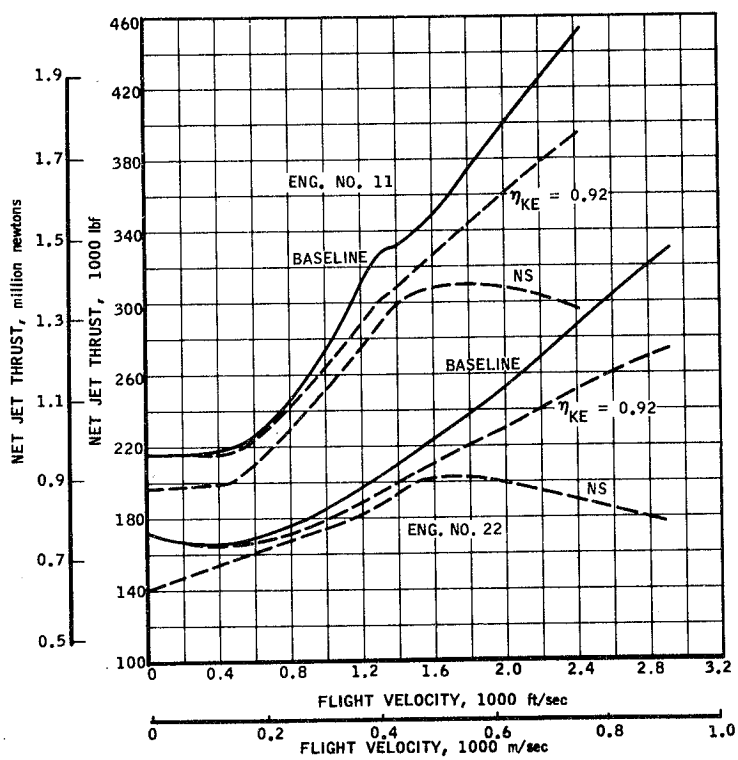

FIGURE 13. Class 2 Engine Thrust Comparison, Ejector Mode

Rocketdyne carried out detailed design studies of the primary rocket subsystem (combustion chamber, nozzle, structure, and turbopumps) for both Class 2 engines (oxygen-hydrogen and air-hydrogen). The annular bell configuration was adopted as the basic approach with (1) the Supercharged Ejector Ramjet (oxygen) being fitted with a single annular chamber operating at 1500 psia combustion pressure and (2) the ScramLACE (air) fitted with a dual conceptual chamber operating at 1000 psia. Subsequently, in the final engine designs, the configuration utilized in the ScramLACE final design was a linear, multi-strip version of the annular layout. All internal operating parameters were, however, maintained.

Detailed conceptual designs of the Class 2 engines were performed on a design point basis as determined by the vehicle/engine integration studies. Figures 14 and 15 are sketches of the Supercharged Ejector Ramjet and ScramLACE Class 2 engines. The design point sea level static thrust was derived from a payload-maximum engine sizing study performed by Lockheed. Five and six engine vehicle complements were selected for the Supercharged Ejector Ramjet and ScramLACE cases, respectively.

The engine thrust/weight sensitivity to subsystem weight variations was determined. Sensitivity graphs were prepared for two ranges of subsystem weight variations plus or minus 10 percent and plus or minus 50 percent.

Vehicle/Mission Analysis

Lockheed performed the vehicle integration and mission analyses. The baseline vehicle (Figure 3) was analyzed to insure that weight and balance characteristics coupled with estimated aerodynamic characteristics would provide an aerodynamically stable and controllable system. The work was consistent with a detailed concept design level of effort. Engine/vehicle sensitivities to propulsion system characteristics, aerodynamic characteristics, and weight characteristics were also determined for each of the two engine/vehicle configurations.

With respect to Class 2 vehicle system payload performance, Figure 16 illustrates pertinent results. The trends of payload are plotted as a function of staging Mach number for both the Class 2 composite systems and the two comparison engines: rocket and turbomachine (three cases for the former). Payload sensitivities to variations in average drag level, specific impulse level, and system thrust-to-weight ratio were determined.

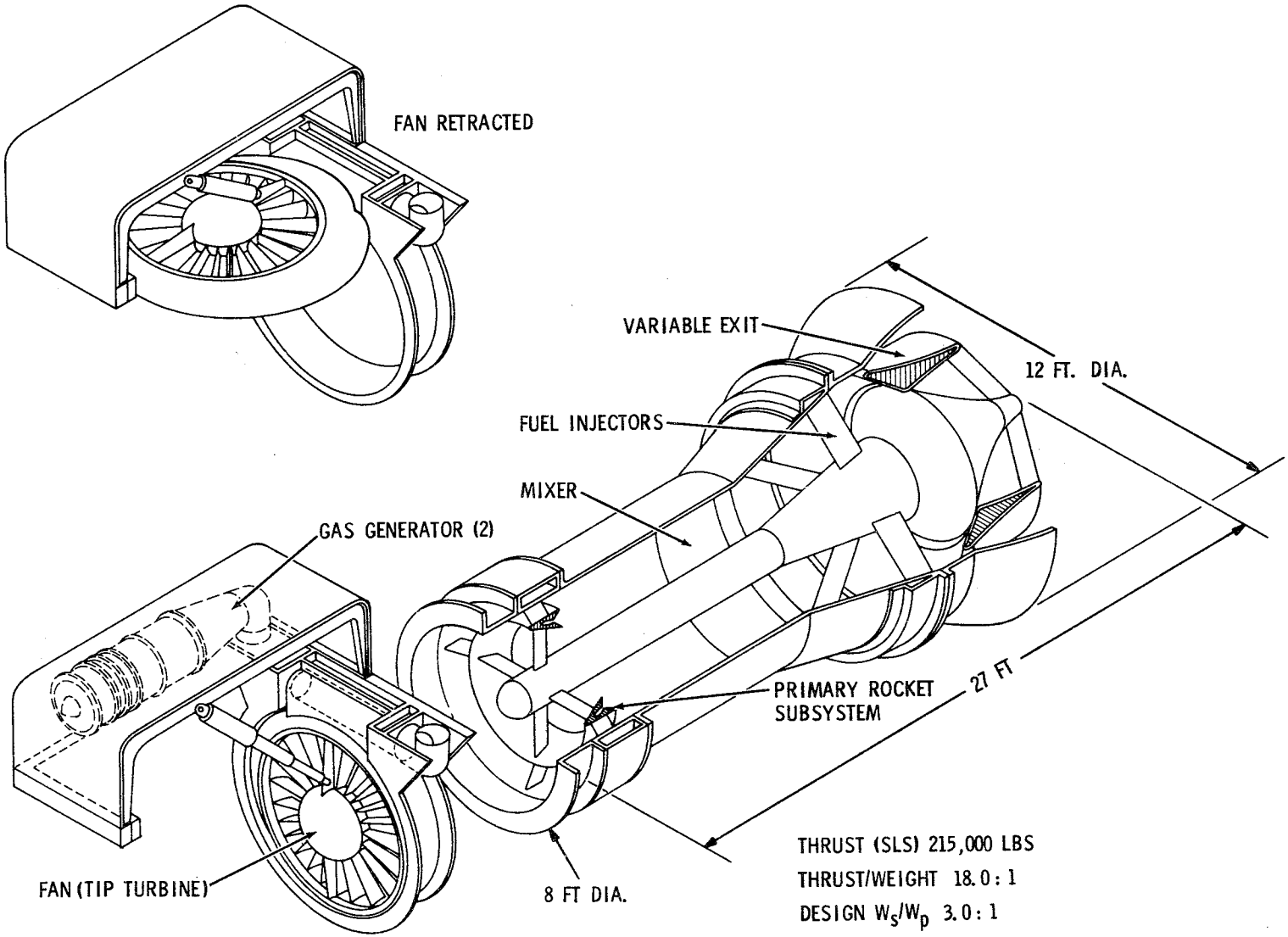

FIGURE 14. Supercharged Ejector Ramjet

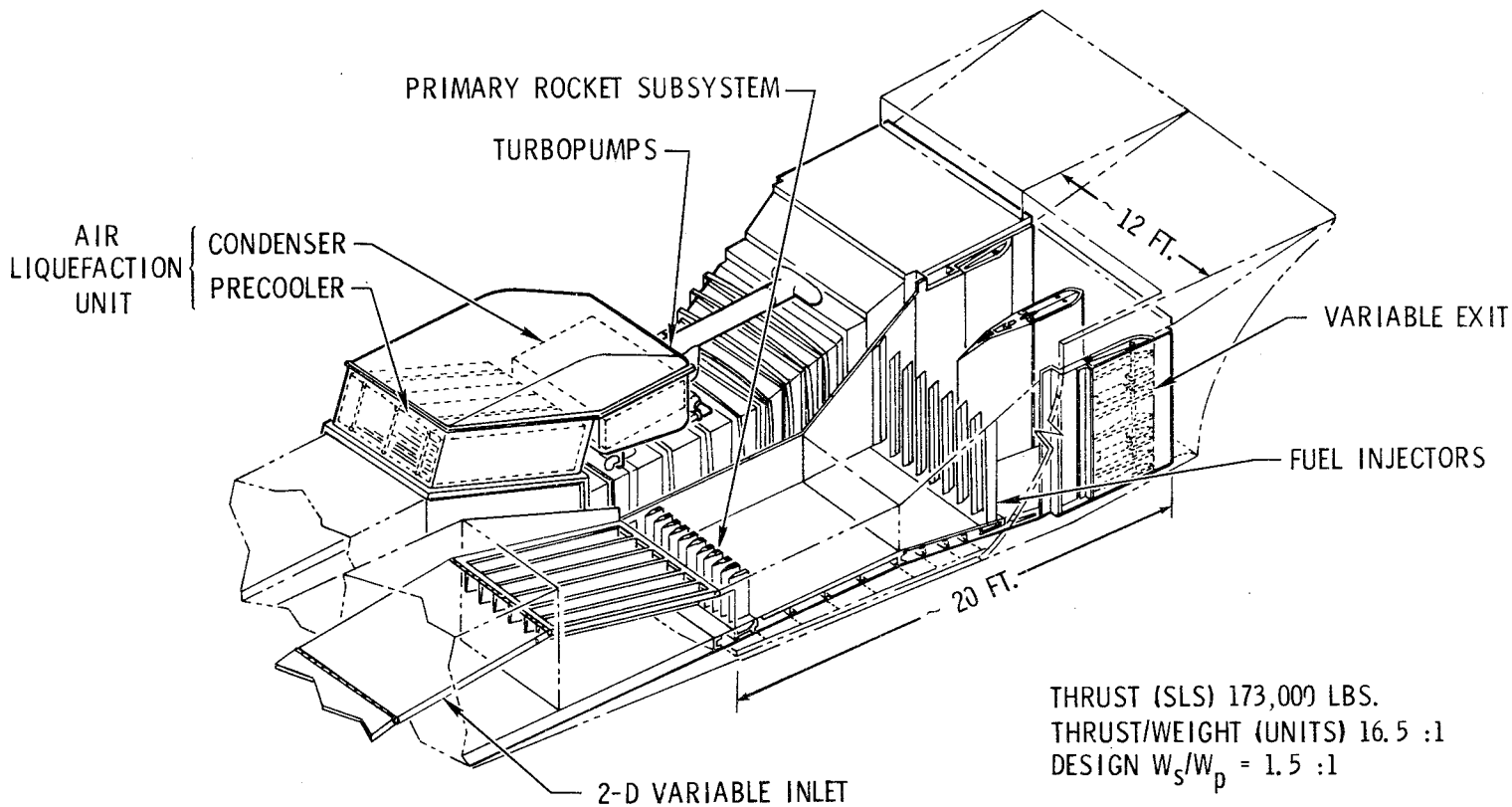

FIGURE 15. ScramLACE Powerplant (Two Engines Shown)

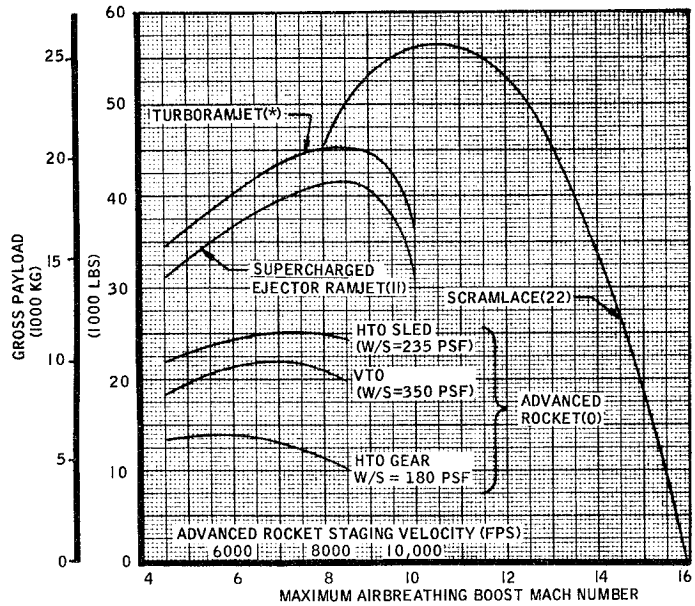

FIGURE 16. Payload Performance for Class 2 Systems

In the same format as those presented for the Class 0 and 1 systems, the gross orbital payload performances of the Class 2 engines are presented in Figure 17, along with those of the two comparison propulsion systems. As before, the system inert/payload ratio (secondary criterion; a rough systems procurement cost indicator) has also been included. It will be noted that the payload magnitudes are the maxima from Figure 16.

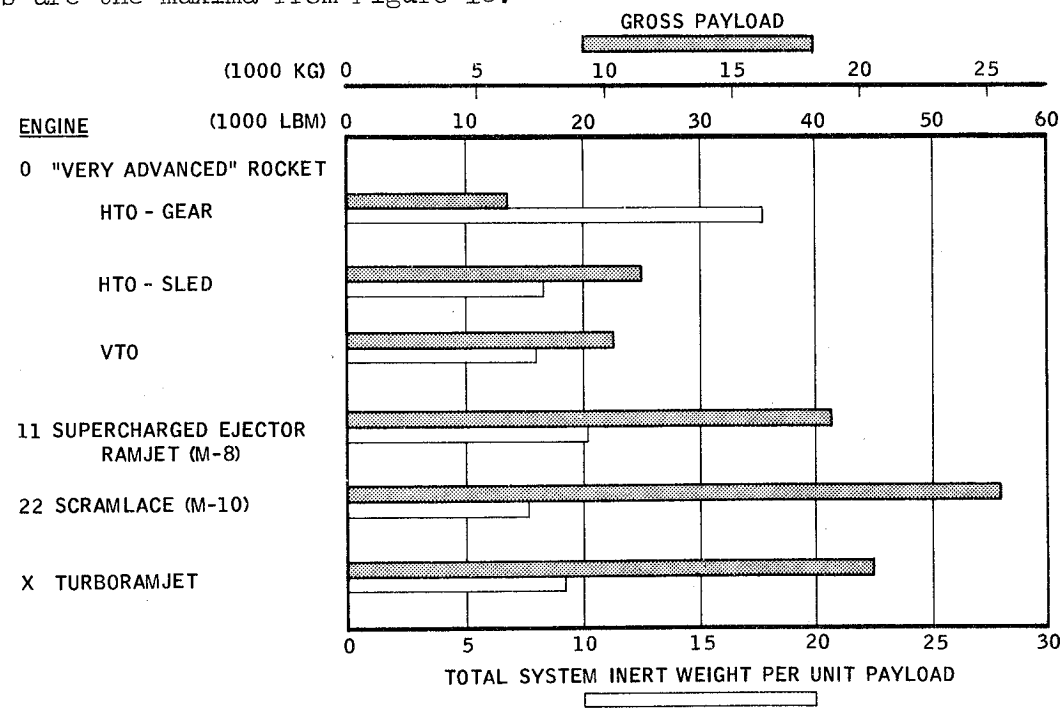

FIGURE 17. Summary of Payload Performance for Class 2 Systems

Conclusions

As compared to Class 1 system performance results, a significant payload performance improvement is indicated for the comparison rocket (Engine No. 0) and the Supercharged Ejector Ramjet (Engine No. 11). The Turboramjet comparison case (Engine No. X) remains approximately at the same level, while the performance of the ScramLACE engine has decreased significantly (20 percent).

These trends result generally from the more rigorous propulsion and vehicle/mission investigations of the Class 2 phase. For example, the combined application of newly generated, more conservative Scramjet performance data, re-estimated vehicle aerodynamic factors, and a more realistic assessment of vehicle thermal protection system weights caused the decrement observed for the ScramLACE system. Note, for example, the reduction in maximum airbreathing Mach number from 12 to about 10 for payload maximization.

On the other hand, the 16 percent improvement in the payload performance of the Supercharged Ejector Ramjet (another ramification of this increased technical penetration) reflects more optimal engine design point selection plus the utilization of the very significant Fan Ramjet intermediate operating mode, not investigated in the Class 1 phase.

As a result of the Class 2 study, several prominent items have been identified as requiring additional analysis: (1) With regard to the matching of the various engine subsystems, the techniques employed for performance predictions did not fully provide for the fact that during some portions of the flight, complete thermodynamic and aerodynamic matching would not be accomplished. Also, internal process efficiencies, though estimated at realistic levels, were held constant over the full flight regime as opposed to being scheduled with flight conditions as would be the case. (2) The analysis suggested, but did not evaluate, the possibility that a fixed geometry exit nozzle might be feasible for the ScramLACE engine. (3) Weight studies and structural heating considerations were based largely on previous studies, whereas detailed heat transfer analysis will be ultimately required to confirm cooling feasibility. Stress analysis was pursued on a very simplified basis in which, for example, internal engine load paths were not quantified. (4) Inasmuch as the cycle performance capitalization on the heat sink characteristics of slush hydrogen (viz., recycle engines) was examined only in the initial phases of the study, further study must be conducted to identify the overall system performance/weight trade-off relationships. (5) Finally, the fact that employment of the low pressure ratio (1.3) fan subsystem had proved so satisfactory for the more attractive composite engines, enlargement of the range of pressure ratios and bypass ratios appears to be in order. A contract extension program is underway to study the above items.

Technology Assessment Task

Based on the overall results of the study program, critical technology implications for composite engines were assessed to satisfy the second stated objective of the study. This effort consisted of a separate examination of each discrete subsystem element. These were coupled into a system level to identify the principal areas of significant deficiencies and to isolate "soft spots" which may have potentially large effects on the overall propulsion system characteristics.

The approach used was to individually cite the important areas for each hardware element where there was a discrete and significant technology indication. Examples were primary rocket technology, air liquefaction technology, etc. For each of these, the following aspects were described:

1. Significance to composite engines
2. Technological status
3. Critical area assessment
4. Future program indications

A review of the list of technology areas utilized in the performance of the study indicates that there are many unknowns and even certain areas of disagreement in the various component and subsystem technology areas. A few principal examples are worthy of mention: (1) In the area of primary rockets, experimental information on the performance achievable with stoichiometric liquid air/hydrogen high pressure combustors is needed. (2) Information is needed on the effect of the rotational and turbulent flow generated by the low pressure ratio fan as it affects rocket/air/fuel mixing and burning. (3) Design ramifications of both atmospheric icing and high inlet diffuser temperature and pressure conditions on a liquid air heat exchanger, both in its operating and non-operating conditions must be determined for realistic dynamic flight conditions. (4) Multi-mode operation, shown to be an attractive feature of the leading composite engine concepts, must be further examined from the standpoints of control, internal aerothermodynamics, and mechanical design. A key problem area for all-supersonic flow systems (e.g., ScramLACE) is the aerodynamic treatment of the primary rocket combustor which represents an in-stream bluff body, potentially capable of imposing significant internal losses in Scramjet mode operation.

6.0 CONCLUSIONS

Based upon this initial and exploratory study of composite propulsion systems and their application to advanced reusable launch vehicles, the following specific conclusions appear to be supportable:

1. Composite propulsion systems provide for increased payload capability relative to very advanced rocket powered vehicles for fully recoverable, orbital launch systems.

2. Composite propulsion systems as applied to launch vehicles are directly competitive with advanced turboaccelerator airbreathing systems from the standpoint of payload performance, operational flexibility, technical risk, and system dry weight per pound of payload. In addition, for cruise missions, composite engines appear to be also competitive with turboaccelerators.

3. Composite engines provide a spectrum of increasing performance capability with increasing component and/or operational complication. The higher performance systems will require considerable advances in the state of the art (e.g., the Scramjet and air liquefaction systems), whereas few technological unknowns are associated with the modest performance systems.

4. The more attractive composite propulsion systems are characterized as ejector or air augmented rocket systems which are capable of ramjet operation following the initial acceleration phase.

5. Composite engines utilize airbreather-typical paths to maximize the delivered payload.

6. No extraordinary technology requirements accompany composite propulsion systems, although considerable further system and component level analytical and experimental efforts are needed to (1) provide increased confidence in the "best estimate" results obtained to date and (2) establish design criteria and define technical approaches for composite propulsion systems. A brief extension phase study effort, addressing the subjects listed herein (page 27) is underway as an initial step in this direction.

DISTRIBUTION

Copy No.	Transmitted to
1.	NASA Office of Resident Representative Jet Propulsion Laboratory 4800 Oak Grove Drive Pasadena, California 91103 Attn.: Office of Technical Information
2.	NASA Office of Resident Representative Jet Propulsion Laboratory 4800 Oak Grove Drive Pasadena, California 91103 Attn.: Contracts Management Division
3.	NASA Office of Resident Representative Jet Propulsion Laboratory 4800 Oak Grove Drive Pasadena, California 91103 Attn.: General Counsel for Patent Matters
4 to 7.	NASA Headquarters Washington, D. C. 20546 Attn.: Chief, Liquid Propulsion Technology, RPL Office of Advanced Research and Technology
8 to 32.	NASA Scientific and Technical Information Facility P. O. Box 33 College Park, Maryland 20740
33.	NASA Headquarters Washington, D. C. 20546 Attn.: Mr. Vincent L. Johnson Director, Launch Vehicles and Propulsion, SV Office of Space Science and Applications
34.	NASA Headquarters Washington, D. C. 20546 Attn.: Mr. Edward L. Gray Director, Advanced Manned Missions, MT Office of Manned Space Flight
35.	NASA Ames Research Center Moffett Field, California 24035 Attn.: Mr. Clarence A. Syvertson Mission Analysis Division
36.	Marshall Space Flight Center Huntsville, Alabama 35812 Attn.: Technical Monitor Mr. Donald Thompson
37.	Langley Research Center Langley Station Hampton, Virginia 23365 Attn.: Mr. Kenneth Pierpont
38.	NASA Ames Research Center Moffett Field, California 94035 Attn.: Mr. Thomas Gregory Mission Analysis Division
39, 40.	NASA Ames Research Center Moffett Field, California 94035 Attn.: Harvey J. Allen Director
41, 42.	NASA Goddard Space Flight Center Greenbelt, Maryland 20771 Attn.: Merland L. Moseson Code 620
43, 44.	NASA Jet Propulsion Laboratory California Institute of Technology 4800 Oak Grove Drive Pasadena, California 91103 Attn.: Henry Burlage, Jr. Propulsion Div., 38
45, 46.	NASA Langley Research Center Langley Station Hampton, Virginia 23365 Attn.: Dr. Floyd L. Thompson Director
47, 48.	NASA Lewis Research Center 21000 Brookpark Road Cleveland, Ohio 44135 Attn.: Dr. Abe Silverstein Director
49, 50.	NASA Marshall Space Flight Center Huntsville, Alabama 35812 Attn.: Hans G. Paul Code R-P&VED
51, 52.	NASA Manned Spacecraft Center Houston, Texas 77001 Attn.: Dr. Robert R. Gilruth Director
53, 54.	NASA Office of Resident Representative Jet Propulsion Laboratory 4800 Oak Grove Drive Pasadena, California 91103 Attn.: Robert W. Kamm Director
55, 56.	NASA John F. Kennedy Space Center Cocoa Beach, Florida 32931 Attn.: Dr. Kurt H. Debus
57.	Aeronautical Systems Division Air Force Systems Command Wright-Patterson Air Force Base Dayton, Ohio 45433 Attn.: D. L. Schmidt Code ASRCNC-2
58.	Air Force Missile Development Center Holloman Air Force Base, New Mexico Attn.: Maj. R. E. Bracken Code MDGRT
59.	Air Force Missile Test Center Patrick Air Force Base, Florida Attn.: L. J. Ullian
60.	Air Force Systems Division Air Force Unit Post Office Los Angeles 45, California Attn.: Col. Clark Technical Data Center
61.	Arnold Engineering Development Center Arnold Air Force Station Tullahoma, Tennessee Attn.: Dr. H. K. Doetsch
62.	Bureau of Naval Weapons Department of the Navy Washington 25, D. C. Attn.: J. Kay RTMS-41
63.	Defense Documentation Center Headquarters Cameron Station, Building 5 5010 Duke Street Alexandria, Virginia 22314 Attn.: TISIA
64.	Headquarters, U. S. Air Force Washington 25, D. C. Attn.: Col. C. K. Stambaugh AFRST

DISTRIBUTION (Continued)

Copy No.	Transmitted to
65.	Picatinny Arsenal Dover, New Jersey 07801 Attn.: I. Forsten, Chief Liquid Propulsion Laboratory SMUPA-DL
66.	Air Force Rocket Propulsion Laboratory Research and Technology Division Air Force Systems Command Edwards, California 93523 Attn.: H. Main, RPRR
67.	Research and Technology Division Air Force Aero Propulsion Laboratory Wright-Patterson Air Force Base, Ohio 45433 Attn.: H. C. Long, APRP
68.	U. S. Atomic Energy Commission Technical Information Services Box 62 Oak Ridge, Tennessee Attn.: A. P. Huber Oak Ridge Gaseous Diffusion Plant (ORGDP) P. O. Box P
69.	U. S. Army Missile Command Redstone Arsenal Alabama 35809 Attn.: Dr. Walter Wharton
70.	U. S. Naval Ordnance Test Station China Lake, California 93557 Attn.: Chief, Missile Propulsion Division Code 4562
71.	Air Force Systems Command Space Systems Division Inglewood, California 90045 Attn.: Lt. Col. Kenneth Mc Aaron
72.	Chemical Propulsion Information Agency Applied Physics Laboratory 8621 Georgia Avenue Silver Spring, Maryland 20910 Attn.: Neil Safeer
73.	Aerojet-General Corporation P. O. Box 296 Azusa, California 91703 Attn.: L. F. Kohrs
74.	Aerojet-General Corporation P. O. Box 1947 Sacramento, California 95809 Attn.: R. Stiff Technical Library, Bldg. 2015, Dept. 2410
75.	Aeronutronic Philco Corporation Ford Road Newport Beach, California 92663 Attn.: D. A. Carrison
76.	Aerospace Corporation 2400 East El Segundo Boulevard P. O. Box 95085 Los Angeles, California 90045 Attn.: John G. Wilder Propulsion Dept. MS-2293
77.	Arthur D. Little, Inc. 20 Acorn Park Cambridge, Massachusetts 02140 Attn.: E. Karl Bastress
78.	Astropower Laboratory Douglas Aircraft Company 2121 Paularino Newport Beach, California 92663 Attn.: Dr. George Moc Director, Research
79.	Astrosystems International, Inc. 1275 Bloomfield Avenue Fairfield, New Jersey 07007 Attn.: A. Mendenhall
80.	Atlantic Research Corporation Edsall Road and Shirley Highway Alexandria, Virginia 22314 Attn.: A. Scurlock
81.	Beech Aircraft Corporation Boulder Division Box 631 Boulder, Colorado Attn.: J. H. Rodgers
82.	Bell Aerosystems Company P. O. Box 1 Buffalo, New York 14240 Attn.: W. M. Smith
83.	Bendix Systems Division Bendix Corporation 3300 Plymouth Road Ann Arbor, Michigan Attn.: John M. Brueger
84.	Boeing Company P. O. Box 3707 Seattle, Washington 98124 Attn.: J. D. Alexander
85.	Missile Division Chrysler Corporation P. O. Box 2628 Detroit, Michigan 48231 Attn.: John Gates
86.	Wright Aeronautical Division Curtiss-Wright Corporation Wood-Ridge, New Jersey 07075 Attn.: G. Kelley
87.	Missile and Space Systems Division Douglas Aircraft Company, Inc. 3000 Ocean Park Boulevard Santa Monica, California 90406 Attn.: R. W. Hallet Chief Engineer, Advanced Space Tech.
88.	Aircraft Missiles Division Fairchild Hiller Corporation Hagerstown, Maryland 10 Attn.: J. S. Kerr
89.	General Dynamics/Astronautics P. O. Box 1128 San Diego, California 92112 Attn.: Frank Dore Library & Information Services (128-00)
90.	Re-Entry Systems Department General Electric Company 3198 Chestnut Street Philadelphia, Pennsylvania 19101 Attn.: F. E. Schultz

DISTRIBUTION (Continued)

Copy No.	Transmitted to
91.	Advanced Engine & Technology Dept. General Electric Company Cincinnati, Ohio 45215 Attn.: D. Suichu
92.	Grumman Aircraft Engineering Corp. Bethpage, Long Island New York Attn.: Joseph Gavin
93.	Ling-Temco-Vought Corporation Astronautics P. O. Box 5907 Dallas, Texas 75222 Attn.: Warren C. Trent
94.	Lockheed-California Company 2555 North Hollywood Way Burbank, California 91503 Attn.: G. D. Brewer
95.	Lockheed Missiles and Space Company P. O. Box 504 Sunnyvale, California 94088 Attn.: Y. C. Lee Technical Information Center
96.	Lockheed Propulsion Company P. O. Box 111 Redlands, California 92374 Attn.: H. L. Thackwell
97.	Baltimore Division Martin-Marietta Corporation Baltimore, Maryland 21203 Attn.: John Calathes (3214)
98.	Denver Division Martin-Marietta Corporation P. O. Box 179 Denver, Colorado 80201 Attn.: J. D. Goodlette (A-241)
99.	McDonnell Aircraft Corporation P. O. Box 516 Municipal Airport St. Louis, Missouri 63166 Attn.: R. A. Herzmark
100.	Space & Information Systems Division North American Aviation, Inc. 12214 Lakewood Boulevard Downey, California 90241 Attn.: H. Storms
101.	Rocketdyne North American Aviation, Inc. 6633 Canoga Avenue Canoga Park, California 91304 Attn.: E. B. Monteath Library, 586-306
102.	Northrop Space Laboratories 3401 West Broadway Hawthorne, California Attn.: Dr. William Howard
103.	Astro-Electronics Division Radio Corporation of America Princeton, New Jersey 08540 Attn.: S. Fairweather
104.	Reaction Motors Division Thiokol Chemical Corporation Denville, New Jersey 07832 Attn.: Arthur Sherman
105.	Republic Aviation Corporation Farmingdale Long Island, New York Attn.: Dr. William O'Donnell
106.	Space-General Corporation 9200 East Flair Avenue El Monte, California 91734 Attn.: C. E. Roth
107.	Stanford Research Institute 333 Ravenswood Avenue Menlo Park, California 94025 Attn.: Lionel Dickinson
108.	Space Technology Laboratories TRW Incorporated One Space Park Redondo Beach, California 90278 Attn.: G. W. Elverum
109.	TAPCO Division TRW, Incorporated 23555 Euclid Avenue Cleveland, Ohio 44117 Attn.: P. T. Angell
110.	Thiokol Chemical Corporation Huntsville Division Huntsville, Alabama Attn.: John Goodloe
111.	Research Laboratories United Aircraft Corporation 400 Main Street East Hartford, Connecticut 06108 Attn.: Erle Martin
112.	United Aircraft Corporation Pratt and Whitney Aircraft Division East Hartford, Connecticut 06108 Attn.: W. Sens
113.	United Aircraft Corporation Pratt and Whitney Aircraft Division Florida Research and Development Division West Palm Beach, Florida 33401 Attn.: R. Coar

DISTRIBUTION

Copy No.	Transmitted to
1.	NASA Office of Resident Representative Jet Propulsion Laboratory 4800 Oak Grove Drive Pasadena, California 91103 Attn.: Office of Technical Information
2.	NASA Office of Resident Representative Jet Propulsion Laboratory 4800 Oak Grove Drive Pasadena, California 91103 Attn.: Contracts Management Division
3.	NASA Office of Resident Representative Jet Propulsion Laboratory 4800 Oak Grove Drive Pasadena, California 91103 Attn.: General Counsel for Patent Matters
4 to 7.	NASA Headquarters Washington, D. C. 20546 Attn.: Chief, Liquid Propulsion Technology, RPL Office of Advanced Research and Technology
8 to 32.	NASA Scientific and Technical Information Facility P. O. Box 33 College Park, Maryland 20740
33.	NASA Headquarters Washington, D. C. 20546 Attn.: Mr. Vincent L. Johnson Director, Launch Vehicles and Propulsion, SV Office of Space Science and Applications
34.	NASA Headquarters Washington, D. C. 20546 Attn.: Mr. Edward L. Gray Director, Advanced Manned Missions, MT Office of Manned Space Flight
35.	NASA Ames Research Center Moffett Field, California 24035 Attn.: Mr. Clarence A. Syvertson Mission Analysis Division
36.	Marshall Space Flight Center Huntsville, Alabama 35812 Attn.: Technical Monitor Mr. Donald Thompson
37.	Langley Research Center Langley Station Hampton, Virginia 23365 Attn.: Mr. Kenneth Pierpont
38.	NASA Ames Research Center Moffett Field, California 94035 Attn.: Mr. Thomas Gregory Mission Analysis Division
39, 40.	NASA Ames Research Center Moffett Field, California 94035 Attn.: Harvey J. Allen Director
41, 42.	NASA Goddard Space Flight Center Greenbelt, Maryland 20771 Attn.: Merland L. Moseson Code 620
43, 44.	NASA Jet Propulsion Laboratory California Institute of Technology 4800 Oak Grove Drive Pasadena, California 91103 Attn.: Henry Burlage, Jr. Propulsion Div., 38

Copy No.	Transmitted to
45, 46.	NASA Langley Research Center Langley Station Hampton, Virginia 23365 Attn.: Dr. Floyd L. Thompson Director
47, 48.	NASA Lewis Research Center 21000 Brookpark Road Cleveland, Ohio 44135 Attn.: Dr. Abe Silverstein Director
49, 50.	NASA Marshall Space Flight Center Huntsville, Alabama 35812 Attn.: Hans G. Paul Code R-P&VED
51, 52.	NASA Manned Spacecraft Center Houston, Texas 77001 Attn.: Dr. Robert R. Gilruth Director
53, 54.	NASA Office of Resident Representative Jet Propulsion Laboratory 4800 Oak Grove Drive Pasadena, California 91103 Attn.: Robert W. Kamm Director
55, 56.	NASA John F. Kennedy Space Center Cocoa Beach, Florida 32931 Attn.: Dr. Kurt H. Debus
57.	Aeronautical Systems Division Air Force Systems Command Wright-Patterson Air Force Base Dayton, Ohio 45433 Attn.: D. L. Schmidt Code ASFCNC-2
58.	Air Force Missile Development Center Holloman Air Force Base, New Mexico Attn.: Maj. R. E. Bracken Code MDGRT
59.	Air Force Missile Test Center Patrick Air Force Base, Florida Attn.: L. J. Ullian
60.	Air Force Systems Division Air Force Unit Post Office Los Angeles 45, California Attn.: Col. Clark Technical Data Center
61.	Arnold Engineering Development Center Arnold Air Force Station Tullahoma, Tennessee Attn.: Dr. H. K. Doetsch
62.	Bureau of Naval Weapons Department of the Navy Washington 25, D. C. Attn.: J. Kay RTMS-41
63.	Defense Documentation Center Headquarters Cameron Station, Building 5 5010 Duke Street Alexandria, Virginia 22314 Attn.: TISIA
64.	Headquarters, U. S. Air Force Washington 25, D. C. Attn.: Col. C. K. Stambaugh AFRST

DISTRIBUTION (Continued)

Copy No.	Transmitted to
65.	Picatinny Arsenal Dover, New Jersey 07801 Attn.: I. Forsten, Chief Liquid Propulsion Laboratory SMUPA-DL
66.	Air Force Rocket Propulsion Laboratory Research and Technology Division Air Force Systems Command Edwards, California 93523 Attn.: H. Main, RPRR
67.	Research and Technology Division Air Force Aero Propulsion Laboratory Wright-Patterson Air Force Base, Ohio 45433 Attn.: H. C. Long, APRP
68.	U. S. Atomic Energy Commission Technical Information Services Box 62 Oak Ridge, Tennessee Attn.: A. P. Huber Oak Ridge Gaseous Diffusion Plant (ORGDP) P. O. Box P
69.	U. S. Army Missile Command Redstone Arsenal Alabama 35809 Attn.: Dr. Walter Wharton
70.	U. S. Naval Ordnance Test Station China Lake, California 93557 Attn.: Chief, Missile Propulsion Division Code 4562
71.	Air Force Systems Command Space Systems Division Inglewood, California 90045 Attn.: Lt. Col. Kenneth Mc Aaron
72.	Chemical Propulsion Information Agency Applied Physics Laboratory 8621 Georgia Avenue Silver Spring, Maryland 20910 Attn.: Neil Safeer
73.	Aerojet-General Corporation P. O. Box 296 Azusa, California 91703 Attn.: L. F. Kohrs
74.	Aerojet-General Corporation P. O. Box 1947 Sacramento, California 95809 Attn.: R. Stiff Technical Library, Bldg. 2015, Dept. 2410
75.	Aeronutronic Philco Corporation Ford Road Newport Beach, California 92663 Attn.: D. A. Carrison
76.	Aerospace Corporation 2400 East El Segundo Boulevard P. O. Box 95085 Los Angeles, California 90045 Attn.: John G. Wilder Propulsion Dept. MS-2293
77.	Arthur D. Little, Inc. 20 Acorn Park Cambridge, Massachusetts 02140 Attn.: E. Karl Bastress
78.	Astropower Laboratory Douglas Aircraft Company 2121 Paularino Newport Beach, California 92663 Attn.: Dr. George Moc Director, Research
79.	Astrosystems International, Inc. 1275 Bloomfield Avenue Fairfield, New Jersey 07007 Attn.: A. Mendenhall
80.	Atlantic Research Corporation Edsall Road and Shirley Highway Alexandria, Virginia 22314 Attn.: A. Scurlock
81.	Beech Aircraft Corporation Boulder Division Box 631 Boulder, Colorado Attn.: J. H. Rodgers
82.	Bell Aerosystems Company P. O. Box 1 Buffalo, New York 14240 Attn.: W. M. Smith
83.	Bendix Systems Division Bendix Corporation 3300 Plymouth Road Ann Arbor, Michigan Attn.: John M. Brueger
84.	Boeing Company P. O. Box 3707 Seattle, Washington 98124 Attn.: J. D. Alexander
85.	Missile Division Chrysler Corporation P. O. Box 2628 Detroit, Michigan 48231 Attn.: John Gates
86.	Wright Aeronautical Division Curtiss-Wright Corporation Wood-Ridge, New Jersey 07075 Attn.: G. Kelley
87.	Missile and Space Systems Division Douglas Aircraft Company, Inc. 3000 Ocean Park Boulevard Santa Monica, California 90406 Attn.: R. W. Hallet Chief Engineer, Advanced Space Tech.
88.	Aircraft Missiles Division Fairchild Hiller Corporation Hagerstown, Maryland 10 Attn.: J. S. Kerr
89.	General Dynamics/Astronautics P. O. Box 1128 San Diego, California 92112 Attn.: Frank Dore Library & Information Services (128-00)
90.	Re-Entry Systems Department General Electric Company 3198 Chestnut Street Philadelphia, Pennsylvania 19101 Attn.: F. E. Schultz

DISTRIBUTION (Continued)

Copy No.	Transmitted to
91.	Advanced Engine & Technology Dept. General Electric Company Cincinnati, Ohio 45215 Attn.: D. Suichu
92.	Grumman Aircraft Engineering Corp. Bethpage, Long Island New York Attn.: Joseph Gavin
93.	Ling-Temco-Vought Corporation Astronautics P. O. Box 5907 Dallas, Texas 75222 Attn.: Warren C. Trent
94.	Lockheed-California Company 2555 North Hollywood Way Burbank, California 91503 Attn.: G. D. Brewer
95.	Lockheed Missiles and Space Company P. O. Box 504 Sunnyvale, California 94088 Attn.: Y. C. Lee Technical Information Center
96.	Lockheed Propulsion Company P. O. Box 111 Redlands, California 92374 Attn.: H. L. Thackwell
97.	Baltimore Division Martin-Marietta Corporation Baltimore, Maryland 21203 Attn.: John Calathes (3214)
98.	Denver Division Martin-Marietta Corporation P. O. Box 179 Denver, Colorado 80201 Attn.: J. D. Goodlette (A-241)
99.	McDonnell Aircraft Corporation P. O. Box 516 Municipal Airport St. Louis, Missouri 63166 Attn.: R. A. Herzmark
100.	Space & Information Systems Division North American Aviation, Inc. 12214 Lakewood Boulevard Downey, California 90241 Attn.: H. Storms
101.	Rocketdyne North American Aviation, Inc. 6633 Canoga Avenue Canoga Park, California 91304 Attn.: E. B. Monteath Library, 586-306
102.	Northrop Space Laboratories 3401 West Broadway Hawthorne, California Attn.: Dr. William Howard
103.	Astro-Electronics Division Radio Corporation of America Princeton, New Jersey 08540 Attn.: S. Fairweather
104.	Reaction Motors Division Thiokol Chemical Corporation Denville, New Jersey 07832 Attn.: Arthur Sherman
105.	Republic Aviation Corporation Farmingdale Long Island, New York Attn.: Dr. William O'Donnell
106.	Space-General Corporation 9200 East Flair Avenue El Monte, California 91734 Attn.: C. E. Roth
107.	Stanford Research Institute 333 Ravenswood Avenue Menlo Park, California 94025 Attn.: Lionel Dickinson
108.	Space Technology Laboratories TRW Incorporated One Space Park Redondo Beach, California 90278 Attn.: G. W. Elverum
109.	TAPCO Division TRW, Incorporated 23555 Euclid Avenue Cleveland, Ohio 44117 Attn.: P. T. Angell
110.	Thiokol Chemical Corporation Huntsville Division Huntsville, Alabama Attn.: John Goodloe
111.	Research Laboratories United Aircraft Corporation 400 Main Street East Hartford, Connecticut 06108 Attn.: Erle Martin
112.	United Aircraft Corporation Pratt and Whitney Aircraft Division East Hartford, Connecticut 06108 Attn.: W. Sens
113.	United Aircraft Corporation Pratt and Whitney Aircraft Division Florida Research and Development Division West Palm Beach, Florida 33401 Attn.: R. Coar