[redacted]

CLASSIFICATION CHANGE

To Unclassified
By authority of E.O. 11652
Changed by D. L. Merrill Date 12/31/74
Classified Document Master Control Station, NASA
Scientific and Technical Information Facility

T/W

[redacted]

FACILITY FORM 602

(ACCESSION NUMBER) (THRU)

[redacted]

(NASA CR OR TMX OR AD NUMBER) (CATEGORY)

(UNCLASSIFIED TITLE)

A STUDY OF COMPOSITE PROPULSION SYSTEMS FOR ADVANCED LAUNCH VEHICLE APPLICATIONS

CLASS 1 ENGINE INFORMATION

VOLUME 6

SEPTEMBER 1966 REPORT NO. 25,194

PREPARED UNDER NATIONAL AERONAUTICS AND SPACE ADMINISTRATION CONTRACT NAS7-377

THE MARQUARDT CORPORATION

ROCKETDYNE

LOCKHEED-CALIFORNIA COMPANY [redacted]

[redacted]

[redacted]

[redacted]

[redacted]

[redacted]

[redacted]

[redacted]

THE Marquardt VAN NUYS, CALIFORNIA

CLASS 1 ENGINE INFORMATION

A STUDY OF COMPOSITE PROPULSION SYSTEMS FOR ADVANCED LAUNCH VEHICLE APPLICATIONS

[U]

VOLUME SIX

Report 25,194

Contract NAS7-377

The Marquardt Corporation
Van Nuys, California

September 1966

This document contains information affecting the national defense of the United States within the meaning of the Espionage Laws, Title 18, U.S.C. Section 793 and 794, the transmission or revelation of which in any manner to an unauthorized person is prohibited by law.

~~DOWNGRADED AT 3 YEAR INTERVALS; DECLASSIFIED AFTER 12 YEARS DOD DIR 5200.10~~

[redacted]

[redacted]

FOREWORD

This report constitutes a portion of the final report documentation under Contract NAS7-377. This and two companion reports (Refs. 1 & 2) present general engine data derived from the study which are organized to facilitate their incorporation into concurrent and subsequent advanced systems studies.

Covered here are the Class 1 Engines (twelve in number), studies in the program's mid-phase. More complete study results concerning these engines, including such areas as subsystem design trade-off studies and overall vehicle/mission analyses, are given in the main body of the project report (Ref. 3).

The present volume is one of seven in the total published study documentation. Its orientation in the report sequence is shown below:

Volume 1	Summary Report
Volume 2	Main Technical Report, Part 1
Volume 3	Main Technical Report, Part 2
Volume 4	Class 0 Fact Sheets, Part 1
Volume 5	Class 0 Fact Sheets, Part 2
→ Volume 6	Class 1 Engine Information
Volume 7	Class 2 Engine Information

ACKNOWLEDGEMENT

This report results from the contributions of the following Marquardt Science and Technology Group personnel under NASA Contract NAS7-377:

W. J. D. Escher
B. J. Flornes
W. R. Hammill
J. J. Kuhlmeier
C. R. Orr
A. F. Truitt

Acknowledgement is extended to C. H. Carlson and R. E. Brewster of Marquardt's Product Operations Group who generated the supersonic combustion ramjet (SCRAMJET) performance data incorporated in this report.

The contributions of R. E. Morris, Lockheed California Company, in the area of inlet specification and installed ramjet analysis is also gratefully acknowledged. The assistance of Lockheed was received via Marquardt subcontracts under Contract NAS7-377.

TABLE OF CONTENTS

	Page
PREFACE	1
INTRODUCTION	2
General	2
Selected Class 1 Engines	4
Scope and Content of the Report	15
GENERAL REFERENCE DATA	17
Summary	17
Reference Data	18
Legend and Nomenclature	31
References	34
CLASS 1 ENGINE INFORMATION	
Ejector Ramjet, Engine No. 9	35
Ejector SCRAMJET, Engine No. 10	54
Supercharged Ejector Ramjet, Engine No. 11	69
Supercharged Ejector SCRAMJET, Engine No. 12	93
RamLACE, Engine No. 21	99
ScramLACE, Engine No. 22	117
Recycled RamLACE, Engine No. 23	123
Recycled ScramLACE, Engine No. 24	141
Supercharged RamLACE, Engine No. 29	147
Supercharged ScramLACE, Engine No. 30	174
Recycled Supercharged RamLACE, Engine No. 31	180
Recycled Supercharged ScramLACE, Engine No. 32	207

LIST OF MAIN REFERENCE ILLUSTRATIONS

		Page
1.	Class 1 Systems - Ejector Ramjet Family (4 Engines)	11
2.	Class 1 Systems - RamLACE Family (8 Engines)	13
3.	Mach Number/Velocity Conversion Chart	18
4.	Engine Station Designation and Nomenclature	19
5.	Conceptual Design Drawing - Supercharged RamLACE, Engine No. 29 (Non-SCRAMJET)	21
6.	Conceptual Design Drawing - Supercharged ScramLACE, Engine No. 30 (SCRAMJET)	23
7.	Inlet Contours - Mach 8 and Mach 12 Capability	24
8.	Inlet Mechanization	25
9.	Inlet Pressure Recovery Characteristics - Mach 8 Capability Inlet	26
10.	Capture Area Characteristics - Mach 8 Capability Inlet	27
11.	Inlet Pressure Recovery Characteristics - Mach 12 Capability Inlet	28
12.	Capture Area Characteristics - Mach 12 Capability Inlet	29

PREFACE

This report comprises a major portion of the technical results of the Class 1 study phase of NASA Contract NAS7-377, "A Study of Composite Propulsion Systems for Advanced Launch Vehicle Applications". This phase of the program was Task III (of four) of the contract work statement

Composite cycle launch vehicle engines, as defined for this study, are single integrated propulsion systems which are comprised of both rocket (liquid-propellant) and airbreathing subsystems, e.g., primary bipropellant combustors, inlets. To date this type of powerplant has received little systematic study wherein common ground rules are employed to judge the possible merits of the large number of candidate engines.

The potential advantages offered by the more attractive composite systems in advanced (reusable) vehicles include the following points: high payload performance (exceeds the advanced rocket, roughly equals the turbomachine-type airbreather), high operational flexibility across the reusable-cycle mission profile, ease of development in terms of the indicated major facility requirement for competing pure-airbreathing engines (composite engines can be segmented to fit existing or planned ground test facilities which provide high simulated Mach number airflow capability).

It is the objective of the study to (1) appraise this potential for advanced, reusable launch vehicle applications, and (2) provide technical guidance for initiating possible research and development efforts directed toward the ultimate creation of these systems. The study included consideration of both single and multistage vehicles, for earth-orbit payload delivery. The study concentrated on launch vehicles in the 1,000,000 pound gross weight class which operate on hydrogen/oxygen propellants. In general, the study was directed toward propulsion system first availability in the period 1975-1985 and full mission-cycle propulsion requirements from lift-off to landing was considered. The principal performance criteria for engine ranking purposes was payload-in-orbit to gross weight ratio. Other criteria were, however, brought into play as appropriate.

Marquardt, prime contractor, Rocketdyne and Lockheed are associated in this analytical and design study effort. The study extended over nine (9) months with a final report (of which the present report is Volume 6 of seven) submitted for distribution February 1967.

INTRODUCTION

GENERAL

This report is the second in a series of three, which specifically present engine information derived from the NASA-contracted study, "A Study of Composite Propulsion Systems for Advanced Launch Vehicle Applications" (NAS7-377). The three reports (the other two are Refs. 1 and 2) are associated with the three chronological phases of the study and comprise varying numbers of engine concepts and various degrees of technical penetration as follows:

Report Order	Associated Study Phase	Number of Engines Included	Technical Penetration
1 (Ref. 1)	Class 0	36	Overall System Analysis only, performance on three (3) reference trajectories based on "ideal" inlet, important parameters "bracketed" only
2 (This Report)	Class 1	12	Included subsystem considerations, performance presented in map form, based on realistic inlets, conceptual designs made, important engine variables exercised parametrically
3 (Ref. 2)	Class 2	2	Effect of varying subsystem and component efficiencies and operational points assessed, performance maps broadened and refined, detailed conceptual designs rendered based on vehicle-stipulated sizing parameters, approaches for structural and thermal design and engine control investigated.

The purpose of this report series, issued as a major portion of the study's final report documentation, is to make available the Study-generated engine data spec-

ifically arranged to facilitate its use in subsequent propulsion and vehicle analysis efforts. The resulting performance analyses and design synthesis, though generated specifically to accomplish the immediate goals of the study:

- To assess the potential of composite engines
- To appraise the technological implications of composite engines

can in this way serve a broader purpose:

- To provide a systematically documented base of technical information concerning composite engines.

To this end the present report presents working information on twelve (12) engine concepts taken from the initial candidate listing of 36 concepts treated in Reference 1.

The next section will describe the engines included. Following this, a brief orientation and guide to the report itself is given.

SELECTED CLASS 1 ENGINES

Of the thirty-six (36) engines originally ordered within the Class 0 phase study (Ref. 1), twelve (12) were selected for further study as Class 1 systems. These twelve (12) systems can be viewed as variations about a single "parent" multimode composite engine concept; the afterburning cycle, air augmented rocket/ramjet system:

SELECTED CLASS 1 ENGINES

(12 SELECTED FROM 36 CANDIDATES)

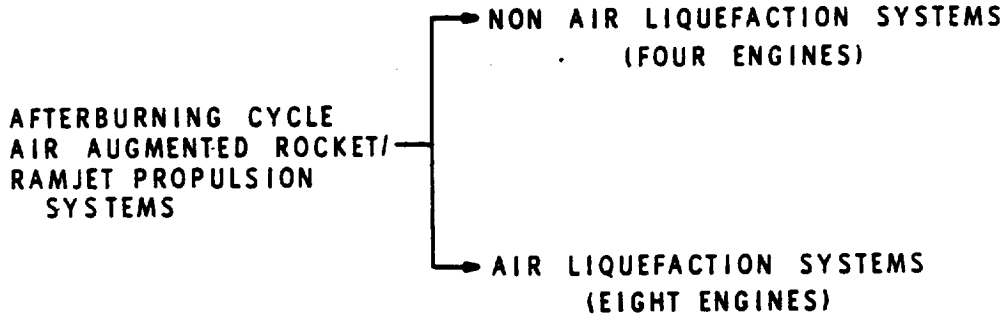

The basic split shown is that of higher performance air liquefaction systems versus the somewhat simpler non-air liquefaction systems which effects a grouping of eight (8) and four (4), respectively. Both sub-families are represented in previous engine types studied by The Marquardt Corporation in the guise of lightweight, efficient acceleration and cruise aircraft powerplants. These are the Ejector Ramjet systems (non-air liquefaction) and the RamLACE systems (air liquefaction). Before describing in further detail the Class 1 engines, it is instructive to review the characteristics and configurations of the Ejector Ramjet and the RamLACE engines.

Ejector Ramjet Cycle

The Ejector Ramjet is a multimode composite powerplant which transists from low speed operation as an advanced air augmented rocket to ramjet operation at the point where ramjet takeover is possible along a given trajectory. The engine comprises an inlet, a primary rocket assembly, a mixer-diffuser, a combustor and a supersonic exit nozzle.

EJECTOR RAMJET CYCLE

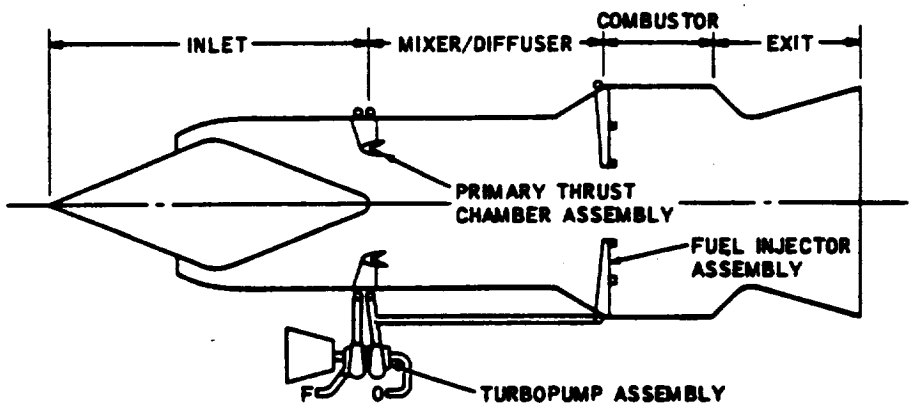

The afterburning cycle utilized in the Ejector Ramjet is characterized by separate rocket/air mixing, diffusion and then full afterburning of fuel with the oxygen in the air. The basic geometry associated with this cycle is as shown and a stoichiometric primary system is specified. The thermodynamic cycle advantage of this configuration over the somewhat simpler simultaneous mixing and combustion system is discussed in the main report (Ref. 3).

As stated, the Ejector Ramjet system as previously studied by Marquardt is directed at hypersonic acceleration and cruise propulsion, that is, systems applicable to high performance aircraft. A typical conceptualization of the Ejector Ramjet hardware arrangement (Hydrocarbon Fuel) is presented on the facing page.

The engine is shown here without the air induction system as typically is done for turbine-type powerplants. As evidenced, the engine is a fundamentally simple device whose lightweight installation potential makes up for its modest low speed flight performance as compared to competing turbojet-type devices (its static performance is superior to a rocket). Mission studies have in fact shown the Ejector Ramjet to compete effectively with conventional turbine systems in terms of payload and range.

MACH 5.0 EJECTOR RAMJET

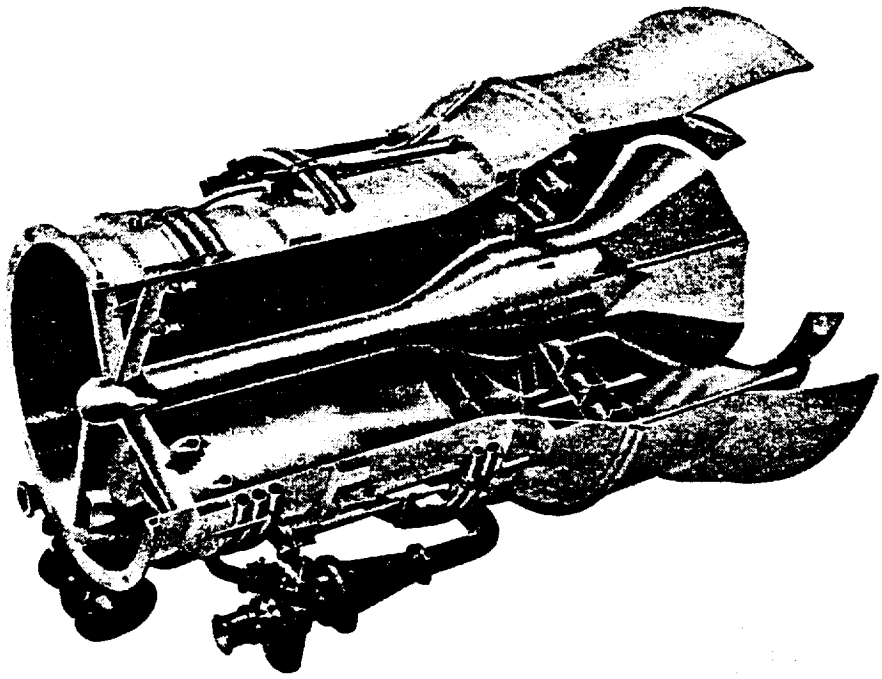

RamLACE Cycle

The RamLACE engine is schematically similar to the basic Ejector Ramjet. The one prominent item that has been added is the air liquefaction heat exchanger subsystem. The RamLACE system can, in fact, be viewed as a basic Ejector Ramjet in which the rocket primary system has been replaced by a special version of a liquid air cycle engine primary system.

RAM-LACE CYCLE

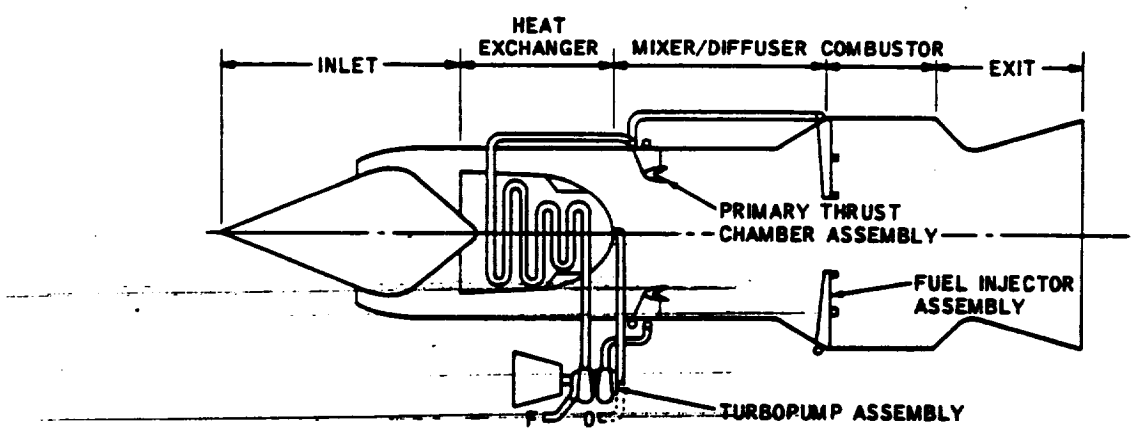

The heat exchanger subsystem effects the pre-cooling and liquefaction of atmospheric air by virtue of the refrigerative capacity of the liquid hydrogen fuel. As a result, high specific impulse performance is achieved in the cycle since only the flow rate of hydrogen is assessed against the thrust produced, the air being taken aboard and processed along the trajectory. Like the Ejector Ramjet, the RamLACE engine converts to full ramjet operation at the higher speed conditions. Technical considerations which dictate the switchover point, are, however, noticably different.

Although there are significant thermodynamic and hardware differences between the primary rocket subsystem of RamLACE and the basic LACE (Liquid Air Cycle Engine) system, it is pertinent to review a typical example of the latter as a point of departure. The basic liquid air cycle engine, it will be recalled, is fundamentally an airbreathing rocket with no jet compression type augmentation.

MA70-XAA
LIQUID AIR CYCLE ENGINE

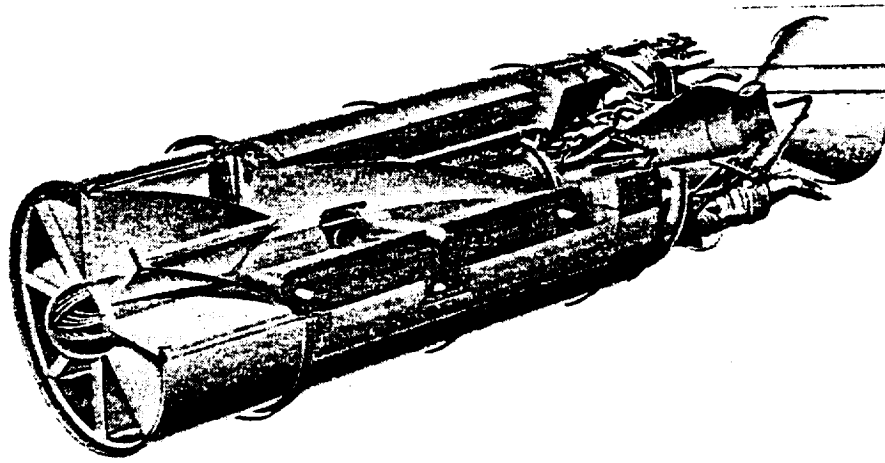

The basic LACE engine as investigated previously by Marquardt (small scale firing tests were conducted) includes a heat exchanger group, and in the illustration above, this comprises a liquid air regenerator, a precooler and condenser (left to right). Along with this are the necessary turbopump and controls which feed and control combustion in the rocket type thrust chamber at the aft end of the engine. The basic LACE typically achieves performance of 1000 seconds at sea level static conditions, a value which gradually decreases over the flight Mach number regime toward a conventional rocket level impulse (→450 secs) at the hypersonic flight speed condition. As will be seen the RamLACE cycle offers significantly superior performance trends.

When used in the RamLACE engine, the basic LACE unit is operated in a significantly different manner. The prime difference results from the stipulation that the combustion in the high pressure primary occurs at the stoichiometric condition (to preclude combustion during mixing) as opposed to being significantly fuel-rich as is the case in basic LACE. The fundamental limitation here is the amount of liquid hydrogen required in a practical version of a heat exchanger to liquify the air. In LACE, this results in excess fuel in the cycle (relative to stoichiometric) and accounts for the modest performance achieved.

However, in RamLACE, this "excess" fuel is combusted in the afterburner of the engine. Typically, this provides a significantly less fuel-rich overall engine operating condition. A resulting increase in specific impulse over basic LACE, from roughly 1000 seconds to 1500 seconds results. A further reduction in fuel richness is possible through the use of subcooled hydrogen in a recycle mode. As will be seen, this operating technique, resulting in further specific impulse gains, is represented in certain of the Class 1 engines, viz. Nos. 23, 24, 31, and 32.

As is the case of the Ejector Ramjet, RamLACE has also been previously studied exclusively for high performance cruise aircraft missions. As compared to the hydrogen-fueled turboramjet type engines, the lightweight RamLACE engine has appeared as a highly competitive powerplant concept. Remarks concerning the relative standing of RamLACE and more conventional airbreathing engines are made in the main report (Ref. 3).

Derivative Class 1 Engines

In review, then, eight of the Class 1 engines are in the RamLACE family. The remaining are Ejector Ramjet cycle derivatives. Again, the point is made that the present study is the first formal appraisal of this entire family of powerplants for launch vehicle applications exclusively.

The basic parent cycles of the Ejector Ramjet and the RamLACE engines are included in the Class 1 selected engines as Engine No. 9 and 21, respectively. The remaining ten engines, then, represent derivatives of these basic cycles. These derivatives result from the inclusion of additional hardware items and/or operating mode capability over and above those associated with the basic cycle. Three items in all are involved to achieve these "further developed" versions of the parent engine types.

1. Supersonic combustion ramjet mode (SCRAMJET). (The parent engines are limited to subsonic burning ramjet mode.)

2. Low pressure ratio mechanical supercharging (addition of a simple, stowable low-blockage fan).

The final engine within the Ejector Ramjet family is Engine No. 12 which combines the supersonic combustion mode and fan supercharging. This engine, while offering somewhat more complexity in hardware and operating mode aspects, offers a maximum of performance and operational flexibility for the Ejector Ramjet cycle within the launch vehicle application context.

RamLACE Cycle Derivatives

The remaining eight (8) powerplant concepts being carried in the Class 1 studies are based on the RamLACE cycle discussed earlier. Figure 6 presents a collection of schematics for this family grouping arranged similarly to that of Figure 2. The additional engine combinations shown here result directly from the availability of the recycle hydrogen mode operation previously discussed. These eight engines again represent the basic cycle and the various perturbations possible.

Engine No. 22 is the SCRAMLACE cycle and is analogous to the Ejector SCRAMJET. Again, it provides further hypersonic penetration of the engine in an air-breathing mode via SCRAMJET operation.

The recycle hydrogen mode RamLACE (Engine No. 23) offers a significantly increase in specific impulse over the basic cycle (upward of 2500 seconds as compared to 1500 seconds). As indicated, this is achieved by running the overall engine cycle much more nearly stoichiometric and thereby increasing performance over the intrinsic (hardware limitation) fuel-rich operation in RamLACE. This improvement is achieved by calling upon the additional refrigerative capability of slush hydrogen at approximately 25°R (as compared to 36°R normal boiling hydrogen) which affords, in the vehicle propellant tank, a significant additional heat sink. With a recycle loop, a larger quantity of hydrogen can be taken through the condenser for air liquefaction purposes, part of which is then returned to the tank and recooled by means of this refrigerant sink. The remainder of the hydrogen then is combusted in the afterburner, after passing through the precooler. It may be noted that there is a significantly increased precooler hardware size associated with recycle operation. One or more turbine expanders can be incorporated in the hydrogen circuit to increase overall performance and reduce weight of the heat exchanger assembly.

Engine No. 29 comprises the fan addition to RamLACE. There are similar supercharging advantages here as described for the fan Ejector Ramjet system plus end-of-mission loiter capability benefit. Still another potential fan advantage occurs in this engine in that the fan pressurized air passing into the heat exchanger (an option) permits a significant reduction in the heat exchanger hardware as compared to the "non-blown" engine. There is a resulting trade-off in fan and heat exchanger sizing and weight.

CLASS 1 SYSTEMS — RAMLACE FAMILY (8 ENGINES)

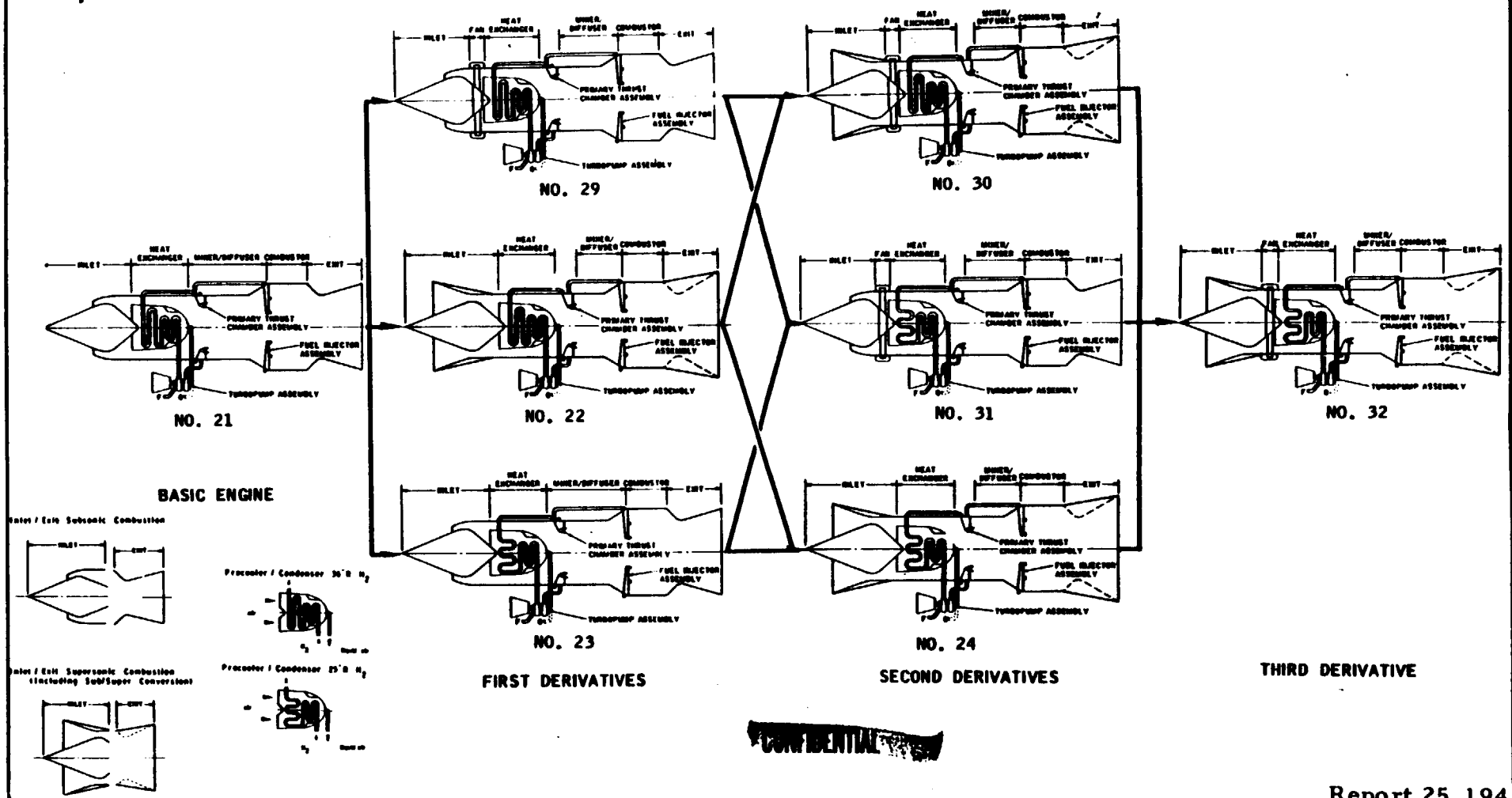

R-20,776

3. The use of subcooled tanked hydrogen (slush) and recycle operation (applies to the RamLACE family, only).

A brief technical review of the Class 1 engines, including their physical make-up and their operating modes, will now be given.

Ejector Ramjet Cycle Derivatives

Figure 1 presents schematics of the four (4) non air-liquefaction composite engines which were carried in the Class 1 study phase. Note the basic cycle as already described to the left on the figure. The first derivative engines, so-called, are the SCRAMJET versions of the engine, sometimes referred to as Ejector SCRAMJET, and the fan version, termed the Supercharged Ejector Ramjet (SERJ). By compounding both of these variations, a second derivative engine is evolved involving fan operation and supersonic combustion ramjet mode availability. This engine, No. 12, could be termed a Supercharged Ejector SCRAMJET.

With the previous discussion of the Ejector Ramjet operation in mind, the Ejector SCRAMJET (Engine No. 10) operates in an identical fashion into the ramjet mode with the exception that a conversion to supersonic burning takes place extending the air-using range of the basic powerplant well beyond Mach 6 to 8. This progression from subsonic burning to supersonic burning ramjet operation is conventionally referred to as a "dual mode" or "convertible" ramjet. Mission studies conducted in Class 0 have revealed the high payoff of such SCRAMJET mode operation for orbital payload increases.

Engine No. 11, the supercharged cycle, provides two fundamental benefits over the basic cycle:

1. Fan supercharging increases the low speed specific impulse by 20% to 30% and offers the further possibility of throttling down earlier (i.e. at a lower flight speed) the low specific impulse producing primary rocket system. Also a "fan ramjet" mode (rockets off) is an important attribute of this engine.

2. The availability of the fan operating within the duct alone (no burning) offers a very high performance relatively low thrust, low speed flyback and loiter capability.

Again, studies have indicated that where a loiter and landing requirement is stipulated, there is a significant operational flexibility advantage in the fan mode operation. During the high speed operation of a fan engine, techniques for removing the fan from the basic engine internal flow area have been under consideration. It is expected that such fan stowage can be accomplished at a minor weight and operational complexity penalty.

CLASS 1 SYSTEMS - EJECTOR RAMJET FAMILY (4 ENGINES)

[redacted]

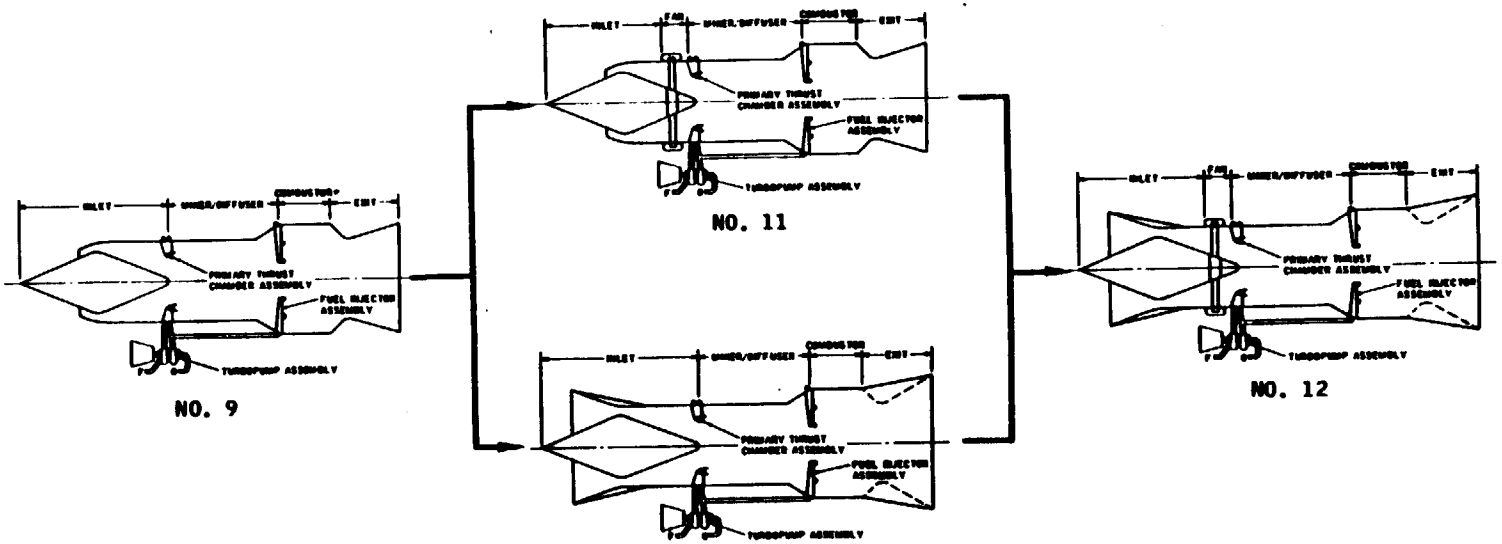

BASIC ENGINE

FIRST DERIVATIVES

SECOND DERIVATIVE

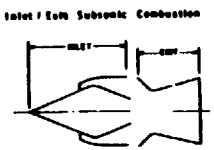

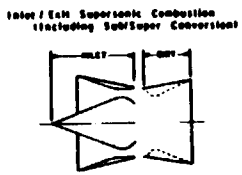

[redacted]

Report 25,194
Volume 6
Figure 1
Page 11

R-20,775

From the discussion above of first derivative engines, the origins and make-up of the second derivative three engines, namely Nos. 24, 31, and 30, are already apparent. The so-called third derivative engine, No. 32, comprises all combinations discussed before, again offering a powerplant with a higher degree of complexity in terms of both its physical make-up and its operation which provides maximum operational flexibility and specific impulse performance potential.

SCOPE AND CONTENT OF THE REPORT

As stated, this report includes a separate section for each of the twelve (12) engine concepts described above. The original numerical coding assigned to these engines as candidates (Class 0 Phase, Ref. 1) is retained for continuity, the engine sections appearing here in numerical order.

The orientation of the engine data presented herein is toward direct user processing for broad and diversified study activities. Performance, weight, physical envelope characteristics, operating mode availability, and other information of this genre is arranged here in a manner intended to promote effective assimilation of composite engine data by the reader. For this reason, the documentation of interpretative results of the engine data, e.g. mission application studies, is left in the main body of the report (Ref. 3). Similarly, discussions bearing on the trade-off studies leading to selection of engine design parameters, such as primary rocket chamber pressure, also remain in the main report, since - per se - these may not be of immediate utility to a systems analyst striving to assess the applicability of composite engines to his particular mission requirement.

Therefore, as appropriate, reference should also be made to the main body of the Study's final report documentation (Ref. 3). There the bulk of the parametric analysis which, for example, explore the effect of the internal design variables, is provided. Also the Study's vehicle integration and mission performance work is represented in these volumes.

The content of each of the twelve engine sections is as follows in the order indicated:

1. Engine description, name and identification number, and a brief verbal description.

2. Operating schematic diagram.

3. Engine design parameters for which the performance data and physical characteristics are based.

4. Engine operating mode block diagrams presented in order of utility in the launch mission profile.

5. Engine conceptual design layout reflecting general arrangement and external dimensions.

6. Engine physical characteristics tabulation: weights, flow areas, lengths.

7. Engine uninstalled thrust/weight ratio plotted as a function of design sea level, static thrust level for variations in maximum ramjet combustion pressure.

8. Ejector mode (or supercharged ejector mode) specific impulse, thrust and airflow maps reflecting the effect of vehicle flight speed and altitude. These maps are backed up by computer-generated tabular data.

9.* Fan-ramjet mode specific impulse and thrust maps.

10. Ramjet (subsonic combustion) specific impulse and thrust maps, including the effect of inlet air precompression (flow field).

11.* SCRAMJET (supersonic combustion) specific impulse and thrust data, including the effect of inlet air precompression (flow field). This information is presented for three reference trajectories which follow the performance curves.

12.* Fan (ducted) operation specific impulse and thrust maps, reflecting the effect of varying degrees of plenum burning.

In order to minimize duplication of data - hence, the physical size of this volume - cross referencing between engine sections has been freely employed. For example there are two (2) basic sets of ramjet performance data, one for engines not employing a subsequent SCRAMJET mode, the other for the higher speed SCRAMJET systems. Once each of these appears (engines 9 and 10), the maps are thereafter cited, not repeated, in subsequent engine sections.

Preceding the individual engine sections, and immediately following this section, a general reference section is provided which includes:

1. Mach Number/Velocity Conversion Chart

2. Engine Station Nomenclature Diagram, Standard Efficiencies

3. Engine Design Configuration Approaches, Non-SCRAMJET vs. SCRAMJET Mode Capability.

4. Inlet configurations, pressure recovery performance and capture area schedules for both Non-SCRAMJET and SCRAMJET systems.

5. Remarks and special notes

6. General nomenclature and legends

7. List of references

*Where applicable to the individual engines.

This Page Intentionally Blank

SUMMARY - GENERAL REFERENCE DATA

The purpose of this section as noted in the introduction is to provide technical information and general background material applicable to the twelve (12) specific engine sections to follow. Each of the items to be provided in this general section will be briefly discussed below.

Mach Number versus Flight Velocity Conversion Chart - Although the basic engine performance information to be presented in this report is given generally on the basis of flight velocity (ft/sec, m/sec), much of the general information as well as the intermediate data is most effectively and conveniently stated in terms of Mach number. A conversion plot is provided in Figure 3 to assist in approximate conversions of these two velocity terms. For more precise computations the use of appropriate tables, however, is recommended.

Engine Station Designation and Nomenclature - An installed engine schematic (Figure 4) is presented reflecting a typical composite engine of the Class 1 series. The several aerothermodynamically significant geometric stations employed in the engine general description, as well as in the performance computations, are called out in this figure. Also listed are standard combustion and nozzle efficiencies.

Design Configuration Approaches - Since the availability, or non-availability of a supersonic combustion operating mode for a given engine will strongly control the specific geometry selected for the powerplant design, a double display of configuration approaches is provided, appropriate to the Class 1 engine series. A detailed conceptual "parent" design was executed for both situations e.g. SCRAMJET and non-SCRAMJET. These are included as foldout drawings accompanied by descriptive texts (Figures 5 and 6).

Inlet Contours and Mechanization, Mach 8 and 12 Capability - Although the inlet design is not considered to be directly within the scope of the engine design analysis presented here, it was required that the inlet performance bases for the engine data be substantiated by a specific inlet design approach. To meet this requirement two cases were considered viz., non-SCRAMJET and SCRAMJET capability. A set of contours for a two dimensional moving panel type design were developed which correspond to the pressure recovery used, and are presented in this section as Figure 7. Also the physical mechanization of these contours by way of actuator placement, panel hinge points and pressure balance compartments was investigated. A conceptual drawing of a typical mechanization approach for satisfying this requirement is also included as Figure 8. Following these geometrical specifications the pressure recovery (Figures 9 and 11) and capture area characteristics (Figures 10 and 12) of these two (2) inlets over the Mach number regime of use are provided. These form the basis of the performance to be provided in the individual engine sections.

Legends, Nomenclature and References - Within the engine sections certain diagramatic conventions have been adopted and these are reflected in both schematic and tabular form in this section of the report. Also a nomenclature sheet is provided for all symbolic characters employed either in the presentation of the engine information, or in the computations supporting the performance provided. Finally a list of references is given at the end of this section.

FLIGHT VELOCITY - MACH NUMBER

U. S. STANDARD ATMOSPHERE, 1962

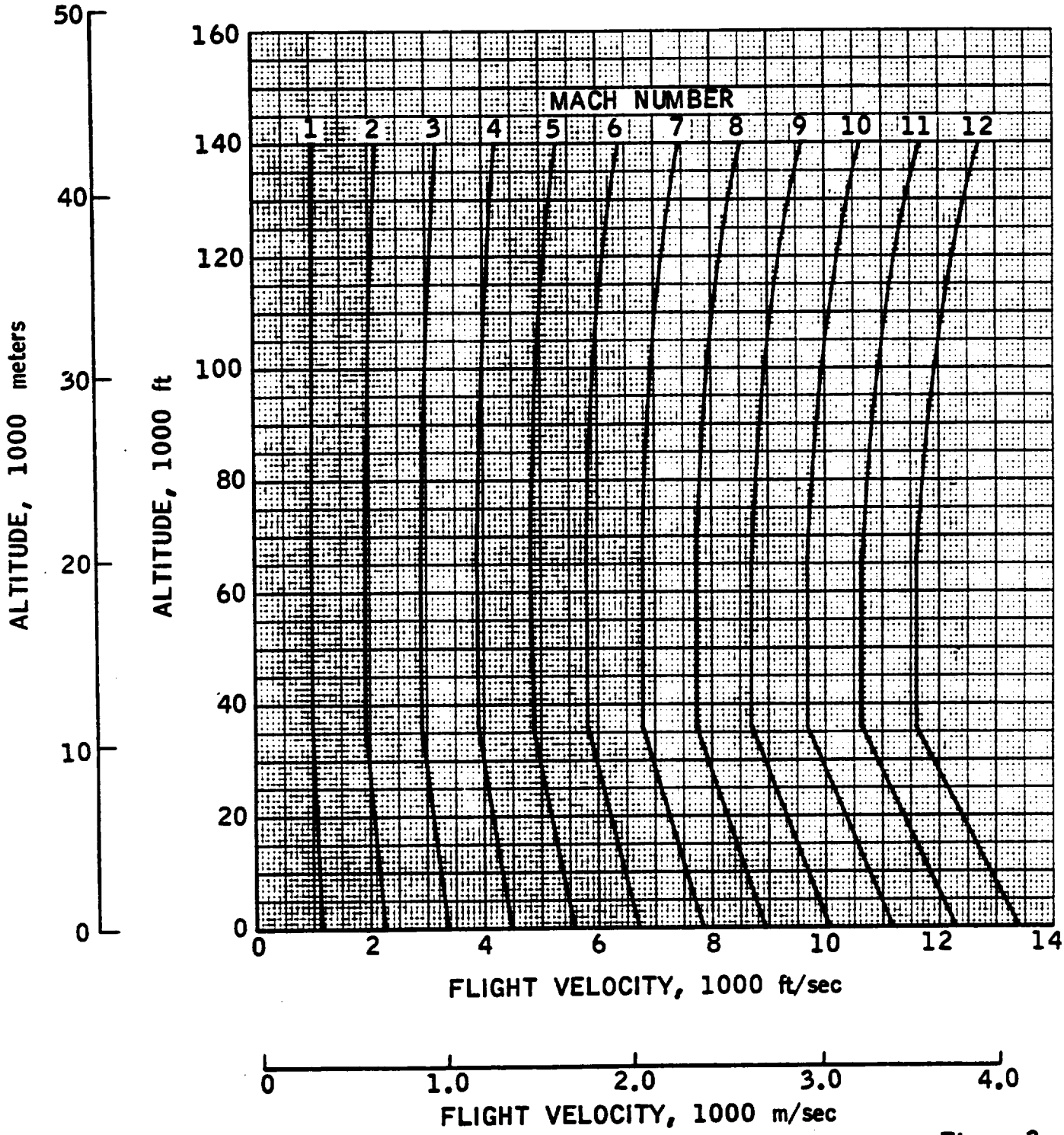

Figure 3

INSTALLED ENGINE STATION NOMENCLATURE

Figure 4

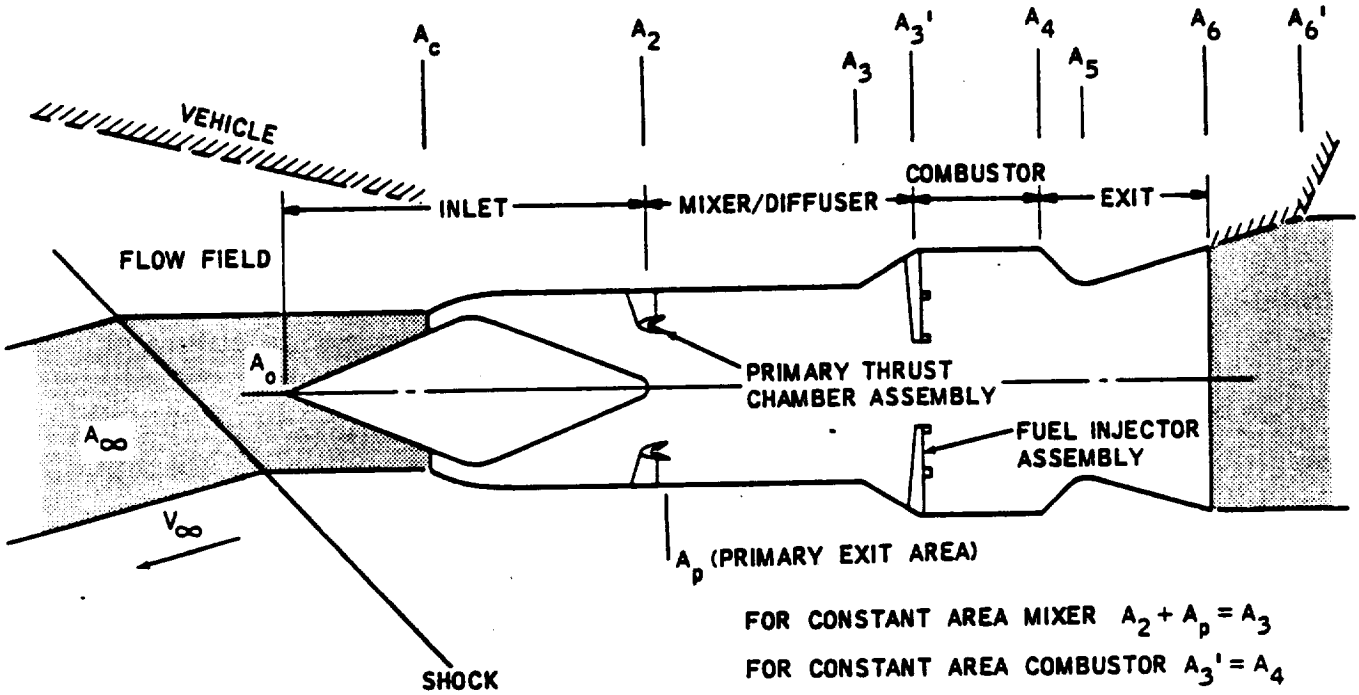

Standard Efficiencies: The following listed efficiencies have been used as baseline values for all engine performance computations:

Primary Rocket:
Combustion, $\eta_c^* = 0.975$

Nozzle, $\eta_N = 0.98$

Mixer:
Mixing, $\eta_M = 0.80$

Afterburner or Combustor:
Combustion $= 0.95$

Exit:
Nozzle, $\eta_N = 0.98$

DESIGN CONFIGURATION APPROACH

NON-SCRAMJET MODE ENGINES (6)

Presented here is a conceptual design drawing typifying the Class 1 Engines which do not employ a supersonic conbustion ramjet mode (Figure 5). In this case, the Supercharged RamLACE (Engine No. 29) was selected for the design exercise since it reflects essentially all of the various subsystems included in the basic engine derivatives, fan, heat exchanger - as well as the basic ejector and ramjet components. Thrust is 250,000 lb at sea level static conditions.

The engine, shown here uninstalled, is an axisymetric design, except for the air liquefaction equipment group. The single stage fan unit (pressure ratio: 1.3) is retracted at the end of the supercharged modes(below Mach 3; recall the tip-turbine fan processes only subsonic air flow). This is accomplished by hinging it forward and upward about trunnions through which the drive gas is transmitted from dual airbreathing gas generators.* Conceptually, the fan in its stowed position is covered with a cooled louvered panel which serves also to block off the heat exchanger from the inlet diffuser during high speed operation.

The exit nozzle design shown is an advanced concept based on an on-axis translating contoured ring. This unit forms dual concentric throats and expansion surfaces in conjunction with the fixed plug and the outer bell, respectively. The approach provides high nozzle efficiencies, full throat area variability, and provides altitude compensation during low speed operation.

The primary rocket section is shown as a double toroidal combustor with an "annular bell" throat and expansion surface. Combustion chamber pressure is 2000 psia for the non-liquefaction engines (single toroid), and 1000 psia for the air liquefaction systems, such as the engine shown here. The turbo-pump package (not shown) is mounted adjacent to the combustor but external to the engine flow passage.

The general approach displayed here applies to all of the Class 1 Engines which do not transist to SCRAMJET mode. These Engines, Nos. 9, 11, 21, 23, 29 and 31 are thereby limited to flight speeds below 6000 - 8000 ft/sec which they achieve in the subsonic combustion Ramjet mode.

*Although an alternative drive approach is available - a bipropellant gas generator system - the designs presented in this report are all based on airbreathing gas generator fan drives. See Reference 3 for a performance comparison of the two approaches.

[redacted]

NOTE: SEA LEVEL STATIC THRUST
250,000 LB_f - MACH 8
CAPABILITY

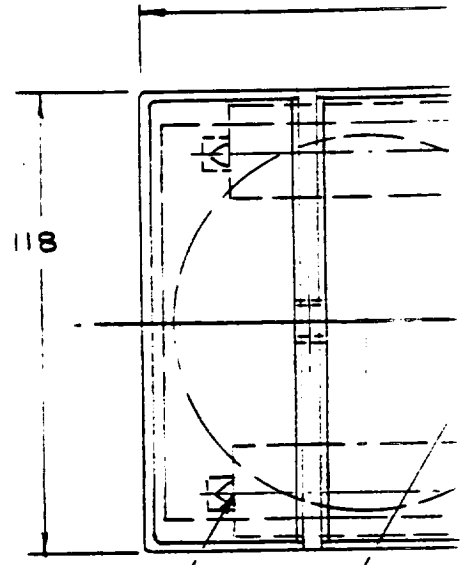

HEAT EX

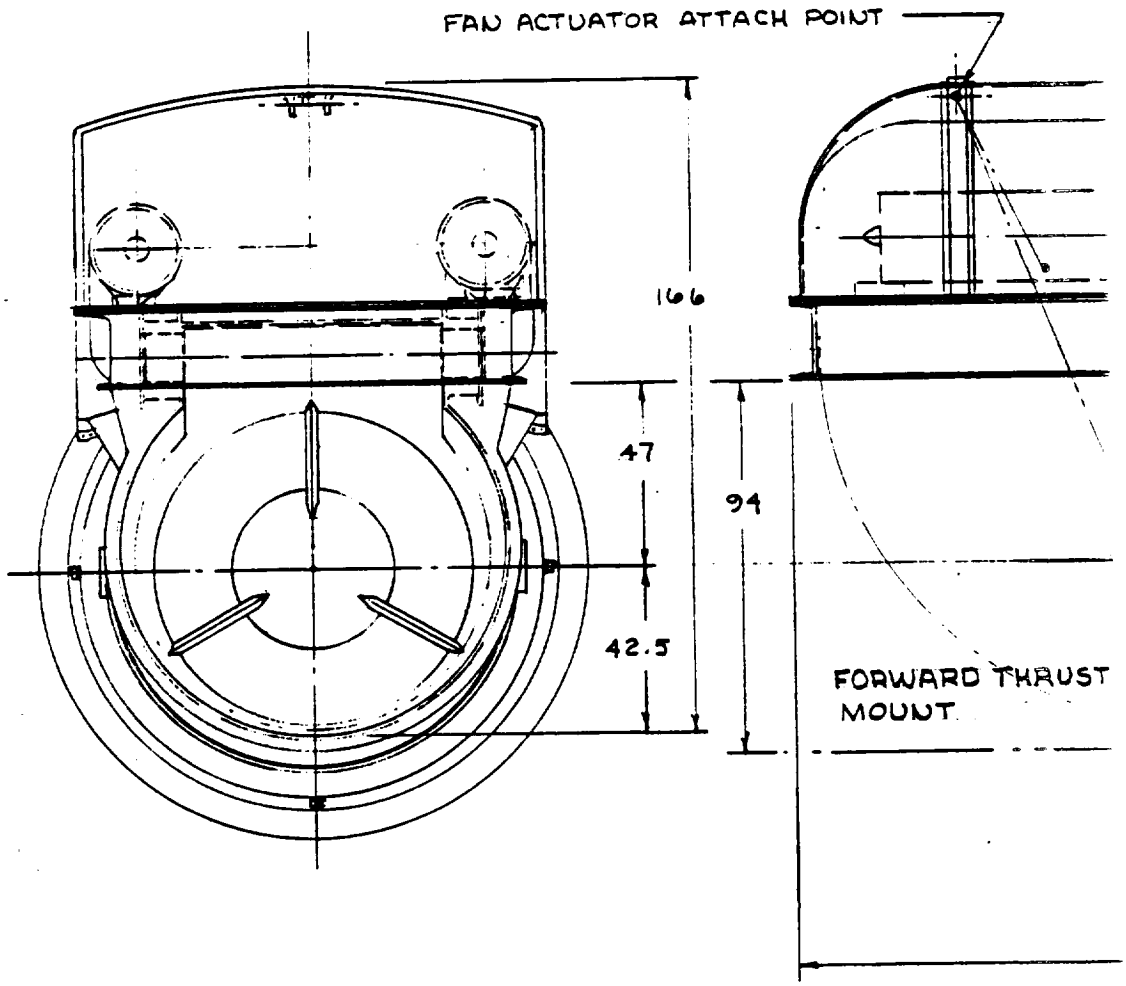

COMPOSI
CLAS
SUPERCHARGED

[redacted]

21-1

[redacted]

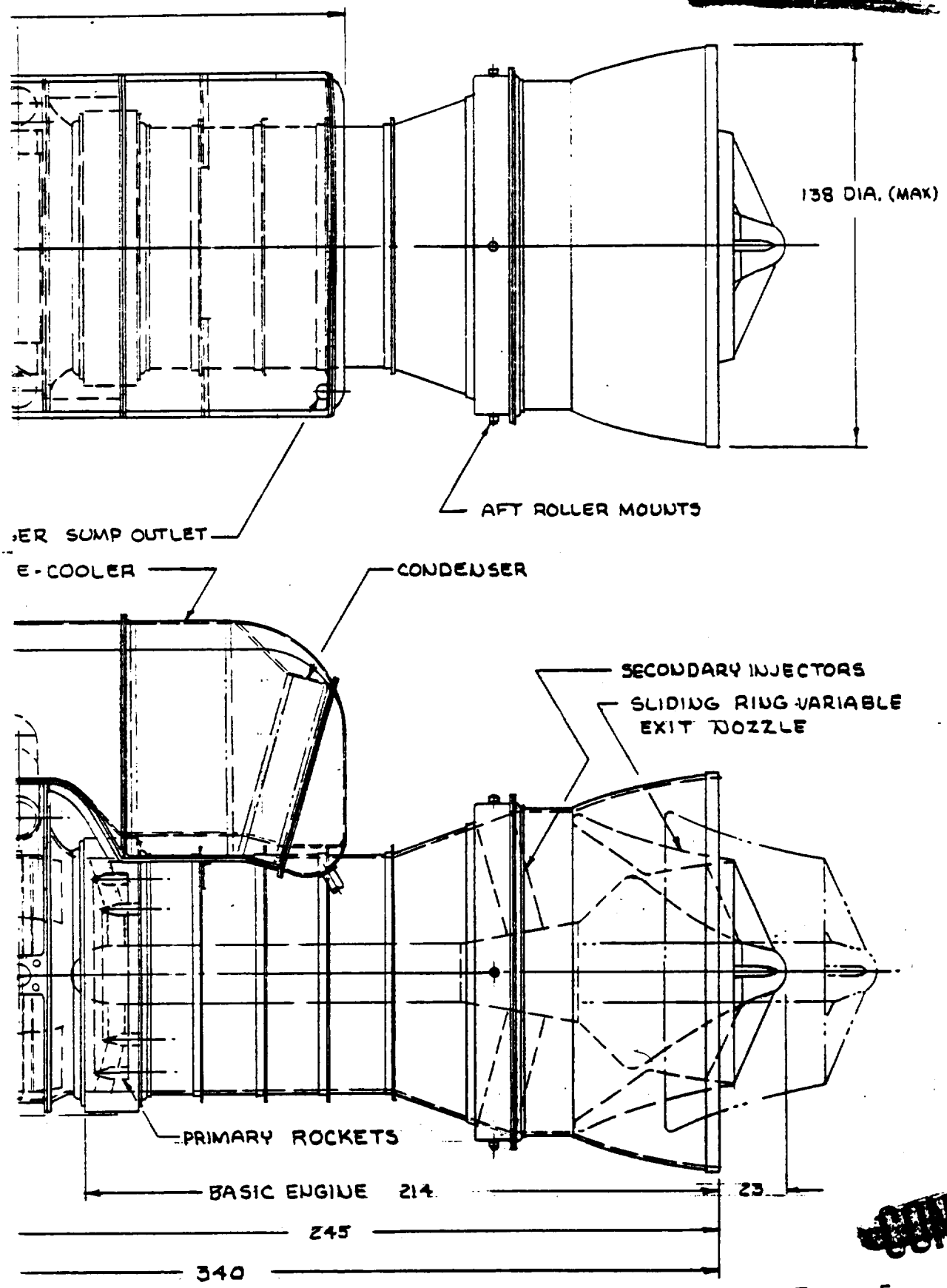

[redacted]

ENGINE STUDY
PHASE
ACE (ENGINE NO. 29)

Figure 5
Page 21

This Page Intentionally Blank

DESIGN CONFIGURATION APPROACH

SCRAMJET MODE ENGINES (6)

The facing conceptual design sketch (Figure 6) reflects the general approach used in laying out the Class 1 Engines which employ the SCRAMJET operating mode. The engine shown, a 250,000 lb-thrust (SLS) Supercharged ScramLACE (Engine No. 30), includes a fan subsystem and an air liquefaction heat exchanger unit, in addition to the basic engine throughput sections, mixer, afterburner, etc. To this extent the engine is identical in functional makeup to that previously shown, Engine 29.

SCRAMJET imposed geometry considerations require a significantly different approach in configuring the engine, however. In this instance the design moves toward a two-dimensional layout to achieve both, minimum discontinuity losses in contracting the supersonic airflow ahead of the combustor (fuel is injected at the primary rocket station), and maximum efficiency in expanding the post-combustion flow onto the vehicle aft underbody (not shown) for further expansion.

A major difference with reference to the previous conceptual drawing (Engine No. 29) is the transition from a circular mixer to a rectangular afterburner and exit. The throat area (A_5) variability requirement is handled in this case by opposed hinged panels, which in association with adjacent engine and vehicle-fixed panels provide the equivalent of an expansion-deflection exit nozzle. For the SCRAMJET mode these exit panels go to a full open position (shown).

As will be seen in the individual engine sections of this report, this conceptual approach is used as a basis for all of the SCRAMJET-mode Class 1 Engines, viz Nos. 10, 12, 22, 24, 30 and 32.

NOTE: The estimated engine weight statements which follow for the above six SCRAMJET-mode engines includes only the hardware items reflected in adjacent Figure 6. In particular the exit gas expansion surfaces (upper and lower) are considered installation-peculiar items and are not included - in the uninstalled engine estimates given. These must, of course, be included in any installation considerations.

[redacted]

NOTE:
SEA LEVEL STATIC THRUST = 250,000 LB_f
MACH 12 CAPABILITY

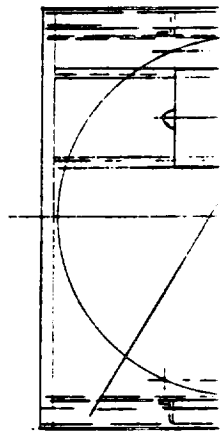

FAN DRIVE GAS GENERATOR

LOW PRESSURE RATIO FAN

HEAT EXCHANGE
REMOVED IN TC

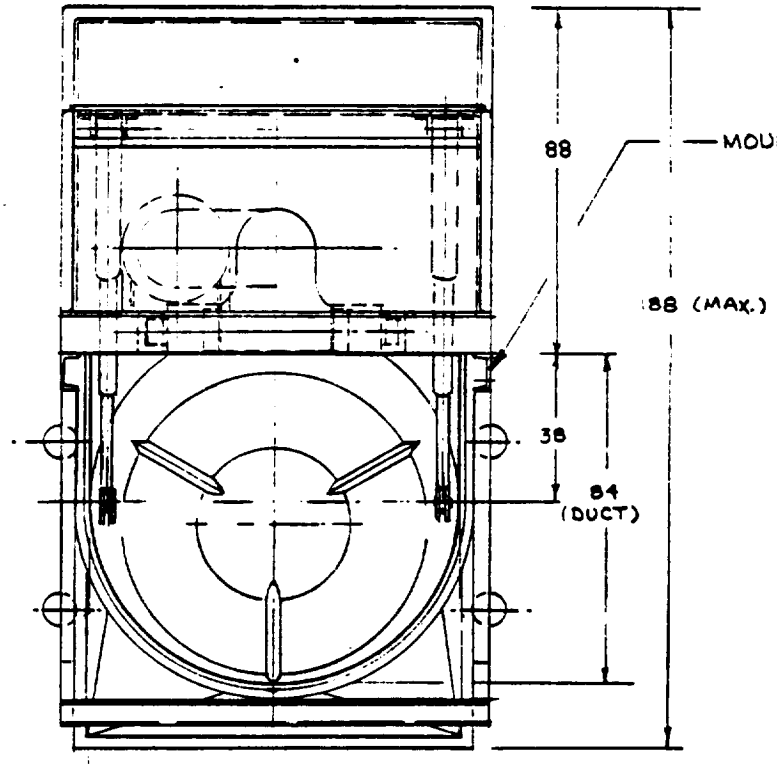

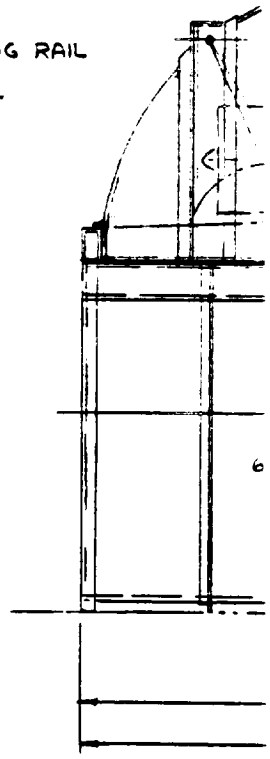

COMPOSITE ENGINE
CLASS 1 PHA
SUPERCHARGED SCRAMLA

23-1

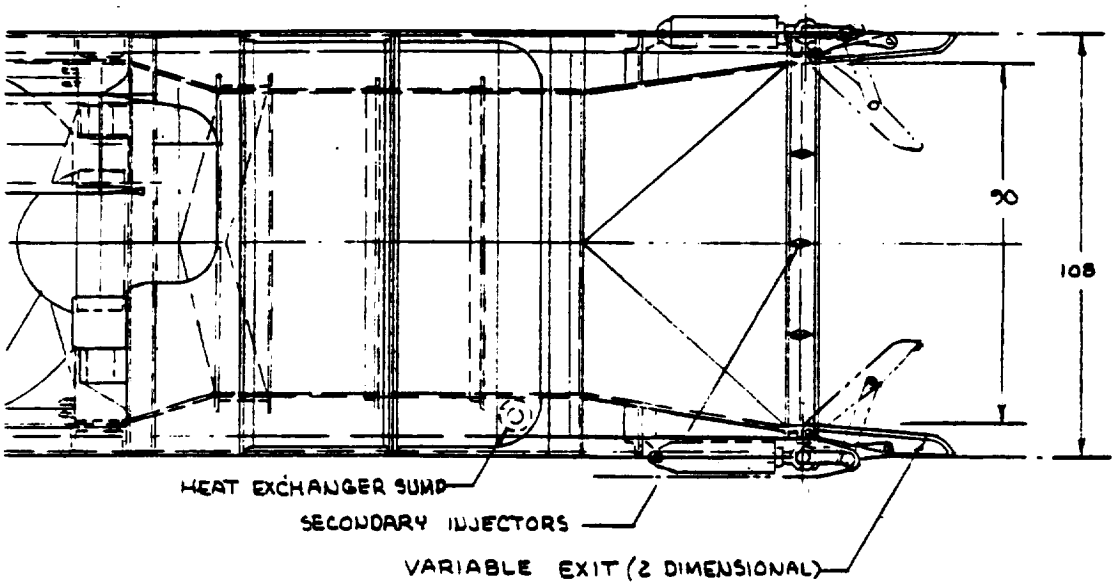

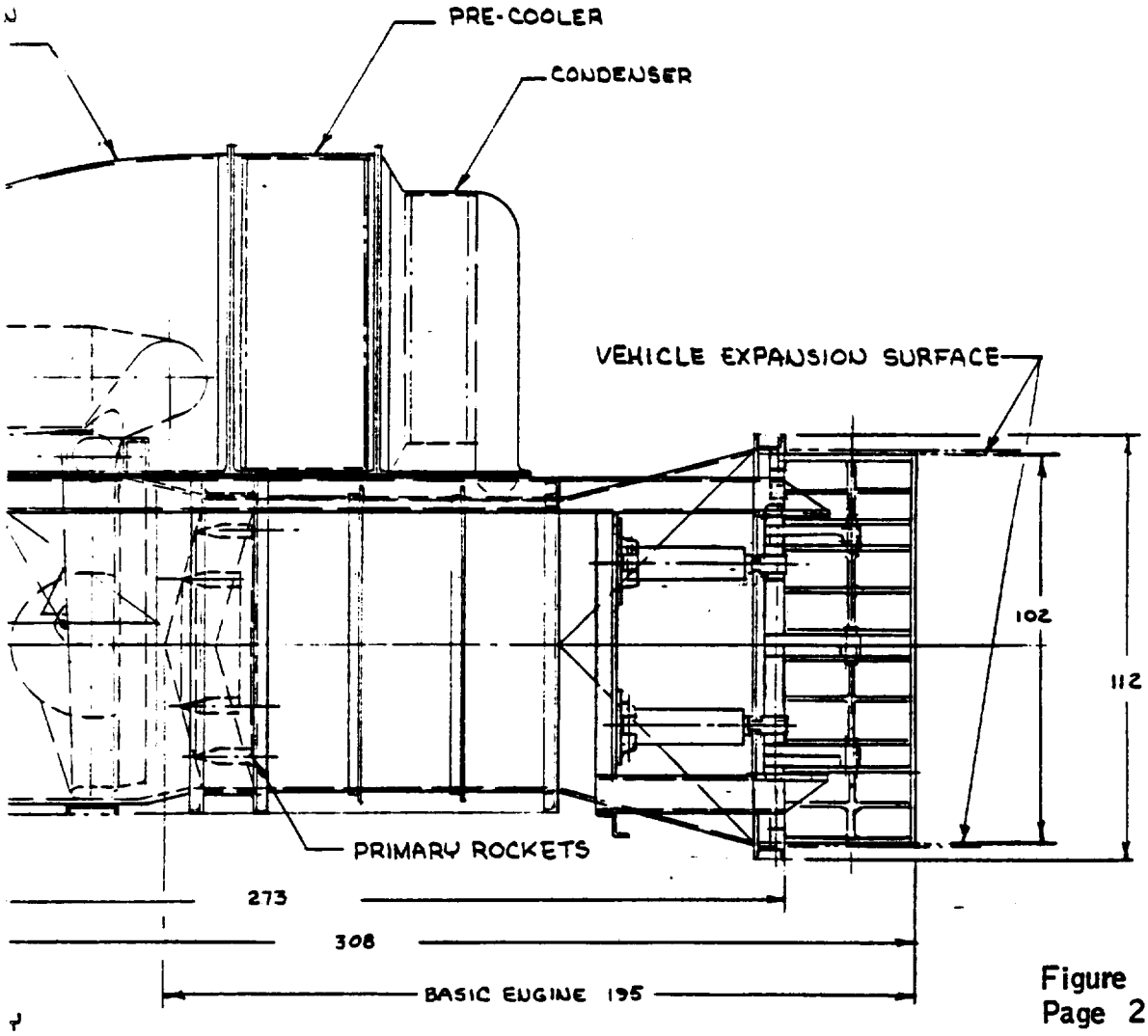

Figure 6
Page 23-2

[redacted]

GINE NO 30)

INLET CONTOURS FOR VARIOUS FLIGHT SPEED CONDITIONS

CONSTANT WIDTH = 8.5 FT

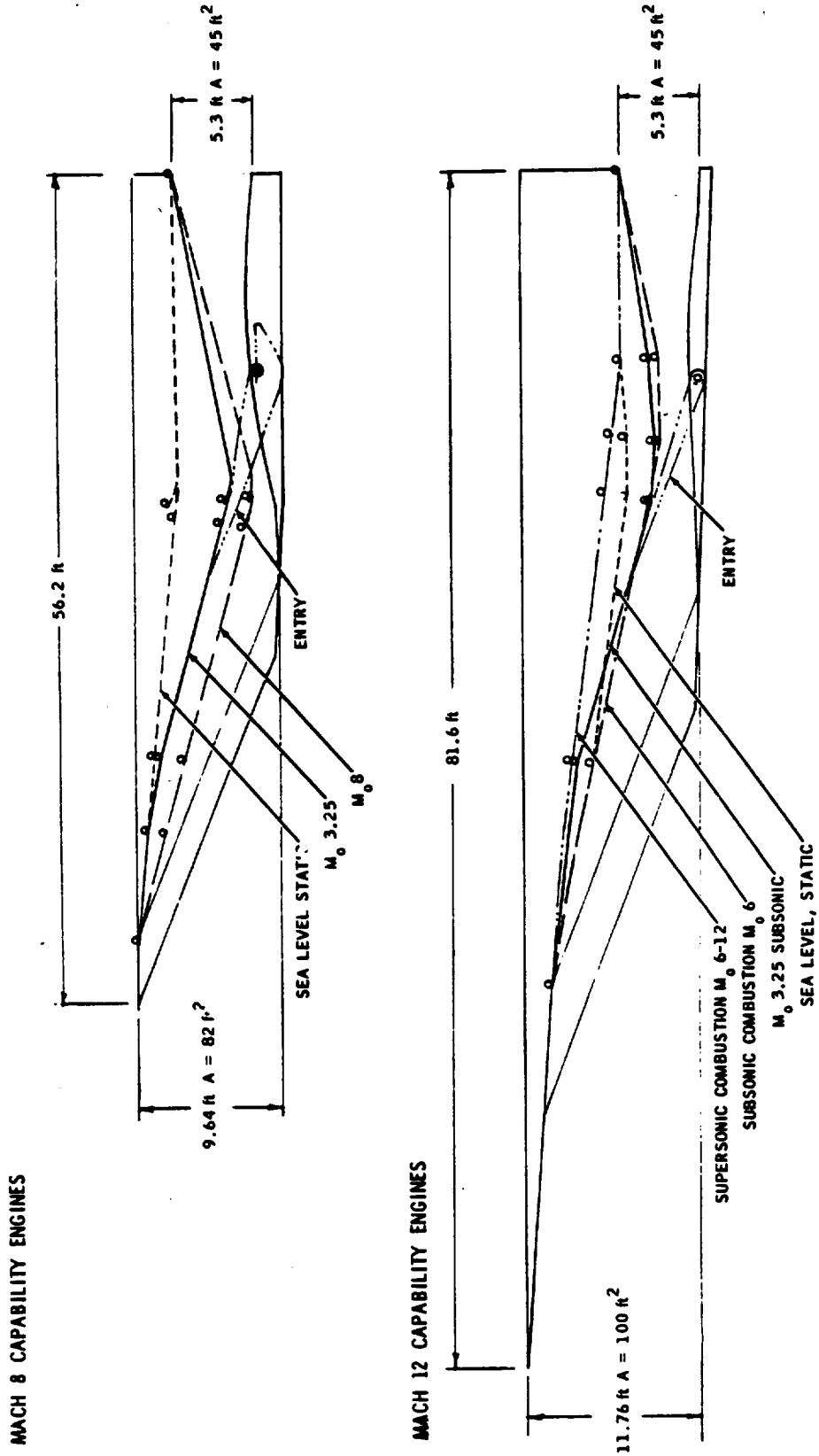

MECHANIZATION OF TWO-DIMENSIONAL, MOVING PANEL INLET

(MACH 8 CAPABILITY ENGINES, TYPICAL)

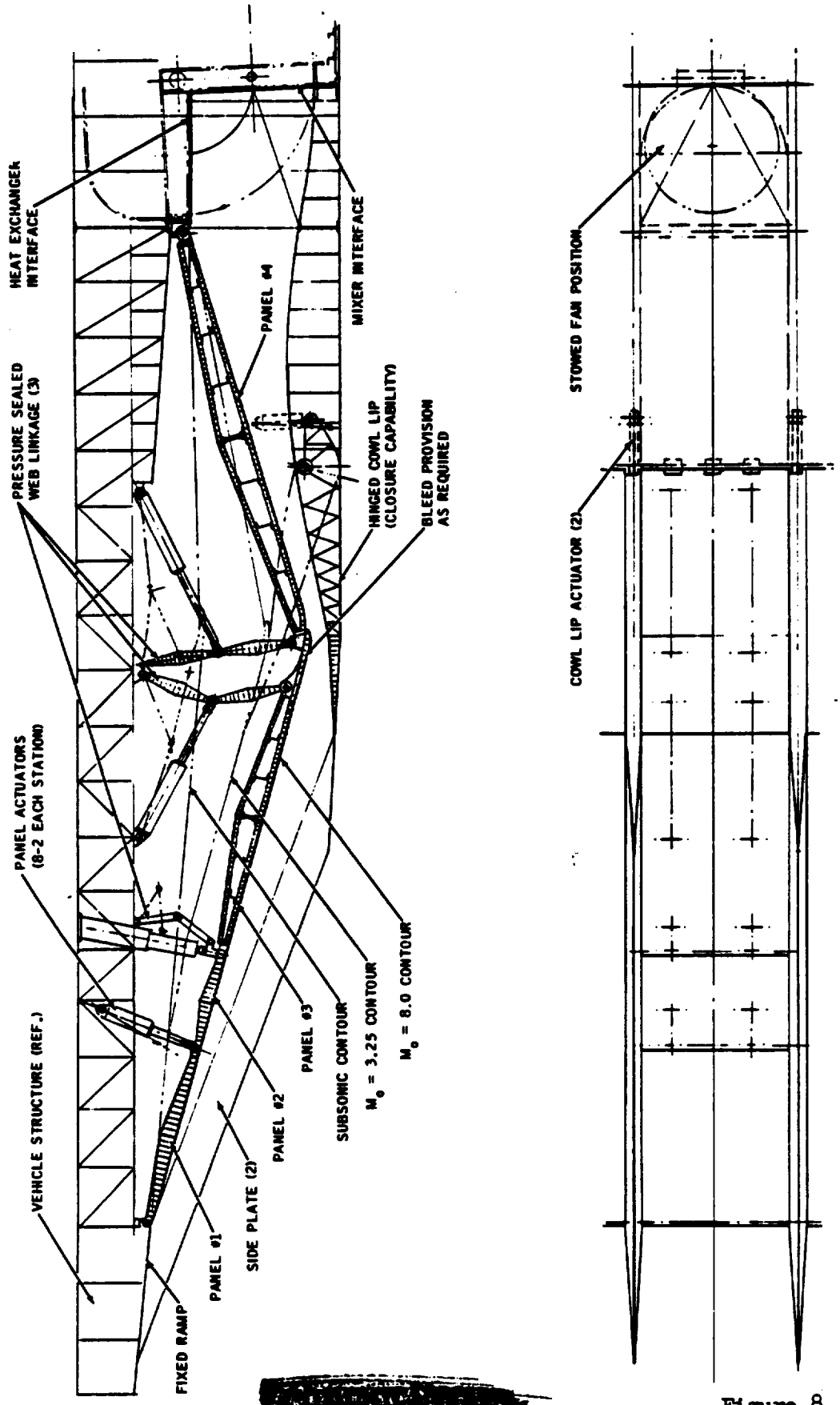

R-21,735

[redacted]

Figure 8

This Page Intentionally Blank

INLET PRESSURE RECOVERY

MACH 8 ENGINES

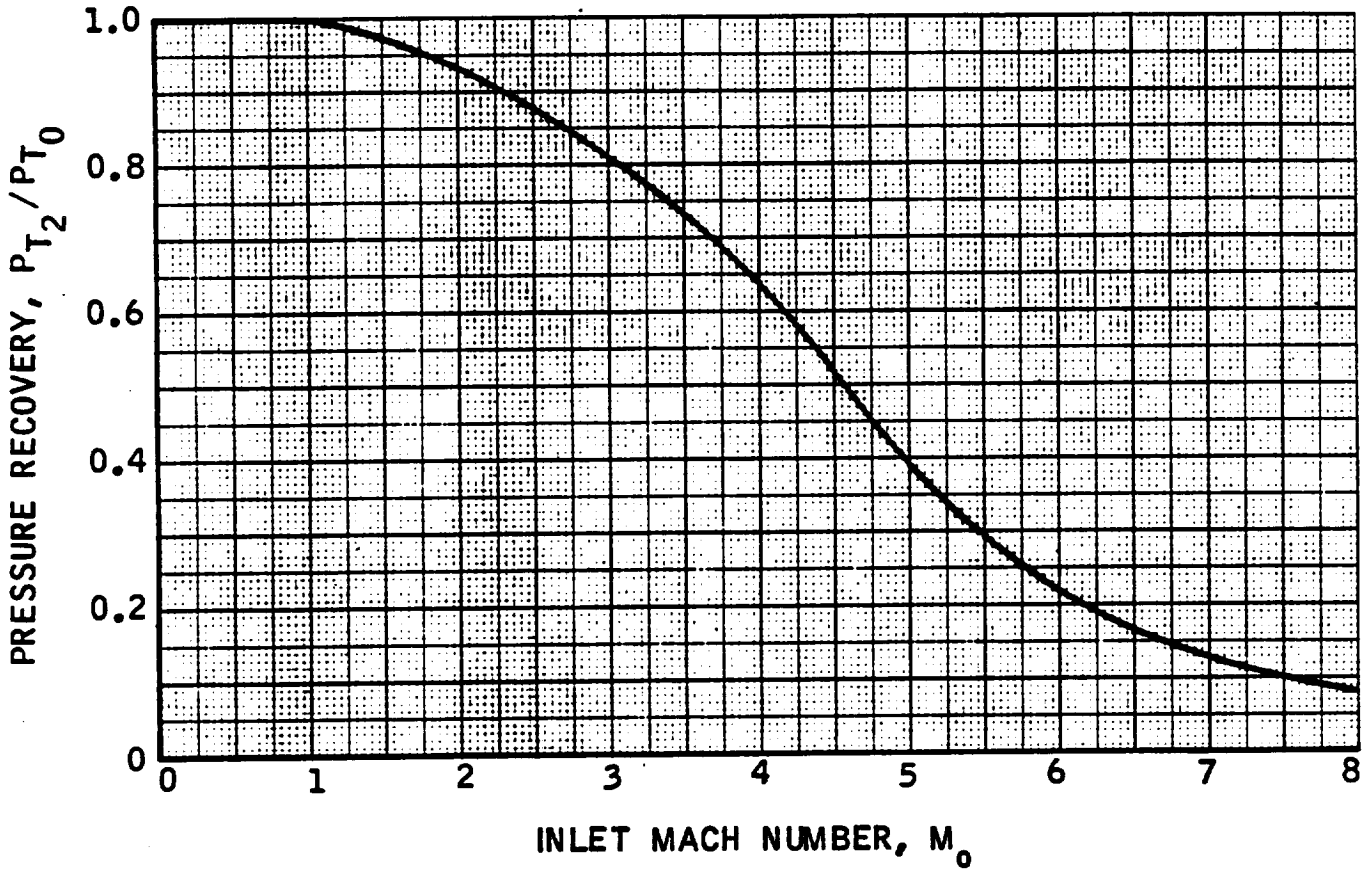

Figure 9

INLET CAPTURE AREA

MACH 8 ENGINES

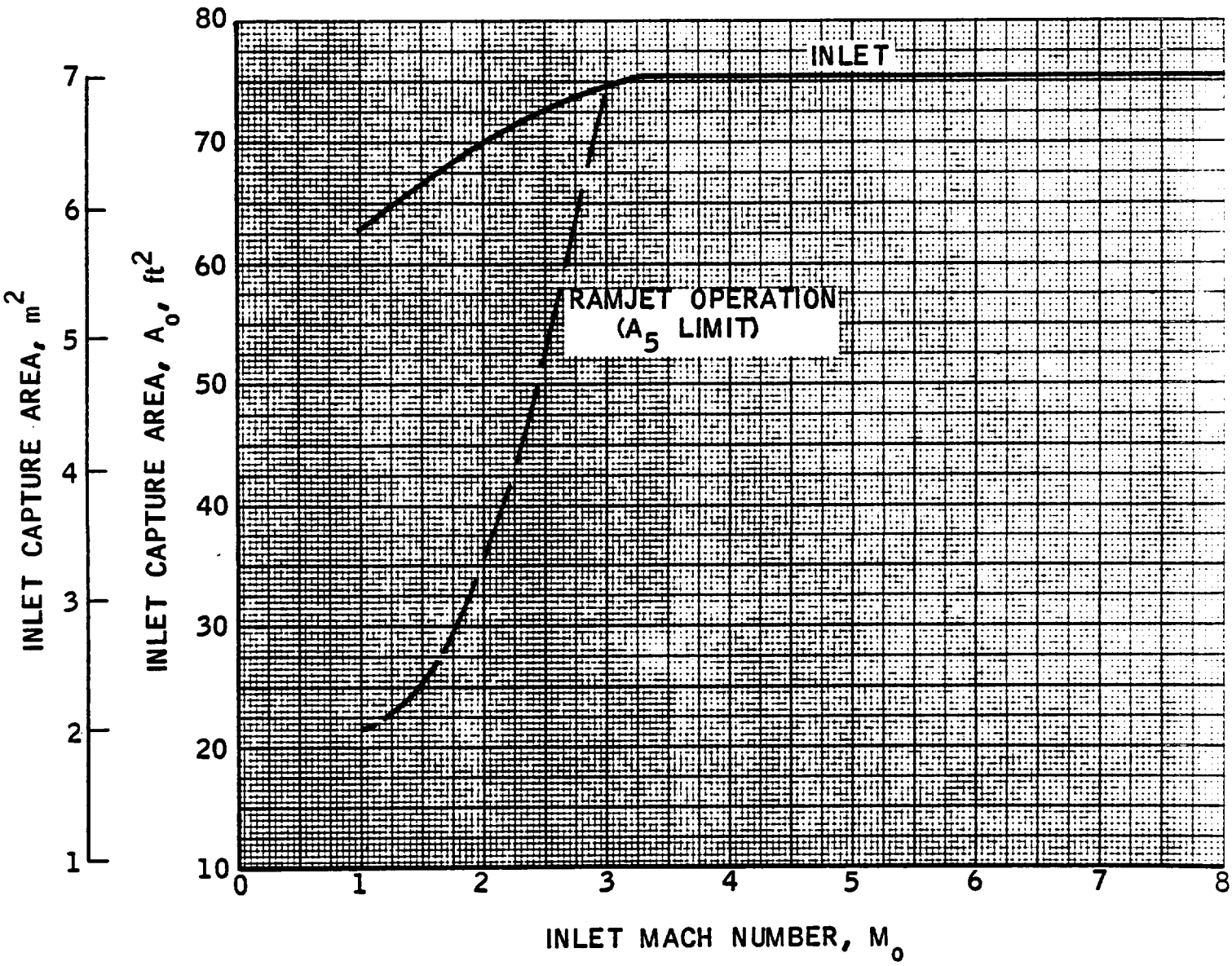

Figure 10

INLET PRESSURE RECOVERY

MACH 12 ENGINES

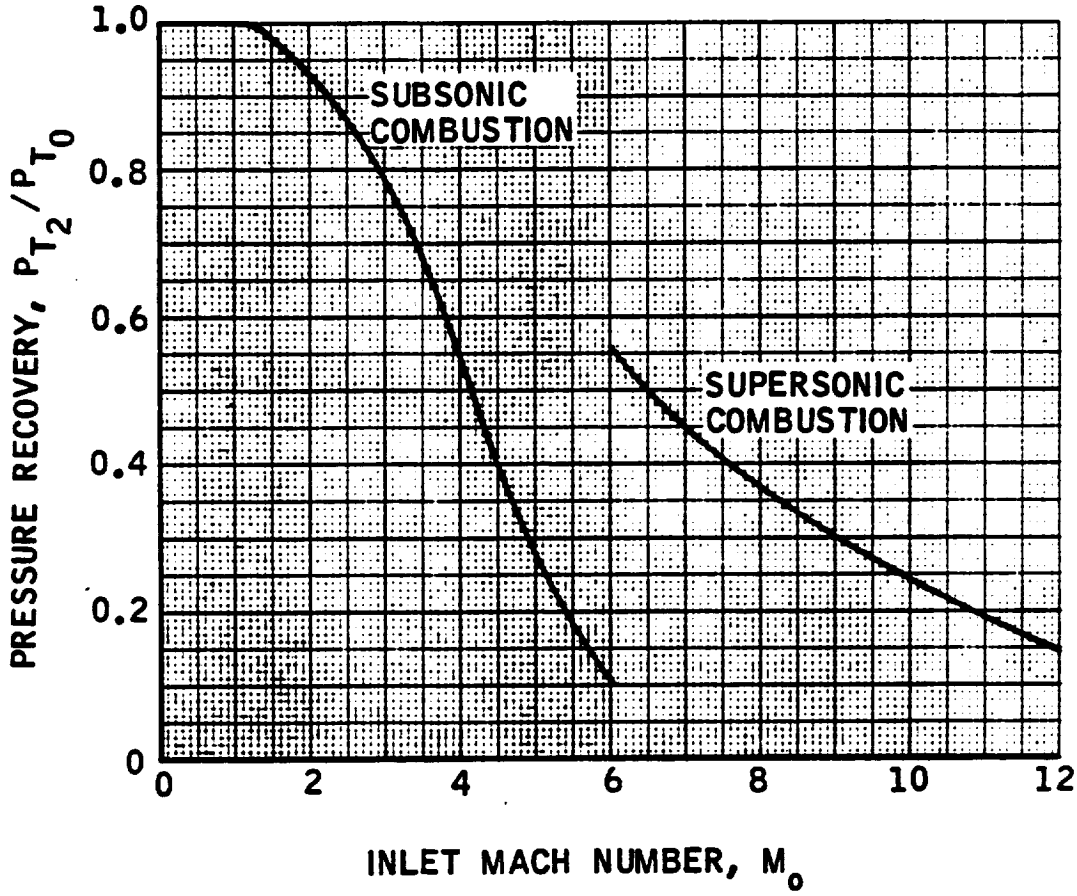

Figure 11

INLET CAPTURE AREA

MACH 12 ENGINES

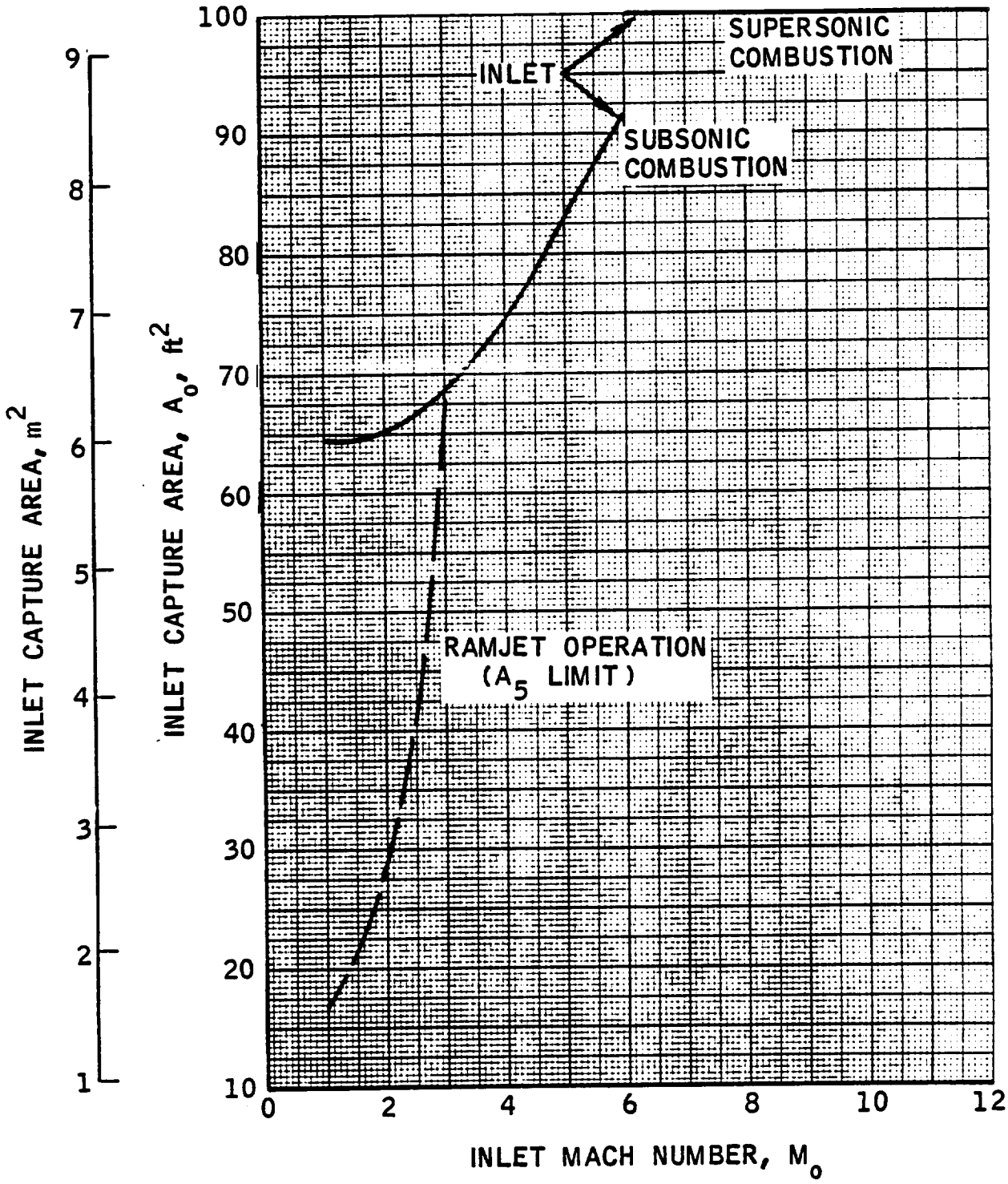

Figure 12

LEGEND - ENGINE SCHEMATIC

Inlet / Exit: Subsonic Combustion

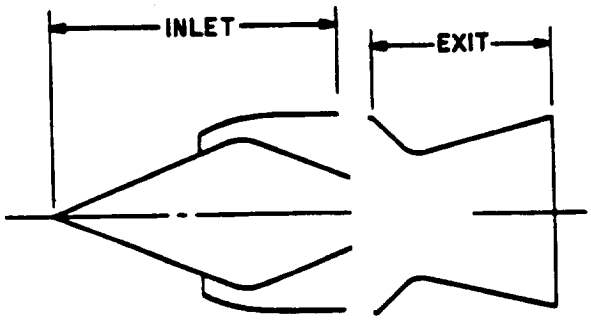

Inlet / Exit: Supersonic Combustion
(Including Sub/Super Conversion)

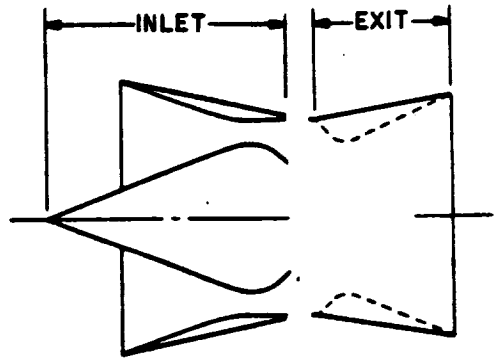

Precooler / Condenser 36°R H_2

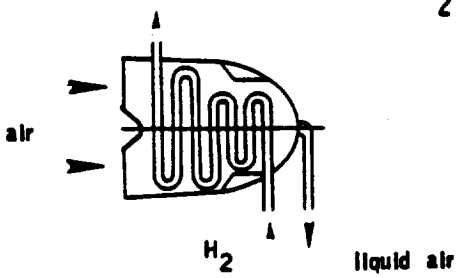

Precooler / Condenser 25°R H_2

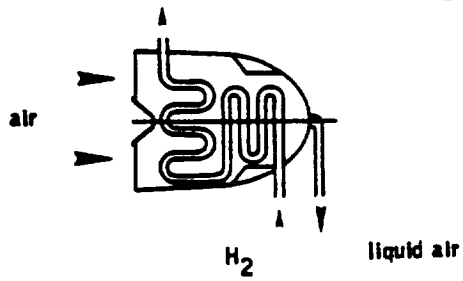

LEGEND - ENGINE OPERATING MODE BLOCK DIAGRAM

Letter Symbols (Within Blocks)

I	Inlet Subsystem	
HE	Heat Exchanger	
F	Fan Subsystem	
R	Rocket Subsystem	
MC	Mixer/Combustor	Mixer/Combustor/Exit Subsystem
MD	Mixer/Diffuser	Mixer/Combustor/Exit Subsystem
C	Combustor	Mixer/Combustor/Exit Subsystem
E	Exit	Mixer/Combustor/Exit Subsystem

Letter Symbols (Fluids)

H	Hydrogen
O	Oxygen
A	Air
X	Exhaust

Graphical Symbols

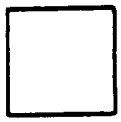
Functioning Unit

Non-functioning Unit

Fluid Flow Direction

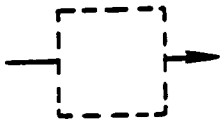
Fluid Flow Through a Non-functioning Unit

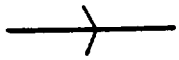
Flow Mach Number > 1

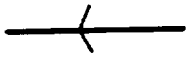
Flow Mach Number < 1

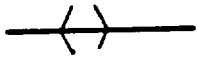
Flow Mach Number is both below and above 1 at changing flight speed conditions

NOMENCLATURE

Nomenclature used in this report is given below. The tabulated computer printout information does not include subscripting as will be noted by the repetition of certain parameter symbols. Refer to Figure 4 for engine flow area station designations including the distinction made between A_∞ and A_o where a vehicle flow field is involved (where there is no flow field these are identical).

AB	-	Afterburner
A_4/A_3	-	Afterburner/Mixer Diffusion Ratio
A5	-	Engine nozzle throat area, ft^2
A6	-	Engine nozzle exit area, ft^2
A_6/A_5	-	Exit Nozzle Expansion Area Ratio
A_6/A_c	-	Exit to Capture Area Ratio (SCRAMJET)
AHX	-	Inlet capture area for heat exchanger air flow, ft^2
AO	-	Inlet capture area for secondary air flow, ft^2
AOT	-	Inlet capture area for total air flow, ft^2
BL	-	Baseline
C_F, CF	-	Thrust Coefficient based on inlet capture area
H2	-	Secondary air static enthalpy at mixer entrance, Btu/lb
HTO	-	Ambient Total Enthalpy, Btu/lb
I_{sp}, IS	-	Specific Impulse, $lb_f/lb_m/sec$ (Net Jet)*
M_o, MO	-	Local Mach Number
M2	-	Mixer entrance Mach number
NS	-	"Normal Shock" inlet (Includes Normal Shock losses plus an assumed 90% diffuser efficiency.)
O/F	-	Oxidizer/fuel mass flow ratio
P2	-	Secondary air static pressure at mixer entrance, Btu/lb
P_c	-	Primary chamber pressure, psia
PR_f	-	Fan pressure ratio
P_{T_2}, PT2	-	Inlet recovered total pressure, psia
P_{T2}/P_{TO}	-	Inlet total pressure recovery
PTO	-	Ambient total pressure, psia

R	-	Rocket Mode
Ref	-	Reference
SLS	-	Sea Level, Static Conditions
SPC	-	Specific Fuel or propellant consumption, $lb_m/hr\text{-}lb_f$
T	-	Thrust, lb_f (Net Jet)*
V6	-	Exit velocity, ft/sec
V_o, VO	-	Local velocity, ft/sec
WFT	-	Total fuel or propellant flow rate, lb_m/sec
WHX	-	Heat exchanger air flow rate, lb_m/sec
W_P, WP	-	Primary flow rate, lb_m/sec
W_S/W_P, WSWP	-	Secondary/primary flow ratio
W_S, WS	-	Secondary (WS + WHX), lb_m/sec
WT	-	Total air flow
δ	-	Two dimensional wedge half angle, deg
η_c	-	Combustion efficiency based on enthalpy rise
η_c*	-	Characteristic velocity efficiency based on velocity, or thrust
η_{KE}	-	Inlet kinetic energy process efficiency
η_M	-	Mixing Efficiency based on static pressure rise
η_N	-	Nozzle efficiency based on stream thrust
ϕ, ϕ_{AB}	-	Combustor equivalence ratio
ϕ_{cond}	-	Condenser equivalence ratio
ϕ_{HX}	-	Heat exchanger equivalence ratio
ϕ_P, PHP	-	Primary rocket equivalence ratio
ϕ_{prec}	-	Precooler equivalence ratio
ϕ_{sec}, PHS	-	Secondary equivalence ratio

* Net jet thrust and specific impulse includes air induction inlet momentum penalty, but does not include external drag such as cowl, induced, friction, or spillage drag

LIST OF REFERENCES

1. "Class 0 Engine Fact Sheets (thirty-six engines)," Contract NAS7-377, Marquardt Report 25,194, Volumes 4 and 5, Sept. 1965. CONFIDENTIAL - Title Unclassified.

2. "Class 2 Engine Information (Two Engines)," Contract NAS7-377, Marquardt Report 25,194, Volume 6, Sept. 1965. CONFIDENTIAL - Title Unclassified.

3. "A Study of Composite Propulsion System for Advanced Launch Vehicle Applications (Main Technical Report)," Contract NAS7-377, Marquardt Report 25,194, Volumes 2 and 3 (of seven), Sept. 1966. CONFIDENTIAL - Title Unclassified.

EJECTOR RAMJET, NO. 9

Technical Description

This engine is capable of two operating modes: (1) ejector mode (afterburning cycle air augmented rocket) and (2) subsonic combustion ramjet. Phasing between modes can be accomplished by continous throttling of the primary rockets or by a discrete shutdown of the primary system. The engine consists of a primary rocket section, a constant area mixer, a diffuser, an afterburner, and a variable geometry exit nozzle.

For initial acceleration the stoichiometric primary rocket operation is at full thrust. The afterburner effects stoichiometric combustion with the free oxygen in the mixed flow entering from the diffuser. Transition to ramjet mode is accomplished by shutting down the primary rockets and continuing combustion in the afterburner, which functionally becomes the ramjet combustor. The variable exit is programmed to provide throat settings for maximum thrust consistent with maximum performance. Normally in acceleration missions the ramjet combustion remains at the stoichiometric condition. Following entry, the subsonic combustion ramjet mode can be employed for supersonic flyback. Low speed loiter and landing thrust is provided by the ejector mode.

Engine Operating Schematic

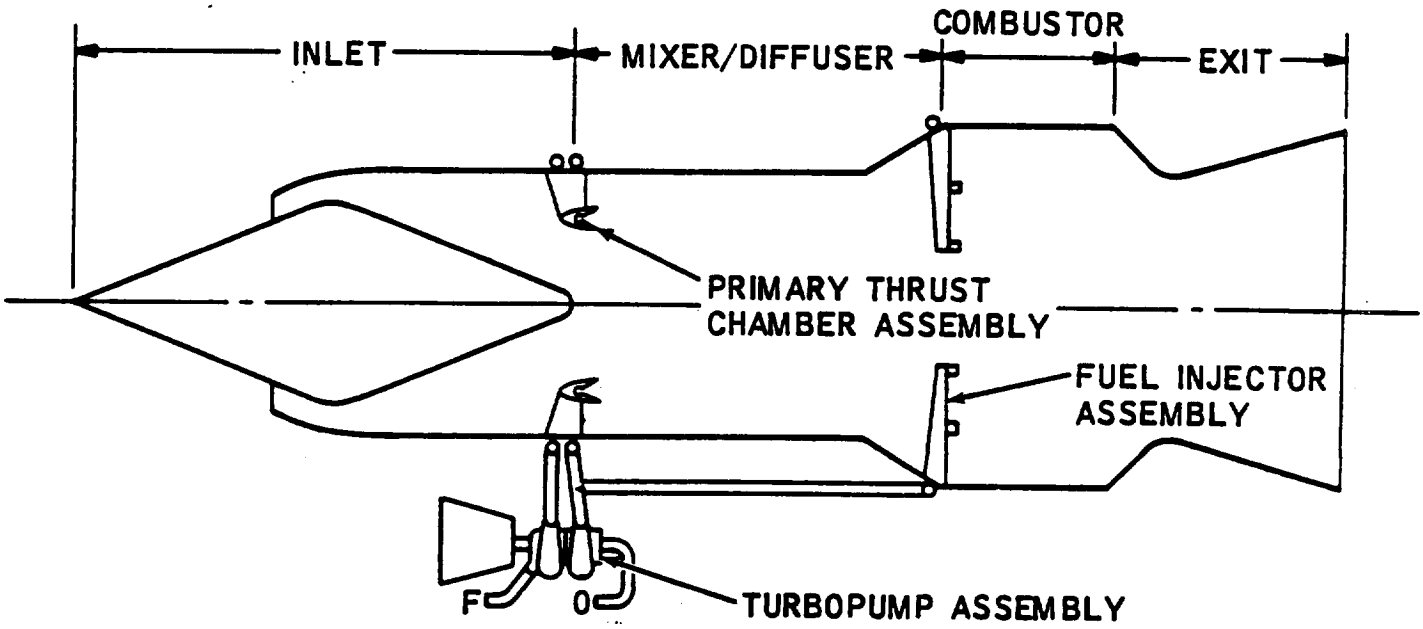

Eng. No. 9

Engine Design Parameters

P_c = 2000 psia, W_s/W_p = 1.50, O/F = 7.937, ϕ_p = 1.0, ϕ_s = 1.00, A_4/A_3 = 2.00, P_{T2}/P_{TO} ref. Fig. 9

Engine Operating Mode Block Diagrams

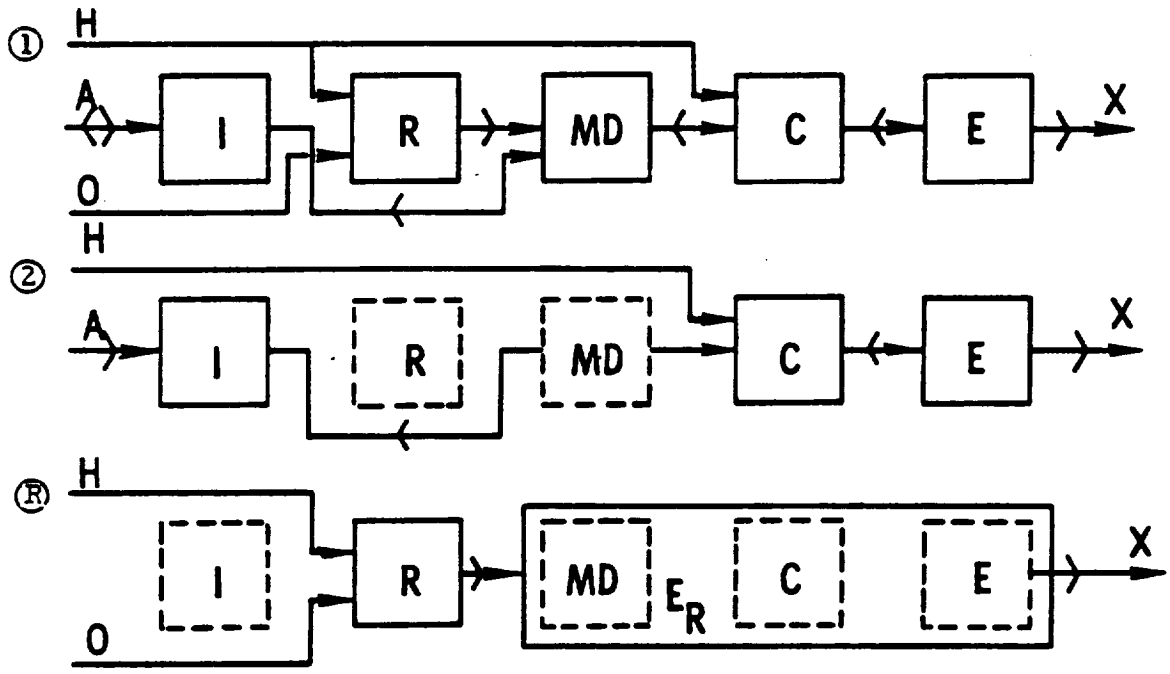

Eng. No. 9

ENGINE THRUST / WEIGHT

EFFECT OF SIZE AND INTERNAL PRESSURE

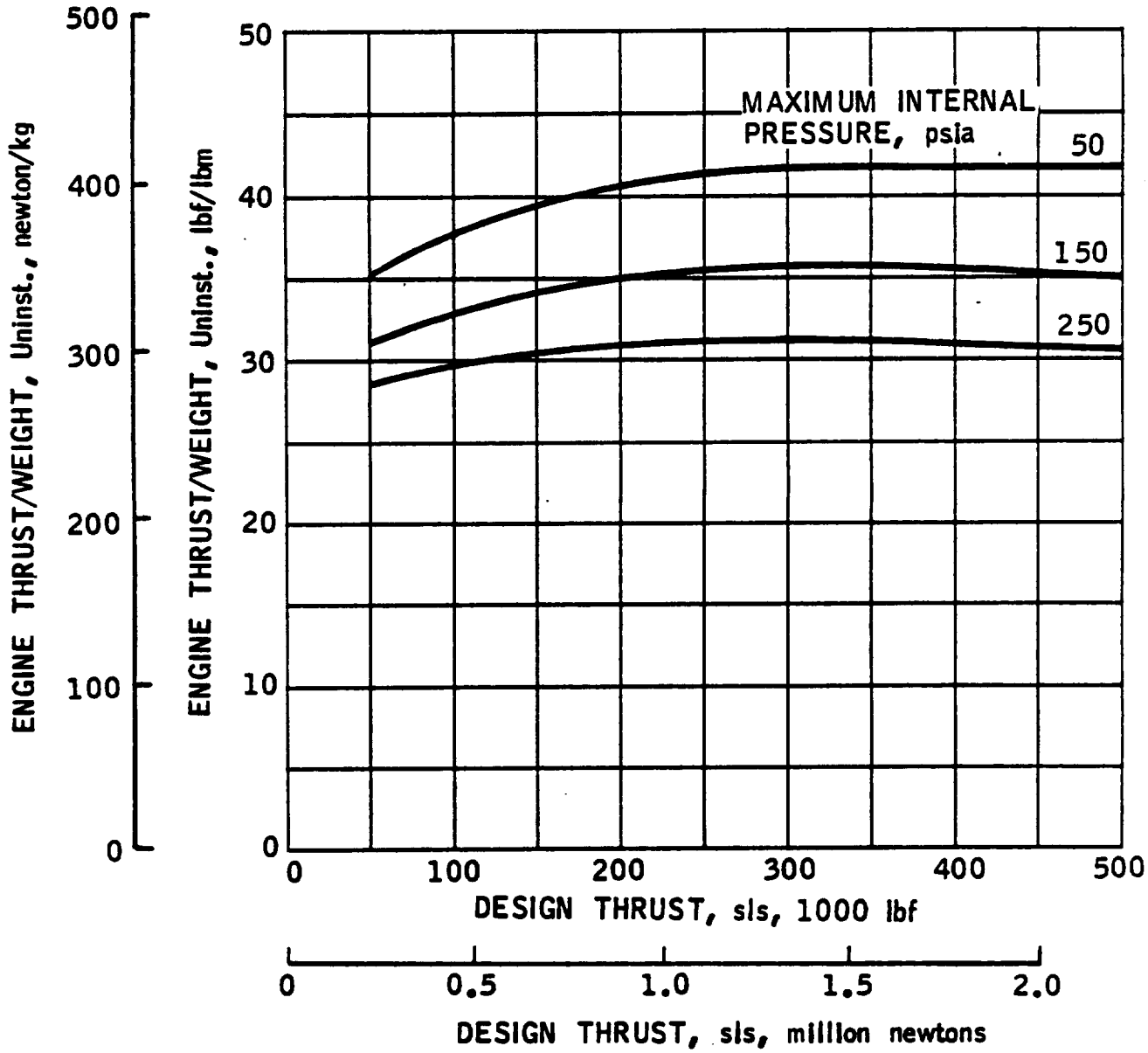

EJECTOR MODE SPECIFIC IMPULSE

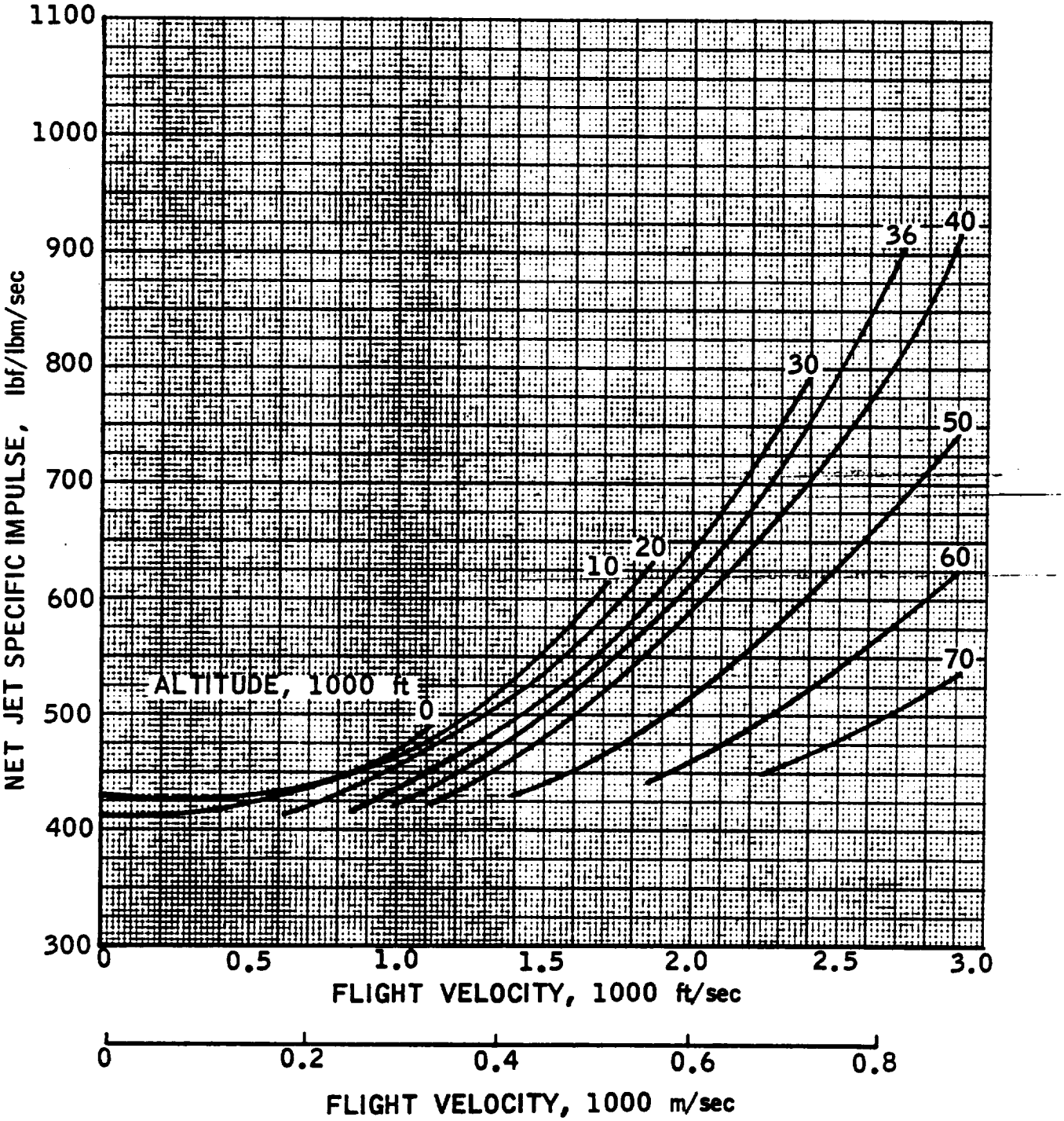

EJECTOR RAMJET (ENGINE NO. 9)
COMPOSITE ENGINE STUDY
CLASS 1 PHASE

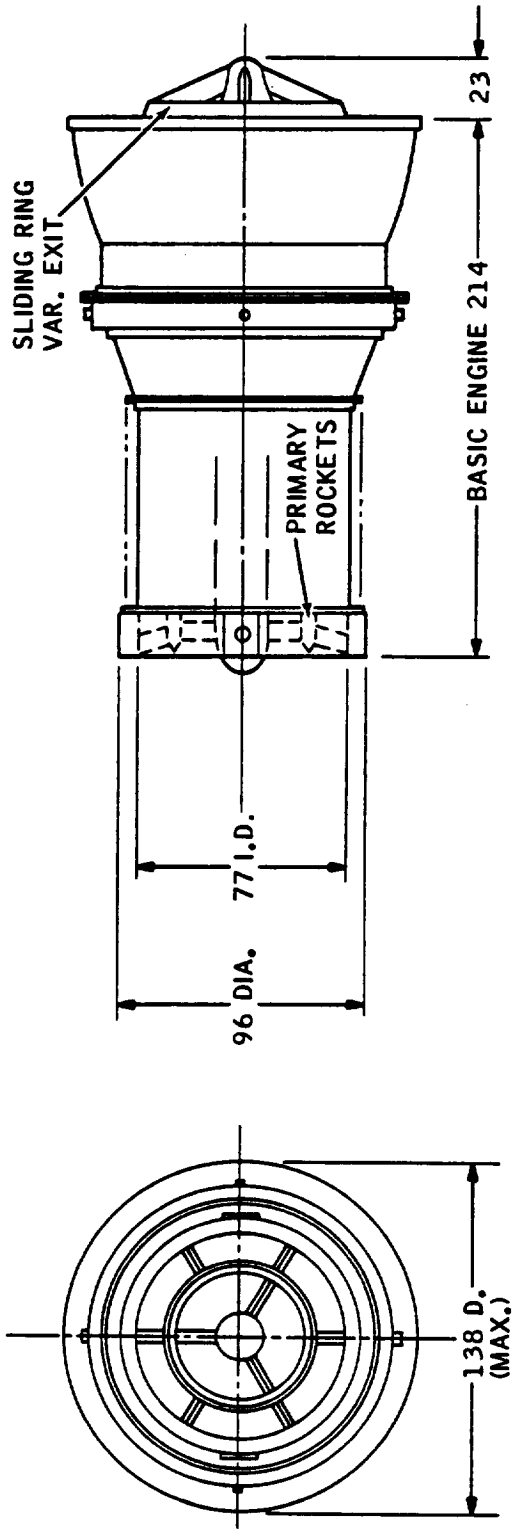

Engine Physical Characteristics

Eng. No. 9

WEIGHT, THRUST/WEIGHT*	English Units	International Units
Subsystem Components		
Primary Rockets	677 LBM	307 KG
Turbopumps and Plumbing	706	320
Structure	1254	568.8
Mixer	776	352
Diffuser	432	196
Combustor	712	323
Exit and Centerbody	2172	985.2
Manifolding and Contingency	400	181
Uninstalled Weight	7129 LBM	3234 KG
Thrust, SLS	250,000 LBF	1,112,055 N
Uninstalled Thrust/weight	35.1 LBF/LBM	344 N/KG
Inlet Weight (typical)	9840 LBM	4463 KG
Installed Weight	16,969 LBM	7697 KG
Installed Thrust/weight	14.7 LBF/LBM	144 N/KG
LENGTH		
Uninstalled Length	17.8 FT	5.42 M
Inlet Length (typical)	56.2	17.1
Installed Length	74.0 FT	22.6 M
FLOW AREAS		
Inlet Cowl, Ac	82 FT^2	7.6 M^2
Mixer, A_3	32	3.0
Combustor, A_4	64	6.0
Nozzle Exit, max, A_6**	125 FT^2	11.6 M^2

* Based on maximum internal pressure = 150 psia (1034 N/M^2)
**For ejector mode, see engine data

EJECTOR MODE THRUST

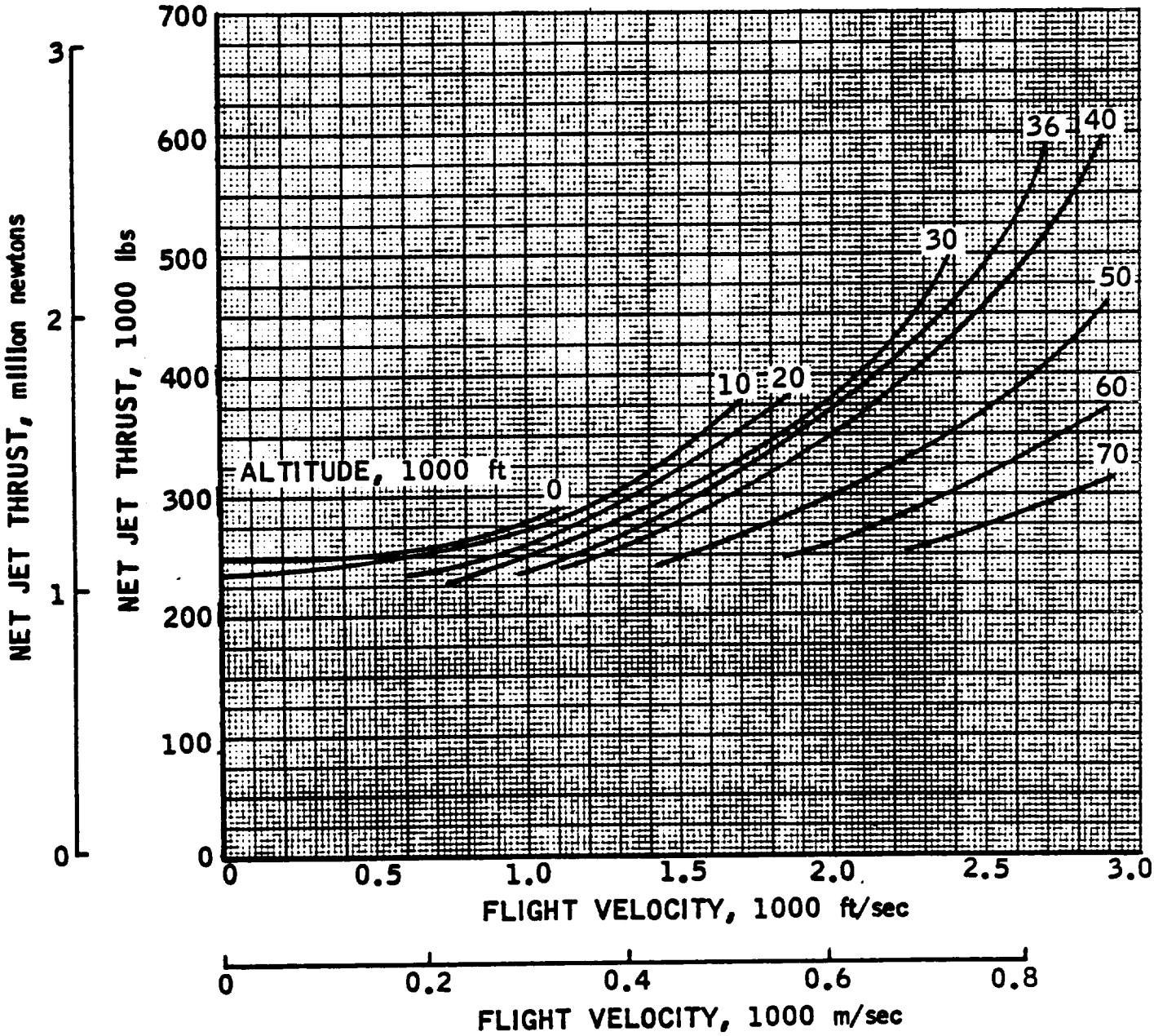

EJECTOR MODE AIRFLOW

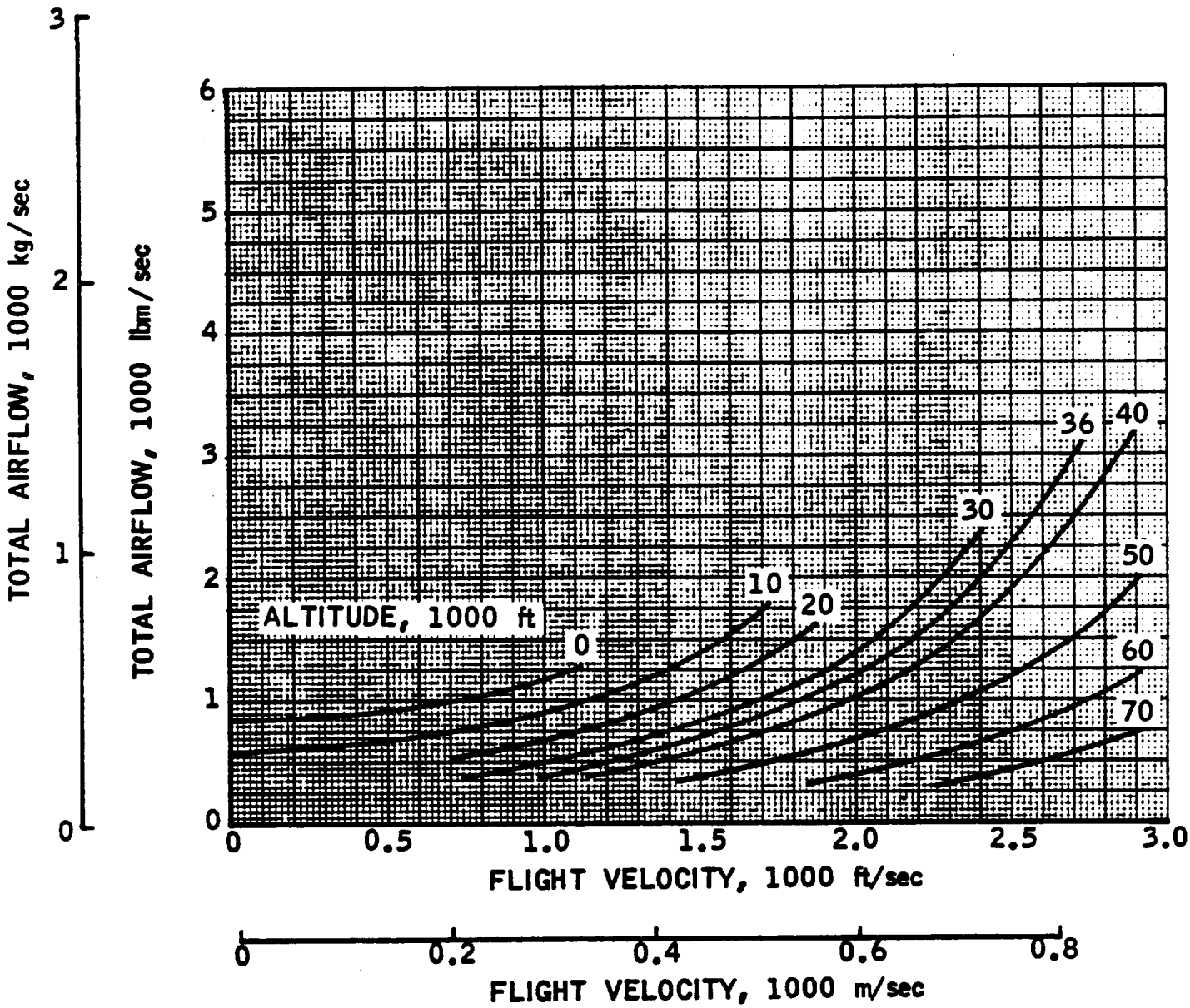

EJECTOR MODE CAPTURE AREA

NOTE: CURVE = UPPER LIMIT

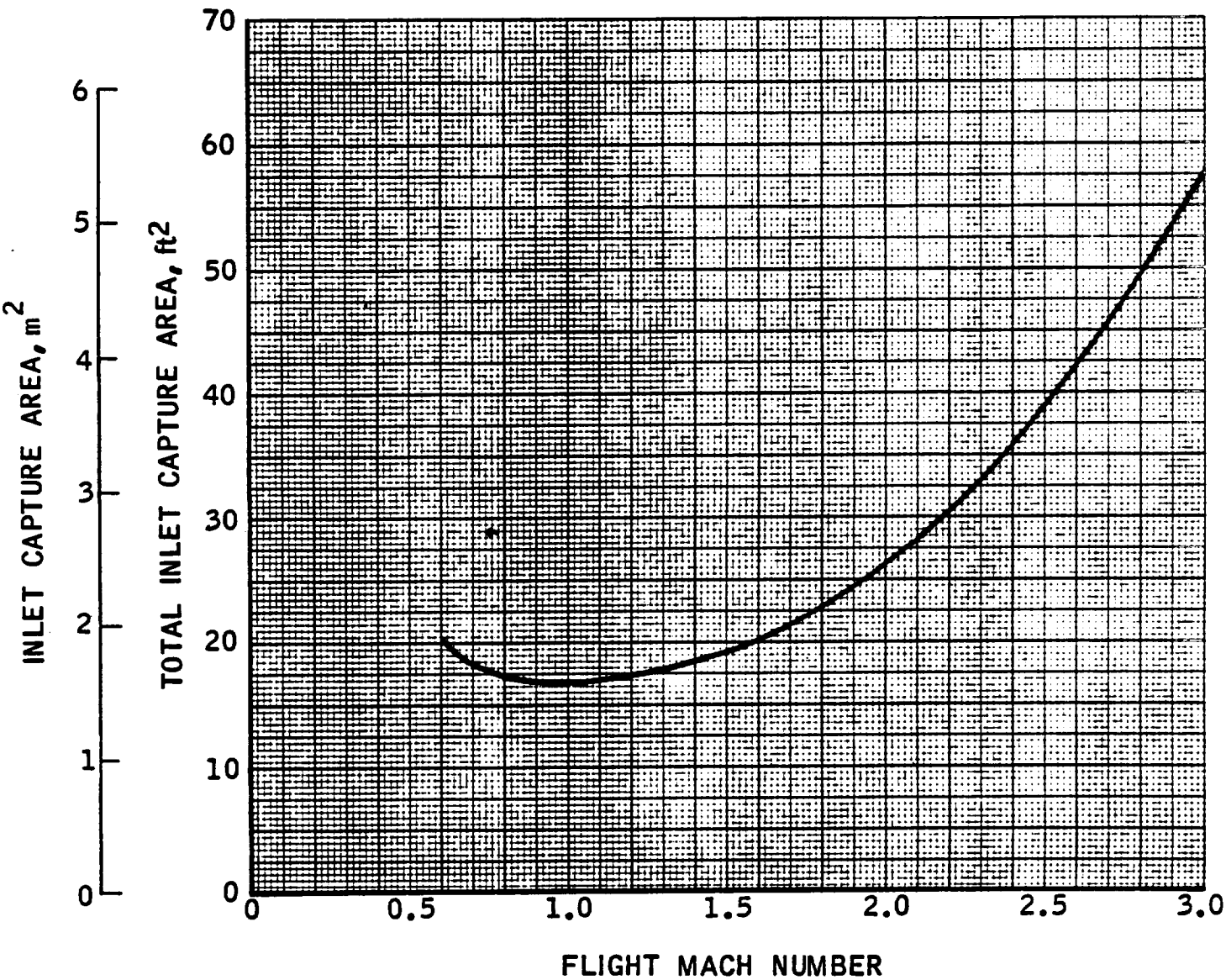

ENGINE 9

ESTIMATED PERFORMANCE

MO	VO	HTO	PTO	T	CF	IS	SPC	PT2	H2	P2
				ALTITUDE -		0. FEET				
0.01	11.	124.5	14.7	251996.	1724.66	429.	8.39	14.70	119.3	12.65
0.25	279.	126.0	15.3	250666.	66.11	426.	8.45	15.35	120.7	13.21
0.50	558.	130.7	17.4	254081.	31.25	430.	8.36	17.43	125.8	15.23
0.75	837.	138.5	21.3	266285.	19.31	448.	8.03	21.34	133.9	18.95
.00	1116.	149.4	27.8	291495.	13.13	486.	7.41	27.82	144.9	24.98
				ALTITUDE -		10000. FEET				
0.01	11.	115.1	10.1	239389.	2384.17	412.	8.73	10.11	110.2	8.70
0.30	322.	117.1	10.8	239501.	75.36	412.	8.74	10.76	112.2	9.26
0.60	644.	123.4	12.9	251315.	33.84	430.	8.37	12.89	118.2	11.10
0.90	966.	133.7	17.1	274627.	19.72	465.	7.73	17.10	128.4	14.83
1.20	1288.	148.2	24.5	303103.	13.06	508.	7.09	24.33	143.4	21.66
1.40	1503.	160.2	32.2	334654.	10.14	554.	6.50	31.51	155.3	28.24
1.60	1718.	174.0	43.0	381064.	7.98	619.	5.81	41.36	168.7	37.04
				ALTITUDE -		20000. FEET				
0.60	622.	115.1	8.6	237868.	47.93	412.	8.75	8.62	110.3	7.42
0.90	933.	124.8	11.4	257612.	27.15	443.	8.13	11.43	119.5	9.84
1.20	1244.	138.3	16.4	289830.	16.93	492.	7.31	16.27	132.5	14.01
1.50	1555.	155.7	24.8	325161.	11.68	545.	6.61	24.10	150.3	21.29
1.80	1867.	177.0	38.8	384122.	8.25	630.	5.72	36.70	171.3	32.68

[redacted]

ENGINE 9

ESTIMATED PERFORMANCE

M2	WS	WP	WSWP	WFT	PHP	PHS	V6	PT20	A0	A5	A6
					ALTITUDE -		0. FEET				
0.468	842.	563.	1.50	587.6	1.0	1.000	5678.	1.00	986.87	40.76	48.33
0.468	874.	563.	1.55	588.5	1.0	1.000	5681.	1.00	40.97	41.03	48.88
0.443	937.	563.	1.66	590.3	1.0	1.000	5695.	1.00	21.95	41.40	49.86
0.415	1060.	563.	1.88	593.9	1.0	1.000	5718.	1.00	16.54	42.10	51.74
0.395	1279.	563.	2.27	600.3	1.0	1.000	5750.	1.00	14.96	43.27	55.05
					ALTITUDE -		10000. FEET				
0.468	602.	563.	1.07	580.6	1.0	1.000	6519.	1.00	986.79	37.27	51.33
0.468	635.	563.	1.13	581.5	1.0	1.000	6502.	1.00	34.70	37.82	52.28
0.468	742.	563.	1.32	584.6	1.0	1.000	6455.	1.00	20.26	39.43	55.21
0.455	928.	563.	1.65	590.0	1.0	1.000	6412.	1.00	16.87	41.34	59.64
0.411	1160.	563.	2.06	596.8	1.0	1.000	6403.	0.99	15.80	42.63	64.36
0.399	1412.	563.	2.51	604.2	1.0	1.000	6392.	0.98	16.47	43.94	69.34
0.401	1789.	563.	3.18	615.2	1.0	1.000	6379.	0.96	18.23	45.79	76.55
					ALTITUDE -		20000. FEET				
0.468	513.	563.	0.91	578.0	1.0	1.000	7306.	1.00	20.26	35.55	60.84
0.468	654.	563.	1.16	582.1	1.0	1.000	7198.	1.00	17.20	37.96	66.03
0.468	885.	563.	1.57	588.8	1.0	1.000	7072.	0.99	17.44	40.94	73.70
0.425	1152.	563.	2.05	596.6	1.0	1.000	7008.	0.97	18.12	42.56	81.04
0.411	1605.	563.	2.85	609.8	1.0	1.000	6932.	0.94	21.00	44.86	92.83

[redacted]

ENGINE 9

ESTIMATED PERFORMANCE

MO	VO	HTO	PTO	T	CF	IS	SPC	PT2	H2	P2
				ALTITUDE - 30000. FEET						
0.70	696.	108.5	6.1	231110.	57.45	403.	8.94	6.07	103.9	5.22
1.10	1094.	122.8	9.3	257277.	28.17	445.	8.10	9.31	117.6	8.01
1.50	1492.	143.3	16.1	301670.	15.59	514.	7.01	15.59	137.3	13.43
1.90	1890.	170.2	29.3	361661.	9.74	603.	5.97	27.41	164.2	24.16
2.40	2388.	212.7	63.9	501560.	5.65	793.	4.54	56.48	205.0	49.46
				ALTITUDE - 36000. FEET						
0.80	775.	105.7	5.0	229440.	60.91	401.	8.98	5.04	101.2	4.34
1.20	1163.	120.7	8.0	254818.	30.48	442.	8.14	7.96	115.6	6.85
1.60	1550.	141.7	14.1	296563.	16.92	508.	7.09	13.53	135.8	11.65
2.00	1938.	168.7	25.9	355562.	10.32	596.	6.04	23.94	162.3	20.88
2.40	2325.	201.7	48.3	442037.	6.69	717.	5.02	42.70	194.6	37.56
2.80	2713.	240.7	89.7	589391.	4.48	901.	4.00	74.92	231.0	64.62
				ALTITUDE - 40000. FEET						
0.80	774.	105.6	4.2	224676.	72.23	394.	9.14	4.16	101.1	3.58
1.40	1355.	130.3	8.7	262769.	26.16	455.	7.90	8.51	124.8	7.33
2.00	1936.	168.5	21.4	336990.	11.45	570.	6.32	19.77	161.5	17.03
2.50	2420.	210.6	46.6	434005.	6.60	707.	5.09	40.66	202.7	35.48
3.00	2904.	262.1	100.3	602987.	4.11	917.	3.93	81.17	251.7	70.03

[redacted]

[redacted]

ENGINE 9

ESTIMATED PERFORMANCE

M2	WS	WP	WSWP	WFT	PHP	PHS	V6	PT20	A0	A5	A6
ALTITUDE - 30000. FEET											
0.468	372.	563.	0.66	573.8	1.0	1.000	8138.	1.00	18.66	32.56	72.27
0.468	537.	563.	0.95	578.7	1.0	1.000	7946.	1.00	17.13	35.86	80.77
0.468	834.	563.	1.48	587.3	1.0	1.000	7704.	0.97	19.48	40.17	94.35
0.429	1264.	563.	2.25	599.9	1.0	1.000	7267.	0.94	23.25	43.10	96.04
0.441	2391.	563.	4.25	632.7	1.0	1.000	6595.	0.88	34.68	48.11	96.17
ALTITUDE - 36000. FEET											
0.468	313.	563.	0.56	572.1	1.0	1.000	8616.	1.00	17.70	31.15	83.01
0.468	463.	563.	0.82	576.5	1.0	1.000	8406.	0.99	17.44	34.41	92.56
0.468	728.	563.	1.29	584.2	1.0	1.000	7921.	0.96	20.53	38.69	96.01
0.447	1145.	563.	2.03	596.4	1.0	1.000	7380.	0.93	25.77	42.46	96.10
0.433	1828.	563.	3.25	616.3	1.0	1.000	6881.	0.88	34.18	45.72	96.20
0.468	3123.	563.	5.55	654.1	1.0	1.000	6389.	0.84	49.89	49.47	95.97
ALTITUDE - 40000. FEET											
0.468	258.	563.	0.46	570.5	1.0	1.000	8961.	1.00	17.70	29.72	90.35
0.468	477.	563.	0.85	576.9	1.0	1.000	8450.	0.98	18.63	34.53	96.01
0.468	978.	563.	1.74	591.5	1.0	1.000	7566.	0.93	26.64	41.17	95.80
0.447	1748.	563.	3.10	614.0	1.0	1.000	6931.	0.87	37.94	45.32	95.78
0.468	3250.	563.	5.77	657.8	1.0	1.000	6462.	0.81	58.51	47.57	96.13

[redacted]

ENGINE 9

ESTIMATED PERFORMANCE

MO	VO	HTO	PTO	T	CF	IS	SPC	PT2	H2	P2
				ALTITUDE - 50000. FEET						
1.00	968.	112.3	3.2	222865.	76.76	392.	9.19	3.20	107.6	2.76
1.50	1452.	135.7	6.2	248193.	33.18	433.	8.31	6.03	130.0	5.19
2.00	1936.	168.5	13.2	291609.	15.99	502.	7.17	12.25	161.5	10.55
2.50	2420.	210.6	28.9	360122.	8.55	605.	5.95	25.20	202.0	21.72
3.00	2904.	262.1	62.2	462781.	5.09	744.	4.84	50.31	251.7	43.40
				ALTITUDE - 60000. FEET						
1.00	968.	112.3	2.0	214890.	119.38	379.	9.49	1.99	107.6	1.71
1.50	1452.	135.7	3.9	231648.	49.96	407.	8.84	3.74	130.0	3.22
2.00	1936.	168.5	8.2	260713.	23.06	454.	7.93	7.60	161.5	6.54
2.50	2420.	210.6	17.9	306675.	11.75	526.	6.85	15.62	202.0	13.47
3.00	2904.	262.1	38.5	373978.	6.63	624.	5.77	31.19	251.7	26.91
				ALTITUDE - 70000. FEET						
2.00	1942.	169.5	5.1	239562.	34.15	420.	8.56	4.71	162.5	4.06
2.40	2330.	202.6	9.5	263108.	19.10	458.	7.86	8.41	194.3	7.25
2.80	2719.	241.7	17.7	295260.	11.39	508.	7.08	14.75	232.1	12.72
3.00	2913.	263.6	23.9	314966.	9.00	538.	6.69	19.35	253.1	16.70

[redacted]

ENGINE 9

ESTIMATED PERFORMANCE

M2	WS	WP	WSWP	WFT	PHP	PHS	V6	PT20	A0	A5	A6
					ALTITUDE - 50000. FEET						
0.468	193.	563.	0.34	568.6	1.0	1.000	9311.	1.00	17.05	27.82	96.19
0.468	331.	563.	0.59	572.7	1.0	1.000	8860.	0.97	19.48	31.30	96.01
0.468	606.	563.	1.08	580.7	1.0	1.000	8205.	0.93	26.64	36.13	96.10
0.468	1120.	563.	1.99	595.7	1.0	1.000	7470.	0.87	39.22	41.24	95.68
0.468	2014.	563.	3.58	621.7	1.0	1.000	6897.	0.81	58.51	44.54	95.82
					ALTITUDE - 60000. FEET						
0.468	120.	563.	0.21	566.5	1.0	1.000	9588.	1.00	17.05	25.50	96.09
0.468	205.	563.	0.36	569.0	1.0	1.000	9273.	0.97	19.48	28.09	96.09
0.468	376.	563.	0.67	574.0	1.0	1.000	8758.	0.93	26.64	31.93	96.03
0.468	694.	563.	1.23	583.2	1.0	1.000	8096.	0.87	39.22	36.53	96.13
0.468	1249.	563.	2.22	599.4	1.0	1.000	7455.	0.81	58.51	40.48	96.27
					ALTITUDE - 70000. FEET						
0.468	232.	563.	0.41	569.8	1.0	1.000	9195.	0.93	26.64	28.64	96.12
0.468	380.	563.	0.68	574.1	1.0	1.000	8773.	0.88	36.22	31.67	96.01
0.468	614.	563.	1.09	580.9	1.0	1.000	8285.	0.84	49.89	34.89	96.04
0.468	773.	563.	1.37	585.5	1.0	1.000	8039.	0.81	58.51	36.37	96.02

Eng. No. 9

RAMJET SPECIFIC IMPULSE

SUBSONIC COMBUSTION

NO PRESSURE FIELD

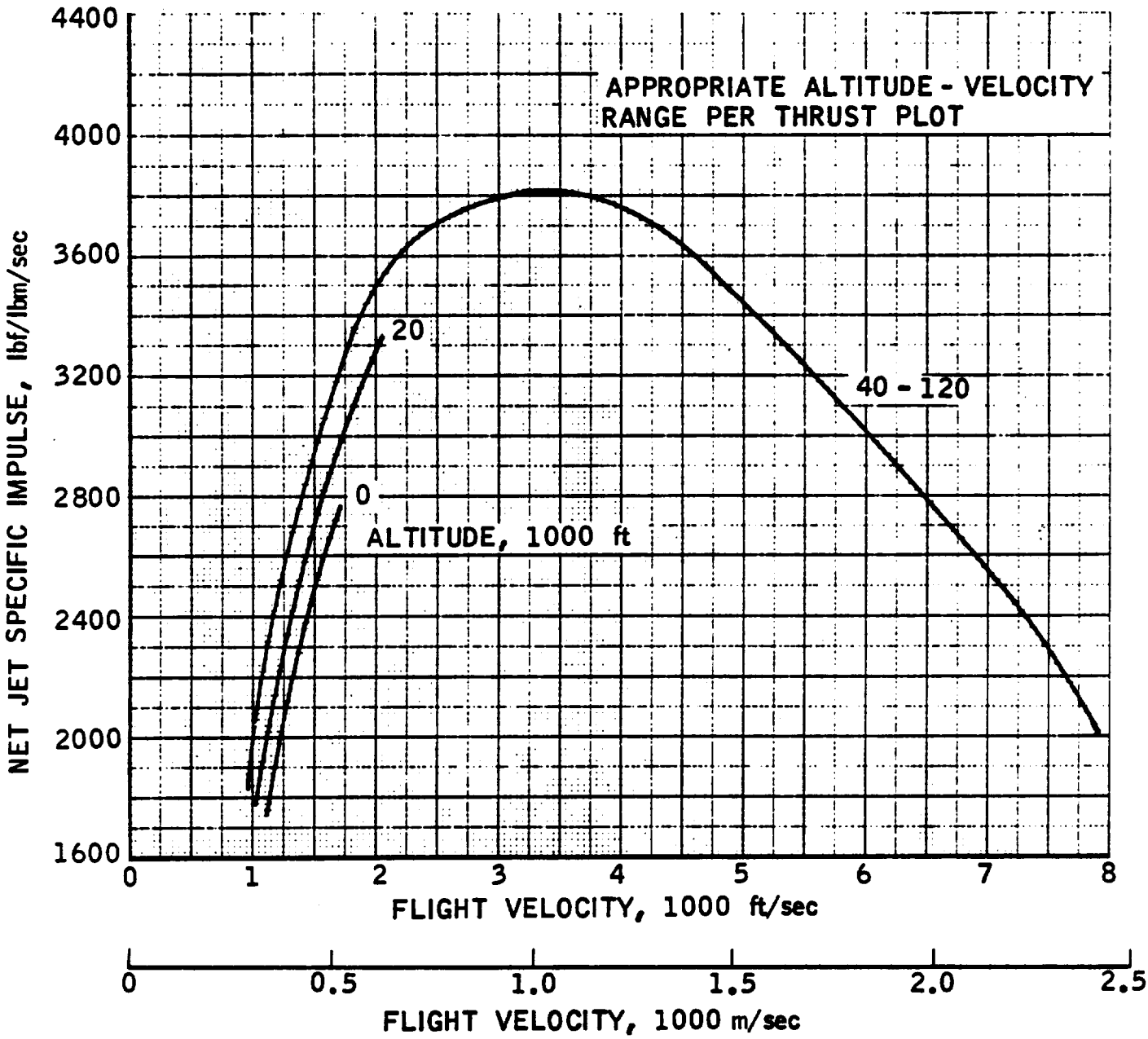

RAMJET THRUST

Eng. No. 9

SUBSONIC COMBUSTION

NO PRESSURE FIELD

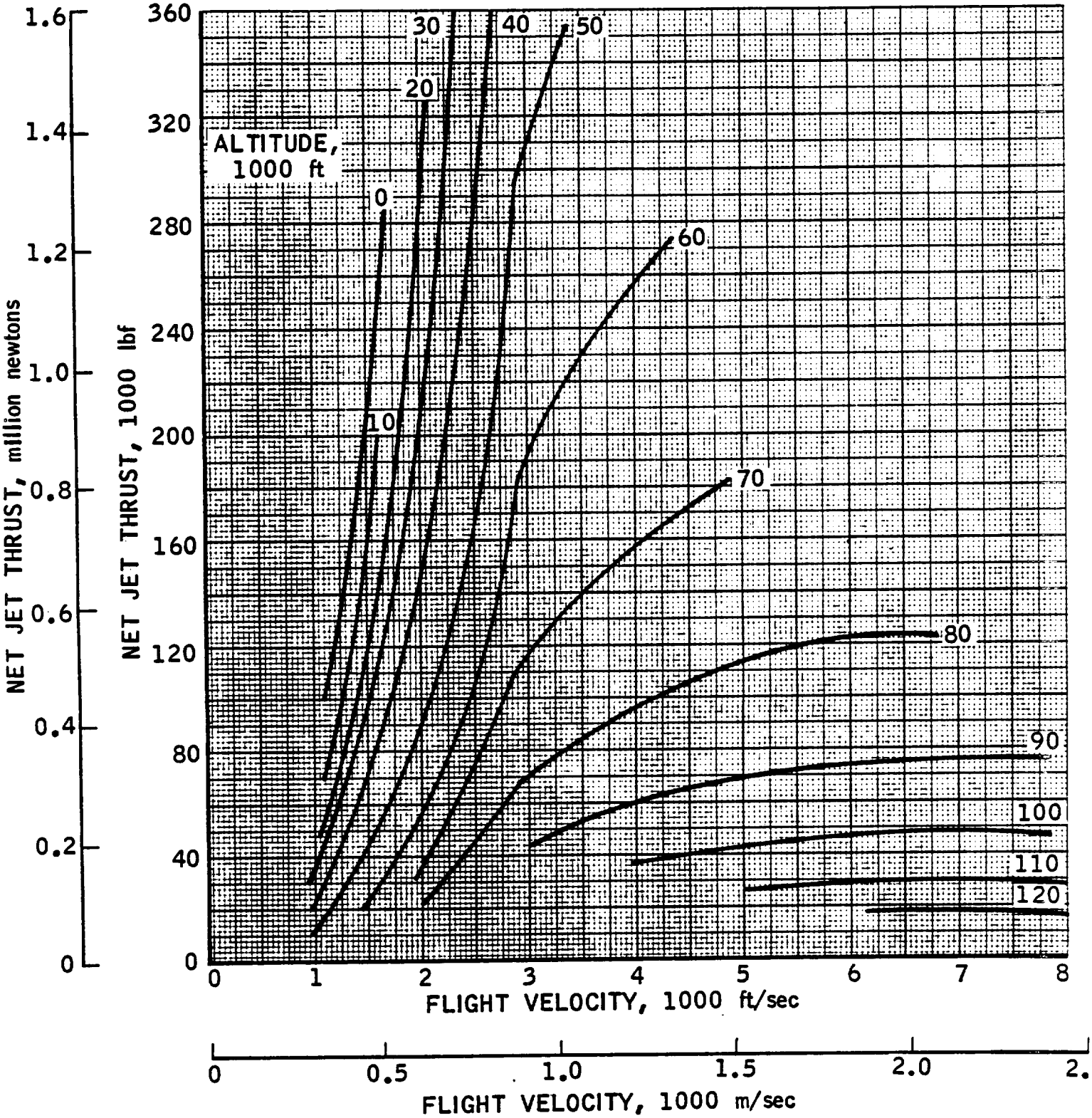

Eng. No. 9

RAMJET SPECIFIC IMPULSE
SUBSONIC COMBUSTION
EFFECT OF PRESSURE FIELD

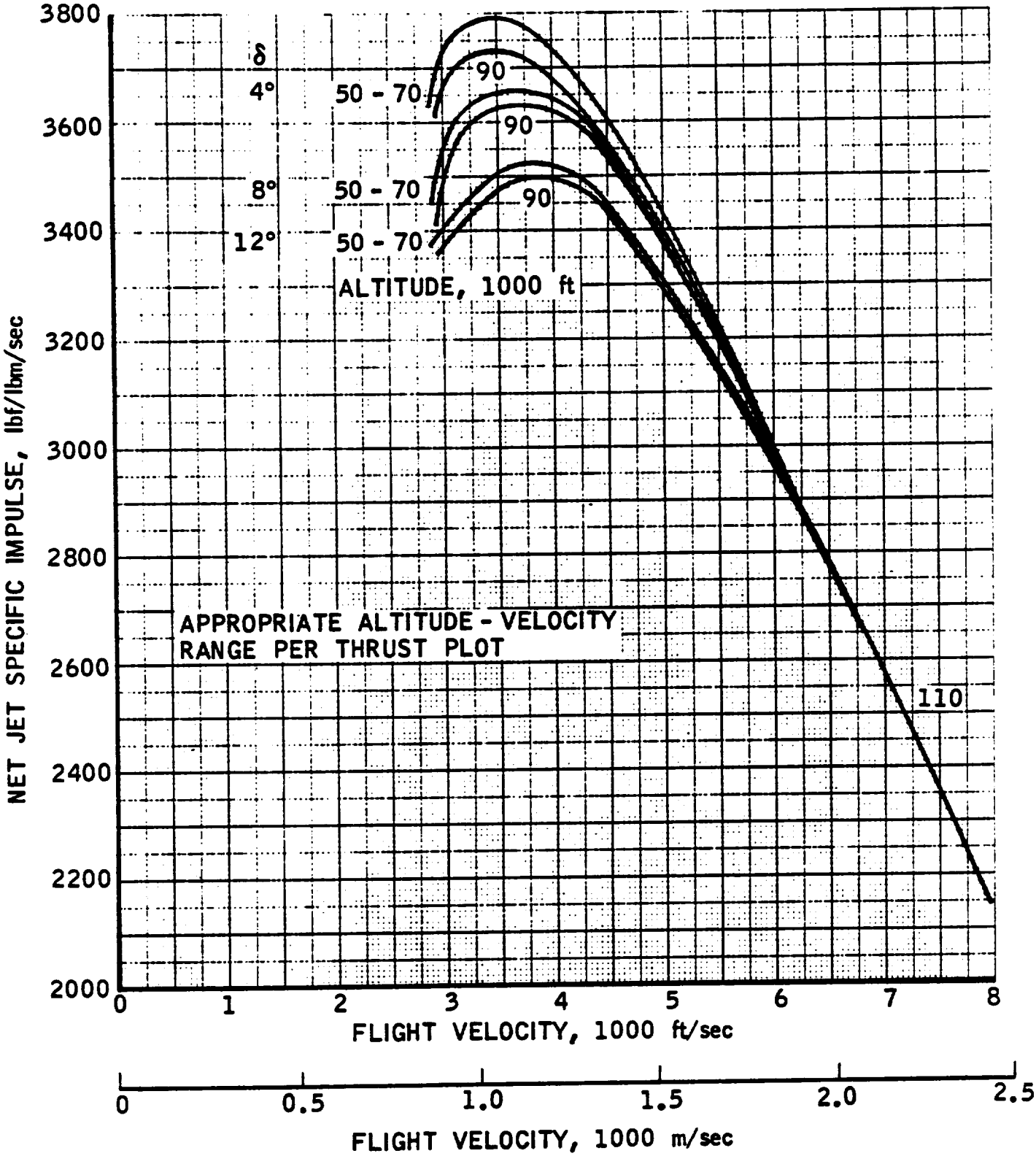

RAMJET THRUST

SUBSONIC COMBUSTION

EFFECT OF PRESSURE FIELD

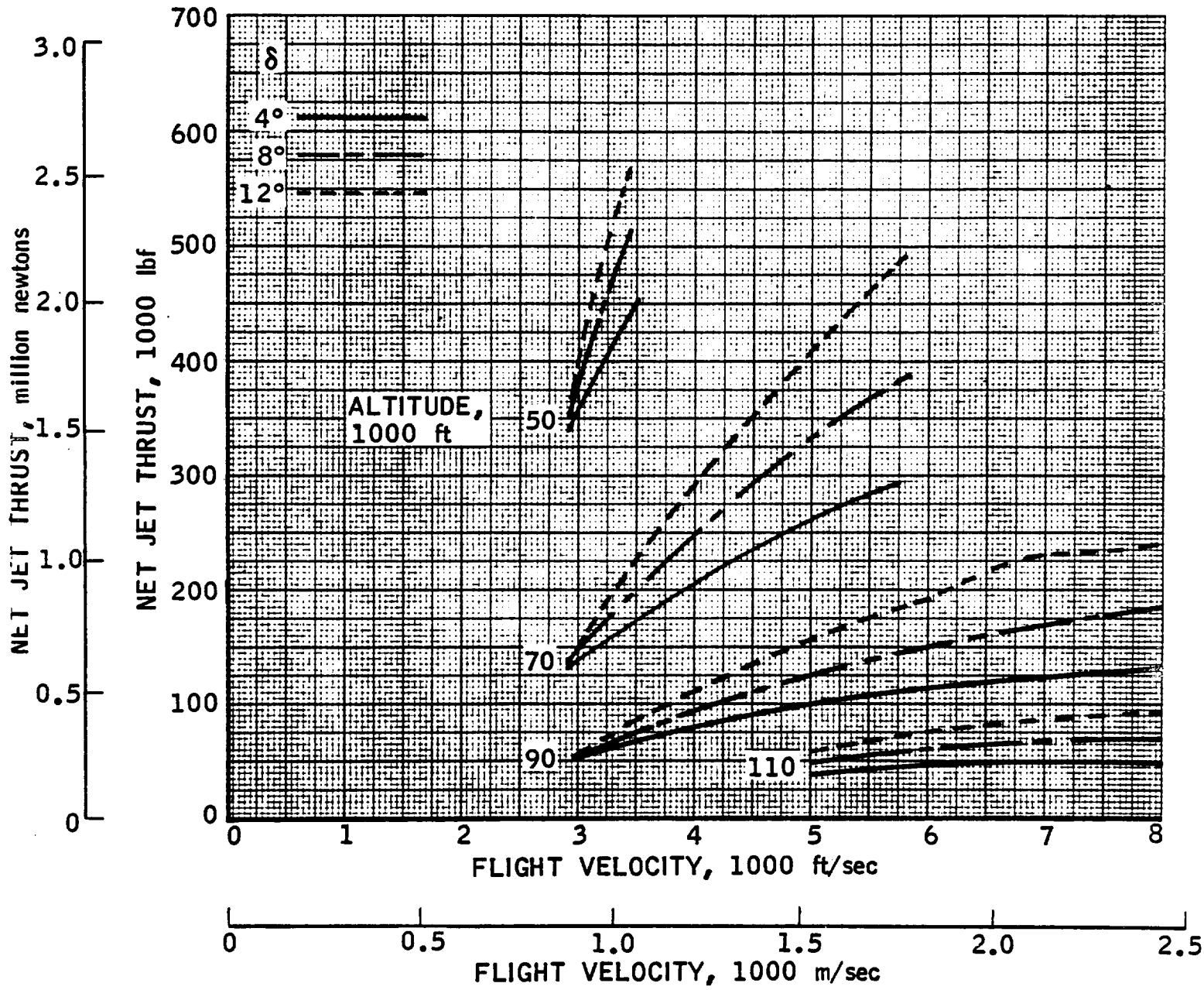

This Page Intentionally Blank

EJECTOR SCRAMJET, NO. 10

Technical Description

This engine is capable of three operating modes: (1) ejector mode (afterburning cycle air augmented rocket), (2) subsonic combustion ramjet and (3) supersonic combustion ramjet. The engine is comprised of a primary rocket section - which also acts as a secondary fuel injector for scramjet operation - a mixer, a diffuser, an afterburner, and a variable geometry exit nozzle. The engine as presented here requires certain vehicle affixed expansion surfaces to operate in conjunction with the variable exit components shown to provide adequate expansion surface for the supersonic combustion operating mode.

Initial engine operation involves full thrust primary rocket operation at stoichiometric conditions and full afterburning in the aft combustor. Transition to subsonic combustion ramjet is accomplished by shutting down the primary rocket subsystem and continuing stoichiometric combustion in the afterburner. The variable exit nozzle is programmed to provide throat settings consistent with maximum performance at full thrust. Supersonic combustion ramjet mode is accomplished by transferring the fuel injection station forward to the primary rocket assembly (the rocket is not reignited), and the full opening of the exit panels to permit the diffuser normal shock system to pass from the engine, thereby providing all supersonic flow. As noted exhaust expansion takes place against vehicle affixed surfaces not shown in the present description. Following entry, flyback propulsion is provided by subsonic combustion ramjet mode. Low speed loiter and landing thrust is provided by the ejector mode.

Engine Operating Schematic

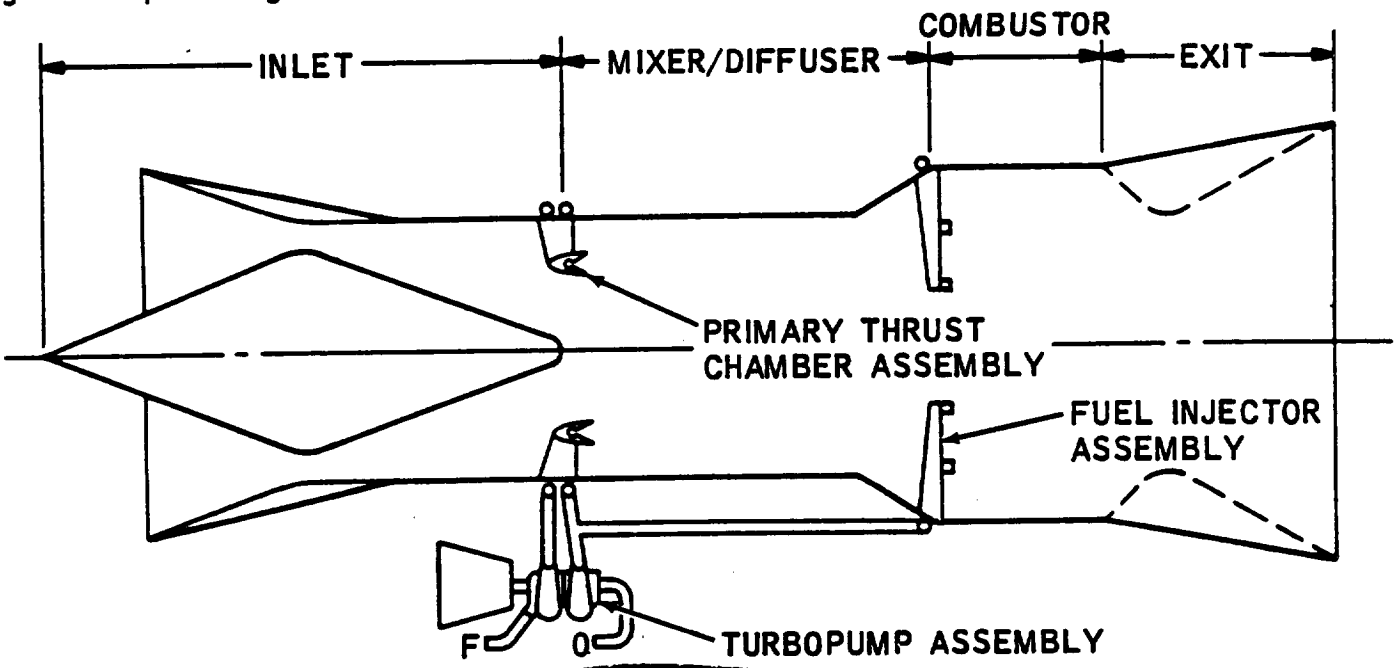

Engine Design Parameters

P_c = 2000 psia, W_s/W_p = 1.50, O/F = 7.937, ϕ_p = 1.0, ϕ_s = 1.00, A_4/A_3 = 2.00, P_{T2}/P_{TO} ref. Fig. 11

Engine Operating Mode Block Diagrams

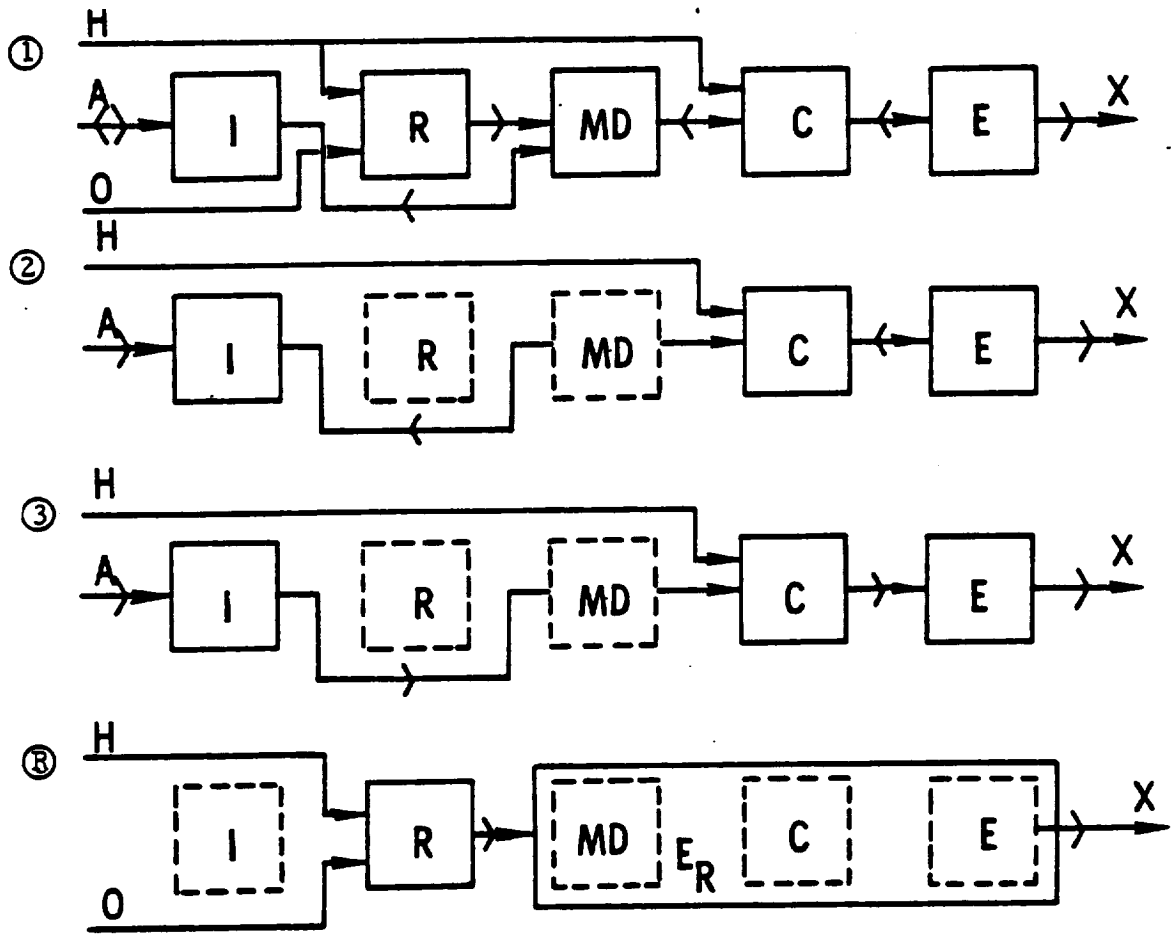

EJECTOR SCRAMJET (ENGINE NO. 10)
COMPOSITE ENGINE STUDY
CLASS 1 PHASE

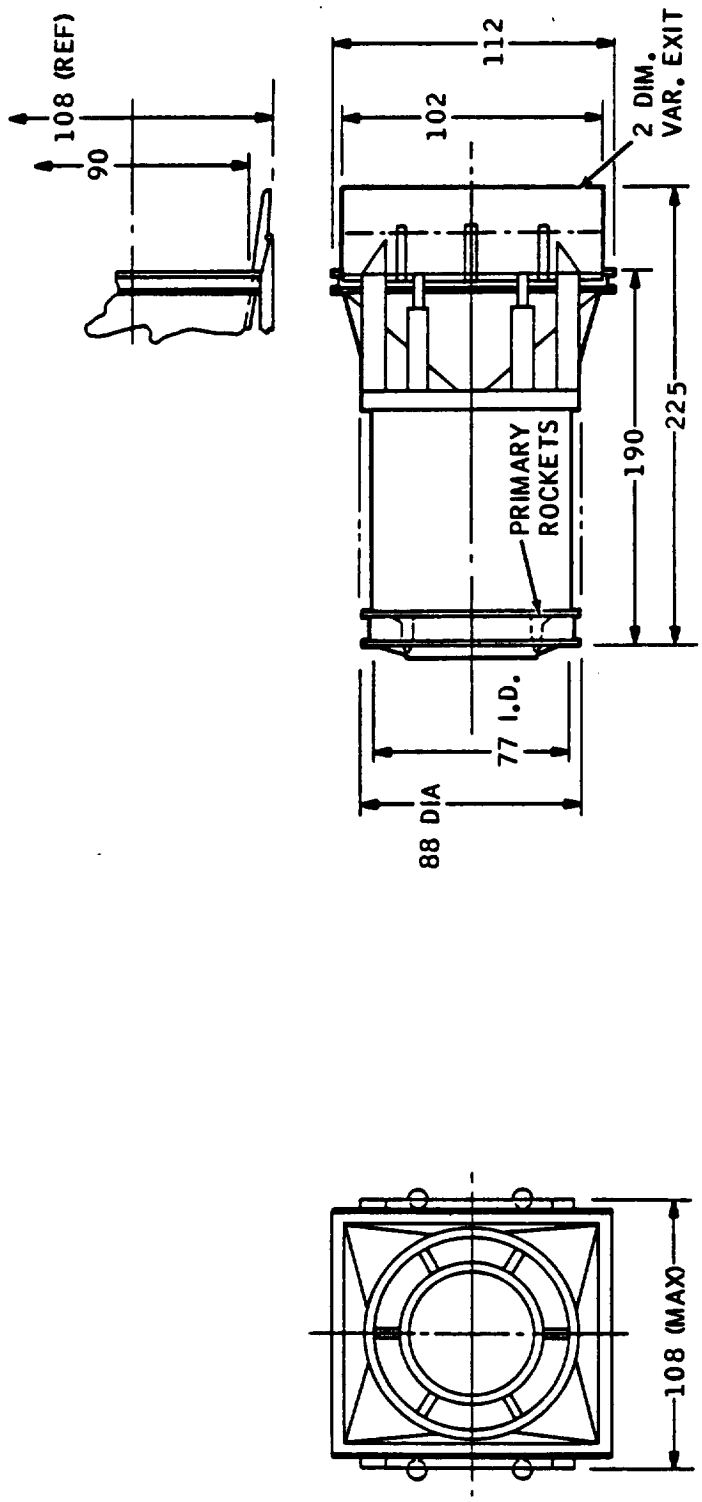

Engine Physical Characteristics

Eng. No. 10

WEIGHT, THRUST/WEIGHT*	English Units	International Units
Subsystem Components	NOTE: Engine weight statement does not include nozzle exit surfaces considered to be vehicle affixed (Fig 6)	
Primary Rockets	677 LBM	307 KG
Turbopumps and Plumbing	706	320
Structure	1254	568.8
Mixer	740	336
Diffuser	375	170
Combustor	620	281
Exit and Centerbody	1890	857.3
Manifolding and Contingency	350	159
Uninstalled Weight	6612 LBM	2999 KG
Thrust, SLS	250,000 LBF	1,112,055 N
Uninstalled Thrust/weight	37.8 LBF/LBM	371 N/KG
Inlet Weight (typical)	12,000 LBM	5443 KG
Installed Weight	18,612 LBM	8442 KG
Installed Thrust/weight	13.4 LBF/LBM	131 N/KG
LENGTH		
Uninstalled Length	18.8 FT	5.73 M
Inlet Length (typical)	81.6	24.9
Installed Length	90.4 FT	27.6 M
FLOW AREAS		
Inlet Cowl, Ac	100 FT^2	9.29 M^2
Mixer, A_3	32	3.0
Combustor, A_4	64	6.0
Nozzle Exit, max, A_6**	400 FT^2	37.2 M^2

* Based on maximum internal pressure = 100 psia (689.5 N/M^2)
**For ejector mode, see engine data

ENGINE THRUST / WEIGHT

EFFECT OF SIZE AND INTERNAL PRESSURE

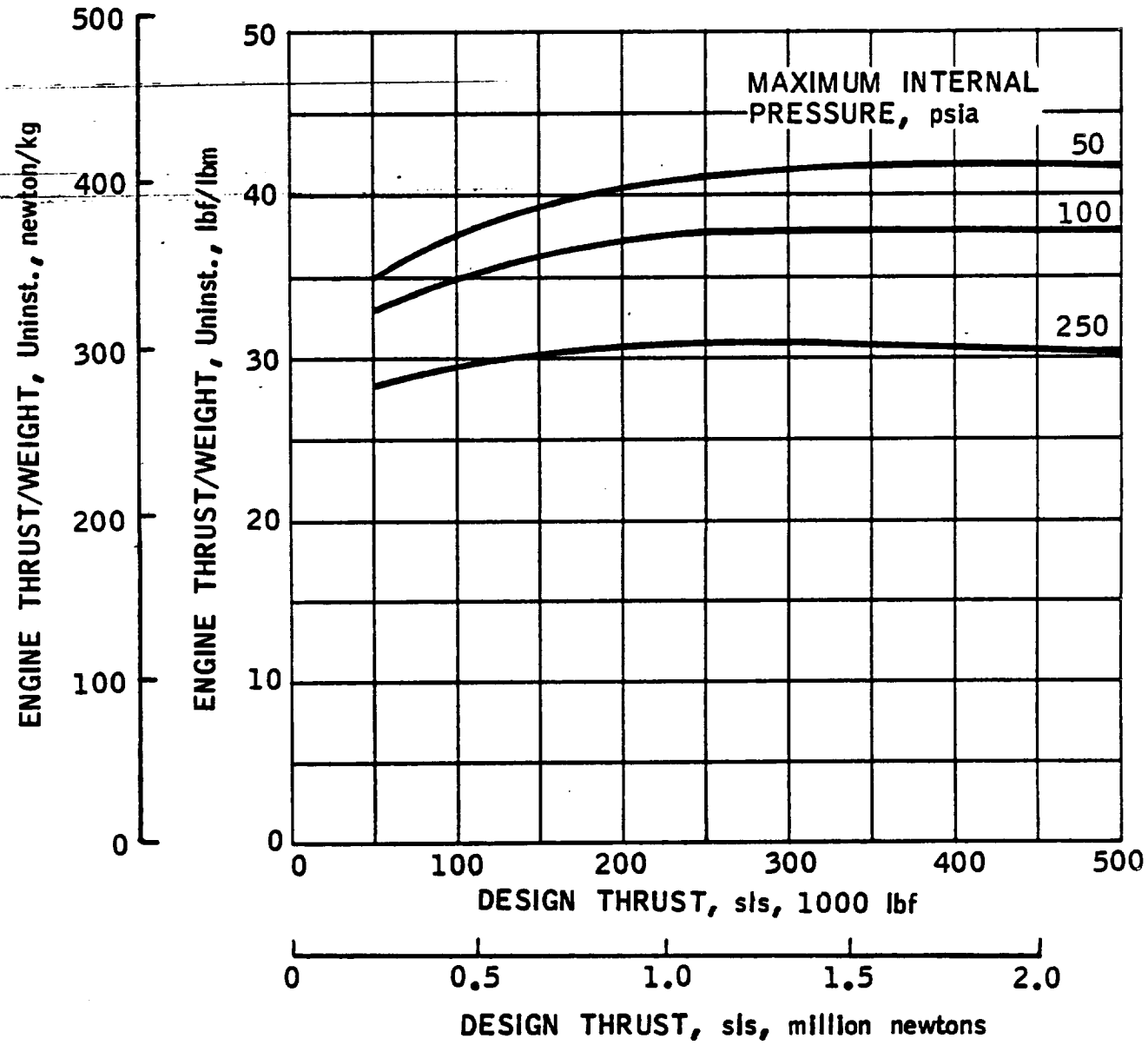

RAMJET SPECIFIC IMPULSE

SUBSONIC COMBUSTION

NO PRESSURE FIELD

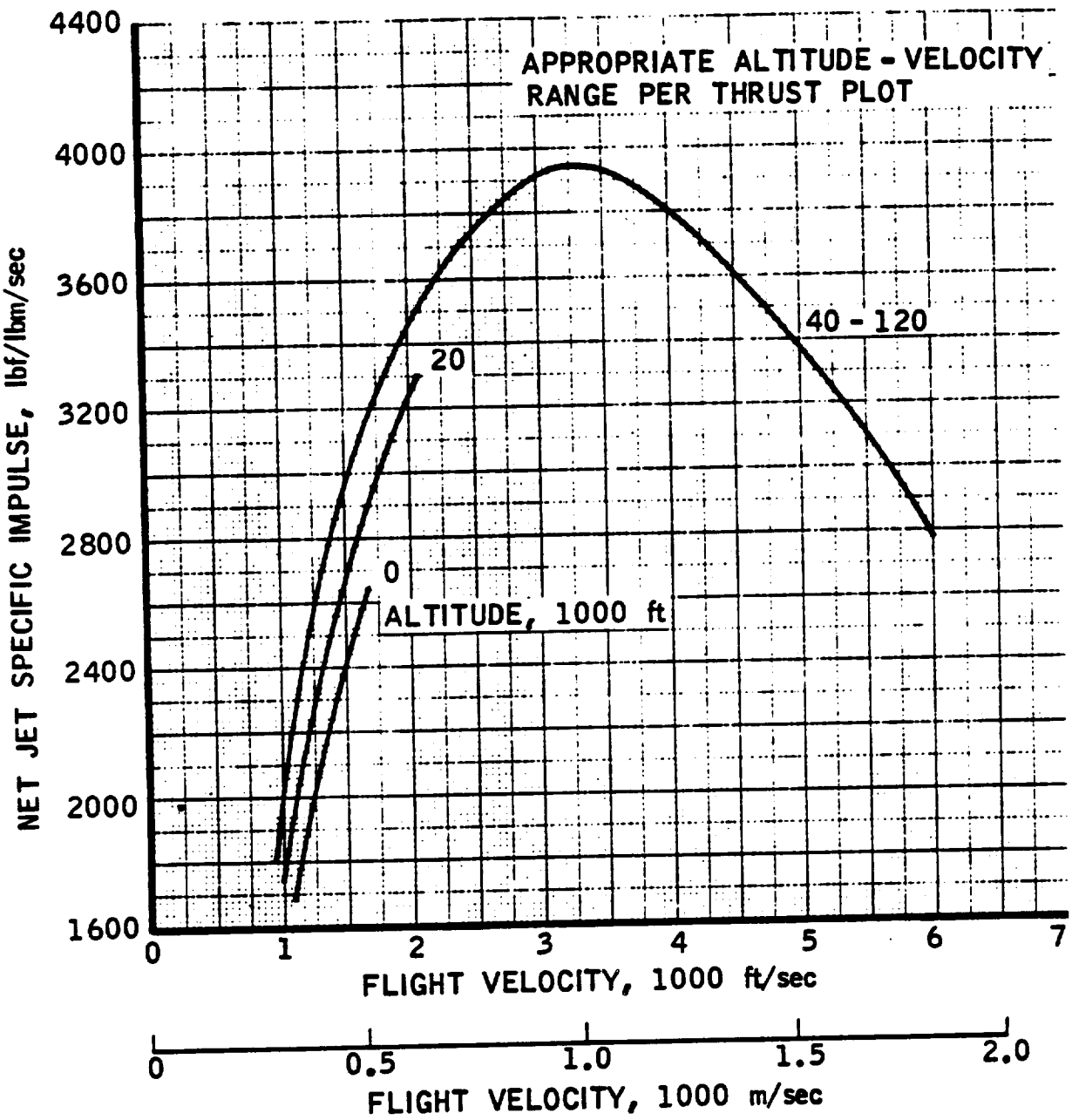

RAMJET THRUST

Eng. No. 10

SUBSONIC COMBUSTION
NO PRESSURE FIELD

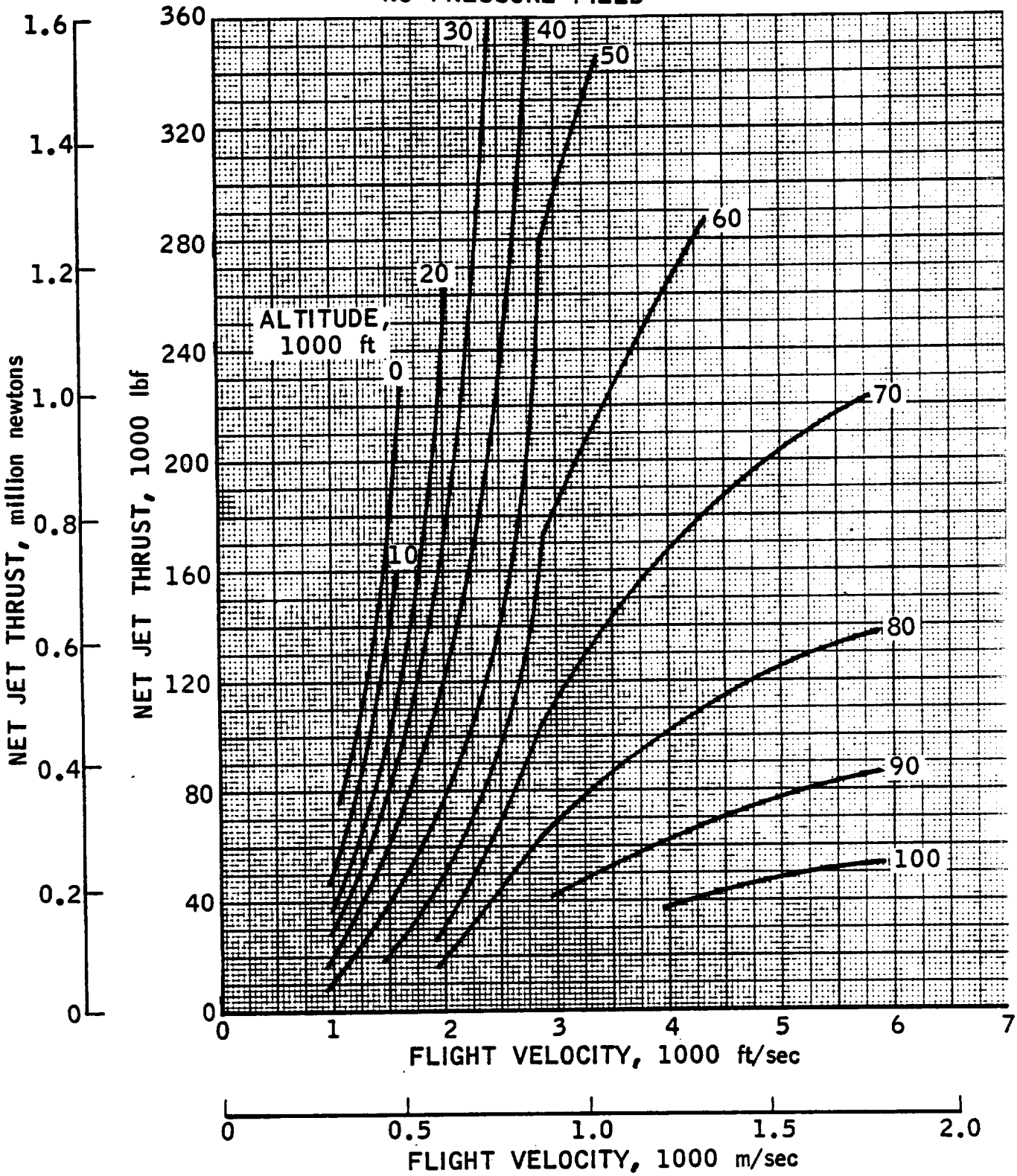

Eng. No. 10

RAMJET SPECIFIC IMPULSE
SUBSONIC COMBUSTION
EFFECT OF PRESSURE FIELD

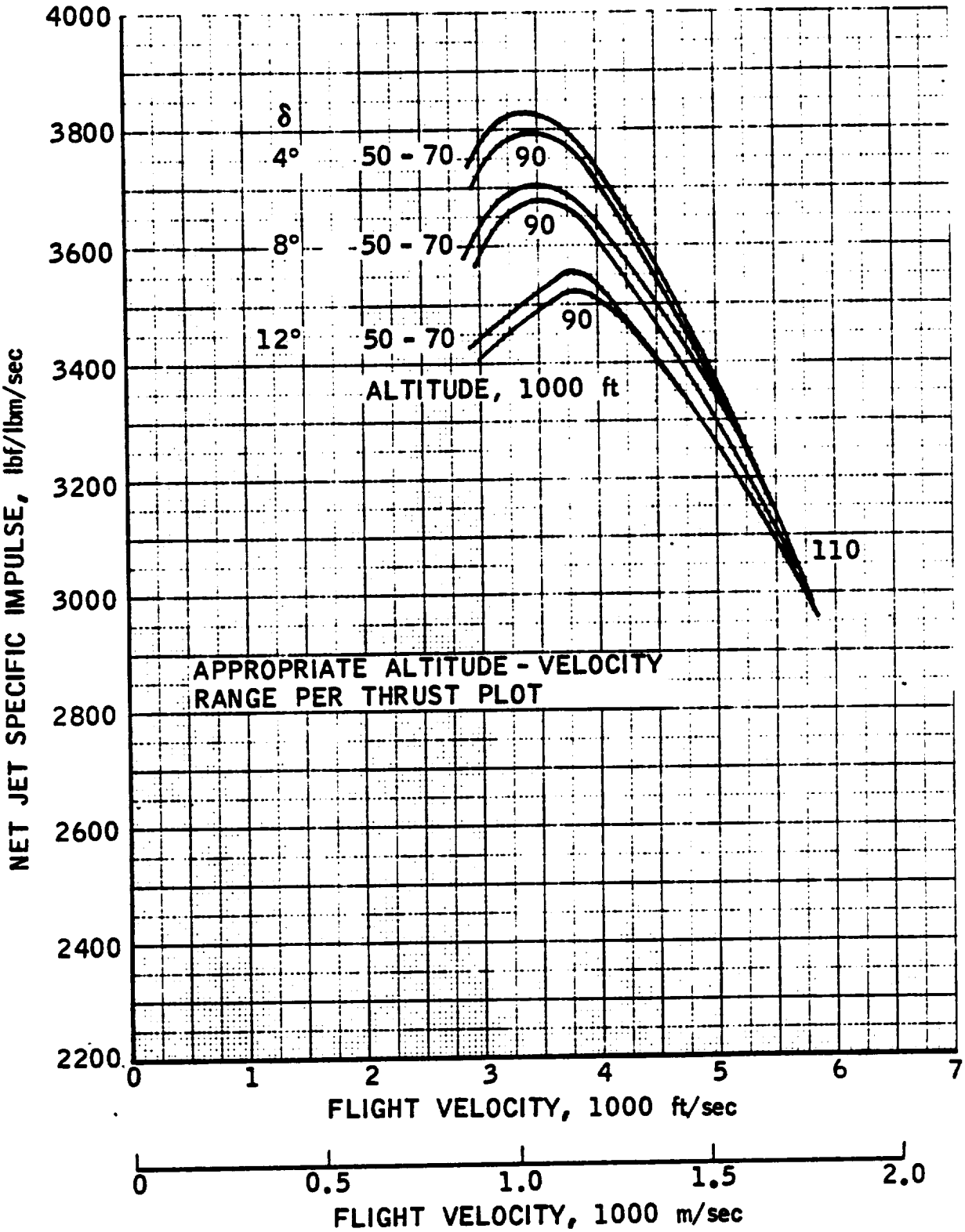

RAMJET THRUST

SUBSONIC COMBUSTION

EFFECT OF PRESSURE FIELD

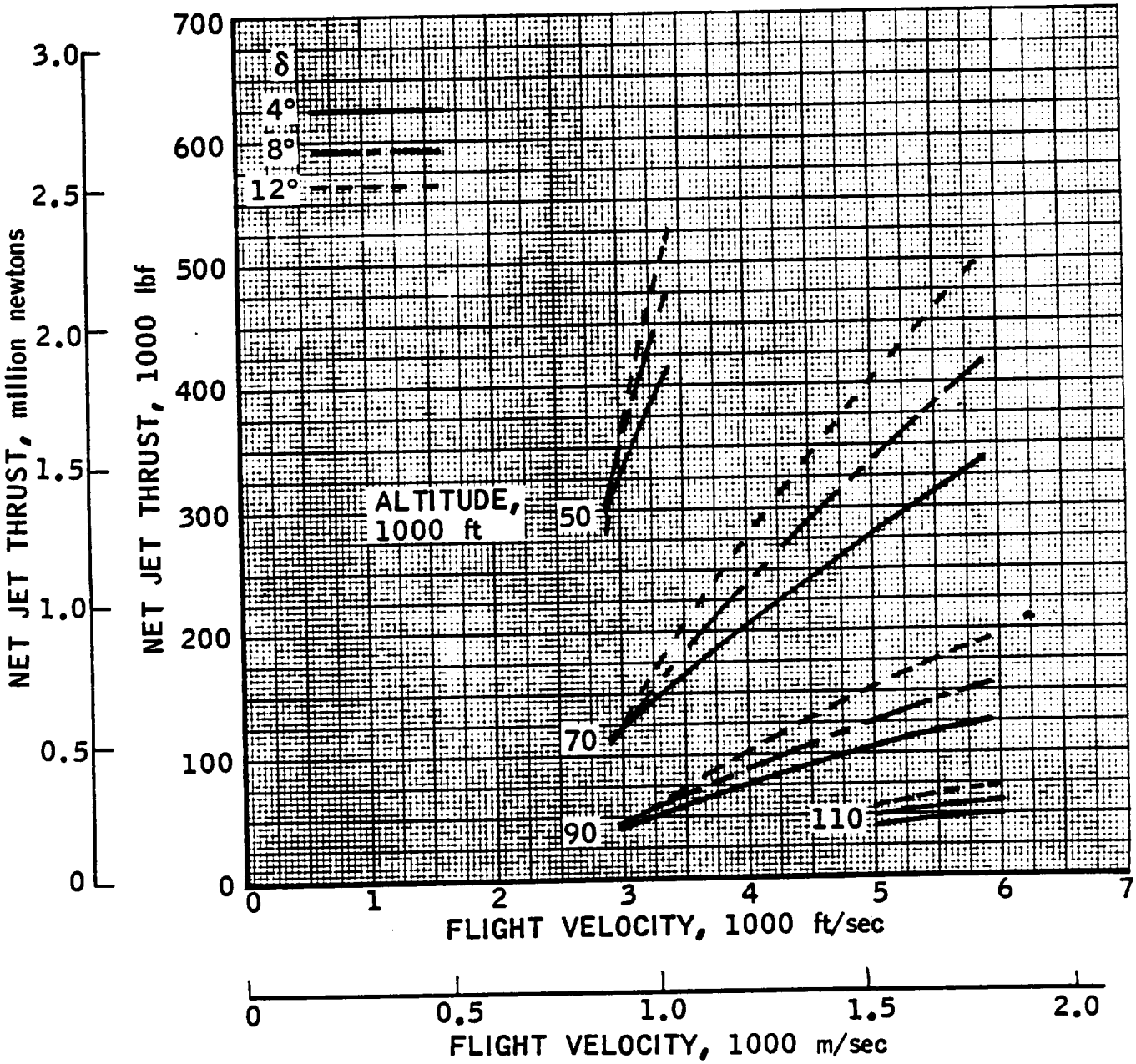

RAMJET SPECIFIC IMPULSE

SUPERSONIC COMBUSTION

NO PRESSURE FIELD

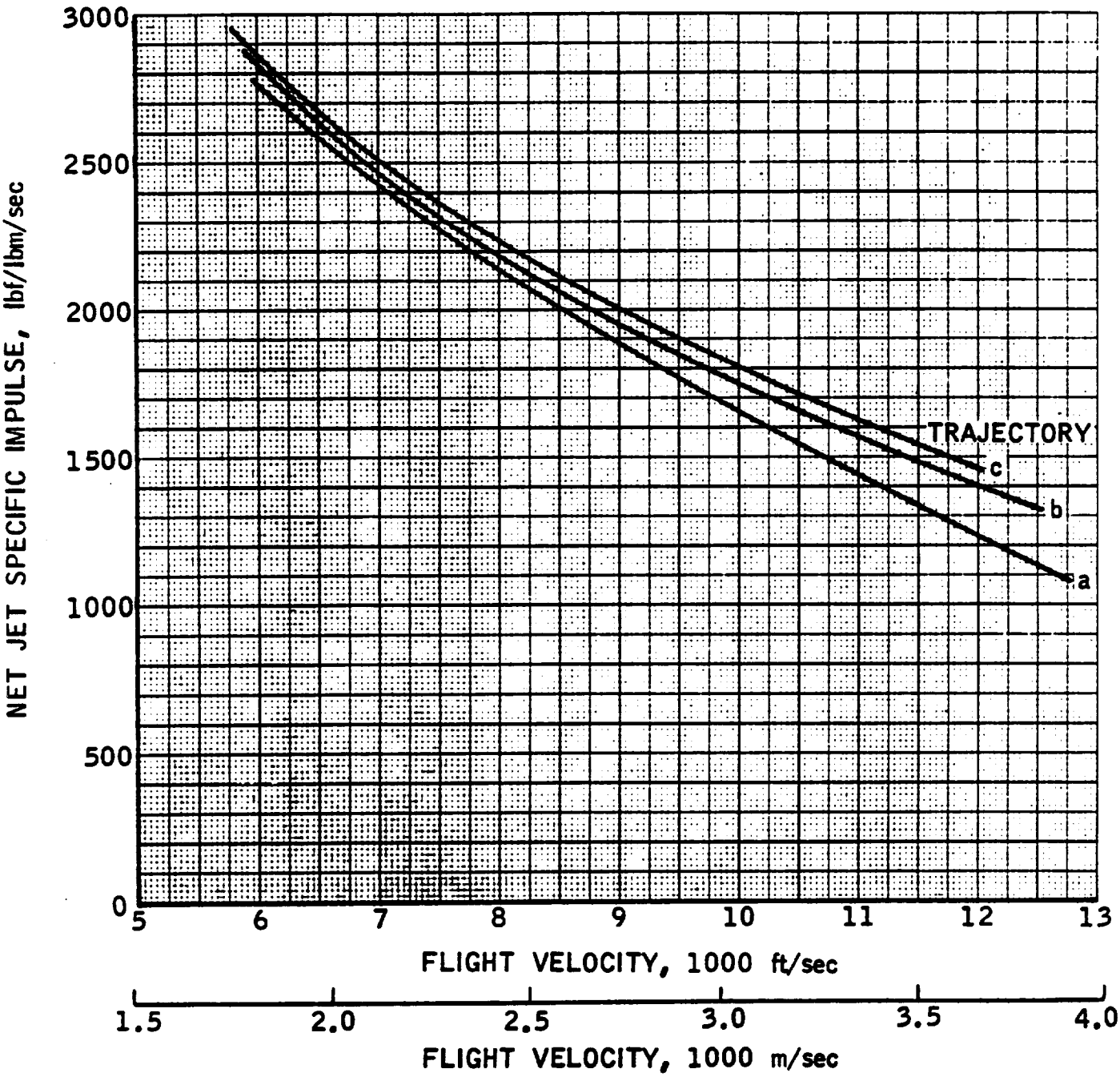

RAMJET THRUST

SUPERSONIC COMBUSTION
NO PRESSURE FIELD

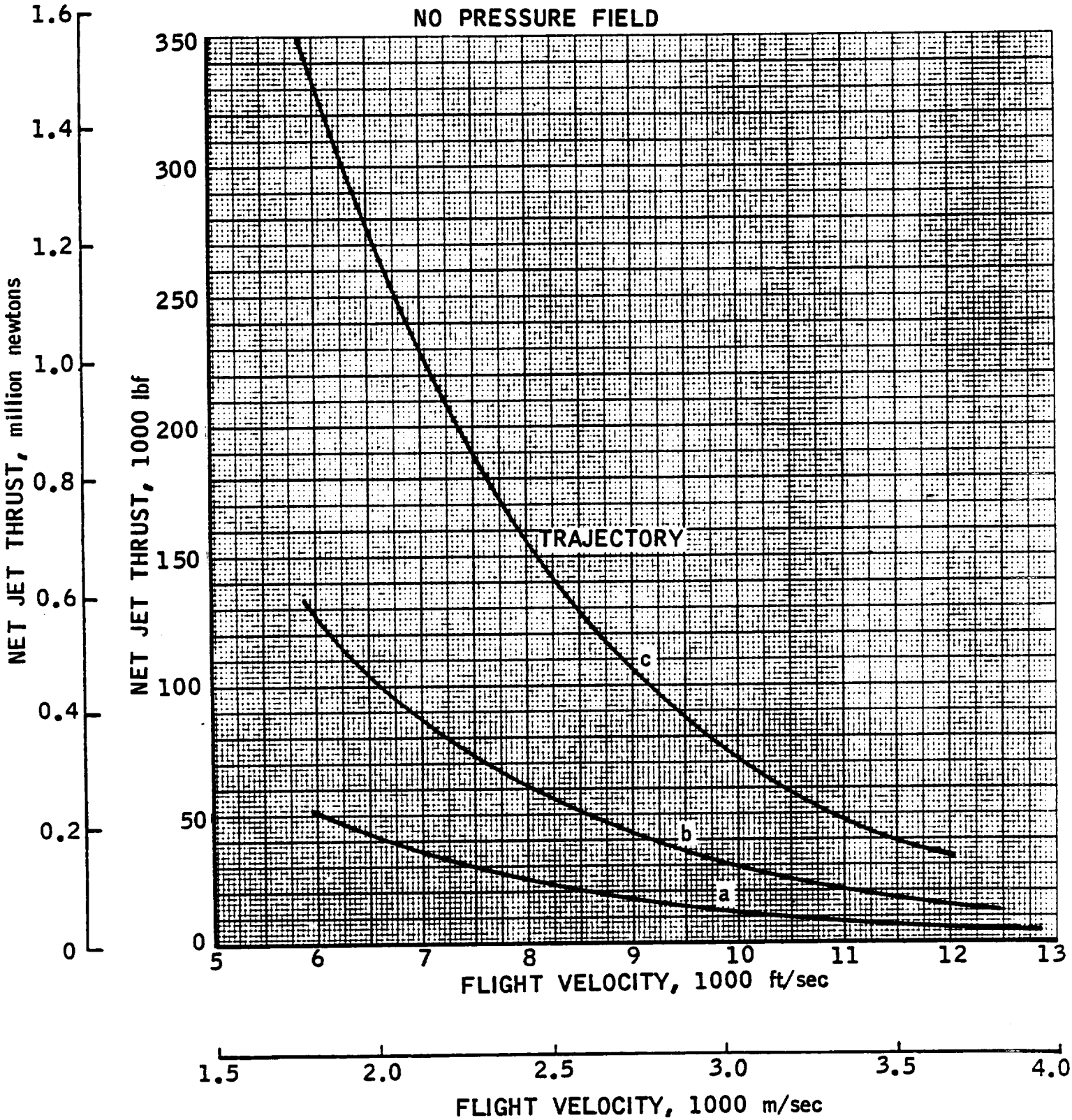

RAMJET SPECIFIC IMPULSE

SUPERSONIC COMBUSTION

EFFECT OF PRESSURE FIELD

TRAJECTORY b

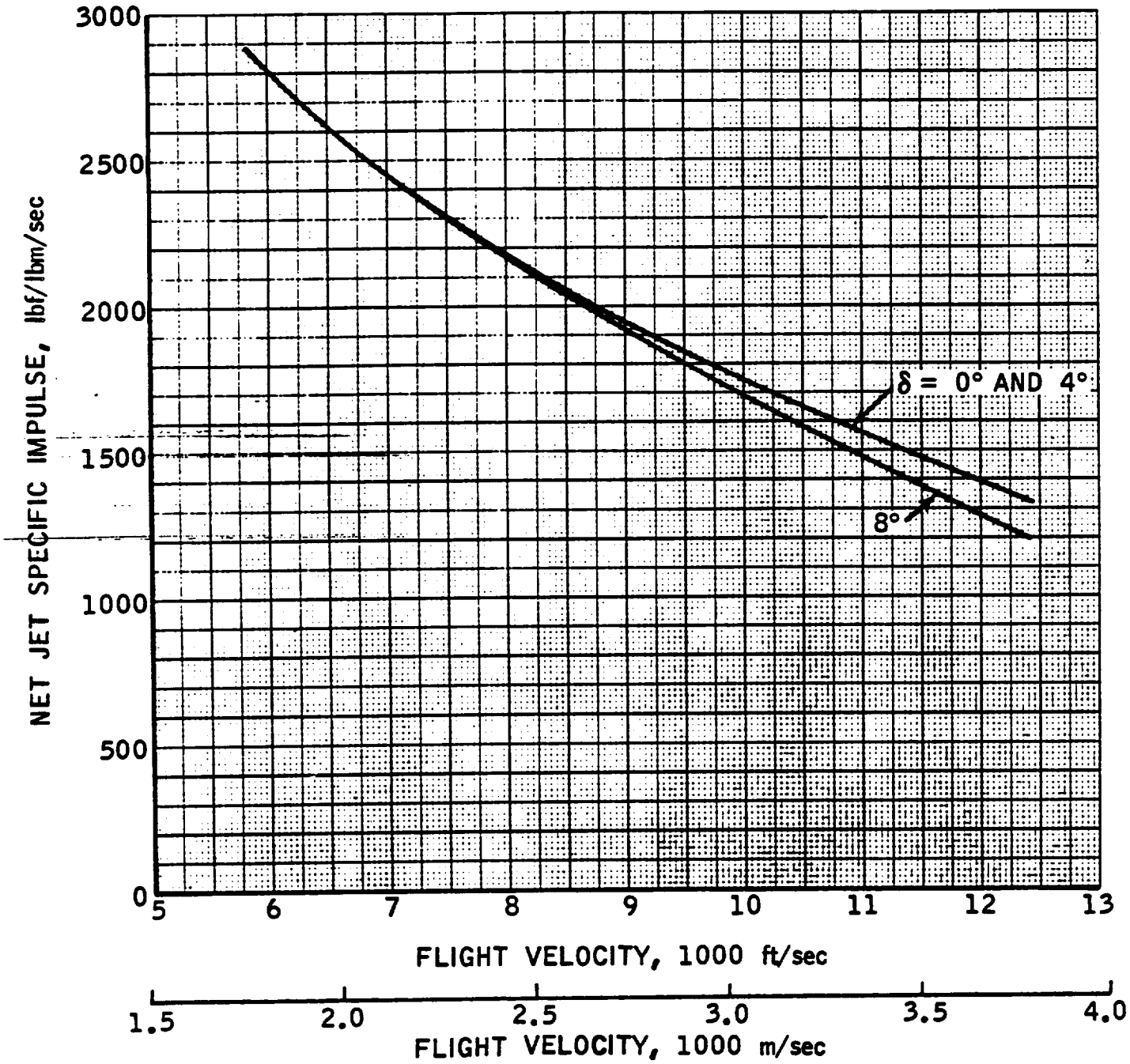

RAMJET THRUST
SUPERSONIC COMBUSTION
EFFECT OF PRESSURE FIELD

TRAJECTORY b

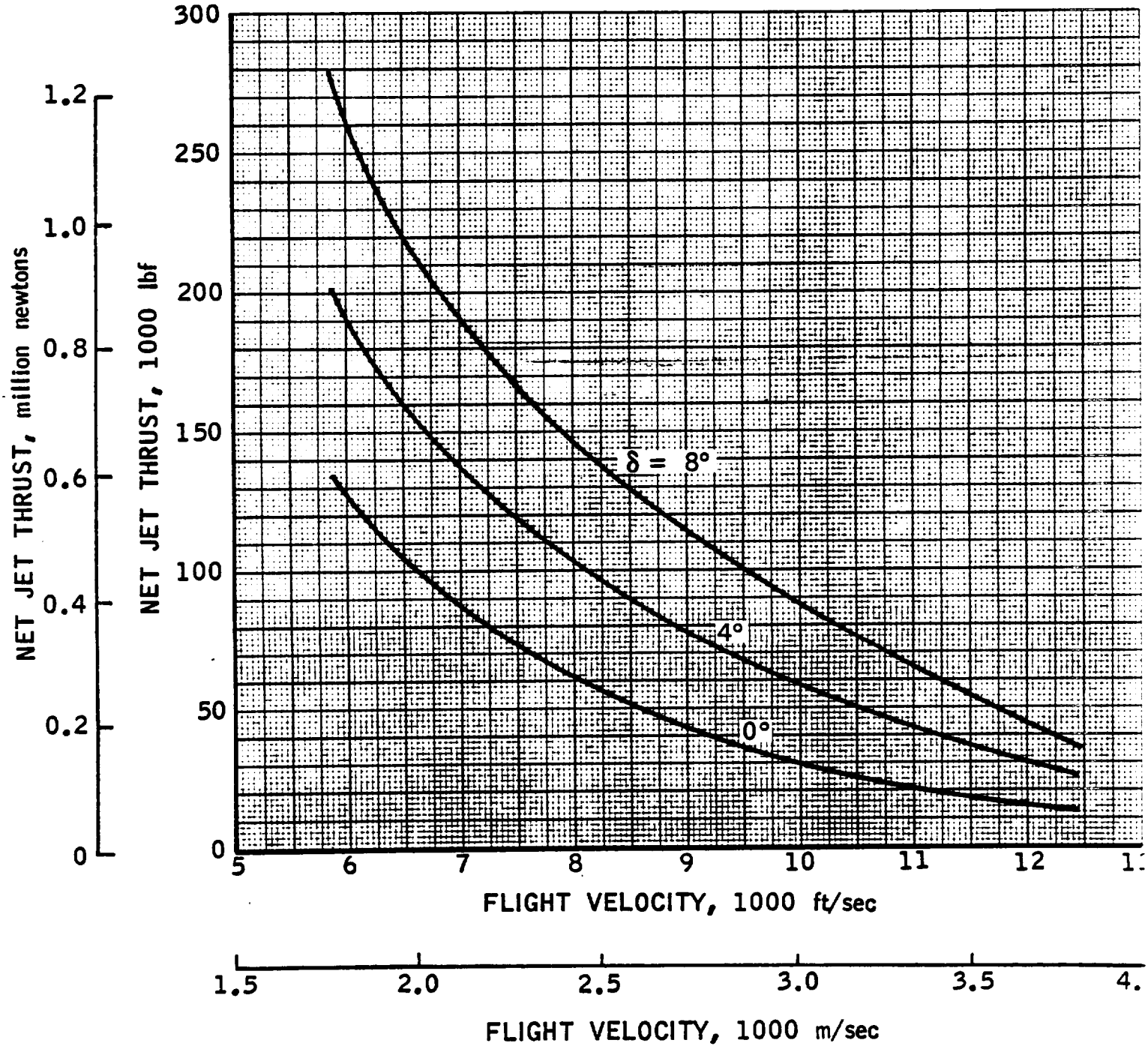

REFERENCE TRAJECTORIES

SUPERSONIC COMBUSTION RAMJET

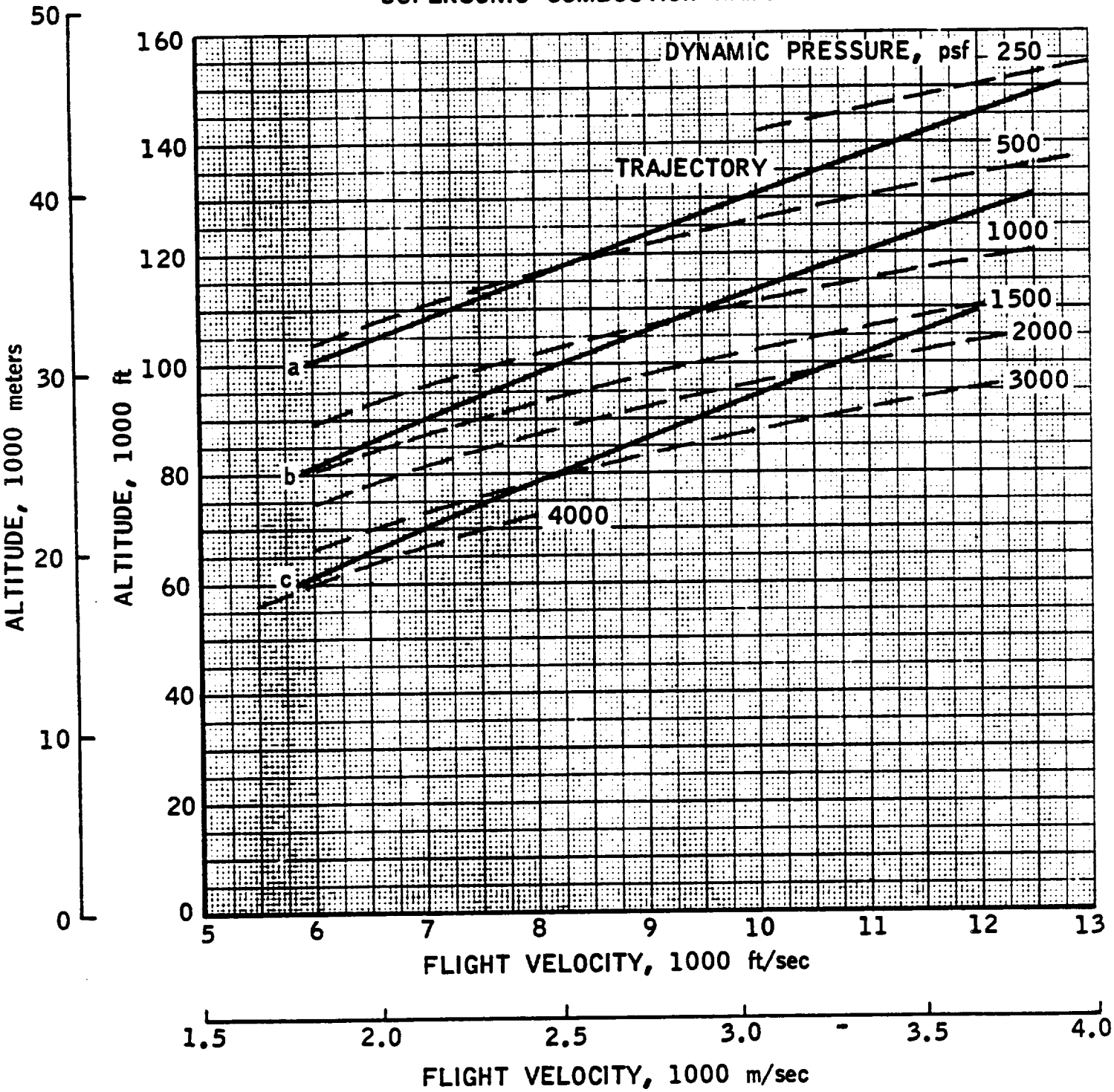

Cross-Reference Information

Ejector Mode Performance Maps and Tabular Data may be found in the Engine No. 9 Section.

This Page Intentionally Blank

SUPERCHARGED EJECTOR RAMJET, NO. 11

Technical Description

This engine is capable of operating in four discrete modes: (1) supercharged ejector mode, (2) fan ramjet mode, (3) subsonic combustion ramjet and (4) fan only operation. The later operating mode is a low-thrust capability applicable to the flyback and loiter aspect of the mission profile. The engine consists of a single stage low pressure ratio fan capable of being retracted from the main engine flow stream. Accompanying the tip turbine fan is a fan drive subsystem consisting of a remote airbreathing gas generator, or small turbojet engine. Following the fan, a primary rocket subsystem, mixer, diffuser, afterburner, and variable geometry exit nozzle are included as in the basic ejector ramjet engine.

For a typical mission profile the engine is initially operated in the supercharged ejector mode wherein the fan operates at design speed. The stoichiometric primary rockets are operated at full thrust condition and the afterburner operates stoichiometrically. At a flight condition in the approximate vicinity of Mach 1 the primary system can be phased off, the engine continuing in the fan ramjet mode (technically a high bypass ratio, full plenum burning turbofan cycle). In the vicinity of Mach 2 plus, fan operation is stopped and the fan is hinged forward and retracted from the flow stream. The engine continues in the subsonic combustion ramjet mode to the staging condition. Following entry and cruise-back in the subsonic combustion ramjet mode, subsonic loiter and landing is accomplished with fan only operation with little if any plenum burning.

Engine Operating Schematic

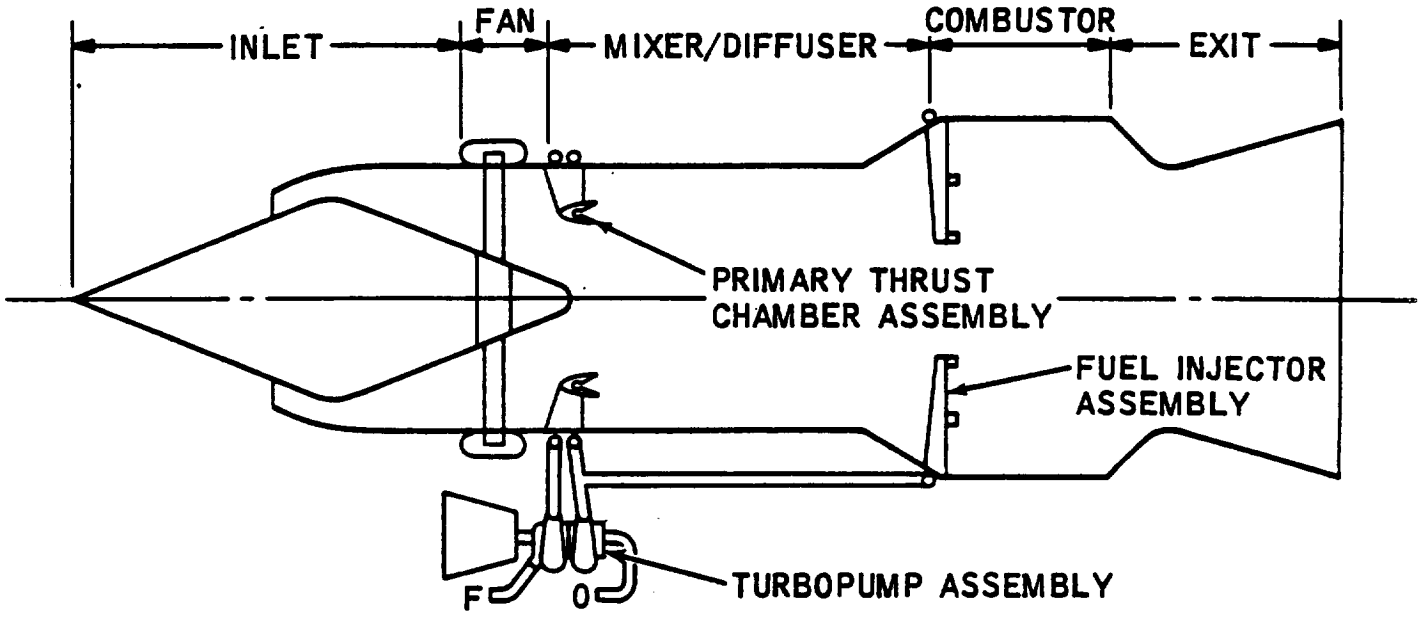

Eng. No. 11

Engine Desgin Parameters

P_c = 2000 psia, W_s/W_p = 1.90, O/F = 7.937, ϕ_p = 1.0, ϕ_s = 1.00, PR_f = 1.30, A_4/A_3 = 2.00, P_{T2}/P_{TO} ref. Fig. 9

Engine Operating Mode Block Diagrams

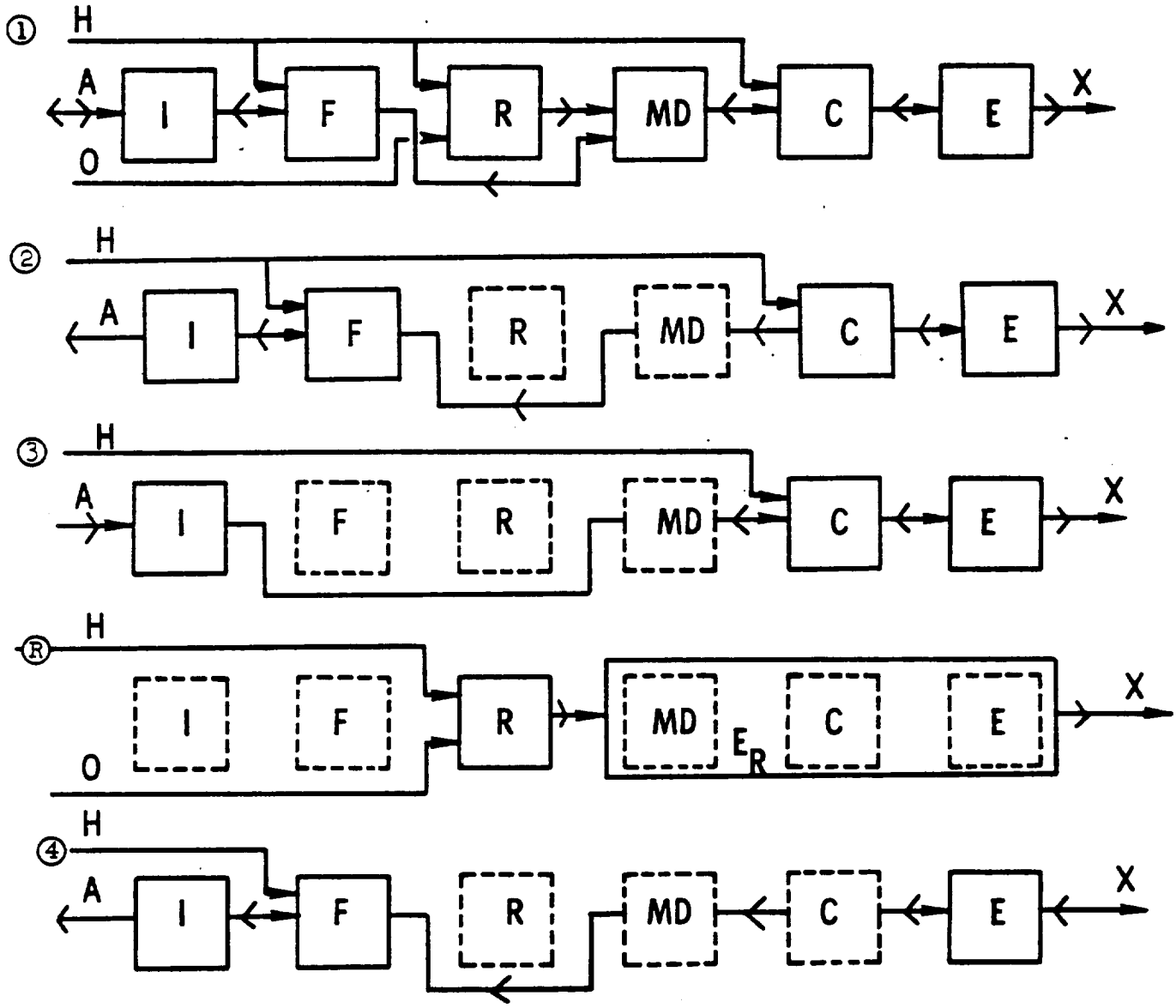

SUPERCHARGED EJECTOR RAMJET (ENGINE NO. 11)

COMPOSITE ENGINE STUDY

CLASS 1 PHASE

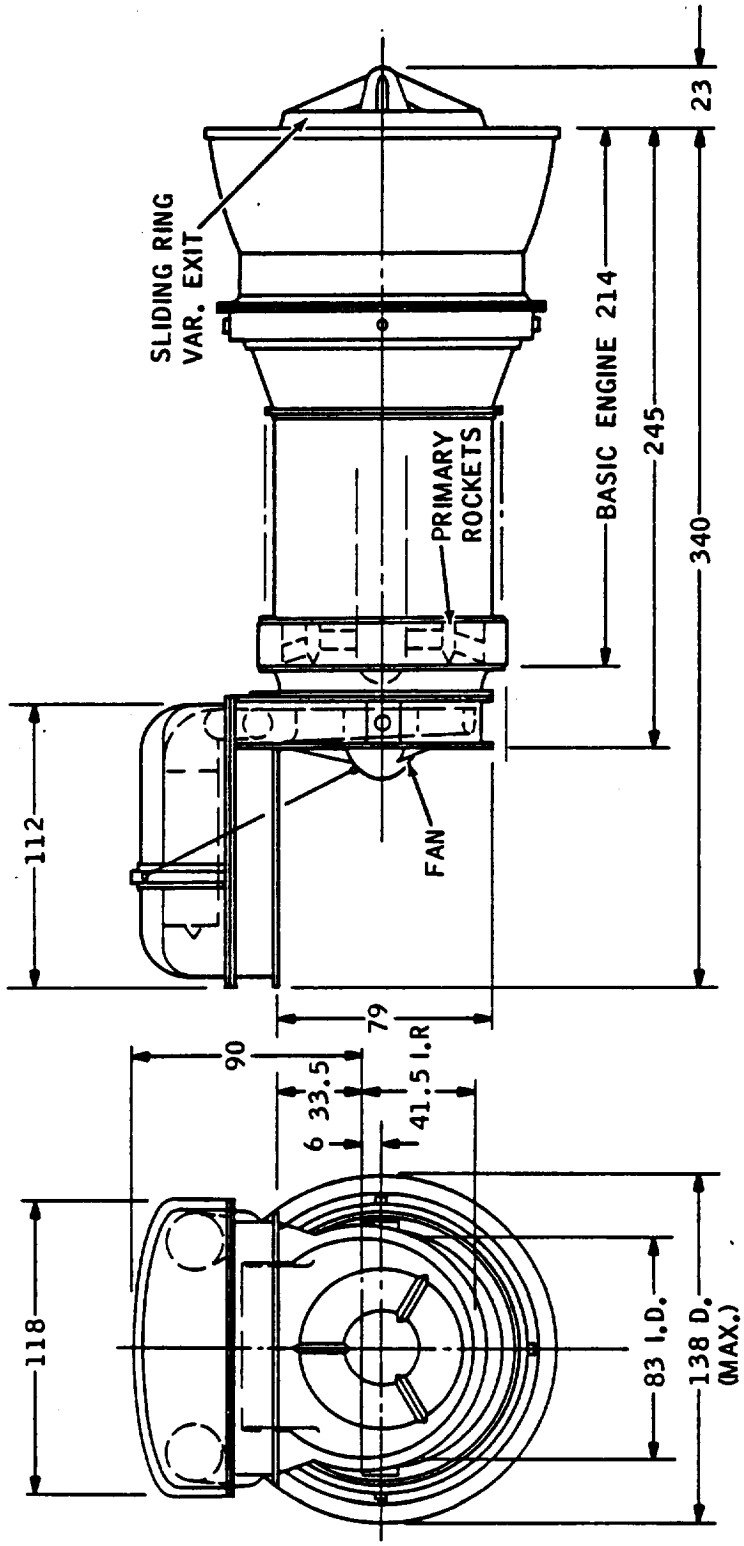

Engine Physical Characteristics

Eng. No. 11

WEIGHT, THRUST/WEIGHT*	English Units		International Units	
Subsystem Components				
Fan Assembly	1009	LBM	457.7	KG
Gas Generator	895		406	
Structure and Actuator	665		302	
Fan Cover Structures	350		159	
Primary Rockets	602		273	
Turbopumps and Plumbing	661		300	
Structure	1114		505.3	
Mixer	1020		462.7	
Diffuser	432		196	
Combustor	712		323	
Exit and Centerbody	2172		985.2	
Manifolding and Contingency	400		181	
Uninstalled Weight	10,032	LBM	4551	KG
Thrust, SLS	250,000	LBF	1,112,055	N
Uninstalled Thrust/weight	24.9	LBF/LBM	244	N/KG
Inlet Weight (typical)	9840	LBM	4463	KG
Installed Weight	19,872	LBM	9014	KG
Installed Thrust/weight	12.6	LBF/LBM	124	N/KG
LENGTH				
Uninstalled Length	28.3	FT	8.63	M
Inlet Length (typical)	56.2		17.1	
Installed Length	84.5	FT	25.6	M
FLOW AREAS				
Inlet Cowl, Ac	82	FT^2	7.6	M^2
Mixer, A_3	32		3.0	
Combustor, A_4	64		6.0	
Nozzle Exit, max A_6**	125	FT^2	11.6	M^2

* Based on maximum internal pressure = 150 psia (1034 N/M_2)
**For ejector mode, see engine data

ENGINE THRUST / WEIGHT

EFFECT OF SIZE AND INTERNAL PRESSURE

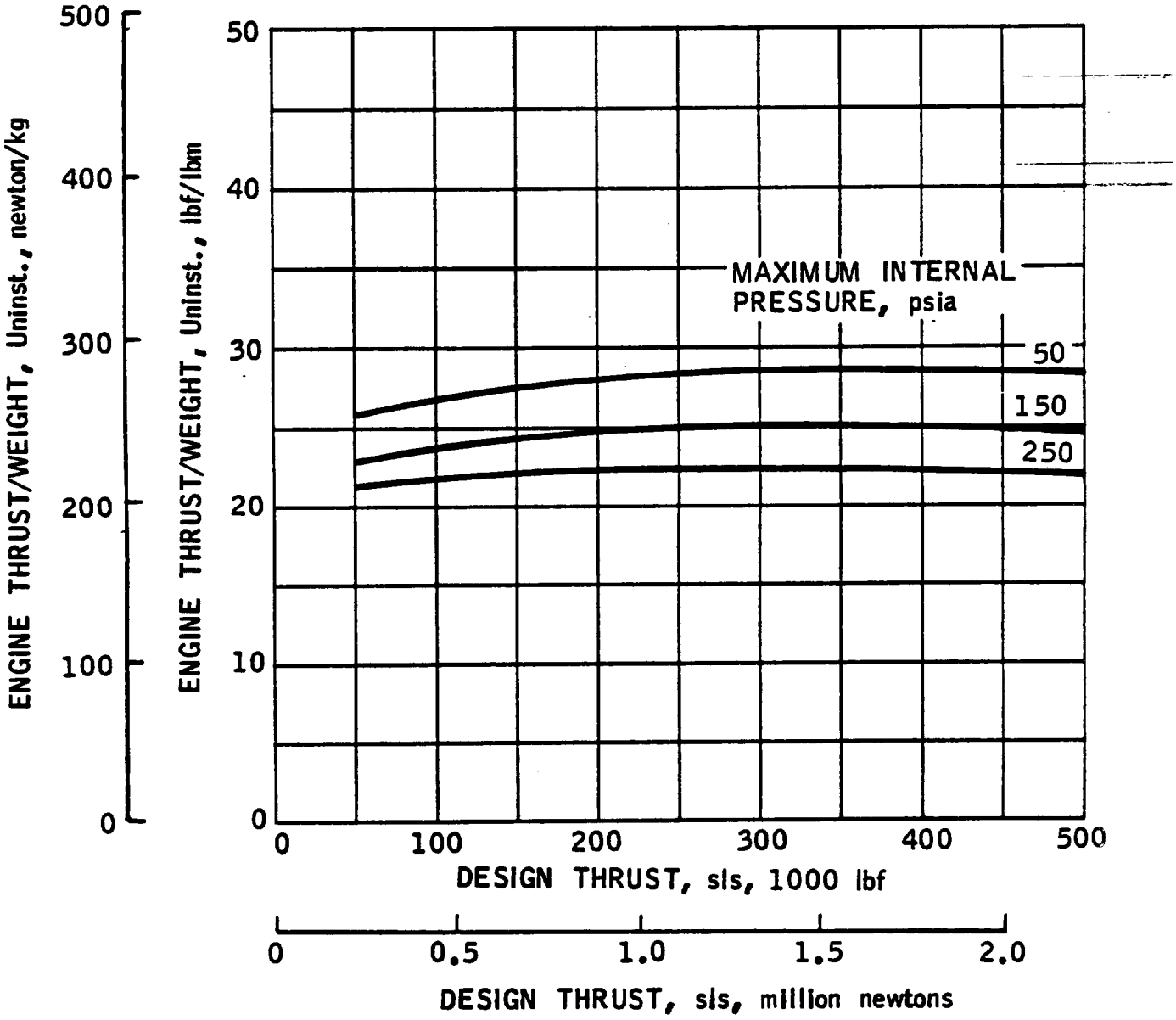

EJECTOR MODE SPECIFIC IMPULSE

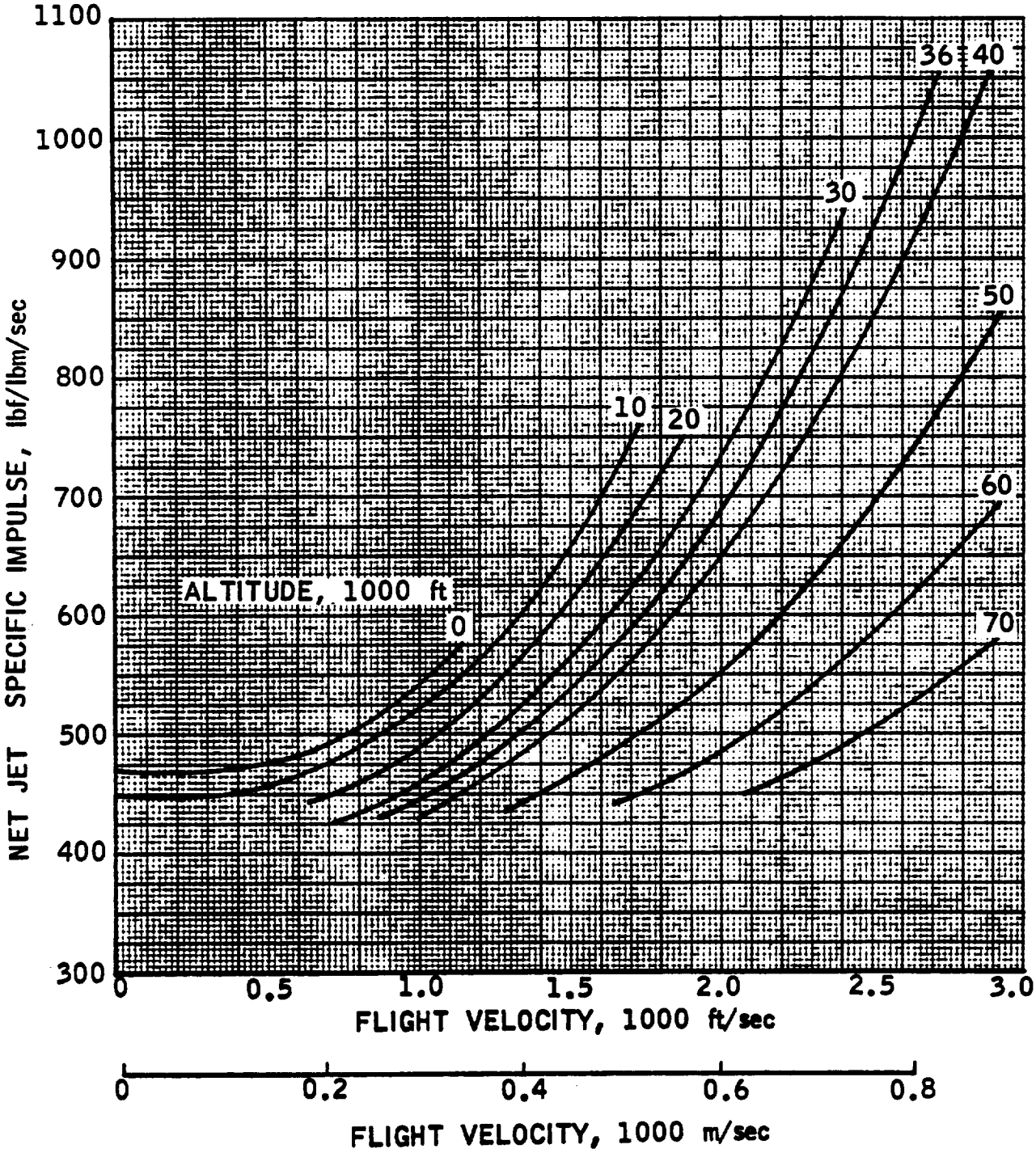

Eng. No. 11

EJECTOR MODE THRUST

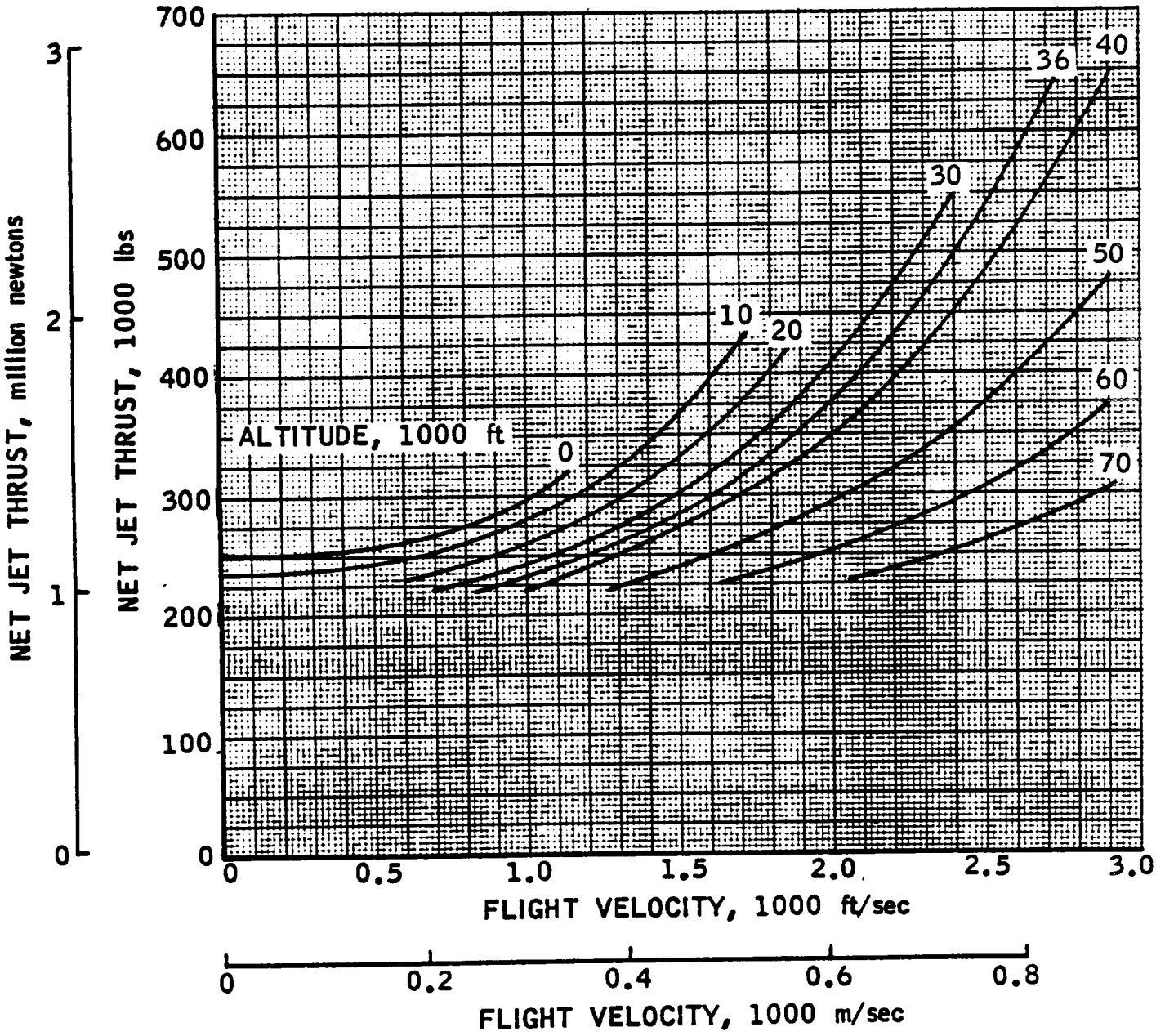

EJECTOR MODE AIRFLOW

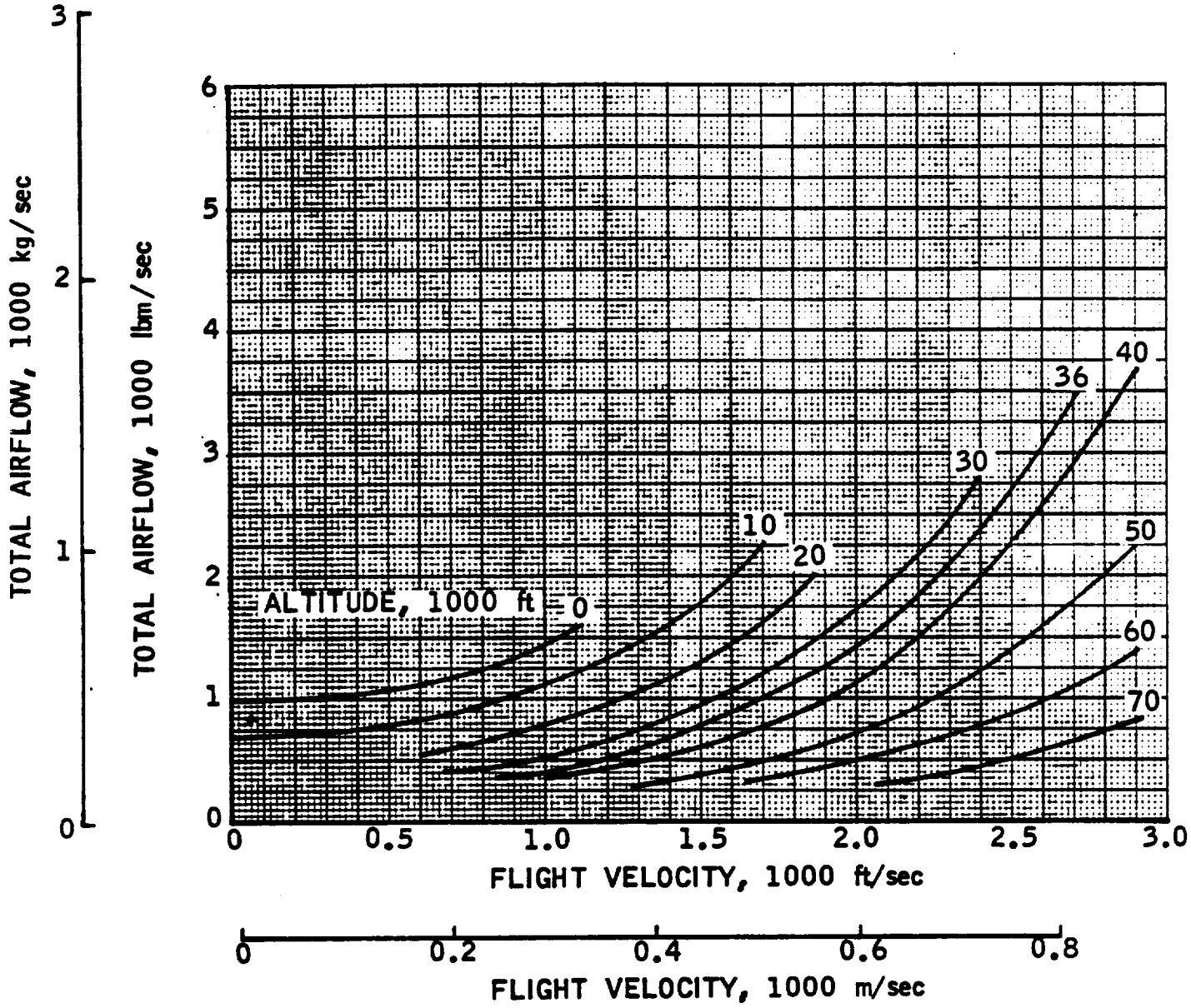

EJECTOR MODE CAPTURE AREA

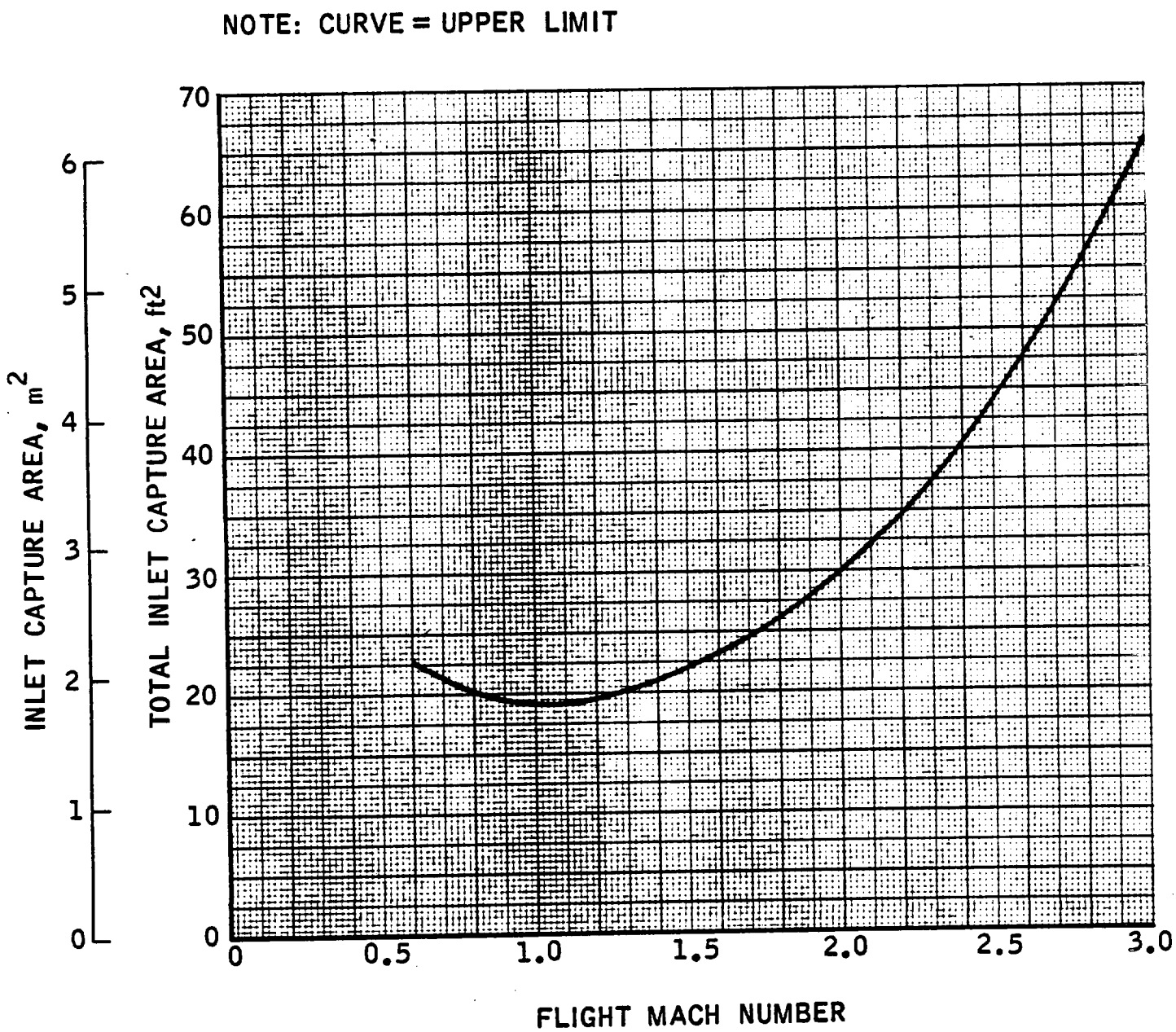

[redacted]

ENGINE 11

ESTIMATED PERFORMANCE

MO	VO	HTO	PTO	T	CF	IS	SPC	PT2	H2	P2
				ALTITUDE -		0. FEET				
0.01	11.	124.5	14.7	251320.	1521.18	476.	7.57	19.11	121.5	17.56
0.25	279.	126.0	15.3	249631.	58.22	471.	7.64	19.95	123.0	18.34
0.50	558.	130.7	17.4	257583.	27.33	484.	7.44	22.66	127.7	20.89
0.75	837.	138.5	21.3	277183.	16.81	516.	6.98	27.75	135.5	25.67
1.00	1116.	149.4	27.8	315612.	11.43	577.	6.24	36.16	146.1	33.47
				ALTITUDE -		10000. FEET				
0.01	11.	115.1	10.1	233718.	2058.55	449.	8.02	13.14	112.3	12.08
0.30	322.	117.1	10.8	233826.	65.06	448.	8.03	13.99	114.3	12.86
0.60	644.	123.4	12.9	247135.	29.43	471.	7.65	16.76	120.4	15.41
0.90	966.	133.7	17.1	276124.	17.19	519.	6.93	22.22	130.5	20.43
1.20	1288.	148.2	24.5	318876.	11.31	589.	6.12	31.55	144.9	29.14
1.40	1503.	160.2	32.2	366230.	8.79	663.	5.43	40.88	156.5	37.66
1.60	1718.	174.0	43.0	428658.	7.07	756.	4.76	53.62	169.9	49.31
				ALTITUDE -		20000. FEET				
0.60	622.	115.1	8.6	229096.	40.83	443.	8.13	11.21	112.4	10.30
0.90	933.	124.8	11.4	251170.	23.41	481.	7.49	14.86	121.8	13.66
1.20	1244.	138.3	16.4	286823.	14.85	541.	6.65	21.09	135.0	19.39
1.50	1555.	155.7	24.8	340450.	10.07	629.	5.73	31.29	152.0	28.77
1.80	1867.	177.0	38.8	420631.	7.25	752.	4.78	47.61	172.8	43.79

[redacted]

[redacted]

ENGINE 11

ESTIMATED PERFORMANCE

M2	WS	WP	WSWP	WFT	PHP	PHS	V6	PT20	A0	A5	A6
					ALTITUDE -		0. FEET				
0.349	952.	501.	1.90	528.4	1.0	1.000	5468.	1.30	1115.65	42.12	49.31
0.349	988.	501.	1.97	529.5	1.0	1.000	5473.	1.30	46.32	42.43	49.93
0.343	1087.	501.	2.17	532.4	1.0	1.000	5494.	1.30	25.45	43.07	51.47
0.335	1267.	501.	2.53	537.6	1.0	1.000	5529.	1.30	19.77	44.12	54.20
0.335	1592.	501.	3.18	547.1	1.0	1.000	5578.	1.30	18.61	45.89	59.03
					ALTITUDE -		10000. FEET				
0.349	681.	501.	1.36	520.5	1.0	1.000	6267.	1.30	1115.60	38.76	51.90
0.349	718.	501.	1.43	521.6	1.0	1.000	6255.	1.30	39.23	39.28	52.89
0.349	839.	501.	1.68	525.1	1.0	1.000	6225.	1.30	22.91	40.76	55.93
0.349	1070.	501.	2.14	531.9	1.0	1.000	6193.	1.30	19.45	42.94	61.23
0.339	1408.	501.	2.81	541.7	1.0	1.000	6191.	1.29	19.18	44.86	68.01
0.345	1785.	501.	3.56	552.7	1.0	1.000	6189.	1.27	20.81	46.90	75.34
0.349	2271.	501.	4.54	566.9	1.0	1.000	6234.	1.25	23.14	47.74	83.37
					ALTITUDE -		20000. FEET				
0.349	580.	501.	1.16	517.6	1.0	1.000	7042.	1.30	22.90	37.05	60.96
0.349	740.	501.	1.48	522.2	1.0	1.000	6950.	1.30	19.45	39.29	66.43
0.349	999.	501.	1.99	529.8	1.0	1.000	6851.	1.29	19.67	42.01	74.47
0.349	1398.	501.	2.79	541.4	1.0	1.000	6768.	1.26	22.00	44.78	85.56
0.349	2000.	501.	4.00	559.0	1.0	1.000	6675.	1.23	26.17	46.41	96.16

[redacted]

ENGINE 11

ESTIMATED PERFORMANCE

MU	VO	HTO	PTO	T	CF	IS	SPC	PT2	H2	P2
				ALTITUDE - 30000. FEET						
0.70	696.	108.5	6.1	219125.	48.18	427.	8.43	7.89	105.9	7.25
1.10	1094.	122.8	9.3	247950.	24.05	478.	7.53	12.08	119.8	11.11
1.50	1492.	143.3	16.1	297507.	13.62	563.	6.39	20.24	139.9	18.61
1.90	1890.	170.2	29.3	378188.	8.46	694.	5.19	35.54	166.2	32.69
2.40	2388.	212.7	63.9	543580.	5.23	933.	3.86	72.88	207.8	67.05
				ALTITUDE - 36000. FEET						
0.80	775.	105.7	5.0	215934.	50.69	423.	8.52	6.55	103.2	6.02
1.20	1163.	120.7	8.0	243690.	25.84	472.	7.62	10.32	117.8	9.48
1.60	1550.	141.7	14.1	289973.	14.67	553.	6.51	17.54	138.4	16.12
2.00	1938.	168.7	25.9	362226.	9.01	671.	5.36	31.04	164.8	28.54
2.40	2325.	201.7	48.3	471017.	6.00	835.	4.31	55.10	197.0	50.69
2.80	2713.	240.7	89.7	634282.	4.29	1052.	3.42	96.81	235.2	89.08
				ALTITUDE - 40000. FEET						
0.80	774.	105.6	4.2	209868.	59.66	412.	8.73	5.41	103.0	4.97
1.40	1355.	130.3	8.7	251668.	22.20	487.	7.39	11.04	127.2	10.15
2.00	1936.	168.5	21.4	334620.	10.08	628.	5.73	25.63	164.5	23.57
2.50	2420.	210.6	46.6	453989.	5.96	811.	4.44	52.43	205.7	48.23
3.00	2904.	262.1	100.3	646864.	3.93	1066.	3.38	104.69	256.2	96.36

ENGINE 11

ESTIMATED PERFORMANCE

M2	WS	WP	WSWP	WFT	PHP	PHS	V6	PT20	A0	A5	A6
					ALTITUDE - 30000. FEET						
0.349	420.	501.	0.84	512.9	1.0	1.000	7868.	1.30	21.09	34.07	71.47
0.349	606.	501.	1.21	518.3	1.0	1.000	7684.	1.29	19.34	37.25	80.52
0.349	942.	501.	1.88	528.1	1.0	1.000	7467.	1.26	21.99	41.10	94.87
0.349	1522.	501.	3.04	545.0	1.0	1.000	6956.	1.21	27.98	44.55	96.15
0.349	2803.	501.	5.60	582.4	1.0	1.000	6542.	1.14	40.64	44.63	95.95
					ALTITUDE - 36000. FEET						
0.349	354.	501.	0.71	511.0	1.0	1.000	8352.	1.30	20.01	32.60	81.44
0.349	522.	501.	1.04	515.9	1.0	1.000	8139.	1.29	19.67	35.81	91.65
0.349	820.	501.	1.64	524.6	1.0	1.000	7673.	1.25	23.14	39.69	96.01
0.349	1335.	501.	2.67	539.6	1.0	1.000	7114.	1.20	30.03	43.34	96.18
0.349	2174.	501.	4.34	564.1	1.0	1.000	6712.	1.14	40.64	44.55	96.23
0.349	3510.	501.	7.01	603.0	1.0	1.000	6515.	1.08	56.03	42.72	96.24
					ALTITUDE - 40000. FEET						
0.349	292.	501.	0.58	509.2	1.0	1.000	8708.	1.30	20.01	31.08	87.96
0.349	538.	501.	1.08	516.4	1.0	1.000	8209.	1.27	21.01	35.84	96.21
0.349	1103.	501.	2.20	532.8	1.0	1.000	7353.	1.20	30.03	41.43	95.91
0.349	2026.	501.	4.05	559.7	1.0	1.000	6808.	1.12	43.96	43.43	95.86
0.349	3646.	501.	7.28	607.0	1.0	1.000	6569.	1.04	65.60	41.20	95.87

ENGINE 11

ESTIMATED PERFORMANCE

MU	VO	HTO	PTO	T	CF	IS	SPC	PT2	H2	P2
				ALTITUDE - 50000. FEET						
1.00	968.	112.3	3.2	206182.	62.80	407.	8.35	4.16	109.6	3.83
1.50	1452.	135.7	6.2	234121.	27.72	458.	7.87	7.83	132.5	7.20
2.00	1936.	168.5	13.2	282257.	13.72	542.	6.64	15.89	164.5	14.61
2.50	2420.	210.6	28.9	359005.	7.60	668.	5.39	32.49	205.7	29.89
3.00	2904.	262.1	62.2	479610.	4.70	847.	4.25	64.89	256.2	59.72
				ALTITUDE - 60000. FEET						
1.00	968.	112.3	2.0	196362.	96.47	389.	9.25	2.58	109.6	2.37
1.50	1452.	135.7	3.9	214895.	41.04	423.	8.50	4.86	132.5	4.46
2.00	1936.	168.5	8.2	247009.	19.37	481.	7.48	9.85	164.5	9.06
2.50	2420.	210.6	17.9	297728.	10.17	569.	6.33	20.15	205.7	18.53
3.00	2904.	262.1	38.5	374796.	5.93	692.	5.20	40.23	256.2	37.03
				ALTITUDE - 70000. FEET						
2.00	1942.	169.5	5.1	223042.	28.19	439.	8.20	6.11	165.5	5.62
2.40	2330.	202.6	9.5	248824.	16.09	485.	7.42	10.85	197.9	9.98
2.80	2719.	241.7	17.7	284814.	9.78	547.	6.58	19.06	236.3	17.54
3.00	2913.	263.6	23.9	306917.	7.82	584.	6.17	24.96	257.7	22.97

ENGINE 11

ESTIMATED PERFORMANCE

M2	WS	WP	WSWP	WFT	PHP	PHS	V6	PT20	A0	A5	A6
					ALTITUDE - 50000. FEET						
0.349	218.	501.	0.44	507.0	1.0	1.000	9142.	1.30	19.28	28.99	96.09
0.349	374.	501.	0.75	511.6	1.0	1.000	8644.	1.26	21.99	32.54	96.03
0.349	683.	501.	1.37	520.6	1.0	1.000	7976.	1.20	30.03	36.91	96.13
0.349	1256.	501.	2.51	537.3	1.0	1.000	7316.	1.12	43.96	40.30	95.70
0.349	2259.	501.	4.51	566.6	1.0	1.000	6898.	1.04	65.60	40.40	95.76
					ALTITUDE - 60000. FEET						
0.349	135.	501.	0.27	504.6	1.0	1.000	9471.	1.30	19.28	26.42	96.04
0.349	232.	501.	0.46	507.4	1.0	1.000	9105.	1.26	21.99	29.18	96.00
0.349	424.	501.	0.85	513.0	1.0	1.000	8548.	1.20	30.03	32.94	96.05
0.349	778.	501.	1.55	523.4	1.0	1.000	7898.	1.12	43.96	36.67	96.16
0.349	1401.	501.	2.80	541.5	1.0	1.000	7350.	1.04	65.60	38.55	96.27
					ALTITUDE - 70000. FEET						
0.349	262.	501.	0.52	508.3	1.0	1.000	9026.	1.20	30.03	29.63	96.08
0.349	427.	501.	0.85	513.1	1.0	1.000	8580.	1.14	40.64	32.43	96.02
0.349	690.	501.	1.38	520.8	1.0	1.000	8096.	1.08	56.03	34.96	96.05
0.349	867.	501.	1.73	525.9	1.0	1.000	7873.	1.04	65.60	35.84	96.05

FAN RAMJET SPECIFIC IMPULSE

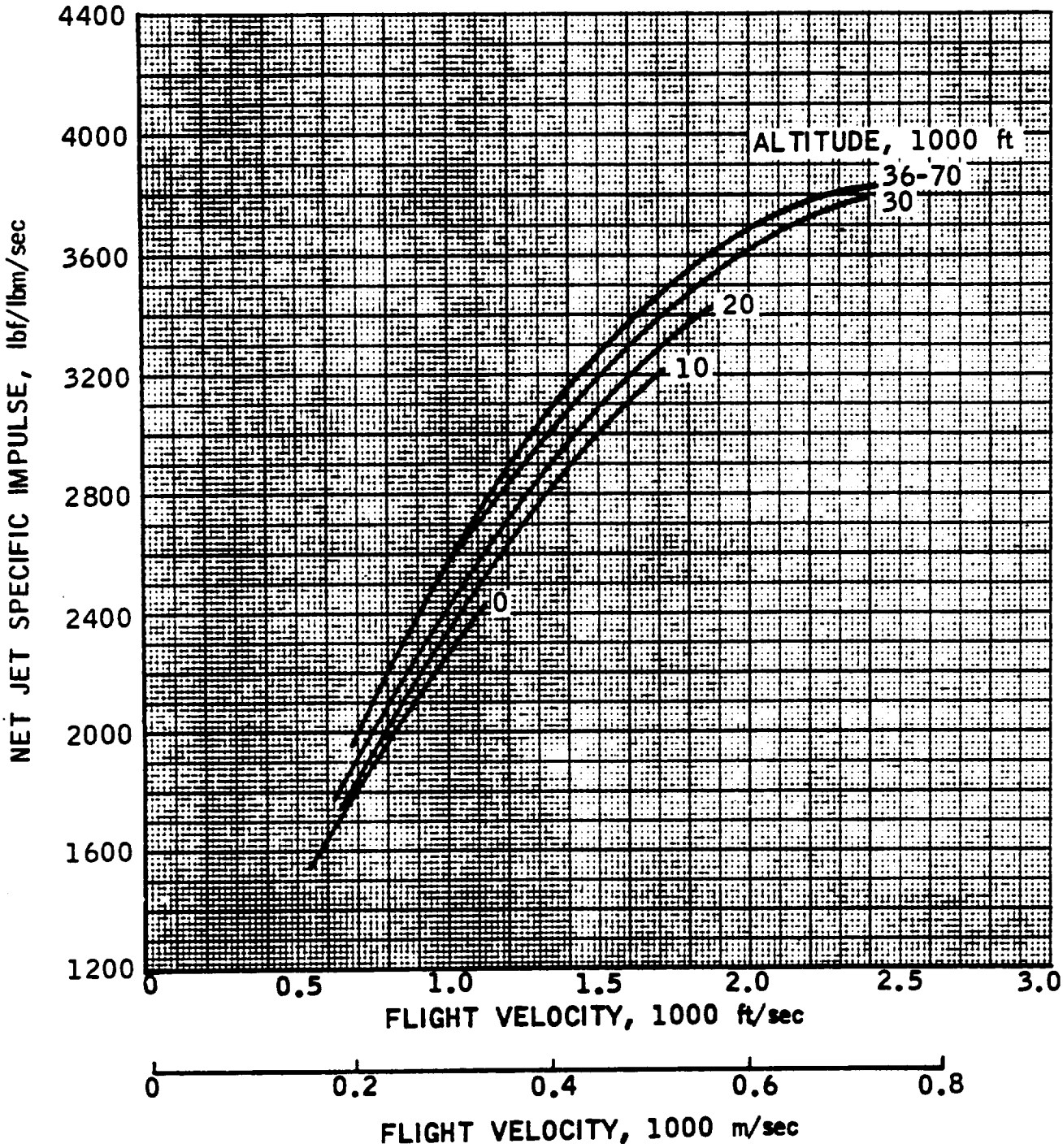

FAN RAMJET THRUST

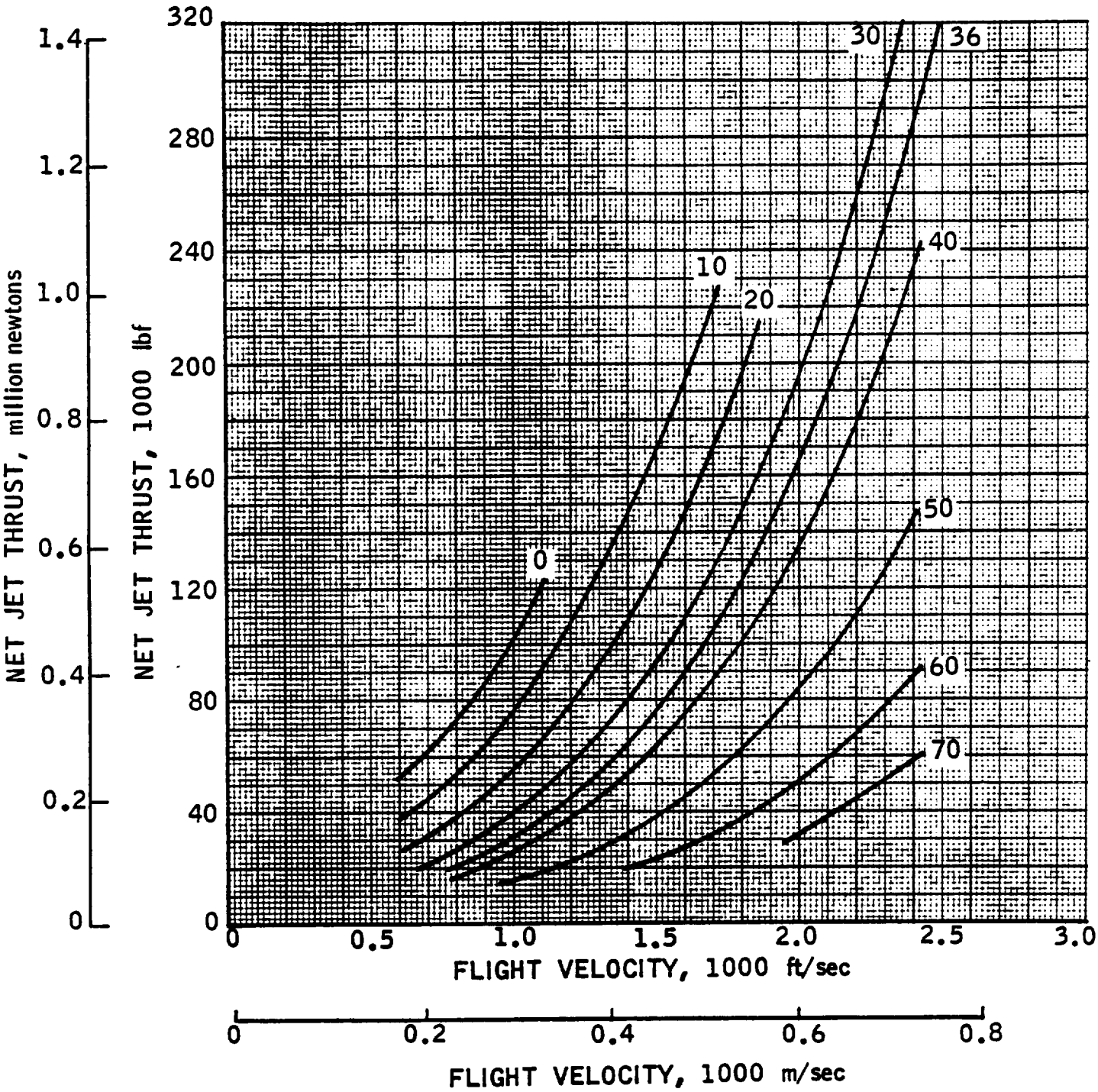

FAN RAMJET CAPTURE AREA

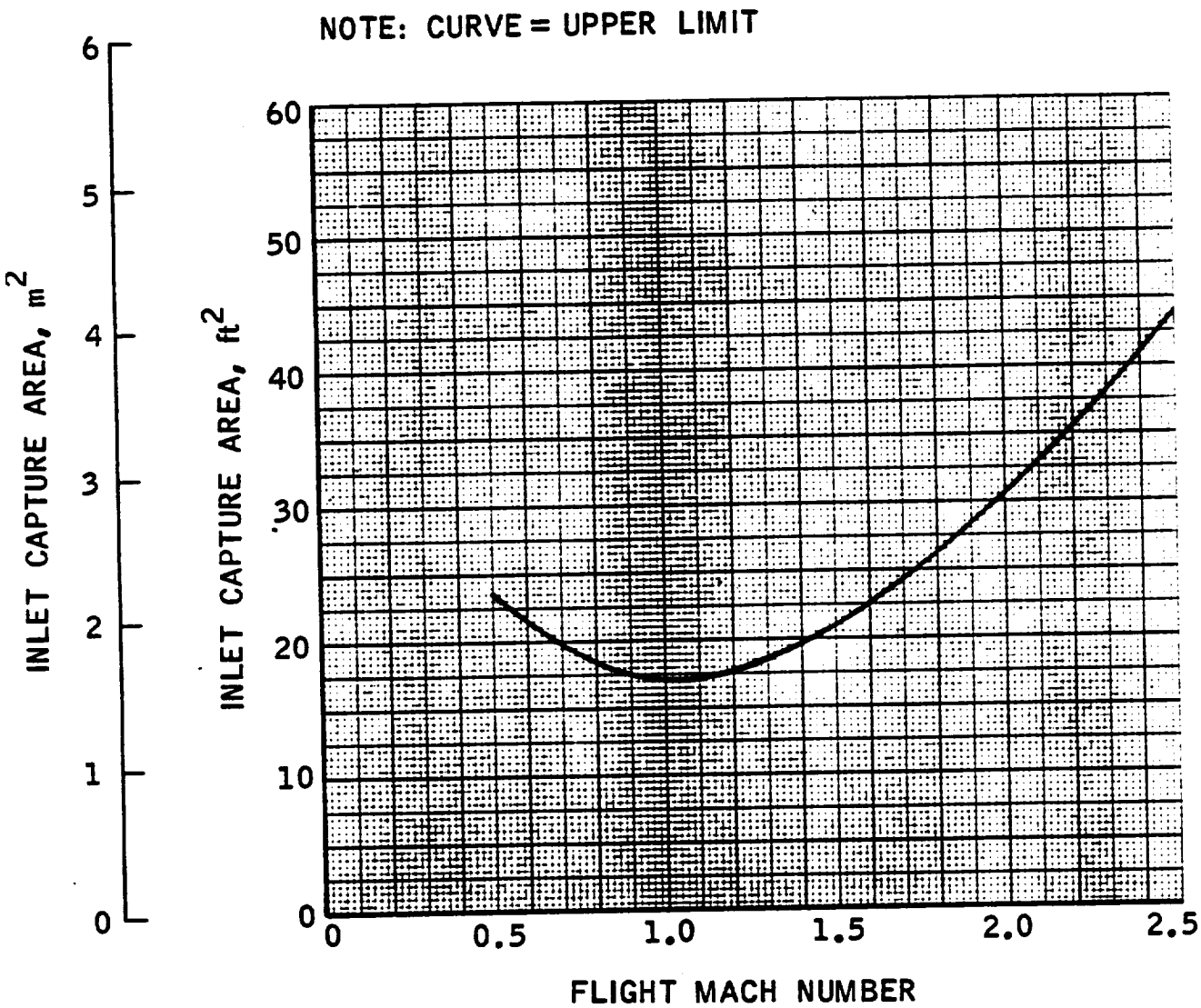

FAN OPERATION SPECIFIC IMPULSE

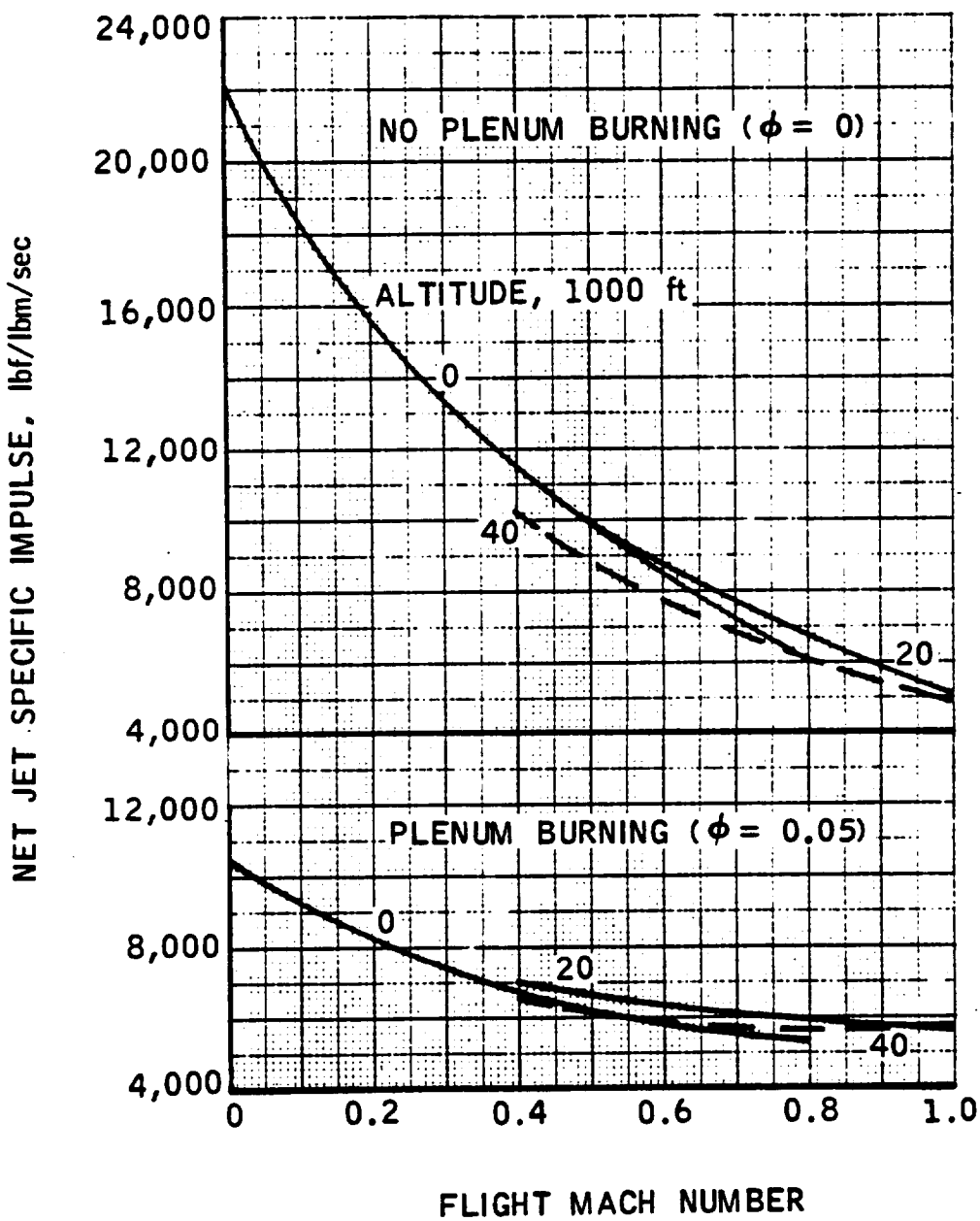

This Page Intentionally Blank

FAN OPERATION THRUST

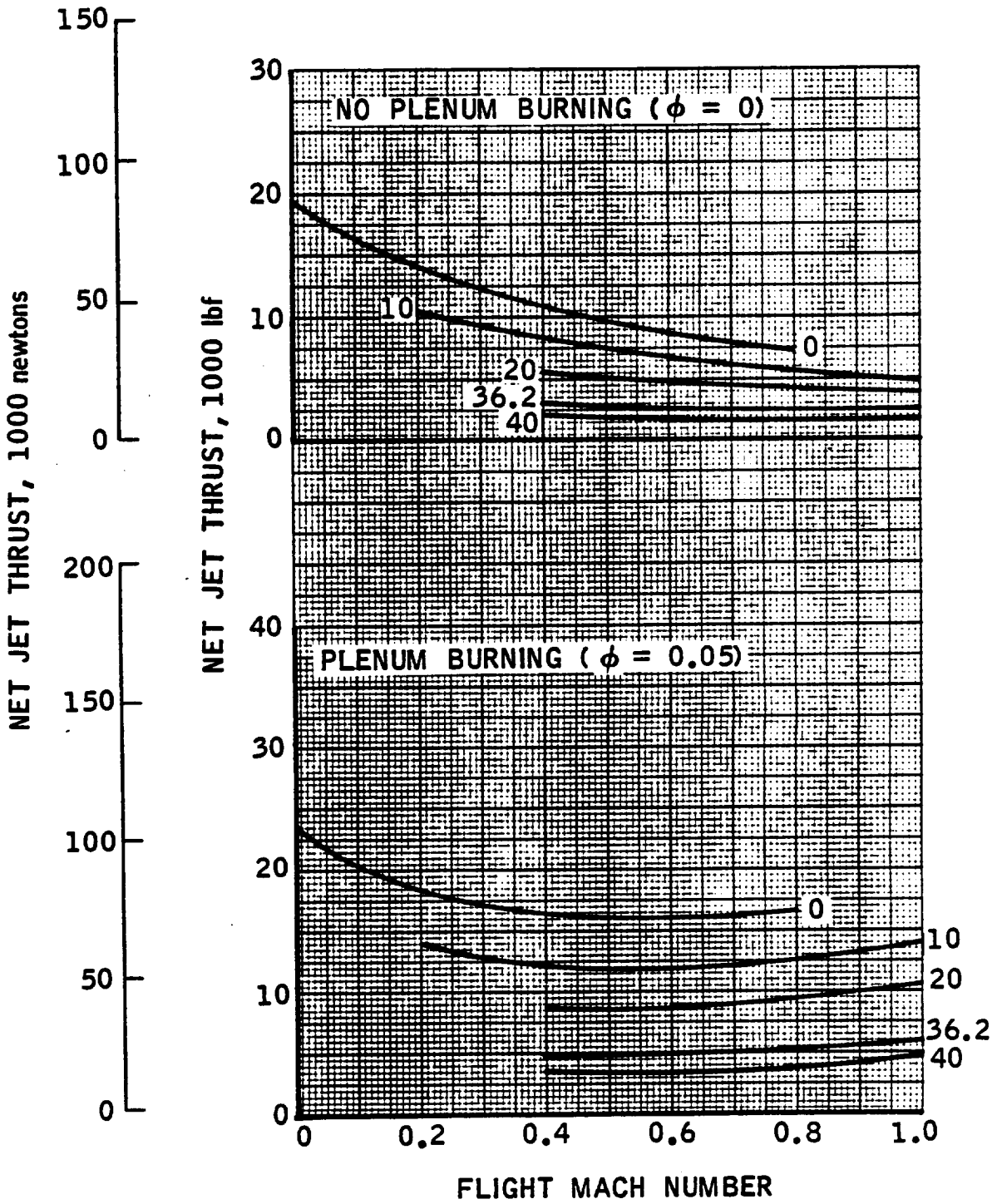

Eng. No. 11

FAN OPERATION SPECIFIC IMPULSE

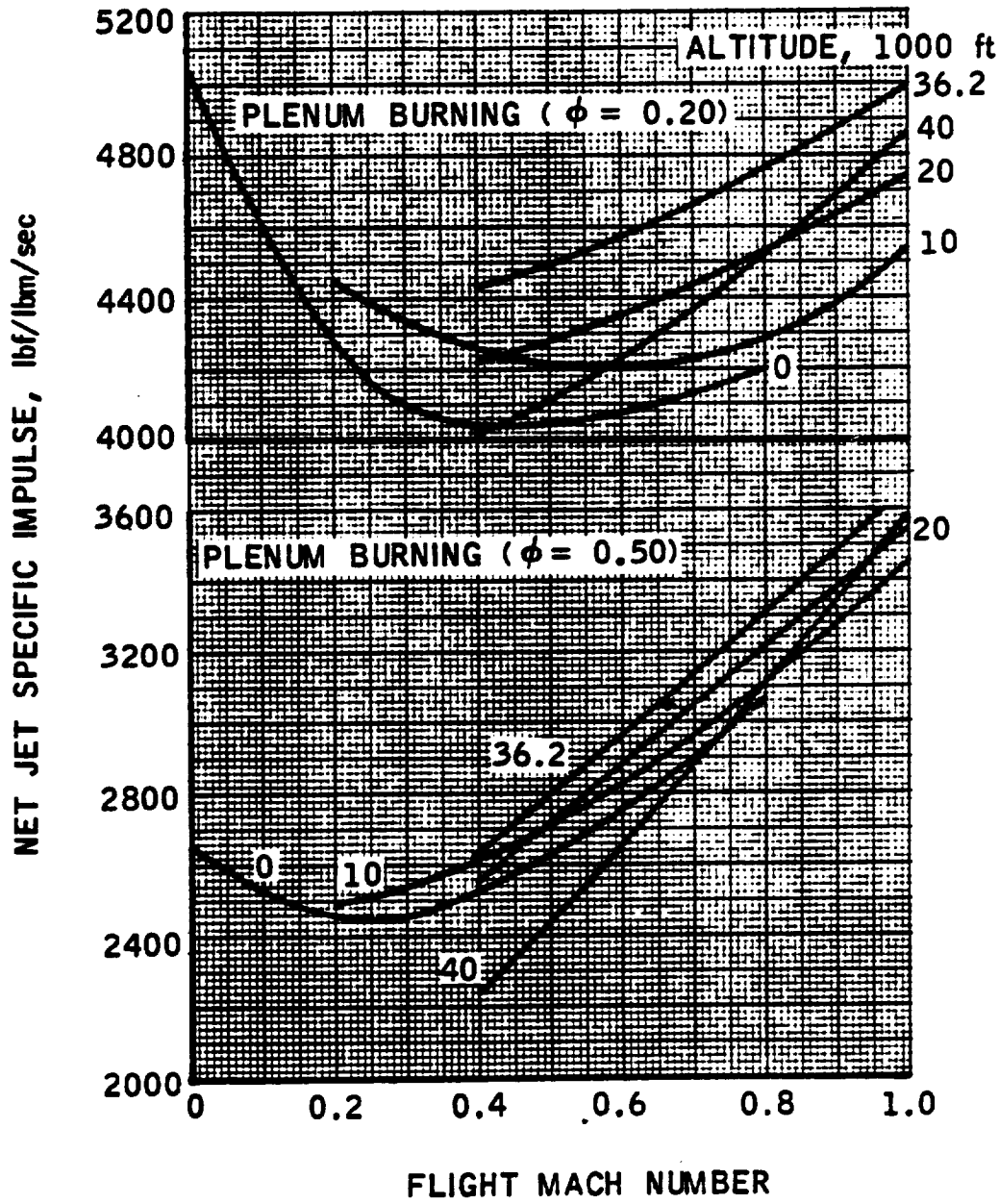

FAN OPERATION THRUST

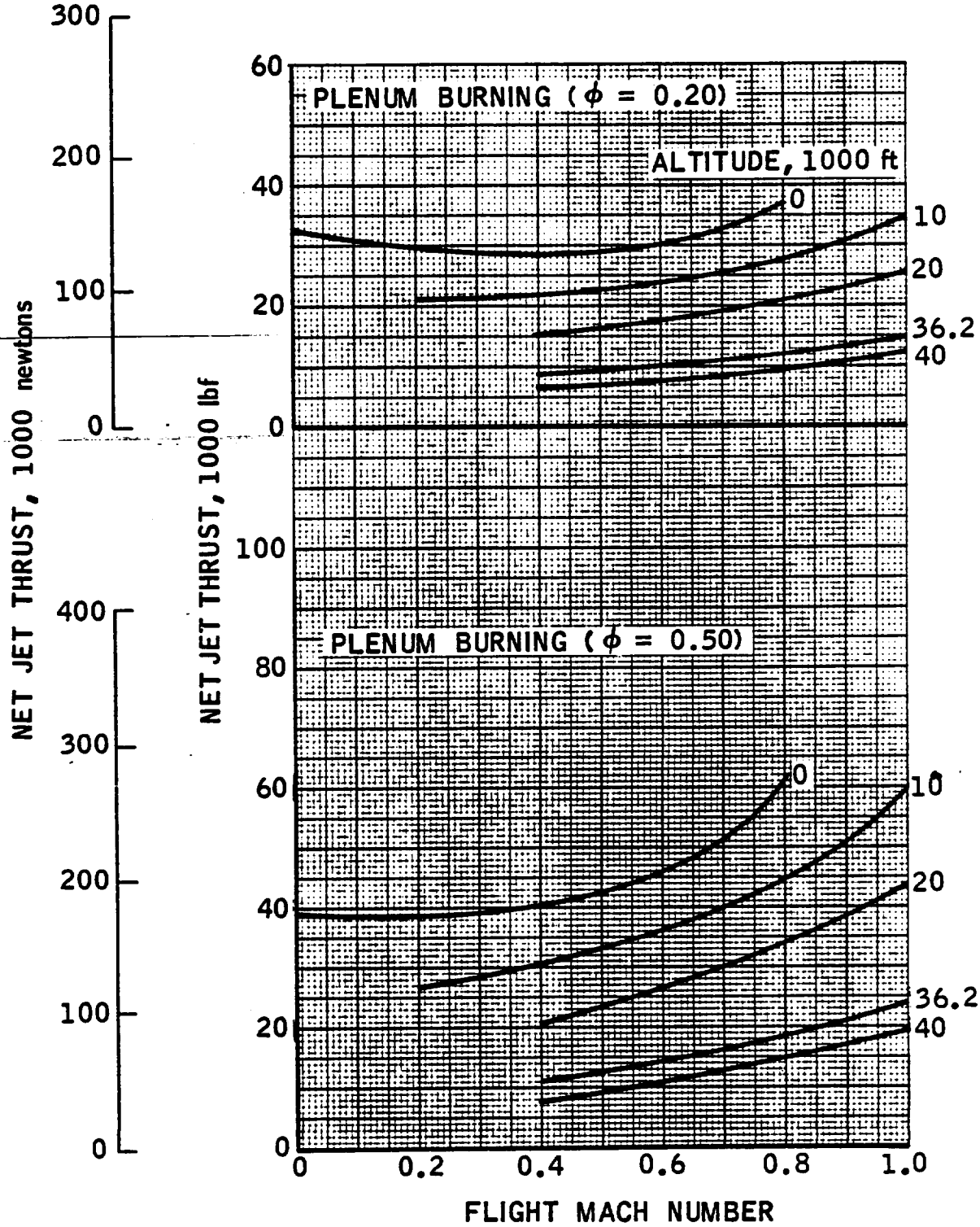

Eng. No. 11

FAN OPERATION SPECIFIC IMPULSE

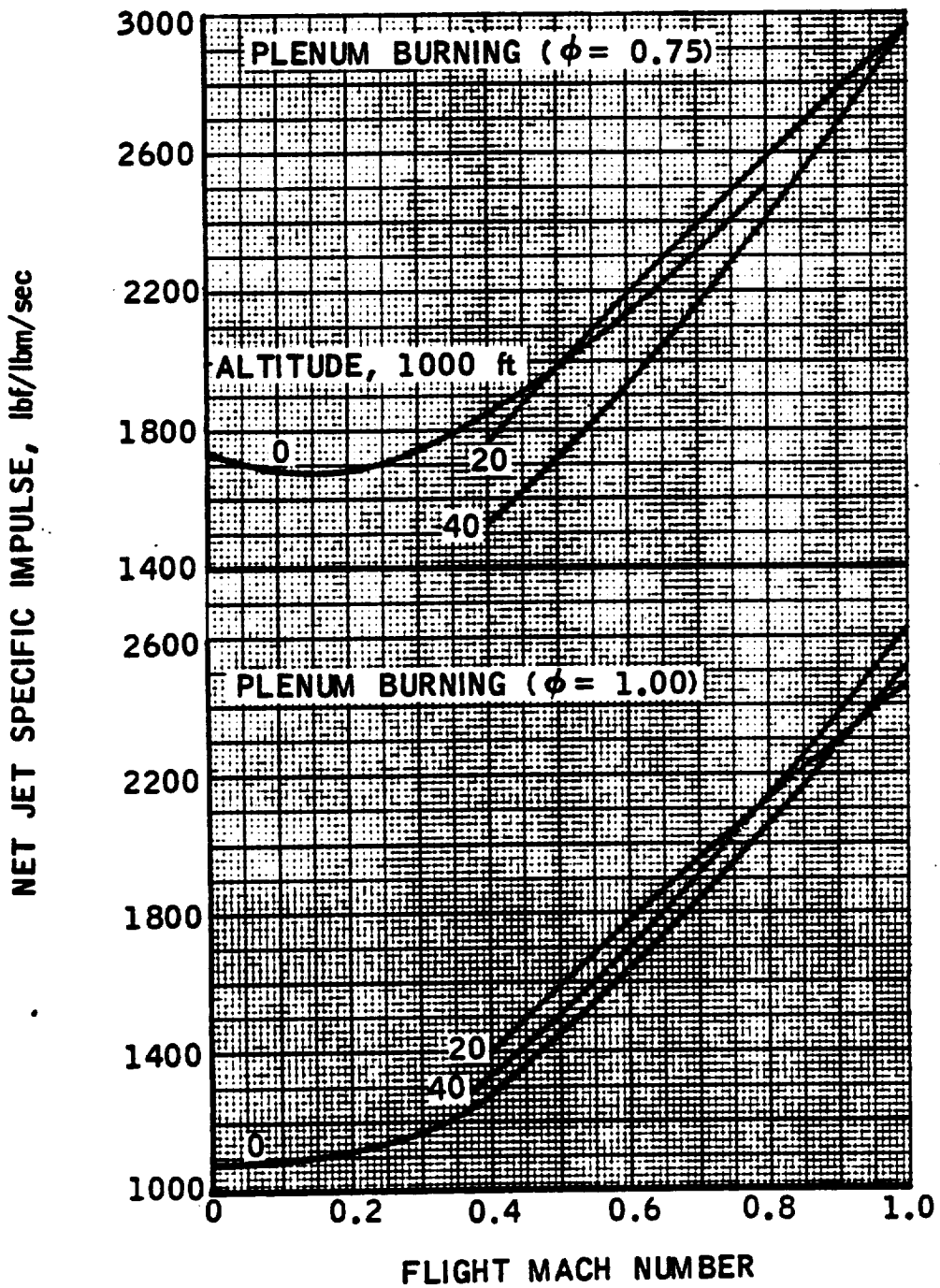

FAN OPERATION THRUST

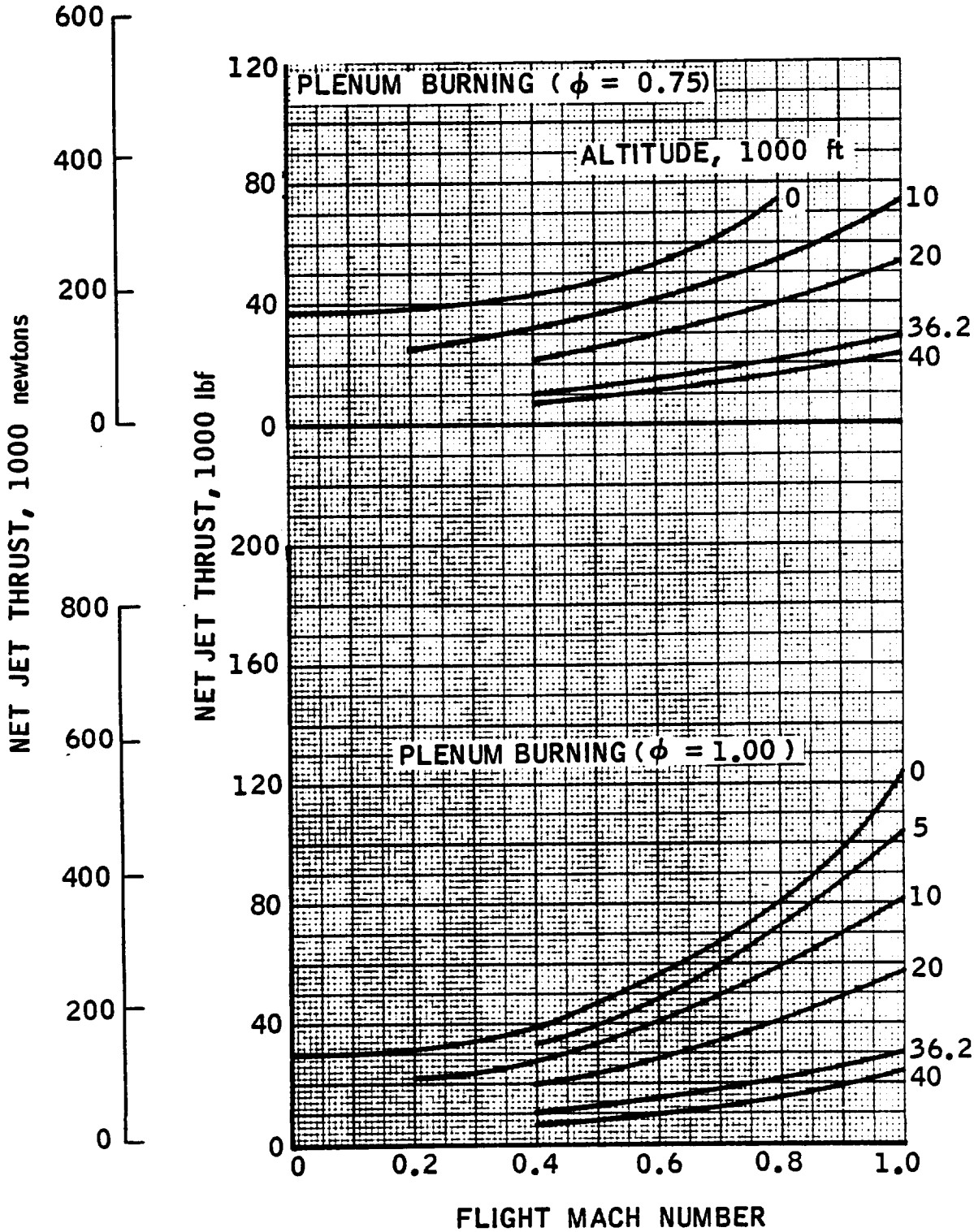

This Page Intentionally Blank

SUPERCHARGED EJECTOR SCRAMJET, NO. 12

Technical Description

This engine is capable of five operating modes: (1) supercharged ejector operation, (2) fan ramjet, (3) subsonic combustion ramjet, (4) supersonic combustion ramjet, and (5) fan only operation. The latter mode is useful in the subsonic loiter and landing phase of the mission profile. The engine consists of a low pressure ratio single stage fan capable of retraction from the main engine flow stream. This is attended by a fan drive subsystem in a form of an airbreathing gas generator, or small turbojet. Aft of the fan is located the primary rocket subsystem, a mixer, diffuser, afterburner, and variable exit geometry nozzle.

Initial engine operation is in the supercharged ejector mode. In the approximate vicinity of Mach 1 the primary rockets can be shutdown whereby the engine transists into the fan ramjet ~~mode which is sustained to approximately~~ Mach 2.5, wherein the engine continues in the subsonic combustion ramjet mode. Transition to supersonic combustion is afforded by a simultaneous transfer of fuel injection to the vicinity of the primary rocket station and full opening of the variable exit nozzle to permit the ~~internal normal shock~~ system ~~to pass from~~ the engine. Following entry subsonic combustion ramjet operation is reinitiated. Subsonic loiter and landing can be accomplished by means of the fan operation mode during which plenum burning can be conducted as required for increased thrust at the expense of reduced specific impulse.

Engine Operating Schematic

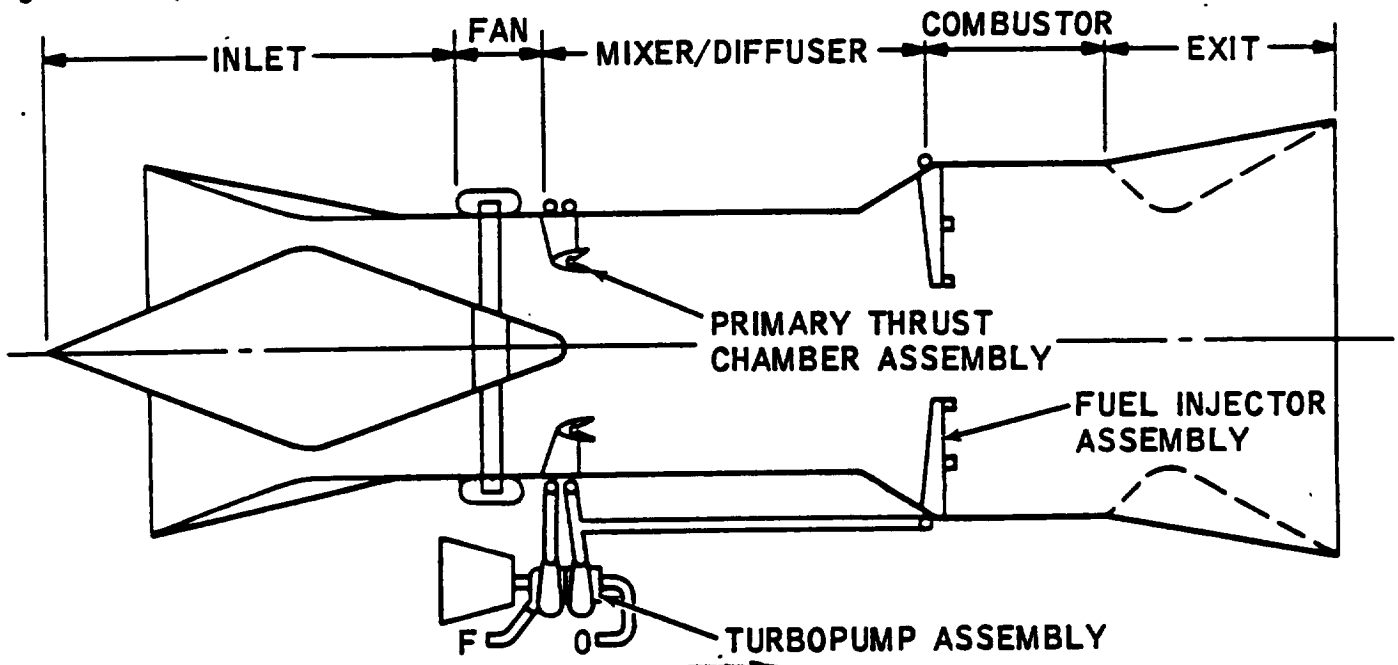

Engine Design Parameters

Eng. No. 12

P_c = 2000 psia, W_s/W_p = 1.90, O/F = 7.937, ϕ_p = 1.0, ϕ_s = 1.00, PR_f = 1.30, A_4/A_3 = 2.00, P_{T2}/P_{TO} ref. Fig. 11

Engine Operating Mode Block Diagrams

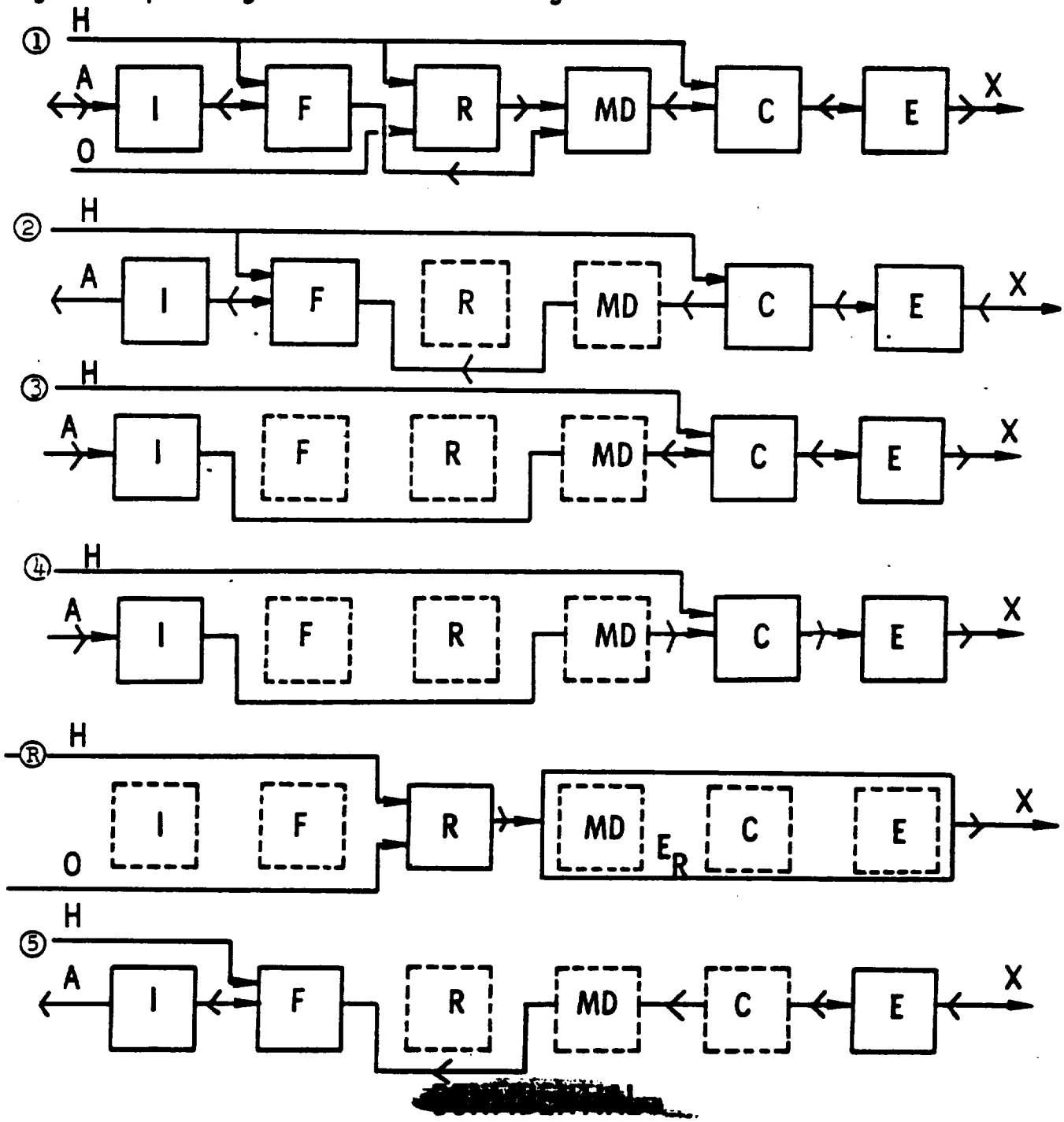

SUPERCHARGED EJECTOR SCRAMJET (ENGINE NO. 12)
COMPOSITE ENGINE STUDY
CLASS 1 PHASE

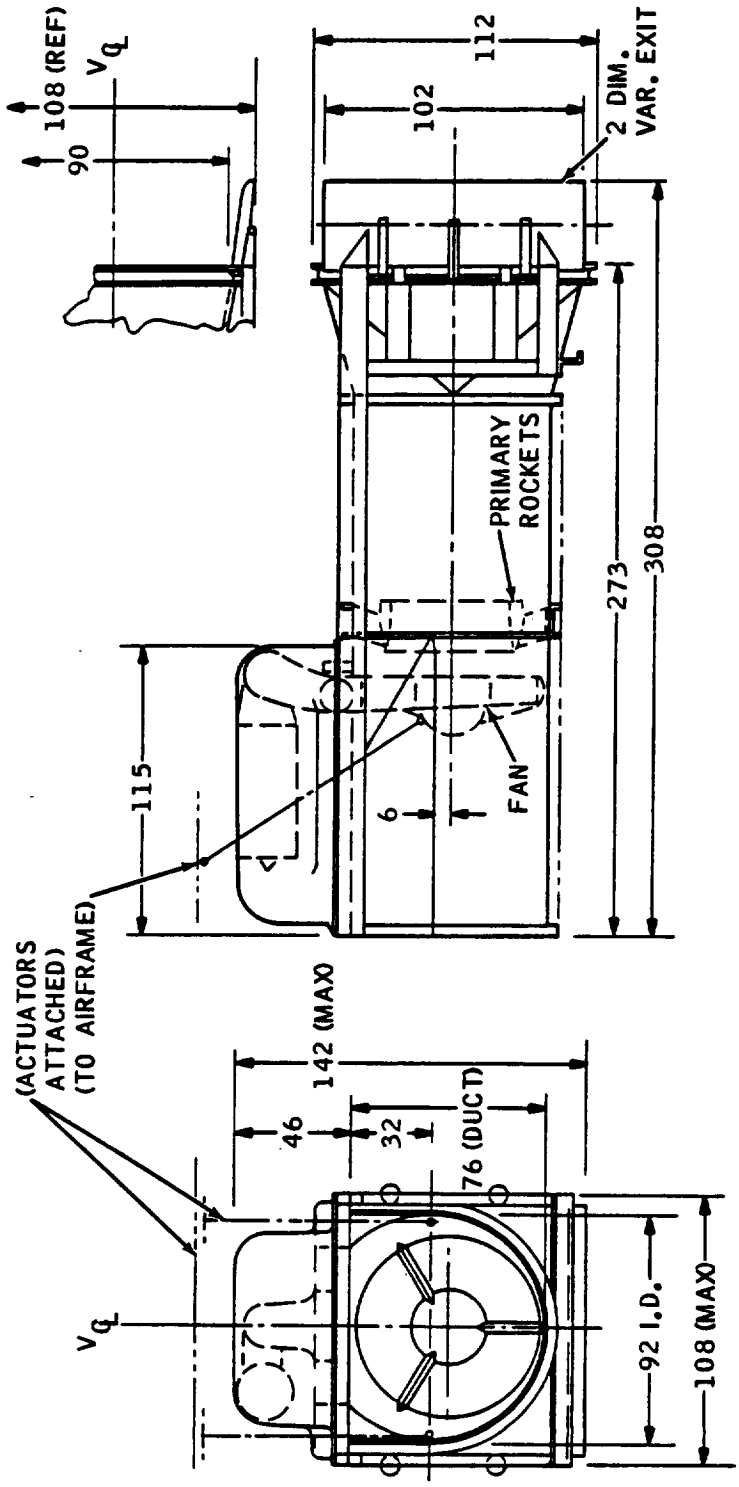

Engine Physical Characteristics

Eng. No. 12

WEIGHT, THRUST/WEIGHT*	English Units	International Units
Subsystem Components	NOTE: Engine weight statement does not include nozzle exit surfaces considered to be vehicle affixed (Fig 6)	
Fan Assembly	1009 LBM	457.7 KG
Gas Generator	895	406
Structure and Actuator	665	302
Fan Cover Structure	300	136
Primary Rockets	602	273
Turbopumps and Plumbing	661	300
Structure	1114	505.3
Mixer	940	426
Diffuser	375	170
Combustor	620	281
Exit and Centerbody	1890	857.3
Manifolding and Contingency	350	159
Uninstalled Weight	9421 LBM	4273 KG
Thrust, SLS	250,000 LBF	1,112,055 N
Uninstalled Thrust/weight	26.5 LBF/LBM	260 N/KG
Inlet Weight (typical)	12,000 LBM	5443 KG
Installed Weight	21,421 LBM	KG
Installed Thrust/weight	11.7 LBF/LBM	115 N/KG

LENGTH		
Uninstalled Length	25.7 FT	7.83 M
Inlet Length (typical)	81.6	24.9
Installed Length	107.3 FT	32.7 M

FLOW AREAS		
Inlet Cowl, Ac	100 FT^2	9.29 M^2
Mixer, A_3	32	3.0
Combustor, A_4	64	6.0
Nozzle Exit, max A_6**	400 FT^2	37.2 M^2

* Based on maximum internal pressure = 100 psia (689.5 N/M^2)
**For ejector mode, see engine data

ENGINE THRUST / WEIGHT

EFFECT OF SIZE AND INTERNAL PRESSURE

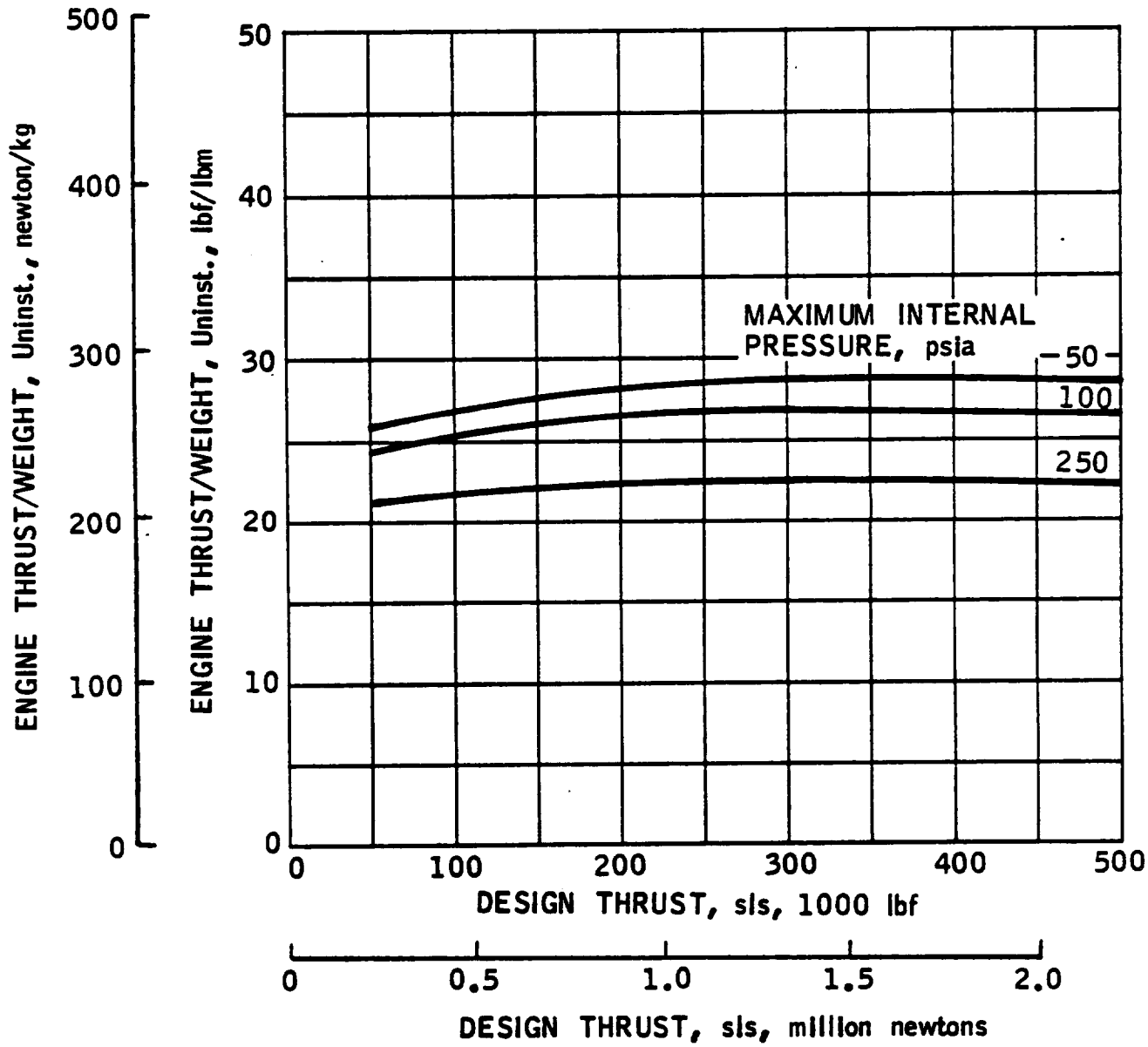

Cross-Reference Information

Ejector Mode Performance Maps and Tabular Data may be found in the Engine No. 11 Section.

Fan Ramjet Mode Performance Maps may be found in the Engine No. 11 Section.

Subsonic Combustion Ramjet Performance Maps may be found in the Engine No. 10 Section.

Supersonic Combustion Ramjet Performance Information may be found in the Engine No. 10 Section.

Fan Operation Performance Maps may be found in the Engine No. 11 Section.

RAMLACE, NO. 21

Technical Description

This engine is capable of two operating modes: (1) liquid air cycle ejector operation, and (2) subsonic combustion ramjet. The engine comprises a primary rocket subsystem, in which the oxidizer is air liquified in an air liquefaction unit. This latter consists of an air precooler, and condenser utilizing liquid hydrogen supplied to the engine as the refrigerant. This unit is supplied air from the common inlet diffuser. A closure means is provided to isolate the heat exchanger subsystem when the engine is operating at the higher speed condition. Following the primary rocket subsystem is the mixer, diffuser, afterburner, and variable geometry exit nozzle-in essence, identical to that of the Ejector Ramjet series (Engines 9 through 12). A specific operating characteristic of the RamLACE family of powerplants which contrasts with that of the Ejector Ramjet is that the afterburner operates significantly fuel rich due to the basic air liquefaction unit hydrogen requirements (heat exchanger equivalence ratio).

Engine operation is initially with the primary rockets operating with hydrogen and liquid air at a stoichiometric condition. The air is derived from the sump of the condenser of the air liquefaction unit. Transition to ramjet which nominally occurs in the Mach 2 - 3 flight speed range is accomplished by shutting down the primary rocket subsystem and closing off the heat exchanger unit. Post entry operation is essentially the reverse of the above, viz. subsonic ramjet followed by ejector operation for the low speed and landing thrust requirement.

Engine Operating Schematic

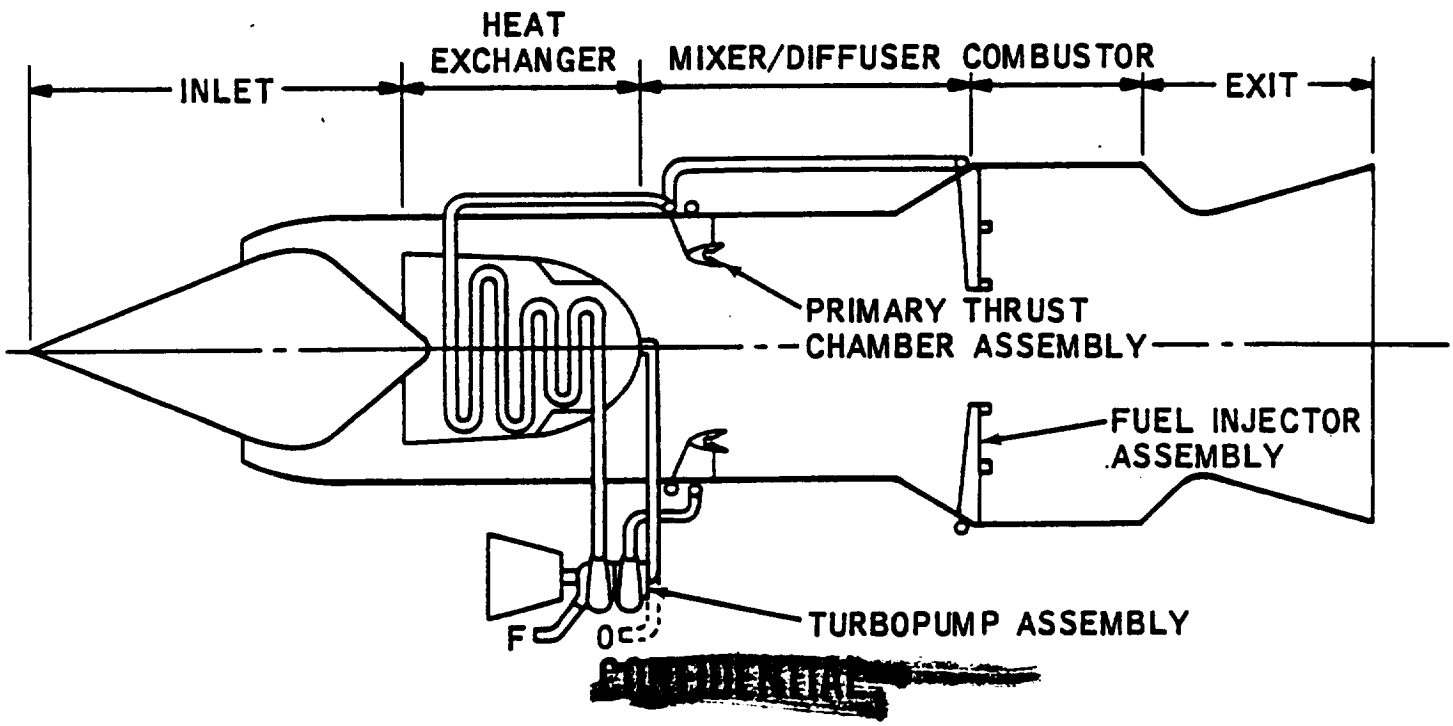

Engine Design Parameters

P_c = 1000 psia, W_s/W_p = 1.50, O/F = 34.3, ϕ_p = 1.0, ϕ_s = 4.49, ϕ_{cond} = 8.0, ϕ_{prec} = 8.0, A_4/A_3 = 2.09, P_{T2}/P_{TO} ref. Fig. 9

Engine Operating Mode Block Diagrams

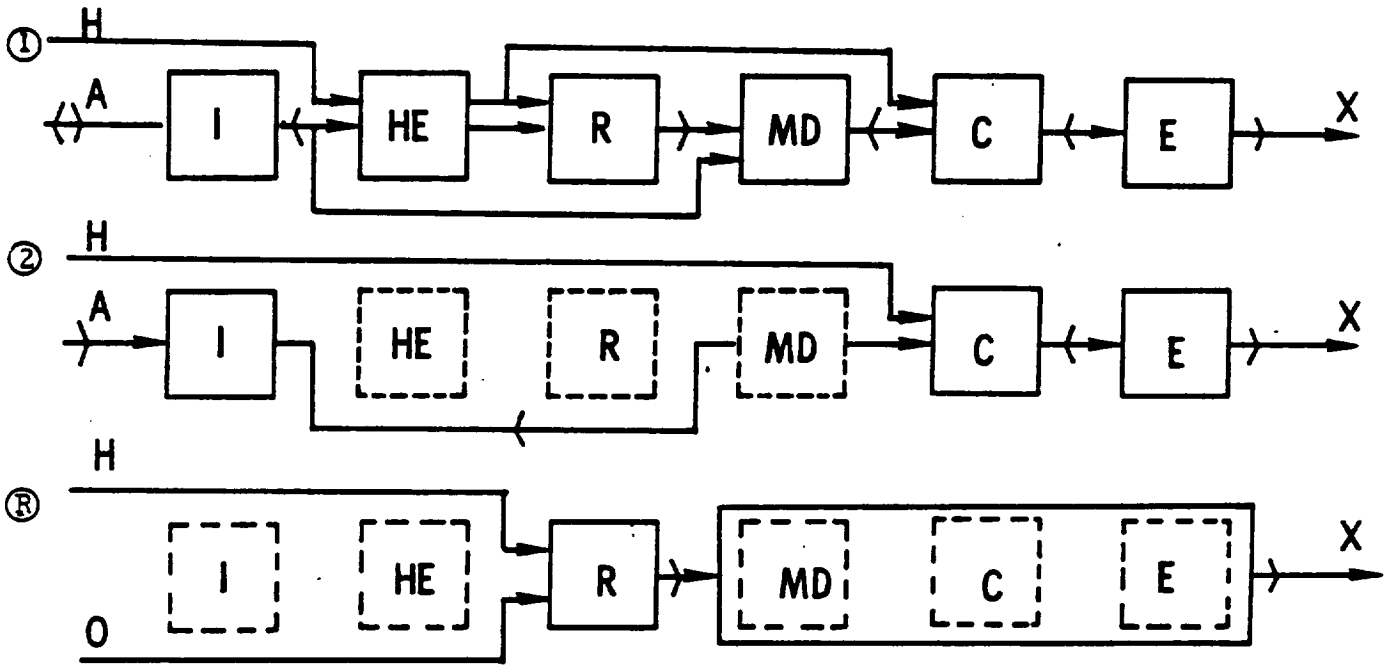

RAMLACE (ENGINE NO. 21)
COMPOSITE ENGINE STUDY
CLASS 1 PHASE

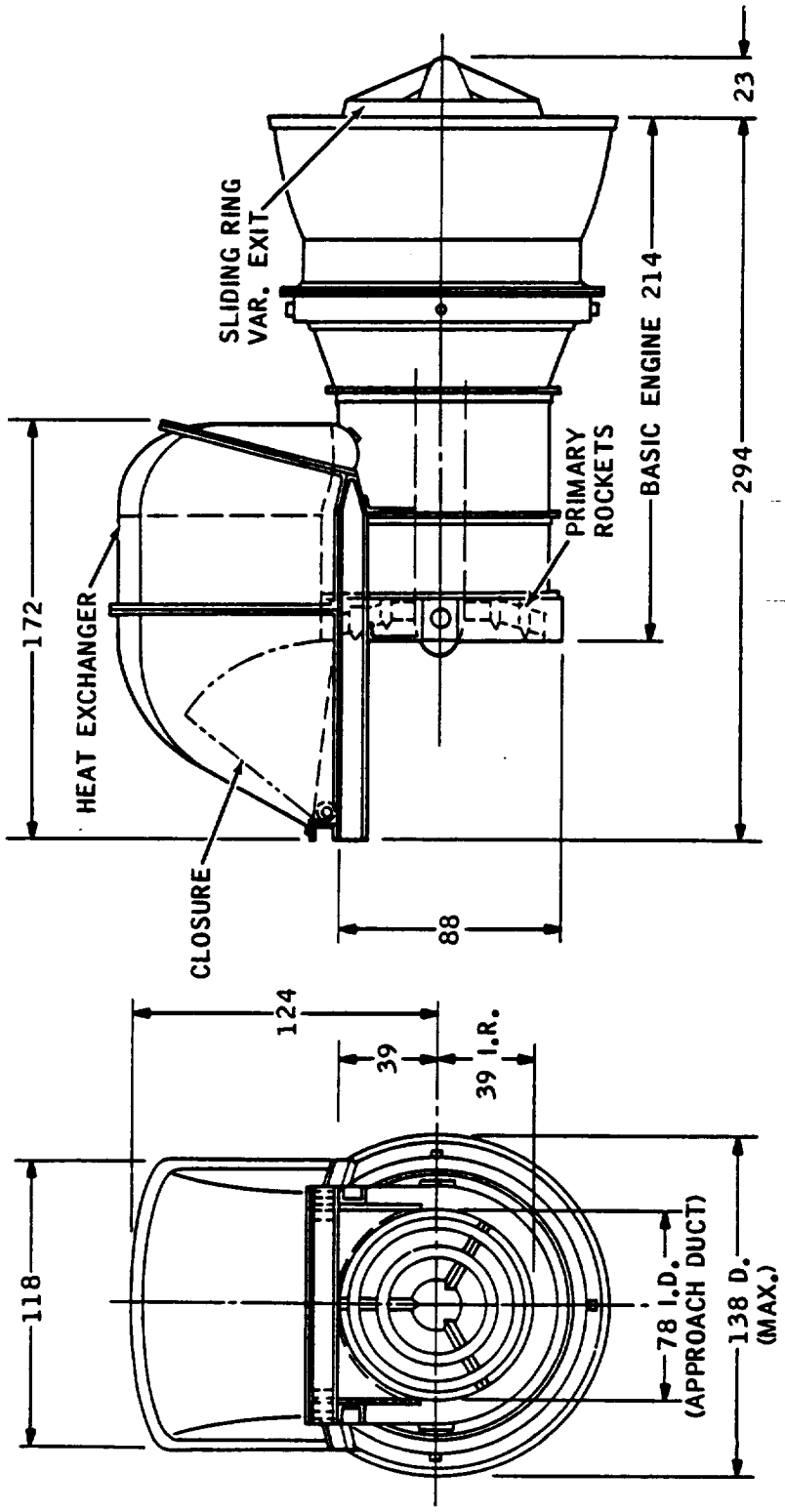

ENGINE PHYSICAL CHARACTERISTICS

WEIGHT, THRUST/WEIGHT*	English Units	International Units
Subsystem Components		
Heat Exchanger	2,704 LBM	1,229 KG
Catalyst	1,418	643.2
Structure	905	411
Primary Rockets	860	390
Turbopumps and Plumbing	817	371
Structure	1,590	721.2
Mixer	917	416
Diffuser	470	213
Combustor	755	343
Exit and Centerbody	2,370	1,075
Manifolding and Contingency	550	250
Uninstalled Weight	13,356 LBM	6,058.3 KG
Thrust, SLS	250,000 LBF	1,112,055 N
Uninstalled Thrust/Weight	18.7 LBF/LBM	183 N/KG
Inlet Weight (Typical)	9,840 LBM	4,463 KG
Installed Weight	23,196 LBM	10,522 KG
Installed Thrust/Weight	10.8 LBF/LBM	106 N/KG
LENGTH		
Uninstalled Length	24.5 FT	7.47 M
Inlet Length (Typical)	56.2	17.1
Installed Length	80.7 FT	24.6 M
FLOW AREAS		
Inlet Cowl, A_c	82. FT^2	7.6 M^2
Mixer, A_3	33.5	3.1
Combustor, A_4	70.	6.5
Nozzle Exit, max, A_6**	125 FT^2	11.6 M^2

* Based on maximum internal pressure = 150 psia (1034 N/M^2)
** For ejector mode, see engine data

ENGINE THRUST / WEIGHT

EFFECT OF SIZE AND INTERNAL PRESSURE

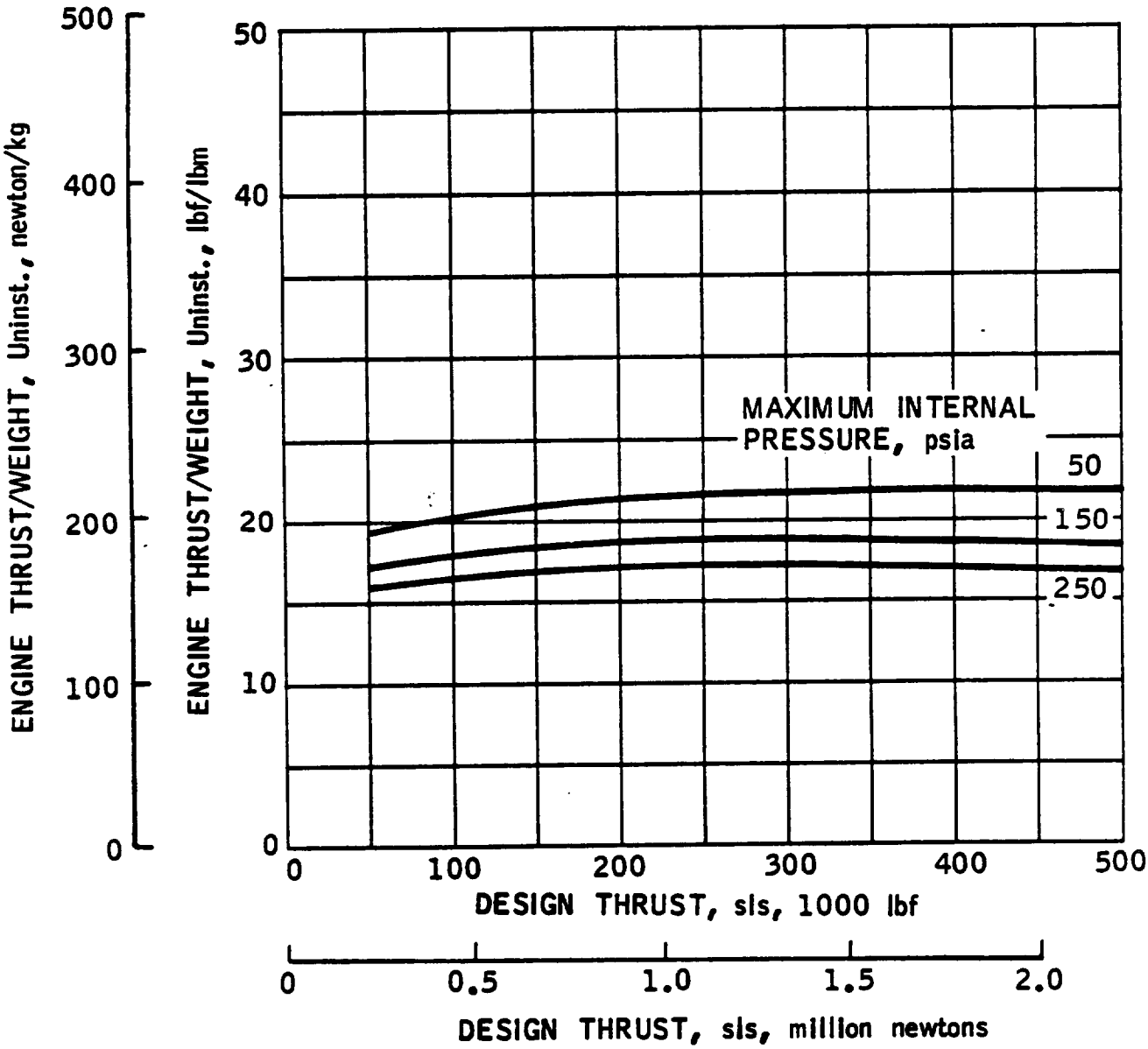

EJECTOR MODE SPECIFIC IMPULSE

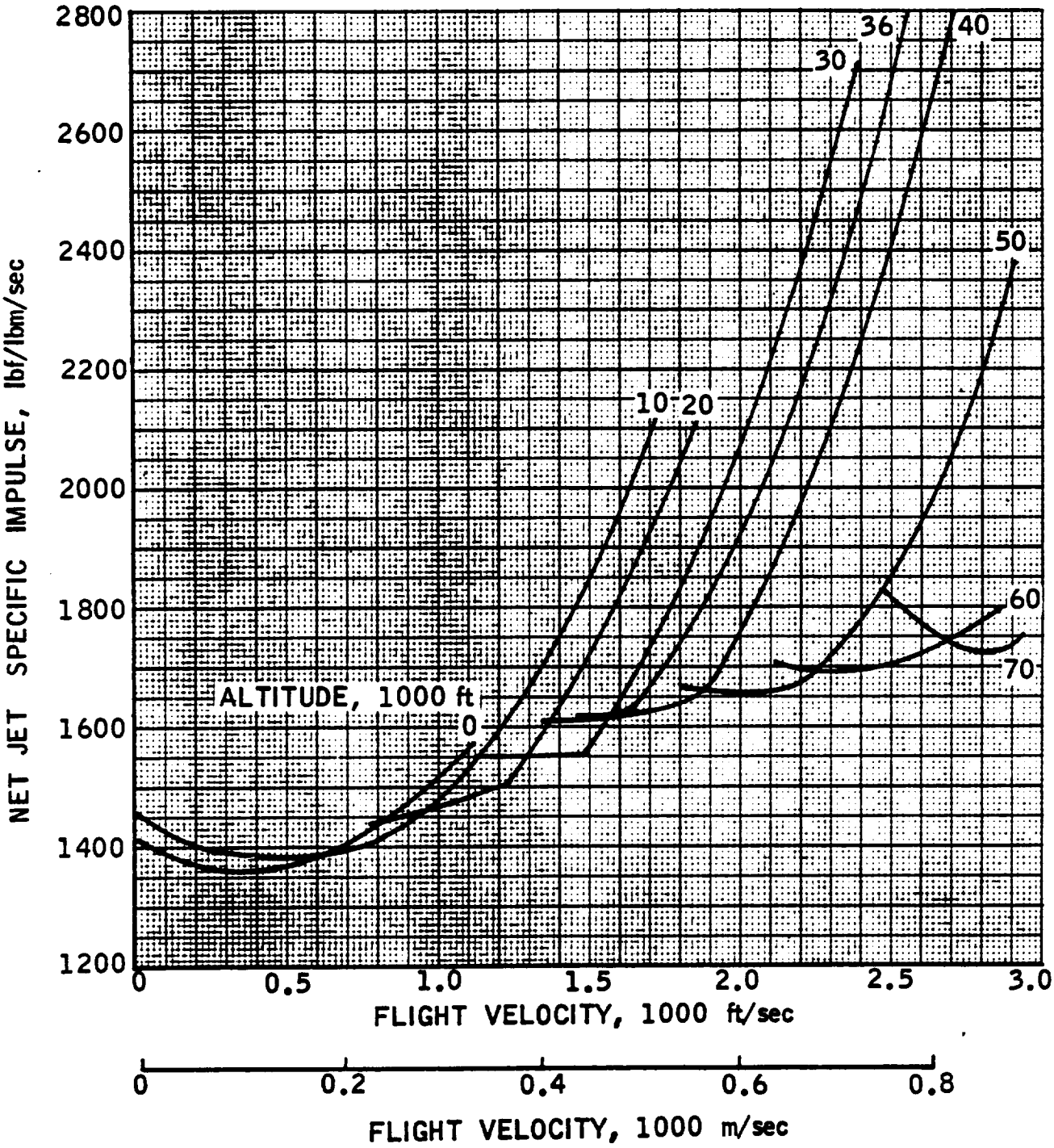

EJECTOR MODE THRUST

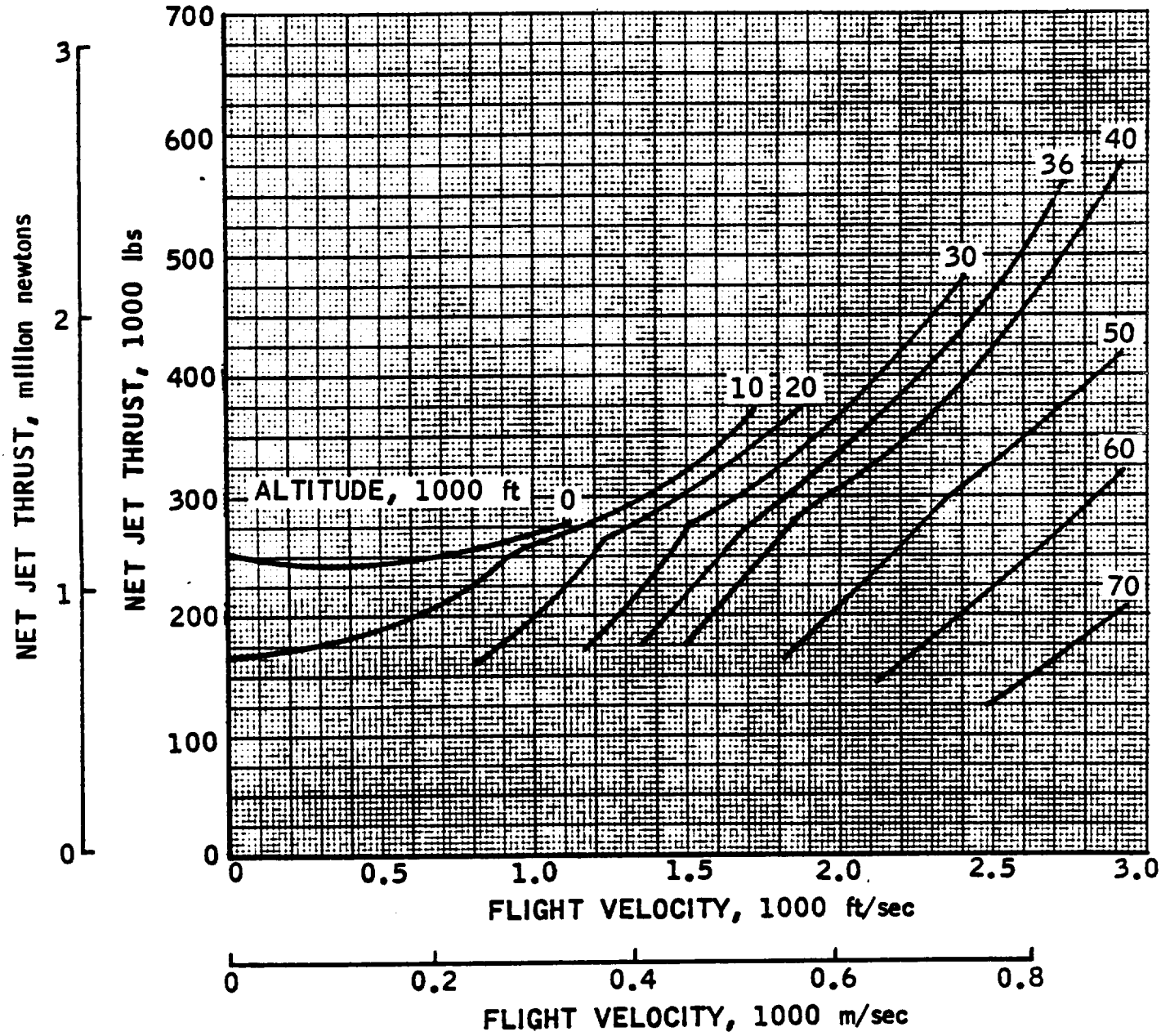

EJECTOR MODE AIRFLOW

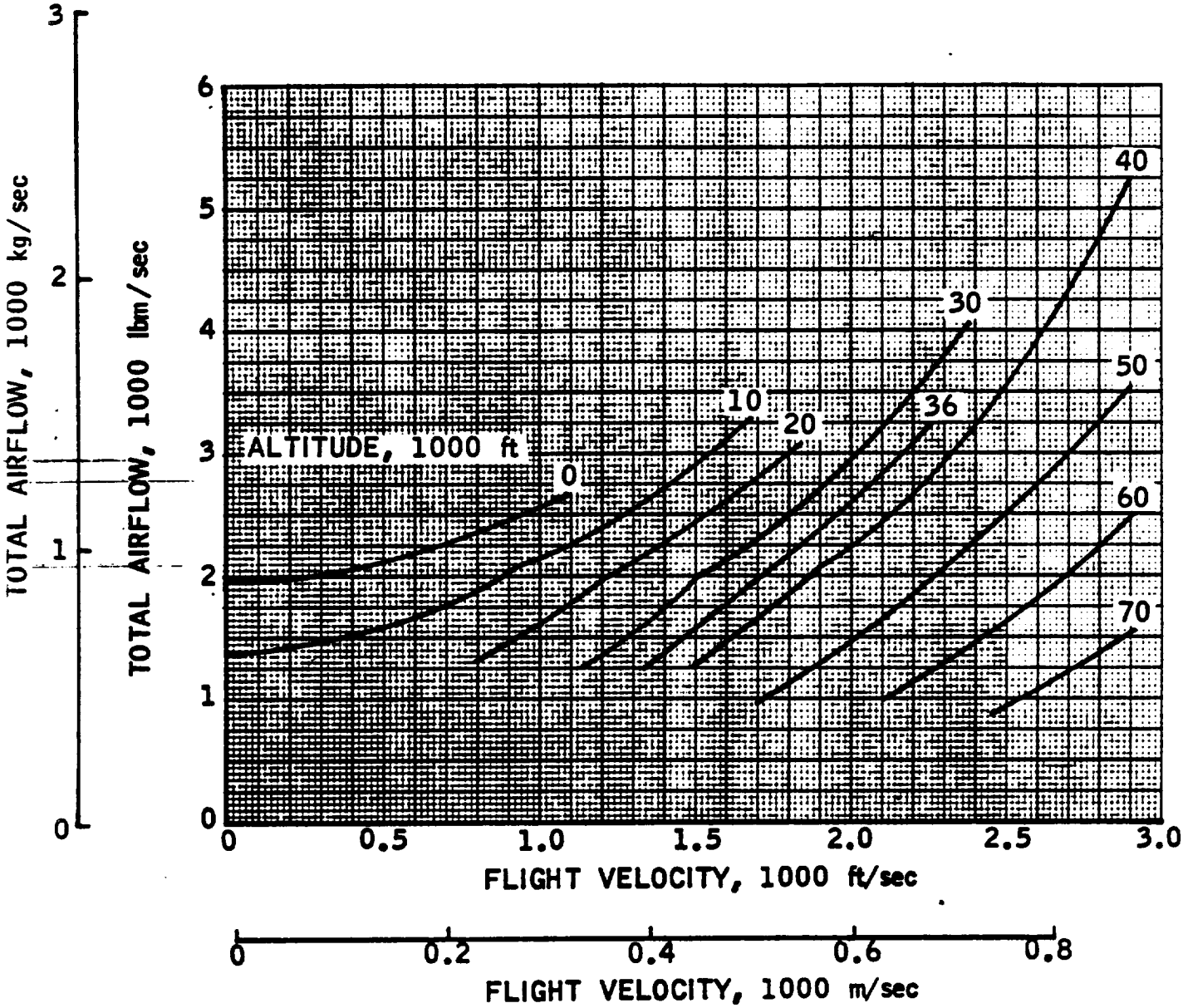

EJECTOR MODE CAPTURE AREA

NOTE: 1. CURVE REFLECTS UPPER LIMIT.

2. EJECTOR MODE CAPTURE AREA CAN EXCEED NOMINAL INLET SIZE (SEE SUPPLEMENTARY TABULAR DATA).

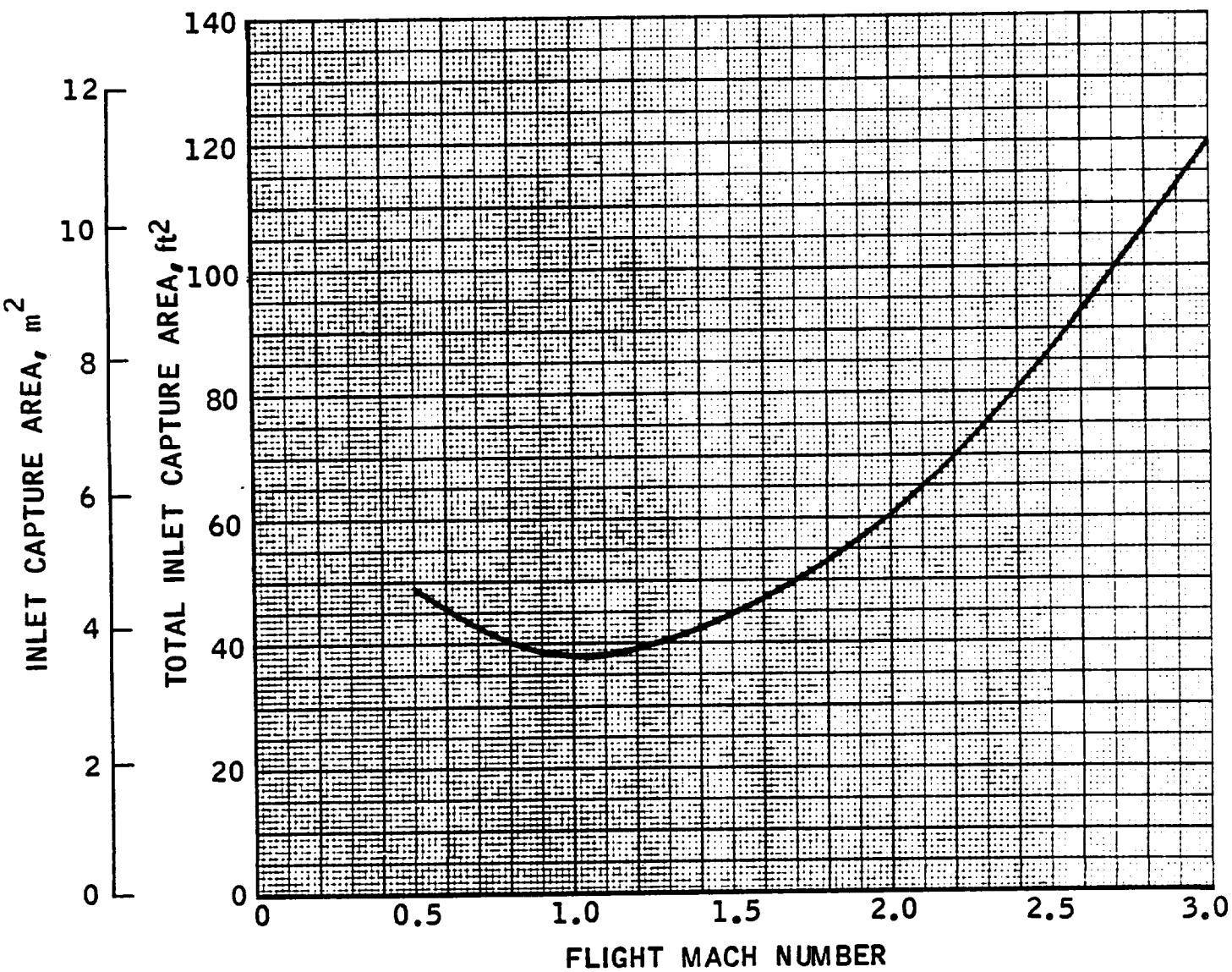

ENGINE 21

ESTIMATED PERFORMANCE

MU	VU	HTU	PTO	T	CF	IS	SPC	PT2	H2	P2
				ALTITUDE -		0. FEET				
0.01	11.	124.5	14.7	253132.	750.35	1428.	2.52	14.70	113.3	10.59
0.25	279.	126.0	15.3	243210.	28.18	1372.	2.62	15.35	114.7	11.06
0.50	558.	130.7	17.4	244693.	13.23	1380.	2.61	17.43	119.0	12.57
0.75	837.	138.5	21.3	258769.	8.32	1459.	2.47	21.34	126.2	15.41
1.00	1116.	149.4	27.8	279730.	6.03	1578.	2.28	27.82	139.0	21.58
				ALTITUDE -		10000. FEET				
0.01	11.	115.1	10.1	169339.	757.28	1469.	2.45	10.11	104.7	7.28
0.30	322.	117.1	10.8	176557.	24.57	1394.	2.58	10.76	106.6	7.75
0.60	644.	123.4	12.9	206099.	12.28	1395.	2.58	12.89	112.3	9.29
0.90	966.	133.7	17.1	259010.	8.25	1461.	2.46	17.10	121.8	12.32
1.20	1288.	148.2	24.5	294451.	5.84	1661.	2.17	24.33	136.2	18.07
1.40	1503.	160.2	32.2	325568.	4.88	1836.	1.96	31.51	149.1	24.49
1.60	1718.	174.0	43.0	375221.	4.20	2116.	1.70	41.36	162.8	32.66
				ALTITUDE -		20000. FEET				
0.77	801.	120.2	10.0	165576.	10.14	1448.	2.49	10.02	109.4	7.22
1.00	1037.	128.9	12.8	212206.	8.10	1485.	2.42	12.79	117.3	9.22
1.20	1244.	138.3	16.4	268928.	6.94	1517.	2.37	16.27	126.0	11.73
1.50	1555.	155.7	24.8	316623.	5.24	1786.	2.02	24.10	141.9	17.38
1.80	1867.	177.0	38.8	375345.	4.16	2117.	1.70	36.70	164.4	28.26

ENGINE 21

ESTIMATED PERFORMANCE

M2	WS	WP	WSWP	WFT	PHP	PHS	V6	PT20	A0	A5	A6
					ALTITUDE -		0. FEET				
0.700	1184.	782.	1.51	177.3	1.0	4.493	3849.	1.00	1388.47	61.77	65.32
0.700	1229.	782.	1.57	177.3	1.0	4.329	3868.	1.00	57.65	62.57	66.30
0.700	1372.	782.	1.75	177.3	1.0	3.879	3925.	1.00	32.15	64.99	69.32
0.698	1630.	782.	2.08	177.3	1.0	3.263	4022.	1.00	25.46	69.26	74.77
0.614	1915.	782.	2.45	177.3	1.0	2.778	4202.	1.00	22.41	69.83	77.69
					ALTITUDE -		10000. FEET				
0.700	846.	509.	1.66	115.3	1.0	4.086	3753.	1.00	1388.30	64.06	67.19
0.700	893.	559.	1.60	126.6	1.0	4.254	3932.	1.00	48.82	62.94	67.31
0.700	1043.	652.	1.60	147.7	1.0	4.247	4227.	1.00	28.51	62.81	70.35
0.700	1330.	782.	1.70	177.3	1.0	4.000	4565.	1.00	24.21	63.96	77.28
0.666	1757.	782.	2.25	177.3	1.0	3.028	4719.	0.99	23.95	69.99	87.89
0.612	2094.	782.	2.68	177.3	1.0	2.541	4871.	0.98	24.43	69.83	92.82
0.592	2589.	782.	3.31	177.3	1.0	2.055	4931.	0.96	26.40	69.93	95.82
					ALTITUDE -		20000. FEET				
0.700	822.	505.	1.63	114.4	1.0	4.177	4471.	1.00	25.21	62.96	74.55
0.700	1014.	631.	1.61	142.9	1.0	4.231	4812.	1.00	23.99	62.37	81.36
0.700	1245.	782.	1.59	177.3	1.0	4.273	5108.	0.99	24.54	61.96	89.79
0.700	1742.	782.	2.23	177.3	1.0	3.055	5008.	0.97	27.42	69.52	96.03
0.624	2349.	782.	3.00	177.3	1.0	2.265	4961.	0.94	30.76	69.97	96.04

[redacted]

ENGINE 21

ESTIMATED PERFORMANCE

MU	VU	HTU	PTU	T	CF	IS	SPC	PT2	H2	P2
				ALTITUDE - 30000. FEET						
1.17	1160.	125.7	10.1	173608.	7.48	1554.	2.32	10.09	114.5	7.27
1.30	1293.	132.2	12.1	208823.	6.89	1562.	2.30	11.96	120.4	8.62
1.40	1393.	137.6	13.9	236896.	6.48	1577.	2.28	13.63	125.3	9.83
1.50	1492.	143.3	16.1	276797.	6.17	1561.	2.31	15.59	130.6	11.24
1.90	1890.	170.2	29.3	346025.	4.43	1951.	1.84	27.41	155.2	19.78
2.40	2388.	212.7	63.9	481128.	3.15	2713.	1.33	56.48	197.2	43.04
				ALTITUDE - 36000. FEET						
1.39	1345.	129.8	10.3	177976.	6.70	1619.	2.22	10.14	118.2	7.31
1.50	1453.	135.9	12.1	210717.	6.34	1606.	2.24	11.79	123.8	8.50
1.60	1550.	141.7	14.1	236331.	5.96	1625.	2.21	13.53	129.1	9.75
1.70	1647.	147.9	16.3	266765.	5.63	1635.	2.20	15.57	134.7	11.23
2.00	1938.	168.7	25.9	329957.	4.52	1861.	1.93	23.94	153.8	17.27
2.40	2325.	201.7	48.3	417810.	3.40	2356.	1.53	42.70	186.0	31.99
2.80	2713.	240.7	89.7	561382.	2.63	3166.	1.14	74.92	221.7	55.72
				ALTITUDE - 40000. FEET						
1.52	1470.	136.7	10.3	175869.	6.25	1626.	2.21	9.98	124.5	7.19
1.65	1597.	144.6	12.5	207852.	5.80	1635.	2.20	11.98	131.7	8.64
1.85	1791.	157.7	16.9	267243.	5.21	1638.	2.20	15.93	143.7	11.49
2.00	1936.	168.5	21.4	302949.	4.72	1708.	2.11	19.77	153.6	14.26
2.50	2420.	210.6	46.6	405149.	3.27	2285.	1.58	40.66	192.5	29.49
3.00	2904.	262.1	100.3	575371.	2.39	3245.	1.11	81.17	239.7	58.74

[redacted]

[redacted]

ENGINE 21

ESTIMATED PERFORMANCE

M2	WS	WP	WSWP	WFT	PHP	PHS	V6	PT20	A0	A5	A6
ALTITUDE - 30000. FEET											
0.700	809.	493.	1.64	111.7	1.0	4.145	5059.	0.99	24.35	62.60	89.70
0.700	936.	590.	1.59	133.7	1.0	4.288	5267.	0.99	25.25	61.59	96.18
0.700	1046.	663.	1.58	150.2	1.0	4.308	5280.	0.98	26.21	61.36	96.00
0.700	1173.	782.	1.50	177.3	1.0	4.536	5330.	0.97	27.41	60.24	96.05
0.700	1897.	782.	2.42	177.3	1.0	2.805	5003.	0.94	34.92	69.90	96.16
0.638	3351.	782.	4.28	177.3	1.0	1.588	4940.	0.88	48.64	69.95	96.08
ALTITUDE - 36000. FEET											
0.700	801.	485.	1.65	109.9	1.0	4.119	5235.	0.98	26.08	62.35	96.15
0.700	910.	579.	1.57	131.2	1.0	4.327	5291.	0.97	27.41	61.00	96.16
0.700	1023.	642.	1.60	145.4	1.0	4.264	5292.	0.96	28.88	61.18	96.03
0.700	1153.	720.	1.60	163.1	1.0	4.245	5303.	0.95	30.62	61.15	96.04
0.700	1664.	782.	2.13	177.3	1.0	3.198	5143.	0.93	37.49	66.48	96.24
0.656	2642.	782.	3.38	177.3	1.0	2.014	4969.	0.88	49.45	69.91	95.91
0.668	4294.	782.	5.49	177.3	1.0	1.239	4930.	0.84	68.65	69.73	95.90
ALTITUDE - 40000. FEET											
0.700	768.	477.	1.61	108.2	1.0	4.226	5289.	0.97	27.66	61.05	96.10
0.700	897.	561.	1.60	127.1	1.0	4.251	5313.	0.96	29.72	60.68	96.01
0.700	1144.	720.	1.59	163.1	1.0	4.279	5350.	0.94	33.75	60.27	96.06
0.700	1375.	782.	1.76	177.3	1.0	3.870	5305.	0.93	37.49	61.91	96.01
0.696	2534.	782.	3.24	177.3	1.0	2.100	4993.	0.87	55.06	69.92	96.02
0.700	4571.	782.	5.84	177.3	1.0	1.164	4981.	0.81	82.38	68.96	96.22

[redacted]

ENGINE 21

ESTIMATED PERFORMANCE

MU	VU	HIU	PTO	T	CF	IS	SPC	PT2	H2	P2
				ALTITUDE - 50000. FEET						
1.86	1800.	158.3	10.6	165436.	5.18	1666.	2.16	10.00	144.3	7.21
2.00	1936.	168.5	13.2	196750.	4.81	1663.	2.16	12.25	153.6	8.84
2.10	2033.	176.1	15.5	219585.	4.55	1673.	2.15	14.16	160.6	10.22
2.20	2130.	184.2	18.1	247874.	4.33	1664.	2.16	16.37	168.0	11.82
2.50	2420.	210.6	28.9	317610.	3.62	1791.	2.01	25.20	192.3	18.21
3.00	2904.	262.1	62.2	420269.	2.59	2370.	1.52	50.31	239.7	36.41
				ALTITUDE - 60000. FEET						
2.19	2120.	183.4	11.0	148529.	4.33	1710.	2.11	10.01	167.3	7.22
2.25	2178.	188.4	12.1	161621.	4.23	1688.	2.13	10.92	171.9	7.88
2.35	2275.	197.0	14.2	177678.	3.99	1710.	2.11	12.61	179.8	9.11
2.40	2323.	201.4	15.3	189953.	3.91	1692.	2.13	13.55	183.8	9.79
2.70	2614.	230.1	24.4	253232.	3.34	1729.	2.08	20.70	210.2	14.97
3.00	2904.	262.1	38.5	322757.	2.84	1820.	1.98	31.19	239.7	22.57
				ALTITUDE - 70000. FEET						
2.53	2460.	215.0	11.7	126092.	3.56	1823.	1.97	10.17	196.4	7.35
2.60	2524.	221.4	13.0	137578.	3.47	1792.	2.01	11.17	202.2	8.07
2.70	2621.	231.4	15.2	154403.	3.32	1766.	2.04	12.84	211.4	9.29
2.80	2719.	241.7	17.7	173822.	3.18	1732.	2.08	14.75	221.0	10.67
2.90	2816.	252.5	20.6	191748.	3.03	1727.	2.08	16.91	230.9	12.23
3.00	2913.	263.6	23.9	207520.	2.88	1755.	2.05	19.35	241.1	14.01

[redacted]

ENGINE 21

ESTIMATED PERFORMANCE

M2	WS	WP	WSWP	WFT	PHP	PHS	V6	PT20	A0	A5	A6
					ALTITUDE - 50000. FEET						
0.700	717.	438.	1.64	99.3	1.0	4.156	5373.	0.94	33.96	59.57	96.06
0.700	852.	522.	1.63	118.3	1.0	4.165	5402.	0.93	37.49	59.21	96.01
0.700	904.	579.	1.67	131.2	1.0	4.083	5408.	0.92	40.37	59.36	96.04
0.700	1091.	657.	1.66	148.9	1.0	4.097	5431.	0.90	43.57	59.12	96.08
0.700	1575.	782.	2.01	177.3	1.0	3.379	5386.	0.87	55.21	61.45	96.22
0.700	2833.	782.	3.62	177.3	1.0	1.878	5230.	0.81	82.38	64.79	96.28
					ALTITUDE - 60000. FEET						
0.700	668.	383.	1.74	86.9	1.0	3.902	5435.	0.91	43.23	58.84	96.00
0.700	720.	422.	1.70	95.7	1.0	3.993	5469.	0.90	45.30	58.26	96.22
0.700	813.	458.	1.77	103.9	1.0	3.833	5463.	0.89	48.99	58.64	96.03
0.700	865.	495.	1.75	112.2	1.0	3.895	5487.	0.88	50.98	58.25	96.15
0.700	1240.	646.	1.92	146.5	1.0	3.545	5511.	0.85	64.81	58.79	96.23
0.700	1756.	782.	2.25	177.3	1.0	3.030	5519.	0.81	82.38	59.73	96.18
					ALTITUDE - 70000. FEET						
0.700	629.	305.	2.06	69.2	1.0	3.299	5460.	0.87	56.71	59.44	96.17
0.700	681.	339.	2.01	76.8	1.0	3.381	5497.	0.86	59.82	58.73	96.26
0.700	767.	386.	1.99	87.4	1.0	3.419	5529.	0.85	64.81	58.13	96.06
0.700	863.	443.	1.95	100.4	1.0	3.490	5569.	0.84	70.23	57.48	96.04
0.700	969.	490.	1.98	111.0	1.0	3.437	5589.	0.82	76.07	57.34	95.97
0.700	1087.	522.	2.08	118.3	1.0	3.266	5593.	0.81	82.38	57.60	95.89

ENGINE 21

SUPPLEMENTARY DATA

MO	WS	WHX	WT	AO	AHX	AOT
			ALTITUDE - 0. FEET			
0.50	1372.	759.	2131.	32.15	17.79	49.94
0.75	1630.	759.	2389.	25.46	11.86	37.32
1.00	1915.	759.	2674.	22.41	8.88	31.29
			ALTITUDE - 10000. FEET			
0.60	1043.	633.	1676.	28.51	17.30	45.81
0.90	1330.	759.	2089.	24.21	13.82	38.03
1.20	1757.	759.	2516.	23.95	10.35	34.30
1.40	2094.	759.	2853.	24.43	8.85	33.28
1.60	2589.	759.	3348.	26.40	7.74	34.14
			ALTITUDE - 20000. FEET			
0.77	822.	490.	1312.	25.21	15.03	40.24
1.00	1014.	613.	1627.	23.99	14.50	38.49
1.20	1245.	759.	2004.	24.54	14.96	39.50
1.50	1742.	759.	2501.	27.42	11.95	39.37
1.80	2349.	759.	3108.	30.76	9.94	40.70
			ALTITUDE - 30000. FEET			
1.17	809.	479.	1288.	24.35	14.42	38.77
1.30	936.	573.	1509.	25.25	15.46	40.71
1.40	1046.	644.	1690.	26.21	16.14	42.35
1.50	1173.	759.	1932.	27.41	17.73	45.14
1.90	1897.	759.	2656.	34.92	13.97	48.89
2.40	3351.	759.	4110.	48.64	11.02	59.66
			ALTITUDE - 36000. FEET			
1.39	801.	471.	1272.	26.08	15.34	41.42
1.50	910.	562.	1472.	27.41	16.93	44.34
1.60	1023.	623.	1646.	28.88	17.59	46.47
1.70	1153.	699.	1852.	30.62	18.56	49.18
2.00	1664.	759.	2423.	37.49	17.10	54.59
2.40	2642.	759.	3401.	49.45	14.21	63.66
2.80	4294.	759.	5053.	68.65	12.13	80.78

ENGINE 21 CONT'D.

SUPPLEMENTARY DATA

MO	WS	WHX	WT	AO	AHX	AOT
			ALTITUDE - 40000. FEET			
1.52	768.	463.	1231.	27.66	16.68	44.34
1.65	897.	545.	1442.	29.72	18.06	47.78
1.85	1144.	699.	1843.	33.75	20.62	54.37
2.00	1375.	759.	2134.	37.49	20.69	58.18
2.50	2534.	759.	3293.	55.06	16.49	71.55
3.00	4571.	759.	5330.	82.38	13.68	96.06
			ALTITUDE - 50000. FEET			
1.86	717.	425.	1142.	33.96	20.13	54.09
2.00	852.	507.	1359.	37.49	22.31	59.80
2.10	964.	562.	1526.	40.37	23.53	63.90
2.20	1091.	638.	1729.	43.57	25.48	69.05
2.50	1575.	759.	2334.	55.21	26.61	81.82
3.00	2833.	759.	3592.	82.38	22.07	104.45
			ALTITUDE - 60000. FEET			
2.19	668.	372.	1040.	43.23	24.07	67.30
2.25	720.	410.	1130.	45.30	25.80	71.10
2.35	813.	445.	1258.	48.99	26.81	75.80
2.40	865.	480.	1345.	50.98	28.29	79.27
2.70	1240.	627.	1867.	64.81	32.77	97.58
3.00	1756.	759.	2515.	82.38	35.61	117.99
			ALTITUDE - 70000. FEET			
2.53	629.	296.	925.	56.71	26.69	83.40
2.60	681.	329.	1010.	59.82	28.90	88.72
2.70	767.	375.	1142.	64.81	31.69	96.50
2.80	863.	430.	1293.	70.23	34.99	105.22
2.90	969.	476.	1445.	76.07	37.37	113.44
3.00	1087.	507.	1594.	82.38	38.42	120.80

Cross-Reference Information

Subsonic Combustion Ramjet Performance Maps may be found in the Engine No. 9 Section.

SCRAMLACE, NO. 22

Technical Description

This engine is capable of three operating modes: (1) liquid air cycle ejector mode, (2) subsonic combustion ramjet and (3) supersonic combustion ramjet. The engine consists of a primary rocket subsystem which operates on liquid hydrogen and liquid air, with the liquid air being supplied from the air liquefaction unit, consisting of a precooler and condenser. The refrigerant is the liquid hydrogen total flow supplied to the engine. Following the primary rocket section is the mixer, diffuser, afterburner and variable geometry exit nozzle.

Initial engine operation is in the ejector mode with full thrust operation of the primary rockets at a stoichiometric condition. Air flow, nominally constant, is controlled by hydrogen flow into the engine and the specific flight conditions, non primary fuel being burned in the afterburner at a significantly fuel rich condition. At an appropriate flight Mach number the primary rocket subsystem is shut down and the air liquefaction unit is closed off from the inlet diffuser. The engine continues to operate with stoichiometric combustion in the afterburner as a subsonic combustion ramjet. At approximately Mach 6 the engine transists into supersonic combustion ramjet operation by simultaneous shifting of combustion forward into the region of primary rockets (the rockets are not reignited) and full opening of the aft end of the engine to permit the normal shock system to pass from the engine. Upon entry, flyback is nominally accomplished in the subsonic ramjet mode with loiter and landing being achieved in the liquid air cycle ejector phase operation.

Engine Operating Schematic

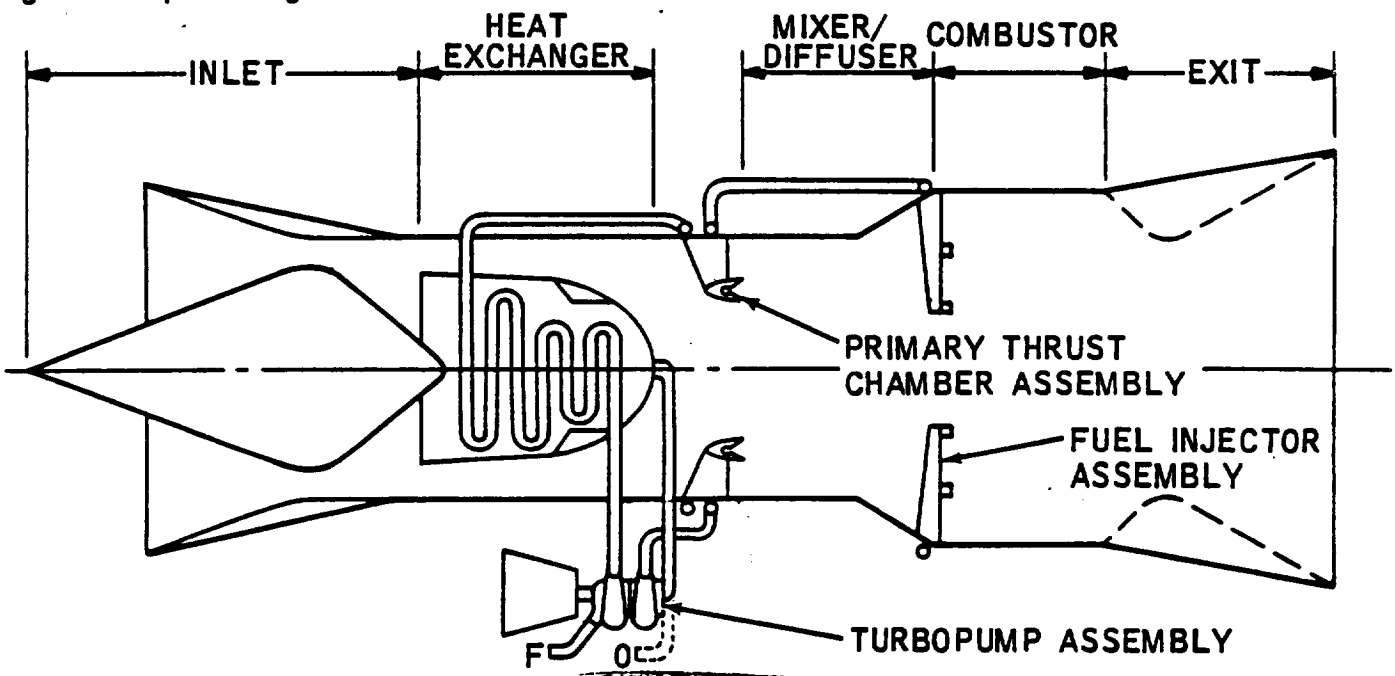

Engine Design Parameters

P_c = 1000 psia, W_s/W_p = 1.50, O/F = 34.3, ϕ_p = 1.0, ϕ_s = 4.49, ϕ_{cond} = 8.0, ϕ_{prec} = 8.0, A_4/A_3 = 2.09, P_{T2}/P_{TO} ref. Fig. 11

Engine Operating Mode Block Diagrams

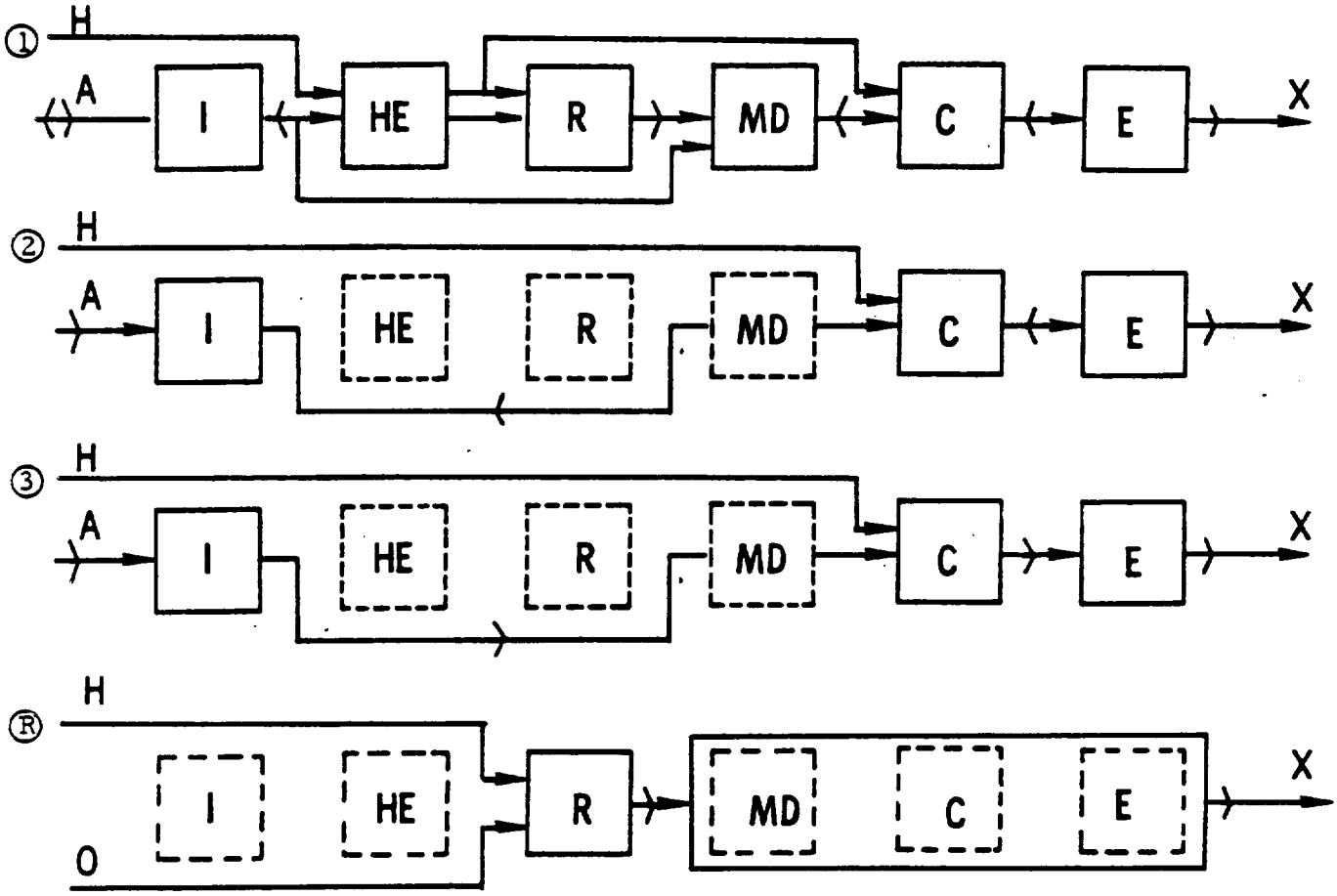

[redacted]

SCRAMLACE (ENGINE NO. 22)
COMPOSITE ENGINE STUDY
CLASS 1 PHASE

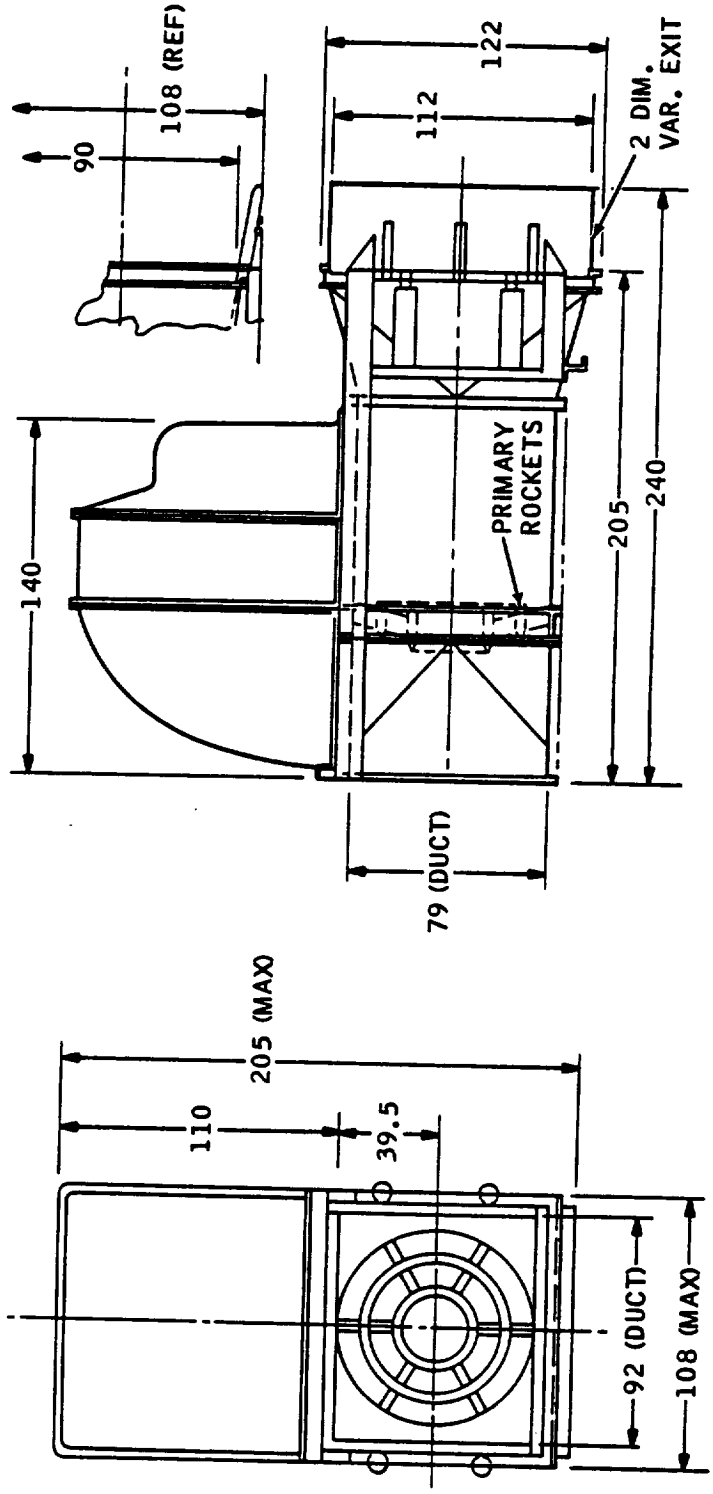

[redacted]

ENGINE PHYSICAL CHARACTERISTICS

WEIGHT, THRUST/WEIGHT*	English Units		International Units	
Subsystem Components	NOTE: Engine weight statement does not include nozzle exit surfaces considered to be vehicle affixed (Fig 6)			
Heat Exchanger	2,506	LBM	1,137	KG
Catalyst	1,418		643	
Structure	855		388	
Primary Rockets	860		390	
Turbopumps and Plumbing	817		371	
Structure	1,590		721.2	
Mixer	805		365	
Diffuser	413		187	
Combustor	663		301	
Exit and Centerbody	2,079		943	
Manifolding and Contingency	500		229	
Uninstalled Weight	12,506	LBM	5,673	KG
Thrust, SLS	250,000	LBF	1,112,055	N
Uninstalled Thrust/Weight	20.0	LBF/LBM	196	N/KG
Inlet Weight (Typical)	12,000	LBM	5,443	KG
Installed Weight	24,506	LBM	11,116	KG
Installed Thrust/Weight	10.2	LBF/LBM	100	N/KG
LENGTH				
Uninstalled Length	20.0	FT	6.1	M
Inlet Length (Typical)	81.6		24.9	
Instaled Length	101.6	FT	30.97	M
FLOW AREAS				
Inlet Cowl, A_c	100.0	FT^2	9.29	M^2
Mixer, A_3	33.5		3.11	
Combustor, A_4	70.0		6.50	
Nozzle Exit, max, A_6**	400.0	FT^2	37.2	M^2

* Based on maximum internal pressure = 100 psia (689.5 N/M^2)
** For ejector mode, see engine data

ENGINE THRUST / WEIGHT

EFFECT OF SIZE AND INTERNAL PRESSURE

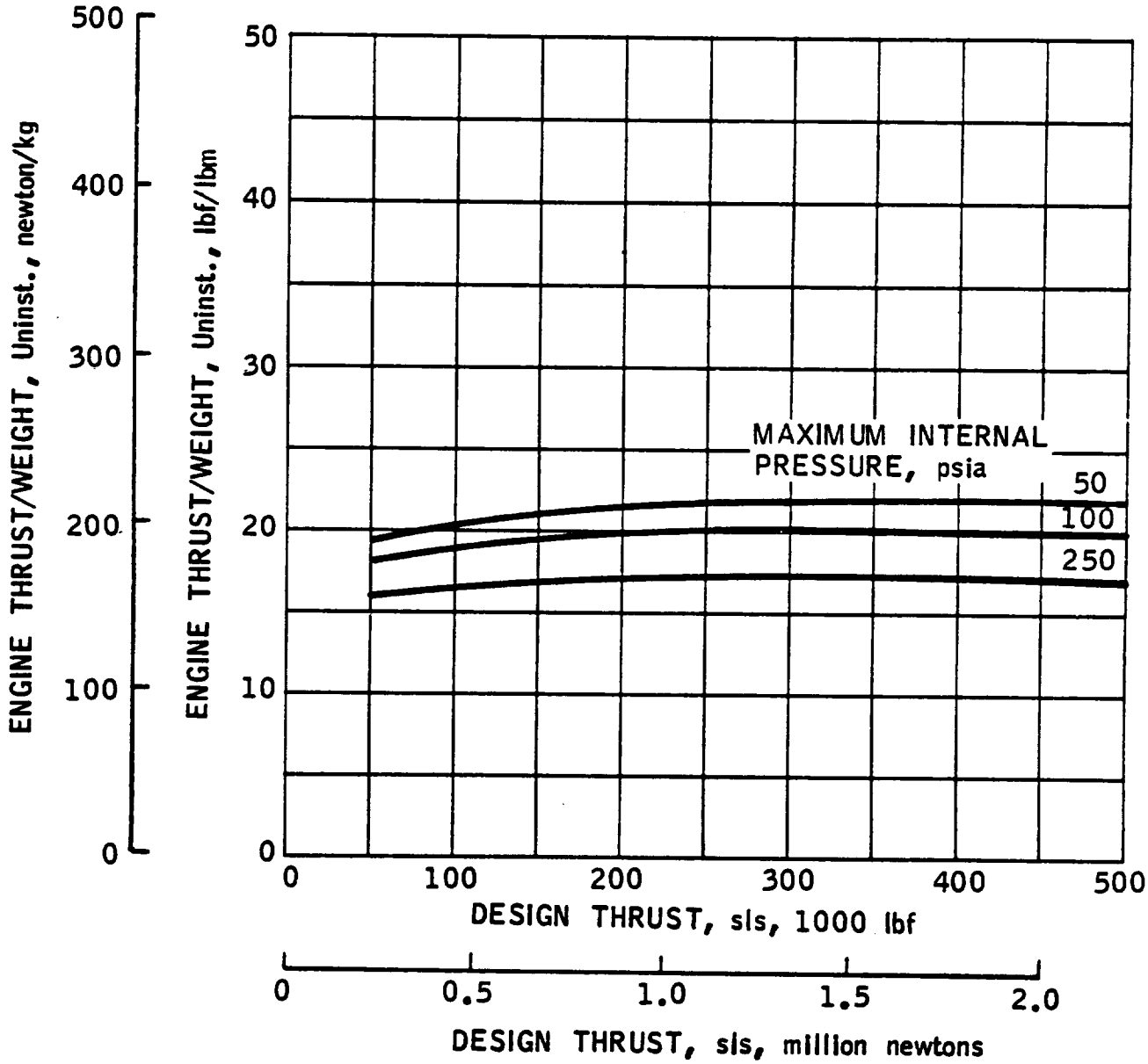

Cross-Reference Information

Ejector Mode Performance Maps and Tabular Data may be found in the Engine No. 21 Section.

Subsonic Combustion Ramjet Performance Maps may be found in the Engine No. 10 Section.

Supersonic Combustion Ramjet Performance Information may be found in the Engine No. 10 Section.

RECYCLED RAMLACE, NO. 23

Technical Description

This engine is capable of two operating modes: (1) recycled liquid air cycle ejector operation (non recycle operation is also possible) and (2) subsonic combustion ramjet operation. The engine consists of a primary rocket subsystem which operates on liquid hydrogen and liquid air supplied from the air liquefaction unit. Following these components is the typical mixer, diffuser, afterburner and variable geometry exit nozzle. The recycle operation yields a significant improvement in low speeds specific impulse by virtue of leaning out the afterburning operation during ejector mode operation. This is accomplished by returning a significant portion of the refrigerant hydrogen after its use in the condenser to the vehicle hydrogen tank. This permits a reduction of fuel flow being directed to the afterburner, thereby leaning out the cycle. Recycle operation stipulates subcooled hydrogen in the tank, nominally in the form of 50% slush hydrogen at 25°R. The warmed up hydrogen is returned to the vehicle tank, in some cases through turbine expanders, where it is cooled and recondensed while melting the slush hydrogen and otherwise warming up the tank hydrogen temperature.

Initial operation is in the recycled liquid air cycle ejector mode, which is time limited by virtue of the discrete refrigerative capacity of the tanked slush hydrogen. At a nominal flight speed of Mach 2 - 3 transition to subsonic combustion ramjet mode is effected by shutting down the primary rocket subsystem and the air liquefaction heat exchanger. Recycle operation is terminated at that point, if not earlier as limited by the heat sink capacity of the tanked hydrogen. Ramjet operation is nominally combustion with a stoichiometric afterburner setting and a programmed variable throat to provide maximum thrust, consistent with maximum performance. Post entry flyback is accomplished in the subsonic burning ramjet mode and the loiter and landing operation is effected by the liquid air cycle ejector mode without recycle operation (the hydrogen is no longer subcooled).

Engine Operating Schematic

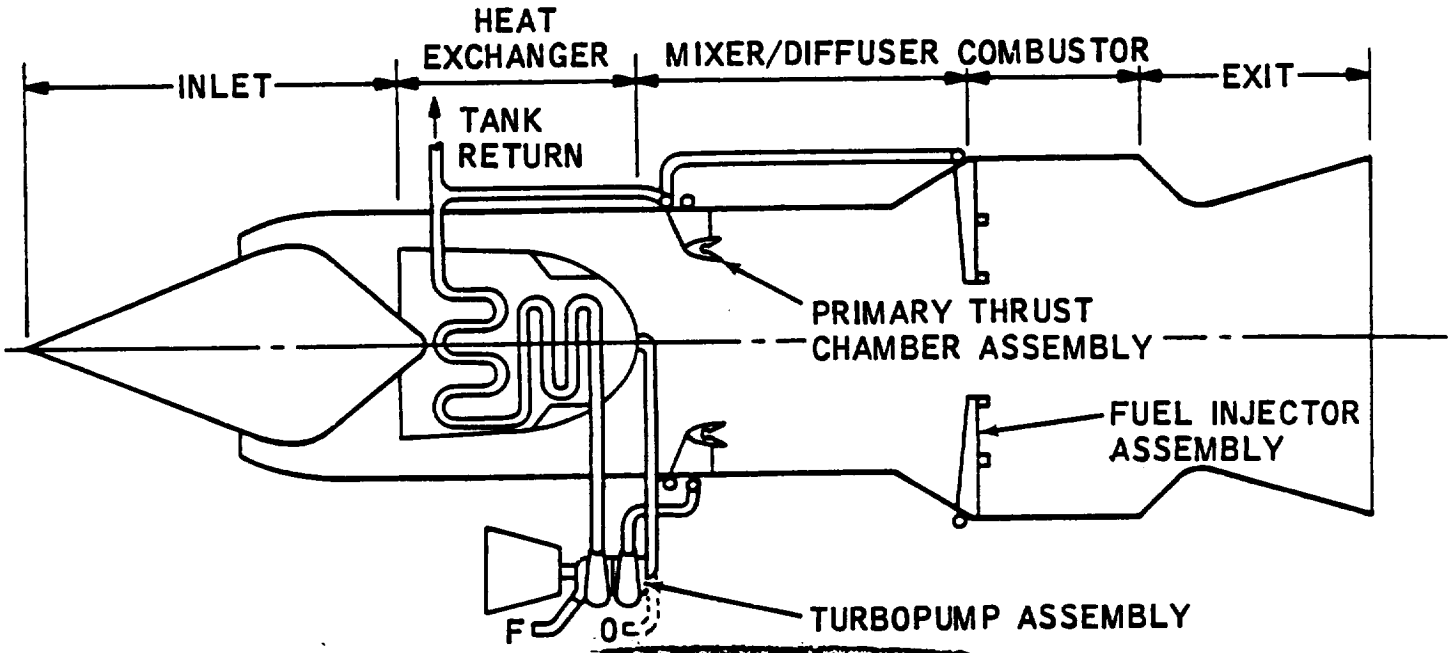

Eng. No. 23

Engine Design Parameters

P_c = 1000 psia, W_s/W_p = 1.45, O/F = 34.3, ϕ_p = 1.0, ϕ_s = 2.01, ϕ_{cond} = 8.0, ϕ_{prec} = 4.0, A_4/A_3 = 2.09, P_{T2}/P_{TO} ref. Fig. 9

Engine Operating Mode Block Diagrams

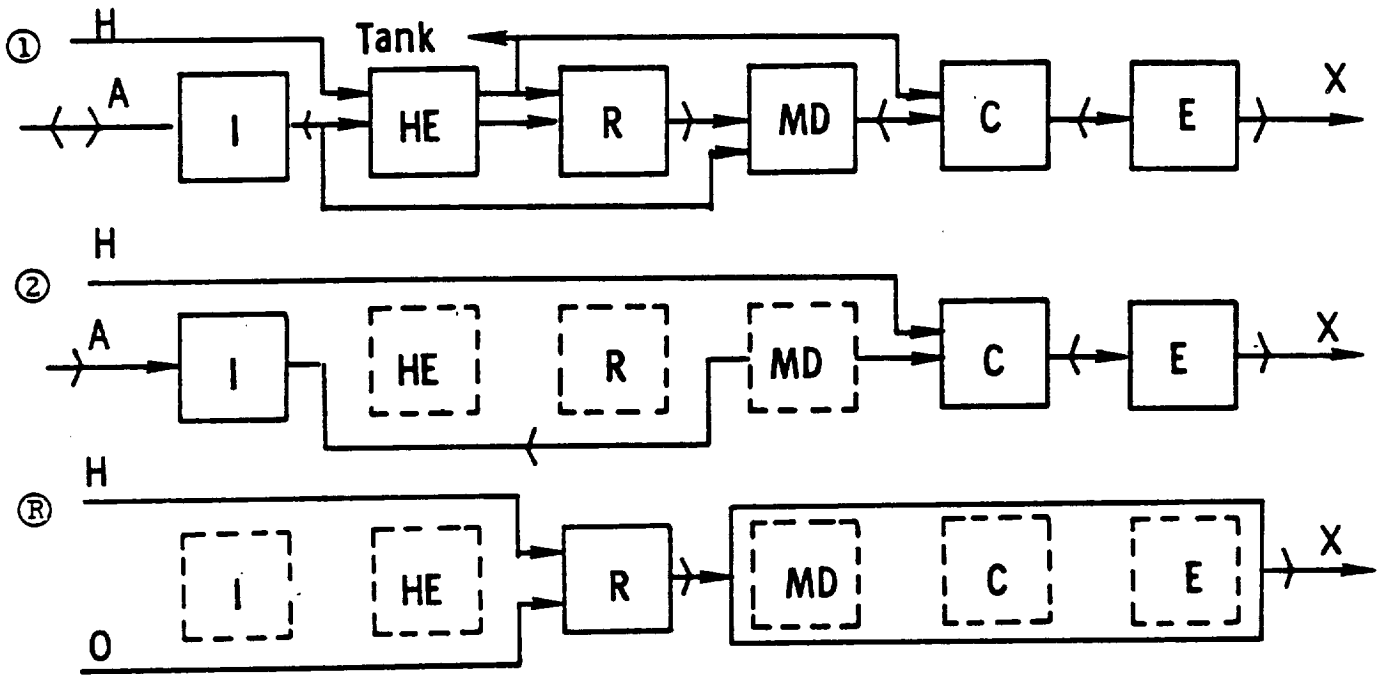

RECYCLED RAMLACE (ENGINE NO. 23)
COMPOSITE ENGINE STUDY
CLASS 1 PHASE

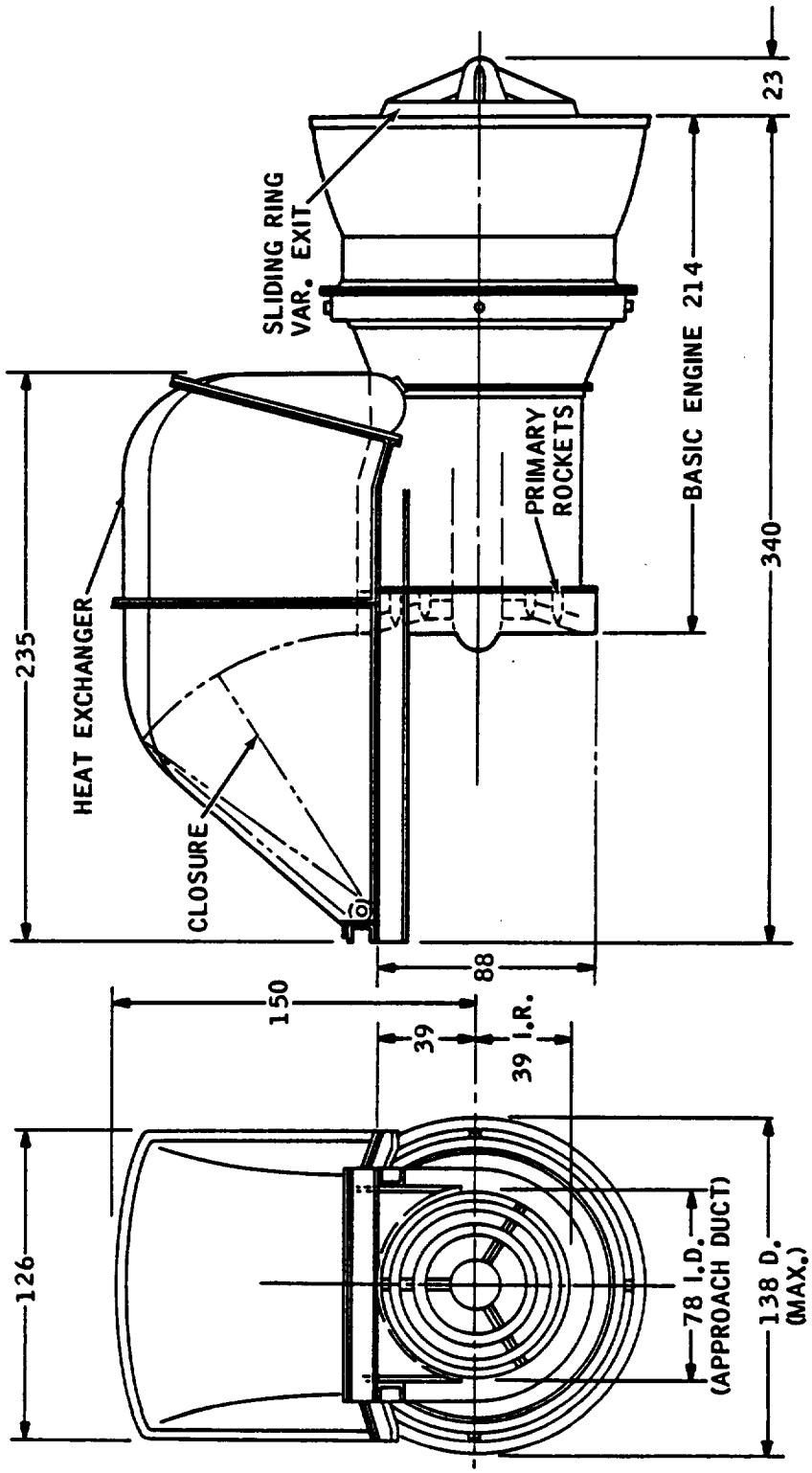

Engine Physical Characteristics

Eng. No. 23

WEIGHT, THRUST/WEIGHT*	English Units		International Units	
Subsystem Components				
Heat Exchanger	4083	LBM	1852	KG
Catalyst	1484		673.1	
Structure	1162		527.1	
Primary Rockets	885		401	
Turbopumps and Plumbing	741		336	
Structure	1668		756.6	
Mixer	917		416	
Diffuser	470		213	
Combustor	755		342	
Exit and Centerbody	2370		1075	
Manifolding and Contingency	550		250	
Uninstalled Weight	15,085	LBM	6,842.6	KG
Thrust, SLS	250,000	LBF	1,112,055	N
Uninstalled Thrust/weight	16.6	LBF/LBM	163	N/KG
Inlet Weight (typical)	9840	LBM	4463	KG
Installed Weight	24,925	LBM	11,306	KG
Installed Thrust/weight	10.0	LBF/LBM	98	N/KG
LENGTH				
Uninstalled Length	28.3	FT	8.63	M
Inlet Length (typical)	56.2		17.1	
Installed Length	84.5	FT	25.6	M
FLOW AREAS				
Inlet Cowl, Ac	82	FT^2	7.6	M^2
Mixer, A_3	33.5		3.1	
Combustor, A_4	70		6.5	
Nozzle Exit, max, A_6**	125	FT^2	11.6	M^2

* Based on maximum internal pressure = 150 psia (1034 N/M^2)
**For ejector mode, see engine data

ENGINE THRUST / WEIGHT

EFFECT OF SIZE AND INTERNAL PRESSURE

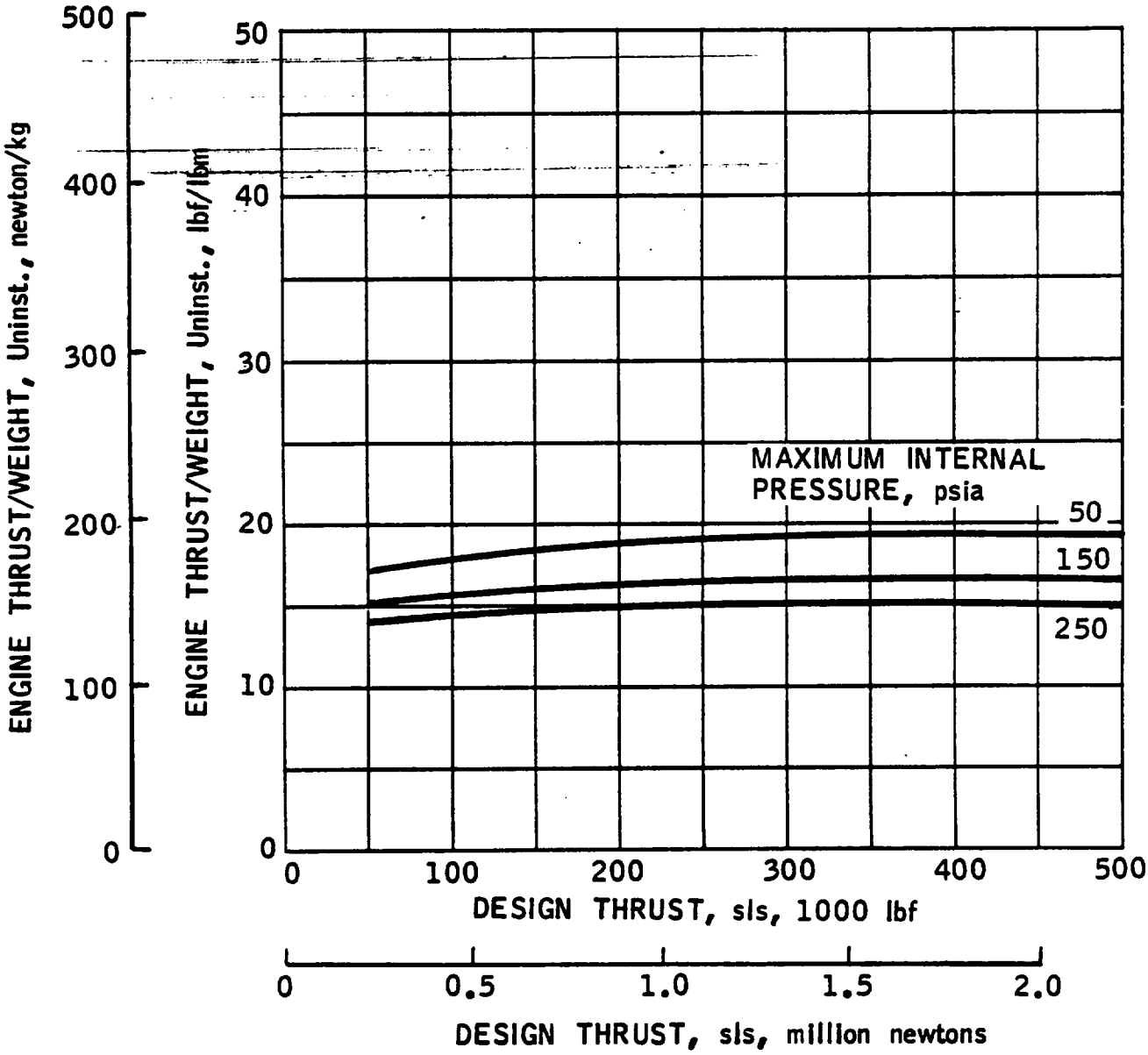

EJECTOR MODE SPECIFIC IMPULSE

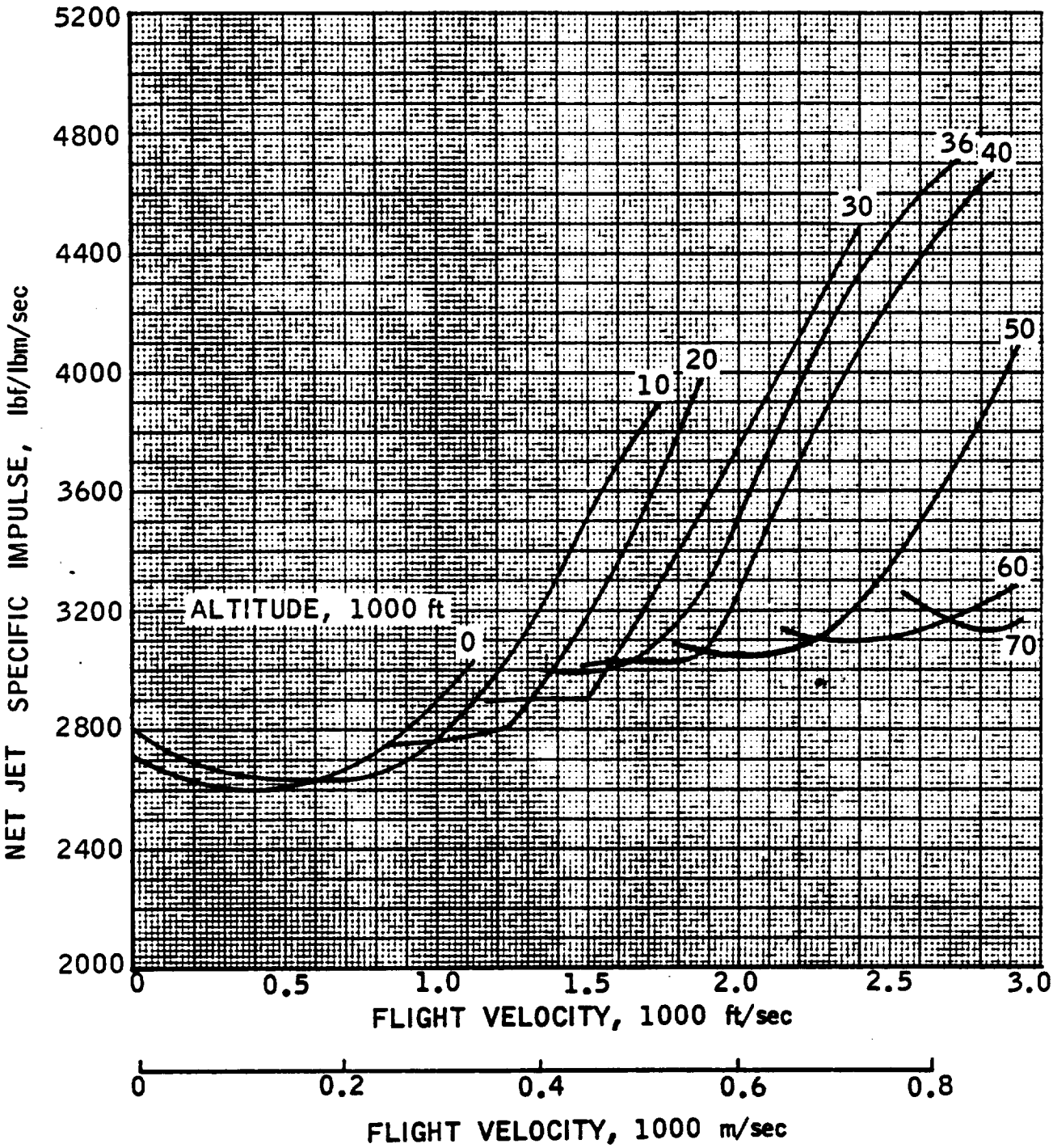

EJECTOR MODE THRUST

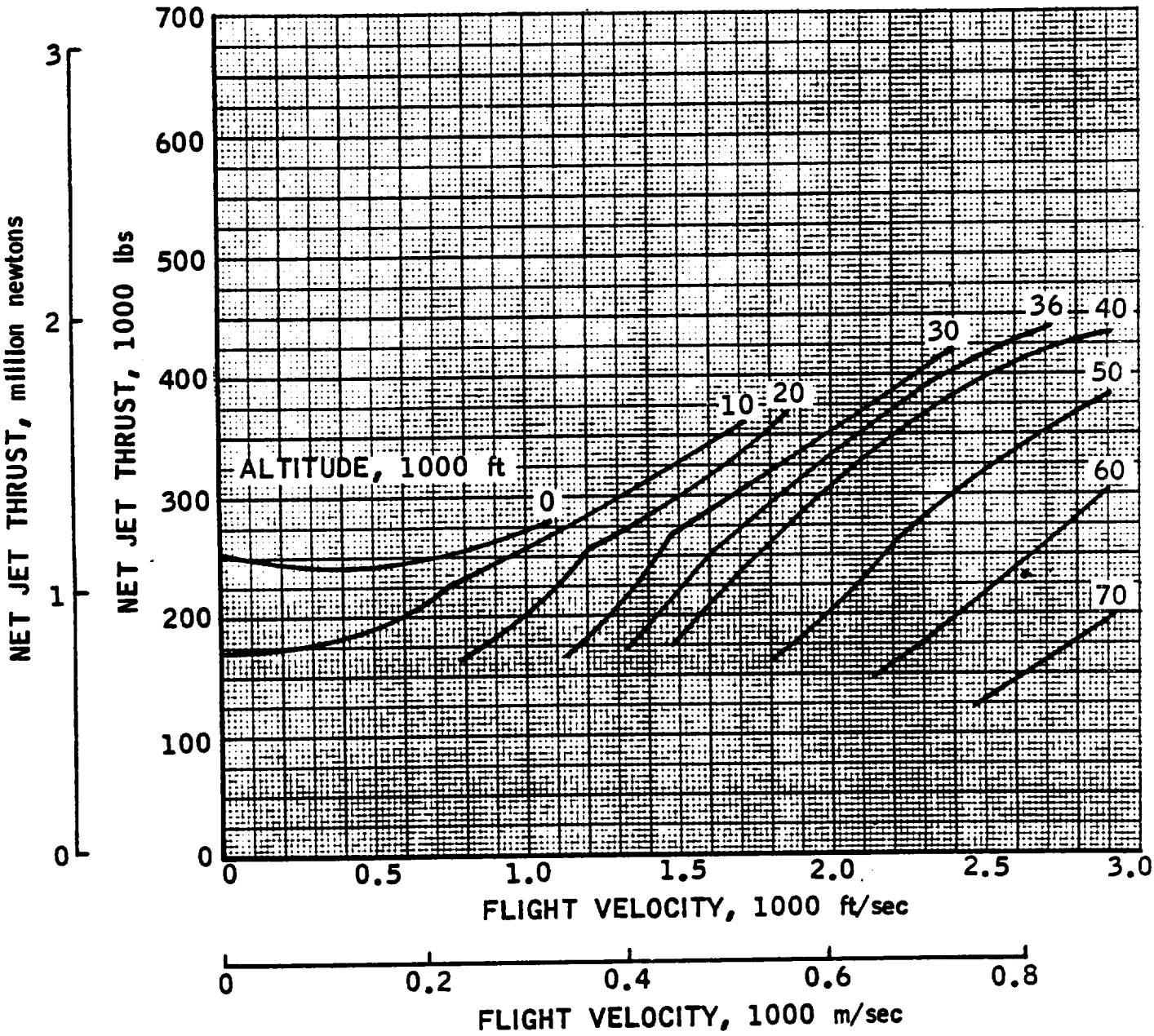

EJECTOR MODE AIRFLOW

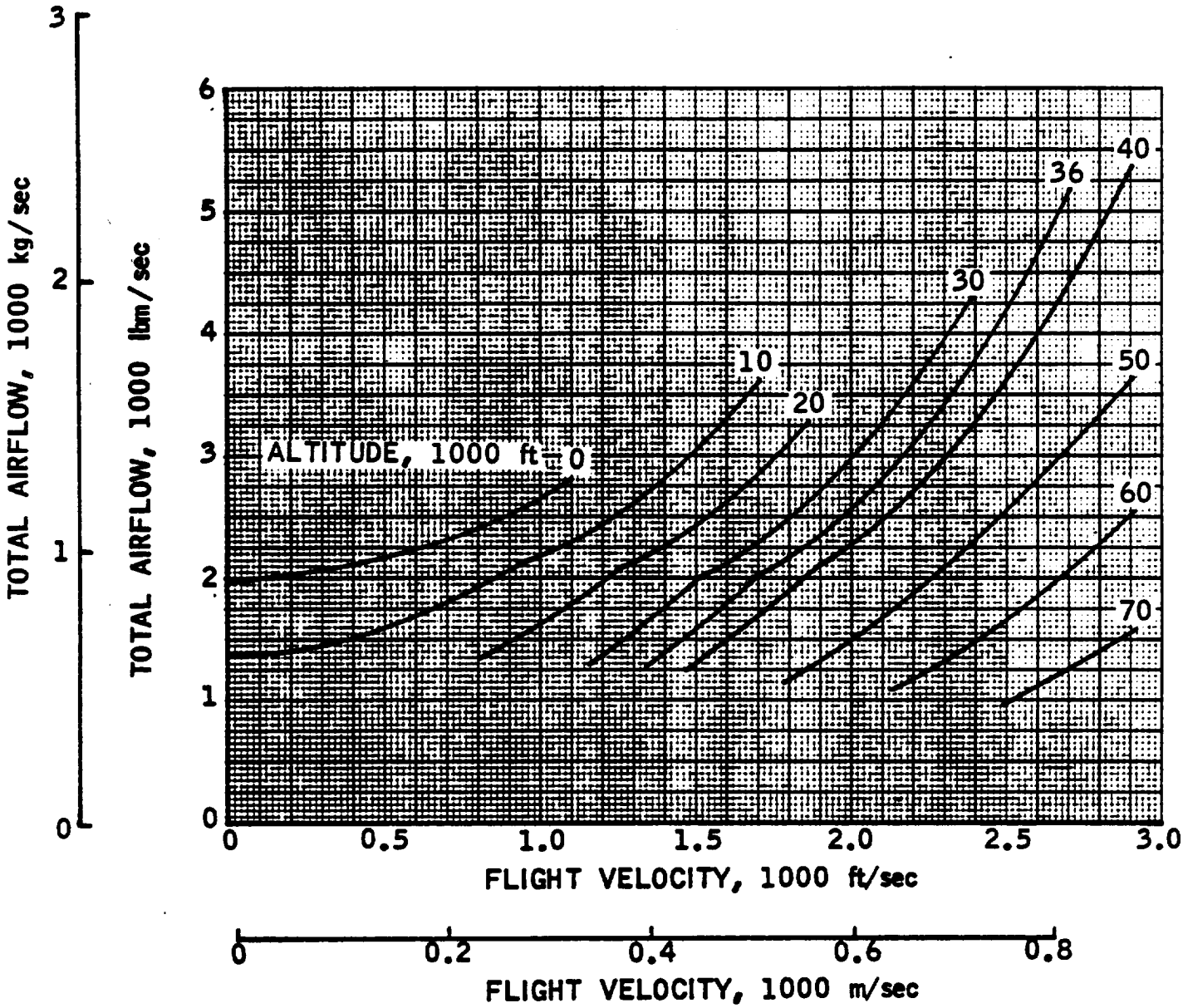

EJECTOR MODE CAPTURE AREA

NOTE: 1. CURVE REFLECTS UPPER LIMIT.

2. EJECTOR MODE CAPTURE AREA CAN EXCEED NOMINAL INLET SIZE (SEE SUPPLEMENTARY TABULAR DATA).

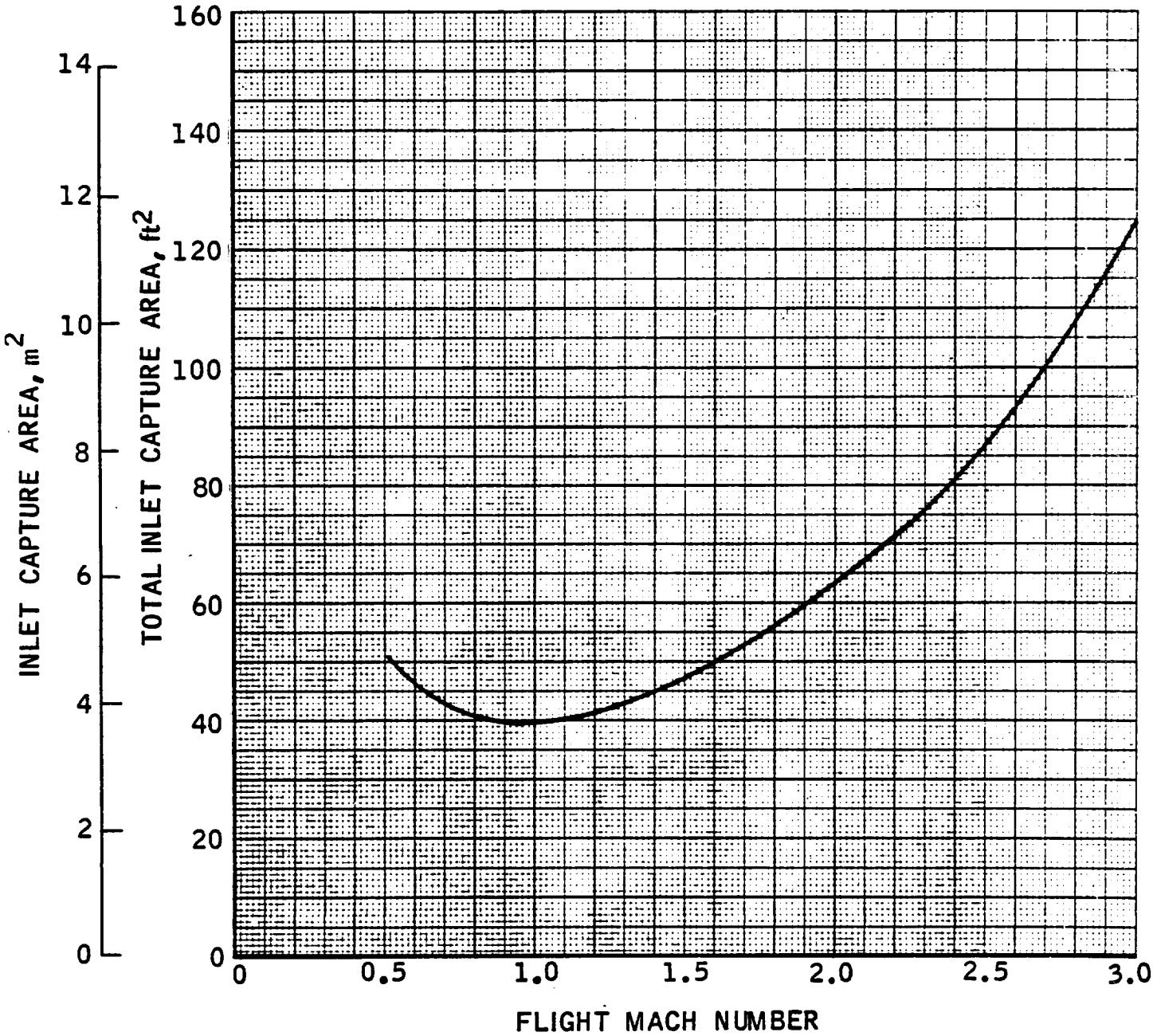

ENGINE 23

ESTIMATED PERFORMANCE

MO	VO	HTO	PTO	T	CF	IS	SPC	PT2	H2	P2
				ALTITUDE -		0. FEET				
0.01	11.	124.5	14.7	253065.	735.91	2727.	1.32	14.70	112.3	10.26
0.25	279.	126.0	15.3	242662.	27.60	2615.	1.38	15.35	113.7	10.71
0.50	558.	130.7	17.4	243355.	12.93	2622.	1.37	17.43	117.9	12.17
0.75	837.	138.5	21.3	255973.	8.12	2758.	1.31	21.34	125.3	15.04
1.00	1116.	149.4	27.8	282695.	5.78	3046.	1.18	27.82	135.8	19.90
				ALTITUDE -		10000. FEET				
0.01	11.	115.1	10.1	169723.	745.32	2813.	1.28	10.11	103.8	7.05
0.30	322.	117.1	10.8	175980.	24.04	2656.	1.36	10.76	105.6	7.51
0.60	644.	123.4	12.9	203819.	11.92	2637.	1.37	12.89	111.3	9.00
0.90	966.	133.7	17.1	253987.	7.95	2737.	1.32	17.10	120.7	11.94
1.20	1288.	148.2	24.5	290435.	5.59	3129.	1.15	24.33	134.0	17.06
1.40	1503.	160.2	32.2	327603.	4.61	3530.	1.02	31.51	144.8	22.10
1.60	1718.	174.0	43.0	360818.	3.72	3888.	0.93	41.36	157.2	28.92
				ALTITUDE -		20000. FEET				
0.77	801.	120.2	10.0	162984.	9.80	2723.	1.32	10.02	108.4	7.00
1.00	1037.	128.9	12.8	207580.	7.78	2775.	1.30	12.79	116.2	8.93
1.20	1244.	138.3	16.4	261882.	6.63	2822.	1.28	16.27	124.8	11.36
1.50	1555.	155.7	24.8	305707.	4.98	3294.	1.09	24.10	140.6	16.84
1.80	1867.	177.0	38.8	368641.	3.86	3972.	0.91	36.70	159.9	25.66

[redacted]

ENGINE 23

ESTIMATED PERFORMANCE

M2	WS	WP	WSWP	WFT	PHP	PHS	V6	PT20	A0	A5	A6
					ALTITUDE -		0. FEET				
0.735	1186.	819.	1.45	92.8	1.0	2.012	3935.	1.00	1391.02	55.99	60.41
0.735	1231.	819.	1.50	92.8	1.0	1.939	3950.	1.00	57.75	56.59	61.25
0.735	1374.	819.	1.68	92.8	1.0	1.737	3996.	1.00	32.21	58.37	63.80
0.725	1626.	819.	1.99	92.8	1.0	1.468	4082.	1.00	25.39	61.06	68.05
0.709	2023.	819.	2.47	92.8	1.0	1.180	4205.	1.00	23.67	64.85	74.55
					ALTITUDE -		10000. FEET				
0.735	848.	532.	1.59	60.3	1.0	1.830	3841.	1.00	1390.84	57.61	61.61
0.735	895.	585.	1.53	66.3	1.0	1.905	4011.	1.00	48.91	56.79	62.21
0.735	1045.	682.	1.53	77.3	1.0	1.902	4289.	1.00	28.56	56.72	65.58
0.735	1333.	819.	1.63	92.8	1.0	1.791	4605.	1.00	24.25	57.62	72.51
0.731	1800.	819.	2.20	92.8	1.0	1.326	4720.	0.99	24.53	62.56	82.91
0.731	2245.	819.	2.74	92.8	1.0	1.063	4822.	0.98	26.21	66.58	92.41
0.735	2838.	819.	3.47	92.8	1.0	0.841	4748.	0.96	28.95	65.71	96.04
					ALTITUDE -		20000. FEET				
0.735	823.	528.	1.56	59.9	1.0	1.871	4522.	1.00	25.26	56.76	69.86
0.735	1015.	660.	1.54	74.8	1.0	1.895	4849.	1.00	24.04	56.37	76.94
0.735	1247.	819.	1.52	92.8	1.0	1.914	5135.	0.99	24.59	56.11	85.54
0.735	1745.	819.	2.13	92.8	1.0	1.368	5147.	0.97	27.47	61.42	96.25
0.735	2497.	819.	3.05	92.8	1.0	0.956	4903.	0.94	32.70	65.93	96.17

[redacted]

ENGINE 23

ESTIMATED PERFORMANCE

MO	VO	HTO	PTO	T	CF	IS	SPC	PT2	H2	P2
				ALTITUDE - 30000. FEET						
1.17	1160.	125.7	10.1	169309.	7.16	2896.	1.24	10.09	113.4	7.04
1.30	1293.	132.2	12.1	203063.	6.57	2902.	1.24	11.95	119.3	8.35
1.40	1393.	137.6	13.9	229946.	6.17	2925.	1.23	13.63	124.2	9.52
1.50	1492.	143.3	16.1	268776.	5.88	2896.	1.24	15.59	129.4	10.89
1.90	1890.	170.2	29.3	333946.	4.22	3598.	1.00	27.41	153.8	19.16
2.40	2388.	212.7	63.9	417666.	2.61	4500.	0.80	56.48	192.5	39.54
				ALTITUDE - 36000. FEET						
1.39	1345.	129.8	10.3	172816.	6.38	3003.	1.20	10.14	117.1	7.08
1.50	1453.	135.9	12.1	204621.	6.04	2979.	1.21	11.79	122.6	8.23
1.60	1550.	141.7	14.1	229297.	5.67	3013.	1.19	13.53	127.9	9.45
1.70	1647.	147.9	16.3	258645.	5.35	3029.	1.19	15.57	133.5	10.87
2.00	1938.	168.7	25.9	317983.	4.29	3426.	1.05	23.94	152.4	16.73
2.40	2325.	201.7	48.3	393131.	3.09	4236.	0.85	42.70	182.5	29.88
2.80	2713.	240.7	89.7	437255.	2.00	4711.	0.76	74.92	218.1	52.50
				ALTITUDE - 40000. FEET						
1.52	1470.	136.7	10.3	170681.	5.96	3015.	1.19	9.98	123.4	6.97
1.65	1597.	144.6	12.5	201615.	5.53	3030.	1.19	11.98	130.5	8.37
1.85	1791.	157.7	16.9	258830.	4.95	3031.	1.19	15.93	142.4	11.13
2.00	1936.	168.5	21.4	292555.	4.47	3152.	1.14	19.77	152.2	13.82
2.50	2420.	210.6	46.6	383703.	3.05	4134.	0.87	40.66	190.6	28.46
3.00	2904.	262.1	100.3	432205.	1.78	4657.	0.77	81.17	237.6	56.91

ENGINE 23

ESTIMATED PERFORMANCE

M2	WS	WP	WSWP	WFT	PHP	PHS	V6	PT20	A0	A5	A6
					ALTITUDE - 30000. FEET						
0.735	810.	516.	1.57	58.5	1.0	1.856	5087.	0.99	24.40	56.47	85.24
0.735	937.	617.	1.52	70.0	1.0	1.921	5304.	0.99	25.29	55.73	92.43
0.735	1048.	694.	1.51	78.6	1.0	1.929	5392.	0.98	26.26	55.60	96.08
0.735	1175.	819.	1.43	92.8	1.0	2.032	5442.	0.97	27.46	54.77	96.11
0.735	1900.	819.	2.32	92.8	1.0	1.256	5126.	0.94	34.99	61.89	95.96
0.735	3518.	819.	4.30	92.8	1.0	0.679	4758.	0.88	51.09	58.81	96.15
					ALTITUDE - 36000. FEET						
0.735	802.	508.	1.58	57.5	1.0	1.845	5346.	0.98	26.13	56.28	96.08
0.735	912.	606.	1.50	68.7	1.0	1.938	5402.	0.97	27.46	55.28	96.21
0.735	1025.	672.	1.53	76.1	1.0	1.909	5399.	0.96	28.94	55.44	96.03
0.735	1155.	753.	1.53	85.4	1.0	1.901	5408.	0.95	30.68	55.45	96.04
0.735	1667.	819.	2.04	92.8	1.0	1.432	5242.	0.93	37.56	59.45	96.19
0.735	2728.	819.	3.33	92.8	1.0	0.875	4955.	0.88	51.08	62.31	96.29
0.735	4400.	819.	5.37	92.8	1.0	0.543	4667.	0.84	70.37	53.59	96.06
					ALTITUDE - 40000. FEET						
0.735	769.	500.	1.54	56.6	1.0	1.893	5395.	0.97	27.71	55.26	96.02
0.735	899.	587.	1.53	66.6	1.0	1.904	5417.	0.96	29.78	55.01	96.01
0.735	1146.	753.	1.52	85.4	1.0	1.917	5450.	0.94	33.81	54.75	96.06
0.735	1377.	819.	1.68	92.8	1.0	1.733	5397.	0.93	37.56	56.05	96.01
0.735	2545.	819.	3.11	92.8	1.0	0.938	5065.	0.87	55.31	61.75	96.00
0.735	4579.	819.	5.59	92.8	1.0	0.521	4714.	0.81	82.54	51.55	96.01

[redacted]

[redacted]

ENGINE 23

ESTIMATED PERFORMANCE

MU	VO	HTO	PTO	T	CF	IS	SPC	PT2	H2	P2
				ALTITUDE - 50000. FEET						
1.86	1800.	158.3	10.6	160122.	4.92	3081.	1.17	10.00	143.0	6.99
2.00	1936.	168.5	13.2	190284.	4.57	3074.	1.17	12.25	152.2	8.56
2.10	2033.	176.1	15.5	211971.	4.32	3086.	1.17	14.16	159.2	9.90
2.20	2130.	184.2	18.1	239059.	4.10	3066.	1.17	16.37	166.5	11.45
2.50	2420.	210.6	28.9	304096.	3.41	3277.	1.10	25.20	190.6	17.64
3.00	2904.	262.1	62.2	379568.	2.31	4090.	0.88	50.31	237.6	35.27
				ALTITUDE - 60000. FEET						
2.19	2120.	183.4	11.0	143133.	4.10	3147.	1.14	10.01	165.8	7.00
2.25	2178.	188.4	12.1	155699.	4.00	3107.	1.16	10.92	170.3	7.64
2.35	2275.	197.0	14.2	170832.	3.77	3141.	1.15	12.61	178.2	8.82
2.40	2323.	201.4	15.3	182578.	3.69	3108.	1.16	13.55	182.2	9.48
2.70	2614.	230.1	24.4	241932.	3.14	3156.	1.14	20.70	208.3	14.50
3.00	2904.	262.1	38.5	305781.	2.65	3295.	1.09	31.19	237.6	21.87
				ALTITUDE - 70000. FEET						
2.53	2460.	215.0	11.7	120553.	3.35	3330.	1.08	10.17	194.6	7.12
2.60	2524.	221.4	13.0	131358.	3.26	3269.	1.10	11.17	200.5	7.82
2.70	2621.	231.4	15.2	147348.	3.12	3220.	1.12	12.84	209.6	9.00
2.80	2719.	241.7	17.7	165735.	2.98	3155.	1.14	14.75	219.0	10.34
2.90	2816.	252.5	20.6	182474.	2.84	3141.	1.15	16.91	228.9	11.85
3.00	2913.	263.6	23.9	196907.	2.69	3181.	1.13	19.35	239.0	13.57

[redacted]

ENGINE 23

ESTIMATED PERFORMANCE

M2	WS	WP	WSWP	WFT	PHP	PHS	V6	PT20	A0	A5	A6
					ALTITUDE - 50000. FEET						
0.735	718.	459.	1.57	52.0	1.0	1.862	5466.	0.94	34.02	54.03	96.02
0.735	854.	546.	1.56	61.9	1.0	1.865	5492.	0.93	37.56	53.81	96.01
0.735	966.	606.	1.59	68.7	1.0	1.829	5493.	0.92	40.45	53.94	96.03
0.735	1093.	688.	1.59	78.0	1.0	1.835	5513.	0.90	43.65	53.78	96.09
0.735	1577.	819.	1.93	92.8	1.0	1.513	5444.	0.87	55.31	55.67	96.21
0.735	2838.	819.	3.47	92.8	1.0	0.841	5176.	0.81	82.54	56.54	95.86
					ALTITUDE - 60000. FEET						
0.735	669.	401.	1.67	45.5	1.0	1.748	5511.	0.91	43.31	53.40	96.05
0.735	721.	442.	1.63	50.1	1.0	1.788	5543.	0.90	45.39	52.96	96.25
0.735	815.	480.	1.70	54.4	1.0	1.717	5531.	0.89	49.09	53.28	96.02
0.735	866.	518.	1.67	58.8	1.0	1.744	5555.	0.88	51.08	52.99	96.17
0.735	1242.	676.	1.84	76.7	1.0	1.587	5559.	0.85	64.94	53.48	96.24
0.735	1759.	819.	2.15	92.8	1.0	1.357	5539.	0.81	82.54	54.28	96.19
					ALTITUDE - 70000. FEET						
0.735	630.	319.	1.97	36.2	1.0	1.477	5504.	0.87	56.82	53.83	96.11
0.735	682.	355.	1.92	40.2	1.0	1.515	5531.	0.86	59.93	53.27	95.74
0.735	769.	404.	1.90	45.8	1.0	1.531	5568.	0.85	64.94	52.81	95.98
0.735	864.	464.	1.87	52.5	1.0	1.563	5608.	0.84	70.37	52.31	96.05
0.735	971.	513.	1.89	58.1	1.0	1.539	5623.	0.82	76.22	52.21	95.97
0.735	1089.	546.	1.99	61.9	1.0	1.463	5617.	0.81	82.54	52.43	95.88

ENGINE 23

SUPPLEMENTARY DATA

MO	WS	WHX	WT	AO	AHX	AOT
			ALTITUDE - 0. FEET			
0.50	1374.	795.	2169.	32.21	18.64	50.85
0.75	1626.	795.	2421.	25.39	12.41	37.80
1.00	2023.	795.	2818.	23.67	9.30	32.97
			ALTITUDE - 10000. FEET			
0.60	1045.	662.	1707.	28.56	18.09	46.65
0.90	1333.	795.	2128.	24.25	14.46	38.71
1.20	1800.	795.	2595.	24.53	10.83	35.36
1.40	2245.	795.	3040.	26.21	9.28	35.49
1.60	2838.	795.	3633.	28.95	8.11	37.06
			ALTITUDE - 20000. FEET			
0.77	823.	513.	1336.	25.26	15.74	41.00
1.00	1015.	641.	1656.	24.04	15.18	39.22
1.20	1247.	795.	2042.	24.59	15.68	40.27
1.50	1745.	795.	2540.	27.47	12.51	39.98
1.80	2497.	795.	3292.	32.70	10.41	43.11
			ALTITUDE - 30000. FEET			
1.17	810.	501.	1311.	24.40	15.09	39.49
1.30	937.	599.	1536.	25.29	16.17	41.46
1.40	1048.	674.	1722.	26.26	16.89	43.15
1.50	1175.	795.	1970.	27.46	18.58	46.04
1.90	1900.	795.	2695.	34.99	14.64	49.63
2.40	3518.	795.	4313.	51.09	11.55	62.64
			ALTITUDE - 36000. FEET			
1.39	802.	493.	1295.	26.13	16.06	42.19
1.50	912.	588.	1500.	27.46	17.70	45.16
1.60	1025.	652.	1677.	28.94	18.41	47.35
1.70	1155.	731.	1886.	30.68	21.68	52.36
2.00	1667.	795.	2462.	37.56	17.91	55.47
2.40	2728.	795.	3523.	51.08	14.88	65.96
2.80	4400.	795.	5195.	70.37	12.71	83.08

ENGINE 23 CONT'D.

SUPPLEMENTARY DATA

MO	WS	WHX	WT	AO	AHX	AOT
			ALTITUDE - 40000. FEET			
1.52	769.	485.	1254.	27.71	17.48	45.19
1.65	899.	570.	1469.	29.78	18.88	48.66
1.85	1146.	731.	1877.	33.81	21.57	55.38
2.00	1377.	795.	2172.	37.56	21.68	59.24
2.50	2545.	795.	3340.	55.31	17.28	72.59
3.00	4579.	795.	5374.	82.54	14.33	96.87
			ALTITUDE - 50000. FEET			
1.86	718.	446.	1164.	34.02	21.13	55.15
2.00	854.	530.	1384.	37.56	23.31	60.87
2.10	966.	588.	1554	40.45	24.62	65.07
2.20	1093.	668.	1761.	43.65	26.68	70.33
2.50	1577.	795.	2372.	55.31	27.88	83.19
3.00	2838.	795.	3633.	82.54	23.12	105.66
			ALTITUDE - 60000. FEET			
2.19	669.	389.	1058.	43.31	25.18	68.49
2.25	721.	429.	1150.	45.39	27.01	72.40
2.35	815.	466.	1281.	49.09	28.07	77.16
2.40	866.	503.	1369.	51.08	29.67	80.75
2.70	1242.	656.	1898.	64.94	34.30	99.24
3.00	1759.	795.	2554.	82.54	37.30	119.84
			ALTITUDE - 70000. FEET			
2.53	630.	310.	940.	56.82	27.96	84.78
2.60	682.	345.	1027.	59.93	30.32	90.25
2.70	769.	392.	1161.	64.94	33.10	98.04
2.80	864.	450.	1314.	70.37	36.65	107.02
2.90	971.	498.	1469.	76.22	39.09	115.31
3.00	1089.	530.	1589.	82.54	37.90	120.44

Cross-Reference Information

Subsonic Combustion Ramjet Performance Maps may be found in the Engine No. 9 Section.

RECYCLED SCRAMLACE, NO. 24

Technical Description

This engine is capable of operating in three modes: (1) recycled liquid air cycle ejector mode operation (non recycle operation is also possible), (2) subsonic combustion ramjet mode, and (3) supersonic combustion ramjet mode. The engine comprises a primary rocket subsystem operating on liquid hydrogen and liquid air. The liquid air is supplied by an air liquefaction unit consisting of a precooler and condenser assembly. Following the primary rocket section is a mixer, diffuser, afterburner and variable geometry exit nozzle.

Initial engine operation is in the recycled liquid air cycle ejector mode wherein some of the hydrogen used to condense the air is recycled to the subcooled hydrogen tank as described for Engine No. 23. As a result of recycle operation afterburner combustion approaches stoichiometric condition and cycle performance is accordingly improved over basic RamLACE capability. Transition to subsonic combustion ramjet is effected in the Mach 2 - 3 regime wherein the primary rockets subsystem is shut down and the air liquefaction heat exchanger duct closed off. Ramjet combustion is performed at a stoichiometric condition with a variable throat area program to provide maximum thrust consistent with maximum performance. Transition to supersonic combustion ramjet takes place in the Mach 6 flight speed regime and is accomplished by simultaneous transfer of the fuel injection station forward to the primary rocket area and full opening of the variable geometry exit nozzle. Exhaust expansion takes place partially against vehicle affixed surfaces. Post entry cruise-back is accomplished in the subsonic combustion ramjet mode with low speed loiter and landing operation being performed on the basic liquid air cycle ejector mode without recycle operation (there is no subcooled hydrogen available at this point in the mission profile).

Engine Operating Schematic

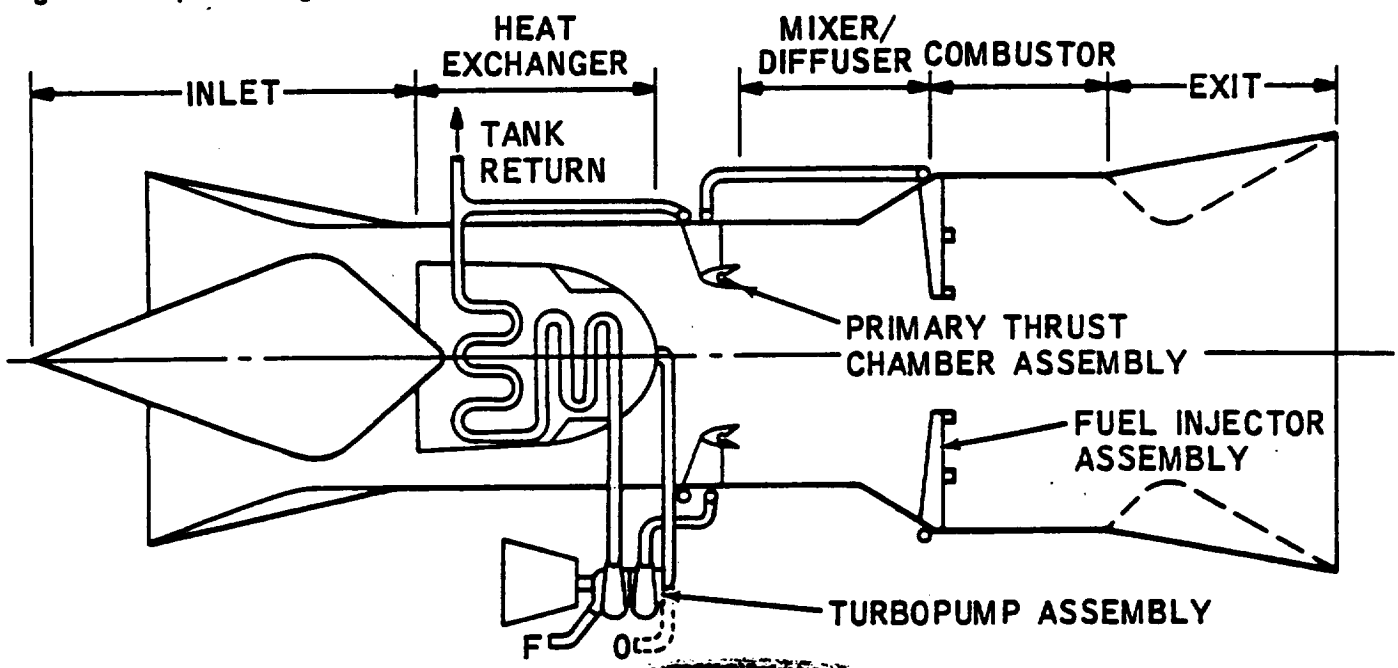

Engine Design Parameters

P_c = 1000 psia, W_s/W_p = 1.45, O/F = 34.3, ϕ_p = 1.0, ϕ_s = 2.01, ϕ_{cond} = 8.0, ϕ_{prec} = 4.0, A_4/A_3 = 2.09, P_{T2}/P_{TO} ref. Fig. 11

Engine Operating Mode Block Diagrams

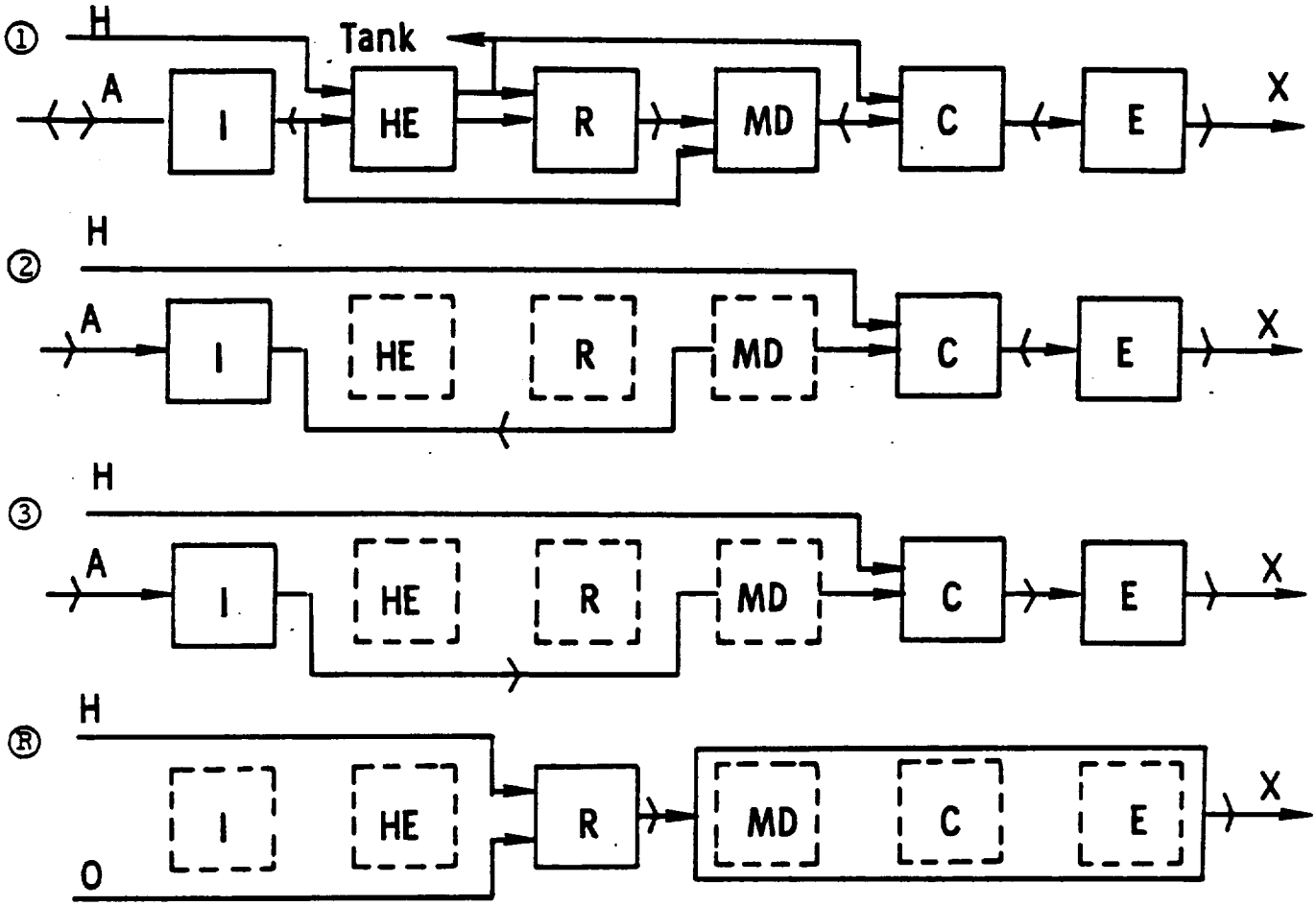

RECYCLED SCRAMLACE (ENGINE NO. 24)
COMPOSITE ENGINE STUDY
CLASS 1 PHASE

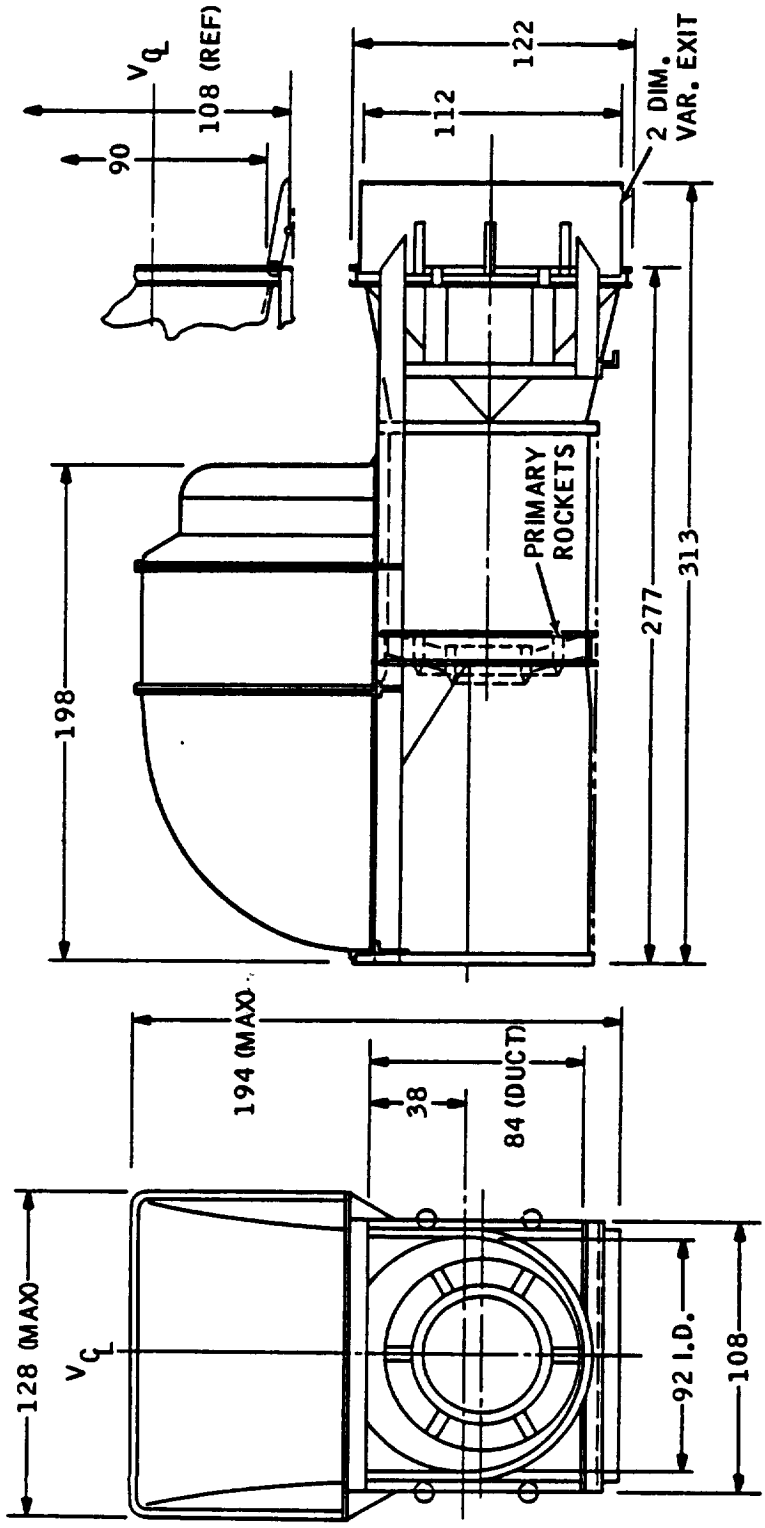

Engine Physical Characteristics

Eng. No. 24

WEIGHT, THRUST/WEIGHT*	English Units		International Units	
Subsystem Components NOTE: Engine weight statement does not include nozzle exit surfaces considered to be vehicle affixed (Fig 6)				
Heat Exchanger	3,784	LBM	1,716	KG
Catalyst	1,484		673.1	
Structure	1,112		504.4	
Primary Rockets	885		401	
Turbopumps and Plumbing	741		336	
Structure	1,668		756.6	
Mixer	805		365	
Diffuser	413		187	
Combustor	663		301	
Exit and Centerbody	2,079		943	
Manifolding and Contingency	500		227	
Uninstalled Weight	14,134	LBM	6,410	KG
Thrust, SLS	250,000	LBF	1,112,055	N
Uninstalled Thrust/weight	17.7	LBF/LBM	174	N/KG
Inlet Weight (typical)	12,000	LBM	5,443	KG
Installed Weight	26,134	LBM	11,854	KG
Installed Thrust/weight	9.6	LBF/LBM	94	N/KG
LENGTH				
Uninstalled Length	26.1	FT	7.96	M
Inlet Length (typical)	81.6		24.9	
Installed Length	107.7	FT	32.83	M
FLOW AREAS				
Inlet Cowl, Ac	100.0	FT^2	9.29	M^2
Mixer, A_3	33.5		3.11	
Combustor, A_4	70.0		6.50	
Nozzle Exit, max, A_6**	400.0	FT^2	37.2	M^2

* Based on maximum internal pressure = 100 psia (689.5 N/M^2)

** For ejector mode, see engine data

ENGINE THRUST / WEIGHT

EFFECT OF SIZE AND INTERNAL PRESSURE

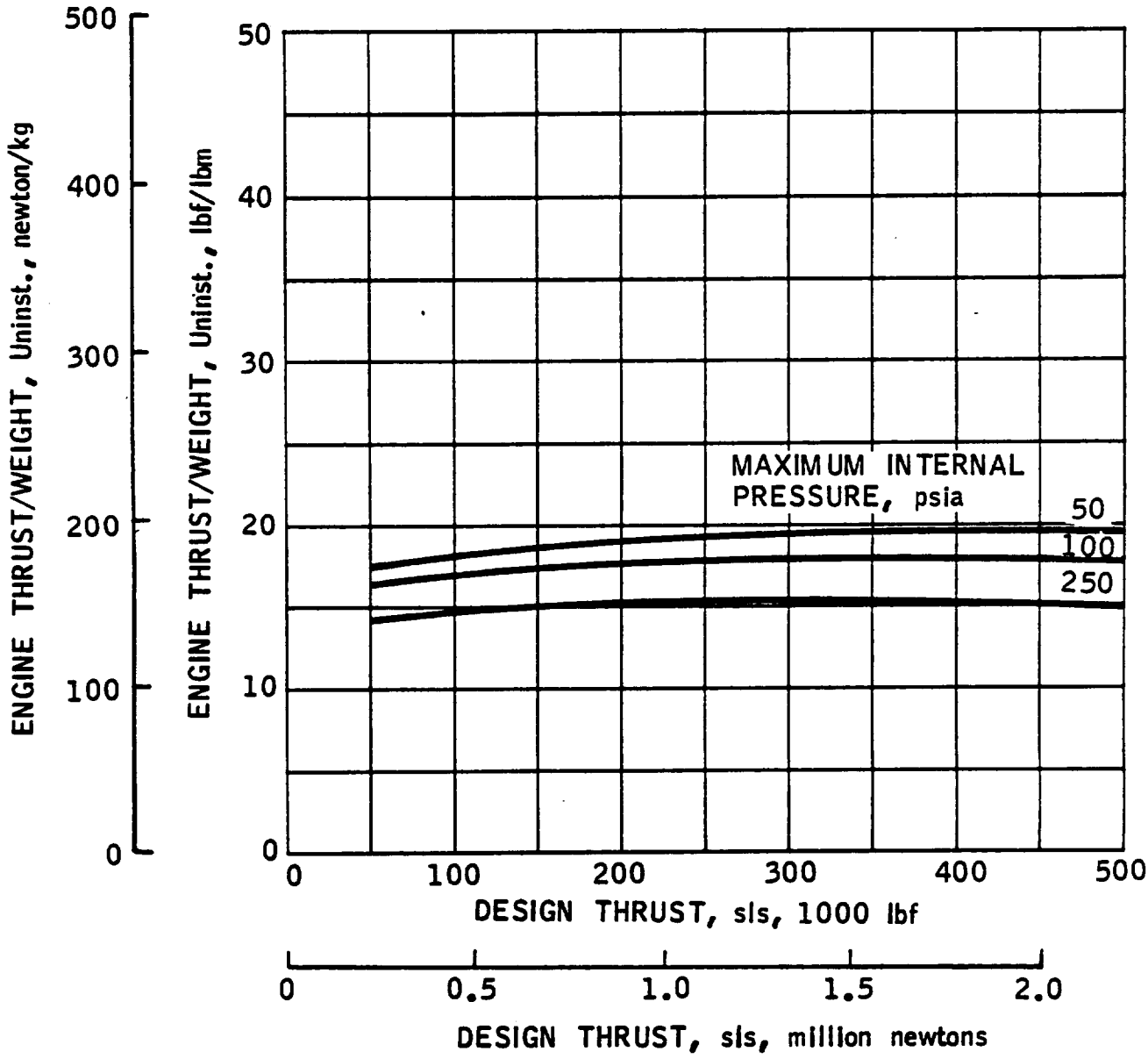

Cross-Reference Information

Ejector Mode Performance Maps and Tabular Data may be found in the Engine No. 23 Section.

Subsonic Combustion Ramjet Performance Maps may be found in the Engine No. 10 Section.

Supersonic Combustion Ramjet Performance Information may be found in the Engine No. 10 Section.

SUPERCHARGED RAMLACE, NO. 29

Technical Description

This engine is normally operated in three operating modes: (1) supercharged liquid air cycle ejector mode, (2) subsonic combustion mode, and (3) fan only operation (with or without plenum burning). The engine includes a low pressure ratio single stage stowable fan and fan drive unit, a primary rocket subsystem operating on liquid hydrogen and liquid air. The liquid air is provided by an air liquefaction unit, consisting of a precooler and condenser and associated ducting. Following the primary rockets are mixer, a diffuser, an afterburner and a variable geometry exit nozzle.

Initial engine operation takes place with full fan operating speed, full thrust stoichiometric primary rocket operation, and an afterburner fuel rich setting as dictated by the heat exchanger process. Although a fan ramjet mode similar to that described for Engine No. 11 is possible, normally the fan operation and the rocket operation are terminated at the same flight condition to effect transition to subsonic combustion ramjet mode. The fan is then retracted into the duct provided for it and the afterburner reverts to its stoichiometric condition which in conjunction with a variable throat program in the exit nozzle provides maximum thrust consistent with maximum performance up to the staging velocity. After entry, flyback is accomplished in the subsonic combustion ramjet mode and low speed operation for loiter and landing is accomplished in the fan operation mode, with plenum burning as required for thrust production. The liquid air cycle ejector mode is also potentially available for the return leg of the mission profile, but is normally not considered.

Engine Operating Schematic

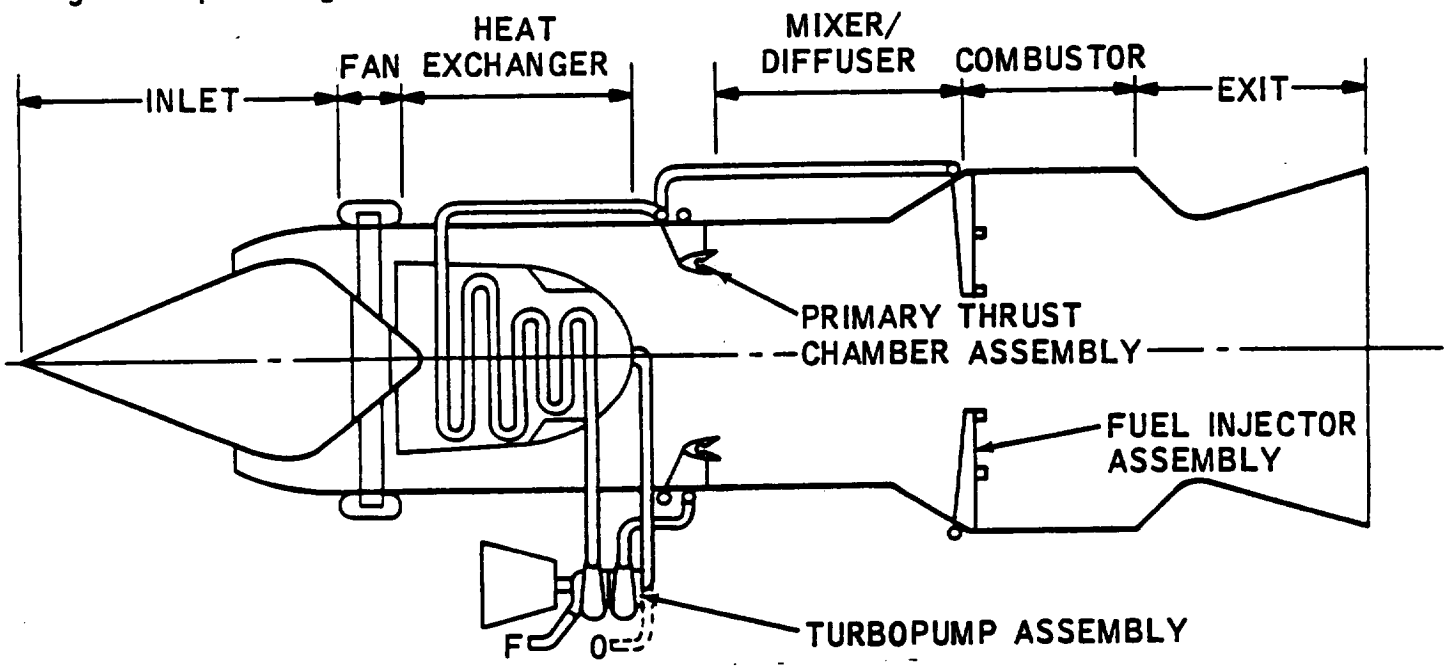

Engine Design Parameters

P_c = 1000 psia, W_s/W_p = 2.00, O/F = 34.3, ϕ_p = 1.0, ϕ_s = 3.40, PR_f = 1.30, ϕ_{cond} = 8.0, ϕ_{prec} = 8.0, A_4/A_3 = 2.11, P_{T2}/P_{TO} ref. Fig. 9

Engine Operating Mode Block Diagrams

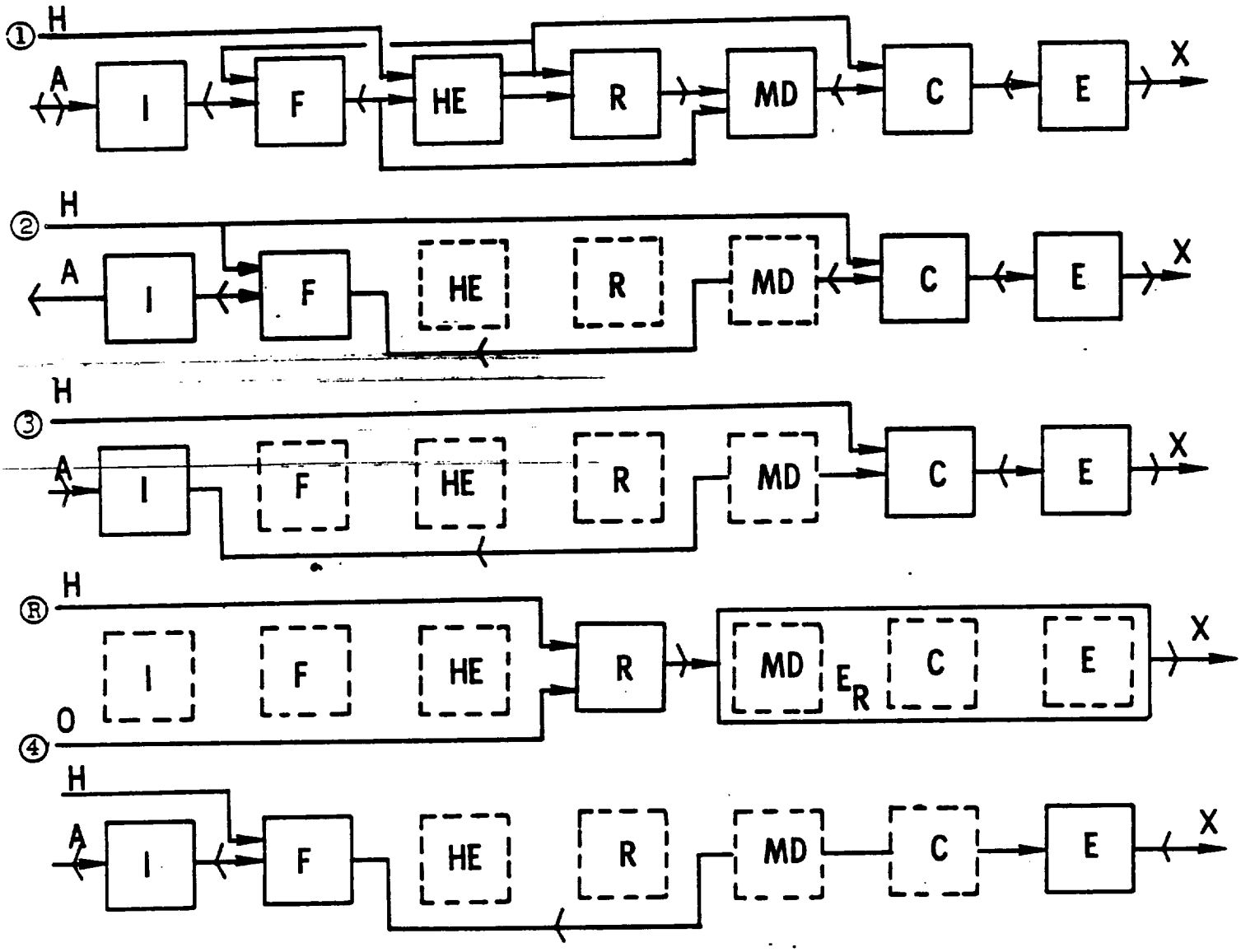

SUPERCHARGED RAMLACE (ENGINE NO. 29)
COMPOSITE ENGINE STUDY
CLASS 1 PHASE

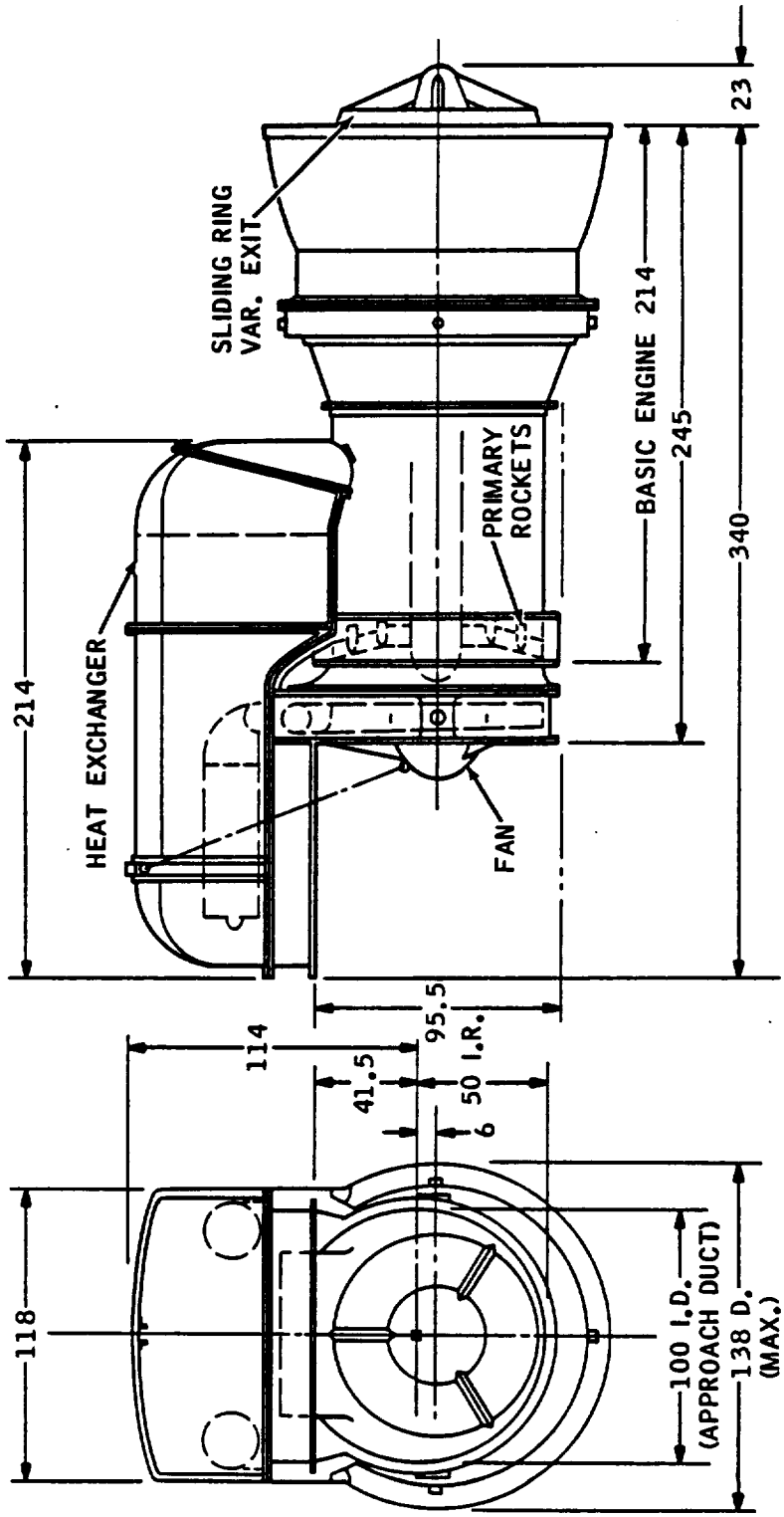

Engine Physical Characteristics

Eng. No. 29

WEIGHT, THRUST/WEIGHT*	English Units		International Units	
Subsystem Components				
Fan Assembly	1,396	LBM	633.2	KG
Gas Generator	1,240		562.5	
Structure and Actuator	885		401	
Heat Exchanger	2,280		1,034	
Catalyst	1,194		541.6	
Structure	1,050		476.3	
Primary Rockets	725		329	
Turbopumps and Plumbing	735		333	
Structure	1,341		608.3	
Mixer	1,021		463.1	
Diffuser	432		196	
Combustor	712		323	
Exit and Centerbody	2,172		985.2	
Manifolding and Contingency	550		250	
Uninstalled Weight	15,733	LBM	7,136.5	KG
Thrust, SLS	250,000	LBF	1,112,055	N
Uninstalled Thrust/weight	15.9	LBF/LBM	156	N/KG
Inlet Weight (typical)	9,840	LBM	4,463	KG
Installed Weight	25,573	LBM	11,600	KG
Installed Thrust/weight	9.8	LBF/LBM	96	N/KG
LENGTH				
Uninstalled Length	28.3	FT	8.63	M
Inlet Length (typical)	56.2		17.1	
Installed Length	84.5	FT	25.6	M
FLOW AREAS				
Inlet Cowl, Ac	82.0	FT^2	7.62	M^2
Mixer, A_3	30.3		2.81	
Combustor, A_4	64.0		6.0	
Nozzle Exit, max, A_6**	125.0	FT^2	11.6	M^2

* Based on maximum internal pressure = 150 psia (1034 N/M^2)

** For ejector mode, see engine data

EJECTOR MODE SPECIFIC IMPULSE

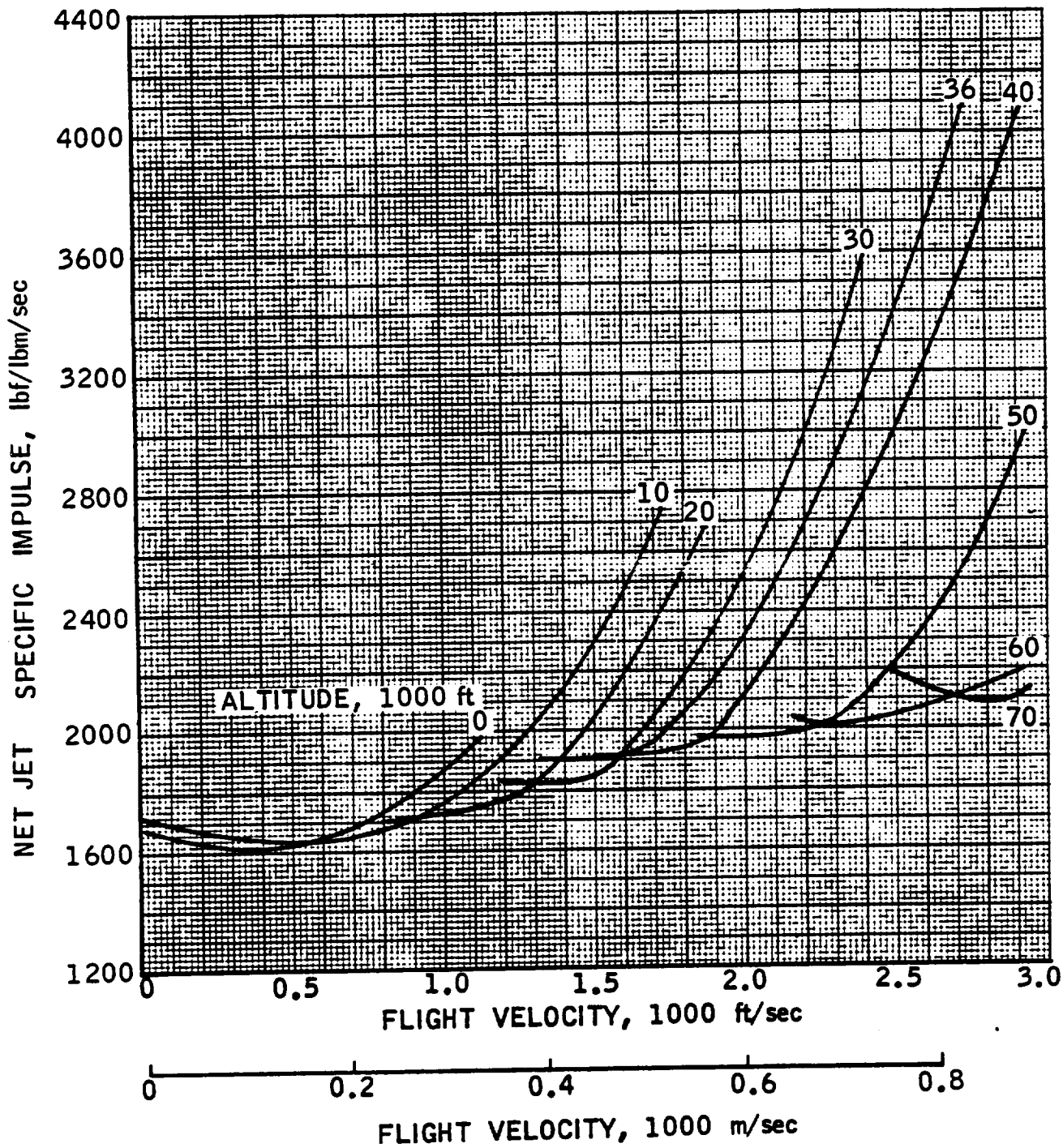

ENGINE THRUST / WEIGHT

EFFECT OF SIZE AND INTERNAL PRESSURE

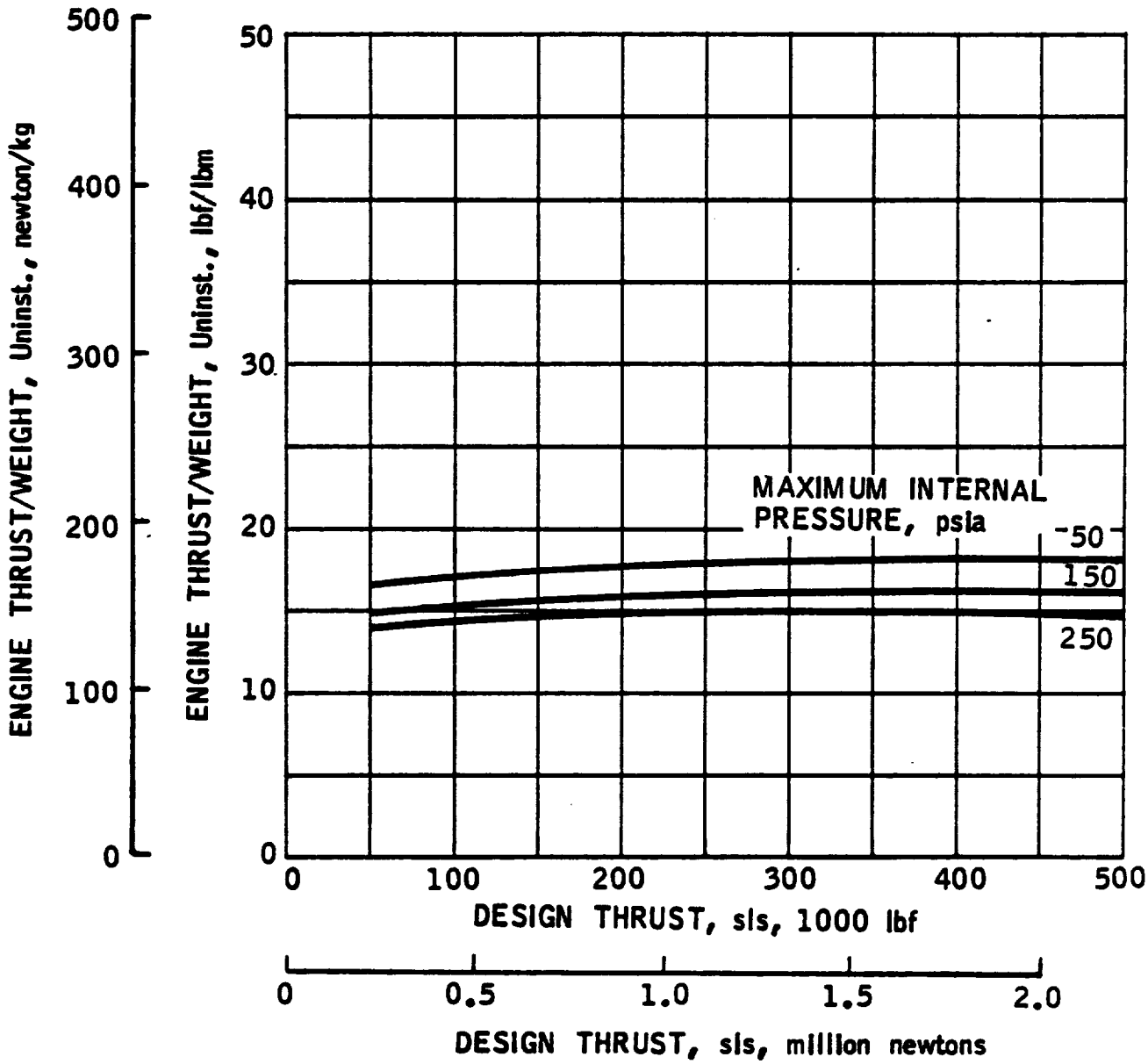

Eng. No. 29

EJECTOR MODE THRUST

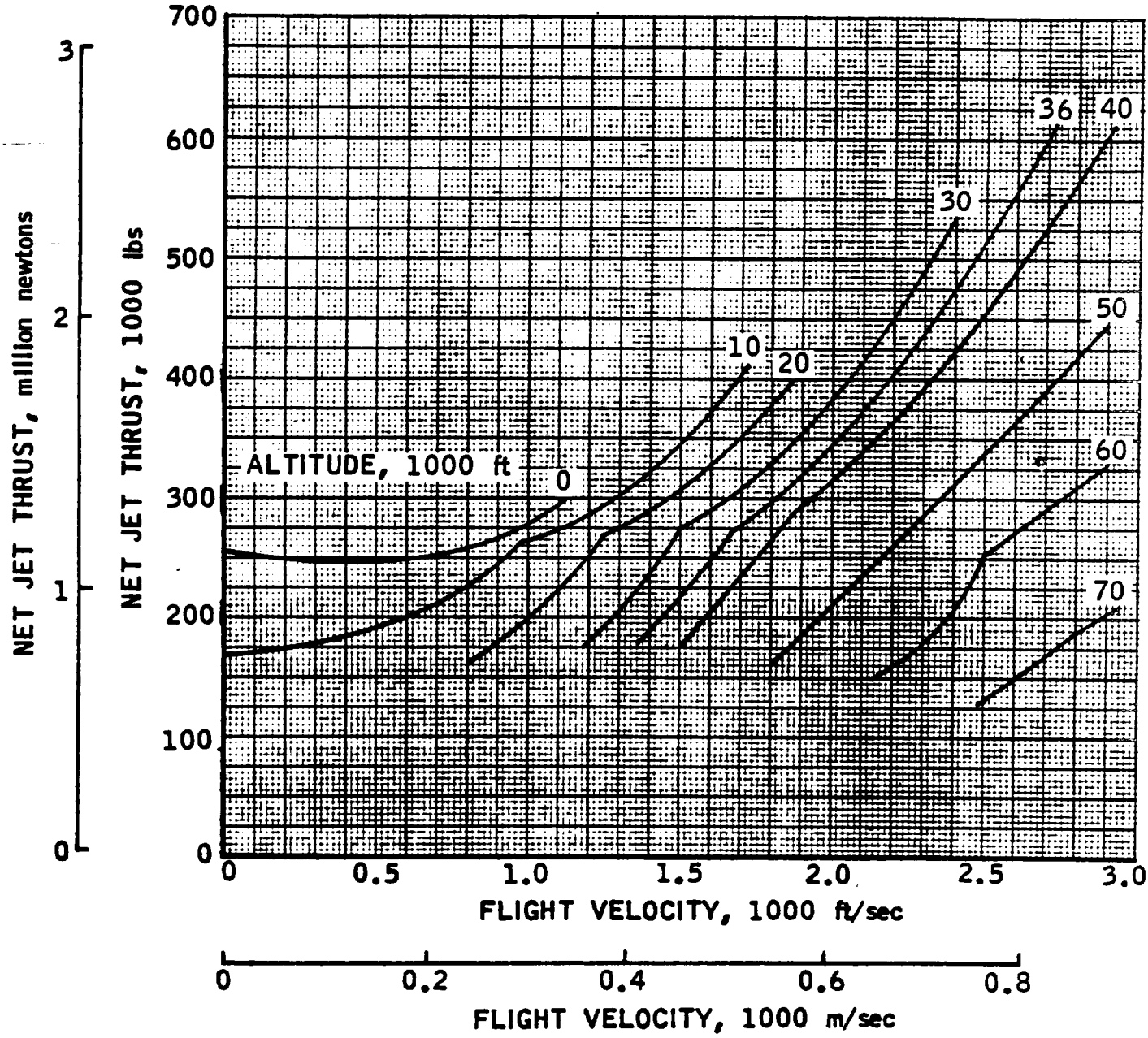

EJECTOR MODE AIRFLOW

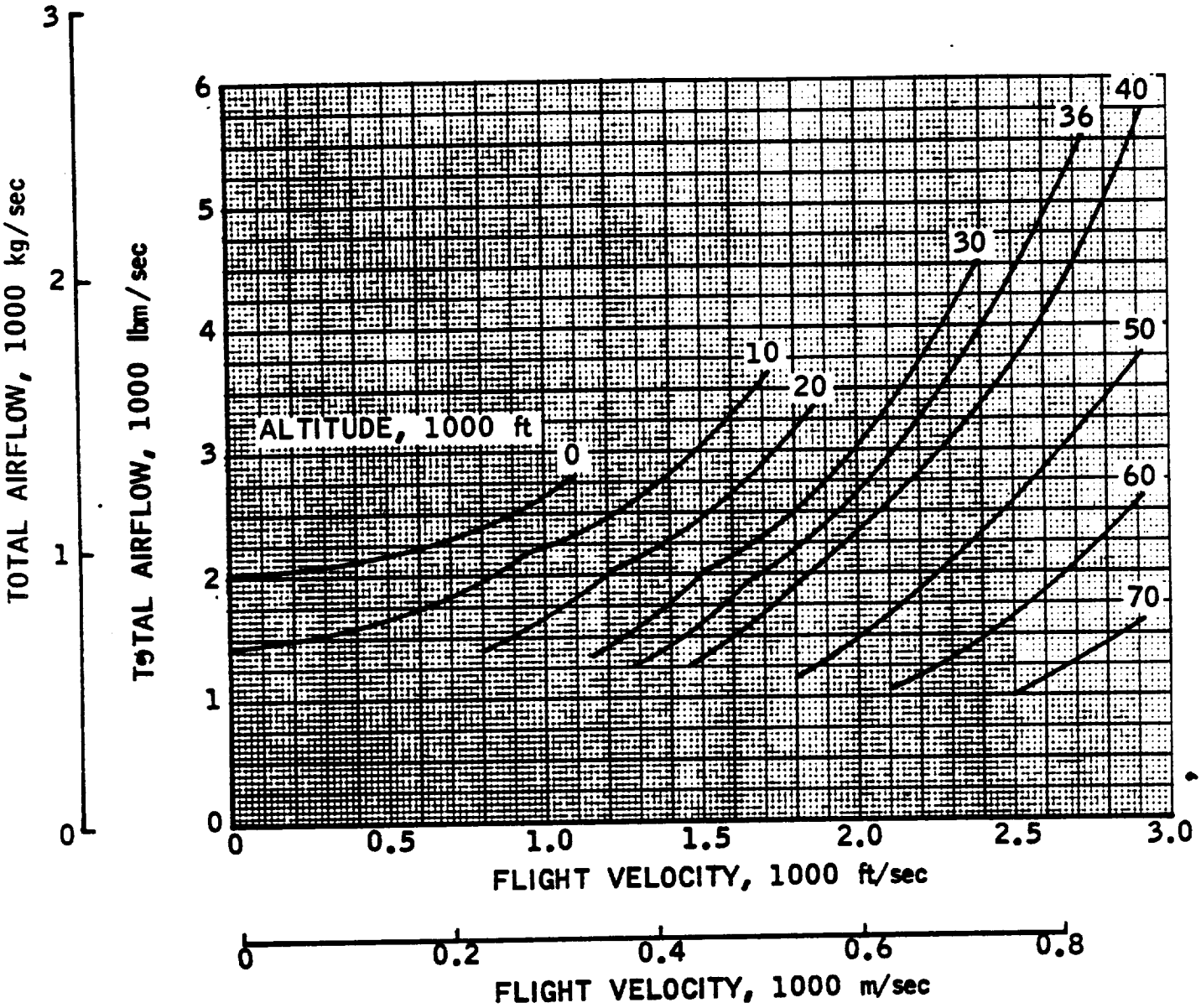

EJECTOR MODE CAPTURE AREA

NOTE: 1. CURVE REFLECTS UPPER LIMIT.

2. EJECTOR MODE CAPTURE AREA CAN EXCEED NOMINAL INLET SIZE (SEE SUPPLEMENTARY TABULAR DATA).

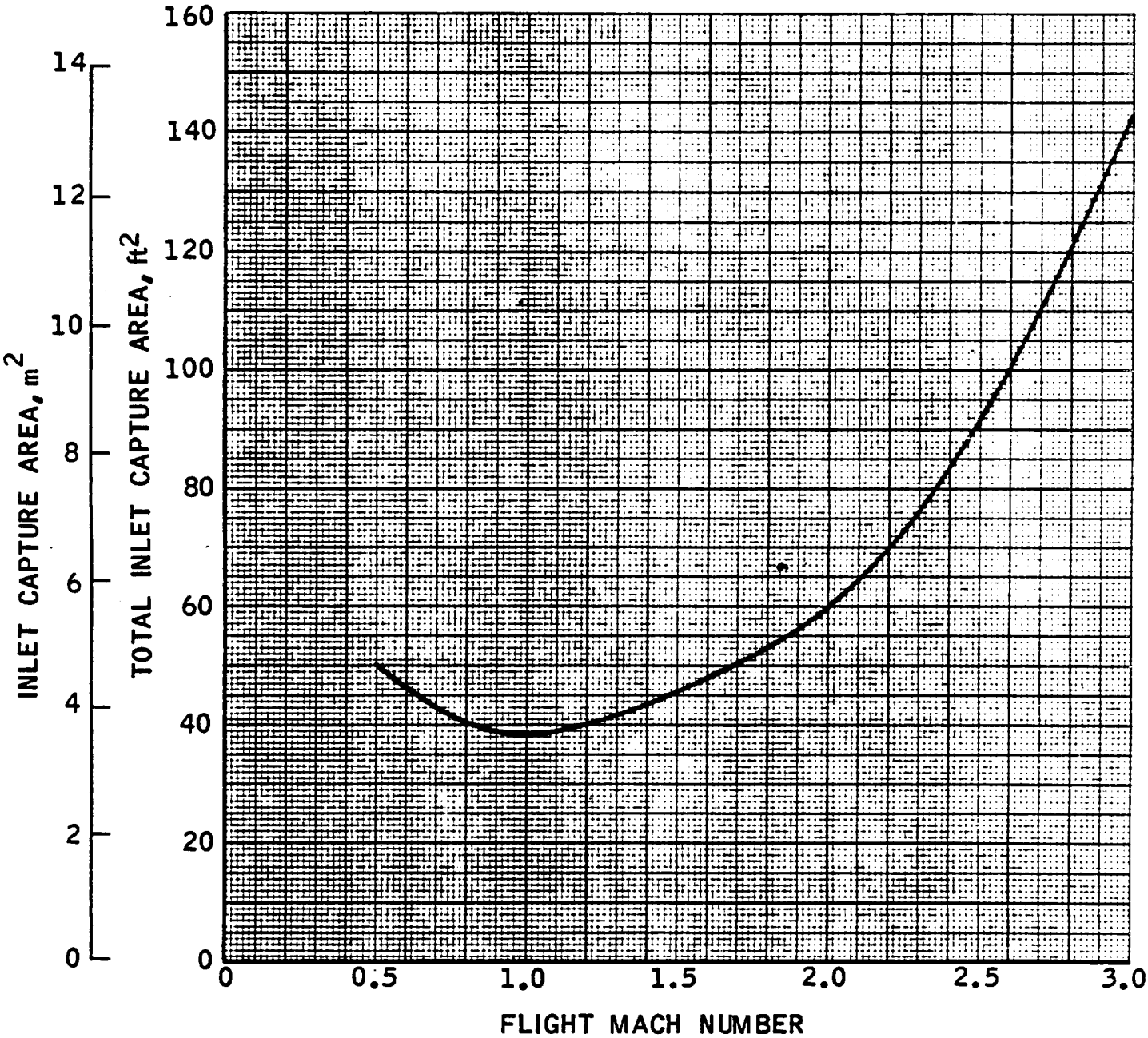

[redacted]

ENGINE 29

ESTIMATED PERFORMANCE

MO	VO	HTO	PTO	T	CF	IS	SPC	PT2	H2	P2
				ALTITUDE -		0. FEET				
0.01	11.	124.5	14.7	252559.	743.11	1690.	2.13	19.11	117.3	15.51
0.25	279.	126.0	15.3	243347.	27.92	1628.	2.21	19.95	118.7	16.20
0.50	558.	130.7	17.4	246302.	13.17	1648.	2.18	22.66	123.3	18.48
0.75	837.	138.5	21.3	261637.	8.44	1750.	2.06	27.75	131.4	23.08
1.00	1116.	149.4	27.8	297548.	6.19	1991.	1.81	36.16	142.3	30.50
				ALTITUDE -		10000. FEET				
0.01	11.	115.1	10.1	167688.	746.07	1726.	2.09	13.14	108.6	10.74
0.30	322.	117.1	10.8	175537.	24.17	1645.	2.19	13.99	110.3	11.35
0.60	644.	123.4	12.9	205608.	12.12	1651.	2.18	16.76	116.2	13.60
0.90	966.	133.7	17.1	260578.	8.18	1743.	2.06	22.22	126.0	18.04
1.20	1288.	148.2	24.5	301301.	5.89	2016.	1.79	31.55	140.7	26.24
1.40	1503.	160.2	32.2	346681.	4.96	2319.	1.55	40.88	152.4	34.30
1.60	1718.	174.0	43.0	413296.	4.29	2765.	1.30	53.62	165.5	44.93
				ALTITUDE -		20000. FEET				
0.77	801.	120.2	10.0	164760.	9.97	1709.	2.11	13.03	113.2	10.58
1.00	1037.	128.9	12.8	211807.	7.99	1758.	2.05	16.63	121.4	13.50
1.20	1244.	138.3	16.4	268439.	6.86	1796.	2.00	21.09	130.3	17.13
1.50	1555.	155.7	24.8	321626.	5.23	2152.	1.67	31.29	147.2	25.67
1.80	1867.	177.0	38.8	403888.	4.20	2702.	1.33	47.61	167.8	39.47

ENGINE 29

ESTIMATED PERFORMANCE

M2	WS	WP	WSWP	WFT	PHP	PHS	V6	PT20	A0	A5	A6
					ALTITUDE -		0. FEET				
0.554	1318.	659.	2.00	149.5	1.0	3.403	3865.	1.30	1544.95	60.80	64.47
0.554	1368.	659.	2.08	149.5	1.0	3.278	3887.	1.30	64.14	61.65	65.53
0.548	1516.	659.	2.30	149.5	1.0	2.959	3958.	1.30	35.51	63.77	68.36
0.520	1742.	659.	2.64	149.5	1.0	2.575	4113.	1.30	27.18	63.89	70.32
0.500	2129.	659.	3.23	149.5	1.0	2.107	4339.	1.30	24.89	63.66	73.75
					ALTITUDE -		10000. FEET				
0.544	931.	429.	2.17	97.2	1.0	3.132	3745.	1.30	1526.39	63.89	66.98
0.554	994.	471.	2.11	106.7	1.0	3.221	3924.	1.30	54.32	63.01	67.37
0.554	1161.	549.	2.11	124.5	1.0	3.217	4235.	1.30	31.72	62.30	70.00
0.554	1481.	659.	2.25	149.5	1.0	3.029	4594.	1.30	26.93	62.84	76.65
0.520	1916.	659.	2.91	149.5	1.0	2.341	4799.	1.29	26.10	63.92	83.86
0.508	2353.	659.	3.57	149.5	1.0	1.906	4981.	1.27	27.44	63.72	90.26
0.510	2973.	659.	4.51	149.5	1.0	1.509	5101.	1.25	30.30	63.92	96.18
					ALTITUDE -		20000. FEET				
0.554	915.	425.	2.15	96.4	1.0	3.163	4468.	1.30	28.05	63.02	74.68
0.554	1128.	532.	2.12	120.5	1.0	3.204	4827.	1.30	26.70	61.54	80.86
0.554	1382.	659.	2.10	149.5	1.0	3.244	5134.	1.29	27.24	60.28	88.63
0.540	1904.	659.	2.89	149.5	1.0	2.356	5162.	1.26	29.95	63.95	96.11
0.526	2675.	659.	4.06	149.5	1.0	1.677	5126.	1.23	35.01	63.87	96.09

[redacted]

ENGINE 29

ESTIMATED PERFORMANCE

MU	VO	HTO	PTO	T	CF	IS	SPC	PT2	H2	P2
				ALTITUDE - 30000. FEET						
1.17	1160.	125.7	10.1	172901.	7.36	1836.	1.96	13.09	118.4	10.63
1.30	1293.	132.2	12.1	207600.	6.79	1842.	1.95	15.50	124.6	12.58
1.40	1393.	137.6	13.9	235905.	6.39	1863.	1.93	17.69	129.6	14.36
1.50	1492.	143.3	16.1	275042.	6.10	1840.	1.96	20.24	135.1	16.44
1.90	1890.	170.2	29.3	356224.	4.43	2383.	1.51	35.54	160.6	28.96
2.40	2388.	212.7	63.9	534399.	3.19	3575.	1.01	72.88	200.8	59.27
				ALTITUDE - 36000. FEET						
1.39	1345.	129.8	10.3	177250.	6.60	1913.	1.88	13.15	122.3	10.67
1.50	1453.	135.9	12.1	209690.	6.25	1896.	1.90	15.30	128.0	12.42
1.60	1550.	141.7	14.1	235499.	5.89	1921.	1.87	17.54	133.5	14.24
1.70	1647.	147.9	16.3	266491.	5.57	1938.	1.86	20.20	139.4	16.41
2.00	1938.	168.7	25.9	336263.	4.49	2250.	1.60	31.04	159.1	25.22
2.40	2325.	201.7	48.3	450474.	3.42	3014.	1.19	55.10	190.3	44.80
2.80	2713.	240.7	89.7	609988.	2.63	4081.	0.88	96.81	227.3	78.77
				ALTITUDE - 40000. FEET						
1.52	1470.	136.7	10.3	175082.	6.16	1920.	1.87	12.94	128.8	10.51
1.65	1597.	144.6	12.5	207446.	5.73	1936.	1.86	15.56	136.2	12.64
1.85	1791.	157.7	16.9	266905.	5.16	1941.	1.85	20.64	148.6	16.77
2.00	1936.	168.5	21.4	305474.	4.68	2044.	1.76	25.63	158.9	20.82
2.50	2420.	210.6	46.6	429307.	3.31	2872.	1.25	52.43	198.8	42.63
3.00	2904.	262.1	100.3	609117.	2.37	4075.	0.88	104.69	247.7	85.23

[redacted]

ENGINE 29

ESTIMATED PERFORMANCE

M2	WS	WP	WSWP	WFT	PHP	PHS	V6	PT20	AO	A5	A6
ALTITUDE - 30000. FEET											
0.554	899.	415.	2.16	94.2	1.0	3.144	5065.	1.29	27.05	62.25	89.60
0.554	1038.	497.	2.09	112.7	1.0	3.258	5292.	1.28	28.01	60.50	95.92
0.554	1162.	559.	2.08	126.6	1.0	3.269	5321.	1.27	29.10	59.89	95.91
0.554	1304.	659.	1.98	149.5	1.0	3.440	5385.	1.26	30.46	58.31	95.95
0.550	2096.	659.	3.18	149.5	1.0	2.139	5165.	1.21	38.57	63.77	95.97
0.554	3880.	659.	5.88	149.5	1.0	1.156	5124.	1.14	56.31	63.14	96.00
ALTITUDE - 36000. FEET											
0.554	889.	409.	2.17	92.7	1.0	3.129	5250.	1.27	28.93	61.70	96.09
0.554	1012.	488.	2.07	110.6	1.0	3.281	5324.	1.26	30.46	59.77	96.05
0.554	1136.	541.	2.10	122.6	1.0	3.238	5339.	1.25	32.05	59.53	95.96
0.554	1282.	607.	2.11	137.5	1.0	3.219	5364.	1.24	34.01	59.11	95.98
0.554	1848.	659.	2.80	149.5	1.0	2.428	5255.	1.20	41.60	61.94	96.19
0.554	3009.	659.	4.56	149.5	1.0	1.490	5156.	1.14	56.30	63.12	95.91
0.554	4859.	659.	7.37	149.5	1.0	0.923	5212.	1.08	77.64	57.37	96.15
ALTITUDE - 40000. FEET											
0.554	853.	402.	2.12	91.2	1.0	3.207	5319.	1.26	30.71	59.98	96.08
0.554	998.	473.	2.11	107.2	1.0	3.221	5360.	1.25	33.04	59.10	96.01
0.554	1270.	607.	2.09	137.5	1.0	3.250	5425.	1.22	37.44	57.83	96.05
0.554	1527.	659.	2.32	149.5	1.0	2.938	5403.	1.20	41.60	58.73	96.01
0.554	2805.	659.	4.25	149.5	1.0	1.599	5259.	1.12	60.91	60.89	96.00
0.554	5048.	659.	7.66	149.5	1.0	0.889	5285.	1.04	90.91	54.18	95.78

ENGINE 29

ESTIMATED PERFORMANCE

MO	VO	HTO	PTO	T	CF	IS	SPC	PT2	H2	P2
				ALTITUDE - 50000. FEET						
1.86	1800.	158.3	10.6	165391.	5.12	1976.	1.82	12.97	149.2	10.54
2.00	1936.	168.5	13.2	196897.	4.76	1975.	1.82	15.89	158.9	12.91
2.10	2033.	176.1	15.5	220250.	4.52	1991.	1.81	18.35	166.1	14.91
2.20	2130.	184.2	18.1	248660.	4.30	1981.	1.82	21.19	173.7	17.22
2.50	2420.	210.6	28.9	322359.	3.60	2157.	1.67	32.49	198.8	26.42
3.00	2904.	262.1	62.2	448086.	2.63	2998.	1.20	64.89	247.7	52.82
				ALTITUDE - 60000. FEET						
2.19	2120.	183.4	11.0	149286.	4.30	2038.	1.77	12.95	173.0	10.53
2.25	2178.	188.4	12.1	162269.	4.19	2010.	1.79	14.13	177.7	11.49
2.35	2275.	197.0	14.2	178720.	3.96	2041.	1.76	16.28	185.9	13.24
2.40	2323.	201.4	15.3	191049.	3.89	2019.	1.78	17.50	190.1	14.23
2.70	2614.	230.1	24.4	256634.	3.32	2079.	1.73	26.74	217.2	21.76
3.00	2904.	262.1	38.5	330008.	2.83	2208.	1.63	40.23	247.7	32.75
				ALTITUDE - 70000. FEET						
2.53	2460.	215.0	11.7	127772.	3.53	2192.	1.64	13.14	203.0	10.69
2.60	2524.	221.4	13.0	139221.	3.44	2151.	1.67	14.42	209.0	11.73
2.70	2621.	231.4	15.2	156378.	3.30	2122.	1.70	16.59	218.5	13.50
2.80	2719.	241.7	17.7	176030.	3.16	2081.	1.73	19.06	228.4	15.51
2.90	2816.	252.5	20.6	194451.	3.02	2078.	1.73	21.84	238.5	17.78
3.00	2913.	263.6	23.9	210902.	2.86	2116.	1.70	24.96	249.1	20.32

ENGINE 29

ESTIMATED PERFORMANCE

M2	WS	WP	WSWP	WFT	PHP	PHS	V6	PT20	AO	A5	A6
					ALTITUDE -	50000.	FEET				
0.554	796.	369.	2.16	83.7	1.0	3.154	5431.	1.22	37.70	57.63	96.04
0.554	946.	440.	2.15	99.7	1.0	3.161	5476.	1.20	41.60	56.75	96.01
0.554	1070.	488.	2.19	110.6	1.0	3.103	5496.	1.19	44.76	56.49	95.99
0.554	1209.	554.	2.18	125.6	1.0	3.117	5531.	1.17	48.24	55.86	96.01
0.554	1738.	659.	2.64	149.5	1.0	2.580	5528.	1.12	60.91	56.14	96.17
0.554	3129.	659.	4.74	149.5	1.0	1.434	5495.	1.04	90.91	55.46	96.14
					ALTITUDE -	60000.	FEET				
0.554	741.	323.	2.29	73.2	1.0	2.968	5523.	1.17	47.90	56.04	96.17
0.554	798.	356.	2.24	80.7	1.0	3.037	5558.	1.17	50.18	55.34	96.23
0.554	899.	386.	2.33	87.6	1.0	2.922	5564.	1.15	54.15	55.21	95.97
0.554	956.	417.	2.29	94.6	1.0	2.969	5595.	1.14	56.35	54.73	96.14
0.554	1372.	545.	2.52	123.5	1.0	2.701	5648.	1.09	71.65	53.83	96.20
0.554	1940.	659.	2.94	149.5	1.0	2.312	5687.	1.04	90.91	53.01	96.15
					ALTITUDE -	70000.	FEET				
0.554	696.	257.	2.71	58.3	1.0	2.513	5566.	1.12	62.71	54.99	96.12
0.554	753.	286.	2.64	64.7	1.0	2.579	5609.	1.11	66.07	54.27	96.25
0.554	849.	325.	2.61	73.7	1.0	2.605	5648.	1.09	71.65	53.50	96.03
0.554	955.	373.	2.56	84.6	1.0	2.659	5695.	1.08	77.64	52.73	96.00
0.554	1072.	413.	2.60	93.6	1.0	2.620	5724.	1.06	84.06	52.24	95.92
0.554	1200.	440.	2.73	99.7	1.0	2.492	5737.	1.04	90.91	51.96	95.83

ENGINE 29

SUPPLEMENTARY DATA

MO	WS	WHX	WT	AO	AHX	AOT
			ALTITUDE - 0. FEET			
0.50	1516.	640.	2156.	35.51	14.99	50.50
0.75	1742.	640.	2382.	27.18	9.98	37.16
1.00	2129.	640.	2769.	24.89	7.48	32.37
			ALTITUDE - 10000. FEET			
0.60	1161.	533.	1694.	31.72	14.56	46.28
0.90	1481.	640.	2121.	26.93	11.64	38.57
1.20	1916.	640.	2556.	26.10	8.72	34.82
1.40	2353.	640.	2993.	27.44	7.46	34.90
1.60	2973.	640.	3613.	30.30	6.52	36.82
			ALTITUDE - 20000. FEET			
0.77	915.	413.	1328.	28.05	12.66	40.71
1.00	1128.	516.	1644.	26.70	12.21	38.91
1.20	1382.	640.	2022.	27.24	12.61	39.85
1.50	1904.	640.	2544.	29.95	10.07	40.02
1.80	2675.	640.	3315.	35.01	8.38	43.39
			ALTITUDE - 30000. FEET			
1.17	899.	403.	1302	27.05	12.13	39.18
1.30	1038.	482.	1520.	28.01	13.01	41.02
1.40	1162.	543.	1705.	29.10	13.60	42.70
1.50	1304.	640.	1944.	30.46	14.95	45.41
1.90	2096.	640.	2736.	38.57	11.78	50.35
2.40	3880.	640.	4520.	56.31	9.29	65.60
			ALTITUDE - 36000. FEET			
1.39	889.	397.	1286.	28.93	12.92	41.85
1.50	1012.	474.	1486.	30.46	14.27	44.73
1.60	1136.	525.	1661.	32.05	14.81	46.86
1.70	1282.	589.	1871.	34.01	15.63	49.64
2.00	1848.	640.	2488.	41.60	14.41	56.01
2.40	3009.	640.	3649.	56.30	11.97	68.27
2.80	4859.	640.	5499.	77.64	10.23	87.87

ENGINE 29 CONT'D.

SUPPLEMENTARY DATA

MO	WS	WHX	WT	AO	AHX	AOT
			ALTITUDE - 40000. FEET			
1.52	853.	390.	1243.	30.71	14.04	44.75
1.65	998	459.	1457.	33.04	15.20	48.24
1.85	1270.	589.	1859.	37.44	17.36	54.80
2.00	1527.	640.	2167.	41.60	17.44	59.04
2.50	2805.	640.	3445.	60.91	13.90	74.81
3.00	5048.	640.	5688.	90.91	11.53	102.44
			ALTITUDE - 50000. FEET			
1.86	796.	358.	1154.	37.70	16.96	54.66
2.00	946.	427.	1373.	41.60	18.78	60.38
2.10	1070.	474.	1544.	44.76	19.83	64.59
2.20	1209.	538.	1747.	48.24	21.47	69.71
2.50	1738.	640.	2378.	60.91	22.43	83.34
3.00	3129.	640.	3769.	90.91	18.59	109.50
			ALTITUDE - 60000. FEET			
2.19	741.	314.	1055.	47.90	20.30	68.20
2.25	798.	346.	1144.	50.18	21.76	71.94
2.35	899.	375.	1274.	54.15	22.59	76.74
2.40	956.	405.	1361.	56.35	23.87	80.22
2.70	1372.	529.	1901.	71.65	27.63	99.28
3.00	1940.	640.	2580.	90.91	29.99	120.90
			ALTITUDE - 70000. FEET			
2.53	696.	250.	946.	62.71	22.53	85.24
2.60	753.	278.	1031.	66.07	24.39	90.46
2.70	849.	316.	1165.	71.65	26.67	98.32
2.80	955.	362.	1317.	77.64	29.43	107.07
2.90	1072.	401.	1473.	84.06	31.44	115.50
3.00	1200.	427.	1627.	90.91	32.35	123.26

FAN RAMJET SPECIFIC IMPULSE

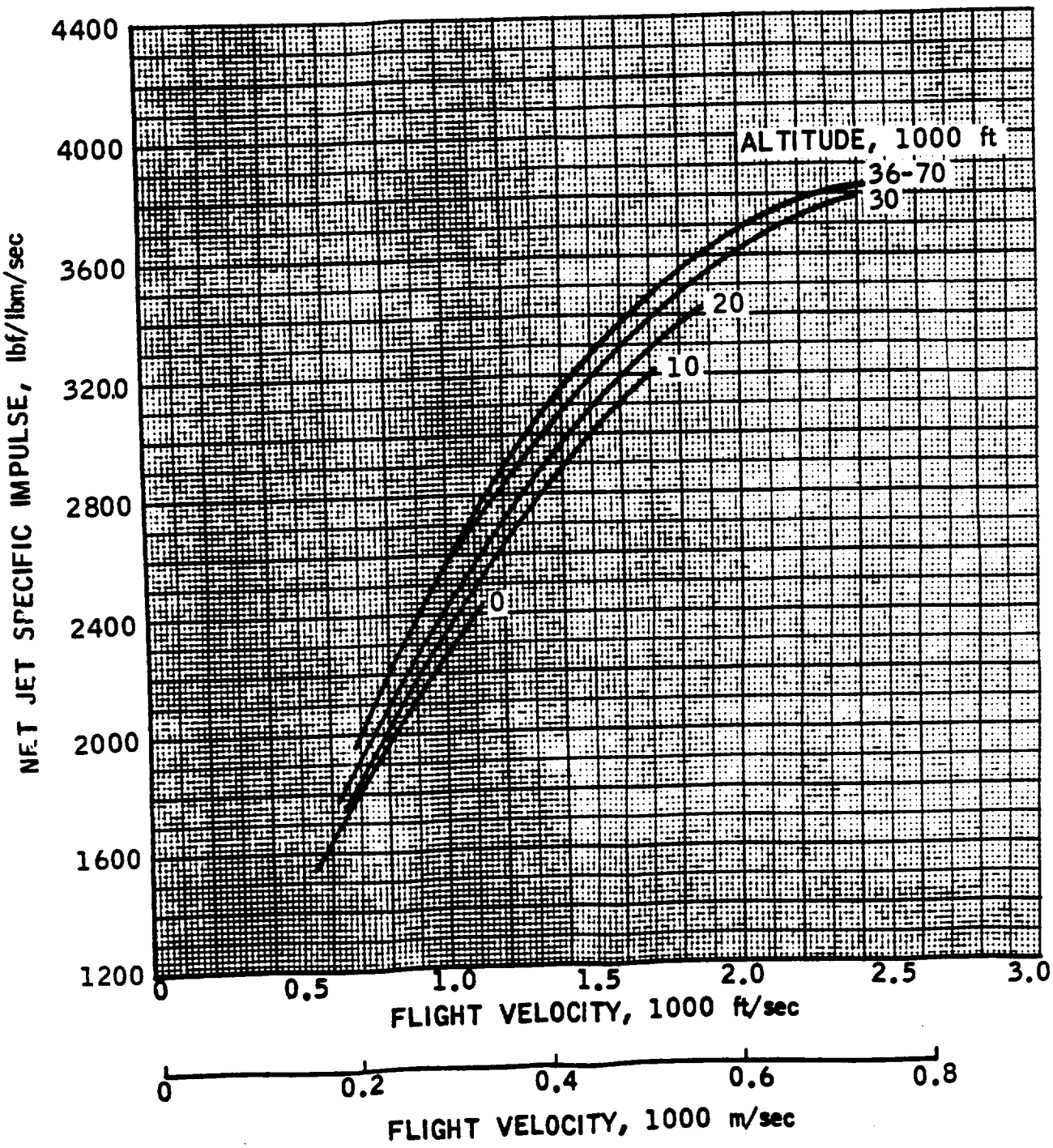

FAN RAMJET THRUST

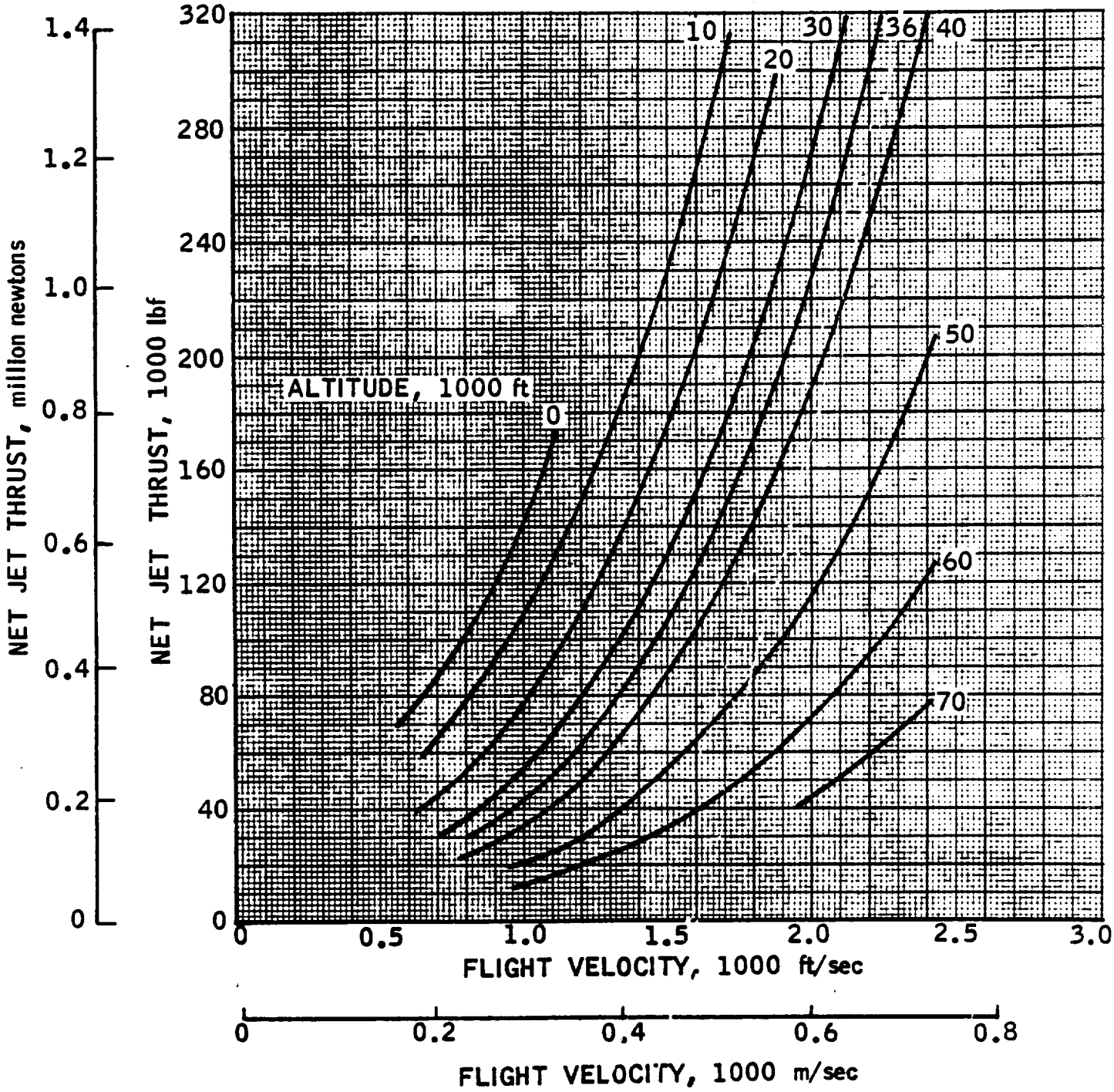

FAN RAMJET CAPTURE AREA

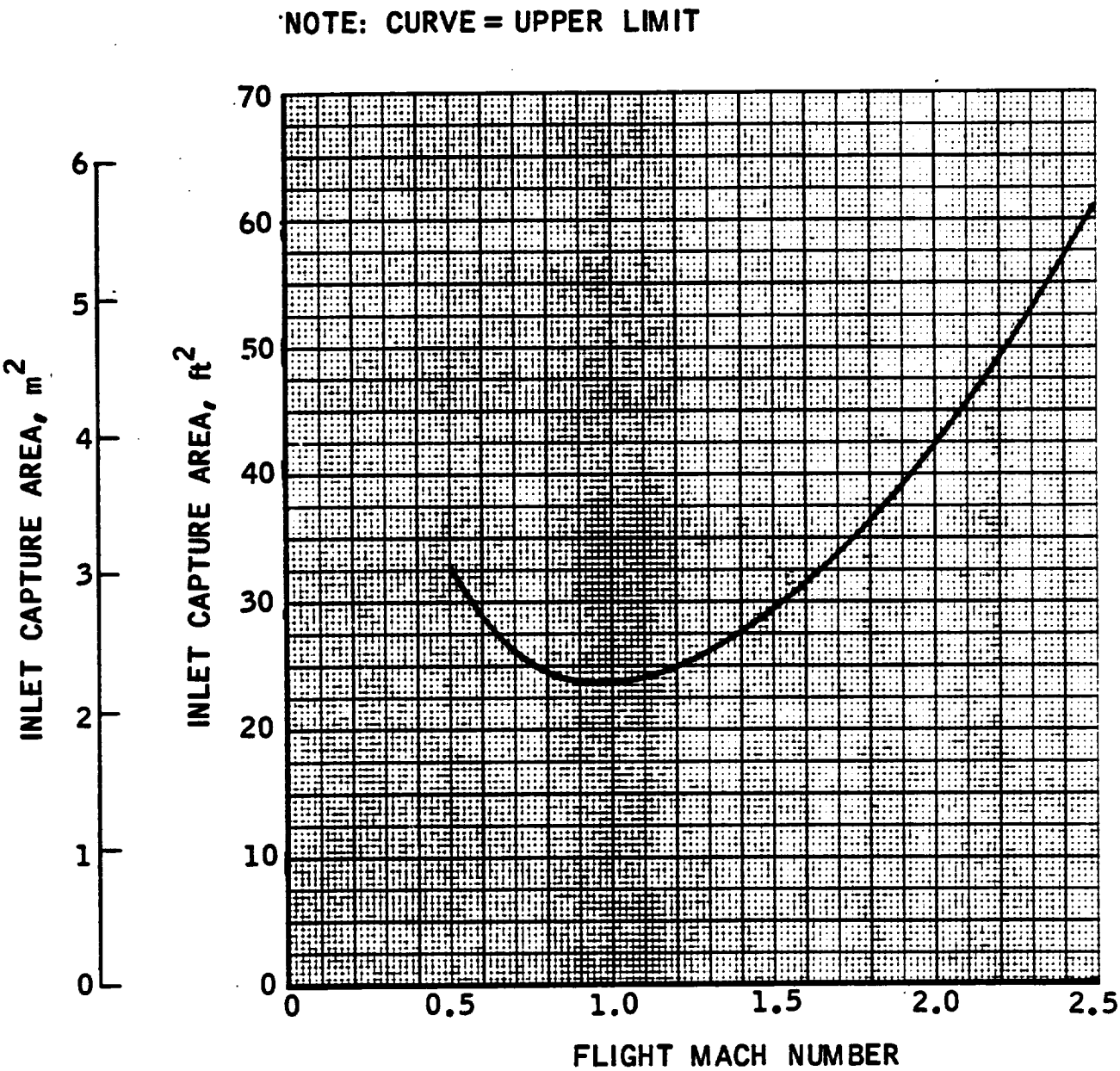

Eng. No. 29

FAN OPERATION SPECIFIC IMPULSE

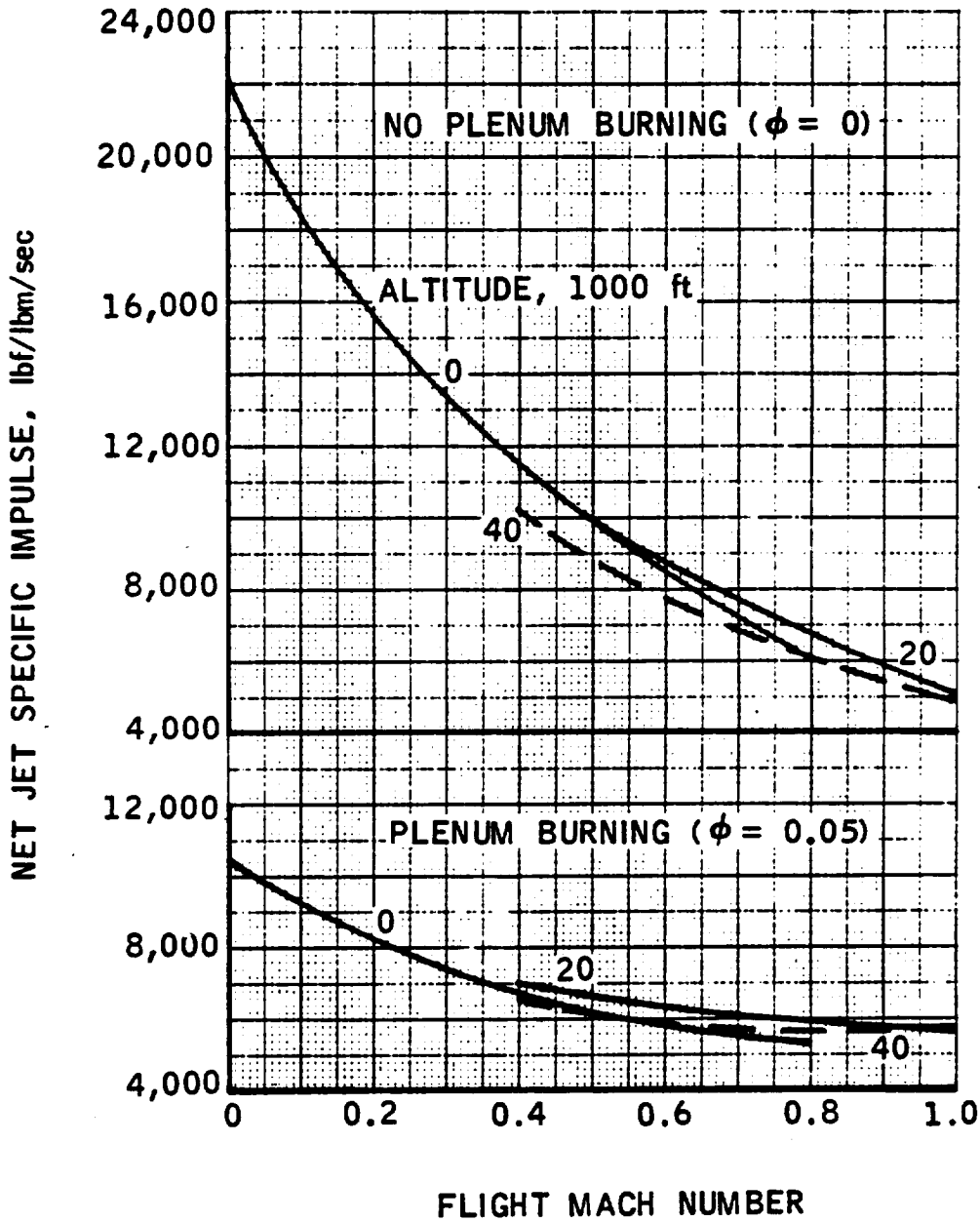

This Page Intentionally Blank

FAN OPERATION THRUST

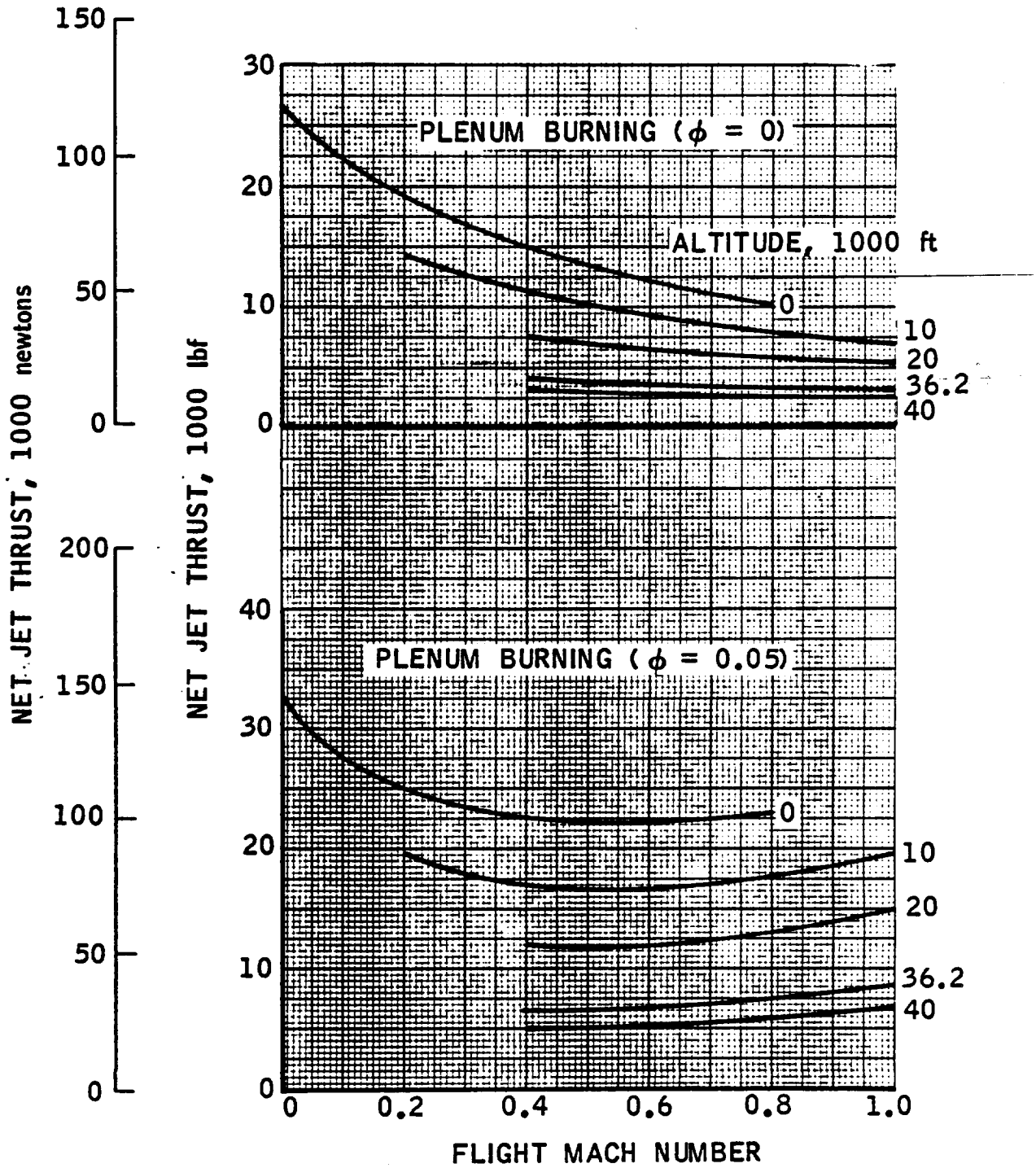

FAN OPERATION SPECIFIC IMPULSE

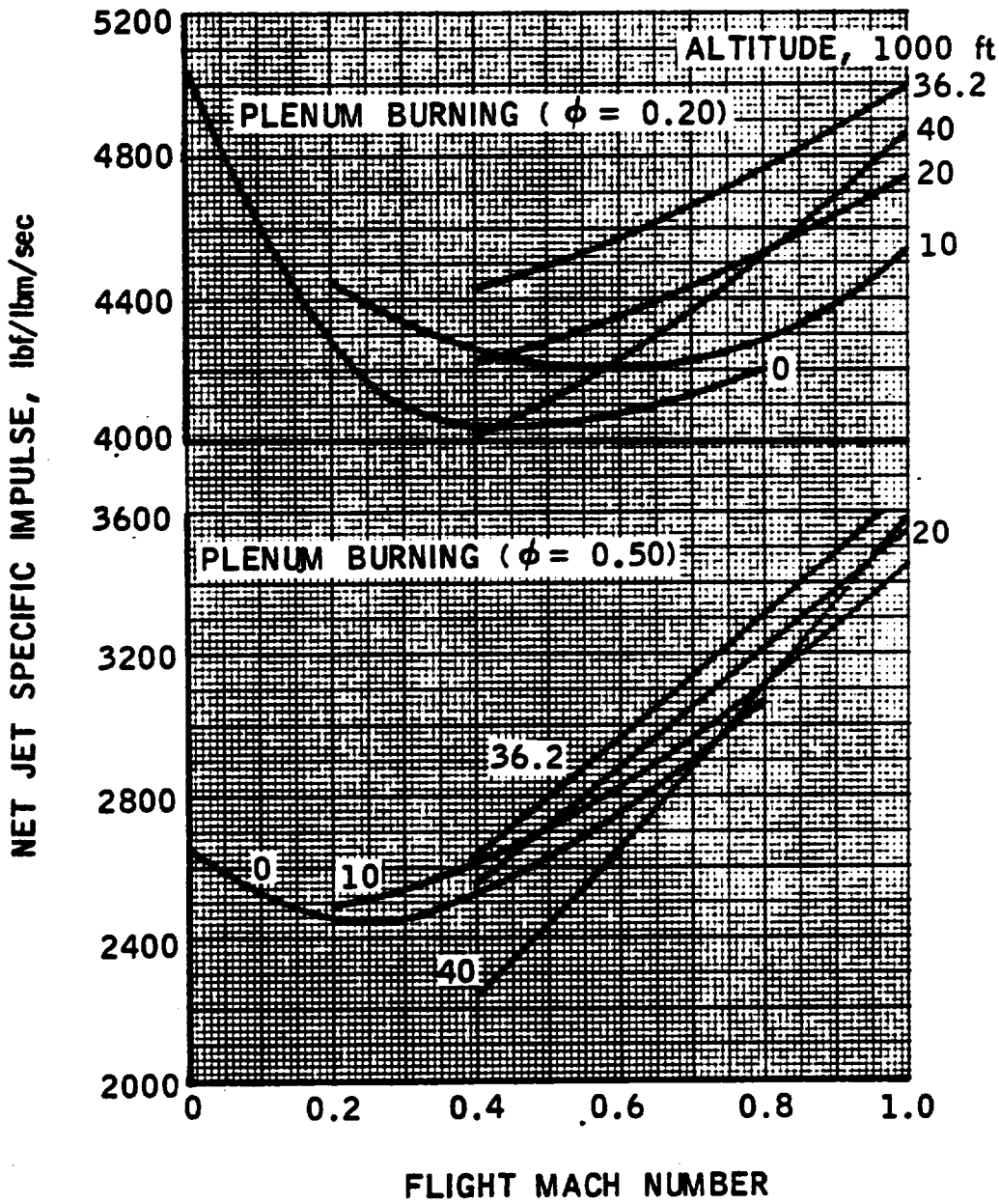

FAN OPERATION THRUST

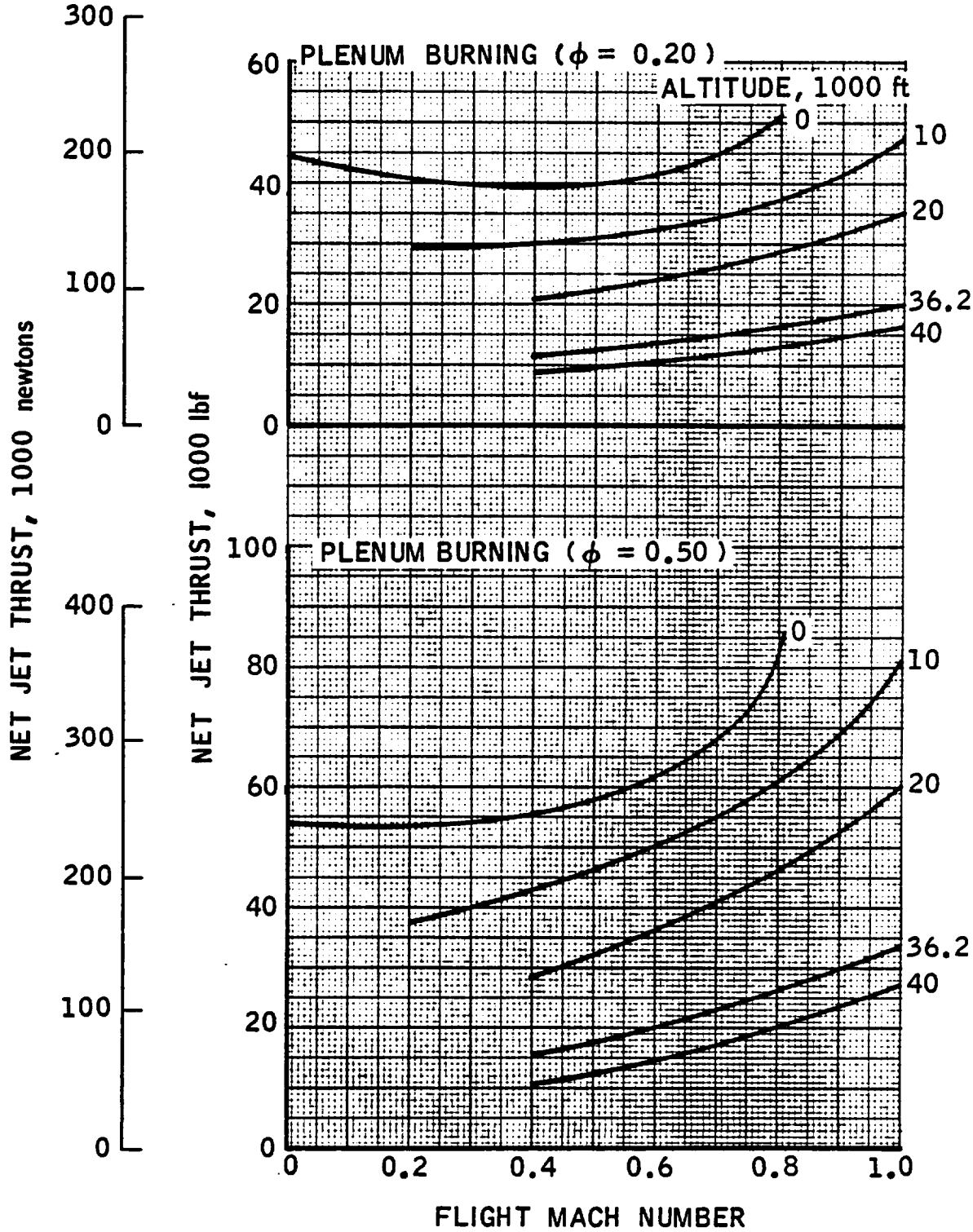

FAN OPERATION SPECIFIC IMPULSE

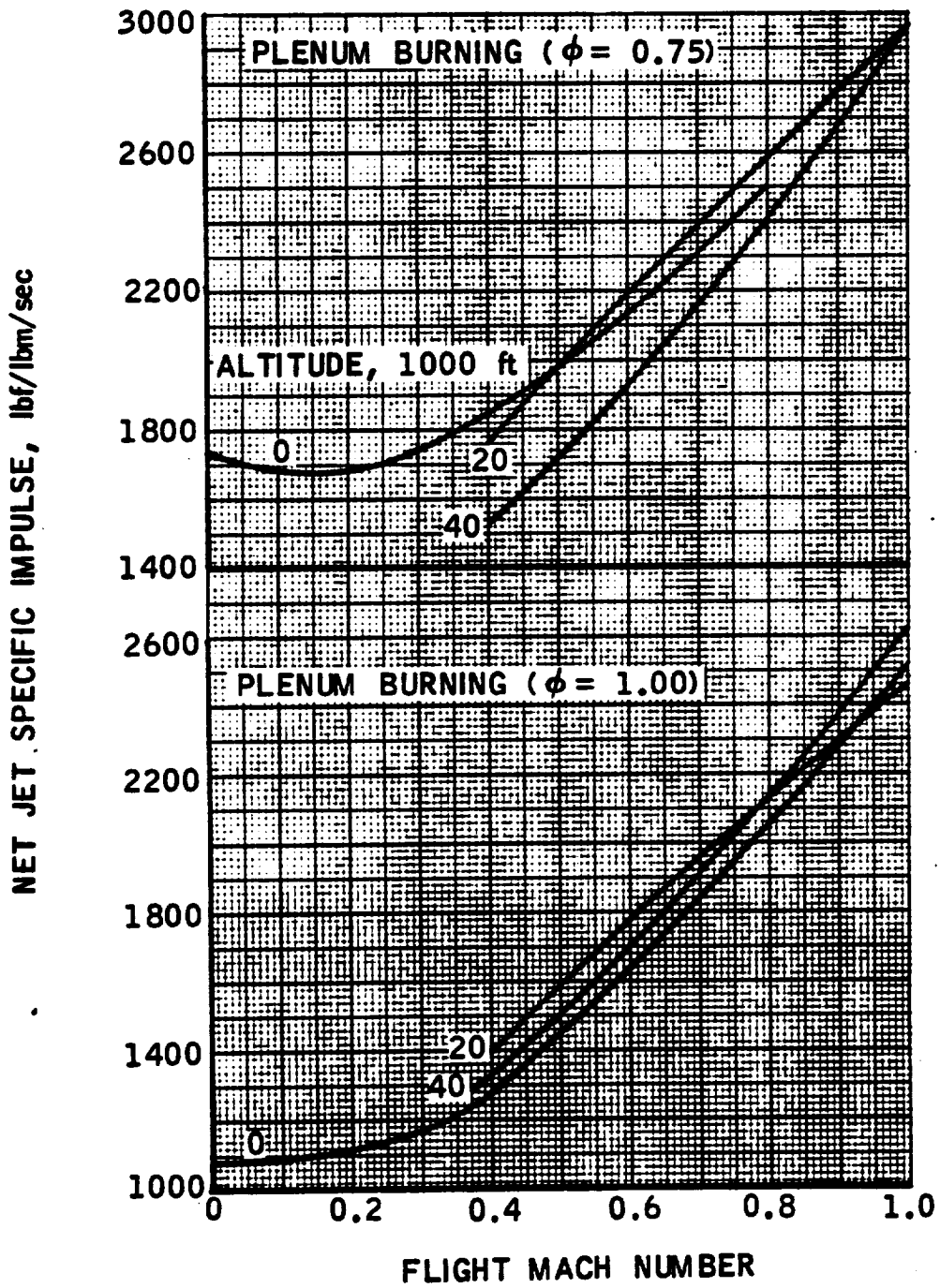

FAN OPERATION THRUST

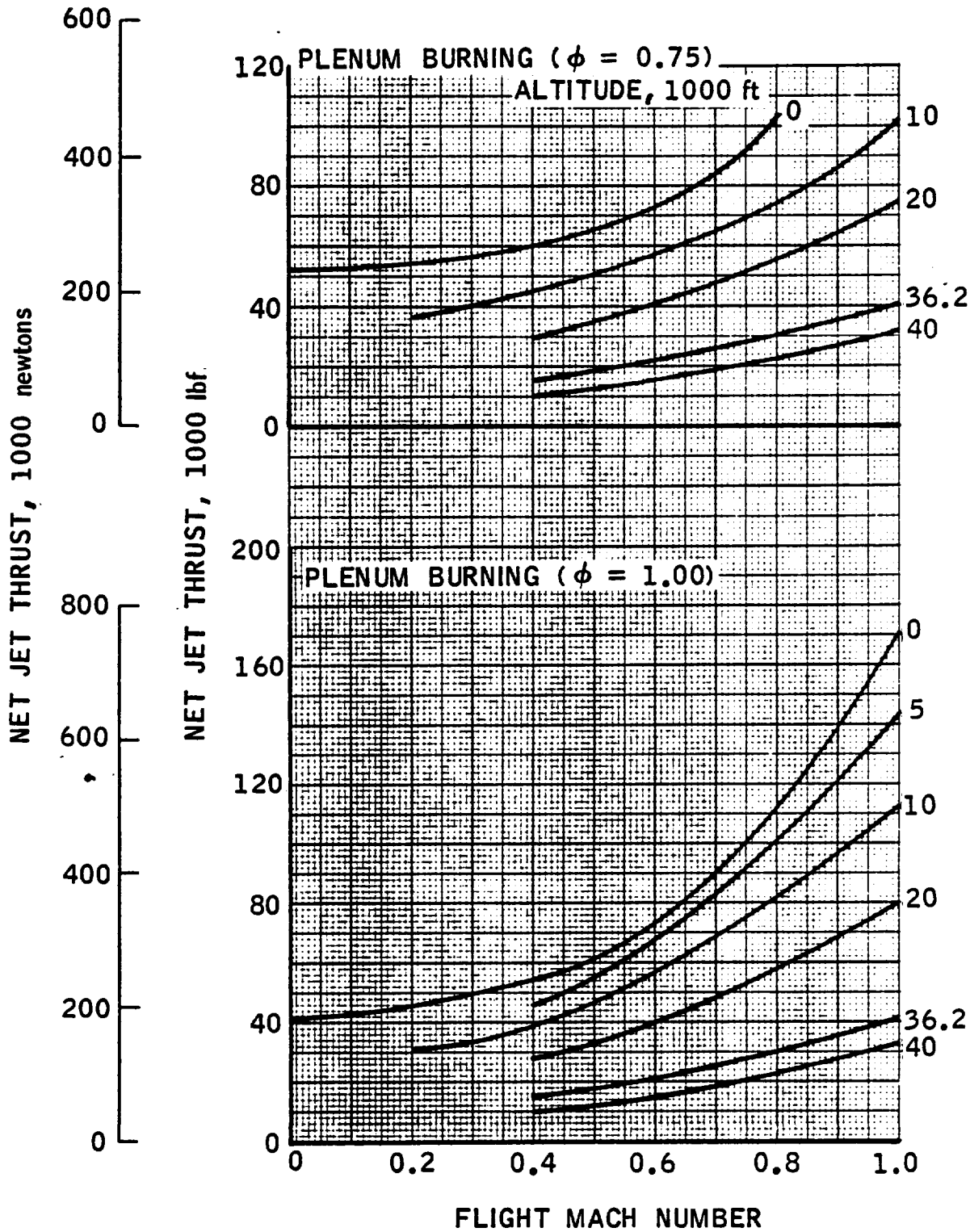

Cross-Reference Information

Ejector Mode Performance Maps and Tabular Data may be found in the Engine No. 29 Section.

SUPERCHARGED SCRAMLACE, NO. 30

Technical Description

This engine is capable of four operating modes over the mission cycle: (1) supercharged liquid air cycle ejector mode, (2) subsonic combustion ramjet mode, (3) supersonic combustion ramjet mode, and (4) fan only operation. The latter mode is useful in the low speed loiter and landing phase of the mission profile. The engine includes a low pressure single stage retractable fan and fan drive subsystem utilizing an airbreathing gas generator, and primary rocket subsystem which operates on liquid hydrogen and liquid air. The liquid air is provided by the air liquefaction heat exchanger consisting of a precooler, a condenser and associated ducting. Following the primary rocket subsystem is a mixer, diffuser, afterburner and variable geometry exit nozzle.

Initial engine operation is in the supercharged liquid air cycle ejector mode wherein the fan is operated at full design speed condition, the primary rockets are at full thrust, and the afterburner operates at a fuel rich setting as determined by the air liquefaction equipment operation. Transition to ramjet is achieved by shutdown of the primary rocket and fan subsystems and retraction of the fan from the engine flow duct, which at the same time closes off the heat exchanger subsystem from the inlet diffuser duct. Ramjet operation is adjusted to stoichiometric conditions with a variable throat setting to achieve maximum thrust consistent with maximum performance up to scramjet conversion at approximately Mach 6. Supersonic combustion operation is accomplished by simultaneous transfer forward of fuel injection to the primary rocket station and full opening of the variable exit nozzle to permit the normal shock system to pass from the engine. Following entry, cruise-back is accomplished in the subsonic burning ramjet mode with low speed loiter and landing thrust provided by the fan only operating mode.

Engine Operating Schematic

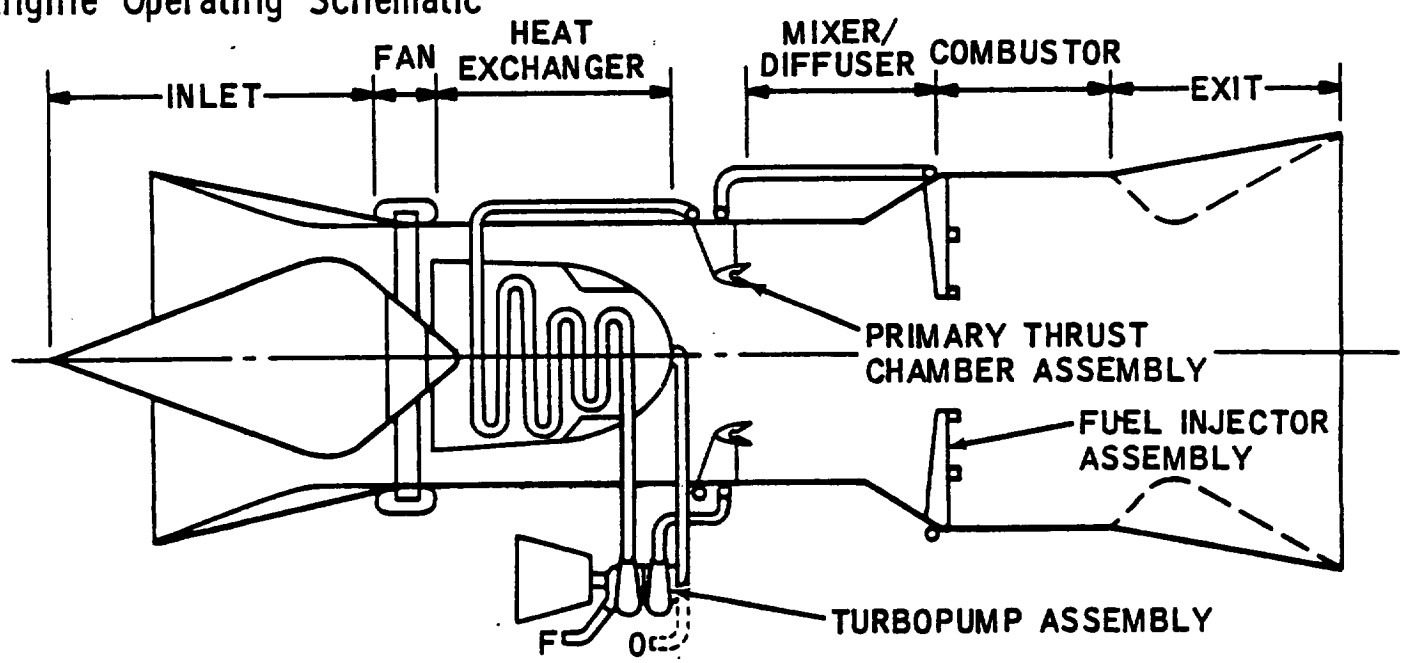

Engine Design Parameters

P_c = 1000 psia, W_s/W_p = 2.00, O/F = 34.3, ϕ_p = 1.0, ϕ_s = 3.40, PR_f = 1.30, ϕ_{cond} = 8.0, ϕ_{prec} = 8.0, A_4/A_3 = 2.11, P_{T2}/P_{TO} ref. Fig. 11

Engine Operating Mode Block Diagrams

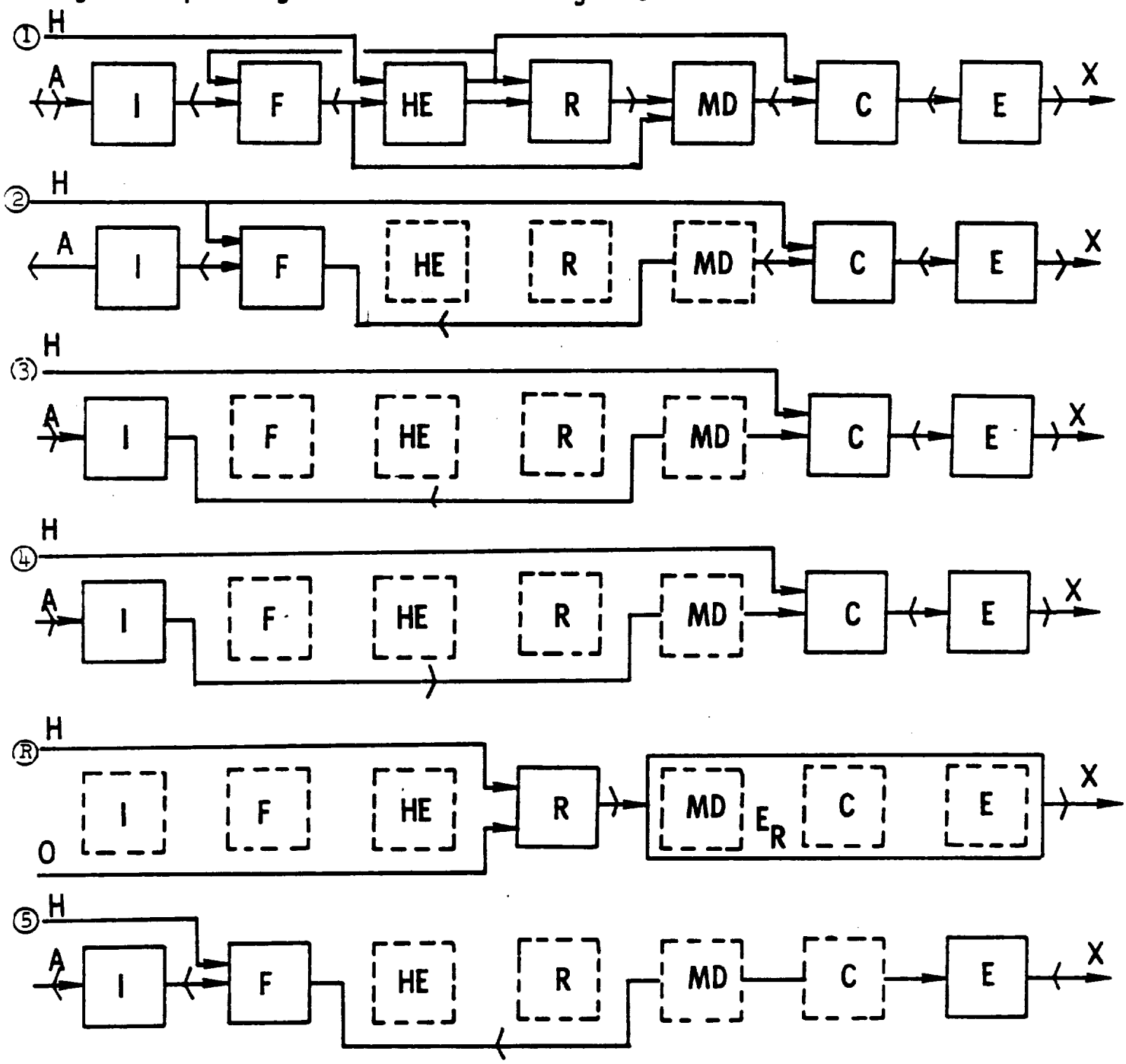

[redacted]

SUPERCHARGED SCRAMLACE (ENGINE NO. 30)
COMPOSITE ENGINE STUDY
CLASS 1 PHASE

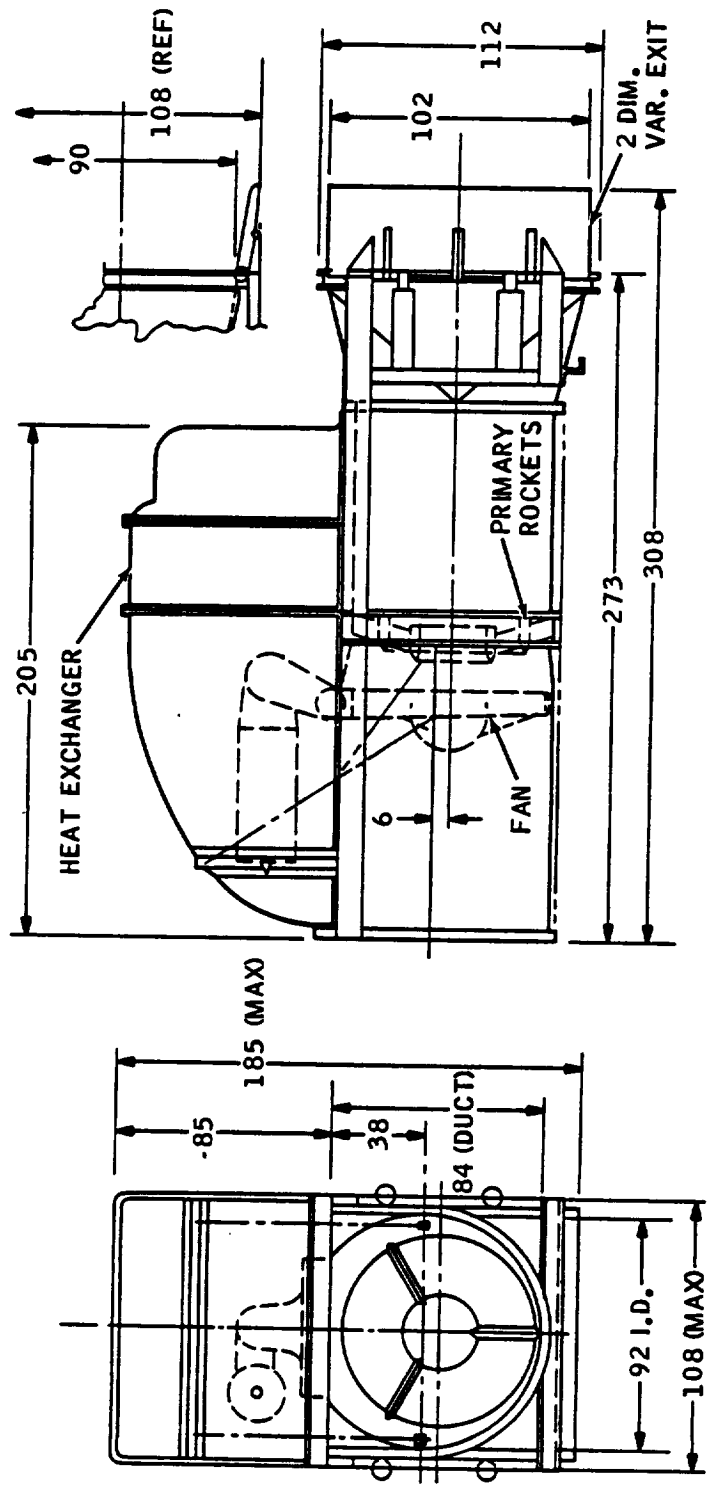

[redacted]

Engine Physical Characteristics

Eng. No. 30

WEIGHT, THRUST/WEIGHT*	English Units	International Units
Subsystem Components	NOTE: Engine weight statement does not include nozzle exit surfaces considered to be vehicle affixed (Fig 6)	
Fan Assembly	1,396 LBM	633.2 KG
Gas Generator	1,240	562.5
Structure and Actuator	885	401
Heat Exchanger	2,113	958.5
Catalyst	1,194	541.6
Structure	1,000	453.6
Primary Rockets	725	329
Turbopumps and Plumbing	735	333
Structure	1,341	608
Mixer	900	408
Diffuser	375	170
Combustor	620	281
Exit and Centerbody	1,890	857.3
Manifolding and Contingency	500	227
Uninstalled Weight	14,914 LBM	6,764 KG
Thrust, SLS	250,000 LBF	1,112,055 N
Uninstalled Thrust/weight	16.8 LBF/LBM	164 N/KG
Inlet Weight (typical)	12,000 LBM	5,443 KG
Installed Weight	26,914 LBM	12,208 KG
Installed Thrust/weight	9.3 LBF/LBM	91 N/KG
LENGTH		
Uninstalled Length	25.7 FT	7.83 M
Inlet Length (typical)	81.6	24.9
Installed Length	107.3 FT	32.71 M
FLOW AREAS		
Inlet Cowl, Ac	100.0 FT^2	9.29 M^2
Mixer, A_3	30.3	2.81
Combustor, A_4	64.0	6.0
Nozzle Exit, max, A_6**	400.0 FT^2	37.2 M^2

* Based on maximum internal pressure = 100 psia (689.5 N/M^2)

** For ejector mode, see engine data

ENGINE THRUST / WEIGHT

EFFECT OF SIZE AND INTERNAL PRESSURE

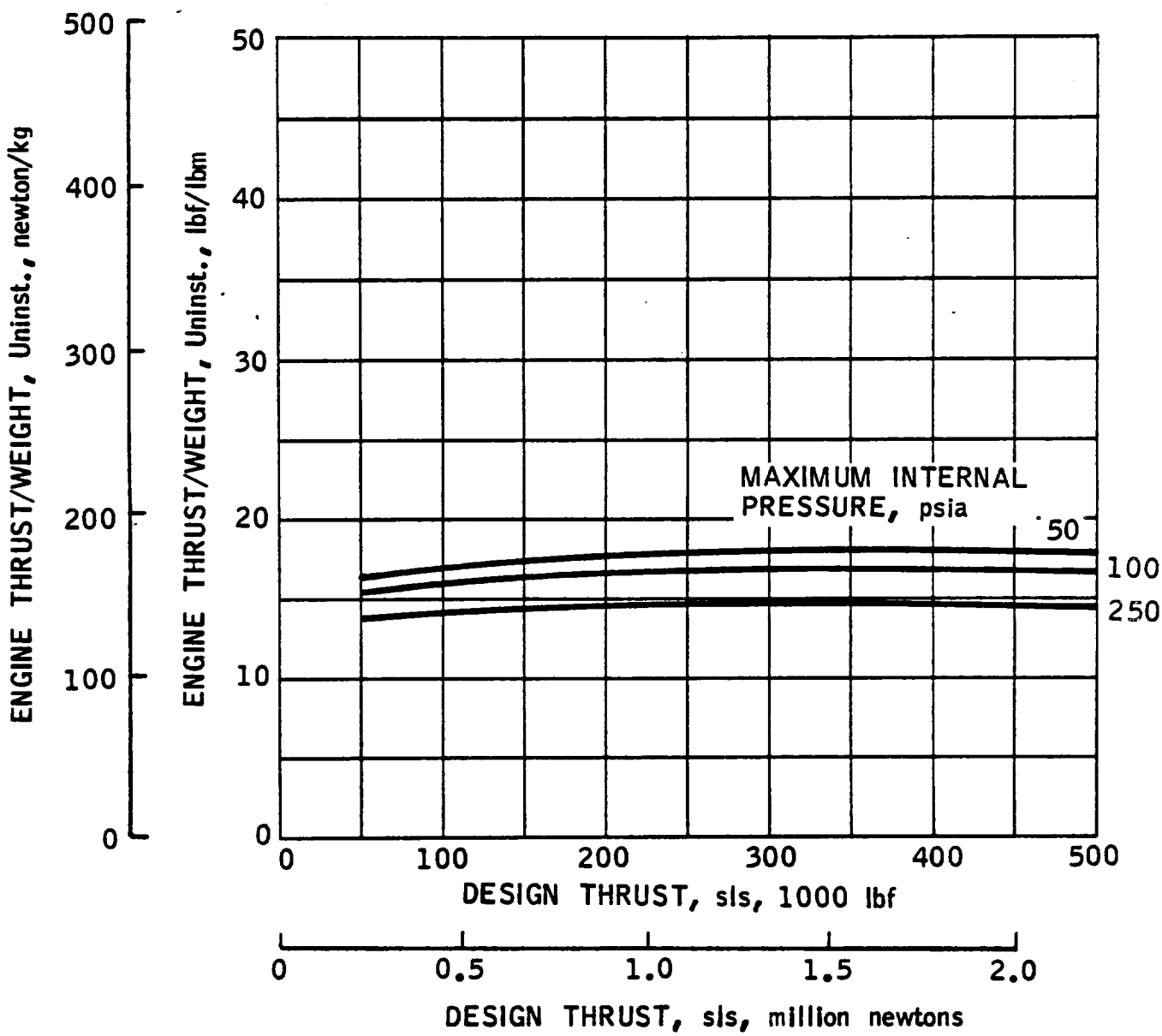

Cross-Reference Information

Ejector Mode Performance Maps and Tabular Data may be found in the Engine No. 29 Section.

Fan Ramjet Mode Performance Maps may be found in the Engine No. 29 Section.

Subsonic Combustion Ramjet Performance Maps may be found in the Engine No. 10 Section.

Supersonic Combustion Ramjet Performance Information may be found in the Engine No. 10 Section.

Fan Operation Performance Maps may be found in the Engine No. 29 Section.

RECYCLED SUPERCHARGED RAMLACE, NO. 31

Technical Description

This engine is capable of four modes: (1) recycled supercharged liquid air cycle ejector mode, (2) subsonic combustion ramjet mode, (3) supersonic combustion ramjet mode, and (4) fan only operation. The latter mode is employed in the loiter and landing phase of the mission profile. The engine includes a retractable low pressure ratio single stage fan and fan drive subsystem. Aft of the fan is the primary rocket subsystem which operates on liquid air and hydrogen. The liquid air is provided by the air liquefaction subsystem consisting of a precooler, a condenser and associated ducting. By virtue of recycle operation (see discussion - Engine 23) a near stoichiometric afterburner operation is possible in the ejector mode. Following the primary rocket subsystem is the mixer, diffuser, afterburner, and a variable geometry exit nozzle.

Initial engine operation is in the recycled supercharged liquid air cycle ejector mode. Full fan power is utilized and the stoichiometric rocket subsystem is operated at full chamber pressure. A near stoichiometric condition is effected in the afterburner by virtue of recycle operation and the exit nozzle is programmed for proper settings during the initial acceleration path. Transition to subsonic combustion ramjet is normally effected by simultaneous primary rocket shutdown, fan system shutdown, and retraction of the fan unit into the heat exchanger duct. This latter operation closes off the air liquefaction subsystem from the inlet diffuser. Subsonic combustion ramjet mode is operated at a stoichiometric afterburner setting and throat area settings which equate to maximum thrust consistent with maximum performance operation. Subsonic combustion ramjet mode continues until vehicle staging takes place and, following entry, provides a flyback or cruise-back operating mode. Low speed landing and loiter operation are effected in the fan only operating mode with plenum burning as required for thrust production.

Engine Operating Schematic

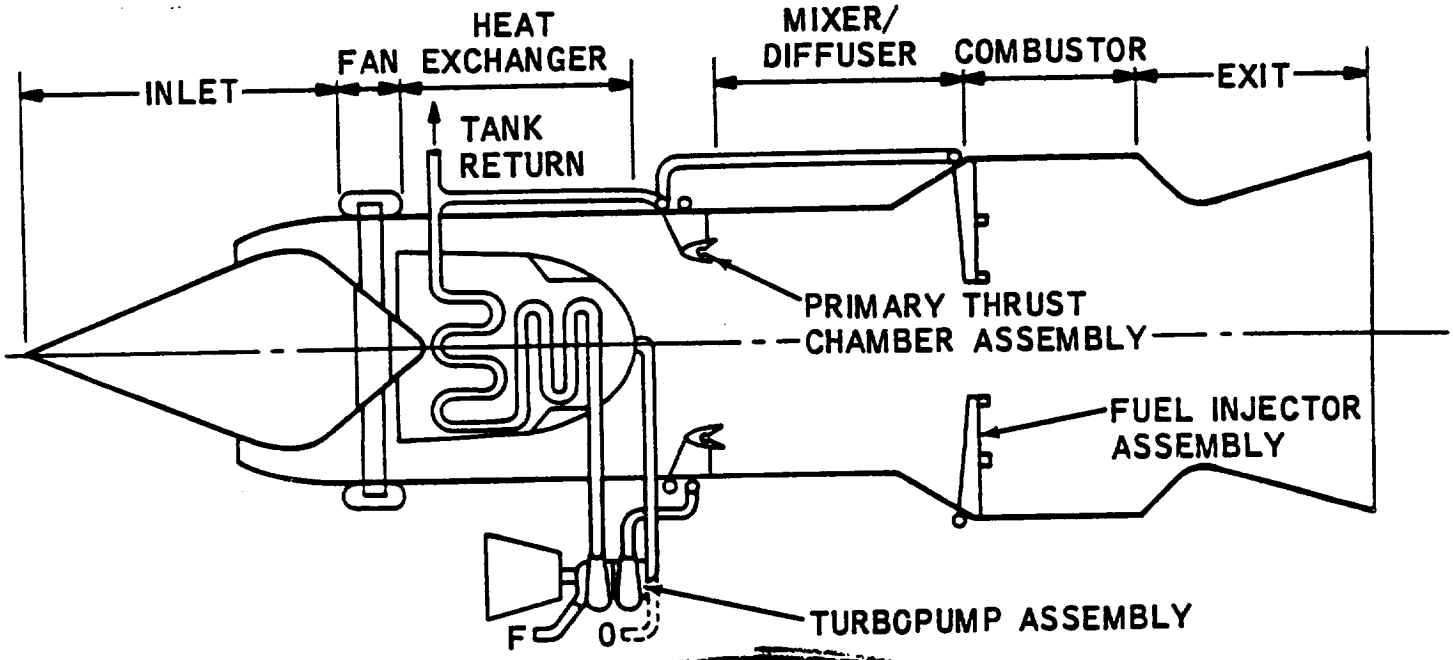

Engine Design Parameters

P_c = 1000 psia, W_s/W_p = 2.00, O/F = 34.3, ϕ_p = 1.0, ϕ_s = 1.46, PR_f = 1.30, ϕ_{cond} = 8.0, ϕ_{prec} = 4.0, A_4/A_3 = 2.00, P_{T2}/P_{TO} ref. Fig. 9

Engine Operating Mode Block Diagrams

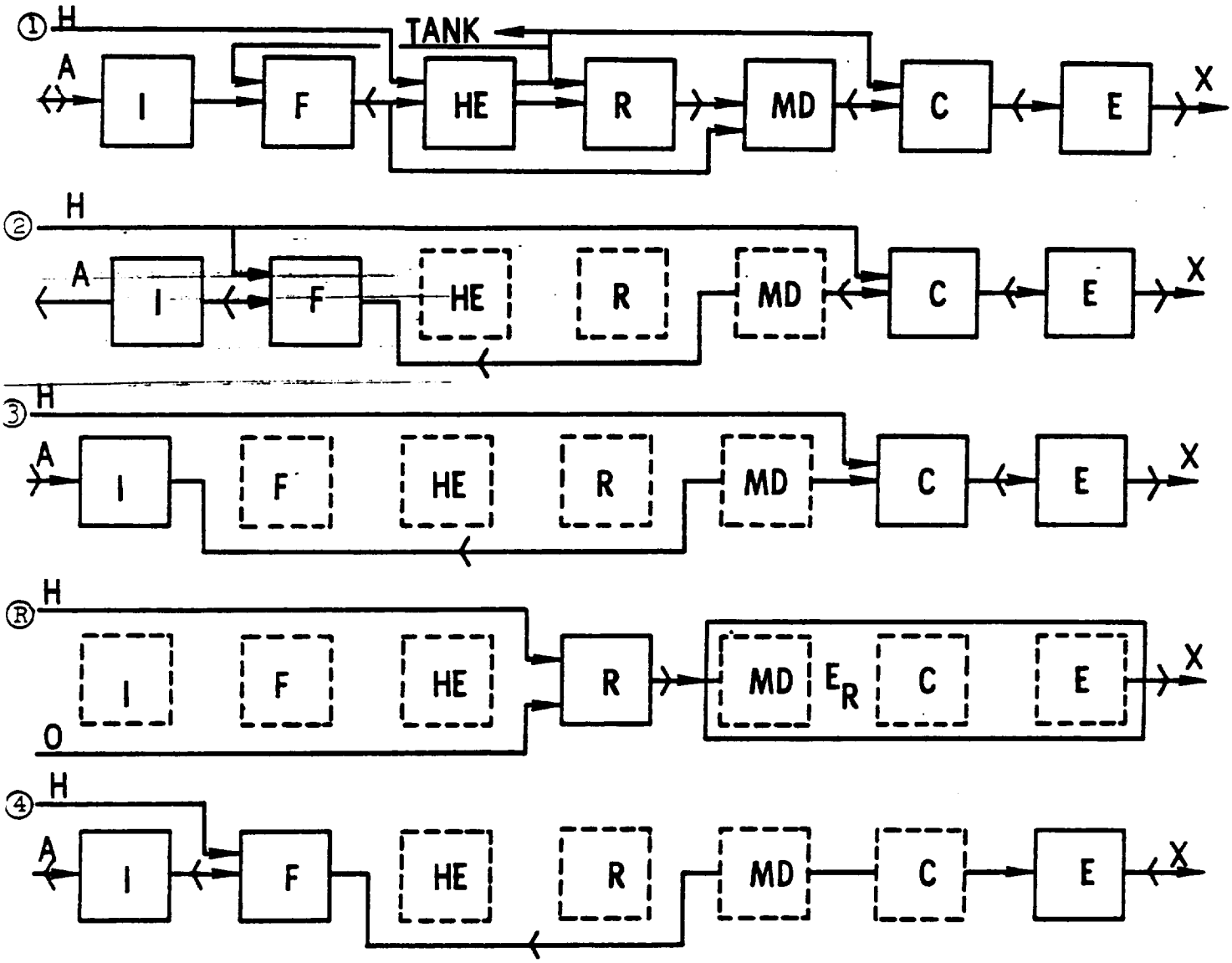

RECYCLED SUPERCHARGED RAMLACE (ENGINE NO. 31)

COMPOSITE ENGINE STUDY

CLASS 1 PHASE

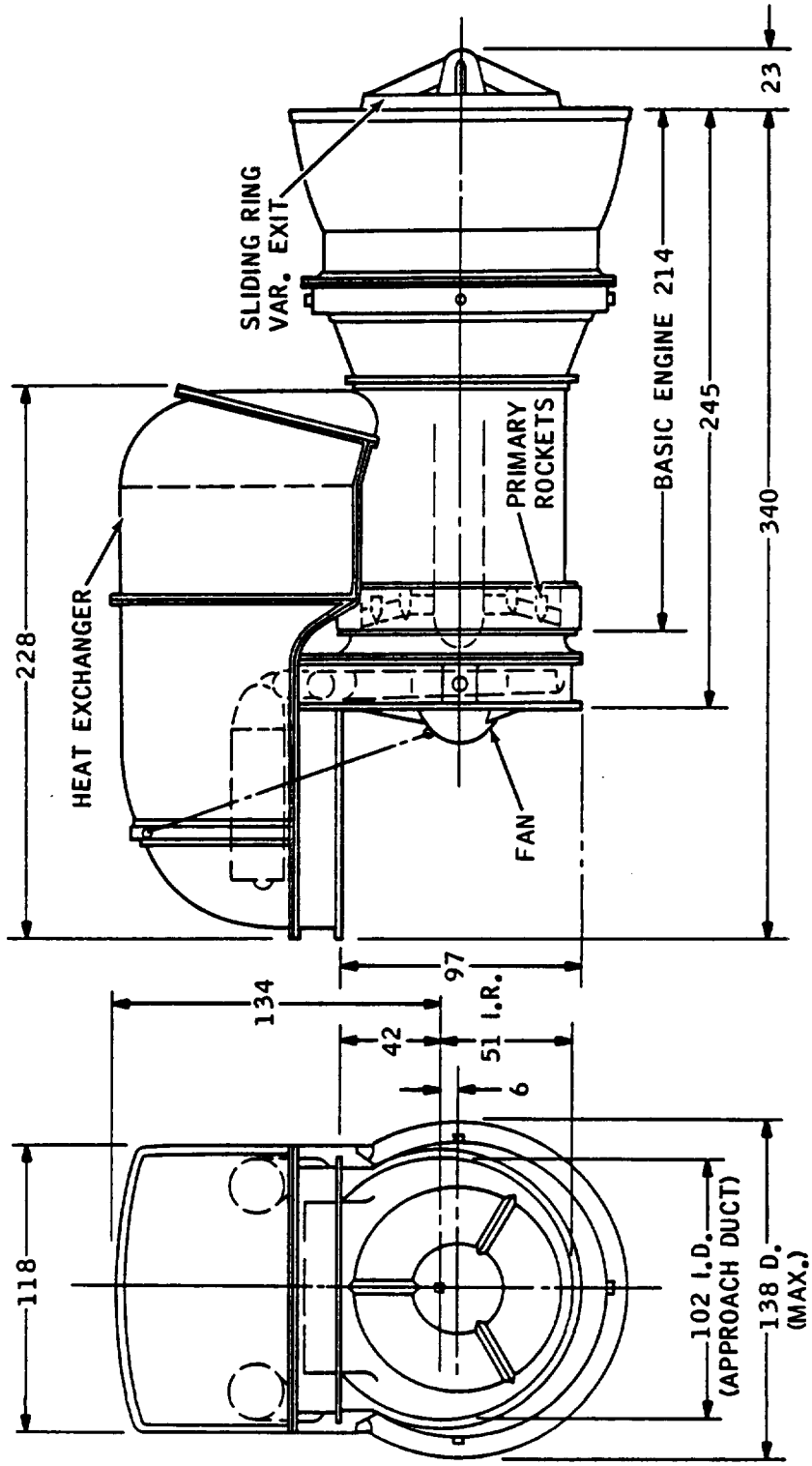

Engine Physical Characteristics

Eng. No. 31

WEIGHT, THRUST/WEIGHT*	English Units		International Units	
Subsytem Components				
Fan Assembly	1475	LBM	669.1	KG
Gas Generator	1310		594.2	
Structure and Actuator	921		418	
Heat Exchanger	3468		1573	
Catalyst	1260		571.5	
Structure	1350		612.4	
Primary Rockets	765		347	
Turbopumps and Plumbing	759		344	
Structure	1416		642.3	
Mixer	1078		489	
Diffuser	432		196	
Combustor	712		323	
Exit and Centerbody	2172		985.2	
Manifolding and Contingency	550		250	
Uninstalled Weight	17,668	LBM	8014.2	KG
Thrust, SLS	250,000	LBF	1,112,055	N
Uninstalled Thrust/weight q	14.2	LBF/LBM	139	N/KG
Inlet Weight (typical)	9840	LBM	4463	KG
Installed Weight	27,508	LBM	12,478	KG
Installed Thrust/weight	9.1	LBF/LBM	89	N/KG
LENGTH				
Uninstalled Length	28.3	FT	8.63	M
Inlet Length (typical)	56.2		17.1	
Installed Length	84.5	FT	25.6	M
FLOW AREAS				
Inlet Cowl, Ac	82.0	FT^2	7.6	M^2
Mixer, A_3	31.9		2.96	
Combustor, A_4	64.0		6.0	
Nozzle Exit, max A_6**	125.0	FT^2	11.6	M^2

* Based on maximum internal pressure = 150 psia (1034 N/M_2)
**For ejector mode, see engine data

ENGINE THRUST / WEIGHT

EFFECT OF SIZE AND INTERNAL PRESSURE

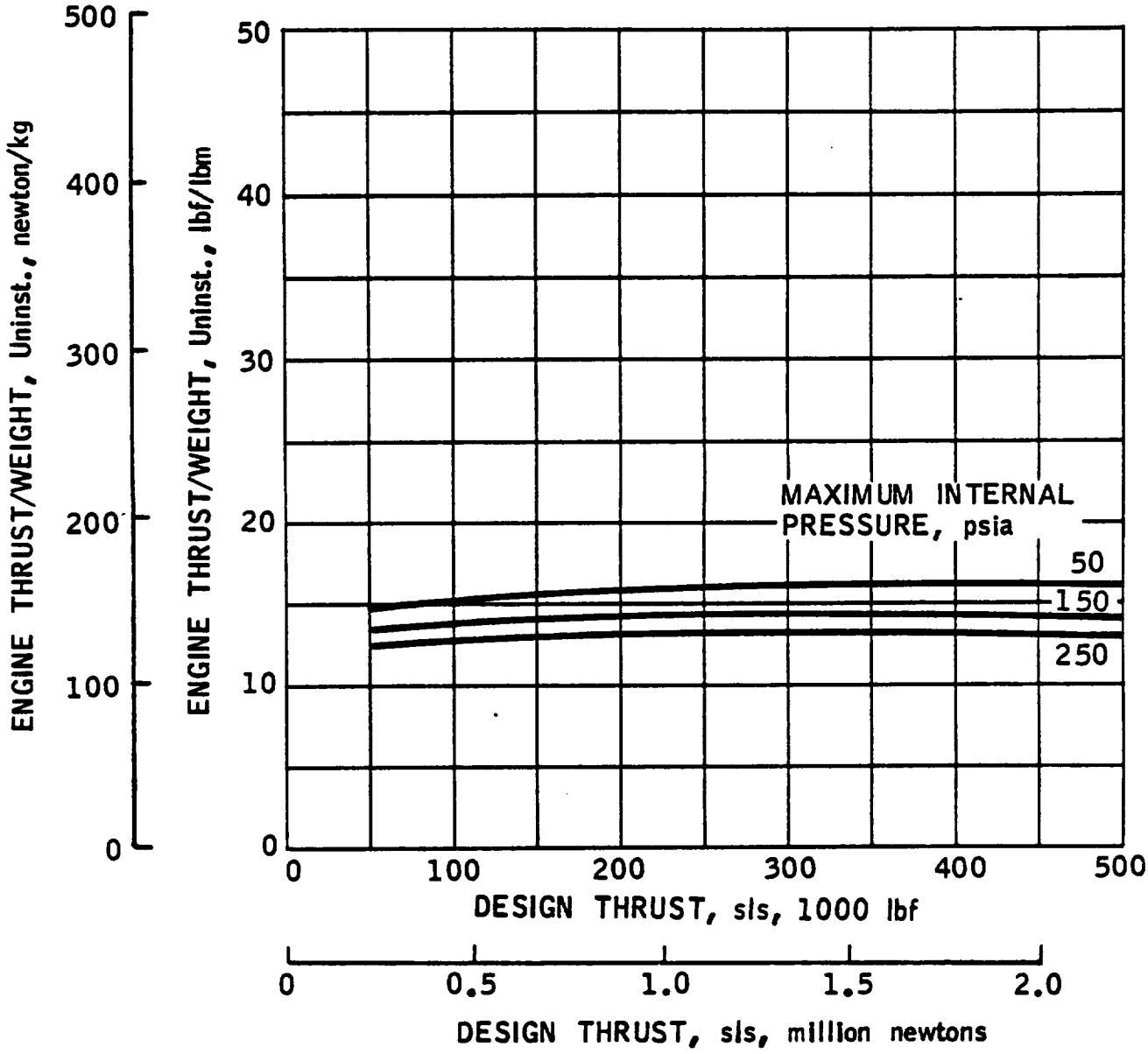

EJECTOR MODE SPECIFIC IMPULSE

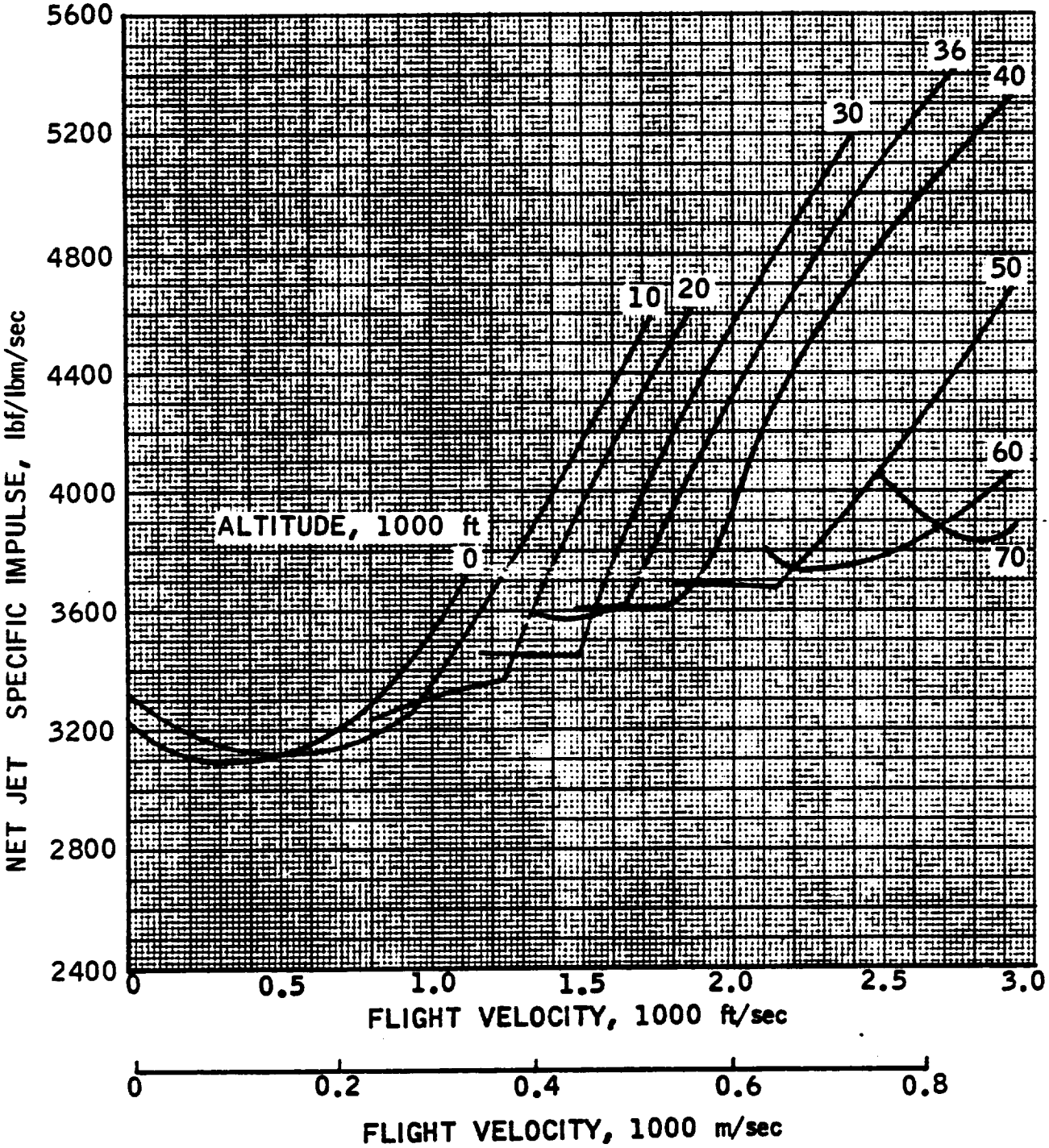

EJECTOR MODE THRUST

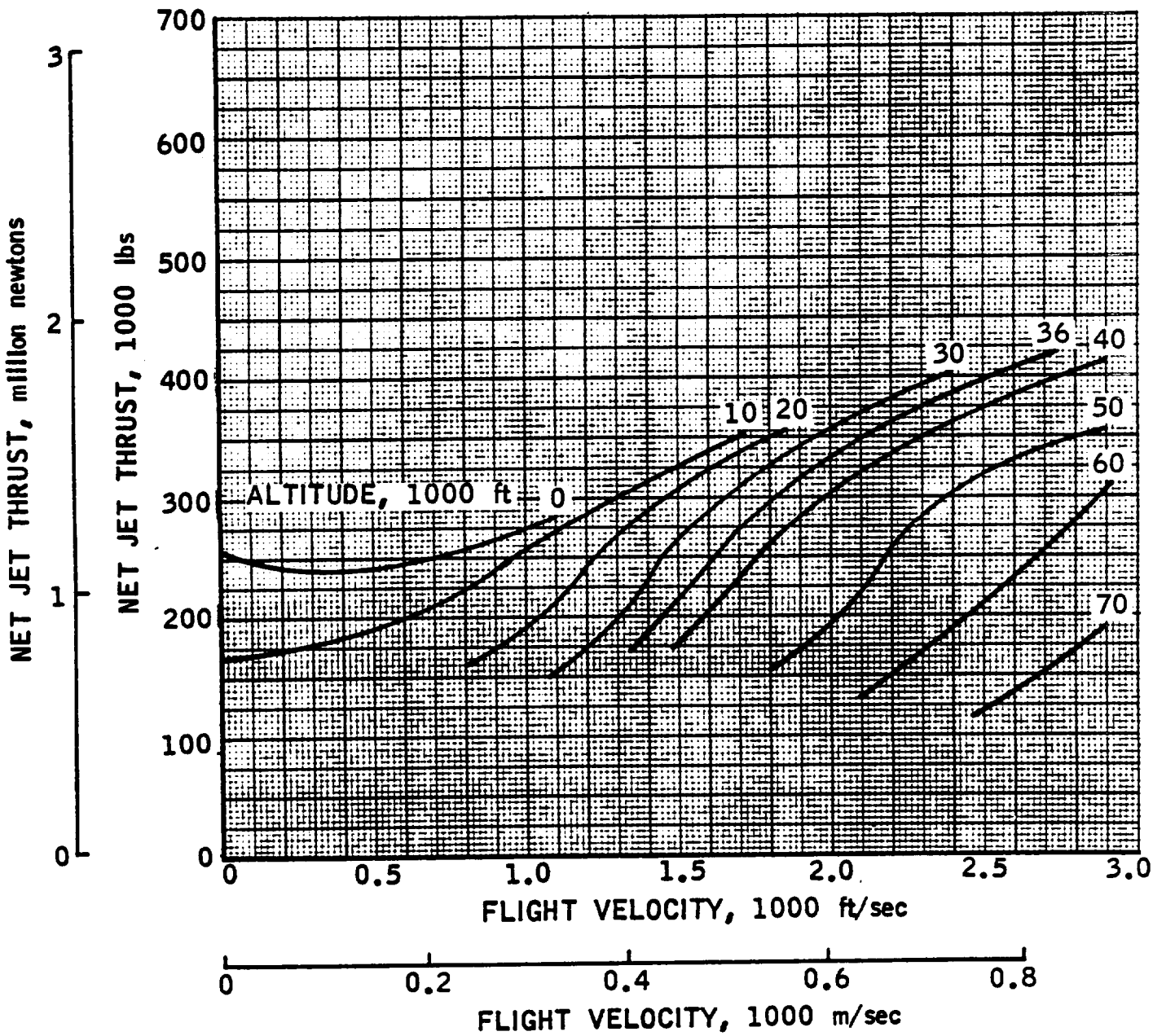

EJECTOR MODE AIRFLOW

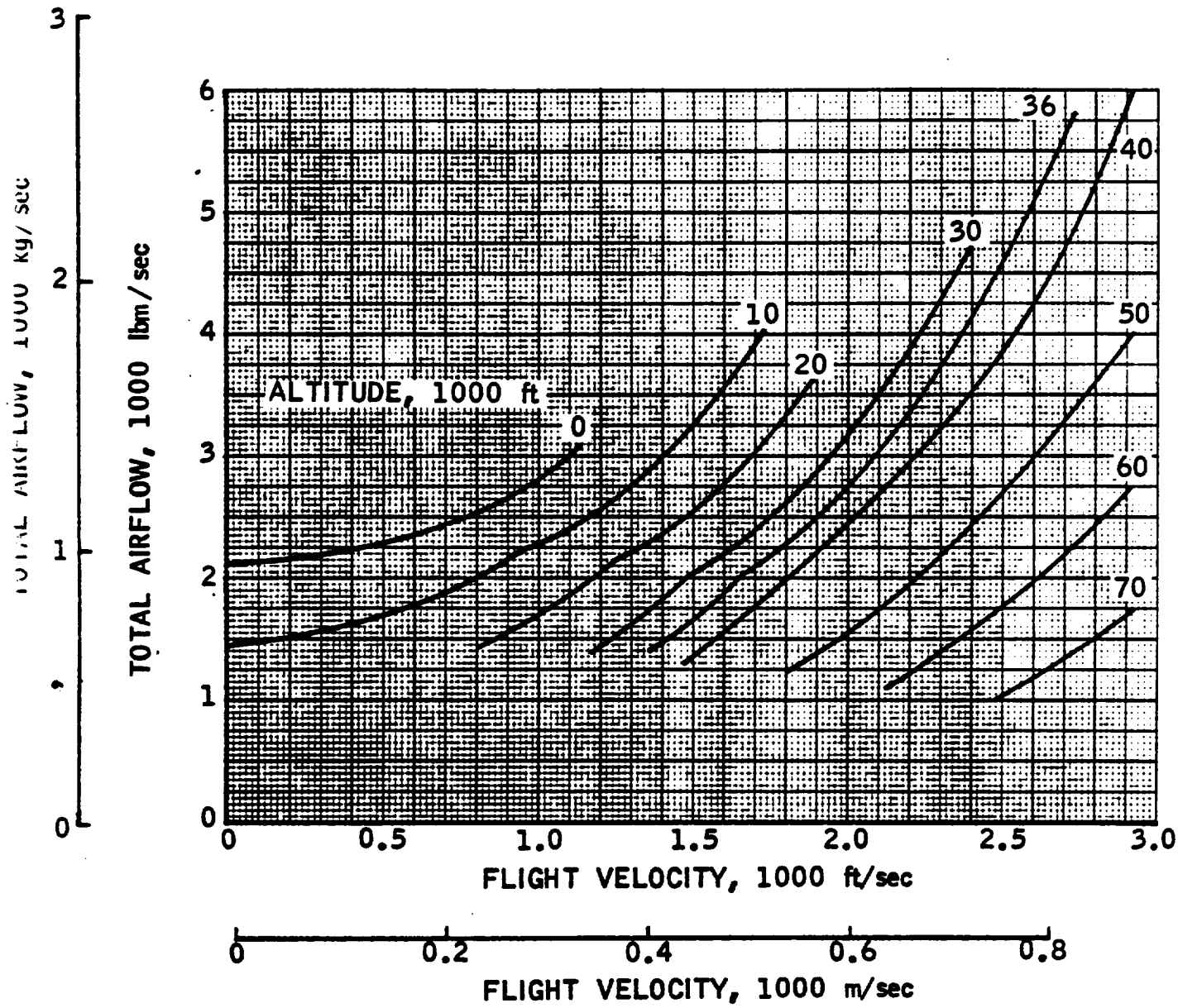

EJECTOR MODE CAPTURE AREA

NOTE: 1. CURVE REFLECTS UPPER LIMIT.

2. EJECTOR MODE CAPTURE AREA CAN EXCEED NOMINAL INLET SIZE (SEE SUPPLEMENTARY TABULAR DATA).

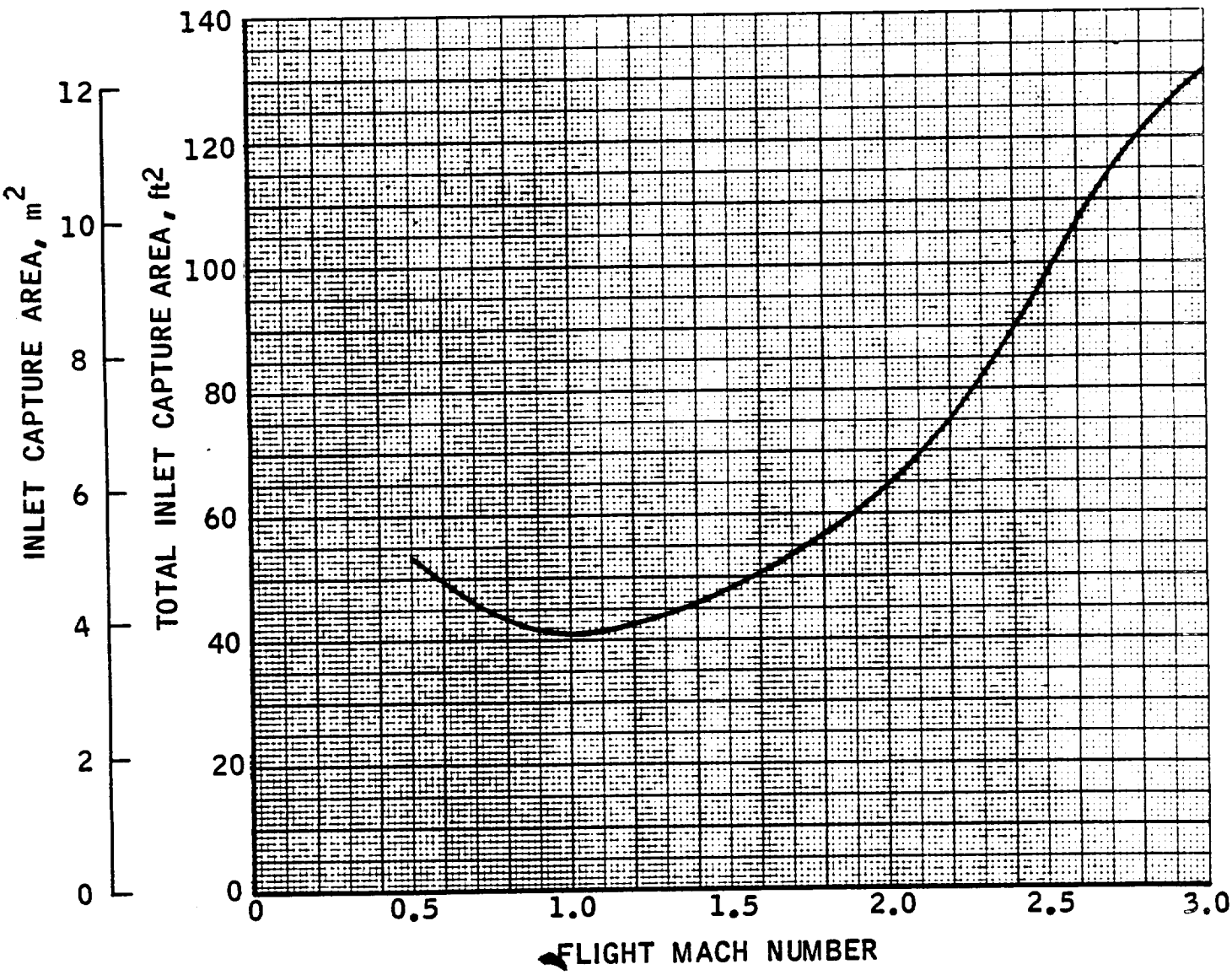

[redacted]

ENGINE 31

ESTIMATED PERFORMANCE

MU	VO	HTO	PTO	T	CF	IS	SPC	PT2	H2	P2
				ALTITUDE -		0. FEET				
0.01	11.	124.5	14.7	254033.	707.81	3222.	1.12	19.11	117.3	15.51
0.25	279.	126.0	15.3	243950.	26.51	3094.	1.16	19.95	118.7	16.20
0.50	558.	130.7	17.4	246849.	12.43	3131.	1.15	22.66	123.1	18.40
0.75	837.	138.5	21.3	261574.	7.93	3318.	1.09	27.75	131.2	22.95
1.00	1116.	149.4	27.8	292430.	5.51	3709.	0.97	36.16	141.1	29.58
				ALTITUDE -		10000. FEET				
0.01	11.	115.1	10.1	169463.	711.59	3307.	1.09	13.14	108.5	10.71
0.30	322.	117.1	10.8	176002.	22.94	3127.	1.15	13.99	110.3	11.35
0.60	644.	123.4	12.9	204890.	11.44	3120.	1.15	16.76	116.2	13.60
0.90	966.	133.7	17.1	258311.	7.68	3277.	1.10	22.22	126.0	18.04
1.20	1288.	148.2	24.5	299686.	5.50	3801.	0.95	31.55	140.4	26.10
1.40	1503.	160.2	32.2	329192.	4.26	4176.	0.86	40.88	151.0	33.21
1.60	1718.	174.0	43.0	359388.	3.37	4559.	0.79	53.62	164.1	43.57
				ALTITUDE -		20000. FEET				
0.77	801.	120.2	10.0	163851.	9.39	3222.	1.12	13.03	113.2	10.58
1.00	1037.	128.9	12.8	209834.	7.50	3303.	1.09	16.63	121.4	13.50
1.20	1244.	138.3	16.4	265352.	6.42	3366.	1.07	21.09	130.3	17.13
1.50	1555.	155.7	24.8	319696.	4.90	4055.	0.89	31.29	147.0	25.56
1.80	1867.	177.0	38.8	363008.	3.47	4605.	0.78	47.61	166.9	38.69

[redacted]

CONFIDENTIAL

ENGINE 31

ESTIMATED PERFORMANCE

M2	WS	WP	WSWP	WFT	PHP	PHS	V6	PT20	A0	A5	A6
					ALTITUDE -		0. FEET				
0.554	1393.	696.	2.00	78.8	1.0	1.456	3817.	1.30	1632.29	59.57	63.73
0.554	1446.	696.	2.08	78.8	1.0	1.403	3836.	1.30	67.77	60.31	64.73
0.554	1613.	696.	2.32	78.8	1.0	1.257	3894.	1.30	37.79	62.61	67.87
0.528	1859.	696.	2.67	78.8	1.0	1.090	4031.	1.30	29.02	63.71	70.86
0.544	2383.	696.	3.43	78.8	1.0	0.851	4087.	1.30	27.87	63.81	74.51
					ALTITUDE -		10000. FEET				
0.548	988.	452.	2.19	51.2	1.0	1.333	3697.	1.30	1620.51	62.52	66.07
0.554	1050.	497.	2.11	56.3	1.0	1.378	3874.	1.30	57.39	61.52	66.50
0.554	1227.	579.	2.12	65.7	1.0	1.376	4174.	1.30	33.51	60.90	69.51
0.554	1564.	696.	2.25	78.8	1.0	1.296	4517.	1.30	28.46	61.30	76.47
0.528	2046.	696.	2.94	78.8	1.0	0.991	4695.	1.29	27.87	63.87	85.36
0.554	2636.	696.	3.79	78.8	1.0	0.769	4591.	1.27	30.76	61.15	88.35
0.554	3322.	696.	4.78	78.8	1.0	0.610	4521.	1.25	33.87	55.94	89.83
					ALTITUDE -		20000. FEET				
0.554	966.	449.	2.15	50.9	1.0	1.354	4400.	1.30	29.64	61.54	74.40
0.554	1192.	561.	2.13	63.5	1.0	1.371	4750.	1.30	28.21	60.22	81.12
0.554	1461.	696.	2.10	78.8	1.0	1.388	5054.	1.29	28.78	59.04	89.40
0.546	2026.	696.	2.91	78.8	1.0	1.001	5013.	1.26	31.88	63.77	96.01
0.554	2926.	696.	4.21	78.8	1.0	0.693	4779.	1.23	38.30	57.17	96.22

CONFIDENTIAL

[redacted]

ENGINE 31

ESTIMATED PERFORMANCE

MO	VO	HTO	PTO	T	CF	IS	SPC	PT2	H2	P2
				ALTITUDE - 30000. FEET						
1.17	1160.	125.7	10.1	171163.	6.90	3446.	1.04	13.09	118.4	10.63
1.30	1293.	132.2	12.1	205351.	6.36	3455.	1.04	15.50	124.6	12.58
1.40	1393.	137.6	13.9	233079.	5.98	3490.	1.03	17.69	129.6	14.36
1.50	1492.	143.3	16.1	271557.	5.70	3445.	1.05	20.24	135.1	16.44
1.90	1890.	170.2	29.3	343621.	4.03	4359.	0.83	35.54	160.5	28.88
2.40	2388.	212.7	63.9	408847.	2.31	5186.	0.69	72.88	200.8	59.27
				ALTITUDE - 36000. FEET						
1.39	1345.	129.8	10.3	175219.	6.17	3585.	1.00	13.15	122.3	10.67
1.50	1453.	135.9	12.1	207048.	5.84	3549.	1.01	15.30	128.0	12.42
1.60	1550.	141.7	14.1	232237.	5.50	3592.	1.00	17.54	133.5	14.24
1.70	1647.	147.9	16.3	262476.	5.19	3619.	0.99	20.20	139.4	16.41
2.00	1938.	168.7	25.9	331106.	4.18	4200.	0.86	31.04	159.1	25.22
2.40	2325.	201.7	48.3	383966.	2.76	4870.	0.74	55.10	190.3	44.80
2.80	2713.	240.7	89.7	424778.	1.73	5388.	0.67	96.81	227.3	78.77
				ALTITUDE - 40000. FEET						
1.52	1470.	136.7	10.3	172814.	5.76	3594.	1.00	12.94	128.8	10.51
1.65	1597.	144.6	12.5	204411.	5.35	3617.	1.00	15.56	136.2	12.64
1.85	1791.	157.7	16.9	262409.	4.80	3618.	1.00	20.64	148.6	16.77
2.00	1936.	168.5	21.4	299544.	4.35	3800.	0.95	25.63	158.9	20.82
2.50	2420.	210.6	46.6	373971.	2.73	4744.	0.76	52.43	198.8	42.63
3.00	2904.	262.1	100.3	417380.	1.54	5294.	0.68	104.69	247.7	85.23

[redacted]

[redacted]

ENGINE 31

ESTIMATED PERFORMANCE

M2	WS	WP	WSWP	WFT	PHP	PHS	V6	PT20	A0	A5	A6
ALTITUDE - 30000. FEET											
0.554	950.	438.	2.17	49.7	1.0	1.345	4984.	1.29	28.58	60.86	90.24
0.554	1097.	525.	2.09	59.4	1.0	1.394	5190.	1.28	29.59	59.27	96.01
0.554	1228.	589.	2.08	66.8	1.0	1.399	5216.	1.27	30.75	58.69	95.93
0.554	1378.	696.	1.98	78.8	1.0	1.472	5284.	1.26	32.18	57.23	95.98
0.554	2226.	696.	3.20	78.8	1.0	0.911	4999.	1.21	40.95	60.99	95.79
0.554	4100.	696.	5.89	78.8	1.0	0.495	4624.	1.14	59.49	48.76	96.06
ALTITUDE - 36000. FEET											
0.554	939.	431.	2.18	48.9	1.0	1.339	5142.	1.27	30.57	60.35	96.00
0.554	1069.	515.	2.08	58.3	1.0	1.404	5218.	1.26	32.18	58.61	96.07
0.554	1200.	570.	2.10	64.6	1.0	1.386	5231.	1.25	33.86	58.35	95.96
0.554	1354.	640.	2.12	72.5	1.0	1.378	5254.	1.24	35.94	57.93	95.99
0.554	1952.	696.	2.81	78.8	1.0	1.039	5127.	1.20	43.95	61.07	96.21
0.554	3179.	696.	4.57	78.8	1.0	0.638	4828.	1.14	59.48	53.11	96.14
0.554	5134.	696.	7.38	78.8	1.0	0.395	4517.	1.08	82.03	43.78	96.10
ALTITUDE - 40000. FEET											
0.554	901.	424.	2.12	48.1	1.0	1.373	5211.	1.26	32.44	58.78	96.12
0.554	1055.	499.	2.11	56.5	1.0	1.378	5249.	1.25	34.91	57.94	96.01
0.554	1341.	640.	2.10	72.5	1.0	1.391	5312.	1.22	39.56	56.71	96.05
0.554	1613.	696.	2.32	78.8	1.0	1.257	5278.	1.20	43.95	57.53	96.01
0.554	2963.	696.	4.26	78.8	1.0	0.684	4941.	1.12	64.35	53.04	96.11
0.554	5333.	696.	7.67	78.8	1.0	0.380	4560.	1.04	96.05	42.10	96.01

[redacted]

[redacted]

ENGINE 31

ESTIMATED PERFORMANCE

MU	VU	HTO	PTO	T	CF	IS	SPC	PT2	H2	P2
				ALTITUDE - 50000. FEET						
1.86	1800.	158.3	10.6	162486.	4.76	3681.	0.98	12.97	149.2	10.54
2.00	1936.	168.5	13.2	193203.	4.43	3674.	0.98	15.89	158.9	12.91
2.10	2033.	176.1	15.5	215641.	4.19	3697.	0.97	18.35	166.1	14.91
2.20	2130.	184.2	18.1	243157.	3.98	3672.	0.98	21.19	173.7	17.22
2.50	2420.	210.6	28.9	314655.	3.33	3991.	0.90	32.49	198.8	26.42
3.00	2904.	262.1	62.2	367632.	2.05	4663.	0.77	64.89	247.7	52.82
				ALTITUDE - 60000. FEET						
2.19	2120.	183.4	11.0	145908.	3.98	3778.	0.95	12.95	173.0	10.53
2.25	2178.	188.4	12.1	158491.	3.88	3723.	0.97	14.13	177.7	11.49
2.35	2275.	197.0	14.2	174381.	3.66	3775.	0.95	16.28	185.9	13.24
2.40	2323.	201.4	15.3	186210.	3.59	3732.	0.96	17.50	190.1	14.23
2.70	2614.	230.1	24.4	249470.	3.06	3831.	0.94	26.74	217.2	21.76
3.00	2904.	262.1	38.5	319127.	2.59	4048.	0.89	40.23	247.7	32.75
				ALTITUDE - 70000. FEET						
2.53	2460.	215.0	11.7	124706.	3.26	4056.	0.89	13.14	203.0	10.69
2.60	2524.	221.4	13.0	135672.	3.18	3974.	0.91	14.42	209.0	11.73
2.70	2621.	231.4	15.2	152093.	3.04	3914.	0.92	16.59	218.5	13.50
2.80	2719.	241.7	17.7	170856.	2.91	3829.	0.94	19.06	228.4	15.51
2.90	2816.	252.5	20.6	188452.	2.77	3819.	0.94	21.84	238.5	17.78
3.00	2913.	263.6	23.9	204258.	2.63	3884.	0.93	24.96	249.1	20.32

ENGINE 31

ESTIMATED PERFORMANCE

M2	WS	WP	WSWP	WFT	PHP	PHS	V6	PT20	AO	A5	A6
ALTITUDE - 50000. FEET											
0.554	841.	390.	2.16	44.1	1.0	1.349	5312.	1.22	39.83	56.53	96.06
0.554	1000.	464.	2.15	52.6	1.0	1.353	5357.	1.20	43.95	55.68	96.01
0.554	1130.	515.	2.20	58.3	1.0	1.328	5372.	1.19	47.29	55.39	95.99
0.554	1277.	584.	2.19	66.2	1.0	1.334	5405.	1.17	50.97	54.78	96.02
0.554	1837.	696.	2.64	78.8	1.0	1.104	5388.	1.12	64.35	55.31	96.19
0.554	3305.	696.	4.75	78.8	1.0	0.613	5041.	1.04	96.05	47.72	96.03
ALTITUDE - 60000. FEET											
0.554	782.	341.	2.30	38.6	1.0	1.270	5387.	1.17	50.60	54.96	96.00
0.554	843.	376.	2.24	42.6	1.0	1.299	5426.	1.17	53.02	54.27	96.22
0.554	950.	408.	2.33	46.2	1.0	1.250	5429.	1.15	57.21	54.18	95.98
0.554	1010.	440.	2.29	49.9	1.0	1.270	5458.	1.14	59.53	53.69	96.14
0.554	1449.	575.	2.52	65.1	1.0	1.156	5504.	1.09	75.70	52.96	96.22
0.554	2049.	696.	2.95	78.8	1.0	0.989	5527.	1.04	96.05	52.26	96.16
ALTITUDE - 70000. FEET											
0.554	735.	271.	2.71	30.7	1.0	1.075	5423.	1.12	66.26	54.27	96.17
0.554	796.	301.	2.64	34.1	1.0	1.104	5464.	1.11	69.81	53.50	96.26
0.554	897.	343.	2.62	38.9	1.0	1.115	5502.	1.09	75.70	52.73	96.04
0.554	1009.	394.	2.56	44.6	1.0	1.138	5548.	1.08	82.03	51.92	96.00
0.554	1132.	435.	2.60	49.3	1.0	1.121	5575.	1.06	88.81	51.46	95.93
0.554	1268.	464.	2.73	52.6	1.0	1.067	5584.	1.04	96.05	51.26	95.84

ENGINE 31

SUPPLEMENTARY DATA

MO	WS	WHX	WT	AO	AHX	AOT
			ALTITUDE - 0. FEET			
0.50	1613.	676.	2289.	37.79	15.84	53.63
0.75	1859.	676.	2535.	29.02	10.55	39.57
1.00	2383.	676.	3059.	27.87	7.91	35.78
			ALTITUDE - 10000. FEET			
0.60	1227.	562.	1789.	33.51	15.35	48.86
0.90	1564.	676.	2240.	28.46	12.30	40.76
1.20	2046.	676.	2722.	27.87	9.21	37.08
1.40	2636.	676.	3312.	30.76	7.89	38.65
1.60	3322.	676.	3998.	33.87	6.89	40.76
			ALTITUDE - 20000. FEET			
0.77	966.	436.	1402.	29.64	13.38	43.02
1.00	1192.	545.	1737.	28.21	12.90	41.11
1.20	1461.	676.	2137.	28.78	13.32	42.10
1.50	2026.	676.	2702.	31.88	10.64	42.52
1.80	2926.	676.	3602.	38.30	8.85	47.15
			ALTITUDE - 30000. FEET			
1.17	950.	425.	1375.	28.58	12.78	41.36
1.30	1097.	510.	1607.	29.59	13.76	43.35
1.40	1228.	572.	1800.	30.75	14.32	45.07
1.50	1378.	676.	2054.	32.18	15.79	47.97
1.90	2226.	676.	2902.	40.95	12.43	53.38
2.40	4100.	676.	4776.	59.49	9.81	69.30
			ALTITUDE - 36000. FEET			
1.39	939.	418.	1357.	30.57	13.61	44.18
1.50	1069.	500.	1569.	32.18	15.05	47.23
1.60	1200.	553.	1753.	33.86	15.60	49.46
1.70	1354.	621.	1975.	35.94	16.48	52.42
2.00	1952.	676.	2628.	43.95	15.22	59.17
2.40	3179.	676.	3855.	59.48	12.65	72.13
2.80	5134.	676.	5810.	82.03	10.80	92.83

ENGINE 31 CONT'D.

SUPPLEMENTARY DATA

MO	WS	WHX	WT	AO	AHX	AOT
			ALTITUDE - 40000. FEET			
1.52	901.	412.	1313.	32.44	14.83	47.27
1.65	1055.	484.	1539.	34.91	16.01	50.92
1.85	1341.	621.	1962.	39.56	18.32	57.88
2.00	1613.	676.	2289.	43.95	18.42	62.37
2.50	2963.	676.	3639.	64.35	14.68	79.03
3.00	5333.	676.	6009.	96.05	12.17	108.22
			ALTITUDE - 50000. FEET			
1.86	841.	379.	1220.	39.83	17.95	57.78
2.00	1000.	450.	1450.	43.95	19.78	63.73
2.10	1130.	500.	1630.	47.29	20.92	68.21
2.20	1277.	567.	1844.	50.97	22.63	73.60
2.50	1837.	676.	2513.	64.35	23.68	88.03
3.00	3305.	676.	3981.	96.05	19.65	115.70
			ALTITUDE - 60000. FEET			
2.19	782.	331.	1113.	50.60	21.42	72.02
2.25	843.	365.	1208.	53.02	22.96	75.98
2.35	950.	396.	1346.	57.21	23.85	81.06
2.40	1010.	427.	1437.	59.53	25.17	84.70
2.70	1449.	558.	2007.	75.70	29.15	104.85
3.00	2049.	676.	2725.	96.05	31.69	127.74
			ALTITUDE - 70000. FEET			
2.53	735.	263.	998.	66.26	23.71	89.97
2.60	796.	292.	1088.	69.81	25.61	95.42
2.70	897.	333.	1230.	75.70	28.10	103.80
2.80	1009.	382.	1391.	82.03	31.05	113.08
2.90	1132.	422.	1554.	88.81	33.11	121.92
3.00	1268.	450.	1718.	96.05	34.09	130.14

FAN RAMJET SPECIFIC IMPULSE

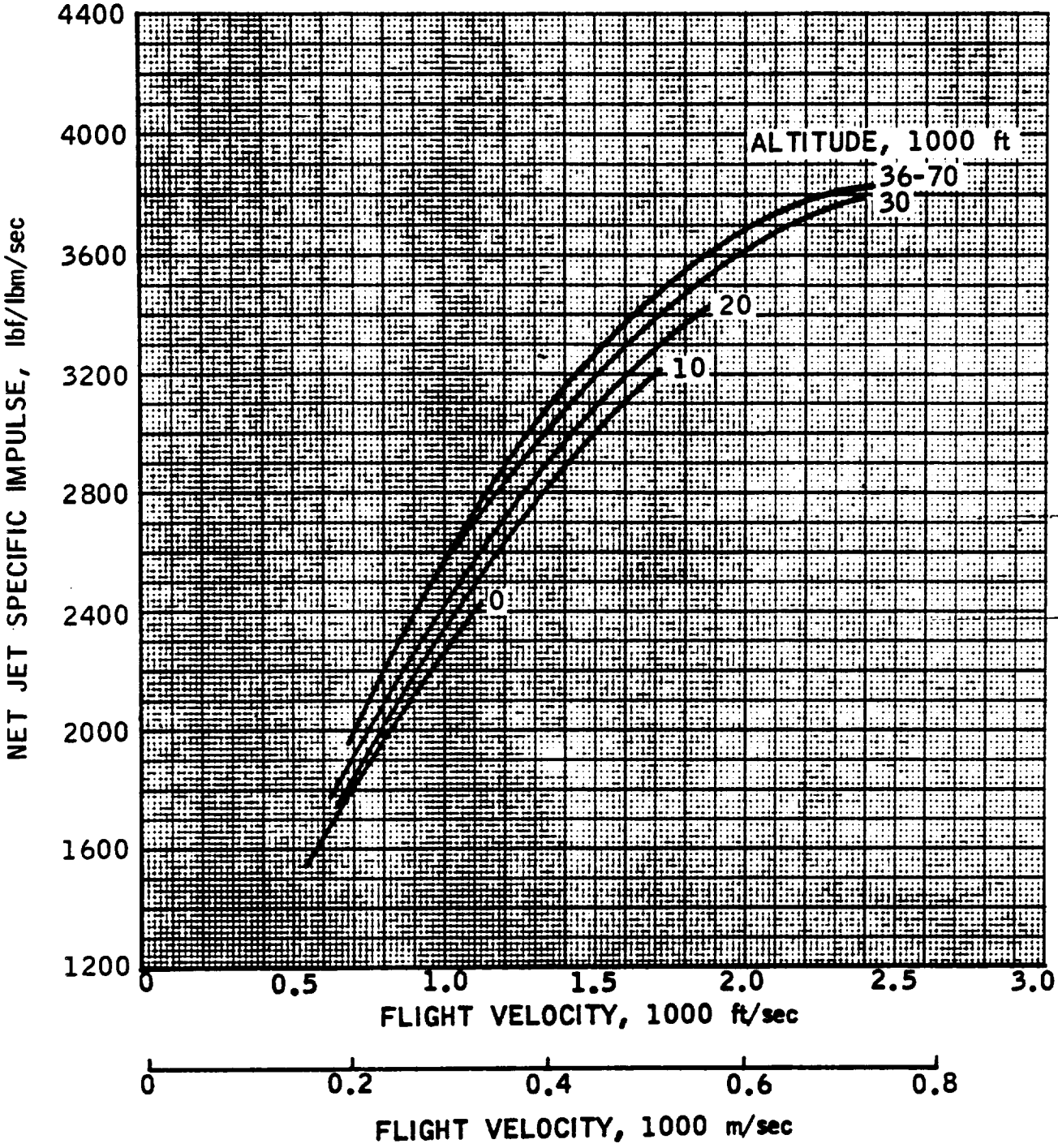

FAN RAMJET THRUST

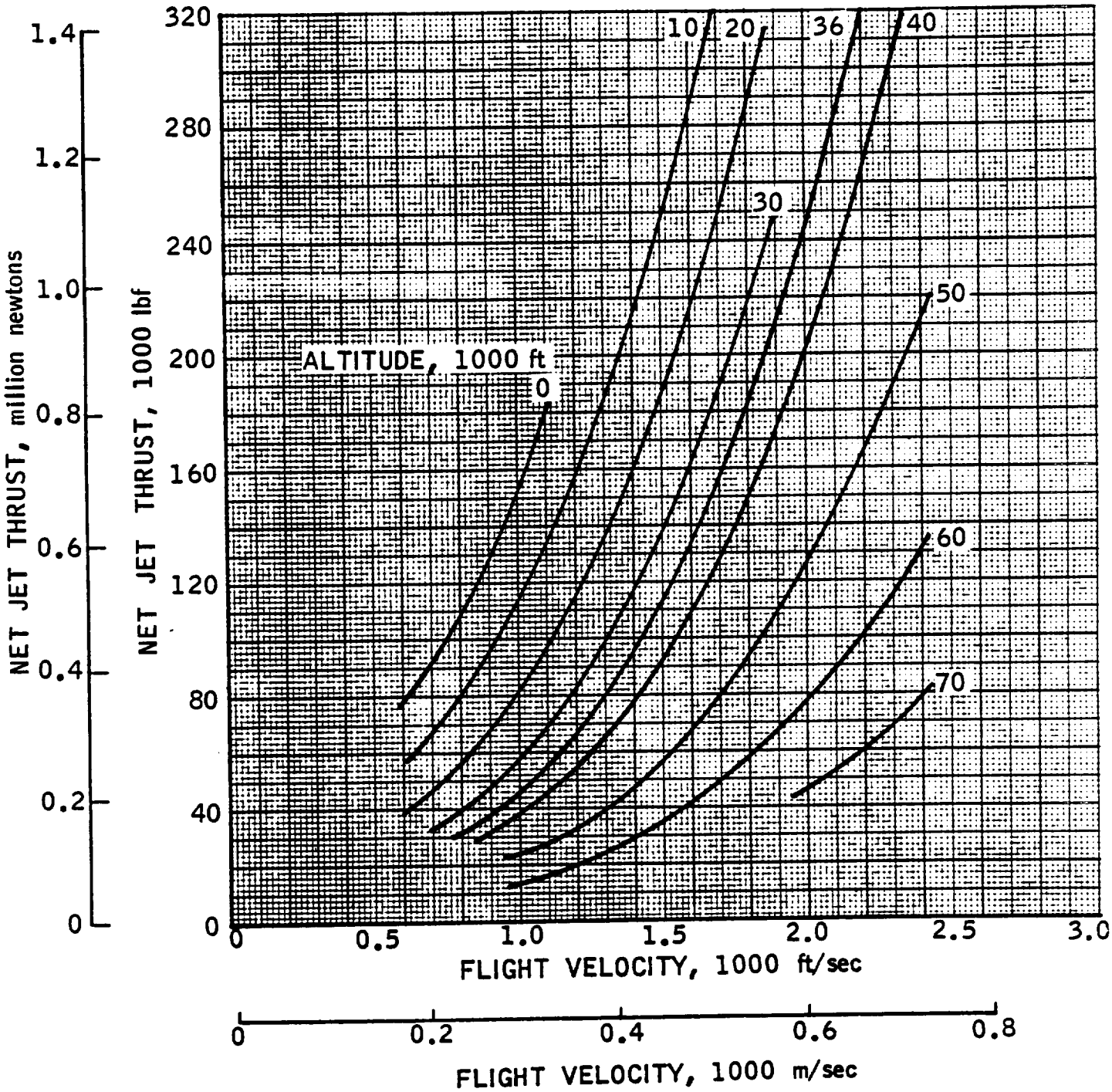

FAN RAMJET CAPTURE AREA

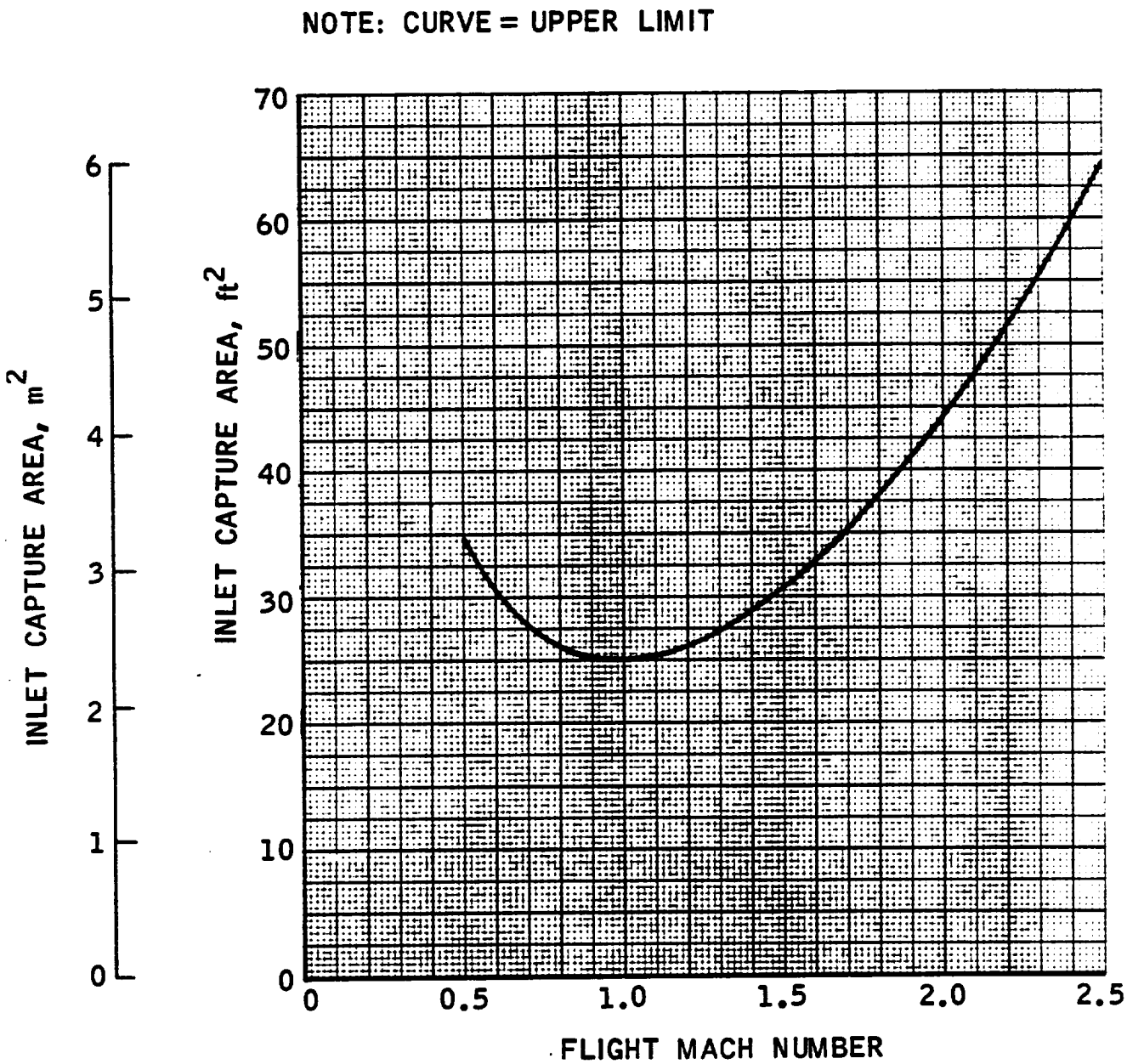

This Page Intentionally Blank

Eng. No. 31

FAN OPERATION SPECIFIC IMPULSE

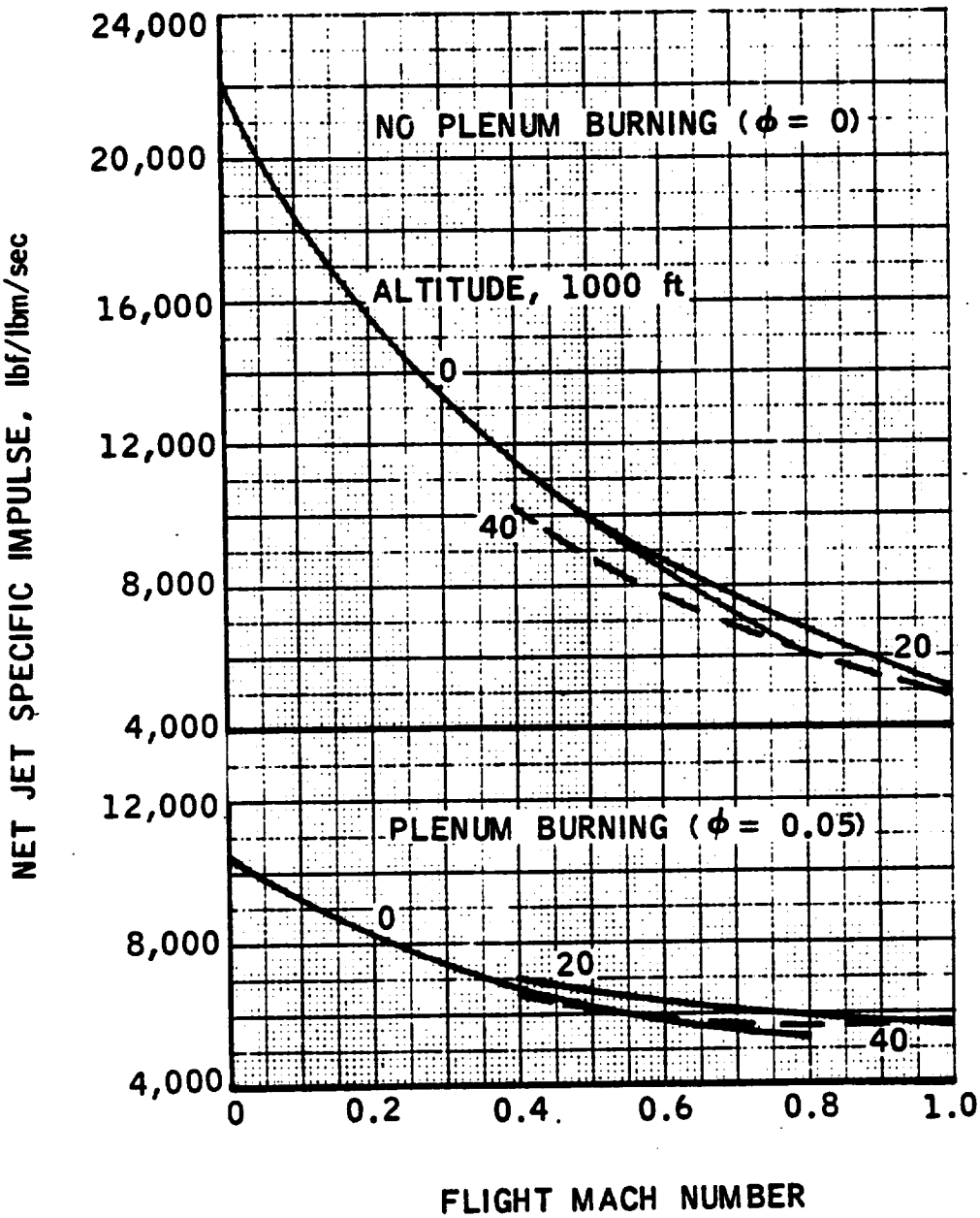

FAN OPERATION THRUST

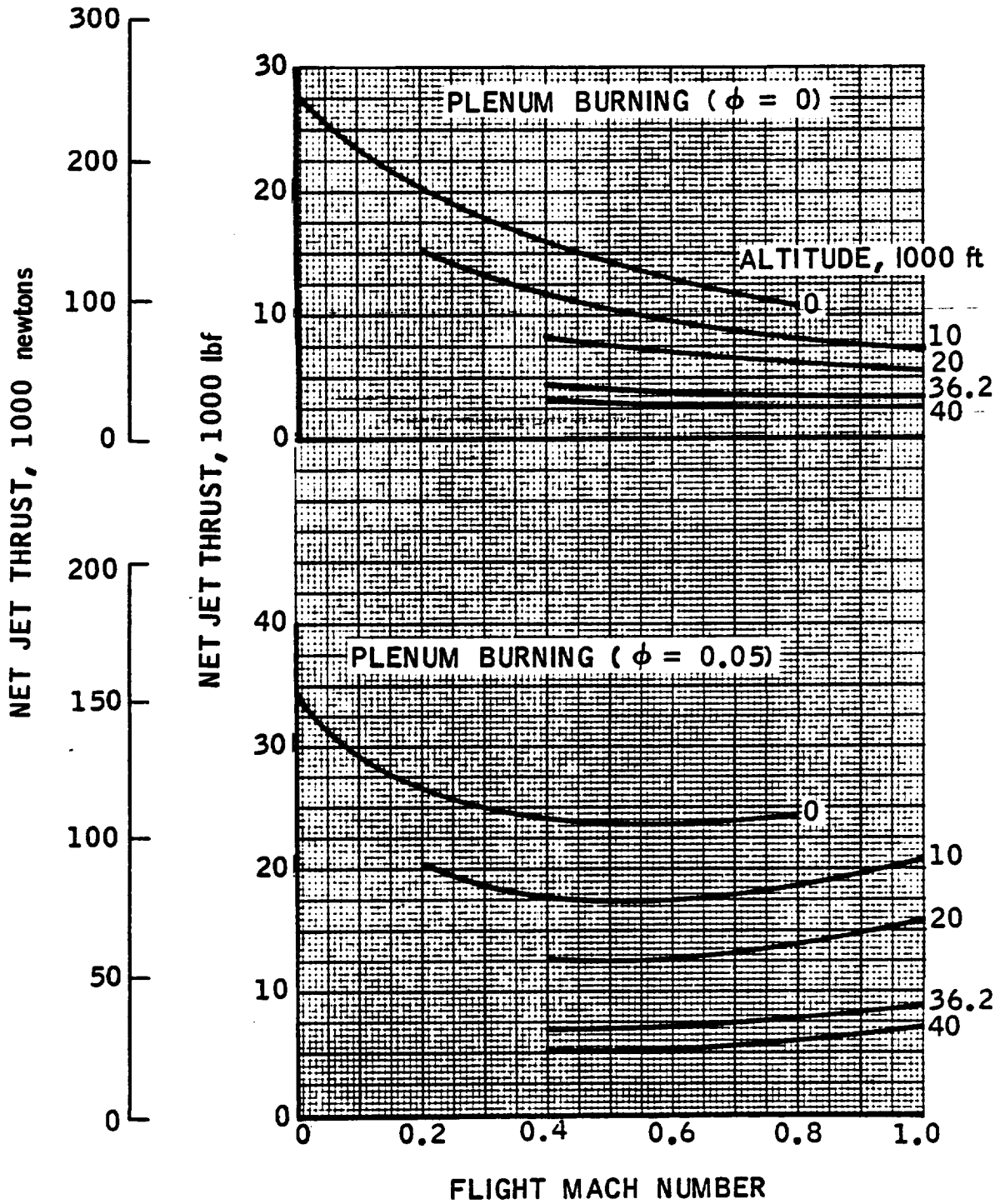

FAN OPERATION SPECIFIC IMPULSE

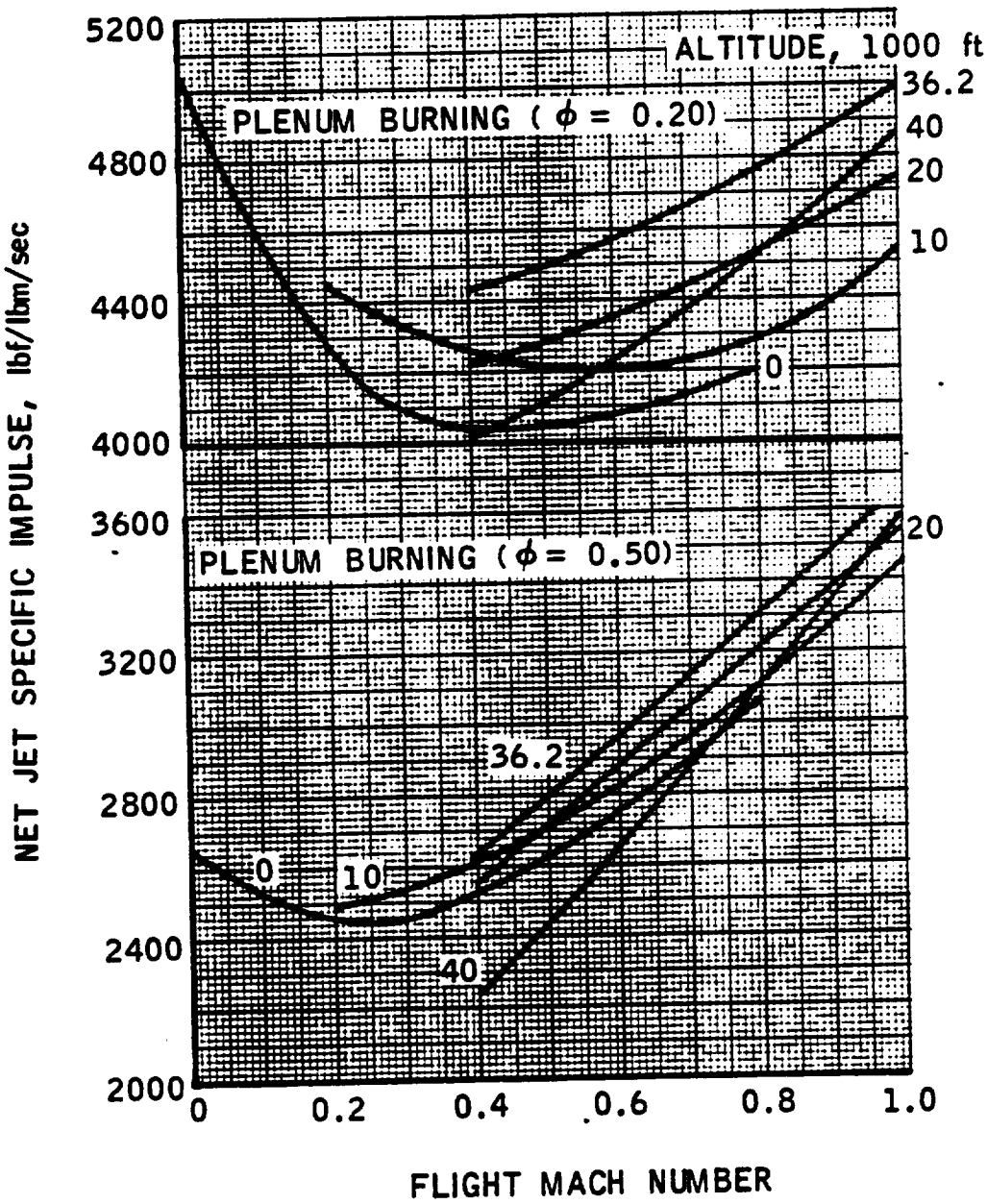

FAN OPERATION THRUST

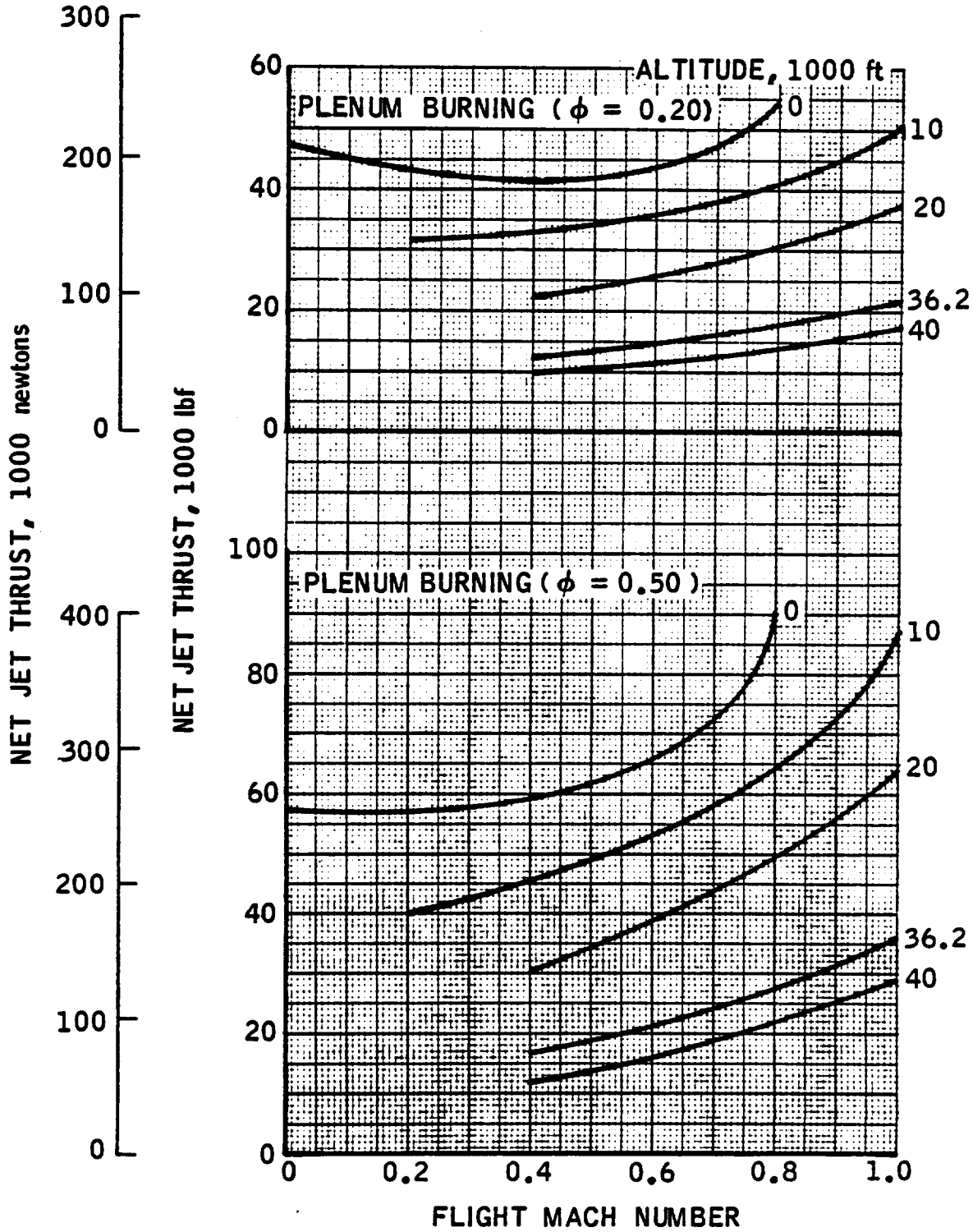

FAN OPERATION SPECIFIC IMPULSE

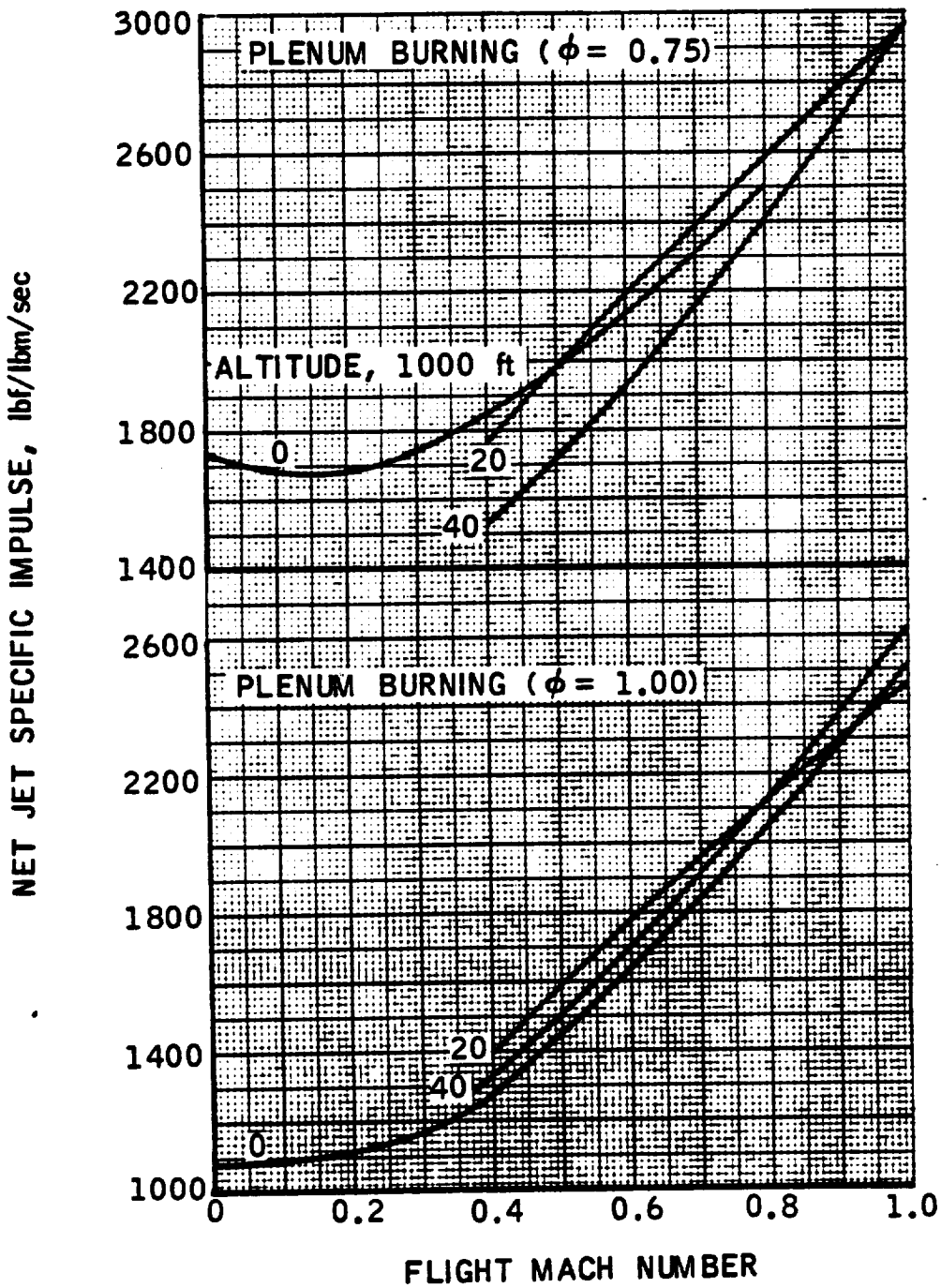

FAN OPERATION THRUST

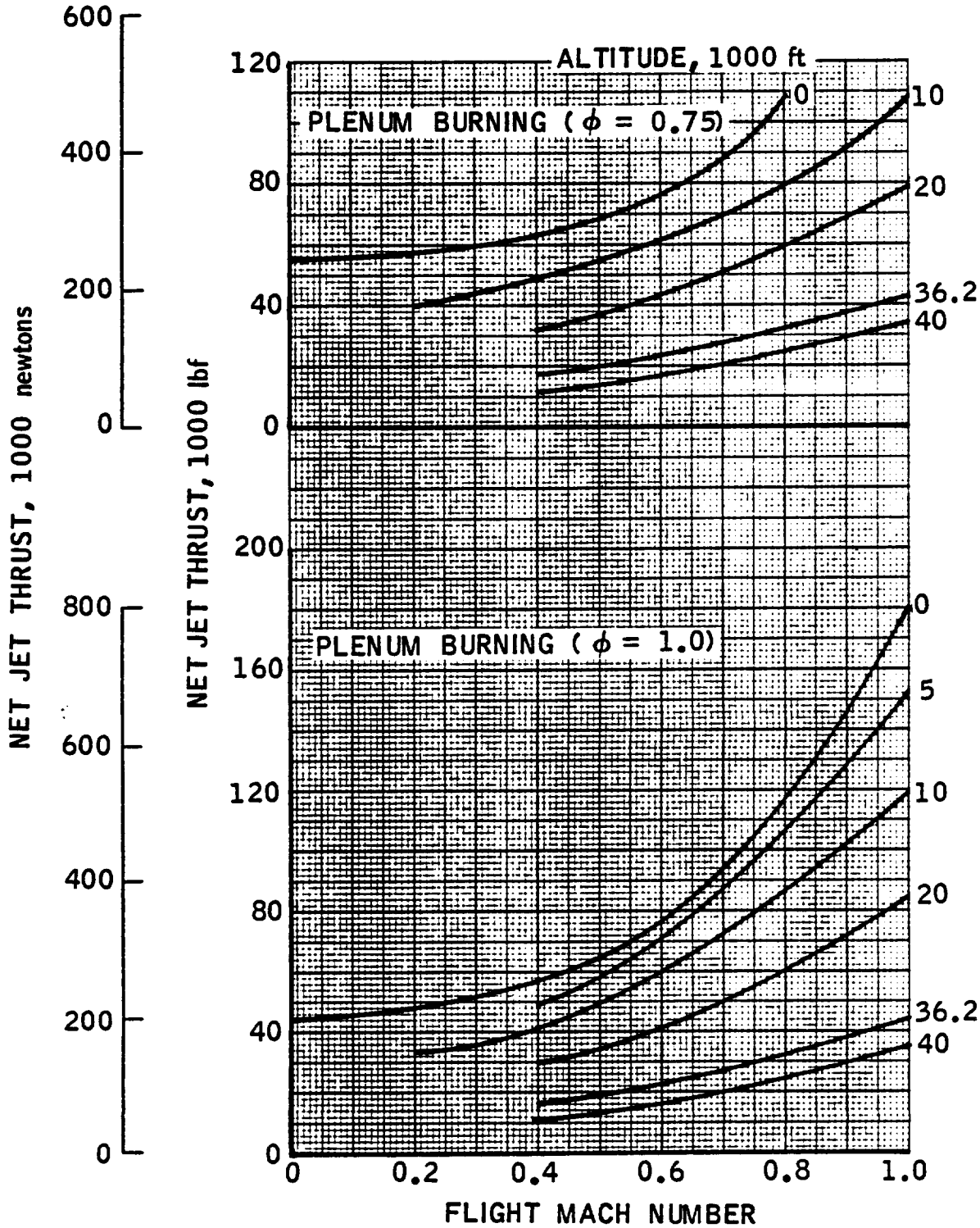

Cross-Reference Information

Subsonic Combustion Ramjet Performance Maps may be found in the Engine No. 9 Section.

RECYCLED SUPERCHARGED SCRAMLACE, NO. 32

Technical Description

This engine is capable of four operating modes: (1) recycled supercharged liquid air cycle ejector mode, (2) subsonic combustion ramjet, (3) supersonic combustion mode, and (4) fan only operation. The engine includes a stowable low pressure ratio single stage fan and fan drive subsystem employing an air-breathing gas generator, a primary rocket subsystem which operates on liquid hydrogen and liquid air. The liquid air is derived from an air liquefaction unit consisting of a precooler and condenser and employing the liquid hydrogen fed to the engine for air condensing. Following the rocket subsystem is a mixer, diffuser, afterburner and variable geometry exit nozzle.

Initial engine operation is in the recycled supercharged liquid air cycle ejector mode and employes near stoichiometric afterburning as a result of the recycle operation (see discussion - Engine 23). At a flight Mach number in the vicinity of 2 - 3 transition to subsonic combustion ramjet is accomplished by simultaneous shutdown of the rocket and fan subsystems and retraction of the fan unit from the main flow stream of the engine. The fan in being retracted, effects a closure of the heat exchanger subsystem from the inlet diffuser for subsequent high speed operation. Subsonic combustion ramjet mode is continued with a stoichiometric combustion operation and a programmed variable throat area to effect maximum thrust consistent with maximum performance. At approximately Mach 6, conversion to supersonic combustion ramjet mode is made by simultaneously transferring the fuel injection and combustion forward to the vicinity of the primary rocket units and full opening of the variable geometry exit. Following entry, flyback or cruise-back is accomplished in the subsonic ramjet mode. Low speed loiter and landing thrust is provided by the fan only operation mode with plenum burning as required for thrust production.

Engine Operating Schematic

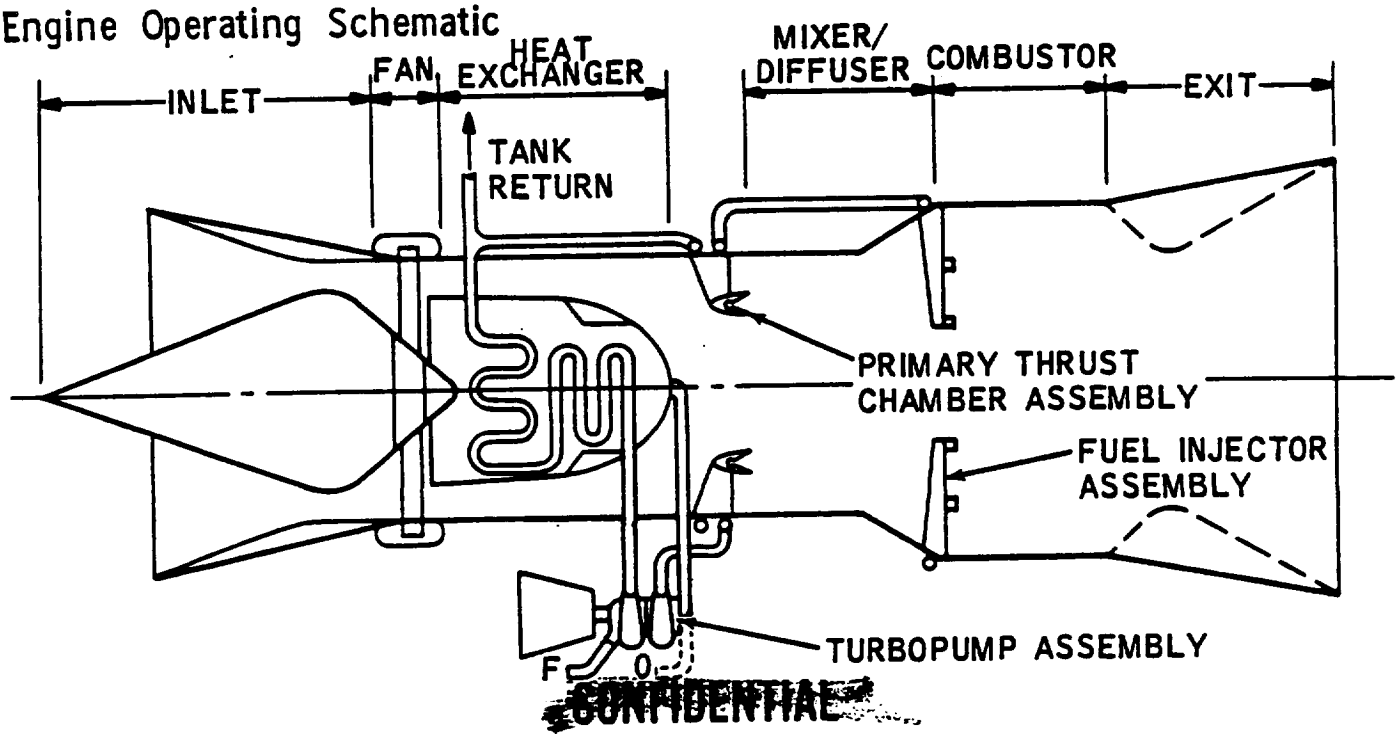

Engine Design Parameters

P_c = 1000 psia, W_s/W_p = 2.00, O/F = 34.3, ϕ_p = 1.0, ϕ_s = 1.46, PR_f = 1.30, ϕ_{cond} = 8.0, ϕ_{prec} = 4.0, A_4/A_3 = 2.00, P_{T2}/P_{TO} ref. Fig. 11

Engine Operating Mode Block Diagrams

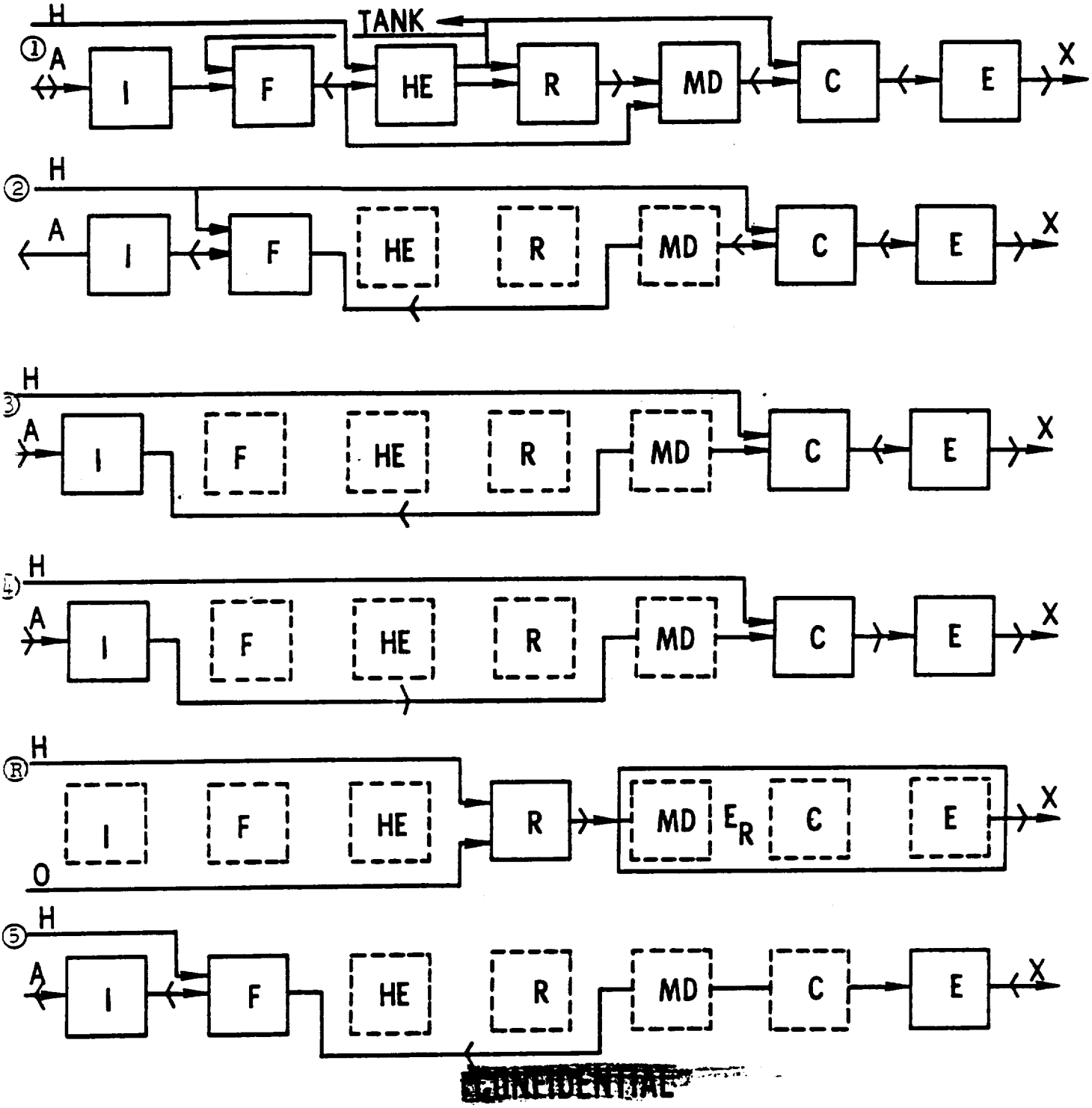

RECYCLED SUPERCHARGED SCRAMLACE (ENGINE NO. 32)

COMPOSITE ENGINE STUDY

CLASS 1 PHASE

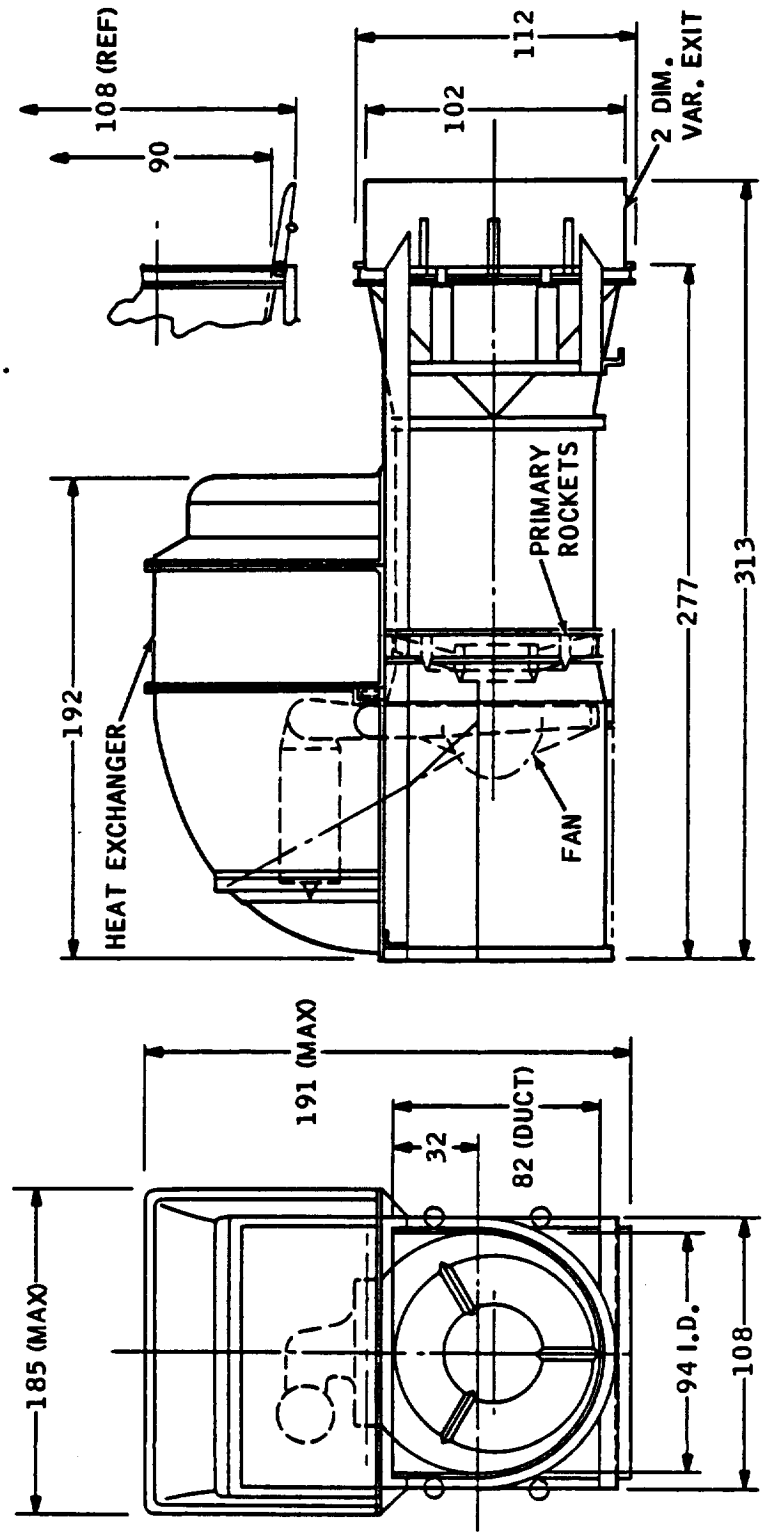

Engine Physical Characteristics

Eng. No. 32

WEIGHT, THRUST/WEIGHT*	English Units	International Units
Subsystem Components	NOTE: Engine weight statement does not include nozzle exit surfaces considered to be vehicle affixed (Fig 6)	
Fan Assembly	1475 LBM	669.1 KG
Gas Generator	1310	594.2
Structure and Actuator	921	418
Heat Exchanger	3214	1458
Catalyst	1260	571.5
Structure	1300	589.7
Primary Rockets	765	347
Turbopumps and Plumbing	759	344
Structure	1416	642.3
Mixer	938	426
Diffuser	375	170
Combustor	620	281
Exit and Centerbody	1890	857.3
Manifolding and Contingency	500	227
Uninstalled Weight	16,743 LBM	7595 KG
Thrust, SLS	250,000 LBF	1,112,055 N
Uninstalled Thrust/weight	14.9 LBF/LBM	146 N/KG
Inlet Weight (typical)	12,000 LBM	5443 KG
Installed Weight	28,743 LBM	13,038 KG
Installed Thrust/weight	8.7 LBF/LBM	85 N/KG

LENGTH		
Uninstalled Length	26.1 FT	7.96 M
Inlet Length (typical)	81.6	24.9
Installed Length	107.7 FT	32.83 M

FLOW AREAS		
Inlet Cowl, Ac	100.0 FT^2	9.29 M^2
Mixer, A_3	31.9	2.96
Combustor, A_4	64.0	6.0
Nozzle Exit, max A_6**	400.0 FT^2	37.2 M^2

* Based on maximum internal pressure = 100 psia (689.5 N/M^2)
**For ejector mode, see engine data

ENGINE THRUST / WEIGHT

EFFECT OF SIZE AND INTERNAL PRESSURE

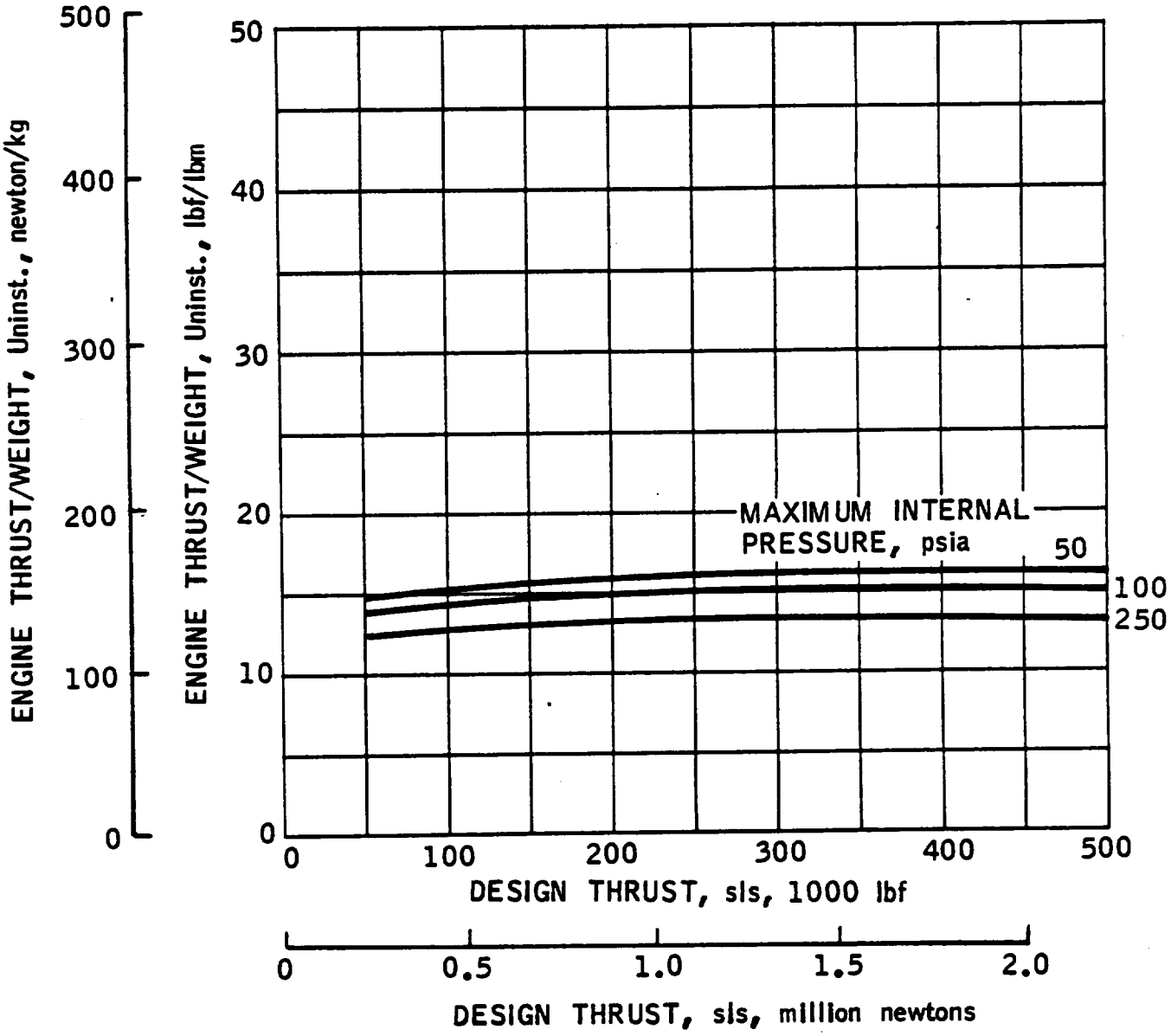

Cross-Reference Information

Ejector Mode Performance Maps and Tabular Data may be found in the Engine No. 31 Section.

Fan Ramjet Mode Performance Maps may be found in the Engine No. 31 Section.

Subsonic Combustion Ramjet Performance Maps may be found in the Engine No. 10 Section.

Supersonic Combustion Ramjet Performance Information may be found in the Engine No. 10 Section.

Fan Operation Performance Maps may be found in the Engine No. 31 Section.

DISTRIBUTION

Copy No.	Transmitted to
1.	NASA Office of Resident Representative Jet Propulsion Laboratory 4800 Oak Grove Drive Pasadena, California 91103 Attn.: Office of Technical Information
2.	NASA Office of Resident Representative Jet Propulsion Laboratory 4800 Oak Grove Drive Pasadena, California 91103 Attn.: Contracts Management Division
3.	NASA Office of Resident Representative Jet Propulsion Laboratory 4800 Oak Grove Drive Pasadena, California 91103 Attn.: General Counsel for Patent Matters
4 to 7.	NASA Headquarters Washington, D. C. 20546 Attn.: Chief, Liquid Propulsion Technology, RPL Office of Advanced Research and Technology
8 to 32.	NASA Scientific and Technical Information Facility P. O. Box 33 College Park, Maryland 20740
33.	NASA Headquarters Washington, D. C. 20546 Attn.: Mr. Vincent L. Johnson Director, Launch Vehicles and Propulsion, SV Office of Space Science and Applications
34.	NASA Headquarters Washington, D. C. 20546 Attn.: Mr. Edward L. Gray Director, Advanced Manned Missions, MT Office of Manned Space Flight
35.	NASA Ames Research Center Moffett Field, California 24035 Attn.: Mr. Clarence A. Syvertson Mission Analysis Division

DISTRIBUTION (Continued)

Copy No.	Transmitted to
36.	Marshall Space Flight Center Huntsville, Alabama 35812 Attn.: Technical Monitor Mr. Donald Thompson
37.	Langley Research Center Langley Station Hampton, Virginia 23365 Attn.: Mr. Kenneth Pierpont
38.	NASA Ames Research Center Moffett Field, California 94035 Attn.: Mr. Thomas Gregory Mission Analysis Division
39, 40.	NASA Ames Research Center Moffett Field, California 94035 Attn.: Harvey J. Allen Director
41, 42.	NASA Goddard Space Flight Center Greenbelt, Maryland 20771 Attn.: Merland L. Moseson Code 620
43, 44.	NASA Jet Propulsion Laboratory California Institute of Technology 4800 Oak Grove Drive Pasadena, California 91103 Attn.: Henry Burlage, Jr. Propulsion Div., 38
45, 46.	NASA Langley Research Center Langley Station Hampton, Virginia 23365 Attn.: Dr. Floyd L. Thompson Director
47, 48.	NASA Lewis Research Center 21000 Brookpark Road Cleveland, Ohio 44135 Attn.: Dr. Abe Silverstein Director

DISTRIBUTION (Continued)

Copy No.	Transmitted to
49, 50.	NASA Marshall Space Flight Center Huntsville, Alabama 35812 Attn.: Hans G. Paul Code R-P&VED
51, 52.	NASA Manned Spacecraft Center Houston, Texas 77001 Attn.: Dr. Robert R. Gilruth Director
53, 54.	NASA Office of Resident Representative Jet Propulsion Laboratory 4800 Oak Grove Drive Pasadena, California 91103 Attn.: Robert W. Kamm Director
55, 56.	NASA John F. Kennedy Space Center Cocoa Beach, Florida 32931 Attn.: Dr. Kurt H. Debus
57.	Aeronautical Systems Division Air Force Systems Command Wright-Patterson Air Force Base Dayton, Ohio 45433 Attn.: D. L. Schmidt Code ASRCNC-2
58.	Air Force Missile Development Center Holloman Air Force Base, New Mexico Attn.: Maj. R. E. Bracken Code MDGRT
59.	Air Force Missile Test Center Patrick Air Force Base, Florida Attn.: L. J. Ullian
60.	Air Force Systems Division Air Force Unit Post Office Los Angeles 45, California Attn.: Col. Clark Technical Data Center

DISTRIBUTION (Continued)

Copy No.	Transmitted to
61.	Arnold Engineering Development Center Arnold Air Force Station Tullahoma, Tennessee Attn.: Dr. H. K. Doetsch
62.	Bureau of Naval Weapons Department of the Navy Washington 25, D. C. Attn.: J. Kay RTMS-41
63.	Defense Documentation Center Headquarters Cameron Station, Building 5 5010 Duke Street Alexandria, Virginia 22314 Attn.: TISIA
64.	Headquarters, U. S. Air Force Washington 25, D. C. Attn.: Col. C. K. Stambaugh AFRST
65.	Picatinny Arsenal Dover, New Jersey 07801 Attn.: I. Forsten, Chief Liquid Propulsion Laboratory SMUPA-DL
66.	Air Force Rocket Propulsion Laboratory Research and Technology Division Air Force Systems Command Edwards, California 93523 Attn.: H. Main, RPRR
67.	Research and Technology Division Air Force Aero Propulsion Laboratory Wright-Patterson Air Force Base, Ohio 45433 Attn.: H. C. Long, APRP
68.	U. S. Atomic Energy Commission Technical Information Services Box 62 Oak Ridge, Tennessee Attn.: A. P. Huber Oak Ridge Gaseous Diffusion Plant (ORGDP) P. O. Box P

DISTRIBUTION (Continued)

Copy No.	Transmitted to
69.	U. S. Army Missile Command Redstone Arsenal Alabama 35809 Attn.: Dr. Walter Wharton
70.	U. S. Naval Ordnance Test Station China Lake, California 93557 Attn.: Chief, Missile Propulsion Division Code 4562
71.	Air Force Systems Command Space Systems Division Inglewood, California 90045 Attn.: Lt. Col. Kenneth Mc Aaron
72.	Chemical Propulsion Information Agency Applied Physics Laboratory 8621 Georgia Avenue Silver Spring, Maryland 20910 Attn.: Neil Safeer
73.	Aerojet-General Corporation P. O. Box 296 Azusa, California 91703 Attn.: L. F. Kohrs
74.	Aerojet-General Corporation P. O. Box 1947 Sacramento, California 95809 Attn.: R. Stiff Technical Library, Bldg. 2015, Dept. 2410
75.	Aeronutronic Philco Corporation Ford Road Newport Beach, California 92663 Attn.: D. A. Carrison
76.	Aerospace Corporation 2400 East El Segundo Boulevard P. O. Box 95085 Los Angeles, California 90045 Attn.: John G. Wilder Propulsion Dept. MS-2293

DISTRIBUTION (Continued)

Copy No.	Transmitted to
77.	Arthur D. Little, Inc. 20 Acorn Park Cambridge, Massachusetts 02140 Attn.: E. Karl Bastress
78.	Astropower Laboratory Douglas Aircraft Company 2121 Paularino Newport Beach, California 92663 Attn.: Dr. George Moc Director, Research
79.	Astrosystems International, Inc. 1275 Bloomfield Avenue Fairfield, New Jersey 07007 Attn.: A. Mendenhall
80.	Atlantic Research Corporation Edsall Road and Shirley Highway Alexandria, Virginia 22314 Attn.: A. Scurlock
81.	Beech Aircraft Corporation Boulder Division Box 631 Boulder, Colorado Attn.: J. H. Rodgers
82.	Bell Aerosystems Company P. O. Box 1 Buffalo, New York 14240 Attn.: W. M. Smith
83.	Bendix Systems Division Bendix Corporation 3300 Plymouth Road Ann Arbor, Michigan Attn.: John M. Brueger
84.	Boeing Company P. O. Box 3707 Seattle, Washington 98124 Attn.: J. D. Alexander

DISTRIBUTION (Continued)

Copy No.	Transmitted to
85.	Missile Division Chrysler Corporation P. O. Box 2628 Detroit, Michigan 48231 Attn.: John Gates
86.	Wright Aeronautical Division Curtiss-Wright Corporation Wood-Ridge, New Jersey 07075 Attn.: G. Kelley
87.	Missile and Space Systems Division Douglas Aircraft Company, Inc. 3000 Ocean Park Boulevard Santa Monica, California 90406 Attn.: R. W. Hallet Chief Engineer, Advanced Space Tech.
88.	Aircraft Missiles Division Fairchild Hiller Corporation Hagerstown, Maryland 10 Attn.: J. S. Kerr
89.	General Dynamics/Astronautics P. O. Box 1128 San Diego, California 92112 Attn.: Frank Dore Library & Information Services (128-00)
90.	Re-Entry Systems Department General Electric Company 3198 Chestnut Street Philadelphia, Pennsylvania 19101 Attn.: F. E. Schultz
91.	Advanced Engine & Technology Dept. General Electric Company Cincinnati, Ohio 45215 Attn.: D. Suichu
92.	Grumman Aircraft Engineering Corp. Bethpage, Long Island New York Attn.: Joseph Gavin

DISTRIBUTION (Continued)

Copy No.	Transmitted to
93.	Ling-Temco-Vought Corporation Astronautics P. O. Box 5907 Dallas, Texas 75222 Attn.: Warren C. Trent
94.	Lockheed-California Company 2555 North Hollywood Way Burbank, California 91503 Attn.: G. D. Brewer
95.	Lockheed Missiles and Space Company P. O. Box 504 Sunnyvale, California 94088 Attn.: Y. C. Lee Technical Information Center
96.	Lockheed Propulsion Company P. O. Box 111 Redlands, California 92374 Attn.: H. L. Thackwell
97.	Baltimore Division Martin-Marietta Corporation Baltimore, Maryland 21203 Attn.: John Calathes (3214)
98.	Denver Division Martin-Marietta Corporation P. O. Box 179 Denver, Colorado 80201 Attn.: J. D. Goodlette (A-241)
99.	McDonnell Aircraft Corporation P. O. Box 516 Municipal Airport St. Louis, Missouri 63166 Attn.: R. A. Herzmark
100.	Space & Information Systems Division North American Aviation, Inc. 12214 Lakewood Boulevard Downey, California 90241 Attn.: H. Storms

DISTRIBUTION (Continued)

Copy No.	Transmitted to
101.	Rocketdyne North American Aviation, Inc. 6633 Canoga Avenue Canoga Park, California 91304 Attn.: E. B. Monteath Library, 586-306
102.	Northrop Space Laboratories 3401 West Broadway Hawthorne, California Attn.: Dr. William Howard
103.	Astro-Electronics Division Radio Corporation of America Princeton, New Jersey 08540 Attn.: S. Fairweather
104.	Reaction Motors Division Thiokol Chemical Corporation Denville, New Jersey 07832 Attn.: Arthur Sherman
105.	Republic Aviation Corporation Farmingdale Long Island, New York Attn.: Dr. William O'Donnell
106.	Space-General Corporation 9200 East Flair Avenue El Monte, California 91734 Attn.: C. E. Roth
107.	Stanford Research Institute 333 Ravenswood Avenue Menlo Park, California 94025 Attn.: Lionel Dickinson
108.	Space Technology Laboratories TRW Incorporated One Space Park Redondo Beach, California 90278 Attn.: G. W. Elverum

DISTRIBUTION (Continued)

Copy No.	Transmitted to
109.	TAPCO Division TRW, Incorporated 23555 Euclid Avenue Cleveland, Ohio 44117 Attn.: P. T. Angell
110.	Thiokol Chemical Corporation Huntsville Division Huntsville, Alabama Attn.: John Goodloe
111.	Research Laboratories United Aircraft Corporation 400 Main Street East Hartford, Connecticut 06108 Attn.: Erle Martin
112.	United Aircraft Corporation Pratt & Whitney Aircraft Division East Hartford, Connecticut 06108 Attn: W. Sens
113.	United Aircraft Corporation Pratt & Whitney Aircraft Division Florida Research and Development Center West Palm Beach, Florida 33401 Attn.: R. Coar