FACILITY FORM

[redacted]

(ACCESSION NUMBER) (THRU)

[redacted]231 21

(PAGES) (CODE)

CR-15316 28

(NASA CR OR TMX OR AD NUMBER) (CATEGORY)

[redacted]

THE Marquardt VAN NUYS, CALIFORNIA

CLASS O ENGINE FACT SHEETS

Part 2 of 2

A STUDY OF COMPOSITE PROPULSION SYSTEMS FOR ADVANCED LAUNCH VEHICLE APPLICATIONS

VOLUME FIVE

Report 25,194

Contract NAS7-377

The Marquardt Corporation
Van Nuys, California

September 1966

GROUP 4
Downgraded at 3 year
intervals; declassified
after 12 years

U. S. Government Agencies and
Contractors Only

This document contains information affecting the national defense of the United States within the meaning of the Espionage Laws, Title 18, U.S.C. Section 793 and 794, the transmission or revelation of which in any manner to an unauthorized person is prohibited by law.

DOWNGRADED AT 3 YEAR
INTERVALS: DECLASSIFIED AFTER
12 YEARS
DOD DIR 5200.10

[redacted]

VOLUME LOCATOR

This volume is one of seven comprising documentation for Contract NAS7-377, "A Study of Composite Propulsion System for Advanced Launch Vehicle Applications." Its placement in the report series is indicated below:

Volume 1	Summary Report
Volume 2	Main Technical Report, Part 1
Volume 3	Main Technical Report, Part 2
Volume 4	Class 0 Fact Sheets, Part 1
→ Volume 5	Class 0 Fact Sheets, Part 2
Volume 6	Class 1 Engine Information
Volume 7	Class 2 Engine Information

TABLE OF CONTENTS

CLASS O ENGINE FACT SHEETS (Volume 5)		Page
Engine 17,	Air Augmented LACE - Ramjet	249
Engine 18,	Air Augmented LACE - Convertible Ramjet	269
Engine 19,	Recycled Air Augmented LACE - Ramjet	276
Engine 20,	Recycled Air Augmented LACE - Convertible Ramjet	296
Engine 21,	RamLACE	303
Engine 22,	ScramLACE	323
Engine 23,	Recycled RamLACE	330
Engine 24,	Recycled ScramLACE	350
Engine 25,	Supercharged Air Augmented LACE - Ramjet	357
Engine 26,	Supercharged Air Augmented LACE - Convertible Ramjet	368
Engine 27,	Recycled Supercharged Air Augmented LACE - Ramjet	373
Engine 28,	Recycled Supercharged Air Augmented LACE - Convertible Ramjet	384
Engine 29,	Supercharged RamLACE	389
Engine 30,	Supercharged ScramLACE	400
Engine 31,	Recycled Supercharged RamLACE	405
Engine 32,	Recycled Supercharged ScramLACE	416
Engine 33,	Augmenter LACE	421
Engine 34,	Recycled Augmenter LACE	434
Engine 35,	Air Augmented Regenerative Monofuel Rocket - Ramjet	447
Engine 36,	Air Augmented Regenerative Monofuel Rocket - Convertible Ramjet	458
NOMENCLATURE		463-464
REFERENCES		465-466

ENGINE FACT SHEET

Class 0 Composite Launch Vehicle Engines

Engine Identification Number: 17 Air Augmented LACE-Ramjet

Engine Operating Modes

Summary: Number of Modes/ Transitions 5 ; Number of Discrete Modes Utilized 3

Mode Progression - Lift-off to Touch-down

(Take off) Air augmented Liquid Air Cycle Engine (LACE), simultaneous mixing and burning cycle (2000-3000 ft/sec) Ramjet, subsonic combustion (6000-8000 ft/sec) Rocket (Orbital speed, space maneuvering and deorbiting) Ramjet, subsonic combustion (Flyback) Air augmented LACE, simultaneous mixing and burning cycle (Landing)

Engine Propellant Requirements

Code: (R) = Required, (V) = Required for vacuum operation, (F) = Useable for flyback mode

- [R] Hydrogen, liquid, 37-40 °R
- [ ] Hydrogen, liquid, subcooled (25 °R)
- [ ] Hydrogen, gaseous
- [V] Oxygen, liquid, 162 °R
- [ ] Oxygen, liquid, subcooled
- [ ] Oxygen, gaseous
- [ ] Other _____

Engine Constituent Subsystems

Inlet, heat exchanger, rocket, mixer-combustor, exit

Engine General Arrangement and Operating Schematic

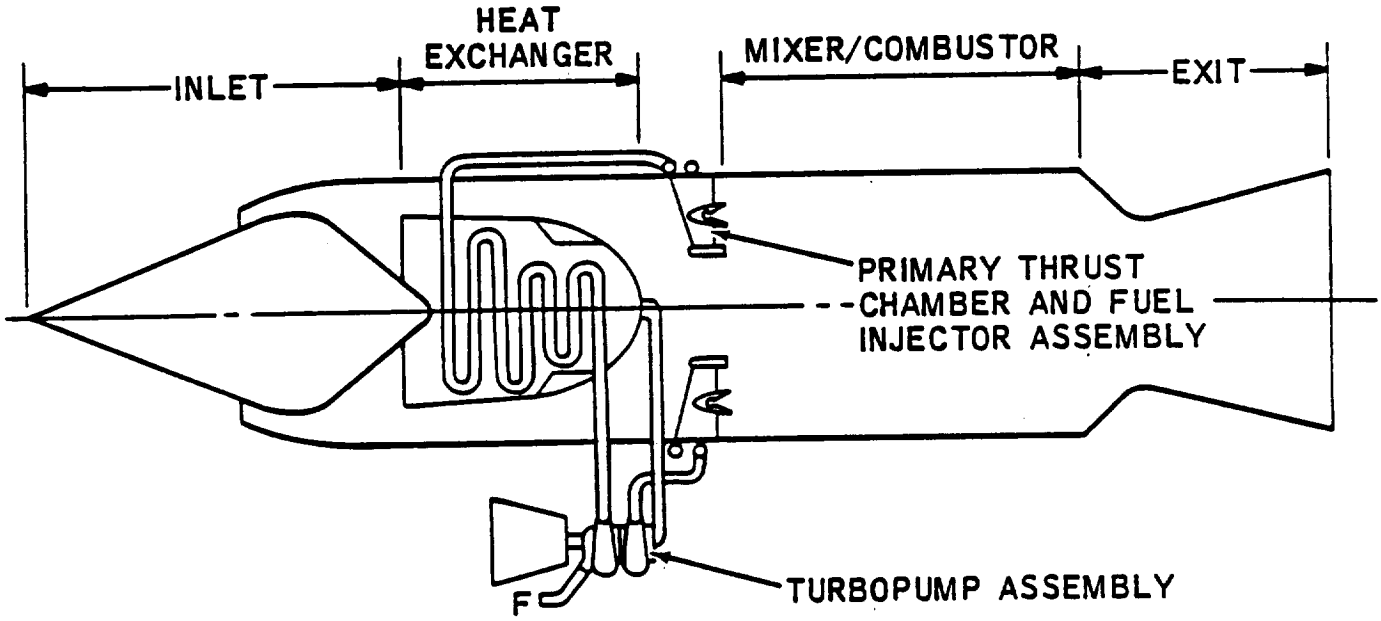

Eng. No. 17

Engine Internal Operating Parameters, nominal

$P_{c\text{-}LACE} = 1000$ psia, $\phi_{LACE} = 8.0$
W_s/W_p (SLS) = 0.887 (1.79), $\phi_{SEC\text{-}SLS} = 6.22$ (3.08)
$A_4/A_3 = 1.00$

Engine Operating Mode Block Diagrams

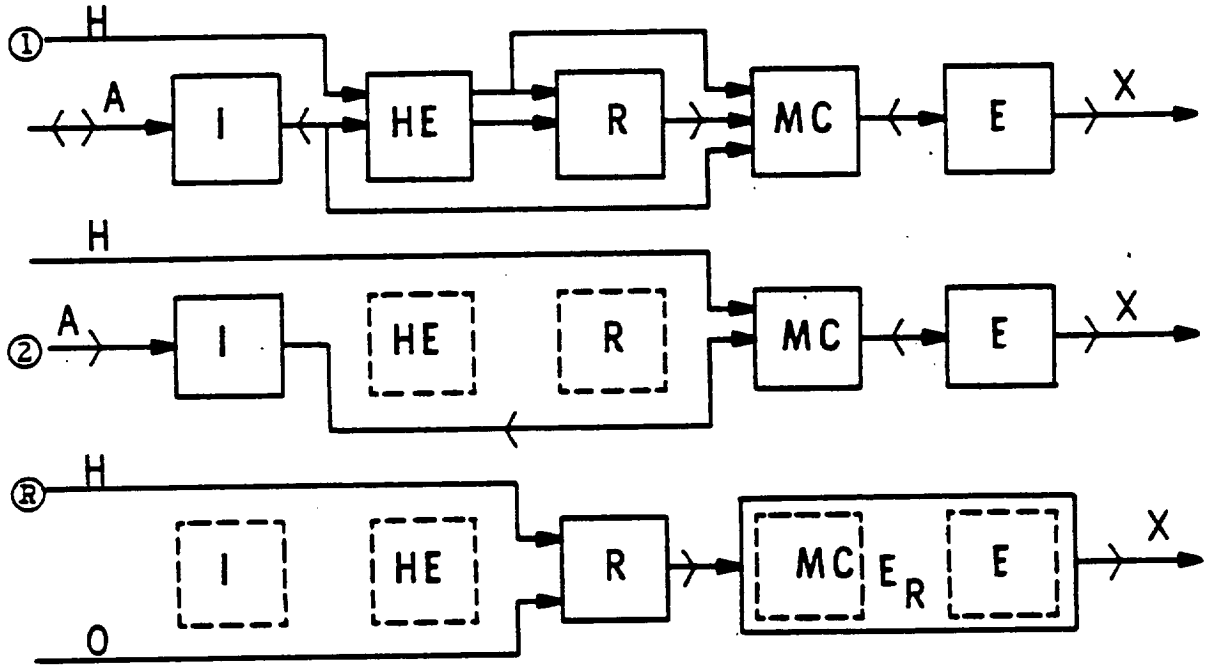

ENGINE PHYSICAL CHARACTERISTICS

Eng. No. 17-1

Thrust, sls	250,000 lbf	1,112,055 newton

Weight and Thrust/Weight Ratio

Measuring Units	(English)	(International)
Weight	lbm	kg
Thrust/Weight	lbf/lbm	newton/kg

(lbf/in^2) Maximum Engine Internal Pressure 1000 (newton/m^2)

Lightweight Estimate	50	100	250	344.7	689.5	1723.7
Subsystems:						
Fan						
Heat Exchanger	4878	5344	5861	2212.7	2424.0	2658.5
Primary Rocket	2555	2555	2555	1158.9	1158.9	1158.9
Mixer/Diffuser	748	1088	1496	339.3	493.5	678.6
Combustor/Exit	1496	1700	2312	678.6	771.1	1048.7
Contingency	480	534	636	217.7	242.2	288.5
Uninstalled Eng. Wt.	10157	11221	12920	4607.2	5089.8	5860.5
Thrust/Weight, Uninst.	24.6	22.3	19.3	241	219	189
Inlet Weight	2765	3160	4582	1254.2	1433.4	2078.4
Installed Eng. Wt.	12922	14381	17502	5861.4	6523.2	7938.9
Thrust/Weight, Inst.	19.3	17.4	14.3	189	171	140

Heavyweight Estimate						
Uninstalled Eng. Wt.	12188	13465	15504	5528.5	6107.7	7032.6
Thrust/Weight, Uninst.	20.5	18.6	16.1	201	182	158
Inlet Weight	11074	12656	17798	5023.2	5740.8	8073.2
Installed Eng. Wt.	23262	26121	33302	10551.6	11848.5	15105.8
Thrust/Weight, Inst.	10.7	9.6	7.5	105	94	74

Engine Flow Areas and Equivalent Diameters

	ft^2	ft	m^2	m
Inlet Cowl, A_c	79.1	10.03	7.35	3.06
Mixer, A_3	69.0	9.37	6.41	2.86
Combustor, A_4	69.0	9.37	6.41	2.86
Exit, A_6	110.0	11.83	10.22	3.61

Engine Lengths

	ft	m
Uninstalled	15.8	4.82
Inlet (Typ)	37.1	11.31
Installed (Typ)	52.9	16.12

REMARKS, REFERENCES

Air Augmented Basic LACE. (References 5, 7, 21)

SPECIFIC IMPULSE
REFERENCE TRAJECTORIES

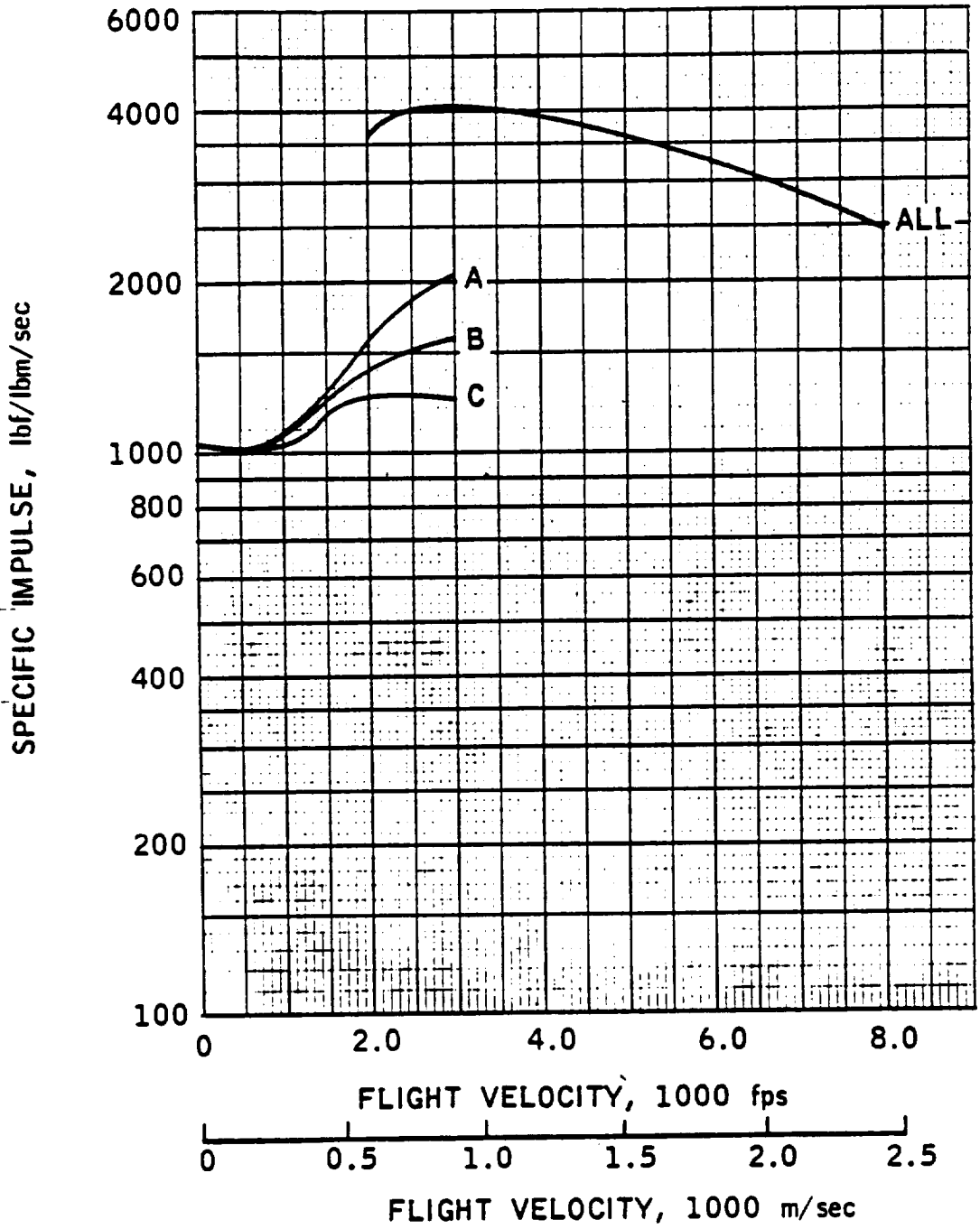

ENG. NO. 17-1

THRUST

REFERENCE TRAJECTORIES

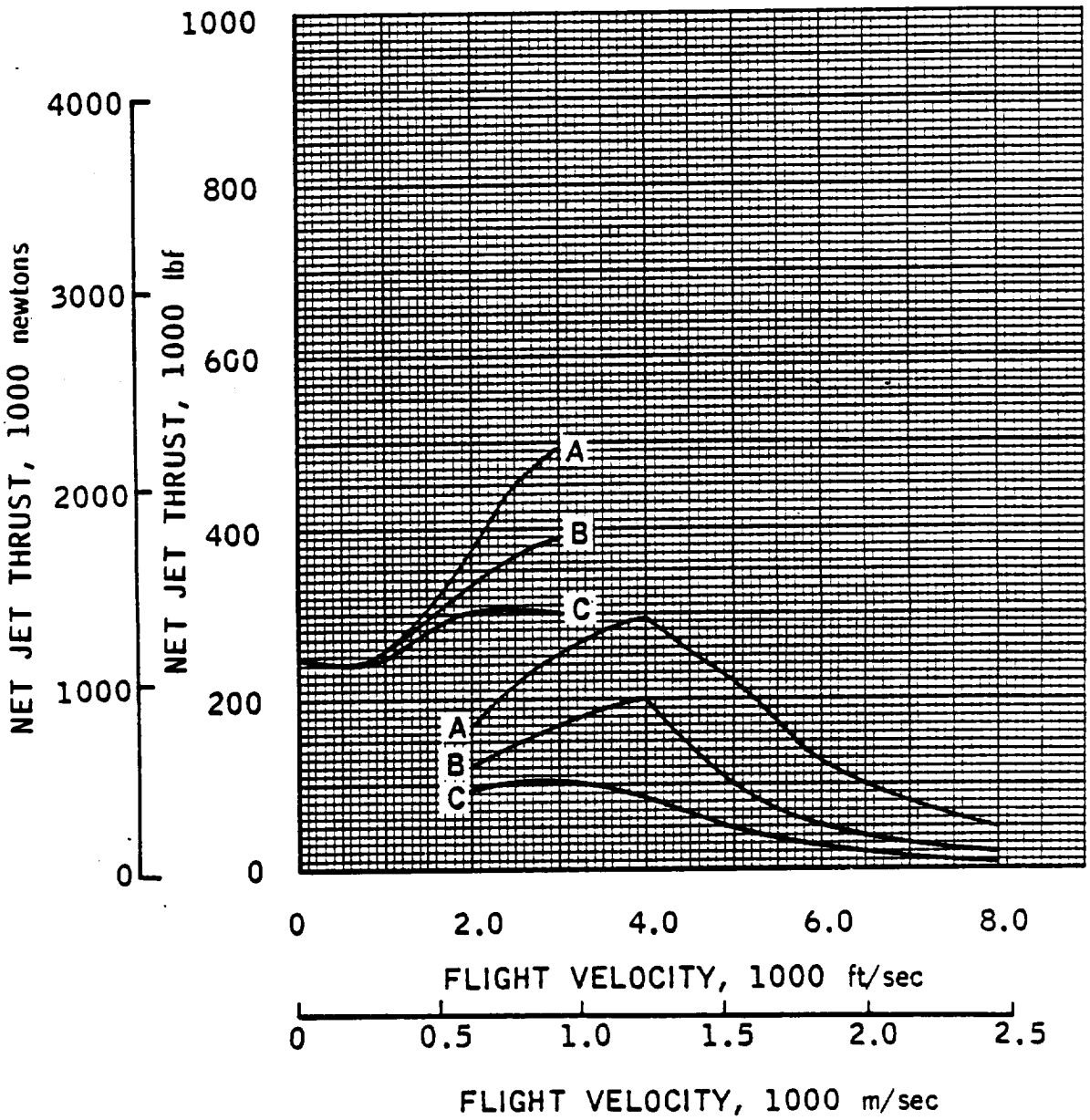

CAPTURE AREA

REFERENCE TRAJECTORIES

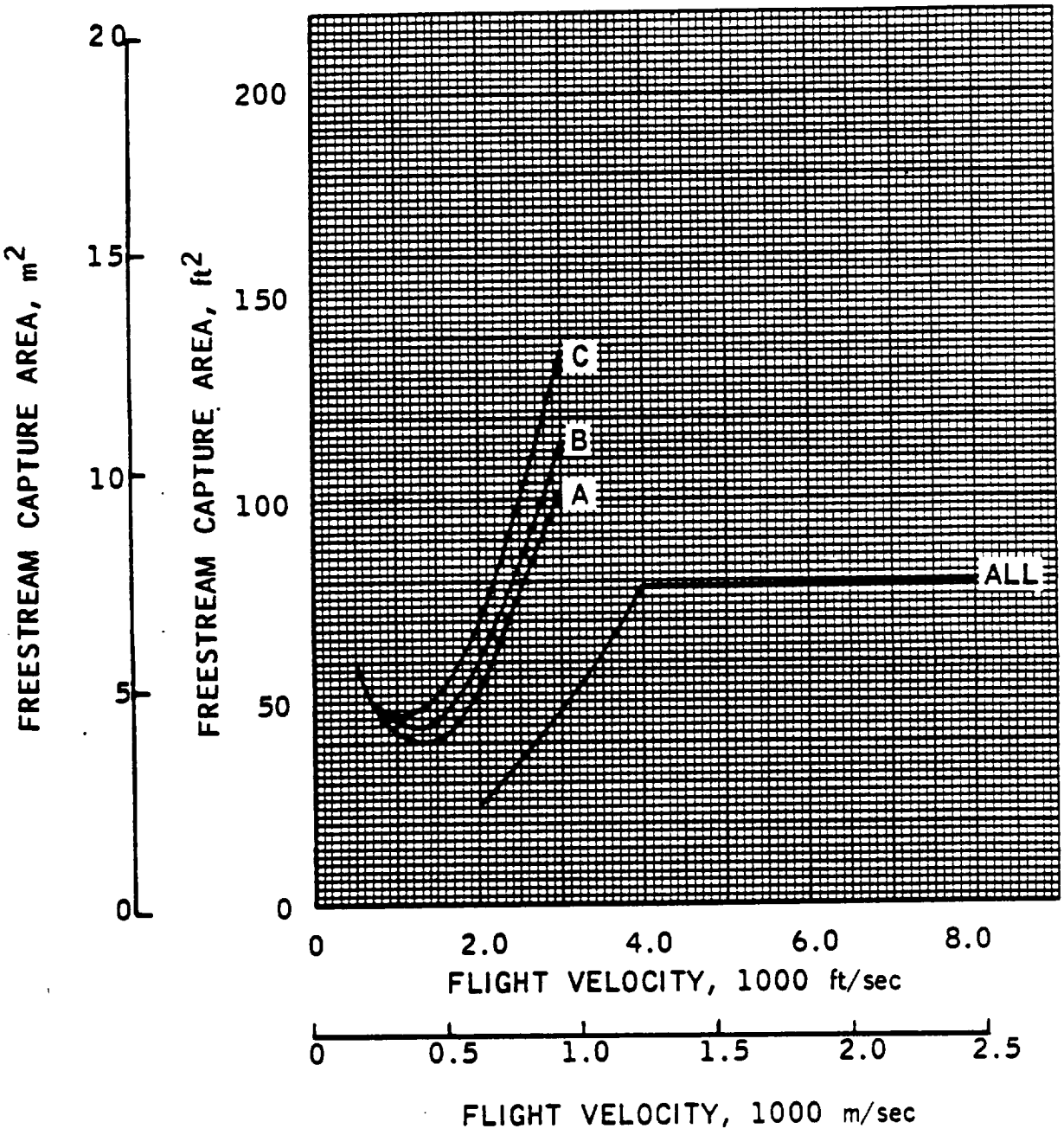

AIRFLOW

REFERENCE TRAJECTORIES

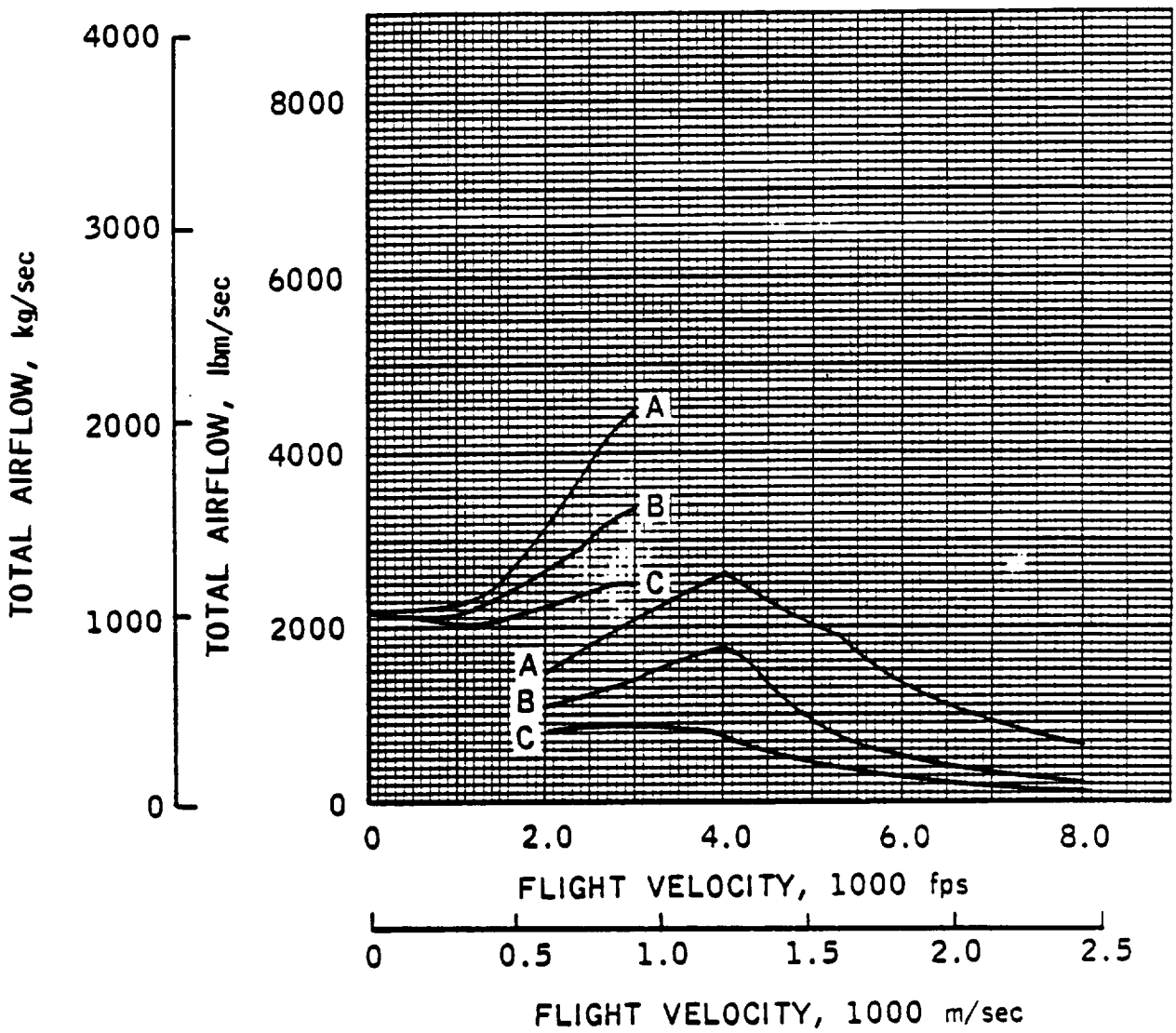

[redacted]

ENGINE- 17-1

ESTIMATED PERFORMANCE

MO	VO	HTO	PTO	T	CF	IS	SPC	PT2	H2	P2
				ALTITUDE -		0. FEET				
0.10	112.	124.7	14.8	249813.	66.46	1035.	3.48	14.80	123.4	14.26
				ALTITUDE -		10000. FEET				
0.65	700.	125.7	13.4	242495.	10.83	1005.	3.58	13.43	124.4	12.94
0.70	754.	127.3	14.0	244991.	9.97	1015.	3.55	14.02	126.0	13.51
0.79	851.	130.4	15.3	250466.	8.70	1038.	3.47	15.26	129.0	14.70
				ALTITUDE -		20000. FEET				
1.01	1047.	129.3	12.9	253205.	7.75	1049.	3.43	12.94	127.9	12.48
1.21	1255.	138.8	16.6	273189.	6.28	1132.	3.18	16.47	137.4	15.88
1.45	1504.	152.5	23.1	300609.	5.08	1245.	2.89	22.52	151.1	21.78
				ALTITUDE -		30000. FEET				
1.46	1453.	141.0	15.2	277370.	5.85	1149.	3.13	14.77	139.5	14.24
1.71	1701.	156.6	21.9	314141.	4.82	1302.	2.77	20.89	155.0	20.14
2.06	2049.	182.7	37.6	384442.	3.74	1593.	2.26	34.55	180.9	33.31
				ALTITUDE -		40000. FEET				
1.91	1849.	161.9	18.6	296139.	4.68	1227.	2.93	17.36	160.2	16.74
2.22	2149.	185.8	30.1	346160.	3.77	1434.	2.51	27.20	183.9	26.22

[redacted]

ENGINE- 17-1

ESTIMATED PERFORMANCE

MO	VO	HTO	PTO	T	CF	IS	SPC	PT2	H2	P2
				ALTITUDE -	40000. FEET					
2.69	2604.	229.0	62.6	460630.	2.80	1908.	1.89	53.11	226.7	51.21
				ALTITUDE -	45500. FEET					
3.10	3000.	273.3	89.3	493725.	2.34	2046.	1.76	71.10	271.0	68.90
				ALTITUDE -	50000. FEET					
2.40	2320.	201.1	24.6	306566.	3.62	1270.	2.83	21.69	199.0	20.91
2.84	2750.	244.6	48.8	383165.	2.74	1588.	2.27	40.51	242.2	39.07
				ALTITUDE -	54000. FEET					
3.10	3000.	273.3	59.5	385753.	2.46	1598.	2.25	47.37	271.0	45.90
				ALTITUDE -	60000. FEET					
2.89	2800.	250.2	32.7	309708.	2.84	1283.	2.81	26.95	247.7	25.99
				ALTITUDE -	64000. FEET					
3.10	3000.	273.3	36.9	302091.	2.62	1252.	2.88	29.37	271.0	28.46

[redacted]

[redacted]

ENGINE- 17-1

ESTIMATED PERFORMANCE

M2	WS	WP	WSWP	WFT	PHP	PHS	V6	PT20	A0	A5	A6
ALTITUDE - 0. FEET											
0.230	1132.	1276.	0.99	241.4	8.0	6.218	3439.	1.00	132.59	68.32	71.90
ALTITUDE - 10000. FEET											
0.230	1023.	1276.	0.80	241.4	8.0	6.880	4021.	1.00	25.86	67.15	78.84
0.230	1062.	1276.	0.83	241.4	8.0	6.628	4047.	1.00	24.92	67.41	79.60
0.230	1142.	1276.	0.89	241.4	8.0	6.164	4099.	1.00	23.74	67.93	81.15
ALTITUDE - 20000. FEET											
0.230	973.	1276.	0.76	241.4	8.0	7.234	4558.	1.00	22.78	66.31	93.32
0.230	1196.	1276.	0.94	241.4	8.0	5.885	4688.	0.99	23.35	67.65	99.33
0.220	1498.	1276.	1.17	241.4	8.0	4.699	4860.	0.98	24.37	66.71	105.47
ALTITUDE - 30000. FEET											
0.230	1064.	1276.	0.83	241.4	8.0	6.611	4928.	0.98	25.54	66.24	109.66
0.230	1430.	1276.	1.12	241.4	8.0	4.922	4940.	0.95	29.25	67.82	109.96
0.230	2195.	1276.	1.82	241.4	8.0	3.206	4925.	0.92	37.18	67.73	109.68
ALTITUDE - 40000. FEET											
0.230	1170.	1276.	0.92	241.4	8.0	6.016	4995.	0.93	33.38	65.37	109.74
0.230	1714.	1276.	1.34	241.4	8.0	4.106	5009.	0.90	41.98	65.60	109.53

[redacted]

ENGINE- 17-1

ESTIMATED PERFORMANCE

M2	WS	WP	WSWP	WFT	PHP	PHS	V6	PT20	A0	A5	A6
ALTITUDE - 40000. FEET											
0.230	3028.	1276.	2.37	241.4	8.0	2.324	5090.	0.85	60.94	62.42	109.72
ALTITUDE - 45500. FEET											
0.214	3489.	1276.	2.73	241.4	8.0	2.017	5353.	0.80	79.00	54.40	109.47
ALTITUDE - 50000. FEET											
0.230	1316.	1276.	1.03	241.4	8.0	5.347	5122.	0.88	48.12	62.97	109.69
0.230	2238.	1276.	1.75	241.4	8.0	3.144	5198.	0.83	68.74	60.62	109.40
ALTITUDE - 54000. FEET											
0.214	2324.	1276.	1.82	241.4	8.0	3.028	5387.	0.80	79.00	55.45	109.90
ALTITUDE - 60000. FEET											
0.230	1473.	1276.	1.15	241.4	8.0	4.776	5273.	0.82	71.65	59.96	109.65
ALTITUDE - 64000. FEET											
0.214	1441.	1276.	1.13	241.4	8.0	4.883	5413.	0.80	79.00	56.27	109.67

CONFIDENTIAL

This Page Intentionally Blank

ENGINE PHYSICAL CHARACTERISTICS

Eng. No. 17-2

Thrust, sls	250,000 lbf	1,112,055 newton

Weight and Thrust/Weight Ratio

Measuring Units	(English)	(International)
Weight	lbm	kg
Thrust/Weight	lbf/lbm	newton/kg

(lbf/in^2) Maximum Engine Internal Pressure 1000 (newton/m^2)

Lightweight Estimate	50	100	250	344.7	689.5	1723.7
Subsystems:						
Fan						
Heat Exchanger	4917	5386	5907	2230.4	2443.1	2679.4
Primary Rocket	2574	2574	2574	1167.6	1167.6	1167.6
Mixer/Diffuser	1738	2528	3476	788.4	1146.7	1576.7
Combustor/Exit	3476	3950	5372	1576.7	1791.7	2436.7
Contingency	779	905	1142	353.4	410.5	518.0
Uninstalled Eng. Wt.	13484	15343	18471	6116.3	6959.6	8378.4
Thrust/Weight, Uninst.	18.5	16.3	13.5	181	160	132
Inlet Weight	6370	7280	10556	2889.4	3302.2	4788.2
Installed Eng. Wt.	19854	22623	29027	9005.8	10265.9	13166.6
Thrust/Weight, Inst.	12.6	11.1	8.6	124	109	84

Heavyweight Estimate						
Uninstalled Eng. Wt.	14832	16877	20318	6727.8	7655.4	9216.2
Thrust/Weight, Uninst.	16.9	14.8	12.3	166	145	121
Inlet Weight	25494	29136	40973	11564.1	13216.1	18585.4
Installed Eng. Wt.	40326	46013	61291	18291.9	20871.5	18729.5
Thrust/Weight, Inst.	6.2	5.4	4.1	61	53	40

Engine Flow Areas and Equivalent Diameters

	ft^2	ft	m^2	m
Inlet Cowl, A_c	182.1	15.23	16.92	4.64
Mixer, A_3	158.3	14.20	14.71	4.33
Combustor, A_4	158.3	14.20	14.71	4.33
Exit, A_6	252.5	17.93	23.46	5.47

Engine Lengths

	ft	m
Uninstalled	18.7	5.70
Inlet (Typ)	45.0	13.72
Installed (Typ)	63.7	19.42

REMARKS, REFERENCES

SPECIFIC IMPULSE
REFERENCE TRAJECTORIES

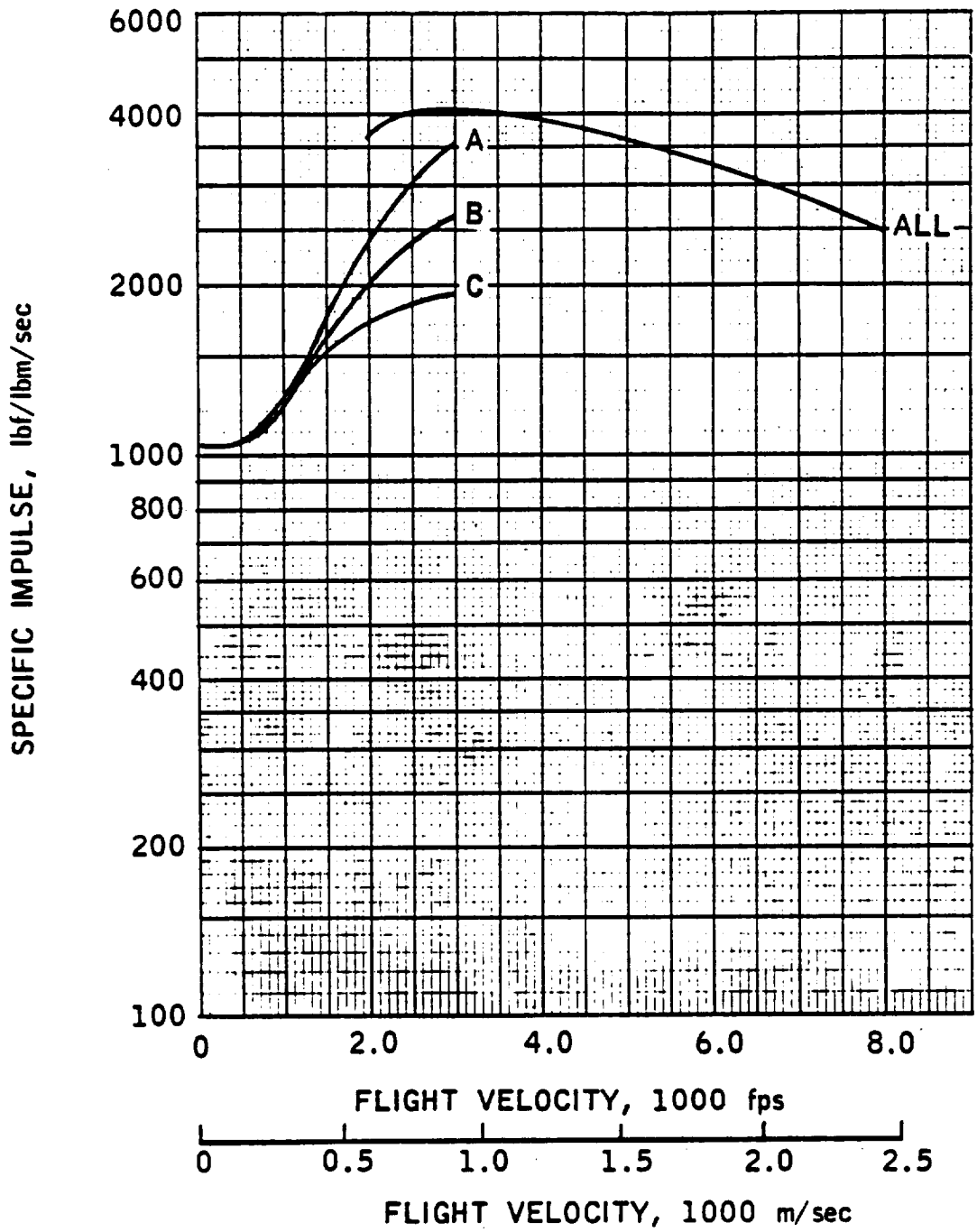

ENG. NO. 17-2

THRUST

REFERENCE TRAJECTORIES

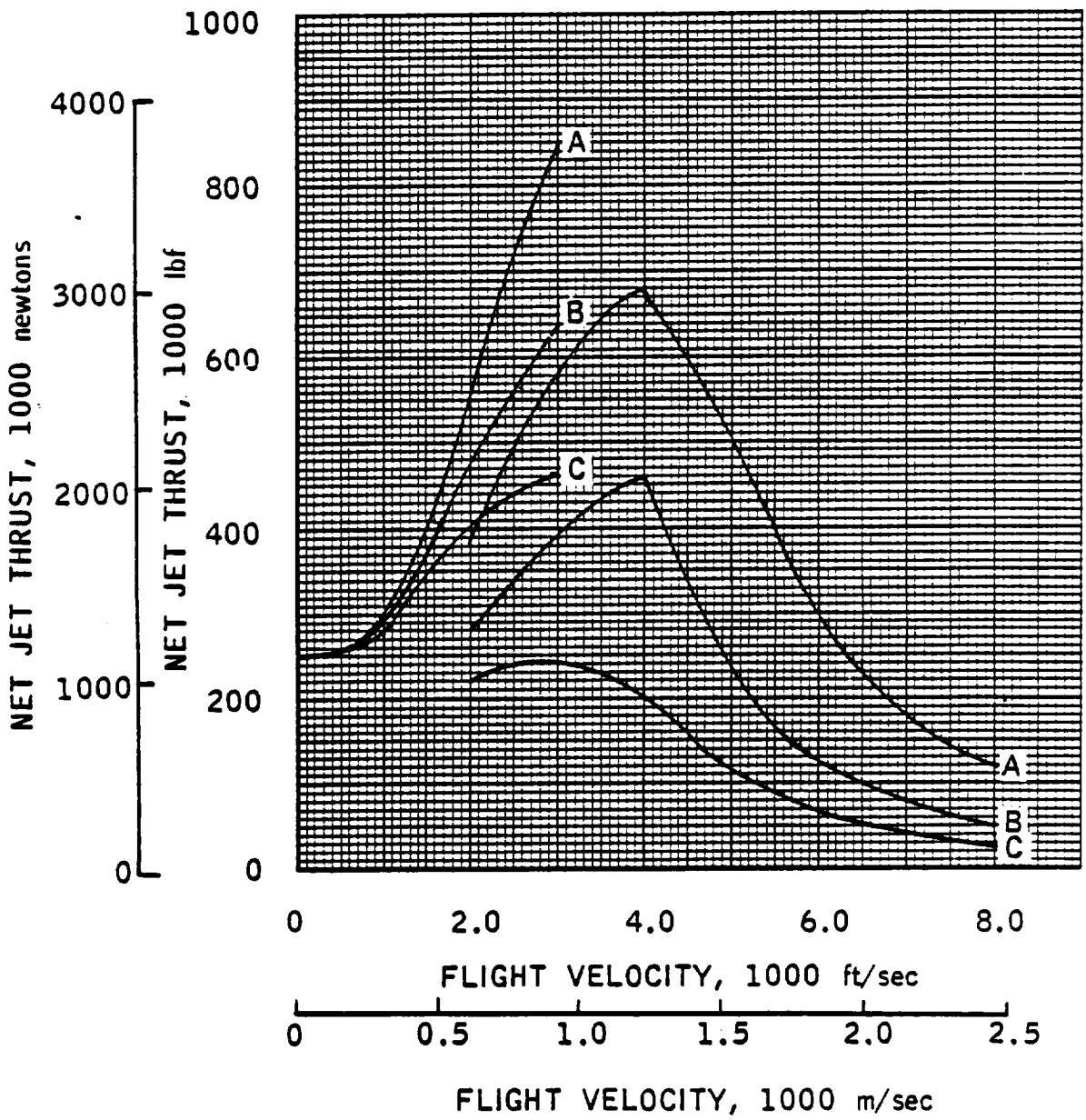

CAPTURE AREA
REFERENCE TRAJECTORIES

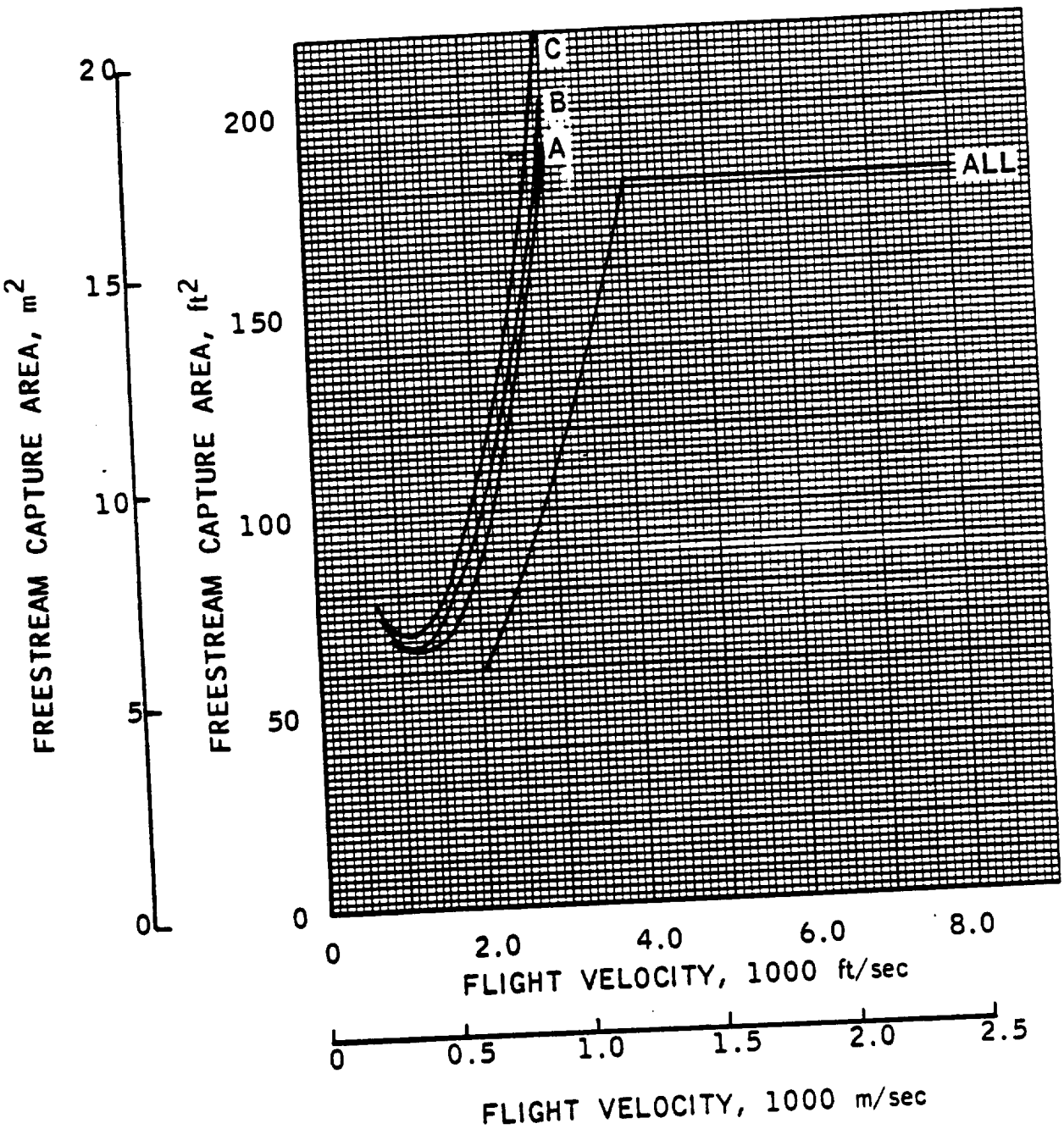

ENG. NO. 17-2

AIRFLOW

REFERENCE TRAJECTORIES

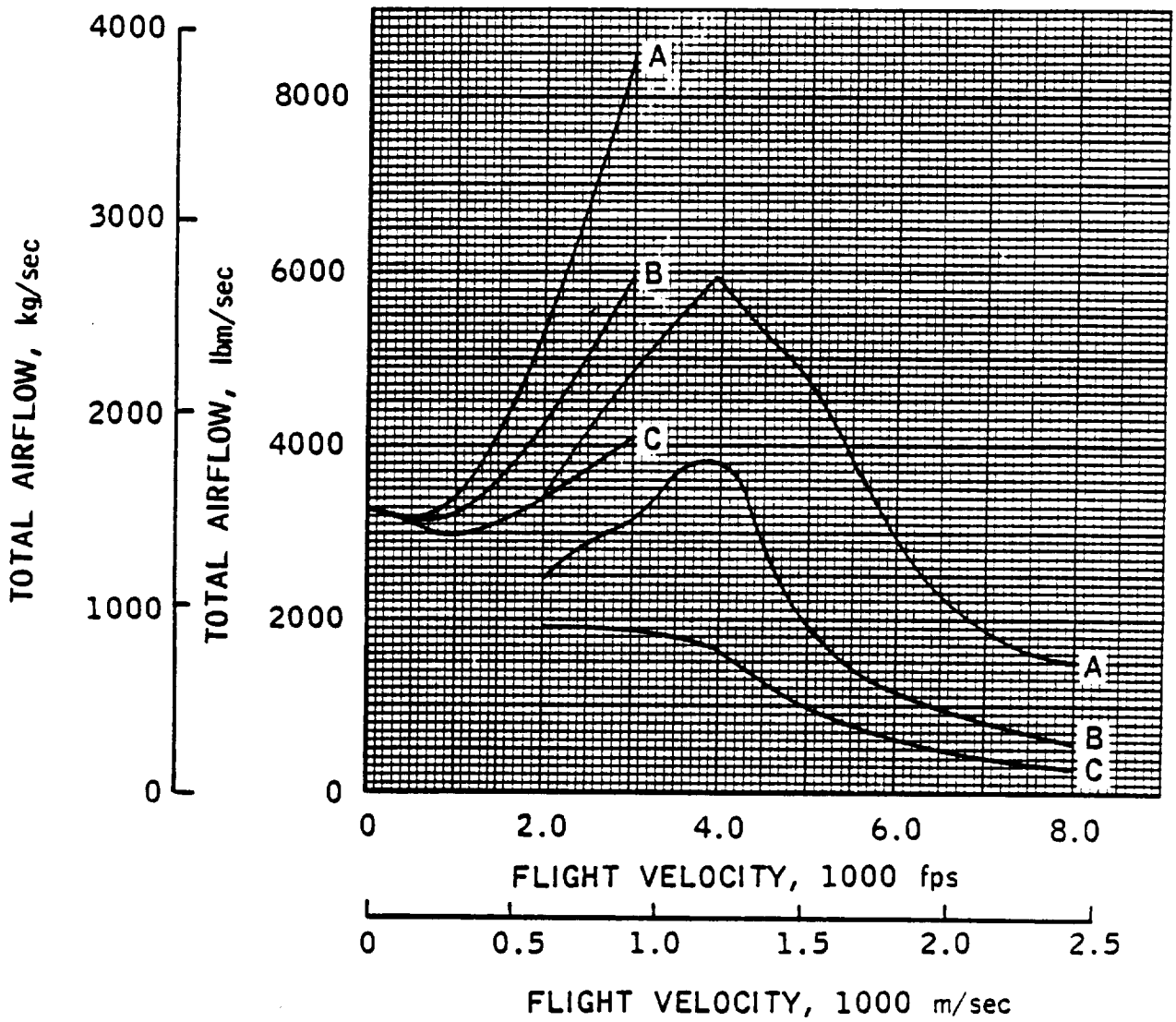

ENGINE- 17-2

ESTIMATED PERFORMANCE

MO	VO	HTO	PTO	T	CF	IS	SPC	PT2	H2	P2
				ALTITUDE -		0. FEET				
0.10	112.	124.7	14.8	248269.	43.62	1040.	3.46	14.80	123.9	14.47
				ALTITUDE -		10000. FEET				
0.65	700.	125.7	13.4	262311.	7.87	1099.	3.28	13.43	124.9	13.13
0.70	754.	127.3	14.0	268353.	7.29	1124.	3.20	14.02	126.5	13.71
0.79	851.	130.4	15.3	281610.	6.45	1180.	3.05	15.26	129.6	14.91
				ALTITUDE -		20000. FEET				
1.01	1047.	129.3	12.9	293781.	6.09	1231.	2.93	12.94	128.5	12.65
1.21	1255.	138.8	16.6	335440.	5.05	1405.	2.56	16.47	137.9	16.10
1.45	1504.	152.5	23.1	405760.	4.20	1700.	2.12	22.52	151.6	22.02
				ALTITUDE -		30000. FEET				
1.46	1453.	141.0	15.2	346334.	4.88	1451.	2.48	14.77	140.1	14.44
1.71	1701.	156.6	21.9	420225.	4.10	1760.	2.04	20.89	155.6	20.42
2.06	2049.	187.7	37.6	576838.	3.35	2416.	1.49	34.55	181.6	33.78
				ALTITUDE -		40000. FEET				
1.91	1849.	161.9	18.6	396970.	4.12	1663.	2.16	17.36	160.9	16.98
2.22	2149.	185.8	30.1	507371.	3.42	2125.	1.69	27.20	184.7	26.59

CONFIDENTIAL

[redacted]

ENGINE- 17-2

ESTIMATED PERFORMANCE

M2	WS	WP	WSWP	WFT	PHP	PHS	V6	PT20	AO	A5	A6
ALTITUDE - 0. FEET											
0.180	2257.	1262.	1.79	238.7	8.0	3.083	2374.	1.00	264.44	166.04	166.04
ALTITUDE - 10000. FEET											
0.180	2040.	1262.	1.62	238.7	8.0	3.412	3205.	1.00	51.58	151.89	156.94
0.180	2118.	1262.	1.68	238.7	8.0	3.287	3256.	1.00	49.71	151.68	157.26
0.180	2277.	1262.	1.80	238.7	8.0	3.056	3354.	1.00	47.35	151.17	158.07
ALTITUDE - 20000. FEET											
0.180	1940.	1262.	1.54	238.7	8.0	3.587	3921.	1.00	45.43	149.76	171.75
0.180	2385.	1262.	1.89	238.7	8.0	2.918	4132.	0.99	46.57	147.92	180.00
0.180	3114.	1262.	2.47	238.7	8.0	2.235	4405.	0.98	50.68	144.27	193.80
ALTITUDE - 30000. FEET											
0.180	2123.	1262.	1.68	238.7	8.0	3.278	4642.	0.98	50.94	146.19	213.22
0.180	2852.	1262.	2.26	238.7	8.0	2.441	4889.	0.95	58.34	141.79	235.11
0.180	4378.	1262.	3.47	238.7	8.0	1.590	5091.	0.92	74.16	133.66	252.53
ALTITUDE - 40000. FEET											
0.180	2333.	1262.	1.85	238.7	8.0	2.983	5081.	0.93	66.56	139.60	252.57
0.180	3419.	1262.	2.71	238.7	8.0	2.036	5150.	0.90	83.72	132.24	252.66

[redacted]

CONFIDENTIAL

ENGINE- 17-2

ESTIMATED PERFORMANCE

MO	VO	HTO	PTO	T	CF	IS	SPC	PT2	H2	P2
				ALTITUDE -		40000. FEET				
2.69	2604.	229.0	62.6	757305.	2.65	3172.	1.13	53.11	227.6	51.94
				ALTITUDE -		45500. FEET				
3.10	3000.	273.3	89.3	841310.	2.13	3524.	1.02	71.10	271.7	69.54
				ALTITUDE -		50000. FEET				
2.40	2320.	201.1	24.6	435623.	3.31	1825.	1.97	21.69	199.8	21.21
2.84	2750.	244.6	48.8	605235.	2.58	2535.	1.42	40.51	243.1	39.62
				ALTITUDE -		54000. FEET				
3.10	3000.	273.3	59.5	639925.	2.30	2681.	1.34	47.37	271.7	46.33
				ALTITUDE -		60000. FEET				
2.89	2800.	250.2	32.7	457247.	2.65	1915.	1.88	26.95	248.7	26.36
				ALTITUDE -		64000. FEET				
3.10	3000.	273.3	36.9	462100.	2.42	1936.	1.86	29.37	271.7	28.73

CONFIDENTIAL

CONFIDENTIAL

ENGINE- 17-2

ESTIMATED PERFORMANCE

M2	WS	WP	WSWP	WFT	PHP	PHS	V6	PT20	A0	A5	A6
ALTITUDE - 40000. FEET											
0.180	6039.	1262.	4.79	238.7	8.0	1.153	5278.	0.85	121.54	119.88	252.50
ALTITUDE - 45500. FEET											
0.180	7434.	1262.	5.89	238.7	8.0	0.936	5367.	0.90	168.32	107.43	252.62
ALTITUDE - 50000. FEET											
0.180	2625.	1262.	2.08	238.7	8.0	2.651	5248.	0.88	95.97	129.10	252.80
0.180	4464.	1262.	3.54	238.7	8.0	1.559	5376.	0.83	137.09	117.33	252.52
ALTITUDE - 54000. FEET											
0.180	4953.	1262.	3.92	238.7	8.0	1.405	5475.	0.80	168.32	111.73	252.80
ALTITUDE - 60000. FEET											
0.180	2939.	1262.	2.33	238.7	8.0	2.368	5426.	0.82	142.85	118.95	252.65
ALTITUDE - 64000. FEET											
0.180	3071.	1262.	2.43	238.7	8.0	2.266	5505.	0.80	168.32	115.03	253.17

CONFIDENTIAL

This Page Intentionally Blank

ENGINE FACT SHEET

Class 0 Composite Launch Vehicle Engines

Engine Identification Number: 18 Air Augmented LACE - Convertible Ramjet

Engine Operating Modes

Summary: Number of Modes/ Transitions 6 ; Number of Discrete Modes Utilized 4

Mode Progression - Lift-off to Touch-down

(Take off) Air augmented Liquid Air Cycle Engine (LACE), simultaneous mixing and burning cycle (2000-3000 ft/sec) Ramjet, subsonic combustion (6000-8000 ft/sec) Ramjet, supersonic combustion (10,000-14,000 ft/sec) Rocket (Orbital speed, space maneuvering and deorbiting) Ramjet, subsonic combustion (Flyback) Air augmented LACE, simultaneous mixing and burning cycle (Landing)

Engine Propellant Requirements

Code: (R) = Required, (V) = Required for vacuum operation, (F) = Useable for flyback mode

- [R] Hydrogen, liquid, 37-40 °R
- [ ] Hydrogen, liquid, subcooled (25 °R)
- [ ] Hydrogen, gaseous
- [V] Oxygen, liquid, 162 °R
- [ ] Oxygen, liquid, subcooled
- [ ] Oxygen, gaseous
- [ ] Other _____

Engine Constituent Subsystems

Inlet, heat exchanger, rocket, mixer-combustor, exit

Engine General Arrangement and Operating Schematic

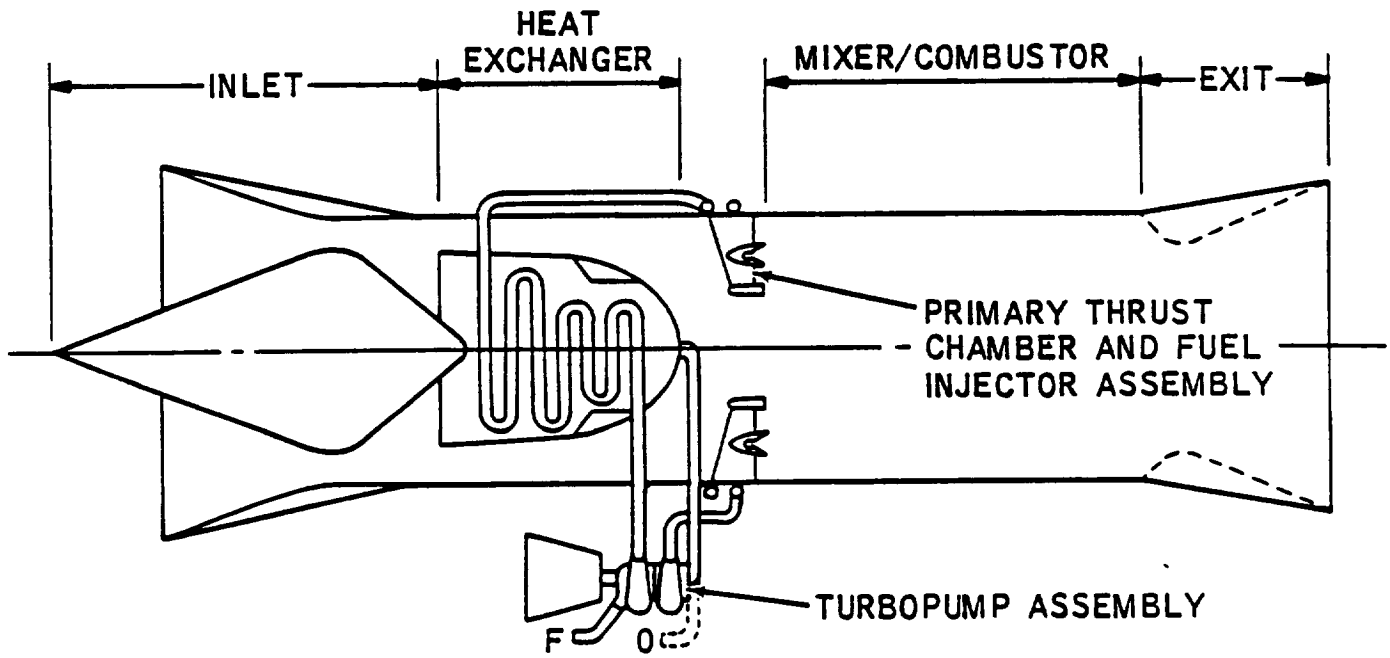

Engine Internal Operating Parameters, nominal

$P_{c\text{-}LACE} = 1000$ psia, $\phi_{LACE} = 8.0$
W_s/W_p (SLS) = 0.887 (1.79), $\phi_{SEC\text{-}SLS} = 6.22$ (3.08)
$A_4/A_3 = 1.00$, $A_c/A_3 = 1.15$

Engine Operating Mode Block Diagrams

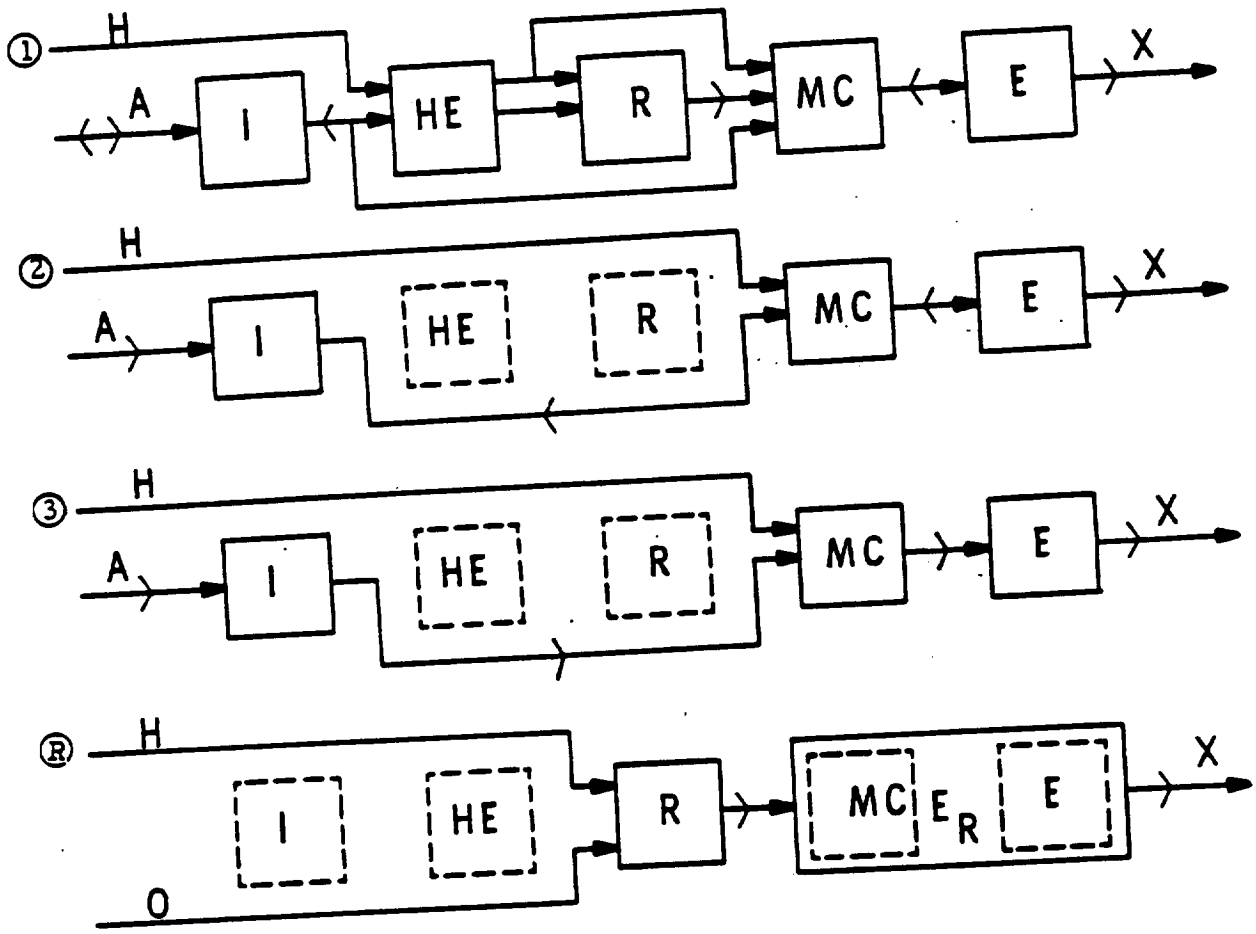

SPECIFIC IMPULSE
REFERENCE TRAJECTORIES

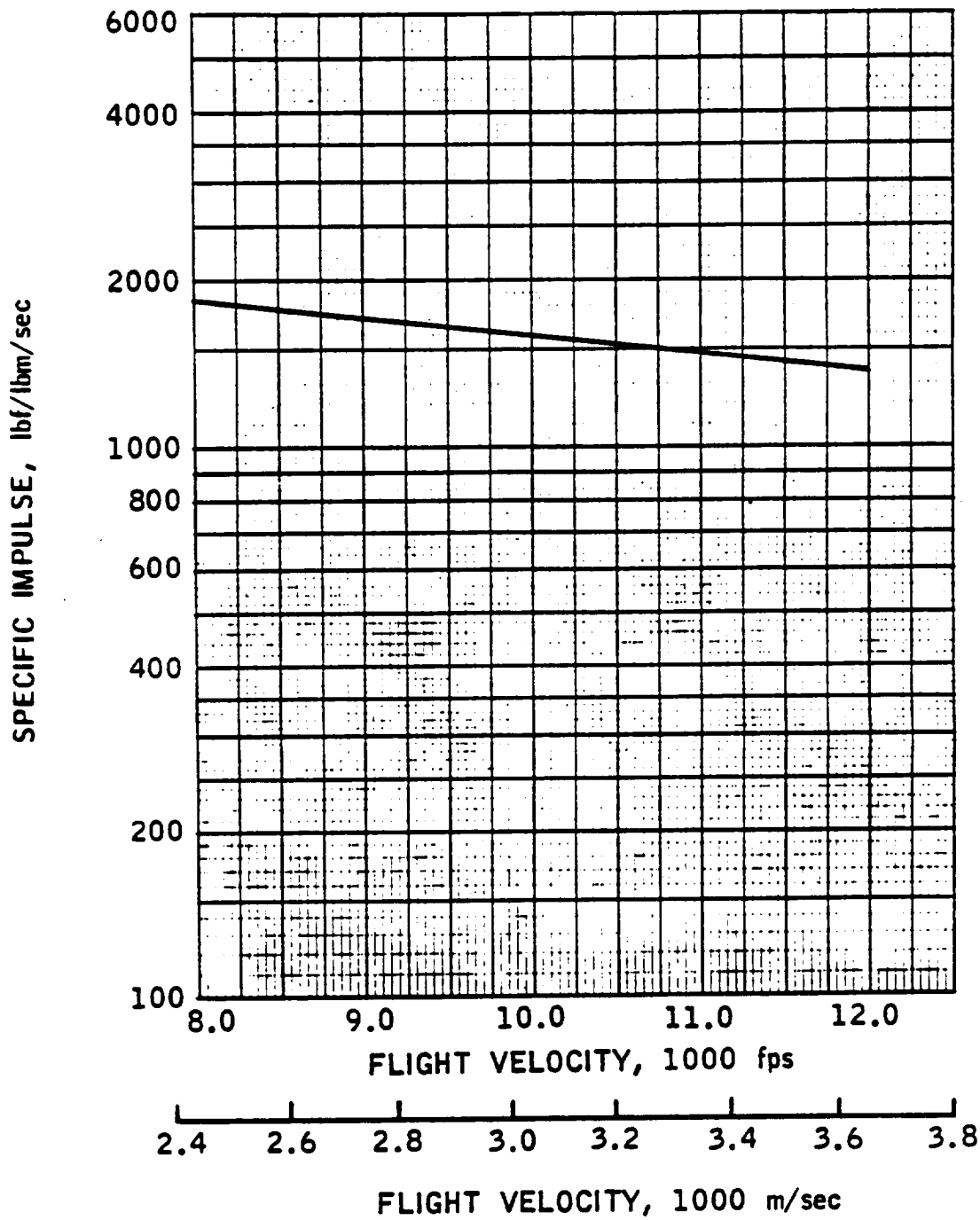

Eng. No. 18

The following information for Engine No. 18 appears in the fact sheets previously given for Engine No. 17.

Engine Physical Characteristics

Weight, Thrust/Weight, Flow areas, Lengths

Engine Performance: 0-8000 ft/sec

Specific Impulse, Thrust, Airflow, Capture Area

References and additional remarks

SPECIFIC IMPULSE
REFERENCE TRAJECTORIES

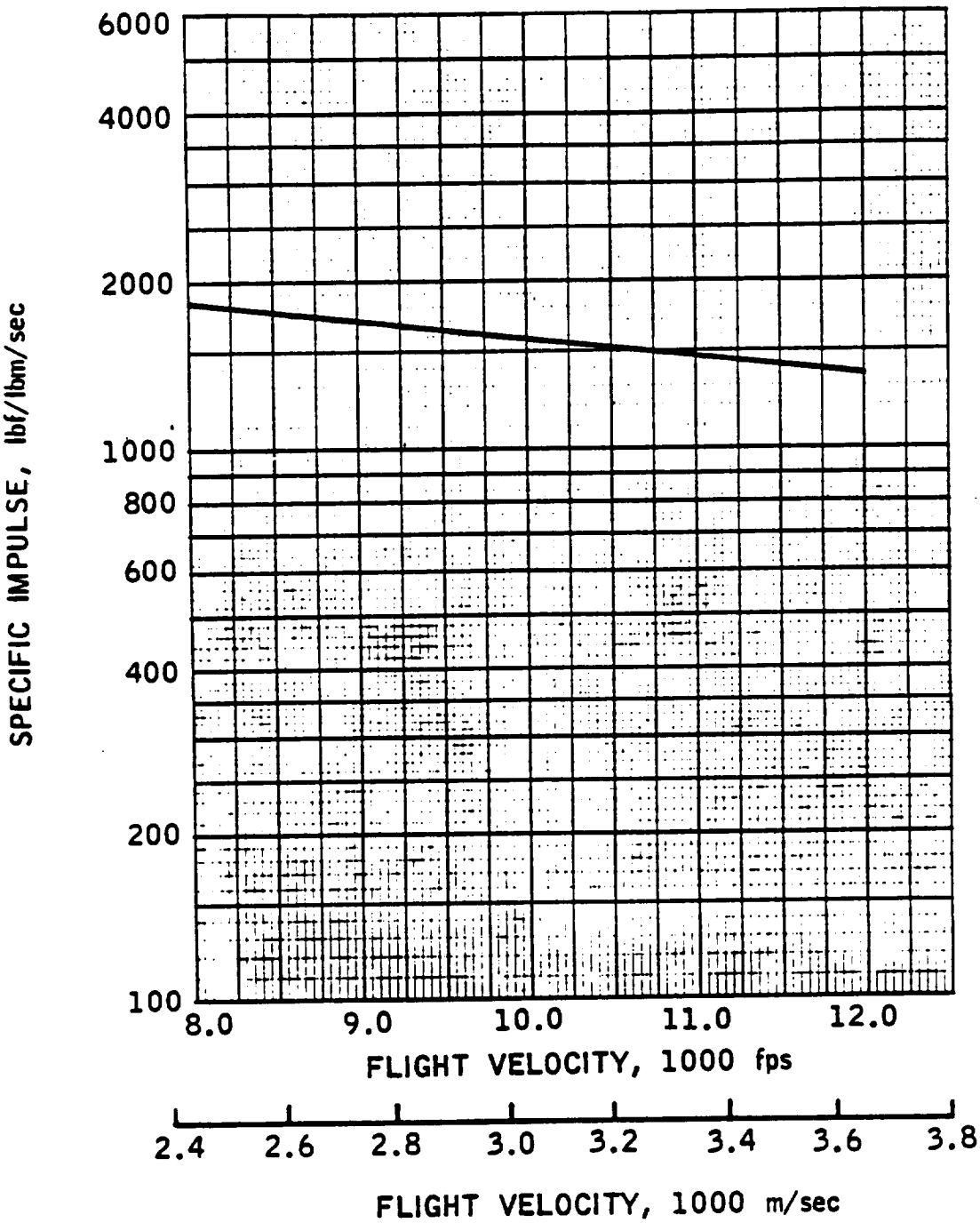

ENG. NO. 18-1

THRUST

REFERENCE TRAJECTORIES

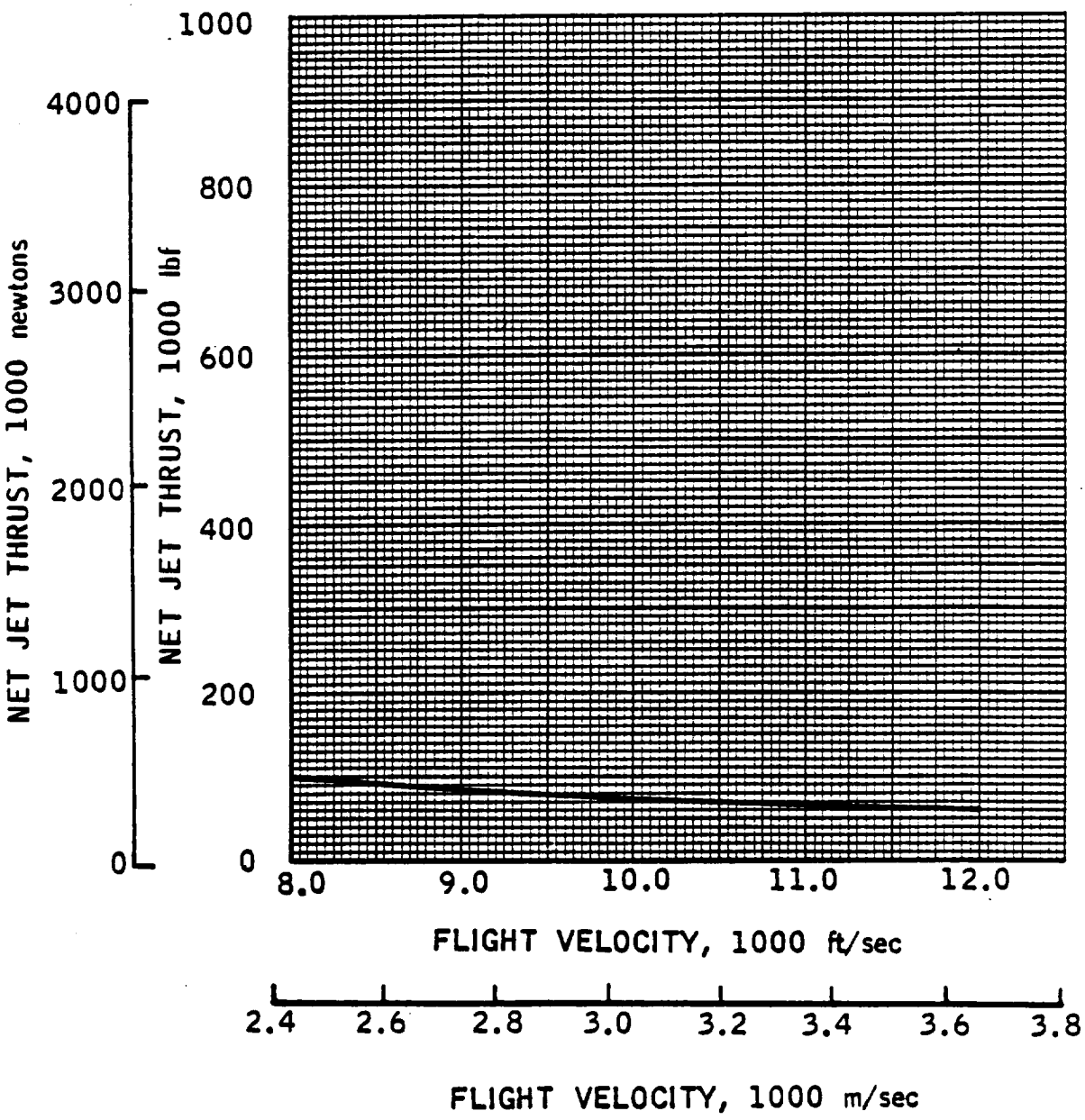

ENG. NO. 18-2

THRUST

REFERENCE TRAJECTORIES

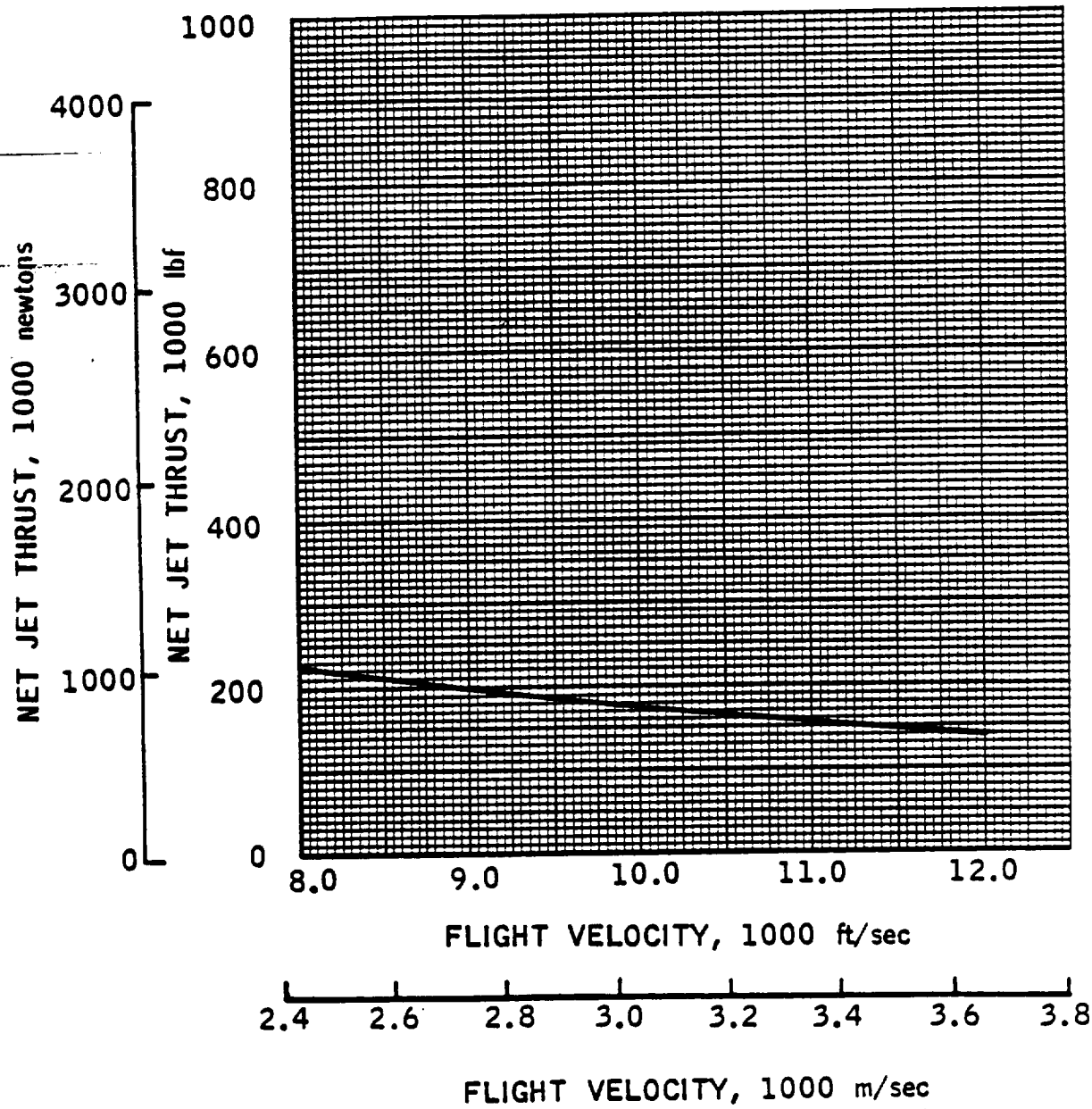

This Page Intentionally Blank

ENGINE FACT SHEET

Class 0 Composite Launch Vehicle Engines

Engine Identification Number: 19 Recycled Air Augmented LACE - Ramjet

Engine Operating Modes

Summary: Number of Modes/ Transitions 5 ; Number of Discrete Modes Utilized 4

Mode Progression - Lift-off to Touch-down

(Take off) Air augmented Liquid Air Cycle Engine (LACE), simultaneous mixing and burning cycle, recycled hydrogen (2000-3000 ft/sec) Ramjet, subsonic combustion (6000-8000 ft/sec) Rocket (Orbital speed, space maneuvering and deorbiting) Ramjet, subsonic combustion (Flyback) Air augmented LACE, simultaneous mixing and burning cycle (Landing)

Engine Propellant Requirements

Code: (R) = Required, (V) = Required for vacuum operation, (F) = Useable for flyback mode

- ☐ Hydrogen, liquid, 37-40 °R
- ☒ Hydrogen, liquid, subcooled (25 °R)
- ☐ Hydrogen, gaseous
- ☒ Oxygen, liquid, 162 °R
- ☐ Oxygen, liquid, subcooled
- ☐ Oxygen, gaseous
- ☐ Other _____

Engine Constituent Subsystems

Inlet, heat exchanger, rocket, mixer-combustor, exit

Engine General Arrangement and Operating Schematic

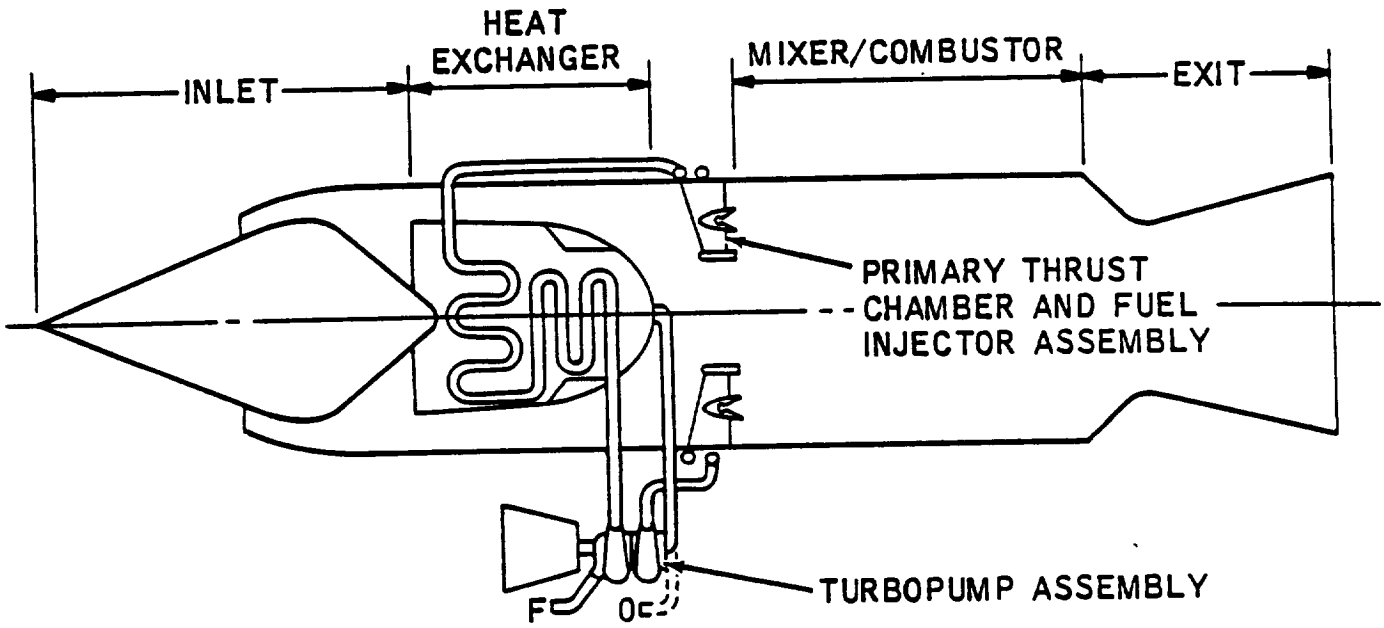

Eng. No. 19

Engine Internal Operating Parameters, nominal

$P_{c\text{-}LACE} = 1000$ psia, $\phi_{LACE} = 4.0$
W_s/W_p (SLS) = 0.985 (1.87), $\phi_{SEC\text{-}SLS} = 2.65$ (1.40)
$A_4/A_3 = 1.00$

Engine Operating Mode Block Diagrams

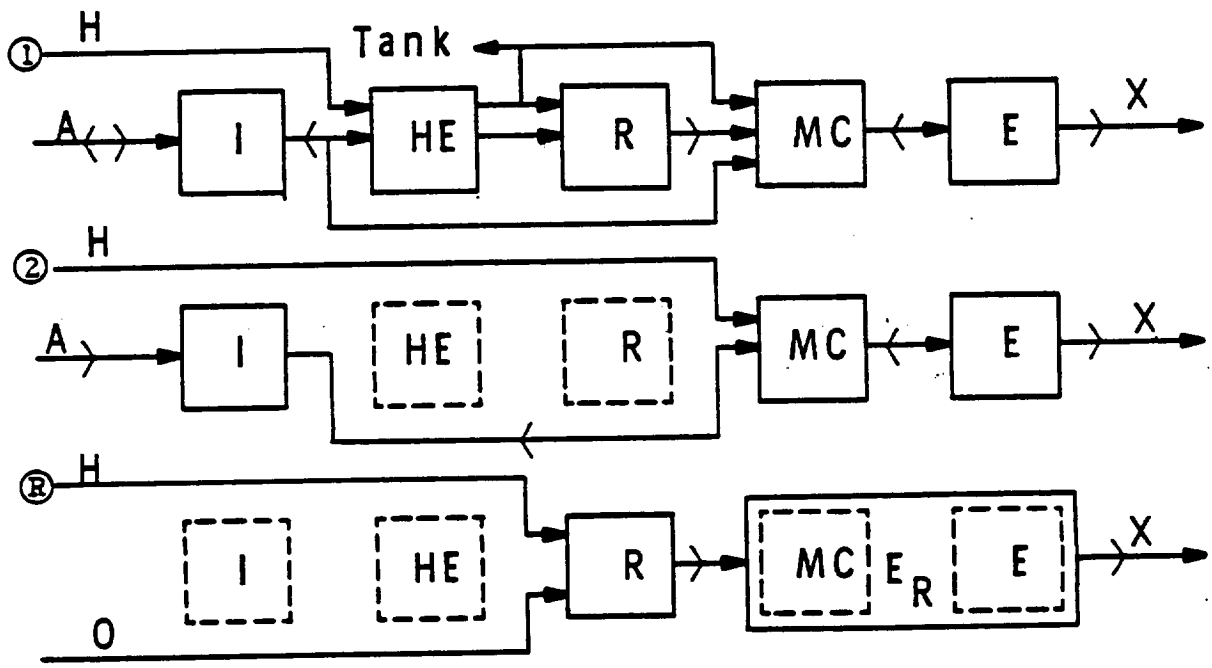

ENGINE PHYSICAL CHARACTERISTICS

Eng. No. 19-1

Thrust, sls	250,000 lbf	1,112,055 newton

Weight and Thrust/Weight Ratio

Measuring Units	(English)	(International)
Weight	lbm	kg
Thrust/Weight	lbf/lbm	newton/kg

(lbf/in^2) Maximum Engine Internal Pressure 1000 (newton/m^2)

Lightweight Estimate	50	100	250	344.7	689.5	1723.7
Subsystems:						
Fan						
Heat Exchanger	6586	7303	8096	2987.4	3312.6	3672.3
Primary Rocket	2558	2558	2558	1160.3	1160.3	1160.3
Mixer/Diffuser	748	1088	1496	339.3	493.5	678.6
Combustor/Exit	1496	1700	2312	678.6	771.1	1048.7
Contingency	480	535	637	217.7	242.7	288.9
Uninstalled Eng. Wt.	11868	13184	15099	5383.3	5980.2	6848.8
Thrust/Weight, Uninst.	21.1	19.0	16.6	207	186	162
Inlet Weight	2765	3160	4582	1254.2	1433.4	2078.4
Installed Eng. Wt.	14633	16344	19681	6637.5	7413.6	8927.2
Thrust/Weight, Inst.	17.1	15.3	12.7	168	150	125

Heavyweight Estimate						
Uninstalled Eng. Wt.	14242	15821	18119	6460.0	7176.2	8218.6
Thrust/Weight, Uninst.	17.6	15.8	13.8	172	155	135
Inlet Weight	11074	12656	17798	5023.2	5740.8	8073.2
Installed Eng. Wt.	25316	28477	35917	11483.2	12917.0	16291.8
Thrust/Weight, Inst.	9.9	8.8	7.0	96.8	86.1	68.3

Engine Flow Areas and Equivalent Diameters

	ft^2	ft	m^2	m
Inlet Cowl, A_c	79.1	10.03	7.35	3.06
Mixer, A_3	69.0	9.37	6.41	2.86
Combustor, A_4	69.0	9.37	6.41	2.86
Exit, A_6	110.0	11.83	10.22	3.61

Engine Lengths

	ft	m
Uninstalled	15.8	4.82
Inlet (Typ)	37.1	11.31
Installed (Typ)	52.9	16.13

REMARKS, REFERENCES

Air Augmented Recycled Basic LACE. Recycle time limit should be checked for specific applications. (References 5, 7, 12, 13, 14)

SPECIFIC IMPULSE
REFERENCE TRAJECTORIES

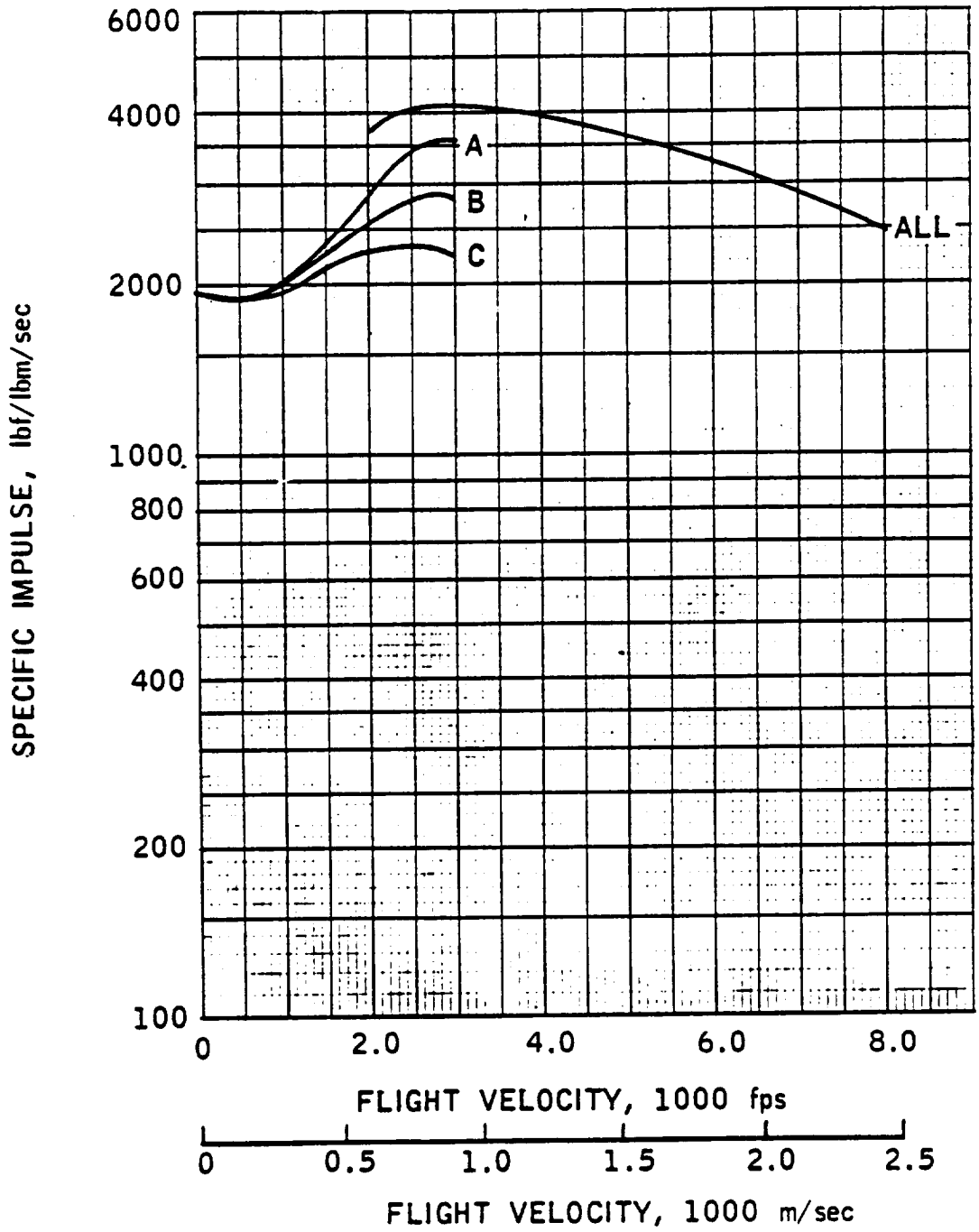

ENG. NO. 19-1

THRUST

REFERENCE TRAJECTORIES

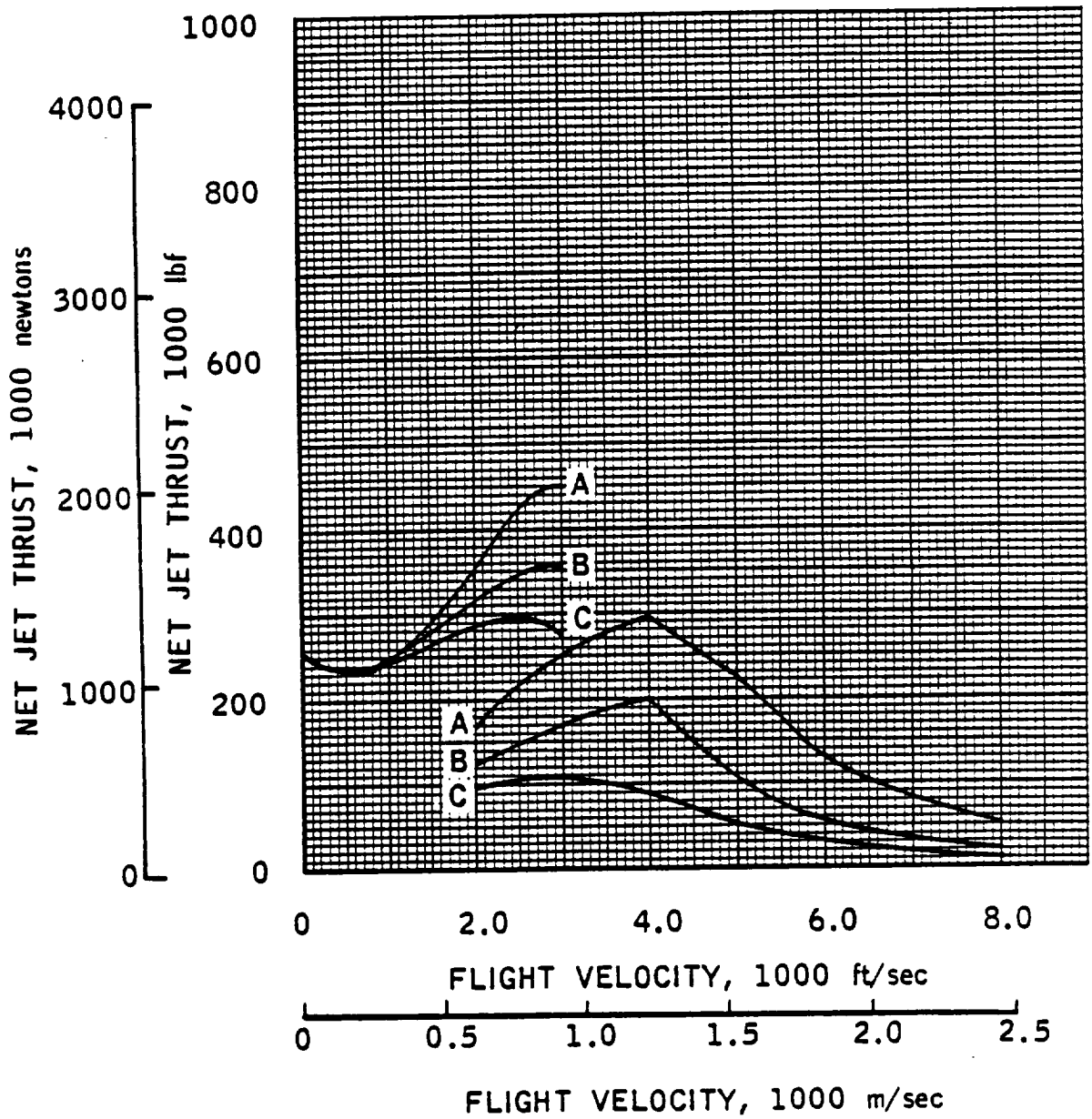

CAPTURE AREA

REFERENCE TRAJECTORIES

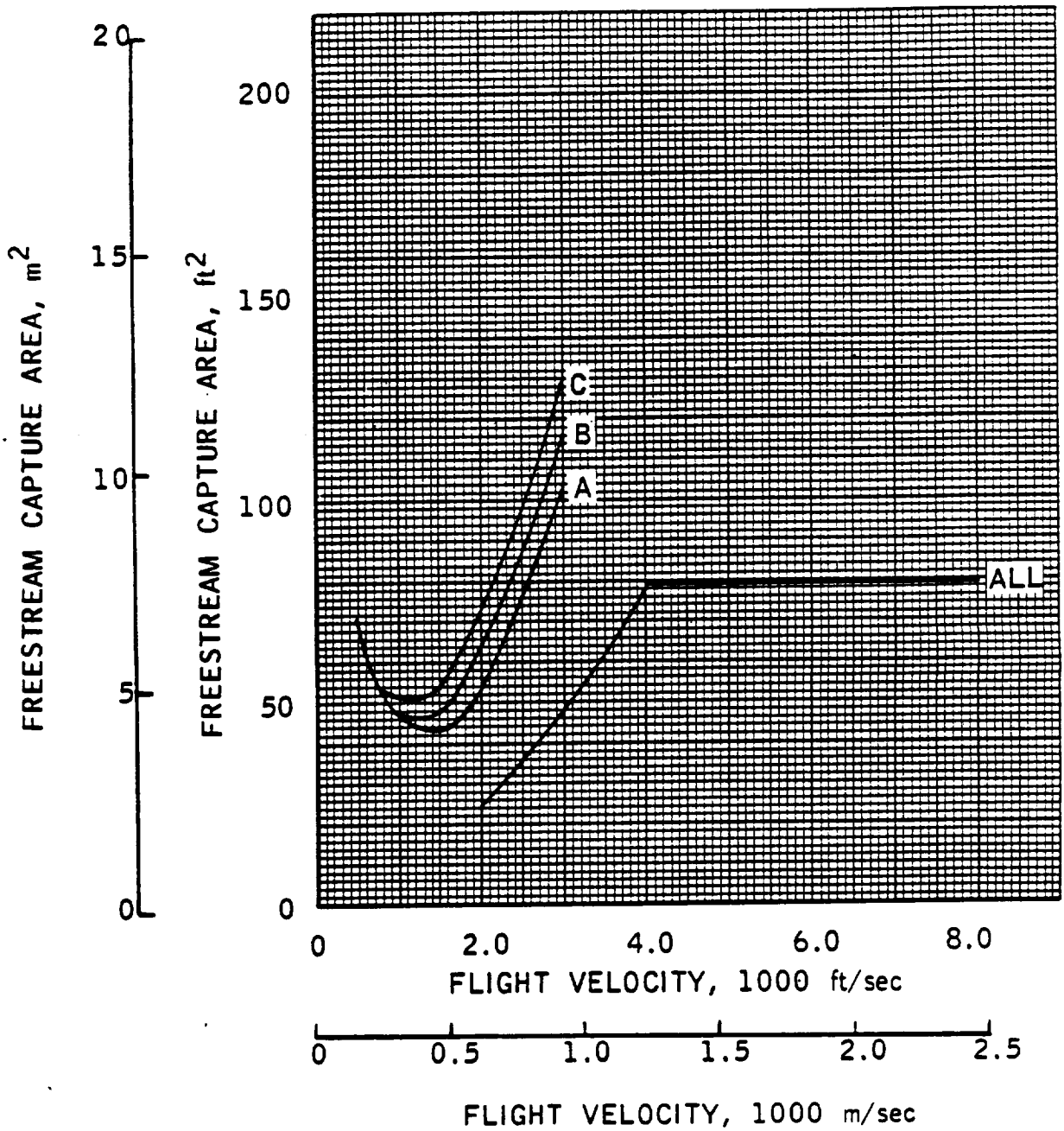

AIRFLOW

REFERENCE TRAJECTORIES

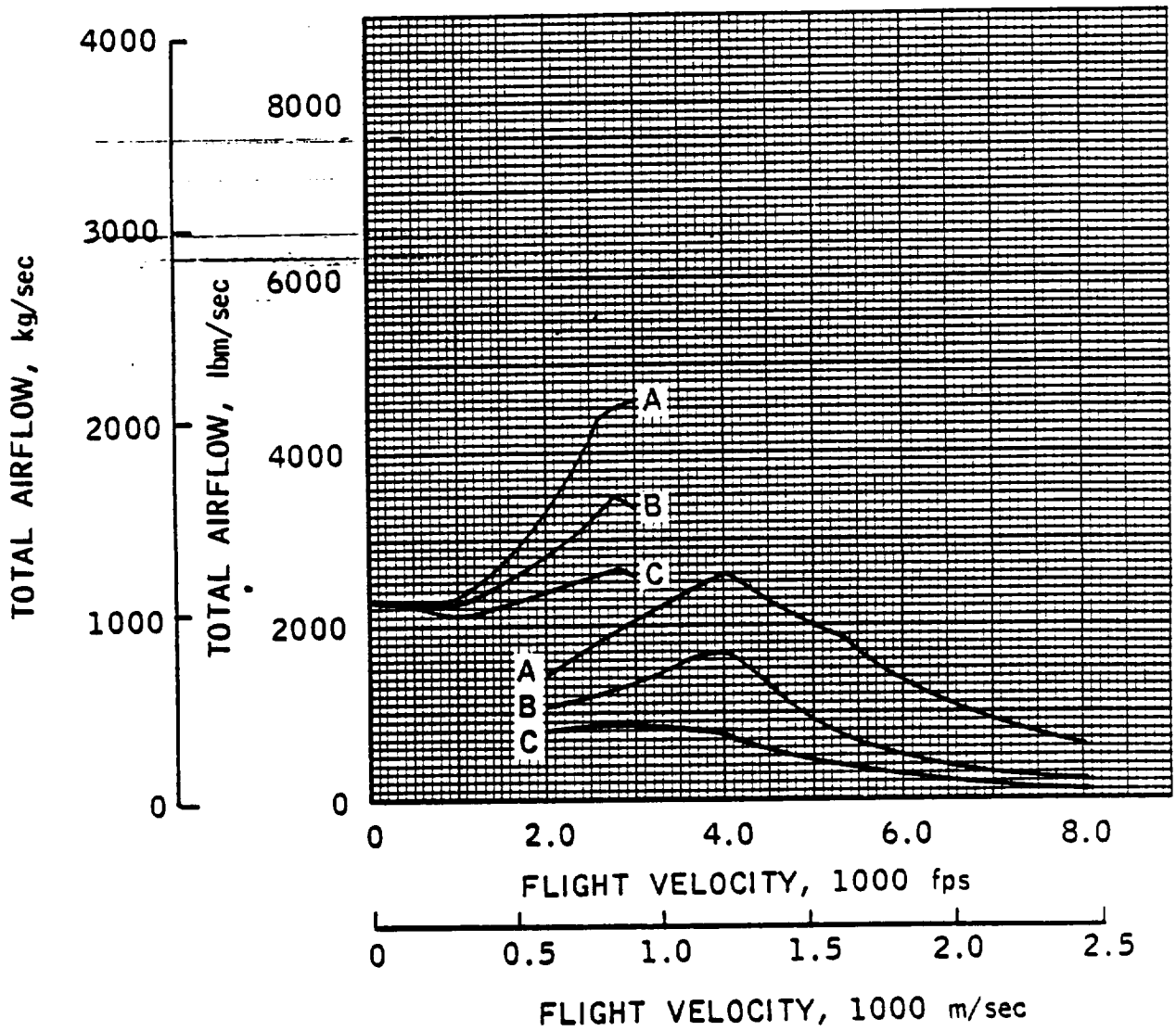

CONFIDENTIAL

ENGINE- 19-1

ESTIMATED PERFORMANCE

MO	VO	HTO	PTO	T	CF	IS	SPC	PT2	H2	P2
ALTITUDE - 0. FEET										
0.10	112.	124.7	14.8	251762.	62.75	1960.	1.84	14.80	123.2	14.17
ALTITUDE - 10000. FEET										
0.65	700.	125.7	13.4	242034.	10.13	1884.	1.91	13.43	124.2	12.85
0.70	754.	127.3	14.0	244107.	9.31	1900.	1.89	14.02	125.7	13.42
0.79	851.	130.4	15.3	249086.	8.11	1939.	1.86	15.26	128.8	14.61
ALTITUDE - 20000. FEET										
1.01	1047.	129.3	12.9	251904.	7.22	1961.	1.84	12.94	127.7	12.39
1.21	1255.	138.9	16.6	270179.	5.82	2103.	1.71	16.47	137.1	15.77
1.45	1504.	152.5	23.1	296940.	4.69	2311.	1.56	22.52	150.8	21.64
ALTITUDE - 30000. FEET										
1.46	1453.	141.0	15.2	274395.	5.43	2136.	1.69	14.77	139.2	14.15
1.71	1701.	156.6	21.9	307784.	4.42	2396.	1.50	20.89	154.7	20.00
2.06	2049.	192.7	37.6	371778.	3.47	2894.	1.24	34.55	180.7	33.20
ALTITUDE - 40000. FEET										
1.91	1849.	161.9	18.6	290462.	4.30	2261.	1.59	17.36	159.9	16.63
2.22	2149.	185.9	30.1	338462.	3.45	2634.	1.37	27.20	183.6	26.05

CONFIDENTIAL

ENGINE- 19-1

ESTIMATED PERFORMANCE

M2	WS	WP	WSWP	WFT	PHP	PHS	V6	PT20	A0	A5	A6
ALTITUDE - 0. FEET											
0.250	1211.	1230.	0.98	128.5	4.0	2.652	3424.	1.00	141.87	68.53	72.37
ALTITUDE - 10000. FEET											
0.250	1094.	1230.	0.89	128.5	4.0	2.934	4012.	1.00	27.67	67.49	79.83
0.250	1136.	1230.	0.92	128.5	4.0	2.827	4033.	1.00	26.67	67.72	80.60
0.250	1222.	1230.	0.99	128.5	4.0	2.628	4075.	1.00	25.40	68.17	82.16
ALTITUDE - 20000. FEET											
0.250	1041.	1230.	0.85	128.5	4.0	3.085	4557.	1.00	24.37	66.67	94.95
0.250	1279.	1230.	1.04	128.5	4.0	2.510	4655.	0.99	24.98	67.84	101.11
0.240	1609.	1230.	1.31	128.5	4.0	1.996	4801.	0.98	26.18	67.25	108.07
ALTITUDE - 30000. FEET											
0.250	1139.	1230.	0.93	128.5	4.0	2.819	4874.	0.98	27.33	66.52	109.69
0.250	1530.	1230.	1.24	128.5	4.0	2.099	4825.	0.95	31.30	67.76	109.48
0.240	2261.	1230.	1.84	128.5	4.0	1.420	4865.	0.92	38.31	65.87	109.68
ALTITUDE - 40000. FEET											
0.250	1252.	1230.	1.02	128.5	4.0	2.565	4921.	0.93	35.71	65.49	109.78
0.250	1834.	1230.	1.49	128.5	4.0	1.751	4892.	0.90	44.92	66.01	109.70

ENGINE- 19-1

ESTIMATED PERFORMANCE

MO	VO	HTO	PTO	T	CF	IS	SPC	PT2	H2	P2
ALTITUDE - 40000. FEET										
2.69	2600.	229.0	62.6	450508.	2.56	3506.	1.03	53.11	226.3	50.88
ALTITUDE - 45500. FEET										
3.10	3000.	273.3	89.3	452913.	2.11	3525.	1.02	71.10	271.0	68.85
ALTITUDE - 50000. FEET										
2.40	2320.	201.1	24.6	297917.	3.29	2319.	1.55	21.69	198.7	20.78
2.84	2750.	244.6	48.8	372755.	2.49	2901.	1.24	40.51	241.8	38.81
ALTITUDE - 54000. FEET										
3.10	3000.	273.3	59.5	363827.	2.28	2832.	1.27	47.37	271.0	45.87
ALTITUDE - 60000. FEET										
2.89	2800.	250.2	32.7	298185.	2.56	2321.	1.55	26.95	247.3	25.82
ALTITUDE - 64000. FEET										
3.10	3000.	273.3	36.9	282938.	2.38	2202.	1.63	29.37	271.0	28.44

ENGINE- 19-1

ESTIMATED PERFORMANCE

M2	WS	WP	WSWP	WFT	PHP	PHS	V6	PT20	A0	A5	A6
ALTITUDE - 40000. FEET											
0.250	3240.	1230.	2.63	128.5	4.0	0.991	4926.	0.85	65.21	63.85	109.77
ALTITUDE - 45500. FEET											
0.217	3494.	1230.	2.84	128.5	4.0	0.919	5227.	0.80	79.11	51.46	109.34
ALTITUDE - 50000. FEET											
0.250	1401.	1230.	1.14	128.5	4.0	2.280	5025.	0.88	51.49	63.07	109.71
0.250	2395.	1230.	1.95	128.5	4.0	1.341	5061.	0.83	73.56	61.47	109.56
ALTITUDE - 54000. FEET											
0.210	2327.	1230.	1.89	128.5	4.0	1.380	5334.	0.80	79.11	53.57	109.86
ALTITUDE - 60000. FEET											
0.250	1577.	1230.	1.28	128.5	4.0	2.037	5160.	0.82	76.67	60.12	109.65
ALTITUDE - 64000. FEET											
0.217	1443.	1230.	1.17	128.5	4.0	2.225	5372.	0.80	79.11	54.20	109.67

This Page Intentionally Blank

ENGINE PHYSICAL CHARACTERISTICS

Eng. No. 19-2

Thrust, sls	250,000 lbf	1,112,055 newton

Weight and Thrust/Weight Ratio

Measuring Units	(English)	(International)
Weight	lbm	kg
Thrust/Weight	lbf/lbm	newton/kg

Lightweight Estimate

(lbf/in^2) Maximum Engine Internal Pressure 1000 (newton/m^2)

Subsystems:	50	100	250	344.7	689.5	1723.7
Fan						
Heat Exchanger	6753	7488	8301	3063.1	3396.5	3765.3
Primary Rocket	2624	2624	2624	1190.2	1190.2	1190.2
Mixer/Diffuser	1738	2528	3476	788.4	1146.7	1576.7
Combustor/Exit	3476	3950	5372	1576.7	1791.7	2436.7
Contingency	784	910	1147	355.6	412.8	520.3
Uninstalled Eng. Wt.	15375	17500	20920	6974.0	7937.9	9489.2
Thrust/Weight, Uninst.	16.3	14.3	12.0	159	140	117
Inlet Weight	6370	7280	10556	2889.4	3302.2	4788.2
Installed Eng. Wt.	21745	24780	31476	9863.4	11240.1	14277.4
Thrust/Weight, Inst.	11.5	10.1	7.9	113	99	78

Heavyweight Estimate

Uninstalled Eng. Wt.	16912	19250	23012	7671.4	8731.7	10438.1
Thrust/Weight, Uninst.	14.8	13.0	10.9	145	127	106
Inlet Weight	25494	29136	40973	11564.1	13216.1	18585.4
Installed Eng. Wt.	42406	48386	63985	19235.5	21947.8	29023.5
Thrust/Weight, Inst.	5.9	5.2	3.9	58	51	38

Engine Flow Areas and Equivalent Diameters

	ft^2	ft	m^2	m
Inlet Cowl, A_c	182.1	15.23	16.92	4.64
Mixer, A_3	158.3	14.20	14.71	4.33
Combustor, A_4	158.3	14.20	14.71	4.33
Exit, A_6	252.5	17.93	23.46	5.47

Engine Lengths

	ft	m
Uninstalled	18.7	5.70
Inlet (Typ)	45.0	13.72
Installed (Typ)	63.7	19.42

REMARKS, REFERENCES

SPECIFIC IMPULSE
REFERENCE TRAJECTORIES

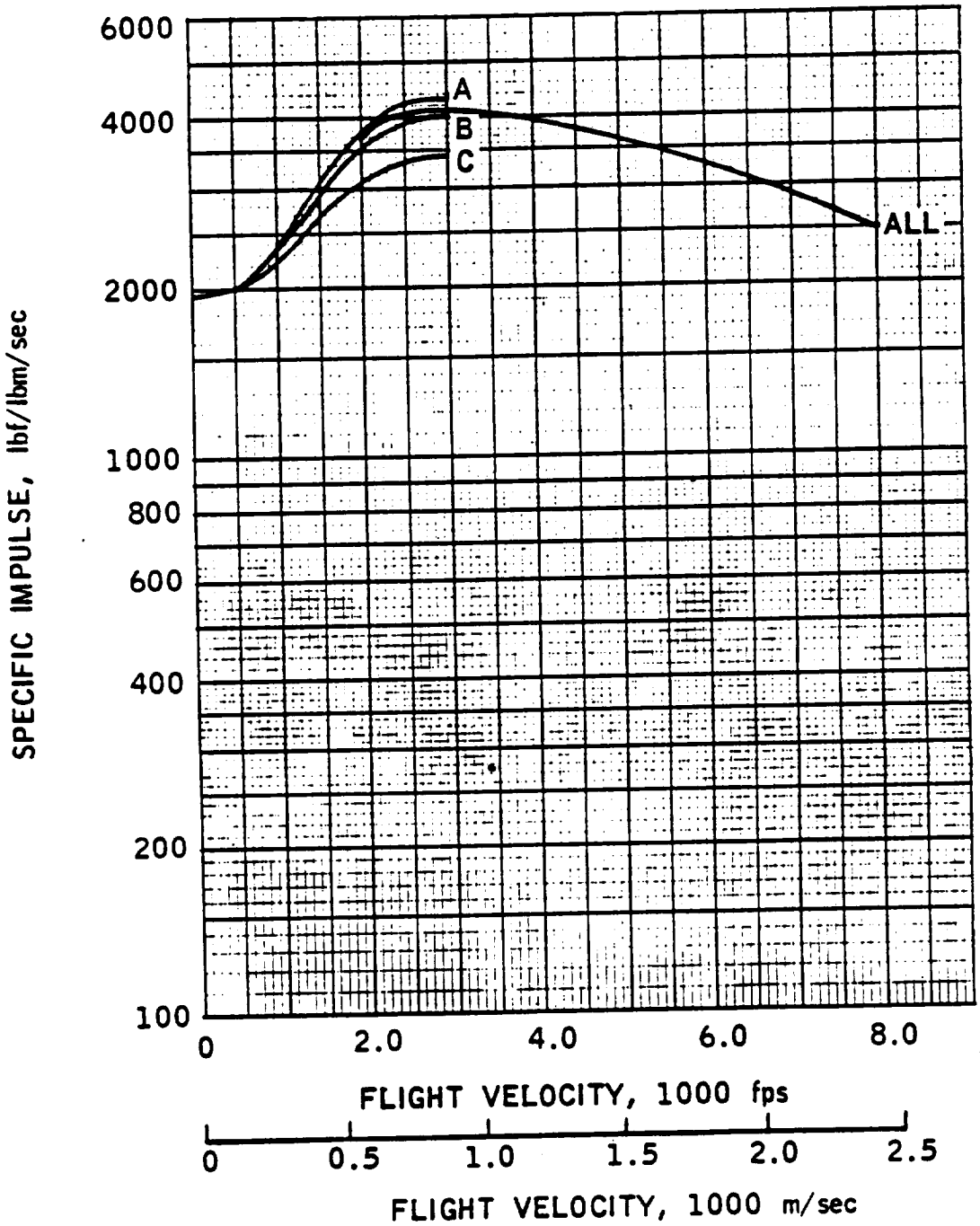

ENG. NO. 19-2

THRUST

REFERENCE TRAJECTORIES

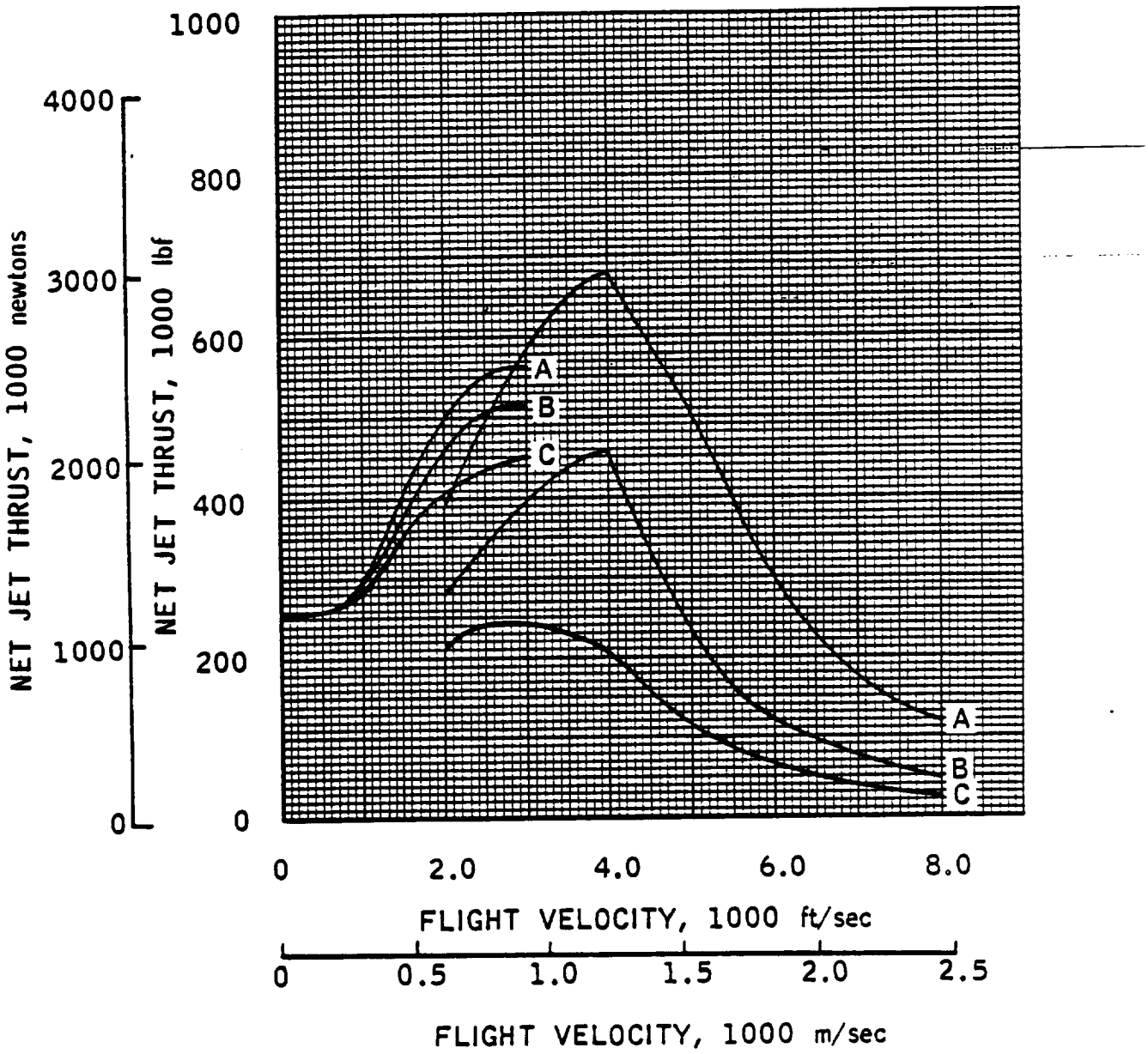

CAPTURE AREA

REFERENCE TRAJECTORIES

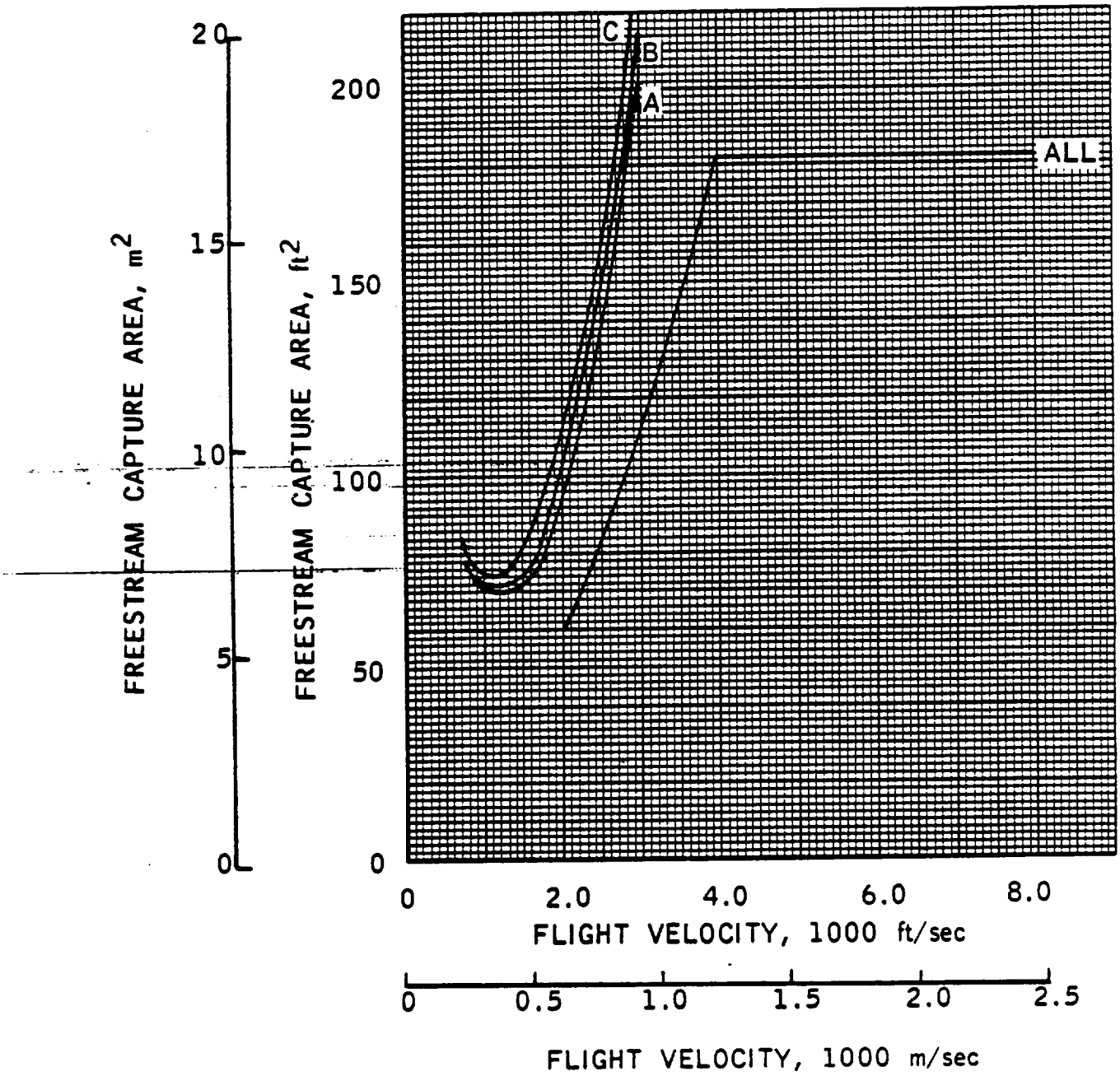

ENG. NO. 19-2

AIRFLOW

REFERENCE TRAJECTORIES

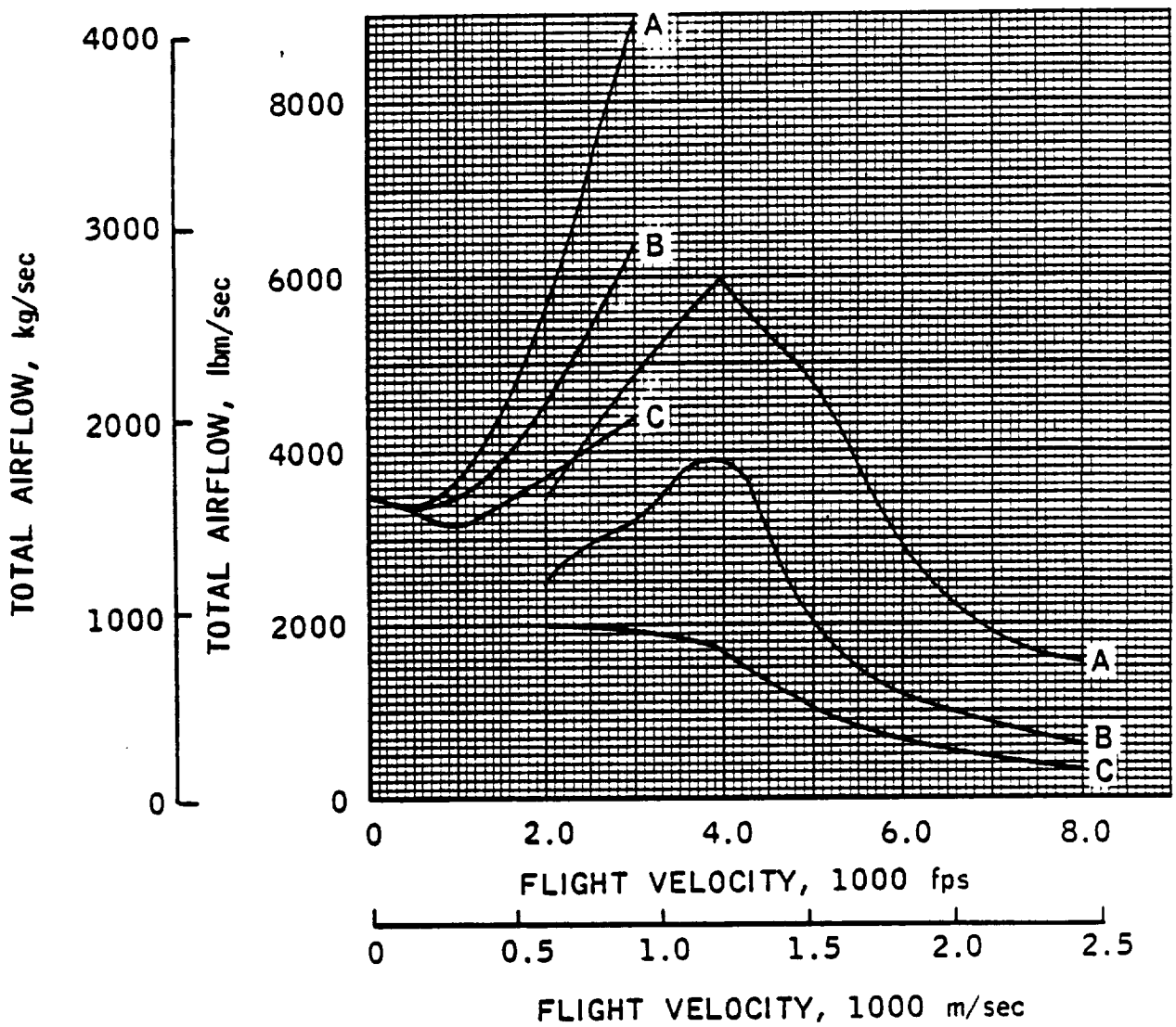

ENGINE- 19-2

ESTIMATED PERFORMANCE

MO	VO	HTO	PTO	T	CF	IS	SPC	PT2	H2	P2
ALTITUDE - 0. FEET										
0.10	112.	124.7	14.8	257753.	42.57	1955.	1.84	14.80	123.8	14.43
ALTITUDE - 10000. FEET										
0.65	700.	125.7	13.4	265614.	7.48	2015.	1.79	13.43	124.8	13.09
0.70	754.	127.3	14.0	271322.	6.92	2058.	1.75	14.02	126.4	13.67
0.79	851.	130.4	15.3	283964.	6.12	2154.	1.67	15.26	129.5	14.88
ALTITUDE - 20000. FEET										
1.01	1047.	129.3	12.9	294646.	5.73	2235.	1.61	12.94	128.4	12.62
1.21	1255.	138.8	16.6	335377.	4.75	1544.	1.42	16.47	137.8	16.06
1.45	1504.	152.5	23.1	405598.	3.96	3077.	1.17	22.52	151.5	21.96
ALTITUDE - 30000. FEET										
1.46	1453.	141.0	15.2	345346.	4.57	2620.	1.37	14.77	140.0	14.41
1.71	1701.	156.6	21.9	418994.	3.86	3178.	1.13	20.89	155.5	20.37
2.06	2049.	182.7	37.6	501945.	2.76	3808.	0.95	34.55	181.5	33.70
ALTITUDE - 40000. FEET										
1.91	1849.	161.9	18.6	394642.	3.85	2994.	1.20	17.36	160.7	16.93
2.22	2149.	185.8	30.1	488686.	3.11	3707.	0.97	27.20	184.5	26.53

[redacted]

ENGINE- 19-2

ESTIMATED PERFORMANCE

M2	WS	WP	WSWP	WFT	PHP	PHS	V6	PT20	A0	A5	A6
ALTITUDE - 0. FEET											
0.190	2359.	1262.	1.97	131.8	4.0	1.396	2398.	1.00	276.40	161.52	161.52
ALTITUDE - 10000. FEET											
0.190	2131.	1262.	1.69	131.8	4.0	1.545	3191.	1.00	53.92	150.15	155.82
0.190	2213.	1262.	1.75	131.8	4.0	1.488	3237.	1.00	51.96	150.07	156.37
0.190	2380.	1262.	1.89	131.8	4.0	1.384	3329.	1.00	49.50	149.81	157.64
ALTITUDE - 20000. FEET											
0.190	2028.	1262.	1.61	131.8	4.0	1.625	3887.	1.00	47.48	148.04	172.34
0.190	1493.	1262.	1.98	131.8	4.0	1.322	4084.	0.99	48.68	146.94	181.67
0.190	3255.	1262.	1.58	131.8	4.0	*******	4348.	0.98	52.98	144.18	196.95
ALTITUDE - 30000. FEET											
0.190	2219.	1262.	1.76	131.8	4.0	1.485	4589.	0.98	53.24	144.92	216.36
0.190	2981.	1262.	2.36	131.8	4.0	1.105	4826.	0.95	60.98	141.73	240.21
0.190	4576.	1262.	3.63	131.8	4.0	0.720	4769.	0.92	77.52	120.26	257.80
ALTITUDE - 40000. FEET											
0.190	2439.	1262.	1.93	131.8	4.0	1.351	4983.	0.93	69.57	138.95	252.66
0.190	3573.	1262.	2.83	131.8	4.0	0.922	4976.	0.90	87.51	129.43	252.68

[redacted]

ENGINE- 19-2

ESTIMATED PERFORMANCE

MO	VO	HTO	PTO	T	CF	IS	SPC	PT2	H2	P2
ALTITUDE - 40000. FEET										
2.69	2604.	229.0	62.6	560707.	1.86	4253.	0.85	53.11	227.5	51.80
ALTITUDE - 45500. FEET										
3.10	3000.	273.3	89.3	561745.	1.35	4261.	0.84	71.10	271.5	69.36
ALTITUDE - 50000. FEET										
2.40	2320.	201.1	14.6	430771.	3.08	3268.	1.10	21.69	199.7	21.16
2.84	2750.	244.6	48.8	516883.	2.09	3921.	0.92	40.51	243.0	39.52
ALTITUDE - 54000. FEET										
3.10	3000.	273.3	59.5	516387.	1.76	3917.	0.92	47.37	271.5	46.21
ALTITUDE - 60000. FEET										
2.89	2800.	250.2	32.7	449978.	2.46	3413.	1.05	26.95	248.5	26.29
ALTITUDE - 64000. FEET										
3.10	3000.	273.3	36.9	453293.	2.24	3439.	1.05	29.37	271.5	28.66

[redacted]

CONFIDENTIAL

ENGINE- 19-2

ESTIMATED PERFORMANCE

M2	WS	WP	WSWP	WFT	PHP	PHS	V6	PT20	A0	A5	A6
ALTITUDE - 40000. FEET											
0.190	6312.	1262.	5.00	131.8	4.0	0.522	4618.	0.85	127.04	99.36	252.55
ALTITUDE - 45500. FEET											
0.190	7774.	1262.	6.16	131.8	4.0	0.424	4562.	0.80	175.94	87.39	252.02
ALTITUDE - 50000. FEET											
0.190	2744.	1262.	2.17	131.8	4.0	1.201	5143.	0.88	100.31	129.12	252.94
0.190	4666.	1262.	3.70	131.8	4.0	0.706	4965.	0.83	143.29	107.34	252.51
ALTITUDE - 54000. FEET											
0.190	5177.	1262.	4.10	131.8	4.0	0.636	4961.	0.80	175.94	99.85	252.57
ALTITUDE - 60000. FEET											
0.190	3072.	1262.	2.43	131.8	4.0	1.073	5316.	0.82	149.36	119.51	252.73
ALTITUDE - 64000. FEET											
0.190	3210.	1262.	2.54	131.9	4.0	1.026	5385.	0.80	175.94	115.76	251.83

CONFIDENTIAL

This Page Intentionally Blank

ENGINE FACT SHEET

Class 0 Composite Launch Vehicle Engines

Engine Identification Number: 20 Recycled Air Augmented LACE-Convertible Ramjet

Engine Operating Modes

Summary: Number of Modes/ Transitions 6 ; Number of Discrete Modes Utilized 5

Mode Progression - Lift-off to Touch-down

(Take off) Air augmented Liquid Air Cycle Engine (LACE), simultaneous mixing and burning cycle, recycled hydrogen (2000-3000 ft/sec) Ramjet, subsonic combustion (6000-8000 ft/sec) Ramjet, supersonic combustion (10,000-14,000 ft/sec) Rocket (Orbital speed, space maneuvering and deorbiting) Ramjet, subsonic combustion (Flyback) Air augmented LACE, simultaneous mixing and burning cycle (Landing)

Engine Propellant Requirements

Code: (R) = Required, (V) = Required for vacuum operation, (F) = Useable for flyback mode

- ☐ Hydrogen, liquid, 37-40 °R
- ☒ Hydrogen, liquid, subcooled (25 °R)
- ☐ Hydrogen, gaseous
- ☒ Oxygen, liquid, 162 °R
- ☐ Oxygen, liquid, subcooled
- ☐ Oxygen, gaseous
- ☐ Other _____

Engine Constituent Subsystems

Inlet, heat exchanger, rocket, mixer-combustor, exit

Engine General Arrangement and Operating Schematic

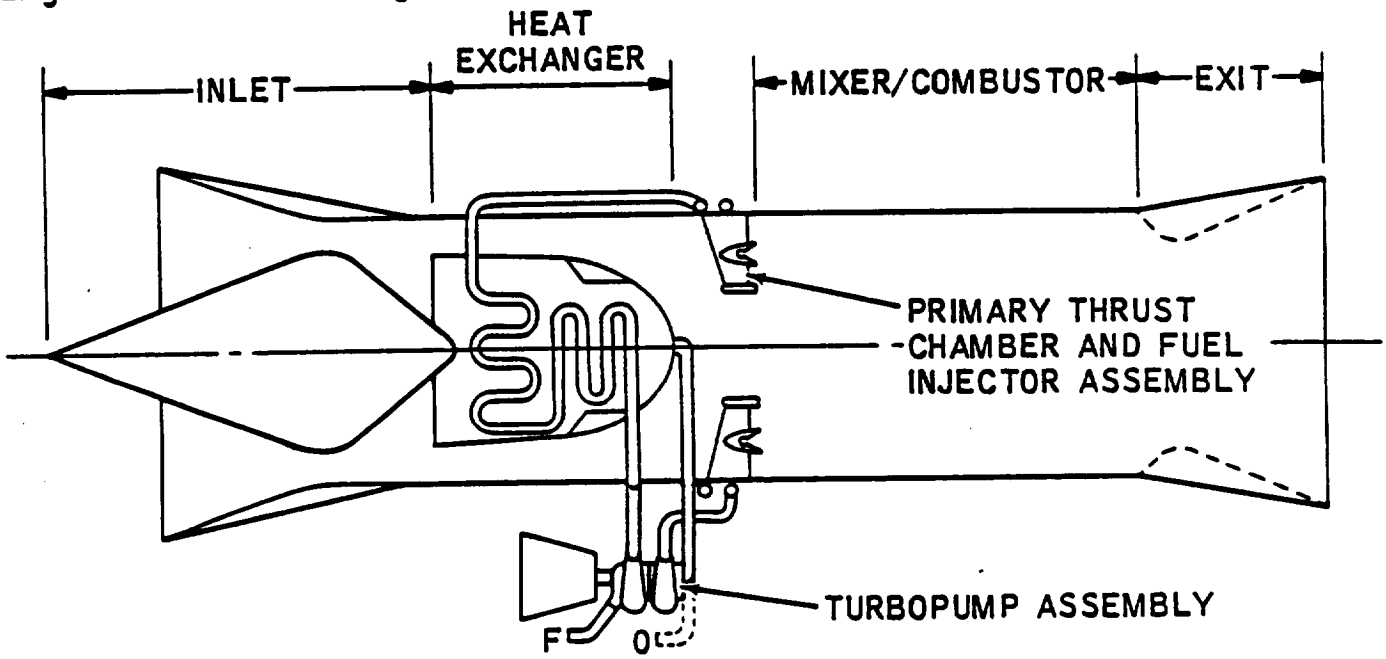

Eng. No. 20

Engine Internal Operating Parameters, nominal

$P_{c\text{-}LACE} = 1000$ psia, $\phi_{LACE} = 4.0$
W_s/W_p (SLS) = 0.985 (1.87), $\phi_{SEC\text{-}SLS} = 2.65$ (1.40)
$A_4/A_3 = 1.00$, $A_c/A_3 = 1.15$

Engine Operating Mode Block Diagrams

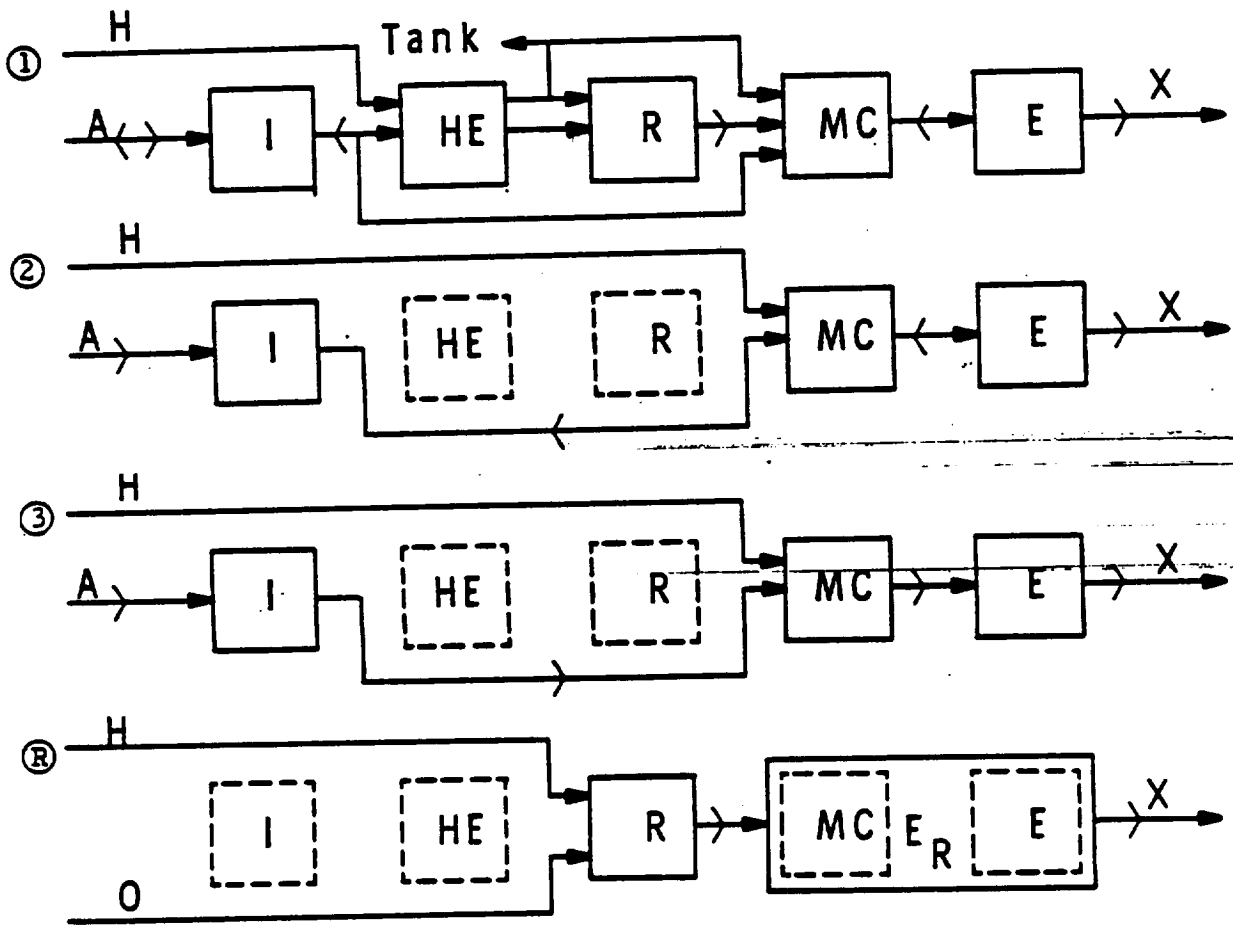

SPECIFIC IMPULSE
REFERENCE TRAJECTORIES

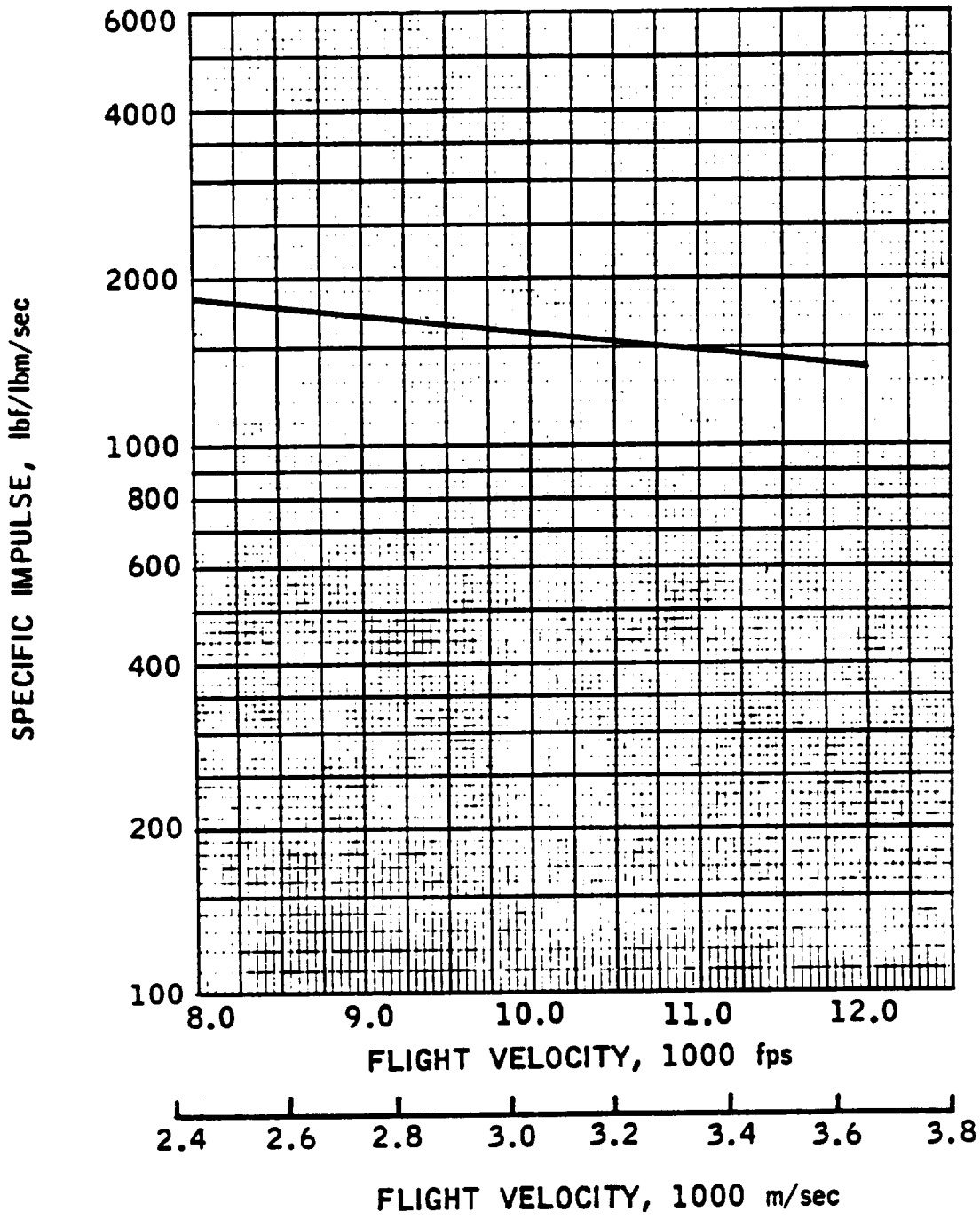

Eng. No. 20

The following information for Engine No. 20 appears in the fact sheets previously given for Engine No. 19.

Engine Physical Characteristics

Weight, Thrust/Weight, Flow areas, Lengths

Engine Performance: 0-8000 ft/sec

Specific Impulse, Thrust, Airflow, Capture Area

References and additional remarks

ENG. NO. 20-1

THRUST

REFERENCE TRAJECTORIES

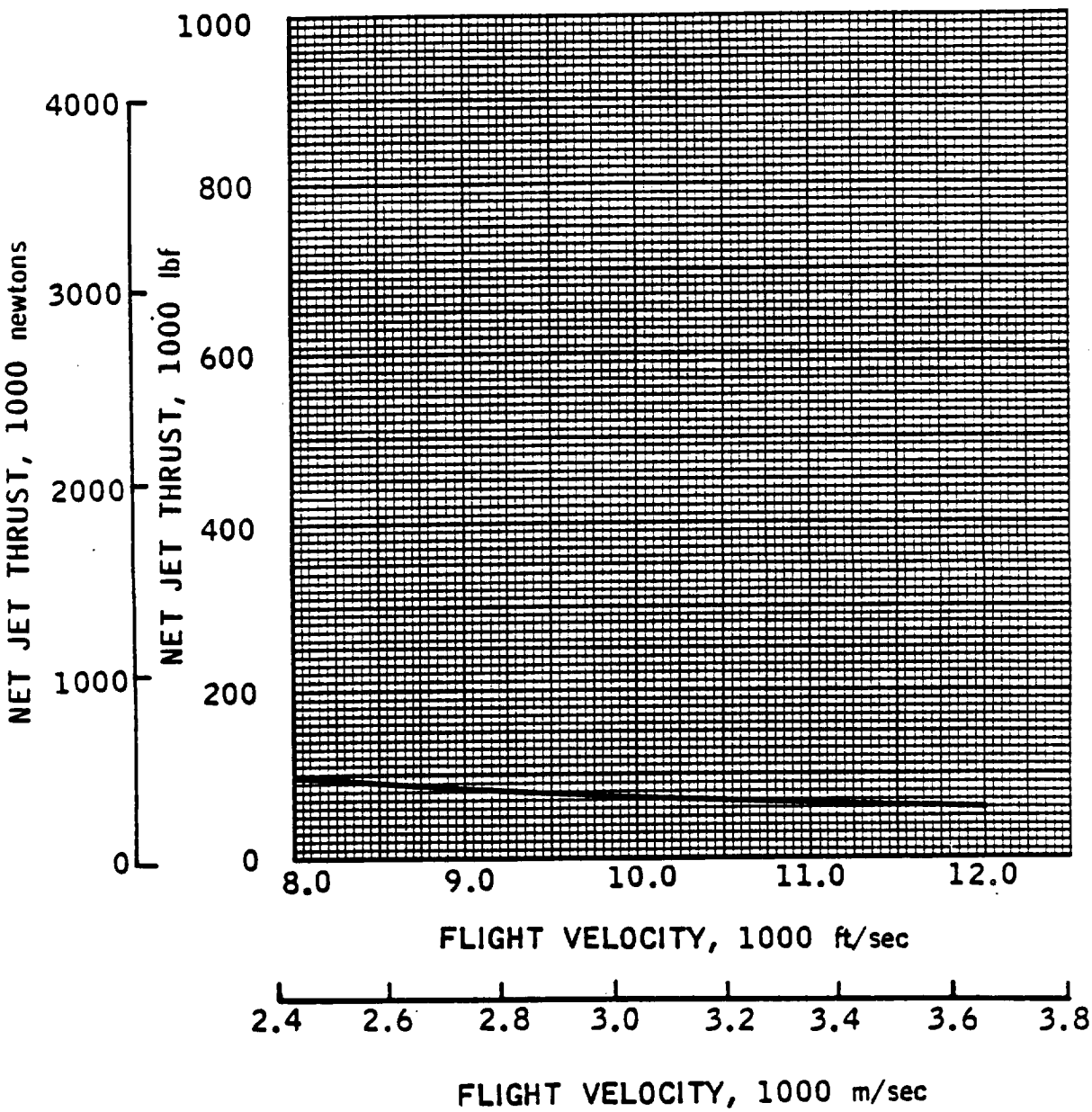

SPECIFIC IMPULSE
REFERENCE TRAJECTORIES

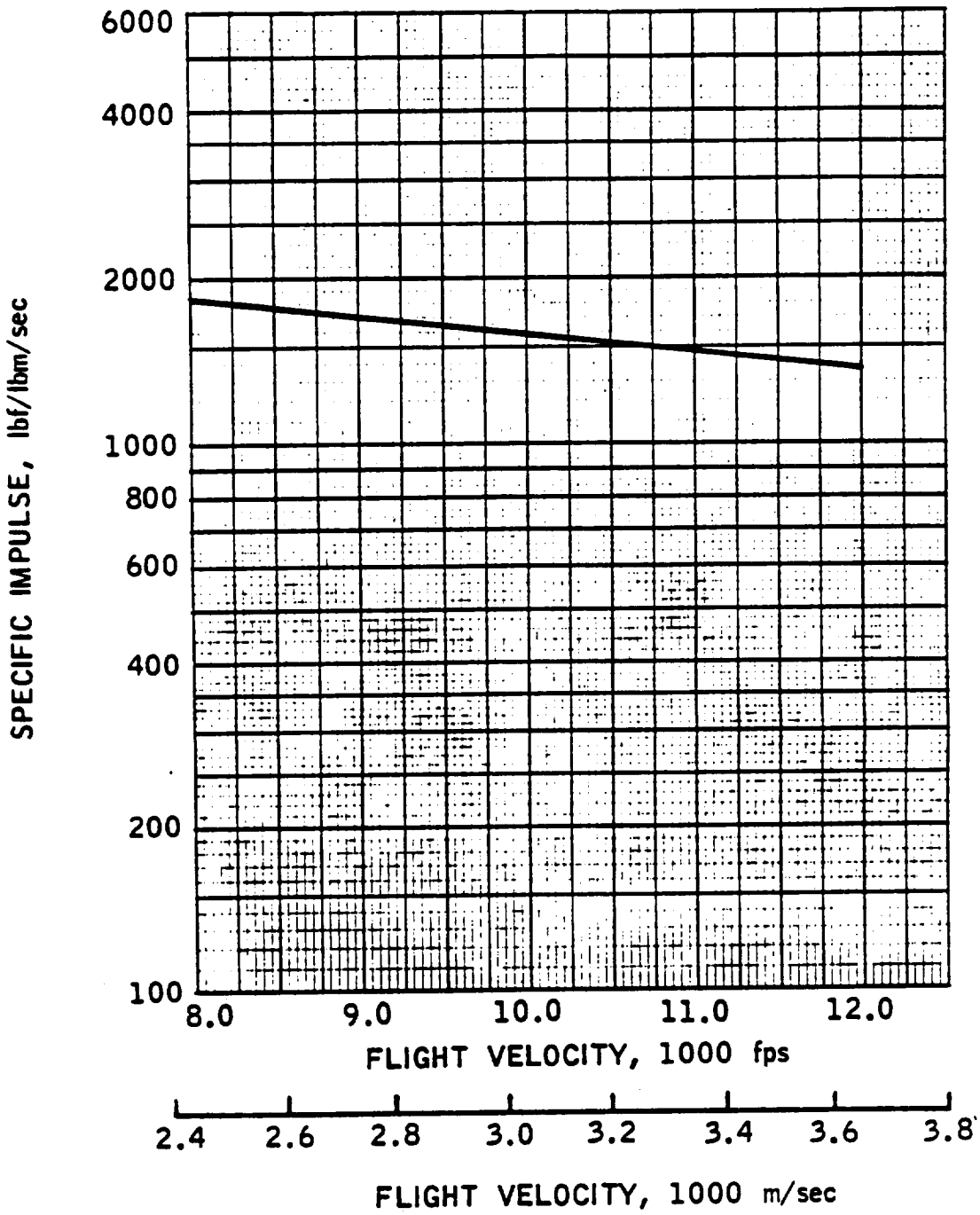

ENG. NO. 20-2

THRUST

REFERENCE TRAJECTORIES

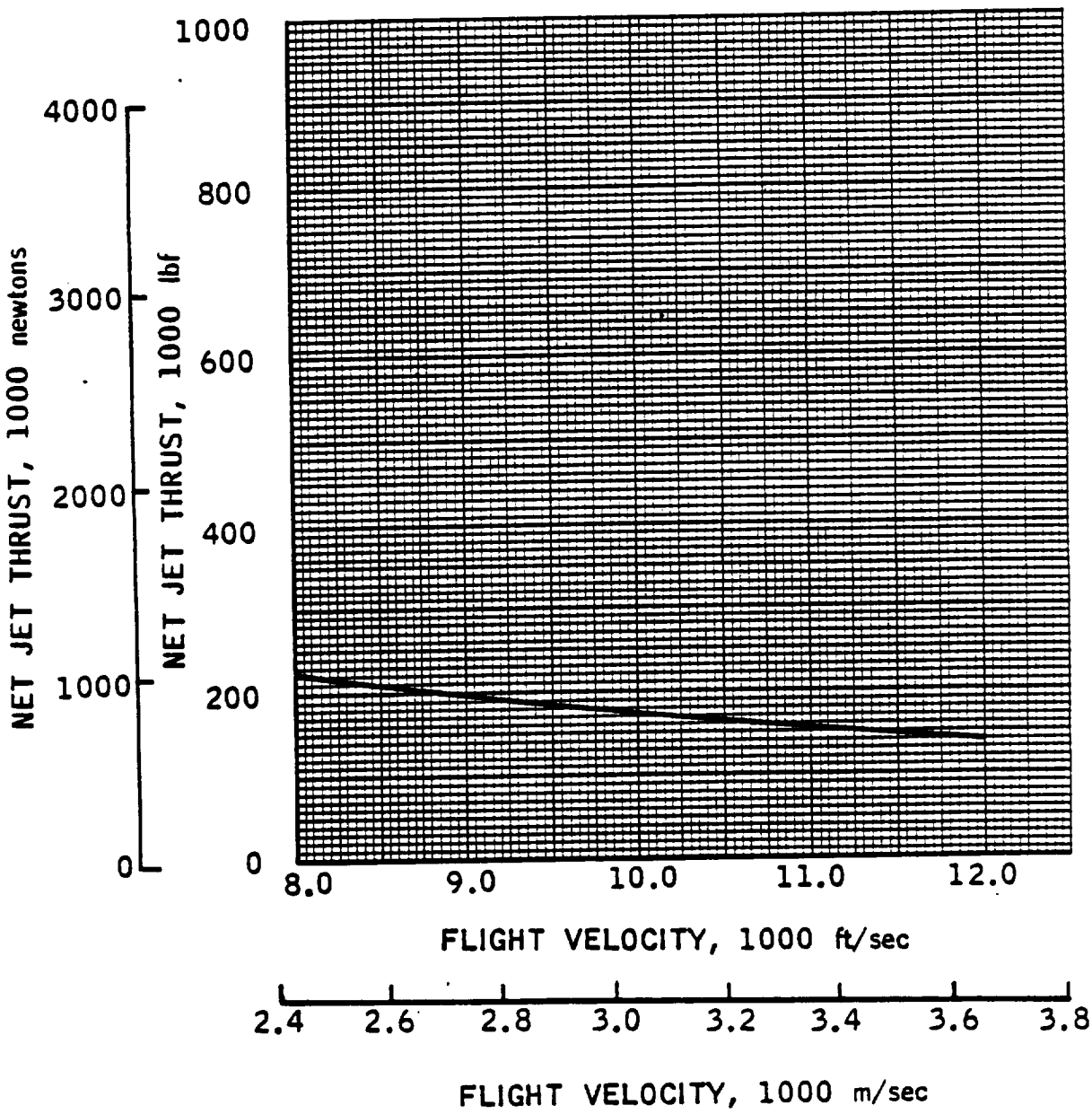

This Page Intentionally Blank

ENGINE FACT SHEET

Class 0 Composite Launch Vehicle Engines

Engine Identification Number: 21 RamLACE

Engine Operating Modes

Summary: Number of Modes/ Transitions 5 ; Number of Discrete Modes Utilized 3

Mode Progression - Lift-off to Touch-down

(Take off) Air augmented Liquid Air Cycle Engine (LACE), afterburning cycle (2000-3000 ft/sec) Ramjet, subsonic combustion (6000-8000 ft/sec) Rocket (Orbital speed, space maneuvering and deorbiting) Ramjet, subsonic combustion (Flyback) Air augmented LACE, afterburning cycle (Landing)

Engine Propellant Requirements

Code: (R) = Required, (V) = Required for vacuum operation, (F) = Useable for flyback mode

- [R] Hydrogen, liquid, 37-40 °R
- [ ] Hydrogen, liquid, subcooled (25 °R)
- [ ] Hydrogen, gaseous
- [V] Oxygen, liquid, 162 °R
- [ ] Oxygen, liquid, subcooled
- [ ] Oxygen, gaseous
- [ ] Other _____

Engine Constituent Subsystems

Inlet, heat exchanger, rocket, mixer-diffuser, combustor, exit

Engine General Arrangement and Operating Schematic

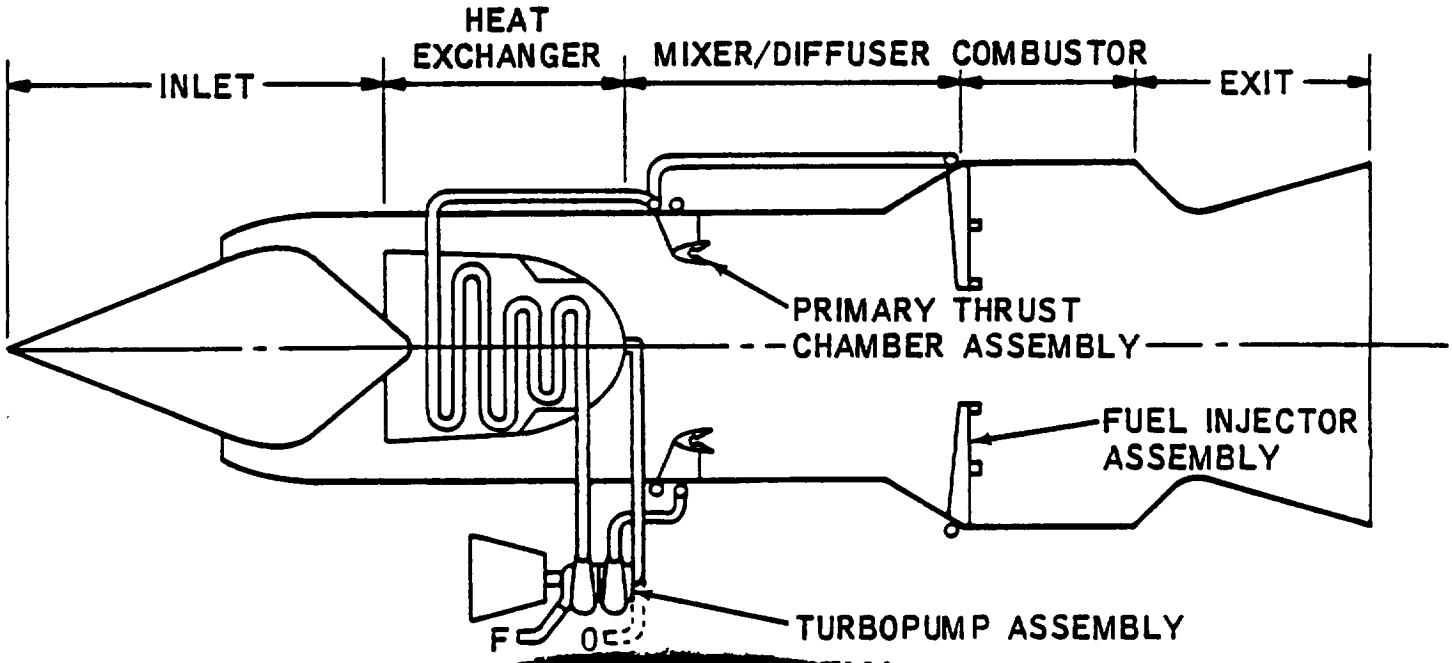

Engine Internal Operating Parameters, nominal

$P_{c\text{-}LACE} = 1000$ psia, $\phi_{LACE} = 1.0$, $\phi_{HX} = 8.0$
W_s/W_p (SLS) = 1.50 (3.00), $\phi_{SEC\text{-}SLS} = 4.54$ (2.27)
$A_4/A_3 = 2.00$ (2.51)

Engine Operating Mode Block Diagrams

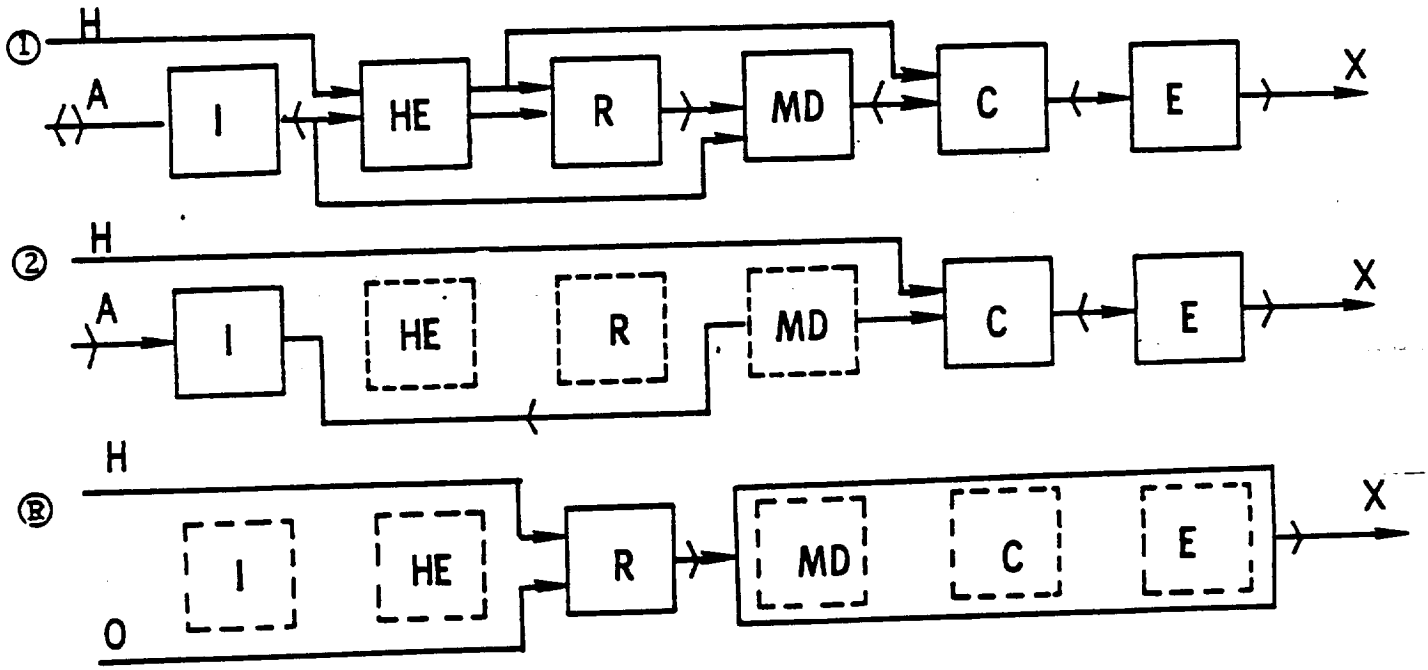

ENGINE PHYSICAL CHARACTERISTICS

Eng. No. 21-1

Thrust, sls	250,000 lbf	1,112,055 newton

Weight and Thrust/Weight Ratio

Measuring Units	(English)	(International)
Weight	lbm	kg
Thrust/Weight	lbf/lbm	newton/kg

(lbf/in^2) Maximum Engine Internal Pressure 1000 (newton/m^2)

Lightweight Estimate	50	100	250	344.7	689.5	1723.7
Subsystems:						
Fan						
Heat Exchanger	3887	4259	4671	1763.1	1931.9	2118.8
Primary Rocket	2035	2035	2035	923.1	923.1	923.1
Mixer/Diffuser	1209	1365	1872	548.4	619.2	849.1
Combustor/Exit	1738	1975	2686	788.4	895.9	1218.4
Contingency	498	538	659	225.9	244.0	298.9
Uninstalled Eng. Wt.	9367	10172	11923	4248.9	4614.0	5408.3
Thrust/Weight, Uninst.	26.7	24.6	21.0	262	241	206
Inlet Weight	3150	3600	5220	1428.8	1633.0	2367.8
Installed Eng. Wt.	12517	13772	17143	5677.7	6246.9	7776.1
Thrust/Weight, Inst.	20.0	18.2	14.6	196	179	143

Heavyweight Estimate						
Uninstalled Eng. Wt.	11240	12 206	14308	5098.5	5536.6	6490.1
Thrust/Weight, Uninst.	22.2	20.5	17.5	218	201	172
Inlet Weight	12656	14464	20340	5740.8	6560.9	9226.2
Installed Eng. Wt.	23896	26670	34648	10839.2	12097.5	15716.3
Thrust/Weight, Inst.	10.5	9.4	7.2	103	92	71

Engine Flow Areas and Equivalent Diameters

	ft^2	ft	m^2	m
Inlet Cowl, A_c	90.4	10.73	8.40	3.27
Mixer, A_3	39.3	7.07	3.65	2.15
Combustor, A_4	78.5	9.98	7.29	3.04
Exit, A_6	125.2	12.62	11.63	3.85

Engine Lengths

	ft	m
Uninstalled	20.8	6.34
Inlet (Typ)	37.1	11.31
Installed (Typ)	57.9	17.65

REMARKS, REFERENCES

RamLACE (References 5, 7, 21)

SPECIFIC IMPULSE
REFERENCE TRAJECTORIES

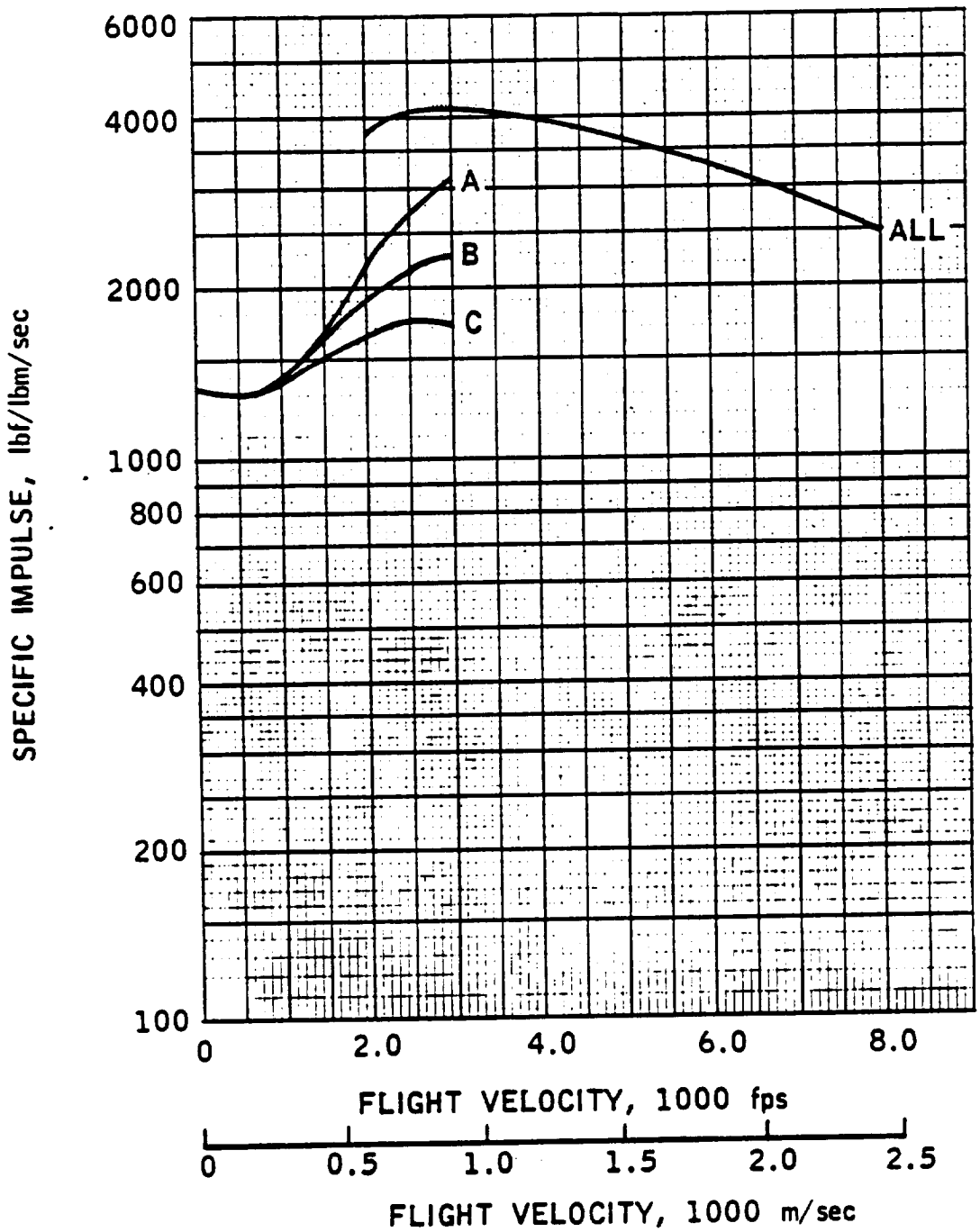

ENG. NO. 21-1

THRUST

REFERENCE TRAJECTORIES

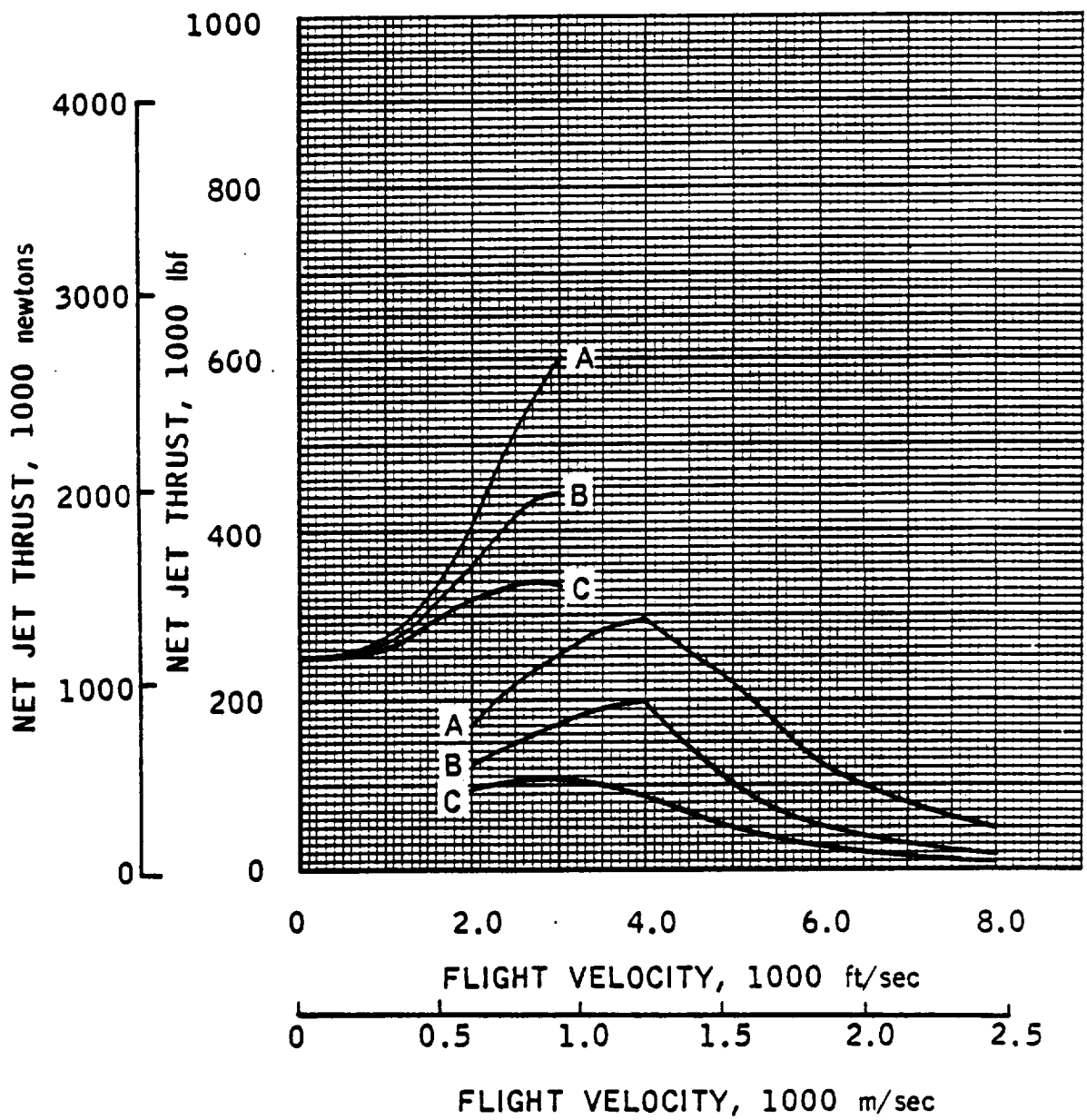

CAPTURE AREA

REFERENCE TRAJECTORIES

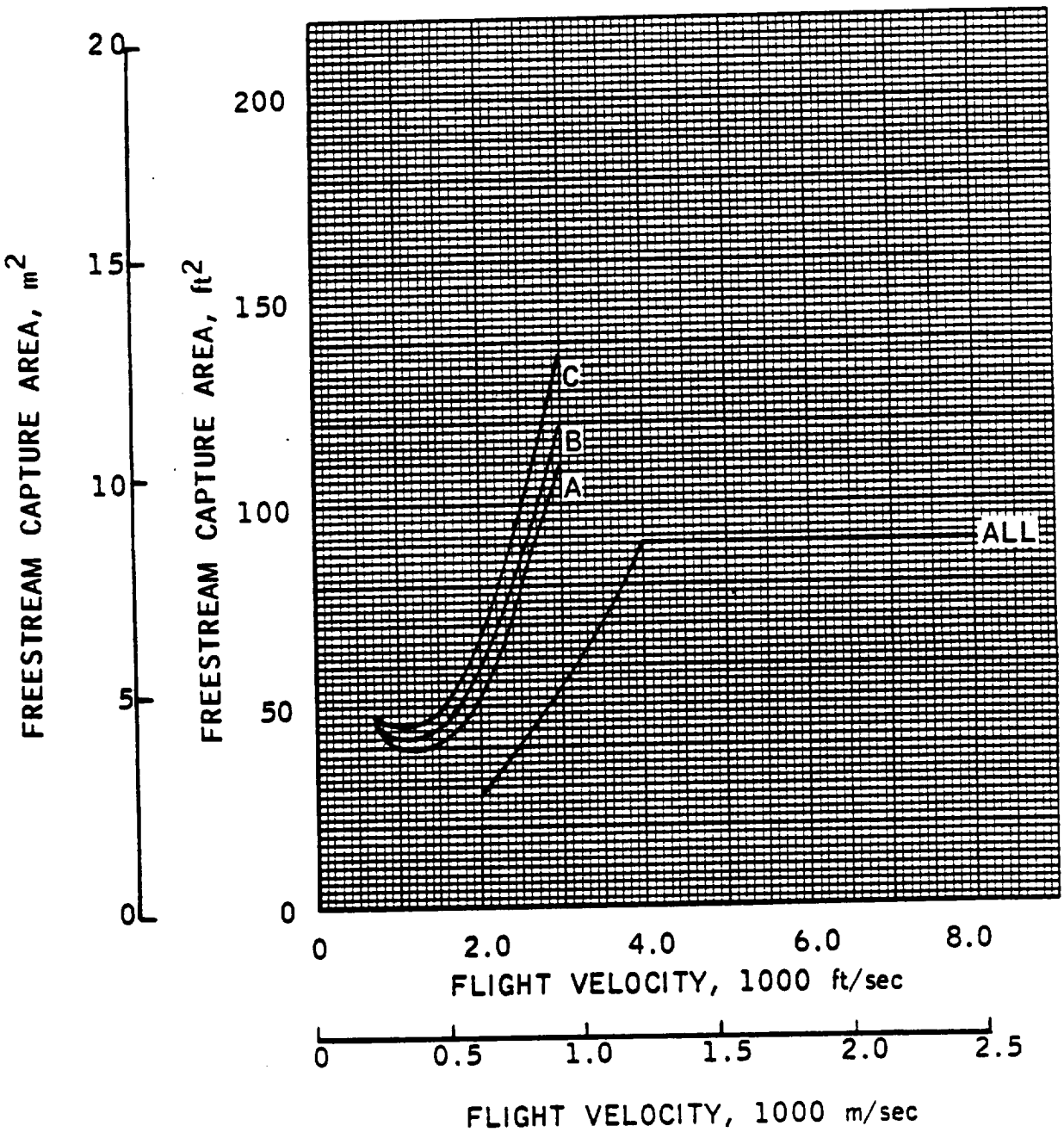

AIRFLOW

REFERENCE TRAJECTORIES

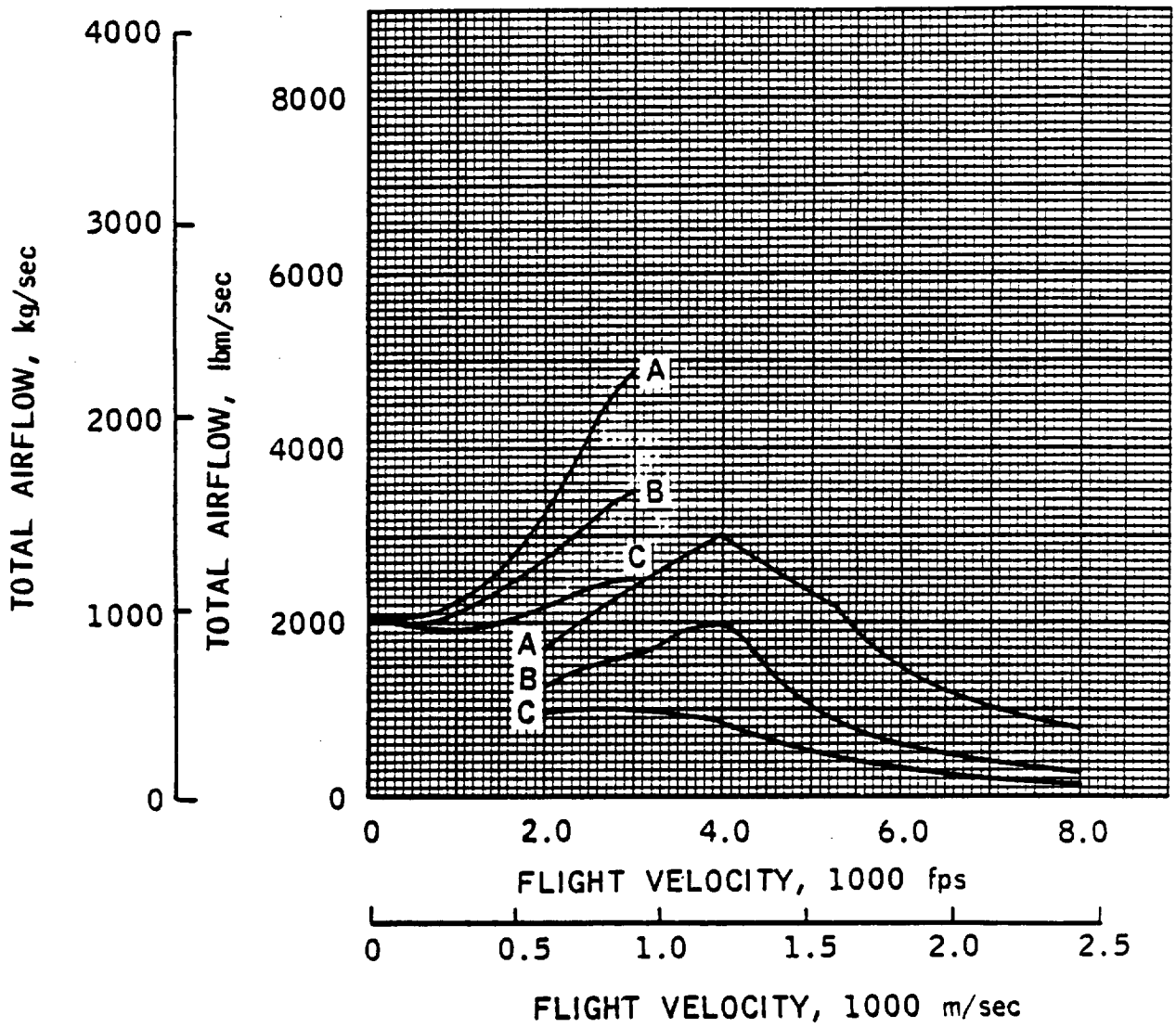

ENGINE- 21-1

ESTIMATED PERFORMANCE

MO	VO	HTO	PTO	T	CF	IS	SPC	PT2	H2	P2
ALTITUDE - 0. FEET										
0.10	112.	124.7	14.8	259209.	71.28	1347.	2.67	14.80	117.6	12.05
ALTITUDE - 10000. FEET										
0.65	700.	125.7	13.4	253544.	11.80	1318.	2.73	13.43	118.5	10.93
0.70	754.	127.3	14.0	256344.	10.84	1333.	2.70	14.02	120.0	11.41
0.79	851.	130.4	15.3	267926.	8.65	1393.	2.58	16.21	125.1	13.20
ALTITUDE - 20000. FEET										
1.01	1047.	129.3	12.9	264190.	8.47	1373.	2.62	12.94	121.9	10.54
1.21	1255.	139.8	16.6	287098.	6.79	1492.	2.41	16.47	130.9	13.41
1.45	1504.	152.5	23.1	327431.	5.43	1702.	2.12	22.52	143.9	19.34
ALTITUDE - 30000. FEET										
1.46	1453.	141.0	15.2	289386.	6.35	1504.	2.39	14.77	133.0	12.03
1.71	1701.	156.6	21.9	333327.	5.19	1733.	2.08	20.89	147.8	17.02
2.06	2049.	182.7	37.6	424888.	4.13	2209.	1.63	34.55	173.2	28.56
ALTITUDE - 40000. FEET										
1.91	1849.	161.9	18.6	314077.	5.11	1633.	2.20	17.36	152.7	14.15
2.22	2149.	185.8	30.1	378553.	4.12	1968.	1.83	27.20	175.5	22.17

[redacted]

ENGINE- 21-1

ESTIMATED PERFORMANCE

M2	WS	WP	WSWP	WFT	PHP	PHS	V6	PT20	A0	A5	A6
ALTITUDE - 0. FEET											
0.550	1271.	849.	1.50	192.4	1.0	4.541	3747.	1.00	149.01	70.72	73.94
ALTITUDE - 10000. FEET											
0.550	1149.	849.	1.35	192.4	1.0	5.024	4404.	1.00	29.07	68.07	78.71
0.550	1193.	849.	1.41	192.4	1.0	4.840	4421.	1.00	28.01	68.81	79.86
0.550	1351.	849.	1.59	192.4	1.0	4.272	4481.	1.00	26.13	71.37	83.98
ALTITUDE - 20000. FEET											
0.550	1093.	849.	1.29	192.4	1.0	5.283	4981.	1.00	25.60	66.58	91.29
0.550	1343.	849.	1.58	192.4	1.0	4.297	5066.	0.99	26.24	70.48	99.61
0.550	1754.	849.	2.07	192.4	1.0	3.291	5201.	0.98	28.57	75.57	112.33
ALTITUDE - 30000. FEET											
0.550	1196.	849.	1.41	192.4	1.0	4.827	5534.	0.98	28.71	67.55	118.49
0.550	1606.	849.	1.89	192.4	1.0	3.594	5522.	0.95	32.88	72.66	125.56
0.530	2406.	849.	2.83	192.4	1.0	2.399	5479.	0.92	40.79	77.50	125.52
ALTITUDE - 40000. FEET											
0.550	1314.	849.	1.55	192.4	1.0	4.392	5661.	0.93	37.52	67.65	125.23
0.550	1926.	849.	2.27	192.4	1.0	2.998	5556.	0.90	47.20	72.81	125.39

ENGINE- 21-1

ESTIMATED PERFORMANCE

MO	VO	HTO	PTO	T	CF	IS	SPC	PT2	H2	P2
ALTITUDE - 40000. FEET										
2.69	2604.	229.0	62.6	540915.	3.16	2812.	1.28	53.11	216.5	43.33
ALTITUDE - 45500. FEET										
3.10	3000.	273.3	99.3	604959.	2.70	3145.	1.14	71.10	260.5	59.62
ALTITUDE - 50000. FEET										
2.40	2320.	201.1	24.6	331227.	3.99	1722.	2.09	21.69	189.9	17.69
2.84	2750.	244.6	48.8	440066.	3.08	2288.	1.57	40.51	231.3	33.06
ALTITUDE - 54000. FEET										
3.10	3000.	273.3	59.5	440644.	2.71	2291.	1.57	47.37	260.5	39.72
ALTITUDE - 60000. FEET										
2.89	2800.	250.2	32.7	340478.	3.15	1770.	2.03	26.95	236.6	22.00
ALTITUDE - 64000. FEET										
3.10	3000.	273.3	36.9	335470.	2.91	1744.	2.06	29.37	260.5	24.63

CONFIDENTIAL

ENGINE- 21-1

ESTIMATED PERFORMANCE

M2	WS	WP	WSWP	WFT	PHP	PHS	V6	PT20	A0	A5	A6
ALTITUDE - 40000. FEET											
0.550	3402.	849.	4.01	192.4	1.0	1.697	5558.	0.85	68.55	78.38	125.29
ALTITUDE - 45500. FEET											
0.512	3989.	849.	4.70	192.4	1.0	1.447	5883.	0.80	90.45	69.45	124.96
ALTITUDE - 50000. FEET											
0.550	1479.	849.	1.74	192.4	1.0	3.903	5753.	0.88	54.11	66.48	125.32
0.550	2515.	849.	2.96	192.4	1.0	2.295	5752.	0.83	77.33	71.29	125.43
ALTITUDE - 54000. FEET											
0.512	2658.	849.	3.13	192.4	1.0	2.172	5851.	0.80	90.45	64.54	125.07
ALTITUDE - 60000. FEET											
0.550	1656.	849.	1.95	192.4	1.0	3.486	5875.	0.82	80.61	64.52	124.92
ALTITUDE - 64000. FEET											
0.512	1648.	849.	1.94	192.4	1.0	3.503	6010.	0.80	90.45	61.05	125.40

This Page Intentionally Blank

ENGINE PHYSICAL CHARACTERISTICS

Eng. No. 21-2

Thrust, sls	250,000 lbf	1,112,055 newton

Weight and Thrust/Weight Ratio

Measuring Units	(English)	(International)
Weight	lbm	kg
Thrust/Weight	lbf/lbm	newton/kg

Lightweight Estimate

(lbf/in^2) Maximum Engine Internal Pressure 1000 (newton/m^2)

Subsystems:	50	100	250	344.7	689.5	1723.7
Fan						
Heat Exchanger	3216	3523	3864	1458.8	1598.0	1752.7
Primary Rocket	1685	1685	1685	764.3	764.3	764.3
Mixer/Diffuser	1953	2205	3024	885.9	1000.2	1371.7
Combustor/Exit	3476	3950	5372	1576.7	1791.7	2436.7
Contingency	711	784	1008	322.5	355.6	457.2
Uninstalled Eng. Wt.	11042	12147	14953	5008.7	5509.9	6782.7
Thrust/Weight, Uninst.	22.6	20.6	16.7	222	202	164
Inlet Weight	6370	7280	10556	2889.4	3302.2	4788.2
Installed Eng. Wt.	17411	19427	25509	7897.6	8812.1	11570.9
Thrust/Weight, Inst.	14.4	12.9	9.8	141	127	96

Heavyweight Estimate

Uninstalled Eng. Wt.	12146	13362	16448	5509.4	6061.0	7460.8
Thrust/Weight, Uninst.	20.6	18.7	15.2	202	183	149
Inlet Weight	25494	29136	40973	11564.1	13216.1	18585.4
Installed Eng. Wt.	37640	42498	57421	17073.5	19277.1	26046.2
Thrust/Weight, Inst.	6.6	5.9	4.4	65	58	43

Engine Flow Areas and Equivalent Diameters

	ft^2	ft	m^2	m
Inlet Cowl, A_c	182.1	15.23	16.92	4.64
Mixer, A_3	63.0	8.96	5.85	2.73
Combustor, A_4	158.3	14.20	14.71	4.33
Exit, A_6	252.5	17.93	23.46	5.47

Engine Lengths

	ft	m
Uninstalled	23.7	7.22
Inlet (Typ)	45.0	13.72
Installed (Typ)	68.7	20.94

REMARKS, REFERENCES

SPECIFIC IMPULSE
REFERENCE TRAJECTORIES

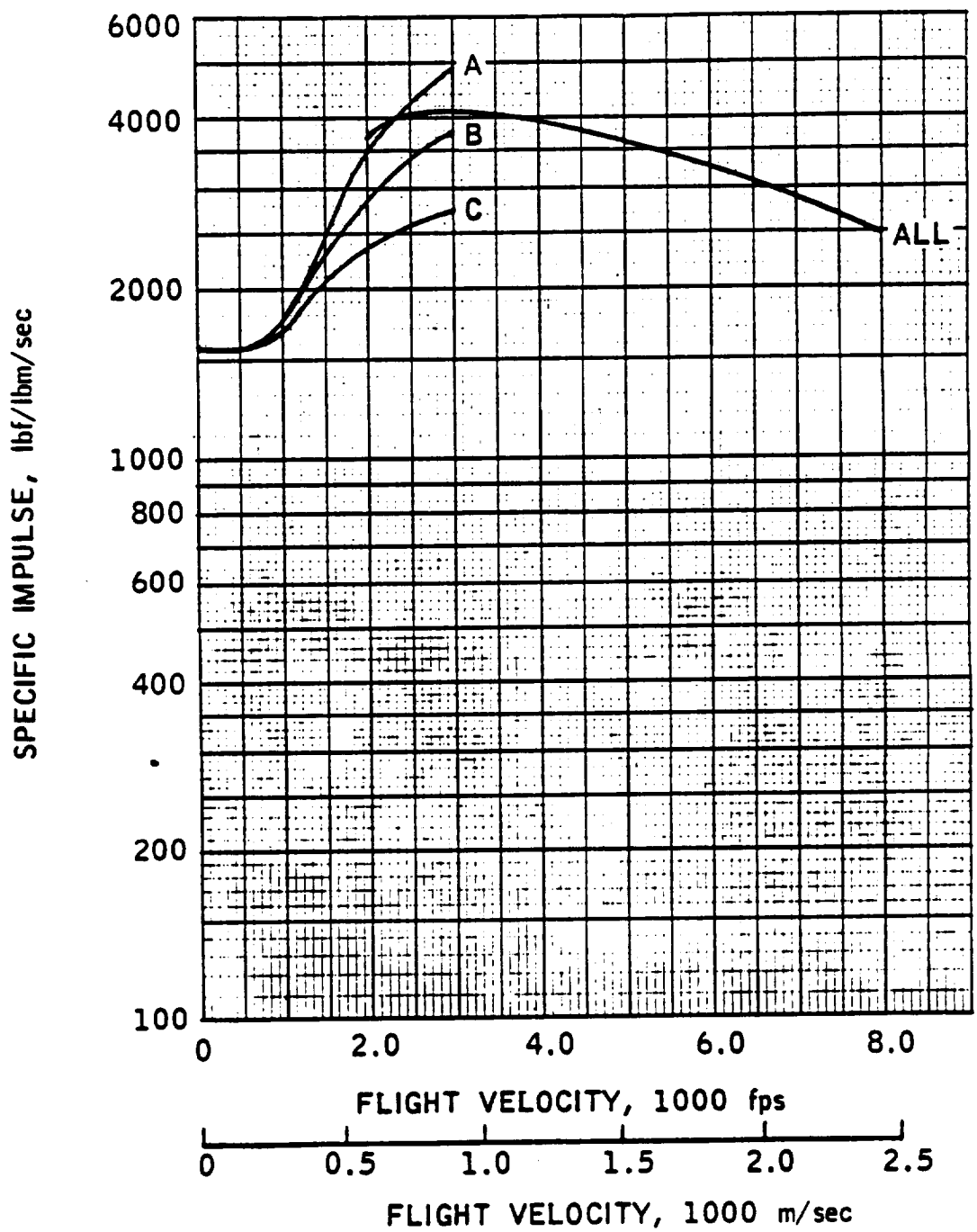

ENG. NO. 21-2

THRUST

REFERENCE TRAJECTORIES

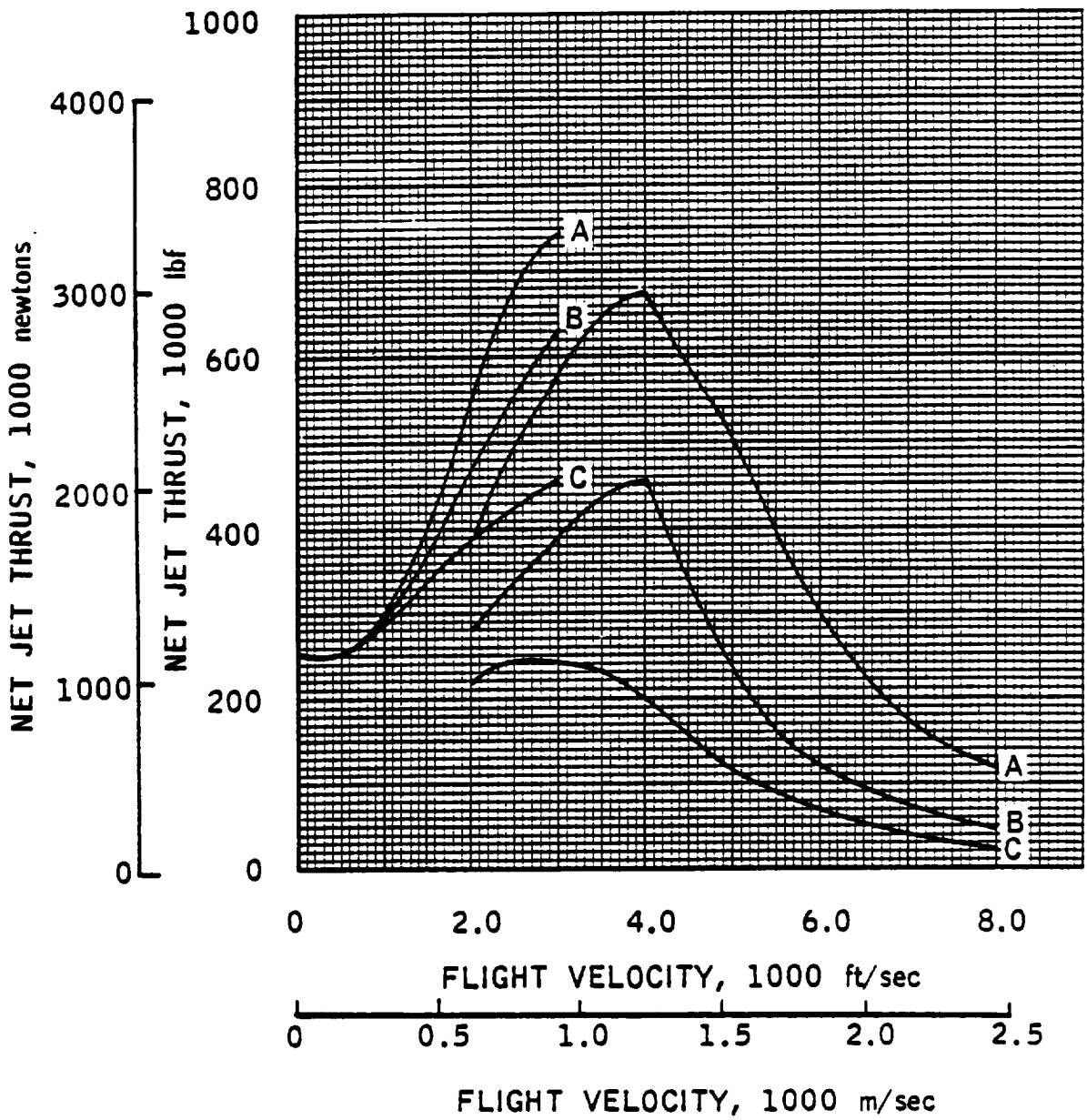

CAPTURE AREA

REFERENCE TRAJECTORIES

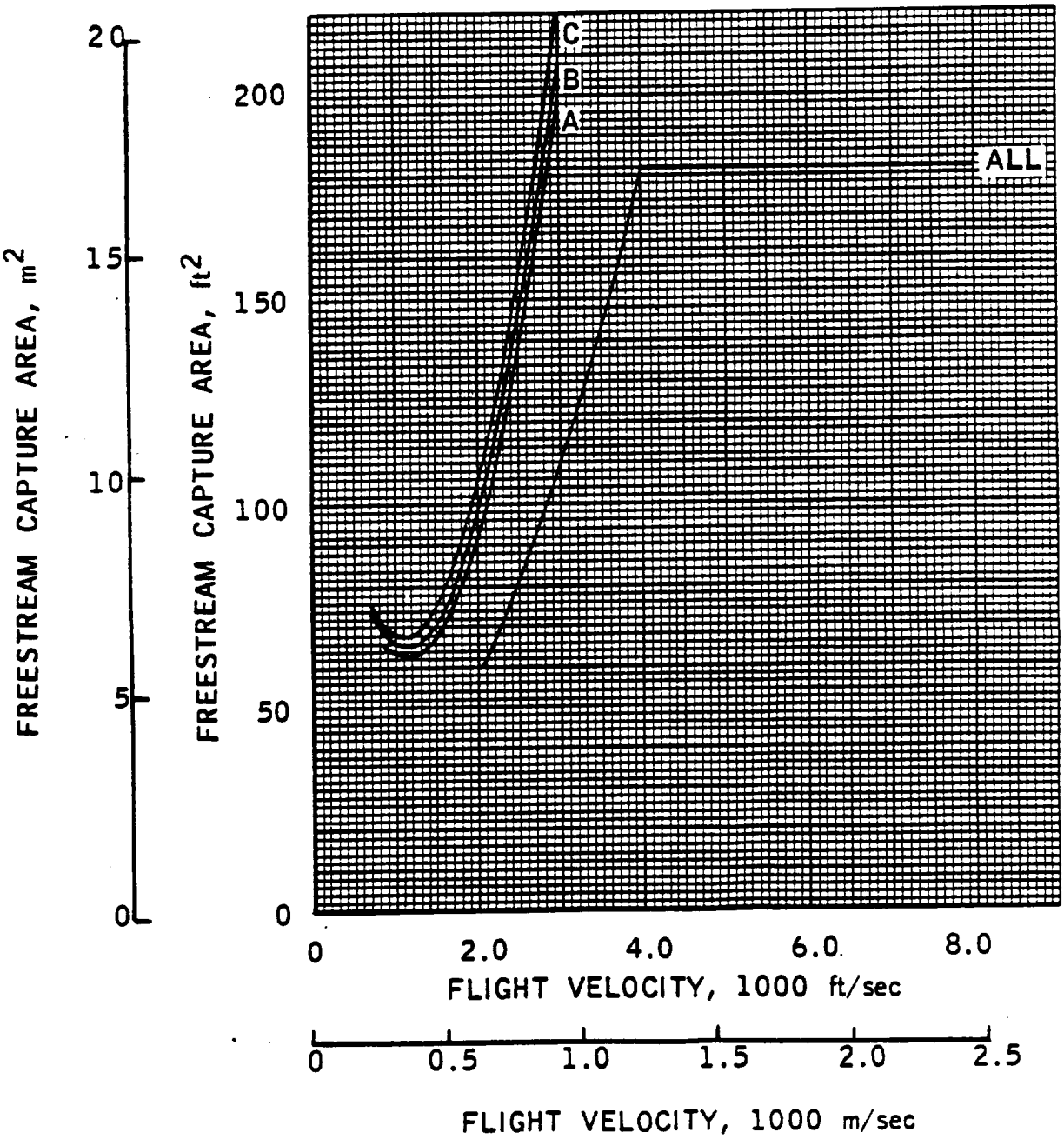

ENG. NO. 21-2

AIRFLOW

REFERENCE TRAJECTORIES

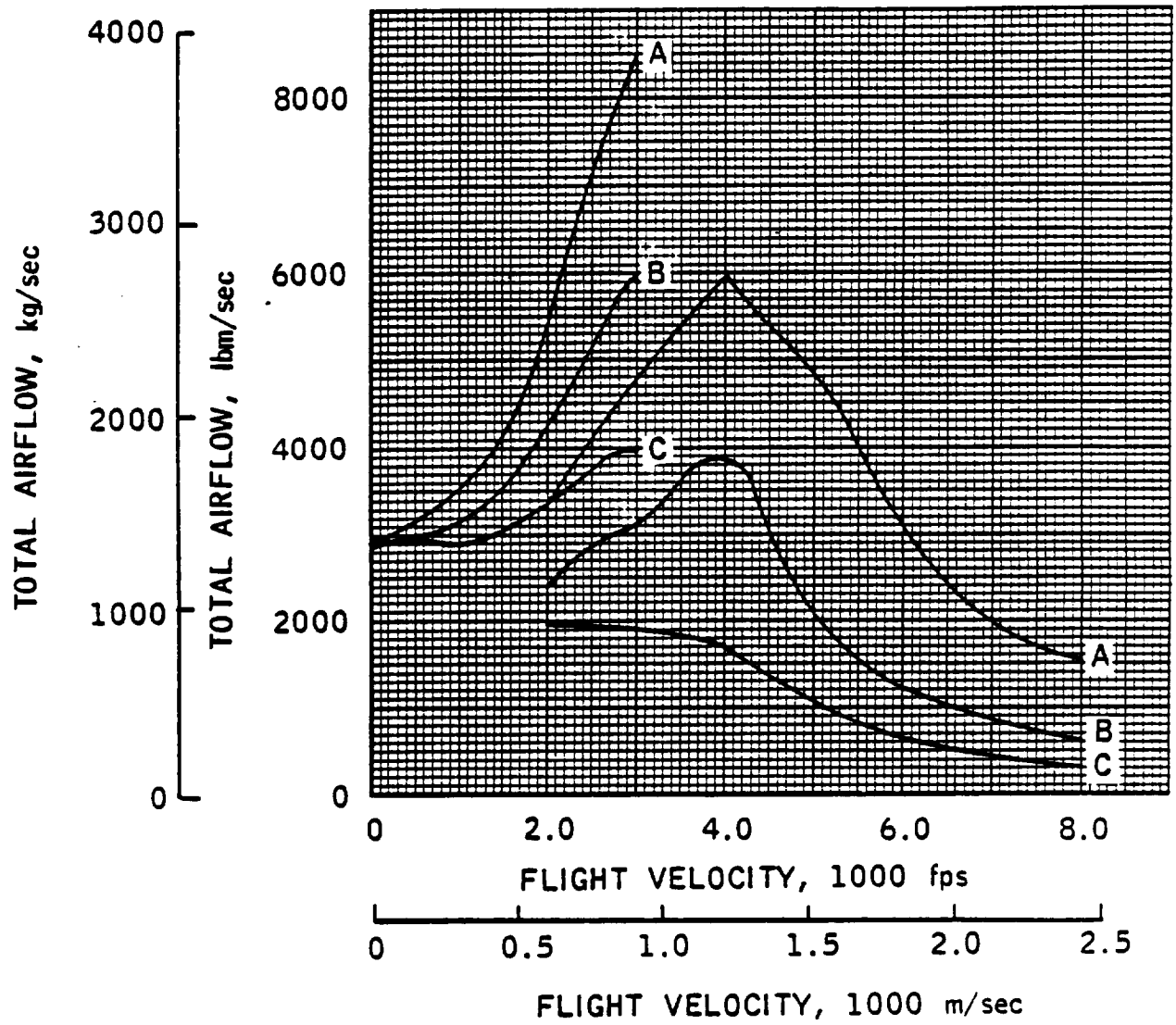

ENGINE- 21-2

ESTIMATED PERFORMANCE

MC	VO	HTO	PTC	T	CF	IS	SPC	PT2	H2	P2
ALTITUDE - 0. FEET										
0.10	112.	124.7	14.8	250000.	*******	1570.	2.29	14.80	*******	*******
ALTITUDE - 10000. FEET										
0.65	700.	125.7	13.4	264500.	*******	1596.	2.26	13.43	*******	*******
0.70	754.	127.3	14.0	271100.	*******	1629.	2.21	14.02	*******	*******
0.79	851.	130.4	15.3	284000.	*******	1700.	2.12	15.26	*******	*******
ALTITUDE - 20000. FEET										
1.01	1047.	129.3	12.9	291000.	*******	1745.	2.06	12.94	*******	*******
1.21	1255.	138.8	16.6	328600.	*******	1996.	1.80	16.47	*******	*******
1.45	1504.	152.5	23.1	397900.	*******	2426.	1.48	22.52	*******	*******
ALTITUDE - 30000. FEET										
1.46	1453.	141.0	15.2	331500.	*******	2032.	1.77	14.77	*******	*******
1.71	1701.	156.6	21.9	414000.	*******	2510.	1.43	20.89	*******	*******
2.06	2049.	182.7	37.6	563000.	*******	3412.	1.06	34.55	*******	*******
ALTITUDE - 40000. FEET										
1.91	1849.	161.9	18.6	388000.	*******	2344.	1.54	17.36	*******	*******
2.22	2149.	185.8	30.1	497500.	*******	3028.	1.19	27.20	*******	*******

CONFIDENTIAL

ENGINE- 21-2

ESTIMATED PERFORMANCE

M2	WS	WP	WSWP	WFT	PHP	PHS	V6	PT20	A0	A5	A6
ALTITUDE - 0. FEET											
0.523	2186.	729.	3.00	159.2	1.0	2.268	*******	1.00	338.95	*******	*******
ALTITUDE - 10000. FEET											
0.523	2281.	729.	3.13	165.7	1.0	2.174	*******	1.00	75.60	*******	*******
0.523	2372.	729.	3.25	166.4	1.0	2.091	*******	1.00	72.32	*******	*******
0.523	2712.	729.	3.72	167.1	1.0	1.828	*******	1.00	66.17	*******	*******
ALTITUDE - 20000. FEET											
0.523	2175.	729.	2.98	166.8	1.0	2.280	*******	1.00	67.54	*******	*******
0.523	2654.	729.	3.64	164.6	1.0	1.868	*******	0.99	65.71	*******	*******
0.523	3460.	729.	4.75	164.0	1.0	1.433	*******	0.98	67.97	*******	*******
ALTITUDE - 30000. FEET											
0.523	2349.	729.	3.22	163.1	1.0	2.111	*******	0.98	73.42	*******	*******
0.523	3132.	729.	4.30	164.9	1.0	1.583	*******	0.95	78.78	*******	*******
0.523	4842.	729.	6.64	165.0	1.0	1.024	*******	0.92	94.51	*******	*******
ALTITUDE - 40000. FEET											
0.523	2576.	729.	3.53	165.5	1.0	1.925	*******	0.93	93.97	*******	*******
0.523	3770.	729.	5.17	164.3	1.0	1.315	*******	0.90	110.26	*******	*******

[redacted]

ENGINE- 21-2

ESTIMATED PERFORMANCE

MO	VO	HTO	PTO	T	CF	IS	SPC	PT2	H2	P2
				ALTITUDE -		40000. FEET				
2.69	2604.	229.0	62.6	705000.	*******	4290.	0.84	53.11	*******	*******
				ALTITUDE -		45500. FEET				
3.10	3000.	273.3	89.3	748800.	*******	4485.	0.80	71.10	*******	*******
				ALTITUDE -		50000. FEET				
2.40	2320.	201.1	24.6	419000.	*******	2456.	1.47	21.69	*******	*******
2.84	2750.	244.6	48.8	602600.	*******	3678.	0.98	40.51	*******	*******
				ALTITUDE -		54000. FEET				
3.10	3000.	273.3	59.5	637900.	*******	3812.	0.94	47.23	*******	*******
				ALTITUDE -		60000. FEET				
2.89	2800.	250.2	32.7	450500.	*******	2756.	1.31	26.95	*******	*******
				ALTITUDE -		64000. FEET				
3.10	3000.	273.3	36.9	465300.	*******	2779.	1.30	29.37	*******	*******

[redacted]

CONFIDENTIAL

ENGINE- 21-2

ESTIMATED PERFORMANCE

M2	WS	WP	WSWP	WFT	PHP	PHS	V6	PT20	A0	A5	A6
ALTITUDE - 40000. FEET											
0.523	6673.	729.	9.15	164.3	1.0	0.743	*******	0.85	149.98	*******	*******
ALTITUDE - 45500. FEET											
0.523	7853.	729.	10.77	167.0	1.0	0.631	*******	0.80	198.42	*******	*******
ALTITUDE - 50000. FEET											
0.523	2917.	729.	4.00	170.6	1.0	1.700	*******	0.88	133.44	*******	*******
0.523	4923.	729.	6.75	163.8	1.0	1.007	*******	0.83	174.88	*******	*******
ALTITUDE - 54000. FEET											
0.523	5280.	729.	7.24	167.3	1.0	0.939	*******	0.80	206.42	*******	*******
ALTITUDE - 60000. FEET											
0.523	3256.	729.	4.47	163.5	1.0	1.523	*******	0.82	194.99	*******	*******
ALTITUDE - 64000. FEET											
0.523	3274.	729.	4.49	167.4	1.0	1.515	*******	0.80	221.36	*******	*******

CONFIDENTIAL

This Page Intentionally Blank

ENGINE FACT SHEET

Class 0 Composite Launch Vehicle Engines

Engine Identification Number: 22 ScramLACE

Engine Operating Modes

Summary: Number of Modes/ Transitions 6 ; Number of Discrete Modes Utilized 4

Mode Progression - Lift-off to Touch-down

(Take off) Air augmented Liquid Air Cycle Engine (LACE), afterburning cycle (2000-3000 ft/sec) Ramjet, subsonic combustion (6000-8000 ft/sec) Ramjet, supersonic combustion (10,000-14,000 ft/sec) Rocket (Orbital speed, space maneuvering and deorbiting) Ramjet, subsonic combustion (Flyback) Air augmented LACE, afterburning cycle (Landing)

Engine Propellant Requirements

Code: (R) = Required, (V) = Required for vacuum operation, (F) = Useable for flyback mode

- [R] Hydrogen, liquid, 37-40 °R
- [ ] Hydrogen, liquid, subcooled (25 °R)
- [ ] Hydrogen, gaseous
- [V] Oxygen, liquid, 162 °R
- [ ] Oxygen, liquid, subcooled
- [ ] Oxygen, gaseous
- [ ] Other _____

Engine Constituent Subsystems

Inlet, heat exchanger, rocket, mixer-diffuser, combustor, exit

Engine General Arrangement and Operating Schematic

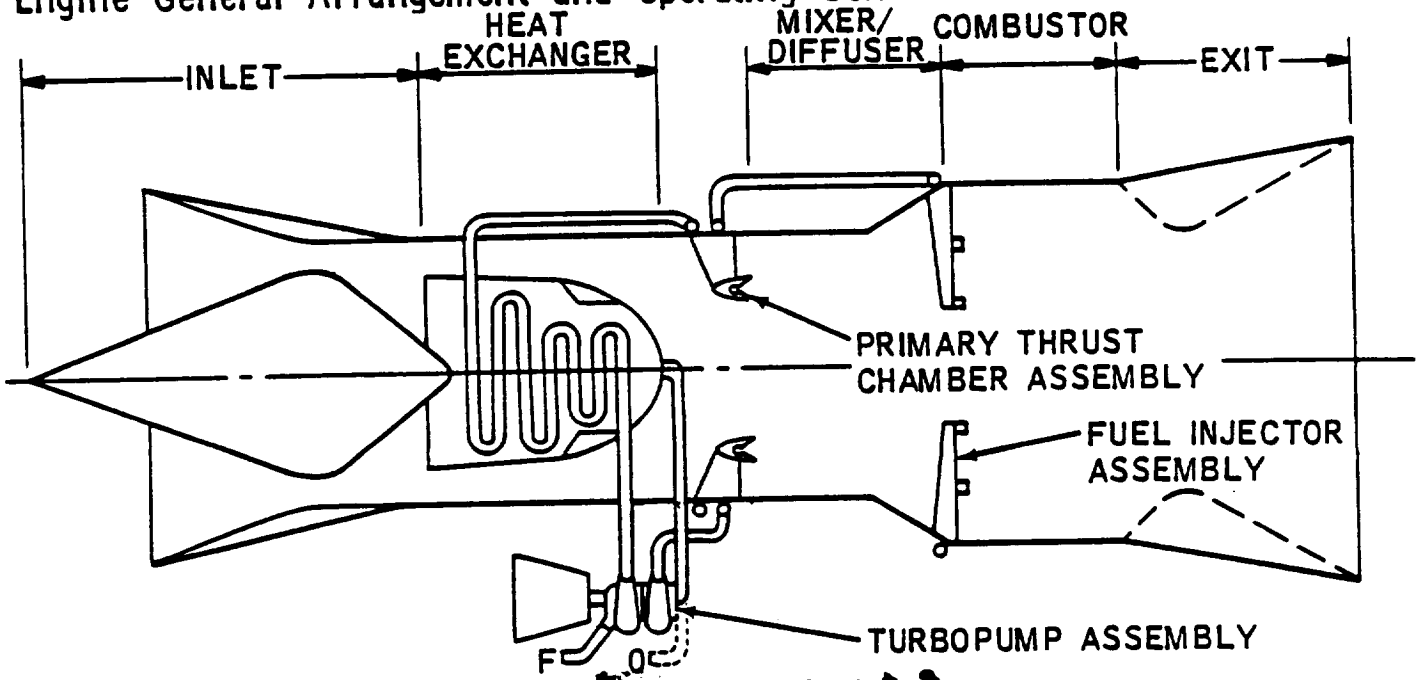

Eng. No. 22

Engine Internal Operating Parameters, nominal

$P_{c\text{-}LACE} = 1000$ psia, $\phi_{LACE} = 1.0$, $\phi_{HX} = 8.0$
W_s/W_p (SLS) = 1.50 (3.00), $\phi_{SEC\text{-}SLS} = 4.54$ (2.27)
$A_4/A_3 = 2.00$ (2.51), $A_c/A_3 = 2.30$ (2.89)

Engine Operating Mode Block Diagrams

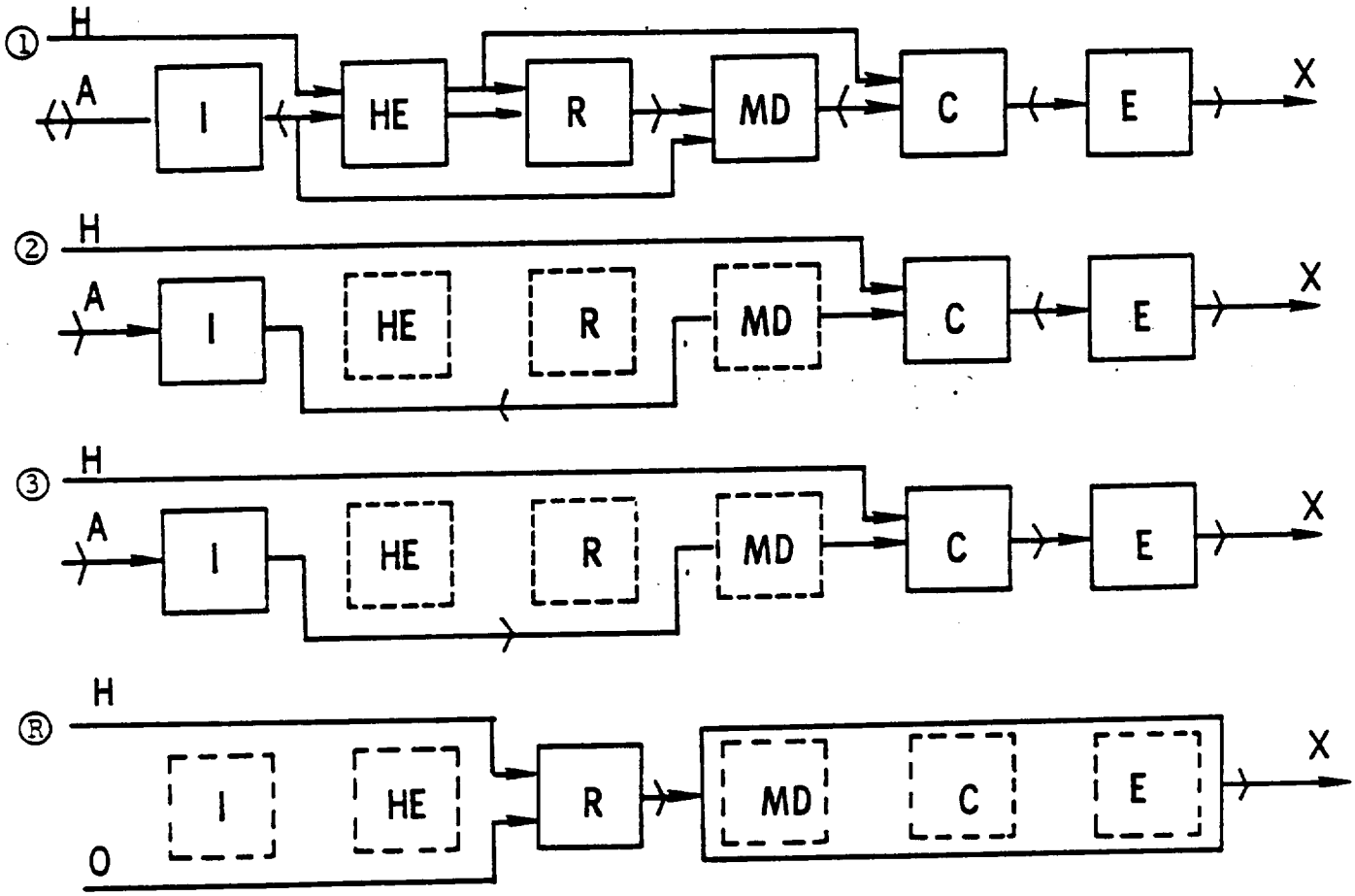

SPECIFIC IMPULSE
REFERENCE TRAJECTORIES

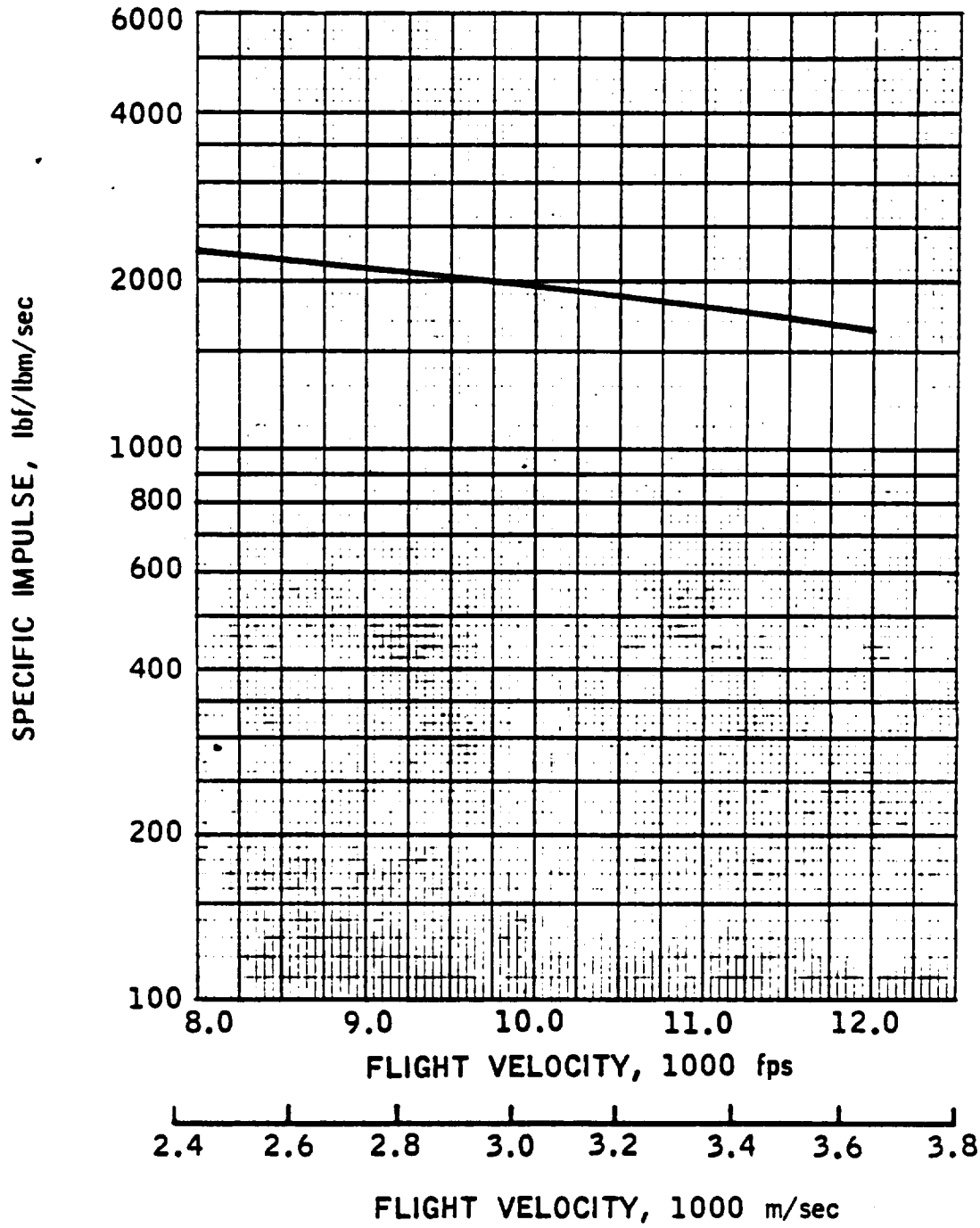

Eng. No. 22

The following information for Engine No. 22 appears in the fact sheets previously given for Engine No. 21.

Engine Physical Characteristics

Weight, Thrust/Weight, Flow areas, Lengths

Engine Performance: 0-8000 ft/sec

Specific Impulse, Thrust, Airflow, Capture Area

References and additional remarks

ENG. NO. 22-1

THRUST

REFERENCE TRAJECTORIES

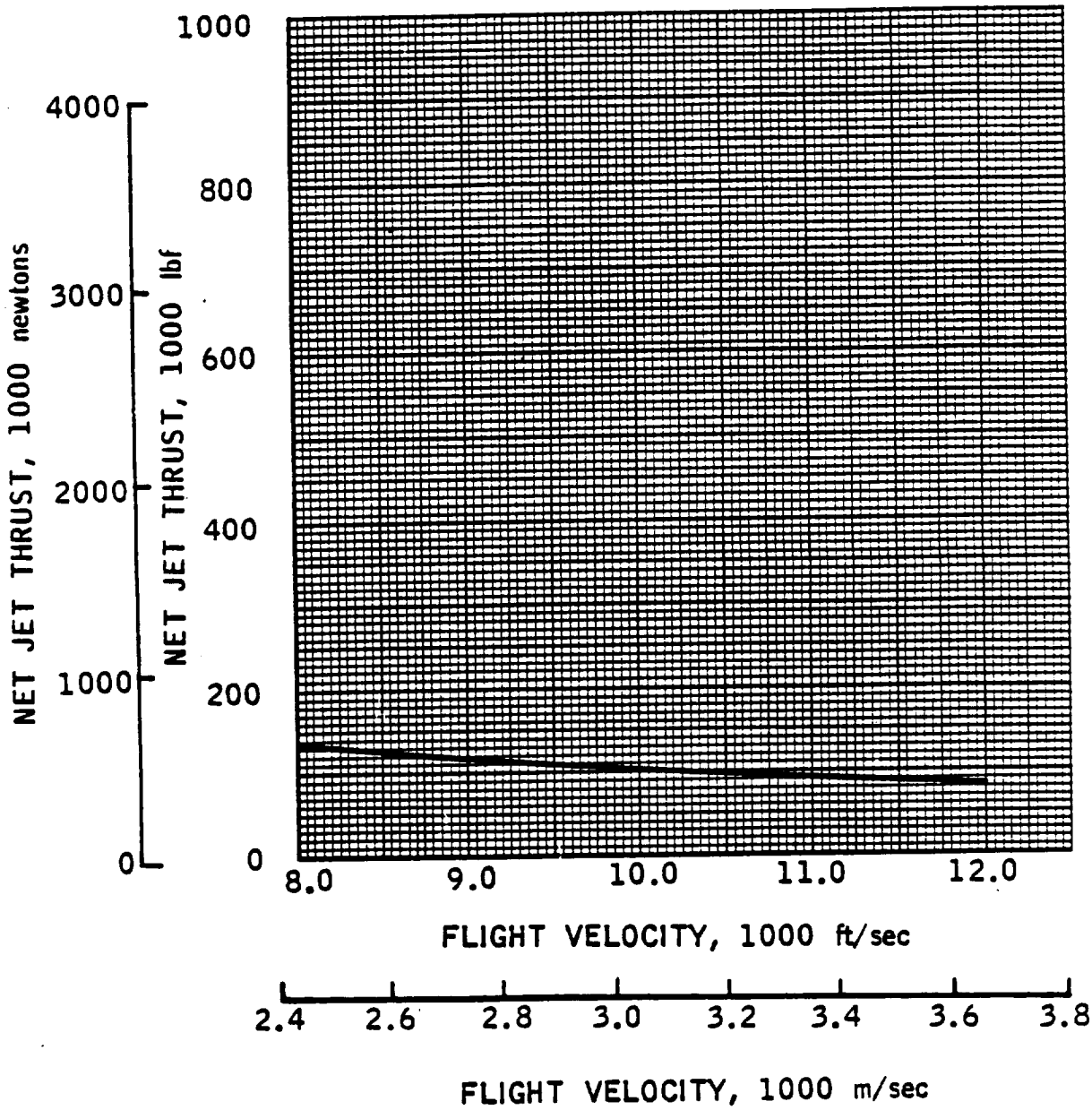

SPECIFIC IMPULSE
REFERENCE TRAJECTORIES

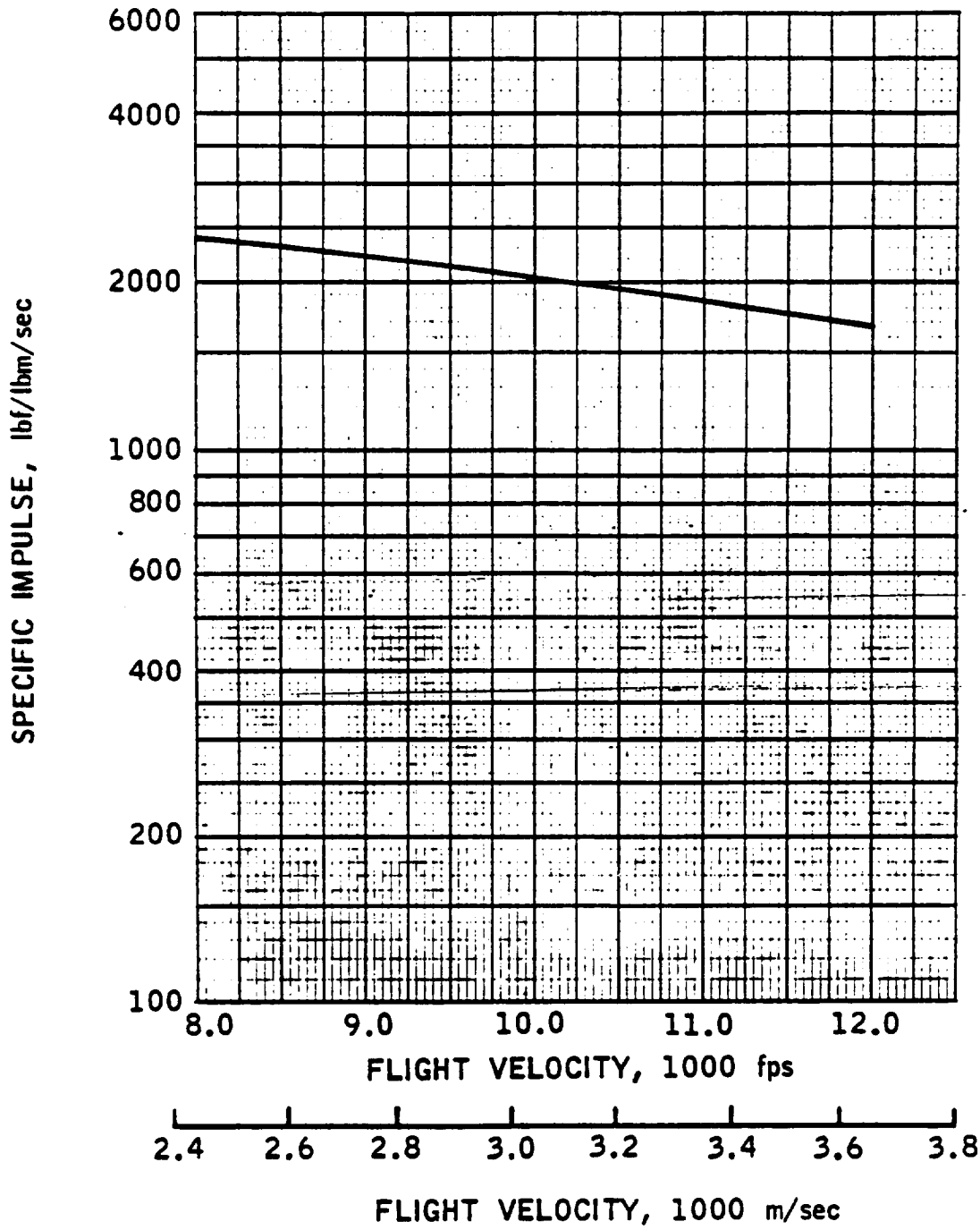

ENG. NO. 22-2

THRUST

REFERENCE TRAJECTORIES

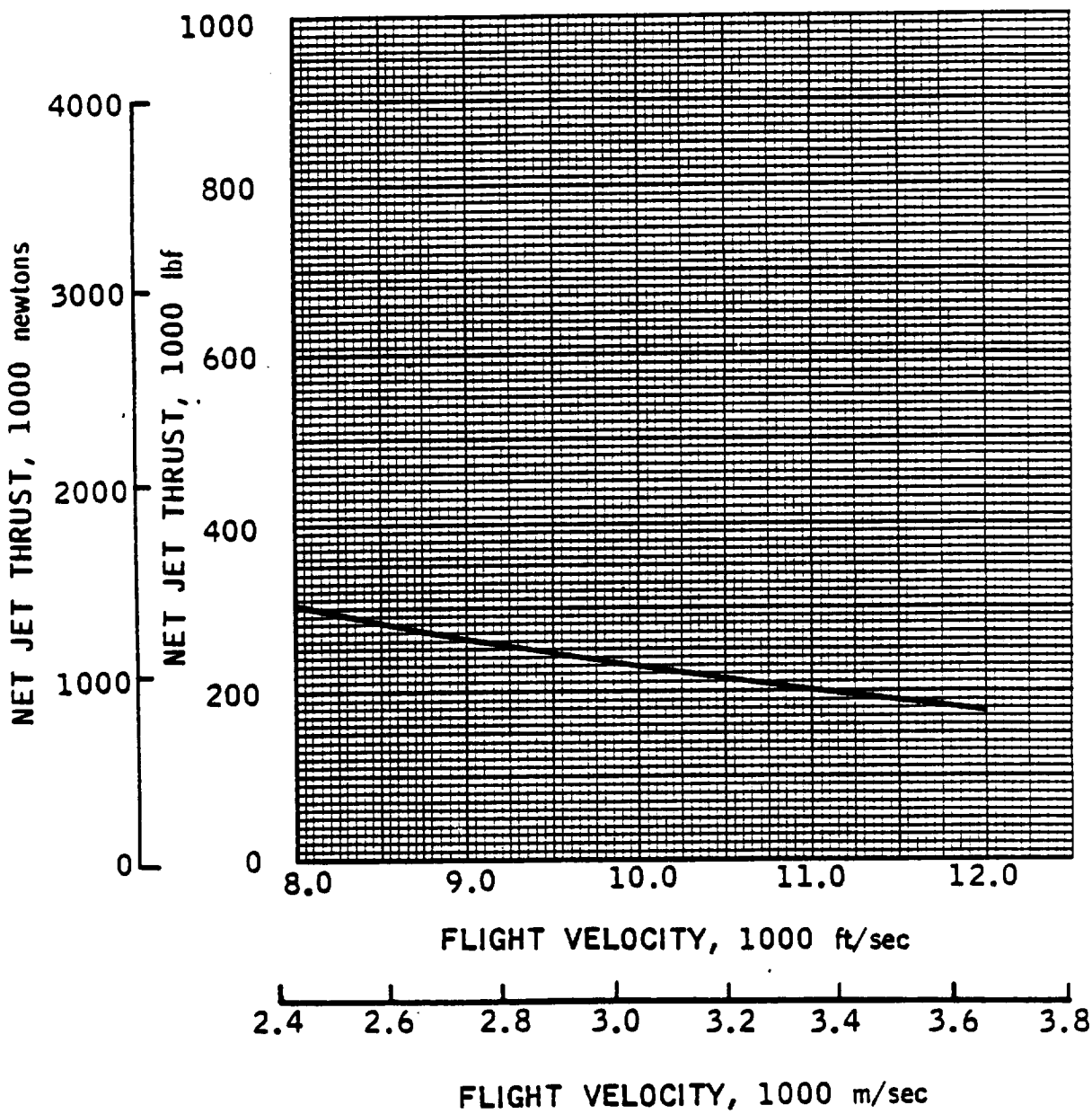

This Page Intentionally Blank

ENGINE FACT SHEET

Class 0 Composite Launch Vehicle Engines

Engine Identification Number: 23 Recycled RamLACE

Engine Operating Modes

Summary: Number of Modes/ Transitions 5 ; Number of Discrete Modes Utilized 4

Mode Progression - Lift-off to Touch-down

(Take off) Air augmented Liquid Air Cycle Engine (LACE), afterburning cycle, recycled hydrogen (2000-3000 ft/sec) Ramjet, subsonic combustion (6000-8000 ft/sec) Rocket (Orbital speed, space maneuvering and deorbiting) Ramjet, subsonic combustion (Flyback) Air augmented LACE, afterburning cycle (Landing)

Engine Propellant Requirements

Code: (R) = Required, (V) = Required for vacuum operation, (F) = Useable for flyback mode

- ☐ Hydrogen, liquid, 37-40 °R
- ☒ Hydrogen, liquid, subcooled (25 °R)
- ☐ Hydrogen, gaseous
- ☒ Oxygen, liquid, 162 °R
- ☐ Oxygen, liquid, subcooled
- ☐ Oxygen, gaseous
- ☐ Other _____

Engine Constituent Subsystems

Inlet, heat exchanger, rocket, mixer-diffuser, combustor, exit

Engine General Arrangement and Operating Schematic

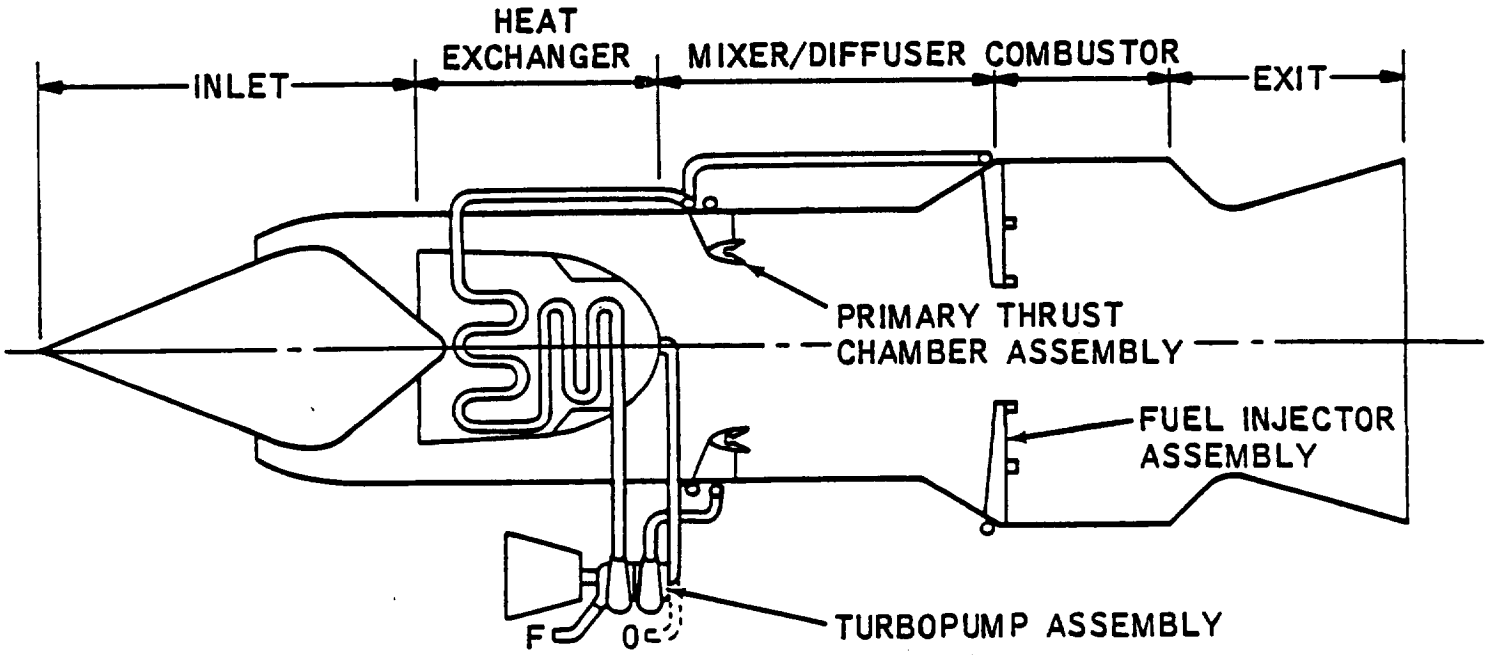

Eng. No. 23

Engine Internal Operating Parameters, nominal

$P_{c\text{-}LACE} = 1000$ psia, $\phi_{LACE} = 1.0$, $\phi_{P.C.} = 4.0$, $\phi_{cond.} = 8.0$
W_s/W_p (SLS) = 1.40 (3.00), $\phi_{SEC\text{-}SLS} = 2.09$ (0.97)
$A_4/A_3 = 1.87$ (2.66)

Engine Operating Mode Block Diagrams

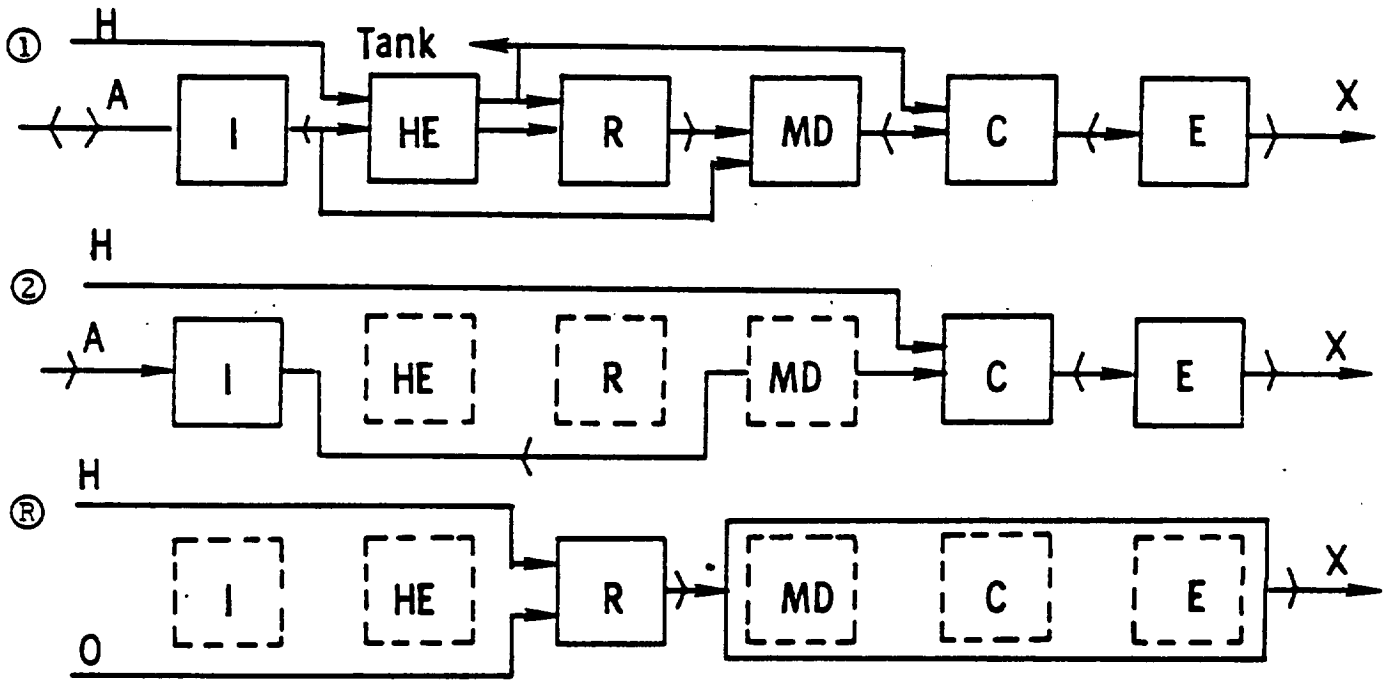

ENGINE PHYSICAL CHARACTERISTICS

Eng. No. 23-1

Thrust, sls	250,000 lbf	1,112,055 newton

Weight and Thrust/Weight Ratio

Measuring Units	(English)	(International)
Weight	lbm	kg
Thrust/Weight	lbf/lbm	newton/kg

(lbf/in^2) Maximum Engine Internal Pressure 1000 (newton/m^2)

Lightweight Estimate						
Subsystems:	50	100	250	344.7	689.5	1723.7
Fan						
Heat Exchanger	5002	5546	6149	2268.9	2515.6	2789.1
Primary Rocket	1944	1944	1944	881.8	881.8	881.8
Mixer/Diffuser	1147	1295	1776	520.3	587.4	805.6
Combustor/Exit	1518	1725	2346	688.6	782.5	1064.1
Contingency	461	496	607	209.1	225.0	275.3
Uninstalled Eng. Wt.	10072	11006	12822	4568.7	4992.3	5815.9
Thrust/Weight, Uninst.	24.8	22.7	19.5	243	223	191
Inlet Weight	2765	3160	4582	1254.2	1433.4	2078.4
Installed Eng. Wt.	12837	14166	17404	58229	6425.7	7894.3
Thrust/Weight, Inst.	19.5	17.6	14.4	191	173	141

Heavyweight Estimate						
Uninstalled Eng. Wt.	12086	13207	15386	5482.4	5990.8	6979.1
Thrust/Weight, Uninst.	20.7	18.9	16.2	203	186	159
Inlet Weight	11074	12656	17798	5023.2	5740.8	8073.2
Installed Eng. Wt.	23160	25863	33184	10505.6	11731.6	15052.3
Thrust/Weight, Inst.	10.8	9.7	7.5	106	95	74

Engine Flow Areas and Equivalent Diameters

	ft^2	ft	m^2	m
Inlet Cowl, A_c	79.1	10.03	7.35	3.06
Mixer, A_3	37.0	6.86	3.44	2.09
Combustor, A_4	69.0	9.37	6.41	2.86
Exit, A_6	110.0	11.83	10.22	3.61

Engine Lengths

	ft	m
Uninstalled	19.2	5.85
Inlet (Typ)	37.0	11.28
Installed (Typ)	56.2	17.13

REMARKS, REFERENCES

Recycled RamLACE. Recycle time limit should be checked for specific applications. (References 5, 7, 14, 21)

SPECIFIC IMPULSE
REFERENCE TRAJECTORIES

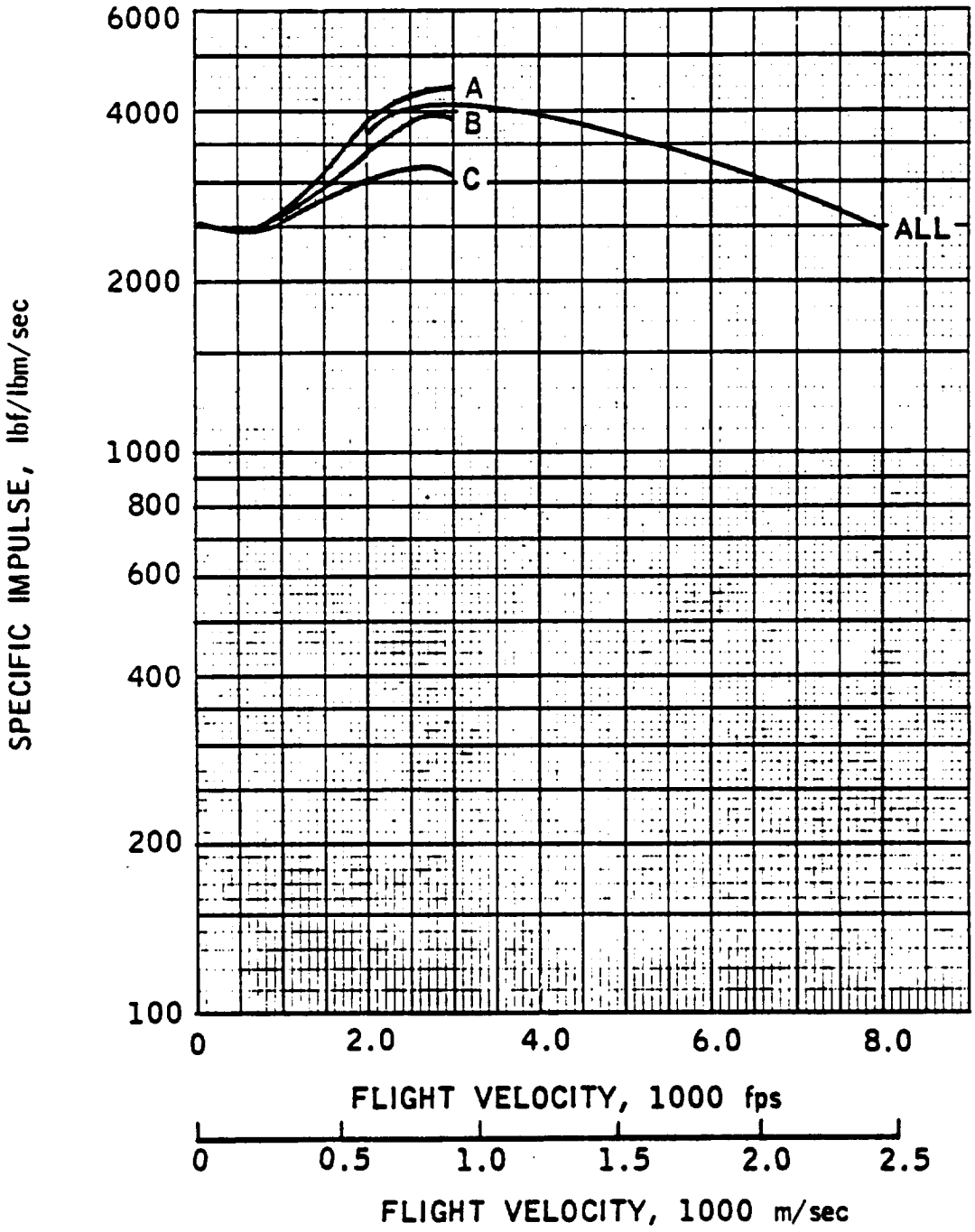

ENG. NO. 23-1

THRUST

REFERENCE TRAJECTORIES

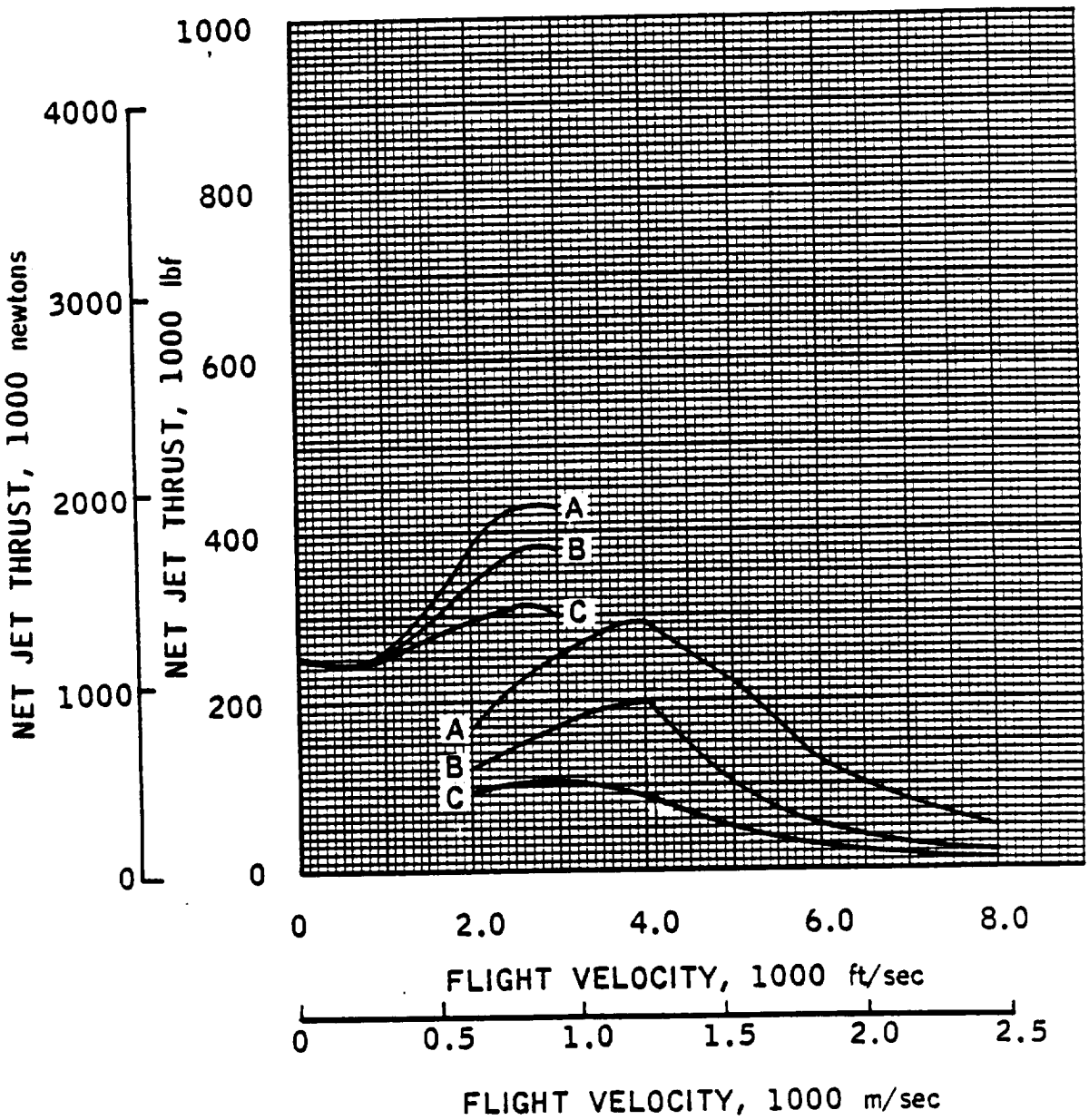

CAPTURE AREA

REFERENCE TRAJECTORIES

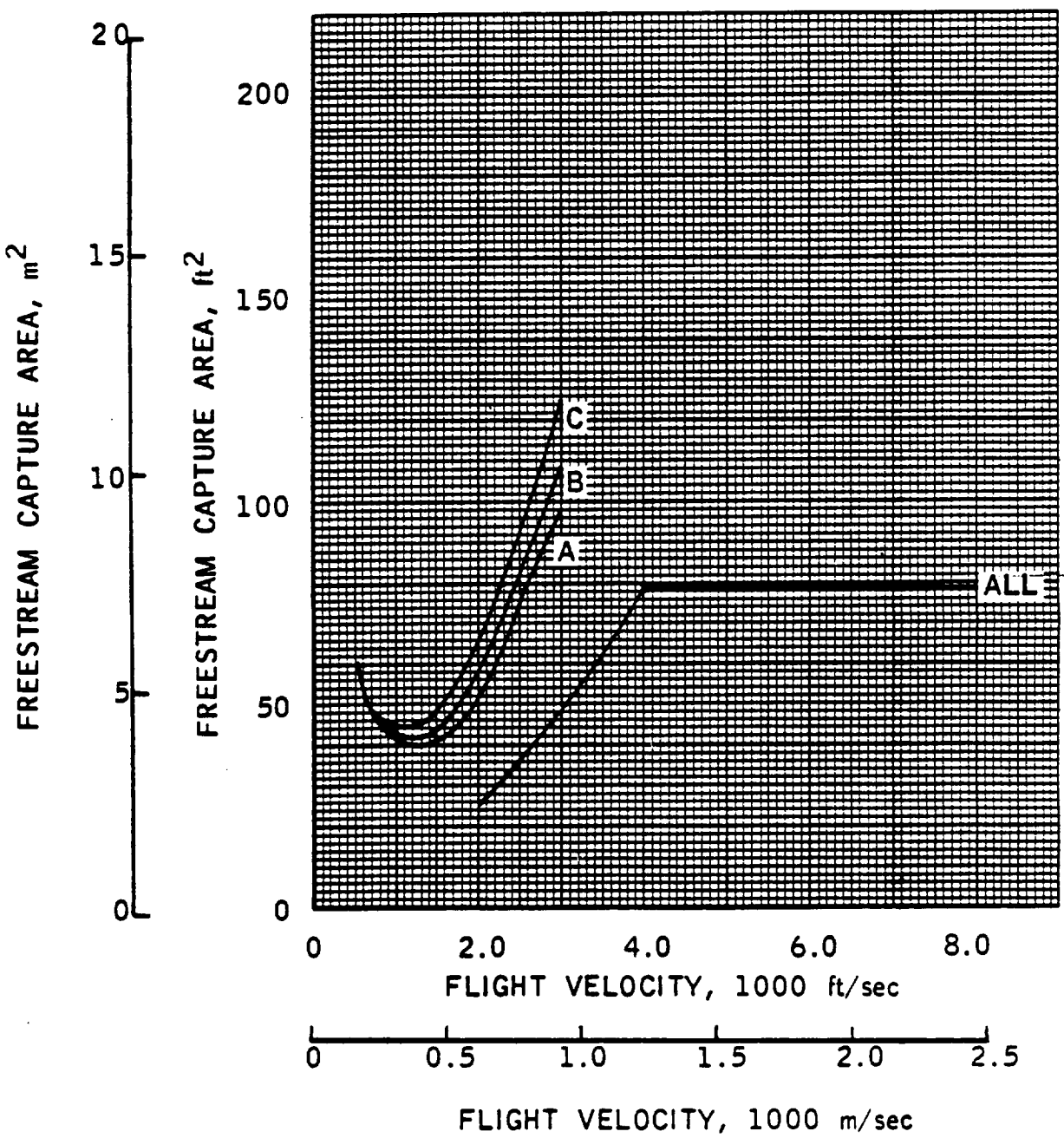

AIRFLOW

REFERENCE TRAJECTORIES

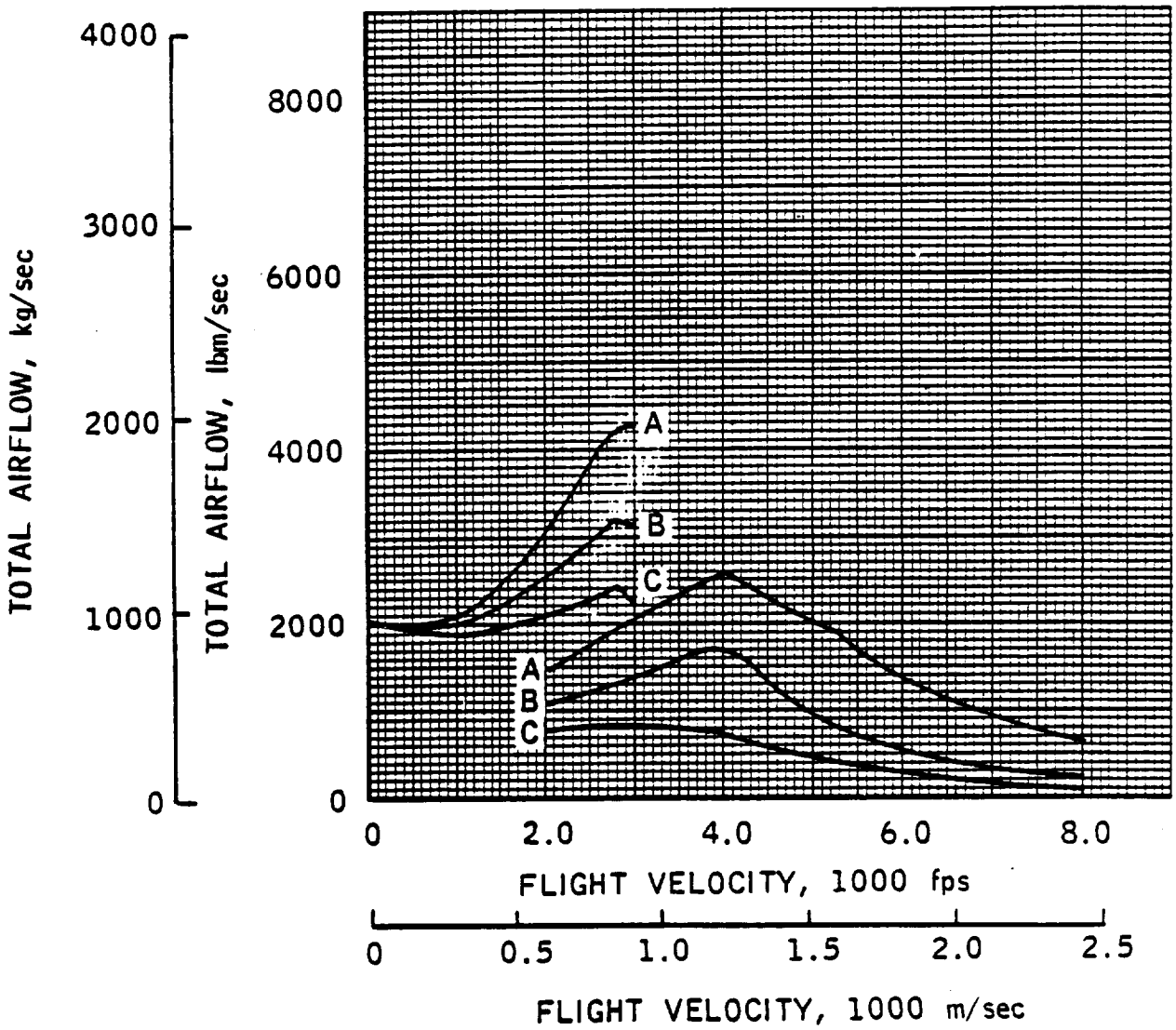

[redacted]

ENGINE- 23-1

ESTIMATED PERFORMANCE

MO	VO	HTO	PTO	T	CF	IS	SPC	PT2	H2	P2
				ALTITUDE -		0. FEET				
0.10	112.	124.7	14.8	250296.	70.52	2563.	1.40	14.80	116.3	11.60
				ALTITUDE -		10000. FEET				
0.65	700.	125.7	13.4	242850.	11.57	2487.	1.45	13.43	117.3	10.52
0.70	754.	127.3	14.0	245178.	10.61	2510.	1.43	14.02	118.7	10.99
0.79	851.	130.4	15.3	250193.	9.20	2562.	1.41	15.26	121.6	11.96
				ALTITUDE -		20000. FEET				
1.01	1047.	129.3	12.9	251276.	8.23	2573.	1.40	12.94	120.6	10.15
1.21	1255.	138.8	16.6	270794.	6.57	2773.	1.30	1.65	129.5	12.92
1.45	1504.	152.5	23.1	304628.	5.21	3119.	1.15	22.52	142.4	17.66
				ALTITUDE -		30000. FEET				
1.46	1453.	141.0	15.2	273283.	6.13	2798.	1.29	14.77	131.5	11.58
1.71	1701.	156.6	21.9	310010.	4.96	3174.	1.13	20.89	146.2	16.39
2.06	2049.	182.7	37.6	382891.	3.81	3920.	0.92	34.55	171.1	27.33
				ALTITUDE -		40000. FEET				
1.91	1849.	161.9	18.6	282698.	4.72	2895.	1.24	17.36	151.1	13.62
2.22	2149.	185.8	30.1	340611.	3.82	3487.	1.03	27.20	173.6	21.35

[redacted]

CONFIDENTIAL

ENGINE- 23-1

ESTIMATED PERFORMANCE

M2	WS	WP	WSWP	WFT	PHP	PHS	V6	PT20	A0	A5	A6
ALTITUDE - 0. FEET											
0.600	1208.	862.	1.40	97.7	1.0	2.079	3864.	1.00	141.64	63.18	66.83
ALTITUDE - 10000. FEET											
0.600	1092.	862.	1.27	97.7	1.0	2.300	4521.	1.00	27.63	60.84	72.09
0.600	1133.	862.	1.32	97.7	1.0	2.216	4532.	1.00	26.63	61.54	73.19
0.600	1219.	862.	1.41	97.7	1.0	2.061	4550.	1.00	25.36	62.81	75.31
ALTITUDE - 20000. FEET											
0.600	1038.	862.	1.21	97.7	1.0	2.419	5092.	1.00	24.33	59.42	84.29
0.600	1277.	862.	1.48	97.7	1.0	1.968	5139.	0.99	24.95	62.97	92.09
0.600	1667.	862.	1.93	97.7	1.0	1.507	5214.	0.98	27.15	67.54	103.98
ALTITUDE - 30000. FEET											
0.600	1136.	862.	1.32	97.7	1.0	2.210	5629.	0.98	27.29	60.46	110.35
0.600	1527.	862.	1.77	97.7	1.0	1.646	5421.	0.95	31.26	64.91	109.13
0.590	2320.	862.	2.69	97.7	1.0	1.083	5214.	0.92	39.34	68.99	109.07
ALTITUDE - 40000. FEET											
0.600	1249.	862.	1.45	97.7	1.0	2.011	5497.	0.93	35.66	57.60	109.05
0.600	1830.	862.	2.12	97.7	1.0	1.373	5382.	0.90	44.87	63.52	109.35

CONFIDENTIAL

CONFIDENTIAL

ENGINE- 23-1

ESTIMATED PERFORMANCE

MO	VO	HTO	PTO	T	CF	IS	SPC	PT2	H2	P2
ALTITUDE - 40000. FEET										
2.69	2604.	229.0	62.6	427.	2.59	4373.	0.82	53.11	214.2	41.74
ALTITUDE - 45500. FEET										
3.10	3000.	273.3	89.3	428893.	2.13	4391.	0.82	71.10	261.5	60.44
ALTITUDE - 50000. FEET										
2.40	2320.	201.1	24.6	304561.	3.77	3118.	1.15	21.69	187.9	17.03
2.84	2750.	244.6	48.8	387463.	2.81	3967.	0.91	40.51	228.9	31.85
ALTITUDE - 54000. FEET										
3.10	3000.	273.3	59.5	379893.	2.58	3890.	0.93	47.37	261.5	40.27
ALTITUDE - 60000. FEET										
2.89	2798.	249.9	32.6	312499.	2.92	3200.	1.13	26.87	232.1	20.54
ALTITUDE - 64000. FEET										
3.10	3000.	273.3	36.9	293708.	2.77	3007.	1.20	29.37	261.5	24.97

CONFIDENTIAL

CONFIDENTIAL

ENGINE- 23-1

ESTIMATED PERFORMANCE

M2	WS	WP	WSWP	WFT	PHP	PHS	V6	PT20	A0	A5	A6
ALTITUDE - 40000. FEET											
0.600	3233.	862.	3.75	97.7	1.0	0.777	5128.	0.85	65.16	60.29	109.06
ALTITUDE - 45500. FEET											
0.491	3483.	862.	4.04	97.7	1.0	0.721	5404.	0.80	79.00	48.89	109.74
ALTITUDE - 50000. FEET											
0.600	1405.	862.	1.63	97.7	1.0	1.787	5680.	0.88	51.44	59.54	109.65
0.600	2391.	862.	2.77	97.7	1.0	1.051	5509.	0.83	73.51	62.76	109.37
ALTITUDE - 54000. FEET											
0.491	2321.	862.	2.69	97.7	1.0	1.082	5830.	0.80	79.00	53.64	109.49
ALTITUDE - 60000. FEET											
0.635	1622.	862.	1.88	97.7	1.0	1.549	5714.	0.82	79.03	59.42	109.24
ALTITUDE - 64000. FEET											
0.491	1439.	862.	1.67	97.7	1.0	1.746	6031.	0.80	79.00	51.47	109.87

CONFIDENTIAL

This Page Intentionally Blank

ENGINE PHYSICAL CHARACTERISTICS

Eng. No. 23-2

Thrust, sls	250,000 lbf	1,112,055 newton

Weight and Thrust/Weight Ratio

Measuring Units	(English)	(International)
Weight	lbm	kg
Thrust/Weight	lbf/lbm	newton/kg

Lightweight Estimate

(lbf/in^2) Maximum Engine Internal Pressure 1000 (newton/m^2)

Subsystems:	50	100	250	344.7	689.5	1723.7
Fan						
Heat Exchanger	4093	4539	5032	1856.6	2058.8	2282.5
Primary Rocket	1591	1591	1591	721.7	721.7	721.7
Mixer/Diffuser	1829	2065	2832	829.6	936.7	1284.6
Combustor/Exit	3476	3950	5372	1576.7	1791.7	2436.7
Contingency	690	761	980	313.0	345.2	444.5
Uninstalled Eng. Wt.	11679	12906	15807	5297.6	5854.1	7170.0
Thrust/Weight, Uninst.	21.4	19.4	15.8	210.	190	155
Inlet Weight	6370	7280	10556	2889.4	3302.2	4788.2
Installed Eng. Wt.	18049	20186	26363	8187.0	9156.3	11958.2
Thrust/Weight, Inst.	13.9	12.4	9.5	136	121	93

Heavyweight Estimate

Uninstalled Eng. Wt.	12847	14197	17388	5827.4	6439.5	7887.0
Thrust/Weight, Uninst.	19.5	17.6	14.4	191.	173	141
Inlet Weight	25494	29136	40973	11564.1	13216.1	18585.4
Installed Eng. Wt.	38341	43333	58361	17391.5	19655.6	26472.4
Thrust/Weight, Inst.	6.5	5.8	4.3	6.4	57	42

Engine Flow Areas and Equivalent Diameters

	ft^2	ft	m^2	m
Inlet Cowl, A_c	182.1	15.23	16.92	4.64
Mixer, A_3	59.4	8.70	5.52	2.65
Combustor, A_4	158.3	14.20	14.71	4.33
Exit, A_6	252.5	17.93	23.46	5.47

Engine Lengths

	ft	m
Uninstalled	23.7	7.22
Inlet (Typ)	45.0	13.72
Installed (Typ)	68.7	20.94

REMARKS, REFERENCES

SPECIFIC IMPULSE
REFERENCE TRAJECTORIES

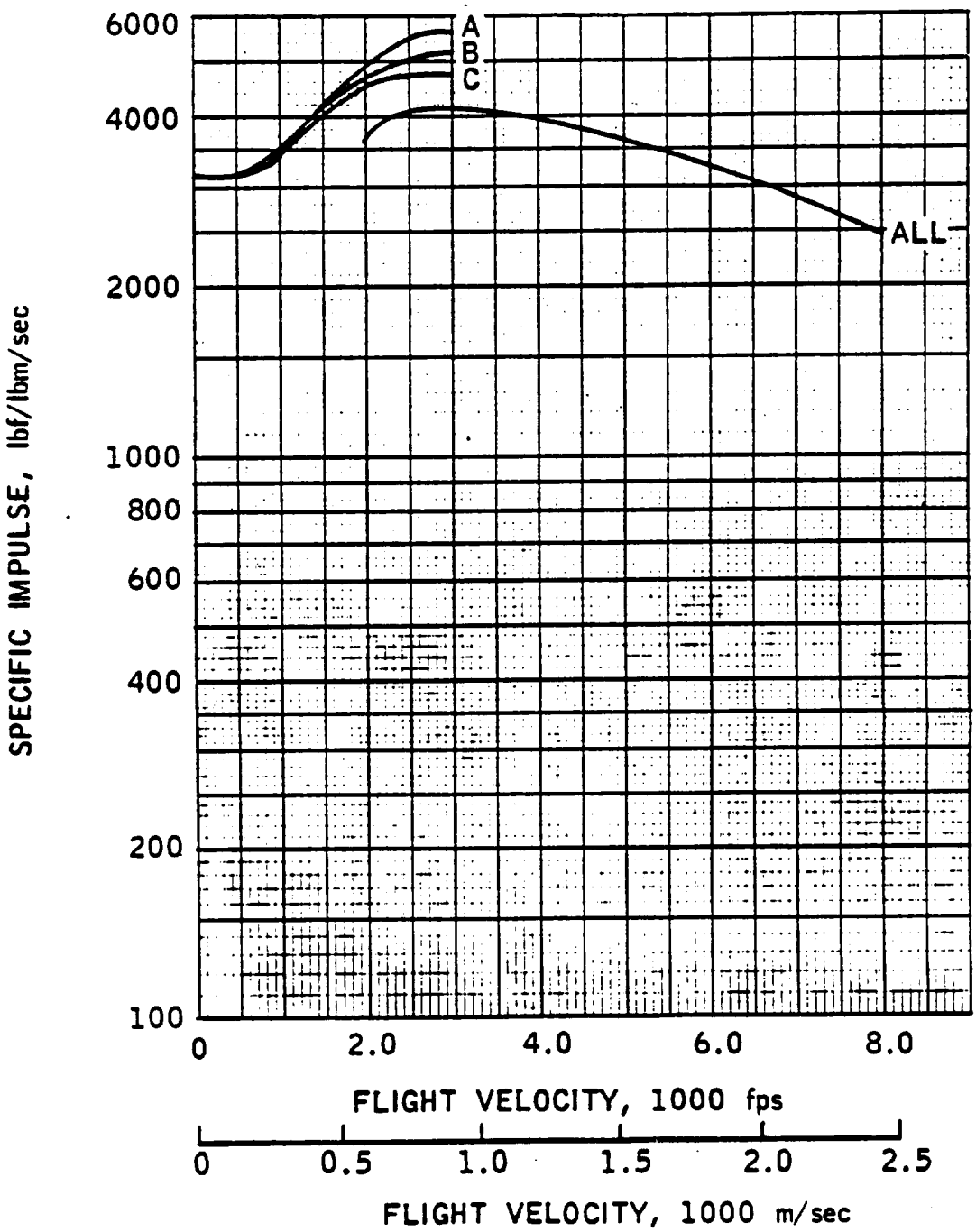

ENG. NO. 23-2

THRUST

REFERENCE TRAJECTORIES

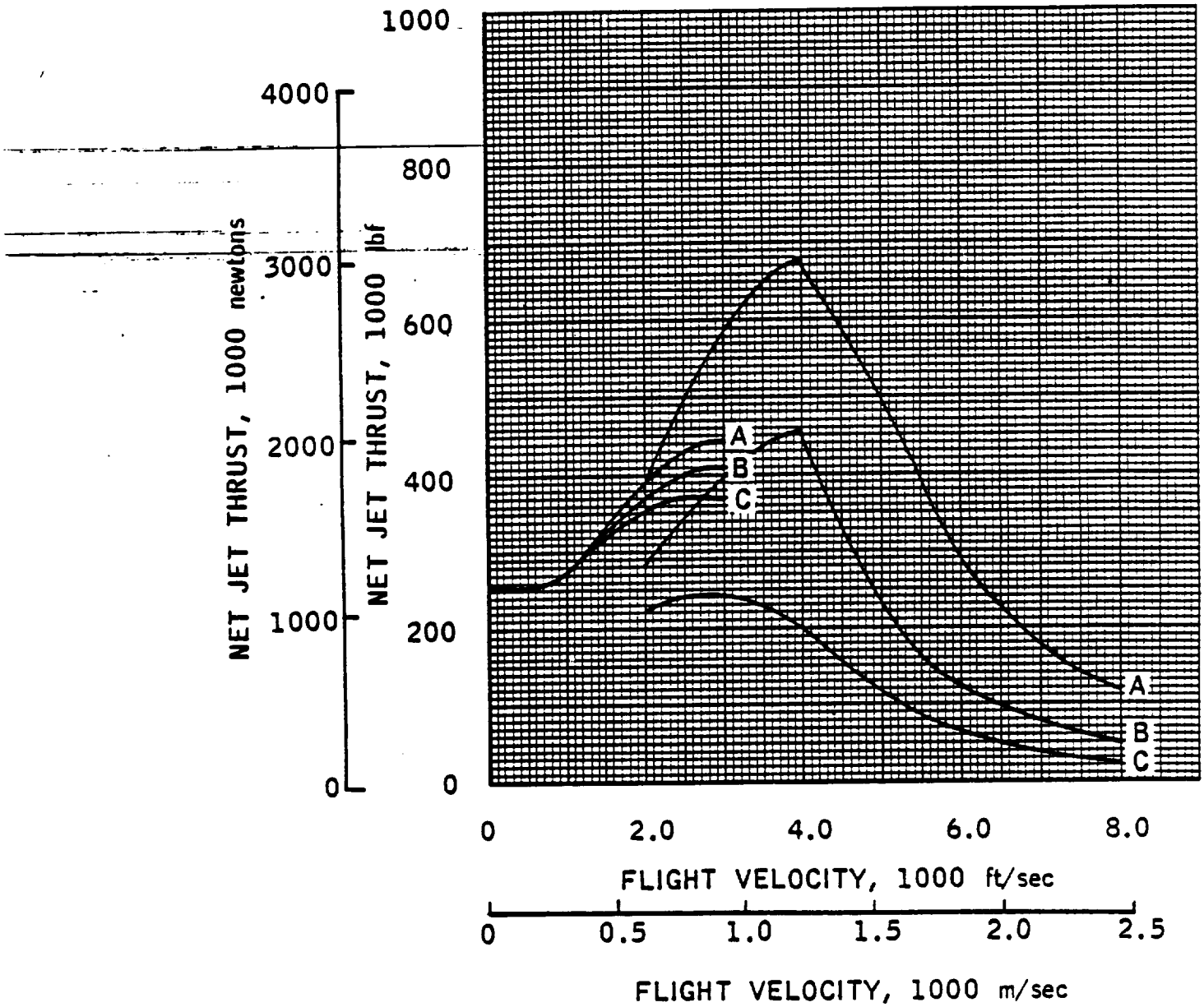

CAPTURE AREA

REFERENCE TRAJECTORIES

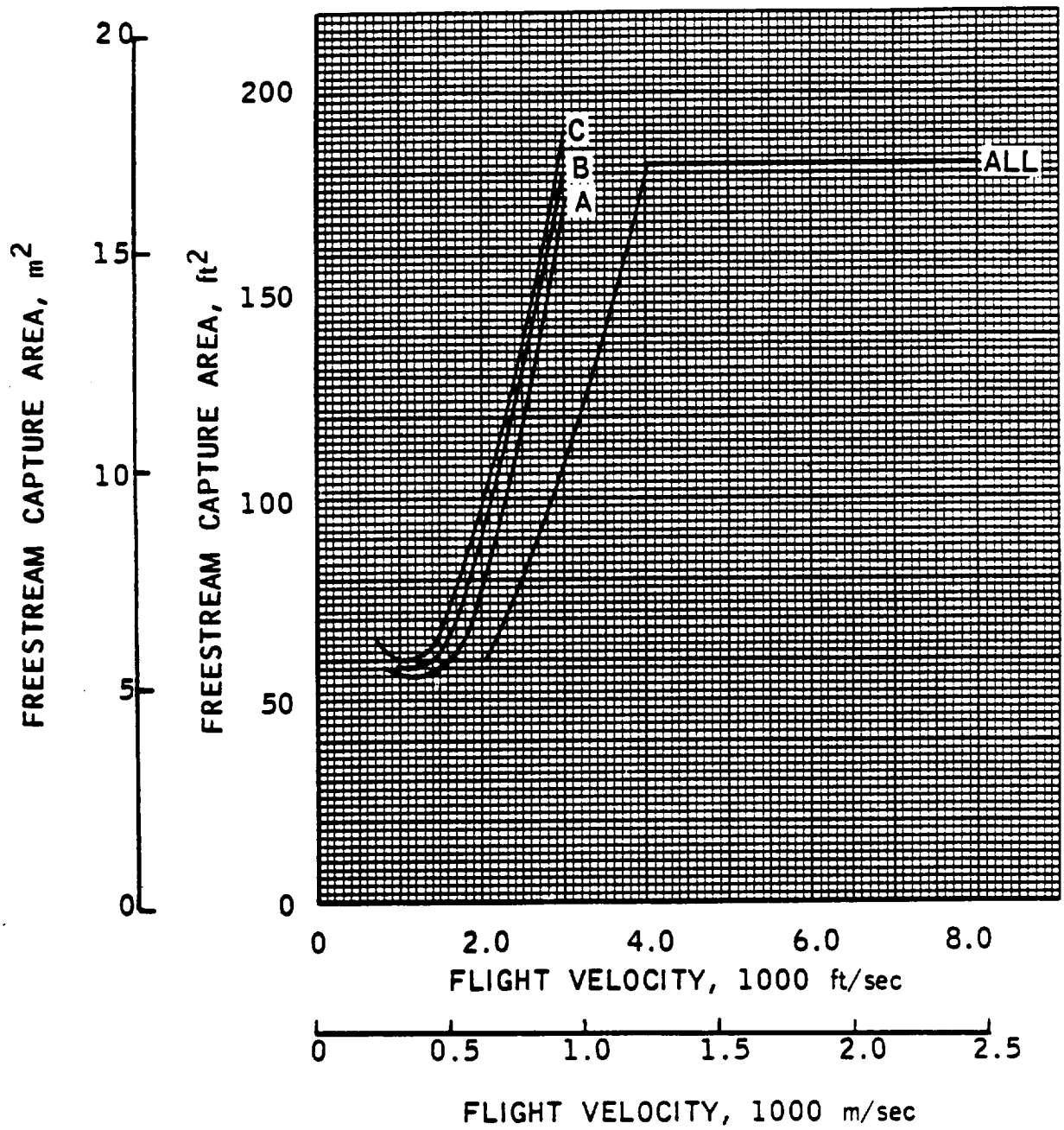

AIRFLOW

REFERENCE TRAJECTORIES

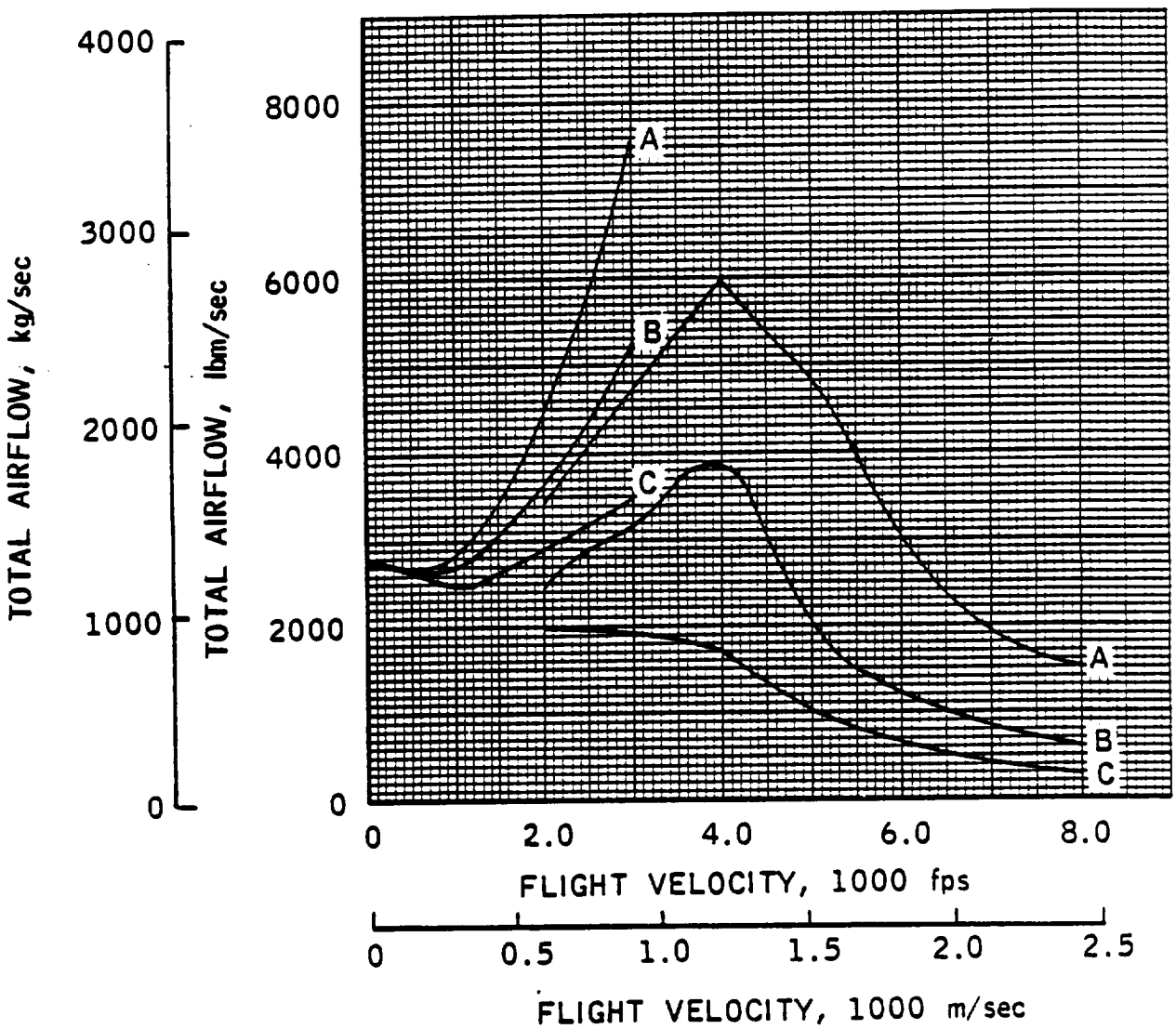

ENGINE- 23-2

ESTIMATED PERFORMANCE

MO	VO	HTO	PTO	T	CF	IS	SPC	PT2	H2	P2
				ALTITUDE -		0. FEET				
0.10	112.	124.7	14.8	253392.	52.18	3170.	1.14	14.80	117.6	12.05
				ALTITUDE -		10000. FEET				
0.65	700.	125.7	13.4	253937.	8.99	3177.	1.13	13.43	118.5	10.93
0.70	754.	127.3	14.0	259519.	8.30	3247.	1.11	14.02	120.0	11.41
0.79	851.	130.4	15.3	268189.	7.20	3355.	1.07	15.26	122.9	12.42
				ALTITUDE -		20000. FEET				
1.01	1047.	129.3	12.9	272520.	6.69	3409.	1.06	12.94	121.9	10.54
1.21	1255.	138.8	16.6	302256.	5.31	3781.	0.95	16.47	130.9	13.41
1.45	1504.	152.5	23.1	327145.	3.89	4093.	0.88	22.52	143.9	18.34
				ALTITUDE -		30000. FEET				
1.46	1453.	141.0	15.2	314949.	5.22	3940.	0.91	14.77	133.0	12.03
1.71	1701.	156.6	21.9	344887.	3.89	4315.	0.83	20.89	147.8	17.02
2.06	2049.	182.7	37.6	393548.	2.58	4923.	0.73	34.55	172.5	28.16
				ALTITUDE -		40000. FEET				
1.91	1849.	161.9	18.6	348371.	4.22	4358.	0.83	17.36	152.7	14.15
2.22	2149.	185.8	30.1	382291.	2.94	4782.	0.75	27.20	175.5	22.17

[redacted]

[redacted]

[redacted]

ENGINE- 23-2

ESTIMATED PERFORMANCE

M2	WS	WP	WSWP	WFT	PHP	PHS	V6	PT20	A0	A5	A6
ALTITUDE - 0. FEET											
0.550	2113.	705.	3.00	79.9	1.0	0.973	2941.	1.00	247.73	117.98	117.98
ALTITUDE - 10000. FEET											
0.550	1910.	705.	2.71	79.9	1.0	1.076	3733.	1.00	48.32	111.34	118.16
0.550	1983.	705.	2.81	79.9	1.0	1.037	3771.	1.00	46.57	112.42	119.83
0.550	2132.	705.	3.02	79.9	1.0	0.964	3806.	1.00	44.36	112.63	121.33
ALTITUDE - 20000. FEET											
0.550	1817.	705.	2.58	79.9	1.0	1.132	4411.	1.00	42.56	108.66	131.87
0.550	2233.	705.	3.17	79.9	1.0	0.921	4465.	0.99	43.63	109.84	140.20
0.550	2916.	705.	4.13	79.9	1.0	0.705	4330.	0.98	47.49	102.73	143.39
ALTITUDE - 30000. FEET											
0.550	1988.	705.	2.82	79.9	1.0	1.034	5091.	0.98	47.73	109.46	169.17
0.550	2670.	705.	3.79	79.9	1.0	0.770	4891.	0.95	54.66	103.16	177.91
0.550	4100.	705.	5.81	79.9	1.0	0.501	4618.	0.92	69.51	91.69	191.36
ALTITUDE - 40000. FEET											
0.550	2185.	705.	3.10	79.9	1.0	0.941	5598.	0.93	62.38	105.55	225.73
0.550	3201.	705.	4.54	79.9	1.0	0.642	5207.	0.90	78.47	95.07	241.77

[redacted]

ENGINE- 23-2

ESTIMATED PERFORMANCE

MO	VO	HTO	PTO	T	CF	IS	SPC	PT2	H2	P2
ALTITUDE - 40000. FEET										
2.69	2604.	229.0	62.6	439271.	1.71	5495.	0.66	53.11	216.5	43.33
ALTITUDE - 45500. FEET										
3.10	3000.	273.3	89.3	447310.	1.25	5596.	0.64	71.10	258.6	58.06
ALTITUDE - 50000. FEET										
2.40	2320.	201.1	24.6	376406.	3.32	4709.	0.76	21.69	189.9	17.69
2.84	2750.	244.6	48.8	411045.	1.98	5142.	0.70	40.51	231.3	33.06
ALTITUDE - 54000. FEET										
3.10	3000.	273.3	59.5	412819.	1.66	5164.	0.70	47.37	258.6	38.68
ALTITUDE - 60000. FEET										
2.89	2798.	249.9	32.6	371774.	2.49	4651.	0.77	26.87	236.3	21.93
ALTITUDE - 64000. FEET										
3.10	3000.	273.3	36.9	378101.	2.28	4730.	0.76	29.37	258.6	23.99

[redacted]

ENGINE- 23-2

ESTIMATED PERFORMANCE

M2	WS	WP	WSWP	WFT	PHP	PHS	V6	PT20	A0	A5	A6
ALTITUDE - 40000. FEET											
0.550	5656.	705.	8.02	79.9	1.0	0.363	4773.	0.85	113.96	79.32	274.83
ALTITUDE - 45500. FEET											
0.550	6963.	705.	9.87	79.9	1.0	0.295	4635.	0.80	157.87	71.67	253.19
ALTITUDE - 50000. FEET											
0.550	2458.	705.	3.49	79.9	1.0	0.836	5792.	0.88	89.95	99.40	252.99
0.550	4181.	705.	5.93	79.9	1.0	0.492	5131.	0.83	128.55	83.01	253.23
ALTITUDE - 54000. FEET											
0.550	4639.	705.	6.58	79.9	1.0	0.443	5098.	0.80	157.87	78.56	252.77
ALTITUDE - 60000. FEET											
0.550	2745.	705.	3.89	79.9	1.0	0.749	5708.	0.82	133.75	89.40	253.10
ALTITUDE - 64000. FEET											
0.550	2877.	705.	4.08	79.9	1.0	0.715	5787.	0.80	157.87	88.13	253.01

This Page Intentionally Blank

ENGINE FACT SHEET

Class 0 Composite Launch Vehicle Engines

Engine Identification Number: 24 Recycled ScramLACE

Engine Operating Modes

Summary: Number of Modes/ Transitions 6 ; Number of Discrete Modes Utilized 5

Mode Progression - Lift-off to Touch-down

(Take off) Air augmented Liquid Air Cycle Engine (LACE), afterburning cycle, recycled hydrogen (2000-3000 ft/sec) Ramjet, subsonic combustion (6000-8000 ft/sec) Ramjet, supersonic combustion (10,000-14,000 ft/sec) Rocket (Orbital speed, space maneuvering and deorbiting) Ramjet, subsonic combustion (Flyback) Air augmented LACE, afterburning cycle (Landing)

Engine Propellant Requirements

Code: (R) = Required, (V) = Required for vacuum operation, (F) = Useable for flyback mode

- ☐ Hydrogen, liquid, 37-40 °R
- ☒ Hydrogen, liquid, subcooled (25 °R)
- ☐ Hydrogen, gaseous
- ☒ Oxygen, liquid, 162 °R
- ☐ Oxygen, liquid, subcooled
- ☐ Oxygen, gaseous
- ☐ Other _____

Engine Constituent Subsystems

Inlet, heat exchanger, rocket, mixer-diffuser, combustor, exit

Engine General Arrangement and Operating Schematic

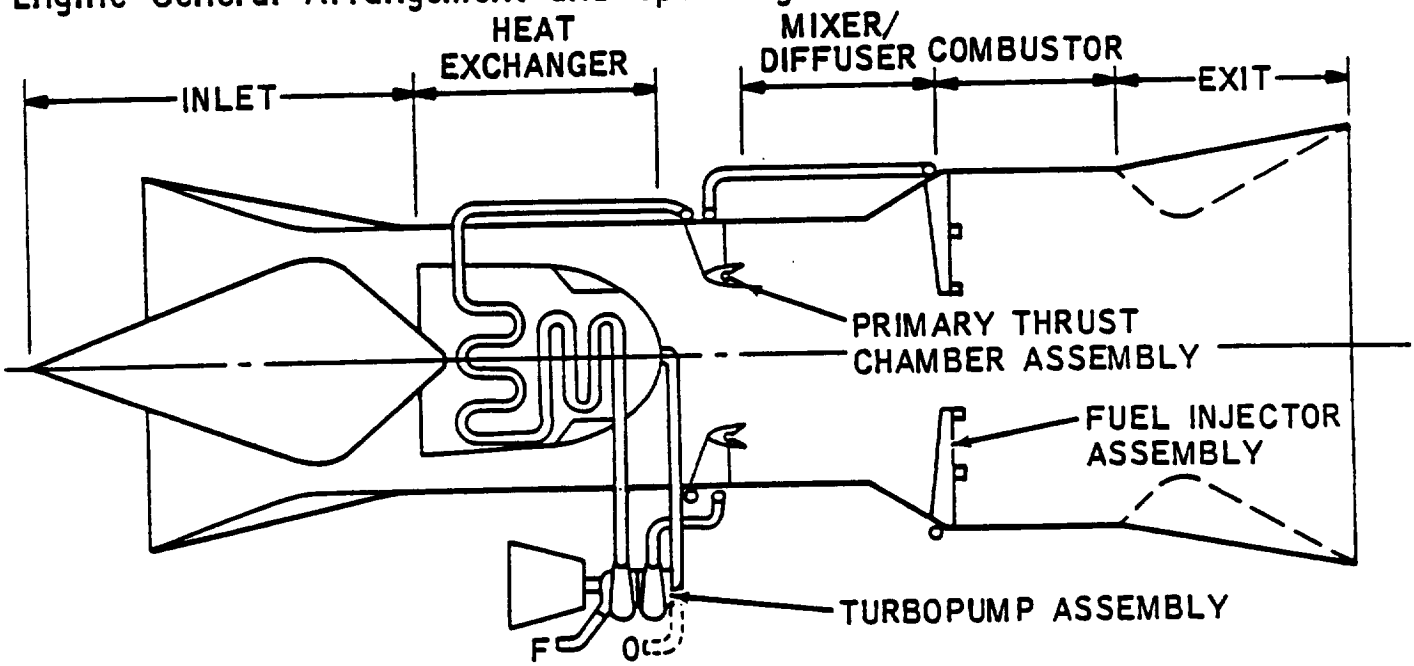

Eng. No. 24

Engine Internal Operating Parameters, nominal

$P_{c\text{-}LACE} = 1000$ psia, $\phi_{LACE} = 1.0$, $\phi_{P.C.} = 4.0$, $\phi_{cond.} = 8.0$
W_s/W_p (SLS) = 1.40 (3.00), $\phi_{SEC\text{-}SLS} = 2.09$ (0.97)
$A_4/A_3 = 1.87$ (2.66), $A_c/A_3 = 2.14$ (3.07)

Engine Operating Mode Block Diagrams

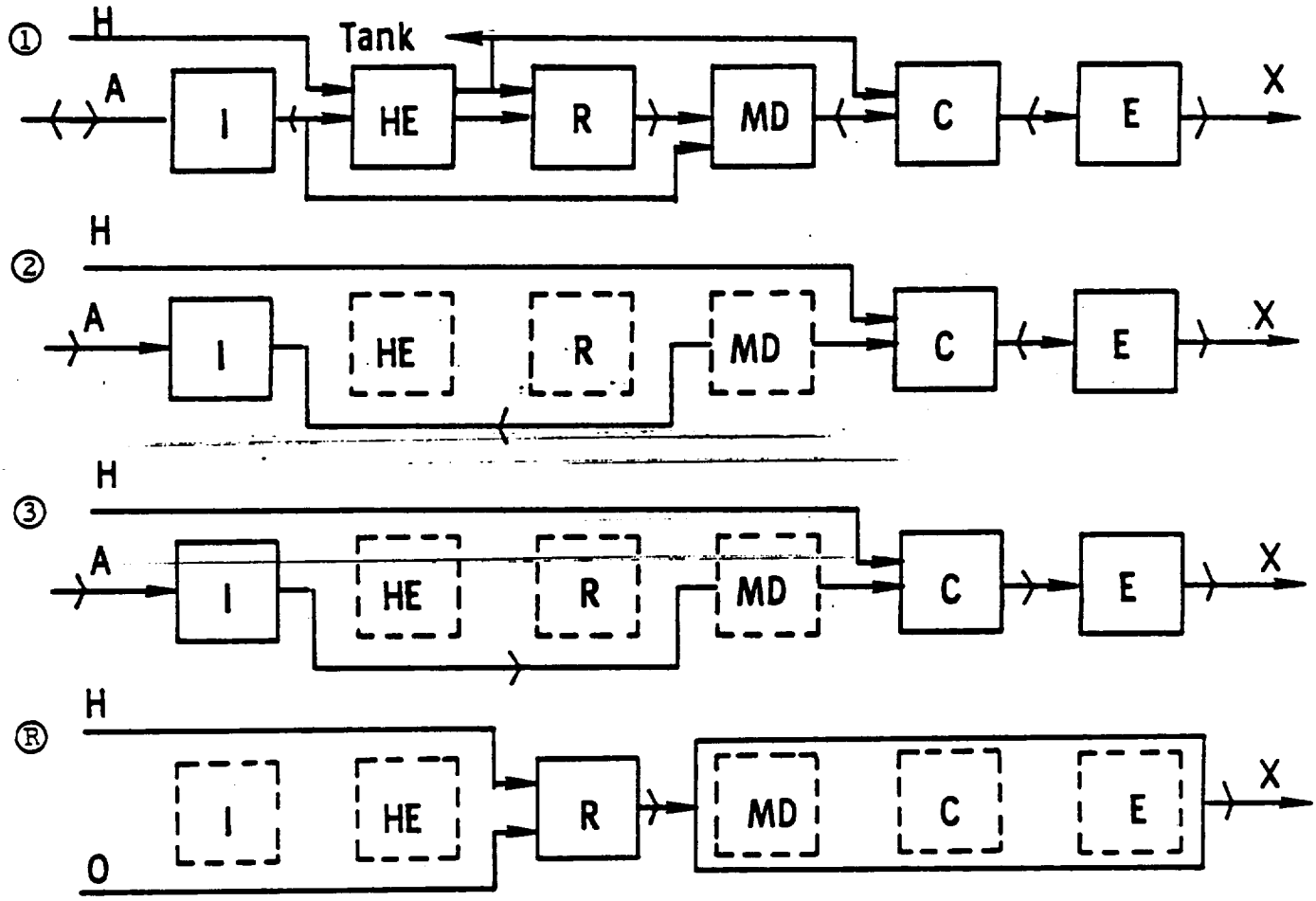

Eng. No. 24

The following information for Engine No. 24 appears in the fact sheets previously given for Engine No. 23.

Engine Physical Characteristics

Weight, Thrust/Weight, Flow areas, Lengths

Engine Performance: 0-8000 ft/sec

Specific Impulse, Thrust, Airflow, Capture Area

References and additional remarks

SPECIFIC IMPULSE
REFERENCE TRAJECTORIES

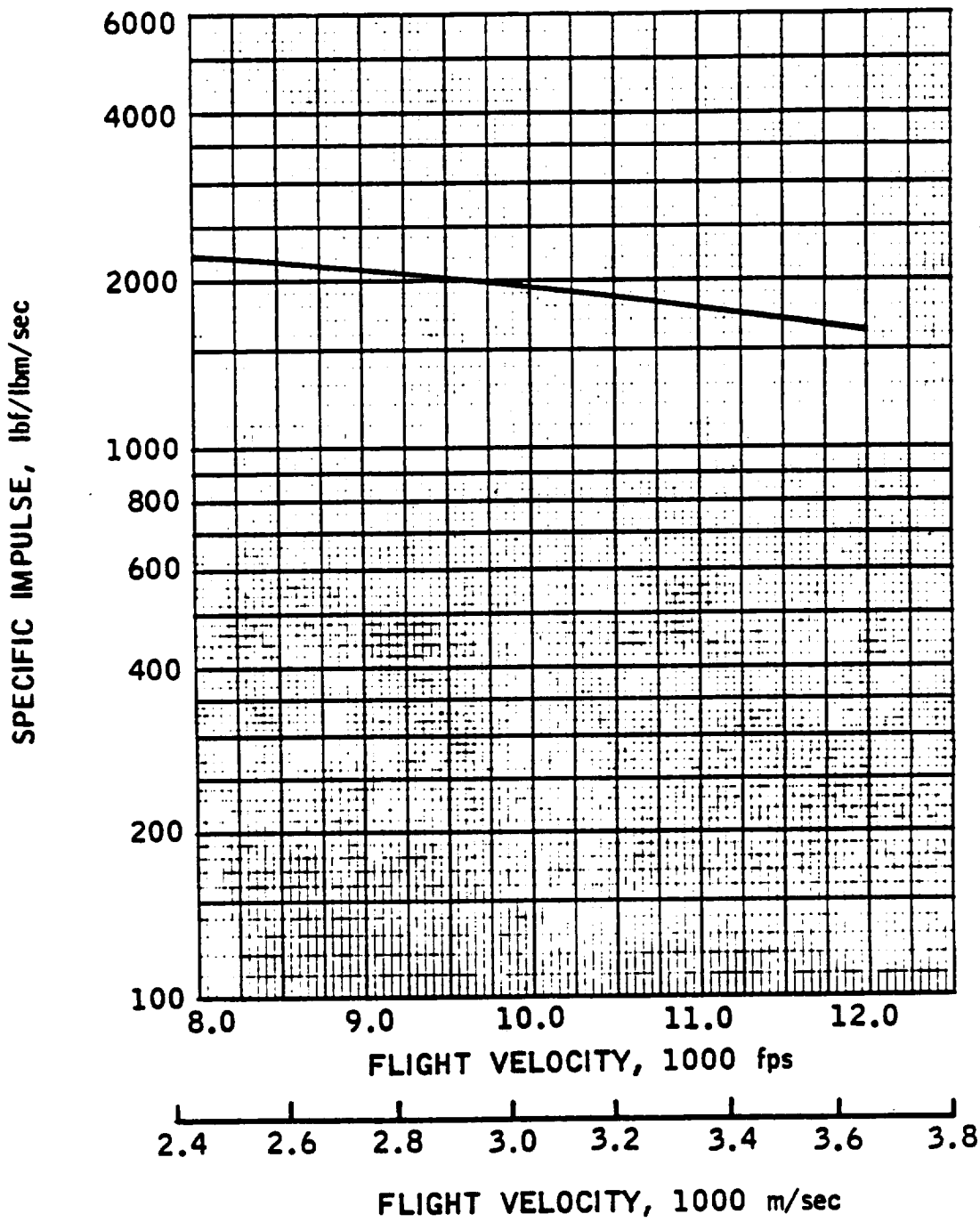

ENG. NO. 24-1

THRUST

REFERENCE TRAJECTORIES

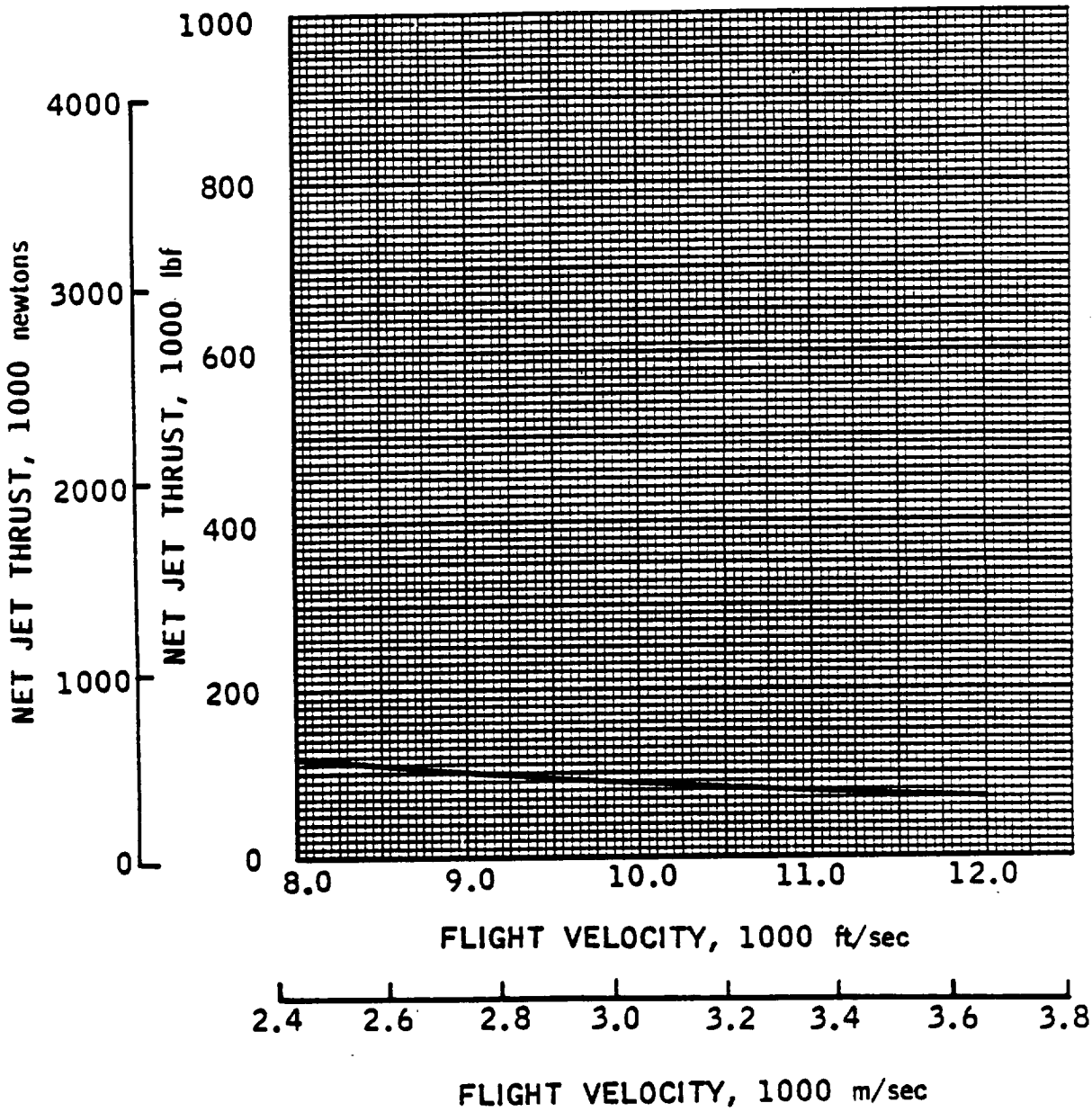

SPECIFIC IMPULSE
REFERENCE TRAJECTORIES

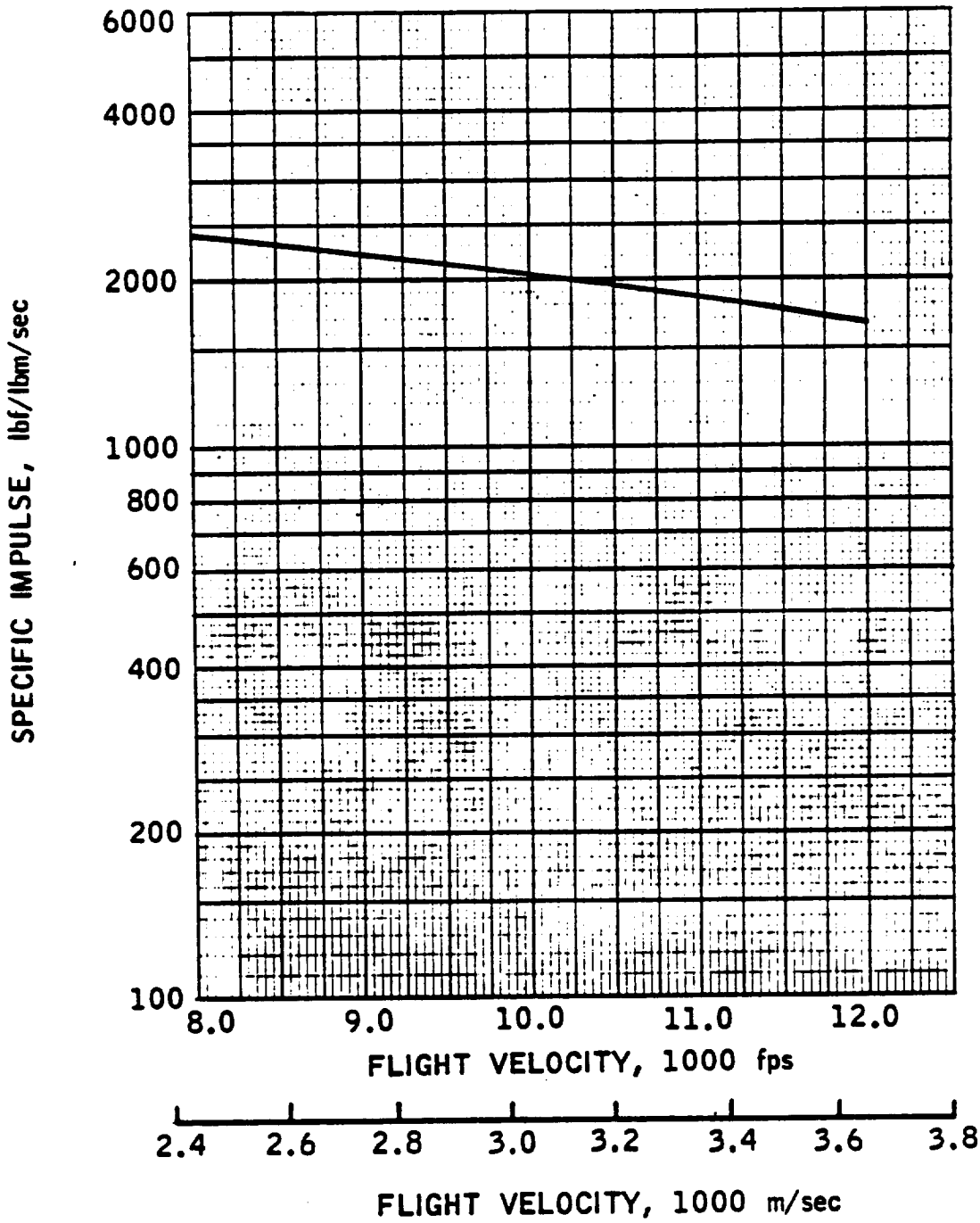

ENG. NO. 24-2

THRUST

REFERENCE TRAJECTORIES

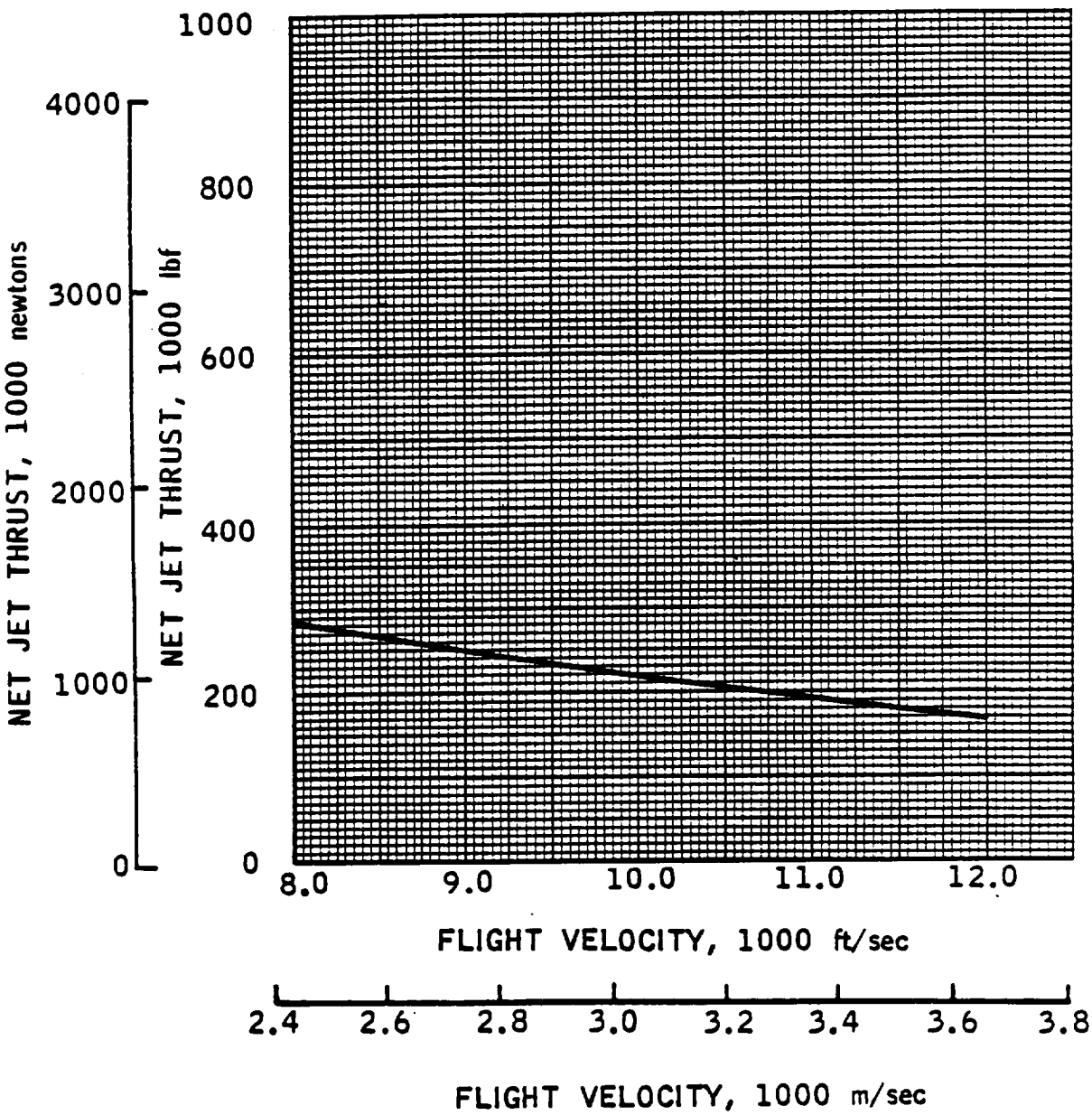

This Page Intentionally Blank

ENGINE FACT SHEET

Class 0 Composite Launch Vehicle Engines

Engine Identification Number: 25 Supercharged Air Augmented LACE-Ramjet

Engine Operating Modes

Summary: Number of Modes/ Transitions 5 ; Number of Discrete Modes Utilized 4

Mode Progression - Lift-off to Touch-down

(Take off) Supercharged air augmented Liquid Air Cycle Engine (LACE), simultaneous mixing and burning cycle (2000-3000 ft/sec) Ramjet, subsonic combustion (6000-8000 ft/sec) Rocket (Orbital speed, space maneuvering and deorbiting) Ramjet, subsonic combustion (Flyback) Ducted fan (Flyback and landing)

Engine Propellant Requirements

Code: (R) = Required, (V) = Required for vacuum operation, (F) = Useable for flyback mode

- [R] Hydrogen, liquid, 37-40 °R
- [ ] Hydrogen, liquid, subcooled (25 °R)
- [F] Hydrogen, gaseous
- [V] Oxygen, liquid, 162 °R
- [ ] Oxygen, liquid, subcooled
- [ ] Oxygen, gaseous
- [ ] Other _____

Engine Constituent Subsystems

Inlet, fan, heat exchanger, rocket, mixer-combustor, exit

Engine General Arrangement and Operating Schematic

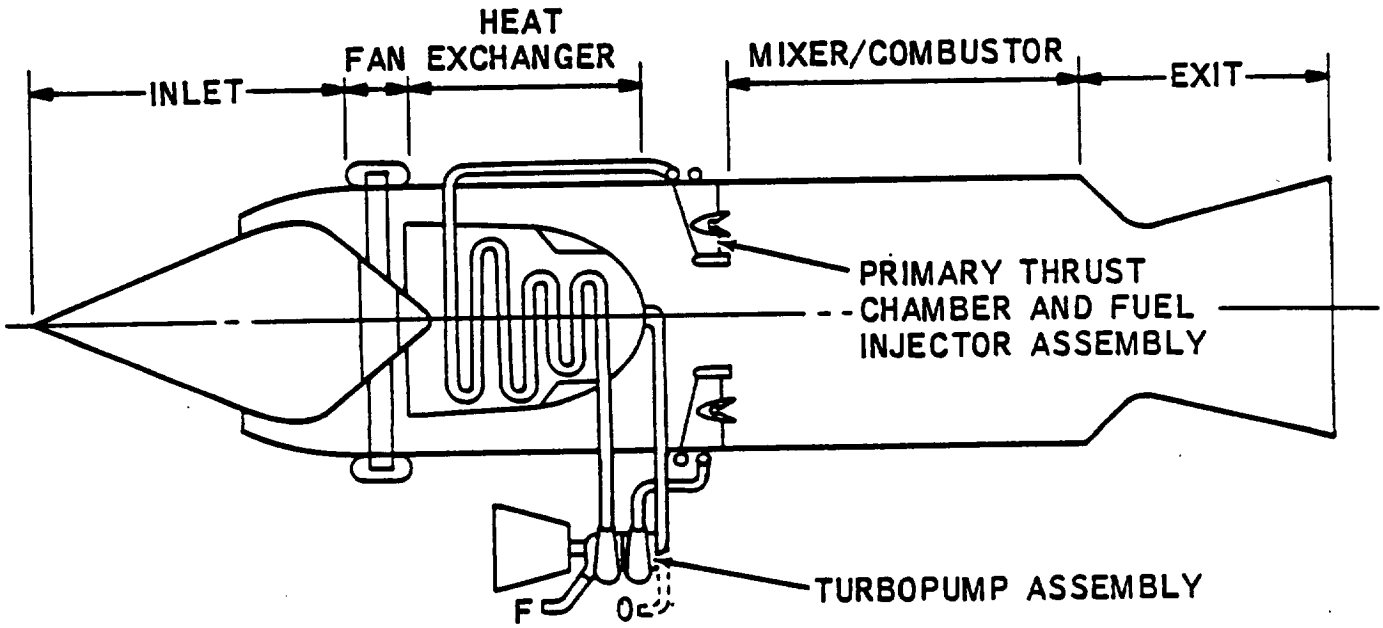

Eng. No. 25

Engine Internal Operating Parameters, nominal

$P_{c\text{-}LACE} = 1000$ psia, $\phi_{LACE} = 8.0$
W_s/W_p (SLS) = 1.19, $\phi_{SEC\text{-}SLS} = 4.64$
$A_4/A_3 = 1.00$
FAN P.R. = 1.3

Engine Operating Mode Block Diagrams

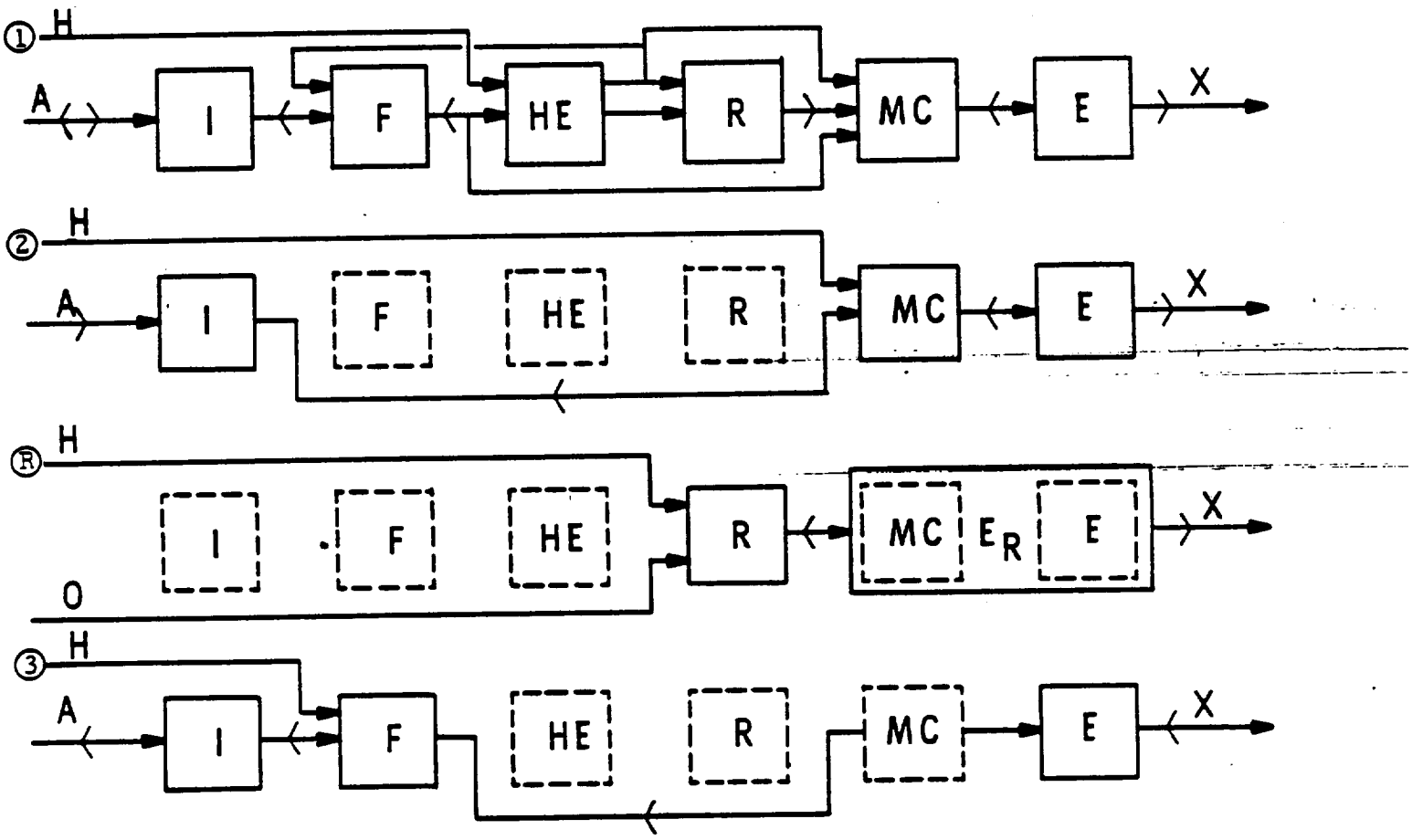

ENGINE PHYSICAL CHARACTERISTICS

Eng. No. 25

Thrust, sls	250,000 lbf	1,112,055 newton

Weight and Thrust/Weight Ratio

Measuring Units	(English)	(International)
Weight	lbm	kg
Thrust/Weight	lbf/lbm	newton/kg

(lbf/in^2) Maximum Engine Internal Pressure 1000 (newton/m^2)

Lightweight Estimate	50	100	250	344.7	689.5	1723.7
Subsystems:						
Fan	3450	3450	3450	1564.9	1564.9	1564.9
Heat Exchanger	4235	4639	5088	1921.0	2104.2	2307.9
Primary Rocket	2211	2211	2211	1002.9	1002.9	1002.9
Mixer/Diffuser	759	1104	1518	344.3	500.8	688.6
Combustor/Exit	1518	1725	2346	688.6	782.5	1064.1
Contingency	449	504	608	203.7	228.6	275.8
Uninstalled Eng. Wt.	12622	13633	15221	5725.4	6183.9	6904.2
Thrust/Weight, Uninst.	19.8	18.3	16.4	194.2	179.3	161.1
Inlet Weight	2765	3160	4582	1254.2	1433.4	2078.4
Installed Eng. Wt.	15387	16793	19803	6979.6	7617.3	8982.6
Thrust/Weight, Inst.	16.2	14.9	12.6	159.3	146.0	123.8

Heavyweight Estimate						
Uninstalled Eng. Wt.	15146	16360	18265	6870.5	7420.7	8285.0
Thrust/Weight, Uninst.	16.5	15.3	13.7	161.9	149.9	134.2
Inlet Weight	11074	12656	17798	5023.2	5740.8	8073.2
Installed Eng. Wt.	26220	29016	36063	11893.7	13161.5	16358.2
Thrust/Weight, Inst.	9.53	8.62	6.93	93.5	84.5	68.0

Engine Flow Areas and Equivalent Diameters

	ft^2	ft	m^2	m
Inlet Cowl, A_c	79.1	10.03	7.35	3.06
Mixer, A_3	69.0	9.37	6.41	2.86
Combustor, A_4	69.0	9.37	6.41	2.86
Exit, A_6	110.0	11.83	10.22	3.61

Engine Lengths

	ft	m
Uninstalled	15.8	4.82
Inlet (Typ)	37.1	11.31
Installed (Typ)	52.9	16.12

REMARKS, REFERENCES

Supercharged Air Augmented Basic LACE. (References 5, 7, 12, 13, 21)

SPECIFIC IMPULSE
REFERENCE TRAJECTORIES

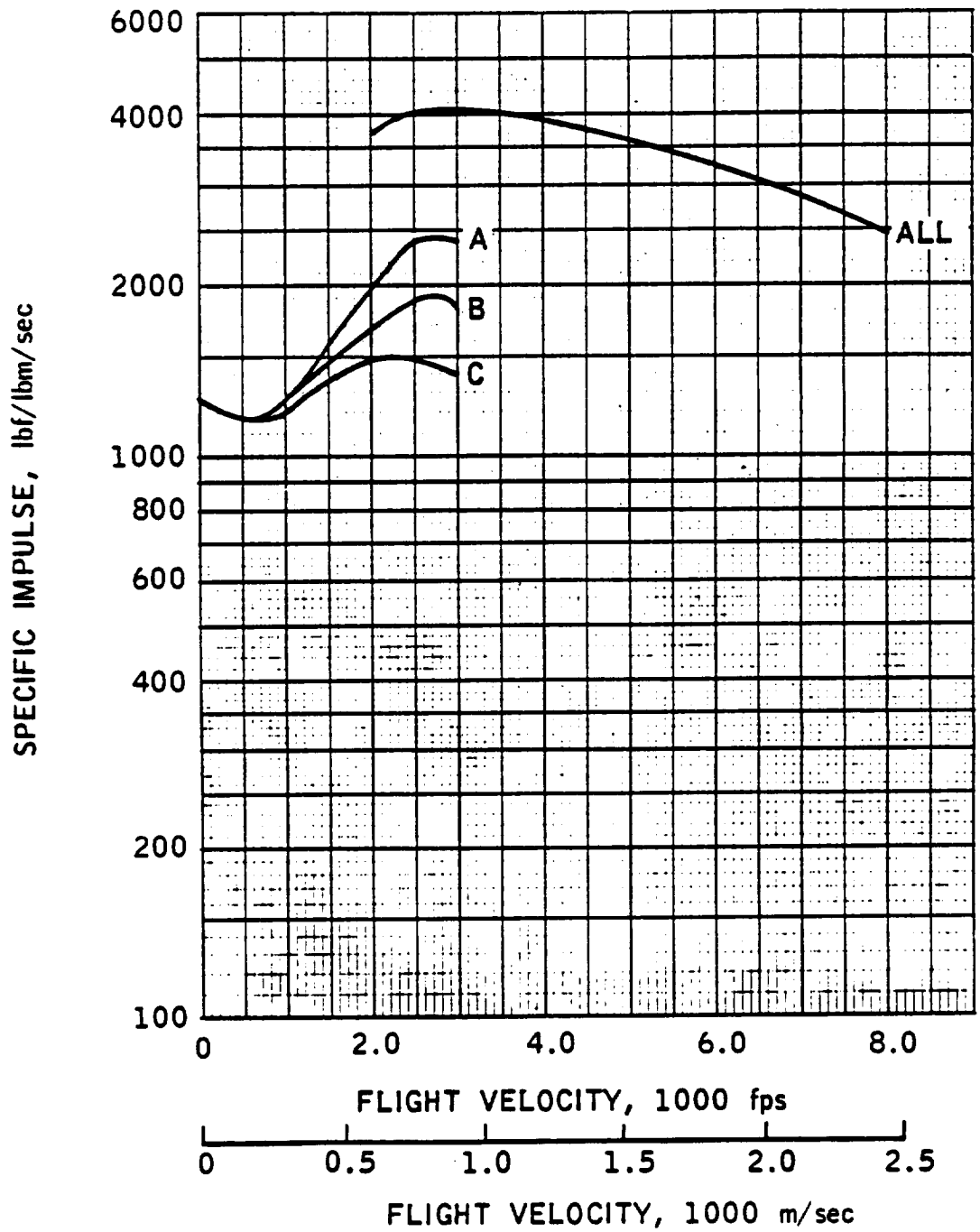

ENG. NO. 25

THRUST

REFERENCE TRAJECTORIES

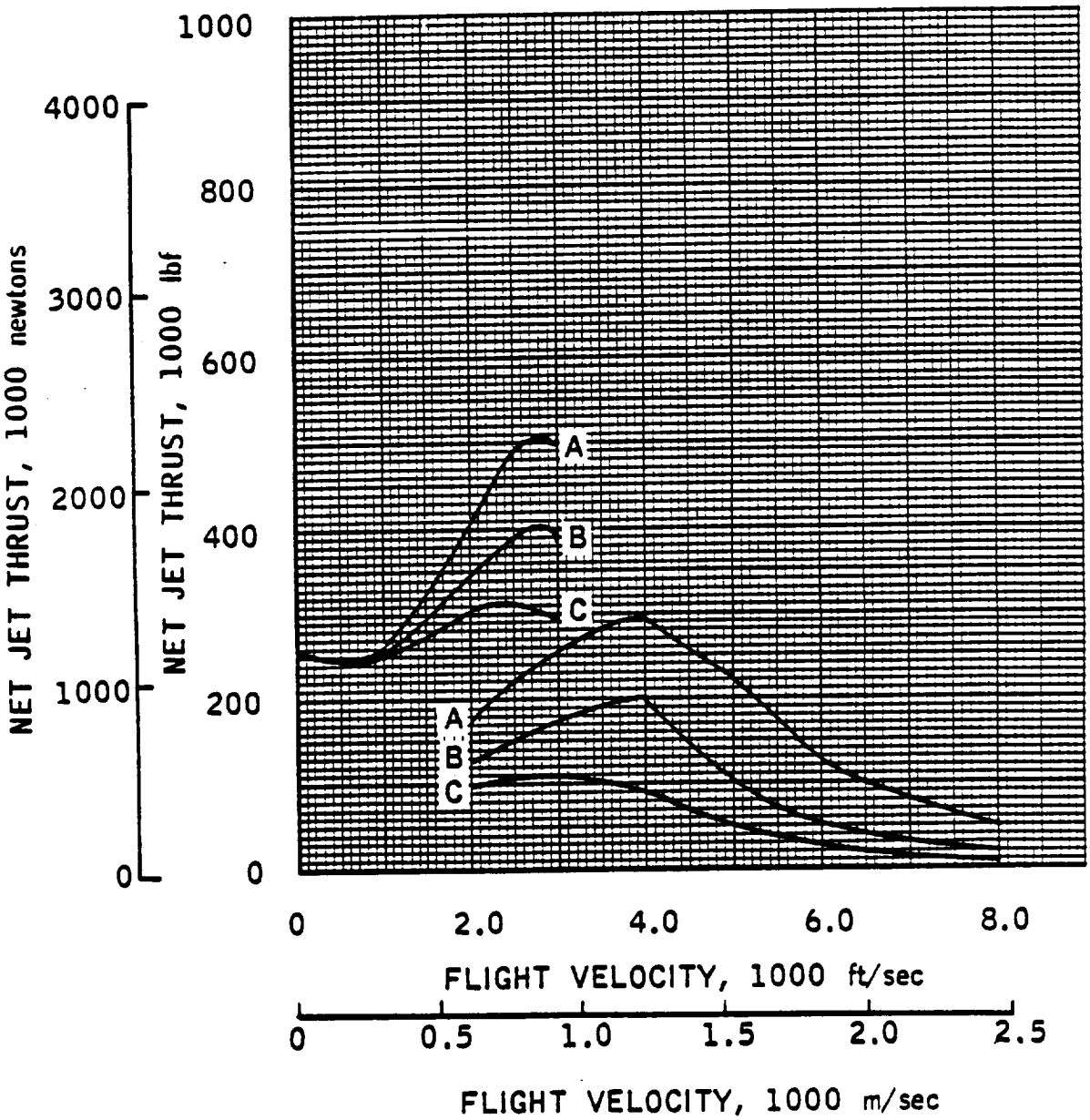

CAPTURE AREA

REFERENCE TRAJECTORIES

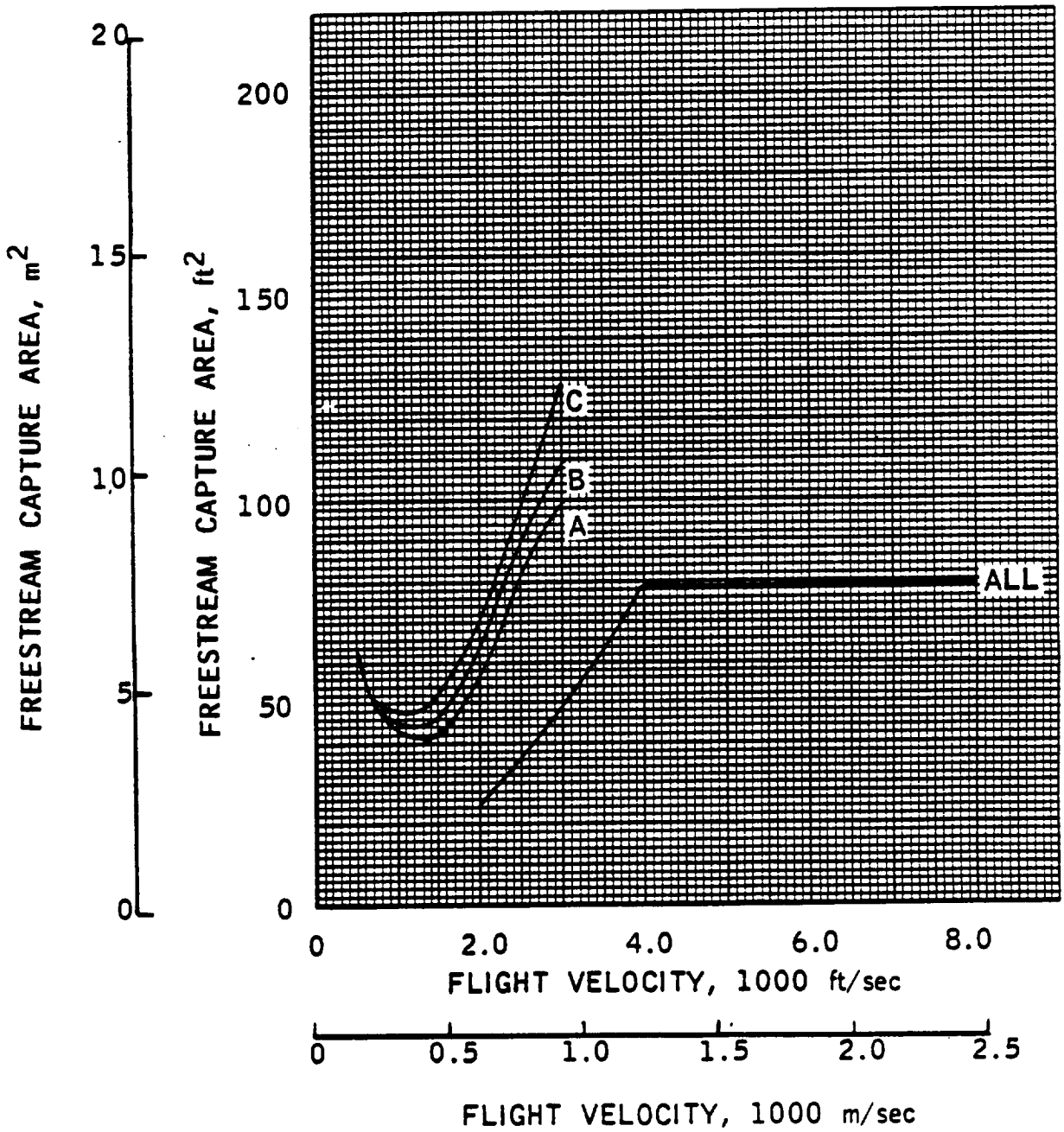

AIRFLOW

REFERENCE TRAJECTORIES

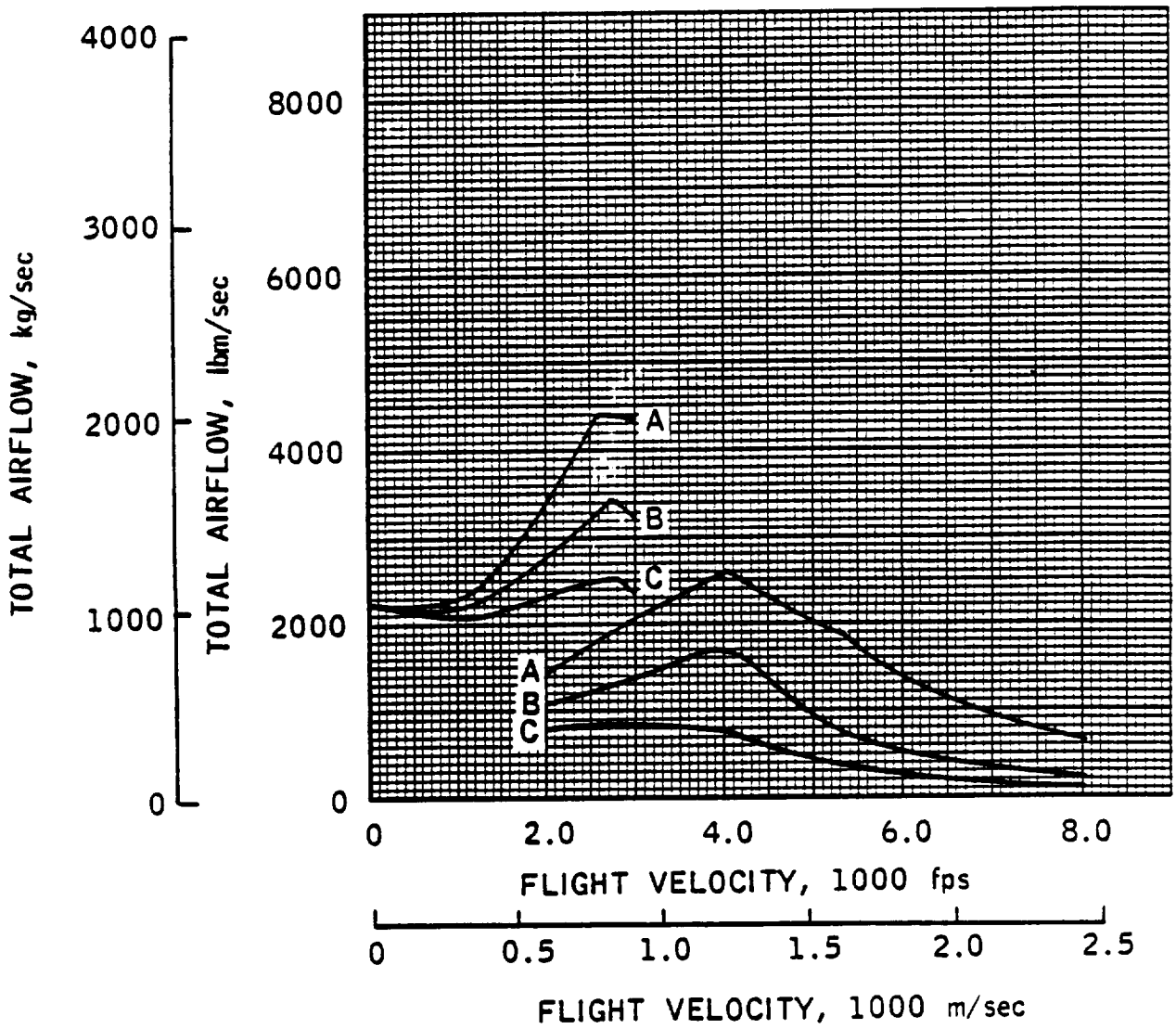

[redacted]

ENGINE- 25

ESTIMATED PERFORMANCE

MO	VO	HTO	PTO	T	CF	IS	SPC	PT2	H2	P2
ALTITUDE - 0. FEET										
0.10	112.	124.7	14.9	255871.	66.59	1221.	2.95	19.24	123.7	18.71
ALTITUDE - 10000. FEET										
0.65	700.	125.7	13.4	244321.	10.77	1168.	3.08	17.45	124.7	16.97
0.70	754.	127.3	14.0	248344.	9.93	1185.	3.04	18.23	126.3	17.73
0.79	851.	130.4	15.3	254722.	8.65	1215.	2.96	19.83	129.4	19.29
ALTITUDE - 20000. FEET										
1.01	1047.	129.3	12.9	253946.	7.69	1212.	2.97	16.83	16.4	128.26
1.21	1255.	138.8	16.6	276941.	6.23	1321.	2.72	21.26	137.7	20.68
1.45	1504.	152.5	23.1	318921.	5.06	1522.	2.37	29.02	151.3	28.23
ALTITUDE - 30000. FEET										
1.46	1453.	141.0	15.2	277913.	5.79	1326.	2.71	19.05	139.9	18.53
1.71	1701.	156.6	21.9	321945.	4.77	1536.	2.34	26.99	155.4	26.25
2.06	2049.	182.7	37.6	412079.	3.76	1966.	1.83	44.80	191.3	43.58
ALTITUDE - 40000. FEET										
1.91	1849.	161.9	18.6	299522.	4.63	1429.	2.52	22.46	160.6	21.84
2.22	2149.	185.8	30.1	362226.	3.75	1728.	2.08	35.34	184.4	34.37

[redacted]

ENGINE- 25

ESTIMATED PERFORMANCE

M2	WS	WP	WSWP	WFT	PHP	PHS	V6	PT20	A0	A5	A6
ALTITUDE - 0. FEET											
0.200	1316.	1108.	1.19	209.6	8.0	4.642	3498.	1.30	154.20	67.77	71.65
ALTITUDE - 10000. FEET											
0.200	1190.	1108.	1.07	209.6	8.0	5.137	4065.	1.30	30.08	66.57	78.59
0.200	1235.	1108.	1.11	209.6	8.0	4.949	4097.	1.30	28.99	66.73	79.37
0.200	1328.	1108.	1.20	209.6	8.0	4.602	4142.	1.30	27.61	66.51	80.53
ALTITUDE - 20000. FEET											
0.200	1131.	1108.	1.02	209.6	8.0	5.401	4598.	1.30	26.49	65.65	92.94
0.200	1381.	1108.	1.25	209.6	8.0	4.425	4729.	1.28	26.96	*******	98.51
0.200	1801.	1108.	1.63	209.6	8.0	3.394	4923.	1.26	29.30	64.97	107.34
ALTITUDE - 30000. FEET											
0.200	1228.	1108.	1.11	209.6	8.0	4.977	4980.	1.26	29.46	64.60	109.65
0.200	1653.	1108.	1.49	209.6	8.0	3.697	5007.	1.23	33.81	64.05	109.90
0.200	2547.	1108.	2.30	209.6	8.0	2.399	5063.	1.19	43.14	61.23	109.67
ALTITUDE - 40000. FEET											
0.200	1354.	1108.	1.22	209.6	8.0	4.514	5064.	1.21	38.62	62.72	109.72
0.200	1992.	1108.	1.80	209.6	8.0	3.067	5113.	1.17	48.79	60.68	109.47

CONFIDENTIAL

ENGINE- 25

ESTIMATED PERFORMANCE

MO	VO	HTO	PTO	T	CF	IS	SPC	PT2	H2	P2
ALTITUDE - 40000. FEET										
2.69	2604.	229.0	62.6	505329.	2.82	2411.	1.49	69.16	227.3	67.28
ALTITUDE - 45500. FEET										
3.10	3000.	273.3	99.3	502307.	2.45	2397.	1.50	92.85	272.1	91.26
ALTITUDE - 50000. FEET										
2.40	2320.	201.1	24.6	314451.	3.58	1500.	2.40	28.30	199.5	27.52
2.84	2750.	244.6	48.8	408212.	2.75	1948.	1.85	53.52	52.2	242.89
ALTITUDE - 54000. FEET										
3.10	3000.	273.3	59.5	384101.	2.55	1833.	1.96	61.86	272.1	60.80
ALTITUDE - 60000. FEET										
2.89	2800.	250.2	32.7	313177.	2.95	1494.	2.41	35.12	248.5	34.27
ALTITUDE - 64000. FEET										
3.10	3000.	273.3	36.9	293906.	2.69	1402.	2.57	38.36	272.1	37.70

CONFIDENTIAL

CONFIDENTIAL

ENGINE- 25

ESTIMATED PERFORMANCE

M2	WS	WP	WSWP	WFT	PHP	PHS	V6	PT20	A0	A5	A6
ALTITUDE - 40000. FEET											
0.200	3528.	1108.	3.18	209.6	8.0	1.732	5241.	1.11	71.00	55.49	109.72
ALTITUDE - 45500. FEET											
0.159	3492.	1108.	3.15	209.6	8.0	1.750	5698.	1.04	79.08	42.13	109.82
ALTITUDE - 50000. FEET											
0.200	1536.	1108.	1.39	209.6	8.0	3.978	5212.	1.15	56.15	59.07	109.68
0.194	2572.	1108.	2.32	209.6	8.0	2.375	5365.	1.10	79.00	53.32	109.31
ALTITUDE - 54000. FEET											
0.159	2327.	1108.	2.10	209.6	8.0	2.626	5694.	1.04	79.08	43.99	109.33
ALTITUDE - 60000. FEET											
0.189	1627.	1108.	1.47	209.6	8.0	3.755	5445.	1.07	79.13	53.16	109.79
ALTITUDE - 64000. FEET											
0.159	1443.	1108.	1.30	209.6	8.0	4.235	5691.	1.04	79.08	46.38	109.97

This Page Intentionally Blank

ENGINE FACT SHEET

Class 0 Composite Launch Vehicle Engines

Engine Identification Number: 26 Supercharged Air Augmented LACE - Convertible Ramjet

Engine Operating Modes

Summary: Number of Modes/ Transitions 6 ; Number of Discrete Modes Utilized 5

Mode Progression - Lift-off to Touch-down

(Take off) Supercharged air augmented Liquid Air Cycle Engine (LACE), simultaneous mixing and burning cycle (2000-3000 ft/sec) Ramjet, subsonic combustion (6000-8000 ft/sec) Ramjet, supersonic combustion (10,000-14,000 ft/sec) Rocket (Orbital speed, space maneuvering and deorbiting) Ramjet, subsonic combustion (Flyback) Ducted fan (Flyback and landing)

Engine Propellant Requirements

Code: (R) = Required, (V) = Required for vacuum operation, (F) = Useable for flyback mode

- [R] Hydrogen, liquid, 37-40 °R
- [ ] Hydrogen, liquid, subcooled (25 °R)
- [F] Hydrogen, gaseous
- [V] Oxygen, liquid, 162 °R
- [ ] Oxygen, liquid, subcooled
- [ ] Oxygen, gaseous
- [ ] Other _____

Engine Constituent Subsystems

Inlet, fan, heat exchanger, rocket, mixer-combustor, exit

Engine General Arrangement and Operating Schematic

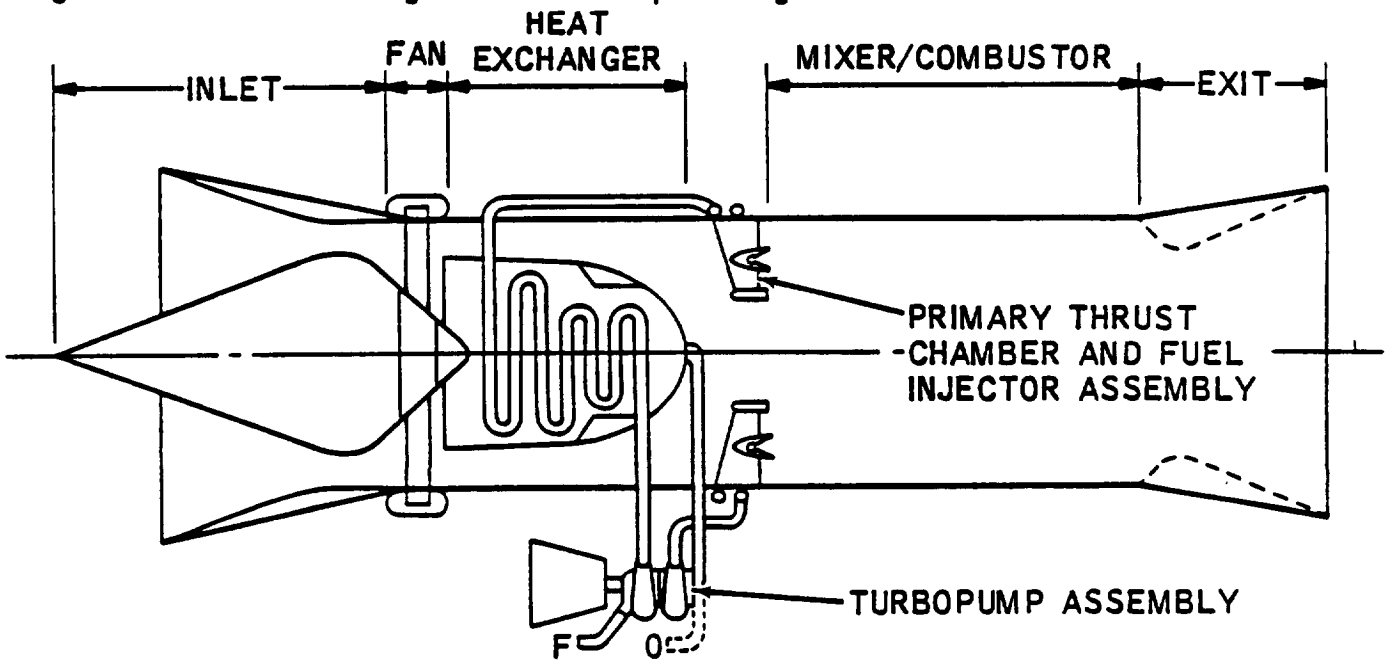

Eng. No. 26

Engine Internal Operating Parameters, nominal

$P_{c\text{-}LACE} = 1000$ psia, $\phi_{LACE} = 8.0$
W_s/W_p (SLS) $= 1.19$, $\phi_{SEC\text{-}SLS} = 4.64$
$A_4/A_3 = 1.00$, $A_c/A_3 = 1.15$
FAN P.R. $= 1.3$

Engine Operating Mode Block Diagrams

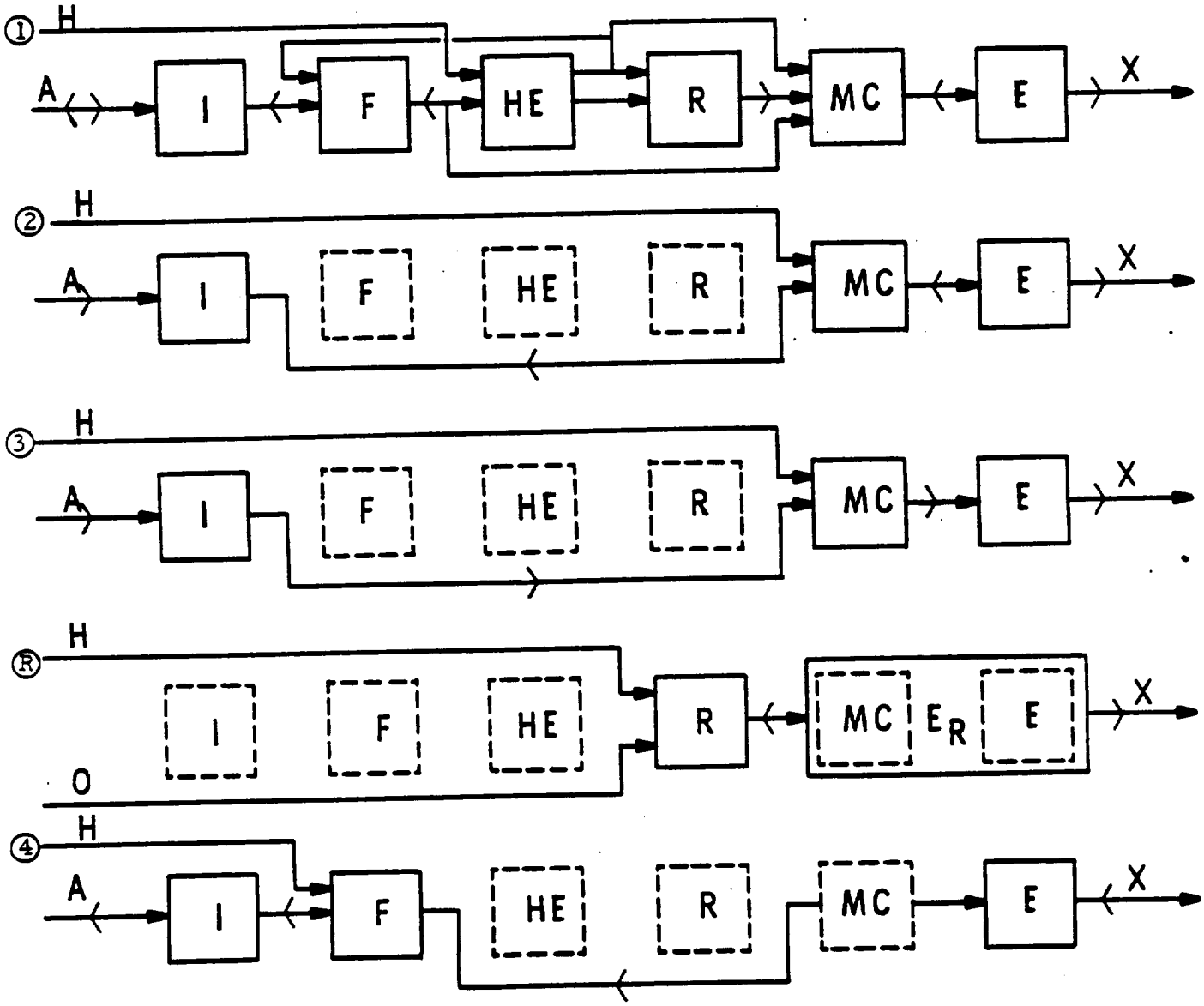

Eng. No. 26

The following information for Engine No. 26 appears in the fact sheets previously given for Engine No. 25.

Engine Physical Characteristics

Weight, Thrust/Weight, Flow areas, Lengths

Engine Performance: 0-8000 ft/sec

Specific Impulse, Thrust, Airflow, Capture Area

References and additional remarks

SPECIFIC IMPULSE
REFERENCE TRAJECTORIES

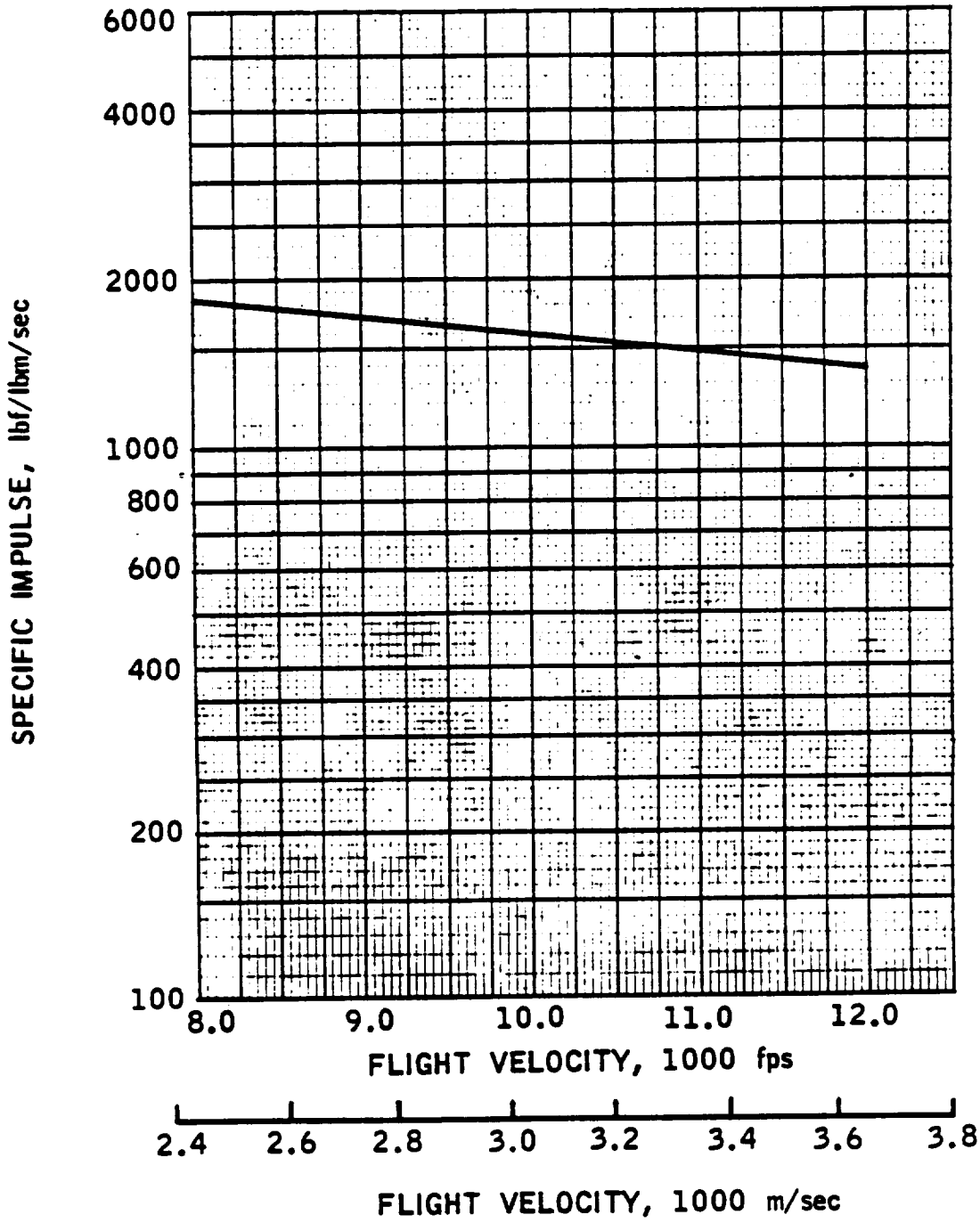

ENG. NO. 26

THRUST

REFERENCE TRAJECTORIES

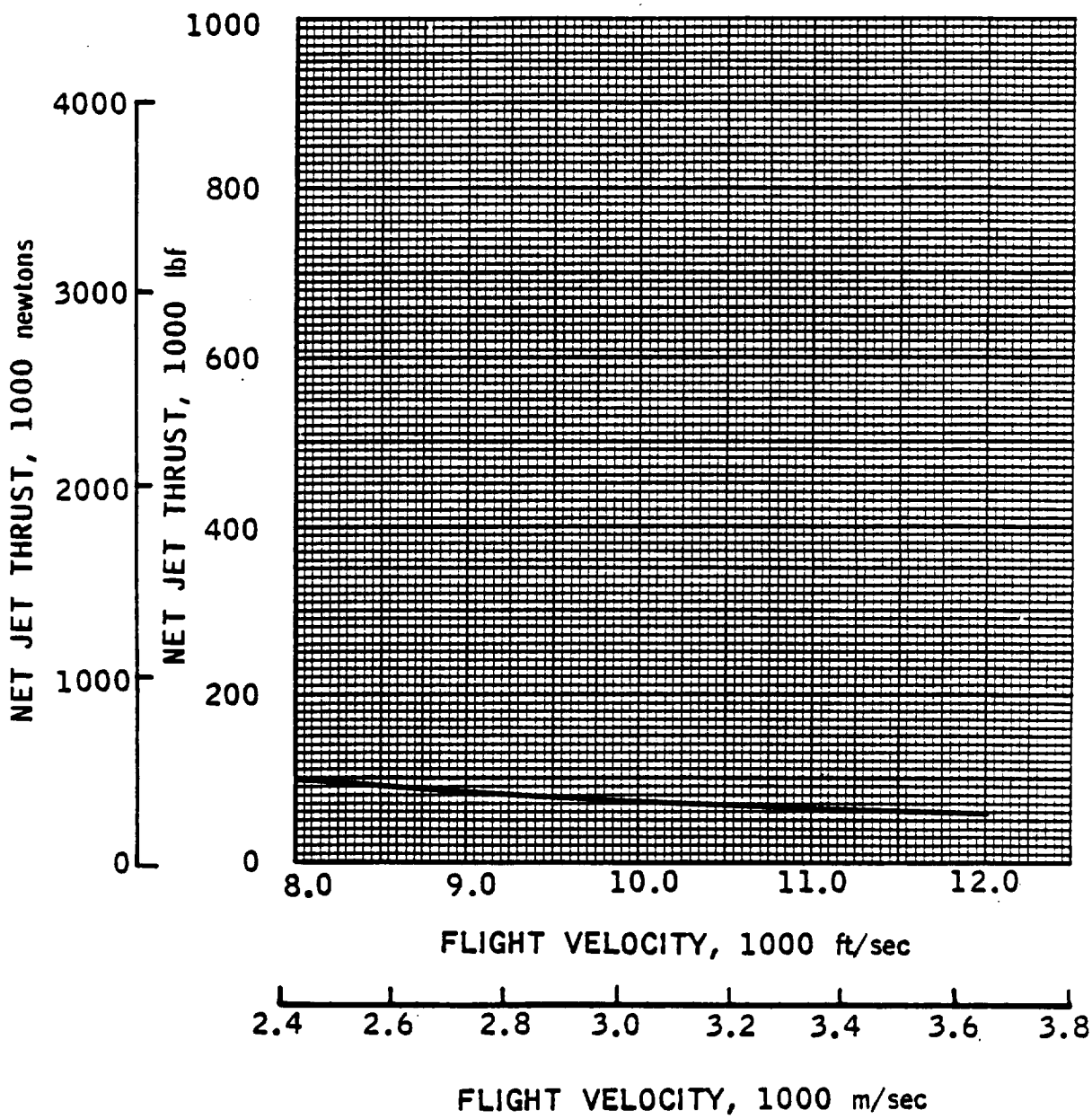

This Page Intentionally Blank

ENGINE FACT SHEET

Class 0 Composite Launch Vehicle Engines

Engine Identification Number: 27 Recycled Supercharged Air Augmented LACE - Ramjet

Engine Operating Modes

Summary: Number of Modes/ Transitions 5 ; Number of Discrete Modes Utilized 4

Mode Progression - Lift-off to Touch-down

(Take off) Supercharged air augmented Liquid Air Cycle Engine (LACE), simultaneous mixing and burning cycle, recycled hydrogen (2000-3000 ft/sec) Ramjet, subsonic combustion (6000-8000 ft/sec) Rocket (Orbital speed, space maneuvering and deorbiting) Ramjet, subsonic combustion (Flyback) Ducted fan (Flyback and landing)

Engine Propellant Requirements

Code: (R) = Required, (V) = Required for vacuum operation, (F) = Useable for flyback mode

- ☐ Hydrogen, liquid, 37-40 °R
- ☒ Hydrogen, liquid, subcooled (25 °R)
- ☒ Hydrogen, gaseous
- ☒ Oxygen, liquid, 162 °R
- ☐ Oxygen, liquid, subcooled
- ☐ Oxygen, gaseous
- ☐ Other _____

Engine Constituent Subsystems

Inlet, fan, heat exchanger, rocket, mixer-combustor, exit

Engine General Arrangement and Operating Schematic

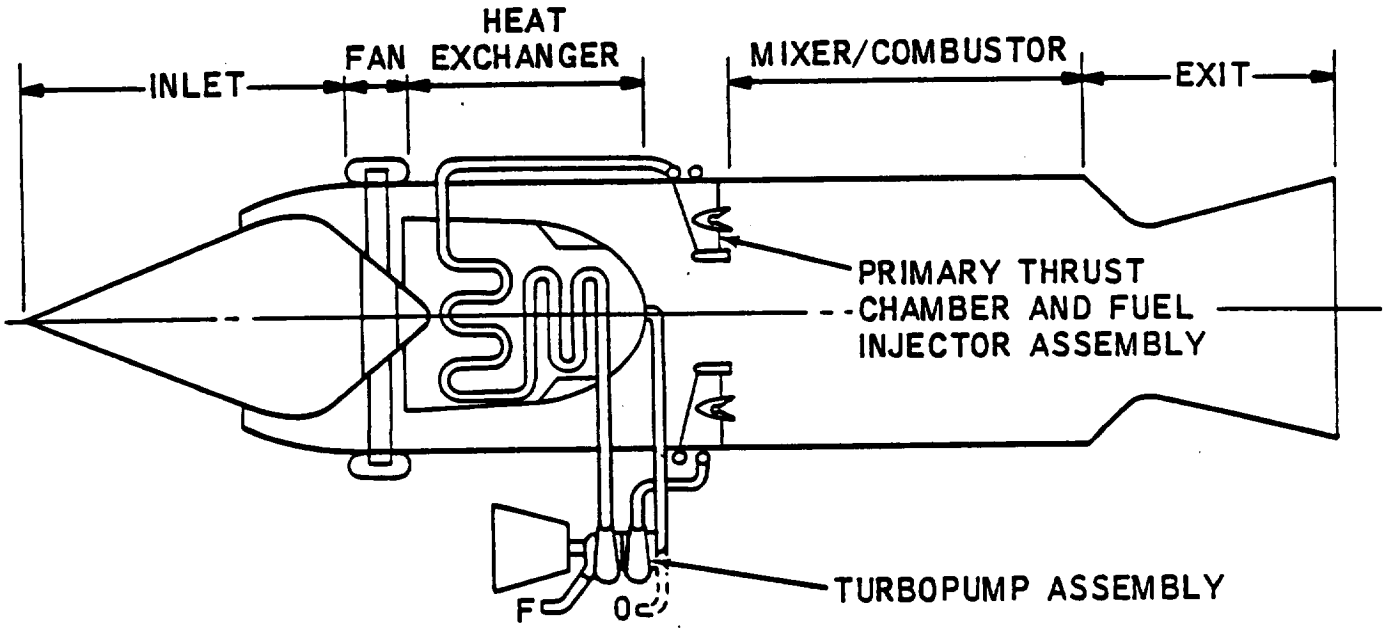

Eng. No. 27

Engine Internal Operating Parameters, nominal

$P_{c\text{-}LACE} = 1000$ psia, $\phi_{LACE} = 4.0$
W_s/W_p (SLS) = 1.36, $\phi_{SEC\text{-}SLS} = 1.92$
$A_4/A_3 = 1.00$
FAN P.R. = 1.3

Engine Operating Mode Block Diagrams

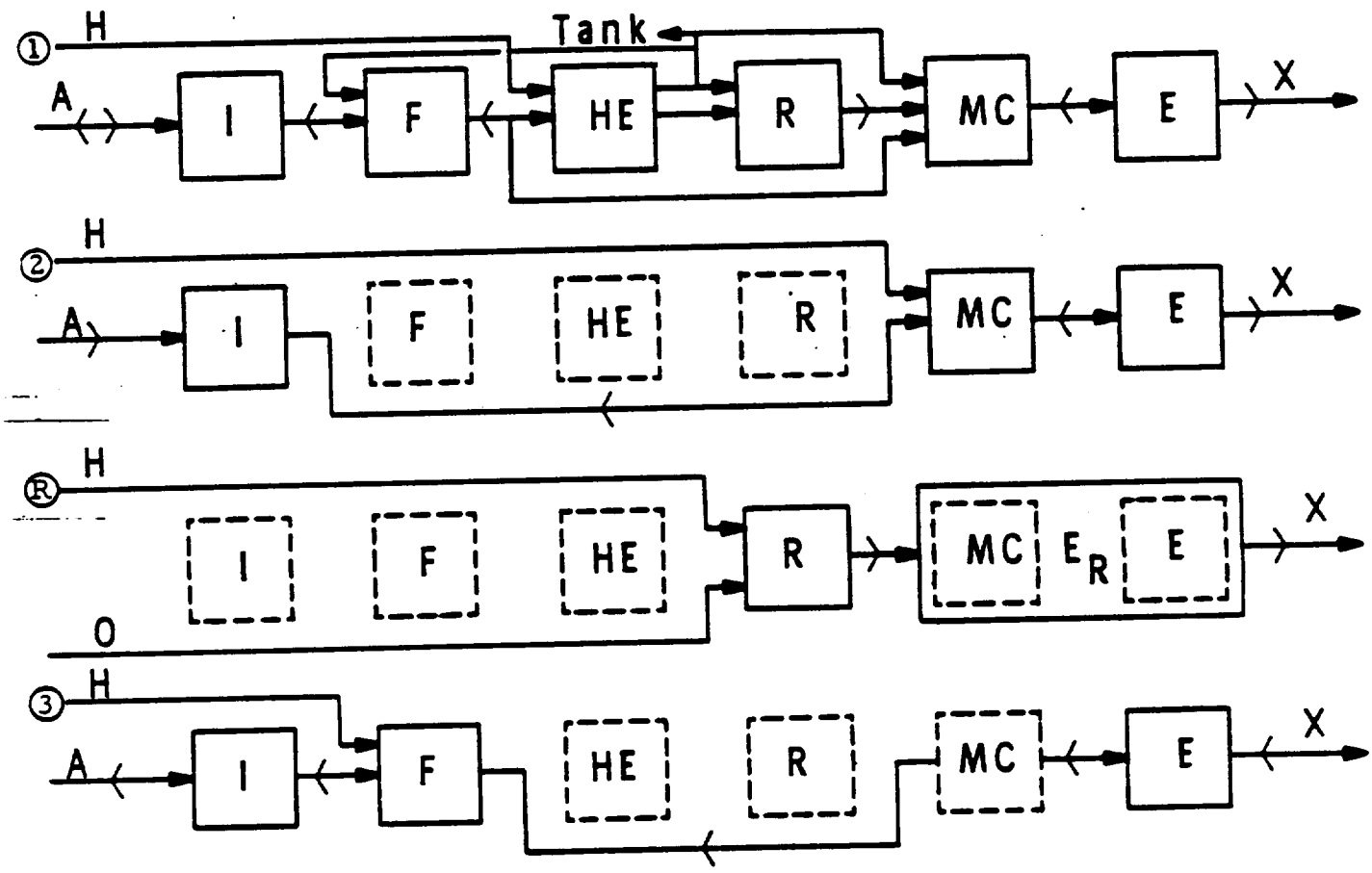

ENGINE PHYSICAL CHARACTERISTICS

Eng. No. 27

Thrust, sls	250,000 lbf	1,112,055 newton

Weight and Thrust/Weight Ratio

Measuring Units	(English)	(International)
Weight	lbm	kg
Thrust/Weight	lbf/lbm	newton/kg

Lightweight Estimate

(lbf/in^2) Maximum Engine Internal Pressure 1000 (newton/m^2)

Subsystems:	50	100	250	344.7	689.5	1723.7
Fan	3450	3450	3450	1564.9	1564.9	1564.9
Heat Exchanger	5528	6129	6795	2507.5	2780.1	3082.2
Primary Rocket	2098	2098	2098	951.7	951.7	951.7
Mixer/Diffuser	759	1104	1518	344.3	500.8	688.6
Combustor/Exit	1518	1725	2346	688.6	782.5	1064.1
Contingency	438	493	597	198.7	223.6	270.8
Uninstalled Eng. Wt.	13791	14999	16804	6255.7	6803.6	7622.3
Thrust/Weight, Uninst.	18.1	16.7	14.9	178	163	146
Inlet Weight	2765	3160	4582	1254.2	1433.4	2078.4
Installed Eng. Wt.	16556	18159	21386	7509.9	8237.0	9700.7
Thrust/Weight, Inst.	15.1	13.8	11.7	148	135	115

Heavyweight Estimate

Uninstalled Eng. Wt.	16549	17999	20165	7506.8	8164.4	9146.8
Thrust/Weight, Uninst.	15.1	13.9	12.4	148	136	122
Inlet Weight	11074	12656	17798	5023.2	5740.8	8073.2
Installed Eng. Wt.	27623	30655	37963	12530.0	13905.2	17220.0
Thrust/Weight, Inst.	9.1	8.2	6.6	88.6	80.0	64.6

Engine Flow Areas and Equivalent Diameters

	ft^2	ft	m^2	m
Inlet Cowl, A_c	79.1	10.03	7.35	3.06
Mixer, A_3	69.0	9.37	6.41	2.86
Combustor, A_4	69.0	9.37	6.41	2.86
Exit, A_6	110.0	11.83	10.22	3.61

Engine Lengths

	ft	m
Uninstalled	15.8	4.82
Inlet (Typ)	37.1	11.31
Installed (Typ)	52.9	16.12

REMARKS, REFERENCES

Recycled Supercharged Air Augmented Basic LACE. Recycle time limit should be checked for specific applications. (References 5, 7, 12, 13, 14, 21)

SPECIFIC IMPULSE
REFERENCE TRAJECTORIES

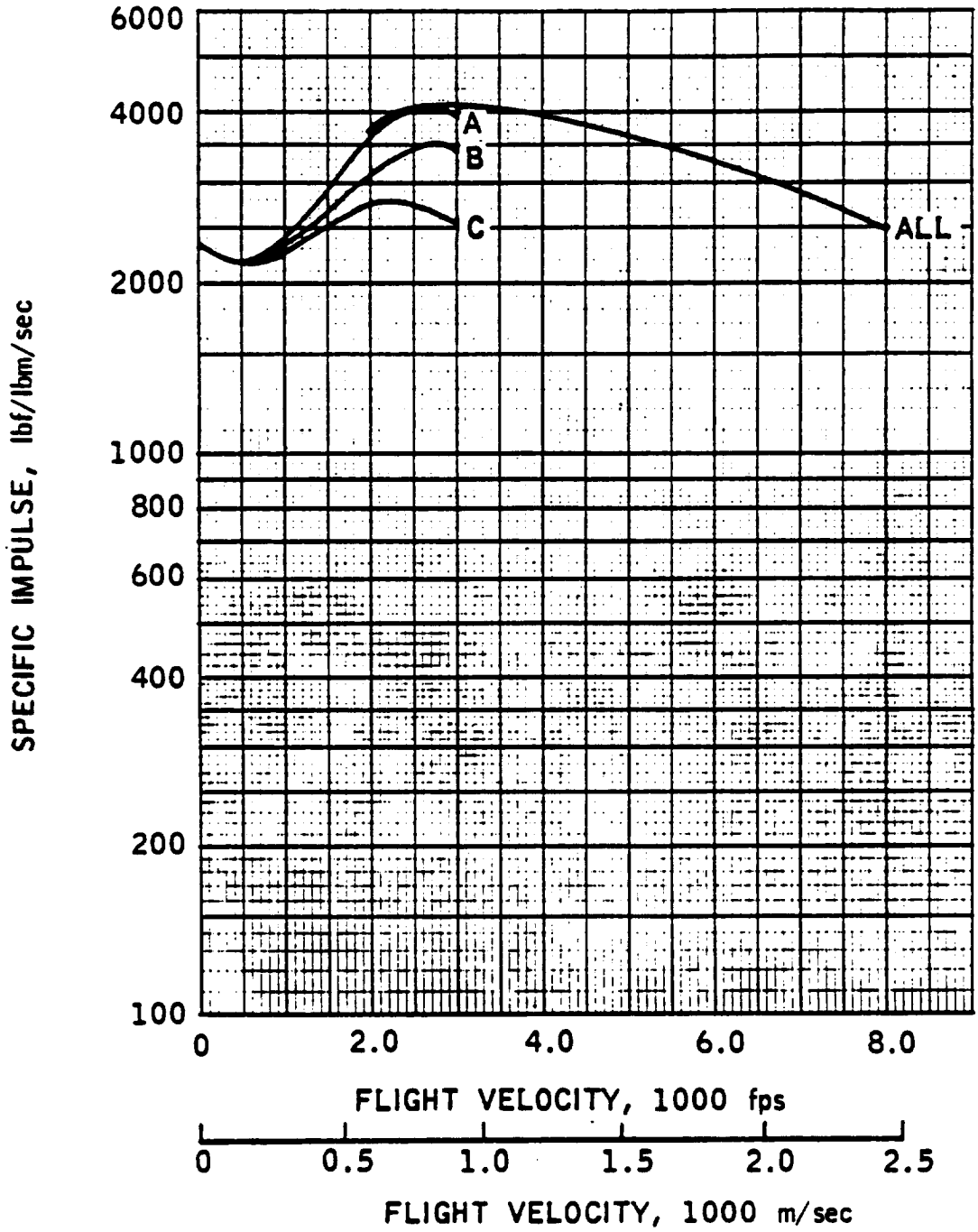

ENG. NO. 27

THRUST

REFERENCE TRAJECTORIES

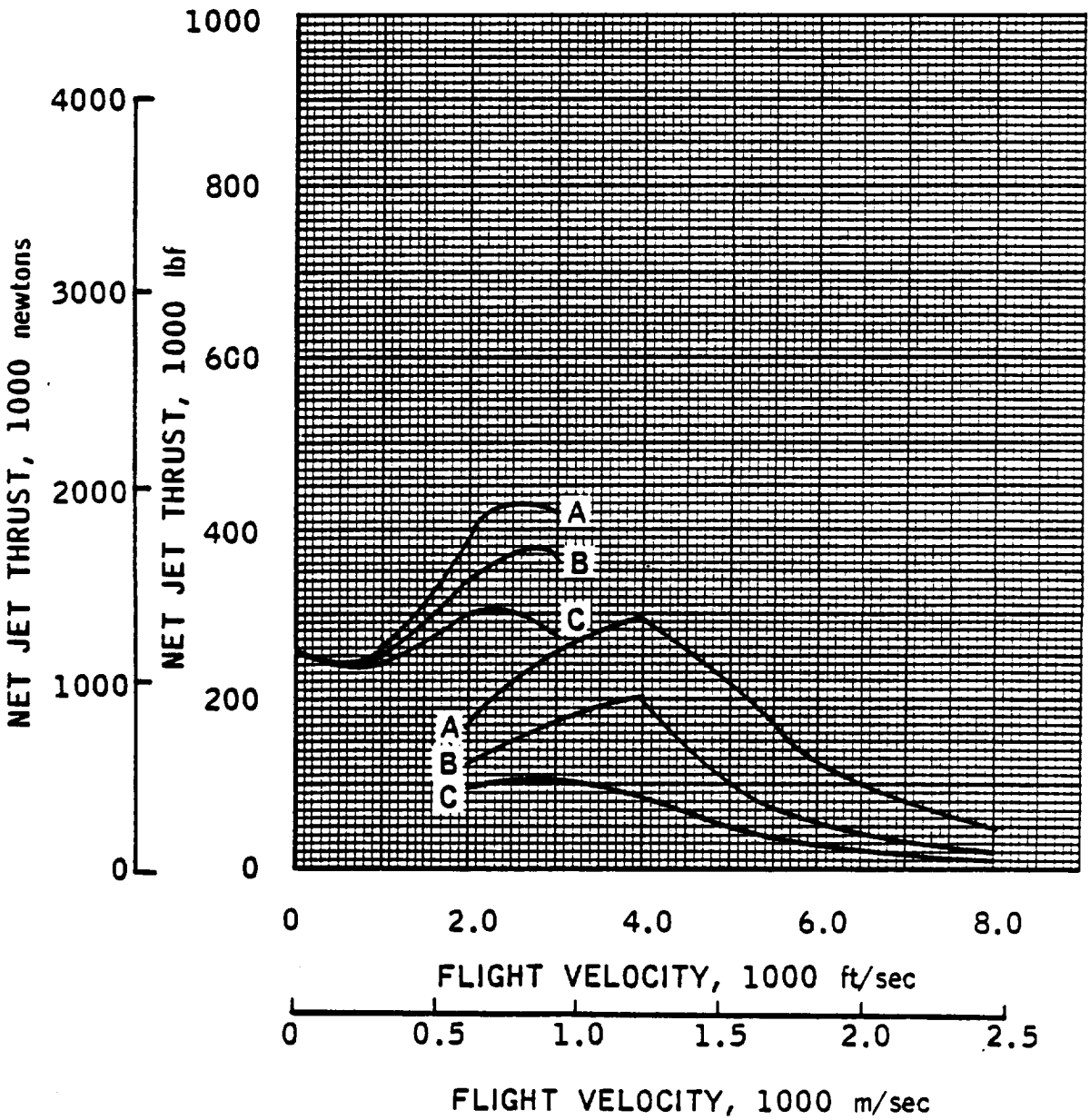

CAPTURE AREA

REFERENCE TRAJECTORIES

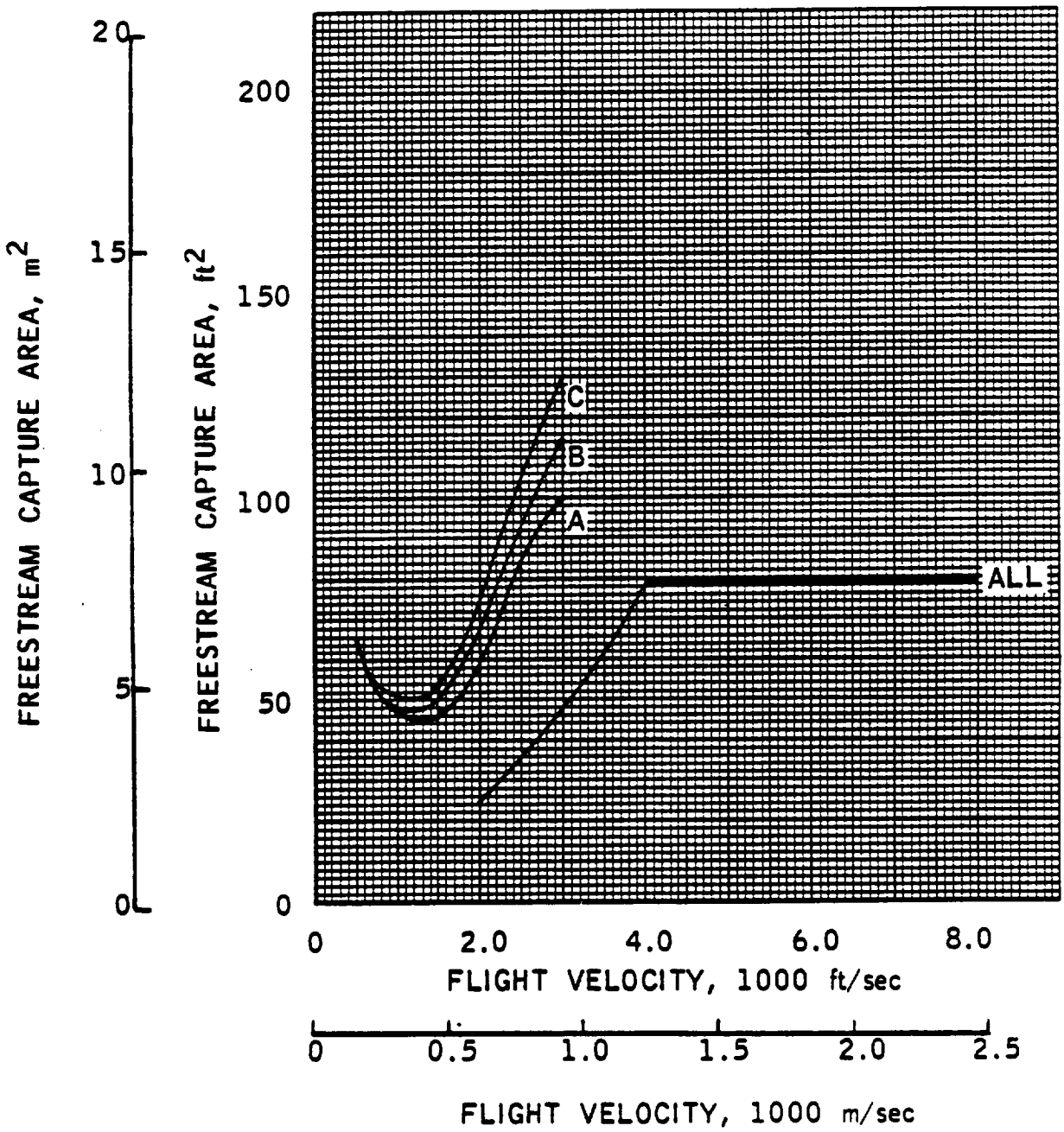

ENG. NO. 27

AIRFLOW

REFERENCE TRAJECTORIES

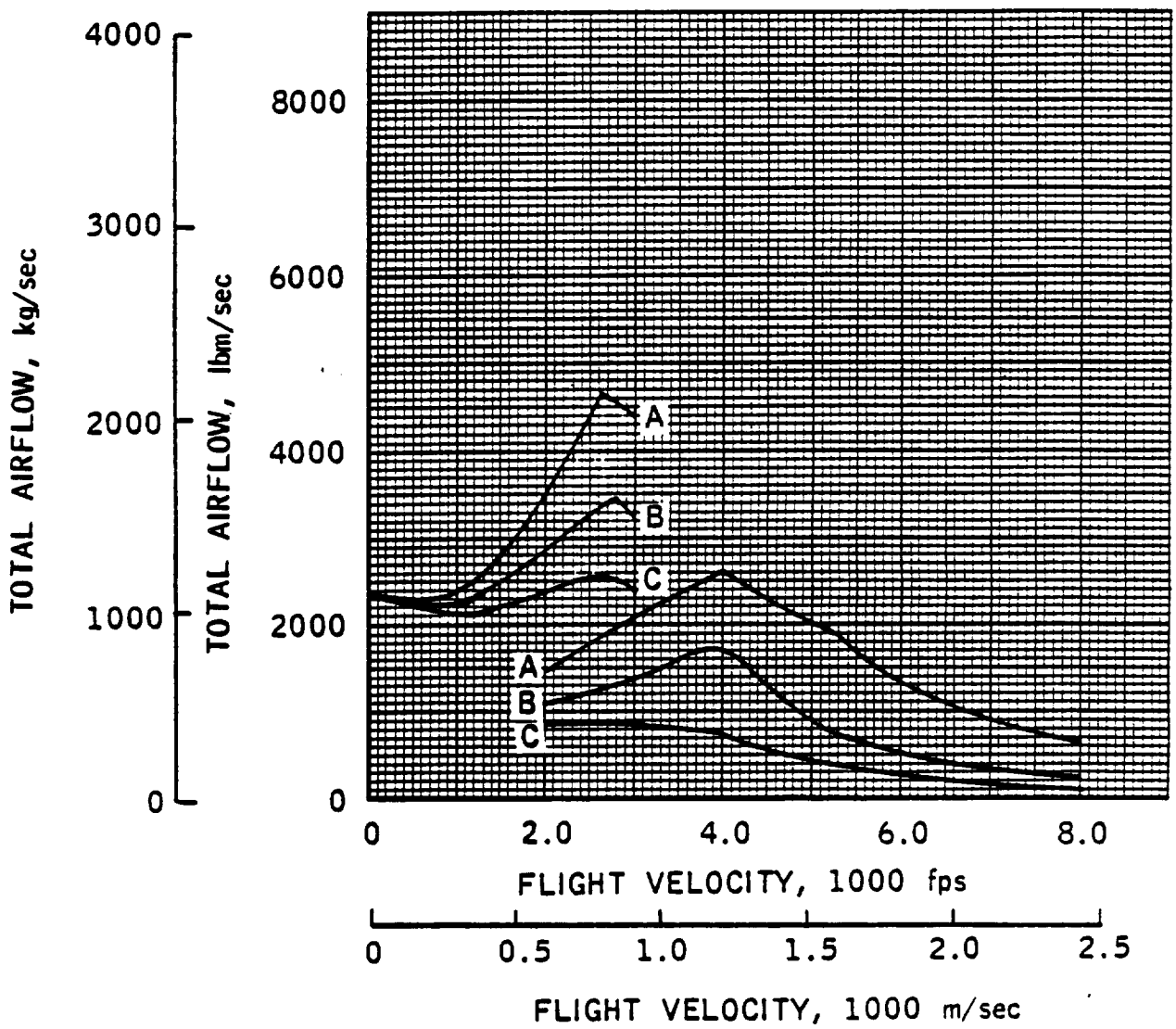

[redacted]

ENGINE- 27

ESTIMATED PERFORMANCE

MO	VO	HTO	PTO	T	CF	IS	SPC	PT2	H2	P2
				ALTITUDE -		0. FEET				
0.10	112.	124.7	14.8	249491.	61.71	2312.	1.56	19.24	123.6	18.63
				ALTITUDE -		10000. FEET				
0.65	700.	125.7	13.4	236866.	9.92	2195.	1.64	17.45	124.6	16.90
0.70	754.	127.3	14.0	240011.	9.13	2224.	1.62	18.23	126.1	17.65
0.79	851.	130.4	15.3	247120.	7.98	2290.	1.57	19.83	129.2	19.20
				ALTITUDE -		20000. FEET				
1.01	1047.	129.3	12.9	245308.	7.07	2273.	1.58	16.83	128.1	16.29
1.21	1255.	138.8	16.6	268196.	5.73	2486.	1.45	21.26	137.6	20.59
1.45	1504.	152.5	23.1	310013.	4.66	2873.	1.25	29.02	151.1	28.11
				ALTITUDE -		30000. FEET				
1.46	1453.	141.0	15.2	268857.	5.33	2492.	1.44	19.05	139.7	18.45
1.71	1701.	156.6	21.9	312042.	4.39	2892.	1.24	26.99	155.2	26.14
2.06	2049.	182.7	37.6	401635.	3.46	3722.	0.97	44.80	181.1	43.39
				ALTITUDE -		40000. FEET				
1.91	1849.	161.9	18.6	288740.	4.24	2676.	1.35	22.46	160.4	21.75
2.22	2149.	185.8	30.1	351418.	3.45	3257.	1.11	35.34	184.2	34.22

[redacted]

CONFIDENTIAL

ENGINE- 27

ESTIMATED PERFORMANCE

M2	WS	WP	WSWP	WFT	PHP	PHS	V6	PT20	AO	A5	A6
ALTITUDE - 0. FEET											
0.215	1405.	1033.	1.36	107.9	4.0	1.919	3399.	1.30	164.61	67.82	71.70
ALTITUDE - 10000. FEET											
0.215	1270.	1033.	1.23	107.9	4.0	2.123	3977.	1.30	32.11	66.71	78.92
0.215	1318.	1033.	1.28	107.9	4.0	2.046	4004.	1.30	30.94	66.82	79.68
0.215	1417.	1033.	1.37	107.9	4.0	1.902	4058.	1.30	29.48	67.00	81.25
ALTITUDE - 20000. FEET											
0.215	1208.	1033.	1.17	107.9	4.0	2.233	4519.	1.30	28.28	65.81	93.68
0.215	1474.	1033.	1.43	107.9	4.0	1.830	4643.	1.28	28.78	66.05	99.80
0.215	1922.	1033.	1.86	107.9	4.0	1.403	4824.	1.26	31.28	65.71	109.49
ALTITUDE - 30000. FEET											
0.215	1311.	1033.	1.27	107.9	4.0	2.058	4880.	1.26	31.45	64.93	109.66
0.215	1764.	1033.	1.71	107.9	4.0	1.529	4869.	1.23	36.09	64.61	109.38
0.215	2719.	1033.	2.63	107.9	4.0	0.992	4903.	1.19	46.05	62.42	109.70
ALTITUDE - 40000. FEET											
0.215	1445.	1033.	1.40	107.9	4.0	1.866	4951.	1.21	41.23	62.98	109.75
0.215	2127.	1033.	2.06	107.9	4.0	1.268	4976.	1.17	52.09	61.45	109.61

CONFIDENTIAL

CONFIDENTIAL

ENGINE- 27

ESTIMATED PERFORMANCE

MO	VO	HTO	PTO	T	CF	IS	SPC	PT2	H2	P2
ALTITUDE - 40000. FEET										
2.69	2604.	229.0	62.6	434523.	2.29	4027.	0.89	69.16	227.0	67.00
ALTITUDE - 45500. FEET										
3.10	3000.	273.3	89.3	424447.	2.06	3934.	0.92	92.85	272.1	91.25
ALTITUDE - 50000. FEET										
2.40	2320.	201.1	24.6	302021.	3.27	2799.	1.29	28.30	199.3	27.41
2.84	2750.	244.6	48.8	384377.	2.57	3562.	1.01	53.52	242.9	52.14
ALTITUDE - 54000. FEET										
3.10	3000.	273.3	59.5	359528.	2.37	3332.	1.08	61.86	272.1	60.79
ALTITUDE - 60000. FEET										
2.89	2800.	250.2	32.7	290727.	2.62	2694.	1.34	35.12	248.5	34.27
ALTITUDE - 64000. FEET										
3.10	3000.	273.3	36.9	271602.	2.46	2517.	1.43	38.36	272.1	37.70

CONFIDENTIAL

[redacted]

ENGINE- 27

ESTIMATED PERFORMANCE

M2	WS	WP	WSWP	WFT	PHP	PHS	V6	PT20	AO	A5	A6
ALTITUDE - 40000. FEET											
0.215	3766.	1033.	3.65	107.9	4.0	0.716	4840.	1.11	75.79	51.11	109.67
ALTITUDE - 45500. FEET											
0.159	3489.	1033.	3.38	107.9	4.0	0.773	5377.	1.04	79.01	38.11	109.70
ALTITUDE - 50000. FEET											
0.215	1640.	1033.	1.59	107.9	4.0	1.645	5088.	1.15	59.94	59.38	109.70
0.195	2574.	1033.	2.49	107.9	4.0	1.048	5319.	1.10	79.05	51.50	109.95
ALTITUDE - 54000. FEET											
0.159	2325.	1033.	2.25	107.9	4.0	1.160	5638.	1.04	79.01	42.45	109.64
ALTITUDE - 60000. FEET											
0.189	1624.	1033.	1.57	107.9	4.0	1.660	5395.	1.07	78.99	51.05	109.69
ALTITUDE - 64000. FEET											
0.169	1441.	1033.	1.40	107.9	4.0	1.871	5637.	1.04	79.01	44.57	109.88

This Page Intentionally Blank

ENGINE FACT SHEET

Class 0 Composite Launch Vehicle Engines

Engine Identification Number: 28 Recycled Supercharged Air Augmented LACE - Convertible Ramjet

Engine Operating Modes

Summary: Number of Modes/ Transitions 6 ; Number of Discrete Modes Utilized 5

Mode Progression - Lift-off to Touch-down

(Take off) Supercharged air augmented Liquid Air Cycle Engine (LACE), simultaneous mixing and burning cycle, recycled hydrogen (2000-3000 ft/sec) Ramjet, subsonic combustion (6000-8000 ft/sec) Ramjet, supersonic combustion (10,000-14,000 ft/sec) Rocket (Orbital speed, space maneuvering and deorbiting) Ramjet, subsonic combustion (Flyback) Ducted fan (Flyback and landing)

Engine Propellant Requirements

Code: (R) = Required, (V) = Required for vacuum operation, (F) = Useable for flyback mode

- ☐ Hydrogen, liquid, 37-40 °R
- ☐ Hydrogen, liquid, subcooled (25 °R)
- ☐ Hydrogen, gaseous
- ☒ Oxygen, liquid, 162 °R
- ☐ Oxygen, liquid, subcooled
- ☐ Oxygen, gaseous
- ☐ Other _____

Engine Constituent Subsystems

Inlet, fan, heat exchanger, rocket, mixer-combustor, exit

Engine General Arrangement and Operating Schematic

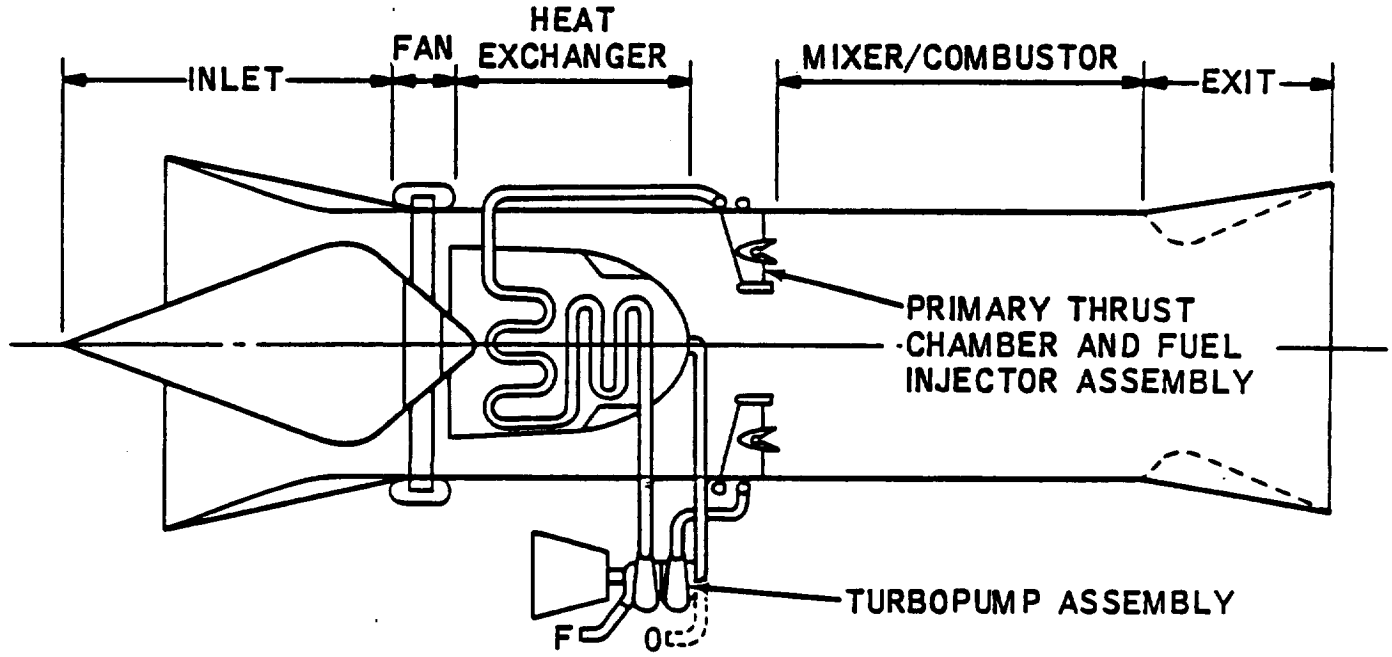

Eng. No. 28

Engine Internal Operating Parameters, nominal

$P_{c\text{-}LACE} = 1000$ psia, $\phi_{LACE} = 4.0$
W_s/W_p (SLS) $= 1.36$, $\phi_{SEC\text{-}SLS} = 1.92$
$A_4/A_3 = 1.00$, $A_c/A_3 = 1.15$
FAN P.R. $= 1.3$

Engine Operating Mode Block Diagrams

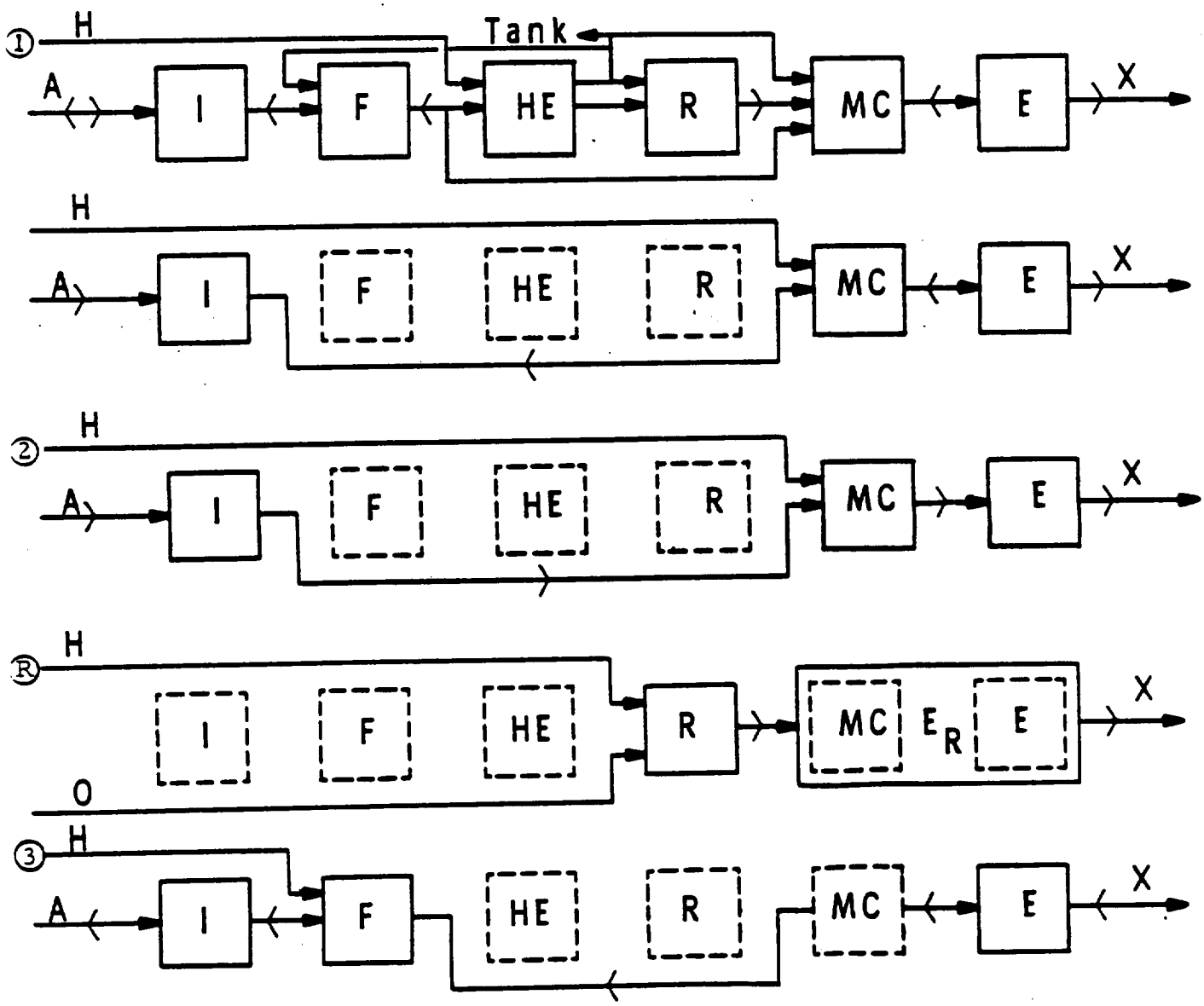

Eng. No. 28

The following information for Engine No. 28 appears in the fact sheets previously given for Engine No. 27.

Engine Physical Characteristics

Weight, Thrust/Weight, Flow areas, Lengths

Engine Performance: 0-8000 ft/sec

Specific Impulse, Thrust, Airflow, Capture Area

References and additional remarks

SPECIFIC IMPULSE
REFERENCE TRAJECTORIES

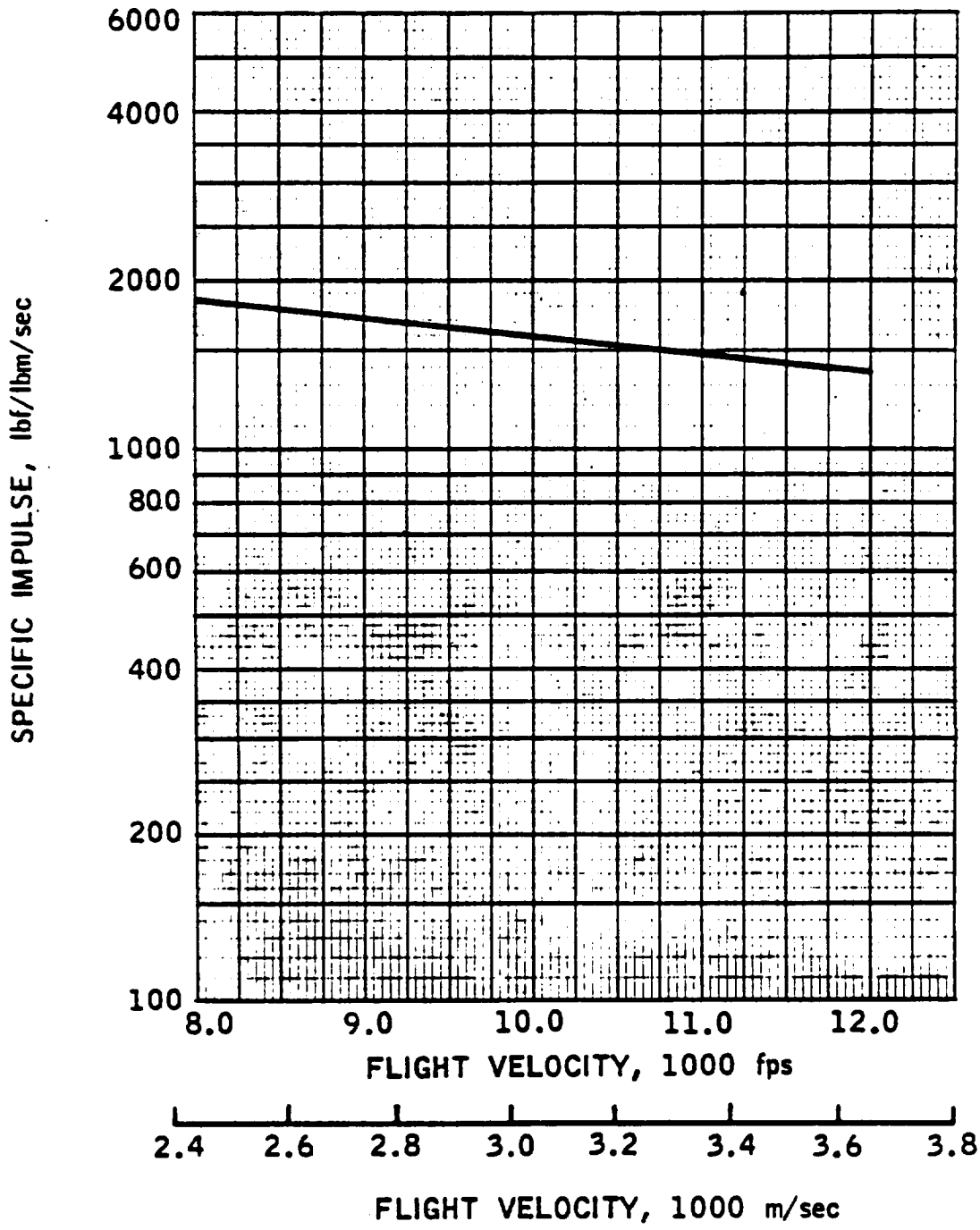

ENG. NO. 28

THRUST

REFERENCE TRAJECTORIES

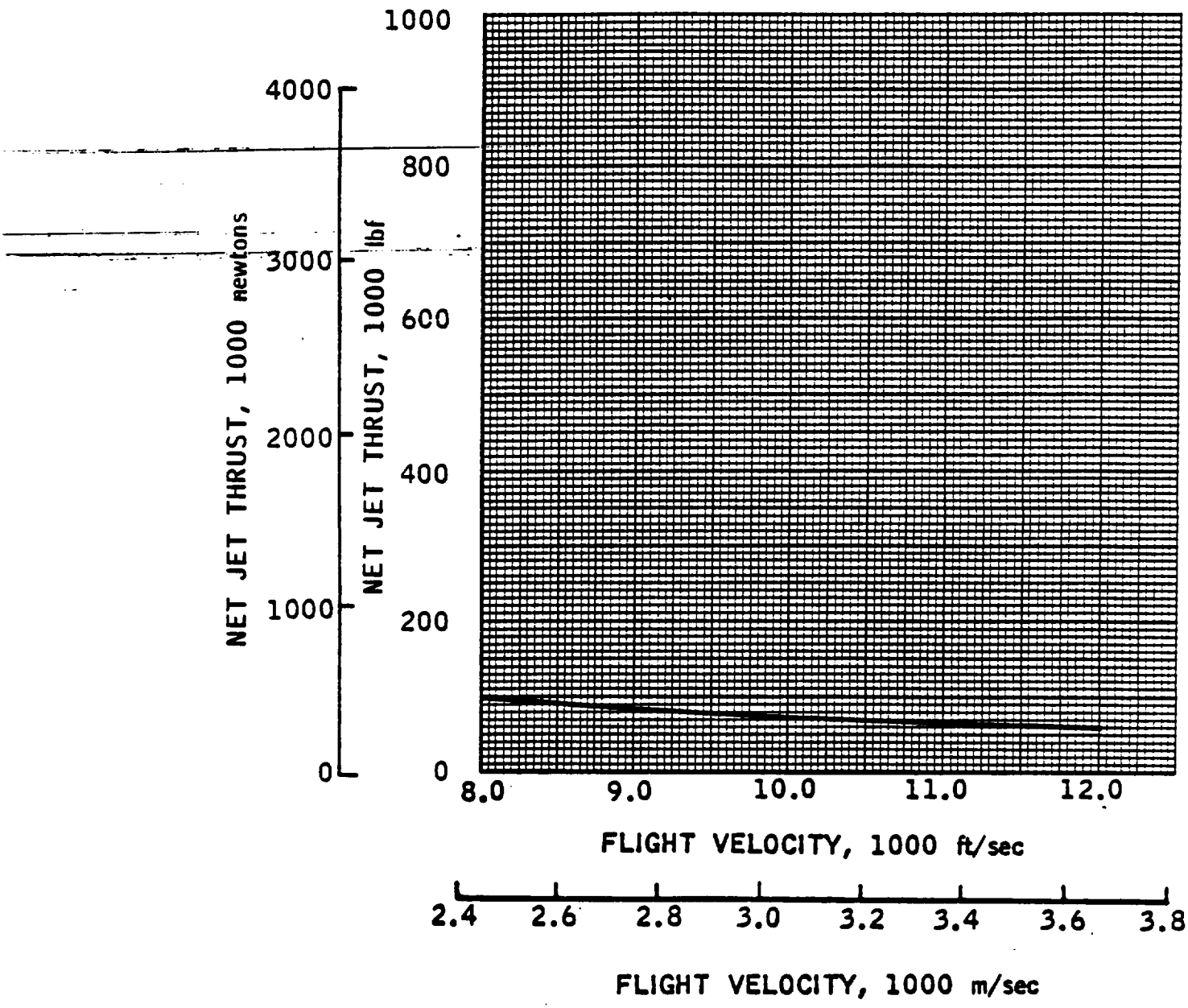

This Page Intentionally Blank

ENGINE FACT SHEET

Class 0 Composite Launch Vehicle Engines

Engine Identification Number: 29 Supercharged RamLACE

Engine Operating Modes

Summary: Number of Modes/ Transitions 5 ; Number of Discrete Modes Utilized 4

Mode Progression - Lift-off to Touch-down

(Take off) Supercharged air augmented Liquid Air Cycle Engine (LACE), after-burning cycle (2000-3000 ft/sec) Ramjet, subsonic combustion (6000-8000 ft/sec) Rocket (Orbital speed, space maneuvering and deorbiting) Ramjet, subsonic combustion (Flyback) Ducted fan (Flyback and landing)

Engine Propellant Requirements

Code: (R) = Required, (V) = Required for vacuum operation, (F) = Useable for flyback mode

- [R] Hydrogen, liquid, 37-40 °R
- [ ] Hydrogen, liquid, subcooled (25 °R)
- [F] Hydrogen, gaseous
- [V] Oxygen, liquid, 162 °R
- [ ] Oxygen, liquid, subcooled
- [ ] Oxygen, gaseous
- [ ] Other _____

Engine Constituent Subsystems

Inlet, fan, heat exchanger, rocket, mixer-diffuser, combustor, exit

Engine General Arrangement and Operating Schematic

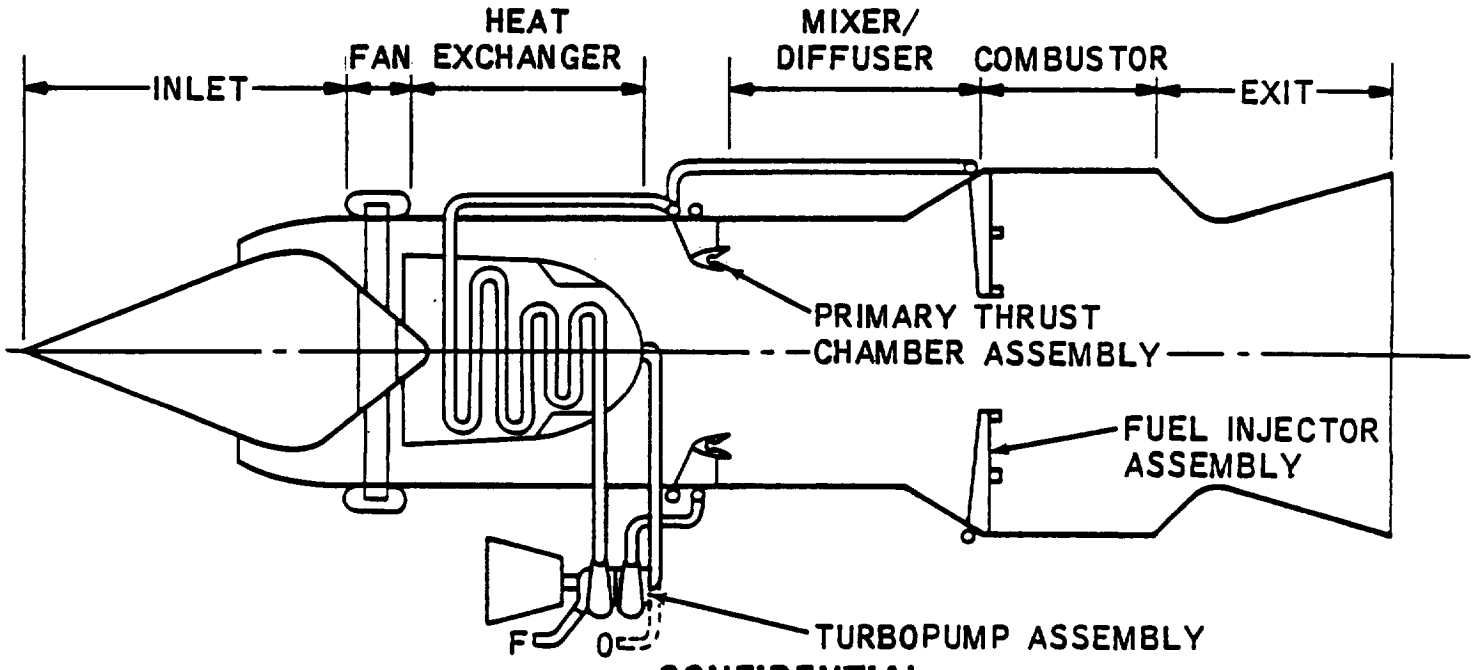

Eng. No. 29

Engine Internal Operating Parameters, nominal

$P_{c\text{-}LACE} = 1000$ psia, $\phi_{LACE} = 1.0$, $\phi_{HX} = 8.0$
W_s/W_p (SLS) = 1.93, $\phi_{SEC\text{-}SLS} = 3.53$
$A_4/A_3 = 3.53$
FAN P.R. = 1.3

Engine Operating Mode Block Diagrams

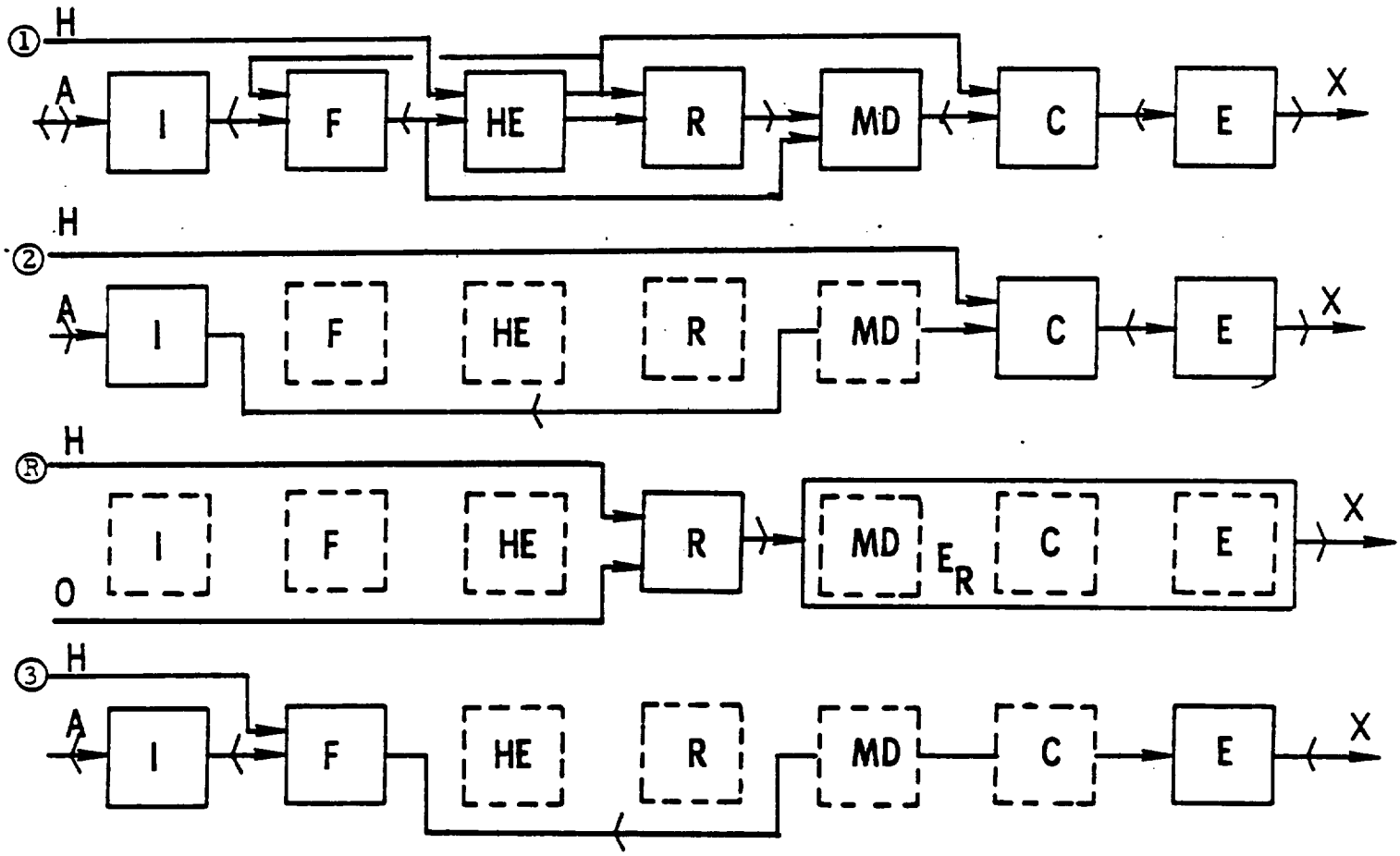

ENGINE PHYSICAL CHARACTERISTICS

Eng. No. 29

Thrust, sls	250,000 lbf	1,112,055 newton

Weight and Thrust/Weight Ratio

Measuring Units	(English)	(International)
Weight	lbm	kg
Thrust/Weight	lbf/lbm	newton/kg

Lightweight Estimate

(lbf/in^2) Maximum Engine Internal Pressure 1000 (newton/m^2)

Subsystems:	50	100	250	344.7	689.5	1723.7
Fan	1500	1500	1500	680.4	680.4	680.4
Heat Exchanger	2995	3281	3598	1358.5	1488.2	1632.0
Primary Rocket	1562	1562	1562	708.5	708.5	708.5
Mixer/Diffuser	1147	1295	1776	520.3	587.4	805.6
Combustor/Exit	1738	1975	2686	788.4	895.9	1218.4
Contingency	423	459	569	191.9	208.2	258.1
Uninstalled Eng. Wt.	9365	10072	11691	4248.0	4568.6	5302.9
Thrust/Weight, Uninst.	26.7	24.8	21.4	261.8	243.4	209.7
Inlet Weight	3150	3600	5220	1428.8	1632.9	2367.8
Installed Eng. Wt.	12515	13672	16911	5676.8	6201.5	7670.7
Thrust/Weight, Inst.	20.0	18.3	14.8	195.9	179.3	145.0

Heavyweight Estimate

Uninstalled Eng. Wt.	11238	12086	14029	5097.6	5482.3	6363.5
Thrust/Weight, Uninst.	22.2	20.7	17.8	218.2	202.8	174.8
Inlet Weight	12656	14464	20340	5740.8	6560.9	9226.2
Installed Eng. Wt.	23894	26550	34369	10838.4	12043.2	15589.7
Thrust/Weight, Inst.	10.5	9.4	7.3	102.6	92.3	71.3

Engine Flow Areas and Equivalent Diameters

	ft^2	ft	m^2	m
Inlet Cowl, A_c	90.4	10.73	8.40	3.27
Mixer, A_3	30.2	6.20	2.81	1.89
Combustor, A_4	78.5	9.98	7.29	3.04
Exit, A_6	125.2	12.62	11.63	3.85

Engine Lengths

	ft	m
Uninstalled	20.8	6.34
Inlet (Typ)	37.1	11.31
Installed (Typ)	57.9	17.65

REMARKS, REFERENCES

Supercharged RamLACE, (References 5, 7, 14, 21)

SPECIFIC IMPULSE
REFERENCE TRAJECTORIES

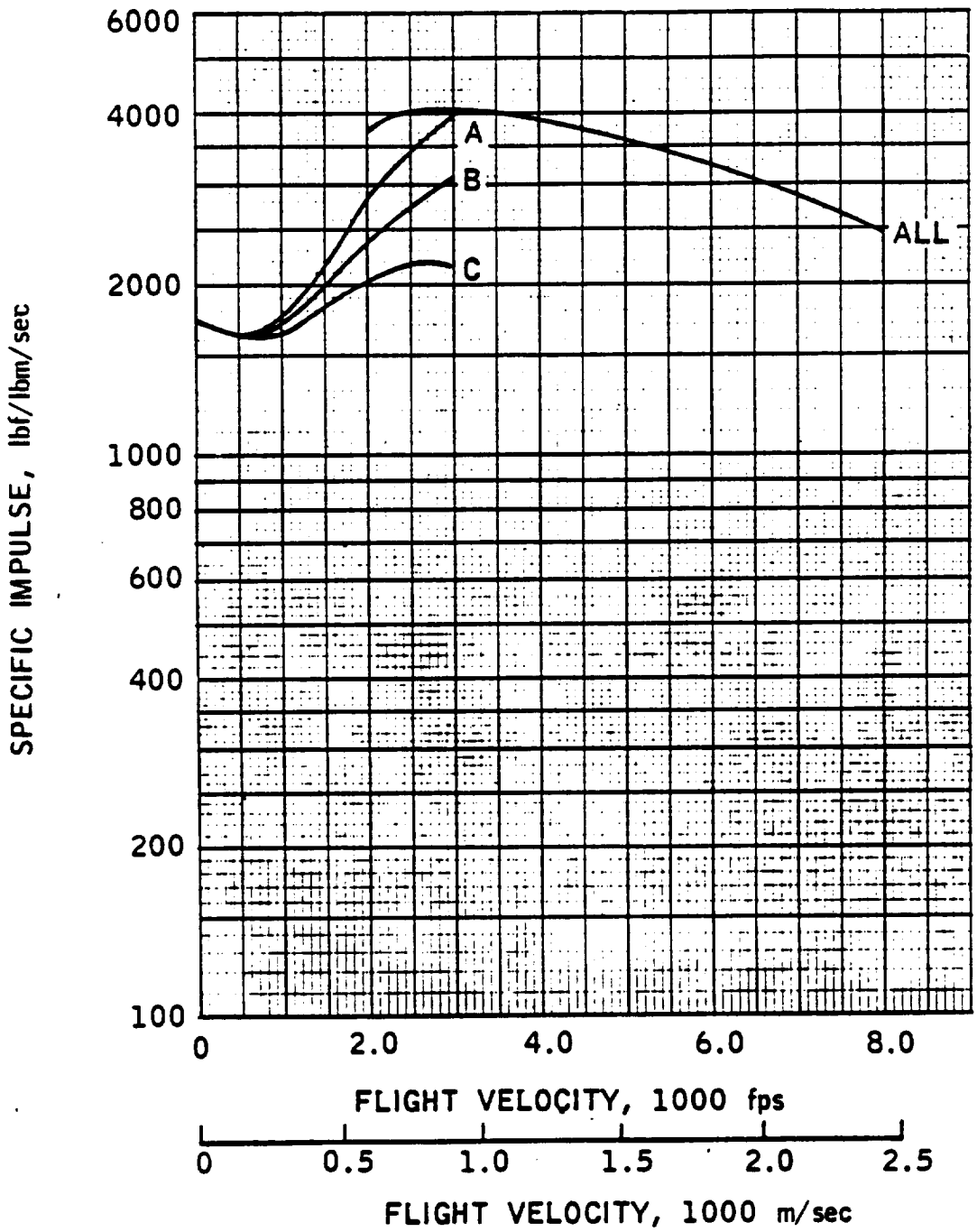

ENG. NO. 29

THRUST

REFERENCE TRAJECTORIES

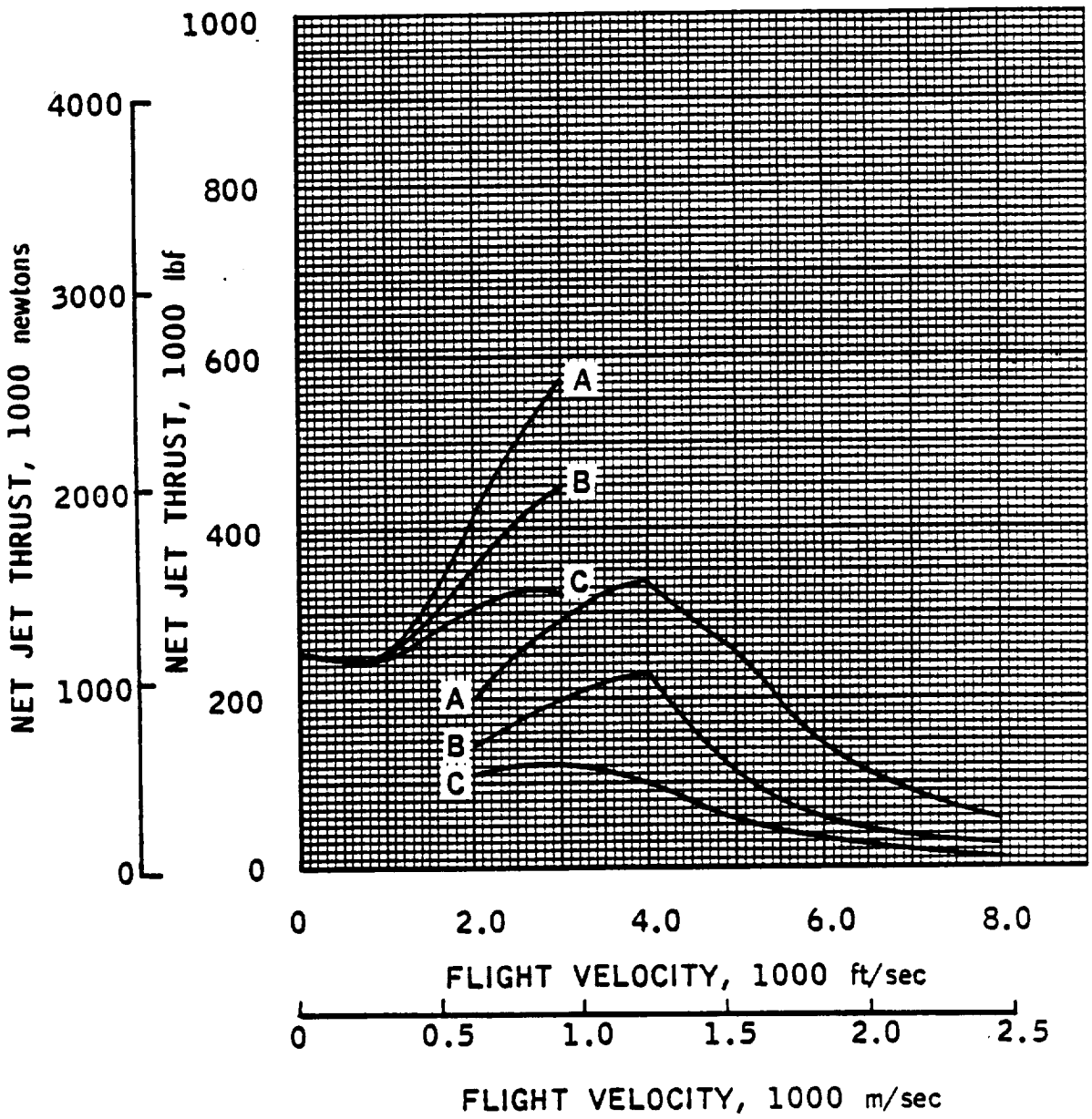

CAPTURE AREA

REFERENCE TRAJECTORIES

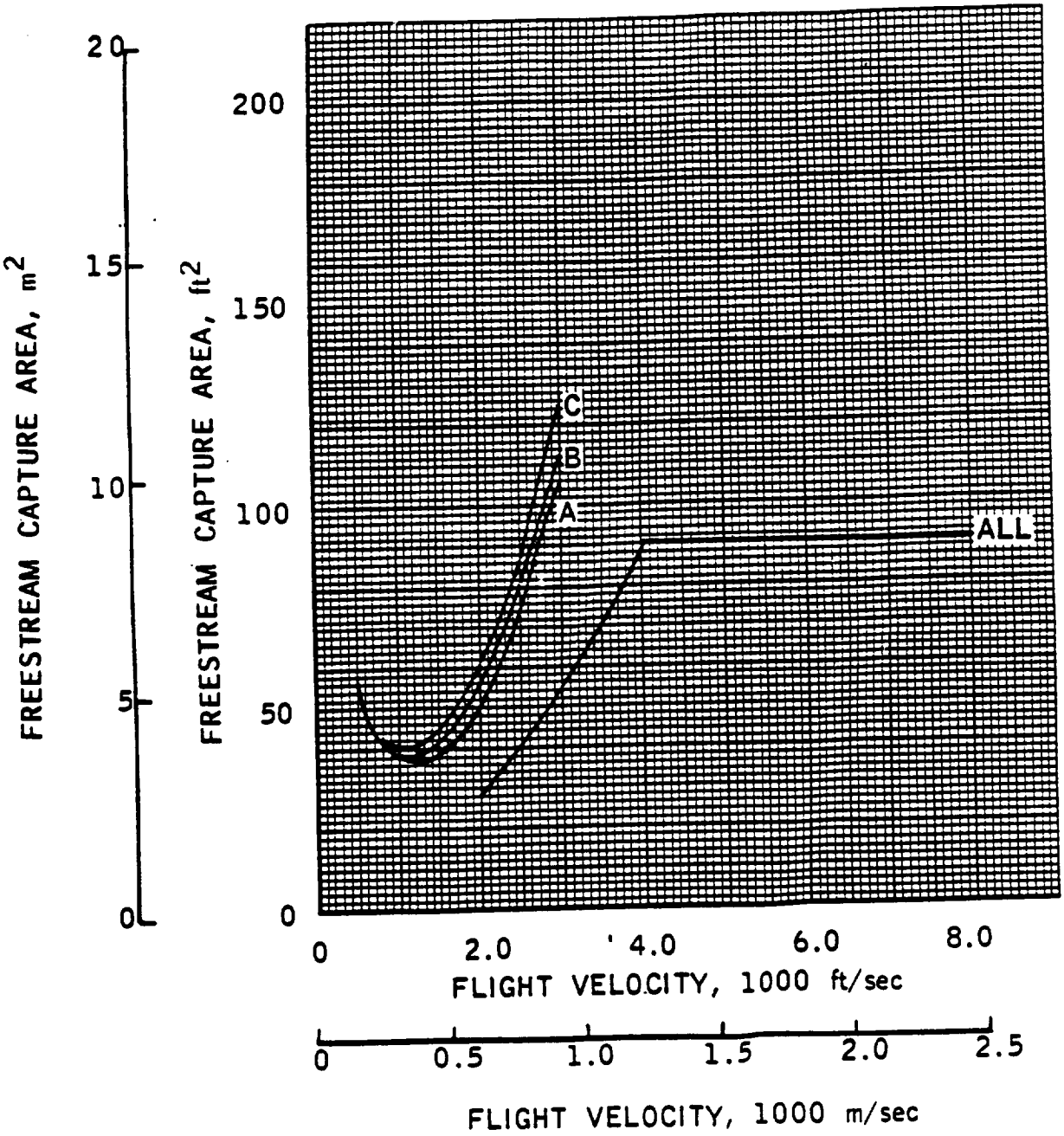

AIRFLOW

REFERENCE TRAJECTORIES

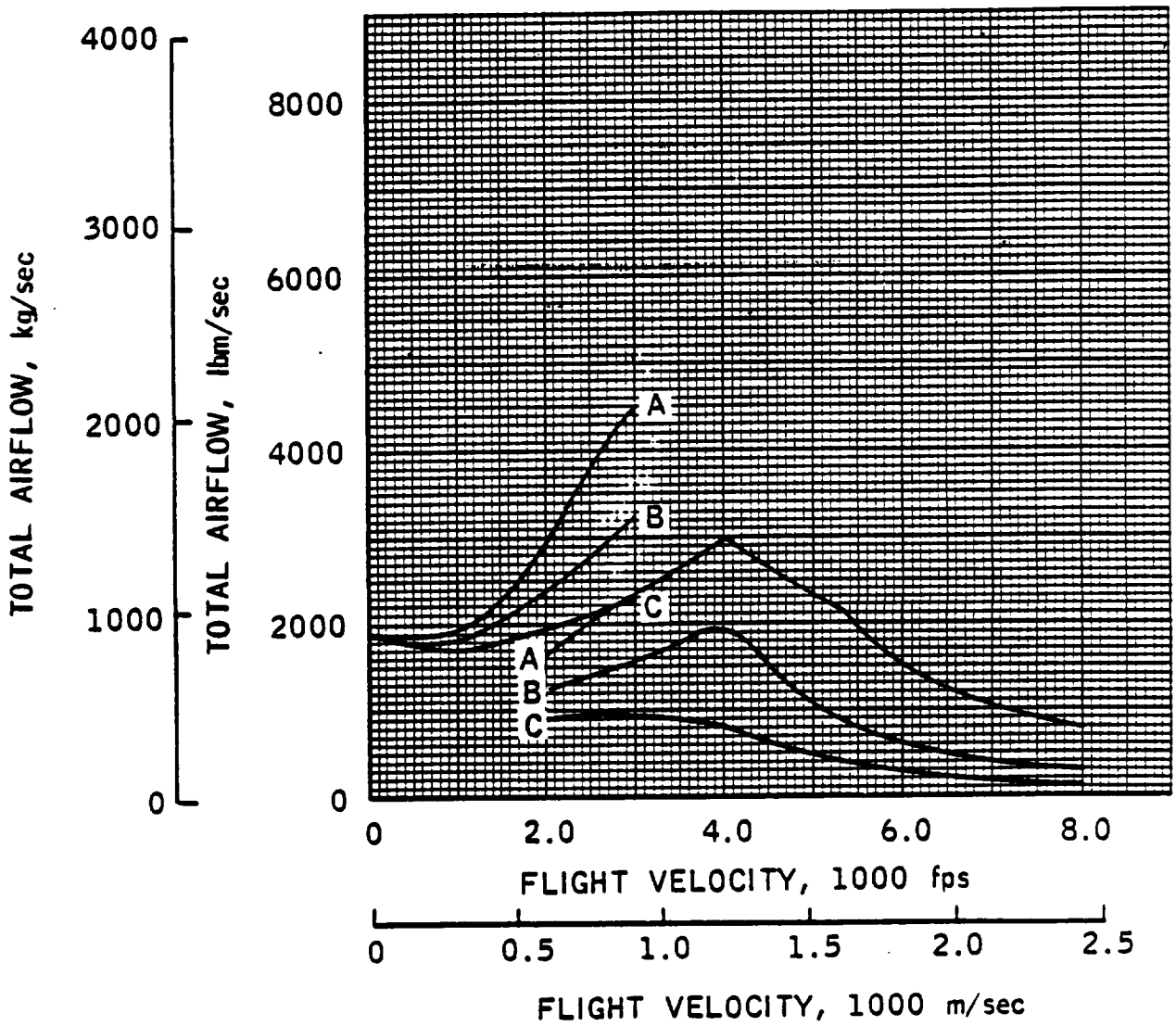

ENGINE- 29

ESTIMATED PERFORMANCE

MO	VO	HTO	PTO	T	CF	IS	SPC	PT2	H2	P2
				ALTITUDE -		0. FEET				
0.10	112.	124.7	14.8	249646.	76.06	1687.	2.13	19.24	117.8	15.77
				ALTITUDE -		10000. FEET				
0.65	700.	125.7	13.4	236565.	12.28	1598.	2.25	17.45	118.8	14.31
0.70	754.	127.3	14.0	240161.	11.30	1623.	2.22	18.23	120.3	14.94
0.79	851.	130.4	15.3	248096.	9.86	1676.	2.15	19.83	123.2	16.26
				ALTITUDE -		20000. FEET				
1.01	1047.	129.3	12.9	241835.	8.66	1634.	2.20	16.83	122.2	13.80
1.21	1255.	138.8	16.6	266665.	7.00	1802.	2.00	21.26	121.2	17.44
1.45	1504.	152.5	23.1	310561.	5.65	2098.	1.72	29.02	144.2	23.81
				ALTITUDE -		30000. FEET				
1.46	1453.	141.0	15.2	262990.	6.45	1777.	2.03	19.05	133.2	15.62
1.71	1701.	156.6	21.9	312222.	5.34	2109.	1.71	26.99	148.1	22.14
2.06	2049.	182.7	37.6	418279.	4.28	2826.	1.27	44.80	172.9	36.78
				ALTITUDE -		40000. FEET				
1.91	1849.	161.9	18.6	287418.	5.19	1942.	1.85	22.46	153.1	18.43
2.22	2149.	185.8	30.1	365002.	4.31	2466.	1.46	35.34	175.8	29.01

ENGINE- 29

ESTIMATED PERFORMANCE

M2	WS	WP	WSWP	WFT	PHP	PHS	V6	PT20	AO	A5	A6
ALTITUDE - 0. FEET											
0.540	1257.	653.	1.93	148.0	1.0	3.533	4041.	1.30	147.36	53.97	58.49
ALTITUDE - 10000. FEET											
0.540	1136.	653.	1.74	148.0	1.0	3.909	4613.	1.30	28.74	52.35	64.08
0.540	1179.	653.	1.81	148.0	1.0	3.766	4636.	1.30	27.70	52.77	65.01
0.540	1268.	653.	1.94	148.0	1.0	3.502	4682.	1.30	26.39	53.58	66.89
ALTITUDE - 20000. FEET											
0.540	1081.	653.	1.65	148.0	1.0	4.110	5140.	1.30	25.31	51.35	75.46
0.540	1319.	653.	2.02	148.0	1.0	3.368	5249.	1.28	25.77	53.39	82.12
0.540	1720.	653.	2.63	148.0	1.0	2.582	5408.	1.26	28.01	56.03	92.70
ALTITUDE - 30000. FEET											
0.540	1173.	653.	1.80	148.0	1.0	3.787	5670.	1.26	28.16	51.61	98.65
0.540	1579.	653.	2.42	148.0	1.0	2.813	5849.	1.23	32.32	54.41	113.32
0.540	2433.	653.	3.73	148.0	1.0	1.826	5975.	1.19	41.24	57.03	125.26
ALTITUDE - 40000. FEET											
0.540	1293.	653.	1.98	148.0	1.0	3.435	6065.	1.21	36.92	51.31	125.48
0.540	1903.	653.	2.91	148.0	1.0	2.334	6077.	1.17	46.65	54.09	125.26

ENGINE- 29

ESTIMATED PERFORMANCE

MO	VO	HTO	PTO	T	CF	IS	SPC	PT2	H2	P2
ALTITUDE - 40000. FEET										
2.69	2604.	229.0	62.6	518115.	3.20	3500.	1.03	69.16	216.9	56.83
ALTITUDE - 45500. FEET										
3.10	3000.	273.3	89.3	565391.	2.68	3820.	0.94	92.85	260.7	76.26
ALTITUDE - 54000. FEET										
3.10	3000.	273.3	59.5	448580.	2.92	3031.	1.19	61.86	260.7	52.01
ALTITUDE - 60000. FEET										
2.89	2798.	249.9	32.6	322037.	3.26	2176.	1.65	35.00	236.8	28.77
ALTITUDE - 64000. FEET										
3.10	3000.	273.3	36.9	317800.	2.97	2147.	1.63	38.36	259.1	31.55

CONFIDENTIAL

ENGINE- 29

ESTIMATED PERFORMANCE

M2	WS	WP	WSWP	WFT	PHP	PHS	V6	PT20	A0	A5	A6
ALTITUDE - 40000. FEET											
0.540	3370.	653.	5.16	148.0	1.0	1.318	5968.	1.11	67.90	52.70	125.00
ALTITUDE - 45500. FEET											
0.508	3897.	653.	5.97	148.0	1.0	1.140	6149.	1.04	90.45	47.48	125.32
ALTITUDE - 54000. FEET											
0.508	2658.	653.	4.07	148.0	1.0	1.671	6419.	1.04	90.45	48.57	125.35
ALTITUDE - 60000. FEET											
0.540	1636.	653.	2.51	148.0	1.0	2.714	6293.	1.07	79.72	48.13	125.29
ALTITUDE - 64000. FEET											
0.540	1719.	653.	2.63	148.0	1.0	2.584	6353.	1.04	94.34	47.28	125.54

CONFIDENTIAL

This Page Intentionally Blank

ENGINE FACT SHEET

Class 0 Composite Launch Vehicle Engines

Engine Identification Number: 30 Supercharged ScramLACE

Engine Operating Modes

Summary: Number of Modes/ Transitions 6 ; Number of Discrete Modes Utilized 5

Mode Progression - Lift-off to Touch-down

(Take off) Supercharged air augmented Liquid Air Cycle Engine (LACE), after-burning cycle (2000-3000 ft/sec) Ramjet, subsonic combustion (6000-8000 ft/sec) Ramjet, supersonic combustion (10,000-14,000 ft/sec) Rocket (Orbital speed, space maneuvering and deorbiting) Ramjet, subsonic combustion (Flyback) Ducted fan (Flyback and landing)

Engine Propellant Requirements

Code: (R) = Required, (V) = Required for vacuum operation, (F) = Useable for flyback mode

- [R] Hydrogen, liquid, 37-40 °R
- [ ] Hydrogen, liquid, subcooled (25 °R)
- [F] Hydrogen, gaseous
- [V] Oxygen, liquid, 162 °R
- [ ] Oxygen, liquid, subcooled
- [ ] Oxygen, gaseous
- [ ] Other _____

Engine Constituent Subsystems

Inlet, fan, heat exchanger, rocket, mixer-diffuser, combustor, exit

Engine General Arrangement and Operating Schematic

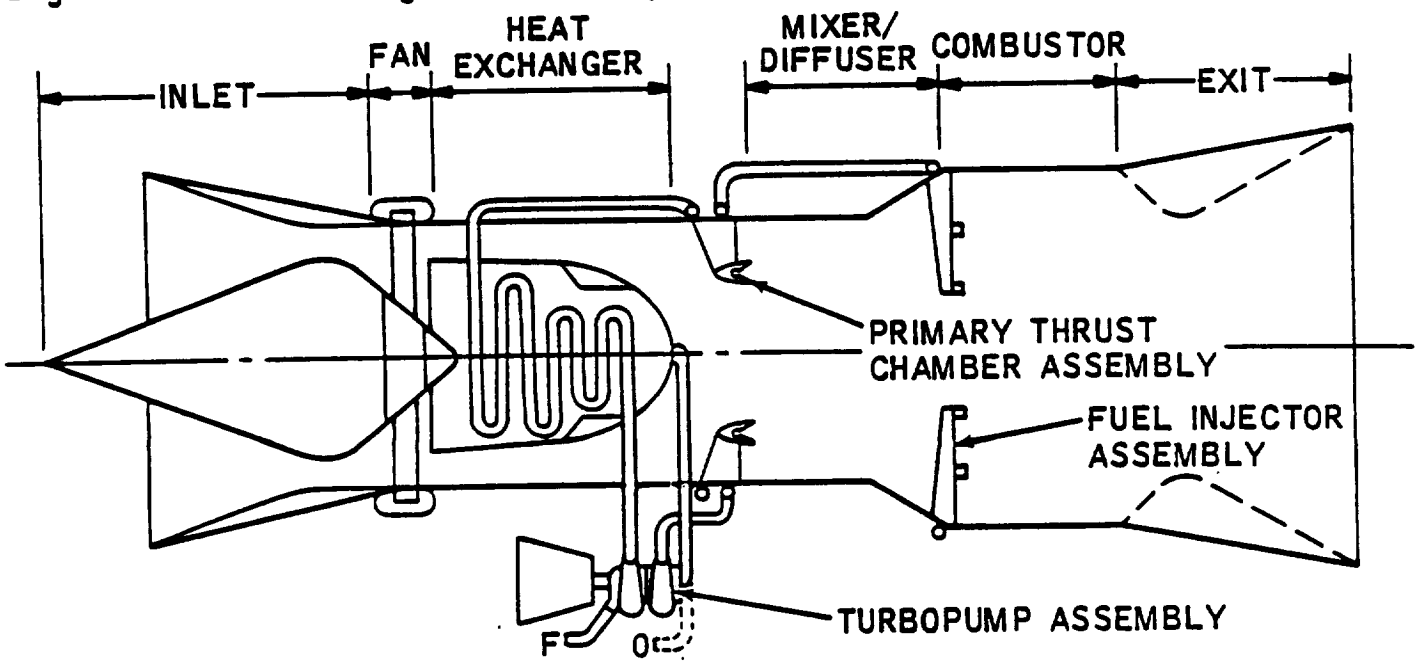

Eng. No. 30

Engine Internal Operating Parameters, nominal

$P_{c\text{-}LACE} = 1000$ psia, $\phi_{LACE} = 1.0$, $\phi_{HX} = 8.0$
W_s/W_p (SLS) = 1.93, $\phi_{SEC\text{-}SLS} = 3.53$
$A_4/A_3 = 3.53$, $A_c/A_3 = 2.99$
FAN P.R. = 1.3

Engine Operating Mode Block Diagrams

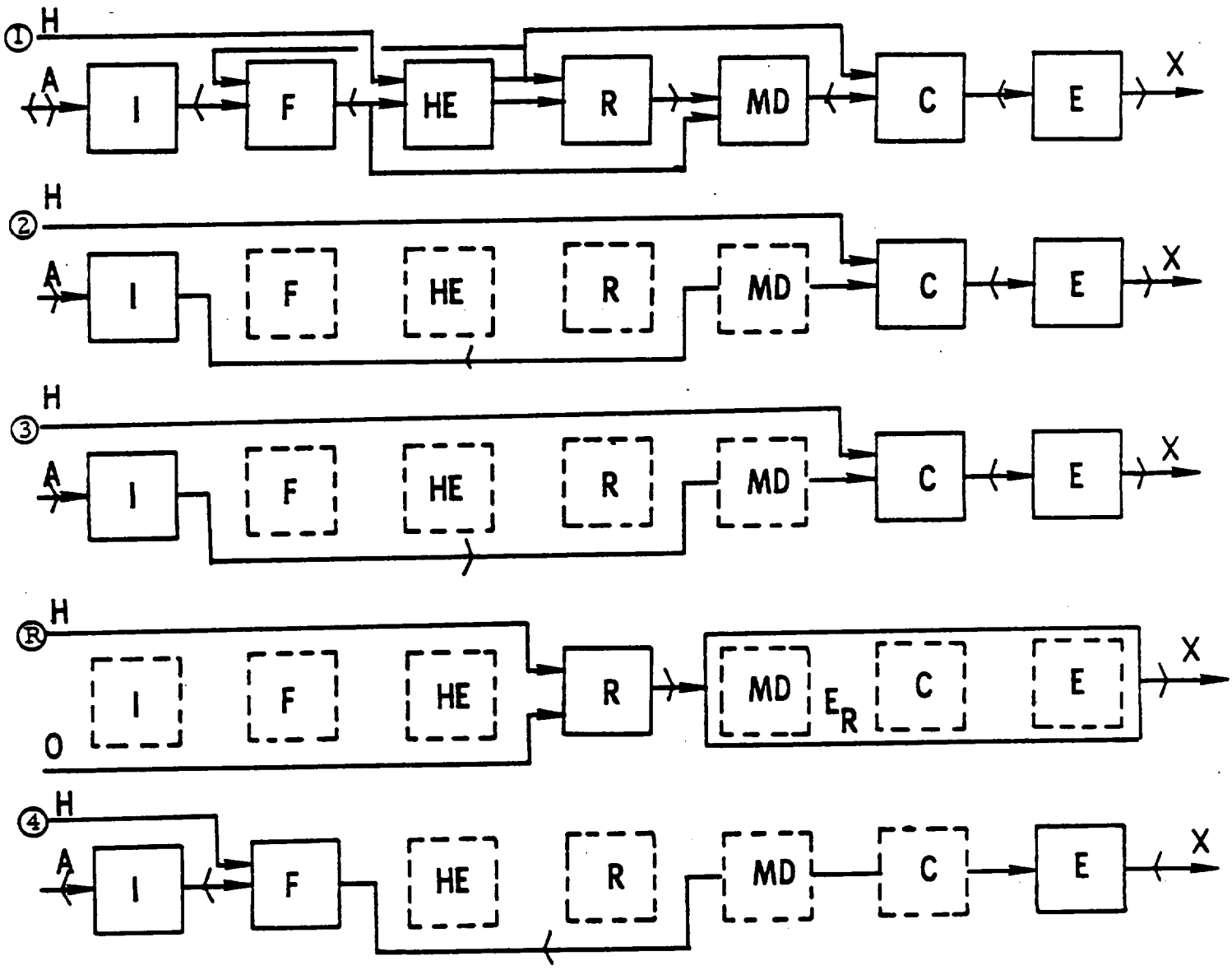

Eng. No. 30

The following information for Engine No. 30 appears in the fact sheets previously given for Engine No. 29.

Engine Physical Characteristics

Weight, Thrust/Weight, Flow area, Lengths

Engine Performance: 0-8000 ft/sec

Specific Impulse, Thrust, Airflow, Capture Area

References and additional remarks

SPECIFIC IMPULSE
REFERENCE TRAJECTORIES

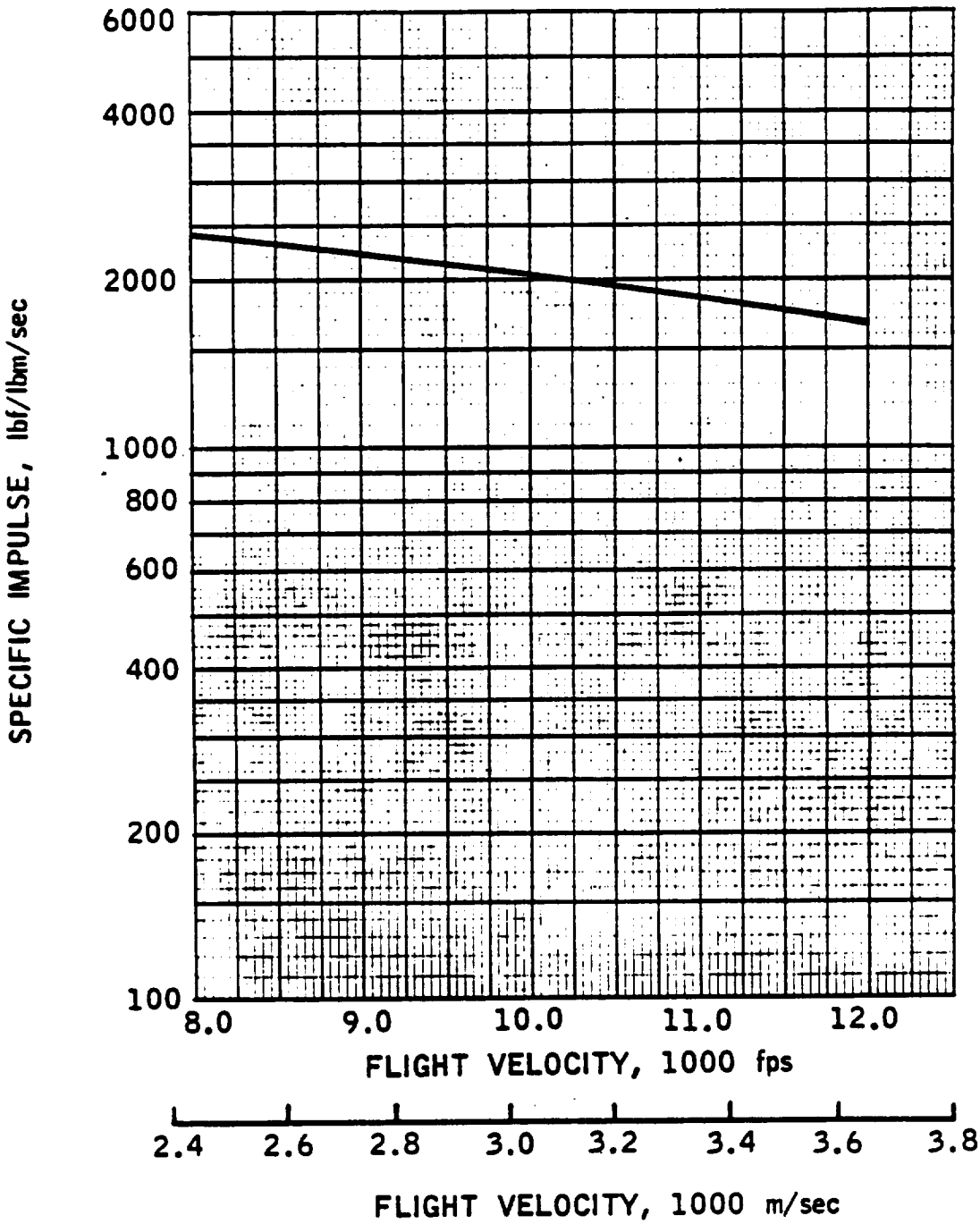

ENG. NO. 30

THRUST

REFERENCE TRAJECTORIES

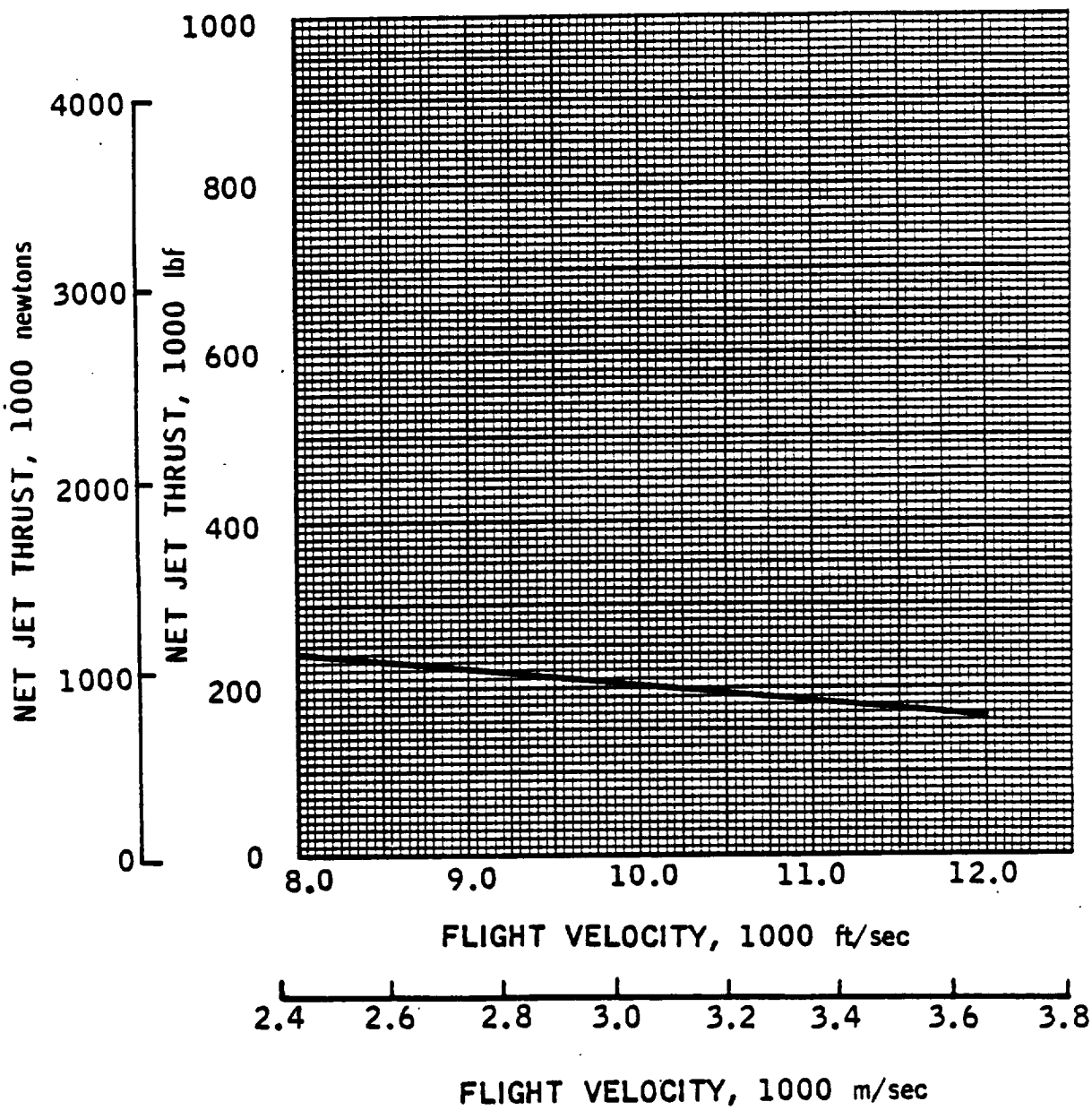

[redacted]

THE Marquardt CORPORATION VAN NUYS, CALIFORNIA

This Page Intentionally Blank

ENGINE FACT SHEET

Class 0 Composite Launch Vehicle Engines

Engine Identification Number: 31 Recycled Supercharged RamLACE

Engine Operating Modes

Summary: Number of Modes/ Transitions 5 ; Number of Discrete Modes Utilized 4

Mode Progression - Lift-off to Touch-down

(Take off) Supercharged air augmented Liquid Air Cycle Engine (LACE), after-burning cycle, recycled hydrogen (2000-3000 ft/sec) Ramjet, subsonic combustion (6000-8000 ft/sec) Rocket (Orbital speed, space maneuvering and deorbiting) Ramjet, subsonic combustion (Flyback) Ducted fan (Flyback and landing)

Engine Propellant Requirements

Code: (R) = Required, (V) = Required for vacuum operation, (F) = Useable for flyback mode

- ☐ Hydrogen, liquid, 37-40 °R
- ☒ Hydrogen, liquid, subcooled (25 °R)
- ☐ Hydrogen, gaseous
- ☒ Oxygen, liquid, 162 °R
- ☐ Oxygen, liquid, subcooled
- ☐ Oxygen, gaseous
- ☐ Other _____

Engine Constituent Subsystems

Inlet, fan, heat exchanger, rocket, mixer-diffuser, combustor, exit

Engine General Arrangement and Operating Schematic

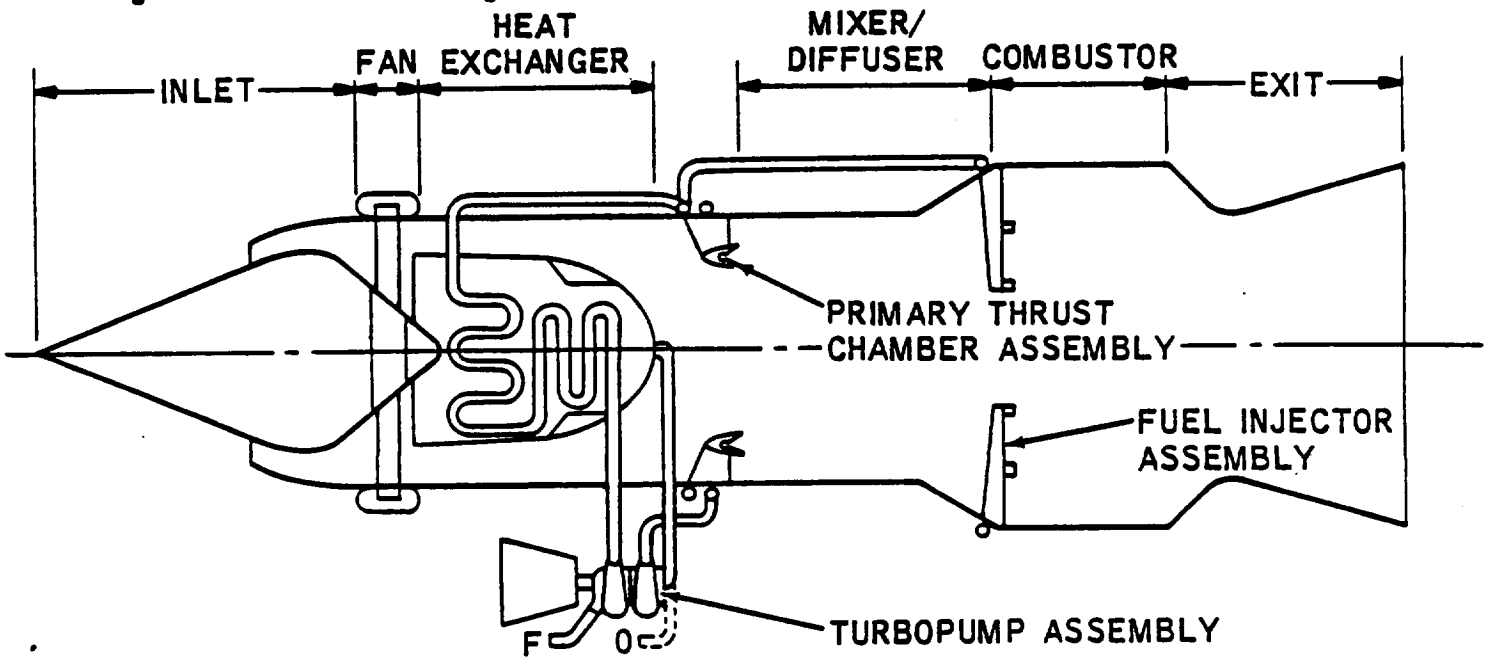

Eng. No. 31

Engine Internal Operating Parameters, nominal

$P_{c\text{-}LACE} = 1000$ psia, $\phi_{LACE} = 1.0$, $\phi_{P.C.} = 4.0$, $\phi_{cond.} = 8.0$
W_s/W_p (SLS) $= 1.79$, $\phi_{SEC\text{-}SLS} = 1.63$
$A_4/A_3 = 2.27$
FAN P.R. $= 1.3$

Engine Operating Mode Block Diagrams

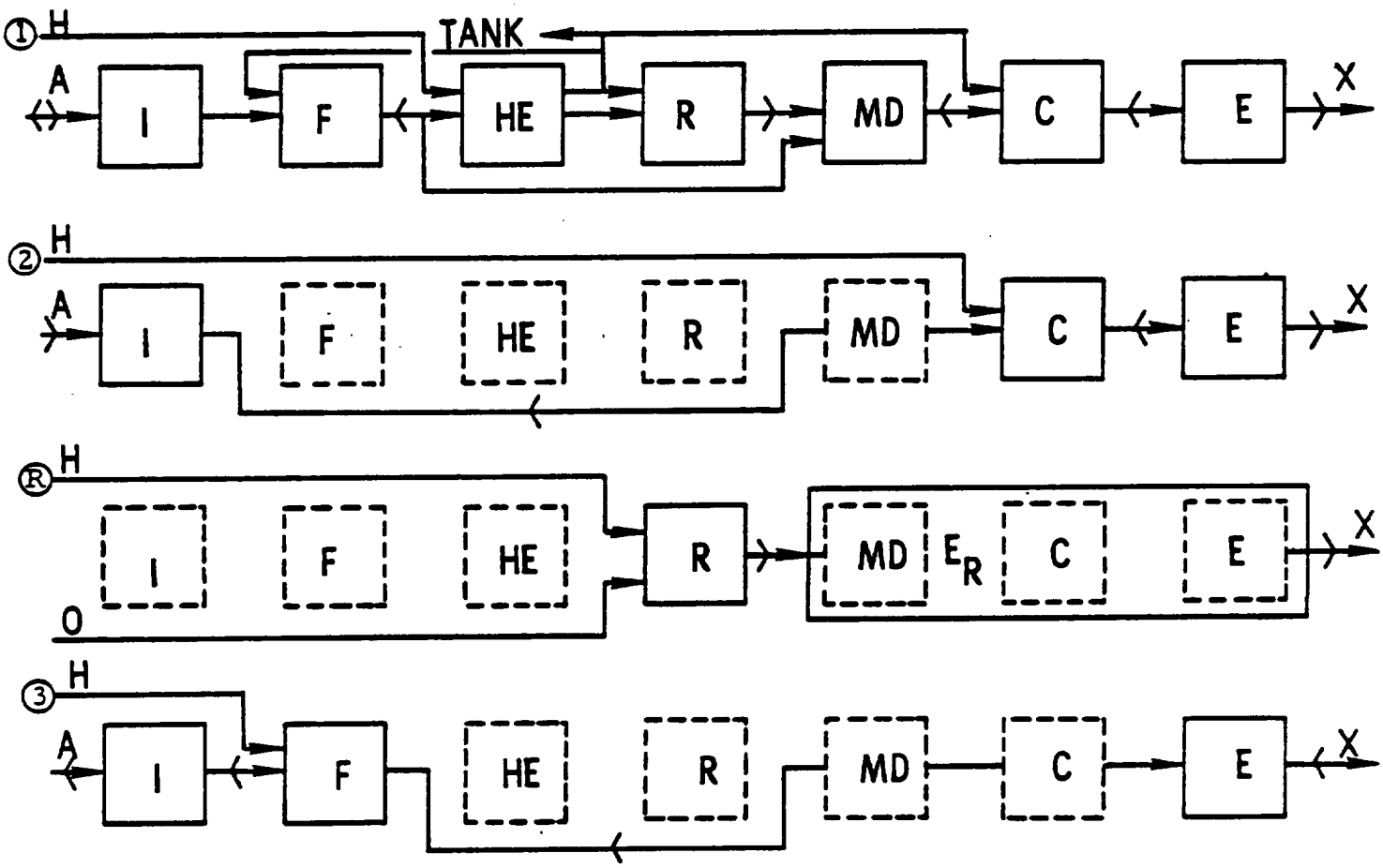

ENGINE PHYSICAL CHARACTERISTICS

Eng. No. 31

Thrust, sls	250,000 lbf	1,112,055 newton

Weight and Thrust/Weight Ratio

Measuring Units	(English)	(International)
Weight	lbm	kg
Thrust/Weight	lbf/lbm	newton/kg

(lbf/in^2) Maximum Engine Internal Pressure 1000 (newton/m^2)

Lightweight Estimate

Subsystems:	50	100	250	344.7	689.5	1723.7
Fan	1500	1500	1500	680.4	680.4	680.4
Heat Exchanger	4124	4572	5069	1870.6	2073.8	2299.3
Primary Rocket	1564	1564	1564	709.4	709.4	709.4
Mixer/Diffuser	930	1050	1440	421.8	476.3	653.2
Combustor/Exit	1518	1725	2346	688.6	782.5	1064.1
Contingency	401	434	535	181.9	196.9	242.7
Uninstalled Eng. Wt.	10037	10845	12454	4552.7	4919.3	5649.1
Thrust/Weight, Uninst.	24.9	23.1	20.1	244.3	226.1	196.9
Inlet Weight	2765	3160	4582	1254.2	1433.4	2078.4
Installed Eng. Wt.	12802	14005	17036	5806.9	6352.7	7727.5
Thrust/Weight, Inst.	19.5	17.8	14.7	191.5	175.1	143.9

Heavyweight Estimate

Uninstalled Eng. Wt.	12044	13014	14945	5463.2	5903.2	6778.9
Thrust/Weight, Uninst.	20.8	19.2	16.7	203.6	188.4	164.0
Inlet Weight	11074	12656	17798	5023.2	5740.8	8073.2
Installed Eng. Wt.	23118	25670	32743	10486.4	11644.0	14852.1
Thrust/Weight, Inst.	10.8	9.7	7.6	106.0	95.5	74.9

Engine Flow Areas and Equivalent Diameters

	ft^2	ft	m^2	m
Inlet Cowl, A_c	79.1	10.03	7.35	3.06
Mixer, A_3	30.5	6.23	2.83	1.90
Combustor, A_4	69.0	9.37	6.41	2.86
Exit, A_6	110.0	11.83	10.22	3.61

Engine Lengths

	ft	m
Uninstalled	19.2	5.85
Inlet (Typ)	37.0	11.28
Installed (Typ)	56.2	17.13

REMARKS, REFERENCES

Recycled Supercharged RamLACE, Recycle time limit should be checked for specific applications. (References 5, 7, 12, 13, 14, 21)

SPECIFIC IMPULSE
REFERENCE TRAJECTORIES

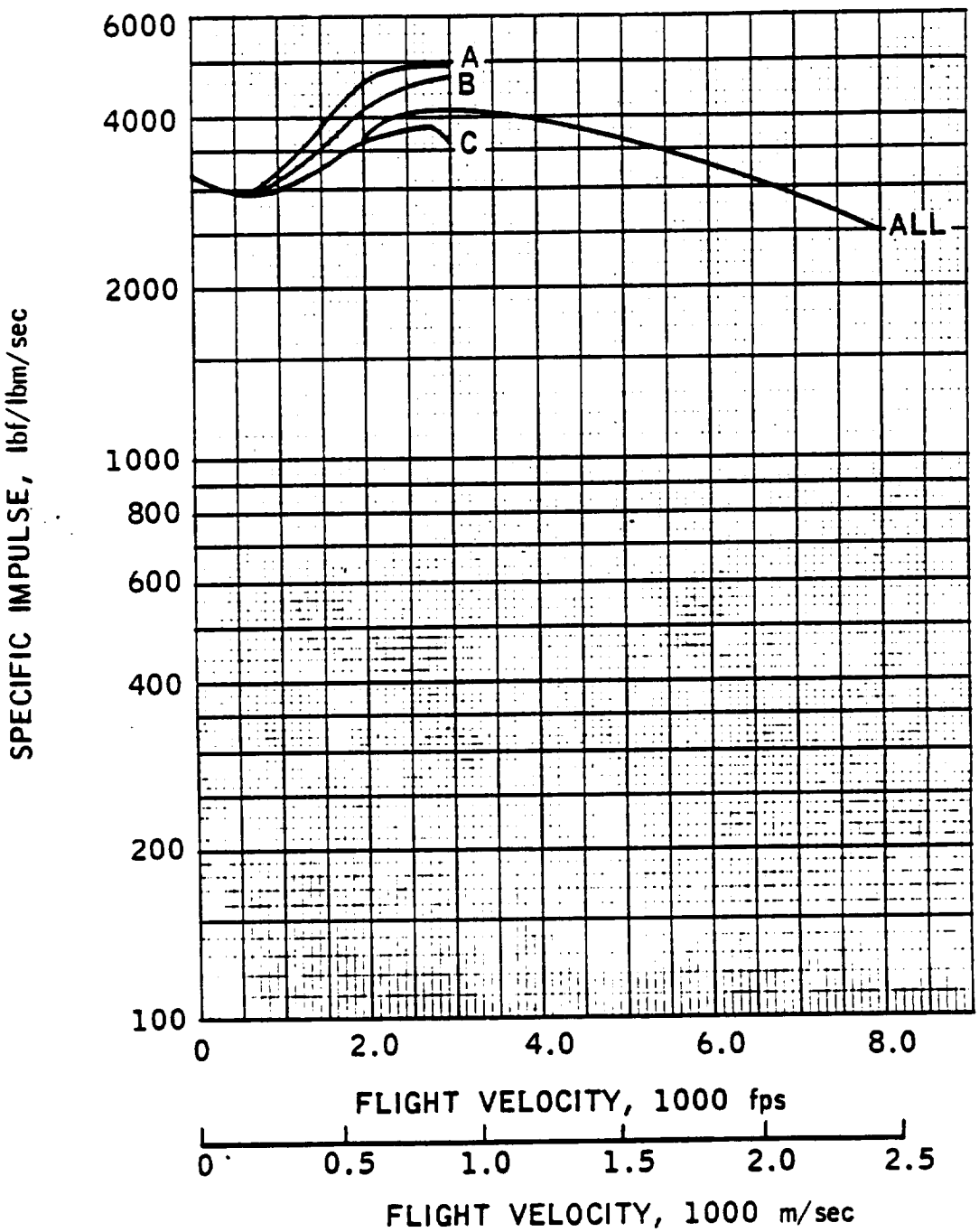

ENG. NO. 31

THRUST

REFERENCE TRAJECTORIES

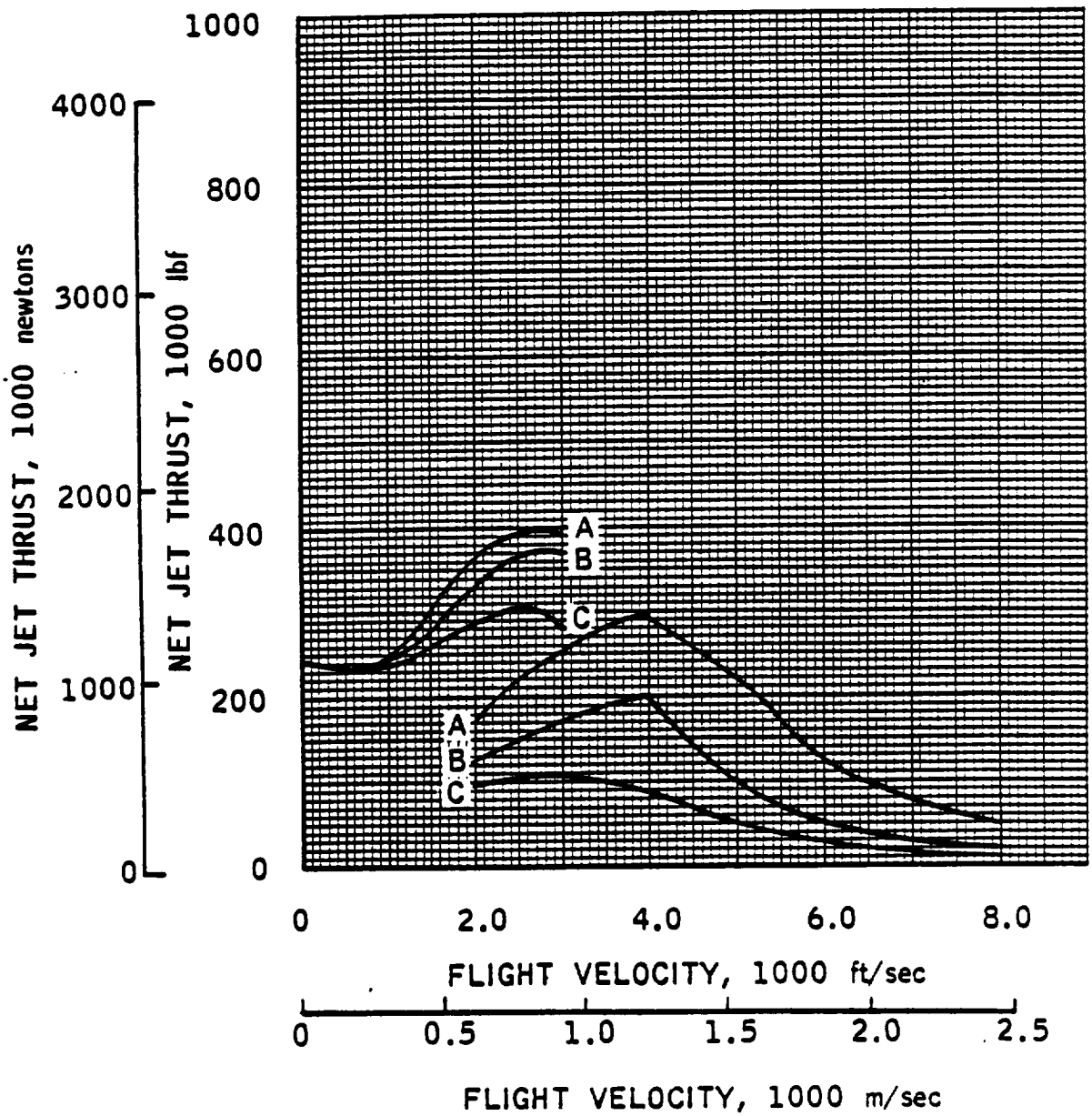

ENG. NO. 31

CAPTURE AREA

REFERENCE TRAJECTORIES

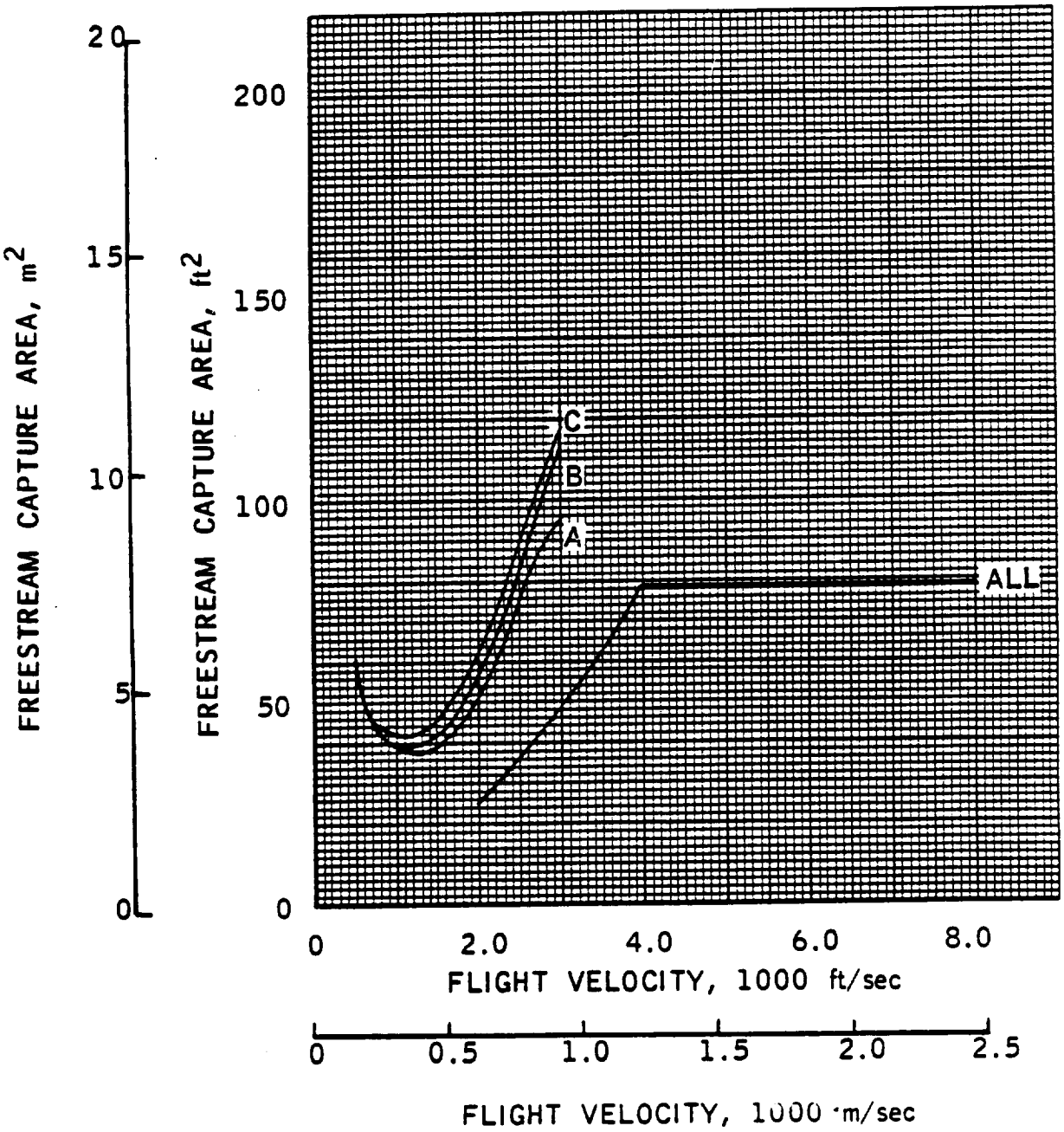

ENG. NO. 31

AIRFLOW

REFERENCE TRAJECTORIES

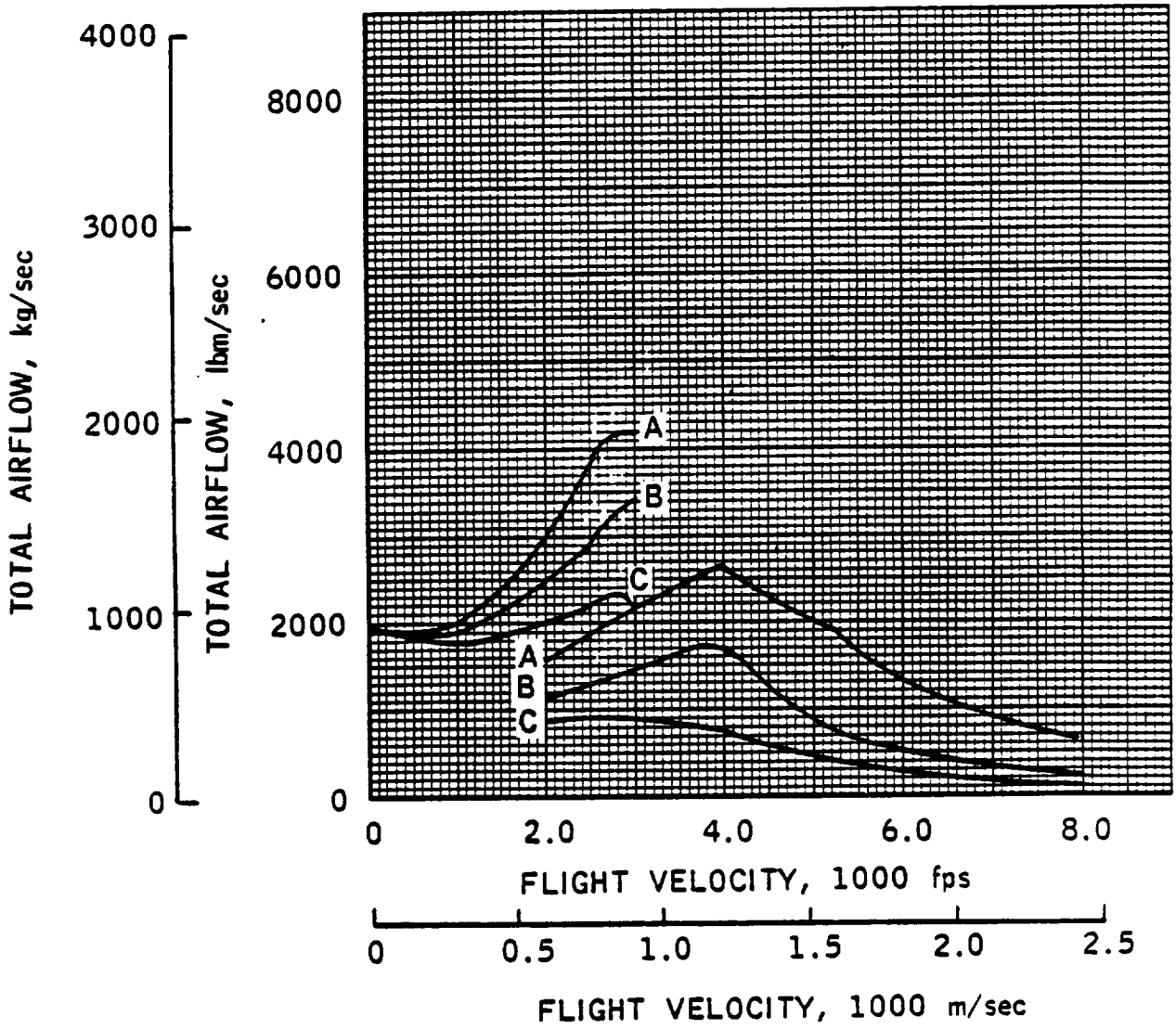

ENGINE- 31

ESTIMATED PERFORMANCE

MO	VO	HTO	PTO	T	CF	IS	SPC	PT2	H2	P2
ALTITUDE - 0. FEET										
0.10	112.	124.7	14.8	251026.	73.93	3120.	1.15	19.24	116.8	15.31
ALTITUDE - 10000. FEET										
0.65	700.	125.7	13.4	237147.	11.87	2948.	1.22	17.45	117.8	13.89
0.70	754.	127.3	14.0	240197.	10.91	2986.	1.21	18.23	119.2	14.51
0.79	851.	130.4	15.3	247029.	9.49	3070.	1.17	19.83	122.2	15.79
ALTITUDE - 20000. FEET										
1.01	1047.	129.3	12.9	241871.	8.35	3006.	1.20	16.83	121.1	13.40
1.21	1255.	138.8	16.6	263832.	6.70	3279.	1.10	21.26	130.1	16.93
1.45	1504.	152.5	23.1	303303.	5.36	3770.	0.95	29.02	143.0	23.12
ALTITUDE - 30000. FEET										
1.46	1453.	141.0	15.2	261099.	6.18	3245.	1.11	19.05	132.1	15.17
1.71	1701.	156.6	21.9	304242.	5.04	3782.	0.95	26.99	146.9	21.50
2.06	2049.	182.7	37.6	373499.	3.73	4642.	0.78	44.80	171.4	35.71
ALTITUDE - 40000. FEET										
1.91	1849.	161.9	18.6	282749.	4.94	3514.	1.02	22.46	151.8	17.89
2.22	2149.	185.8	30.1	350069.	4.03	4359.	0.83	35.34	174.4	28.17

CONFIDENTIAL

~~CONFIDENTIAL~~

ENGINE- 31

ESTIMATED PERFORMANCE

M2	WS	WP	WSWP	WFT	PHP	PHS	V6	PT20	A0	A5	A6
ALTITUDE - 0. FEET											
0.580	1267.	710.	1.79	80.5	1.0	1.633	4071.	1.30	148.55	51.92	57.03
ALTITUDE - 10000. FEET											
0.580	1145.	710.	1.61	80.5	1.0	1.807	4654.	1.30	28.98	50.36	63.02
0.580	1189.	710.	1.67	80.5	1.0	1.741	4668.	1.30	27.92	50.77	63.95
0.580	1278.	710.	1.80	80.5	1.0	1.619	4697.	1.30	26.60	51.56	65.82
ALTITUDE - 20000. FEET											
0.580	1089.	710.	1.53	80.5	1.0	1.900	5187.	1.30	25.52	49.41	74.77
0.580	1329.	710.	1.87	80.5	1.0	1.557	5250.	1.28	25.98	51.39	81.45
0.580	1734.	710.	2.44	80.5	1.0	1.194	5353.	1.26	28.23	54.02	92.11
ALTITUDE - 30000. FEET											
0.580	1182.	710.	1.67	80.5	1.0	1.751	5696.	1.26	28.38	49.67	98.45
0.580	1591.	710.	2.24	80.5	1.0	1.300	5738.	1.23	32.58	52.19	109.77
0.580	2452.	710.	3.45	80.5	1.0	0.844	5476.	1.19	41.58	51.64	109.84
ALTITUDE - 40000. FEET											
0.580	1303.	710.	1.84	80.5	1.0	1.588	5882.	1.21	37.22	49.41	109.96
0.580	1918.	710.	2.70	80.5	1.0	1.079	5794.	1.17	47.03	52.29	109.71

~~CONFIDENTIAL~~

ENGINE- 31

ESTIMATED PERFORMANCE

MO	VO	HTO	PTO	T	CF	IS	SPC	PT2	H2	P2
				ALTITUDE -		40000. FEET				
2.69	2604.	229.0	62.6	399815.	2.42	4970.	0.72	69.16	215.1	55.19
				ALTITUDE -		45500. FEET				
3.10	3000.	273.3	89.3	395323.	2.03	4914.	0.73	92.85	263.5	81.17
				ALTITUDE -		54000. FEET				
3.10	3000.	273.3	59.5	372976.	2.30	4636.	0.78	61.86	257.0	49.42
				ALTITUDE -		60000. FEET				
2.89	2800.	250.2	32.7	306985.	3.01	3816.	0.94	35.12	235.1	28.04
				ALTITUDE -		64000. FEET				
3.10	3000.	273.3	36.9	282503.	2.84	3511.	1.03	38.36	263.5	33.53

[redacted]

[redacted]

ENGINE- 31

ESTIMATED PERFORMANCE

M2	WS	WP	WSWP	WFT	PHP	PHS	V6	PT20	A0	A5	A6
ALTITUDE - 40000. FEET											
0.580	3397.	710.	4.79	80.5	1.0	0.609	5193.	1.11	68.46	44.08	109.64
ALTITUDE - 45500. FEET											
0.446	3487.	710.	4.91	80.5	1.0	0.594	5489.	1.04	79.06	35.09	109.90
ALTITUDE - 54000. FEET											
0.580	2795.	710.	3.94	80.5	1.0	0.740	5657.	1.04	95.12	43.87	109.88
ALTITUDE - 60000. FEET											
0.580	1654.	710.	2.33	80.5	1.0	1.251	6053.	1.07	80.55	46.41	109.92
ALTITUDE - 64000. FEET											
0.446	1440.	710.	2.03	80.5	1.0	1.437	6334.	1.04	79.06	39.71	109.94

[redacted]

This Page Intentionally Blank

ENGINE FACT SHEET

Class 0 Composite Launch Vehicle Engines

Engine Identification Number: 32 Recycled Supercharged ScramLACE

Engine Operating Modes

Summary: Number of Modes/ Transitions 6 ; Number of Discrete Modes Utilized 5

Mode Progression - Lift-off to Touch-down

(Take off) Supercharged air augmented Liquid Air Cycle Engine (LACE), after-burning cycle, recycled hydrogen (2000-3000 ft/sec) Ramjet, subsonic combustion (6000-8000 ft/sec) Ramjet, supersonic combustion (10,000-14,000 ft/sec) Rocket (Orbital speed, space maneuvering and deorbiting) Ramjet, subsonic combustion (Flyback) Ducted fan (Flyback and landing)

Engine Propellant Requirements

Code: (R) = Required, (V) = Required for vacuum operation, (F) = Useable for flyback mode

- ☐ Hydrogen, liquid, 37-40 °R
- ☐ F Hydrogen, liquid, subcooled (25 °R)
- ☐ F Hydrogen, gaseous
- ☐ Other _____
- ☐ V Oxygen, liquid, 162 °R
- ☐ Oxygen, liquid, subcooled
- ☐ Oxygen, gaseous

Engine Constituent Subsystems

Inlet, fan, heat exchanger, rocket, mixer-diffuser, combustor, exit

Engine General Arrangement and Operating Schematic

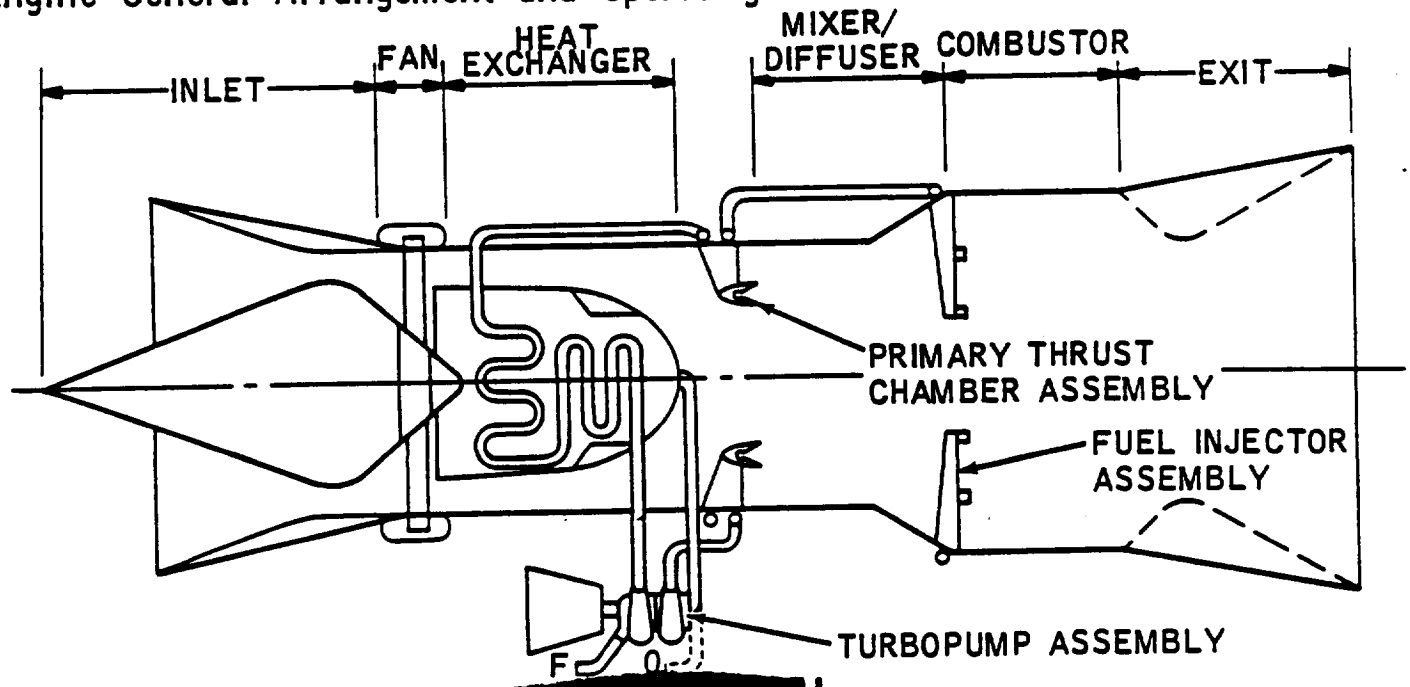

Eng. No. 32

ngine Internal Operating Parameters, nominal

$P_{c\text{-}LACE} = 1000$ psia, $\phi_{LACE} = 1.0$, $\phi_{P.C.} = 4.0$, $\phi_{cond.} = 8.0$
W_s/W_p (SLS) = 1.79, $\phi_{SEC\text{-}SLS} = 1.63$
$A_4/A_3 = 2.27$, $A_c/A_3 = 2.60$
FAN P.R. = 1.3

ngine Operating Mode Block Diagrams

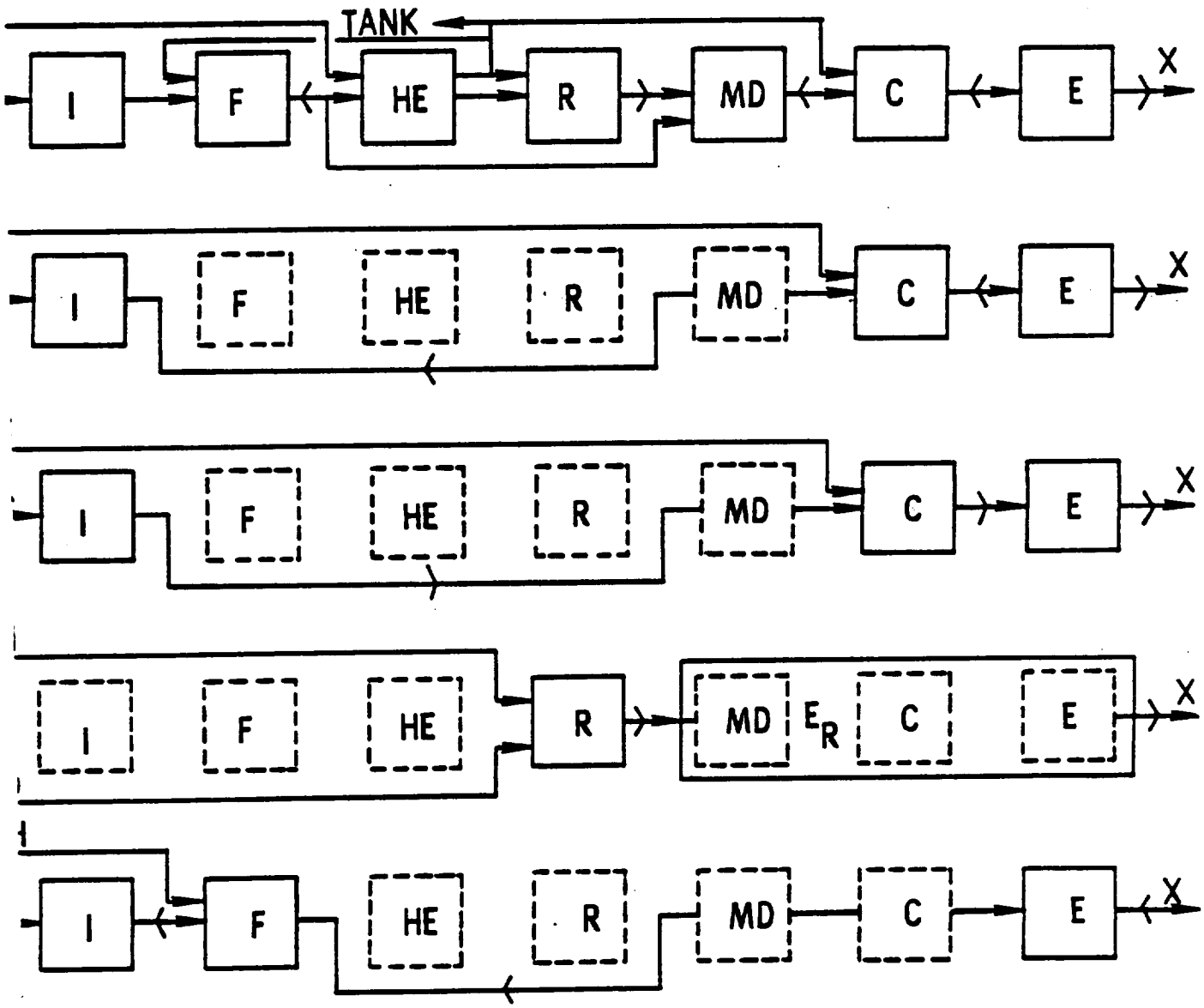

Eng. No. 32

The following information for Engine No. 32 appears in the fact sheets previously given for Engine No. 31.

Engine Physical Characteristics

Weight, Thrust/Weight, Flow area, Lengths

Engine Performance: 0-8000 ft/sec

Specific Impulse, Thrust, Airflow, Capture Area

References and additional remarks

ENG. NO. 32

SPECIFIC IMPULSE
REFERENCE TRAJECTORIES

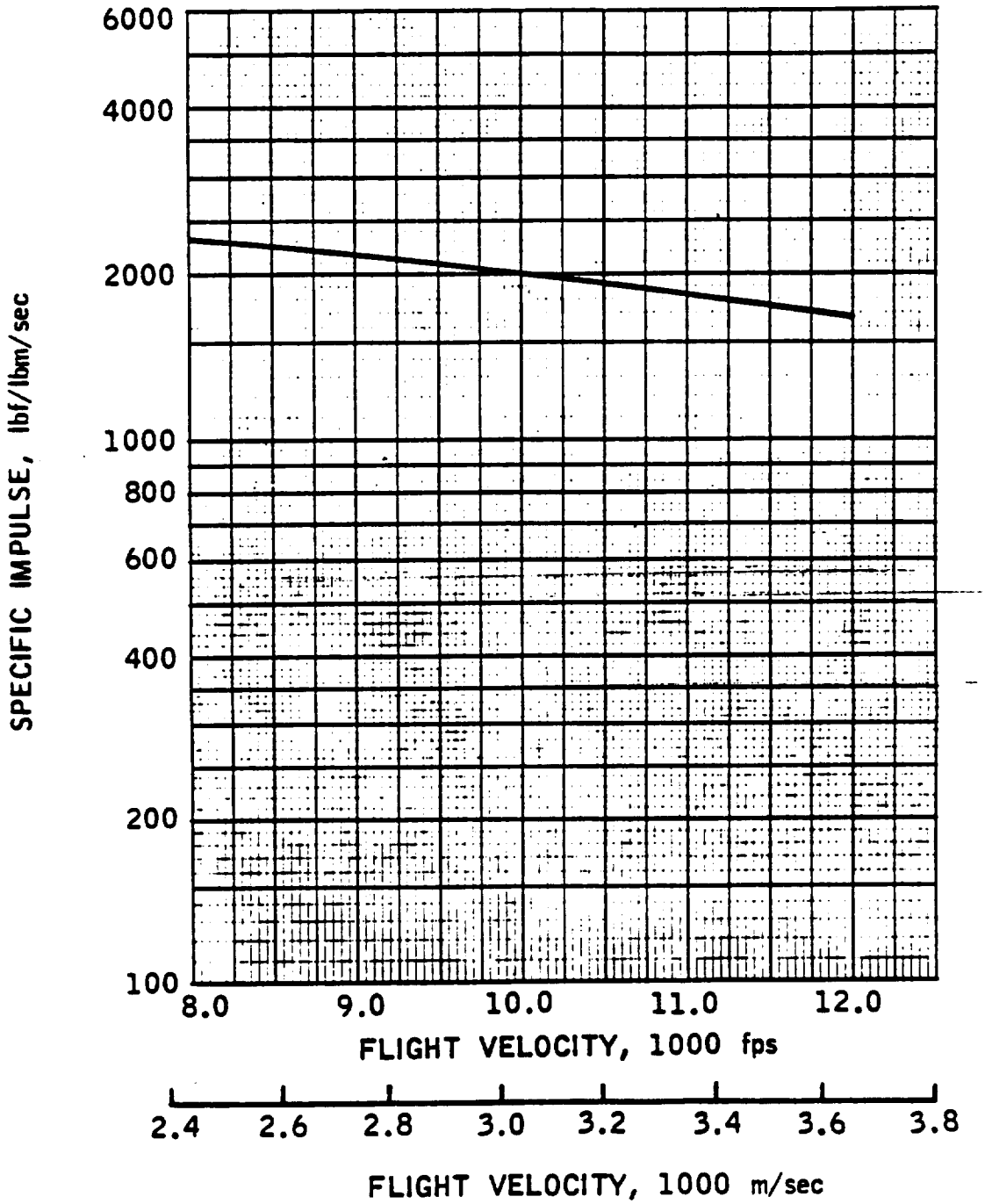

ENG. NO. 32

THRUST

REFERENCE TRAJECTORIES

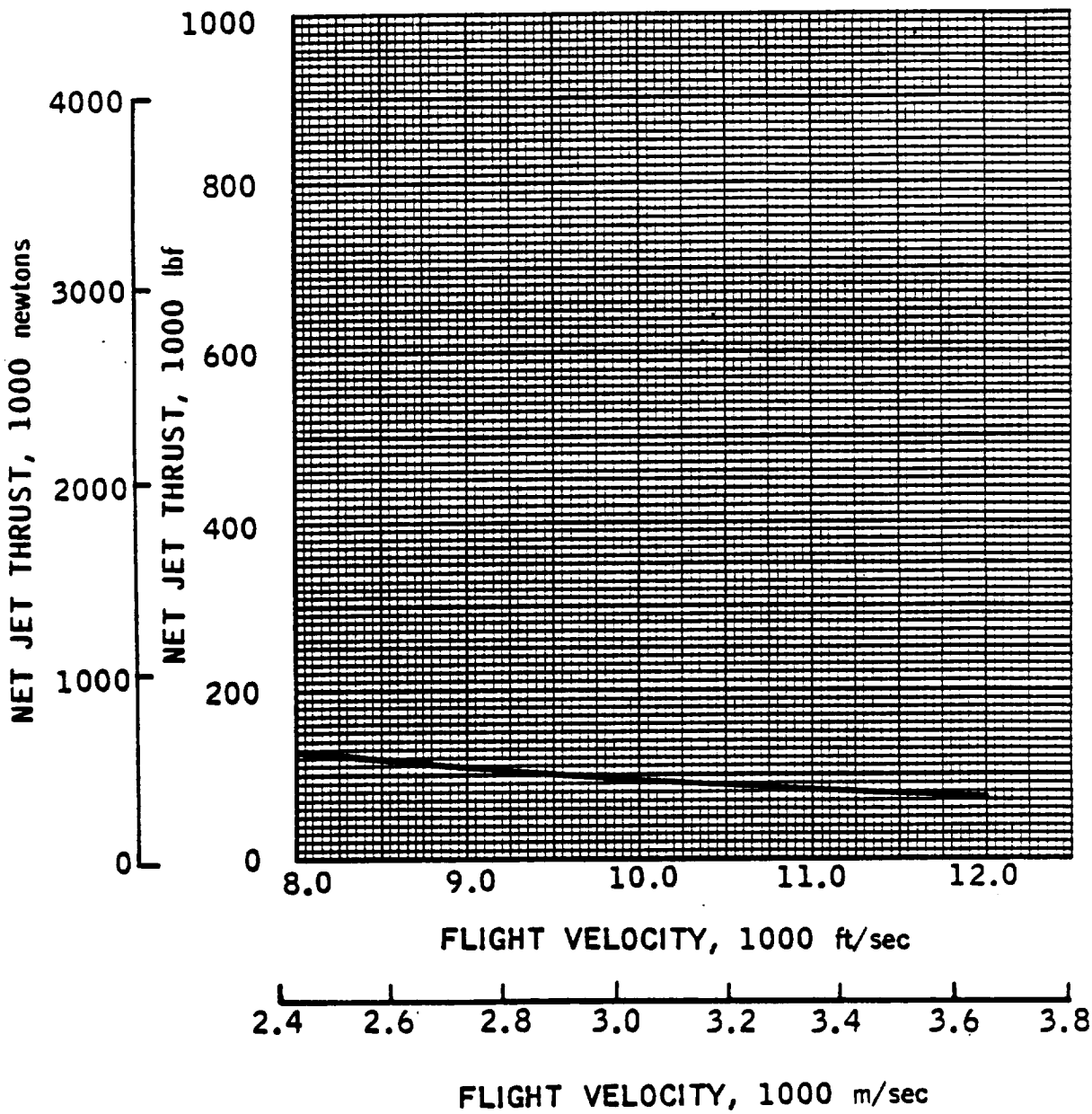

This Page Intentionally Blank

ENGINE FACT SHEET

Class 0 Composite Launch Vehicle Engines

Engine Identification Number: 33 Augmenter LACE

Engine Operating Modes

Summary: Number of Modes/ Transitions 3 ; Number of Discrete Modes Utilized 2

Mode Progression - Lift-off to Touch-down

(Take off) Augmentor LACE (6000-8000 ft/sec) Rocket (Orbital speed, space maneuvering and deorbiting) LACE (Flyback) Augmenter LACE (Landing)

Engine Propellant Requirements

Code: (R) = Required, (V) = Required for vacuum operation, (F) = Useable for flyback mode

- [R] Hydrogen, liquid, 37-40 °R
- [ ] Hydrogen, liquid, subcooled (25 °R)
- [ ] Hydrogen, gaseous
- [R] Oxygen, liquid, 162 °R
- [ ] Oxygen, liquid, subcooled
- [ ] Oxygen, gaseous
- [ ] Other _____

Engine Constituent Subsystems

Inlet, heat exchanger, Rocket #1, Rocket #2

Engine General Arrangement and Operating Schematic

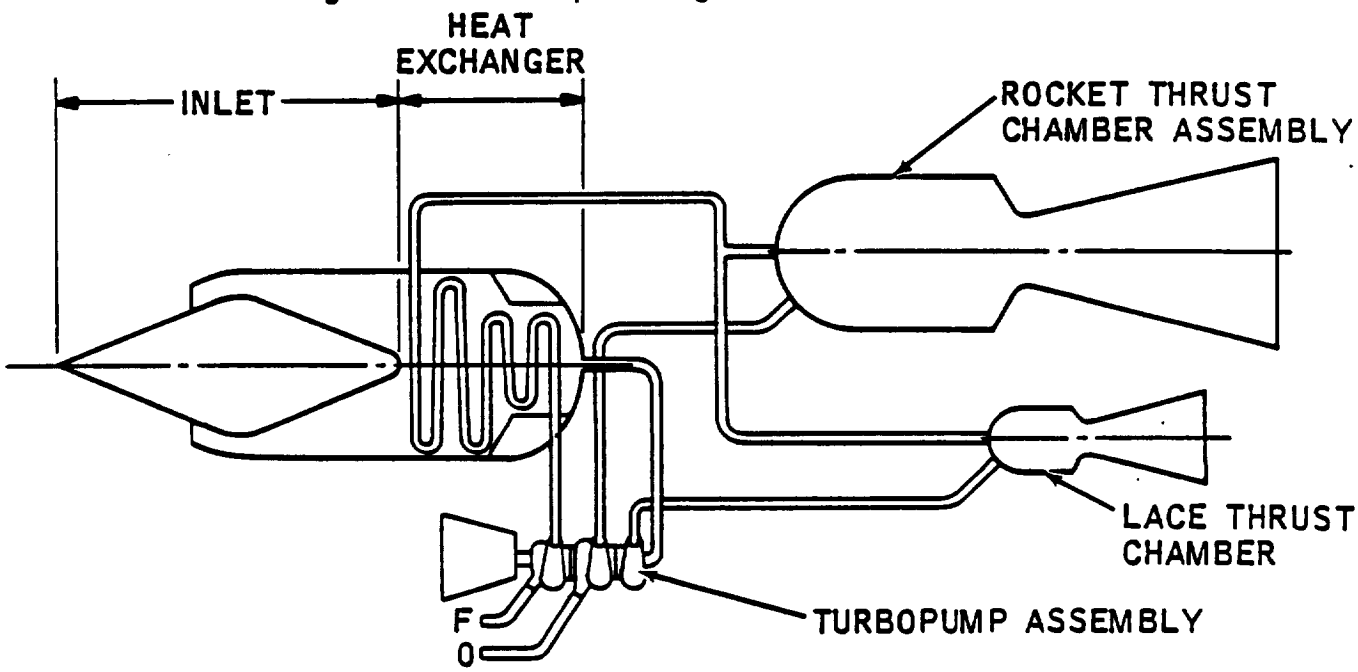

Engine Internal Operating Parameters, nominal

$P_{c\text{-}RKT}$ = 1500 psia, O/F = 5.5 - 6.5

$A_{EXIT}/A_t(RKT)$ = 80

$P_{c\text{-}LACE}$ = 1500 psia, ϕ_{LACE} = 1.0 - 4.6

$A_{EXIT}/A_t(LACE)$ = 15

Engine Operating Mode Block Diagrams

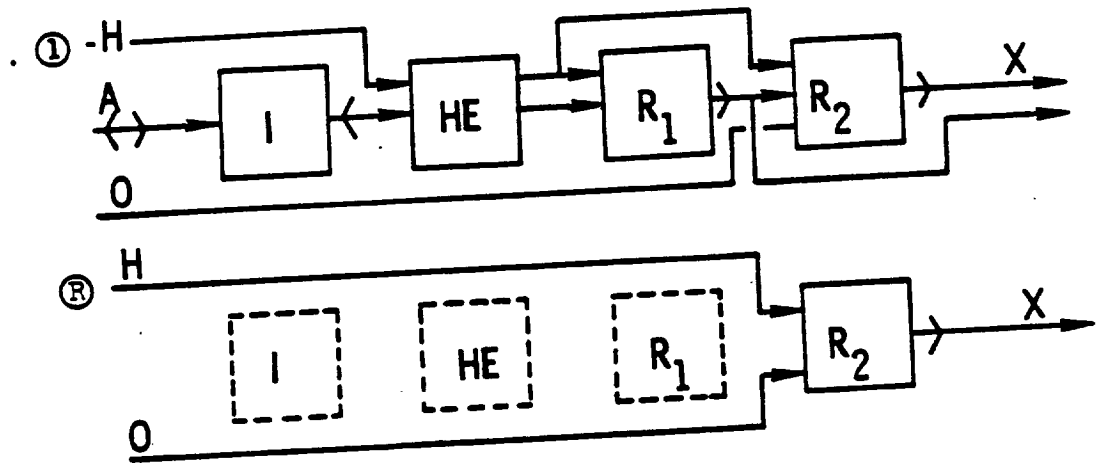

ENGINE PHYSICAL CHARACTERISTICS

Eng. No. 33

Thrust, sls	250,000 lbf	1,112,055 newton

Weight and Thrust/Weight Ratio

Measuring Units	(English)	(International)
Weight	lbm	kg
Thrust/Weight	lbf/lbm	newton/kg

(lbf/in^2) Maximum Engine Internal Pressure 1000 (newton/m^2)

Lightweight Estimate	50	100	250	344.7	689.5	1723.7
Subsystems:						
Fan						
Heat Exchanger						
Primary Rocket						
Mixer/Diffuser						
Combustor/Exit						
Contingency						
Uninstalled Eng. Wt.		3733			1693.3	
Thrust/Weight, Uninst.		67.0			657	
Inlet Weight		922			418.2	
Installed Eng. Wt.		4655			2111.5	
Thrust/Weight, Inst.		537			526	
Heavyweight Estimate						
Uninstalled Eng. Wt.		4106			1862.5	
Thrust/Weight, Uninst.		60.9			597	
Inlet Weight		3680			1669.2	
Installed Eng. Wt.		7786			3531.7	
Thrust/Weight, Inst.		32.1			315	

Engine Flow Areas and Equivalent Diameters

	ft^2	ft	m^2	m
Inlet Cowl, A_c	23.0	5.42	2.14	1.65
Mixer, A_3				
Combustor, A_4				
Exit, A_6				

Engine Lengths

	ft	m
Uninstalled		
Inlet (Typ)		
Installed (Typ)		

REMARKS, REFERENCES

Augmenter LACE, in conjunction with basic rocket (Engine 0). (References 7, 9)

SPECIFIC IMPULSE
REFERENCE TRAJECTORIES

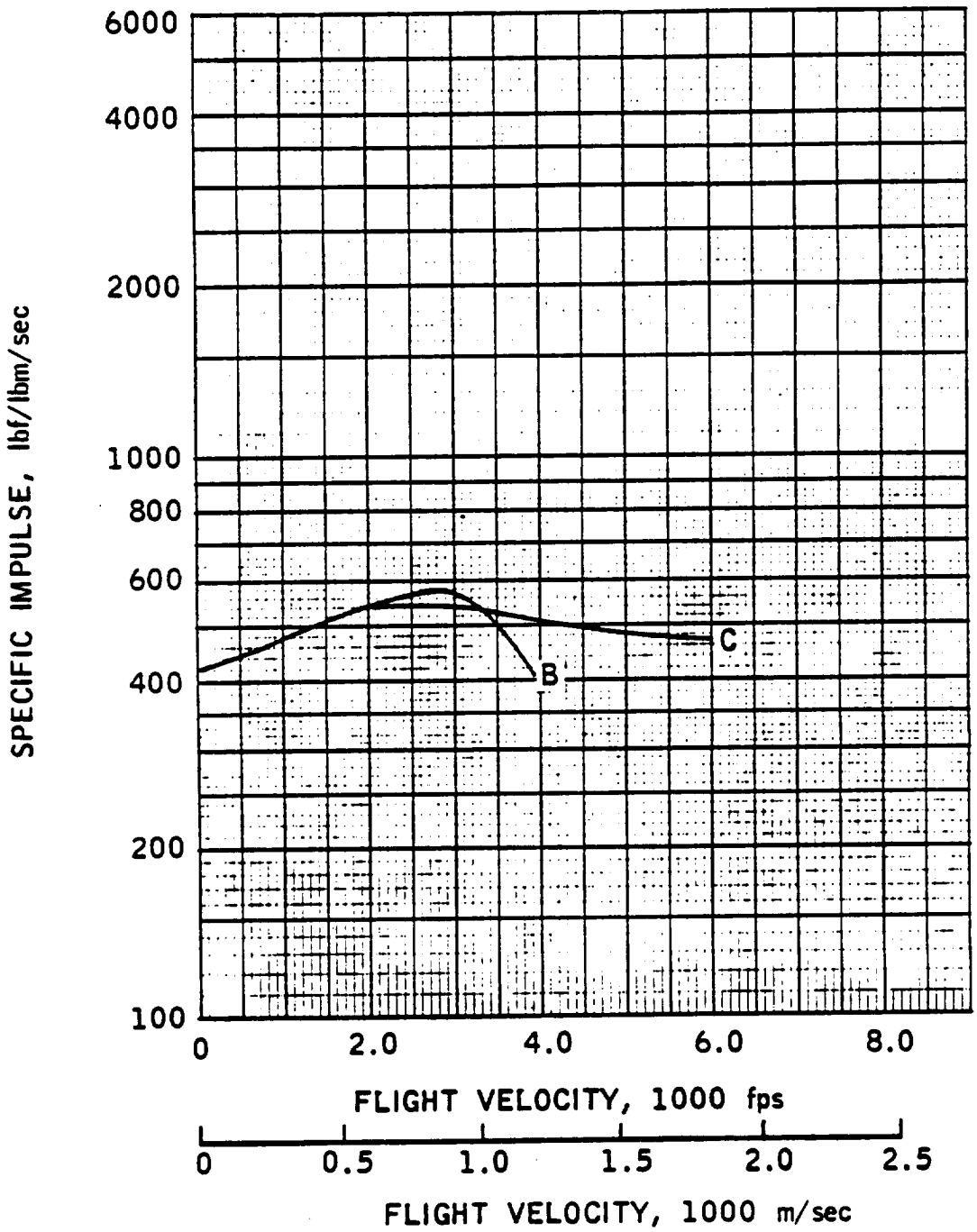

ENG. NO. 33

THRUST

REFERENCE TRAJECTORIES

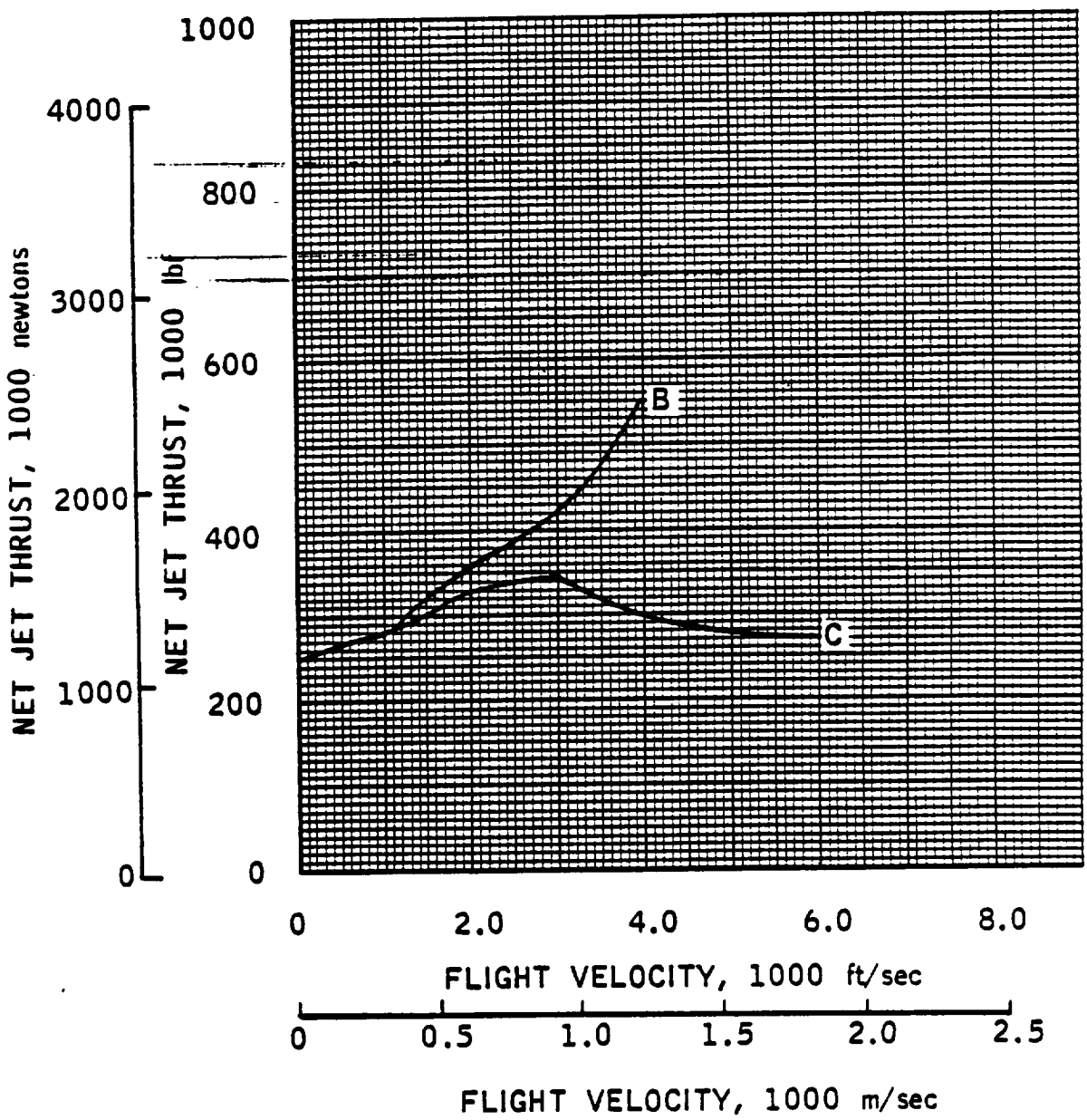

ENG. NO. 33

CAPTURE AREA

REFERENCE TRAJECTORIES

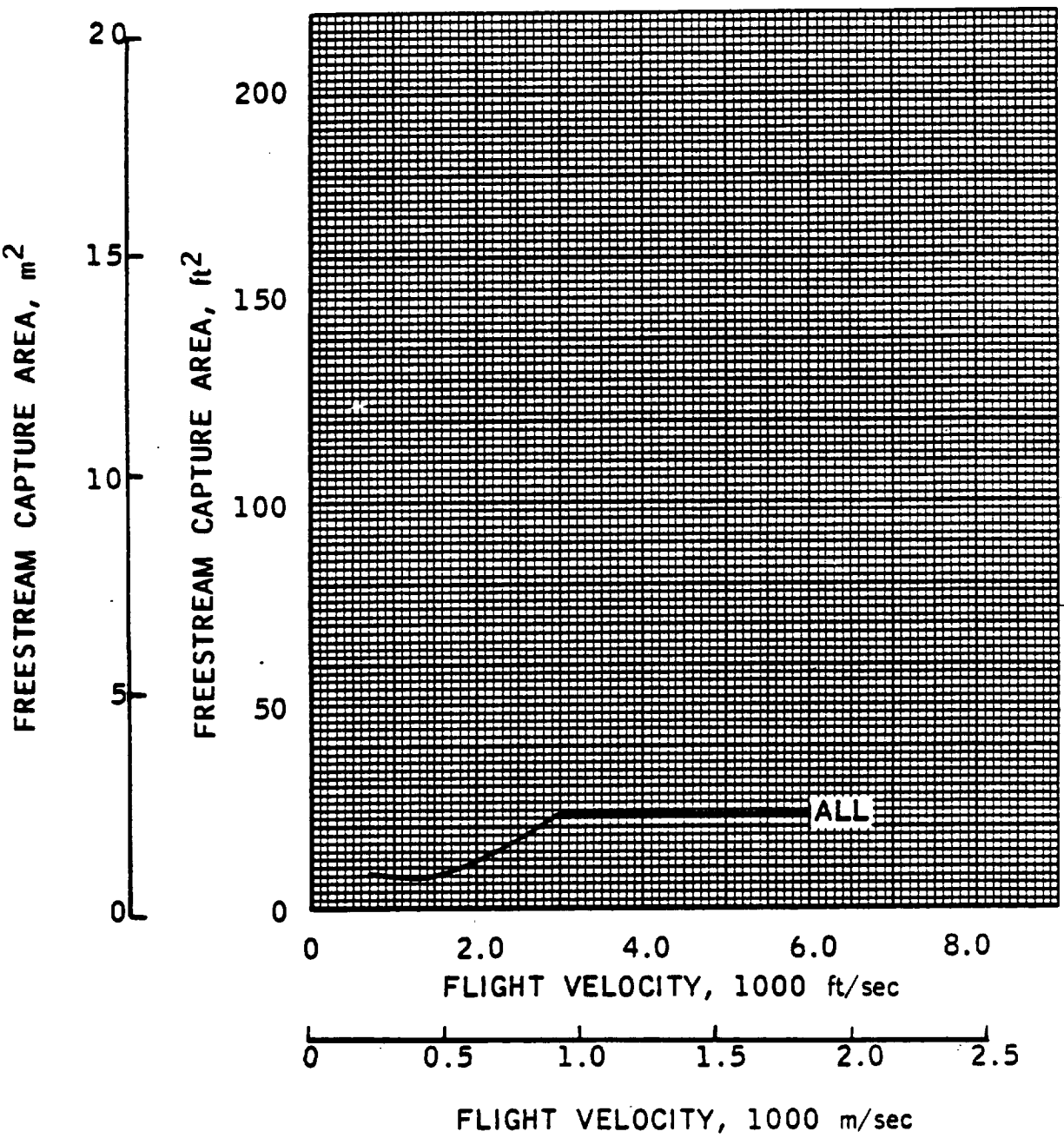

ENG. NO. 33

AIRFLOW

REFERENCE TRAJECTORIES

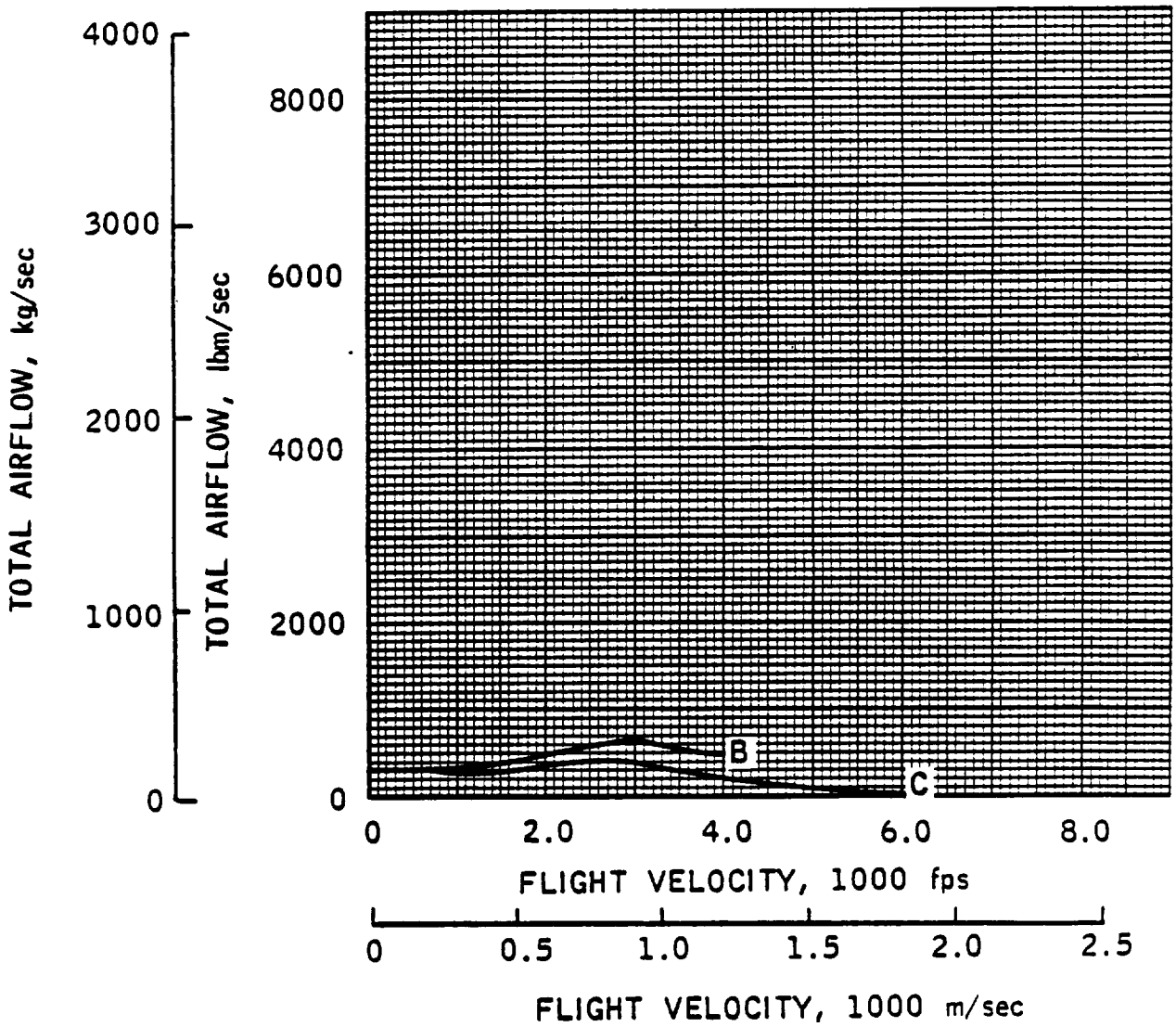

ENGINE- 33

ESTIMATED PERFORMANCE

MO	VO	HTO	PTO	T	CF	IS	SPC	PT2	H2	P2
				ALTITUDE -		0. FEET				
0.10	11.	124.7	14.8	250000.	*******	414.	8.70	14.80	*******	*******
				ALTITUDE -		10000. FEET				
0.65	700.	125.7	13.4	272000.	*******	444.	8.11	13.43	*******	*******
0.70	754.	127.3	14.0	273000.	*******	446.	8.07	14.02	*******	*******
				ALTITUDE -		20000. FEET				
1.01	1047.	129.3	12.9	280000.	*******	468.	7.69	12.94	*******	*******
1.21	1255.	138.8	16.6	296000.	*******	482.	7.47	16.47	*******	*******
				ALTITUDE -		30000. FEET				
1.46	1453.	141.0	15.2	300000.	*******	502.	7.17	14.77	*******	*******
1.71	1701.	156.6	21.9	338000.	*******	514.	7.00	20.89	*******	*******
				ALTITUDE -		40000. FEET				
1.91	1849.	161.9	18.6	322000.	*******	520.	6.92	17.36	*******	*******
2.22	2149.	185.8	30.1	366000.	*******	546.	6.59	27.20	*******	*******

ENGINE- 33

ESTIMATED PERFORMANCE

M2	WS	WP	WSWP	WFT	PHP	PHS	V6	PT20	A0	A5	A6
					ALTITUDE -		0. FEET				
******	321.	******	0.00	603.9	1.5	*******	*******	1.00	21.24	*******	******
					ALTITUDE -		10000. FEET				
******	311.	******	0.00	612.6	1.5	*******	*******	1.00	8.03	*******	******
******	324.	******	0.00	612.1	1.5	*******	*******	1.00	7.77	*******	******
					ALTITUDE -		20000. FEET				
******	285.	******	0.00	598.3	1.5	*******	*******	1.00	6.74	*******	******
******	352.	******	0.00	614.1	1.5	*******	*******	0.99	6.80	*******	******
					ALTITUDE -		30000. FEET				
******	311.	******	0.00	597.6	1.5	*******	*******	0.98	7.25	*******	******
******	418.	******	0.00	657.6	1.5	*******	*******	0.95	8.35	*******	******
					ALTITUDE -		40000. FEET				
******	356.	******	0.00	619.2	1.5	*******	*******	0.93	9.84	*******	******
******	528.	******	0.00	670.3	1.5	*******	*******	0.90	12.69	*******	******

[redacted]

ENGINE- 33

ESTIMATED PERFORMANCE

MO	VO	HTO	PTO	T	CF	IS	SPC	PT2	H2	P2
				ALTITUDE -		50000. FEET				
2.40	2320.	201.1	24.6	338000.	*******	529.	6.81	21.69	*******	*******
2.84	2750.	244.6	48.8	401000.	*******	565.	6.37	40.51	*******	*******
				ALTITUDE -		54000. FEET				
3.10	3000.	273.3	59.5	427000.	*******	561.	6.42	47.37	*******	*******
				ALTITUDE -		60000. FEET				
2.89	2800.	250.2	32.7	345000.	*******	536.	6.72	26.95	*******	*******
3.62	3504.	338.9	94.7	484000.	*******	496.	7.26	68.40	*******	*******
				ALTITUDE -		63000. FEET				
4.13	4000.	413.2	163.8	553000.	*******	400.	9.00	106.47	*******	*******
				ALTITUDE -		64000. FEET				
3.10	3000.	273.3	36.9	345000.	*******	537.	6.70	29.37	*******	*******
				ALTITUDE -		80000. FEET				
3.94	3852.	391.8	56.9	302000.	*******	505.	7.13	39.40	*******	*******

[redacted]

ENGINE- 33

ESTIMATED PERFORMANCE

M2	WS	WP	WSWP	WFT	PHP	PHS	V6	PT20	A0	A5	A6
					ALTITUDE -		50000. FEET				
******	412.	******	0.00	638.9	1.5	*******	*******	0.88	14.64	*******	******
******	658.	******	0.00	709.7	1.5	*******	*******	0.83	20.08	*******	******
					ALTITUDE -		54000. FEET				
******	689.	******	0.00	761.1	1.5	*******	*******	0.80	22.99	*******	******
					ALTITUDE -		60000. FEET				
******	449.	******	0.00	643.7	1.5	*******	*******	0.82	20.60	*******	******
******	575.	******	0.00	975.8	1.5	*******	*******	0.72	22.99	*******	******
					ALTITUDE -		63000. FEET				
******	575.	******	0.00	*****	1.5	*******	*******	0.65	22.99	*******	******
					ALTITUDE -		64000. FEET				
******	425.	******	0.00	642.5	1.5	*******	*******	0.80	22.99	*******	******
					ALTITUDE -		80000. FEET				
******	252.	******	0.00	598.0	1.5	*******	*******	0.69	22.99	*******	******

CONFIDENTIAL

ENGINE- 33

ESTIMATED PERFORMANCE

	VO	HTO	PTO	T	CF	IS	SPC	PT2	H2	P2
				ALTITUDE - 100000. FEET						
				280000.	*******	475.	7.58	49.68	*******	*******
				ALTITUDE - 112000. FEET						
.15	5103.	618.2	101.7	274000.	*******	461.	7.81	51.37	*******	*******
5.96	6000.	820.3	142.7							

ENGINE- 33

ESTIMATED PERFORMANCE

M2	WS	WP	WSWP	WFT	PHP	PHS	V6	PT20	A0	A5	A6
ALTITUDE - 100000. FEET											
******	119.	******	0.00	589.5	1.5	*******	*******	0.49	22.99	*******	******
ALTITUDE - 112000. FEET											
******	75.	******	0.00	594.4	1.5	*******	*******	0.36	22.99	*******	******

This Page Intentionally Blank

ENGINE FACT SHEET

Class 0 Composite Launch Vehicle Engines

Engine Identification Number: 34 Recycled Augmenter LACE

Engine Operating Modes

Summary: Number of Modes/ Transitions 3 ; Number of Discrete Modes Utilized 3

Mode Progression - Lift-off to Touch-down

(Take off) Augmenter LACE, Recycled hydrogen (6000-8000 ft/sec) Rocket (Orbital speed, space maneuvering and deorbiting) LACE (Flyback) Augmenter LACE (Landing)

Engine Propellant Requirements

Code: (R) = Required, (V) = Required for vacuum operation, (F) = Useable for flyback mode

- ☐ Hydrogen, liquid, 37-40 °R
- ☒ Hydrogen, liquid, subcooled (25 °R)
- ☐ Hydrogen, gaseous
- ☒ Oxygen, liquid, 162 °R
- ☐ Oxygen, liquid, subcooled
- ☐ Oxygen, gaseous
- ☐ Other _____

Engine Constituent Subsystems

Inlet, heat exchanger, Rocket #1, Rocket #2

Engine General Arrangement and Operating Schematic

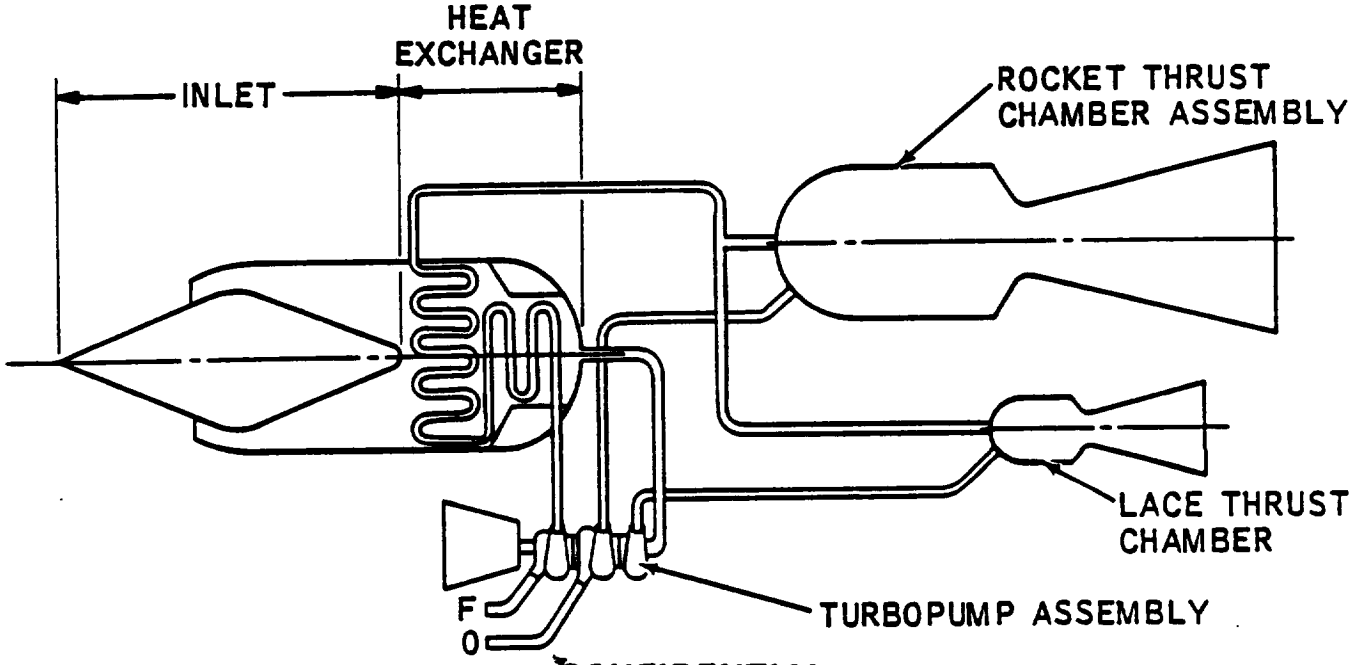

Eng. No. 34

Engine Internal Operating Parameters, nominal

$P_{c\text{-}RKT}$ = 1500 psia, O/F = 5.5-6.5

A_{EXIT}/A_t (RKT) = 80

$P_{c\text{-}LACE}$ = 1500 psia, ϕ_{LACE} = 1.0-

A_{EXIT}/A_t (LACE) = 15

Engine Operating Mode Block Diagrams

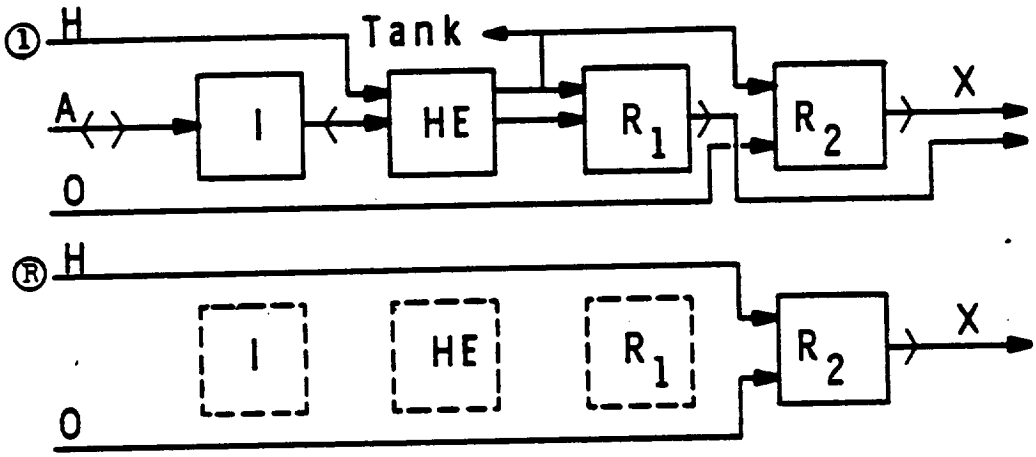

ENGINE PHYSICAL CHARACTERISTICS

Eng. No. 34

Thrust, sls	250,000 lbf	1,112,055 newton

Weight and Thrust/Weight Ratio

Measuring Units	(English)	(International)
Weight	lbm	kg
Thrust/Weight	lbf/lbm	newton/kg

Lightweight Estimate	(lbf/in^2) Maximum Engine Internal Pressure			1000 (newton/m^2)		
Subsystems:	50	100	250	344.7	689.5	1723.7
Fan						
Heat Exchanger						
Primary Rocket						
Mixer/Diffuser						
Combustor/Exit						
Contingency						
Uninstalled Eng. Wt.		3733			1693.3	
Thrust/Weight, Uninst.		67.0			657	
Inlet Weight		922			418.2	
Installed Eng. Wt.		4655			2111.5	
Thrust/Weight, Inst.		537			526	
Heavyweight Estimate						
Uninstalled Eng. Wt.		4106			1862.5	
Thrust/Weight, Uninst.		60.9			597	
Inlet Weight		3680			1669.2	
Installed Eng. Wt.		7786			3531.7	
Thrust/Weight, Inst.		32.1			315	

Engine Flow Areas and Equivalent Diameters

	ft^2	ft	m^2	m
Inlet Cowl, A_c	23.0	5.42	2.14	1.65
Mixer, A_3				
Combustor, A_4				
Exit, A_6				

Engine Lengths

	ft	m
Uninstalled		
Inlet (Typ)		
Installed (Typ)		

REMARKS, REFERENCES

Recycled Augmenter LACE, in conjunction with basic rockets (Engine 0). Recycle time limit should be checked for specific applications. (References 7, 9, 14)

SPECIFIC IMPULSE
REFERENCE TRAJECTORIES

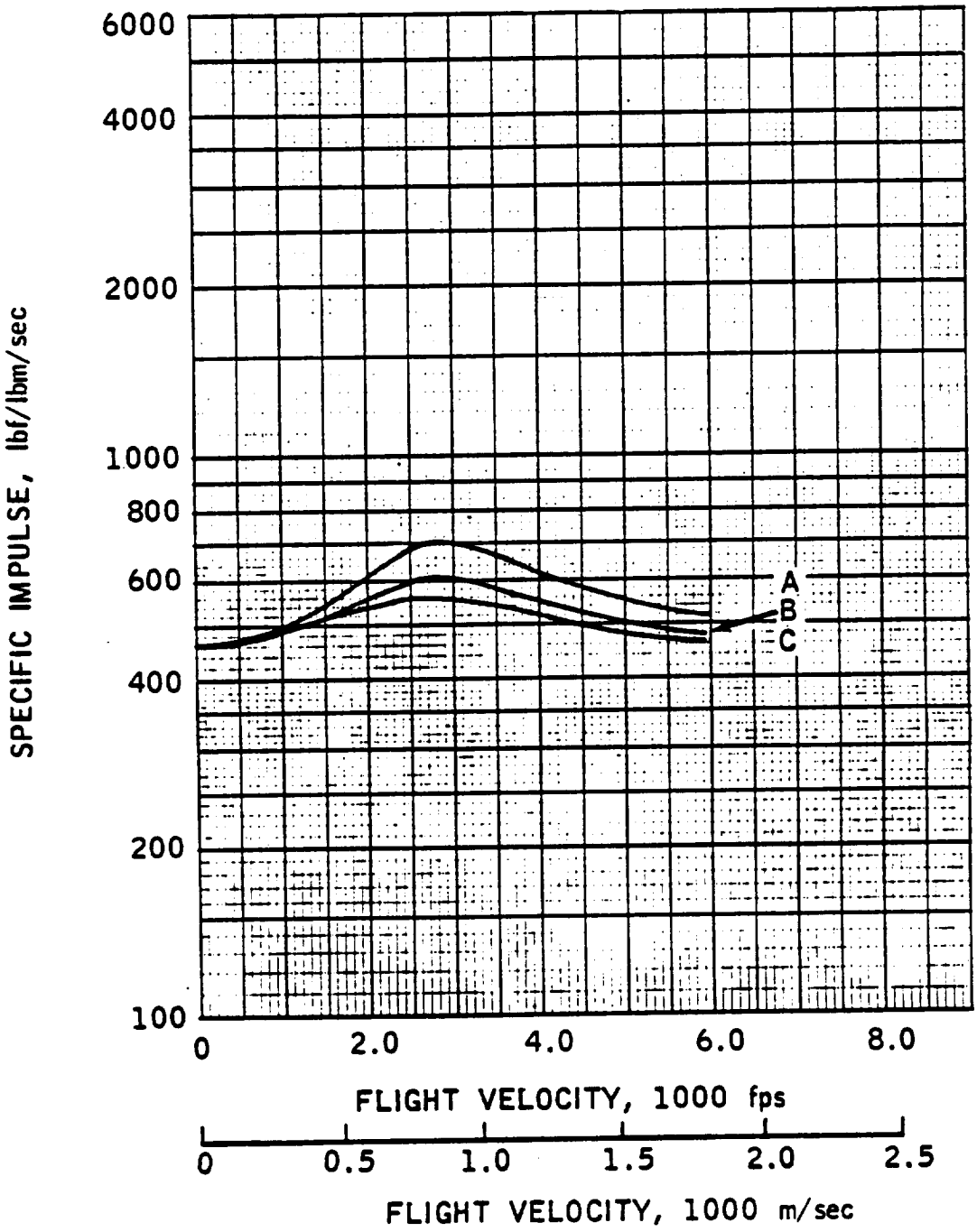

ENG. NO. 34

THRUST

REFERENCE TRAJECTORIES

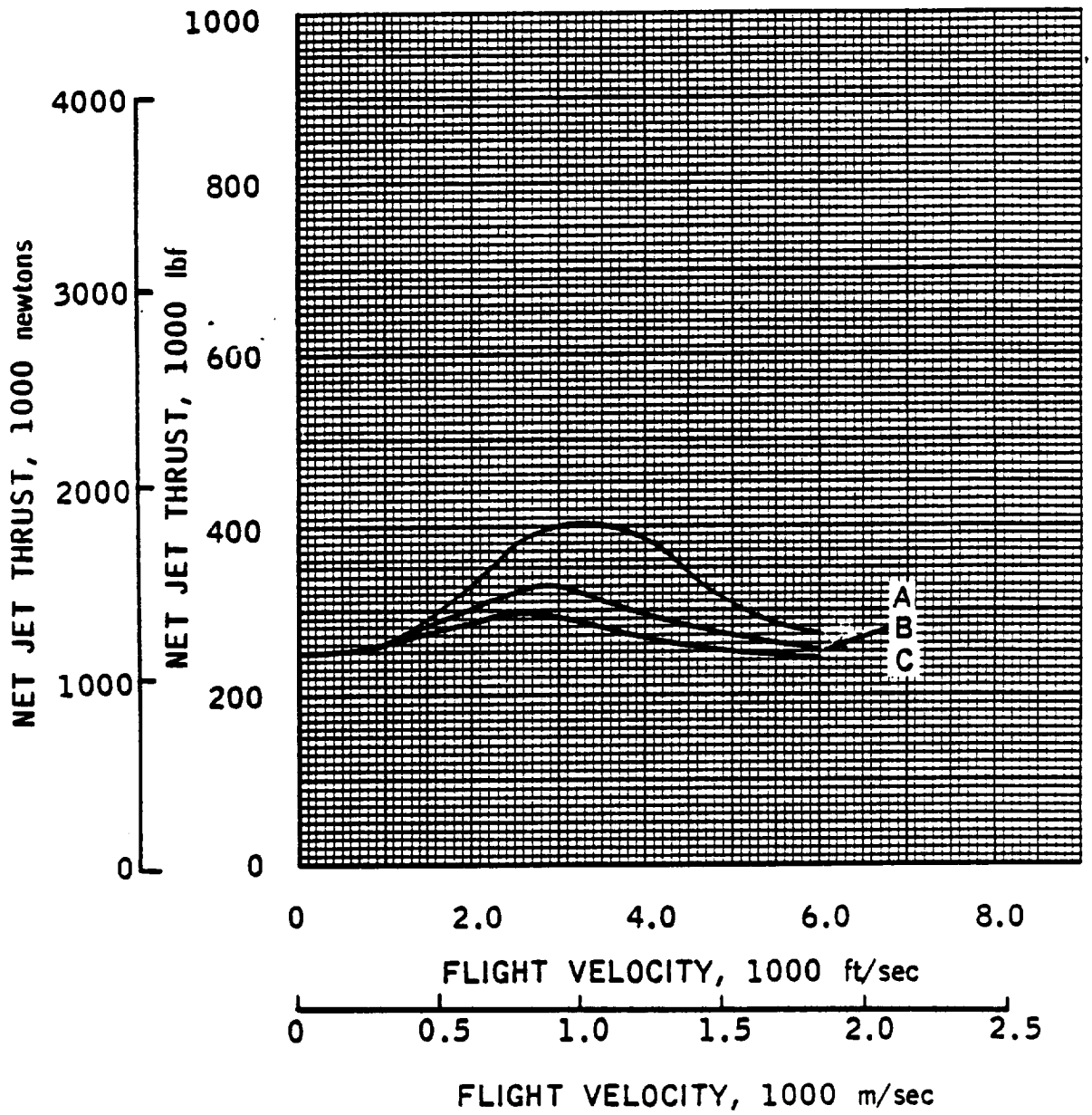

CAPTURE AREA

REFERENCE TRAJECTORIES

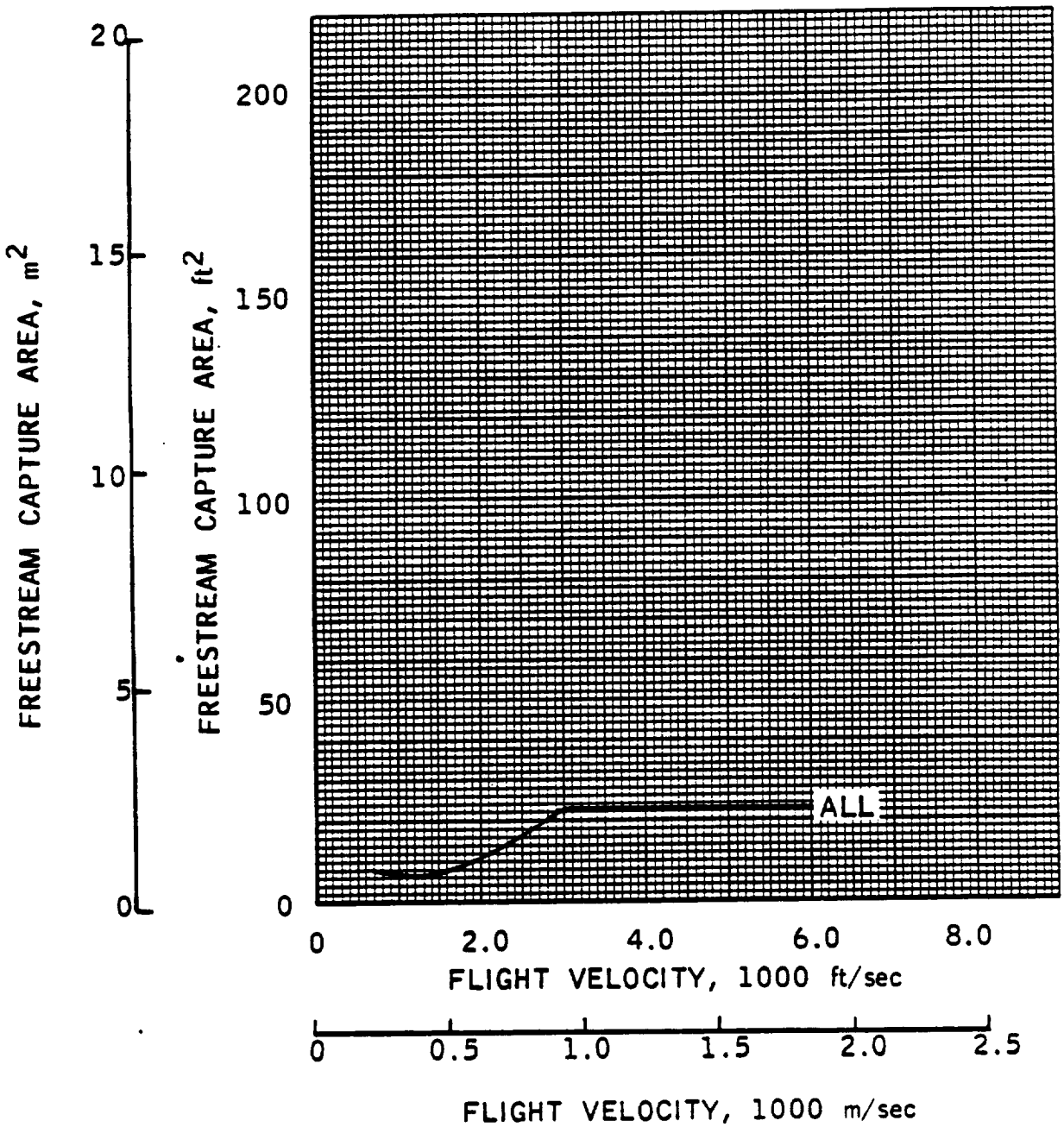

ENG. NO. 34

AIRFLOW

REFERENCE TRAJECTORIES

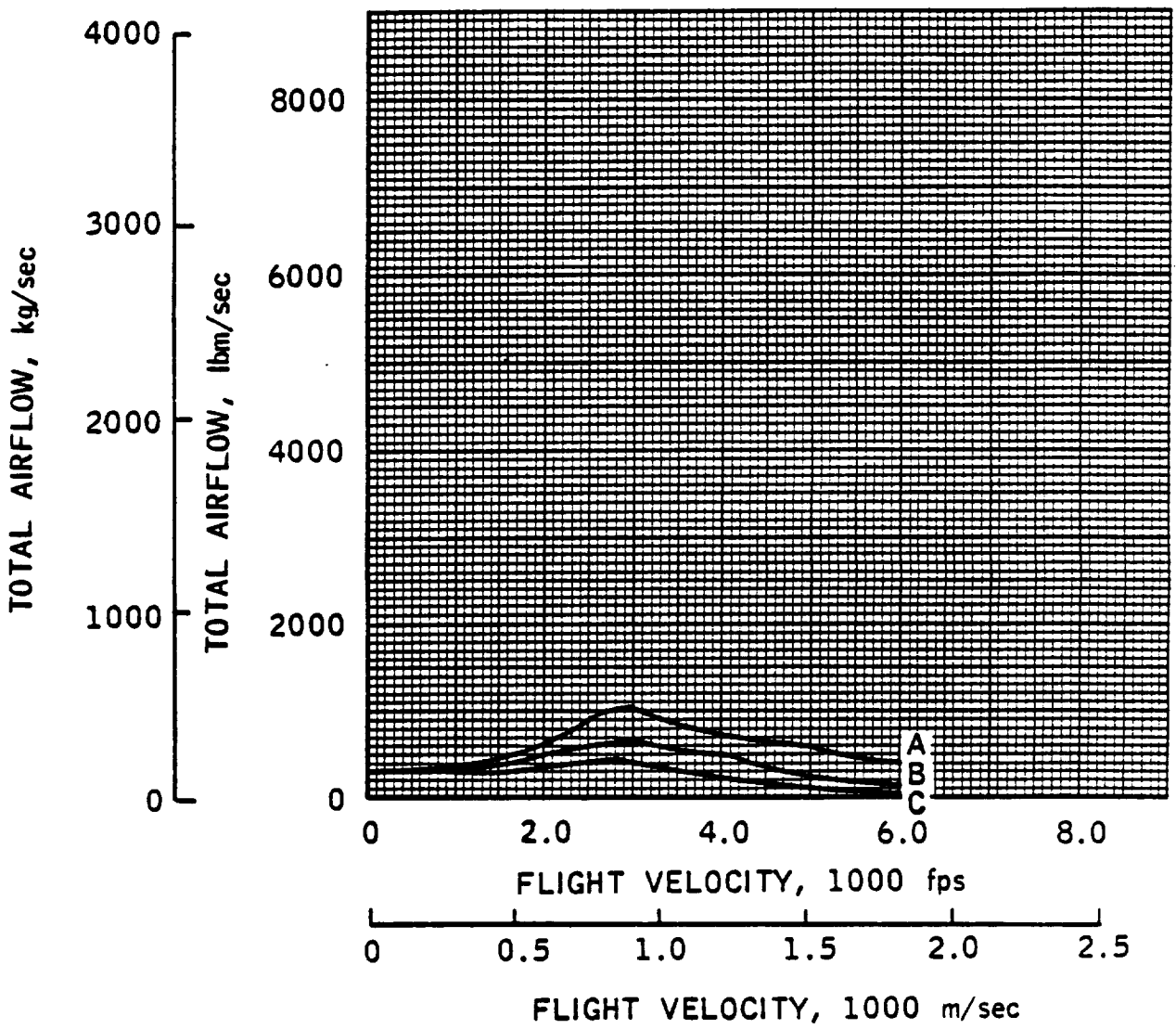

[redacted]

ENGINE- 34

ESTIMATED PERFORMANCE

MO	VO	HTO	PTJ	T	CF	IS	SPC	PT2	H2	P2
				ALTITUDE -		0. FEET				
0.10	11.	124.7	14.8	250000.	*******	462.	7.79	14.80	*******	*******
				ALTITUDE -		10000. FEET				
0.65	700.	125.7	13.4	254000.	*******	473.	7.61	13.43	*******	*******
0.70	754.	127.3	14.0	255000.	*******	474.	7.59	14.02	*******	*******
0.79	851.	130.4	15.3	258000.	*******	478.	7.53	15.26	*******	*******
				ALTITUDE -		20000. FEET				
1.01	1047.	129.3	12.9	260000.	*******	485.	7.42	12.94	*******	*******
1.21	1255.	138.8	16.6	270000.	*******	500.	7.20	16.47	*******	*******
1.45	1504.	152.5	23.1	288000.	*******	527.	6.83	22.52	*******	*******
				ALTITUDE -		30000. FEET				
1.46	1453.	141.0	15.2	272000.	*******	507.	7.10	14.77	*******	*******
1.71	1701.	156.6	21.9	292000.	*******	537.	6.70	20.89	*******	*******
2.06	2049.	182.7	37.6	335000.	*******	600.	6.00	34.55	*******	*******
				ALTITUDE -		40000. FEET				
1.91	1849.	161.9	18.6	287000.	*******	528.	6.82	17.36	*******	*******
2.22	2149.	185.8	30.1	314000.	*******	575.	6.26	27.20	*******	*******

CONFIDENTIAL

ENGINE- 34

ESTIMATED PERFORMANCE

M2	WS	WP	WSWP	WFT	PHP	PHS	V6	PT20	A0	A5	A6
ALTITUDE - 0. FEET											
******	321.	******	0.00	541.1	1.5	1.000	*******	1.00	21.24	*******	*******
ALTITUDE - 10000. FEET											
******	311.	******	0.00	537.0	1.5	1.000	*******	1.00	8.03	*******	*******
******	324.	******	0.00	538.0	1.5	1.000	*******	1.00	7.77	*******	*******
******	339.	******	0.00	539.7	1.5	1.000	*******	1.00	7.19	*******	*******
ALTITUDE - 20000. FEET											
******	285.	******	0.00	536.1	1.5	1.000	*******	1.00	6.74	*******	*******
******	352.	******	0.00	540.0	1.5	1.000	*******	0.99	6.80	*******	*******
******	440.	******	0.00	546.5	1.5	1.000	*******	0.98	7.77	*******	*******
ALTITUDE - 30000. FEET											
******	311.	******	0.00	536.5	1.5	1.000	*******	0.98	7.25	*******	*******
******	418.	******	0.00	543.8	1.5	1.000	*******	0.95	8.35	*******	*******
******	661.	******	0.00	558.3	1.5	1.000	*******	0.92	11.92	*******	*******
ALTITUDE - 40000. FEET											
******	356.	******	0.00	543.6	1.5	1.000	*******	0.93	9.84	*******	*******
******	528.	******	0.00	546.1	1.5	1.000	*******	0.90	12.69	*******	*******

CONFIDENTIAL

[redacted]

ENGINE- 34

ESTIMATED PERFORMANCE

MO	VO	HTO	PTO	T	CF	IS	SPC	PT2	H2	P2
ALTITUDE - 40000. FEET										
2.69	2604.	229.0	62.6	389000.	*******	698.	5.16	53.11	*******	*******
ALTITUDE - 45500. FEET										
3.10	3000.	273.3	89.3	400000.	*******	707.	5.09	71.10	*******	*******
ALTITUDE - 50000. FEET										
2.40	2320.	201.1	24.6	298000.	*******	548.	6.57	21.69	*******	*******
2.84	2750.	244.6	48.8	332000.	*******	606.	5.94	40.51	*******	*******
ALTITUDE - 54000. FEET										
3.10	3000.	273.3	59.5	335000.	*******	610.	5.90	47.37	*******	*******
ALTITUDE - 60000. FEET										
2.89	2800.	250.2	32.7	301000.	*******	555.	6.49	26.95	*******	*******
3.62	3504.	338.9	94.7	316000.	*******	575.	6.26	68.40	*******	*******
4.39	4250.	454.3	264.3	324000.	*******	585.	6.15	160.58	*******	*******

[redacted]

[redacted]

[redacted]

ENGINE- 34

ESTIMATED PERFORMANCE

M2	WS	WP	WSWP	WFT	PHP	PHS	V6	PT20	A0	A5	A6
					ALTITUDE -		40000. FEET				
******	933.	******	0.00	557.3	1.5	1.000	*******	0.85	18.26	*******	*******
					ALTITUDE -		45500. FEET				
******	1036.	******	0.00	565.8	1.5	1.000	*******	0.80	22.99	*******	*******
					ALTITUDE -		50000. FEET				
******	412.	******	0.00	543.8	1.5	1.000	*******	0.88	14.64	*******	*******
******	658.	******	0.00	547.9	1.5	1.000	*******	0.83	20.08	*******	*******
					ALTITUDE -		54000. FEET				
******	689.	******	0.00	549.2	1.5	1.000	*******	0.80	22.99	*******	*******
					ALTITUDE -		60000. FEET				
******	449.	******	0.00	542.3	1.5	1.000	*******	0.82	20.60	*******	*******
******	575.	******	0.00	549.6	1.5	1.000	*******	0.72	22.99	*******	*******
******	710.	******	0.00	553.8	1.5	1.000	*******	0.61	22.99	*******	*******

ENGINE- 34

ESTIMATED PERFORMANCE

MO	VO	HTO	PTO	T	CF	IS	SPC	PT2	H2	P2
				ALTITUDE - 64000. FEET						
3.10	3000.	273.3	36.9	299000.	*******	554.	6.50	29.37	*******	*******
				ALTITUDE - 70000. FEET						
[redacted]4.43	4301.	463.6	172.5	290000.	*******	535.	6.73	160.60	*******	*******
[redacted]5.47	5311.	657.5	585.9	291000.	*******	532.	6.77	256.43	*******	*******
				ALTITUDE - 80000. FEET						
[redacted]3.96	3852.	391.8	56.9	277000.	*******	520.	6.92	39.40	*******	*******
[redacted]4.91	4800.	555.6	193.4	273000.	*******	504.	7.14	102.58	*******	*******
[redacted]6.14	6003.	815.1	739.5	278000.	*******	512.	7.03	250.85	*******	*******
				ALTITUDE - 99000. FEET						
6.06	6000.	817.0	283.5	255000.	*******	475.	7.58	97.80	*******	*******
5.15	5103.	618.2	101.7	254000.	*******	473.	7.61	49.68	*******	*******
				ALTITUDE - 112000. FEET						
5.96	6000.	820.3	142.7	248000.	*******	463.	7.78	51.37	*******	*******

[redacted]

ENGINE- 34

ESTIMATED PERFORMANCE

M2	WS	WP	WSWP	WFT	PHP	PHS	V6	PT20	A0	A5	A6
ALTITUDE - 64000. FEET											
******	425.	******	0.00	539.7	1.5	1.000	*******	0.80	22.99	*******	*******
ALTITUDE - 70000. FEET											
******	408.	******	0.00	542.1	1.5	1.000	*******	0.60	22.99	*******	*******
******	501.	******	0.00	547.0	1.5	1.000	*******	0.44	22.99	*******	*******
ALTITUDE - 80000. FEET											
******	252.	******	0.00	532.7	1.5	1.000	*******	0.69	22.99	*******	*******
******	285.	******	0.00	541.7	1.5	1.000	*******	0.53	22.99	*******	*******
******	411.	******	0.00	543.0	1.5	1.000	*******	0.34	22.99	*******	*******
ALTITUDE - 99000. FEET											
******	161.	******	0.00	536.8	1.5	1.000	*******	0.34	22.99	*******	*******
******	119.	******	0.00	537.0	1.5	1.000	*******	0.49	22.99	*******	*******
ALTITUDE - 112000. FEET											
******	75.	******	0.00	535.6	1.5	1.000	*******	0.36	22.99	*******	*******

[redacted]

[redacted]

THE Marquardt CORPORATION VAN NUYS, CALIFORNIA

This Page Intentionally Blank

ENGINE FACT SHEET

Class 0 Composite Launch Vehicle Engines

Engine Identification Number: 35 Air Augmented Regenerative Monofuel Rocket - Ramjet

Engine Operating Modes

Summary: Number of Modes/ Transitions 5 ; Number of Discrete Modes Utilized 3

Mode Progression - Lift-off to Touch-down

(Take off) Air augmented heated hydrogen rocket, simultaneous mixing and burning cycle (2000-3000 ft/sec) Ramjet, subsonic combustion (6000-8000 ft/sec) Rocket (Orbital speed, space maneuvering and deorbiting) Ramjet, subsonic combustion (Flyback) Air augmented heated hydrogen rocket, simultaneous mixing and burning cycle (Landing)

Engine Propellant Requirements

Code: (R) = Required, (V) = Required for vacuum operation, (F) = Useable for flyback mode

- [R] Hydrogen, liquid, 37-40 °R
- [ ] Hydrogen, liquid, subcooled (25 °R)
- [ ] Hydrogen, gaseous
- [V] Oxygen, liquid, 162 °R
- [ ] Oxygen, liquid, subcooled
- [ ] Oxygen, gaseous
- [ ] Other _____

Engine Constituent Subsystems

Inlet, rocket, Mixer-combustor, Regenerator, Exit

Engine General Arrangement and Operating Schematic

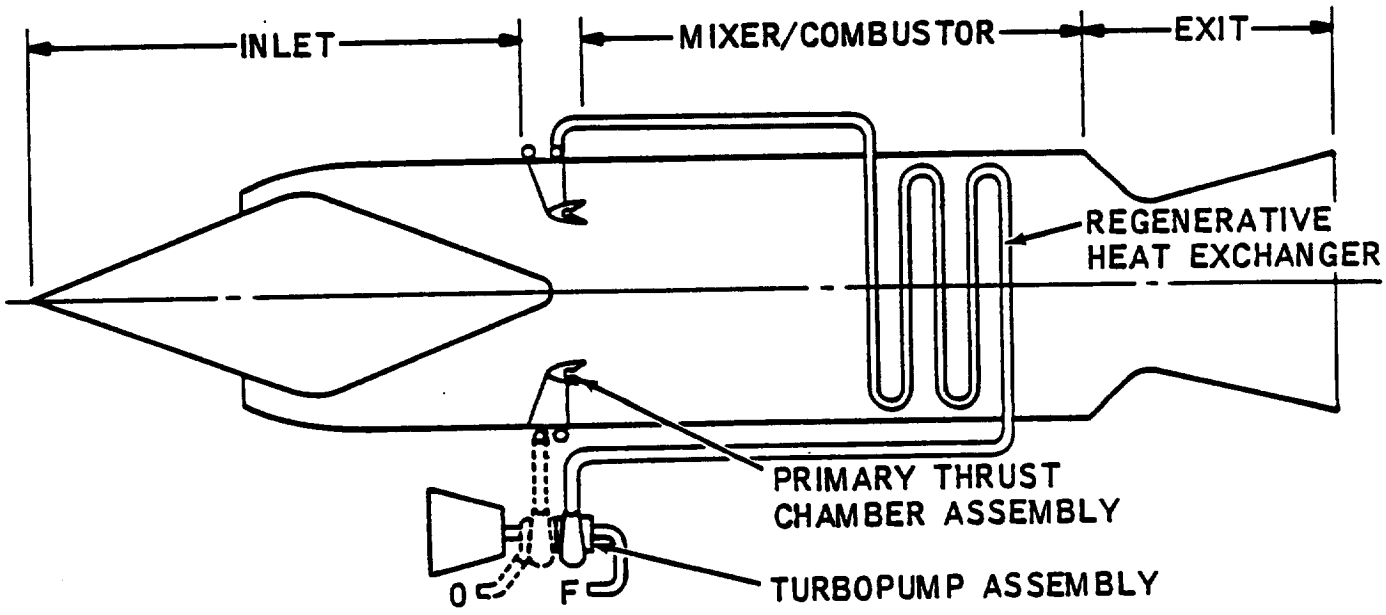

Eng. No. 35

Engine Internal Operating Parameters, nominal

$P_{c-H_2} = 1000$ psia

W_s/W_p (SLS) = 1.82, $\phi_{SEC-SLS} = 18.9$

$A_4/A_3 = 1.00$

Engine Operating Mode Block Diagrams

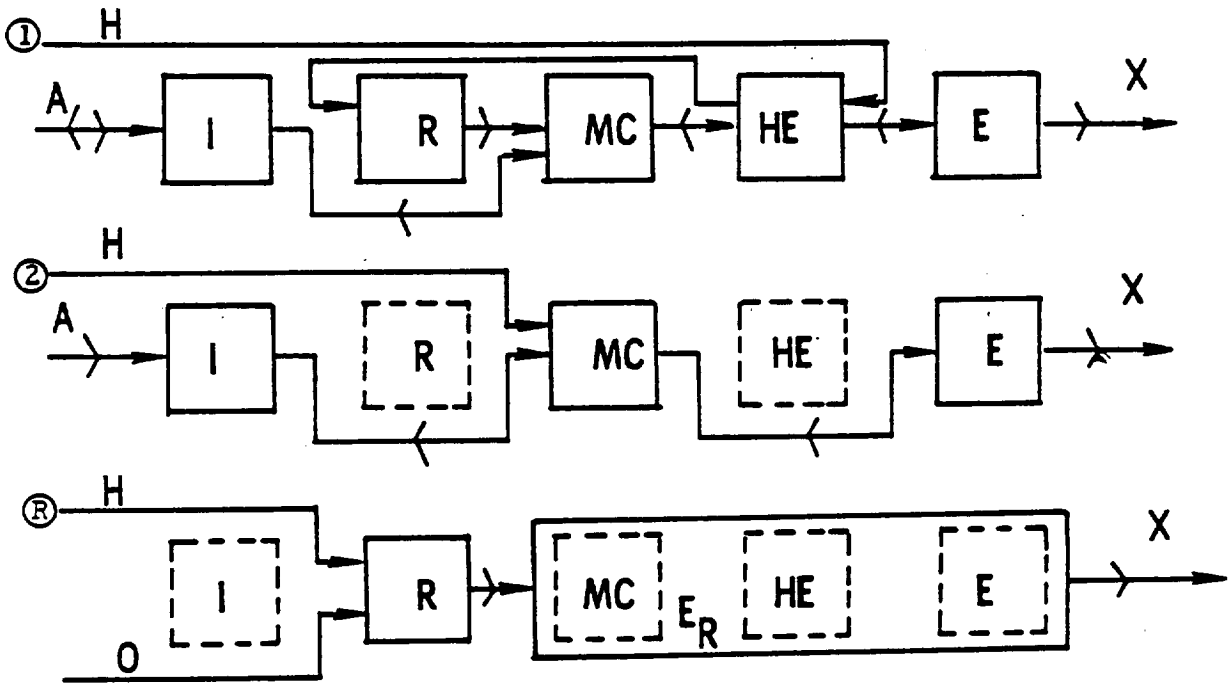

ENGINE PHYSICAL CHARACTERISTICS

Eng. No. 35

Thrust, sls	250,000 lbf	1,112,055 newton

Weight and Thrust/Weight Ratio

Measuring Units	(English)	(International)
Weight	lbm	kg
Thrust/Weight	lbf/lbm	newton/kg

Lightweight Estimate

(lbf/in^2) Maximum Engine Internal Pressure 1000 (newton/m^2)

Subsystems:	50	100	250	344.7	689.5	1723.7
Fan						
Regenerator	1000	1000	1000	453.6	453.6	453.6
Primary Rocket	2500	2500	2500	1134.0	1134.0	1134.0
Mixer/Diffuser	748	1088	1496	339.3	493.5	678.6
Combustor/Exit	1496	1706	2312	678.6	773.8	1048.7
Contingency	496	551	653	225.0	249.9	296.2
Uninstalled Eng. Wt.	6240	6845	7961	2830.5	3104.9	3611.1
Thrust/Weight, Uninst.	40.1	36.5	31.4	393	358	308
Inlet Weight	2765	3160	4582	1254.2	1433.4	2078.4
Installed Eng. Wt.	9005	10005	12543	4084.7	4538.3	5689.5
Thrust/Weight, Inst.	27.8	25.0	19.9	273	245	195

Heavyweight Estimate

Uninstalled Eng. Wt.	7488	8214	9553	3396.6	3725.9	4333.2
Thrust/Weight, Uninst.	33.4	30.4	26.2	328	298	257
Inlet Weight	11074	12656	17798	5023.2	5740.8	8073.2
Installed Eng. Wt.	18562	20870	27351	8419.7	9466.6	12406.4
Thrust/Weight, Inst.	13.5	12.0	9.1	132	118	89

Engine Flow Areas and Equivalent Diameters

	ft^2	ft	m^2	m
Inlet Cowl, A_c	79.1	10.03	7.35	3.06
Mixer, A_3	69.0	9.37	6.41	2.86
Combustor, A_4	69.0	9.37	6.41	2.86
Exit, A_6	110.0	11.83	10.22	3.61

Engine Lengths

	ft	m
Uninstalled	15.8	4.82
Inlet (Typ)	37.1	11.31
Installed (Typ)	52.9	16.13

REMARKS, REFERENCES

Regenerative Hydrogen Cycle. (References 6, 21)

SPECIFIC IMPULSE
REFERENCE TRAJECTORIES

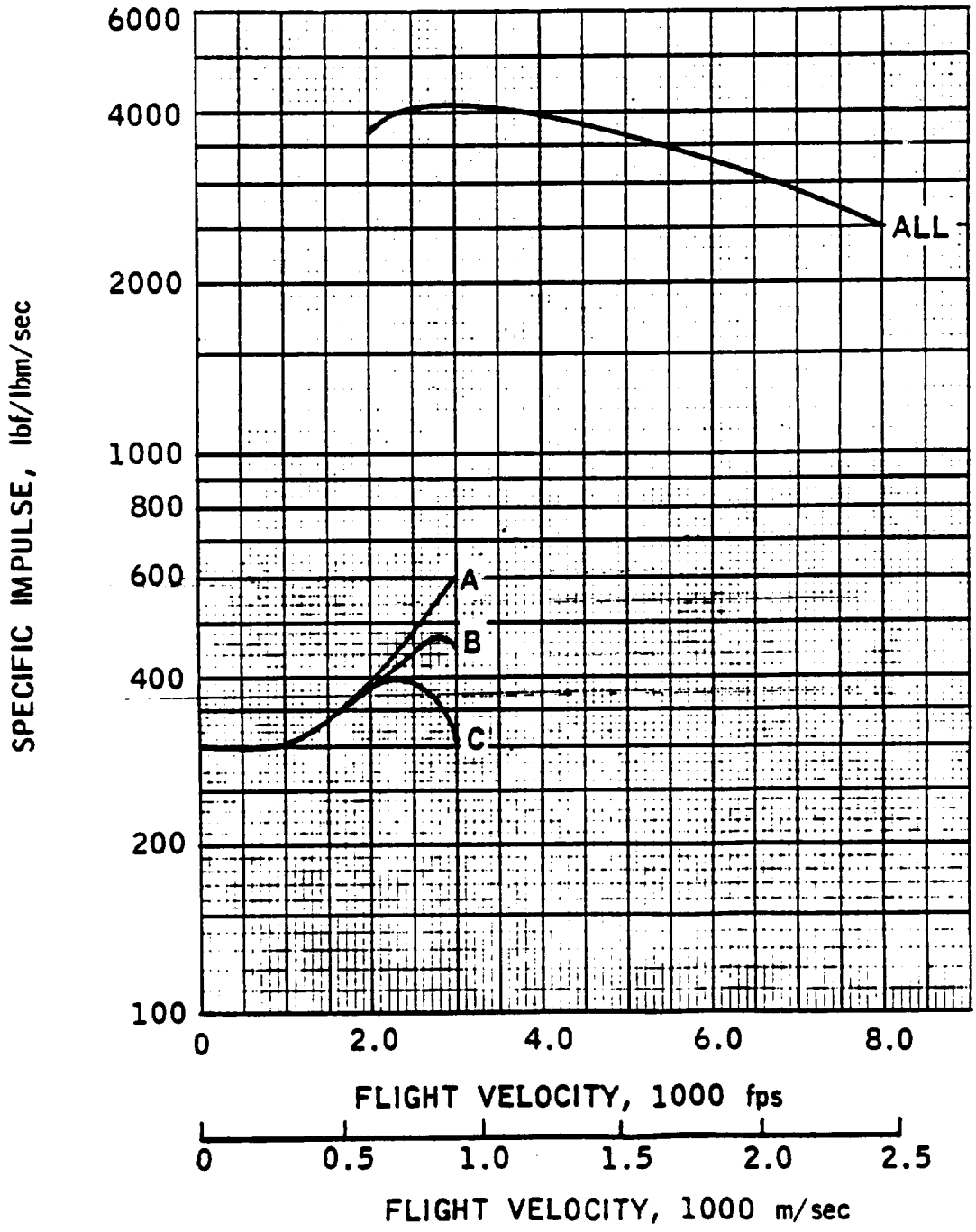

ENG. NO. 35

THRUST

REFERENCE TRAJECTORIES

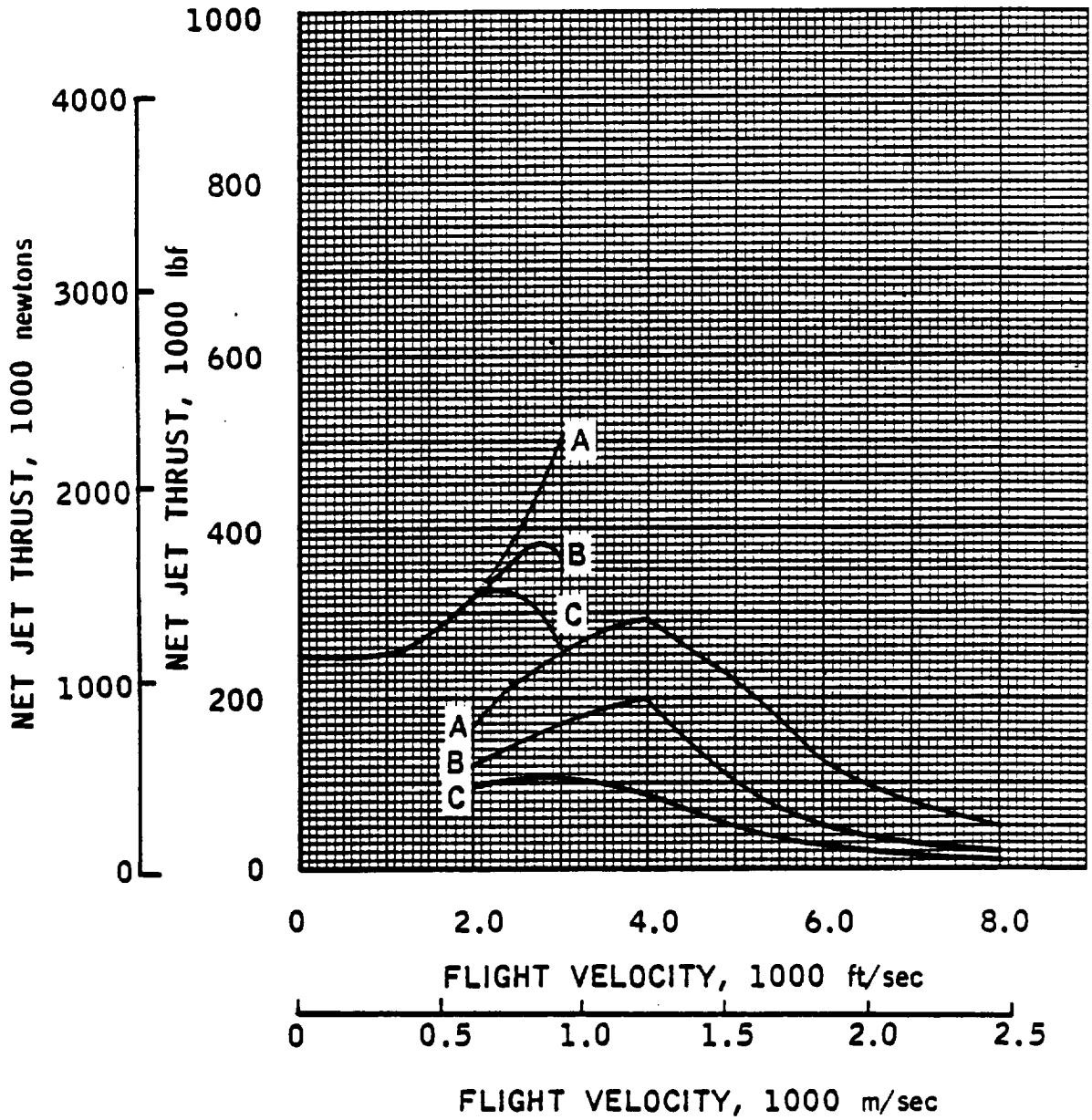

CAPTURE AREA

REFERENCE TRAJECTORIES

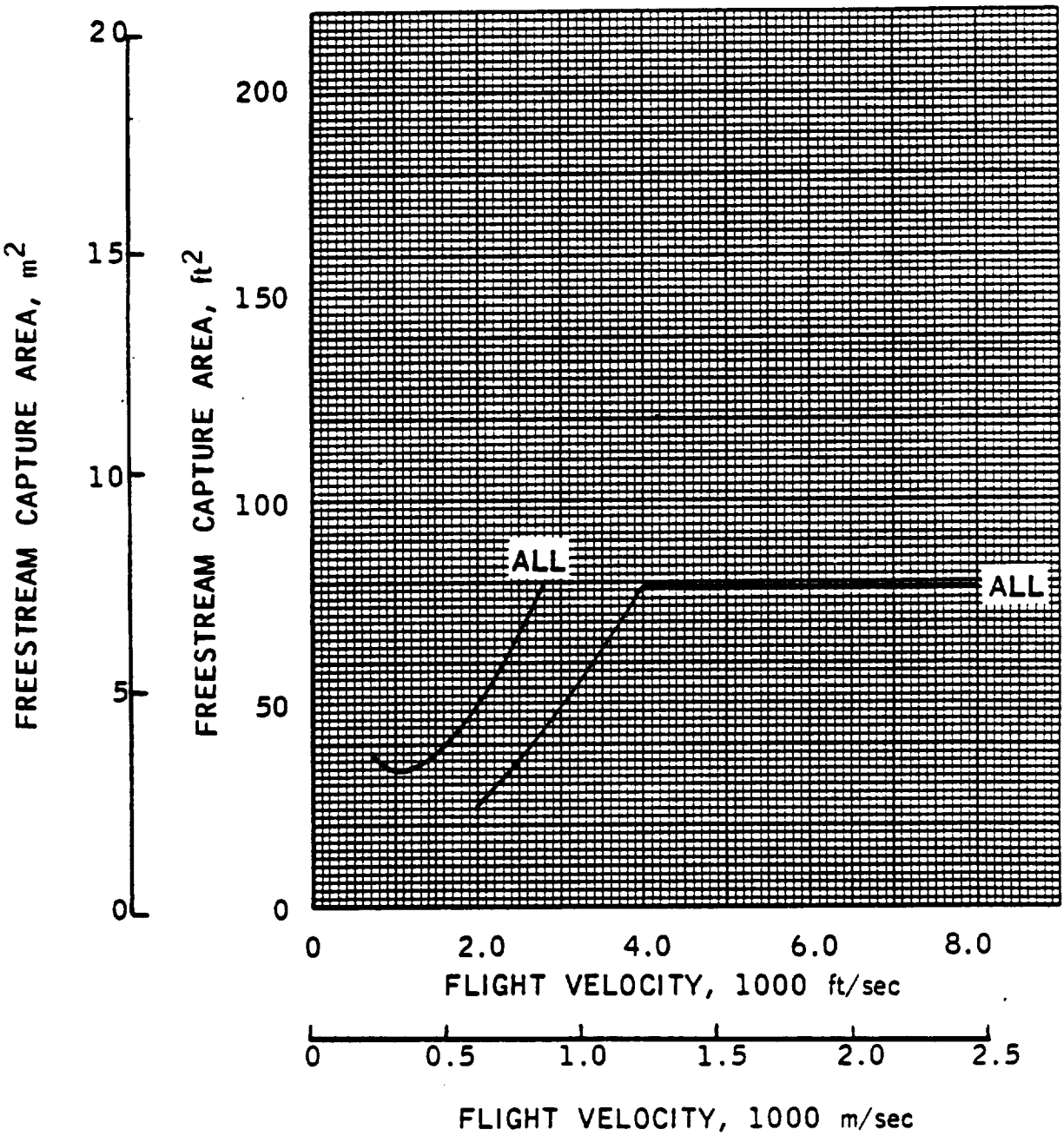

ENG. NO. 35

AIRFLOW

REFERENCE TRAJECTORIES

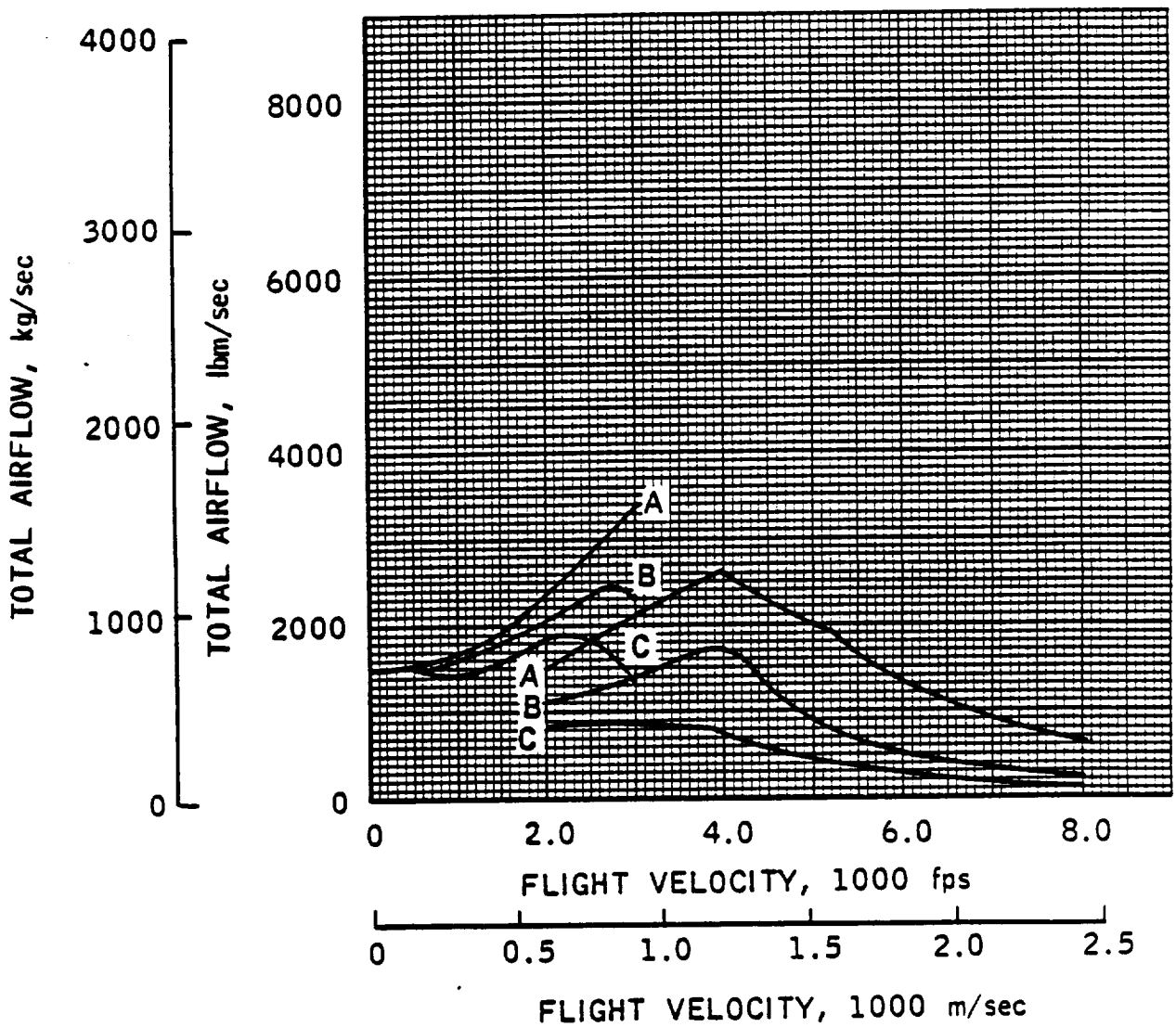

ENGINE- 35

ESTIMATED PERFORMANCE

MC	VC	FTC	FTC	T	CF	IS	SFC	FT2	F2	F2
				ALTITUDE -		0. FEET				
0.10	112.	124.7	14.8	250000.	*******	300.	12.00	14.80	*******	*******
				ALTITUDE -		10000. FEET				
0.65	700.	125.7	13.4	250000.	*******	300.	12.00	13.43	*******	*******
0.70	754.	127.3	14.0	250000.	*******	300.	12.00	14.02	*******	*******
0.75	851.	130.4	15.3	250000.	*******	300.	12.00	15.26	*******	*******
				ALTITUDE -		20000. FEET				
1.01	1047.	129.3	12.9	252800.	*******	306.	11.76	12.94	*******	*******
1.21	1255.	138.8	16.6	262500.	*******	315.	11.43	16.47	*******	*******
1.45	1504.	152.5	23.1	278000.	*******	337.	10.68	22.52	*******	*******
				ALTITUDE -		30000. FEET				
1.46	1453.	141.0	15.2	274500.	*******	332.	10.84	14.77	*******	*******
1.71	1701.	156.6	21.9	295000.	*******	355.	10.14	20.89	*******	*******
2.06	2049.	182.7	37.6	336000.	*******	407.	8.85	34.55	*******	*******
				ALTITUDE -		40000. FEET				
1.91	1849.	161.9	18.6	305400.	*******	369.	9.76	17.36	*******	*******
2.22	2149.	185.8	30.1	335000.	*******	391.	9.21	27.20	*******	*******

ENGINE- 35

ESTIMATED PERFORMANCE

M2	WS	WP	WSWP	WFT	FFP	FFS	V6	PT2C	AC	A5	A6
					ALTITUDE -		0. FEET				
*****	1513.	833.	1.82	833.3	*****	18.882	*******	1.00	177.20	*******	*******
					ALTITUDE -		10000. FEET				
*****	1507.	833.	1.81	833.3	*****	18.557	*******	1.00	38.11	*******	*******
*****	1564.	833.	1.88	833.3	*****	18.265	*******	1.00	36.73	*******	*******
*****	1810.	833.	2.17	833.3	*****	15.782	*******	1.00	34.55	*******	*******
					ALTITUDE -		20000. FEET				
*****	1433.	826.	1.73	826.1	*****	15.767	*******	1.00	33.57	*******	*******
*****	1761.	833.	2.11	833.3	*****	16.221	*******	0.95	34.41	*******	*******
*****	2330.	825.	2.82	824.5	*****	12.143	*******	0.98	38.00	*******	*******
					ALTITUDE -		30000. FEET				
*****	1567.	827.	1.89	826.8	*****	18.100	*******	0.98	37.64	*******	*******
*****	2048.	831.	2.46	831.0	*****	13.647	*******	0.95	42.00	*******	*******
*****	3024.	826.	3.66	825.6	*****	5.366	*******	0.92	51.50	*******	*******
					ALTITUDE -		40000. FEET				
*****	1550.	828.	1.92	827.6	*****	17.880	*******	0.93	45.50	*******	*******
*****	2214.	857.	2.58	856.8	*****	13.275	*******	0.90	54.50	*******	*******

[redacted]

ENGINE- 35

ESTIMATED PERFORMANCE

MC	VC	FTC	PTC	T	CF	IS	SFC	PT2	F2	F2
				ALTITUDE - 40000. FEET						
2.69	2604.	229.0	62.6	412000.	*******	459.	7.21	53.11	*******	*******
				ALTITUDE - 45500. FEET						
3.10	3000.	273.3	69.3	504500.	*******	611.	5.89	71.10	*******	*******
				ALTITUDE - 50000. FEET						
2.40	2320.	201.1	24.6	330300.	*******	399.	9.02	21.69	*******	*******
2.84	2750.	244.6	48.8	395700.	*******	479.	7.52	40.51	*******	*******
				ALTITUDE - 54000. FEET						
3.10	3000.	273.3	59.5	364000.	*******	441.	8.16	47.37	*******	*******
				ALTITUDE - 60000. FEET						
2.89	2800.	250.2	32.7	252400.	*******	354.	10.17	26.55	*******	*******
				ALTITUDE - 64000. FEET						
3.10	3000.	273.3	36.5	255800.	*******	309.	11.65	29.37	*******	*******

[redacted]

ENGINE- 35

ESTIMATED PERFORMANCE

P2	WS	WP	WSWP	WFT	PHP	PHS	V6	PT2C	AC	A5	A6
					ALTITUDE - 40000. FEET						
*****	3455.	826.	4.18	825.7	*****	8.200	*******	0.85	70.00	*******	*******
					ALTITUDE - 45500. FEET						
*****	3405.	826.	4.13	826.4	*****	8.305	*******	0.80	75.01	*******	*******
					ALTITUDE - 50000. FEET						
*****	1630.	828.	1.97	827.8	*****	17.421	*******	0.88	60.00	*******	*******
*****	2447.	826.	2.96	826.1	*****	8.772	*******	0.83	76.00	*******	*******
					ALTITUDE - 54000. FEET						
*****	2252.	825.	2.78	825.4	*****	12.342	*******	0.80	75.01	*******	*******
					ALTITUDE - 60000. FEET						
*****	1606.	826.	1.94	826.0	*****	17.637	*******	0.82	75.01	*******	*******
					ALTITUDE - 64000. FEET						
*****	1421.	828.	1.72	827.8	*****	19.583	*******	0.80	75.01	*******	*******

This Page Intentionally Blank

ENGINE FACT SHEET

Class 0 Composite Launch Vehicle Engines

Engine Identification Number: 36 Air Augmented Regenerative Monofuel Rocket - Convertible Ramjet

Engine Operating Modes

Summary: Number of Modes/ Transitions 6 ; Number of Discrete Modes Utilized 3

Mode Progression - Lift-off to Touch-down

(Take off) Air augmented heated hydrogen rocket, simultaneous mixing and burning cycle (2000-3000 ft/sec) Ramjet, subsonic combustion (6000-8000 ft/sec) Ramjet, supersonic combustion (10,000-14,000 ft/sec) Rocket (Orbital speed, space maneuvering and deorbiting) Ramjet, subsonic combustion (Flyback) Air augmented heated hydrogen rocket, simultaneous mixing and burning cycle (Landing)

Engine Propellant Requirements

Code: (R) = Required, (V) = Required for vacuum operation, (F) = Useable for flyback mode

- [R] Hydrogen, liquid, 37-40 °R
- [ ] Hydrogen, liquid, subcooled (25 °R)
- [ ] Hydrogen, gaseous
- [V] Oxygen, liquid, 162 °R
- [ ] Oxygen, liquid, subcooled
- [ ] Oxygen, gaseous
- [ ] Other _____

Engine Constituent Subsystems

Inlet, rocket, mixer-combustor, regenerator, exit

Engine General Arrangement and Operating Schematic

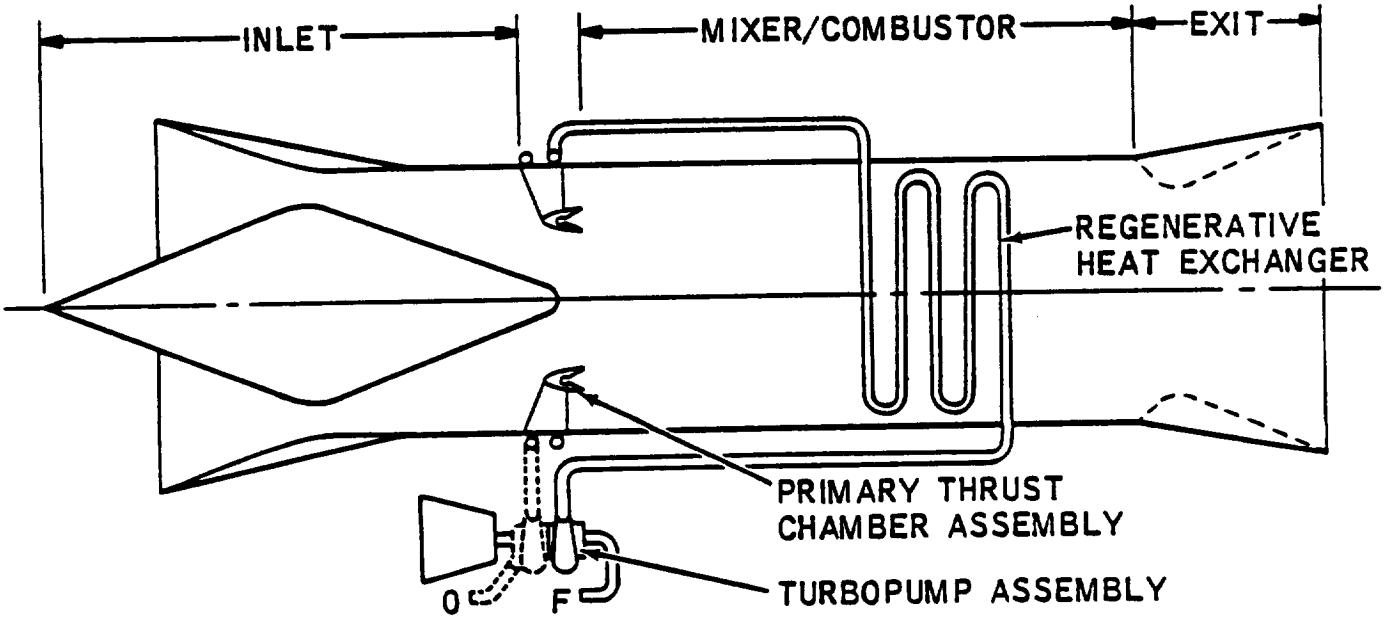

Eng. No. 36

Engine Internal Operating Parameters, nominal

$P_{c-H_2} = 1000$ psia

W_s/W_p (SLS) = 1.82, $\phi_{SEC-SLS} = 18.9$

$A_4/A_3 = 1.00$, $A_c/A_3 = 1.15$

Engine Operating Mode Block Diagrams

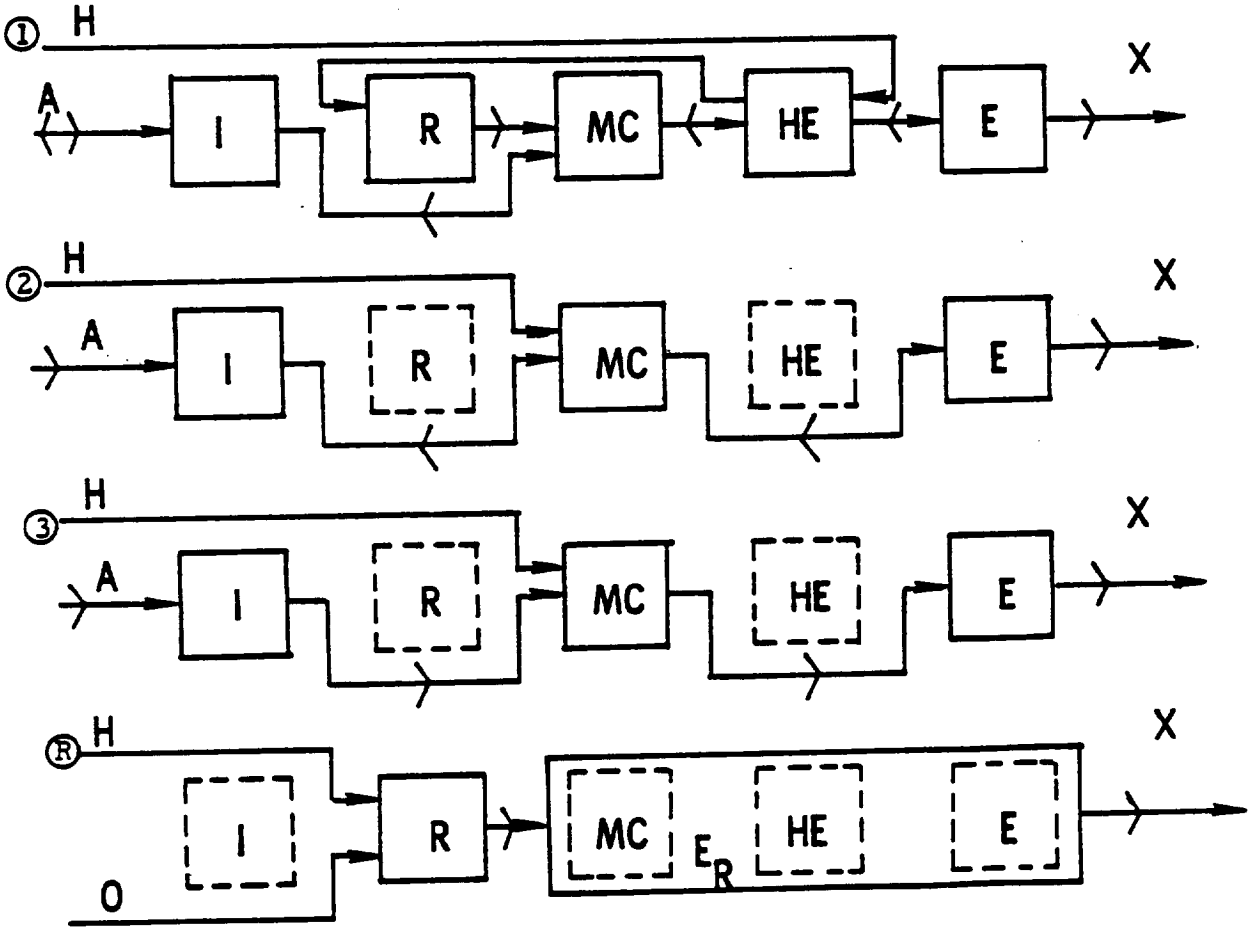

Eng. No. 36

The following information for Engine No. 36 appears in the fact sheets previously given for Engine No. 35.

Engine Physical Characteristics

Weight, Thrust/Weight, Flow Areas, Lengths

Engine Performance: 0-8000 ft/sec

Specific Impulse, Thrust, Airflow, Capture Area

References and additional remarks

SPECIFIC IMPULSE
REFERENCE TRAJECTORIES

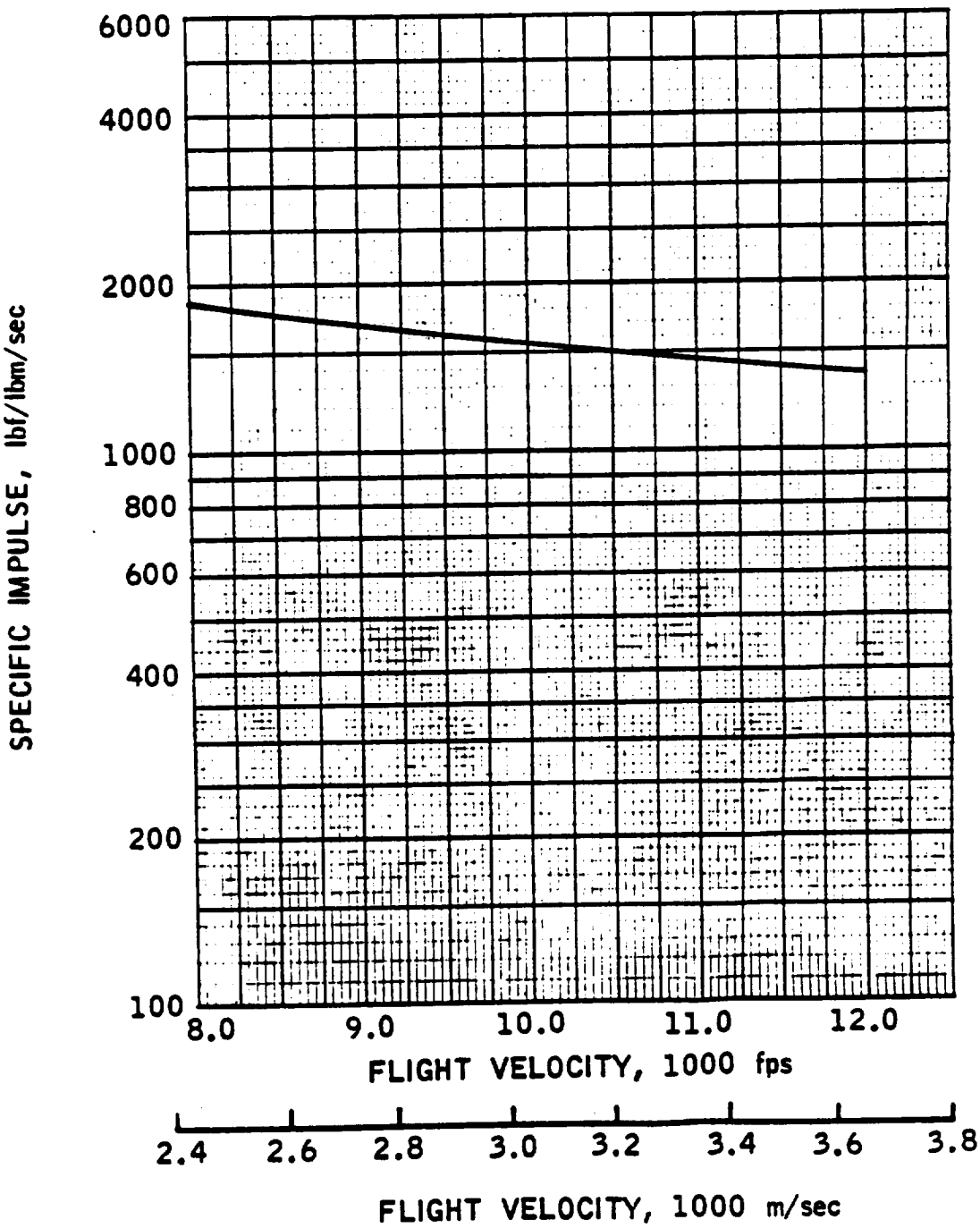

ENG. NO. 36

THRUST

REFERENCE TRAJECTORIES

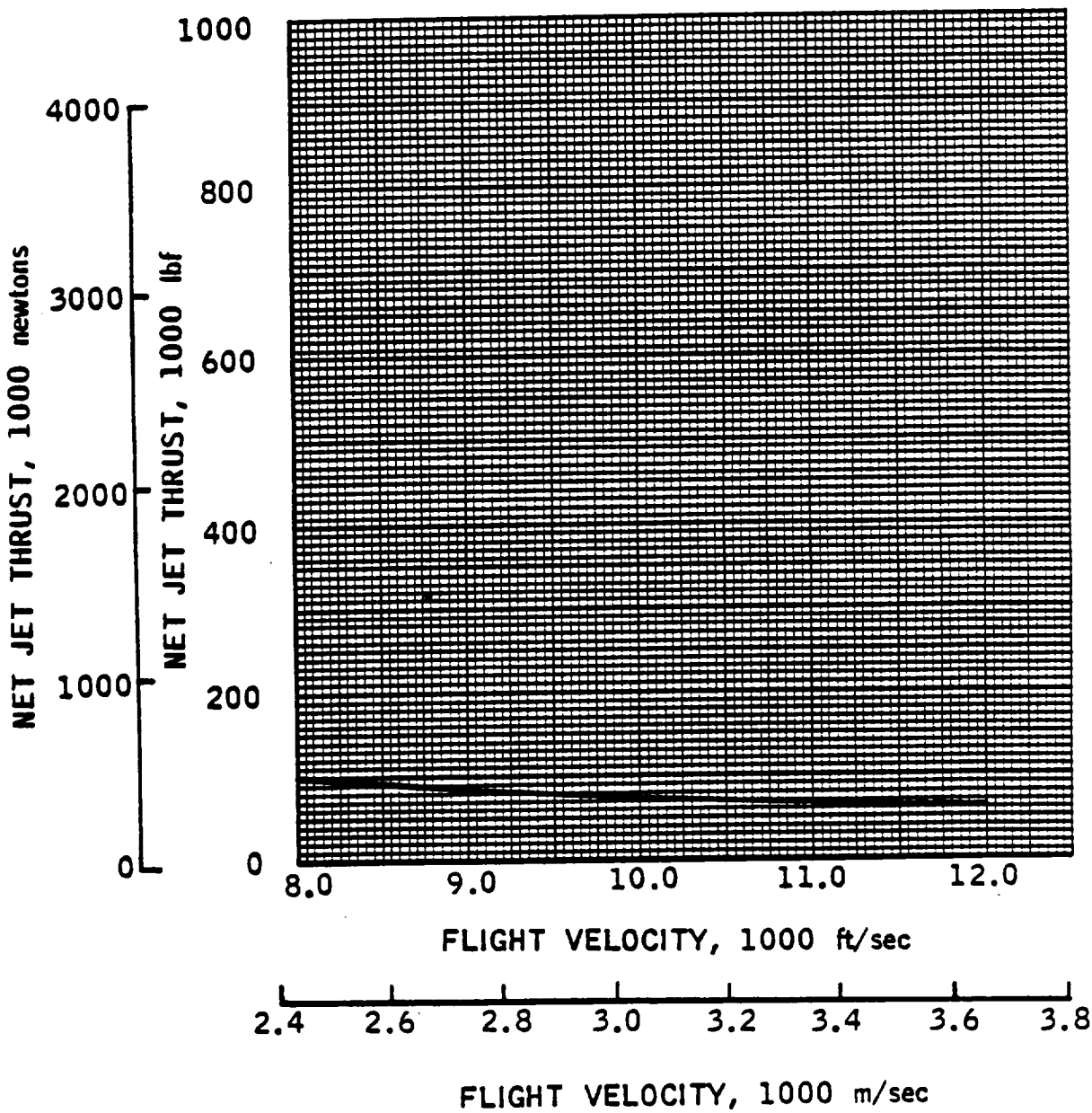

[redacted]

THE Marquardt CORPORATION VAN NUYS, CALIFORNIA

This Page Intentionally Blank

NOMENCLATURE

Nomenclature used in this report is given below. The tabulated computer printout information does not include subscripting as will be noted by the repetition of certain parameter symbols. Refer to Figure 2 for engine flow area station designations including the distinction made between A_∞ and A_o where a vehicle flow field is involved (where there is no flow field these are identical).

AB	-	Afterburner
A_4/A_3	-	Afterburner/Mixer Diffusion Ratio
A5	-	Engine nozzle throat area, ft^2
A6	-	Engine nozzle exit area, ft^2
A_6/A_5	-	Exit Nozzle Expansion Area Ratio
A_6/A_c	-	Exit to Capture Area Ratio (SCRAMJET)
AHX	-	Inlet capture area for heat exchanger air flow, ft^2
AO	-	Inlet capture area for secondary air flow, ft^2
AOT	-	Inlet capture area for total air flow, ft^2
BL	-	Baseline
C_F, CF	-	Thrust Coefficient based on inlet capture area
H2	-	Secondary air static enthalpy at mixer entrance, Btu/lb
HTO	-	Ambient Total Enthalpy, Btu/lb
I_{sp}, IS	-	Specific Impulse, $lb_f/lb_m/sec$ (Net Jet)*
M_o, MO	-	Local Mach Number
M2	-	Mixer entrance Mach number
NS	-	"Normal Shock" inlet (Includes Normal Shock losses plus an assumed 90% diffuser efficiency.)
O/F	-	Oxidizer/fuel mass flow ratio
P2	-	Secondary air static pressure at mixer entrance, Btu/lb
P_c	-	Primary chamber pressure, psia
PR_f	-	Fan pressure ratio
P_{T_2}, PT2	-	Inlet recovered total pressure, psia
P_{T2}/P_{TO}, PT2O	-	Inlet total pressure recovery
PTO	-	Ambient total pressure, psia

R	-	Rocket Mode
Ref	-	Reference
SLS	-	Sea Level, Static Conditions
SPC	-	Specific Fuel or propellant consumption, $lb_m/hr\text{-}lb_f$
T	-	Thrust, lb_f (Net Jet)*
V6	-	Exit velocity, ft/sec
V_o, VO	-	Local velocity, ft/sec
WFT	-	Total fuel or propellant flow rate, lb_m/sec
WHX	-	Heat exchanger air flow rate, lb_m/sec
W_P, WP	-	Primary flow rate, lb_m/sec
W_S/W_P, WSWP	-	Secondary/primary flow ratio
W_S, WS	-	Secondary (WS + WHX), lb_m/sec
WT	-	Total air flow
δ	-	Two dimensional wedge half angle, deg
η_c	-	Combustion efficiency based on enthalpy rise
η_c*	-	Characteristic velocity efficiency based on velocity, or thrust
η_{KE}	-	Inlet kinetic energy process efficiency
η_M	-	Mixing Efficiency based on static pressure rise
η_N	-	Nozzle efficiency based on stream thrust
ϕ, ϕ_{AB}	-	Combustor equivalence ratio
ϕ_{cond}	-	Condenser equivalence ratio
ϕ_{HX}	-	Heat exchanger equivalence ratio
ϕ_P, PHP	-	Primary rocket equivalence ratio
ϕ_{prec}	-	Precooler equivalence ratio
ϕ_{sec}, PHS	-	Secondary equivalence ratio

* Net jet thrust and specific impulse includes air induction inlet momentum penalty, but does not include external drag such as cowl, induced, friction, or spillage drag

REFERENCES

1. Summary Report, "A Study of Composite Propulsion Systems For Advanced Launch Vehicle Applications", Contract NAS7-377, Marquardt Report 25,194, Volume 1, September 1966. [redacted]

2. Main Technical Report, "A Study of Composite Propulsion System For Advanced Launch Vehicle Applications", Contract NAS7-377, Marquardt Report 25,194, Volumes 2 and 3, September 1966. [redacted]

3. Class 1 Engine Information (Twelve Engines), "A Study of Composite Propulsion Systems for Advanced Launch Vehicle Applications", Contract NAS7-377, Marquardt Report 25,194, Volume 6, September 1966. [redacted]

4. Class 2 Engine Information, "A Study of Composite Propulsion Systems For Advanced Launch Vehicle Applications", Contract NAS7-377, Marquardt Report 25,194, Volume 7, September 1966. [redacted]

5. "Final Summary Technical Report on the Calendar Year 1963, Ramjet Technology Program", Volume 2 of 12, "Jet Compressor Research-Ejector Ramjet Investigation", The Marquardt Corporation Report No. 25,116, April 1964. [redacted]

6. Cox, P. B., "Phase I Summary Technical Report of the CY 1962 Air Force-Marquardt Contributing Engineering Program", Volume III of VIII, "Advanced Engine Concepts and Advanced Logistics Systems Studies", Marquardt Report No. 25,065, March 1963. [redacted]

7. Cox, P.B., "Phase I Summary Technical Report of the CY 1962 Air Force-Marquardt Contributing Engineering Program", Volume I of VIII, "Program Summaries Electromagnetic Ramjet Research and Advanced Liquid Air Cycle Concepts", Marquardt Report No. 25,065, March 1963. [redacted]

8. Cox, P. B., "Phase I Summary Technical Report of the CY 1962 Air Force-Marquardt Contributing Engineering Program", Volume II of VIII, "Jet Compressor Research", Marquardt Report No. 25,065, March 1963. [redacted]

9. Pucker, M. E., "Advanced LACE-Air Collection and Enrichment Systems, Final Summary Report", Rocketdyne Report R-5255, 30 September 1963. [redacted]

10. Hearth, D. P., Brema, A., and Hedman, P., "Final Summary Report, Hypersonic Ramjet Engine Program, Volume I", Contract AF 33(600)-37921, Report No. 25,020, 28 March 1960. CONFIDENTIAL (Title-Unclassified)

11. Escher, W. J. D., et al, "MA158 Launch Vehicle Engine Preliminary Information", Marquardt Report MR 20,316, March 1965. [redacted]

12. Goldsmith, R. H., "Lift-Fan Technology", Astronautics and Aeronautics, September 1965, Unclassified.

13. Kutney, John T., "Propulsion System Development for V/STOL Transports", AIAA Paper No. 64-606, August 1964, [redacted].

14. Brown, M. L., and Builder, C. H., "Hypersonic, Air-Breathing Engine Research Program, Annual Report", Contract AF33(616)-7046, Marquardt Report 5838, 31 March 1961, [redacted]

15. Builder, C. H. and Kroll, R. W., "Preliminary Model Specification MA70-XAA Liquid Air Cycle Engine", Marquardt Report No. MR 20,100, June 1960. [redacted]

16. "The Liquid Propellant Hyperjet", Marquardt Report S-122, January 1959, [redacted]

17. "Air Augmented Rocket Propulsion Study", Final Report on Contract NAS4-661, Marquardt Report No. 25,148, November 1964. [redacted])

18. "Investigation of Vehicle-Integrated Rocket Powerplants with Air Augmentation", Final Report on Contract NAS8-11017. [redacted]

19. Mossman, E. A., Rozycki, R. C., and Holle, G. F., "RENE-A Concept for Thrust Augmentation of Rocket Engines", Martin-Denver Research Report R-63-16, October 1963. [redacted]

20. Flornes, B. J. and Stroup, K. E., "1964 Advanced Ramjet Concepts Program", Volume I of VI, "Advanced Jet Compression Engine Concepts", Technical Report AFAPL-TR-65-32, May 1965 [redacted])

21. Brown, M. L., Woodgrift, K. E., Ozawa, R. I., "Applied Research and Advanced Technology for the Supersonic Combustion Ramjet for 1964, Part I. Design and Analysis, Fuel Injection and Combustion, Nozzles, Structures, and Control System Studies", Technical Report AFAPL-TR-65-15, Part 1, The Marquardt Corporation, April 1965. [redacted])

22. "Interim Report--Toroidal Systems Analysis Study", Rocketdyne Report R-6226, 30 June 1965. [redacted]

DISTRIBUTION

Copy No.	Transmitted to
1.	NASA Office of Resident Representative Jet Propulsion Laboratory 4800 Oak Grove Drive Pasadena, California 91103 Attn.: Office of Technical Information
2.	NASA Office of Resident Representative Jet Propulsion Laboratory 4800 Oak Grove Drive Pasadena, California 91103 Attn.: Contracts Management Division
3.	NASA Office of Resident Representative Jet Propulsion Laboratory 4800 Oak Grove Drive Pasadena, California 91103 Attn.: General Counsel for Patent Matters
4 to 7.	NASA Headquarters Washington, D. C. 20546 Attn.: Chief, Liquid Propulsion Technology, RPL Office of Advanced Research and Technology
8 to 32.	NASA Scientific and Technical Information Facility P. O. Box 33 College Park, Maryland 20740
33.	NASA Headquarters Washington, D. C. 20546 Attn.: Mr. Vincent L. Johnson Director, Launch Vehicles and Propulsion, SV Office of Space Science and Applications
34.	NASA Headquarters Washington, D. C. 20546 Attn.: Mr. Edward L. Gray Director, Advanced Manned Missions, MT Office of Manned Space Flight
35.	NASA Ames Research Center Moffett Field, California 24035 Attn.: Mr. Clarence A. Syvertson Mission Analysis Division

DISTRIBUTION (Continued)

Copy No.	Transmitted to
36.	Marshall Space Flight Center Huntsville, Alabama 35812 Attn.: Technical Monitor Mr. Donald Thompson
37.	Langley Research Center Langley Station Hampton, Virginia 23365 Attn.: Mr. Kenneth Pierpont
38.	NASA Ames Research Center Moffett Field, California 94035 Attn.: Mr. Thomas Gregory Mission Analysis Division
39, 40.	NASA Ames Research Center Moffett Field, California 94035 Attn.: Harvey J. Allen Director
41, 42.	NASA Goddard Space Flight Center Greenbelt, Maryland 20771 Attn.: Merland L. Moseson Code 620
43, 44.	NASA Jet Propulsion Laboratory California Institute of Technology 4800 Oak Grove Drive Pasadena, California 91103 Attn.: Henry Burlage, Jr. Propulsion Div., 38
45, 46.	NASA Langley Research Center Langley Station Hampton, Virginia 23365 Attn.: Dr. Floyd L. Thompson Director
47, 48.	NASA Lewis Research Center 21000 Brookpark Road Cleveland, Ohio 44135 Attn.: Dr. Abe Silverstein Director

DISTRIBUTION (Continued)

Copy No.	Transmitted to
49, 50.	NASA Marshall Space Flight Center Huntsville, Alabama 35812 Attn.: Hans G. Paul Code R-P&VED
51, 52.	NASA Manned Spacecraft Center Houston, Texas 77001 Attn.: Dr. Robert R. Gilruth Director
53, 54.	NASA Office of Resident Representative Jet Propulsion Laboratory 4800 Oak Grove Drive Pasadena, California 91103 Attn.: Robert W. Kamm Director
55, 56.	NASA John F. Kennedy Space Center Cocoa Beach, Florida 32931 Attn.: Dr. Kurt H. Debus
57.	Aeronautical Systems Division Air Force Systems Command Wright-Patterson Air Force Base Dayton, Ohio 45433 Attn.: D. L. Schmidt Code ASRCNC-2
58.	Air Force Missile Development Center Holloman Air Force Base, New Mexico Attn.: Maj. R. E. Bracken Code MDGRT
59.	Air Force Missile Test Center Patrick Air Force Base, Florida Attn.: L. J. Ullian
60.	Air Force Systems Division Air Force Unit Post Office Los Angeles 45, California Attn.: Col. Clark Technical Data Center

DISTRIBUTION (Continued)

Copy No.	Transmitted to
61.	Arnold Engineering Development Center Arnold Air Force Station Tullahoma, Tennessee Attn.: Dr. H. K. Doetsch
62.	Bureau of Naval Weapons Department of the Navy Washington 25, D. C. Attn.: J. Kay RTMS-41
63.	Defense Documentation Center Headquarters Cameron Station, Building 5 5010 Duke Street Alexandria, Virginia 22314 Attn.: TISIA
64.	Headquarters, U. S. Air Force Washington 25, D. C. Attn.: Col. C. K. Stambaugh AFRST
65.	Picatinny Arsenal Dover, New Jersey 07801 Attn.: I. Forsten, Chief Liquid Propulsion Laboratory SMUPA-DL
66.	Air Force Rocket Propulsion Laboratory Research and Technology Division Air Force Systems Command Edwards, California 93523 Attn.: H. Main, RPRR
67.	Research and Technology Division Air Force Aero Propulsion Laboratory Wright-Patterson Air Force Base, Ohio 45433 Attn.: H. C. Long, APRP
68.	U. S. Atomic Energy Commission Technical Information Services Box 62 Oak Ridge, Tennessee Attn.: A. P. Huber Oak Ridge Gaseous Diffusion Plant (ORGDP) P. O. Box P

DISTRIBUTION (Continued)

Copy No.	Transmitted to
69.	U. S. Army Missile Command Redstone Arsenal Alabama 35809 Attn.: Dr. Walter Wharton
70.	U. S. Naval Ordnance Test Station China Lake, California 93557 Attn.: Chief, Missile Propulsion Division Code 4562
71.	Air Force Systems Command Space Systems Division Inglewood, California 90045 Attn.: Lt. Col. Kenneth Mc Aaron
72.	Chemical Propulsion Information Agency Applied Physics Laboratory 8621 Georgia Avenue Silver Spring, Maryland 20910 Attn.: Neil Safeer
73.	Aerojet-General Corporation P. O. Box 296 Azusa, California 91703 Attn.: L. F. Kohrs
74.	Aerojet-General Corporation P. O. Box 1947 Sacramento, California 95809 Attn.: R. Stiff Technical Library, Bldg. 2015, Dept. 2410
75.	Aeronutronic Philco Corporation Ford Road Newport Beach, California 92663 Attn.: D. A. Carrison
76.	Aerospace Corporation 2400 East El Segundo Boulevard P. O. Box 95085 Los Angeles, California 90045 Attn.: John G. Wilder Propulsion Dept. MS-2293

DISTRIBUTION (Continued)

Copy No.	Transmitted to
77.	Arthur D. Little, Inc. 20 Acorn Park Cambridge, Massachusetts 02140 Attn.: E. Karl Bastress
78.	Astropower Laboratory Douglas Aircraft Company 2121 Paularino Newport Beach, California 92663 Attn.: Dr. George Moc Director, Research
79.	Astrosystems International, Inc. 1275 Bloomfield Avenue Fairfield, New Jersey 07007 Attn.: A. Mendenhall
80.	Atlantic Research Corporation Edsall Road and Shirley Highway Alexandria, Virginia 22314 Attn.: A. Scurlock
81.	Beech Aircraft Corporation Boulder Division Box 631 Boulder, Colorado Attn.: J. H. Rodgers
82.	Bell Aerosystems Company P. O. Box 1 Buffalo, New York 14240 Attn.: W. M. Smith
83.	Bendix Systems Division Bendix Corporation 3300 Plymouth Road Ann Arbor, Michigan Attn.: John M. Brueger
84.	Boeing Company P. O. Box 3707 Seattle, Washington 98124 Attn.: J. D. Alexander

DISTRIBUTION (Continued)

Copy No.	Transmitted to
85.	Missile Division Chrysler Corporation P. O. Box 2628 Detroit, Michigan 48231 Attn.: John Gates
86.	Wright Aeronautical Division Curtiss-Wright Corporation Wood-Ridge, New Jersey 07075 Attn.: G. Kelley
87.	Missile and Space Systems Division Douglas Aircraft Company, Inc. 3000 Ocean Park Boulevard Santa Monica, California 90406 Attn.: R. W. Hallet Chief Engineer, Advanced Space Tech.
88.	Aircraft Missiles Division Fairchild Hiller Corporation Hagerstown, Maryland 10 Attn.: J. S. Kerr
89.	General Dynamics/Astronautics P. O. Box 1128 San Diego, California 92112 Attn.: Frank Dore Library & Information Services (128-00)
90.	Re-Entry Systems Department General Electric Company 3198 Chestnut Street Philadelphia, Pennsylvania 19101 Attn.: F. E. Schultz
91.	Advanced Engine & Technology Dept. General Electric Company Cincinnati, Ohio 45215 Attn.: D. Suichu
92.	Grumman Aircraft Engineering Corp. Bethpage, Long Island New York Attn.: Joseph Gavin

DISTRIBUTION (Continued)

Copy No.	Transmitted to
93.	Ling-Temco-Vought Corporation Astronautics P. O. Box 5907 Dallas, Texas 75222 Attn.: Warren C. Trent
94.	Lockheed-California Company 2555 North Hollywood Way Burbank, California 91503 Attn.: G. D. Brewer
95.	Lockheed Missiles and Space Company P. O. Box 504 Sunnyvale, California 94088 Attn.: Y. C. Lee Technical Information Center
96.	Lockheed Propulsion Company P. O. Box 111 Redlands, California 92374 Attn.: H. L. Thackwell
97.	Baltimore Division Martin-Marietta Corporation Baltimore, Maryland 21203 Attn.: John Calathes (3214)
98.	Denver Division Martin-Marietta Corporation P. O. Box 179 Denver, Colorado 80201 Attn.: J. D. Goodlette (A-241)
99.	McDonnell Aircraft Corporation P. O. Box 516 Municipal Airport St. Louis, Missouri 63166 Attn.: R. A. Herzmark
100.	Space & Information Systems Division North American Aviation, Inc. 12214 Lakewood Boulevard Downey, California 90241 Attn.: H. Storms

DISTRIBUTION (Continued)

Copy No.	Transmitted to
101.	Rocketdyne North American Aviation, Inc. 6633 Canoga Avenue Canoga Park, California 91304 Attn.: E. B. Monteath Library, 586-306
102.	Northrop Space Laboratories 3401 West Broadway Hawthorne, California Attn.: Dr. William Howard
103.	Astro-Electronics Division Radio Corporation of America Princeton, New Jersey 08540 Attn.: S. Fairweather
104.	Reaction Motors Division Thiokol Chemical Corporation Denville, New Jersey 07832 Attn.: Arthur Sherman
105.	Republic Aviation Corporation Farmingdale Long Island, New York Attn.: Dr. William O'Donnell
106.	Space-General Corporation 9200 East Flair Avenue El Monte, California 91734 Attn.: C. E. Roth
107.	Stanford Research Institute 333 Ravenswood Avenue Menlo Park, California 94025 Attn.: Lionel Dickinson
108.	Space Technology Laboratories TRW Incorporated One Space Park Redondo Beach, California 90278 Attn.: G. W. Elverum

DISTRIBUTION (Continued)

Copy No.	Transmitted to
109.	TAPCO Division TRW, Incorporated 23555 Euclid Avenue Cleveland, Ohio 44117 Attn.: P. T. Angell
110.	Thiokol Chemical Corporation Huntsville Division Huntsville, Alabama Attn.: John Goodloe
111.	Research Laboratories United Aircraft Corporation 400 Main Street East Hartford, Connecticut 06108 Attn.: Erle Martin