FACILITY FORM 602

[redacted]

(THRU)

[redacted]

(PAGES)

(CODE)

[redacted]

(NASA CR OR TMX OR AD NUMBER)

(CATEGORY)

[redacted]

[redacted]

[redacted]

[redacted]

[redacted]

THE Marquardt VAN NUYS CALIFORNIA

CLASS O ENGINE FACT SHEETS

Part 1 of 2

A STUDY OF COMPOSITE PROPULSION SYSTEMS FOR ADVANCED LAUNCH VEHICLE APPLICATIONS

[redacted]

VOLUME FOUR

Report 25,194

Contract NAS7-377

The Marquardt Corporation
Van Nuys, California

GROUP 4
[redacted]

September 1966

This document contains information affecting the national defense of the United States within the meaning of the Espionage Laws, Title 18, U.S.C. Section 793 and 794, the transmission or revelation of which in any manner to an unauthorized person is prohibited by law.

DOWNGRADED AT 3 YEAR INTERVALS: DECLASSIFIED AFTER 12 YEARS. DOD DIR 5200.10

[redacted]

[redacted]

ACKNOWLEDGEMENT

This report results from the contributions of the following Marquardt Corporation technical personnel under NASA Contract NAS7-377:

C. W. Brandenberg
W. J. D. Escher
B. J. Flornes
W. R. Hammill
L. R. Hansen
J. J. Kuhlmeier
C. R. Orr
A. F. Truitt

Acknowledgement is also extended to those contract personnel associated at the Rocketdyne Division of North American Aviation, Incorporated and the Lockheed California Company who have contributed information used in this report. The assistance of Rocketdyne and Lockheed was received via Marquardt subcontracts under Contract NAS7-377.

FOREWORD

This report in two parts, Volumes 4 and 5, constitutes a portion of the final report documentation under National Aeronautics and Space Administration Contract NAS7-377. The study is summarized in Reference 1. The Main Technical Report comprises Reference 1. The Main Technical Report comprises Reference 2. This and two companion reports (Refs. 3 & 4) present general engine data derived from the study which are organized to facilitate their incorporation into concurrent and subsequent advanced systems studies.

Covered here are the Class 0 Engines (Thirty-six in number) studied in the program's initial phase. More complete study results relating to these engine concepts, including such areas as subsystem design trade-off studies and overall vehicle/mission analysis, are given in the main body of the project report (Reference 2).

This volume is one of seven comprising documentation for Contract NAS7-377, "A Study of Composite Propulsion Systems for Advanced Launch Vehicle Applications." Its placement in the report series is indicated below:

Volume 1	Summary Report
Volume 2	Main Technical Report, Part 1
Volume 3	Main Technical Report, Part 2
→ Volume 4	Class 0 Fact Sheets, Part 1
Volume 5	Class 0 Fact Sheets, Part 2
Volume 6	Class 1 Engine Information
Volume 7	Class 2 Engine Information

SION SYSTEMS - CLASS O CONFIDENTIAL

GENERAL LEGEND

- STEP MODE CHANGE
- STEP MODE CHANGE, UNCERTAIN SPEED AT CHANGE
- PHASED MODE CHANGE
- RECYCLED H_2 (SUB-COOLED) OPERATION
- SUPERCHARGED CYCLE (SIMPLE FAN)
- SUPERCHARGED CYCLE WITH H_2 RECYCLED
- MISSION - DEPENDENT ALTERNATIVE MODES

ENGINE OPERATING MODES

- ROCKET
- RAMJET - SUBSONIC COMBUSTION
- RAMJET - SUPERSONIC COMBUSTION (SCRAMJET)
- BASIC LACE
- BASIC LACE - RECYCLED H_2
- AIR-AUGMENTED ROCKET, SIMULTANEOUS MIXING AND BURNING CYCLE
- SUPERCHARGED AIR - AUGMENTED ROCKET, SIMULTANEOUS MIXING AND BURNING CYCLE
- AIR - AUGMENTED ROCKET, AFTERBURNING CYCLE
- SUPERCHARGED AIR - AUGMENTED ROCKET, AFTERBURNING CYCLE
- AIR - AUGMENTED LACE, SIMULTANEOUS MIXING AND BURNING CYCLE
- AIR - AUGMENTED LACE, SIMULTANEOUS MIXING AND BURNING CYCLE, RECYCLED H_2
- SUPERCHARGED AIR - AUGMENTED LACE, SIMULTANEOUS MIXING AND BURNING CYCLE
- SUPERCHARGED AIR - AUGMENTED LACE, SIMULTANEOUS MIXING AND BURNING CYCLE, RECYCLED H_2
- AIR - AUGMENTED LACE, AFTERBURNING CYCLE
- AIR - AUGMENTED LACE, AFTERBURNING CYCLE, RECYCLED H_2
- SUPERCHARGED AIR - AUGMENTED LACE, AFTERBURNING CYCLE
- SUPERCHARGED AIR - AUGMENTED LACE, AFTERBURNING CYCLE, RECYCLED H_2
- AIR - AUGMENTED HEATED HYDROGEN ROCKET, SIMULTANEOUS MIXING AND BURNING CYCLE
- AUGMENTER LACE
- AUGMENTER LACE, RECYCLED H_2
- DUCTED FAN, WITH OR WITHOUT PLENUM BURNING

Figure 1 - 2

L

CONFIDENTIAL

TABLE OF CONTENTS

	Page
PREFACE	vi
INTRODUCTION	1
DESCRIPTION OF FACT SHEET FORMAT	7
GENERAL TECHNICAL INFORMATION	17
REMARKS AND SPECIAL NOTES	40
NOMENCLATURE	245-246
REFERENCES	247-248
CLASS 0 ENGINE FACT SHEETS (Volume 4)	
Engine 0, Rocket, Very Advanced	42
Engine 1, Hyperjet	49
Engine 2, Hyperjet - Scramjet	69
Engine 3, Basic LACE	76
Engine 4, Recycled Basic LACE	89
Engine 5, Basic Air Augmented Rocket	104
Engine 6, Basic Air Augmented Rocket - Ramjet	132
Engine 7, Basic Air Augmented Rocket - Convertible Ramjet	152
Engine 8, Basic Air Augmented Rocket - SCRAMJET	159
Engine 9, Ejector Ramjet	166
Engine 10, Ejector SCRAMJET	186
Engine 11, Supercharged Ejector Ramjet	193
Engine 12, Supercharged Ejector SCRAMJET	204

TABLE OF CONTENTS

		Page
Engine 13,	Supercharged Basic Air Augmented Rocket	209
Engine 14,	Supercharged Basic Air Augmented Rocket - Ramjet	224
Engine 15,	Supercharged Basic Air Augmented Rocket - Convertible Ramjet	235
Engine 16,	Supercharged Basic Air Augmented Rocket - SCRAMJET	240
Engine 17,	Air Augmented LACE - Ramjet	249
Engine 18,	Air Augmented LACE - Convertible Ramjet	269
Engine 19,	Recycled Air Augmented LACE - Ramjet	276
Engine 20,	Recycled Air Augmented LACE - Convertible Ramjet	296
Engine 21,	RamLACE	303
Engine 22,	ScramLACE	323
Engine 23,	Recycled RamLACE	330
Engine 24,	Recycled ScramLACE	350
Engine 25,	Supercharged Air Augmented LACE - Ramjet	357
Engine 26,	Supercharged Air Augmented LACE-Convertible Ramjet	368
Engine 27,	Recycled Supercharged Air Augmented LACE - Ramjet	373
Engine 28,	Recycled Supercharged Air Augmented LACE - Convertible Ramjet	384
Engine 29,	Supercharged RamLACE	389
Engine 30,	Supercharged ScramLACE	400
Engine 31,	Recycled Supercharged RamLACE	405

TABLE OF CONTENTS

		Page
Engine 32,	Recycled Supercharged ScramLACE	416
Engine 33,	Augmenter LACE	421
Engine 34,	Recycled Augmenter LACE	434
Engine 35,	Air Augmented Regenerative Monofuel Rocket - Ramjet	447
Engine 36,	Air Augmented Regenerative Monofuel Rocket - Convertible Ramjet	458
Nomenclature		463-464
References		465-466

LIST OF MAIN REFERENCE ILLUSTRATIONS

		Page
1.	Identification and Ordering of Class 0 Systems	4
2.	Operating Schematics of Class 0 Engines	5
3.	Inlet Total Pressure Recovery	18
4.	Reference Trajectories for Evaluating Class 0 Systems (0-8000 ft/sec)	20
5.	Reference Trajectory for Evaluating Class 0 Systems (8000-12,000 ft/sec)	21
6.	Amplification of Freestream Air Flow and Physical Capture Area by Vehicle Flow Field	23
7.	Vehicle Flow Field Effects 0-8000 ft/sec Flight Velocity	25
8.	Vehicle Flow Field Effects 8000-12,000 ft/sec Flight Velocity	27
9.	Subsonic Combustion Ramjet Net Jet Specific Impulse	29
10.	Subsonic Combustion Ramjet Net Jet Thrust Coefficient Based on Freestream Capture Area	31
11.	Supersonic Combustion Ramjet Specific Impulse	33
12.	Supersonic Combustion Ramjet Net Jet Thrust Coefficient Based on Freestream Capture Area	35
13.	Engine Flow Area Station Nomenclature	37
14.	Flight Velocity/Mach Number/Altitude Correlation Curve	39

PREFACE

This report comprises a major portion of the technical results of the Class 0 study phase of NASA Contract NAS7-377, "A Study of Composite Propulsion Systems for Advanced Launch Vehicle Applications". This phase of the program was Task II (of four) of the contract work statement.

Composite cycle launch vehicle engines, as defined for this study, are single integrated propulsion systems which are comprised of both rocket (liquid-propellant) and airbreathing subsystems, e.g., primary bipropellant combustors, inlets. To date this type of powerplant has received little systematic study wherein common ground rules are employed to judge the possible merits of the large number of candidate engines.

The potential advantages offered by the more attractive composite systems in advanced (reusable) vehicles include the following points: high payload performance (exceeds the advanced rocket, roughly equals the turbomachine-type airbreather), high operational flexibility across the reusable-cycle mission profile, ease of development in terms of the indicated major facility requirement for competing pure-airbreathing engines (composite engines can be segmented to fit existing or planned ground test facilities which provide high simulated Mach number airflow capability).

It is the objective of the study to (1) appraise this potential for advanced, reusable launch vehicle applications, and (2) provide technical guidance for initiating possible research and development efforts directed toward the ultimate creation of these systems. The study included consideration of both single and multistage vehicles, for earth-orbit payload delivery. The study concentrated on launch vehicles in the 1,000,000 pound gross weight class which operate on hydrogen/oxygen propellants. In general, the study was directed toward propulsion system first availability in the period 1975-1985 and full mission-cycle propulsion requirements from lift-off to landing was considered. The principal performance criteria for engine ranking purposes was payload-in-orbit to gross weight ratio. Other criteria were, however, brought into play as appropriate.

Marquardt, prime contractor, Rocketdyne and Lockheed were associated in this analytical and design study effort. The study extended over nine (9) months with a final report (of which the present report is Volume 4 of seven) submitted to distribution in February 1967.

INTRODUCTION

GENERAL

This report is the first in a series of three, which specifically present engine information derived from the NASA-contracted study, "A Study of Composite Propulsion Systems for Advanced Launch Vehicle Applications" (NAS7-377). The three reports (the other two are Refs. 3 and 4) are associated with the three chronological phases of the study and comprise varying numbers of engine concepts and various degrees of technical penetration as follows:

Report Order	Associated Study Phase	Number of Engines Included	Technical Penetration
1 (This Report)	Class 0	36	Overall System Analysis only, performance on three (3) reference trajectories based on "ideal" inlet, important parameters "bracketed" only.
2 (Ref. 3)	Class 1	12	Included subsystem considerations, performance presented in map form, based on realistic inlets, conceptual designs made, important engine variables exercised parametrically.
3 (Ref.4)	Class 2	2	Effect of varying subsystem and component efficiencies and operational points assessed, performance maps broadened and refined, detailed conceptual designs rendered based on vehicle-stipulated sizing parameters, approaches for structural and thermal design and engine control investigated.

To this end the present report presents detailed working information on thirty-six (36) engine concepts which were identified as the initial candidates to be evaluated in the study.

The next section will briefly review the two engine concepts. Also the scope and content of this report will be summarized prior to the two major engine-oriented sections of the document.

CLASS 0 ENGINES

The Class 0 engine grouping comprises all of the candidate systems identified and initially ordered for processing in the study. Considerations leading to this listing of thirty-six (36) engines are described in the Main Technical Report (Ref. 2). This is summarized in the next paragraph.

As an initial study sub-task, all composite engine types of potential interest for launch vehicle application were identified, critically reviewed and, as appropriate, placed into a general ordered format. Among others, the following specific techniques were used to accomplish this objective:

1. A quasi-morphological approach wherein (1) engine operating modes and (2) engine hardware elements were used as a means to synthesize, and then to analyze candidate composite engines.

2. A survey and critical reevaluation of previously identified composite propulsion systems.

3. An attempt to invent new systems on a pragmatic, advanced launch vehicle applications requirements basis.

Within the stated guidelines, in all, 36 engine concepts were identified and included as Class 0 systems. The candidate systems are described below.

Figure 1 graphically represents these systems in terms of engine operating mode over the vehicle flight propulsion profile. The numerical coding (0-36) indicated on this figure is maintained throughout the study as basic descriptors of the engines. As a note, Engine 0 is a "very advanced" all-rocket system used as a baseline reference for judging the effectivity of the composite engine family. It is fully described in Reference 2. Figure 2 shows a schematic representation for each of the thirty-six Class 0 concepts.

CONTENT OF THE FACT SHEETS

Engine Description

Each of the thirty-six (36) engines shown in Figure 1 are further described, and their performance and physical characteristics are basically related in individual Fact Sheet sets contained in this report. Special types of information given in the Fact Sheets are:

1. Listing of engine operating modes, and their in-flight progression

2. Propellant requirements

3. Listing of constituent engine subsystems, i.e., engine physical make-up

4. Schematic diagram reflecting engine general arrangement and operation

5. Basic (generalized) design parameters (e.g., rocket primary to secondary air flow ratio, w_s/w_p)

6. Block diagram depiction of each engine's operating modes

Note: Items from this point on are based on a specific engine thrust size, 250,000 lbf. at sea level static conditions.

7. Weight and thrust/weight ratio data

8. Key engine flow areas and equivalent diameters

9. Engine lengths, typical

10. Specific impulse curves (net jet) for three flight trajectories from 0-8000 ft/sec (for engines capable of supersonic combustion ramjet modes, specific impulse is given for a single trajectory from 8000-12,000 ft/sec).

11. Thrust curves (net jet) corresponding to those conditions stated in 10 above.

12. Inlet capture area schedule used in determining the specific impulse and thrust data (Items 10 and 11 above).

13. Total engine air flow for the capture area schedule given (Item 12 above).

14. Tabulated computer-derived engine data for points along the reference trajectories for the 0-8000 ft/sec flight velocity range. Twenty-four (24) parametric items are given for each trajectory point calculated.

General Technical Information

Preceding the Fact Sheets, general technical data are provided upon which the specific engine information was predicated. Typical items given are:

1. Inlet pressure recovery schedule (Mil-E-5008B)

2. Reference trajectories (3)

3. General and specific examples of vehicle/engine pressure field effects on air flow and capture area

4. General subsonic combustion ramjet specific impulse and thrust coefficient data

5. General supersonic combustion ramjet specific impulse and thrust coefficient data.

These curves are discussed with respect to their applicability to the engine performance information given in the Fact Sheets.

This Page Intentionally Blank

CONFIDENTIAL

[redacted]

CANDIDATE COMPOSITE PRO

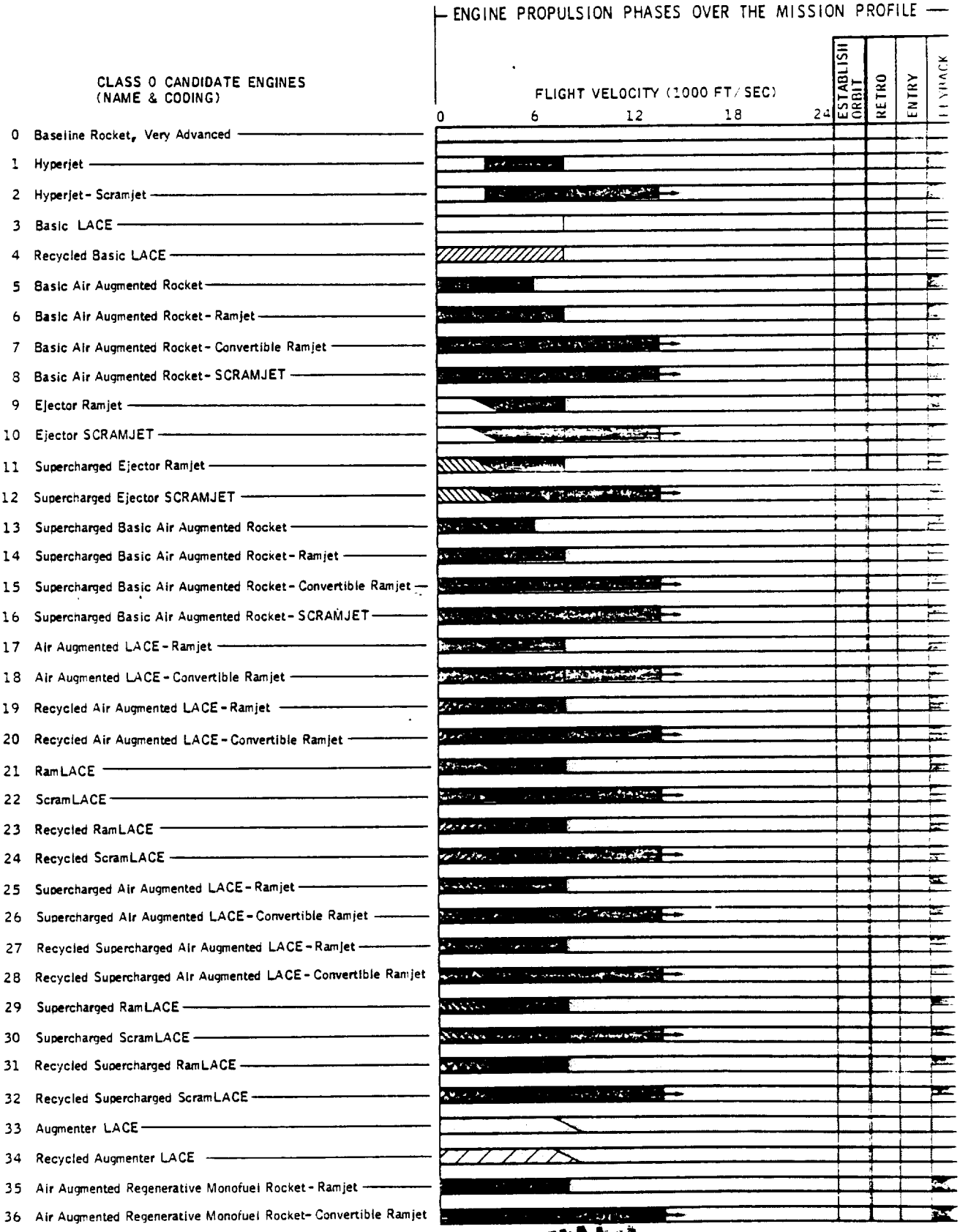

CONFIDENTIAL

CONFIDE

CONFIDENTIAL

COMPOS

SYNTHESIZED AND EV

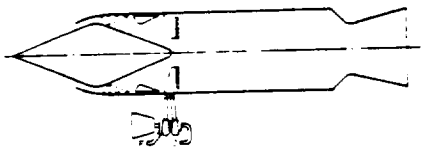

1 Hyperjet

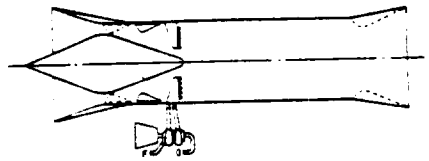

2 Hyperjet - Scramjet

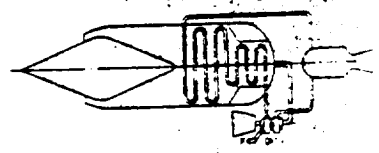

3 Basic LACE

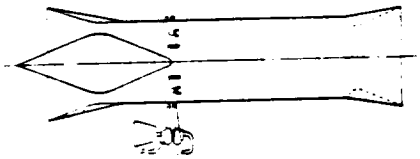

7 Basic Air Augmented Rocket - Convertible Ramjet

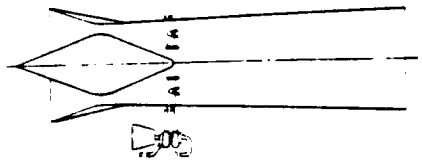

8 Basic Air Augmented Rocket - SCRAMJET

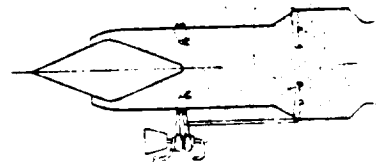

9 Ejector Ramjet

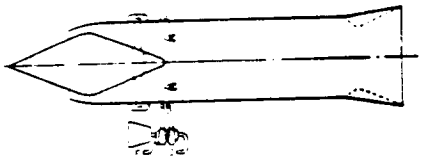

13 Supercharged Basic Air Augmented Rocket

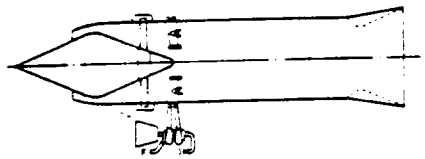

14 Supercharged Basic Air Augmented Rocket - Ramjet

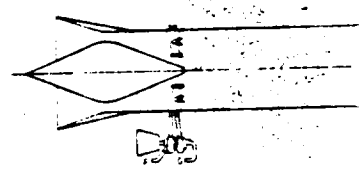

15 Supercharged Basic Air Augmented Rocket - Convertible Ramjet

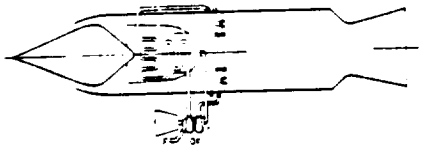

19 Recycled Air Augmented LACE - Ramjet

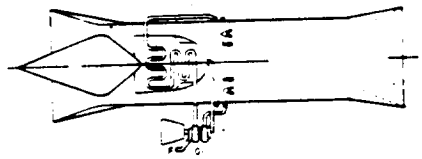

20 Recycled Air Augmented LACE - Convertible Ramjet

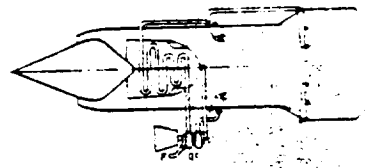

21 RamLACE

25 Supercharged Air Augmented LACE - Ramjet

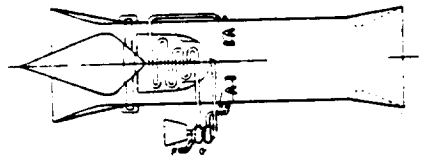

26 Supercharged Air Augmented LACE - Convertible Ramjet

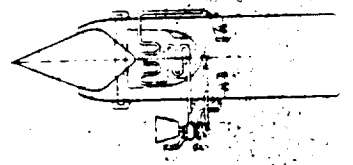

27 Recycled Supercharged Air Augmented L

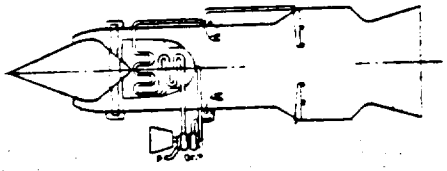

31 Recycled Supercharged RamLACE

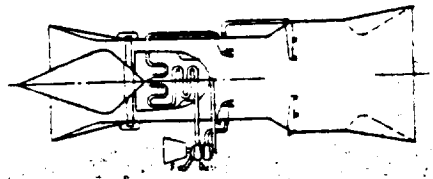

32 Recycled Supercharged ScramLACE

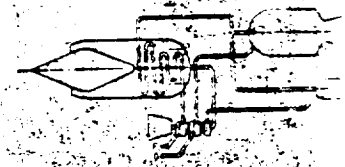

33 Augmenter LACE

CONFIDENTIAL

ITE ENGINES

ALUATED UNDER NAS 7-377

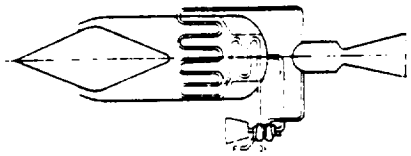

4 Recycled Basic LACE

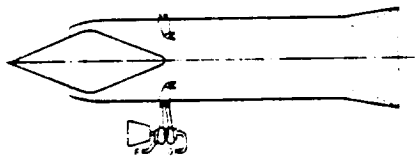

5 Basic Air Augmented Rocket

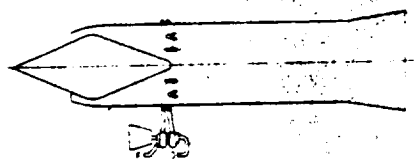

6 Basic Air Augmented Rocket - Ramjet

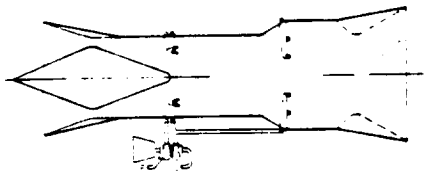

10 Ejector SCRAMJET

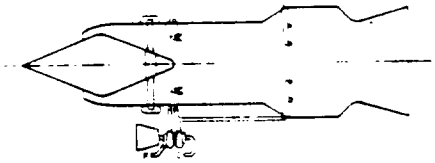

11 Supercharged Ejector Ramjet

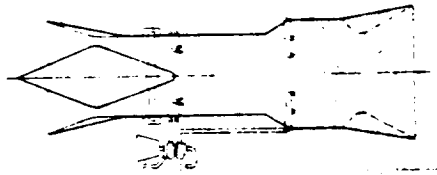

12 Supercharged Ejector SCRAMJET

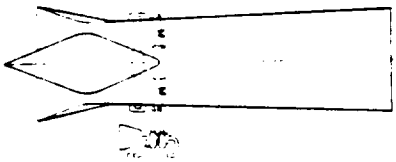

16 Supercharged Basic Air Augmented Rocket - SCRAMJET

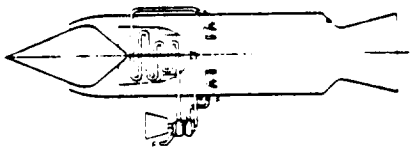

17 Air Augmented LACE - Ramjet

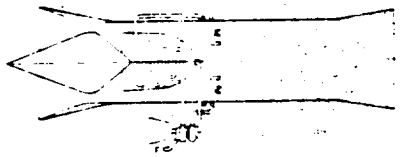

18 Air Augmented LACE - Convertible Ramjet

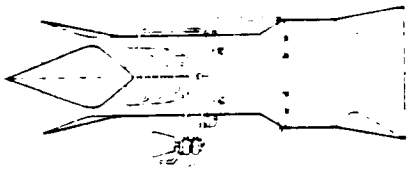

22 ScramLACE

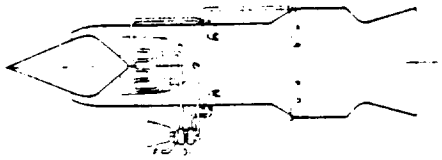

23 Recycled RamLACE

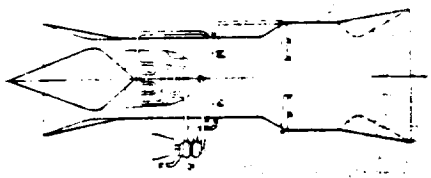

24 Recycled ScramLACE

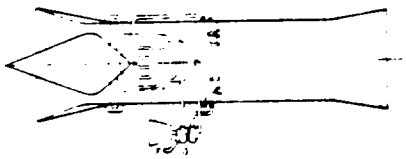

E - Ramjet

28 Recycled Supercharged Air Augmented LACE - Convertible Ramjet

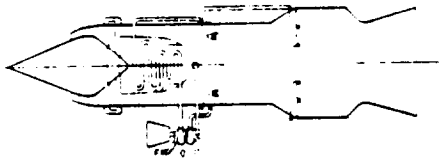

29 Supercharged RamLACE

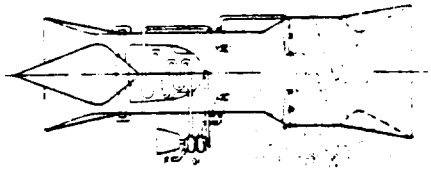

30 Supercharged ScramLACE

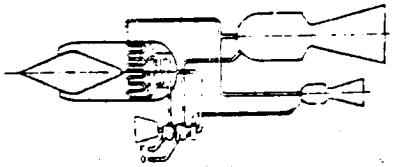

34 Recycled Augmenter LACE

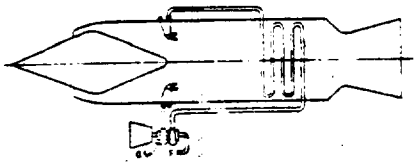

35 Air Augmented Regenerative Monofuel Rocket - Ramjet

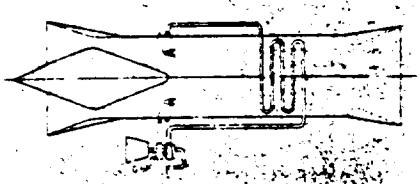

36 Air Augmented Regenerative Monofuel Rocket - Convertible Ramjet

Figure 2-2

Introduction to Fact Sheet Format

For familiarization purposes, as well as to convey a number of technical notes, annotated Fact Sheet forms (blanks) are presented in order of their appearance in the engine information section. Associated schematic legend information is introduced simultaneously.

Remarks and Special Notes

This section contains both general information relating to such things as how engine data were derived, guidelines and assumptions made in the Class 0 study phase, etc. Also, special notes are provided which deal with specific engines, operating modes and other specific technical areas.

References

A reasonably comprehensive set of references are provided for the Class 0 engines. These are called out in the Fact Sheets as they specifically relate to individual engines. The first four (4) references provide information on the Composite Engine Study Program, itself.

This Page Intentionally Blank

DESCRIPTION OF FACT SHEET FORMAT

Following are presented annotated Fact Sheet format blanks and associated schematic legend information. By way of reader familiarization, both the arrangement and content of the Fact Sheets are indicated. Where applicable, brief descriptive notes have been added to establish assumptions or constraints on the data to be given on the engine sheets. Also, the foregoing general figures are cited in conjunction with individual Fact Sheet items.

ENGINE FACT SHEET

Class 0 Composite Launch Vehicle Engines

Engine Identification Number: ← Code Number from 0-36, as given in Figure 1

Number of different operations available

Engine Operating Modes Number (maximum) of propulsion phases

Summary: Number of Modes/ Transitions ___ ; Number of Discrete Modes Utilized ___

Mode Progression - Lift-off to Touch-down

➤ Relates the engine operating modes (e.g. Ramjet, supersonic combustion) and the associated (approximate) transition velocities or functions in the flight profile (e.g. Landing)

Engine Propellant Requirements ← Indicates the internally stored propellant requirement

Code: (R) = Required, (V) = Required for vacuum operation, (F) = Useable for flyback mode

- ☐ Hydrogen, liquid, 37-40 °R
- ☐ Hydrogen, liquid, subcooled (25 °R)
- ☐ Hydrogen, gaseous
- ☐ Oxygen, liquid, 162 °R
- ☐ Oxygen, liquid, subcooled
- ☐ Oxygen, gaseous
- ☐ Other _____

Engine Constituent Subsystems

➤ Lists the basic hardware items making up the engine

Engine General Arrangement and Operating Schematic

Simple line schematic reflecting nominal hardware arrangement with word call-outs as required. A special legend is provided for differentiating inlets capable of scramjet operation as opposed to subsonic combustion operation only. Exit systems are similarly differentiated. Two types of basic heat exchanger systems are reflected, the type using hydrogen partially recycled to the tank containing subcooled hydrogen (slush), and the simple straight-through, non-recycle type. This graphical legend is shown one the following page.

LEGEND - ENGINE SCHEMATIC

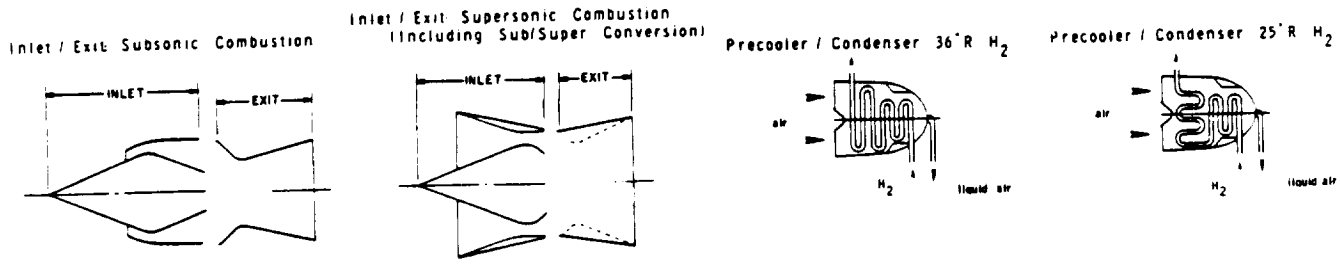

Engine Internal Operating Parameters, nominal

Lists key engine sizing and operating parameters which are normalized or otherwise size-independent (e.g., primary rocket combustion chamber pressure). Where -2 engines (high mass flow ratio) parameters differ from -1 engines as given, the -2 numbers are included in parentheses.

Engine Operating Mode Block Diagrams

In flight-progression order, each of the engine operating modes called out on the first page (and shown in Fig. 1) is depicted in block diagram format. Flow of air, fuel, oxidizer and exhaust gasses are reflected through the various primary components and subsystems. No numerical data are presented, however. The special legend that applies to this section is presented below.

LEGEND - ENGINE OPERATING MODE BLOCK DIAGRAM

Letter Symbols (Within Blocks)

I	Inlet Subsystem	
HE	Heat Exchanger	
F	Fan Subsystem	
R	Rocket Subsystem	
MC	Mixer/Combustor	Mixer/Combustor/Exit Subsystem
MD	Mixer/Diffuser	Mixer/Combustor/Exit Subsystem
C	Combustor	Mixer/Combustor/Exit Subsystem
E	Exit	Mixer/Combustor/Exit Subsystem

Letter Symbols (Fluids)

H	Hydrogen
O	Oxygen
A	Air
X	Exhaust

Graphical Symbols

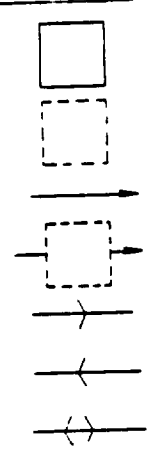

Functioning Unit

Non-functioning Unit

Fluid Flow Direction

Fluid Flow Through a Non-functioning Unit

Flow Mach Number > 1

Flow Mach Number < 1

Flow Mach Number is both below and above 1 at changing flight speed conditions

This Page Intentionally Blank

ENGINE PHYSICAL CHARACTERISTICS

Eng. No._____

Thrust, sls	250,000 lbf	1,112,055 newton

Weight and Thrust/Weight Ratio

Measuring Units	(English)	(International)
Weight	lbm	kg
Thrust/Weight	lbf/lbm	newton/kg

Lightweight Estimate

(lbf/in^2) Maximum Engine Internal Pressure 1000 (newtor/m^2)

	50	100	250	344.7	689.5	1723.7
Subsystems:						
Fan						
Heat Exchanger						
Primary Rocket						
Mixer/Diffuser						
Combustor/Exit						
Contingency						
Uninstalled Eng. Wt.						
Thrust/Weight, Uninst.						
Inlet Weight						
Installed Eng. Wt.						
Thrust/Weight, Inst.						

This so-called lightweight estimate is based on assessing components and subsystems on an "advanced" state of the art basis. Brought into play were such materials as beryllium and reinforced high temperature plastics. Transpiration cooled structural panels were included.

Heavyweight Estimate

Uninstalled Eng. Wt.
Thrust/Weight, Uninst.
Inlet Weight
Installed Eng. Wt.
Thrust/Weight, Inst.

The "heavyweight" estimate is premised on relatively near term or current state of the art. Materials currently included in rocket and airbreathing engines only were considered. Active cooling was limited to forced convective (regenerative) type operation with fuel.

Engine Flow Areas and Equivalent Diameters

	ft^2	ft	m^2	m
Inlet Cowl, A_c				
Mixer, A_3		See Fig. 13		
Combustor, A_4				
Exit, A_6				

Engine Lengths

	ft	m
Uninstalled		
Inlet (Typ)		
Installed (Typ)		

REMARKS, REFERENCES

SPECIFIC IMPULSE
REFERENCE TRAJECTORIES

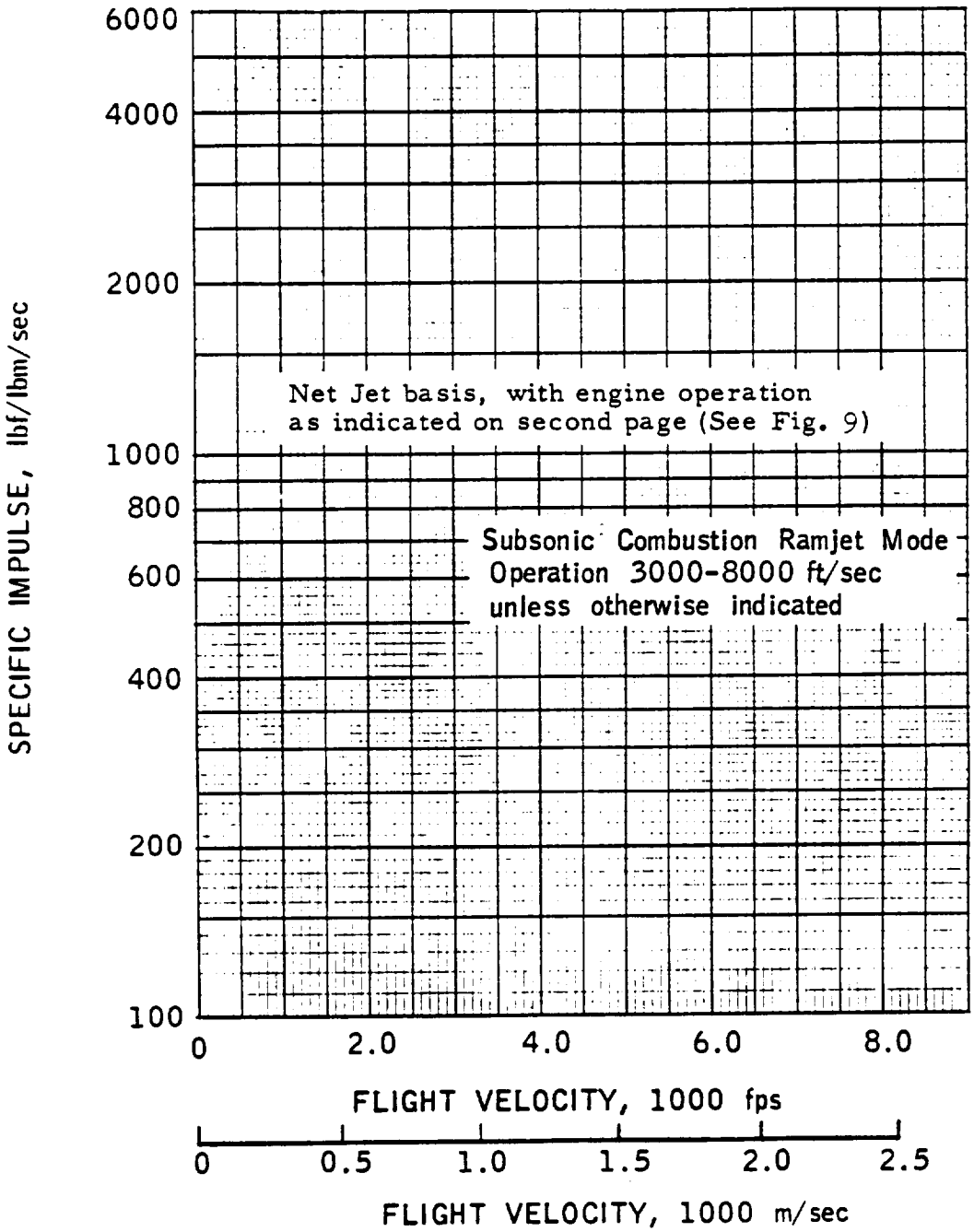

ENG. NO. _____

THRUST

REFERENCE TRAJECTORIES

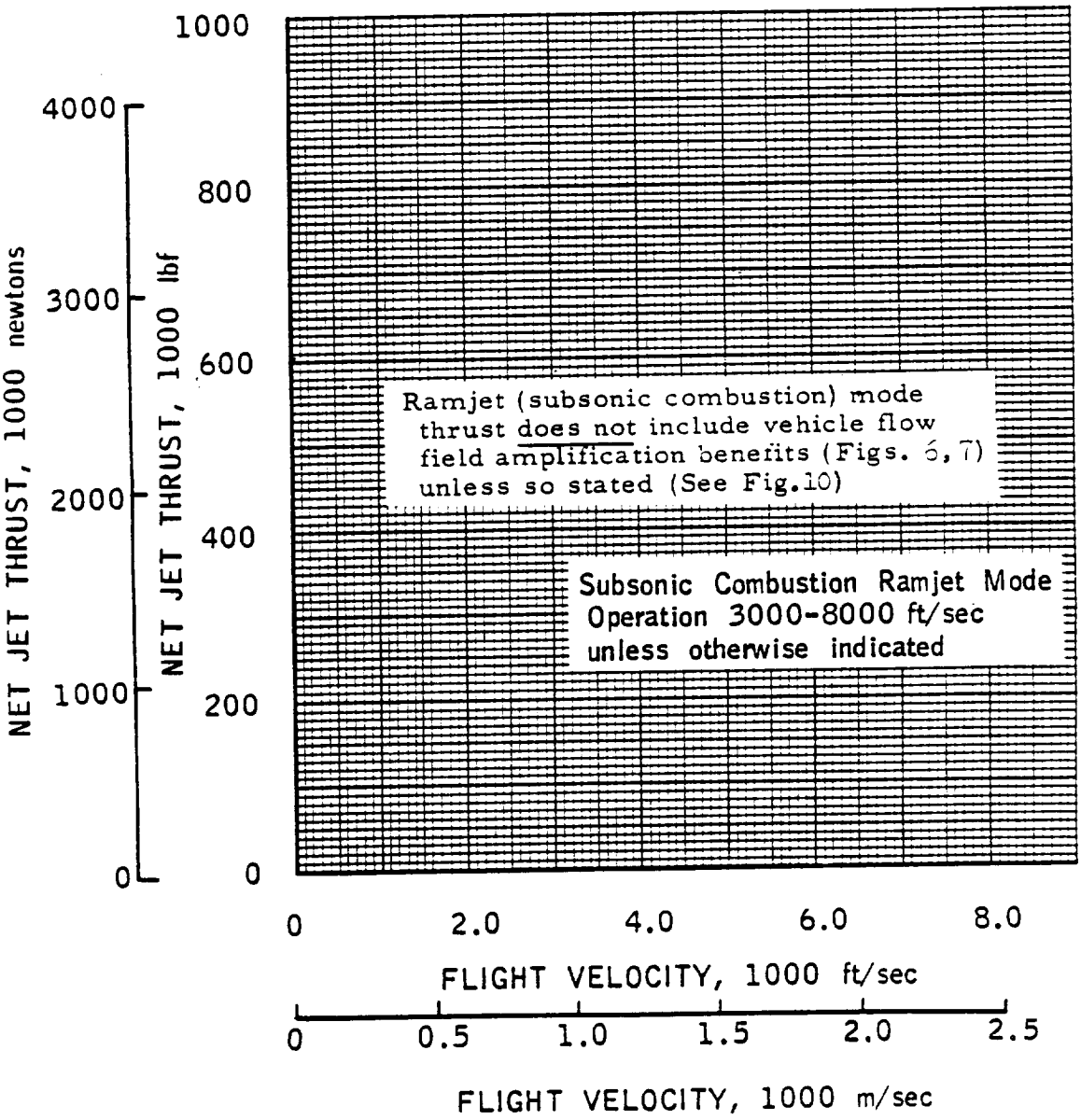

ENG. NO. _____

CAPTURE AREA

REFERENCE TRAJECTORIES

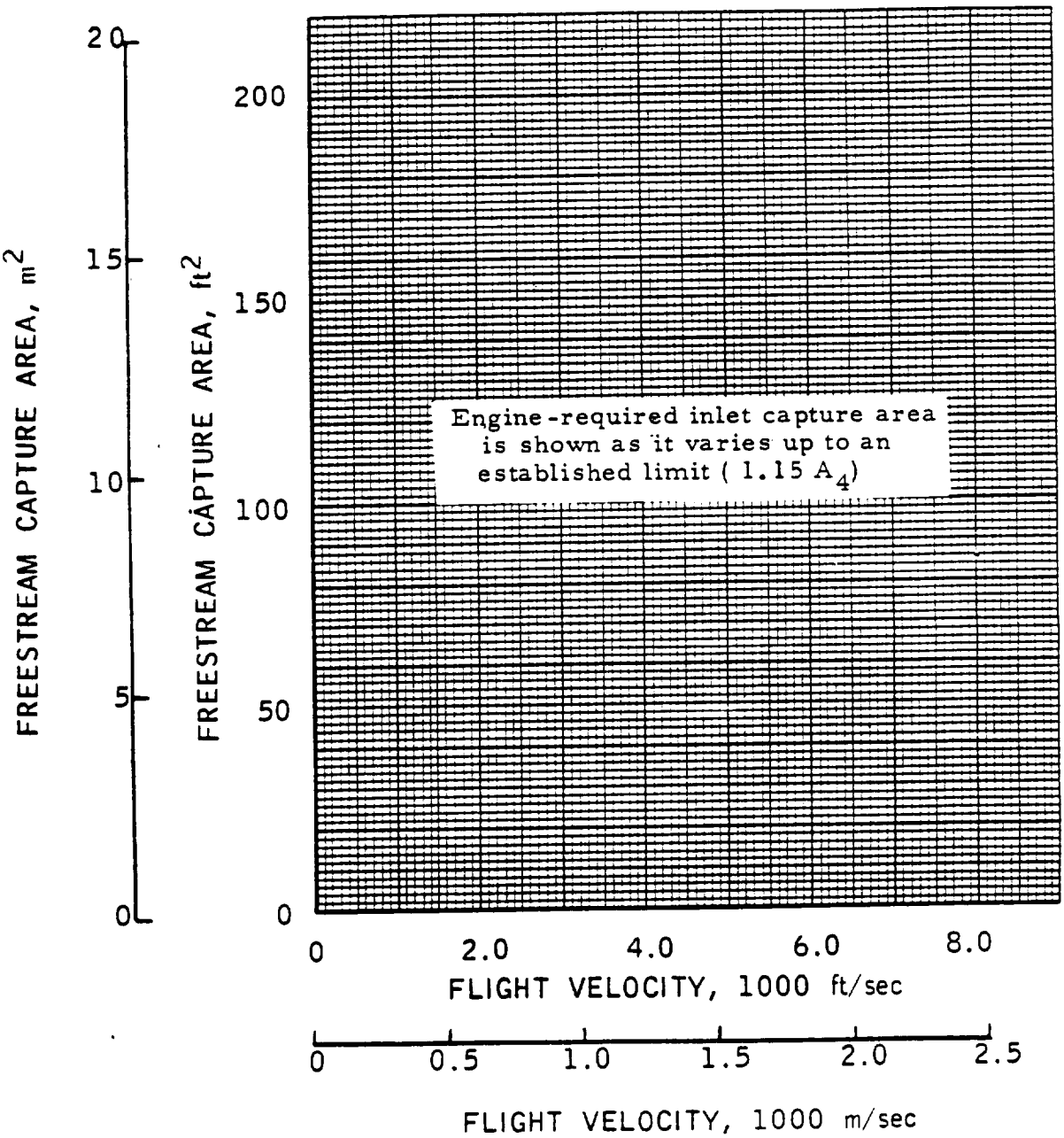

AIRFLOW

REFERENCE TRAJECTORIES

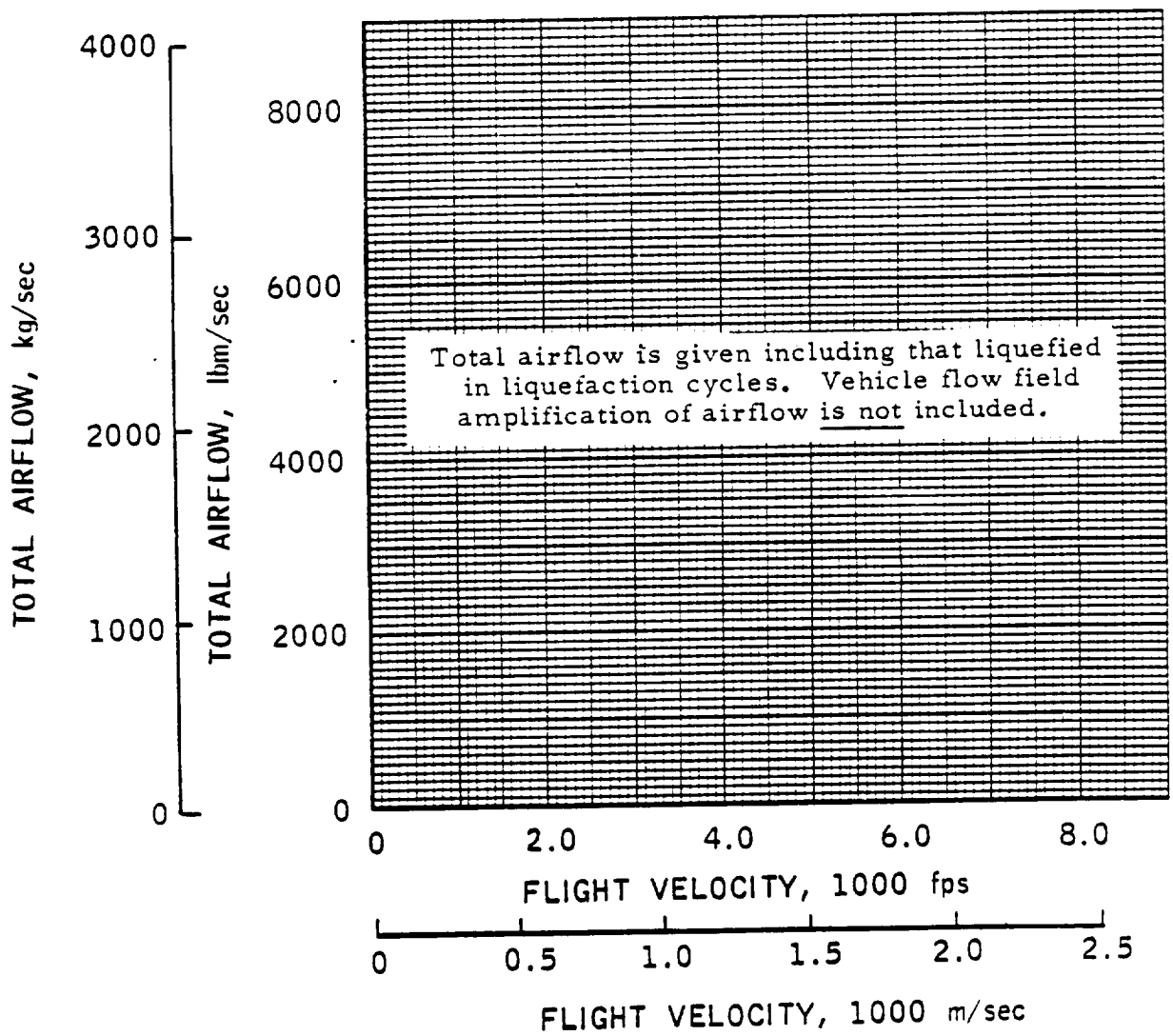

SPECIFIC IMPULSE
REFERENCE TRAJECTORIES

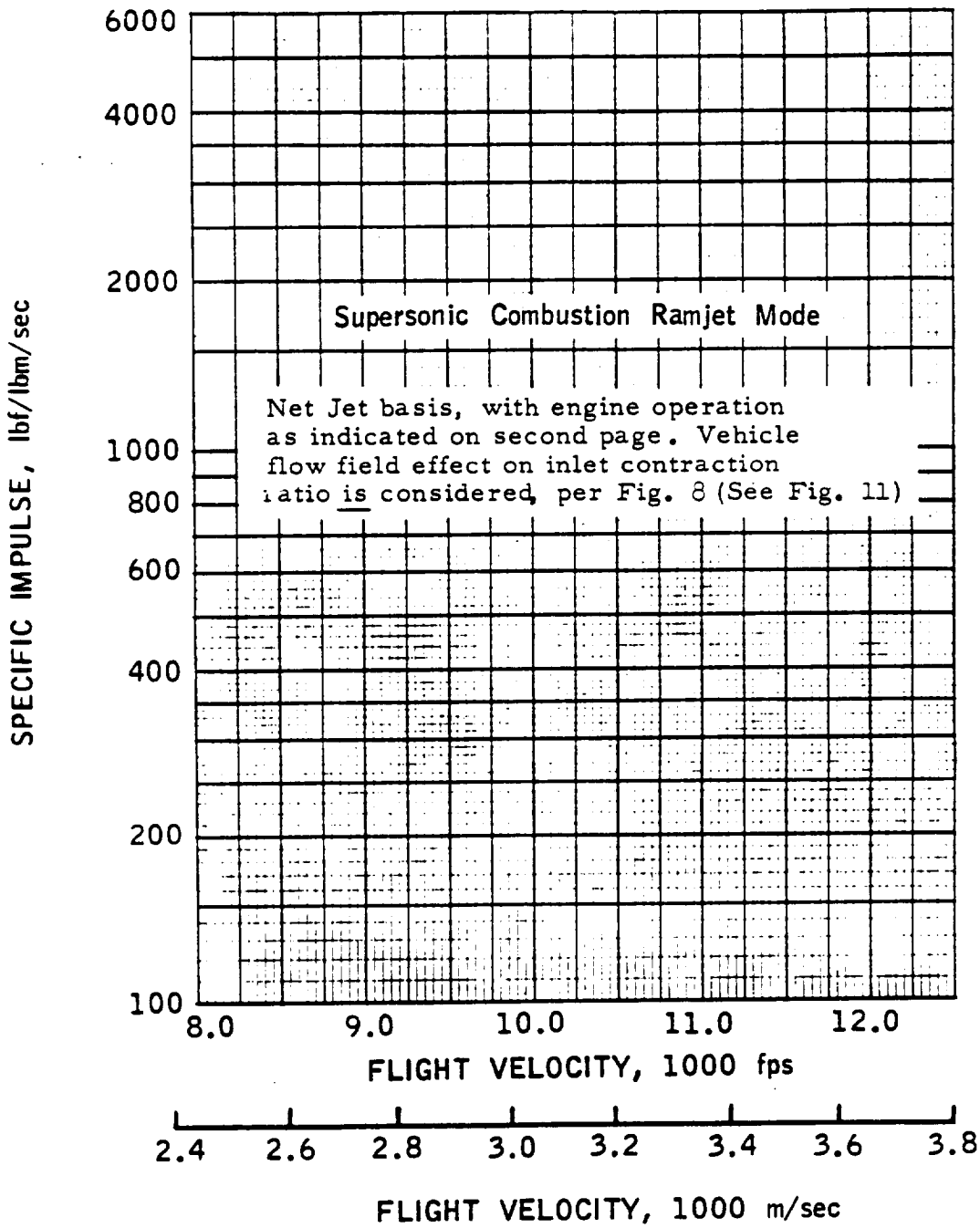

ENG. NO. _____

THRUST

REFERENCE TRAJECTORIES

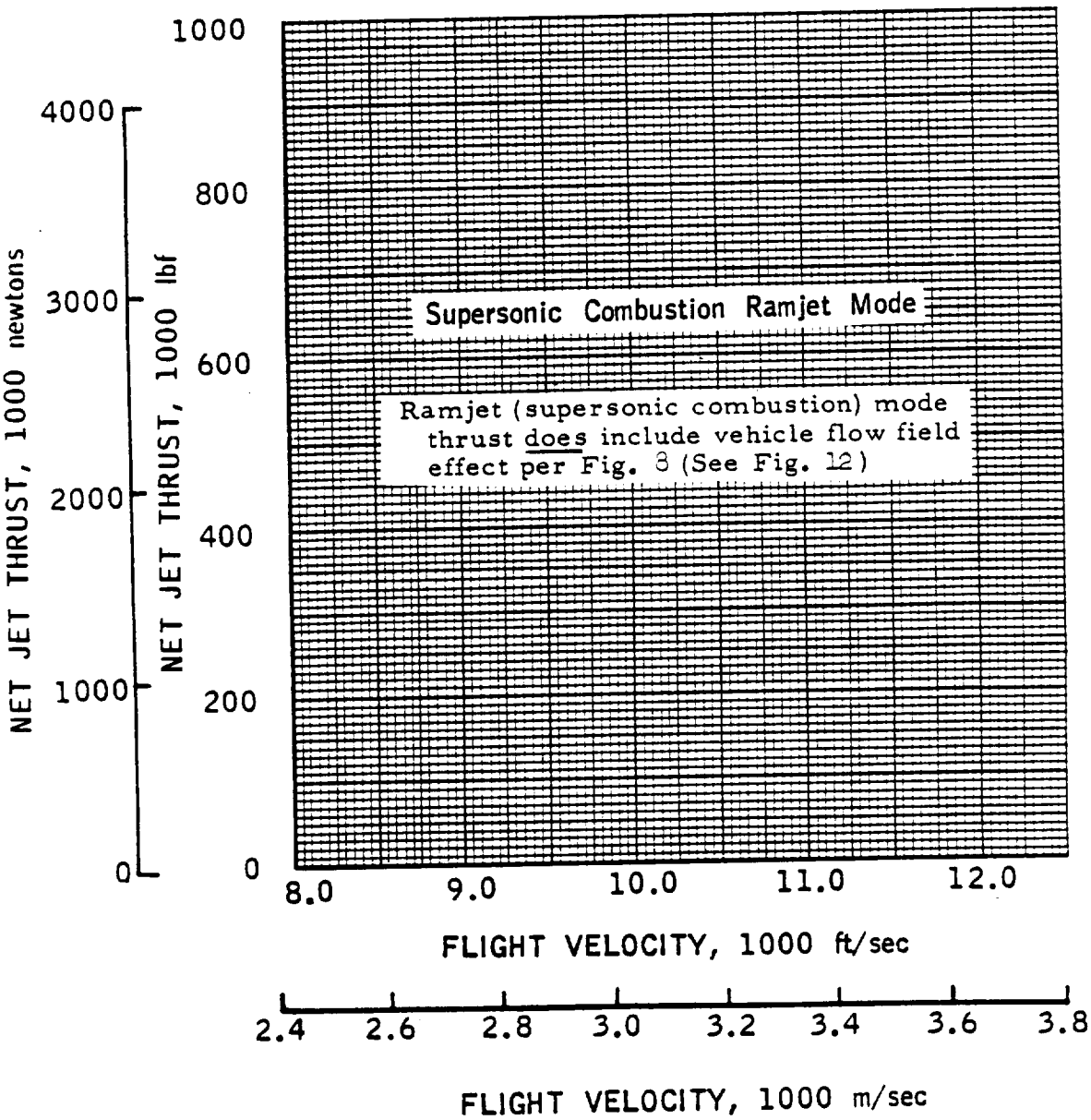

GENERAL TECHNICAL INFORMATION

Inlet Total Pressure Recovery

(Per Specification MIL-E-5008B)

Class 0 Engine performance was predicated on a free stream inlet total pressure recovery schedule (MIL-E-5008B) given in Figure 3. As such, a high performance variable geometry inlet is implied which is consistent with the Class 0 guideline stipulating that the full cycle performance potential be assessed.

INLET TOTAL PRESSURE RECOVERY

(PER SPECIFICATION MIL-E-5008B)

FREESTREAM CONDITIONS

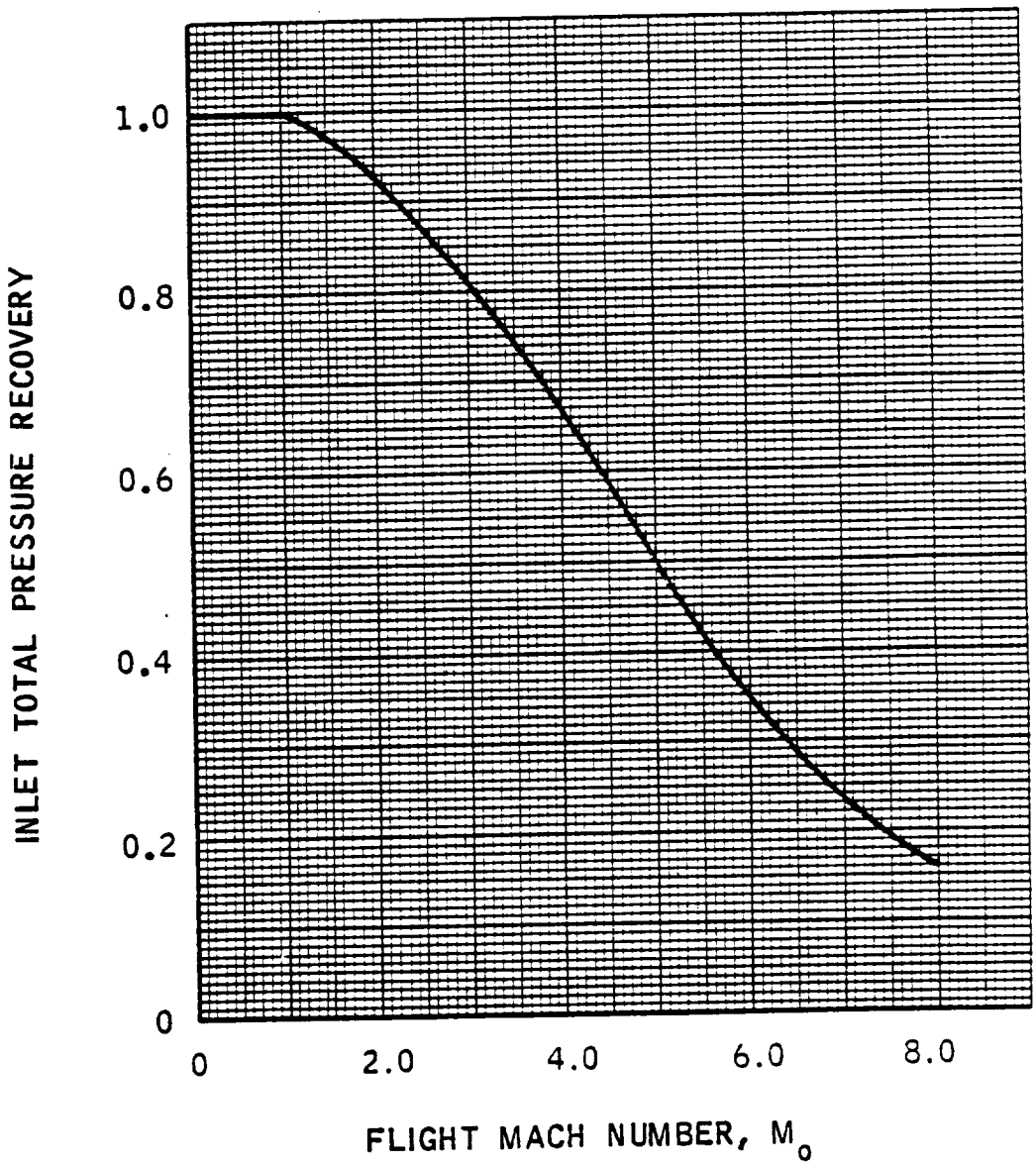

Figure 3

This Page Intentionally Blank

Reference Trajectories For Evaluating Class 0 Systems

Figures 4 and 5 provide the reference trajectories used for evaluating Class 0 engine performance in the 0-8000 ft/sec and 8000/12,000 ft/sec speed ranges, respectively.

Two of the three trajectories shown in Figure 4 (A and B) are premised on constant dynamic pressure paths followed by constant inlet total pressure lines for the assumed pressure recovery schedule (MIL-E-5008B). Trajectory C was determined on the basis of being approximately a maximum payload, zero-lift rocket vehicle trajectory. The vehicle was a single-stage to orbit, "very advanced" state of the art engine system. The trajectories were entered initially through either horizontal (HTO) or vertical (VTO) take-off ascent paths as noted. All Class 0 engines' specific impulse and thrust characteristics are given in the Fact Sheets for each trajectory, thereby providing a performance sensitivity index.

Class 0 engines capable of supersonic combustion ramjet mode (16 engines) were evaluated along the $q = 1000\ lb/ft^2$ path given in Figure 5. This path, it may be noted, begins at the approximate end-point of Trajectory A (Figure 4).

REFERENCE TRAJECTORIES FOR EVALUATING CLASS 0 SYSTEMS

P_{t_2} BASED ON MIL-E-5008B PRESSURE RECOVERY

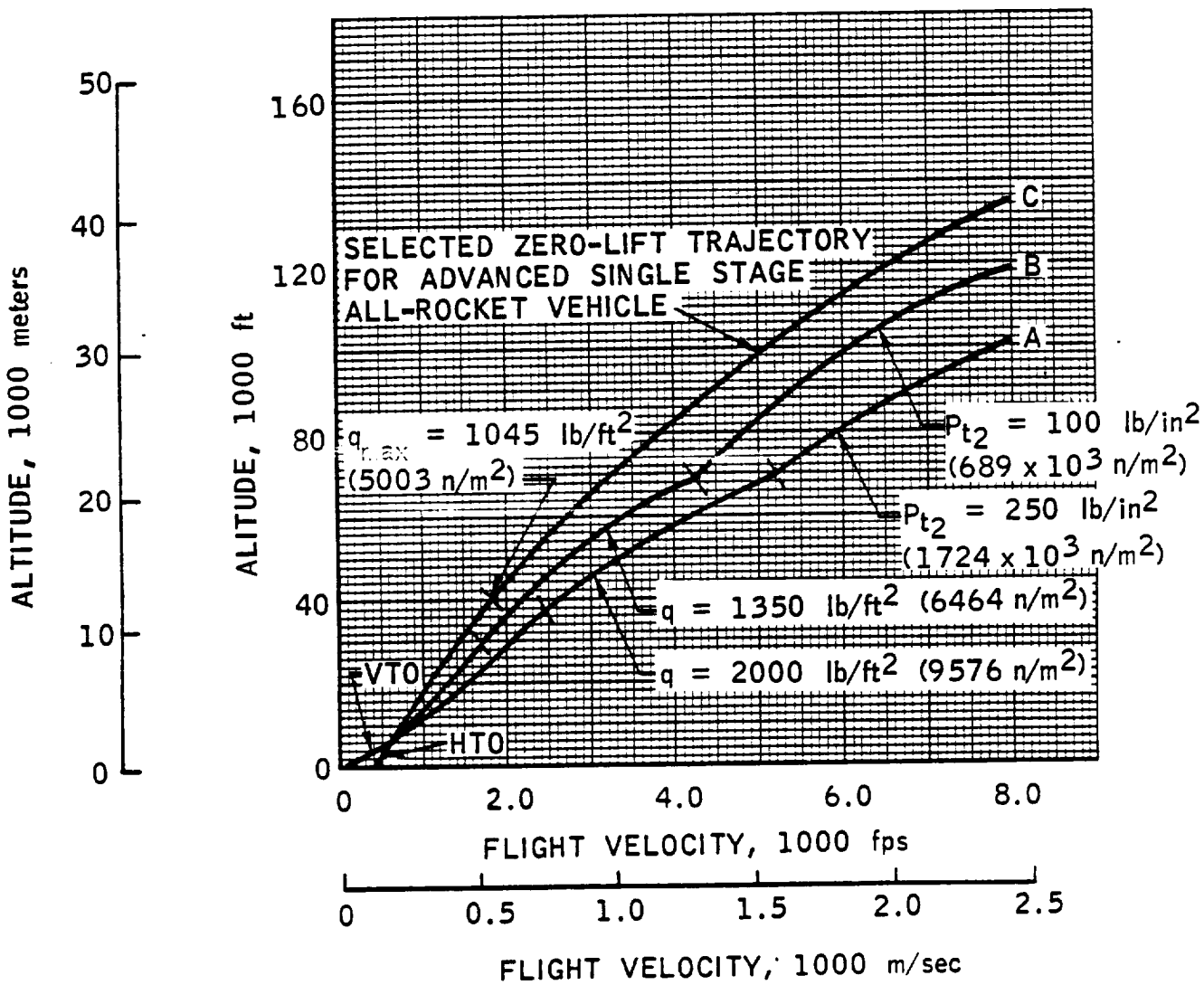

Figure 4

REFERENCE TRAJECTORY FOR EVALUATING CLASS 0 SYSTEMS

$q = 1000\ lb/ft^2$

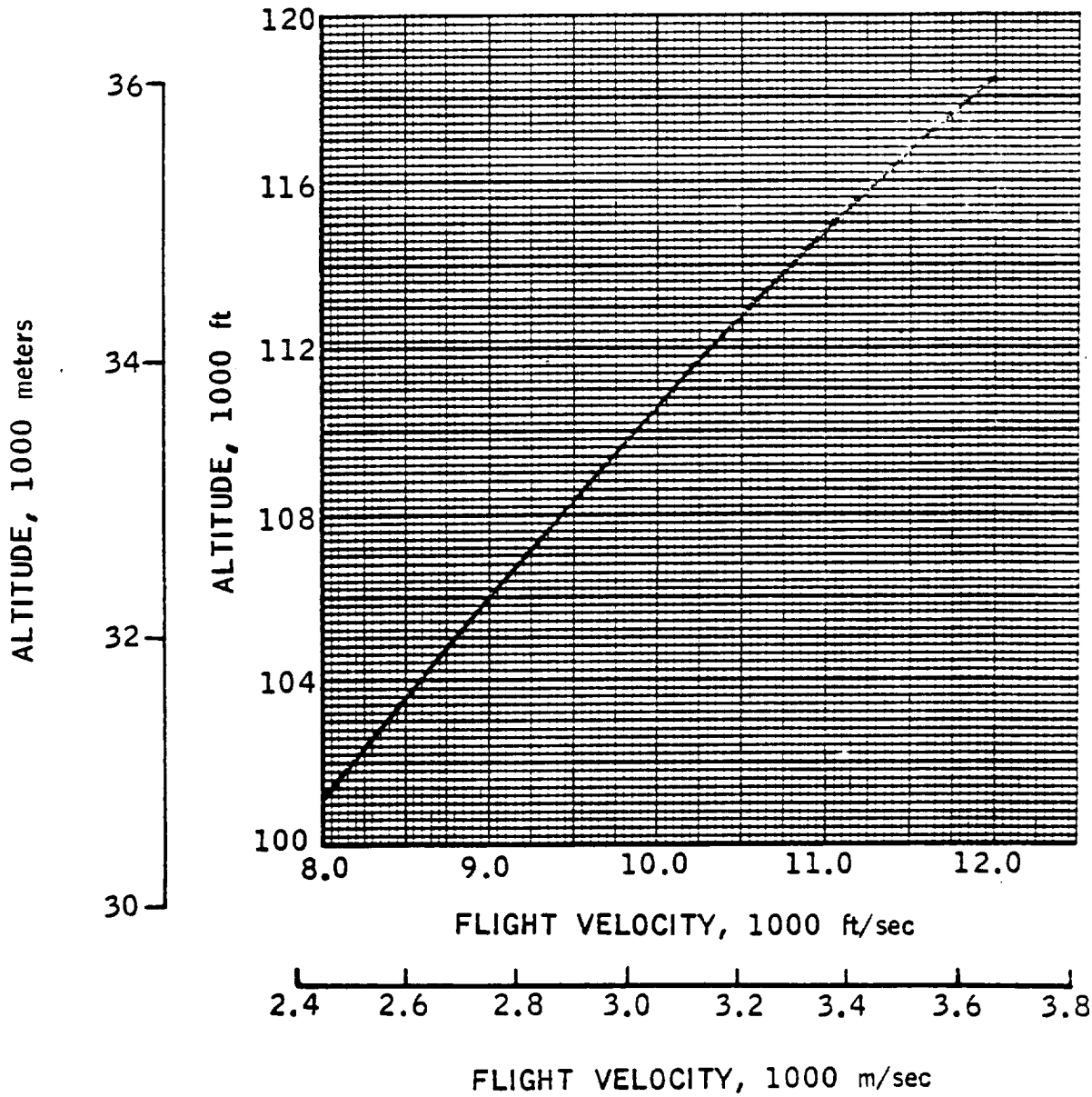

Figure 5

Vehicle Flow Field Effects

Vehicle body/wing supersonic and hypersonic flow field effects can significantly benefit high speed engine operation. Figure 6 represents the air flow increase (referenced to free stream operation) for an engine operating within flow fields created by a two-dimensional wedge at various angles of incidence.

In addition to air flow amplification (thrust multiplication) the local Mach number at the engine inlet is significantly reduced. The resulting reduction in the high speed inlet design point facilitates the achievement of a satisfactory aerodynamic design. It must be noted, however, that the thermal design is still dictated by the free stream flight velocity.

Following Figures 7 and 8 reflect typical flow field effects as evaluated in the study for the 0-8000 and 8000-12,000 ft/sec flight velocity regimes, respectively.

The availability of a necessarily large precompression body in the propellant tankage of typical hydrogen-fueled launch vehicles is a significant factor. Judicious vehicle/engine integration should achieve much of the potential benefits of vehicle flow field utilization.

AMPLIFICATION OF FREESTREAM AIR FLOW

AND PHYSICAL CAPTURE AREA BY VEHICLE FLOW FIELD

FF = FLOW FIELD
FS = FREESTREAM

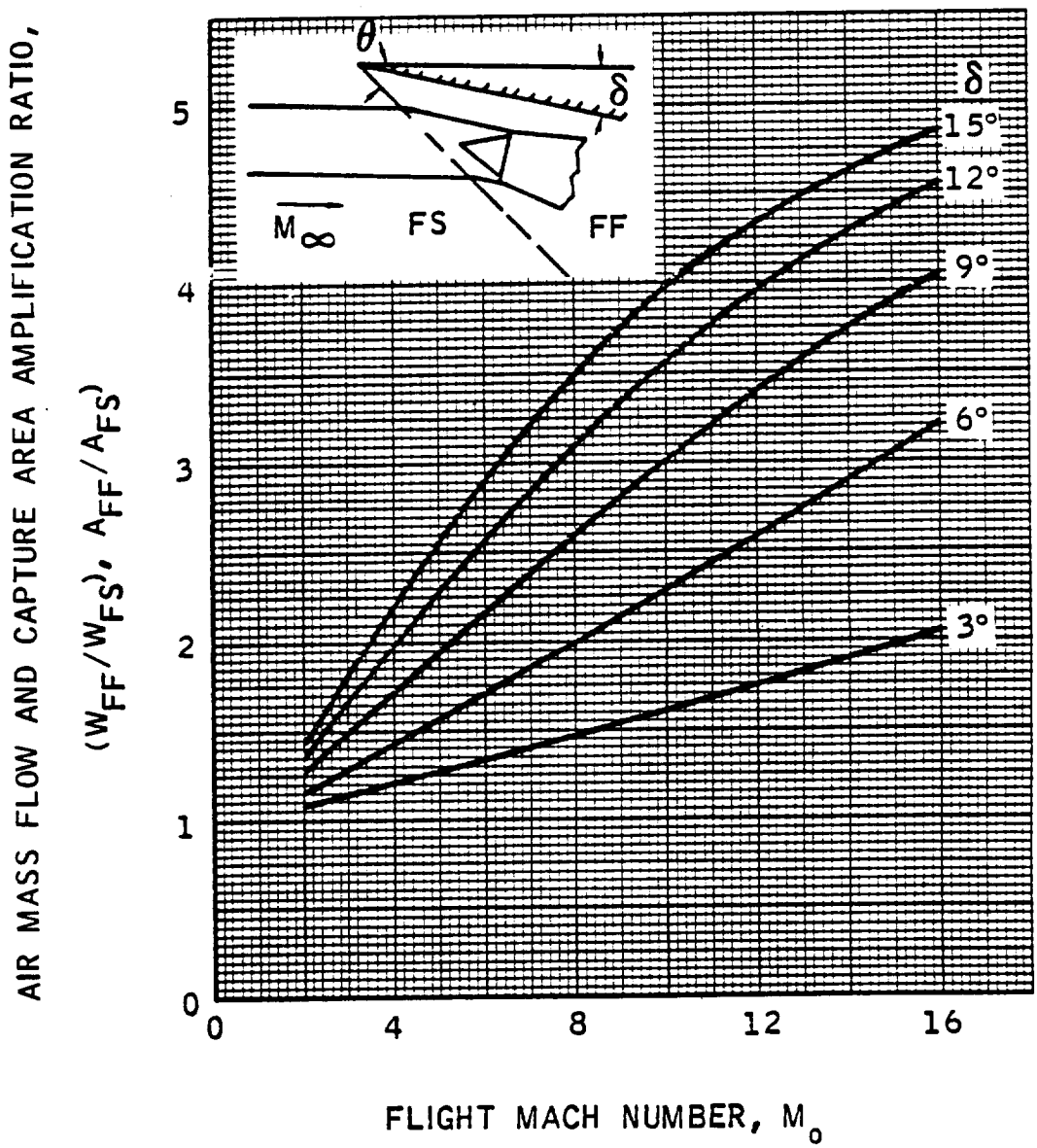

Figure 6

Vehicle Flow Field Effects

0-8000 ft/sec

The thrust multiplication factor due to the vehicle flow field is shown in Figure 7 for the three Class 0 reference trajectories (Fig. 4). The pressure field was assumed to be two-dimensional (a good assumption for the configuration studied). The thrust multiplication factor is then a function of the flow deflection angle and Mach number, as shown in Figure 7. The total deflection angle was the sum of the angle of attack, α, and the pressure field generator ramp angle (in this case, 1.5 degrees). The angle of attack was calculated using an assumed vehicle weight history and the vehicle aerodynamic characteristics.

The effect of the vehicle pressure field on the engine specific impulse is usually quite small and was not assessed in the Class 0 investigations.

It will be noted that Class 0 engine performance for the 0-8000 ft/sec operation (subsonic combustion ramjet mode to 8000 ft/sec), subsequently to be presented in the fact sheets, does not include a vehicle flow field effect (i.e., free stream data).

VEHICLE FLOW FIELD EFFECTS

0-8000 ft/sec FLIGHT VELOCITY

REFERENCE TRAJECTORIES

$\delta = \alpha + 1.5°$, 2-D FIELD

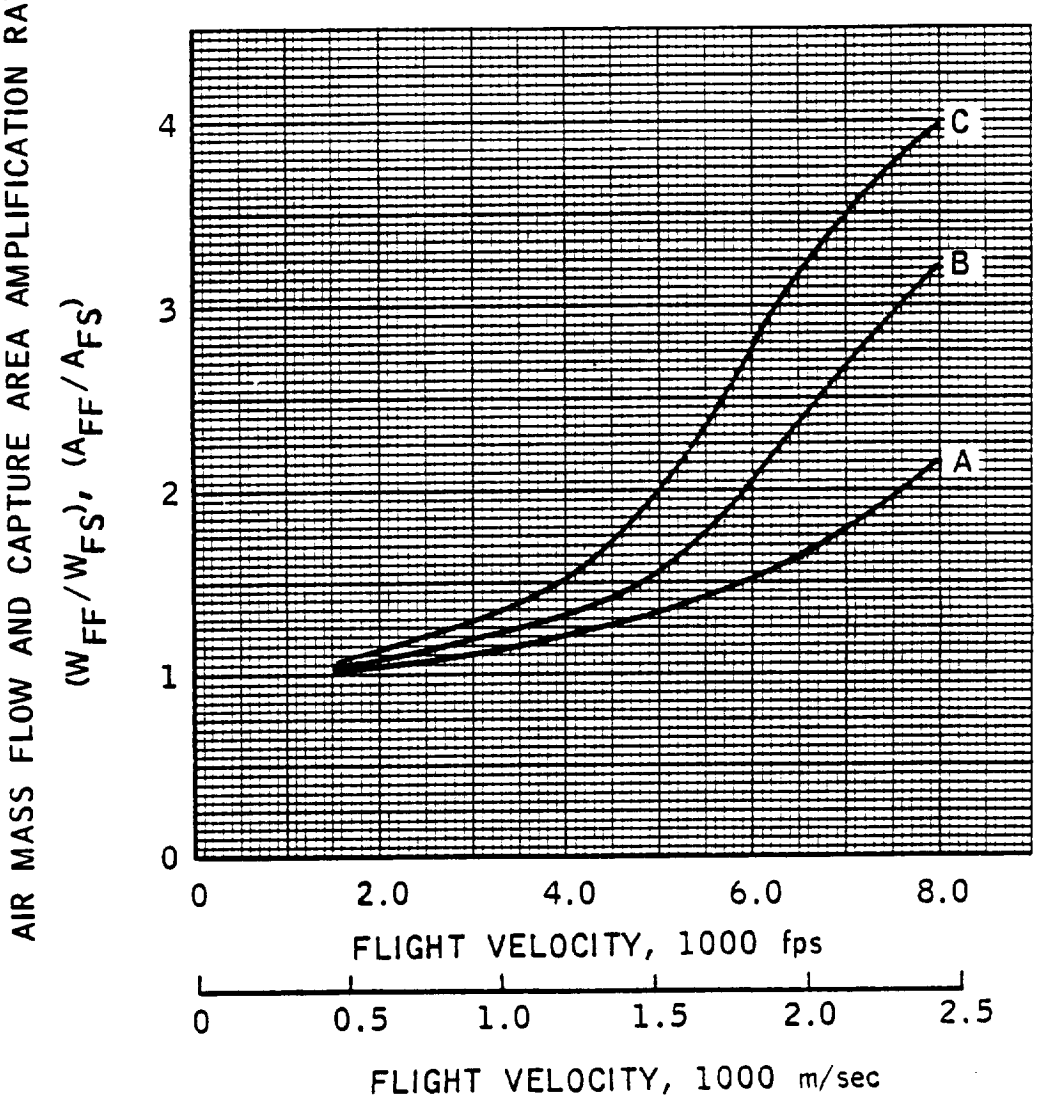

Figure 7

Vehicle Flow Field Effects
8000-12,000 ft/sec

For the flight regime where supersonic combustion ramjet mode operation is used, flow field effects assume a major role in efficient engine operation. A parameter of prime importance is inlet (net) contraction ratio which is the product of contraction within the physical cowl (A_c/A_2) and the vehicle body precompression ahead of the physical engine cowl (A_∞/A_c).

Figure 8 reflects a typical two-dimensional flow field effect in terms of capture area and air flow amplification. This factor is used to increase the net inlet contraction ratio significantly above the physical (cowl/minimum engine area ratio).

It will be noted that Class 0 engine performance in the supersonic combustion mode (i.e., $>$ 8000 ft/sec) includes the flow field effect indicated in Figure 8.

VEHICLE FLOW FIELD EFFECTS

8000-12,000 ft/sec FLIGHT TRAJECTORY

$q = 1000\ lb/ft^2$

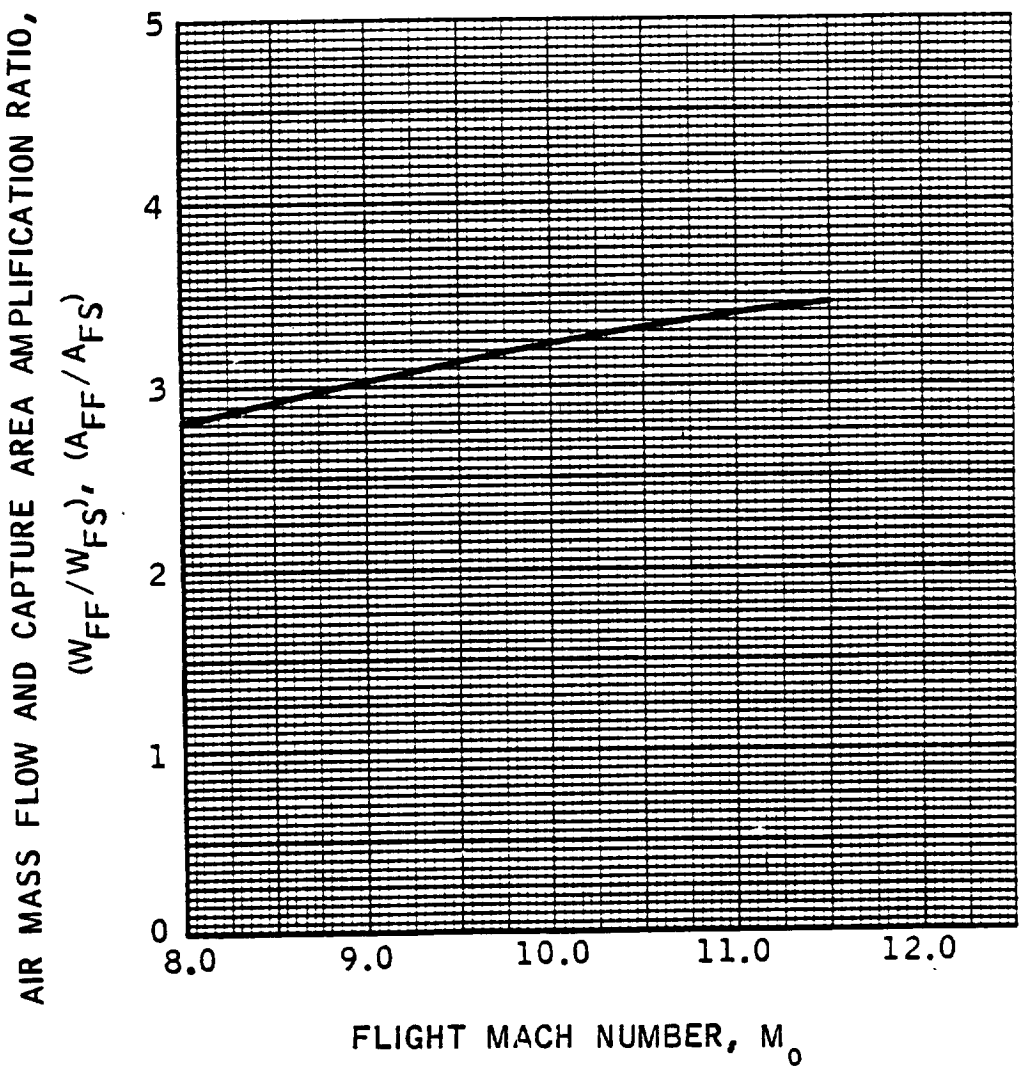

Figure 8

Subsonic Combustion Ramjet

Net Jet Specific Impulse

Specific impulse performance potential is provided in Figure 9 on a net jet basis, as a function of flight condition for the subsonic combustion ramjet mode.

This performance is based on stoichiometric combustion (subsonic) with hydrogen fuel, MIL-E-5008B inlet performance, combustion and nozzle efficiencies of 0.95 and 0.98, respectively. It is further stipulated that the exit nozzle setting is varied to provide optimum expansion, but cannot exceed the maximum capture area by more than a factor of 1.5.

SUBSONIC COMBUSTION RAMJET NET JET SPECIFIC IMPULSE

HYDROGEN FUEL
EQUIVALENCE RATIO = 1.0
INLET PRESSURE RECOVERY PER MIL-E-5008B
VARIABLE INLET CAPTURE AREA
$A_{6\,max}/A_{c\,max} = 1.5$
η_c COMBUSTION = 0.95
η_N NOZZLE = 0.98

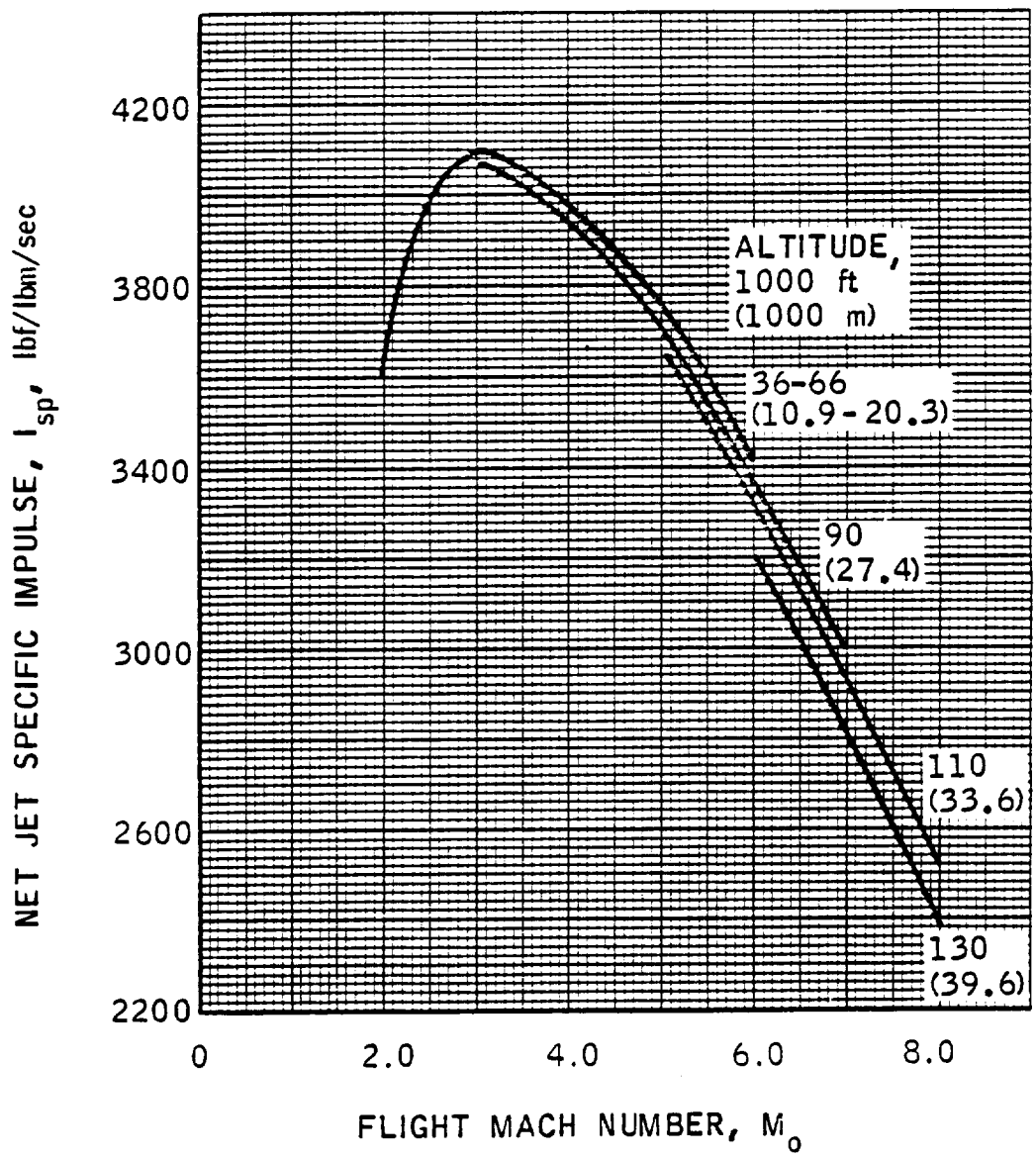

Figure 9

Subsonic Combustion Ramjet Net Jet Thrust Coefficient Based on Free Stream Capture Area

Subsonic combustion ramjet mode thrust potential is reflected in the curves of Figure 10. Thrust (net jet) is the product of the value of this coefficient at the flight path point of interest, the dynamic pressure, and the inlet capture area.

This performance is based on stoichiometric combustion (subsonic) with hydrogen fuel, MIL-E-5008B inlet performance, combustion and nozzle efficiencies of 0.95 and 0.98, respectively. It is further stipulated that the exit nozzle setting is varied to provide optimum expansion, but cannot exceed the maximum capture area by more than a factor of 1.5.

SUBSONIC COMBUSTION RAMJET NET JET THRUST COEFFICIENT BASED ON FREESTREAM CAPTURE AREA

HYDROGEN FUEL
EQUIVALENCE RATIO = 1.0
INLET PRESSURE RECOVERY PER MIL-E-5008B
VARIABLE INLET CAPTURE AREA
$A_{6max}/A_{cmax} = 1.5$
η_c COMBUSTION = 0.95
η_N NOZZLE = 0.98
$C_F = F_{NJ}/q\ A_o$

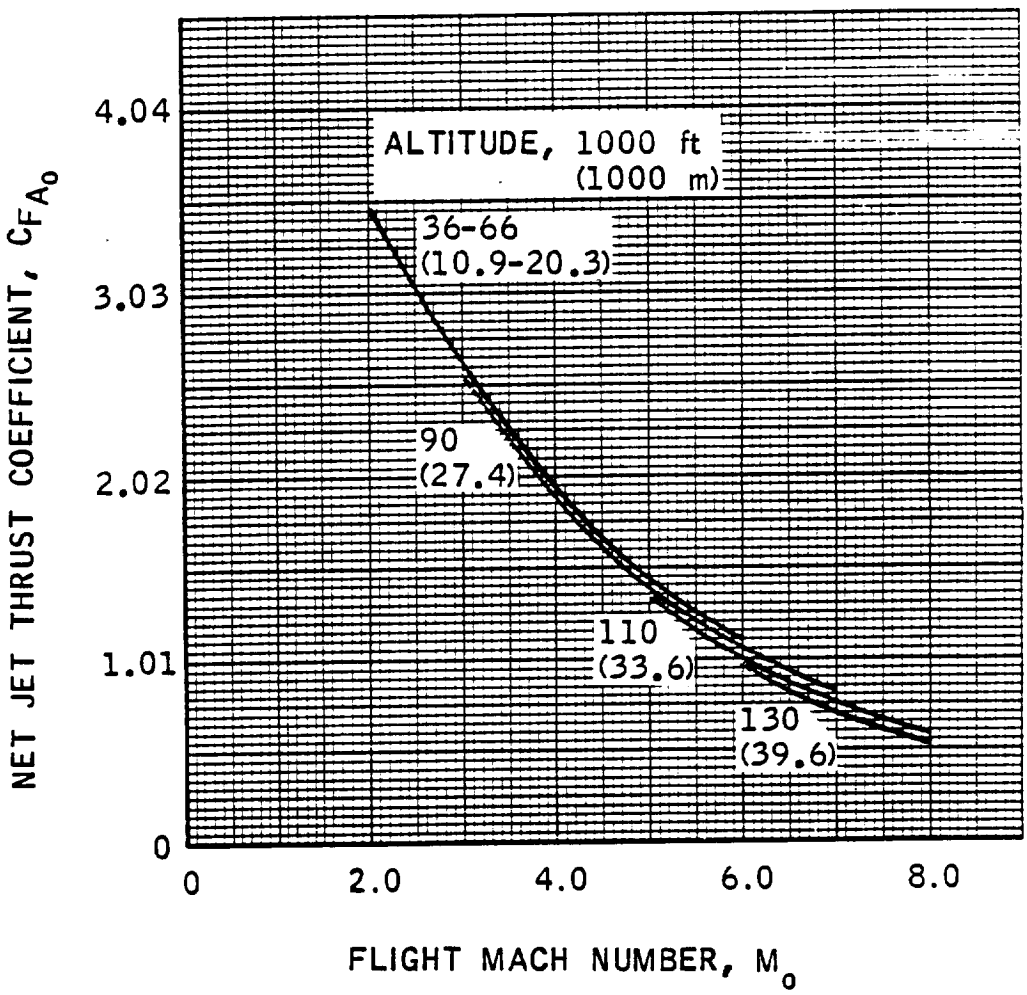

Figure 10

Supersonic Combustion Ramjet

Net Jet Specific Impulse

Supersonic combustion ramjet mode specific impulse potential is provided, on a net jet basis, in Figure 11 as a function of total inlet contraction ratio.

These performance data are based on stoichiometric combustion (supersonic) of hydrogen, an inlet kinetic energy efficiency of 0.985, and exit expansion-to-total capture area ratio of 1.5. Combustion efficiency and nozzle efficiency are assumed as 0.95 and 0.98, respectively.

SUPERSONIC COMBUSTION RAMJET SPECIFIC IMPULSE

HYDROGEN FUEL
$\phi = 1.0$
$\eta_{KE} = 0.985$

$A_{exit}/A_{\infty} = 1.5$
$q = 1000\ lb/ft^2$
$\eta_N = 0.98$
$\eta_c = 0.95$

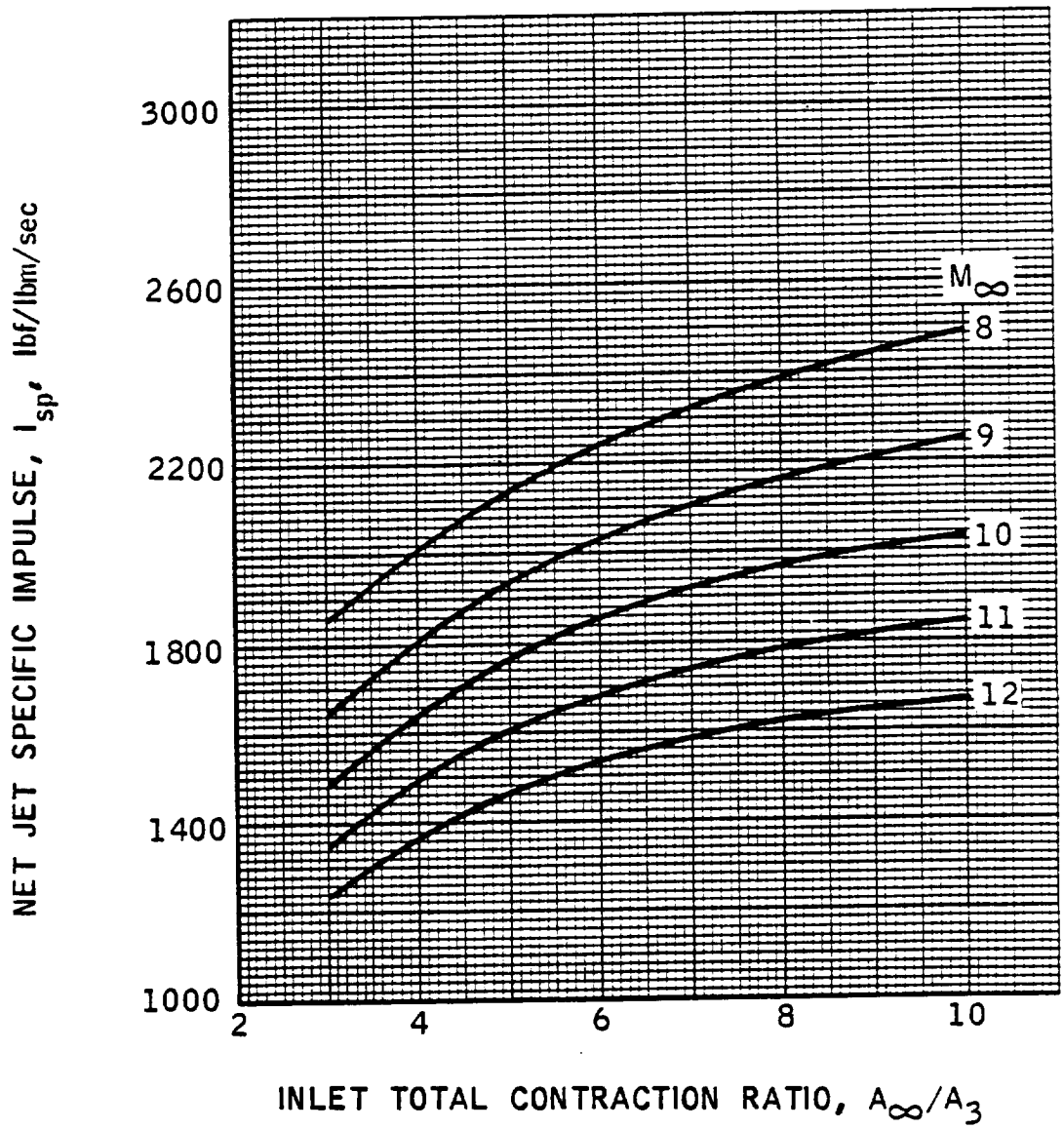

Figure 11

Supersonic Combustion Ramjet Net Jet Thrust Coefficient Based On Free Stream Capture Area

Supersonic combustion ramjet mode thrust potential (C_F) is reflected as a function of total inlet contraction ratio in Figure 12. These data are for a dynamic pressure of 1000 lb/ft^2 corresponding to the flight path of Figure 5. The total inlet contraction ratio (abcissa) is derived as a product of the physical cowl-to-combustor contraction ratio and the flow field amplification factor given in Figure 8.

These performance data are based on stoichiometric combustion (supersonic) of hydrogen, an inlet kinetic energy efficiency of 0.985, and exit expansion-to-total capture area ratio of 1.5. Combustion efficiency and nozzle efficiency are assumed as 0.95 and 0.98, respectively.

This Page Intentionally Blank

SUPERSONIC COMBUSTION RAMJET NET JET SPECIFIC IMPULSE BASED ON FREESTREAM CAPTURE AREA

HYDROGEN FUEL
$\phi = 1.0$
$\eta_{KE} = 0.985$

$A_{exit}/A_\infty = 1.5$
$q = 1000$ lb/ft^2
$\eta_N = 0.98$
$\eta_c = 0.95$

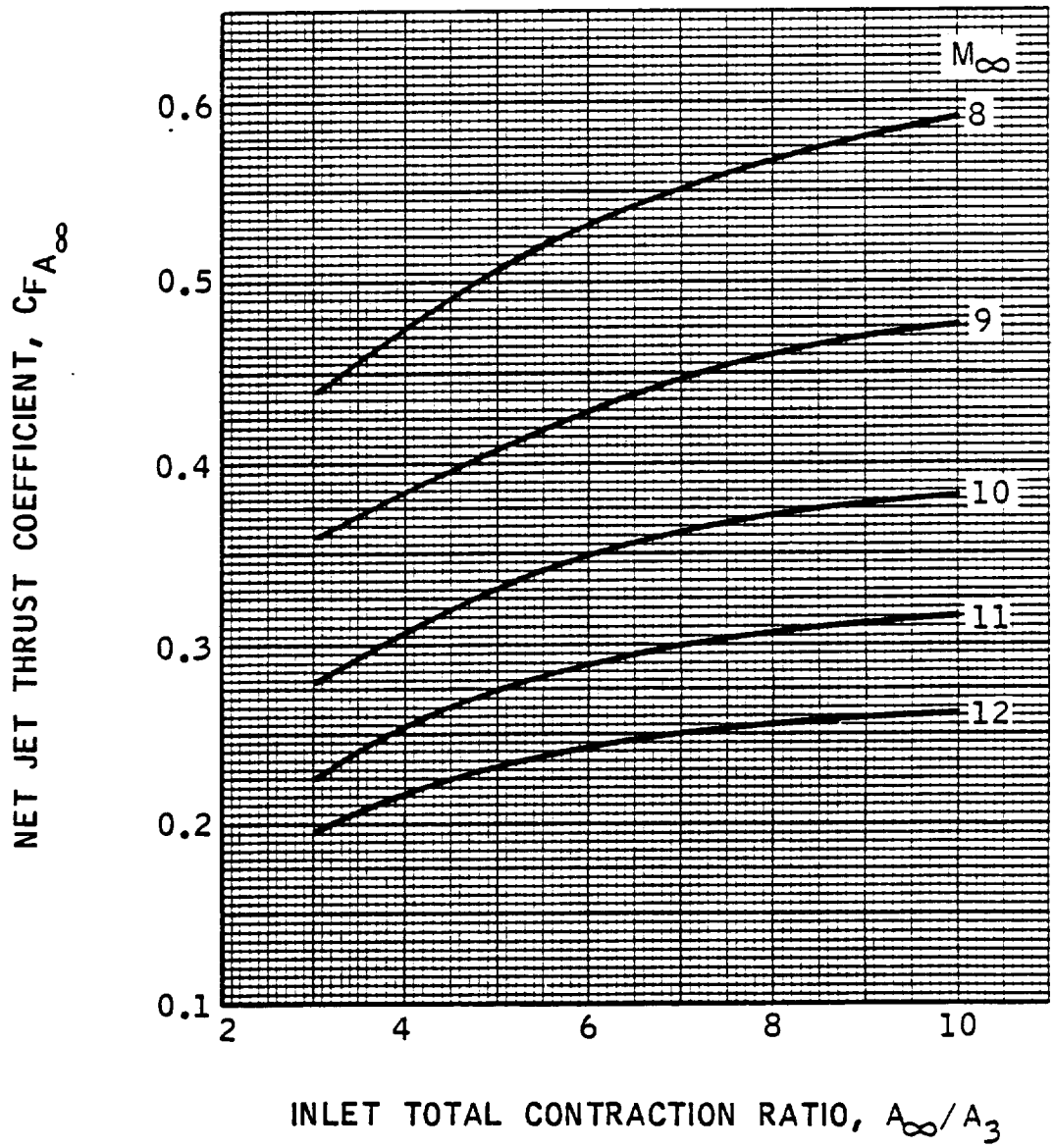

Figure 12

INSTALLED ENGINE STATION NOMENCLATURE

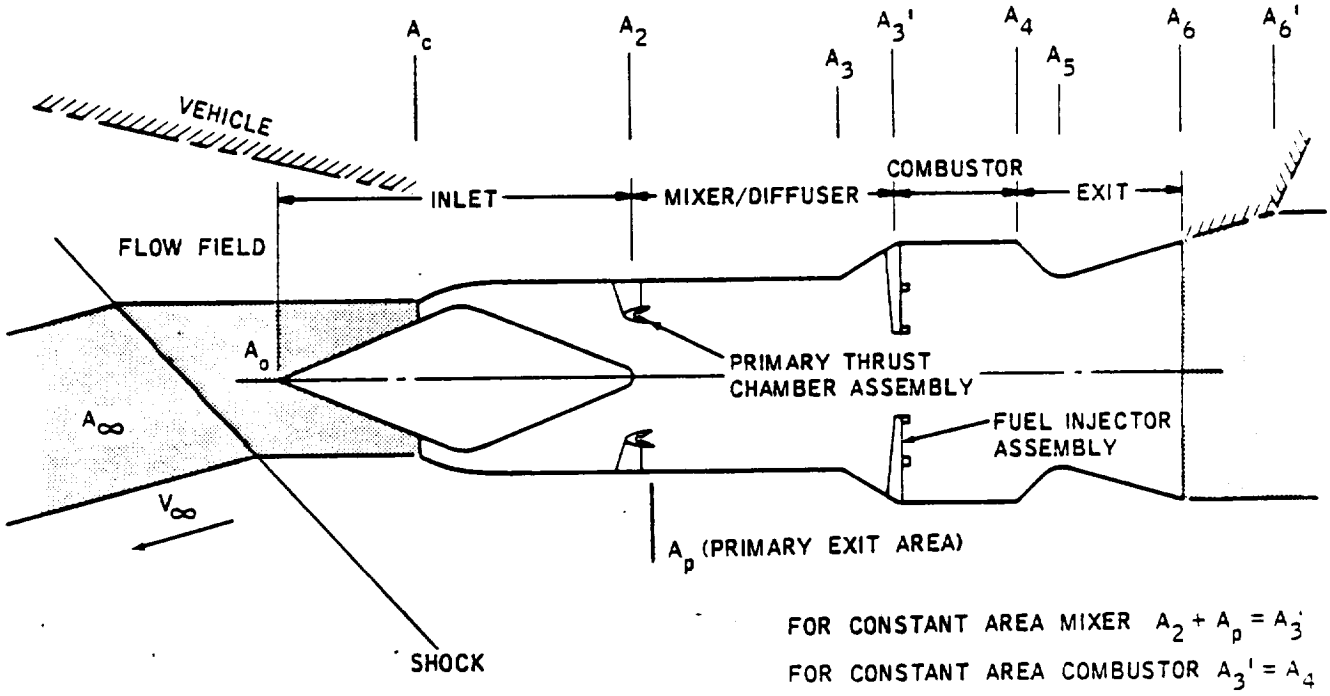

Figure 13

Engine Flow Area Station Nomenclature

Figure 12 presents the standardized nomenclature used in the composite engine study. Reflected in the engine are the several thermodynamically significant flow stations. Further, possible vehicle installation effects are shown in (1) the inlet flow field geometry (see Fig. 5), and (2) the "post engine" further exit expansion which can take place on the vehicle surface adjacent to the engine nozzle. See also the nomenclature listing provided at the end of this section.

Flight Velocity/Mach Number/Altitude Correlation Curve

Although the basic engine performance information presented in this report is given on the basis of flight velocity (ft/sec, m/sec), much of the general information, as well as intermediate computations, is most conveniently stated in terms of Mach number. Figure 14 has been prepared to assist in approximate coversion of these velocity terms. The altitude ordinate is extended to the terminal point of the 8000-12,000 ft/sec reference trajectory (to be introduced), 140,000 ft.

FLIGHT VELOCITY/MACH NUMBER/ALTITUDE CORRELATION CURVE

U. S. STANDARD ATMOSPHERE, 1962

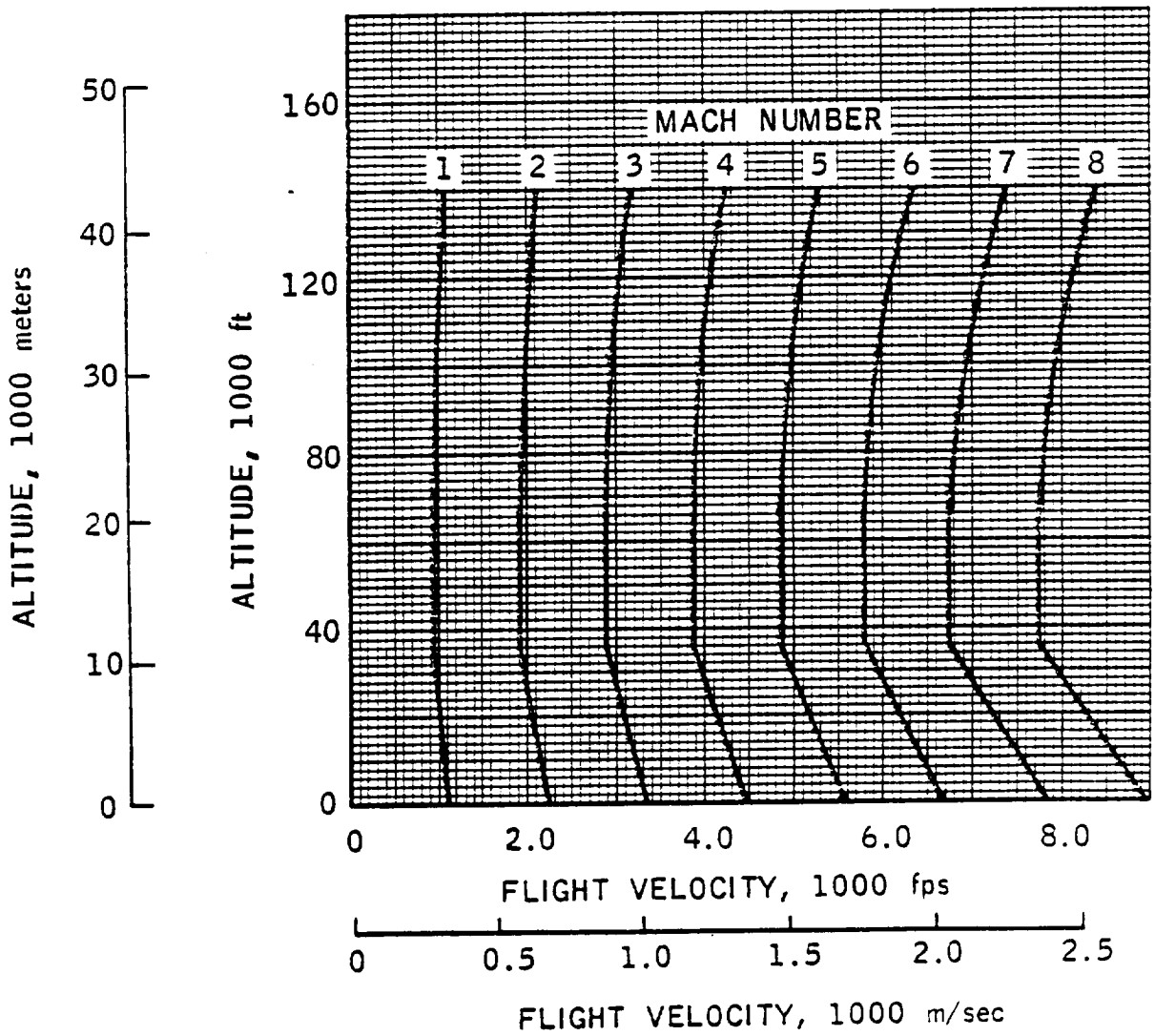

Figure 14

REMARKS AND SPECIAL NOTES

This section consists of both general remarks and special notes, applicable to a single engine, for example. In most cases, these items have been otherwise posted in one of the following places:

(1) On the blank Fact Sheet forms provided for familiarization purposes (preceding).

(2) At appropriate locations on the individual Fact Sheets, e.g., on the performance curves.

(3) In the "Remarks, References" section, page 6 of the individual Fact Sheets.

Following, then, are remarks and special notes in which the subject area is flagged via underlining in each case.

1. Low and High Flow Ratio Engines are presented in certain instances. Flow ratio, air-to-primary rocket mass flow, at sea level static conditions is an important engine design parameter. Low flow ratio designs (typically 1.5:1) are signified by -1, and high flow ratio designs (typically 3.0:1) are signified by -2, following the engine number. For example, Engine 9-1 is a low flow ratio Ejector Ramjet cycle system.

2. Secondary Air Flow, plotted vis à vis data tabulations--An irregularity exists relative to the numerical data shown for secondary air mass flow rate (w_s) and capture area (A_o). As plotted on the curves, total engine flow and required capture area are given. As listed in the data print-out, mixer or combustor flow and the corresponding area only are given; air liquefied in applicable engines is not included.

3. Internal Engine Efficiencies are, unless otherwise indicated, as follows:

Mixing Efficiency, $\eta_M = 0.80$

Combustion Efficiency (primary and secondary), $\eta_c = 0.95$

Nozzle Efficiency (energy, not velocity basis), $\eta_n = 0.98$

4. Recycle Time Limit for vehicles employing subcooled hydrogen occurs because of total heat sink limits of fuel. The time limit normally occurs at a flight velocity beyond which recycle operation is no longer desirable. This limitation is a function of total vehicle subcooled hydrogen mass and conditions (percent slush) and engine heat rejection rate.

Therefore, the time limit is strictly a function of vehicle application and must be evaluated for each case.

This Page Intentionally Blank

ENGINE FACT SHEET

Class 0 Composite Launch Vehicle Engines

Engine Identification Number: 0 Baseline Rocket, Very Advanced

Engine Operating Modes

Summary: Number of Modes/ Transitions 1 ; Number of Discrete Modes Utilized 1

Mode Progression - Lift-off to Touch-down

(Takeoff) Rocket (Orbital speed, space maneuvering and deorbiting) Rocket aided by drogues and parachutes (Landing), or additional airbreathing engines (Flyback and landing)

Engine Propellant Requirements

Code: (R) = Required, (V) = Required for vacuum operation, (F) = Useable for flyback mode

- [R] Hydrogen, liquid, 37-40 °R
- [ ] Hydrogen, liquid, subcooled (25 °R)
- [ ] Hydrogen, gaseous
- [R] Oxygen, liquid, 162 °R
- [ ] Oxygen, liquid, subcooled
- [ ] Oxygen, gaseous
- [ ] Other _____

Engine Constituent Subsystems

Rocket

Engine General Arrangement and Operating Schematic

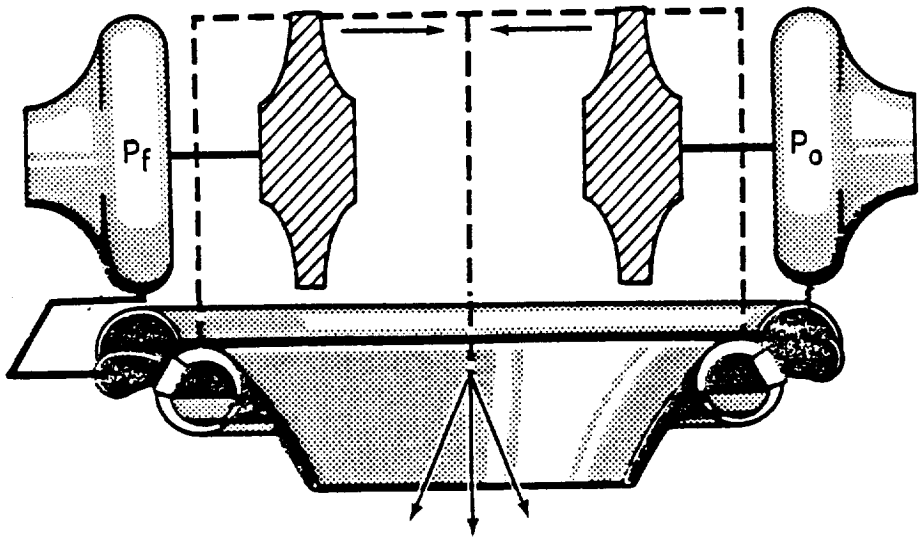

Eng. No. 0

Engine Internal Operating Parameters, nominal

P_c = 2000 psia, O/F = 6.5

W_{GG}/W_{TOT} = 0.0203, A_{EXIT}/A_t = 80

Engine Operating Mode Block Diagrams

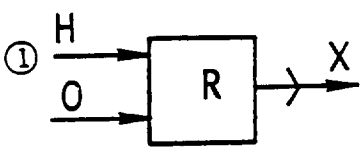

ENGINE PHYSICAL CHARACTERISTICS

Eng. No. 0

Thrust, sls	250,000 lbf	1,112,055 newton

Weight and Thrust/Weight Ratio

Measuring Units	(English)	(International)
Weight	lbm	kg
Thrust/Weight	lbf/lbm	newton/kg

(lbf/in^2) Maximum Engine Internal Pressure 1000 (newtor/m^2)

Lightweight Estimate	50	100	250	344.7	689.5	1723.7
Subsystems:						
Fan						
Heat Exchanger						
Primary Rocket						
Mixer/Diffuser						
Combustor/Exit						
Contingency						
Uninstalled Eng. Wt.		1397			633.7	
Thrust/Weight, Uninst.		179			1756	
Inlet Weight						
Installed Eng. Wt.		1563			709.0	
Thrust/Weight, Inst.		160			1570	

Heavyweight Estimate						
Uninstalled Eng. Wt.						
Thrust/Weight, Uninst.						
Inlet Weight						
Installed Eng. Wt.						
Thrust/Weight, Inst.						

Engine Flow Areas and Equivalent Diameters

	ft^2	ft	m^2	m
Inlet Cowl, A_c				
Mixer, A_3				
Combustor, A_4	43.0	7.4	3.99	2.26
Exit, A_6				

Engine Lengths

	ft	m
Uninstalled	4.8	1.46
Inlet (Typ)		
Installed (Typ)	4.8	1.46

REMARKS, REFERENCES

"Very advanced" State-of-the-art rocket engine. Installed thrust/weight includes tank pressurization heat exchanger and thrust vector control systems. (Reference 22)

SPECIFIC IMPULSE
REFERENCE TRAJECTORIES

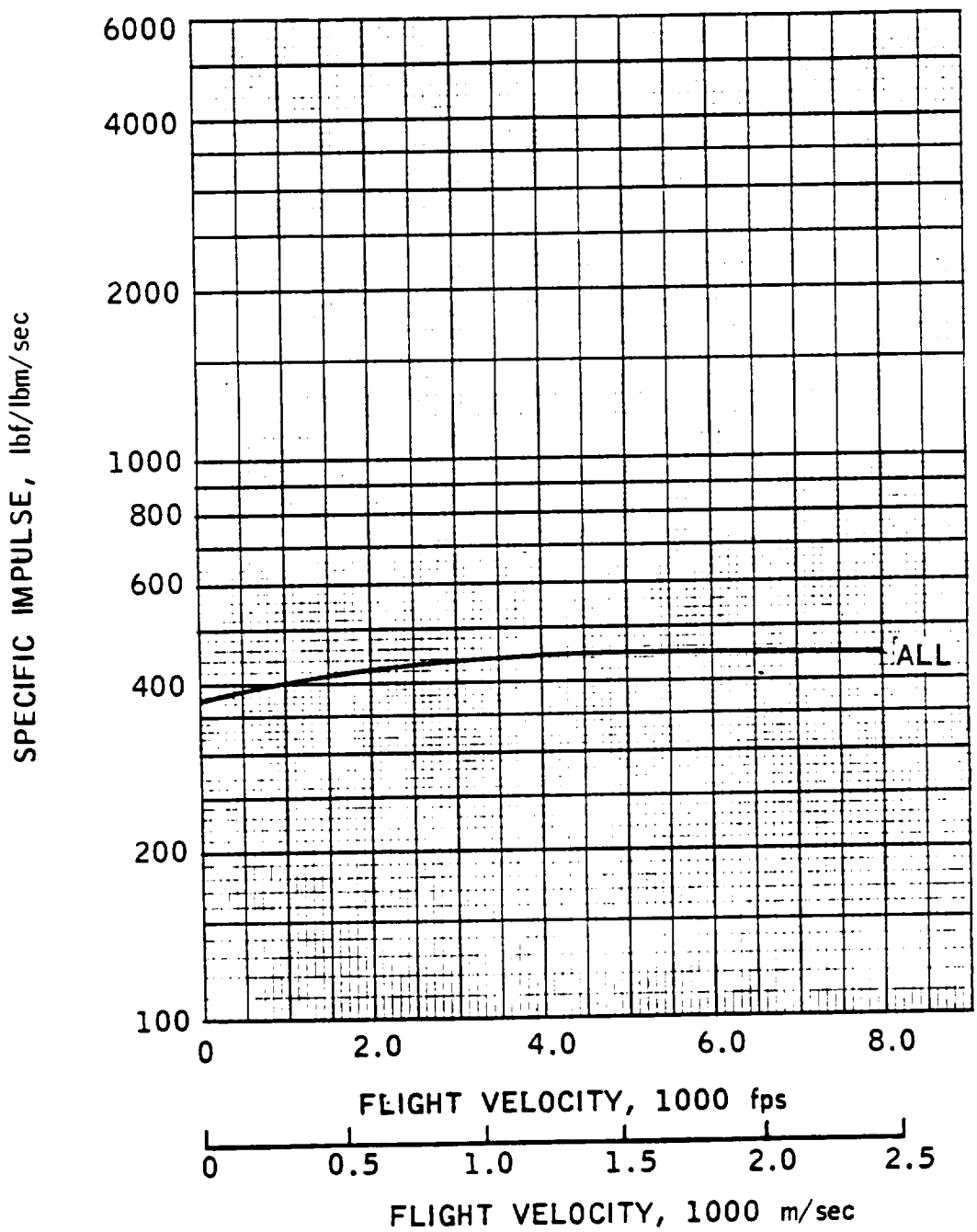

ENG. NO. 0

THRUST

REFERENCE TRAJECTORIES

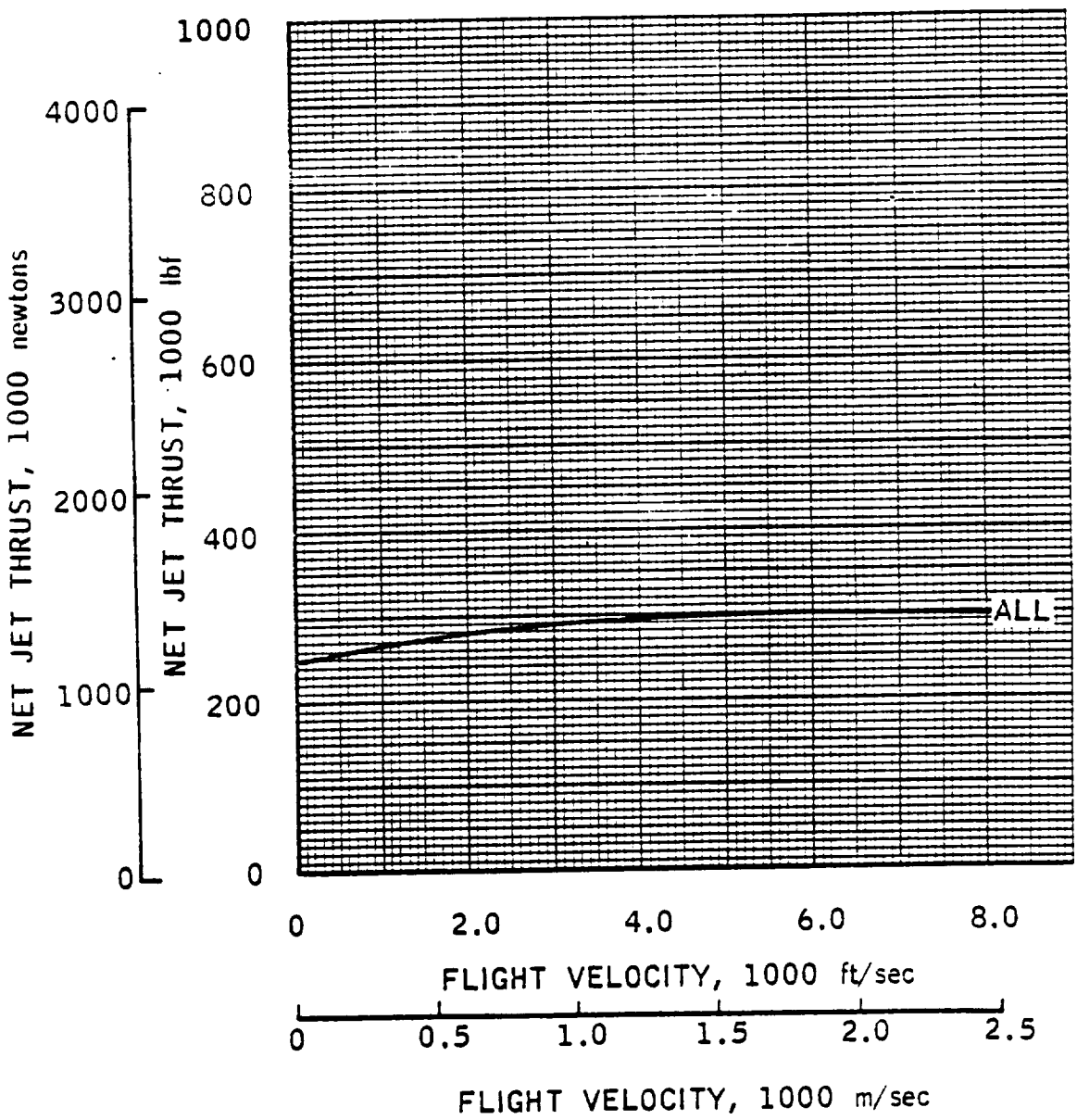

SPECIFIC IMPULSE
REFERENCE TRAJECTORIES

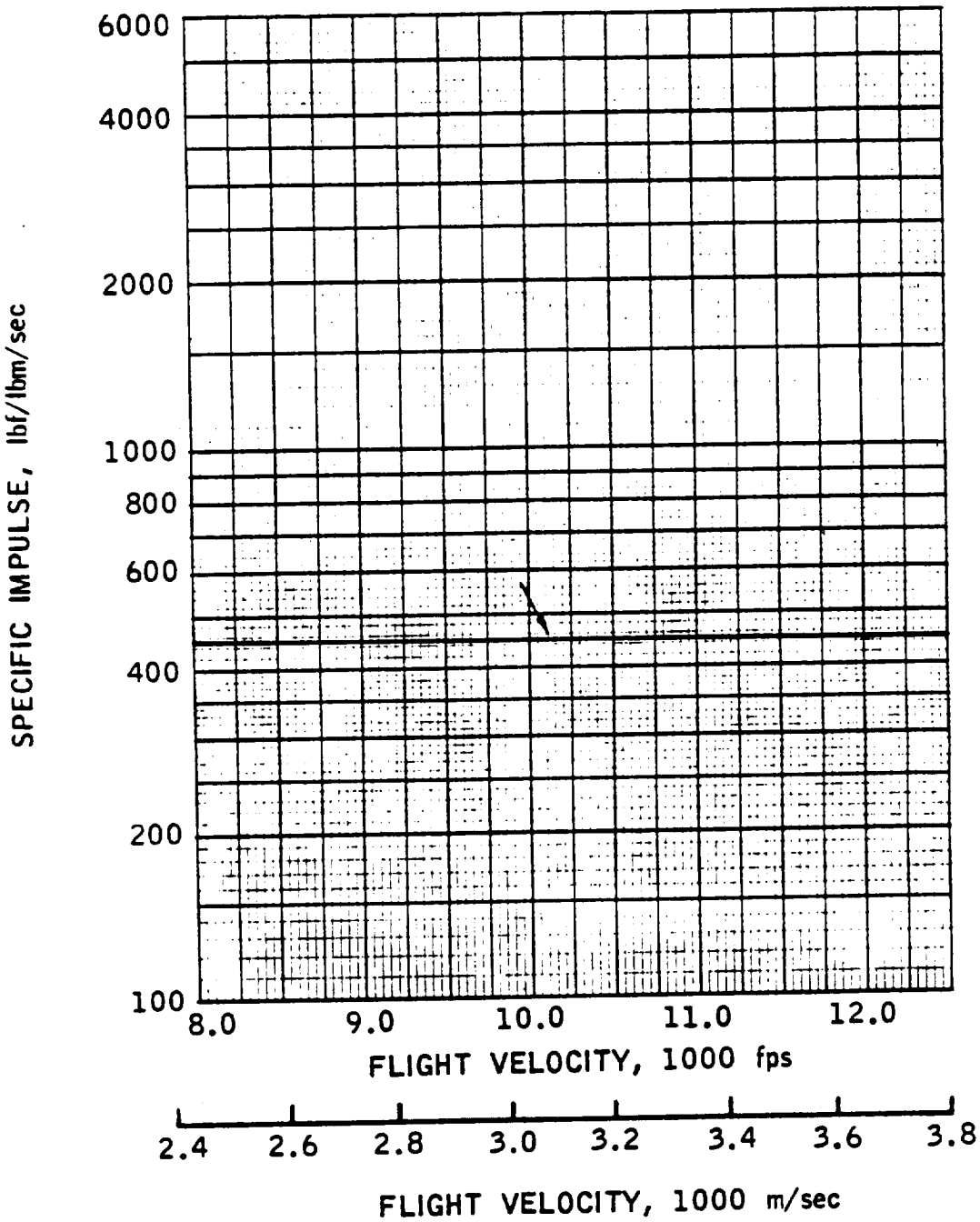

ENG. NO. 0

THRUST

REFERENCE TRAJECTORIES

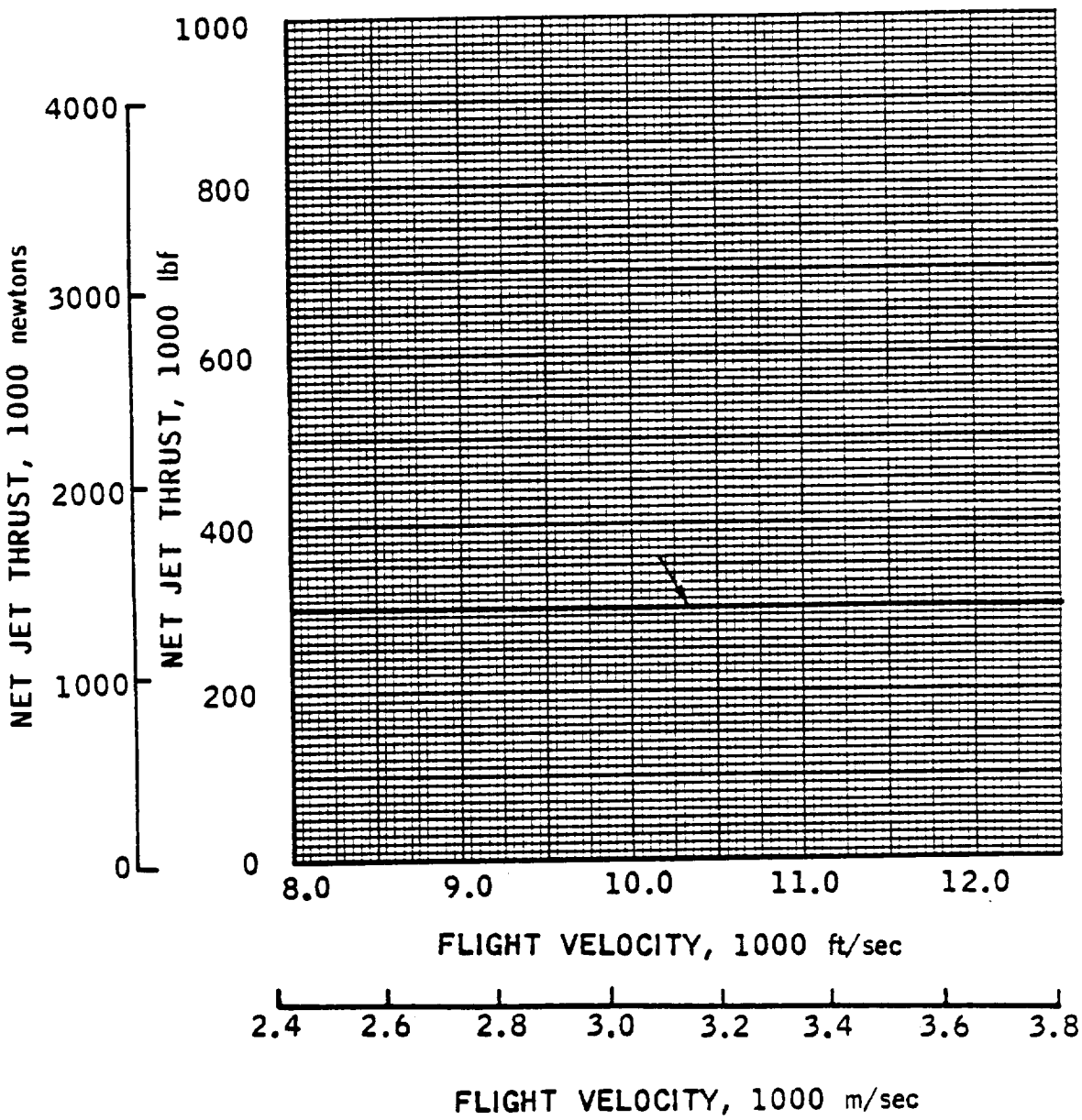

This Page Intentionally Blank

ENGINE FACT SHEET

Class 0 Composite Launch Vehicle Engines

Engine Identification Number: 1 Hyperjet

Engine Operating Modes

Summary: Number of Modes/ Transitions 5 ; Number of Discrete Modes Utilized 2

Mode Progression - Lift-off to Touch-down

(Take off) Rocket (2000-3000 ft/sec) Ramjet, subsonic combustion (6000-8000 ft/sec) Rocket (Orbital speed, space maneuvering and deorbiting) Ramjet, subsonic combustion (Flyback) Rocket (Landing)

Engine Propellant Requirements

Code: (R) = Required, (V) = Required for vacuum operation, (F) = Useable for flyback mode

- [R] Hydrogen, liquid, 37-40 °R
- [ ] Hydrogen, liquid, subcooled (25 °R)
- [ ] Hydrogen, gaseous
- [R] Oxygen, liquid, 162 °R
- [ ] Oxygen, liquid, subcooled
- [ ] Oxygen, gaseous
- [ ] Other _____

Engine Constituent Subsystems

Inlet, combustor, exit

Engine General Arrangement and Operating Schematic

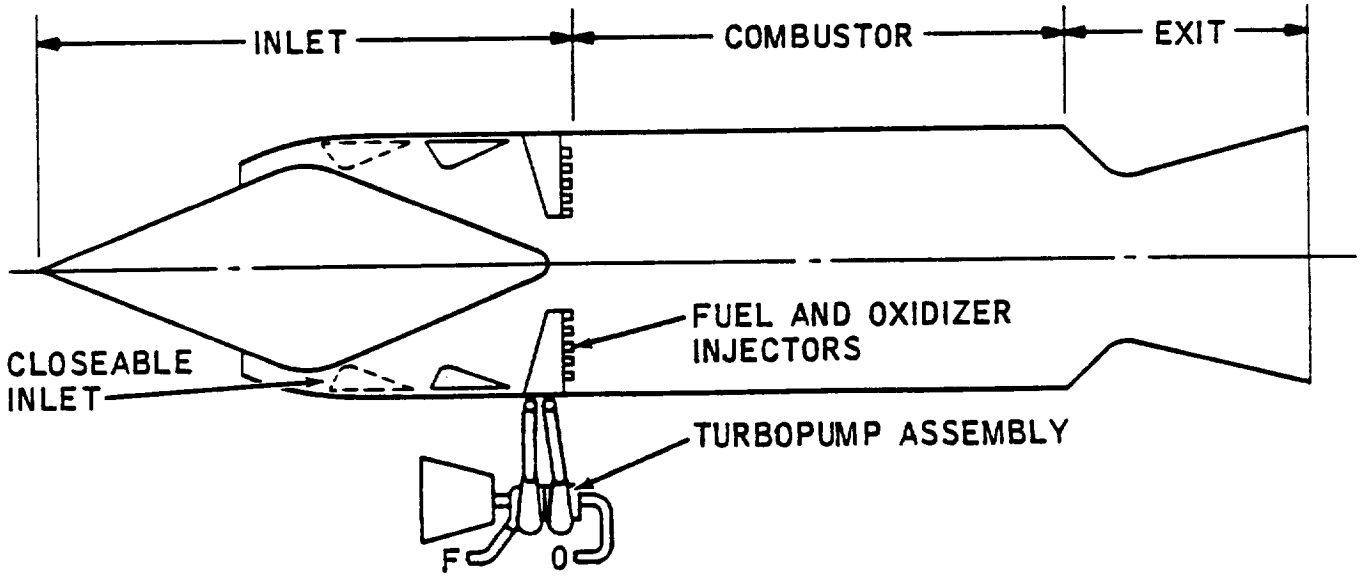

Eng. No. 1

Engine Internal Operating Parameters, nominal

$P_{c\text{-}RKT}$ = 250 psia, O/F = 5.0, A_{EXIT}/A_t = 20 (46)
$P_{c\text{-}RJ}$ = 250 psia, $\emptyset$ = 1.0

Engine Operating Mode Block Diagrams

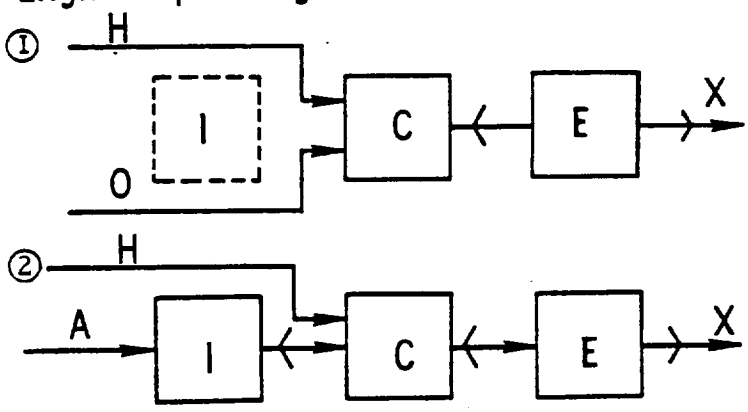

ENGINE PHYSICAL CHARACTERISTICS

Eng. No. 1-1

Thrust, sls	250,000 lbf	1,112,055 newton

Weight and Thrust/Weight Ratio

Measuring Units	(English)	(International)
Weight	lbm	kg
Thrust/Weight	lbf/lbm	newton/kg

(lbf/in^2) Maximum Engine Internal Pressure 1000 (newtor/m^2)

Lightweight Estimate						
Subsystems:	50	100	250	344.7	689.5	1723.7
* Inlet Section	1,896	1,896	1,896	860.0	860.0	860.0
Inlet Valve	1,311	1,311	1,311	594.7	594.7	594.7
Combustor/Exit	2,346	2,346	2,346	1,064.1	1,064.1	1,064.1
Contingency	235	235	235	106.6	106.6	106.6
Uninstalled Eng. Wt.	5,788	5,788	5,788	2,625.4	2,625.4	2,625.4
Thrust/Weight, Uninst.	43.2	43.2	43.2	424	424	424
Inlet Weight (Remaining)	1,106	1,264	1,833	501.7	573.4	831.4
Installed Eng. Wt.	6,894	7,052	7,621	3,127.1	3,198.8	3,456.8
Thrust/Weight, Inst.	36.3	35.5	32.8	356	348	322

Heavyweight Estimate						
Uninstalled Eng. Wt.	6,946	6,946	6,946	3,150.7	3,150.7	3,150.7
Thrust/Weight, Uninst.	36.0	36.0	36.0	353	353	353
Inlet Weight	11,074	12,656	17,798	5,023.2	5,740.8	8,073.2
Installed Eng. Wt.	18,020	19,602	24,744	8,173.9	8,891.5	11,223.9
Thrust/Weight, Inst.	13.9	13.3	10.1	136	130	99

Engine Flow Areas and Equivalent Diameters

	ft^2	ft	m^2	m
Inlet Cowl, A_c	79.1	10.03	7.35	3.06
Mixer, A_3				
Combustor, A_4	69.0	9.37	6.41	2.86
Exit, A_6	110.0	11.83	10.22	3.61

Engine Lengths

	ft	m
* Uninstalled	19.2	5.85
* Inlet (Typ)	27.5	8.38
Installed (Typ)	46.7	14.23

REMARKS, REFERENCES

* Hyperjet. Section of inlet from closure aft must withstand rocket mode combustion pressure, therefore only a small portion of inlet gains on weight reduction with lower "q" trajectories. (References 10, 16, 21)

SPECIFIC IMPULSE
REFERENCE TRAJECTORIES

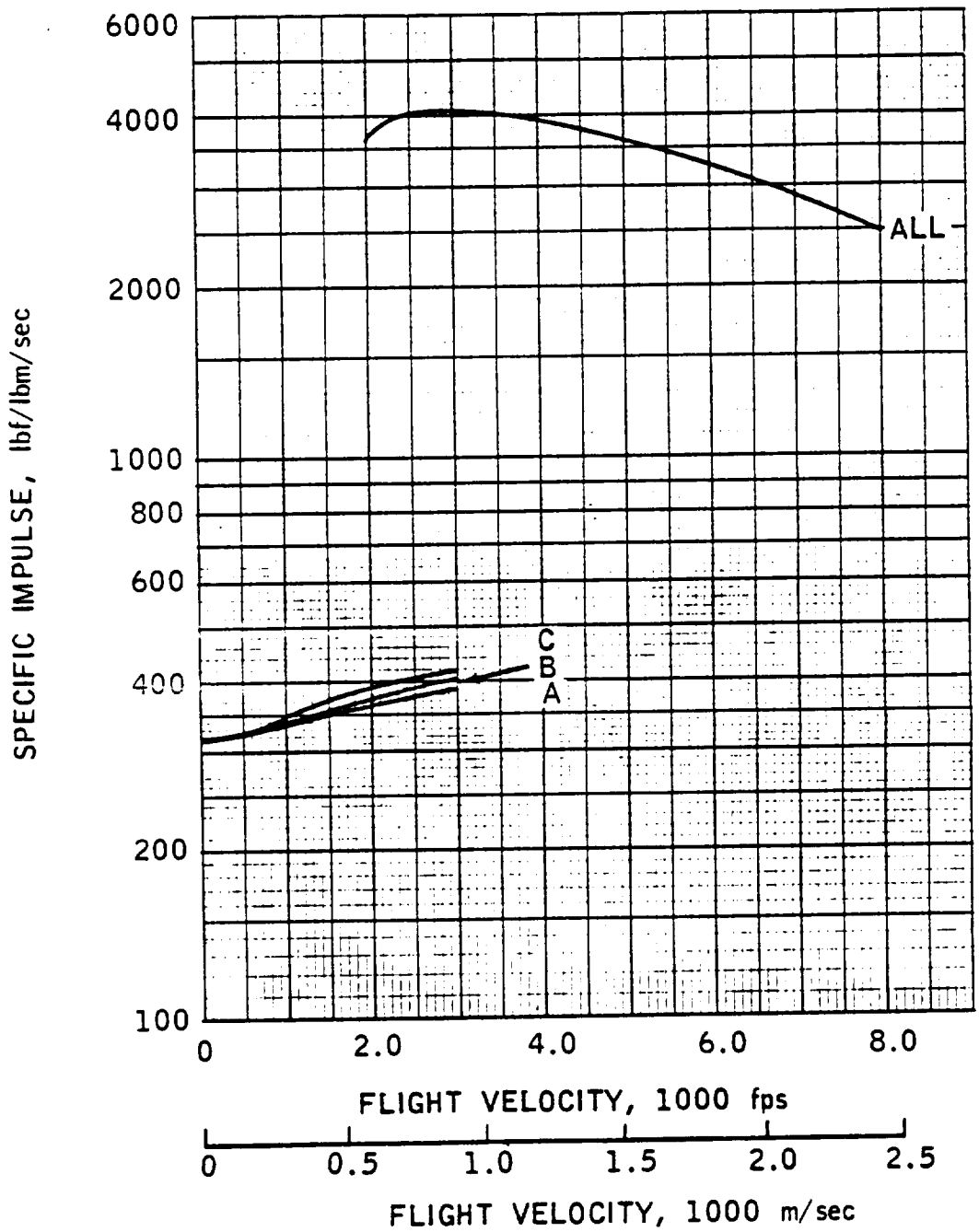

ENG. NO. 1-1

THRUST

REFERENCE TRAJECTORIES

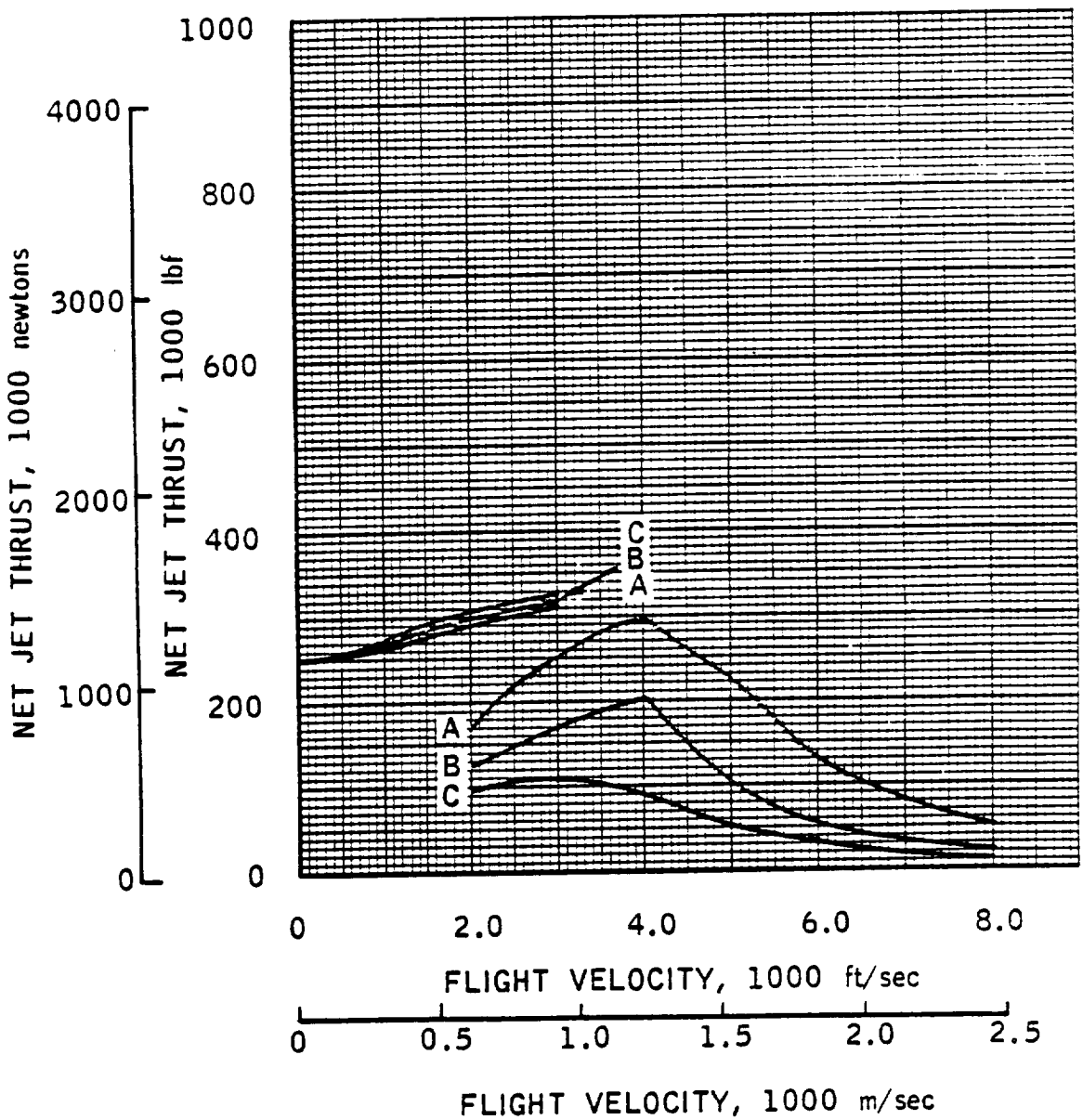

CAPTURE AREA

REFERENCE TRAJECTORIES

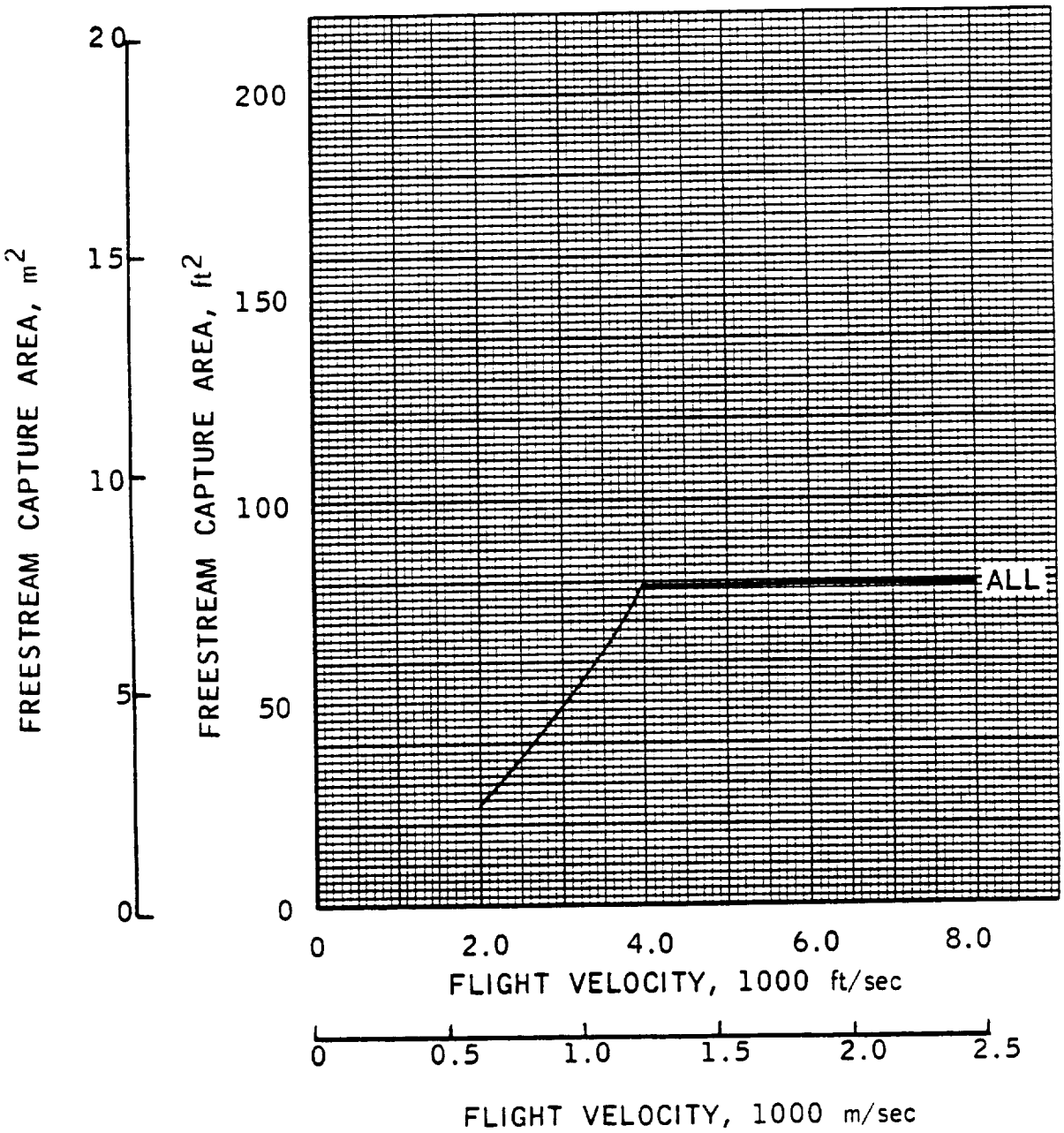

ENG. NO. 1-1

AIRFLOW

REFERENCE TRAJECTORIES

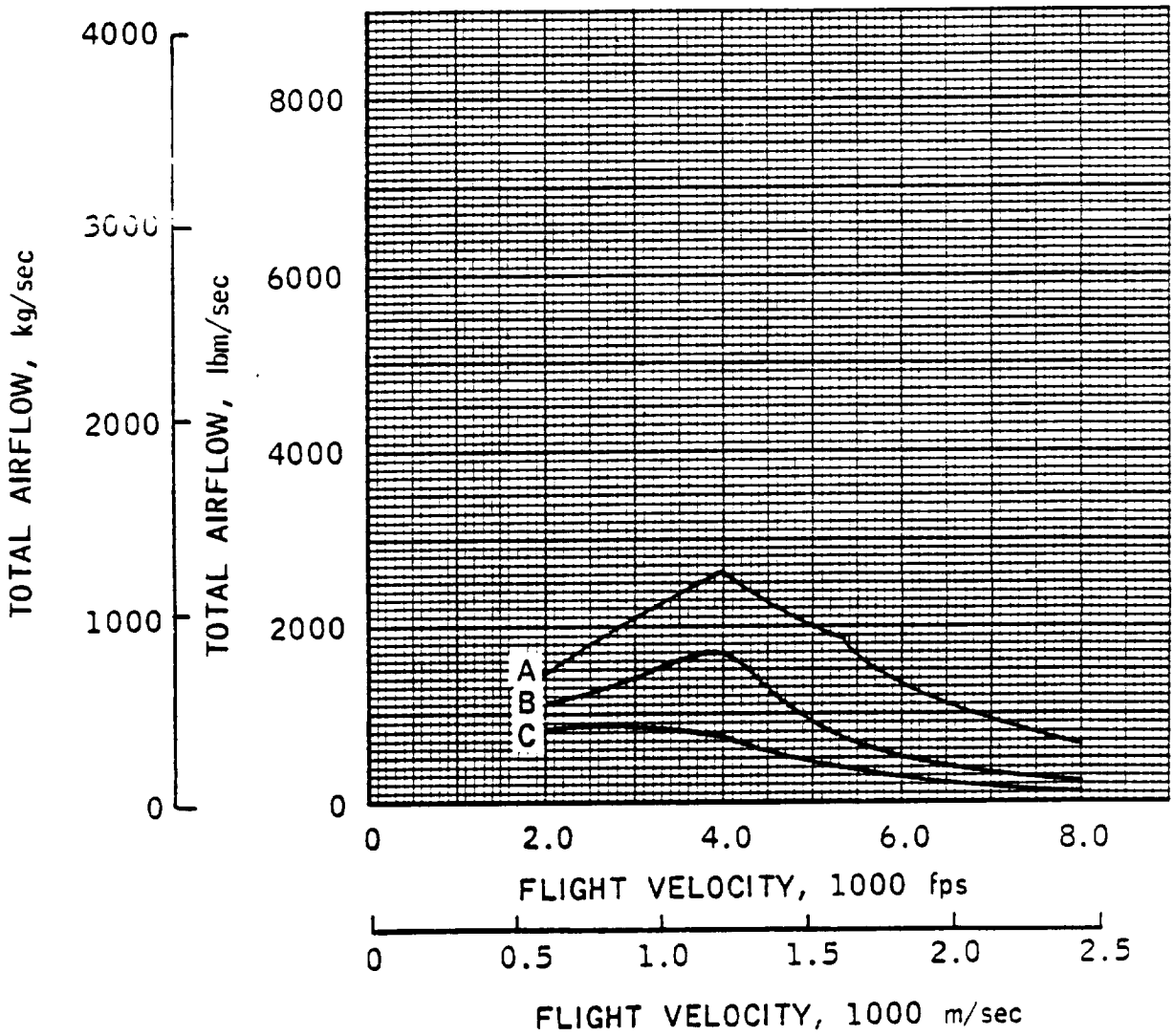

ENGINE- 1-1

ESTIMATED PERFORMANCE

MO	VO	HTO	PTO	T	CF	IS	SPC	PT2	H2	P2
				ALTITUDE -		0. FEET				
0.10	112.	124.7	14.8	250000.	1.37	312.	11.54	14.80	*******	*******
				ALTITUDE -		10000. FEET				
0.65	700.	125.7	13.4	264340.	1.44	330.	10.91	13.43	*******	*******
0.70	754.	127.3	14.0	264340.	1.44	330.	10.91	14.02	*******	*******
0.79	851.	130.4	15.3	264340.	1.44	330.	10.91	15.26	*******	*******
				ALTITUDE -		20000. FEET				
1.01	1047.	129.3	12.9	278200.	1.50	347.	10.37	12.94	*******	*******
1.21	1255.	138.8	16.6	278200.	1.50	347.	10.37	16.47	*******	*******
1.45	1504.	152.5	23.1	278200.	1.50	347.	10.37	22.52	*******	*******
				ALTITUDE -		30000. FEET				
1.46	1453.	141.0	15.2	291190.	1.55	363.	9.92	14.77	*******	*******
1.71	1701.	156.6	21.9	291190.	1.55	363.	9.92	20.89	*******	*******
2.06	2049.	182.7	37.6	291190.	1.55	363.	9.92	34.55	*******	*******
				ALTITUDE -		40000. FEET				
1.91	1849.	161.9	18.6	303770.	1.61	379.	9.50	17.36	*******	*******
2.22	2149.	185.8	30.1	303770.	1.61	379.	9.50	27.20	*******	*******

CONFIDENTIAL

ENGINE- 1-1

ESTIMATED PERFORMANCE

M2	WS	WP	WSWP	WFT	PHP	PHS	V6	PT20	A0	A5	A6
ALTITUDE - 0. FEET											
******	*******	801.	******	801.3	1.6	*******	*******	*****	********	*******	******
ALTITUDE - 10000. FEET											
******	*******	801.	******	801.0	1.6	*******	*******	*****	********	*******	******
******	*******	801.	******	801.0	1.6	*******	*******	*****	********	*******	******
******	*******	801.	******	801.0	1.6	*******	*******	*****	********	*******	******
ALTITUDE - 20000. FEET											
******	*******	801.	******	801.7	1.6	*******	*******	*****	********	*******	******
******	*******	801.	******	801.7	1.6	*******	*******	*****	********	*******	******
******	*******	801.	******	801.7	1.6	*******	*******	*****	********	*******	******
ALTITUDE - 30000. FEET											
******	*******	801.	******	802.2	1.6	*******	*******	*****	********	*******	******
******	*******	801.	******	802.2	1.6	*******	*******	*****	********	*******	******
******	*******	801.	******	802.2	1.6	*******	*******	*****	********	*******	******
ALTITUDE - 40000. FEET											
******	*******	801.	******	801.5	1.6	*******	*******	*****	********	*******	******
******	*******	801.	******	801.5	1.6	*******	*******	*****	********	*******	******

CONFIDENTIAL

This Page Intentionally Blank

ENGINE PHYSICAL CHARACTERISTICS

Eng. No. 1-2

Thrust, sls	250,000 lbf	1,112,055 newton

Weight and Thrust/Weight Ratio

Measuring Units	(English)	(International)
Weight	lbm	kg
Thrust/Weight	lbf/lbm	newton/kg

Lightweight Estimate

(lbf/in^2) Maximum Engine Internal Pressure 1000 (newton/m^2)

Subsystems:	50	100	250	344.7	689.5	1723.7
* Inlet Section	4,368	4,368	4,368	1,981.3	1,981.3	1,981.3
Inlet Valve	3,022	3,022	3,022	1,370.8	1,370.8	1,370.8
Combustor/Exit	5,372	5,372	5,372	2,436.7	2,436.7	2,436.7
Contingency	537	537	537	243.6	243.6	243.6
Uninstalled Eng. Wt.	13,299	13,299	13,299	6,032.4	6,032.4	6,032.4
Thrust/Weight, Uninst.	18.8	18.8	18.8	184	184	184
Inlet Weight (Remaining)	2,548	2,912	4,222	1,155.8	1,320.9	1,915.1
Installed Eng. Wt.	15,847	16,211	17,521	7,188.2	7,353.3	7,947.5
Thrust/Weight, Inst.	15.8	15.4	14.3	155	151	140

Heavyweight Estimate

Uninstalled Eng. Wt.	14,629	14,629	14,629	6,635.7	6,635.7	6,635.7
Thrust/Weight, Uninst.	17.1	17.1	17.1	168	168	168
Inlet Weight	25,494	29,136	40,973	11,564.1	13,216.1	18,585.4
Installed Eng. Wt.	40,123	43,765	55,602	18,199.8	19,851.8	25,221.1
Thrust/Weight, Inst.	6.2	5.7	4.5	61	56	44

Engine Flow Areas and Equivalent Diameters

	ft^2	ft	m^2	m
Inlet Cowl, A_c	182.1	15.23	16.92	4.64
Mixer, A_3				
Combustor, A_4	158.3	14.20	14.71	4.33
Exit, A_6	252.5	17.93	23.46	5.47

Engine Lengths

	ft	m
* Uninstalled	24.2	7.38
* Inlet (Typ)	37.9	11.55
Installed (Typ)	62.1	18.93

REMARKS, REFERENCES

* Section of inlet and inlet valve used for rocket chamber.

SPECIFIC IMPULSE
REFERENCE TRAJECTORIES

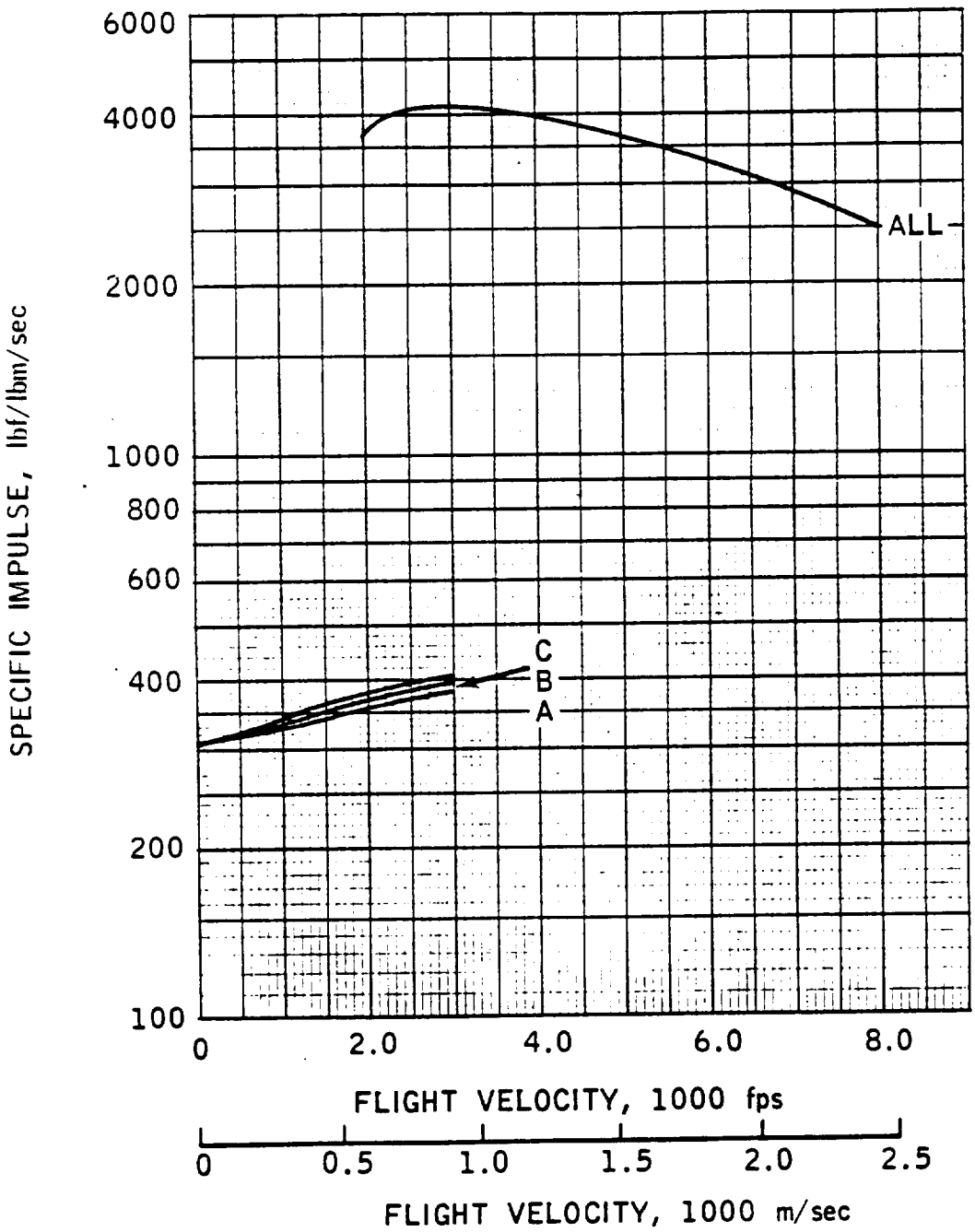

ENG. NO. 1-2

THRUST

REFERENCE TRAJECTORIES

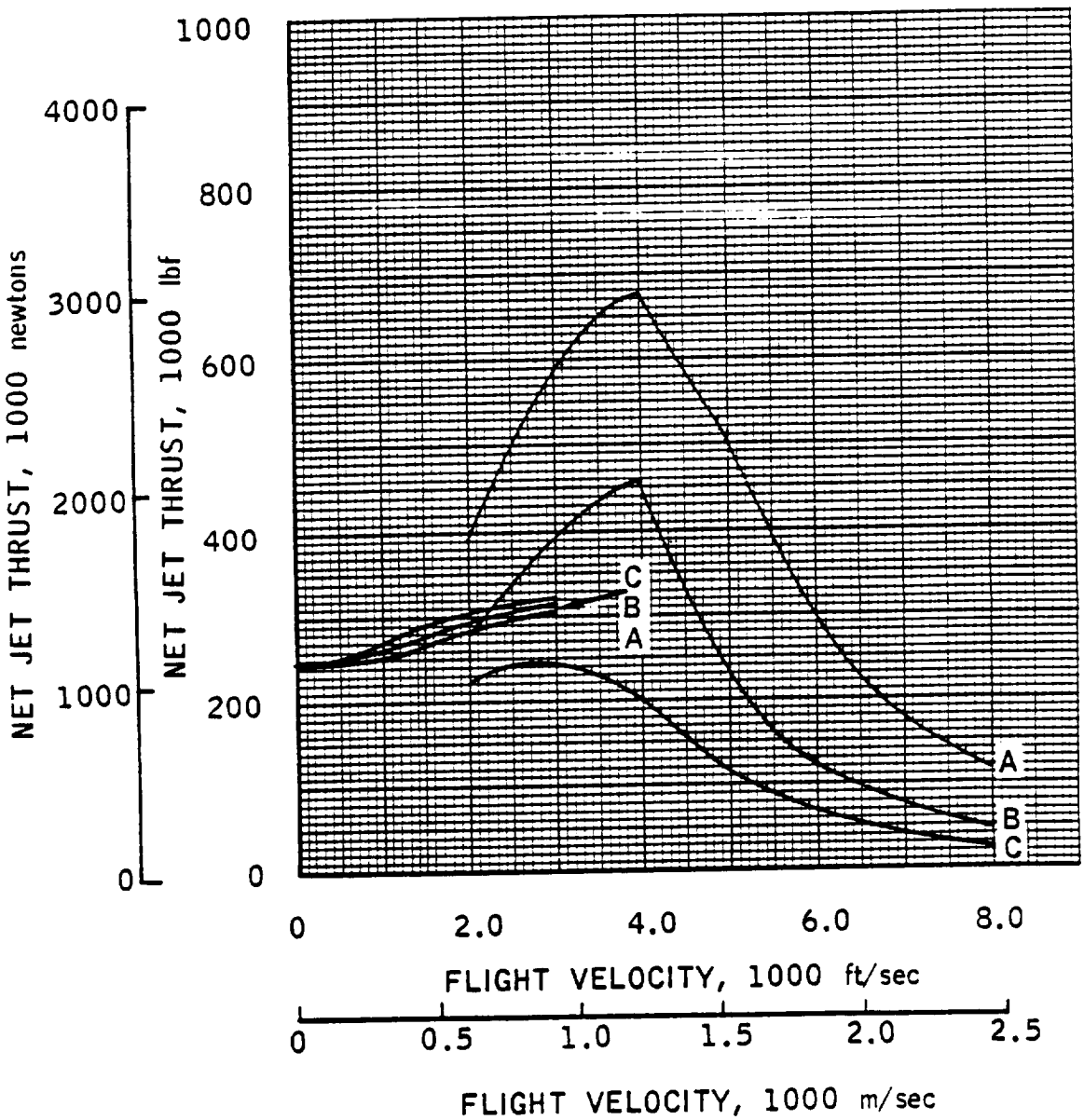

CAPTURE AREA

REFERENCE TRAJECTORIES

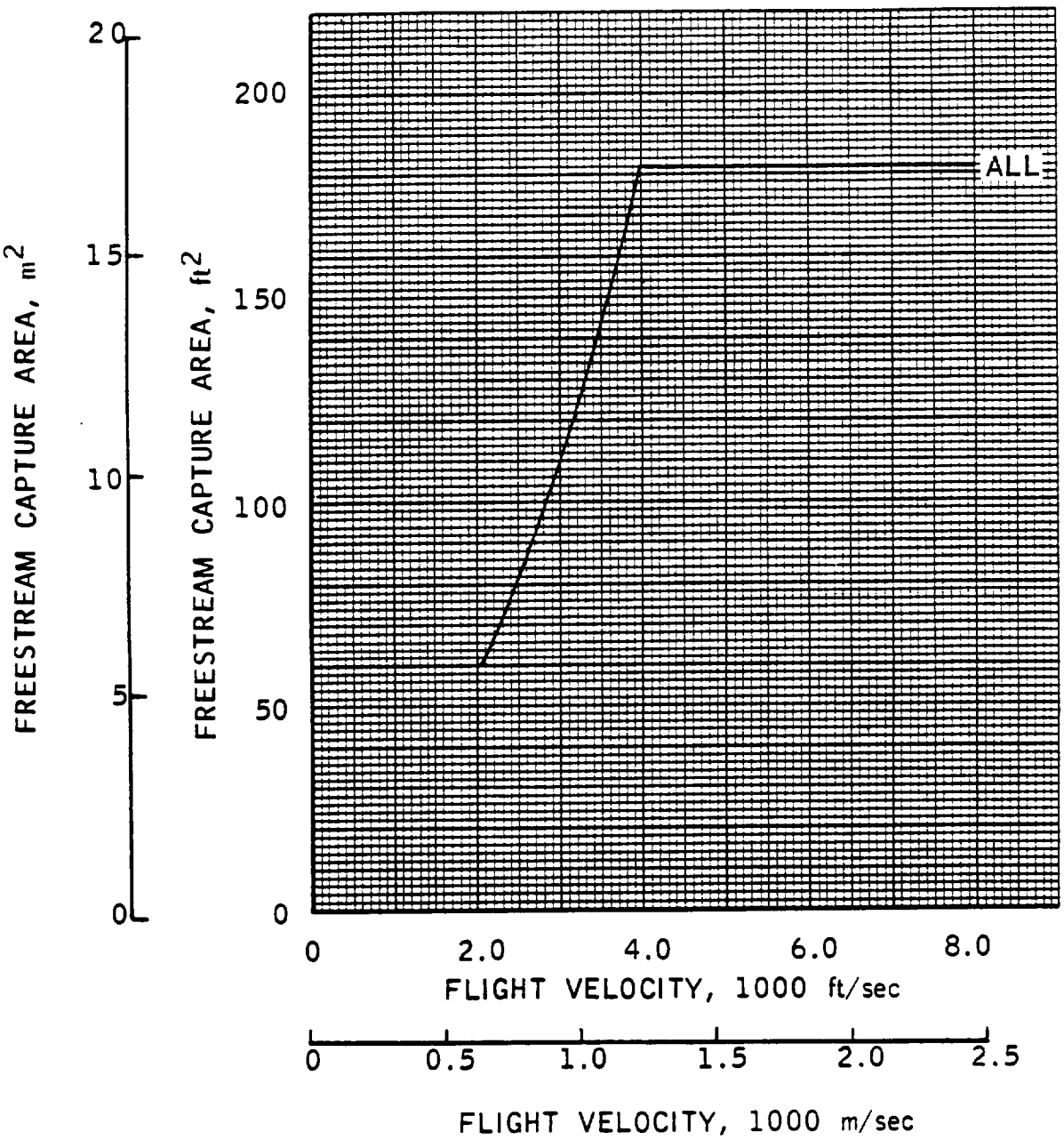

AIRFLOW

REFERENCE TRAJECTORIES

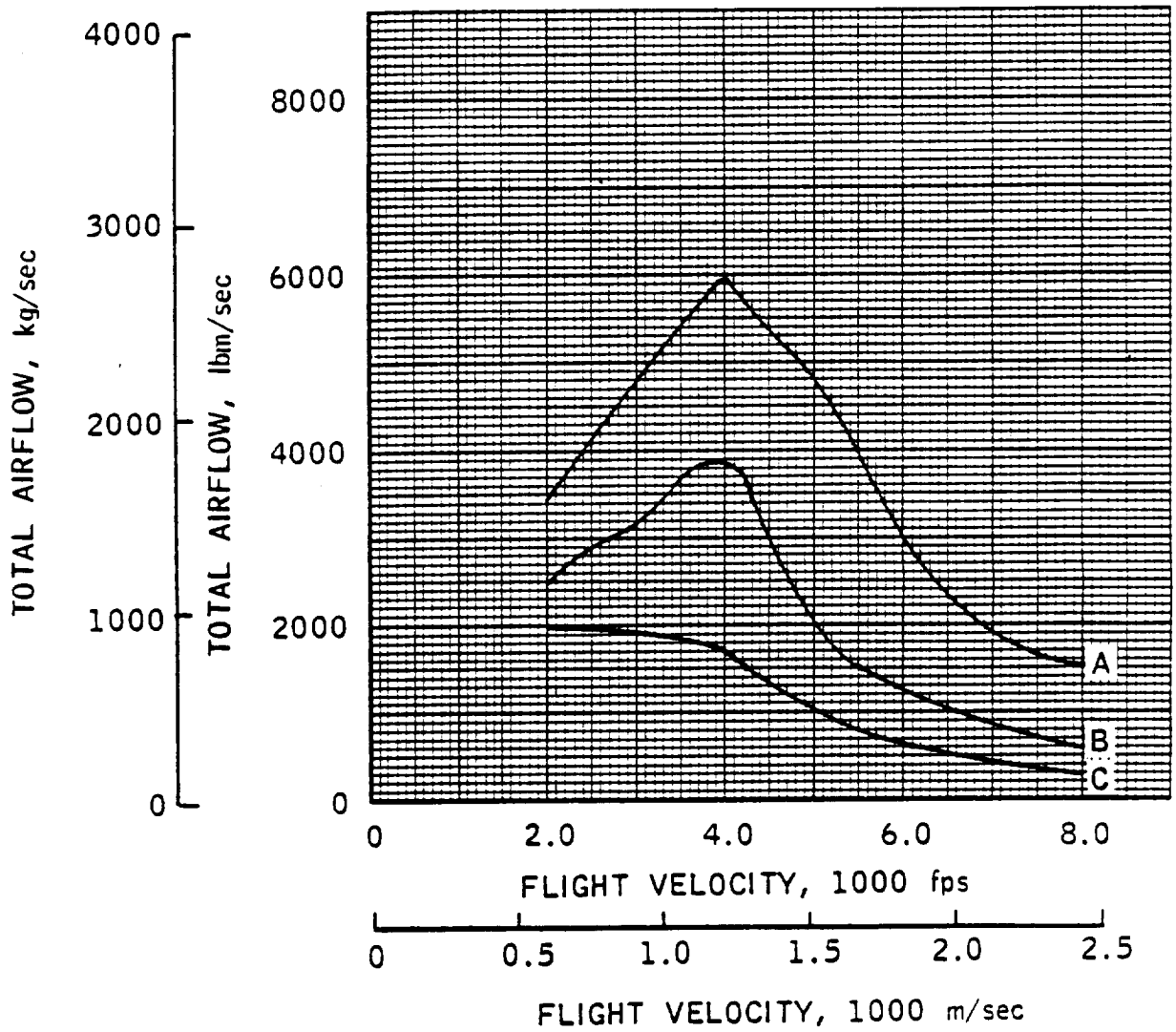

[redacted]

ENGINE- 1-2

ESTIMATED PERFORMANCE

PC	VC	FTC	FTC	T	CF	IS	SFC	PT2	H2	P2
				ALTITUDE -		0. FEET				
0.10	112.	124.7	14.8	250000.	1.37	312.	11.54	14.80	*******	*******
				ALTITUDE -		10000. FEET				
0.65	700.	125.7	13.4	264340.	1.44	330.	10.91	13.43	*******	*******
0.70	754.	127.3	14.0	264340.	1.44	330.	10.91	14.02	*******	*******
0.79	851.	130.4	15.3	264340.	1.44	330.	10.91	15.26	*******	*******
				ALTITUDE -		20000. FEET				
1.01	1047.	129.3	12.9	278200.	1.50	347.	10.37	12.94	*******	*******
1.21	1255.	138.8	16.6	278200.	1.50	347.	10.37	16.47	*******	*******
1.49	1504.	152.5	23.1	278200.	1.50	347.	10.37	22.52	*******	*******
				ALTITUDE -		30000. FEET				
1.46	1453.	141.0	15.2	291190.	1.55	363.	9.92	14.77	*******	*******
1.71	1701.	156.6	21.9	291190.	1.55	363.	9.92	20.89	*******	*******
2.06	2049.	182.7	37.6	291190.	1.55	363.	9.92	34.55	*******	*******
				ALTITUDE -		40000. FEET				
1.91	1849.	161.9	18.6	303770.	1.61	379.	9.50	17.36	*******	*******
2.22	2149.	185.8	30.1	303770.	1.61	379.	9.50	27.20	*******	*******

[redacted]

[redacted]

ENGINE- 1-2

ESTIMATED PERFORMANCE

P2	W5	WP	WSWP	WFT	PFP	PFS	V6	P12C	AC	A5	A6
					ALTITUDE - 0. FEET						
******	*******	EC1.	******	EC1.3	1.6	*******	*******	*****	********	*******	*******
					ALTITUDE - 10000. FEET						
******	*******	EC1.	******	EC1.0	1.6	*******	*******	*****	********	*******	*******
******	*******	BC1.	******	EC1.0	1.6	*******	*******	*****	********	*******	*******
******	*******	EC1.	******	EC1.0	1.6	*******	*******	*****	********	*******	*******
					ALTITUDE - 20000. FEET						
******	*******	EC1.	******	EC1.7	1.6	*******	*******	*****	********	*******	*******
******	*******	BC1.	******	BC1.7	1.6	*******	*******	*****	********	*******	*******
******	*******	EC1.	******	EC1.7	1.6	*******	*******	*****	********	*******	*******
					ALTITUDE - 30000. FEET						
******	*******	EC1.	******	EC2.2	1.6	*******	*******	*****	********	*******	*******
******	*******	BC1.	******	BC2.2	1.6	*******	*******	*****	********	*******	*******
******	*******	EC1.	******	EC2.2	1.6	*******	*******	*****	********	*******	*******
					ALTITUDE - 40000. FEET						
******	*******	EC1.	******	EC1.5	1.6	*******	*******	*****	********	*******	*******
******	*******	BC1.	******	BC1.5	1.6	*******	*******	*****	********	*******	*******

[redacted]

[redacted]

ENGINE- 1-2

ESTIMATED PERFORMANCE

MC	VC	FTC	PTC	T	CF	IS	SFC	PT2	H2	P2
ALTITUDE - 40000. FEET										
2.65	2604.	229.0	62.6	303770.	1.61	379.	9.50	53.11	*******	*******
ALTITUDE - 45500. FEET										
3.10	3000.	273.3	85.3	310660.	1.64	388.	9.28	71.10	*******	*******
ALTITUDE - 50000. FEET										
2.40	2320.	201.1	24.6	315460.	1.66	394.	9.14	21.65	*******	*******
2.84	2750.	244.6	48.8	315460.	1.66	394.	9.14	40.51	*******	*******
ALTITUDE - 54000. FEET										
3.10	3000.	273.3	55.5	319350.	1.68	399.	9.02	47.37	*******	*******
ALTITUDE - 60000. FEET										
2.85	2800.	250.2	32.7	325320.	1.70	406.	8.87	26.55	*******	*******
ALTITUDE - 64000. FEET										
3.10	3000.	273.3	36.5	328770.	1.72	410.	8.78	29.37	*******	*******

[redacted]

ENGINE- 1-2

ESTIMATED PERFORMANCE

P2	W5	WF	WSWP	WFT	PFP	FFS	V6	PT2C	AC	A5	A6
					ALTITUDE - 40000. FEET						
******	*******	801.	******	801.5	1.6	*******	*******	*****	********	*******	*******
					ALTITUDE - 45500. FEET						
******	*******	801.	******	800.7	1.6	*******	*******	*****	********	*******	*******
					ALTITUDE - 50000. FEET						
******	*******	801.	******	800.7	1.6	*******	*******	*****	********	*******	*******
******	*******	801.	******	800.7	1.6	*******	*******	*****	********	*******	*******
					ALTITUDE - 54000. FEET						
******	*******	801.	******	800.5	1.6	*******	*******	*****	********	*******	*******
					ALTITUDE - 60000. FEET						
******	*******	801.	******	801.3	1.6	*******	*******	*****	********	*******	*******
					ALTITUDE - 64000. FEET						
******	*******	801.	******	801.5	1.6	*******	*******	*****	********	*******	*******

[redacted]

This Page Intentionally Blank

ENGINE FACT SHEET

Class 0 Composite Launch Vehicle Engines

Engine Identification Number: 2 Hyperjet-Scramjet

Engine Operating Modes

Summary: Number of Modes/ Transitions 6 ; Number of Discrete Modes Utilized 3

Mode Progression - Lift-off to Touch-down

(Take off) Rocket (2000-3000 ft/sec) Ramjet, subsonic combustion (6000-8000 ft/sec) Ramjet, supersonic combustion (10,000-14,000 ft/sec) Rocket (Orbital speed, space maneuvering and deorbiting) Ramjet, subsonic combustion (Flyback) Rocket (Landing)

Engine Propellant Requirements

Code: (R) = Required, (V) = Required for vacuum operation, (F) = Useable for flyback mode

- [x] Hydrogen, liquid, 37-40 °R
- [ ] Hydrogen, liquid, subcooled (25 °R)
- [ ] Hydrogen, gaseous
- [x] Oxygen, liquid, 162 °R
- [ ] Oxygen, liquid, subcooled
- [ ] Oxygen, gaseous
- [ ] Other _____

Engine Constituent Subsystems

Inlet, combustor, exit

Engine General Arrangement and Operating Schematic

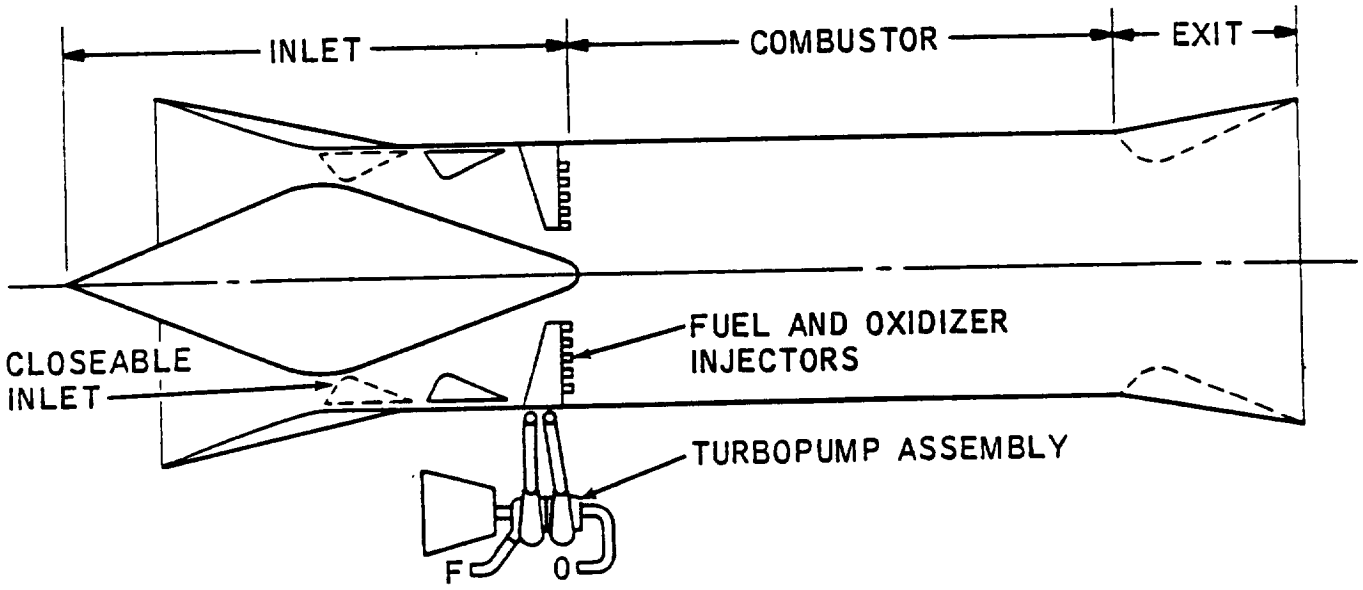

Eng. No. 2

Engine Internal Operating Parameters, nominal

$P_{c\text{-}RKT}$ = 250 psia, O/F = 5.0, A_{EXIT}/A_t = 20 (46)

$P_{c\text{-}RJ}$ = 250 psia, $\emptyset$ = 1.0, A_c/A_3 = 1.15

Engine Operating Mode Block Diagrams

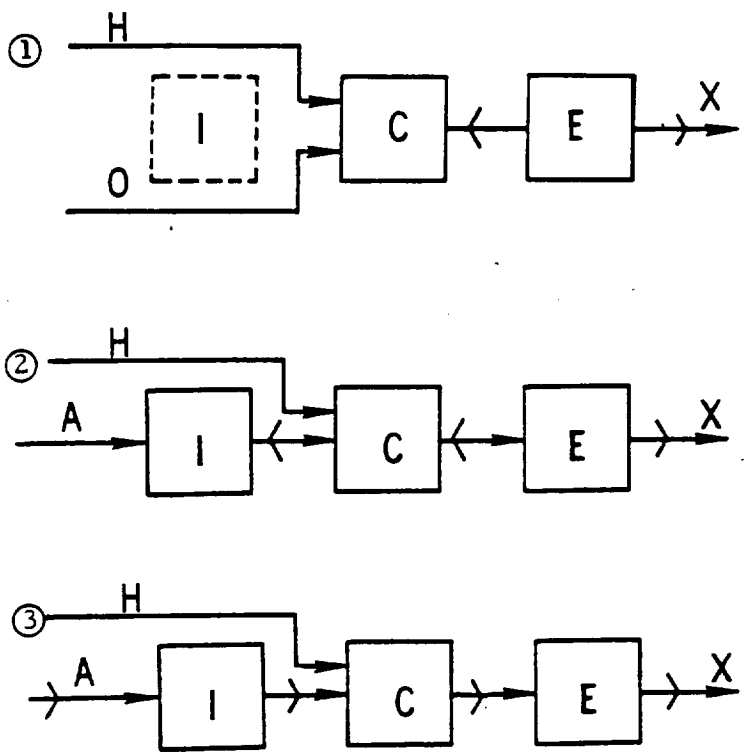

Eng. No. 2

The following information for Engine No. 2 appears in the fact sheets previously given for Engine No. 1.

Engine Physical Characteristics

Weight, Thrust/Weight, Flow Areas, Lengths

Engine Performance: 0-8000 ft/sec

Specific Impulse, Thrust, Airflow, Capture Area

References and additional remarks

SPECIFIC IMPULSE
REFERENCE TRAJECTORIES

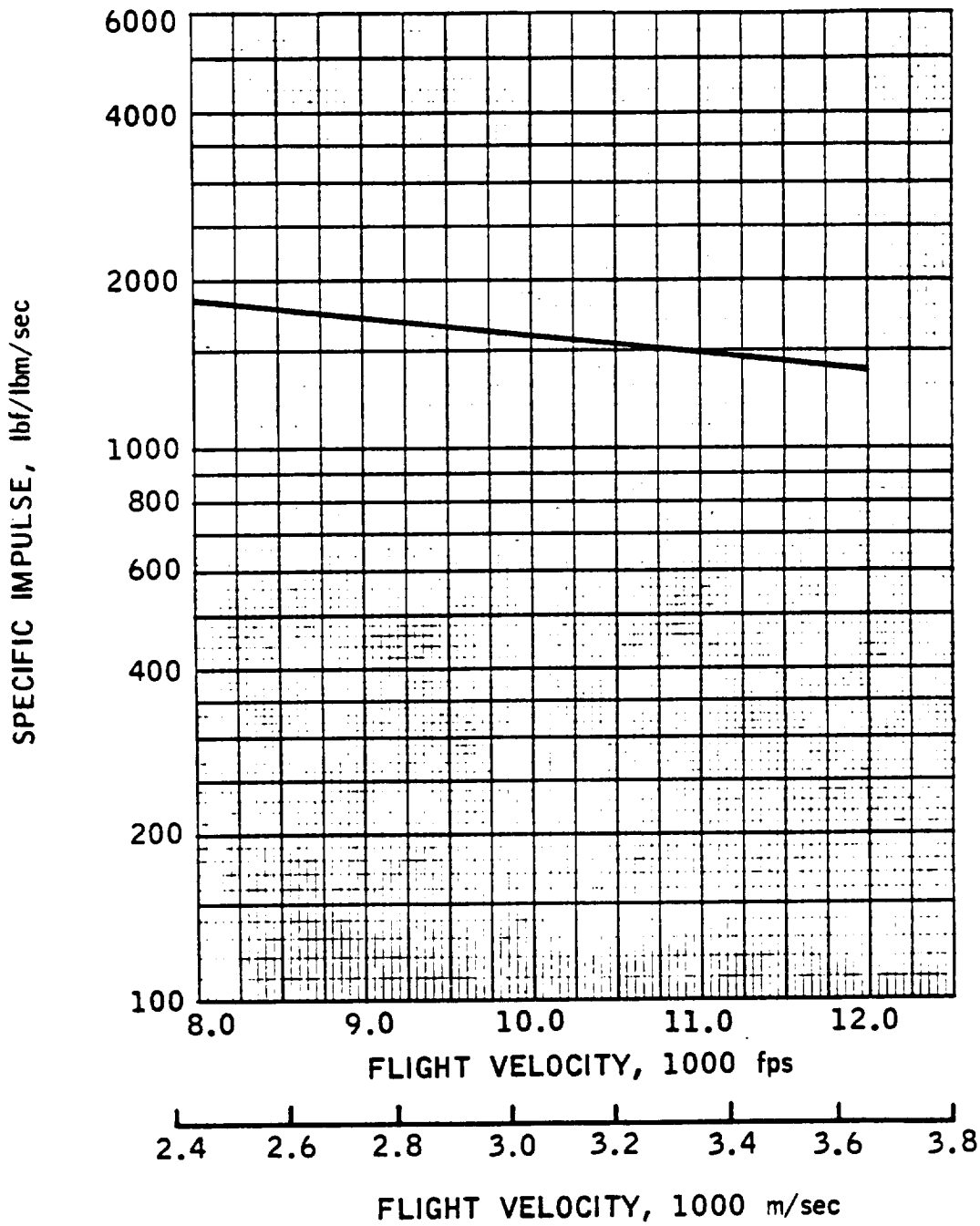

ENG. NO. 2-1

THRUST

REFERENCE TRAJECTORIES

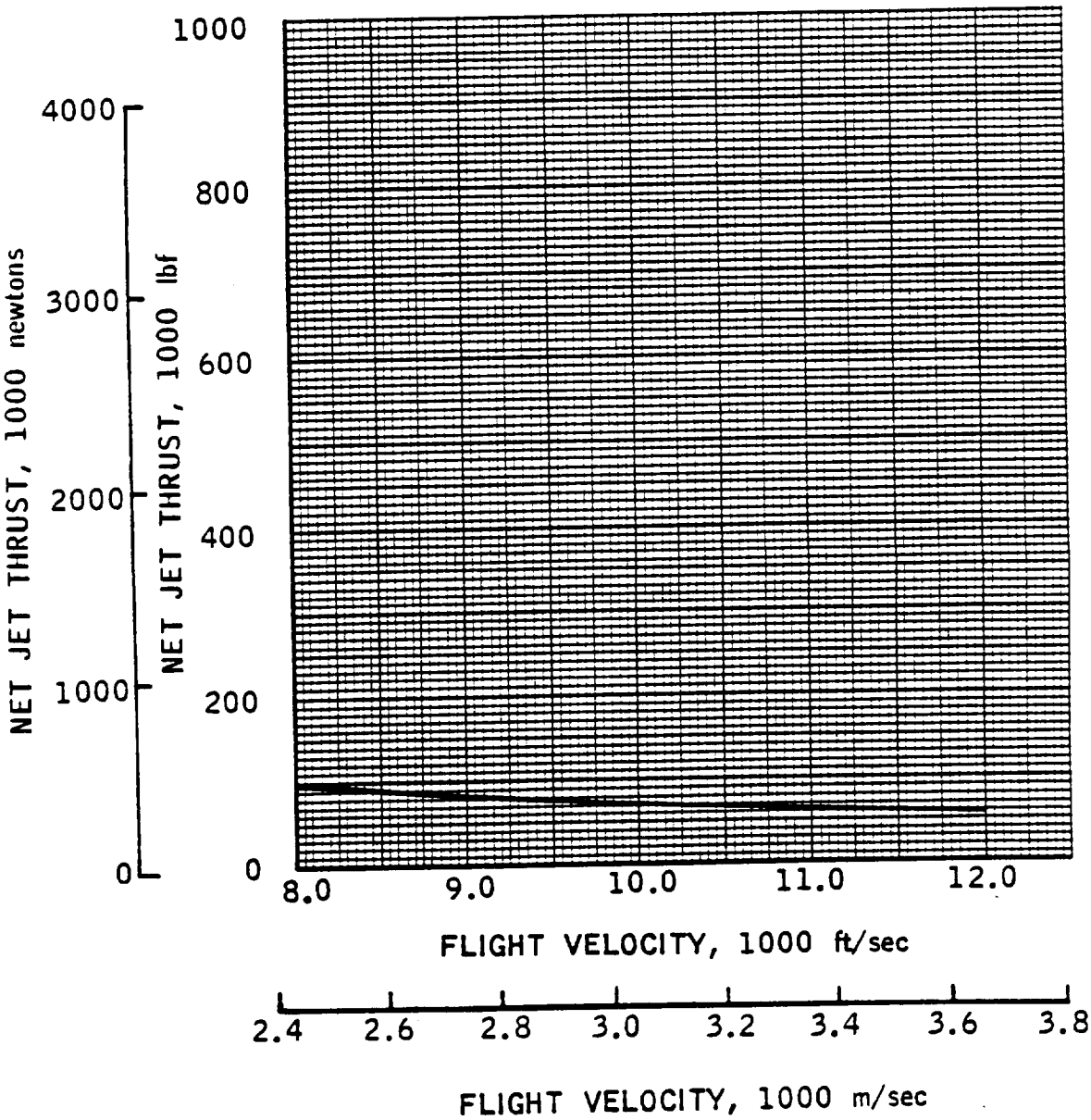

SPECIFIC IMPULSE
REFERENCE TRAJECTORIES

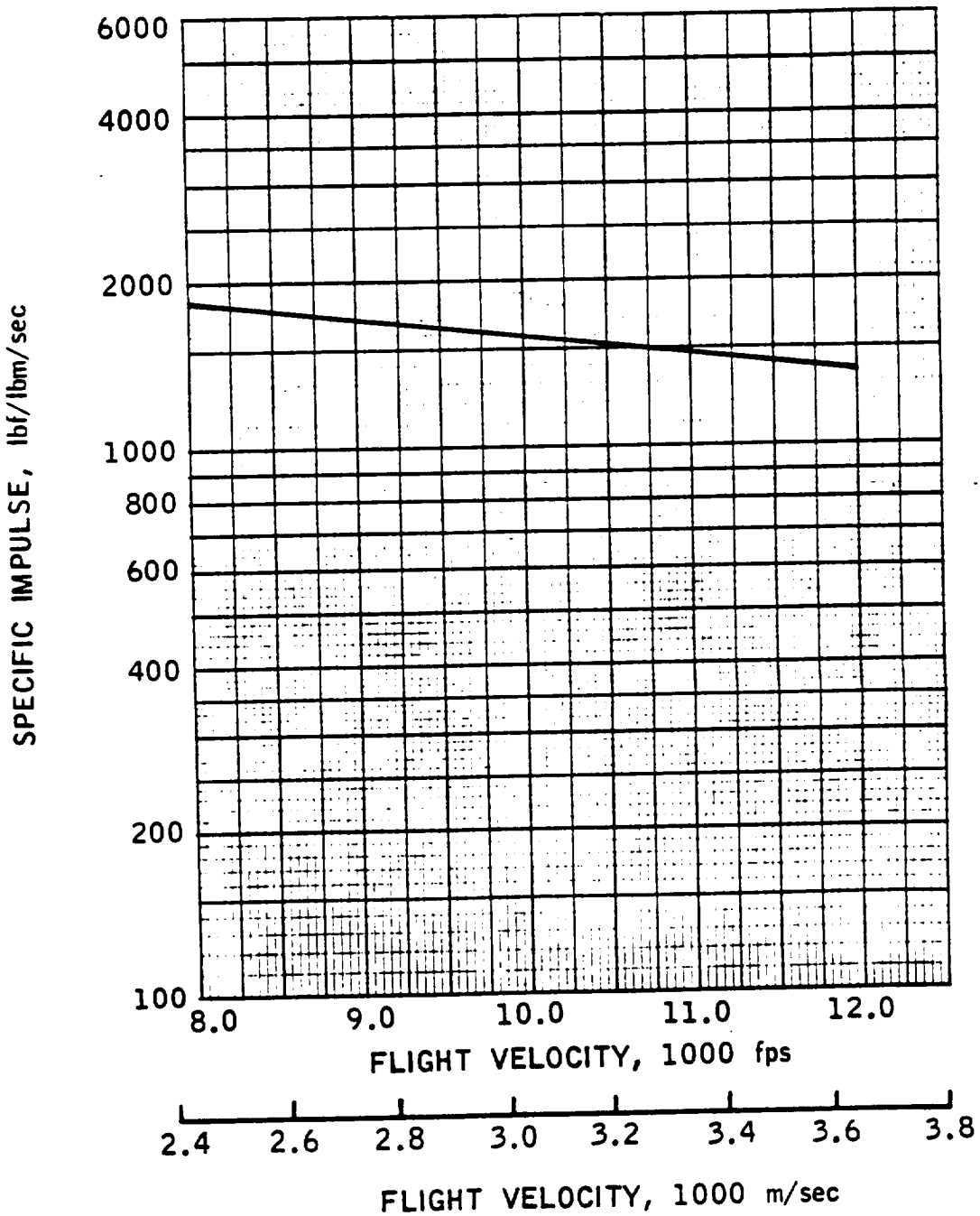

ENG. NO. 2-2

THRUST

REFERENCE TRAJECTORIES

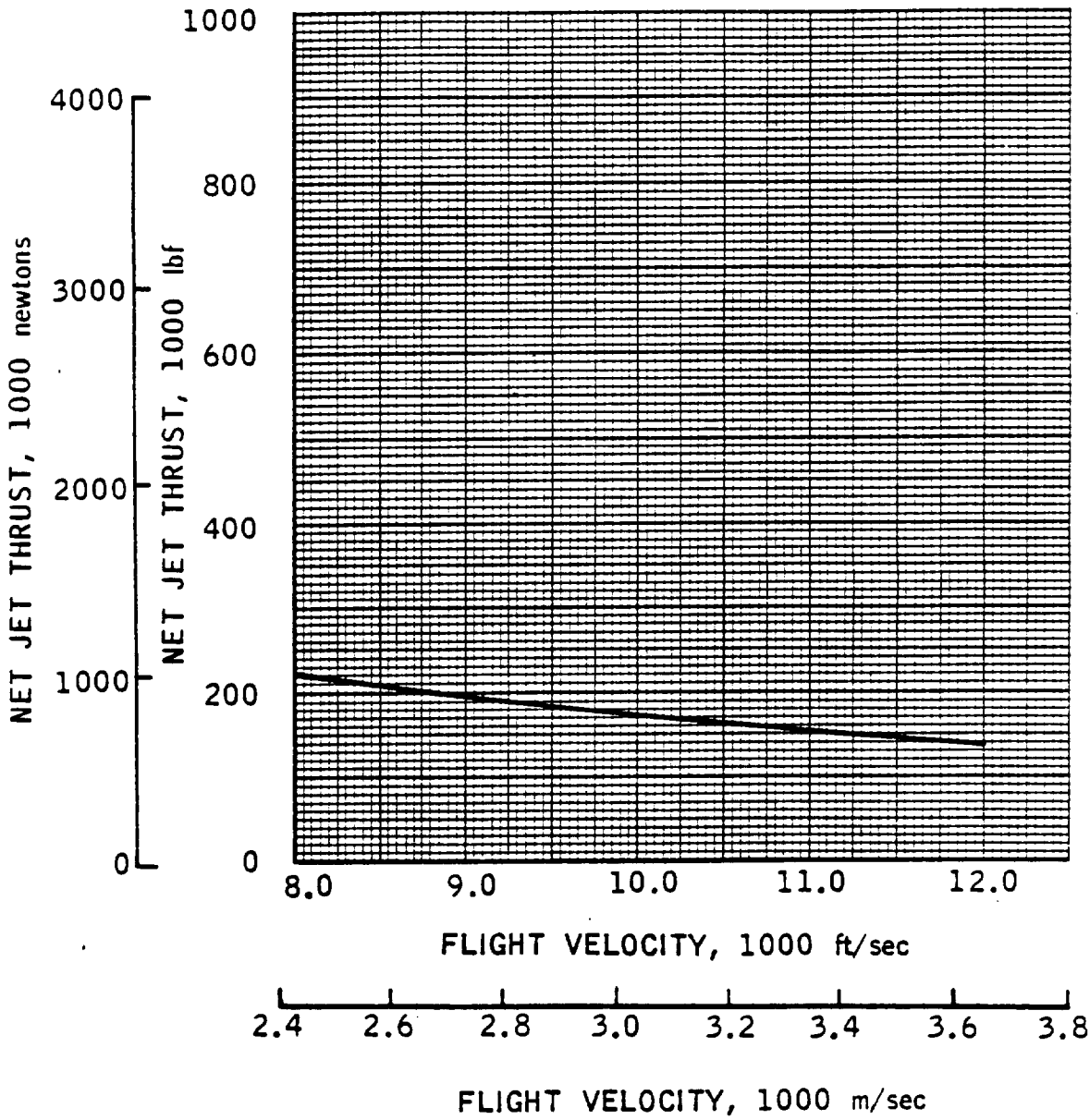

This Page Intentionally Blank

ENGINE FACT SHEET

Class 0 Composite Launch Vehicle Engines

Engine Identification Number: 3 Basic LACE

Engine Operating Modes

Summary: Number of Modes/ Transitions 3 ; Number of Discrete Modes Utilized 2

Mode Progression - Lift-off to Touch-down

(Take off) Liquid Air Cycle Engine (LACE) (6000-8000 ft/sec) Rocket (Orbital speed, space maneuvering and deorbiting) LACE (Flyback and landing)

Engine Propellant Requirements

Code: (R) = Required, (V) = Required for vacuum operation, (F) = Useable for flyback mode

- [R] Hydrogen, liquid, 37-40 °R
- [ ] Hydrogen, liquid, subcooled (25 °R)
- [ ] Hydrogen, gaseous
- [V] Oxygen, liquid, 162 °R
- [ ] Oxygen, liquid, subcooled
- [ ] Oxygen, gaseous
- [ ] Other _____

Engine Constituent Subsystems

Inlet, heat exchanger, combustor, exit

Engine General Arrangement and Operating Schematic

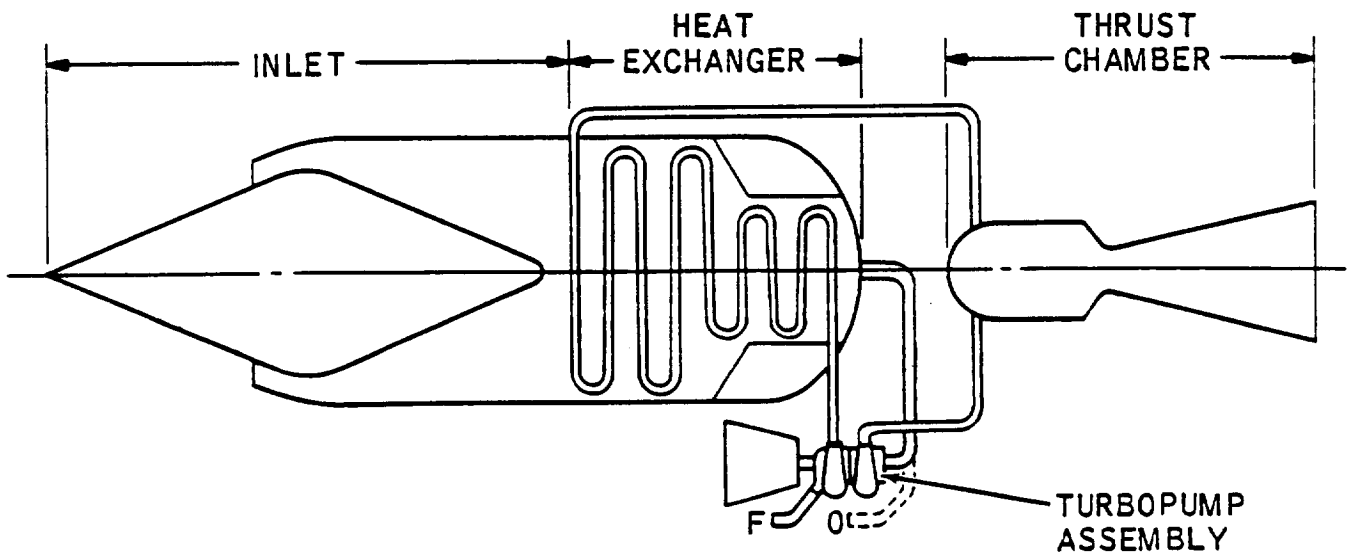

Eng. No. 3

Engine Internal Operating Parameters, nominal

$P_{c\text{-}LACE}$ = 1000 psia, ϕ_{SLS} = 8.0

$P_{c\text{-}RKT}$ = 1000 psia, A_{EXIT}/A_t = 80

Engine Operating Mode Block Diagrams

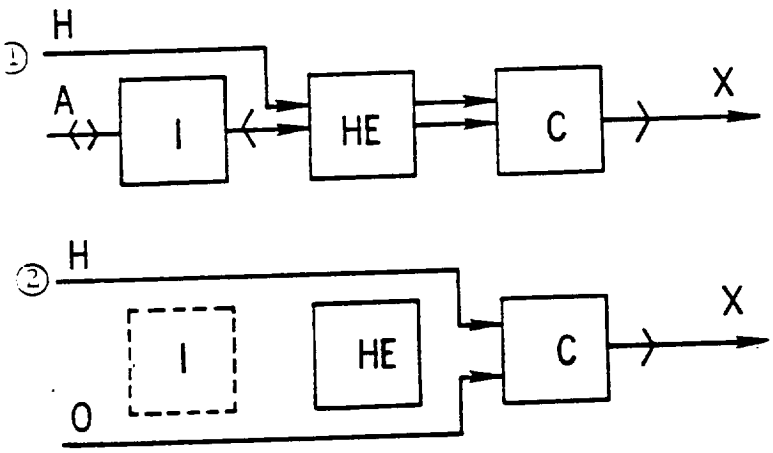

ENGINE PHYSICAL CHARACTERISTICS

Eng. No. 3

Thrust, sls	250,000 lbf	1,112,055 newton

Weight and Thrust/Weight Ratio

Measuring Units	(English)	(International)
Weight	lbm	kg
Thrust/Weight	lbf/lbm	newton/kg

Lightweight Estimate

(lbf/in^2) Maximum Engine Internal Pressure 1000 (newton/m^2)

Subsystems:	50	100	250	344.7	689.5	1723.7
Fan						
Heat Exchanger	6603	7060	7382	2995.1	3202.4	3348.5
Primary Rocket	2500	2500	2500	1134.0	1134.0	1134.0
Mixer/Diffuser						
Combustor/Exit						
Contingency						
Uninstalled Eng. Wt.	9103	9560	9882	4129.1	4336.4	4482.5
Thrust/Weight, Uninst.	27.5	26.2	25.3	270	257	248
* Inlet Weight	3500	3480	3306	1587.6	1578.5	1499.6
Installed Eng. Wt.	12603	13040	13188	5716.7	5914.9	5982.1
Thrust/Weight, Inst.	19.8	19.2	19.0	194	188	186

Heavyweight Estimate

Uninstalled Eng. Wt.	10924	11472	11858	4955.1	5203.7	5254.9
Thrust/Weight, Uninst.	22.9	21.8	21.1	225	214	207
* Inlet Weight	14000	13920	12825	6350.4	6314.1	5817.4
Installed Eng. Wt.	24924	25392	24683	11305.5	11517.8	11196.2
Thrust/Weight, Inst.	10.0	9.9	10.1	98	97	99

Engine Flow Areas and Equivalent Diameters

	ft^2	ft	m^2	m
* Inlet Cowl, A_c	87.0	10.53	8.08	3.21
Precooler	92.4	10.85	8.58	3.31
Combustor, A_4	7.1	3.00	0.66	0.91
Exit, A_6	92.4	10.85	8.58	3.31

Engine Lengths

	ft	m
Uninstalled		
Inlet (Typ)		
Installed (Typ)		

REMARKS, REFERENCES

* Inlet size varies with trajectory, A_c is for B trajectory.

Basic LACE. Performance utilizes vehicle flow field effect in limited fashion to insure satisfaction of heat exchange air flow requirement. (References 7, 10, 15)

SPECIFIC IMPULSE
REFERENCE TRAJECTORIES

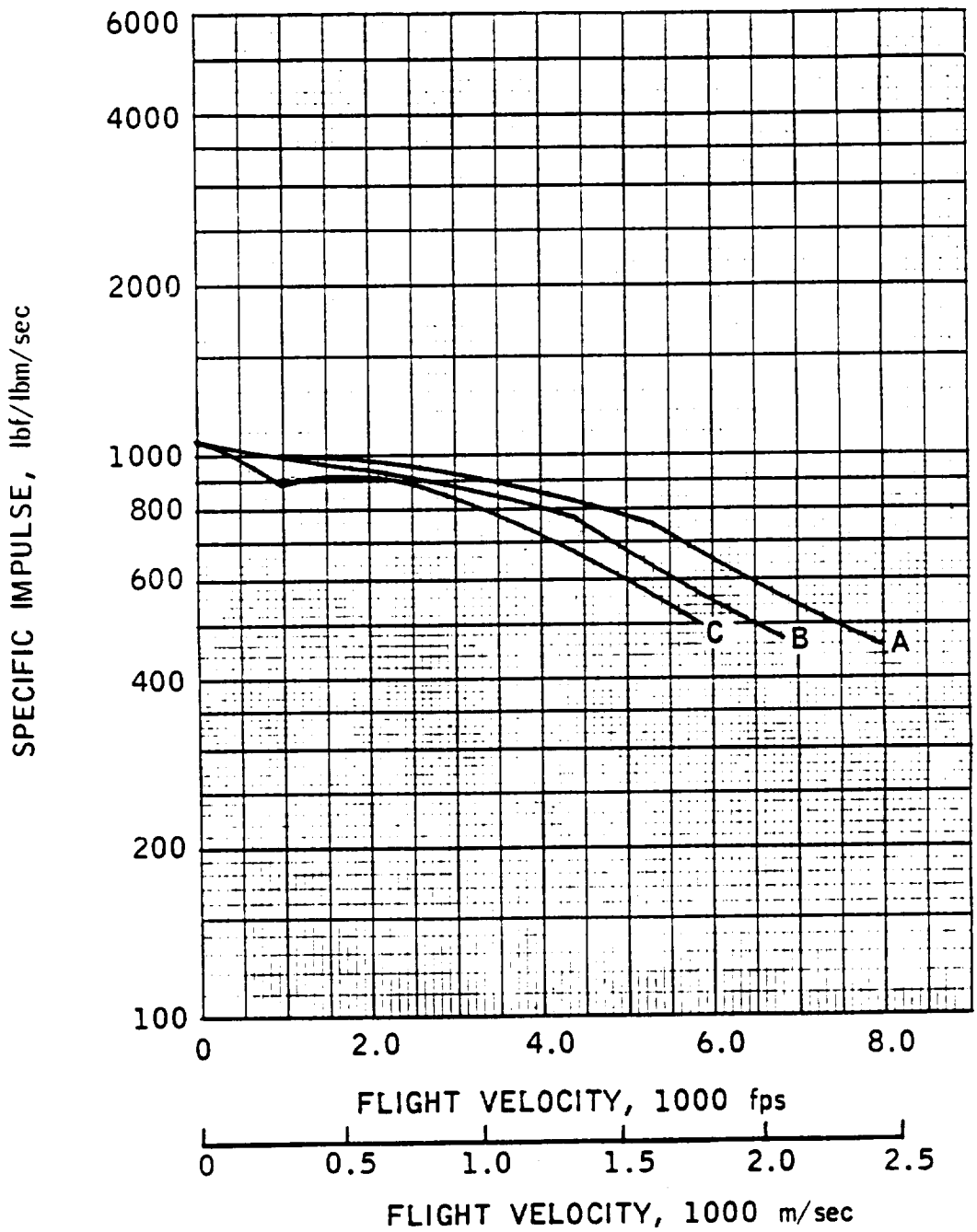

ENG. NO. 3

THRUST

REFERENCE TRAJECTORIES

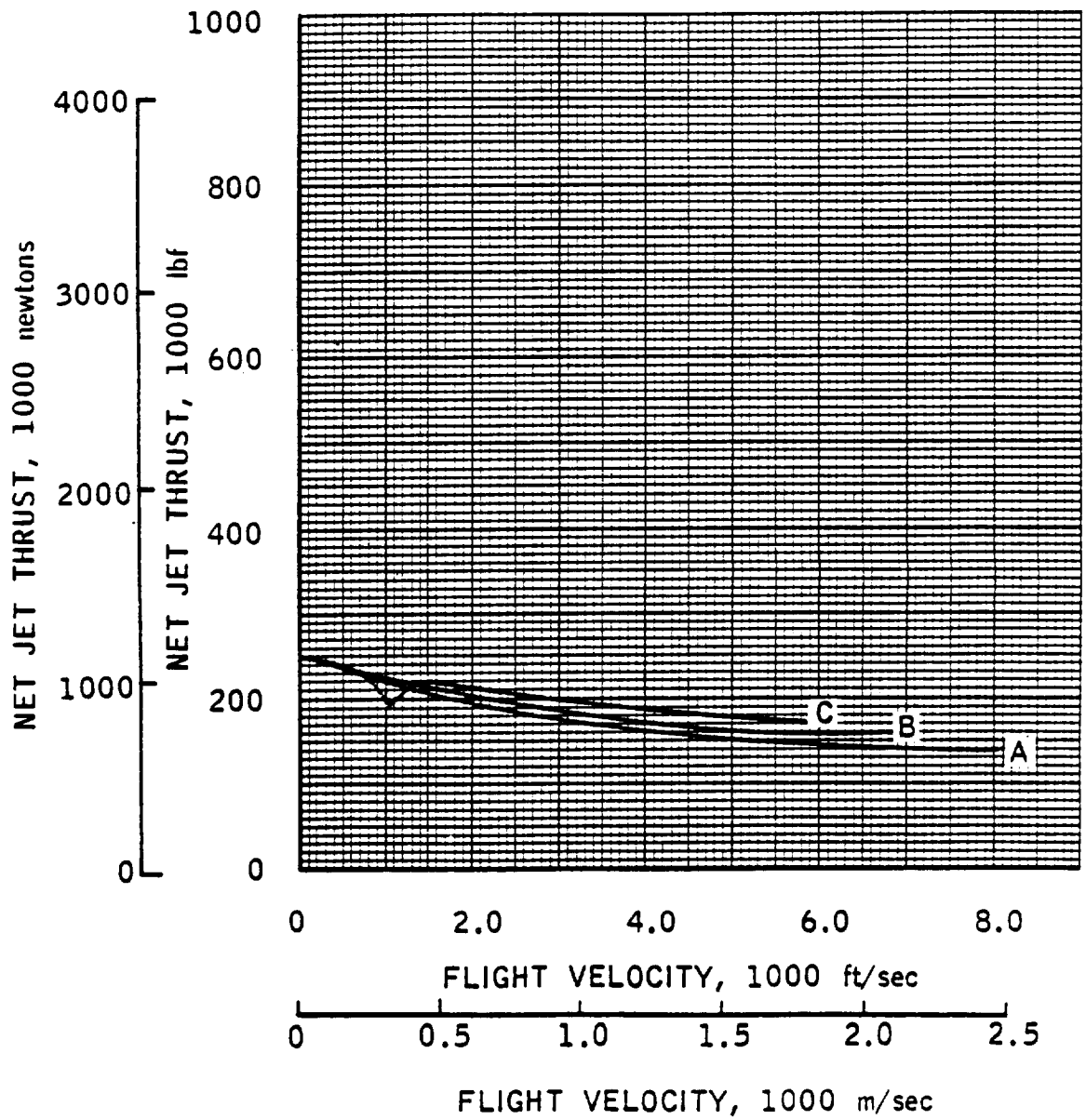

CAPTURE AREA

REFERENCE TRAJECTORIES

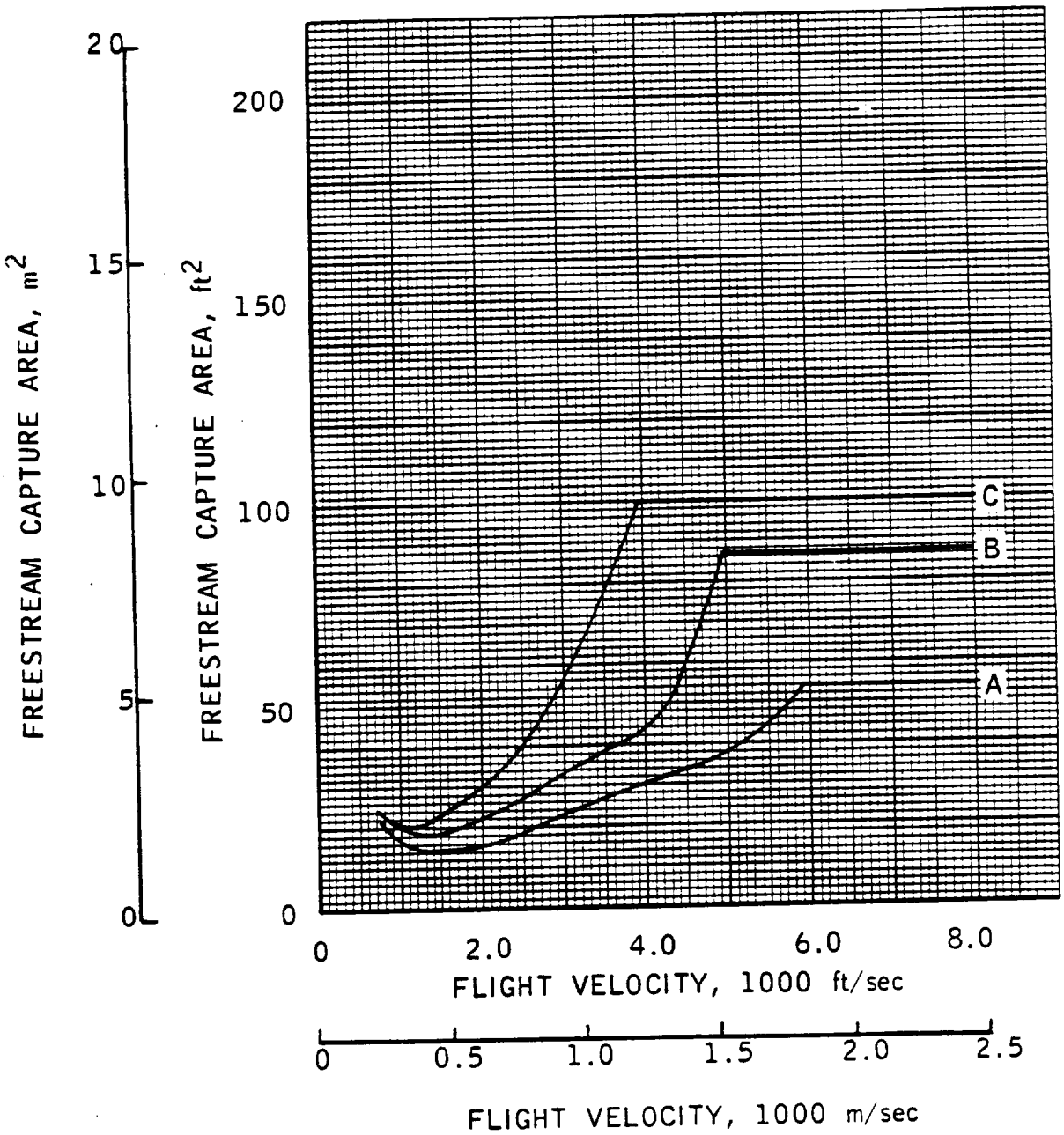

ENG. NO. 3

AIRFLOW

REFERENCE TRAJECTORIES

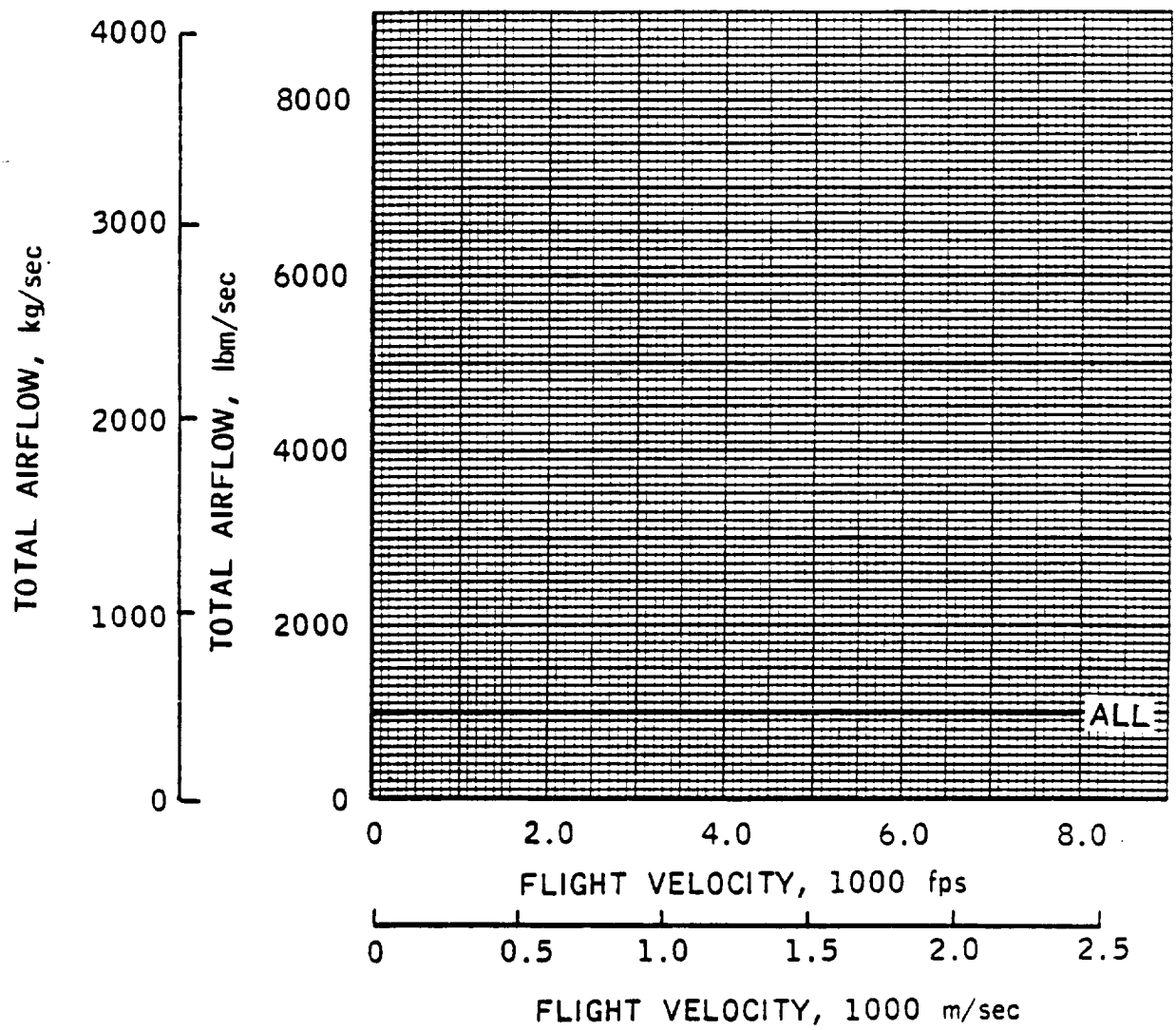

CONFIDENTIAL

ENGINE - 3

ESTIMATED PERFORMANCE

MC	VC	FTC	FTC	T	CF	IS	SFC	FT2	F2	P2
				ALTITUDE - 0. FEET						
0.10	112.	124.7	14.8	250000.	*******	1055.	3.41	14.80	*******	*******
				ALTITUDE - 10000. FEET						
0.65	700.	125.7	13.4	235360.	*******	946.	3.81	13.43	*******	*******
0.70	754.	127.3	14.0	232260.	*******	980.	3.67	14.02	*******	*******
0.75	851.	130.4	15.2	228460.	*******	989.	3.64	15.26	*******	*******
				ALTITUDE - 20000. FEET						
1.01	1047.	129.3	12.9	197310.	*******	875.	4.11	12.94	*******	*******
1.21	1255.	138.8	16.6	220840.	*******	956.	3.77	16.47	*******	*******
1.45	1504.	152.5	23.1	212480.	*******	976.	3.65	22.52	*******	*******
				ALTITUDE - 30000. FEET						
1.46	1453.	141.0	15.2	223150.	*******	902.	3.99	14.77	*******	*******
1.71	1701.	156.6	21.9	211880.	*******	951.	3.79	20.89	*******	*******
2.06	2045.	182.7	37.6	200560.	*******	967.	3.72	34.55	*******	*******
				ALTITUDE - 40000. FEET						
1.91	1849.	161.9	18.6	215670.	*******	910.	3.96	17.36	*******	*******
2.22	2149.	185.8	30.1	204870.	*******	922.	3.90	27.20	*******	*******

CONFIDENTIAL

[redacted]

ENGINE- 3

ESTIMATED PERFORMANCE

W2	WS	WP	WSWP	WFT	PHP	PHS	V6	PT2C	AC	A5	A6
					ALTITUDE - 0. FEET						
******	1016.	1253.	******	237.0	8.0	*******	*******	1.00	119.00	*******	*******
					ALTITUDE - 10000. FEET						
******	1016.	1265.	******	246.8	8.4	*******	*******	1.00	25.70	*******	*******
******	1016.	1253.	******	237.0	8.0	*******	*******	1.00	23.86	*******	*******
******	1016.	1247.	******	231.0	7.8	*******	*******	1.00	19.64	*******	*******
					ALTITUDE - 20000. FEET						
******	864.	1050.	******	225.5	9.0	*******	*******	1.00	20.24	*******	*******
******	1016.	1247.	******	231.0	7.8	*******	*******	0.99	19.86	*******	*******
******	1016.	1234.	******	217.7	7.4	*******	*******	0.98	16.57	*******	*******
					ALTITUDE - 30000. FEET						
******	1016.	1263.	******	247.4	8.4	*******	*******	0.98	24.40	*******	*******
******	1016.	1235.	******	222.8	7.5	*******	*******	0.95	20.84	*******	*******
******	1016.	1223.	******	207.4	7.0	*******	*******	0.92	17.30	*******	*******
					ALTITUDE - 40000. FEET						
******	1016.	1253.	******	237.0	8.0	*******	*******	0.93	25.07	*******	*******
******	1016.	1238.	******	222.2	7.5	*******	*******	0.90	25.01	*******	*******

[redacted]

CONFIDENTIAL

ENGINE- 3

ESTIMATED PERFORMANCE

MC	VC	FTC	FTC	T	CF	IS	SFC	PT2	F2	P2
				ALTITUDE - 40000. FEET						
2.65	2604.	225.0	62.6	191630.	*******	524.	3.90	53.11	*******	*******
				ALTITUDE - 45500. FEET						
3.10	3000.	273.3	89.3	175000.	*******	520.	3.91	71.15	*******	*******
				ALTITUDE - 50000. FEET						
.40	2320.	201.1	24.6	208000.	*******	500.	4.00	21.69	*******	*******
.84	2750.	244.6	48.8	190000.	*******	896.	4.02	40.51	*******	*******
				ALTITUDE - 54000. FEET						
3.10	3000.	273.3	59.5	187000.	*******	880.	4.09	47.40	*******	*******
				ALTITUDE - 60000. FEET						
2.85	2800.	245.5	32.6	200820.	*******	842.	4.28	26.87	*******	*******
3.62	3504.	338.5	54.7	183320.	*******	825.	4.36	68.40	*******	*******
4.35	4250.	454.3	264.3	166330.	*******	802.	4.45	160.58	*******	*******

CONFIDENTIAL

CONFIDENTIAL

ENGINE- 3

ESTIMATED PERFORMANCE

M2	WS	WP	WSWP	WFT	FFP	FFS	V6	PT2C	AC	A5	A6
					ALTITUDE - 40000. FEET						
******	1016.	1223.	******	207.4	7.0	*******	*******	0.85	20.64	*******	*******
					ALTITUDE - 45000. FEET						
******	1016.	1223.	******	207.4	7.0	*******	*******	0.80	23.54	*******	*******
					ALTITUDE - 50000. FEET						
******	1016.	1253.	******	237.0	8.0	*******	*******	0.88	37.40	*******	*******
******	1016.	1238.	******	222.2	7.5	*******	*******	0.83	31.55	*******	*******
					ALTITUDE - 54000. FEET						
******	1016.	1238.	******	222.2	7.5	*******	*******	0.80	35.02	*******	*******
					ALTITUDE - 60000. FEET						
******	1016.	1254.	******	238.5	8.0	*******	*******	0.82	49.58	*******	*******
******	1016.	1238.	******	222.2	7.5	*******	*******	0.72	39.94	*******	*******
******	1016.	1223.	******	207.4	7.0	*******	*******	0.61	32.93	*******	*******

CONFIDENTIAL

ENGINE- 3

ESTIMATED PERFORMANCE

MC	VC	FTC	FTC	T	CF	IS	SFC	PT2	H2	P2
				ALTITUDE - 64000. FEET						
3.10	3000.	273.3	36.5	198000.	*******	836.	4.31	29.39	*******	*******
				ALTITUDE - 70000. FEET						
4.43	4301.	463.6	172.5	171320.	*******	771.	4.67	160.60	*******	*******
5.47	5311.	657.5	585.9	151450.	*******	725.	4.97	256.43	*******	*******
				ALTITUDE - 80000. FEET						
3.94	3852.	351.8	56.9	189000.	*******	725.	4.97	39.40	*******	*******
4.91	4800.	555.6	193.4	169180.	*******	688.	5.23	102.58	*******	*******
6.14	6003.	815.1	739.5	148600.	*******	631.	5.71	250.85	*******	*******
				ALTITUDE - 100000. FEET						
5.15	5103.	618.2	101.7	175690.	*******	575.	6.26	49.68	*******	*******
6.16	6104.	842.2	300.1	165160.	*******	521.	6.91	101.18	*******	*******
7.97	7858.	1343.8	1539.7	145680.	*******	447.	8.05	247.40	*******	*******
				ALTITUDE - 110000. FEET						
5.83	5850.	783.5	136.2	175970.	*******	495.	7.27	51.76	*******	*******
6.82	6850.	1037.5	361.4	163530.	*******	460.	7.83	90.35	*******	*******

[redacted]

[redacted]

[redacted]

ENGINE- 3

ESTIMATED PERFORMANCE

W2	W5	WF	WSWF	WFT	FFF	FFS	V6	PT2C	AC	A5	A6
					ALTITUDE - 64000. FEET						
******	1016.	1257.	******	241.5	8.1	*******	*******	0.80	56.48	*******	*******
					ALTITUDE - 70000. FEET						
******	1016.	1238.	******	222.2	7.5	*******	*******	0.60	52.72	*******	*******
******	1016.	1225.	******	208.9	7.0	*******	*******	0.44	42.70	*******	*******
					ALTITUDE - 80000. FEET						
******	1016.	1277.	******	260.7	8.8	*******	*******	0.69	95.56	*******	*******
******	1016.	1262.	******	245.9	8.3	*******	*******	0.53	76.69	*******	*******
******	1016.	1252.	******	235.5	8.0	*******	*******	0.34	57.00	*******	*******
					ALTITUDE - 100000. FEET						
******	1016.	1328.	******	312.9	10.6	*******	*******	0.49	100.00	*******	*******
******	1016.	1333.	******	317.0	10.7	*******	*******	0.34	87.00	*******	*******
******	1016.	1342.	******	325.9	11.0	*******	*******	0.16	57.00	*******	*******
					ALTITUDE - 110000. FEET						
******	1016.	1372.	******	355.9	12.0	*******	*******	0.38	10.00	*******	*******
******	1016.	1372.	******	355.5	12.0	*******	*******	0.25	87.00	*******	*******

[redacted]

This Page Intentionally Blank

ENGINE FACT SHEET

Class 0 Composite Launch Vehicle Engines

Engine Identification Number: 4 Recycled Basic LACE

Engine Operating Modes

Summary: Number of Modes/ Transitions 3 ; Number of Discrete Modes Utilized 3

Mode Progression - Lift-off to Touch-down

(Take off) Liquid Air Cycle Engine (LACE) recycled hydrogen (6000-8000 ft/sec) Rocket (Orbital speed, space maneuvering and deorbiting) LACE (Flyback and Landing)

Engine Propellant Requirements

Code: (R) = Required, (V) = Required for vacuum operation, (F) = Useable for flyback mode

- ☐ Hydrogen, liquid, 37-40 °R
- ☒ Hydrogen, liquid, subcooled (25 °R)
- ☐ Hydrogen, gaseous
- ☒ Oxygen, liquid, 162 °R
- ☐ Oxygen, liquid, subcooled
- ☐ Oxygen, gaseous
- ☐ Other _____

Engine Constituent Subsystems

Inlet, heat exchanger, combustor, exit

Engine General Arrangement and Operating Schematic

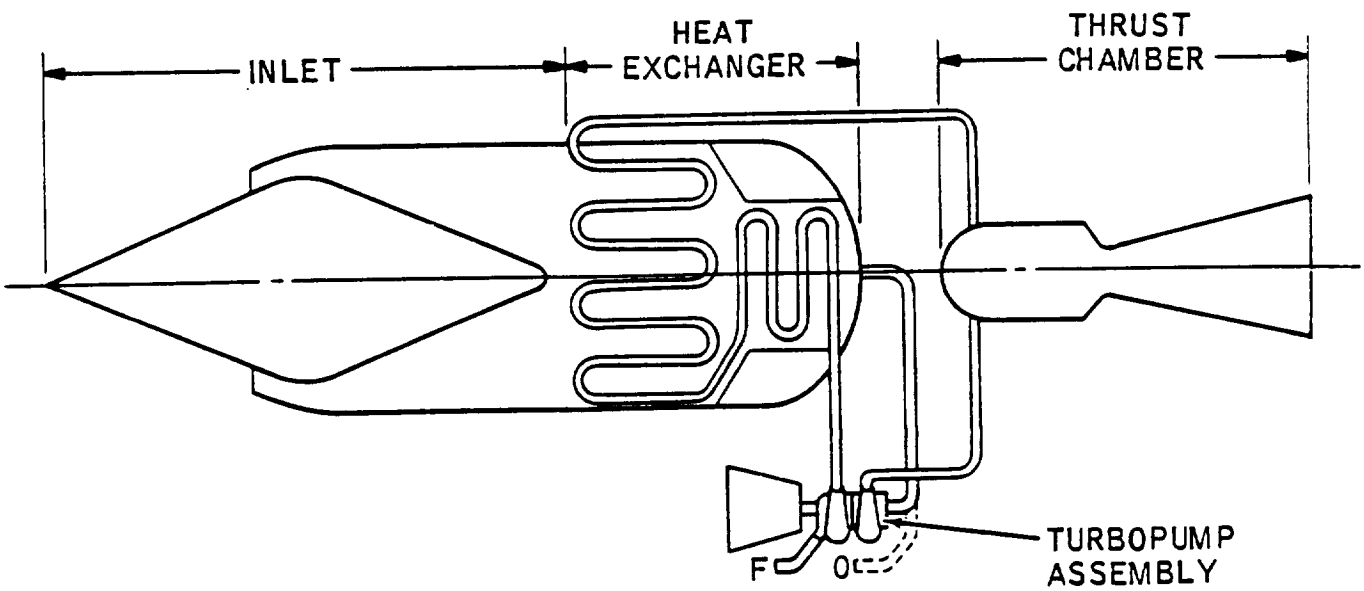

Engine Internal Operating Parameters, nominal

$P_{c\text{-}LACE}$ = 1000 psia, ϕ_{SLS} = 4.0

$P_{c\text{-}RKT}$ = 1000 psia, A_{EXIT}/A_t = 80

Engine Operating Mode Block Diagrams

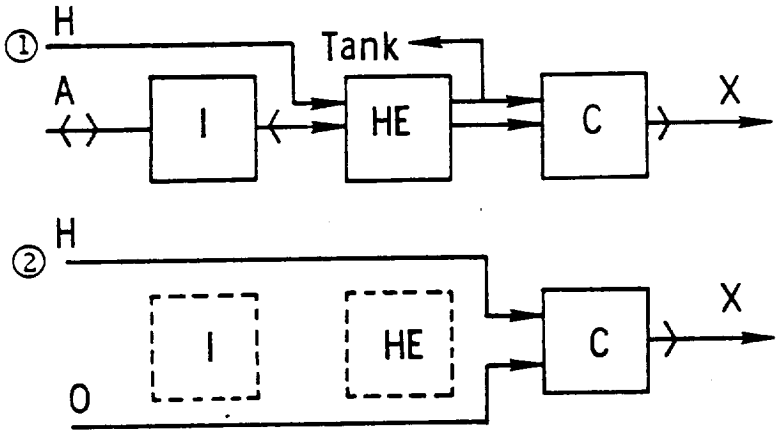

ENGINE PHYSICAL CHARACTERISTICS

Eng. No. 4

Thrust, sls	250,000 lbf	1,112,055 newton

Weight and Thrust/Weight Ratio

Measuring Units	(English)	(International)
Weight	lbm	kg
Thrust/Weight	lbf/lbm	newton/kg

Lightweight Estimate

(lbf/in^2) Maximum Engine Internal Pressure 1000 (newton/m^2)

Subsystems:	50	100	250	344.7	689.5	1723.7
Fan						
Heat Exchanger	9172	9305	10,158	4160.4	4220.7	4607.6
Primary Rocket	2500	2500	2500	1134.0	1134.0	1134.0
Mixer/Diffuser						
Combustor/Exit						
Contingency						
Uninstalled Eng. Wt.	14053	14241	15171	6374.4	6459.7	6881.6
Thrust/Weight, Uninst.	17.8	17.6	16.5	175	173	162
* Inlet Weight	5775	4080	3596	2619.5	1850.7	1631.1
Installed Eng. Wt.	19828	18321	18767	8993.9	8310.4	8512.7
Thrust/Weight, Inst.	12.6	13.6	13.3	124	133	130

Heavyweight Estimate

Uninstalled Eng. Wt.	15458	15665	16688	7011.7	7105.6	7569.7
Thrust/Weight, Uninst.	16.2	16.0	15.0	159	157	147
Inlet Weight	23100	16320	13950	10478.2	7402.8	6327.7
* Installed Eng. Wt.	38558	31985	30638	17489.9	14508.4	13897.4
Thrust/Weight, Inst.	6.5	7.8	8.2	64	77	80

Engine Flow Areas and Equivalent Diameters

	ft^2	ft	m^2	m
* Inlet Cowl, A_c	102.0	11.40	9.48	3.47
Precooler	120.0	12.36	11.15	3.77
Combustor, A_4	7.1	3.00	0.66	0.91
Exit, A_6	92.4	10.85	8.58	3.31

Engine Lengths

	ft	m
Uninstalled		
Inlet (Typ)		
Installed (Typ)		

REMARKS, REFERENCES

* Inlet size varies with trajectory, A_c is for B trajectory.

Recycled Basic LACE. Performance utilizes vehicle flow field effects in limited fashion to insure satisfaction of heat exchanger air flow requirement. Recycle time limit is expected to limit operating time significantly. (References 7, 10, 14, 15)

ENG. NO. 4

SPECIFIC IMPULSE
REFERENCE TRAJECTORIES

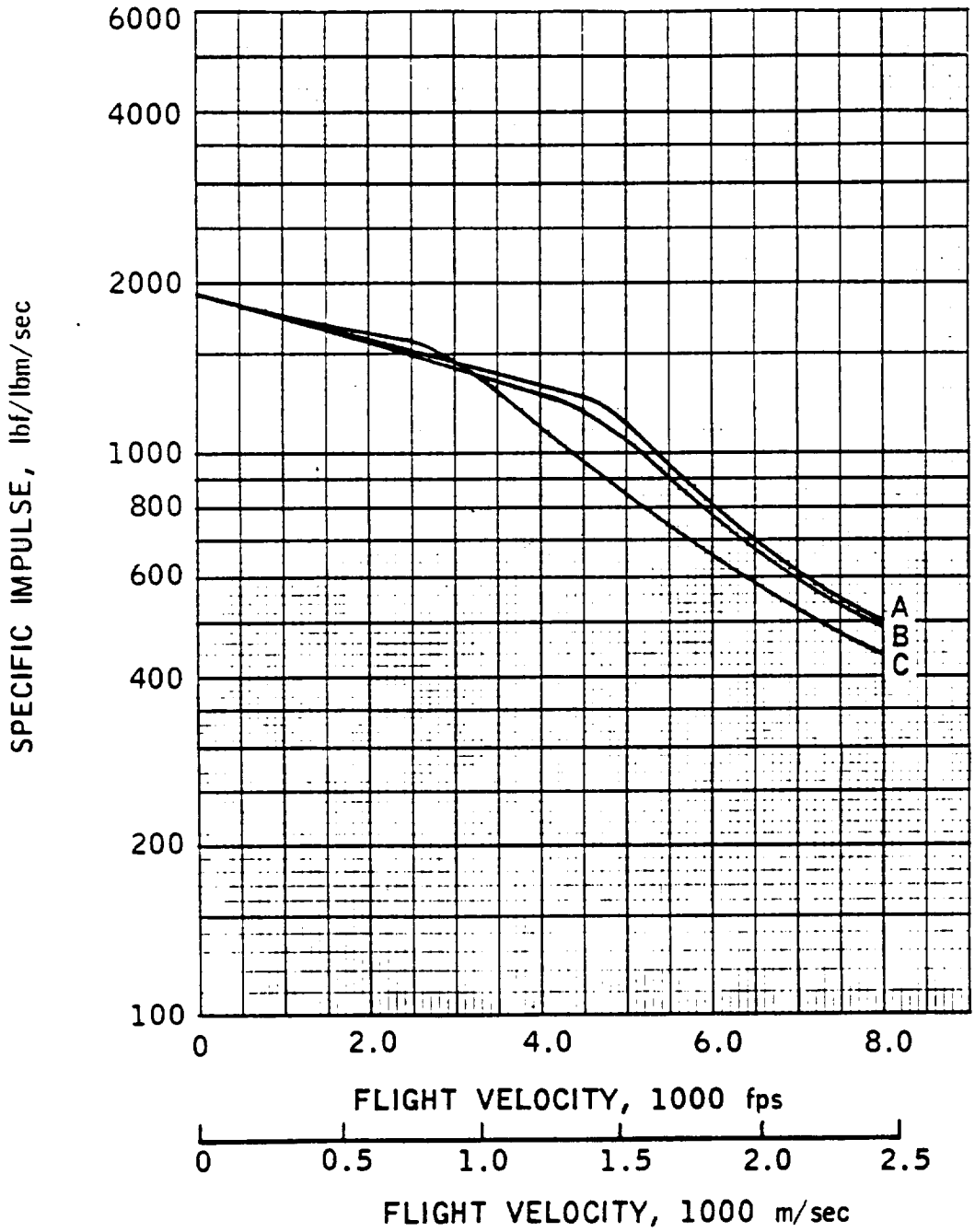

ENG. NO. 4

THRUST

REFERENCE TRAJECTORIES

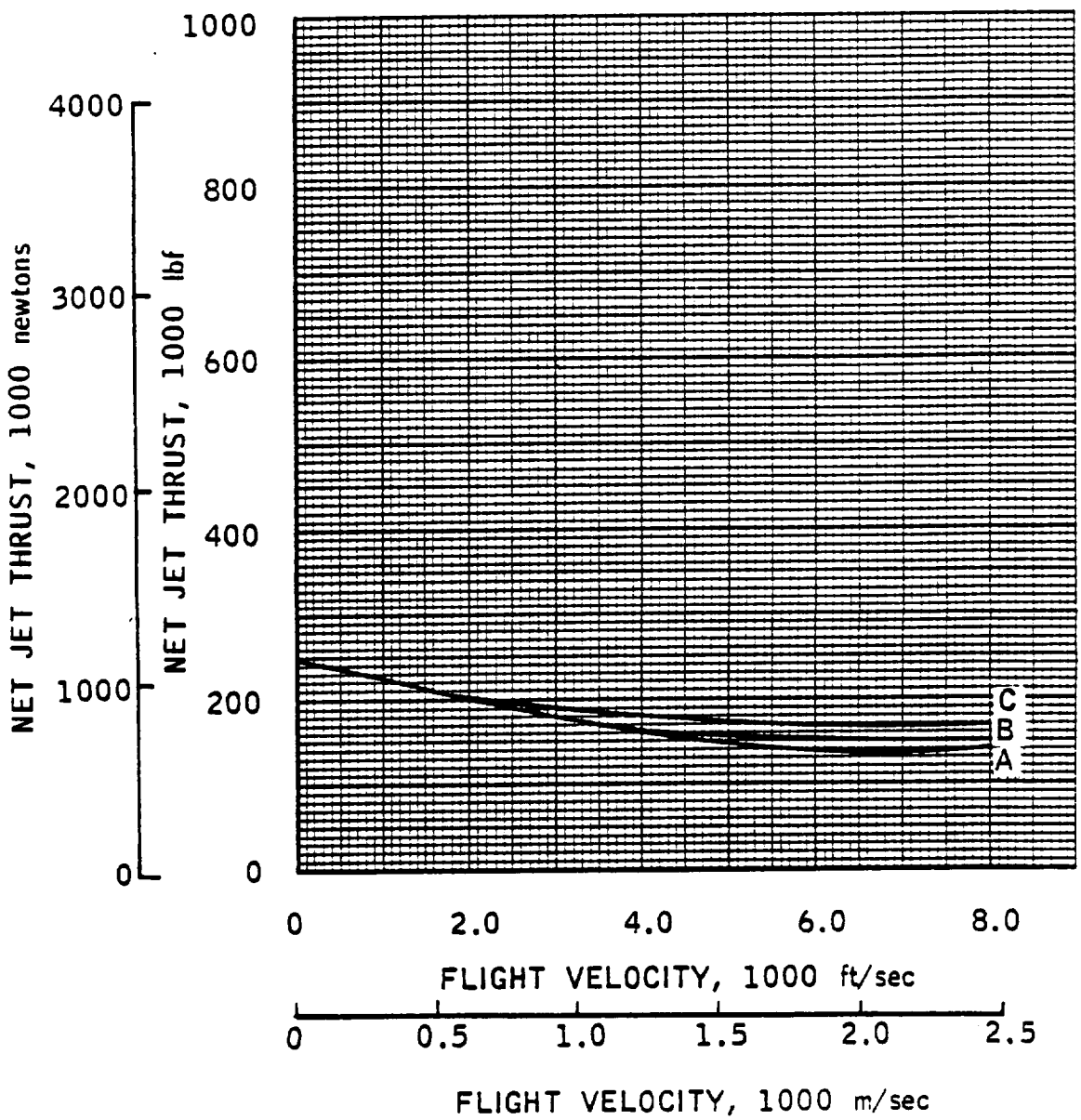

CAPTURE AREA

REFERENCE TRAJECTORIES

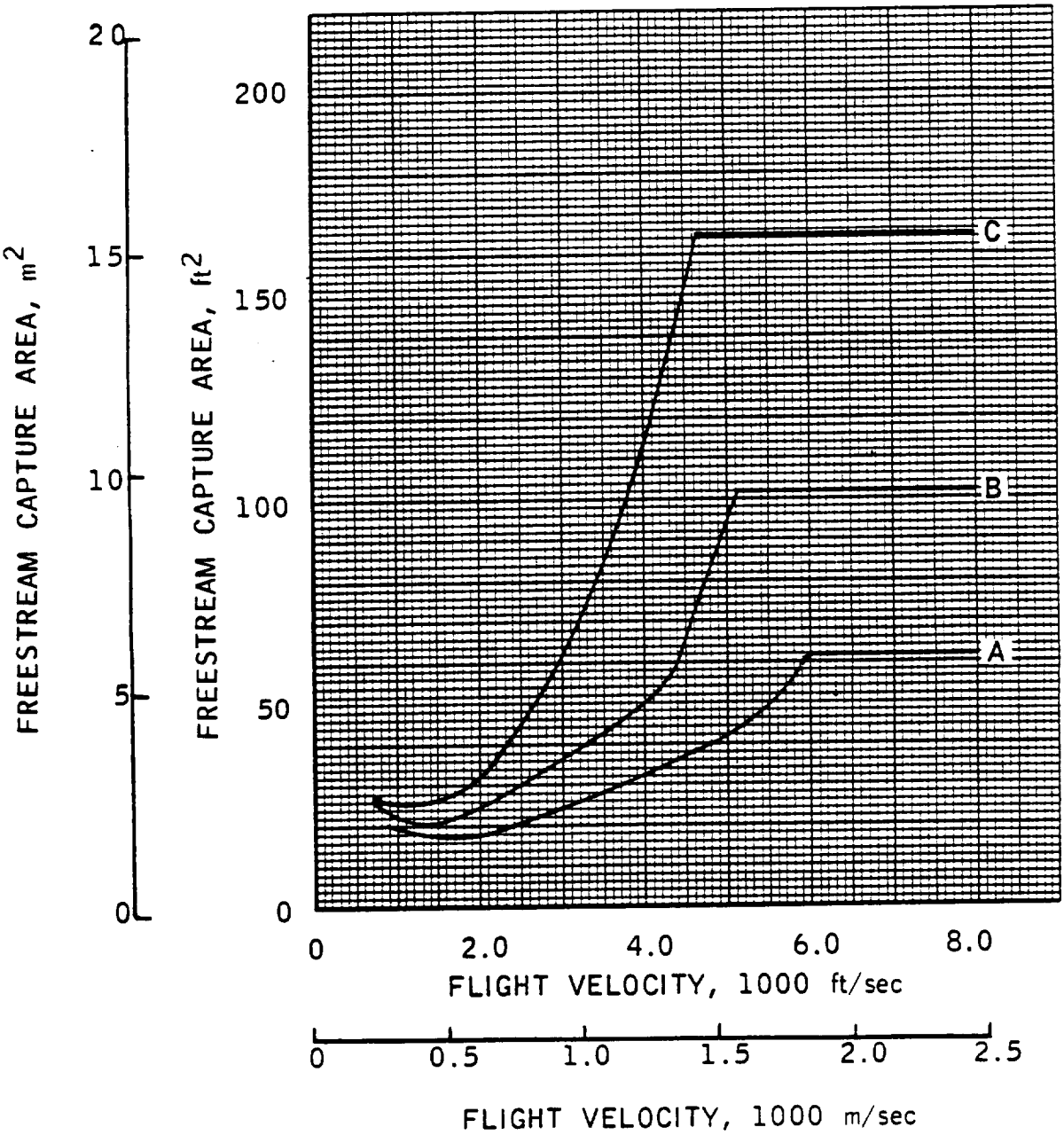

ENG. NO. 4

AIRFLOW

REFERENCE TRAJECTORIES

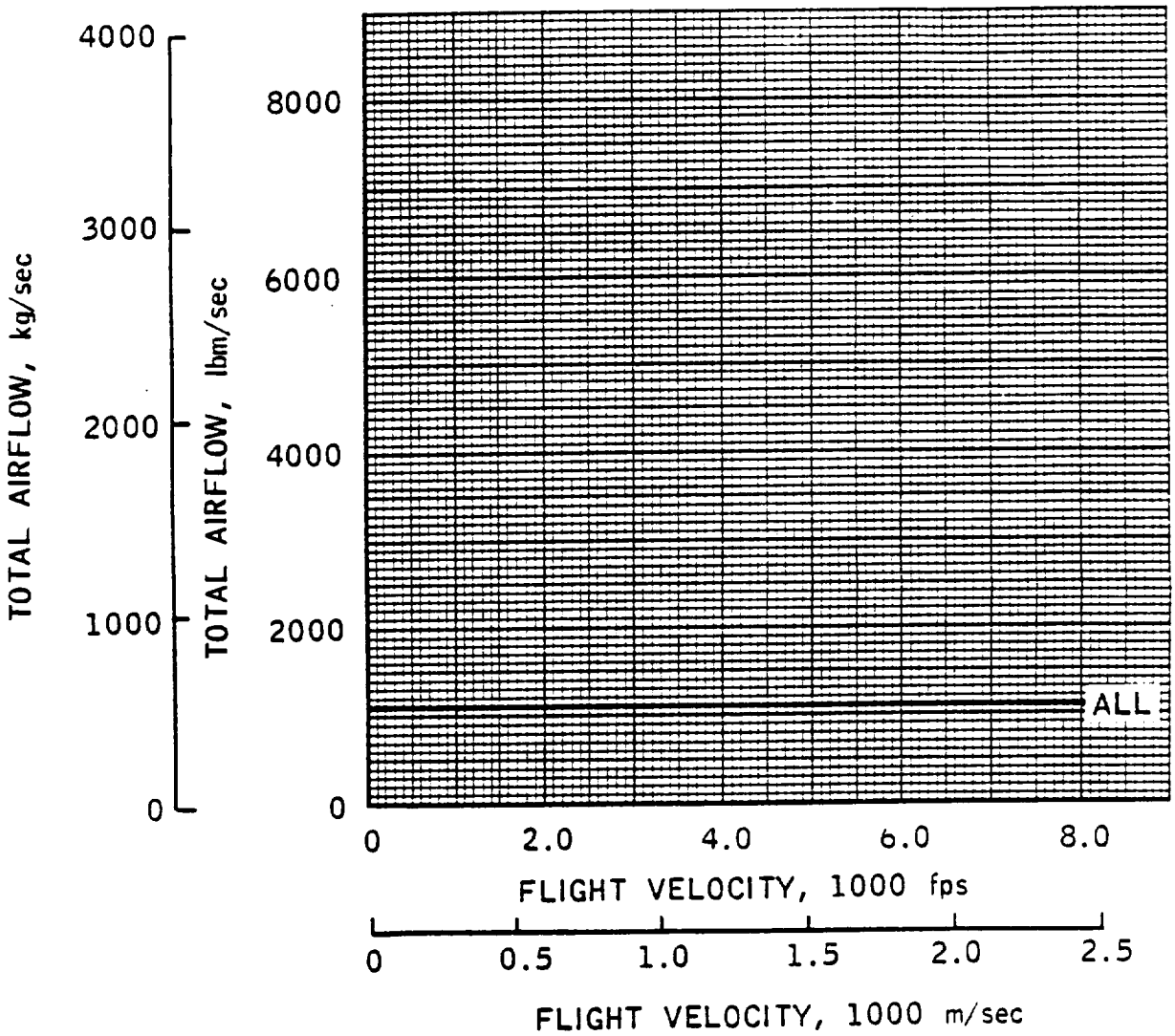

[redacted]

ENGINE- 4

ESTIMATED PERFORMANCE

MC	VC	FTC	PTC	T	CF	IS	SPC	PT2	H2	P2
				ALTITUDE -		0. FEET				
0.10	112..	124.7	14.8	250000.	*******	1944.	1.85	14.80	*******	*******
				ALTITUDE -		10000. FEET				
0.65	700.	125.7	13.4	232510.	*******	1808.	1.99	13.43	*******	*******
0.70	754.	127.3	14.0	230450.	*******	1792.	2.01	14.02	*******	*******
0.79	851.	130.4	15.2	227240.	*******	1767.	2.04	15.26	*******	*******
				ALTITUDE -		20000. FEET				
1.01	1047.	129.3	12.9	226590.	*******	1762.	2.04	12.94	*******	*******
1.21	1255.	138.8	16.6	219390.	*******	1706.	2.11	16.47	*******	*******
1.45	1504.	152.5	23.1	211550.	*******	1645.	2.19	22.52	*******	*******
				ALTITUDE -		30000. FEET				
1.46	1453.	141.0	15.2	219130.	*******	1704.	2.11	14.77	*******	*******
1.71	1701.	156.6	21.9	210390.	*******	1636.	2.20	20.89	*******	*******
2.06	2049.	182.7	37.6	200100.	*******	1556.	2.31	34.55	*******	*******
				ALTITUDE -		40000. FEET				
1.91	1849.	161.9	18.6	212450.	*******	1652.	2.18	17.36	*******	*******
2.22	2149.	185.8	30.1	202800.	*******	1577.	2.28	27.20	*******	*******

[redacted]

CONFIDENTIAL

ENGINE- 4

ESTIMATED PERFORMANCE

M2	WS	WP	WSWP	WFT	PHP	PFS	V6	PT2C	AC	A5	A6
ALTITUDE - 0. FEET											
*****	1102.	1231.	******	128.6	4.0	*******	*******	1.00	129.07	*******	*******
ALTITUDE - 10000. FEET											
*****	1102.	1231.	******	128.6	4.0	*******	*******	1.00	27.89	*******	*******
*****	1102.	1231.	******	128.6	4.0	*******	*******	1.00	25.89	*******	*******
*****	1102.	1231.	******	128.6	4.0	*******	*******	1.00	21.31	*******	*******
ALTITUDE - 20000. FEET											
*****	1102.	1231.	******	128.6	4.0	*******	*******	1.00	25.83	*******	*******
*****	1102.	1231.	******	128.6	4.0	*******	*******	0.99	21.55	*******	*******
*****	1102.	1231.	******	128.6	4.0	*******	*******	0.98	17.98	*******	*******
ALTITUDE - 30000. FEET											
*****	1102.	1231.	******	128.6	4.0	*******	*******	0.98	26.48	*******	*******
*****	1102.	1231.	******	128.6	4.0	*******	*******	0.95	22.61	*******	*******
*****	1102.	1231.	******	128.6	4.0	*******	*******	0.92	18.77	*******	*******
ALTITUDE - 40000. FEET											
*****	1102.	1231.	******	128.6	4.0	*******	*******	0.93	31.55	*******	*******
*****	1102.	1231.	******	128.6	4.0	*******	*******	0.90	27.14	*******	*******

CONFIDENTIAL

ENGINE- 4

ESTIMATED PERFORMANCE

MC	VC	FTC	PTC	T	CF	IS	SPC	PT2	H2	P2
				ALTITUDE - 40000. FEET						
2.69	2604.	229.0	62.6	190200.	*******	1479.	2.43	53.11	*******	*******
				ALTITUDE - 45500. FEET						
3.10	3000.	273.3	89.3	178000.	*******	1450.	2.48	71.15	*******	*******
				ALTITUDE - 50000. FEET						
2.40	2320.	201.1	24.6	197000.	*******	1600.	2.25	21.69	*******	*******
2.84	2750.	244.6	48.8	184000.	*******	1480.	2.43	40.51	*******	*******
				ALTITUDE - 54000. FEET						
3.10	3000.	273.3	59.5	178000.	*******	1420.	2.54	47.40	*******	*******
				ALTITUDE - 60000. FEET						
2.89	2800.	249.9	32.6	195730.	*******	1522.	2.37	26.87	*******	*******
3.62	3504.	338.9	94.7	178500.	*******	1388.	2.59	68.40	*******	*******
4.39	4250.	454.3	264.3	161520.	*******	1256.	2.87	160.58	*******	*******

[redacted]

[redacted]

ENGINE- 4

ESTIMATED PERFORMANCE

M2	WS	WP	WSWP	WFT	PHP	PHS	V6	PT2C	AC	A5	A6
					ALTITUDE - 40000. FEET						
*****	1102.	1231.	******	128.6	4.0	*******	*******	0.85	22.40	*******	*******
					ALTITUDE - 45500. FEET						
*****	1102.	1231.	******	128.6	4.0	*******	*******	0.80	24.20	*******	*******
					ALTITUDE - 50000. FEET						
*****	1102.	1231.	******	128.6	4.0	*******	*******	0.88	40.00	*******	*******
*****	1102.	1231.	******	128.6	4.0	*******	*******	0.83	33.20	*******	*******
					ALTITUDE - 54000. FEET						
*****	1102.	1231.	******	128.6	4.0	*******	*******	0.80	36.40	*******	*******
					ALTITUDE - 60000. FEET						
*****	1102.	1231.	******	128.6	4.0	*******	*******	0.82	54.24	*******	*******
*****	1102.	1231.	******	128.6	4.0	*******	*******	0.72	43.34	*******	*******
*****	1102.	1231.	******	128.6	4.0	*******	*******	0.61	35.73	*******	*******

ENGINE- 4

ESTIMATED PERFORMANCE

MC	VC	FTC	PTO	T	CF	IS	SFC	PT2	F2	P2
				ALTITUDE - 64000. FEET						
3.10	3000.	273.3	36.9	190000.	*******	1435.	2.51	29.39	*******	*******
				ALTITUDE - 70000. FEET						
4.43	4301.	463.6	172.5	164480.	*******	1279.	2.81	160.60	*******	*******
5.47	5311.	657.5	585.9	149650.	*******	980.	3.67	256.43	*******	*******
				ALTITUDE - 80000. FEET						
3.94	3852.	391.8	56.9	184200.	*******	1193.	3.02	39.40	*******	*******
4.91	4800.	555.6	193.4	158680.	*******	1203.	2.99	102.58	*******	*******
6.14	6003.	815.1	739.5	149030.	*******	786.	4.58	250.85	*******	*******
				ALTITUDE - 100000. FEET						
5.15	5103.	618.2	101.7	175480.	*******	840.	4.29	49.68	*******	*******
6.16	6104.	842.2	300.1	154820.	*******	796.	4.52	101.18	*******	*******
7.97	7898.	1343.8	1539.7	149890.	*******	496.	7.26	247.40	*******	*******
				ALTITUDE - 110000. FEET						
5.83	5850.	783.9	136.2	171730.	*******	685.	5.26	51.76	*******	*******
6.82	6850.	1037.5	361.4	154640.	*******	650.	5.54	90.35	*******	*******

[redacted]

ENGINE- 4

ESTIMATED PERFORMANCE

M2	WS	WP	WSWP	WFT	PHP	PHS	V6	PT2C	AC	A5	A6
					ALTITUDE - 64000. FEET						
*****	1102.	1231.	******	128.6	4.0	*******	*******	0.80	61.80	*******	*******
					ALTITUDE - 70000. FEET						
*****	1102.	1231.	******	128.6	4.0	*******	*******	0.60	57.21	*******	*******
*****	1102.	1255.	******	154.4	4.8	*******	*******	0.44	46.34	*******	*******
					ALTITUDE - 80000. FEET						
*****	1102.	1256.	******	154.4	4.8	*******	*******	0.69	103.70	*******	*******
*****	1102.	1234.	******	131.9	4.1	*******	*******	0.53	83.22	*******	*******
*****	1102.	1292.	******	189.6	5.9	*******	*******	0.34	62.00	*******	*******
					ALTITUDE - 100000. FEET						
*****	1102.	1311.	******	208.9	6.5	*******	*******	0.49	165.00	*******	*******
*****	1102.	1297.	******	194.5	6.0	*******	*******	0.34	102.00	*******	*******
*****	1102.	1405.	******	302.2	9.4	*******	*******	0.16	62.00	*******	*******
					ALTITUDE - 110000. FEET						
*****	1102.	1353.	******	250.7	7.8	*******	*******	0.38	165.00	*******	*******
*****	1102.	1340.	******	237.9	7.4	*******	*******	0.25	102.00	*******	*******

[redacted]

ENGINE- 4

ESTIMATED PERFORMANCE

MC	VO	HTO	PTO	T	CF	IS	SFC	PT2	H2	P2
ALTITUDE - 120000. FEET										
6.51	6645.	986.1	174.7	17043C.	*******	570.	6.31	51.26	*******	*******
7.84	8003.	1383.3	571.2	15553C.	*******	504.	7.14	96.90	*******	*******
ALTITUDE - 135000. FEET										
7.64	8000.	1388.1	258.7	17091C.	*******	443.	8.13	47.58	*******	*******

[redacted]

[redacted]

ENGINE- 4

ESTIMATED PERFORMANCE

M2	WS	WP	WSWP	WFT	PHP	PHS	V6	PT2C	AC	A5	A6
					ALTITUDE - 120000. FEET						
*****	1102.	1401.	******	299.0	9.3	*******	*******	0.29	165.00	*******	*******
*****	1102.	1411.	******	308.6	9.6	*******	*******	0.17	102.00	*******	*******
					ALTITUDE - 135000. FEET						
*****	1102.	1488.	******	385.8	12.0	*******	*******	0.18	165.00	*******	*******

[redacted]

This Page Intentionally Blank

ENGINE FACT SHEET

Class 0 Composite Launch Vehicle Engines

Engine Identification Number: 5 Basic Air Augmented Rocket

Engine Operating Modes

Summary: Number of Modes/ Transitions 3 ; Number of Discrete Modes Utilized 2

Mode Progression - Lift-off to Touch-down

(Take off) Air augmented rocket, simultaneous mixing and burning cycle (6000-8000 ft/sec) Rocket (Orbital speed, space maneuvering and deorbiting) Air augmented rocket, simultaneous mixing and burning cycle (Flyback and landing)

Engine Propellant Requirements

Code: (R) = Required, (V) = Required for vacuum operation, (F) = Useable for flyback mode

- [x] (R) Hydrogen, liquid, 37-40 °R
- [ ] Hydrogen, liquid, subcooled (25 °R)
- [ ] Hydrogen, gaseous
- [x] (R) Oxygen, liquid, 162 °R
- [ ] Oxygen, liquid, subcooled
- [ ] Oxygen, gaseous
- [ ] Other _____

Engine Constituent Subsystems

Inlet, rocket, mixer-combustor, exit

Engine General Arrangement and Operating Schematic

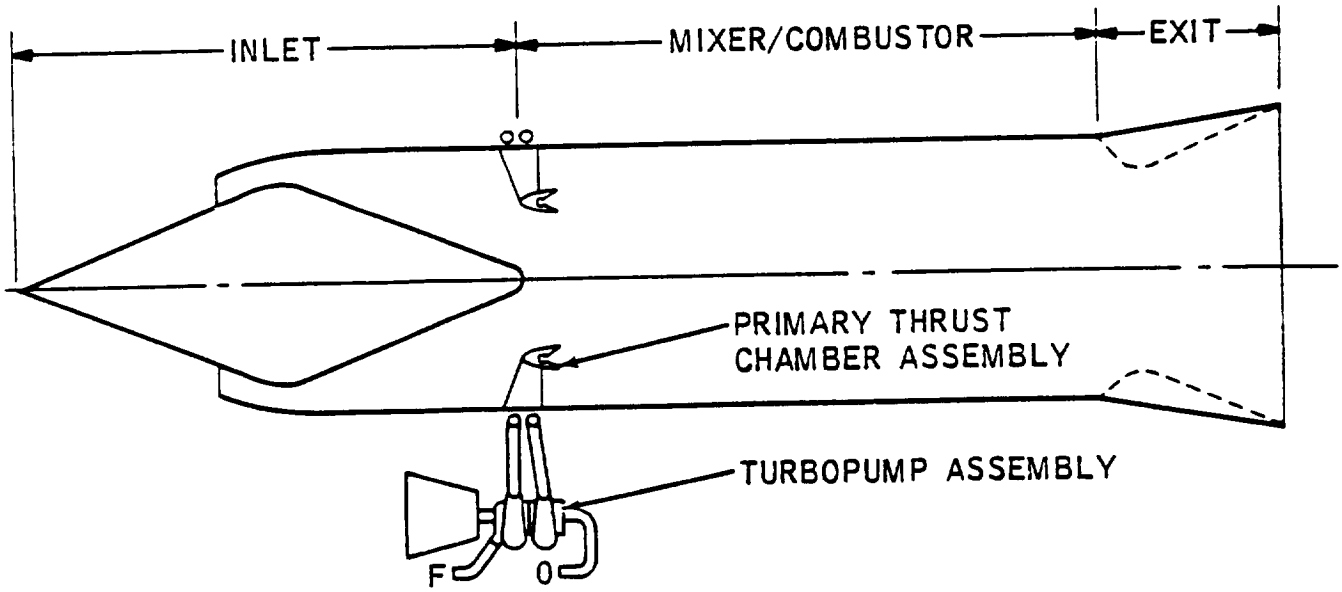

Engine Internal Operating Parameters, nominal

$P_{c\text{-}RKT}$ = 1000 psia, O/F = 7.94 - 4.0
(Initial Operation is Inlet-Closed All Rocket During Otherwise Negative Augmentation Phase for 5-1 only)

W_s/W_p (1000 ft/sec, B trajectory) = 1.75, (W_s/W_p = 4.67 SLS)

A_4/A_3 = 1.00

Engine Operating Mode Block Diagrams

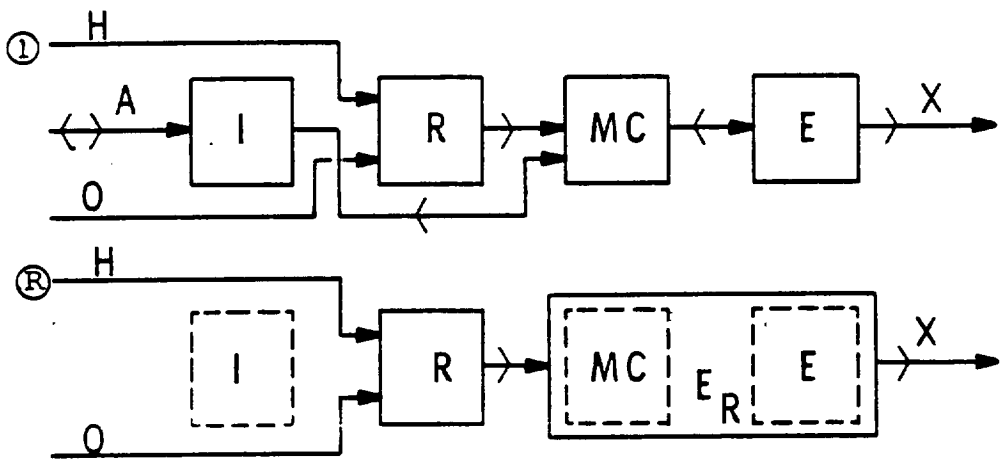

ENGINE PHYSICAL CHARACTERISTICS

Eng. No. 5-1

Thrust, sls	250,000 lbf	1,112,055 newton

Weight and Thrust/Weight Ratio

Measuring Units	(English)	(International)
Weight	lbm	kg
Thrust/Weight	lbf/lbm	newton/kg

Lightweight Estimate

	(lbf/in^2) Maximum Engine Internal Pressure			1000 (newtor/m^2)		
Subsystems:	50	100	250	344.7	689.5	1723.7
Fan						
Heat Exchanger						
Primary Rocket	2720	2720	2720	1233.8	1233.8	1233.3
Mixer/Diffuser	748	1088	1496	339.3	493.5	678.6
Combustor/Exit	1496	1706	2312	678.6	773.8	1048.7
Contingency	496	551	653	225.0	249.9	296.2
Uninstalled Eng. Wt.	5460	6059	7181	2476.7	2748.4	3257.3
Thrust/Weight, Uninst.	45.8	41.3	34.8	449	405	341
Inlet Weight	2765	3160	4582	1254.2	1433.4	2078.4
Installed Eng. Wt.	8225	9219	11673	3730.9	4181.7	5294.9
Thrust/Weight, Inst.	30.4	27.1	21.3	298	266	209

Heavyweight Estimate

Uninstalled Eng. Wt.	6552	7271	8617	2971.9	3298.1	3908.7
Thrust/Weight, Uninst.	38.2	34.4	29.0	375	337	284
Inlet Weight	11074	12656	17788	5023.2	5740.8	8068.6
Installed Eng. Wt.	17626	19927	26405	7995.2	9038.9	11977.3
Thrust/Weight, Inst.	14.2	12.5	9.5	139	123	93

Engine Flow Areas and Equivalent Diameters

	ft^2	ft	m^2	m
Inlet Cowl, A_c	79.1	10.03	7.35	3.06
Mixer, A_3	69.0	9.37	6.41	2.86
Combustor, A_4	69.0	9.37	6.41	2.86
Exit, A_6	110.0	11.83	10.22	3.61

Engine Lengths

	ft	m
Uninstalled	15.8	4.82
Inlet (Typ)	37.1	11.31
Installed (Typ)	52.9	16.13

REMARKS, REFERENCES

Basic, or simple air augmented rocket. No secondary fuel, but rocket permitted to have variable O/F ratio as a mechanism to add fuel for combustion down to fuel-rich O/F = 4.0 (Ø = 2.0). Pressure field benefits included on both 5-1 and 5-2. Inlet closed (rocket operation) during otherwise negative subsonic augmentation phase. (References 17, 18, 19)

SPECIFIC IMPULSE
REFERENCE TRAJECTORIES

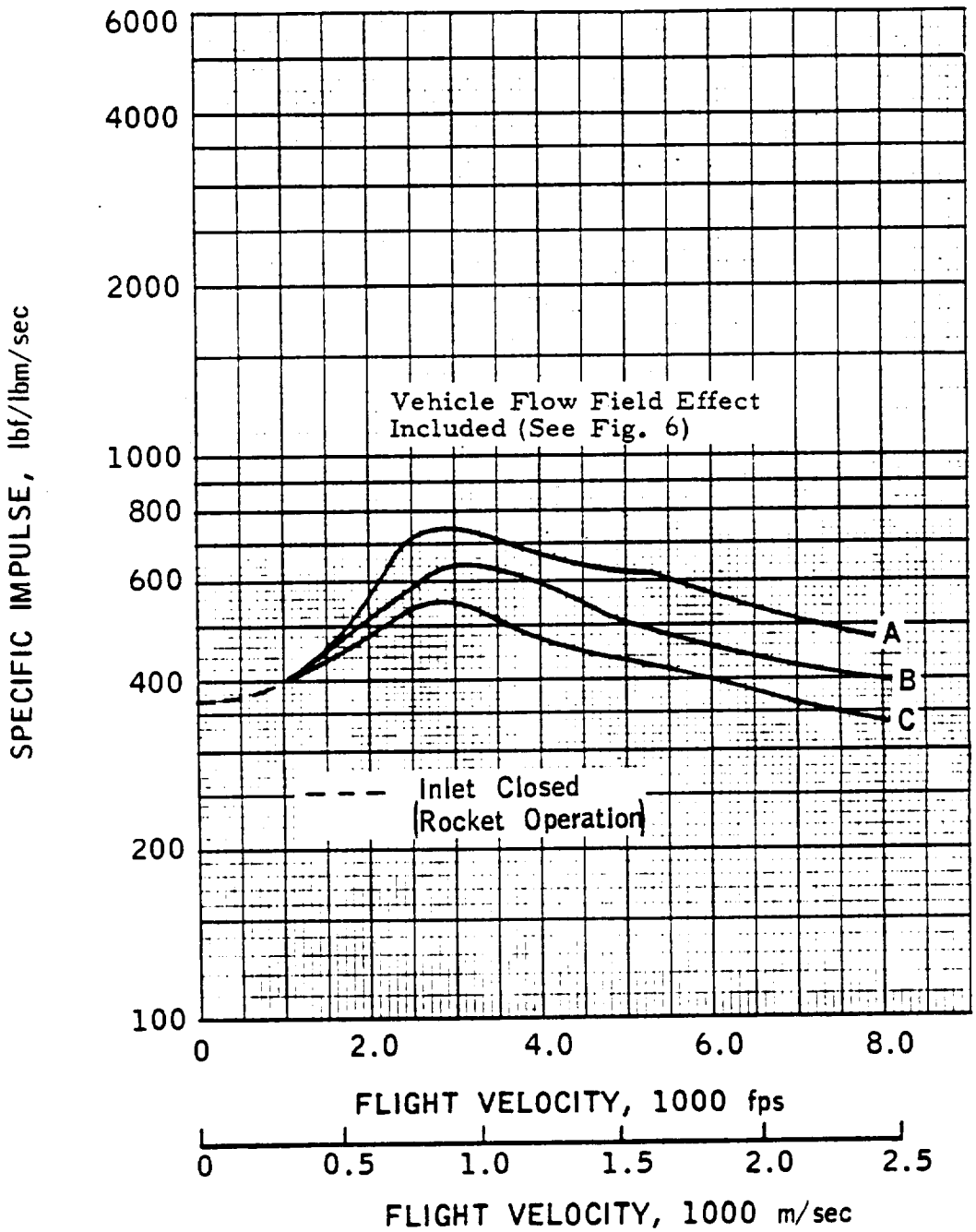

ENG. NO. 5-1

THRUST

REFERENCE TRAJECTORIES

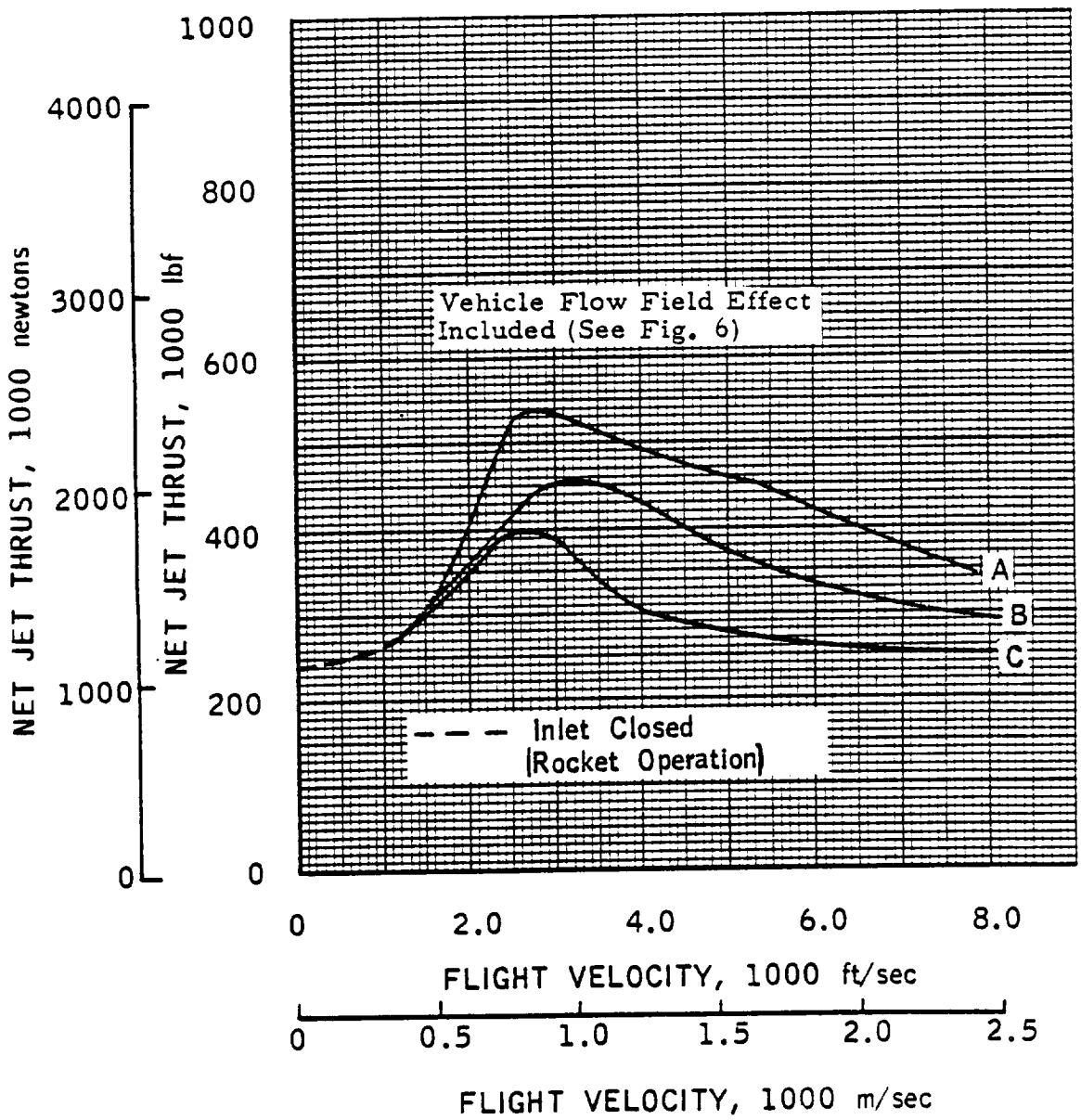

CAPTURE AREA

REFERENCE TRAJECTORIES

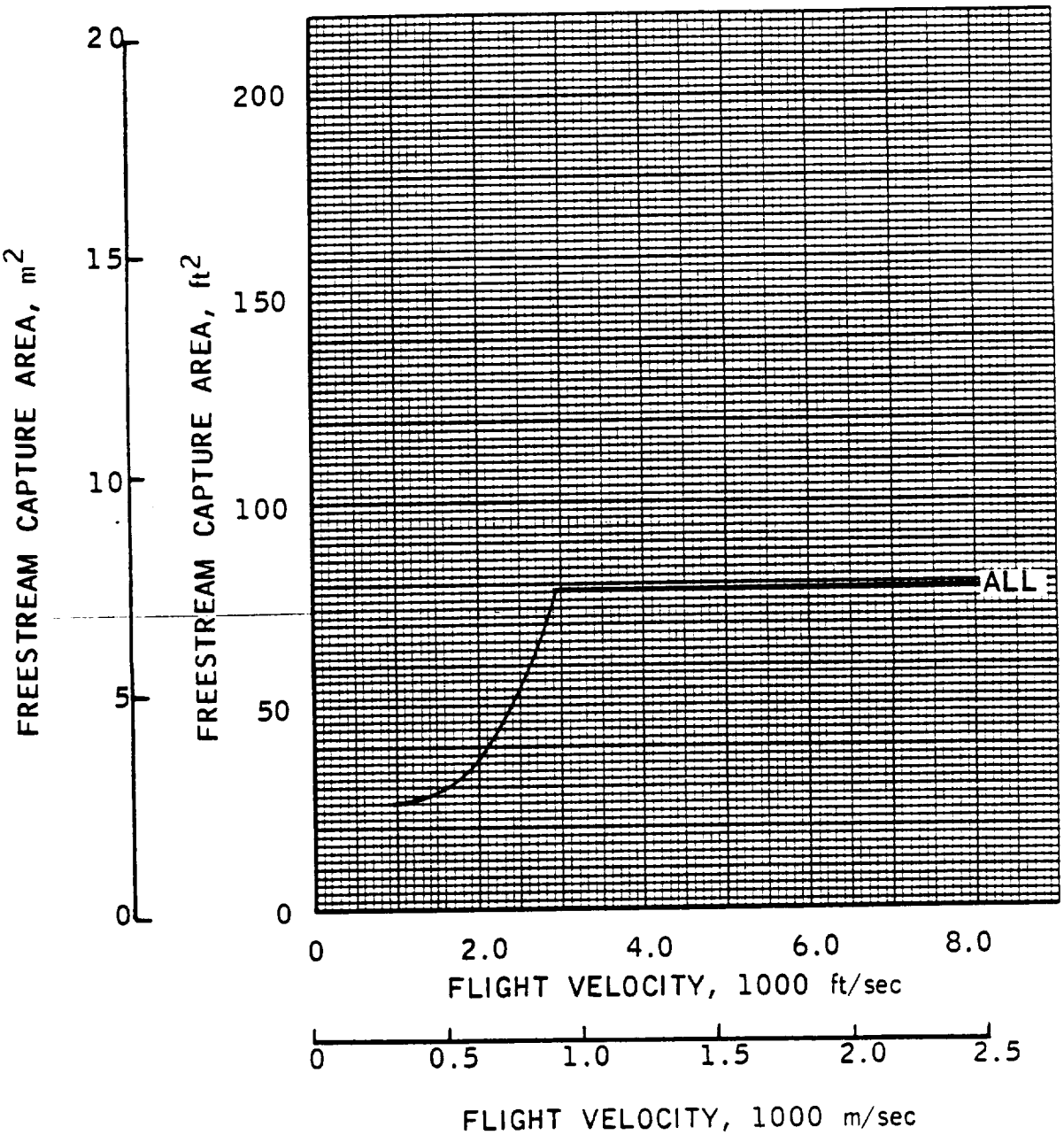

ENG. NO. 5-1

AIRFLOW

REFERENCE TRAJECTORIES

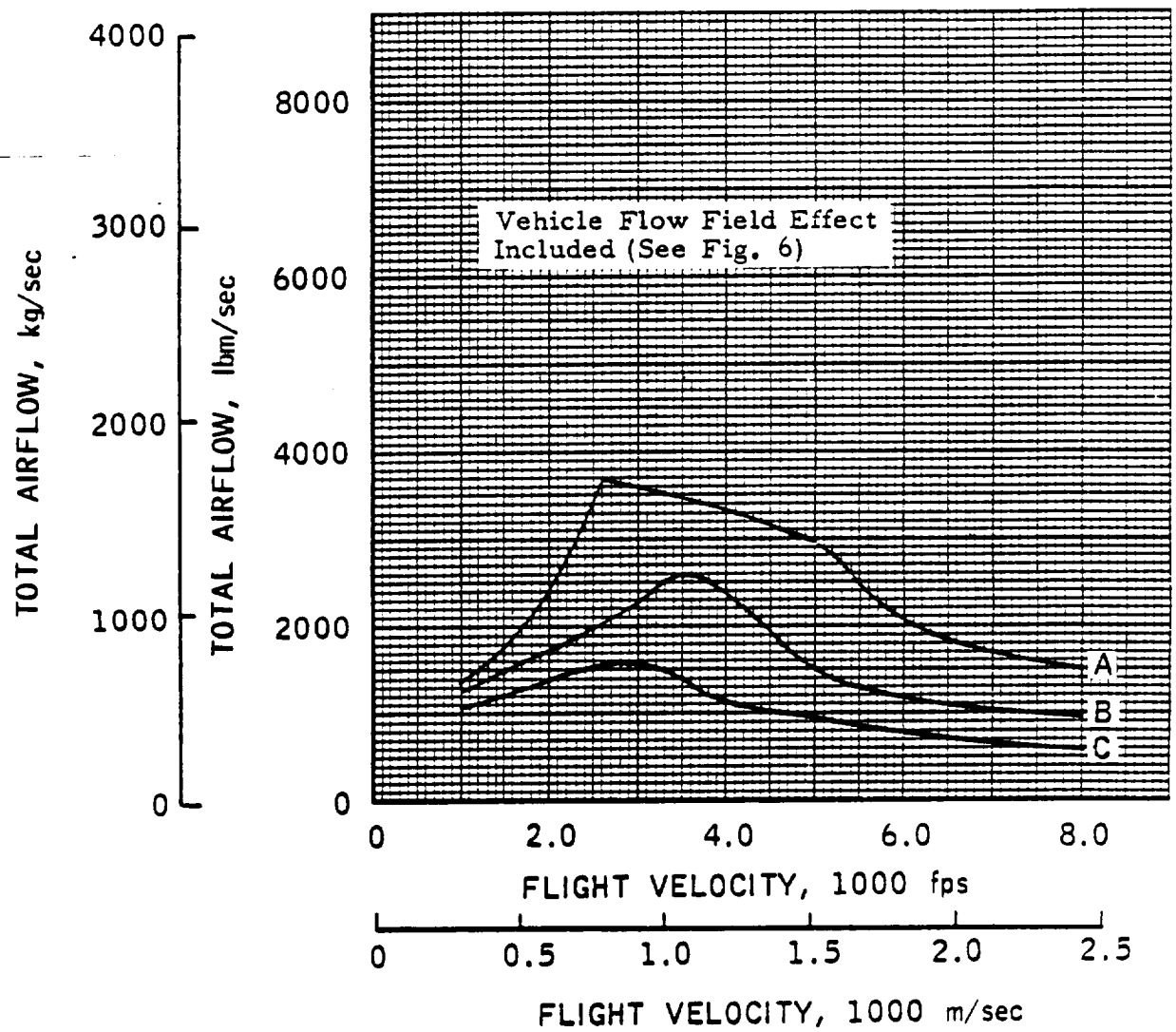

ENGINE- 5-1

ESTIMATED PERFORMANCE

MC	VC	FTC	FTC	T	CF	IS	SFC	PT2	H2	P2
				ALTITUDE - 0. FEET						
0.10	112.	124.7	14.8	250000.	*******	370.	9.73	*******	*******	*******
				ALTITUDE - 10000. FEET						
0.65	700.	125.7	13.4	260000.	*******	386.	9.33	*******	*******	*******
0.70	754.	127.3	14.0	260000.	*******	386.	9.33	*******	*******	*******
0.79	851.	130.4	15.3	260000.	*******	386.	9.33	*******	*******	*******
				ALTITUDE - 20000. FEET						
1.01	1047.	129.3	12.9	270000.	*******	401.	9.00	*******	*******	*******
1.21	1255.	138.8	16.6	295625.	10.96	402.	8.95	16.47	136.7	19.60
1.45	1504.	152.5	23.1	343662.	8.14	467.	7.70	22.52	150.2	21.33
				ALTITUDE - 29000. FEET						
2.00	2000.	179.6	35.8	414154.	5.48	563.	6.39	33.75	177.1	31.97
				ALTITUDE - 30000. FEET						
1.46	1453.	141.0	15.2	309565.	11.14	421.	8.55	14.77	138.8	13.99
1.71	1701.	156.6	21.9	358054.	8.19	487.	7.39	20.89	154.2	19.78
2.06	2049.	182.7	37.6	420000.	*******	584.	6.16	34.55	*******	*******

[redacted]

ENGINE- S-1

ESTIMATED PERFORMANCE

M2	WS	WP	WSWP	WFT	PFP	PFS	V6	PT2C	AC	A5	A6
					ALTITUDE -		0. FEET				
*****	999999.	676.	******	675.7	1.6	*******	*******	*****	********	*******	********
					ALTITUDE -		10000. FEET				
*****	999999.	674.	******	673.6	1.6	*******	*******	*****	********	*******	********
*****	999999.	674.	******	673.6	1.6	*******	*******	*****	********	*******	********
*****	999999.	674.	******	673.6	1.6	*******	*******	*****	********	*******	********
					ALTITUDE -		20000. FEET				
*****	999999.	673.	******	673.3	1.6	*******	*******	*****	********	*******	********
0.280	1383.	735.	1.88	735.2	1.1	0.179	5309.	0.99	27.01	68.75	102.00
0.280	1806.	735.	2.46	735.2	1.2	0.337	5389.	0.98	29.40	68.75	109.66
					ALTITUDE -		29000. FEET				
0.280	2500.	735.	3.40	735.2	1.4	0.384	5162.	0.94	38.49	68.75	109.72
					ALTITUDE -		30000. FEET				
0.280	1231.	735.	1.67	735.2	1.1	0.201	5634.	0.98	29.55	68.75	109.79
0.280	1654.	735.	2.25	735.2	1.2	0.368	5510.	0.95	33.84	68.75	109.65
*****	2500.	735.	3.40	735.2	*****	*******	*******	0.92	38.40	*******	********

ENGINE- 5-1

ESTIMATED PERFORMANCE

MC	VC	FTC	PTC	T	CF	IS	SFC	PT2	F2	P2
				ALTITUDE - 37000. FEET						
2.07	2000.	173.5	27.1	379667.	7.27	516.	6.97	23.46	171.6	22.22
				ALTITUDE - 40000. FEET						
1.91	1849.	161.9	18.6	345546.	8.88	470.	7.66	17.36	159.4	16.45
2.22	2149.	185.8	30.1	384556.	6.66	523.	6.98	24.93	183.0	23.62
2.69	2604.	229.0	62.6	542093.	3.71	737.	4.88	55.80	226.1	52.88
				ALTITUDE - 43000. FEET						
2.07	2000.	173.5	20.6	357575.	9.41	486.	7.40	17.23	171.1	16.32
				ALTITUDE - 45500. FEET						
3.10	3000.	273.3	89.3	532000.	*******	740.	4.96	71.10	*******	*******
				ALTITUDE - 50000. FEET						
2.40	2320.	201.1	246.0	387000.	*******	516.	6.98	21.69	*******	*******
2.84	3.	244.6	48.8	440000.	*******	620.	5.81	40.51	*******	*******

ENGINE- 5-1

ESTIMATED PERFORMANCE

M2	WS	WP	WSWP	WFT	PHF	FFS	V6	PT2C	AC	A5	A6
ALTITUDE - 37000. FEET											
C.280	1764.	735.	2.40	735.2	1.4	C.478	5575.	C.87	38.00	68.75	109.69
ALTITUDE - 40000. FEET											
C.280	1353.	735.	1.84	735.2	1.2	C.362	5706.	C.93	38.62	68.75	109.92
C.280	1818.	735.	2.47	735.2	1.4	C.464	5548.	C.83	41.79	68.73	109.83
C.280	3677.	735.	5.00	735.2	2.0	C.613	5183.	C.85	63.77	60.75	109.76
ALTITUDE - 43000. FEET											
C.280	1258.	735.	1.76	735.2	1.3	C.560	6875.	C.84	37.18	69.75	109.76
ALTITUDE - 45500. FEET											
*****	3580.	735.	4.87	735.2	*****	*******	*******	C.80	78.50	*******	********
ALTITUDE - 50000. FEET											
*****	1480.	735.	2.01	735.2	*****	*******	*******	0.88	47.00	*******	********
*****	2100.	735.	2.86	735.2	*****	*******	*******	0.83	66.50	*******	********

[redacted]

ENGINE- 5-1

ESTIMATED PERFORMANCE

MC	VC	FTC	PTC	T	CF	IS	SFC	PT2	H2	P2
				ALTITUDE - 54000. FEET						
3.10	3000.	273.3	59.5	450000.	*******	640.	5.63	47.37	*******	*******
				ALTITUDE - 60000. FEET						
2.85	2800.	249.9	32.6	410071.	6.02	558.	6.45	25.66	246.1	24.32
3.62	3500.	338.9	94.7	463450.	3.24	630.	5.71	75.29	343.9	73.72
4.39	4250.	454.3	264.3	481122.	2.28	654.	5.50	179.04	452.9	177.82
				ALTITUDE - 64000. FEET						
3.10	3000.	273.3	36.9	388000.	*******	550.	6.55	29.37	*******	*******
				ALTITUDE - 70000. FEET						
4.43	4300.	4636.0	172.5	423966.	3.04	577.	6.24	101.90	462.8	100.94
5.47	5311.	657.5	585.9	452914.	2.03	616.	5.84	287.72	662.6	286.98
				ALTITUDE - 80000. FEET						
3.94	3852.	391.8	56.9	348288.	4.98	474.	7.60	42.19	390.5	41.55
4.91	4800.	555.6	193.4	381077.	3.22	518.	6.94	109.55	556.4	109.36
6.14	6003.	815.1	739.5	413538.	2.16	562.	6.40	305.05	820.0	304.57

[redacted]

ENGINE- 5-1

ESTIMATED PERFORMANCE

P2	WS	WP	WSWP	WFT	PFP	PFS	V6	PT2C	AC	A5	A6
					ALTITUDE - 54000. FEET						
*****	2280.	735.	3.10	735.2	*****	*******	*******	0.80	78.50	*******	********
					ALTITUDE - 60000. FEET						
0.280	1624.	735.	2.21	735.2	1.7	1.001	6158.	0.79	67.70	68.74	109.56
0.176	2648.	735.	3.60	735.2	2.0	0.851	5965.	0.80	78.93	63.38	109.55
0.101	3229.	735.	4.39	735.2	2.0	0.698	6445.	0.68	79.02	44.24	109.65
					ALTITUDE - 64000. FEET						
*****	1550.	735.	2.11	735.2	*****	*******	*******	0.80	78.50	*******	********
					ALTITUDE - 70000. FEET						
0.119	2140.	735.	2.91	735.2	2.0	1.053	6728.	0.59	78.96	52.58	109.70
0.063	2730.	735.	3.71	735.2	2.0	0.825	7552.	0.49	79.00	28.98	109.66
					ALTITUDE - 80000. FEET						
0.150	1159.	735.	1.63	735.2	1.5	0.990	6724.	0.74	78.89	61.79	109.67
0.090	1619.	735.	2.20	735.2	1.7	1.005	7323.	0.57	78.92	44.82	109.76
0.049	2071.	735.	2.82	735.2	2.0	1.088	8302.	0.41	78.96	23.89	109.76

ENGINE- 5-1

ESTIMATED PERFORMANCE

MC	VC	FTC	PTC	T	CF	IS	SPC	PT2	h2	P2
				ALTITUDE - 100000. FEET						
5.15	5103.	618.2	101.7	314682.	4.40	428.	8.41	55.74	618.7	55.35
6.16	6104.	842.2	300.1	335078.	3.11	456.	7.90	137.08	845.0	136.74
7.97	7858.	1343.8	1535.7	345743.	1.92	470.	7.66	361.04	1346.7	360.74
				ALTITUDE - 120000. FEET						
6.51	6645.	986.1	174.7	275100.	3.85	380.	9.48	48.55	975.7	48.06
7.84	8003.	1383.0	571.2	293522.	2.65	400.	9.00	134.96	1387.0	134.64
				ALTITUDE - 135000. FEET						
7.64	8000.	1388.1	258.7	245663.	4.18	340.	10.60	21.50	1393.9	20.65

ENGINE- 5-1

ESTIMATED PERFORMANCE

M2	WS	WP	WSWP	WFT	PFF	PFS	V6	PT2C	AC	A5	A6
					ALTITUDE - 100000. FEET						
0.101	937.	735.	1.27	735.2	1.4	1.024	7477.	0.59	78.79	50.93	109.71
0.062	1166.	735.	1.58	735.2	1.5	1.018	8253.	0.46	78.88	33.67	109.72
0.037	1490.	735.	2.03	735.2	1.7	1.092	9365.	0.23	78.89	17.68	109.64
					ALTITUDE - 120000. FEET						
0.125	770.	735.	1.05	735.2	1.4	1.096	7672.	0.28	78.58	53.42	109.88
0.062	935.	735.	1.28	735.2	1.4	1.022	8818.	0.24	78.88	31.95	109.68
					ALTITUDE - 135000. FEET						
0.249	574.	735.	0.78	735.2	1.2	1.062	7503.	0.08	78.61	64.02	109.72

This Page Intentionally Blank

ENGINE PHYSICAL CHARACTERISTICS

Eng. No. 5-2

Thrust, sls	250,000 lbf	1,112,055 newton

Weight and Thrust/Weight Ratio

Measuring Units	(English)	(International)
Weight	lbm	kg
Thrust/Weight	lbf/lbm	newton/kg

(lbf/in^2) Maximum Engine Internal Pressure 1000 (newton/m^2)

Lightweight Estimate	50	100	250	344.7	689.5	1723.7
Subsystems:						
Fan						
Heat Exchanger						
Primary Rocket	2664	2664	2664	1208.4	1208.4	1208.4
Mixer/Diffuser	1738	2528	3476	788.4	1146.7	1576.7
Combustor/Exit	3476	3950	5372	1576.7	1791.7	2436.7
Contingency	789	914	1151	357.9	414.6	522.1
Uninstalled Eng. Wt.	8667	10056	12663	3931.4	4561.4	5743.2
Thrust/Weight, Uninst.	28.8	24.9	19.7	283	244	193
Inlet Weight	6370	7280	10556	2889.4	3302.2	4788.2
Installed Eng. Wt.	15037	17336	23219	6820.8	7863.6	10532.1
Thrust/Weight, Inst.	16.6	14.4	10.8	163	141	106

Heavyweight Estimate						
Uninstalled Eng. Wt.	9534	11062	13929	4324.6	5017.7	6318.2
Thrust/Weight, Uninst.	26.2	22.6	17.9	257	222	176
Inlet Weight	25494	29136	40973	11564.1	13216.1	18585.4
Installed Eng. Wt.	35028	40198	54902	15888.7	18233.8	24903.6
Thrust/Weight, Inst.	7.1	6.2	4.6	70	61	45

Engine Flow Areas and Equivalent Diameters

	ft^2	ft	m^2	m
Inlet Cowl, A_c	182.1	15.23	16.92	4.64
Mixer, A_3	158.3	14.20	14.71	4.33
Combustor, A_4	158.3	14.20	14.71	4.33
Exit, A_6	252.5	17.93	23.46	5.47

Engine Lengths

	ft	m
Uninstalled	18.7	5.70
Inlet (Typ)	45.0	13.72
Installed (Typ)	63.7	19.42

REMARKS, REFERENCES

SPECIFIC IMPULSE
REFERENCE TRAJECTORIES

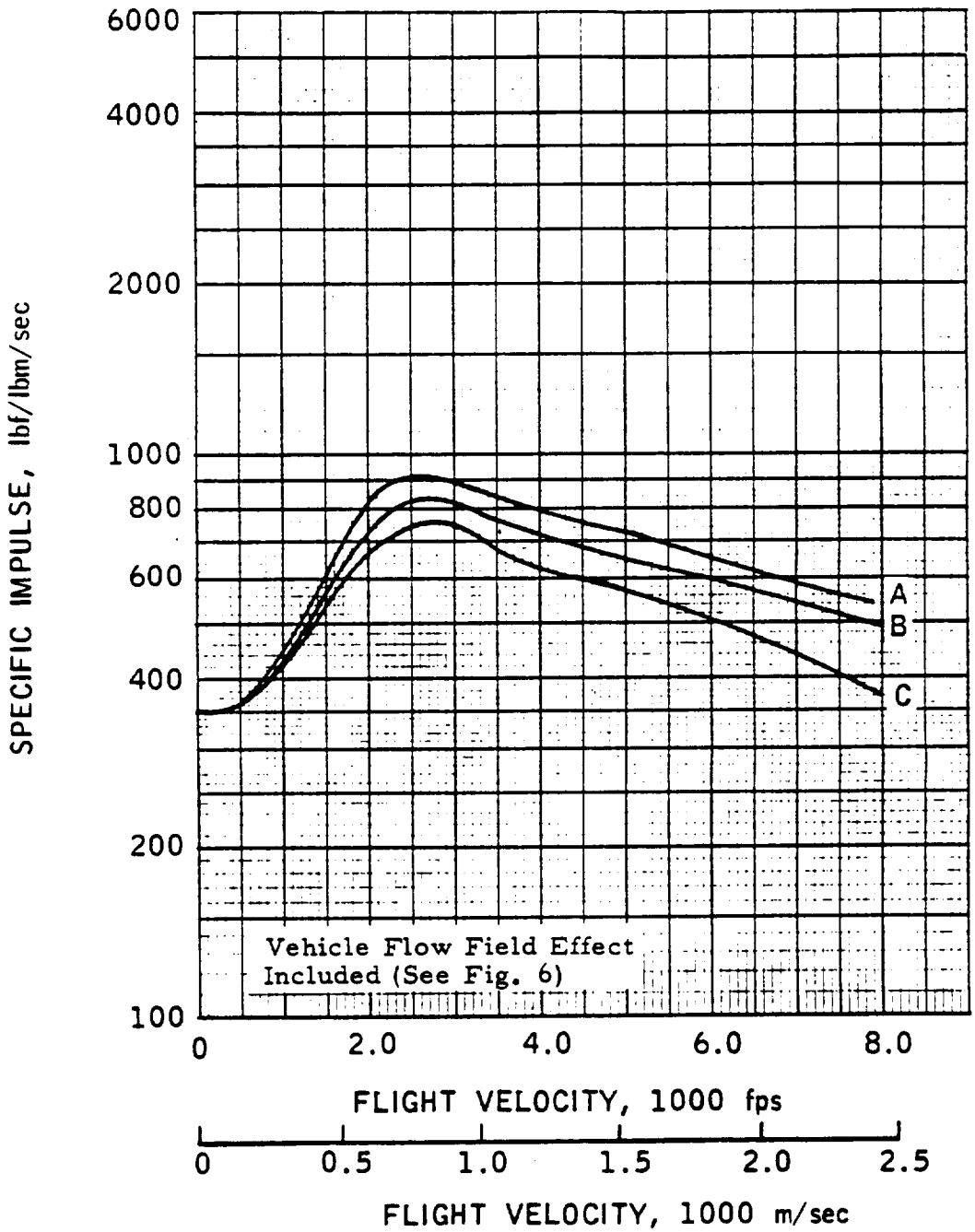

ENG. NO. 5-2

THRUST

REFERENCE TRAJECTORIES

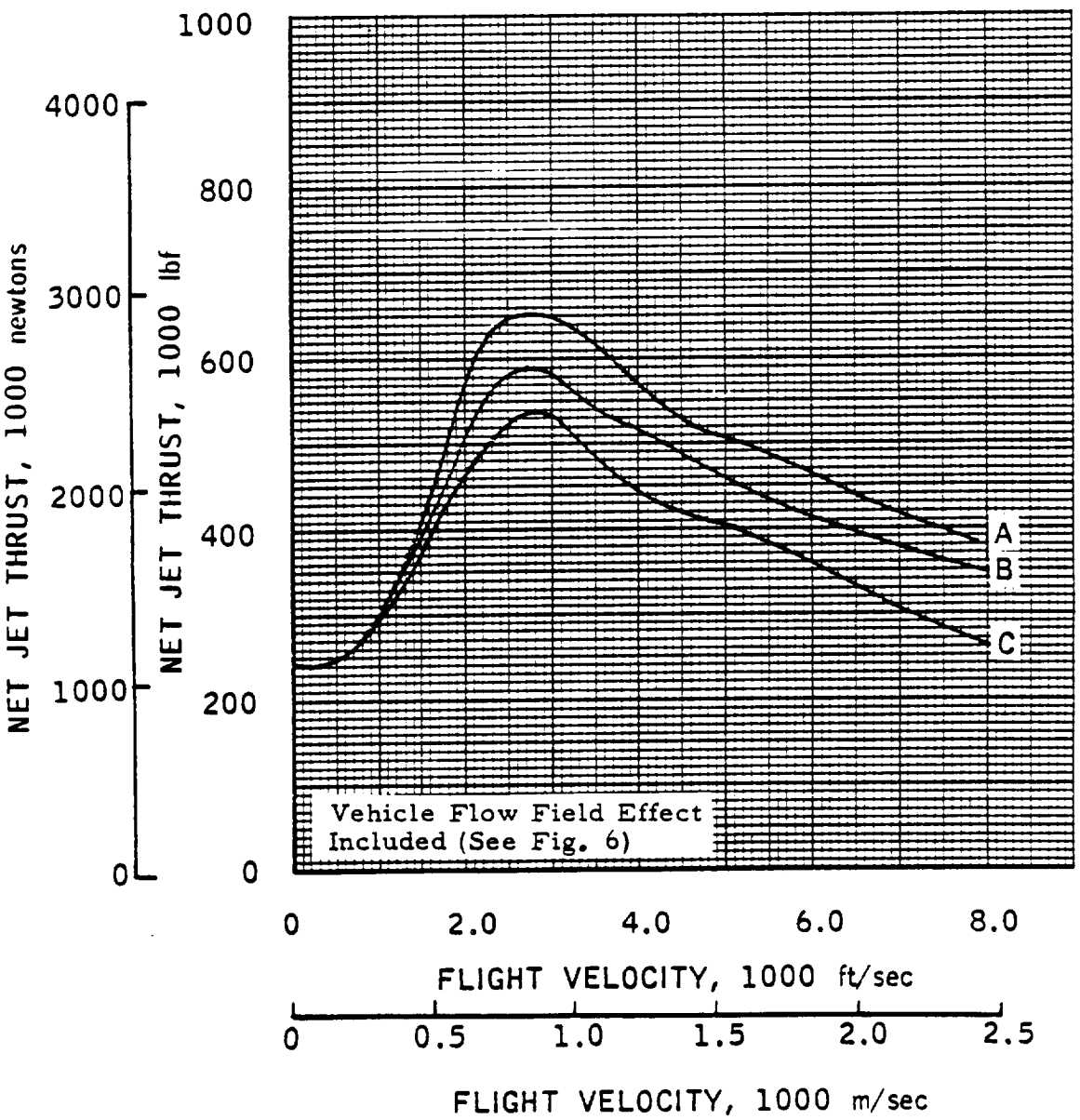

CAPTURE AREA

REFERENCE TRAJECTORIES

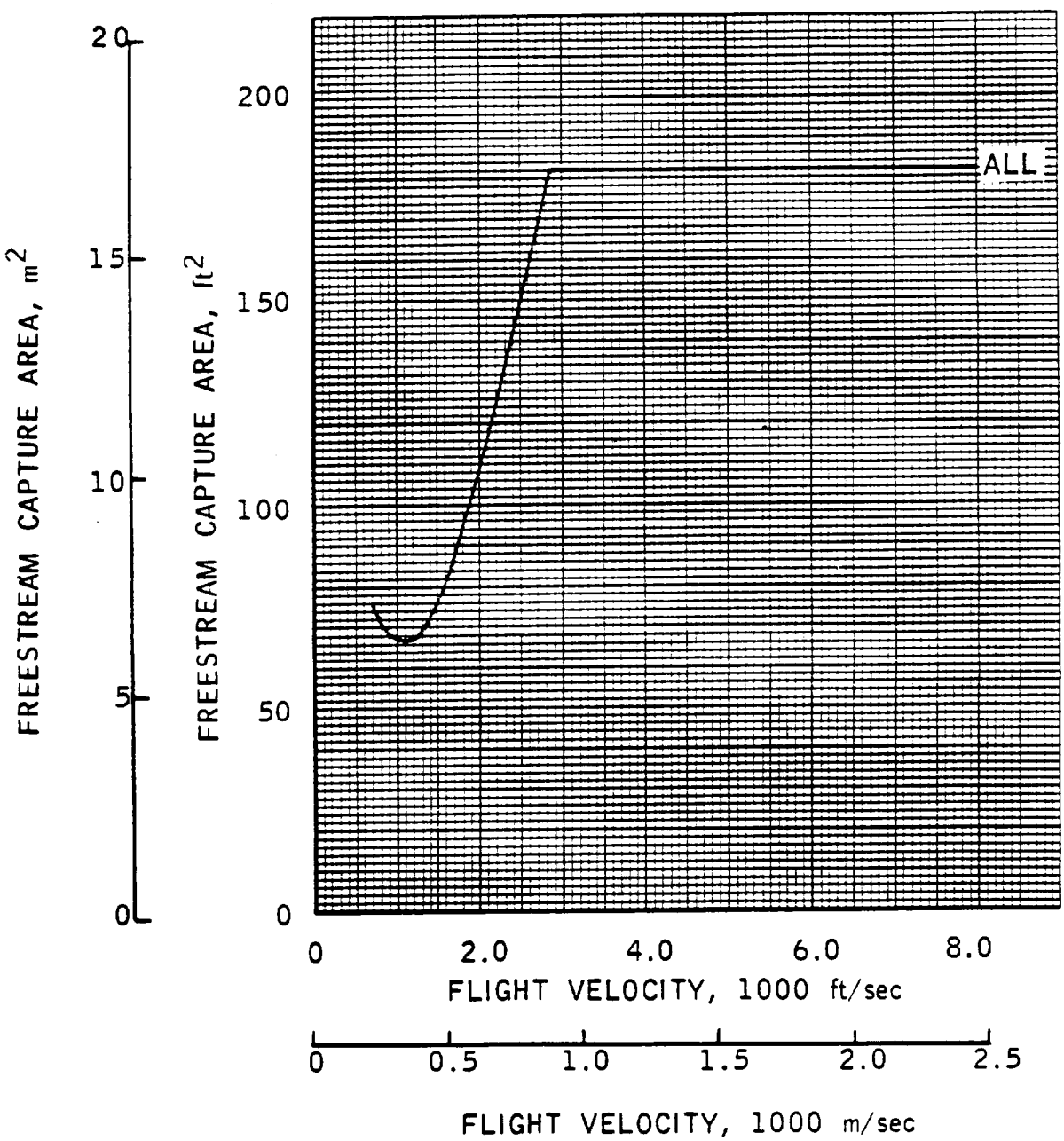

AIRFLOW

REFERENCE TRAJECTORIES

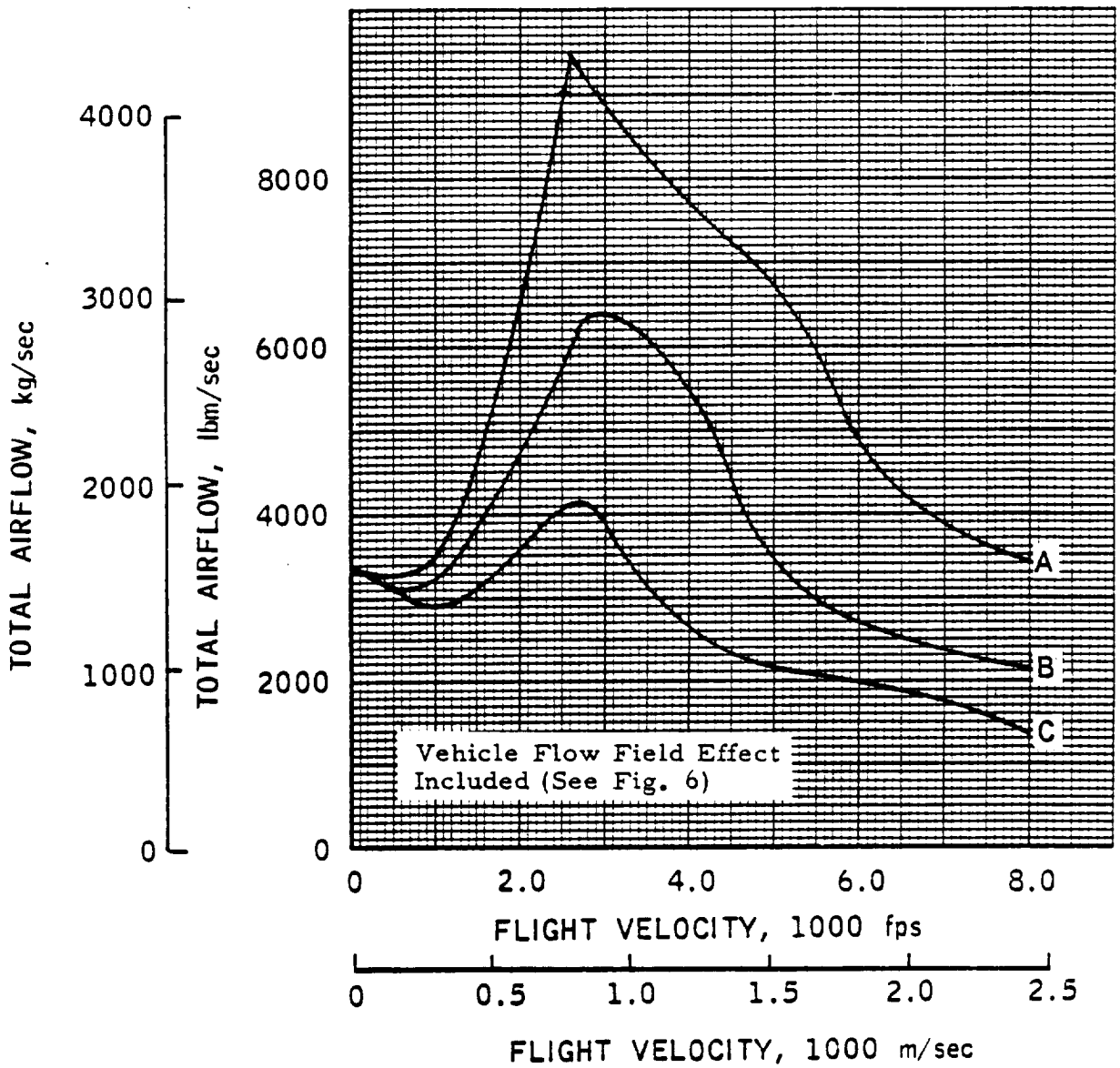

[redacted]

ENGINE- 5-2

ESTIMATED PERFORMANCE

MC	VC	FTC	PTC	T	CF	TS	SFC	PT2	F2	P2
				ALTITUDE - 0. FEET						
0.10	112.	124.7	14.8	245241.	42.06	341.	10.57	14.80	122.8	14.01
				ALTITUDE - 10000. FEET						
0.65	700.	125.7	13.4	264604.	8.00	368.	9.80	13.43	123.8	12.71
0.70	754.	127.3	14.0	268063.	7.25	372.	9.67	14.02	125.3	13.28
0.75	851.	130.4	15.3	284596.	6.35	395.	9.11	15.26	128.4	14.45
				ALTITUDE - 20000. FEET						
1.01	1047.	129.3	12.9	300688.	6.40	418.	8.62	12.94	127.3	12.26
1.21	1255.	138.8	16.6	342575.	4.94	476.	7.57	16.47	136.7	15.60
1.45	1504.	152.5	23.1	412529.	3.81	573.	6.28	22.52	150.2	21.33
				ALTITUDE - 29000. FEET						
2.00	2000.	179.6	35.8	569144.	2.93	790.	4.55	33.75	177.1	31.97
				ALTITUDE - 30000. FEET						
1.46	1453.	141.0	15.2	366026.	5.13	508.	7.08	14.77	138.8	13.99
1.71	1701.	156.6	21.9	440207.	3.92	611.	5.89	20.89	154.3	19.78
2.06	2049.	182.7	37.6	585000.	*******	820.	4.39	*******	*******	*******

[redacted]

CONFIDENTIAL

ENGINE- 5-2

ESTIMATED PERFORMANCE

M2	WS	WP	WSWP	WFT	PFF	PFS	V6	PT2C	AC	A5	A6
					ALTITUDE -		0. FEET				
C.28C	3361.	72C.	4.67	72C.C	1.C	C.CCC	2C26.	1.CC	353.72	172.C1	172.C1
					ALTITUDE -		1CCCO. FEET				
C.28C	3C37.	72C.	4.22	72C.C	1.C	C.CCC	2832.	1.CC	76.8C	158.33	163.24
C.28C	3153.	72C.	4.38	72C.C	1.C	C.CCC	2841.	1.CC	74.C1	158.32	163.6C
C.28C	335C.	72C.	4.71	72C.C	1.C	C.36C	253C.	1.CC	7C.5C	158.33	164.54
					ALTITUDE -		2CCCO. FEET				
C.28C	28EE.	72C.	4.C1	72C.C	1.C	C.CCC	351S.	1.CC	67.64	158.32	175.55
C.280	3551.	720.	4.53	72C.C	1.1	C.683	3624.	C.55	65.34	158.33	185.5C
C.28C	4637.	72C.	6.44	72C.C	1.3	C.154	3775.	C.5E	75.47	158.33	2C7.22
					ALTITUDE -		29CCO. FEET				
C.28C	641E.	72C.	E.51	72C.C	1.E	C.281	4185.	C.54	5E.78	158.33	252.56
					ALTITUDE -		3CCOO. FEET				
C.28C	3161.	72C.	4.35	72C.C	1.1	C.76E	421E.	C.5E	75.84	158.33	227.72
C.280	4246.	72C.	5.5C	720.0	1.3	0.168	4294.	0.95	86.86	158.33	252.52
*****	665C.	72C.	5.24	72C.C	*****	*******	*******	*****	113.2C	*******	********

[redacted]

ENGINE- 5-2

ESTIMATED PERFORMANCE

MC	VC	FTC	FTL	T	CF	IS	SFC	F12	F2	P2
				ALTITUDE - 37000. FEET						
2.07	2000.	173.5	27.1	510000.	*******	700.	5.14	*******	*******	*******
				ALTITUDE - 40000. FEET						
1.91	1845.	161.9	18.6	432975.	4.34	601.	5.99	17.36	159.4	16.45
2.22	2145.	185.8	30.1	540000.	*******	745.	4.83	*******	*******	*******
2.69	2604.	229.0	62.6	655000.	*******	910.	3.96	*******	*******	*******
				ALTITUDE - 43000. FEET						
2.07	2000.	173.5	20.6	467000.	*******	650.	5.54	*******	*******	*******
				ALTITUDE - 45500. FEET						
3.10	3000.	273.3	89.3	652000.	*******	895.	4.02	*******	*******	*******
				ALTITUDE - 50000. FEET						
2.40	2320.	201.1	24.6	512000.	*******	700.	5.14	*******	*******	*******
2.84	2750.	244.6	48.8	593000.	*******	825.	4.36	*******	*******	*******

[redacted]

ENGINE- S-2

ESTIMATED PERFORMANCE

M2	WS	WF	WSWP	WFT	FFF	FFS	V6	PT2C	AC	A5	A6
					ALTITUDE - 37000. FEET						
*****	4780.	720.	6.64	720.0	*****	*******	*******	*****	109.00	*******	********
					ALTITUDE - 40000. FEET						
[redacted].280	3474.	720.	4.82	720.0	1.2	0.172	4504.	0.93	99.11	158.33	252.00
*****	5080.	720.	7.06	720.0	*****	*******	*******	*****	125.00	*******	********
*****	5430.	720.	13.10	720.0	*****	*******	*******	*****	182.50	*******	********
					ALTITUDE - 43000. FEET						
[redacted]*****	3810.	720.	5.01	720.0	*****	*******	*******	*****	109.00	*******	********
					ALTITUDE - 45500. FEET						
*****	8850.	720.	12.35	720.0	*****	*******	*******	*****	182.50	*******	********
					ALTITUDE - 50000. FEET						
*****	3960.	720.	5.50	720.0	*****	*******	*******	*****	134.00	*******	********
*****	6360.	720.	8.83	720.0	*****	*******	*******	*****	170.00	*******	********

ENGINE- S-2

ESTIMATED PERFORMANCE

MC	VC	FTC	FTC	T	CF	IS	SFC	PT2	F2	P2
				ALTITUDE - 54000. FEET						
3.10	3000.	273.3	59.5	588000.	*******	805.	4.47	*******	*******	*******
				ALTITUDE - 60000. FEET						
2.89	2800.	245.9	32.6	546650.	3.13	759.	4.74	25.66	246.1	24.32
3.62	3500.	338.9	94.7	544386.	1.65	756.	4.76	75.29	344.3	74.02
4.39	4250.	454.3	264.3	546855.	1.12	760.	4.74	179.04	453.0	178.05
				ALTITUDE - 64000. FEET						
3.10	3000.	273.3	36.9	540000.	*******	735.	4.90	*******	*******	*******
				ALTITUDE - 70000. FEET						
4.43	4300.	463.6	172.5	500656.	1.56	655.	5.18	101.90	463.1	101.12
5.47	5311.	657.5	585.9	350570.	1.37	487.	7.38	134.96	1387.1	134.70
				ALTITUDE - 80000. FEET						
3.94	3850.	351.8	56.9	455417.	2.81	632.	5.69	42.19	390.8	41.67
4.91	4800.	555.6	193.4	469448.	1.72	652.	5.52	109.95	556.6	109.47
6.14	6003.	815.1	739.5	462521.	1.04	642.	5.60	305.05	820.1	304.66

CONFIDENTIAL

ENGINE- 5-2

ESTIMATED PERFORMANCE

M2	WS	WP	WSWP	WFT	PFP	FFS	V6	PT2C	AC	A5	A6
					ALTITUDE - 54000. FEET						
*****	6400.	720.	8.89	720.0	*****	*******	*******	*****	182.50	*******	********
					ALTITUDE - 60000. FEET						
0.280	4169.	720.	5.79	720.0	2.0	0.529	5004.	0.79	173.78	158.32	253.12
0.158	6122.	720.	8.50	720.0	2.0	0.360	4954.	0.80	182.54	131.47	252.53
0.091	7460.	720.	10.36	720.0	2.0	0.296	5466.	0.68	182.54	83.13	252.63
					ALTITUDE - 64000. FEET						
*****	3870.	720.	5.37	720.0	*****	*******	*******	*****	182.50	*******	********
					ALTITUDE - 70000. FEET						
0.107	4947.	720.	6.87	720.0	2.0	0.446	5798.	0.59	182.51	102.04	253.01
0.056	2172.	720.	3.02	720.0	2.0	1.016	8777.	0.23	182.46	58.62	253.00
					ALTITUDE - 80000. FEET						
0.135	2775.	720.	3.85	720.0	2.0	0.795	6111.	0.74	182.70	132.88	252.52
0.081	3743.	720.	5.20	720.0	2.0	0.590	6578.	0.57	182.46	84.89	252.17
0.044	4787.	720.	6.65	720.0	2.0	0.461	7345.	0.41	182.54	42.79	252.50

[redacted]

ENGINE- 5-2

ESTIMATED PERFORMANCE

MC	VC	FTC	PTC	T	CF	IS	SFC	PT2	F2	P2
				ALTITUDE - 100000. FEET						
5.15	5103.	618.2	101.7	407049.	2.46	565.	6.37	59.74	618.9	59.42
6.16	6104.	842.2	300.1	417612.	1.68	580.	6.21	137.08	845.1	136.80
.57	7858.	1343.8	1539.7	388422.	0.93	540.	6.67	361.04	1346.7	360.79
				ALTITUDE - 120000. FEET						
.51	6645.	986.1	174.7	331237.	1.97	460.	7.83	48.55	980.1	48.15
7.84	8003.	1383.3	571.2	350970.	1.37	487.	7.39	134.97	1387.1	134.70
				ALTITUDE - 135000. FEET						
7.64	8000.	1388.1	258.7	268122.	1.94	372.	9.67	21.50	1396.1	20.84

[redacted]

CONFIDENTIAL

ENGINE- 5-2

ESTIMATED PERFORMANCE

M2	WS	WP	WSWP	WFT	PFF	FFS	V6	P12C	AC	A5	A6
					ALTITUDE - 100000. FEET						
0.091	2171.	720.	3.02	720.0	2.0	1.016	7188.	0.59	182.54	101.78	252.56
0.056	2656.	720.	3.74	720.0	2.0	0.819	7851.	0.46	182.46	61.64	252.51
0.033	3447.	720.	4.79	720.0	2.0	0.640	8822.	0.23	182.55	31.88	252.51
					ALTITUDE - 120000. FEET						
0.113	1788.	720.	2.48	720.0	1.9	1.065	7483.	0.28	182.49	108.44	252.40
0.056	2172.	720.	3.02	720.0	2.0	1.016	8777.	0.24	182.46	58.63	253.00
					ALTITUDE - 135000. FEET						
0.223	1328.	720.	1.84	720.0	1.6	0.957	7288.	0.08	181.94	142.76	252.89

This Page Intentionally Blank

ENGINE FACT SHEET

Class 0 Composite Launch Vehicle Engines

Engine Identification Number: 6 Basic Air Augmented Rocket - Ramjet

Engine Operating Modes

Summary: Number of Modes/ Transitions 5 ; Number of Discrete Modes Utilized 3

Mode Progression - Lift-off to Touch-down

(Take off) Air augmented rocket, simultaneous mixing and burning cycle
(2000-3000 ft/sec) Ramjet, subsonic combustion (6000-8000 ft/sec) Rocket
(Orbital speed, space maneuvering and deorbiting) Ramjet, subsonic combustion
(Flyback) Air augmented rocket, simultaneous mixing and burning cycle (Landing)

Engine Propellant Requirements

Code: (R) = Required, (V) = Required for vacuum operation, (F) = Useable for flyback mode

- [R] Hydrogen, liquid, 37-40 °R
- [ ] Hydrogen, liquid, subcooled (25 °R)
- [ ] Hydrogen, gaseous
- [R] Oxygen, liquid, 162 °R
- [ ] Oxygen, liquid, subcooled
- [ ] Oxygen, gaseous
- [ ] Other _____

Engine Constituent Subsystems

Inlet, rocket, mixer-combustor, exit

Engine General Arrangement and Operating Schematic

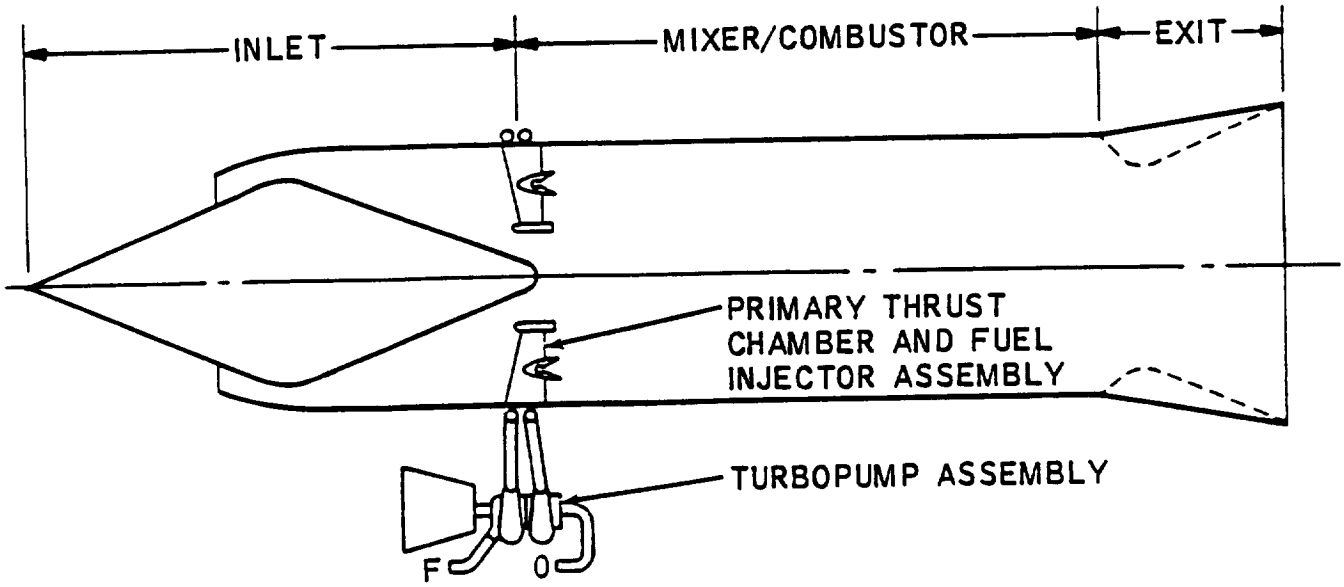

Eng. No. 6

Engine Internal Operating Parameters, nominal

$P_{c\text{-}RKT}$ = 1000 psia, O/F = 7.94
(Initial Operation is Inlet-Closed All Rocket During Otherwise Negative Augmentation Phase for 6-1 only)

W_s/W_p (1000 ft/sec, B trajectory) = 1.75, (W_s/W_p = 2.42 SLS)

A_4/A_3 = 1.00

Engine Operating Mode Block Diagrams

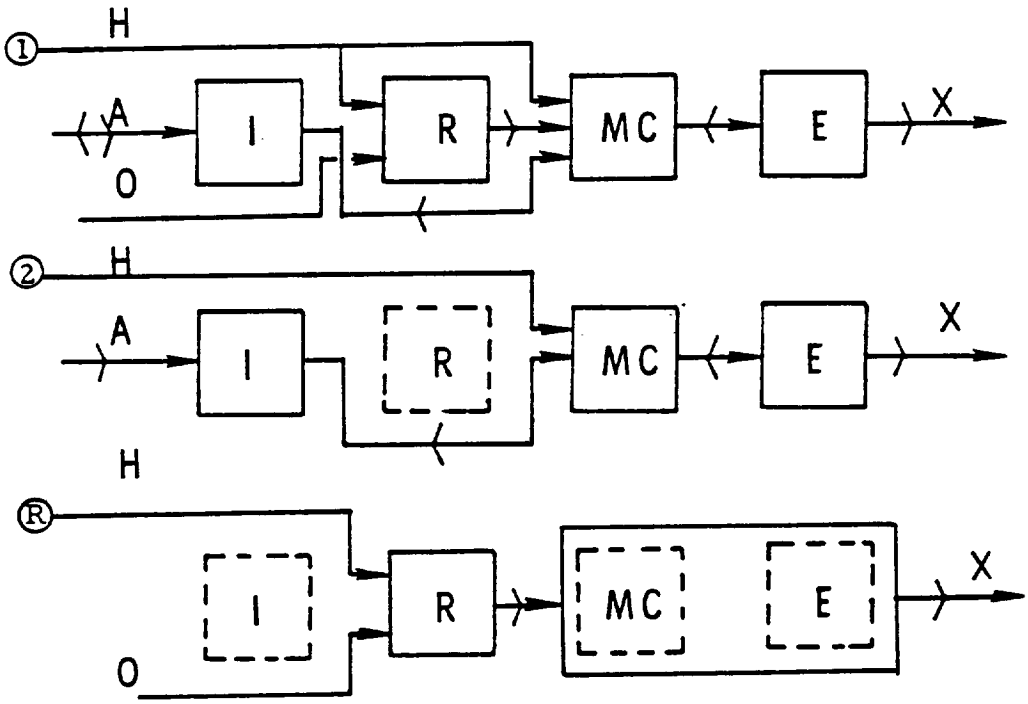

ENGINE PHYSICAL CHARACTERISTICS

Eng. No. 6-1

Thrust, sls	250,000 lbf	1,112,055 newton

Weight and Thrust/Weight Ratio

Measuring Units	(English)	(International)
Weight	lbm	kg
Thrust/Weight	lbf/lbm	newton/kg

(lbf/in^2) Maximum Engine Internal Pressure 1000 (newton/m^2)

Lightweight Estimate	50	100	250	344.7	689.5	1723.7
Subsystems:						
Fan						
Heat Exchanger						
Primary Rocket	2720	2720	2720	1233.8	1233.8	1233.8
Mixer/Diffuser	748	1088	1496	339.3	493.5	678.5
Combustor/Exit	1496	1706	2312	678.6	773.8	1048.7
Contingency	496	551	653	225.0	249.9	296.2
Uninstalled Eng. Wt.	5460	6059	7181	2476.7	2748.4	3257.3
Thrust/Weight, Uninst.	45.8	41.3	34.8	449	405	341
Inlet Weight	2765	3160	4582	1254.2	1433.4	2078.4
Installed Eng. Wt.	8225	9219	11673	3730.9	4181.7	5294.9
Thrust/Weight, Inst.	30.4	27.1	21.3	298	266	209

Heavyweight Estimate						
Uninstalled Eng. Wt.	6552	7271	8617	2971.9	3298.1	3908.7
Thrust/Weight, Uninst.	38.2	34.4	29.0	375	337	284
Inlet Weight	11074	12656	17788	5023.2	5740.8	8068.9
Installed Eng. Wt.	17626	19927	26405	7995.2	9038.9	11977.3
Thrust/Weight, Inst.	14.2	12.5	9.5	139	123	93

Engine Flow Areas and Equivalent Diameters

	ft^2	ft	m^2	m
Inlet Cowl, A_c	79.1	10.03	7.35	3.06
Mixer, A_3	69.0	9.37	6.41	2.86
Combustor, A_4	69.0	9.37	6.41	2.86
Exit, A_6	110.0	11.83	10.22	3.61

Engine Lengths

	ft	m
Uninstalled	15.8	4.82
Inlet (Typ)	37.1	11.31
Installed (Typ)	52.9	16.13

REMARKS, REFERENCES

Basic air augmented rocket with secondary fuel and ramjet capability. (Ø = 1.0). Inlet closed (rocket operation) 6-1 only during otherwise negative subsonic augmentation phase. (References 17, 21)

SPECIFIC IMPULSE
REFERENCE TRAJECTORIES

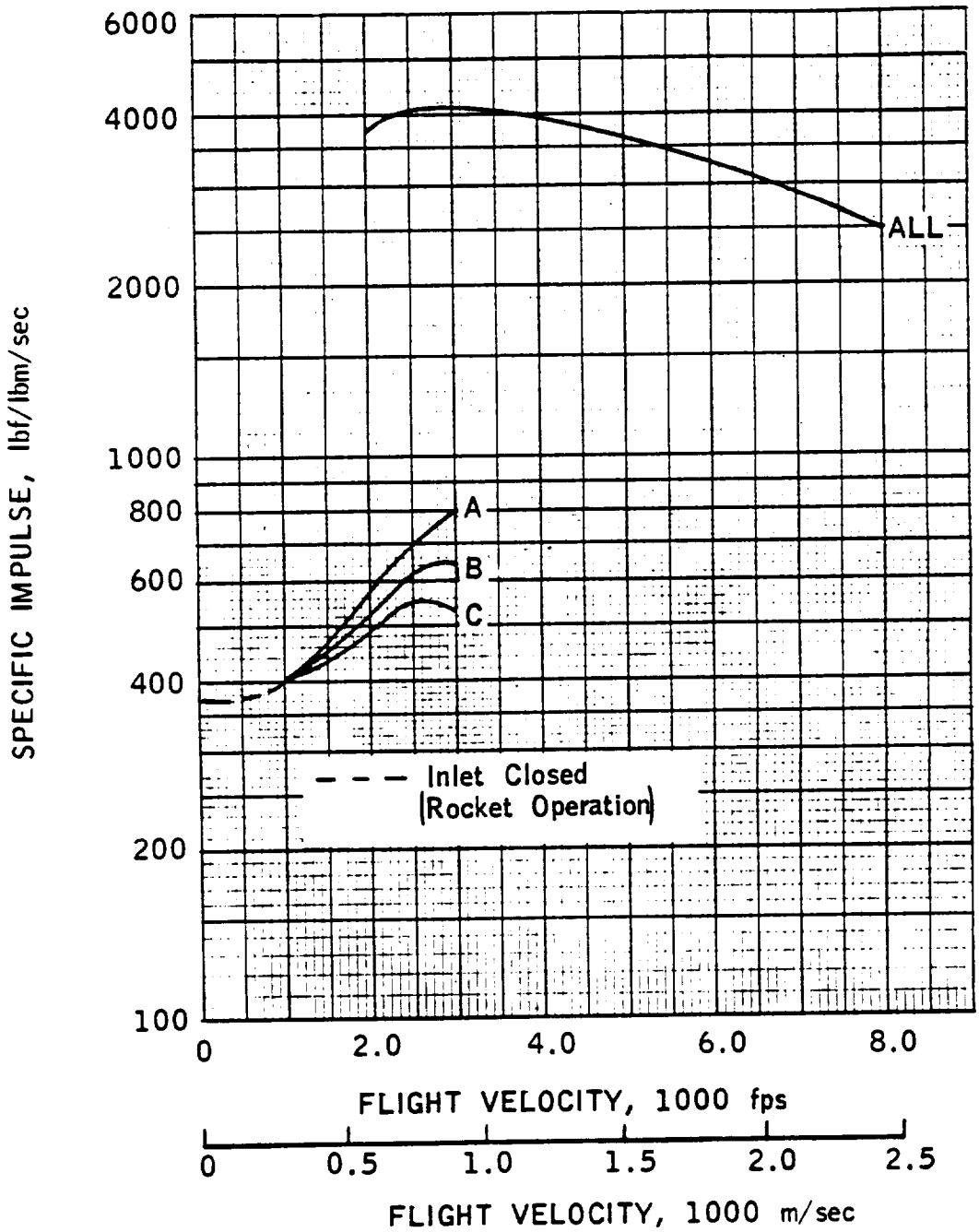

ENG. NO. 6-1

THRUST

REFERENCE TRAJECTORIES

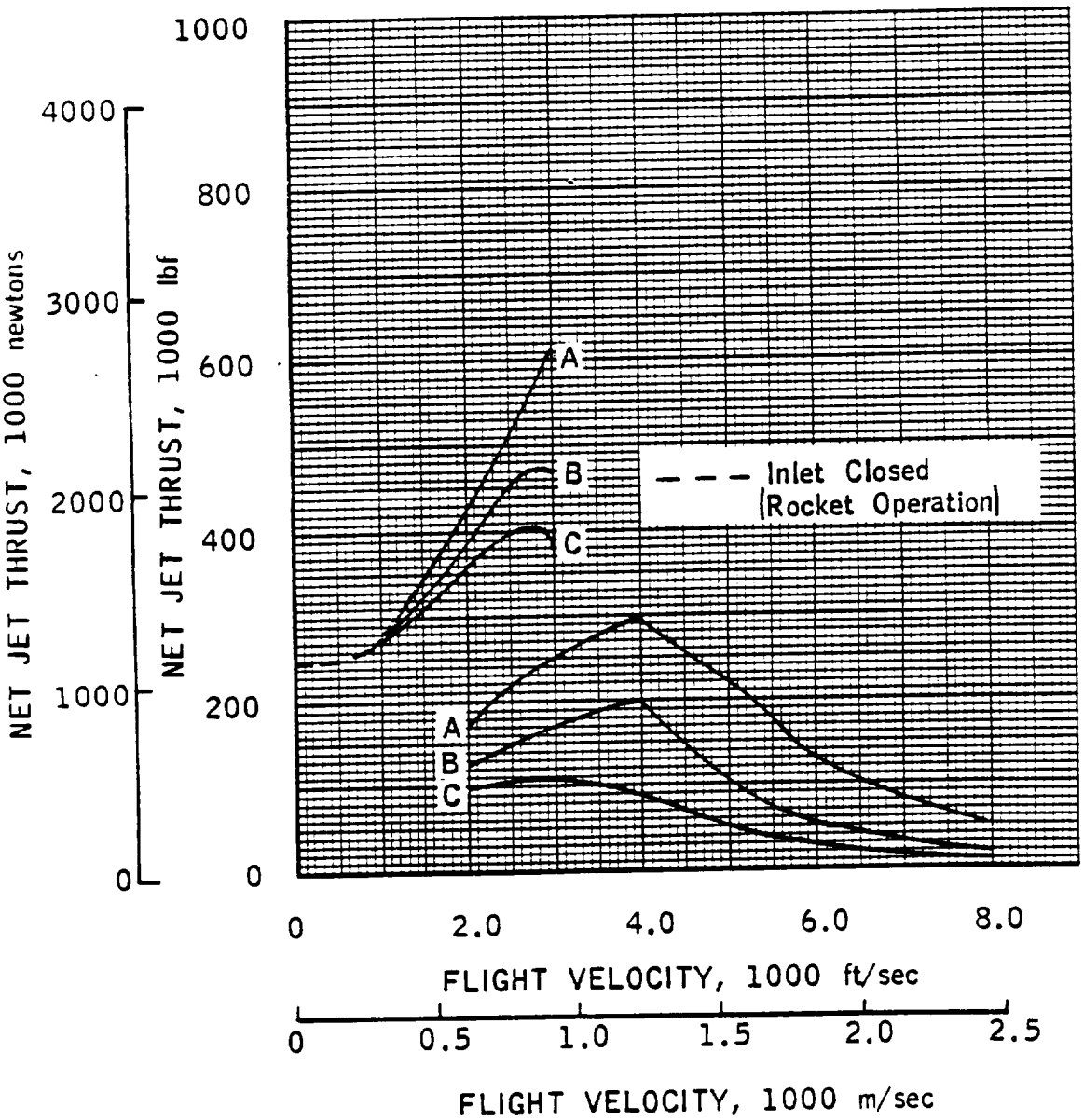

CAPTURE AREA

REFERENCE TRAJECTORIES

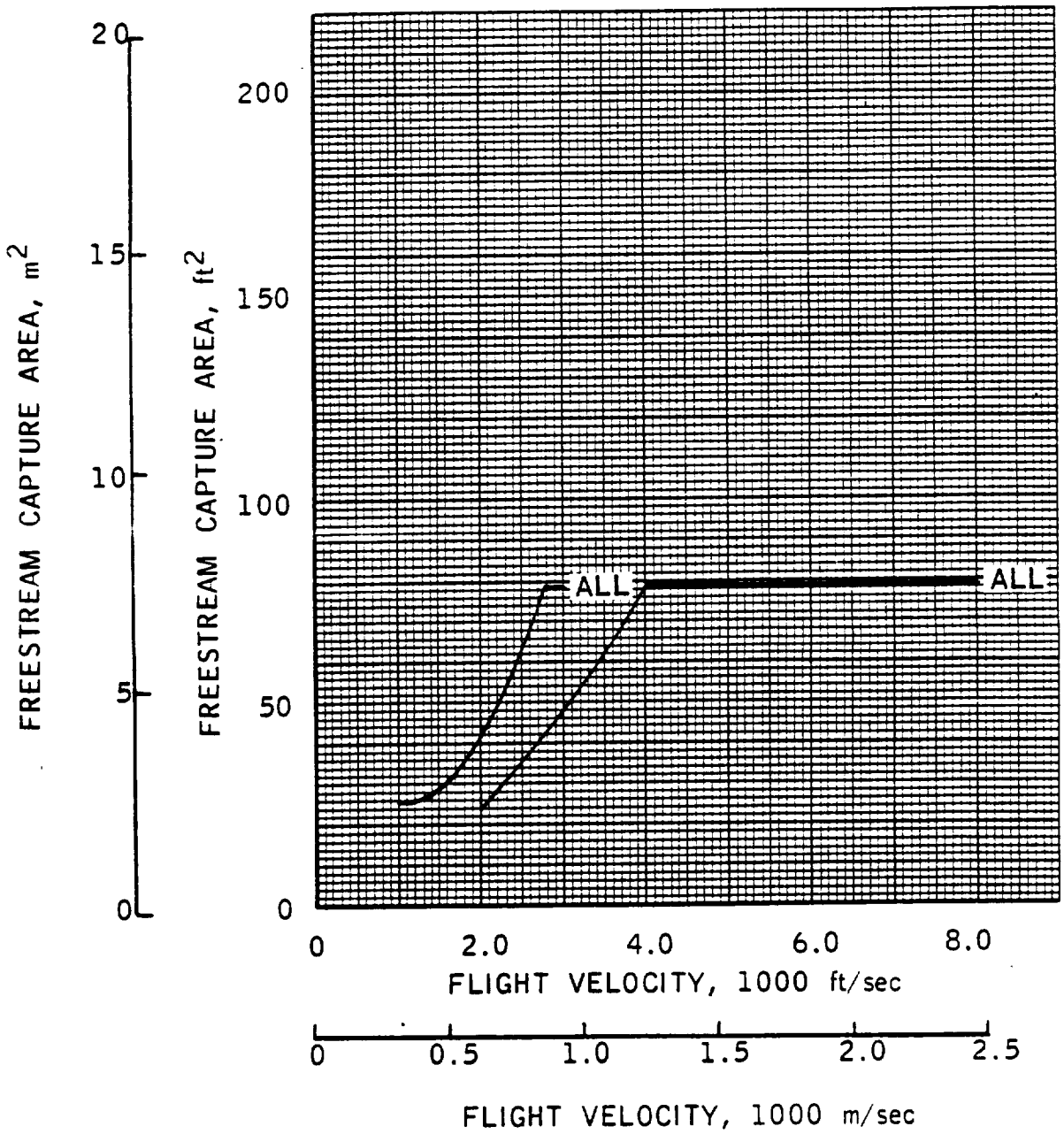

AIRFLOW

REFERENCE TRAJECTORIES

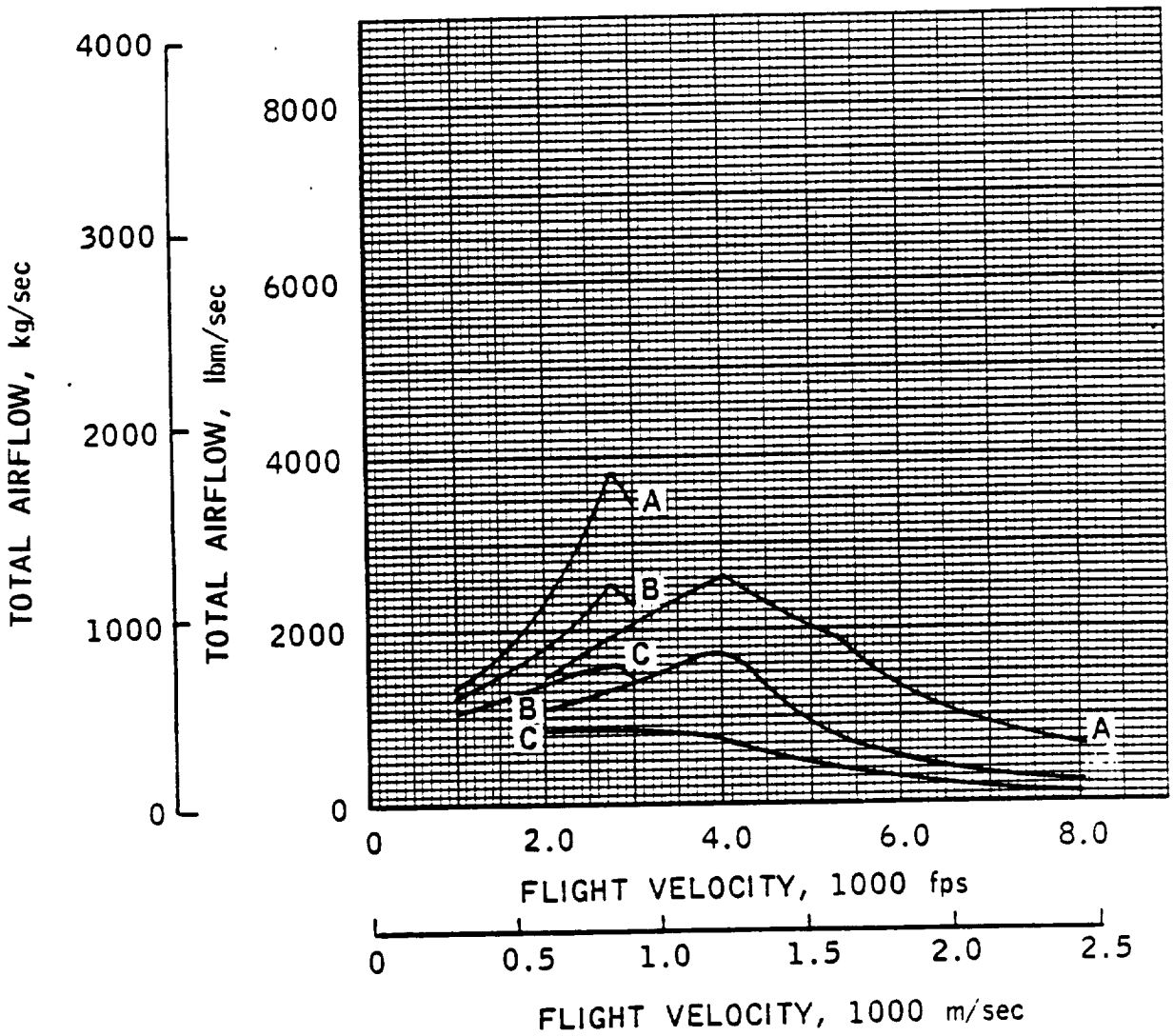

ENGINE- 6-1

ESTIMATED PERFORMANCE

MC	VC	FTC	FTO	T	CF	IS	SPC	PT2	H2	P2
				ALTITUDE -		0. FEET				
0.10	112.	124.7	14.8	250000.	*******	370.	9.73	*******	*******	*******
				ALTITUDE -		10000. FEET				
0.65	700.	125.7	13.4	260000.	*******	386.	9.33	*******	*******	*******
0.70	754.	127.3	14.0	260000.	*******	386.	9.33	*******	*******	*******
0.75	851.	130.4	15.3	260000.	*******	386.	9.33	*******	*******	*******
				ALTITUDE -		20000. FEET				
1.01	1047.	129.3	12.9	270000.	*******	401.	9.00	*******	*******	*******
1.21	1255.	138.8	16.6	295625.	10.96	402.	8.95	16.47	136.7	15.60
1.45	1504.	152.5	23.1	343662.	8.14	467.	7.70	22.52	150.2	21.33
				ALTITUDE -		30000. FEET				
1.46	1453.	141.0	15.2	309565.	11.14	421.	8.55	14.77	138.8	13.99
1.71	1701.	156.6	21.9	358054.	8.19	487.	7.39	20.89	154.2	19.78
2.06	2049.	182.7	37.6	431413.	5.33	587.	6.14	34.55	180.0	32.73
				ALTITUDE -		40000. FEET				
1.91	1849.	161.9	18.6	345546.	8.88	470.	7.66	17.36	159.4	16.45
2.22	2149.	185.8	30.1	406342.	6.14	553.	6.51	27.20	183.0	25.77

[redacted]

ENGINE- 6-1

ESTIMATED PERFORMANCE

M2	WS	WP	WSWP	WFT	PHP	PHS	V6	PT2C	AC	A5	A6
					ALTITUDE - 0. FEET						
*****	*******	676.	******	675.7	1.6	*******	*******	*****	********	*******	********
					ALTITUDE - 10000. FEET						
*****	*******	674.	******	673.6	1.6	*******	*******	*****	********	*******	********
*****	*******	674.	******	673.6	1.6	*******	*******	*****	********	*******	********
*****	*******	674.	******	673.6	1.6	*******	*******	*****	********	*******	********
					ALTITUDE - 20000. FEET						
*****	*******	673.	******	673.3	1.6	*******	*******	*****	********	*******	********
C.280	1383.	735.	1.88	735.2	1.1	C.179	5309.	0.95	27.01	68.75	102.00
C.280	1806.	735.	2.46	735.2	1.2	C.337	5389.	0.98	29.40	68.75	109.66
					ALTITUDE - 30000. FEET						
C.280	1231.	735.	1.67	735.2	1.1	C.201	5634.	0.98	29.55	68.75	109.75
C.280	1654.	735.	2.25	735.2	1.2	C.368	5510.	0.95	33.84	68.75	109.65
C.280	2540.	735.	3.45	735.2	1.4	C.423	5199.	0.92	43.02	68.75	109.81
					ALTITUDE - 40000. FEET						
C.280	1353.	735.	1.84	735.2	1.2	C.362	5706.	0.93	38.62	68.75	109.92
C.280	1983.	735.	2.70	735.2	1.4	0.484	5486.	0.90	48.57	68.75	109.64

[redacted]

[redacted]

ENGINE- 6-1

ESTIMATED PERFORMANCE

MC	VC	FTC	PTC	T	CF	IS	SPC	PT2	H2	P2
ALTITUDE - 40000. FEET										
2.69	2604.	229.0	62.6	538426.	3.80	732.	4.92	53.11	225.6	50.33
ALTITUDE - 45500. FEET										
3.10	3000.	273.3	85.3	614307.	3.78	797.	4.51	71.15	270.8	68.79
ALTITUDE - 50000. FEET										
2.40	2320.	201.1	24.6	393011.	7.16	534.	6.73	21.69	198.1	20.55
2.84	2750.	244.6	48.8	481520.	4.39	655.	5.50	40.51	241.1	38.44
ALTITUDE - 54000. FEET										
3.10	3000.	273.3	59.5	467843.	4.33	636.	5.66	47.40	270.8	45.93
ALTITUDE - 60000. FEET										
2.85	2800.	249.9	32.6	410443.	5.82	558.	6.45	26.87	246.6	25.60
ALTITUDE - 64000. FEET										
3.10	3000.	273.3	36.9	384560.	5.74	524.	6.88	29.39	270.8	28.42

[redacted]

ENGINE- 6-1

ESTIMATED PERFORMANCE

M2	WS	WP	WSWP	WFT	PHP	PHS	V6	PT2C	AC	A5	A6
ALTITUDE - 40000. FEET											
C.280	3503.	735.	4.76	735.2	2.0	0.643	5253.	0.85	70.52	68.75	109.76
ALTITUDE - 45500. FEET											
C.222	3481.	735.	4.73	770.7	2.0	0.997	5896.	0.80	78.82	68.46	109.72
ALTITUDE - 50000. FEET											
C.280	1523.	735.	2.07	735.2	1.5	0.779	5992.	0.88	55.68	68.75	109.89
C.277	2564.	735.	3.49	735.2	1.9	0.799	5652.	0.83	78.77	68.75	109.65
ALTITUDE - 54000. FEET											
C.222	2319.	735.	3.15	735.2	2.0	0.972	5934.	0.80	78.82	67.98	109.68
ALTITUDE - 60000. FEET											
C.266	1622.	735.	2.21	735.2	1.7	1.002	6152.	0.82	78.97	68.69	109.65
ALTITUDE - 64000. FEET											
C.222	1439.	735.	1.96	735.2	1.6	0.979	6272.	0.80	78.85	67.85	109.70

[redacted]

UNCLASSIFIED

This Page Intentionally Blank

UNCLASSIFIED

ENGINE PHYSICAL CHARACTERISTICS

Eng. No. 6-2

Thrust, sls	250,000 lbf	1,112,055 newton

Weight and Thrust/Weight Ratio

Measuring Units	(English)	(International)
Weight	lbm	kg
Thrust/Weight	lbf/lbm	newton/kg

Lightweight Estimate

(lbf/in^2) Maximum Engine Internal Pressure 1000 (newton/m^2)

Subsystems:	50	100	250	344.7	689.5	1723.7
Fan						
Heat Exchanger						
Primary Rocket	3664	3664	3664	1661.9	1661.9	1661.9
Mixer/Diffuser	1738	2528	3476	788.4	1146.7	1576.7
Combustor/Exit	3476	3950	5372	1576.7	1791.7	2436.7
Contingency	789	914	1151	357.9	414.5	522.1
Uninstalled Eng. Wt.	9667	11056	13663	4384.9	5015.0	6197.5
Thrust/Weight, Uninst.	25.9	22.6	18.3	254	222	180
Inlet Weight	6370	7280	10556	2889.4	3302.2	4788.2
Installed Eng. Wt.	16037	18336	24219	7274.4	8317.2	10985.7
Thrust/Weight, Inst.	15.6	13.6	10.3	153	133	101

Heavyweight Estimate

Uninstalled Eng. Wt.	10634	12162	15029	4823.6	5516.6	6817.2
Thrust/Weight, Uninst.	23.5	20.6	16.6	231	202	163
Inlet Weight	25494	29136	40973	11564.1	13216.1	18585.4
Installed Eng. Wt.	36128	41298	56002	16387.7	18732.8	25402.5
Thrust/Weight, Inst.	6.9	6.1	4.5	68	60	44

Engine Flow Areas and Equivalent Diameters

	ft^2	ft	m^2	m
Inlet Cowl, A_c	182.1	15.23	16.92	4.64
Mixer, A_3	158.3	14.20	14.71	4.33
Combustor, A_4	158.3	14.20	14.71	4.33
Exit, A_6	252.5	17.93	23.46	5.47

Engine Lengths

	ft	m
Uninstalled	18.7	5.70
Inlet (Typ)	45.0	13.72
Installed (Typ)	63.7	19.42

REMARKS, REFERENCES

SPECIFIC IMPULSE
REFERENCE TRAJECTORIES

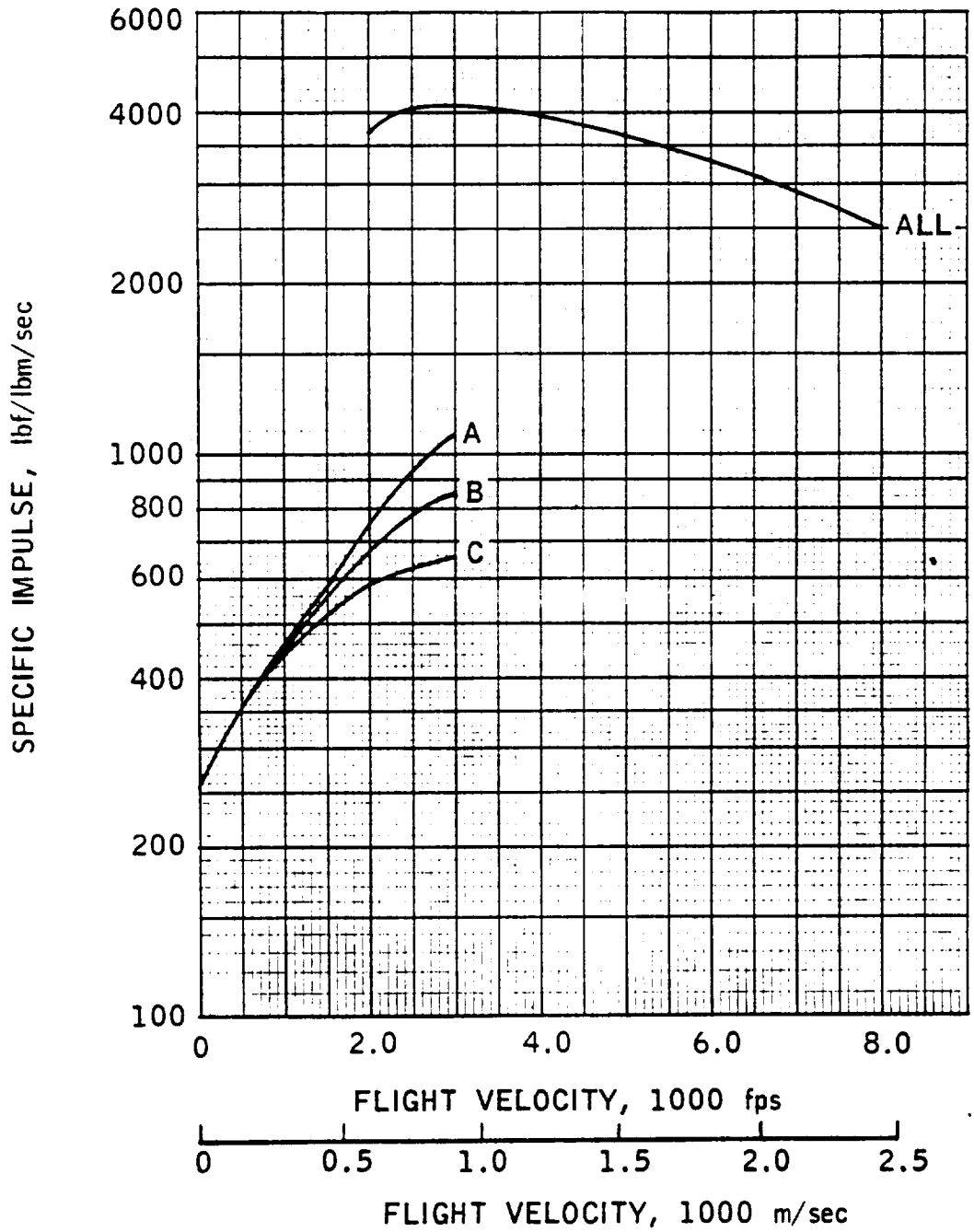

ENG. NO. 6-2

THRUST

REFERENCE TRAJECTORIES

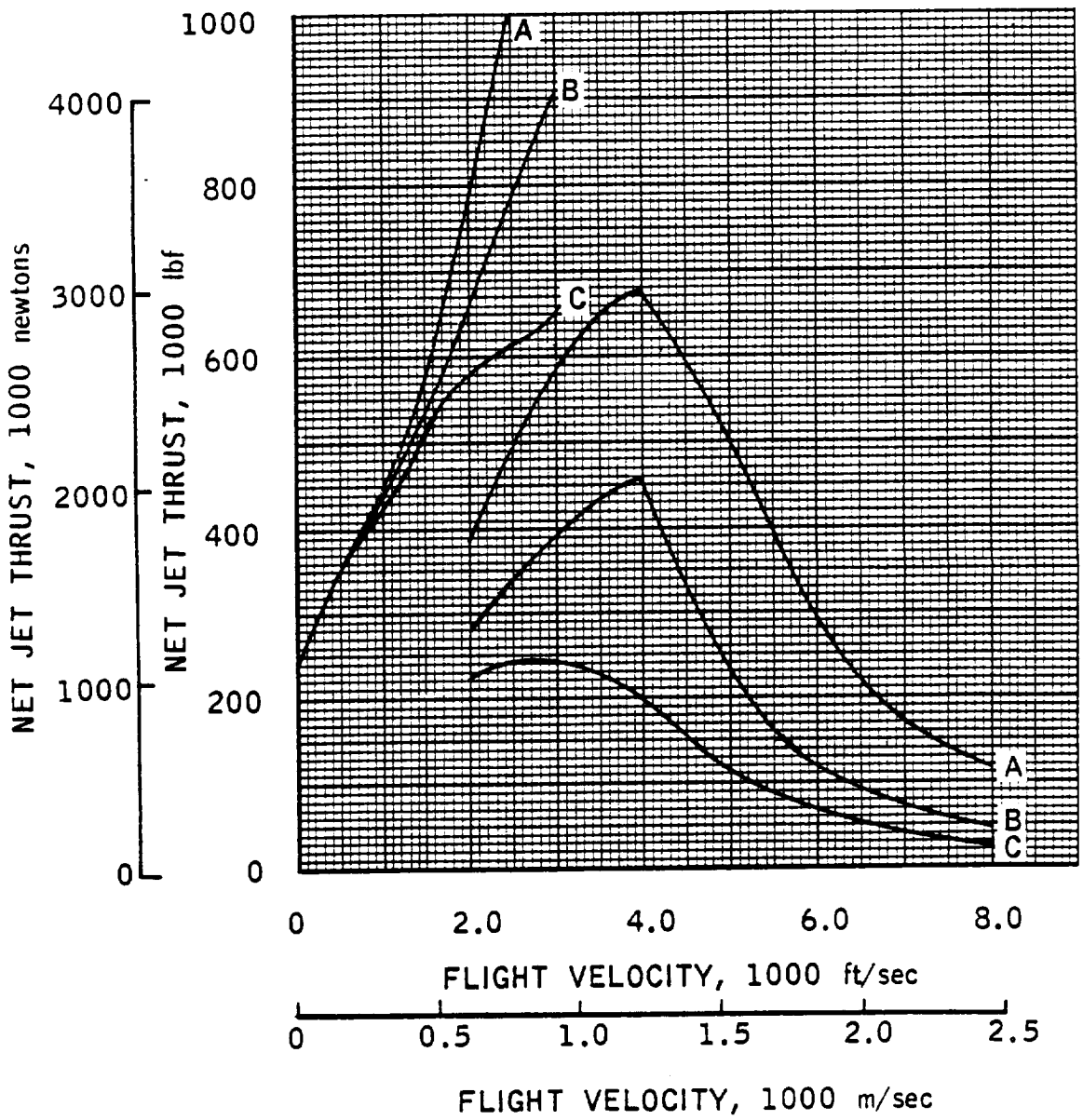

CAPTURE AREA

REFERENCE TRAJECTORIES

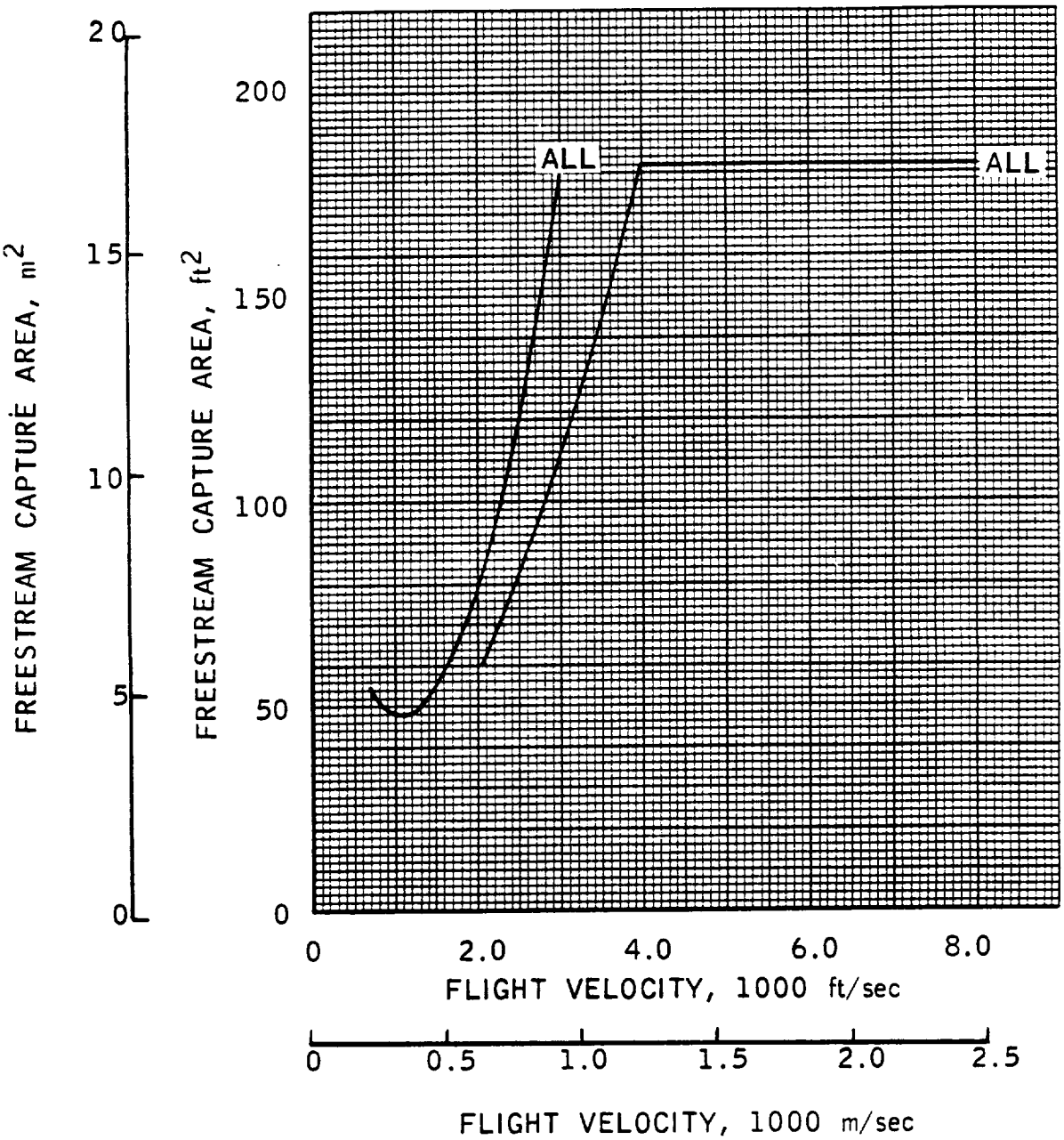

AIRFLOW

REFERENCE TRAJECTORIES

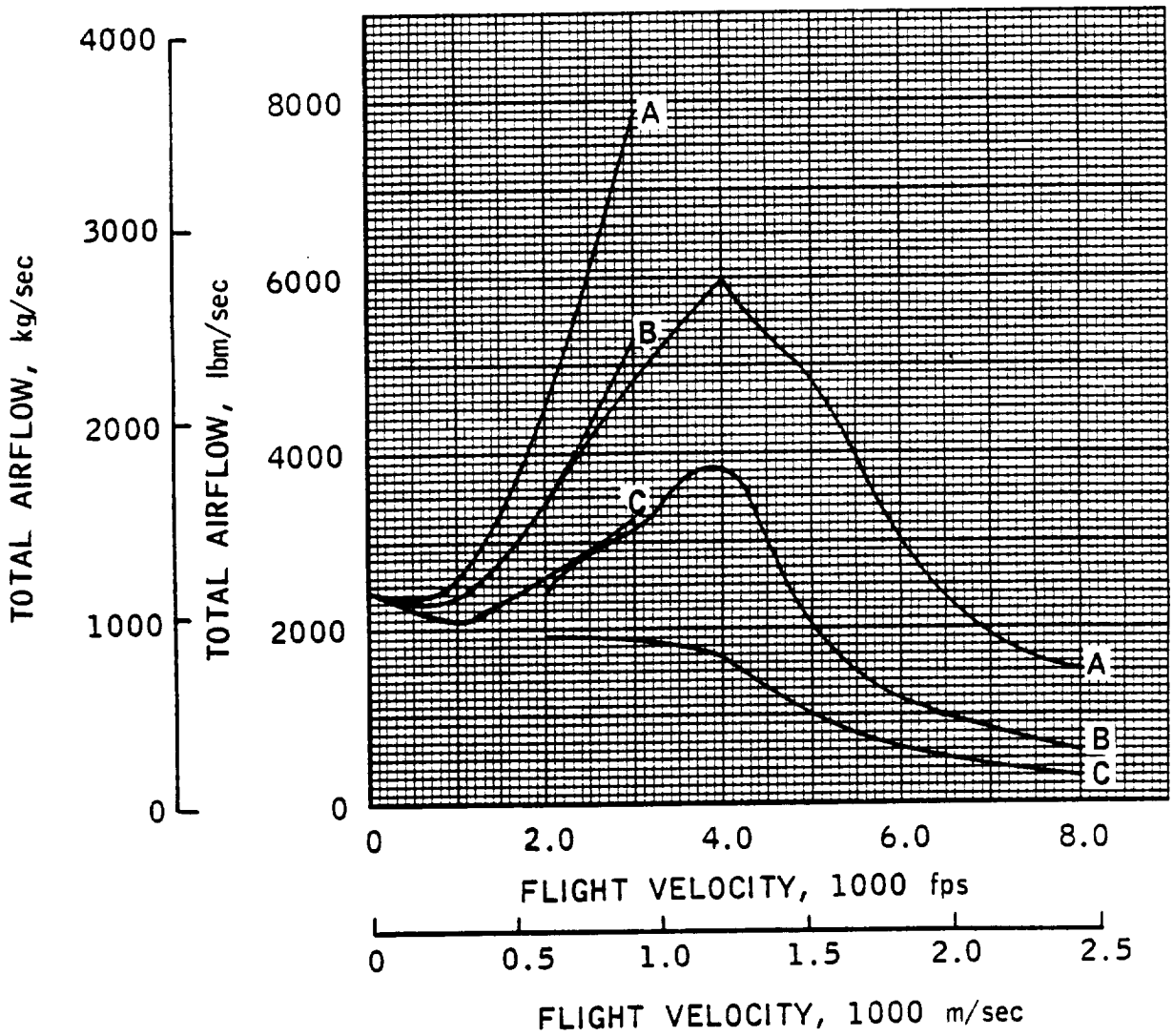

ENGINE- 6-2

ESTIMATED PERFORMANCE

MO	VO	HTO	PTO	T	CF	IS	SPC	PT2	H2	P2
				ALTITUDE -		0. FEET				
0.10	112.	124.7	14.8	249790.	60.04	252.	14.27	14.80	123.7	14.39
				ALTITUDE -		10000. FEET				
0.65	700.	125.7	13.4	388840.	16.48	393.	9.17	13.43	124.7	13.06
0.70	754.	127.3	14.0	396722.	15.05	401.	8.98	14.02	126.3	13.63
0.79	851.	130.4	15.3	406888.	12.72	411.	8.76	15.26	129.4	14.84
				ALTITUDE -		20000. FEET				
1.01	1047.	129.3	12.9	429767.	12.97	434.	8.29	12.79	128.3	12.44
1.45	1504.	152.5	23.1	575295.	7.44	578.	6.23	22.52	151.3	21.90
1.21	1255.	138.8	16.6	488468.	9.89	493.	7.30	16.47	137.7	16.02
				ALTITUDE -		30000. FEET				
1.46	1453.	141.0	15.2	514655.	10.11	515.	6.99	14.77	139.9	14.37
1.71	1701.	156.6	21.9	599194.	7.48	605.	5.95	20.89	155.4	20.32
2.06	2049.	182.7	37.6	806149.	5.44	782.	4.06	34.55	181.3	33.61
				ALTITUDE -		40000. FEET				
1.91	1849.	161.9	18.6	571967.	8.03	578.	6.23	17.36	160.6	16.89
2.22	2149.	185.8	30.1	709398.	5.85	705.	5.10	27.20	184.4	25.45

[redacted]

[redacted]

ENGINE- 6-2

ESTIMATED PERFORMANCE

M2	WS	WF	WSWF	WFT	FHF	FHS	V6	PT2C	AC	A5	A6
ALTITUDE - 0. FEET											
0.200	2398.	990.	2.42	991.2	1.0	0.000	2451.	1.00	280.92	167.69	167.69
ALTITUDE - 10000. FEET											
0.200	2167.	990.	2.19	989.4	1.7	1.011	4443.	1.00	54.80	158.33	169.57
0.200	2250.	990.	2.27	989.3	1.8	1.038	4464.	1.00	52.81	158.33	170.52
0.200	2419.	990.	2.44	990.0	1.7	0.905	4444.	1.00	50.30	158.32	171.98
ALTITUDE - 20000. FEET											
0.200	2036.	990.	2.06	990.2	1.7	1.004	5274.	0.99	47.68	158.33	199.07
0.200	3309.	990.	3.34	995.3	2.0	0.967	5457.	0.98	53.84	158.33	224.10
0.200	2534.	990.	2.56	990.8	1.8	1.000	5362.	0.99	49.47	158.33	206.63
ALTITUDE - 30000. FEET											
0.200	2255.	990.	2.28	999.3	1.6	0.988	6094.	0.98	54.11	158.32	252.87
0.200	3030.	990.	3.06	990.4	2.0	1.002	5843.	0.95	61.97	158.31	252.23
0.200	4651.	990.	4.70	1030.9	2.0	0.952	5717.	0.92	78.78	158.33	252.51
ALTITUDE - 40000. FEET											
0.200	2479.	990.	2.50	989.6	1.8	0.999	5996.	0.93	70.71	158.16	252.53
0.200	3632.	990.	3.67	1006.2	2.0	0.986	5820.	0.90	88.94	158.22	252.95

ENGINE- 6-2

ESTIMATED PERFORMANCE

MC	VC	FTC	FTC	T	CF	IS	SFC	PT2	H2	P2
ALTITUDE - 40000. FEET										
2.65	2604.	229.0	62.6	105234C.	4.05	971.	3.71	53.11	227.3	51.67
ALTITUDE - 45500. FEET										
3.10	3000.	273.3	65.3	121534C.	3.30	1077.	3.34	71.15	271.3	69.22
ALTITUDE - 50000. FEET										
2.40	2320.	201.1	24.6	611829.	6.09	618.	5.83	21.69	199.5	21.10
2.84	2750.	244.6	48.8	863655.	4.26	826.	4.36	40.51	242.8	39.41
ALTITUDE - 54000. FEET										
3.10	3000.	273.3	59.5	910406.	3.71	860.	4.19	47.40	271.3	46.12
ALTITUDE - 60000. FEET										
2.85	2798.	249.9	32.6	637453.	4.71	644.	5.55	26.87	248.0	26.14
ALTITUDE - 64000. FEET										
3.10	3000.	273.3	36.5	661031.	4.34	661.	5.44	29.39	271.3	28.60

[redacted]

[redacted]

[redacted]

ENGINE- 6-2

ESTIMATED PERFORMANCE

M2	WS	WP	WSWP	WFT	FHF	FFS	V6	PT2C	AC	A5	A6
ALTITUDE - 40000. FEET											
0.200	6415.	990.	6.48	1083.8	2.0	0.973	5769.	0.85	129.12	158.24	252.59
ALTITUDE - 45500. FEET											
0.200	7903.	990.	7.98	1128.4	2.0	0.984	5838.	0.80	178.93	157.86	252.69
ALTITUDE - 50000. FEET											
0.200	2785.	990.	2.82	990.0	2.0	1.088	5922.	0.88	101.95	157.51	252.53
0.200	4743.	990.	4.79	1045.6	2.0	1.040	5931.	0.83	145.64	157.95	253.13
ALTITUDE - 54000. FEET											
0.200	5265.	990.	5.32	1058.6	2.0	1.026	5934.	0.80	178.93	157.54	252.52
ALTITUDE - 60000. FEET											
0.200	3114.	990.	3.15	985.8	2.0	0.974	5919.	0.82	151.52	156.42	252.63
ALTITUDE - 64000. FEET											
0.200	3265.	990.	3.30	1000.0	2.0	1.029	6007.	0.80	178.93	156.33	252.58

[redacted]

This Page Intentionally Blank

ENGINE FACT SHEET

Class 0 Composite Launch Vehicle Engines

Engine Identification Number: 7 Basic Air Augmented Rocket - Convertible Ramjet

Engine Operating Modes

Summary: Number of Modes/ Transitions 6 ; Number of Discrete Modes Utilized 4

Mode Progression - Lift-off to Touch-down

(Take off) Air augmented rocket, simultaneous mixng and burning cycle
(2000-3000 ft/sec) Ramjet, subsonic combustion (6000-8000 ft/sec) Rocket
(Orbital speed, space maneuvering and deorbiting) Ramjet, subsonic combustion
(Flyback) Air augmented rocket, simultaneous mixing and burning cycle (Landing)

Engine Propellant Requirements

Code: (R) = Required, (V) = Required for vacuum operation, (F) = Useable for flyback mode

- [x] Hydrogen, liquid, 37-40 °R
- [ ] Hydrogen, liquid, subcooled (25 °R)
- [ ] Hydrogen, gaseous
- [x] Oxygen, liquid, 162 °R
- [ ] Oxygen, liquid, subcooled
- [ ] Oxygen, gaseous
- [ ] Other _____

Engine Constituent Subsystems

Inlet, rocket, mixer-combustor, exit

Engine General Arrangement and Operating Schematic

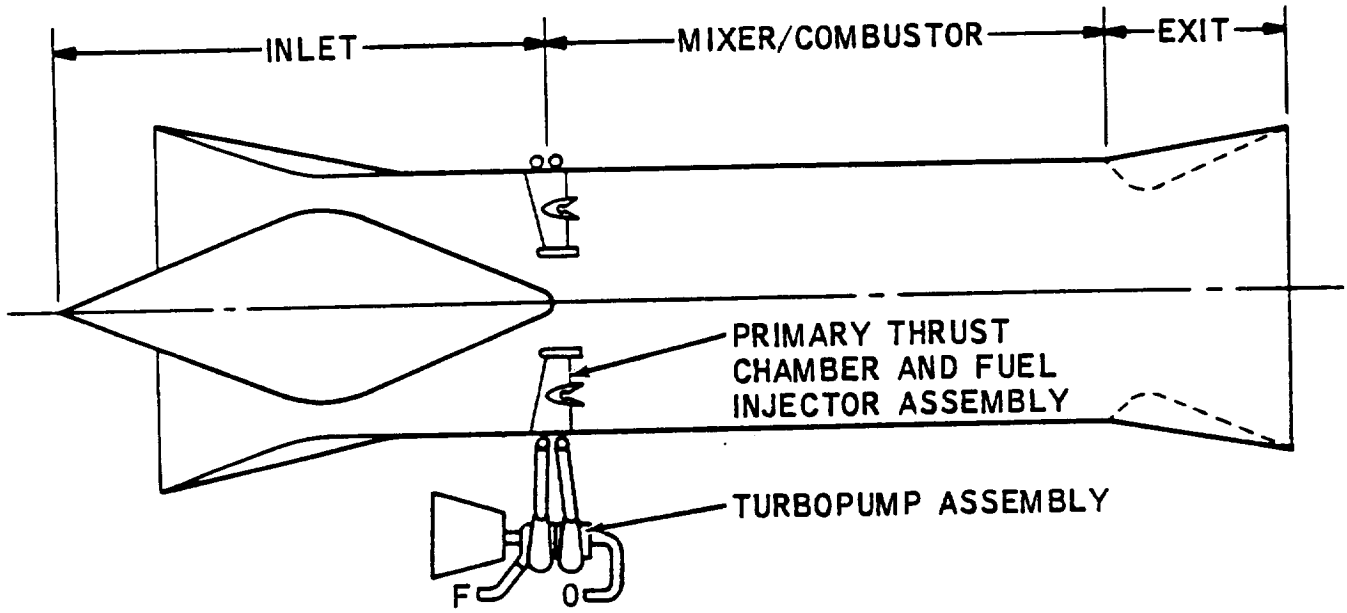

Eng. No. 7

Engine Internal Operating Parameters, nominal

$P_{c\text{-}RKT}$ = 1000 psia, O/F = 7.94
(Initial Operation is Inlet-Closed All Rocket During Otherwise Negative Augmentation Phase for 7-1 only)

W_s/W_p (1000 ft/sec, B trajectory) = 1.75, (W_s/W_p = 2.42 SLS)

A_4/A_3 = 1.00, A_c/A_3 = 1.15

Engine Operating Mode Block Diagrams

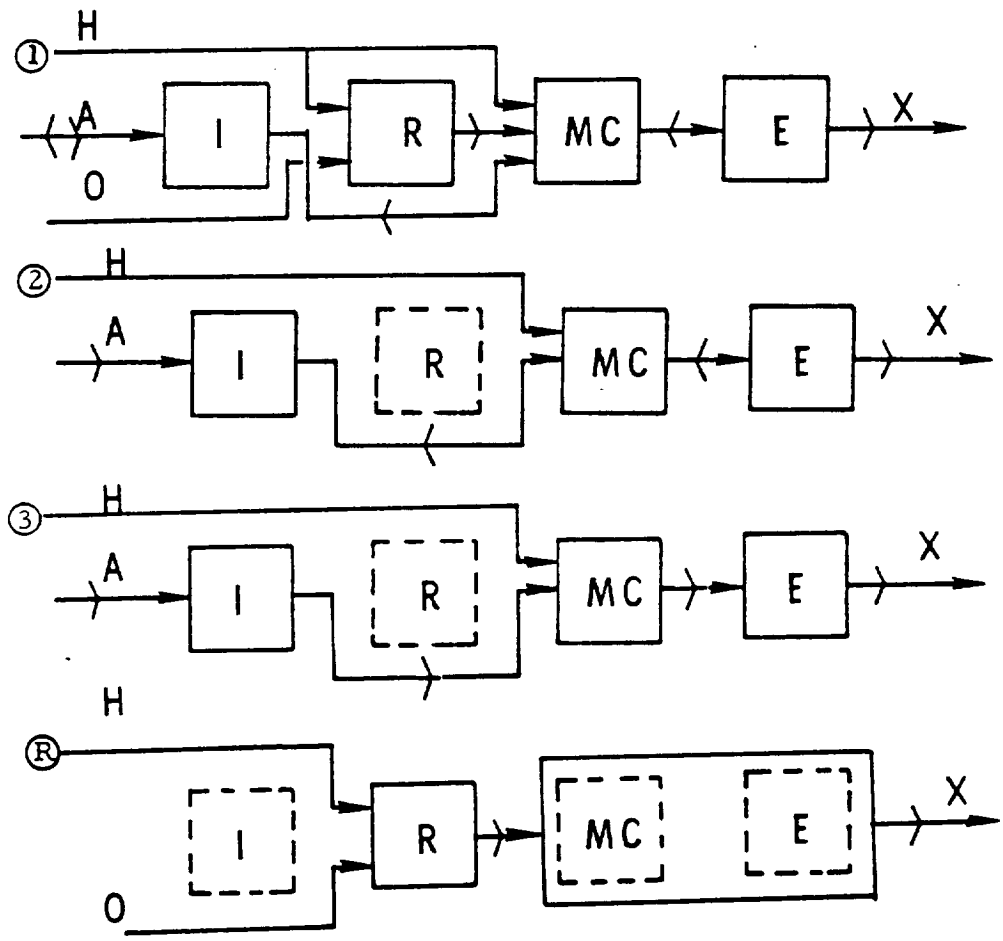

Eng. No. 7

The following information for Engine No. 7 appears in the fact sheets previously given for Engine No. 6.

Engine Physical Characteristics

Weight, Thrust/Weight, Flow Areas, Lengths

Engine Performance: 0-8000 ft/sec

Specific Impulse, Thrust, Airflow, Capture Area

References and additional remarks

SPECIFIC IMPULSE
REFERENCE TRAJECTORIES

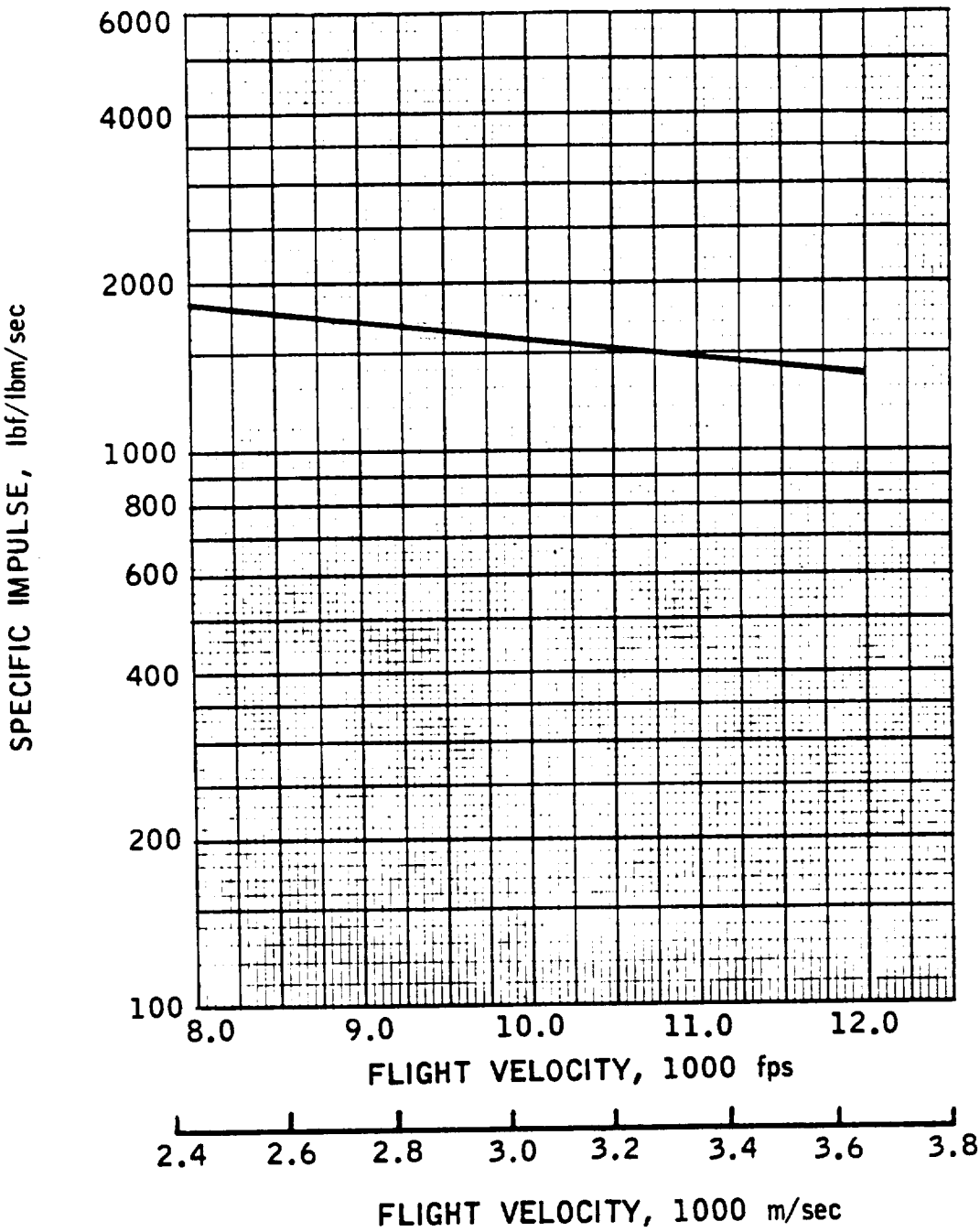

ENG. NO. 7-1

THRUST

REFERENCE TRAJECTORIES

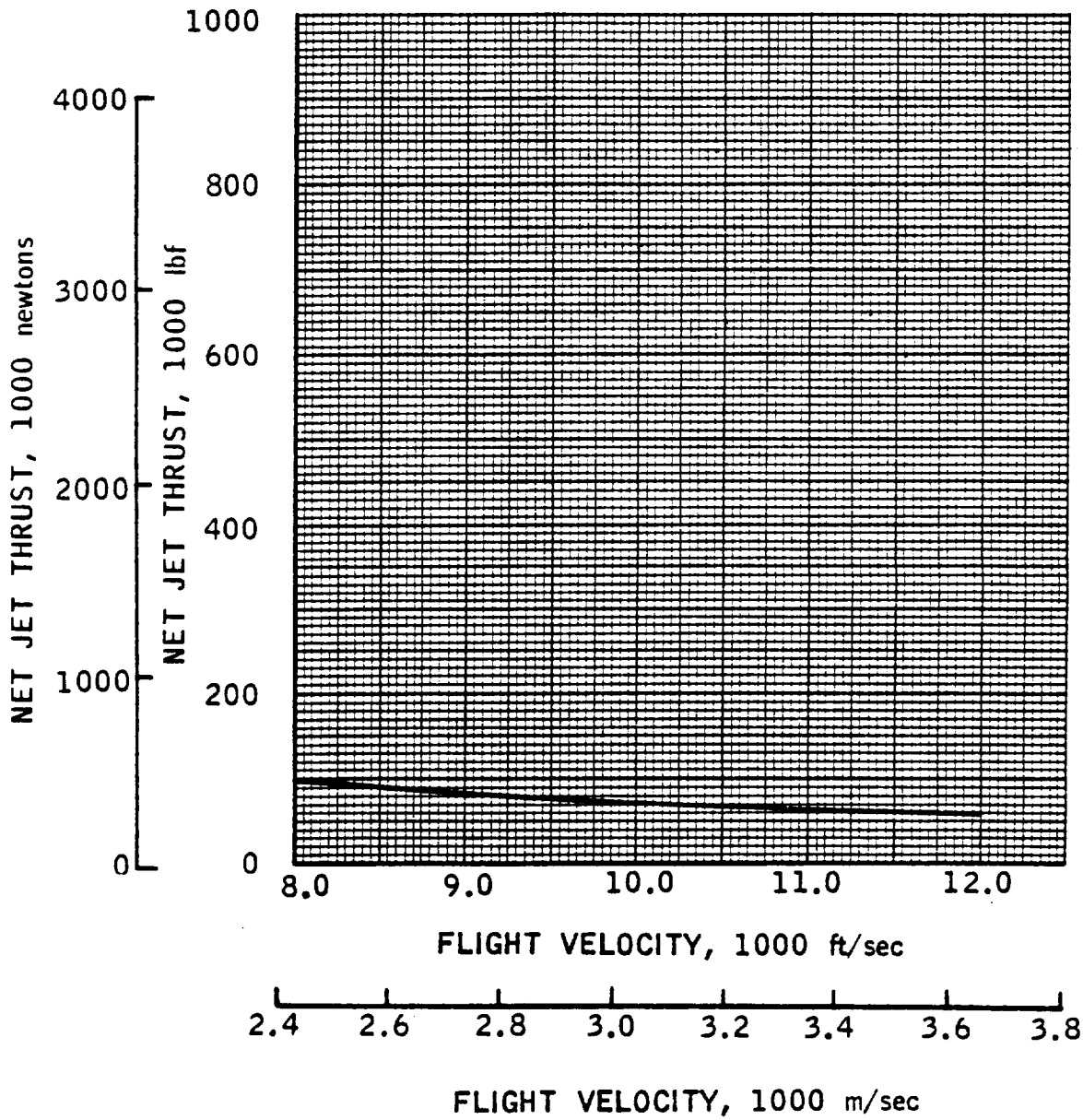

SPECIFIC IMPULSE
REFERENCE TRAJECTORIES

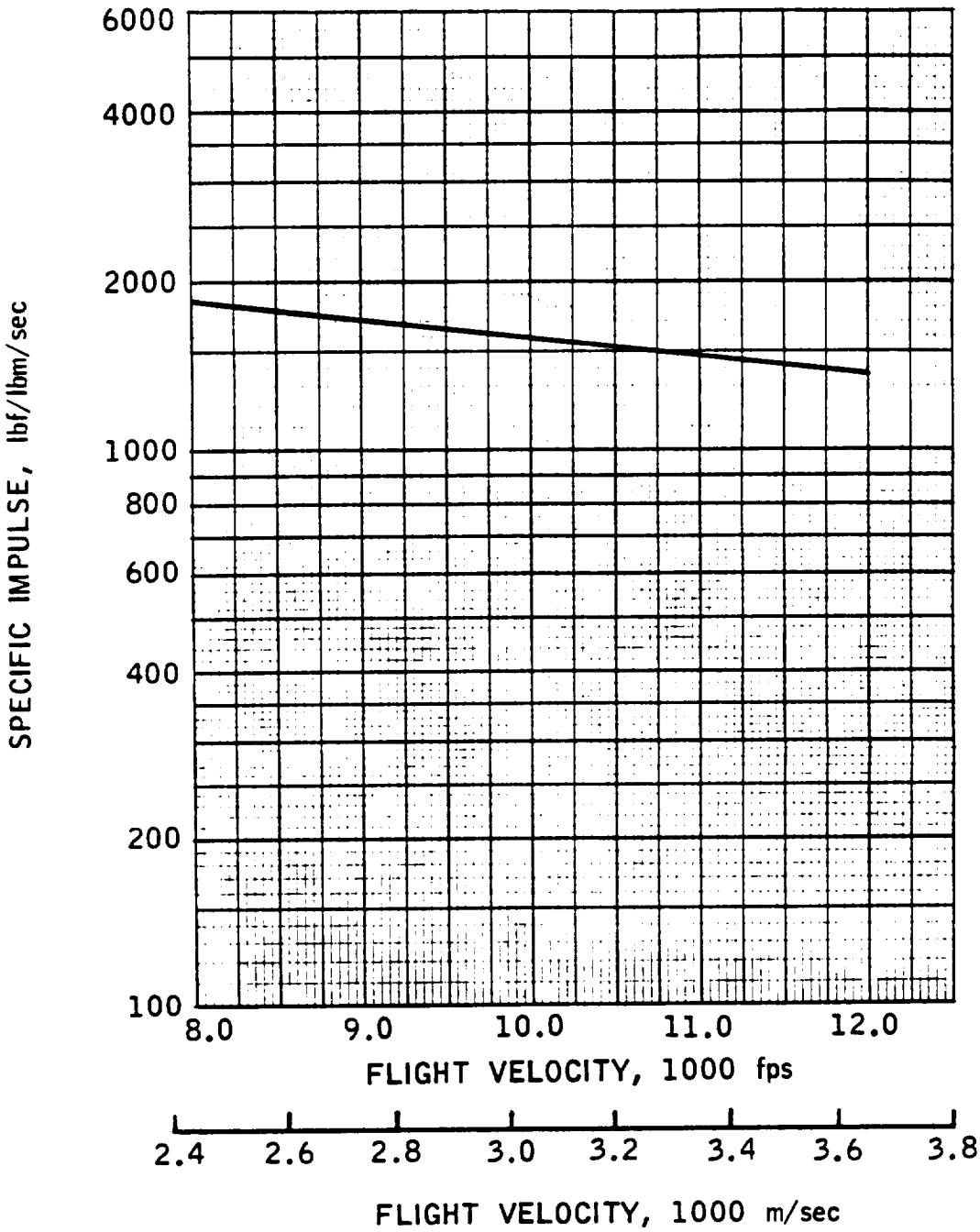

ENG. NO. 7-2

THRUST

REFERENCE TRAJECTORIES

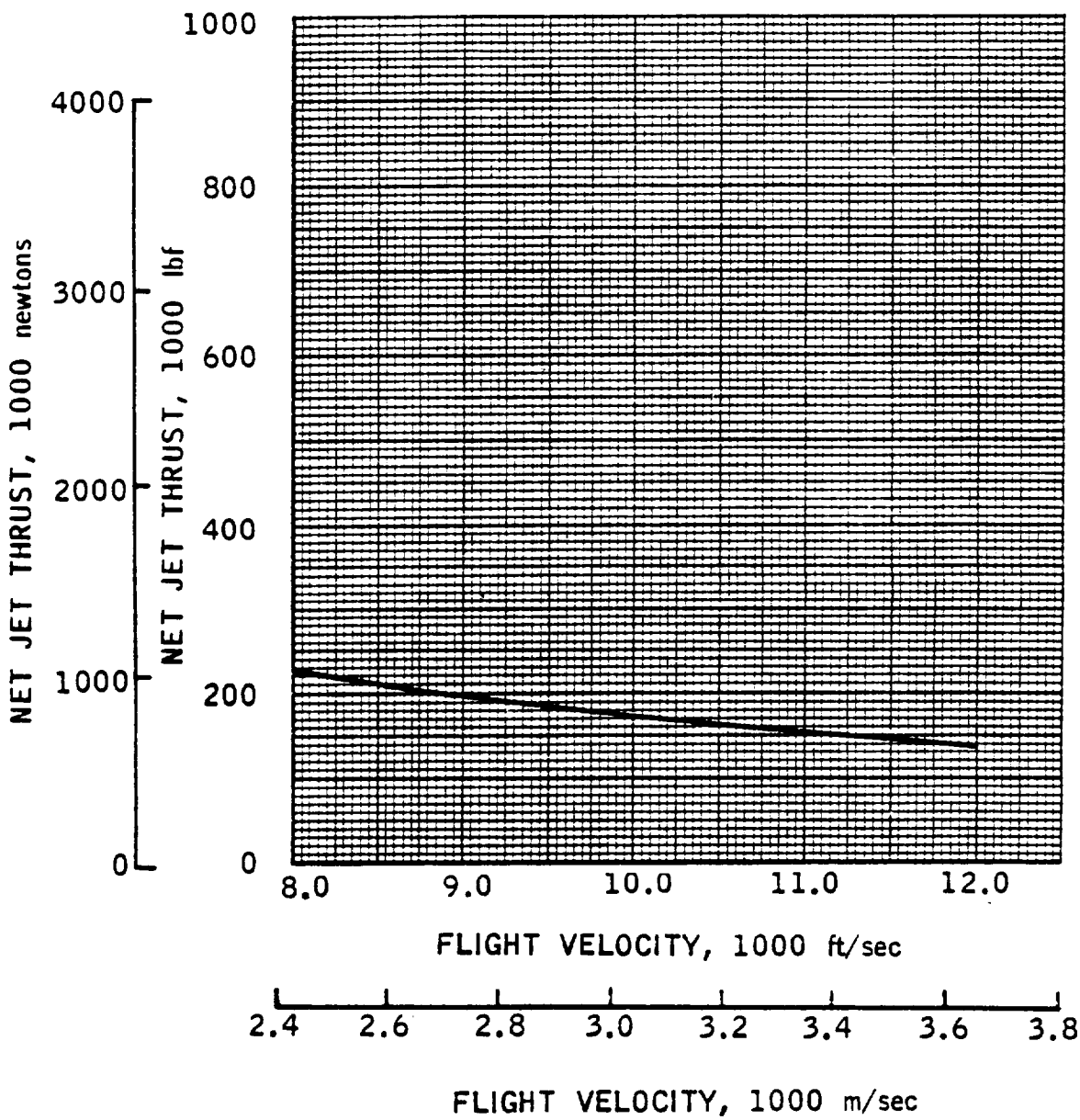

This Page Intentionally Blank

ENGINE FACT SHEET

Class 0 Composite Launch Vehicle Engines

Engine Identification Number: 8 Basic Air Augmented Rocket - SCRAMJET

Engine Operating Modes

Summary: Number of Modes/ Transitions 5 ; Number of Discrete Modes Utilized 3

Mode Progression - Lift-off to Touch-down

(Take off) Air augmented rocket, simultaneous mixing and burning cycle (2000-3000 ft/sec) Ramjet, supersonic combustion (10,000-14,000 ft/sec) Rocket (Orbital speed, space maneuvering and deorbiting) Ramjet, supersonic combustion (Flyback) Air augmented rocket, simultaneous mixing and burning cycle (Landing)

Engine Propellant Requirements

Code: (R) = Required, (V) = Required for vacuum operation, (F) = Useable for flyback mode

- [R] Hydrogen, liquid, 37-40 °R
- [ ] Hydrogen, liquid, subcooled (25 °R)
- [ ] Hydrogen, gaseous
- [R] Oxygen, liquid, 162 °R
- [ ] Oxygen, liquid, subcooled
- [ ] Oxygen, gaseous
- [ ] Other _____

Engine Constituent Subsystems

Inlet, rocket, mixer-combustor, exit

Engine General Arrangement and Operating Schematic

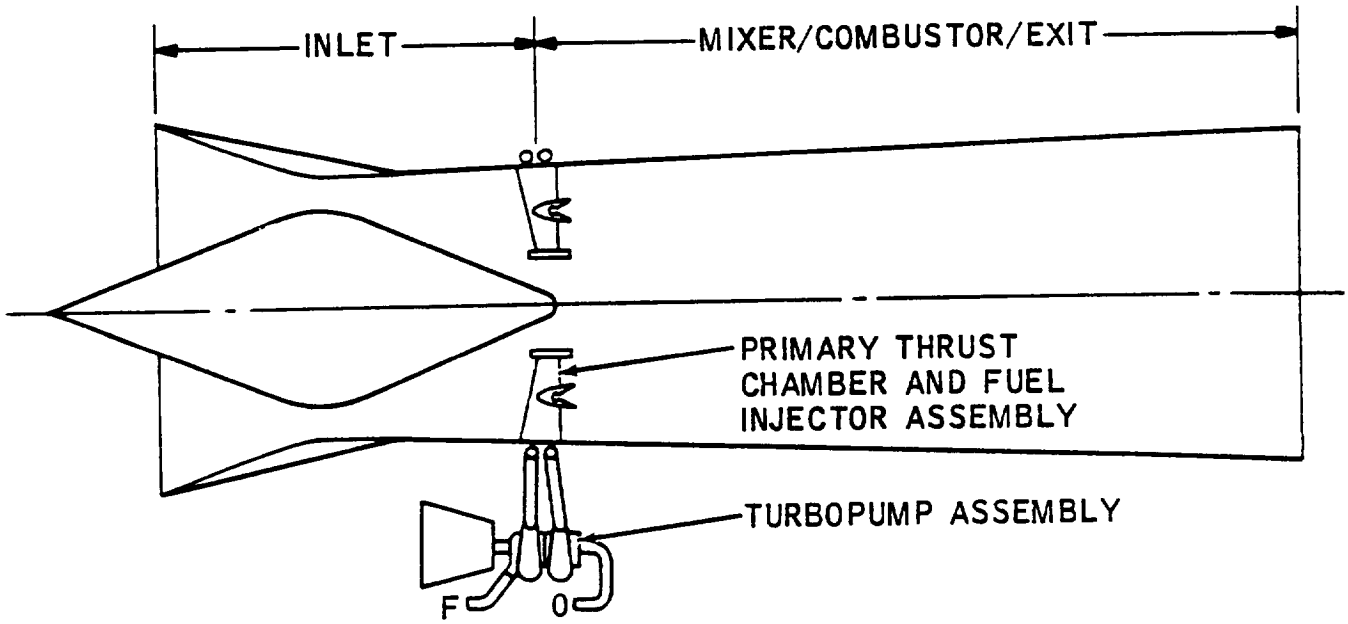

Eng. No. 8

Engine Internal Operating Parameters, nominal

$P_{c\text{-}RKT}$ = 1000 psia, O/F = 7.94 - 4.0
(Initial Operation is Inlet-Closed All Rocket During Otherwise Negative Augmentation Phase for 8-1 only)

W_s/W_p (1000 ft/sec, B trajectory) = 1.75, (W_s/W_p = 4.67 SLS)

A_4/A_3 = 1.00, A_c/A_3 = 1.15

Engine Operating Mode Block Diagrams

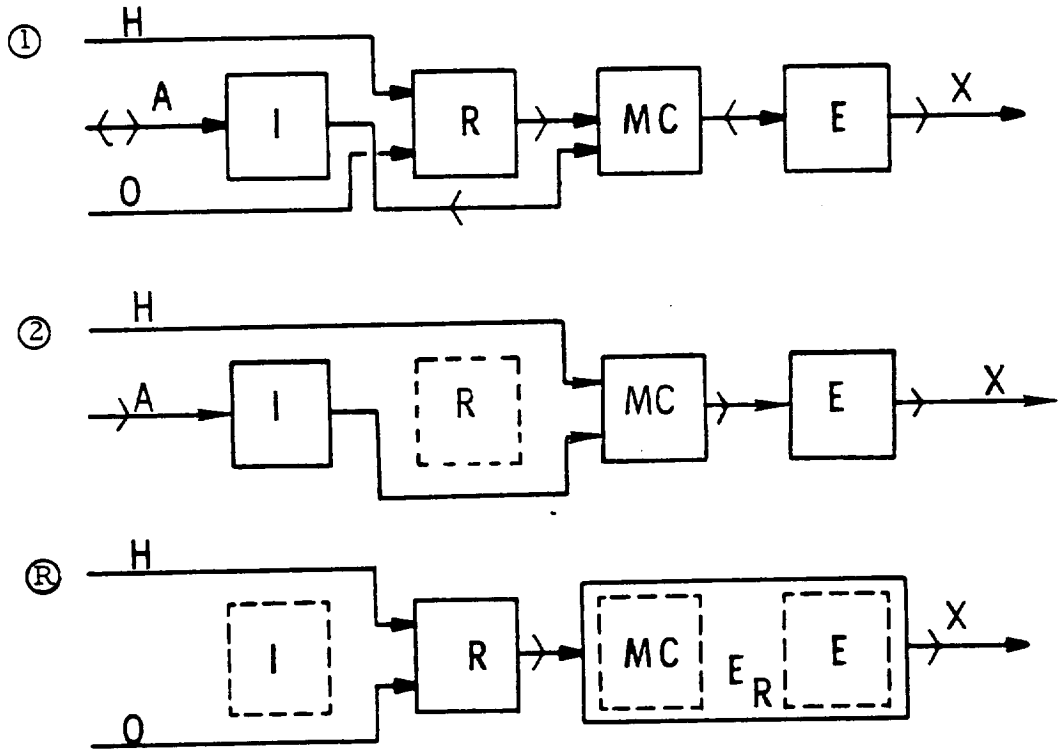

Eng. No. 8

The following information for Engine No. 8 appears in the fact sheets previously given for Engine No. 5.

Engine Physical Characteristics

Weight, Thrust/Weight, Flow Areas, Lengths

Engine Performance: 0-8000 ft/sec

Specific Impulse, Thrust, Airflow, Capture Area

References and additional remarks

SPECIFIC IMPULSE
REFERENCE TRAJECTORIES

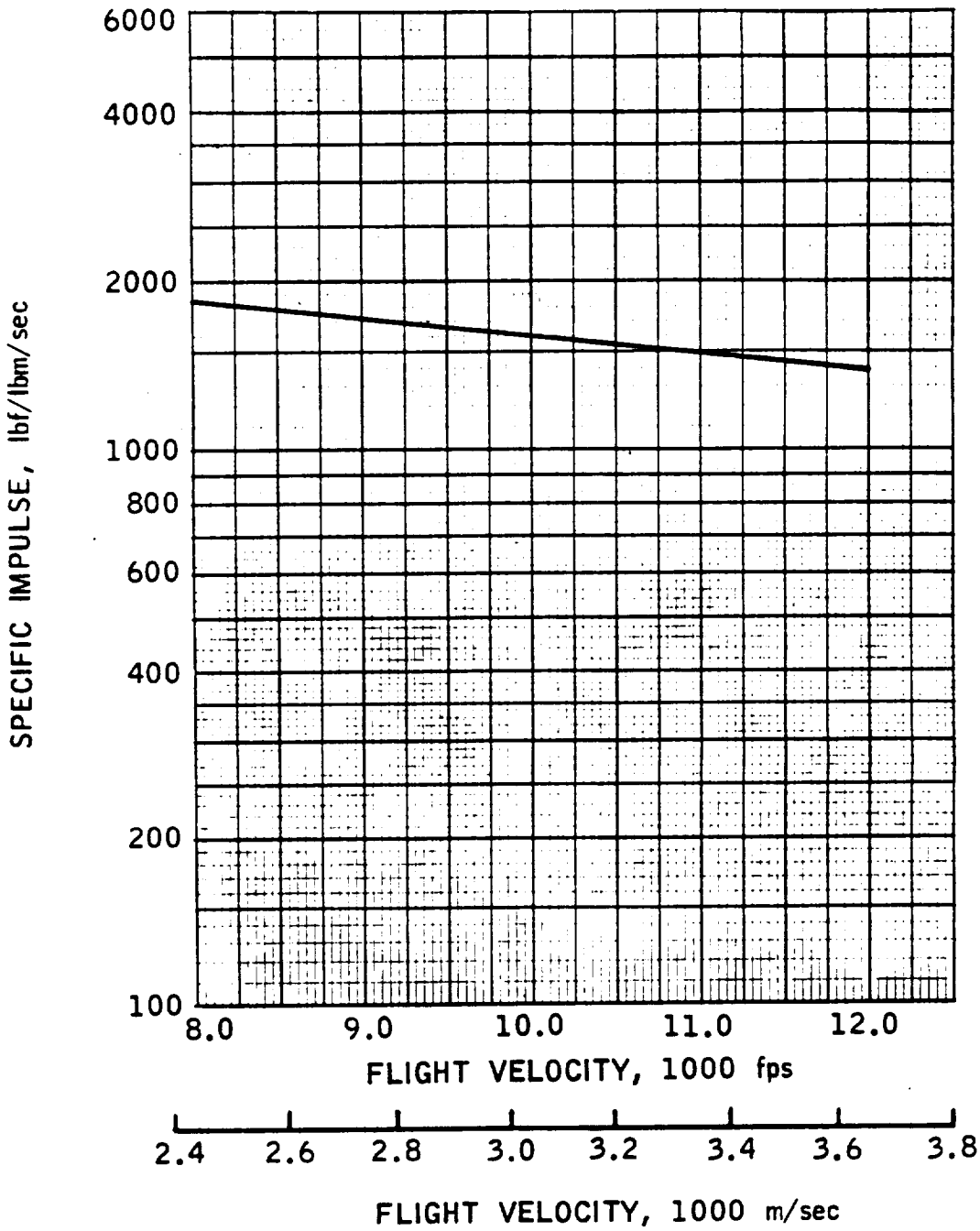

ENG. NO. 8-1

THRUST

REFERENCE TRAJECTORIES

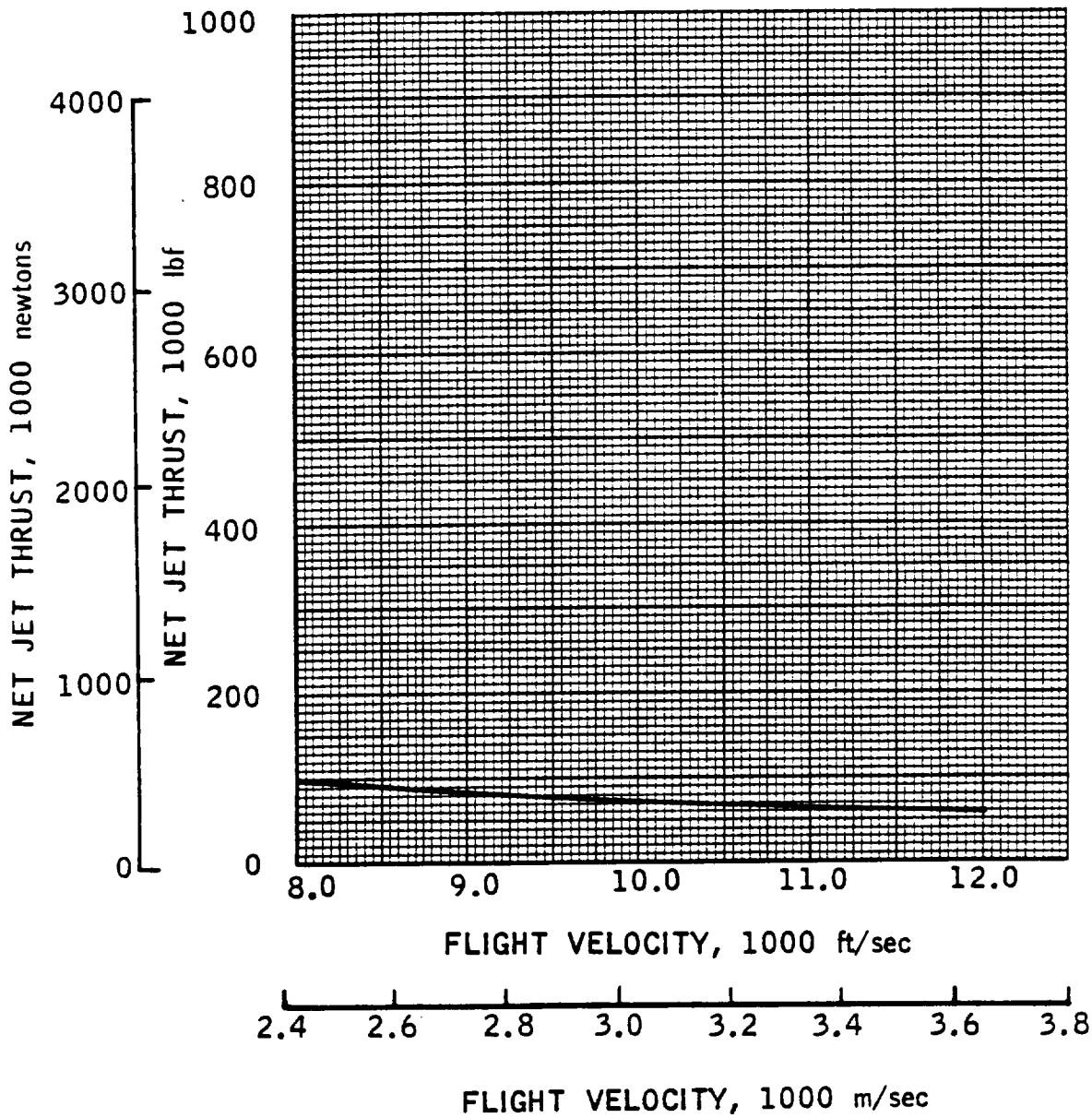

SPECIFIC IMPULSE
REFERENCE TRAJECTORIES

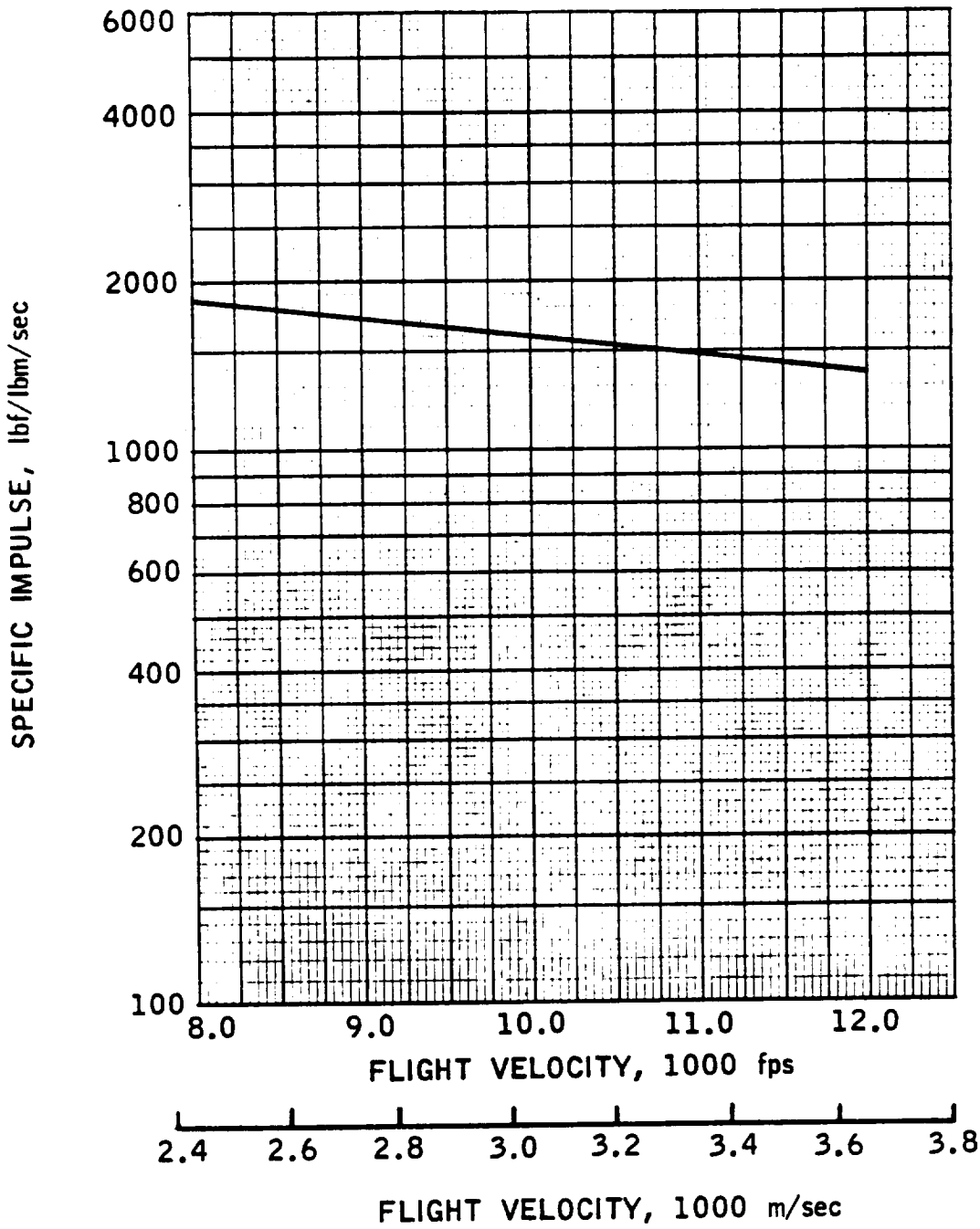

ENG. NO. 8-2

THRUST

REFERENCE TRAJECTORIES

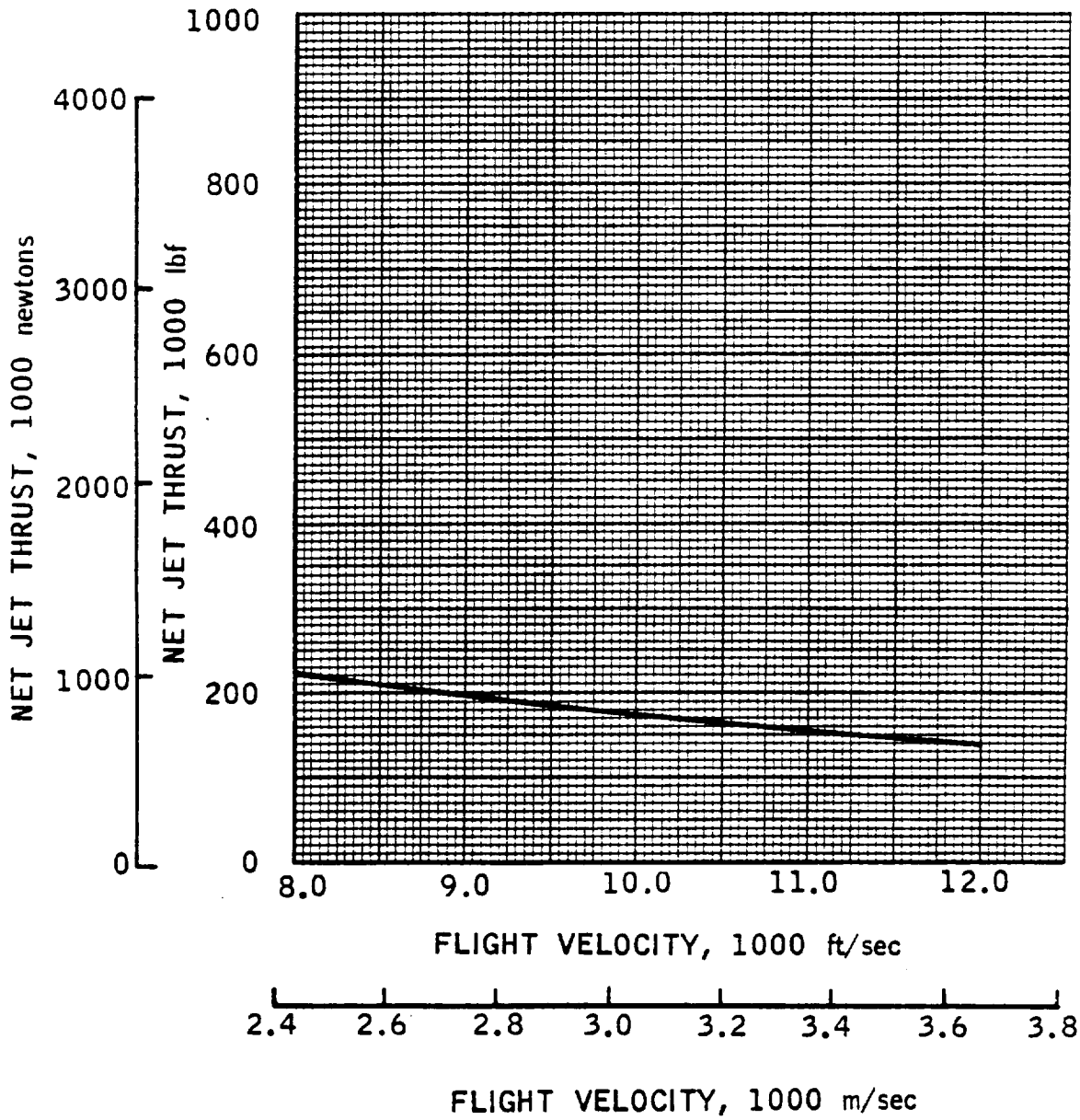

This Page Intentionally Blank

ENGINE FACT SHEET

Class 0 Composite Launch Vehicle Engines

Engine Identification Number: 9 Ejector Ramjet

Engine Operating Modes

Summary: Number of Modes/ Transitions 5 ; Number of Discrete Modes Utilized 3

Mode Progression - Lift-off to Touch-down

(Take off) Air augmented rocket, afterburning cycle (2000-3000 ft/sec) Ramjet, subsonic combustion (6000-8000 ft/sec) Rocket (Orbital speed, space maneuvering and deorbiting) Ramjet, subsonic combustion (Flyback) Air augmented rocket, afterburning cycle (Landing)

Engine Propellant Requirements

Code: (R) = Required, (V) = Required for vacuum operation, (F) = Useable for flyback mode

- [R] Hydrogen, liquid, 37-40 °R
- [ ] Hydrogen, liquid, subcooled (25 °R)
- [ ] Hydrogen, gaseous
- [R] Oxygen, liquid, 162 °R
- [ ] Oxygen, liquid, subcooled
- [ ] Oxygen, gaseous
- [ ] Other _____

Engine Constituent Subsystems

Inlet, rocket, mixer-diffuser, combustor, exit

Engine General Arrangement and Operating Schematic

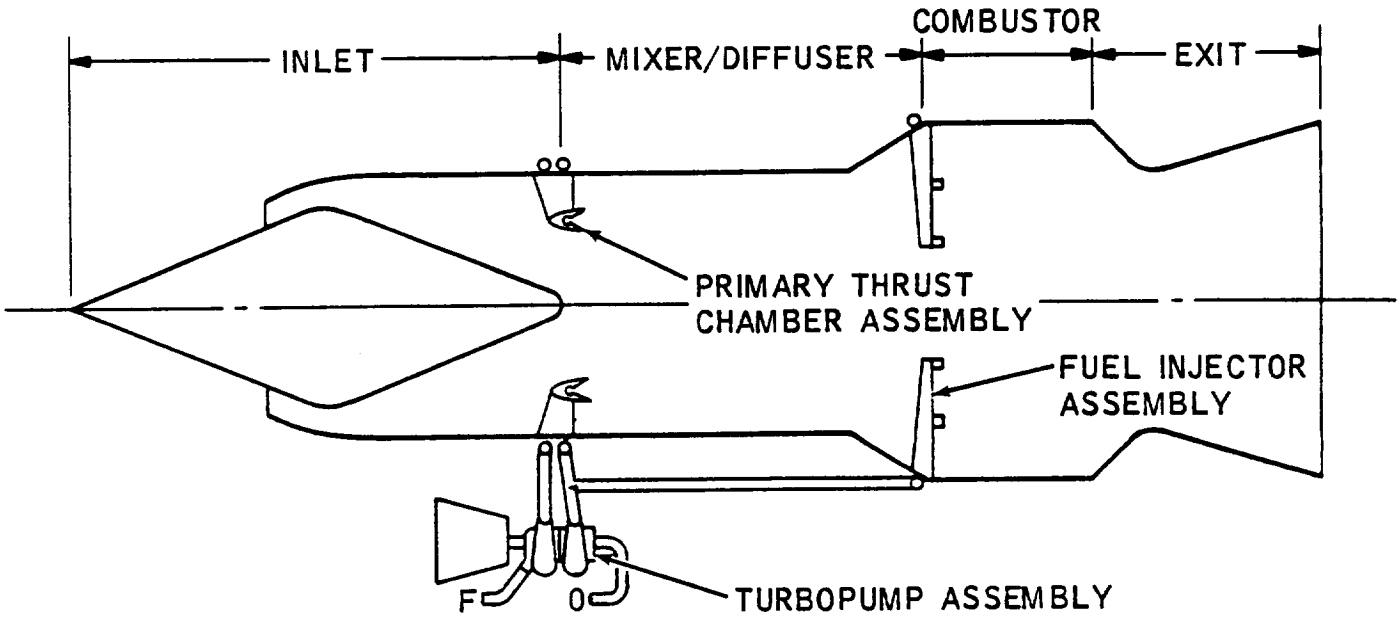

Eng. No. 9

Engine Internal Operating Parameters, nominal

$P_{c\text{-}RKT}$ = 1000 psia, O/F = 7.94
W_s/W_p (SLS) = 1.50 (3.00), A_4/A_3 = 1.59 (2.00)

Engine Operating Mode Block Diagrams

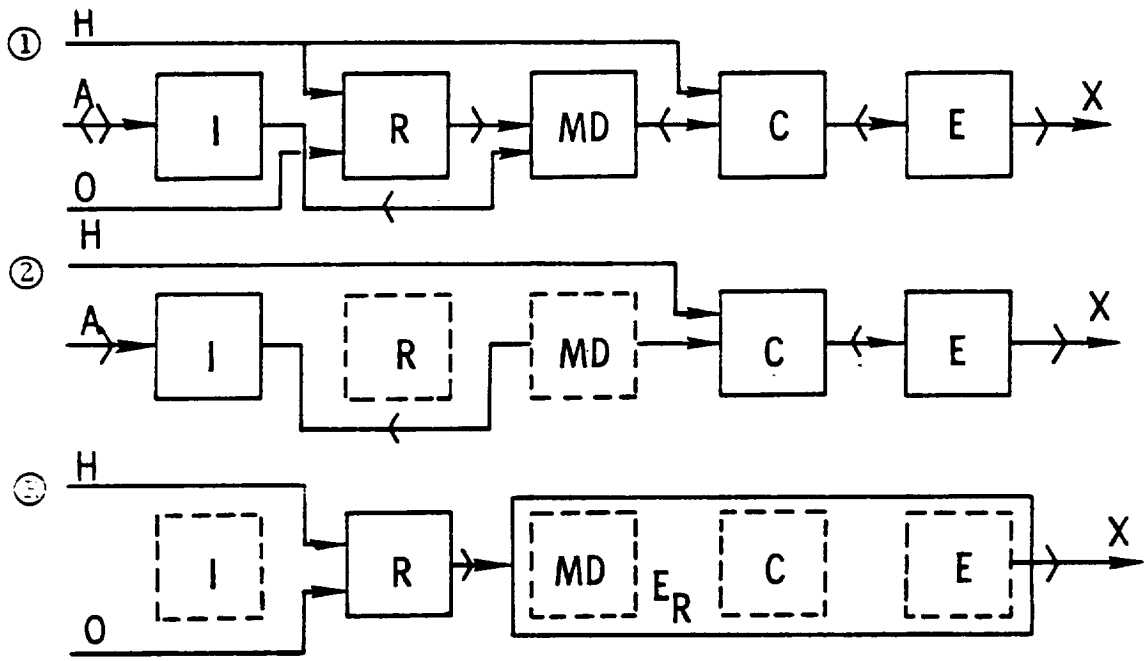

ENGINE PHYSICAL CHARACTERISTICS

Eng. No. 9-1

Thrust, sls	250,000 lbf	1,112,055 newton

Weight and Thrust/Weight Ratio

Measuring Units	(English)	(International)
Weight	lbm	kg
Thrust/Weight	lbf/lbm	newton/kg

Lightweight Estimate

(lbf/in^2) Maximum Engine Internal Pressure 1000 (newton/m^2)

Subsystems:	50	100	250	344.7	689.5	1723.7
Fan						
Heat Exchanger						
Primary Rocket	2410	2410	2410	1093.2	1093.2	1093.2
Mixer/Diffuser	1333	1505	2064	604.6	682.7	936.2
Combustor/Exit	1518	1725	2346	688.6	782.5	1064.1
Contingency	526	564	682	238.6	255.8	309.4
Uninstalled Eng. Wt.	5787	6204	7502	2625.0	2814.1	3402.9
Thrust/Weight, Uninst.	43.2	40.3	33.3	424	395	327
Inlet Weight	2765	3160	4582	1254.2	1433.4	2078.4
Installed Eng. Wt.	8552	9364	12084	3879.2	4247.5	5481.3
Thrust/Weight, Inst.	29.2	26.7	20.7	286	262	203

Heavyweight Estimate

Uninstalled Eng. Wt.	6944	7445	9002	3149.8	3377.1	4083.3
Thrust/Weight, Uninst.	36.0	33.6	27.8	353	330	273
Inlet Weight	11074	12656	17798	5023.2	5740.8	8073.2
Installed Eng. Wt.	18018	20101	26800	8173.0	9117.8	12156.5
Thrust/Weight, Inst.	13.9	12.4	9.3	136	122	91

Engine Flow Areas and Equivalent Diameters

	ft^2	ft	m^2	m
Inlet Cowl, A_c	79.1	10.03	7.35	3.06
Mixer, A_3	43.2	7.42	4.01	2.26
Combustor, A_4	69.0	9.37	6.41	2.86
Exit, A_6	110.0	11.83	10.22	3.61

Engine Lengths

	ft	m
Uninstalled	19.2	5.85
Inlet (Typ)	37.0	11.28
Installed (Typ)	56.2	17.13

REMARKS, REFERENCES

Ejector Ramjet (ERJ) cycle. (References 5, 11, 20, 21)

SPECIFIC IMPULSE
REFERENCE TRAJECTORIES

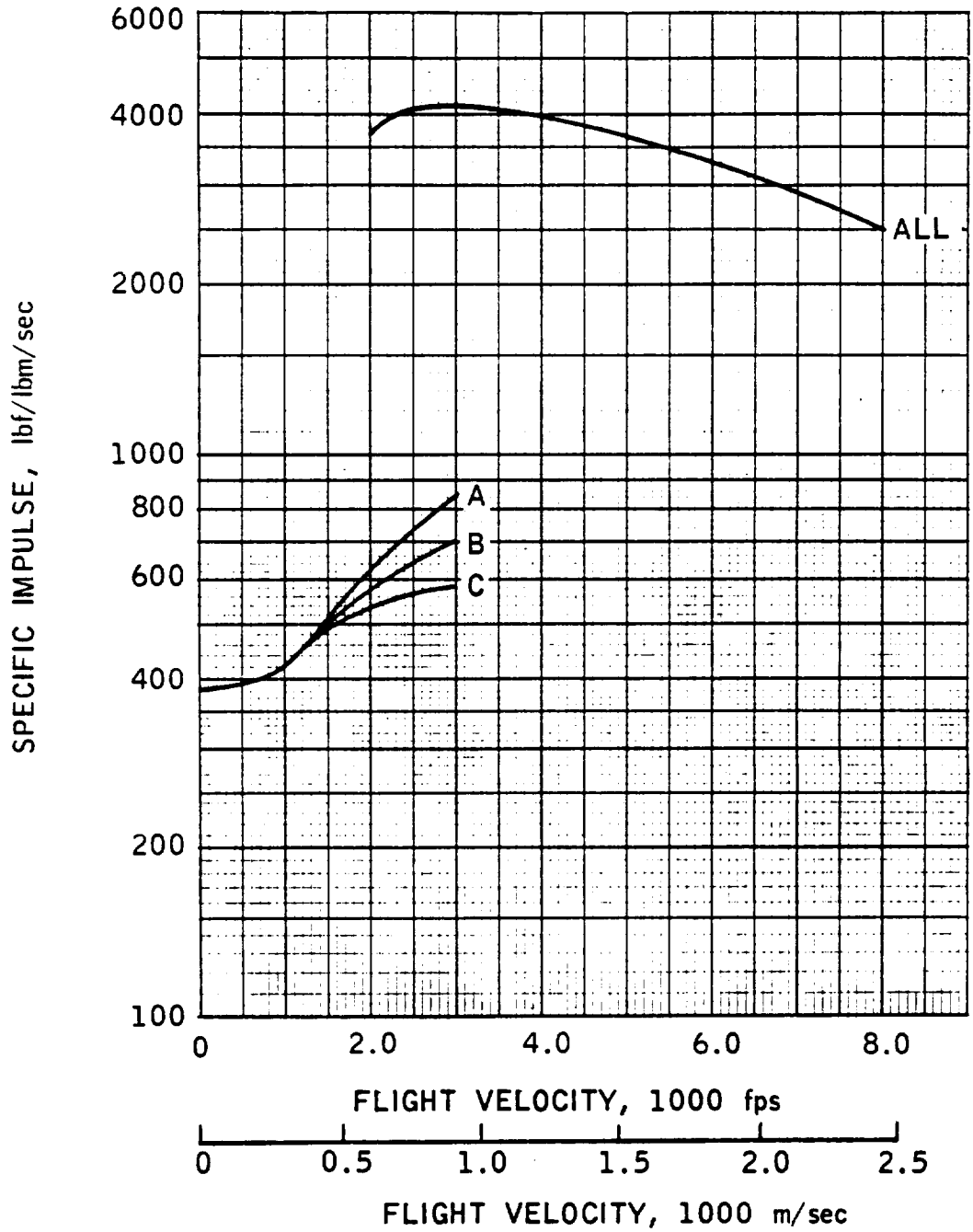

ENG. NO. 9-1

THRUST

REFERENCE TRAJECTORIES

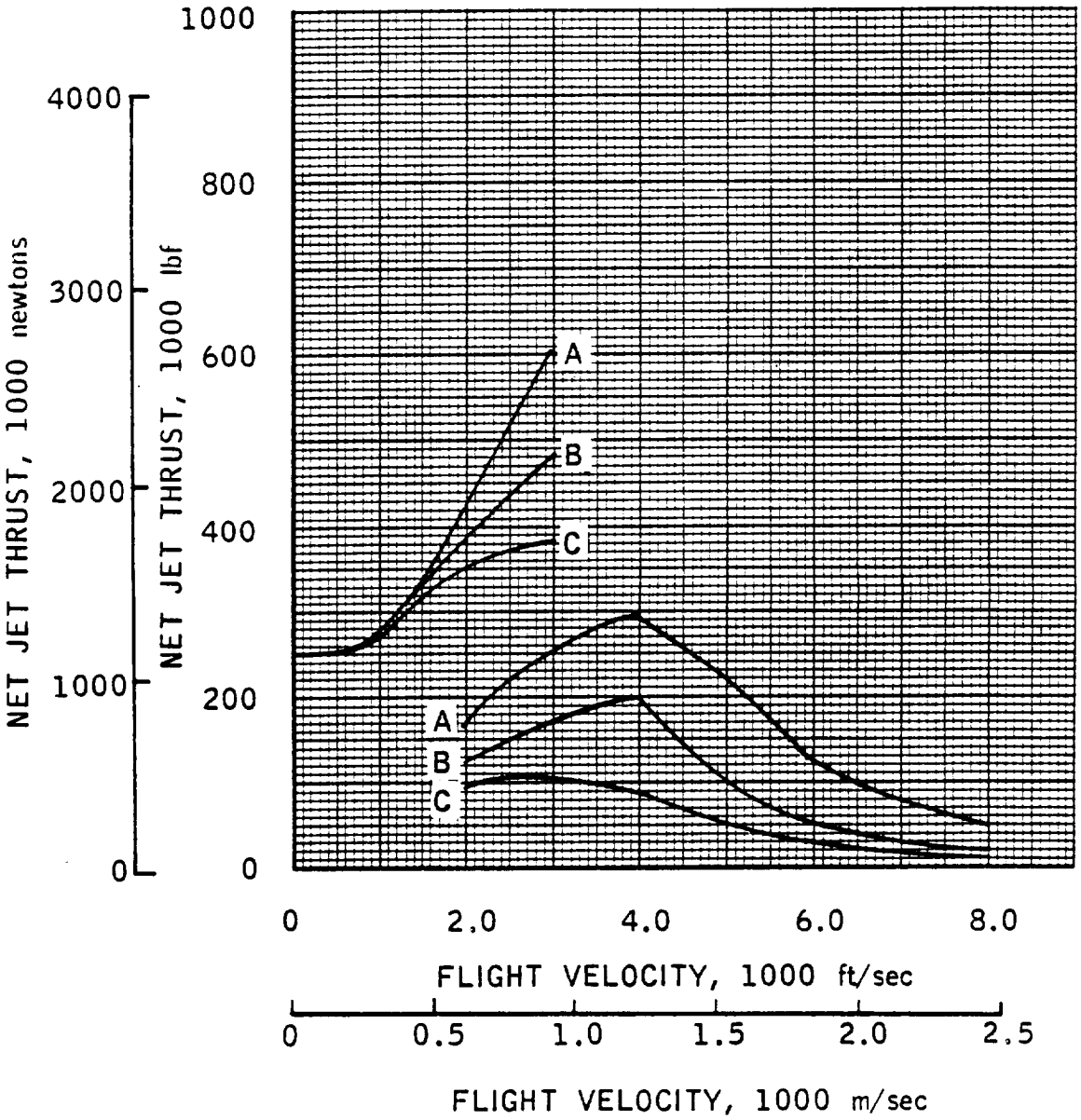

CAPTURE AREA

REFERENCE TRAJECTORIES

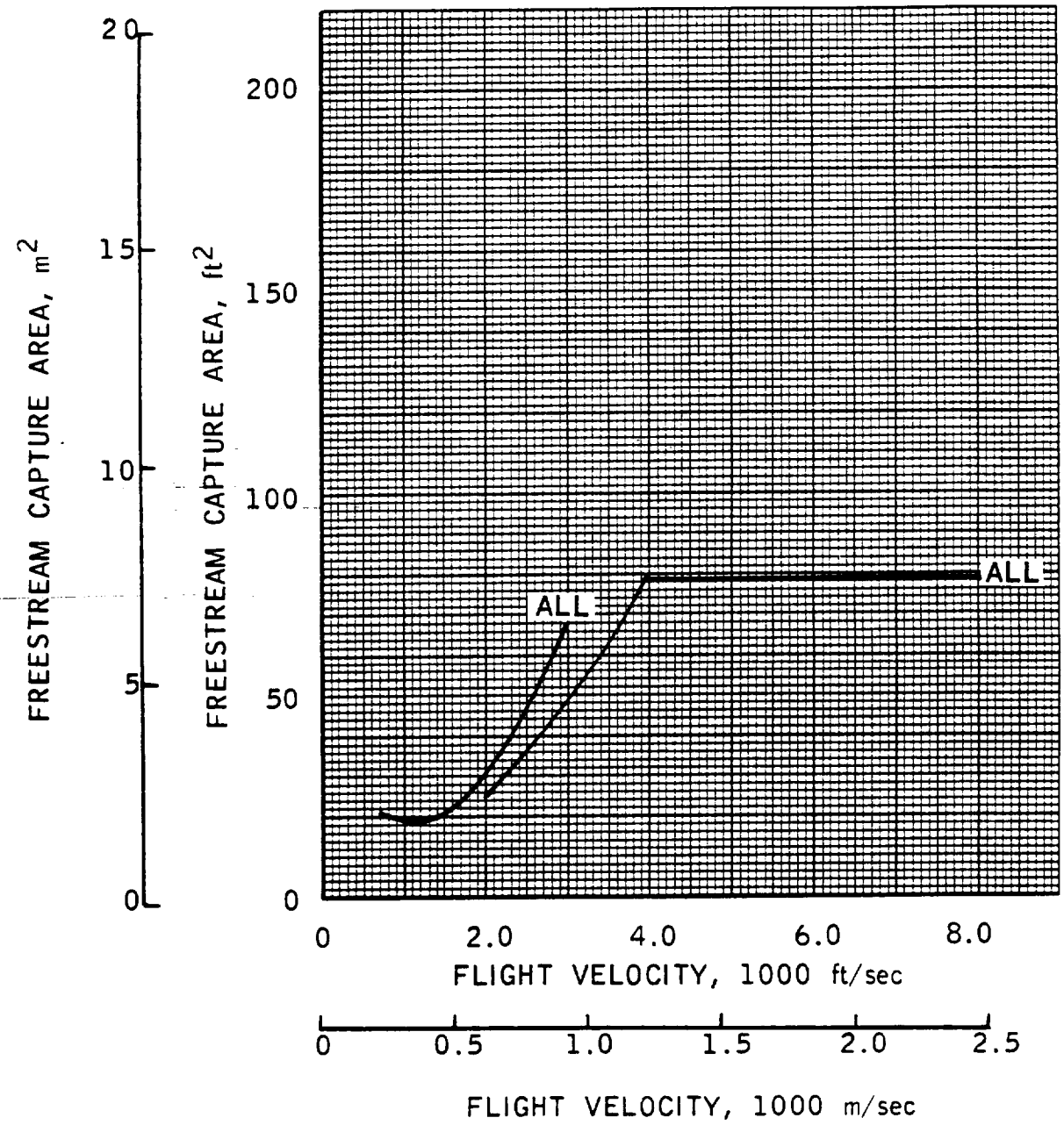

ENG. NO. 9-1

AIRFLOW

REFERENCE TRAJECTORIES

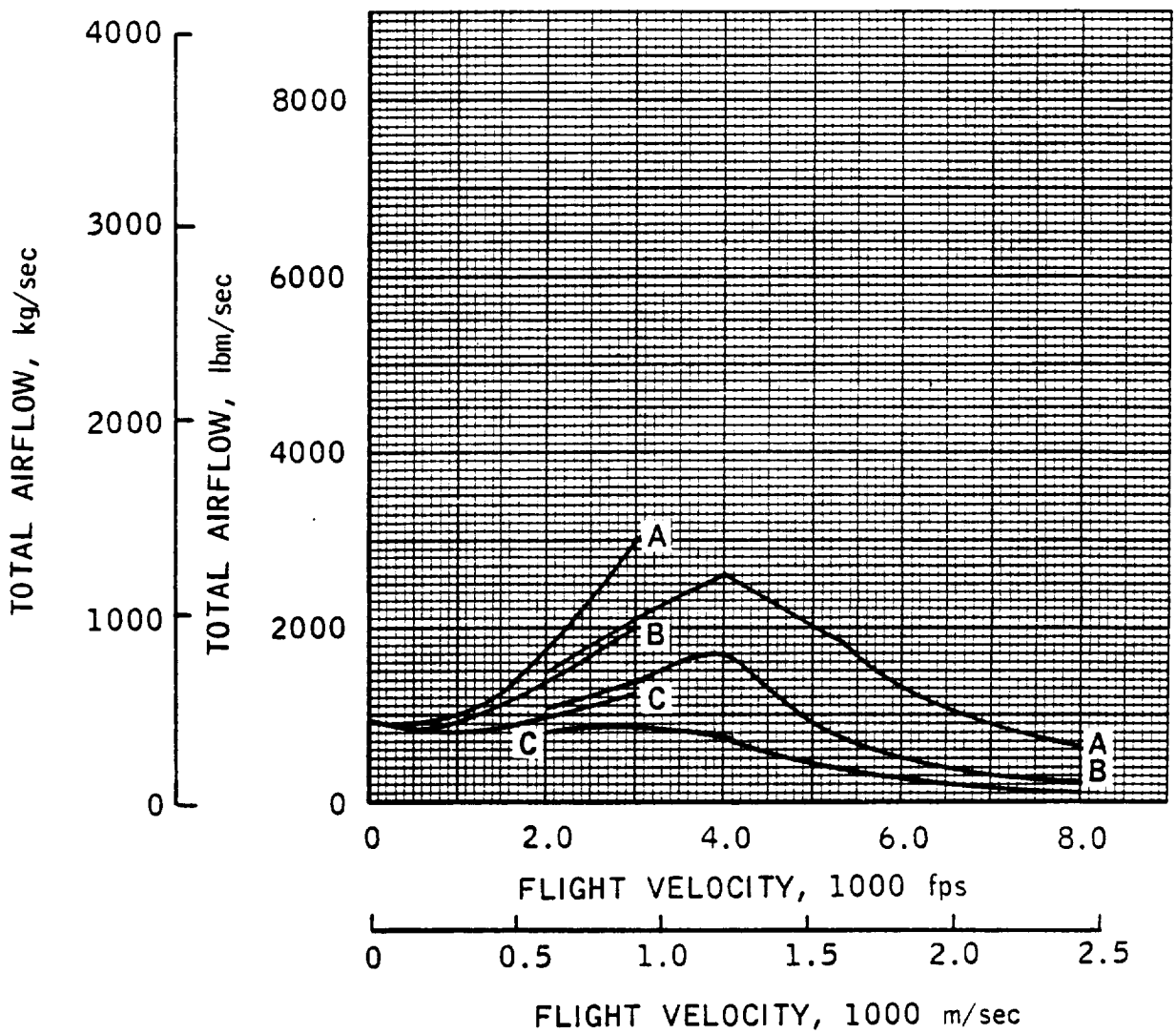

[redacted]

ENGINE- 9-1

ESTIMATED PERFORMANCE

MO	VO	HTO	PTO	T	CF	IS	SPC	PT2	H2	P2
				ALTITUDE -		0. FEET				
0.10	112.	124.7	14.8	250000.	*******	381.	9.45	14.80	*******	*******
				ALTITUDE -		10000. FEET				
0.65	700.	125.7	13.4	253500.	*******	393.	9.16	13.43	*******	*******
0.70	754.	127.3	14.0	261000.	*******	402.	8.96	14.02	*******	*******
0.79	851.	130.4	15.3	268500.	*******	415.	8.67	15.26	*******	*******
				ALTITUDE -		20000. FEET				
1.01	1047.	129.3	12.9	277000.	*******	430.	8.37	12.94	*******	*******
1.21	1255.	138.8	16.6	300500.	*******	461.	7.81	16.47	*******	*******
1.45	1504.	152.5	23.1	336000.	*******	513.	7.02	22.52	*******	*******
				ALTITUDE -		30000. FEET				
1.46	1453.	141.0	15.2	309000.	*******	478.	7.53	14.77	*******	*******
1.71	1701.	156.6	21.9	350000.	*******	534.	6.74	20.89	*******	*******
2.06	2049.	182.7	37.6	432500.	*******	638.	5.64	34.55	*******	*******
				ALTITUDE -		40000. FEET				
1.91	1849.	161.9	18.6	343500.	*******	527.	6.83	17.36	*******	*******
2.22	2149.	185.8	30.1	398000.	*******	597.	6.03	27.20	*******	*******

[redacted]

ENGINE- 9-1

ESTIMATED PERFORMANCE

M2	WS	WP	WSWP	WFT	PHP	PHS	V6	PT20	A0	A5	A6
ALTITUDE - 0. FEET											
0.350	937.	624.	1.50	656.2	1.0	1.000	*******	1.00	109.74	*******	********
ALTITUDE - 10000. FEET											
0.350	865.	624.	1.39	645.0	1.0	1.000	*******	1.00	21.89	*******	********
0.350	892.	624.	1.43	649.3	1.0	1.000	*******	1.00	20.94	*******	********
0.350	961.	624.	1.54	647.0	1.0	1.000	*******	1.00	20.01	*******	********
ALTITUDE - 20000. FEET											
0.350	801.	624.	1.28	644.2	1.0	1.000	*******	1.00	18.76	*******	********
0.350	960.	624.	1.54	651.8	1.0	1.000	*******	0.99	18.76	*******	********
0.350	1246.	624.	2.00	655.0	1.0	1.000	*******	0.98	20.32	*******	********
ALTITUDE - 30000. FEET											
0.350	846.	624.	1.36	646.4	1.0	1.000	*******	0.98	20.32	*******	********
0.350	1158.	624.	1.86	655.4	1.0	1.000	*******	0.95	23.76	*******	********
0.350	1835.	624.	2.94	677.9	1.0	1.000	*******	0.92	31.26	*******	********
ALTITUDE - 40000. FEET											
0.350	983.	624.	1.58	651.8	1.0	1.000	*******	0.93	28.14	*******	********
0.350	1447.	624.	2.32	666.7	1.0	1.000	*******	0.90	35.64	*******	********

[redacted]

[redacted]

ENGINE- 9-1

ESTIMATED PERFORMANCE

MO	VO	HTO	PTO	T	CF	IS	SPC	PT2	H2	P2
				ALTITUDE -		40000. FEET				
2.69	2604.	229.0	62.6	534000.	*******	762.	4.72	53.11	*******	*******
				ALTITUDE -		45500. FEET				
3.10	3000.	273.3	89.3	607800.	*******	840.	4.29	71.10	*******	*******
				ALTITUDE -		50000. FEET				
2.40	2320.	201.1	24.6	366500.	*******	564.	6.38	21.69	*******	*******
2.84	2750.	244.6	48.8	453000.	*******	670.	5.37	40.51	*******	*******
				ALTITUDE -		54000. FEET				
3.10	3000.	273.3	59.5	•484400.	*******	701.	5.14	47.37	*******	*******
				ALTITUDE -		60000. FEET				
2.89	2800.	250.2	32.7	381500.	*******	580.	6.21	26.95	*******	*******
				ALTITUDE -		64000. FEET				
3.10	3000.	273.3	36.9	383600.	*******	582.	6.19	29.37	*******	*******

[redacted]

[redacted]

ENGINE- 9-1

ESTIMATED PERFORMANCE

M2	WS	WP	WSWP	WFT	PHP	PHS	V6	PT20	A0	A5	A6
ALTITUDE - 40000. FEET											
0.350	2538.	624.	4.07	700.8	1.0	1.000	*******	0.85	51.59	*******	********
ALTITUDE - 45000. FEET											
0.350	2997.	624.	4.80	723.6	1.0	1.000	*******	0.80	68.78	*******	********
ALTITUDE - 50000. FEET											
0.350	1104.	624.	1.77	649.8	1.0	1.000	*******	0.88	40.64	*******	********
0.350	1852.	624.	2.97	676.1	1.0	1.000	*******	0.83	57.53	*******	********
ALTITUDE - 54000. FEET											
0.350	1996.	624.	3.20	691.0	1.0	1.000	*******	0.80	68.78	*******	********
ALTITUDE - 60000. FEET											
0.350	1208.	624.	1.94	657.8	1.0	1.000	*******	0.82	59.40	*******	********
ALTITUDE - 64000. FEET											
0.350	1237.	624.	1.98	659.1	1.0	1.000	*******	0.80	68.78	*******	********

[redacted]

This Page Intentionally Blank

ENGINE PHYSICAL CHARACTERISTICS

Eng. No. 9-2

Thrust, sls	250,000 lbf	1,112,055 newton

Weight and Thrust/Weight Ratio

Measuring Units	(English)	(International)
Weight	lbm	kg
Thrust/Weight	lbf/lbm	newton/kg

Lightweight Estimate

(lbf/in^2) Maximum Engine Internal Pressure 1000 (newton/m^2)

Subsystems:	50	100	250	344.7	689.5	1723.7
Fan						
Heat Exchanger						
Primary Rocket	2255	2255	2255	1022.9	1022.9	1022.9
Mixer/Diffuser	2402	2730	3744	1089.5	1238.3	1698.3
Combustor/Exit	3476	3950	5372	1576.7	1791.7	2436.7
Contingency	813	894	1137	368.8	405.5	515.7
Uninstalled Eng. Wt.	8946	9829	12508	4057.9	4458.4	5673.6
Thrust/Weight, Uninst.	27.9	25.4	20.0	274	249	196
Inlet Weight	6370	7280	10556	2889.4	3302.2	4788.2
Installed Eng. Wt.	15316	17109	23064	6947.3	7760.6	10461.8
Thrust/Weight, Inst.	16.3	14.6	10.8	160	143	106

Heavyweight Estimate

Uninstalled Eng. Wt.	9841	10812	13759	4463.9	4904.3	6241.1
Thrust/Weight, Uninst.	25.4	23.1	18.2	249	227	179
Inlet Weight	25494	29136	40973	11564.1	13216.1	18585.4
Installed Eng. Wt.	35335	39948	54732	16027.9	18120.4	24826.4
Thrust/Weight, Inst.	7.1	6.3	4.6	70	62	45

Engine Flow Areas and Equivalent Diameters

	ft^2	ft	m^2	m
Inlet Cowl, A_c	182.1	15.23	16.92	4.64
Mixer, A_3	78.1	9.97	7.26	3.04
Combustor, A_4	158.3	14.20	14.71	4.33
Exit, A_6	252.5	17.93	23.46	5.47

Engine Lengths

	ft	m
Uninstalled	23.7	7.22
Inlet (Typ)	45.0	13.72
Installed (Typ)	68.7	20.94

REMARKS, REFERENCES

SPECIFIC IMPULSE
REFERENCE TRAJECTORIES

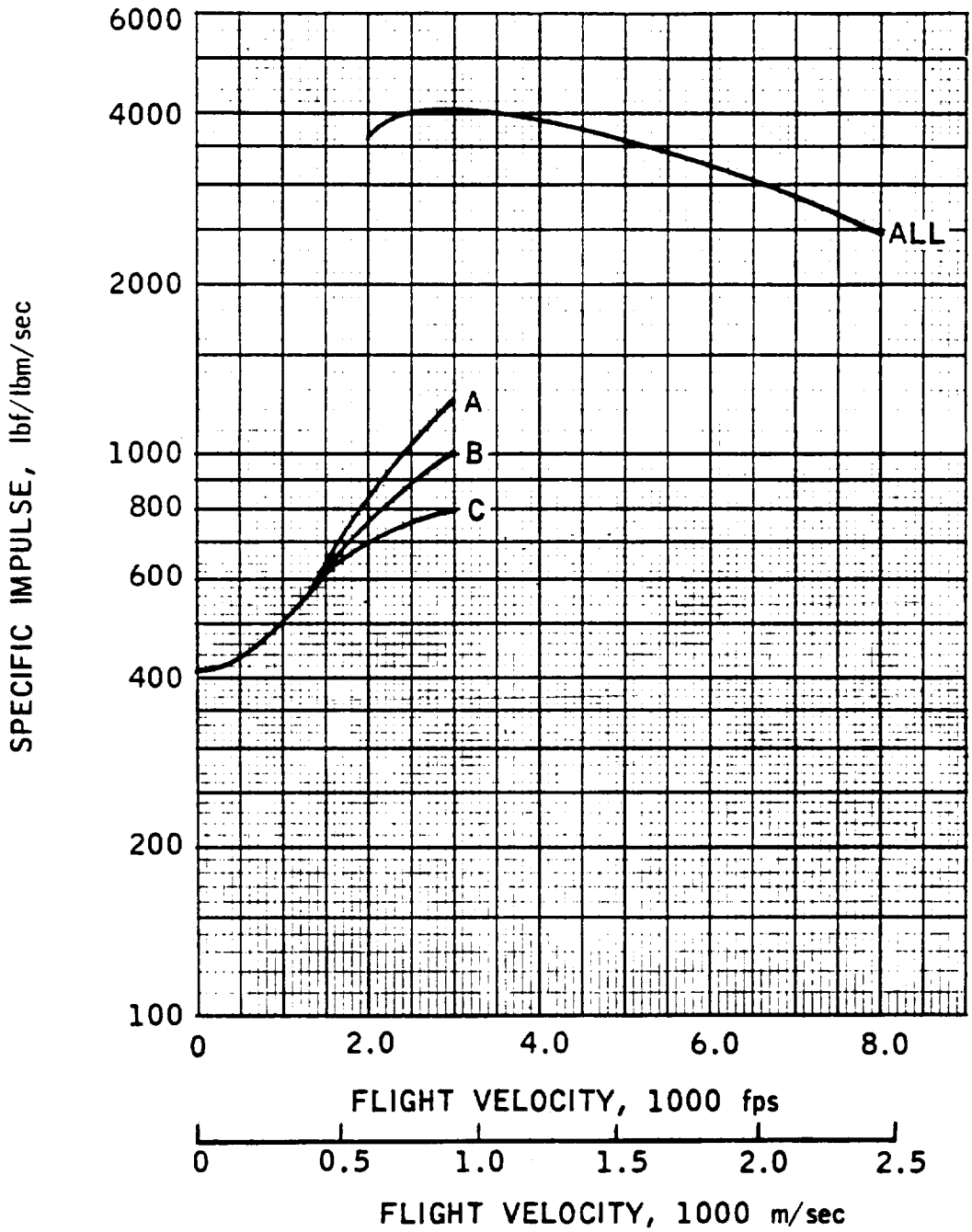

ENG. NO. 9-2

THRUST

REFERENCE TRAJECTORIES

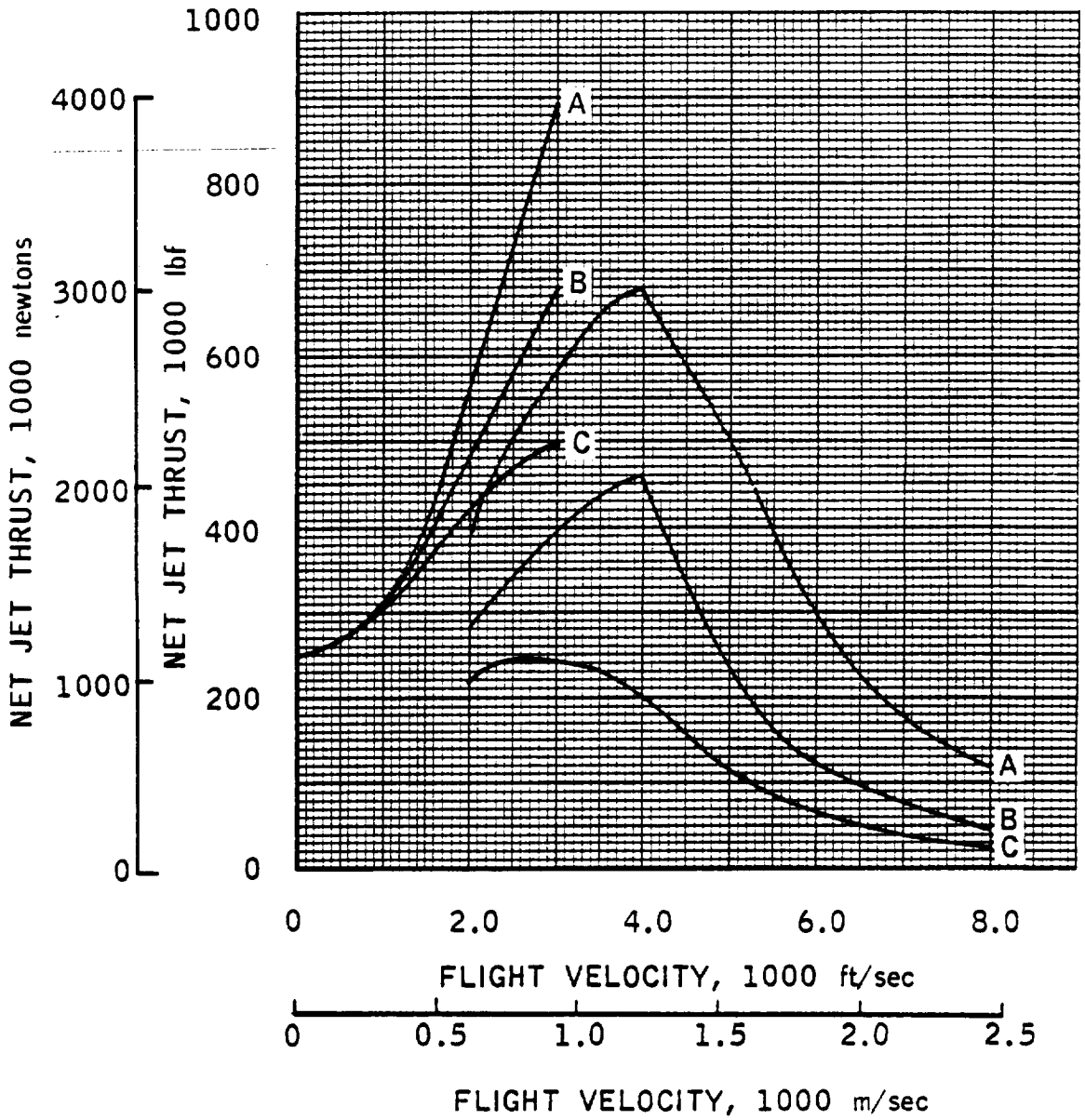

CAPTURE AREA

REFERENCE TRAJECTORIES

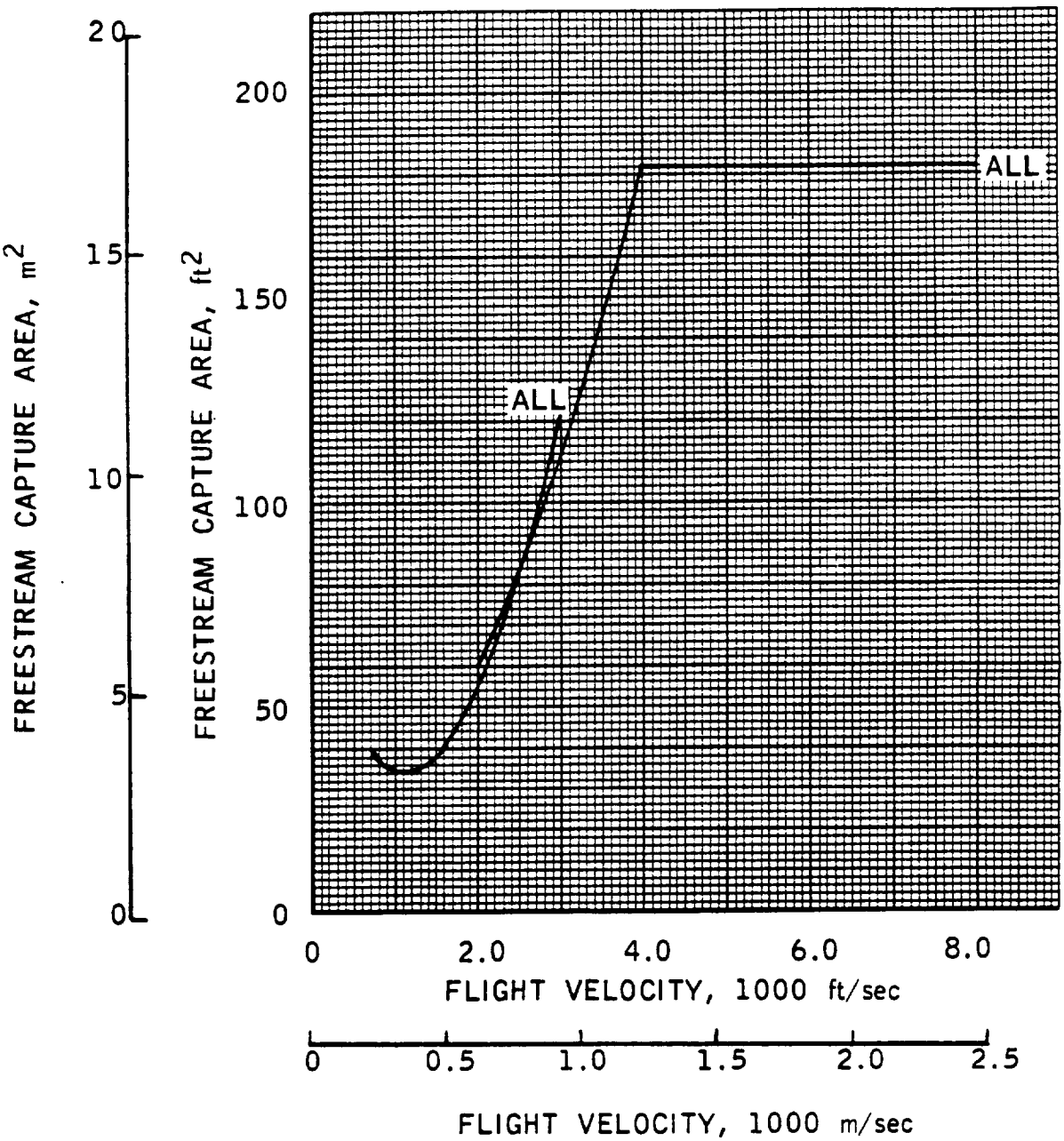

ENG. NO. 9-2

AIRFLOW

REFERENCE TRAJECTORIES

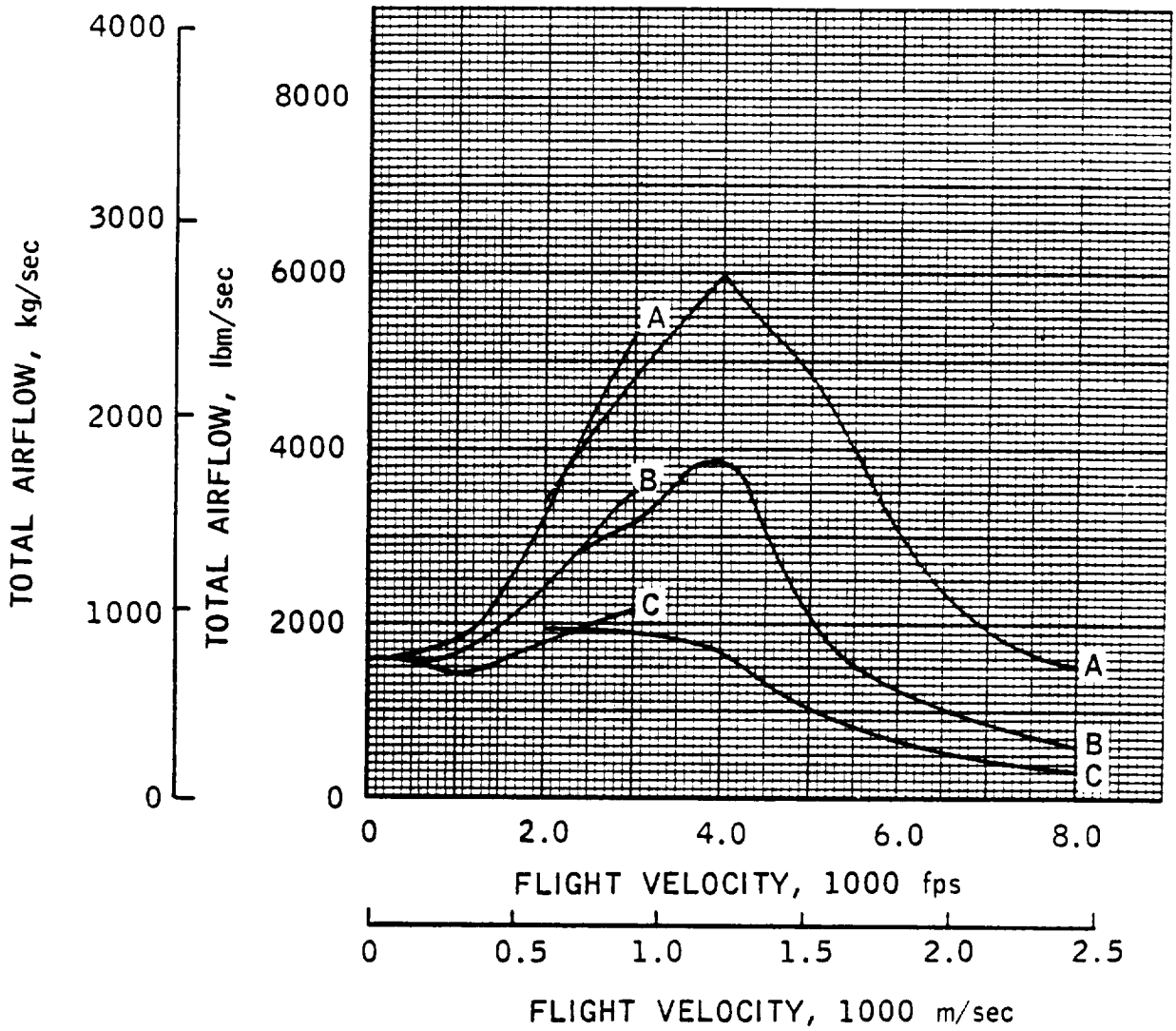

ENGINE- 9-2

ESTIMATED PERFORMANCE

MO	VO	HTO	PTO	T	CF	IS	SPC	PT2	H2	P2
				ALTITUDE -		0. FEET				
0.10	11.	124.7	14.8	250000.	*******	410.	8.78	14.80	*******	*******
				ALTITUDE -		10000. FEET				
[redacted]										
0.65	700.	125.7	13.4	270500.	*******	445.	8.09	13.43	*******	*******
0.70	754.	127.3	14.0	275800.	*******	455.	7.91	14.02	*******	*******
0.79	851.	130.4	15.3	288500.	*******	475.	7.58	15.26	*******	*******
				ALTITUDE -		20000. FEET				
[redacted]										
1.01	1047.	129.3	12.9	302000.	*******	501.	7.19	12.94	*******	*******
1.21	1255.	138.8	16.6	337400.	*******	555.	6.49	16.47	*******	*******
1.45	1504.	152.5	23.1	406600.	*******	648.	5.56	22.52	*******	*******
				ALTITUDE -		30000. FEET				
1.46	1453.	141.0	15.2	351000.	*******	577.	6.24	14.77	*******	*******
1.71	1701.	156.6	21.9	417500.	*******	678.	5.31	20.89	*******	*******
2.06	2049.	182.7	37.6	568000.	*******	861.	4.18	34.55	*******	*******
				ALTITUDE -		40000. FEET				
1.91	1849.	161.9	18.6	405000.	*******	667.	5.40	17.36	*******	*******
2.22	2149.	185.8	30.1	507000.	*******	792.	4.55	27.20	*******	*******

[redacted]

ENGINE- 9-2

ESTIMATED PERFORMANCE

M2	WS	WP	WSWP	WFT	PHP	PHS	V6	PT20	A0	A5	A6
ALTITUDE - 0. FEET											
0.295	1672.	561.	2.98	609.8	1.0	1.000	*******	1.00	195.82	*******	*******
ALTITUDE - 10000. FEET											
0.295	1548.	561.	2.76	607.9	1.0	1.000	*******	1.00	39.15	*******	*******
0.295	1596.	561.	2.84	606.2	1.0	1.000	*******	1.00	37.47	*******	*******
0.295	1740.	561.	3.10	607.4	1.0	1.000	*******	1.00	36.24	*******	*******
ALTITUDE - 20000. FEET											
0.295	1457.	561.	2.60	602.8	1.0	1.000	*******	1.00	34.14	*******	*******
0.295	1811.	561.	3.23	607.9	1.0	1.000	*******	0.99	35.40	*******	*******
0.295	2324.	561.	4.14	627.5	1.0	1.000	*******	0.98	37.89	*******	*******
ALTITUDE - 30000. FEET											
0.295	1578.	561.	2.81	608.3	1.0	1.000	*******	0.98	37.89	*******	*******
0.295	2132.	561.	3.80	615.8	1.0	1.000	*******	0.95	43.73	*******	*******
0.295	3350.	561.	5.97	659.7	1.0	1.000	*******	0.92	57.06	*******	*******
ALTITUDE - 40000. FEET											
0.295	1746.	561.	3.11	607.2	1.0	1.000	*******	0.93	49.98	*******	*******
0.295	2570.	561.	4.58	640.2	1.0	1.000	*******	0.90	63.30	*******	*******

[redacted]

[redacted]

ENGINE- 9-2

ESTIMATED PERFORMANCE

MO	VO	HTO	PTO	T	CF	IS	SPC	PT2	H2	P2
				ALTITUDE -	40000. FEET					
2.69	2604.	229.0	62.6	766000.	*******	1084.	3.32	53.11	*******	*******
				ALTITUDE -	45500. FEET					
3.10	3000.	273.3	89.3	887700.	*******	1242.	2.90	71.10	*******	*******
				ALTITUDE -	50000. FEET					
2.40	2320.	201.1	24.6	455000.	*******	735.	4.90	21.69	*******	*******
2.84	2750.	244.6	48.8	621900.	*******	944.	3.81	40.51	*******	*******
				ALTITUDE -	54000. FEET					
3.10	3000.	273.3	59.5	668000.	*******	1005.	3.58	47.37	*******	*******
				ALTITUDE -	60000. FEET					
2.89	2800.	250.2	32.7	494000.	*******	781.	4.61	26.95	*******	*******
				ALTITUDE -	64000. FEET					
3.10	3000.	273.3	36.9	499800.	*******	794.	4.53	29.37	*******	*******

[redacted]

[redacted]

ENGINE- 9-2

ESTIMATED PERFORMANCE

M2	WS	WP	WSWP	WFT	PHP	PHS	V6	PT20	A0	A5	A6
ALTITUDE - 40000. FEET											
0.295	4570.	561.	8.15	706.6	1.0	1.000	*******	0.85	92.87	*******	*******
ALTITUDE - 45500. FEET											
0.295	5280.	561.	9.41	714.7	1.0	1.000	*******	0.80	121.19	*******	*******
ALTITUDE - 50000. FEET											
0.295	1946.	561.	3.47	619.0	1.0	1.000	*******	0.88	71.64	*******	*******
0.295	3285.	561.	5.86	658.8	1.0	1.000	*******	0.83	102.03	*******	*******
ALTITUDE - 54000. FEET											
0.295	3516.	561.	6.27	664.7	1.0	1.000	*******	0.80	121.19	*******	*******
ALTITUDE - 60000. FEET											
0.295	2150.	561.	3.83	632.5	1.0	1.000	*******	0.82	105.78	*******	*******
ALTITUDE - 64000. FEET											
0.295	2180.	561.	3.89	629.5	1.0	1.000	*******	0.80	121.19	*******	*******

[redacted]

This Page Intentionally Blank

ENGINE FACT SHEET

Class 0 Composite Launch Vehicle Engines

Engine Identification Number: 10 Ejector SCRAMJET

Engine Operating Modes

Summary: Number of Modes/ Transitions 6 ; Number of Discrete Modes Utilized 4

Mode Progression - Lift-off to Touch-down

(Take off) Air augmented rocket, afterburning cycle (2000-3000 ft/sec) Ramjet, subsonic combustion (6000-8000 ft/sec) Ramjet, supersonic combustion (10,000-14,000 ft/sec) Rocket (Orbital speed, space maneuvering and deorbiting) Ramjet, subsonic combustion (Flyback) Air augmented rocket, afterburning cycle (Landing)

Engine Propellant Requirements

Code: (R) = Required, (V) = Required for vacuum operation, (F) = Useable for flyback mode

- ☐ Hydrogen, liquid, 37-40°R
- ☐ Hydrogen, liquid, subcooled (25°R)
- ☐ Hydrogen, gaseous
- [R] Oxygen, liquid, 162°R
- ☐ Oxygen, liquid, subcooled
- ☐ Oxygen, gaseous
- ☐ Other _____

Engine Constituent Subsystems

Inlet, rocket, mixer-diffuser, combustor, exit

Engine General Arrangement and Operating Schematic

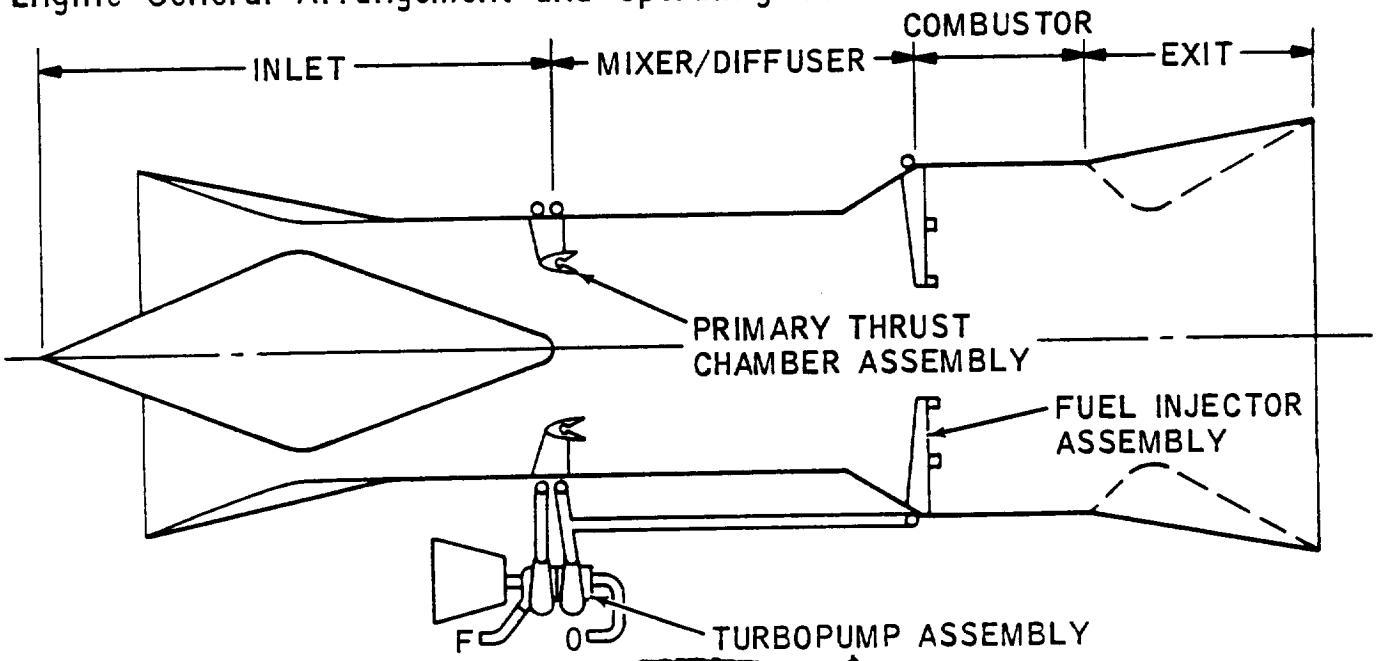

Eng. No. 10

Engine Internal Operating Parameters, nominal

$P_{c\text{-}RKT}$ = 1000 psia, O/F = 7.94
W_s/W_p (SLS) = 1.50 (3.00), A_4/A_3 = 1.59 (2.00)
A_c/A_3 = 1.83 (2.33)

Engine Operating Mode Block Diagrams

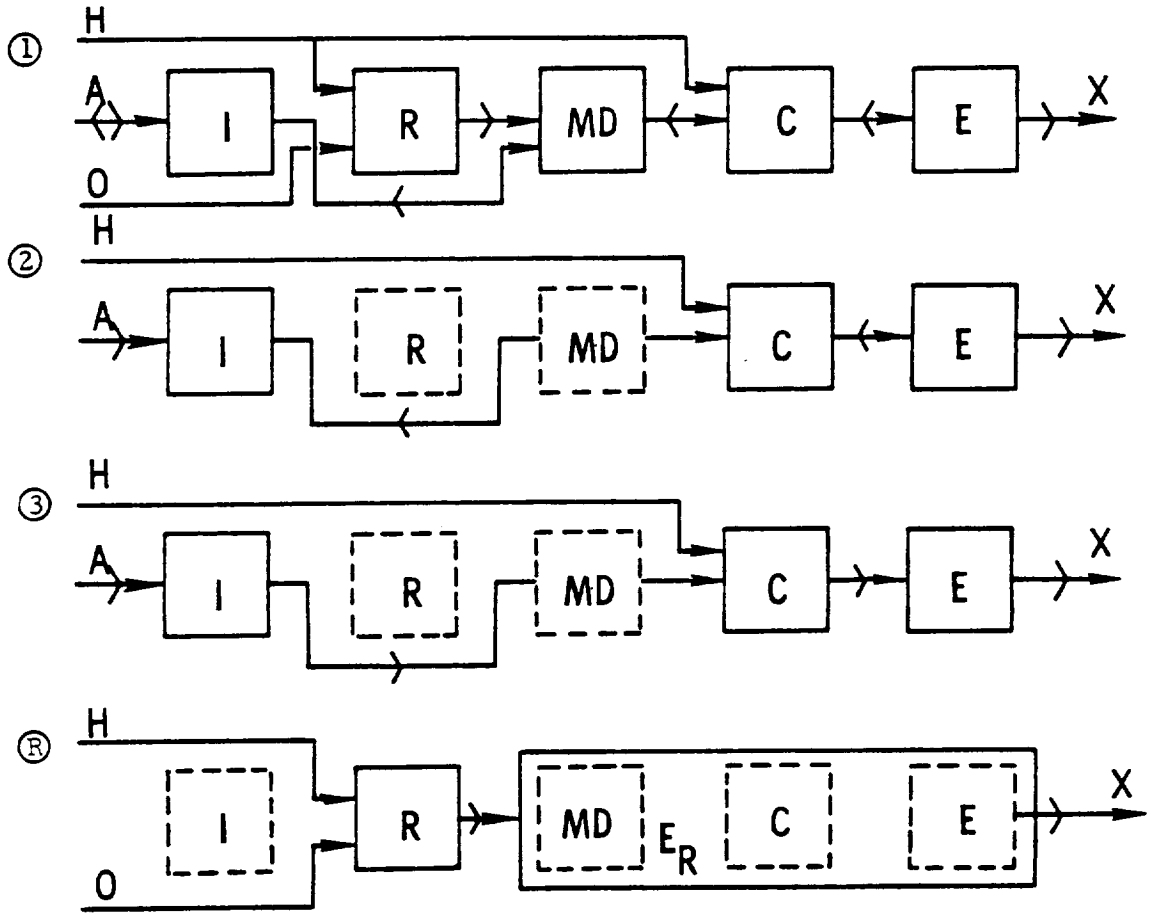

Eng. No. 10

The following information for Engine No. 10 appears in the fact sheets previously given for Engine No. 9.

Engine Physical Characteristics

Weight, Thrust/Weight, Flow Areas, Lengths

Engine Performance: 0-8000 ft/sec

Specific Impulse, Thrust, Airflow, Capture Area

References and additional remarks

SPECIFIC IMPULSE
REFERENCE TRAJECTORIES

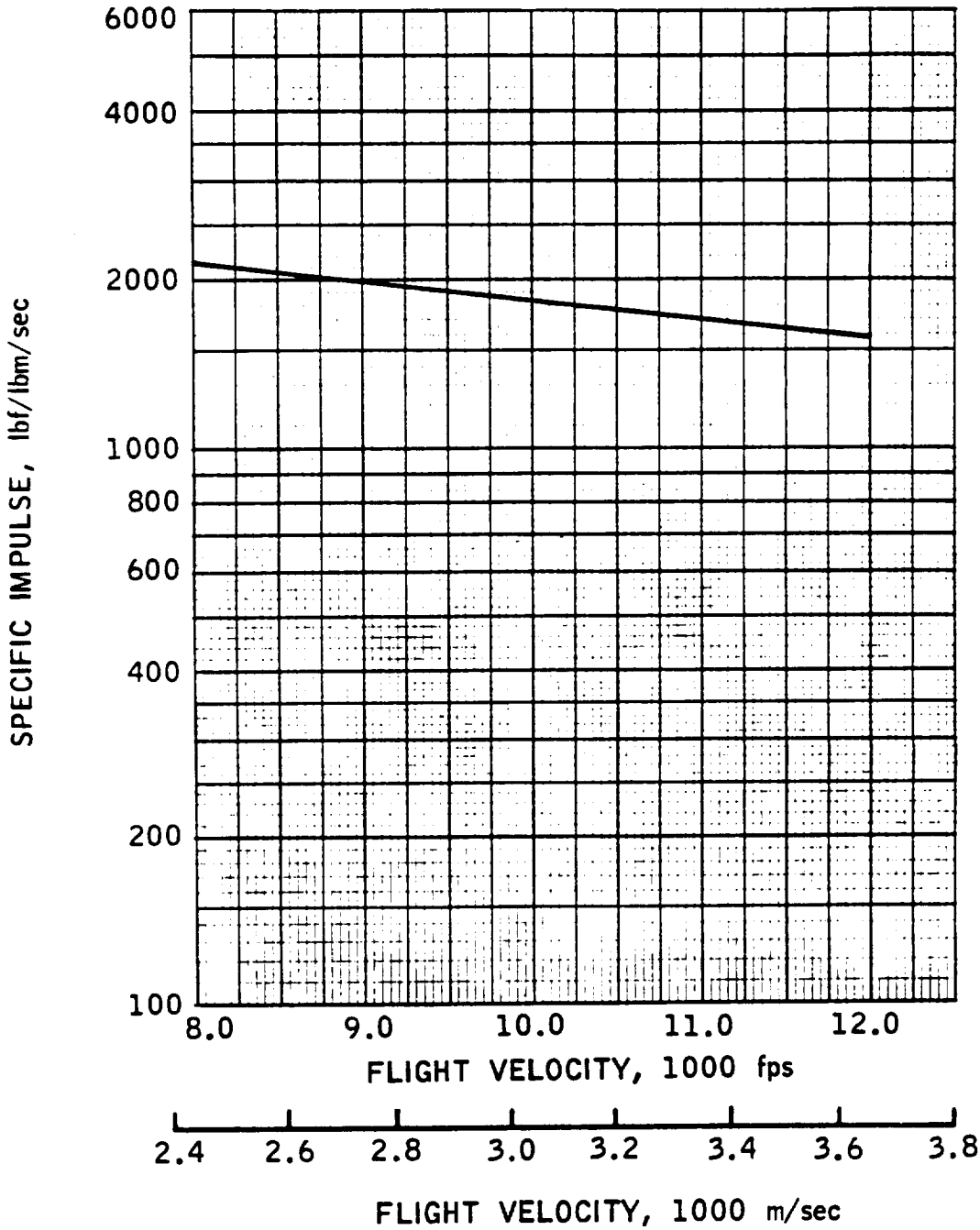

ENG. NO. 10-1

THRUST

REFERENCE TRAJECTORIES

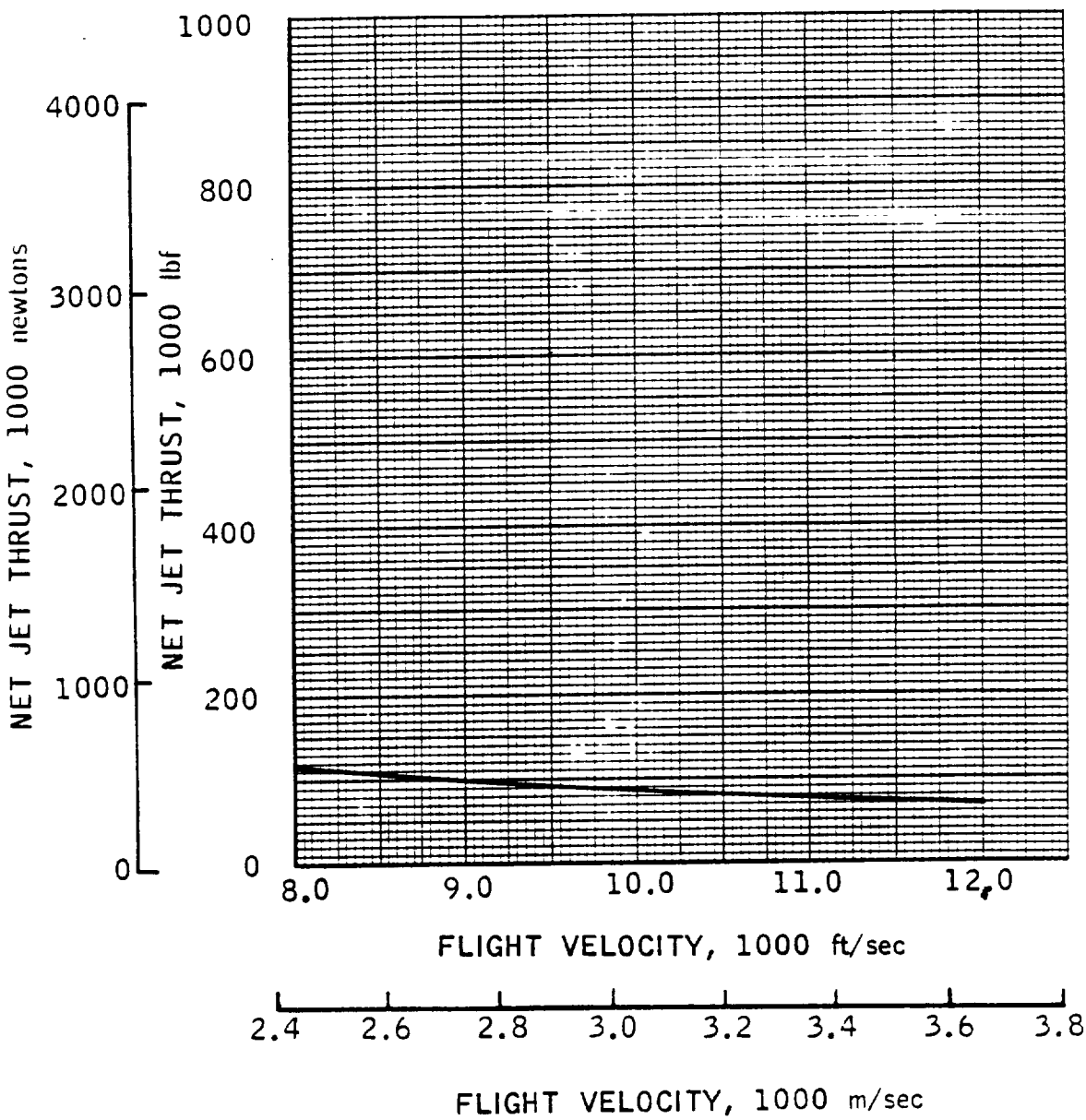

SPECIFIC IMPULSE
REFERENCE TRAJECTORIES

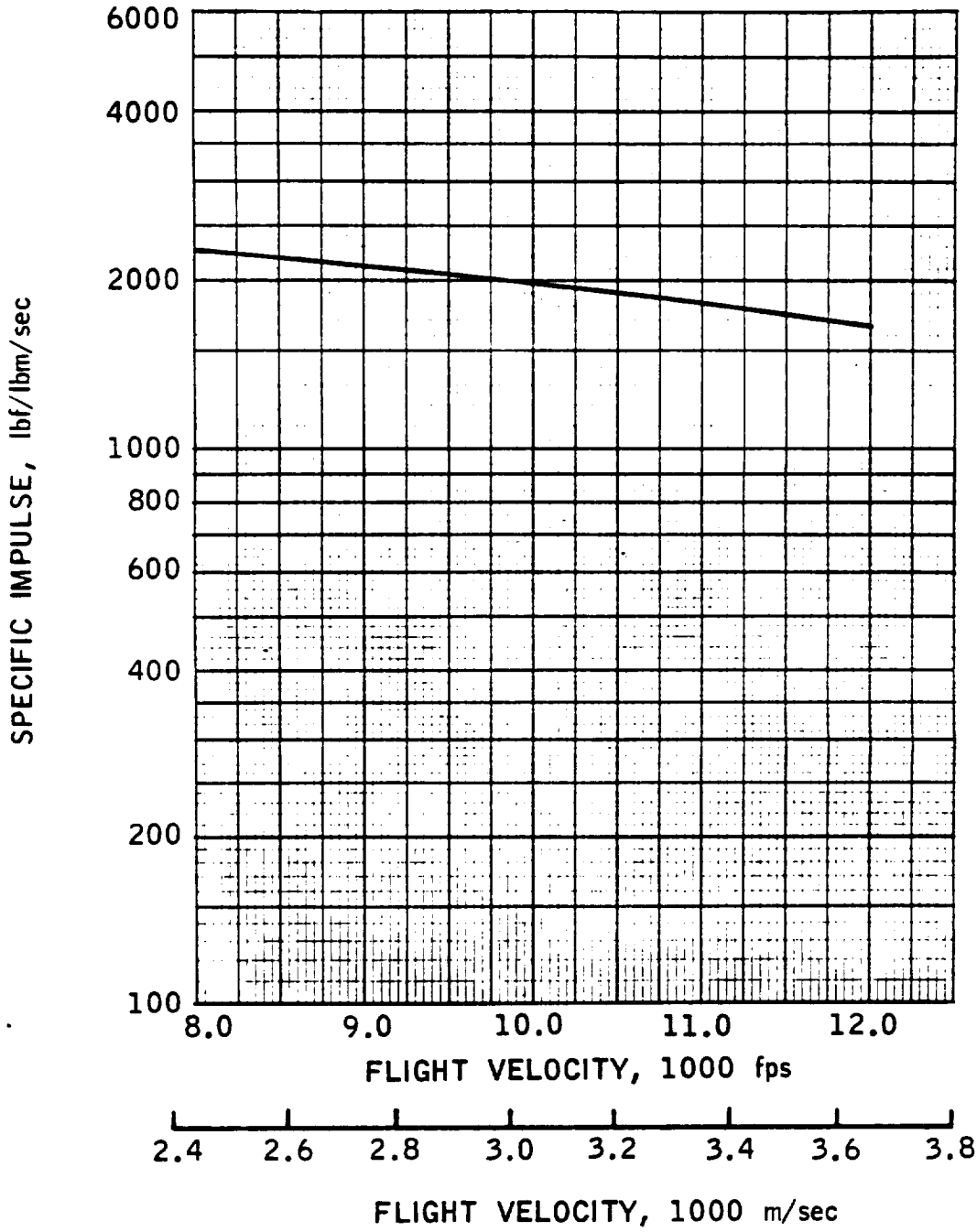

ENG. NO. 10-2

THRUST

REFERENCE TRAJECTORIES

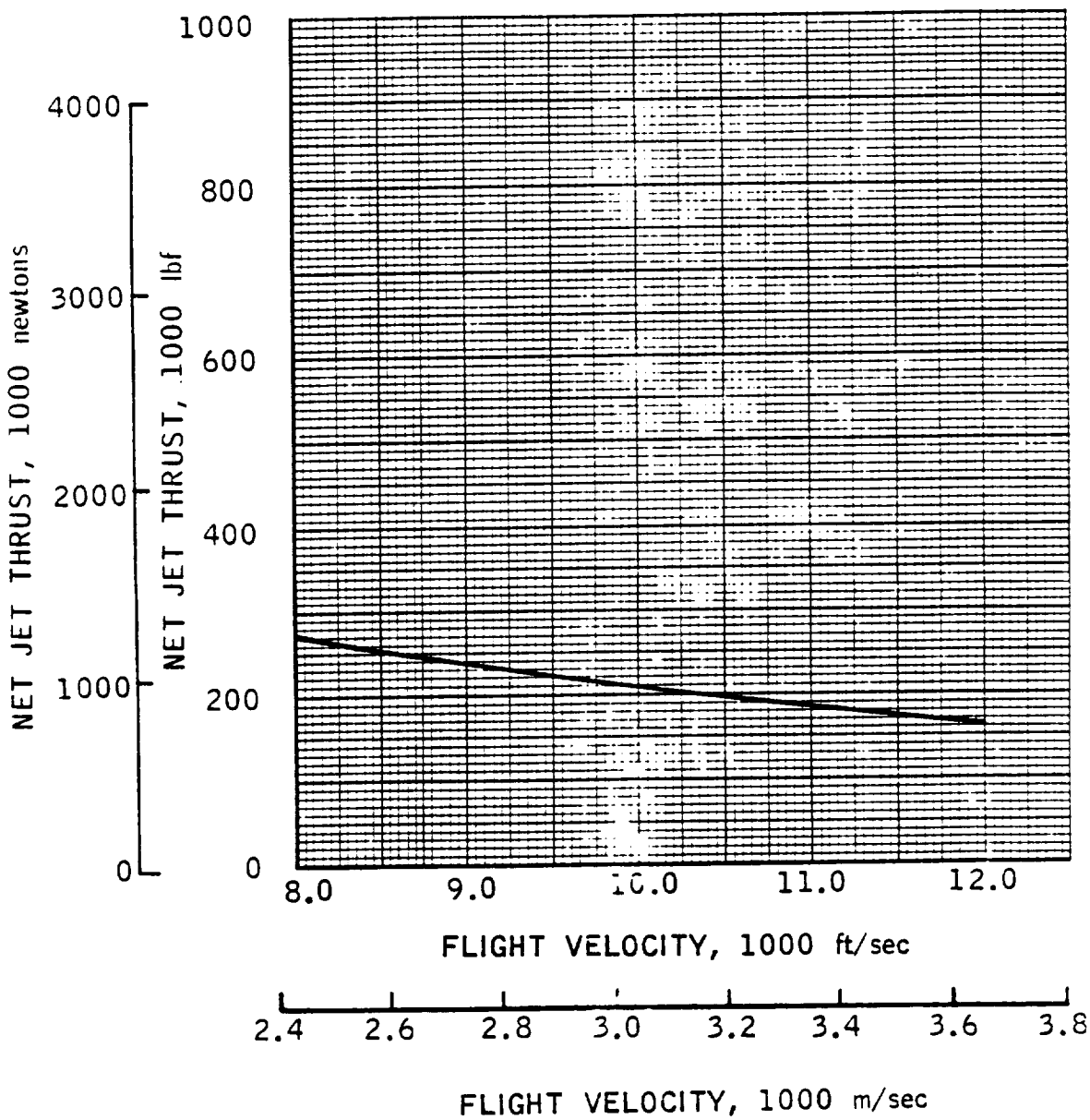

This Page Intentionally Blank

ENGINE FACT SHEET

Class 0 Composite Launch Vehicle Engines

Engine Identification Number: 11 Supercharged Ejector Ramjet

Engine Operating Modes

Summary: Number of Modes/ Transitions 5 ; Number of Discrete Modes Utilized 4

Mode Progression - Lift-off to Touch-down

(Take off) Supercharged air augmented rocket, afterburning cycle (2000-3000 ft/sec) Ramjet, subsonic combustion (6000-8000 ft/sec) Rocket (Orbital speed, space maneuvering and deorbiting) Ramjet, subsonic combustion (Flyback) Ducted fan (Flyback and landing)

Engine Propellant Requirements

Code: (R) = Required, (V) = Required for vacuum operation, (F) = Useable for flyback mode

- [F] Hydrogen, liquid, 37-40 °R
- [ ] Hydrogen, liquid, subcooled (25 °R)
- [ ] Hydrogen, gaseous
- [F] Oxygen, liquid, 162 °R
- [ ] Oxygen, liquid, subcooled
- [F] Oxygen, gaseous
- [ ] Other _____

Engine Constituent Subsystems

Inlet, fan, rocket, mixer-diffuser, combustor, exit

Engine General Arrangement and Operating Schematic

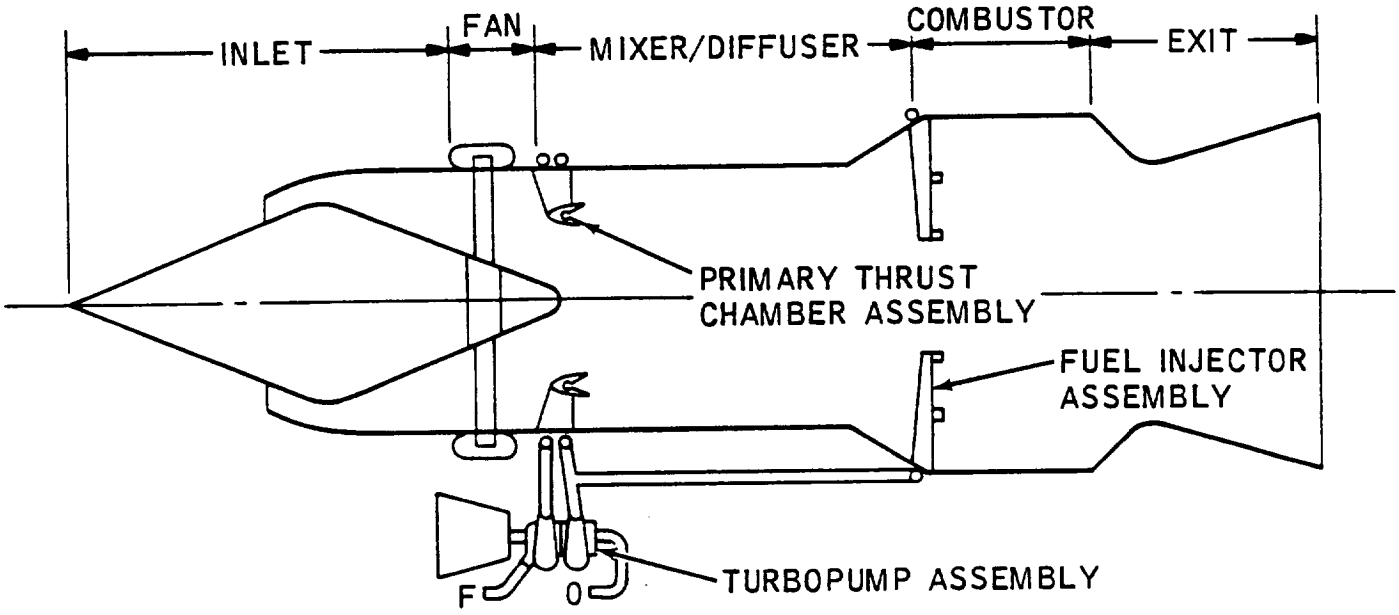

Eng. No. 11

Engine Internal Operating Parameters, nominal

$A_c/A_3 = 1.83\ (2.33)$

$P_{c\text{-}RKT} = 1000$ psia, $O/F = 7.94$
W_s/W_p (SLS) $= 1.85$, $A_4/A_3 = 1.85$
FAN P.R. $= 1.3$

Engine Operating Mode Block Diagrams

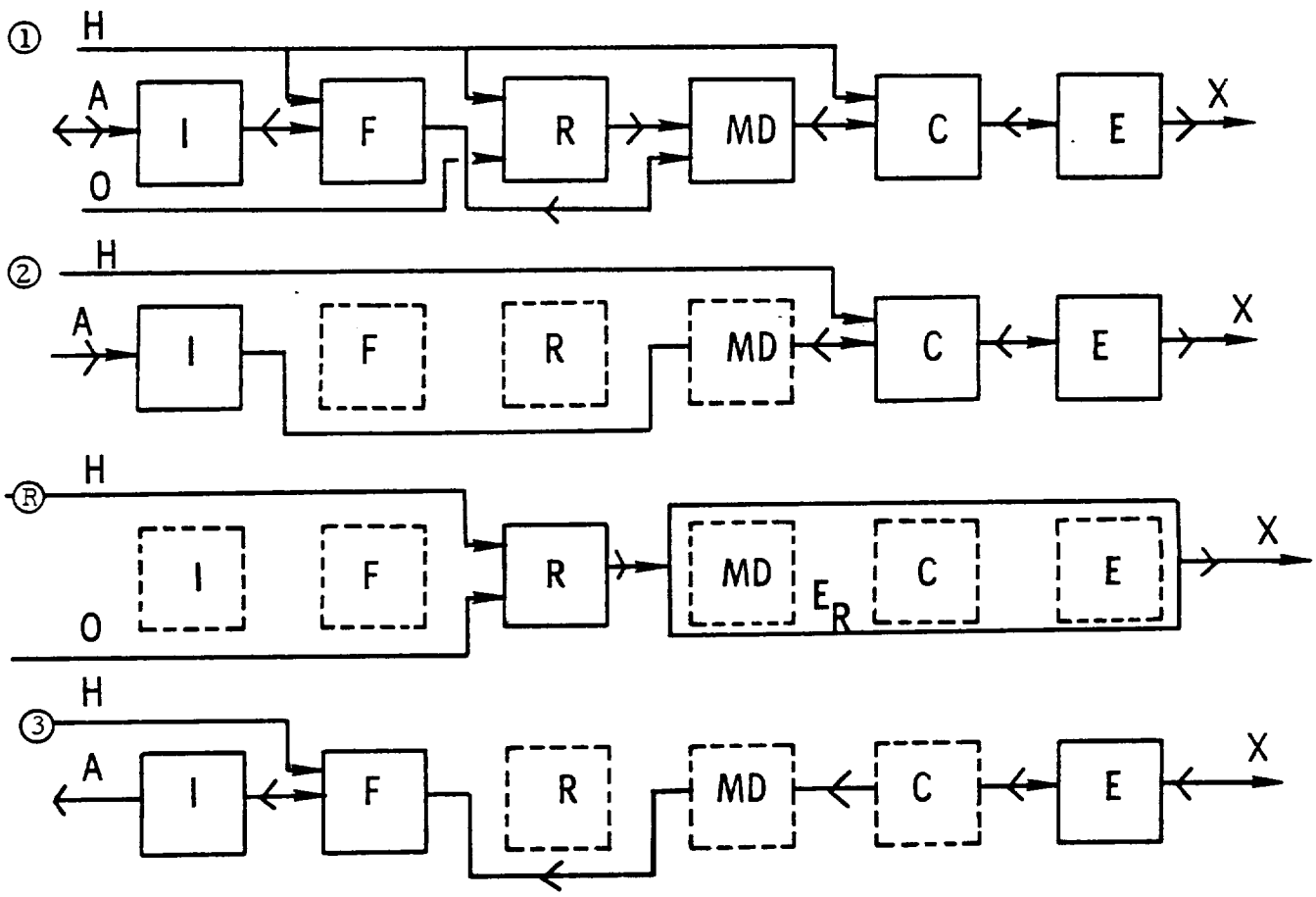

ENGINE PHYSICAL CHARACTERISTICS

Eng. No. 11

Thrust, sls	250,000 lbf	1,112,055 newton

Weight and Thrust/Weight Ratio

Measuring Units	(English)	(International)
Weight	lbm	kg
Thrust/Weight	lbf/lbm	newton/kg

Lightweight Estimate

(lbf/in^2) Maximum Engine Internal Pressure 1000 (newton/m^2)

Subsystems:	50	100	250	344.7	689.5	1723.7
Fan	1850	1850	1850	839.2	839.2	839.2
Heat Exchanger						
Primary Rocket	2093	2093	2093	949.4	949.4	949.4
Mixer/Diffuser	1147	1295	1776	520.3	587.4	805.6
Combustor/Exit	1518	1725	2346	688.6	782.5	1064.1
Contingency	476	511	621	215.9	231.8	281.7
Uninstalled Eng. Wt.	6084	7474	8686	2759.7	3390.2	3940.0
Thrust/Weight, Uninst.	41.1	33.4	28.8	403	328	283
Inlet Weight	2765	3160	4582	1254.2	1433.4	2078.4
Installed Eng. Wt.	9849	10 634	13268	4467.5	4823.6	6018.4
Thrust/Weight, Inst.	25.4	23.5	18.8	249	231	184

Heavyweight Estimate

Uninstalled Eng. Wt.	7300	8969	10423	3311.3	4068.3	4747.9
Thrust/Weight, Uninst.	34.2	27.9	24.0	336	274	235
Inlet Weight	11074	12656	17798	5023.2	5740.8	8073.2
Installed Eng. Wt.	18374	21625	28221	8334.4	9809.1	12801.0
Thrust/Weight, Inst.	13.6	11.6	8.9	133	114	87

Engine Flow Areas and Equivalent Diameters

	ft^2	ft	m^2	m
Inlet Cowl, A_c	79.1	10.03	7.35	3.06
Mixer, A_3	37.1	6.87	3.45	2.09
Combustor, A_4	69.0	9.37	6.41	2.86
Exit, A_6	110.0	11.83	10.22	3.61

Engine Lengths

	ft	m
Uninstalled	19.2	5.85
Inlet (Typ)	37.0	11.28
Installed (Typ)	56.2	17.13

REMARKS, REFERENCES

Supercharged Ejector Ramjet Cycle, airbreathing gas generator assumed for fan drive. Fan stowed for high speed operation. (References 12, 13, 20, 21)

SPECIFIC IMPULSE
REFERENCE TRAJECTORIES

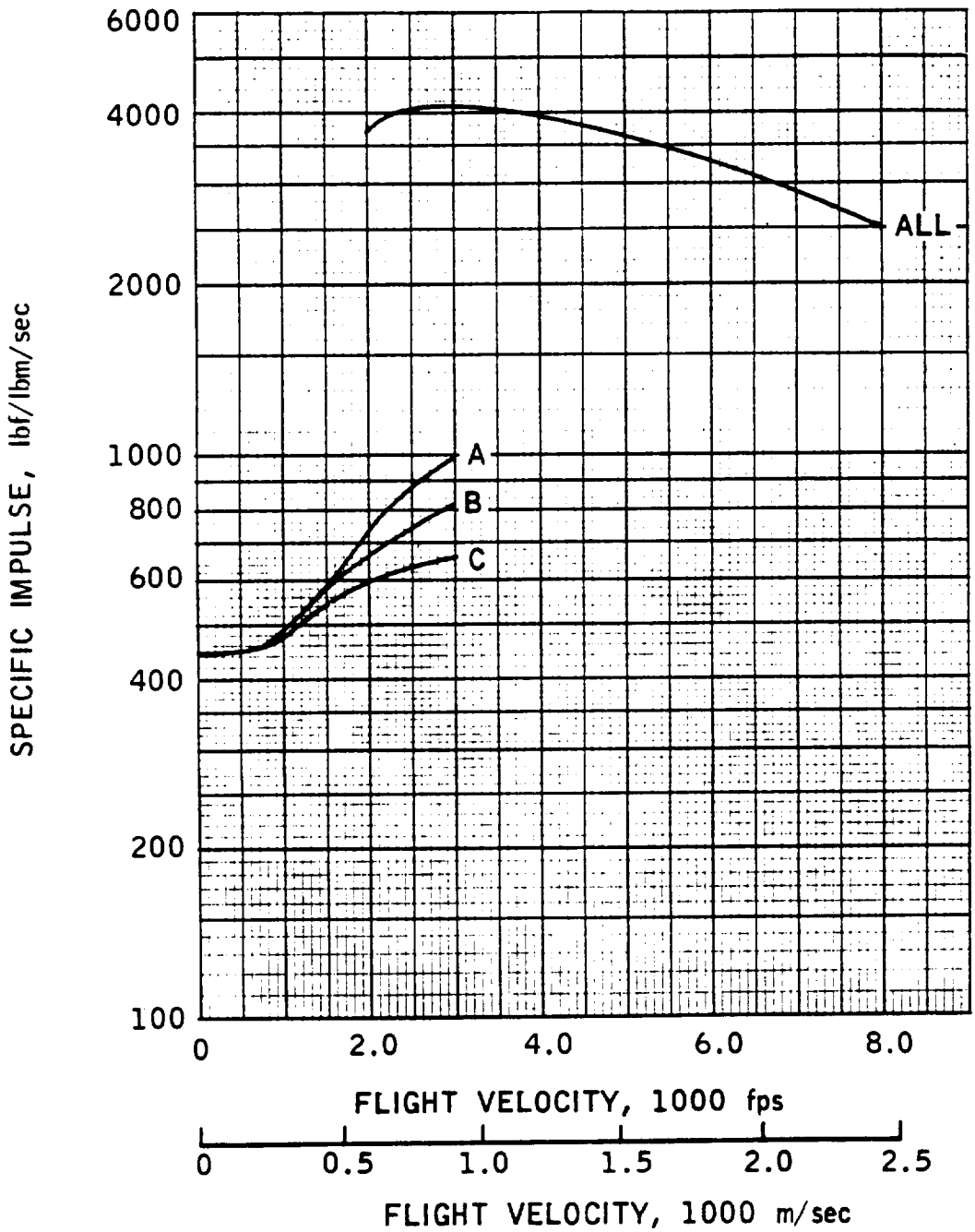

ENG. NO. 11

THRUST

REFERENCE TRAJECTORIES

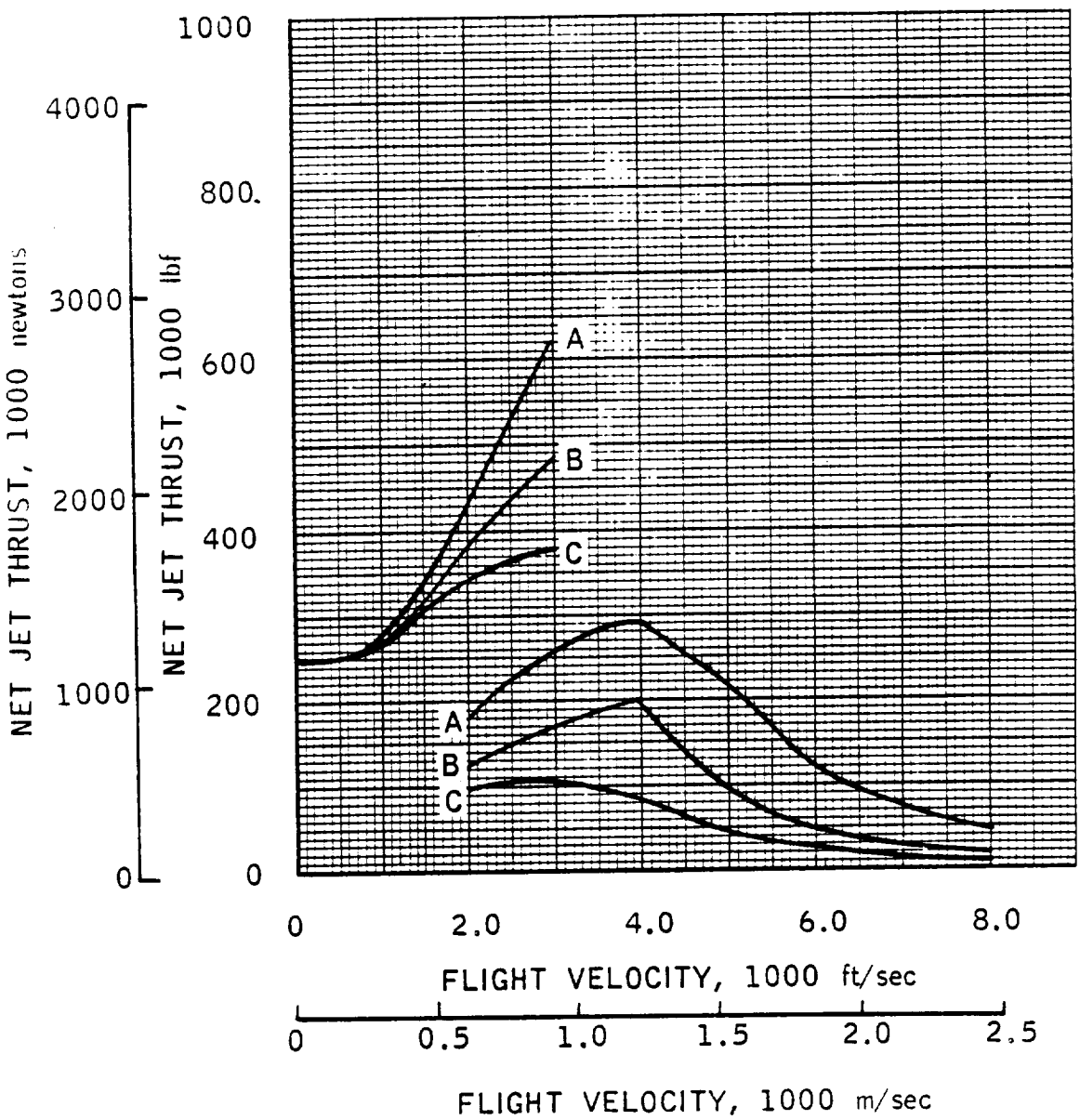

CAPTURE AREA

REFERENCE TRAJECTORIES

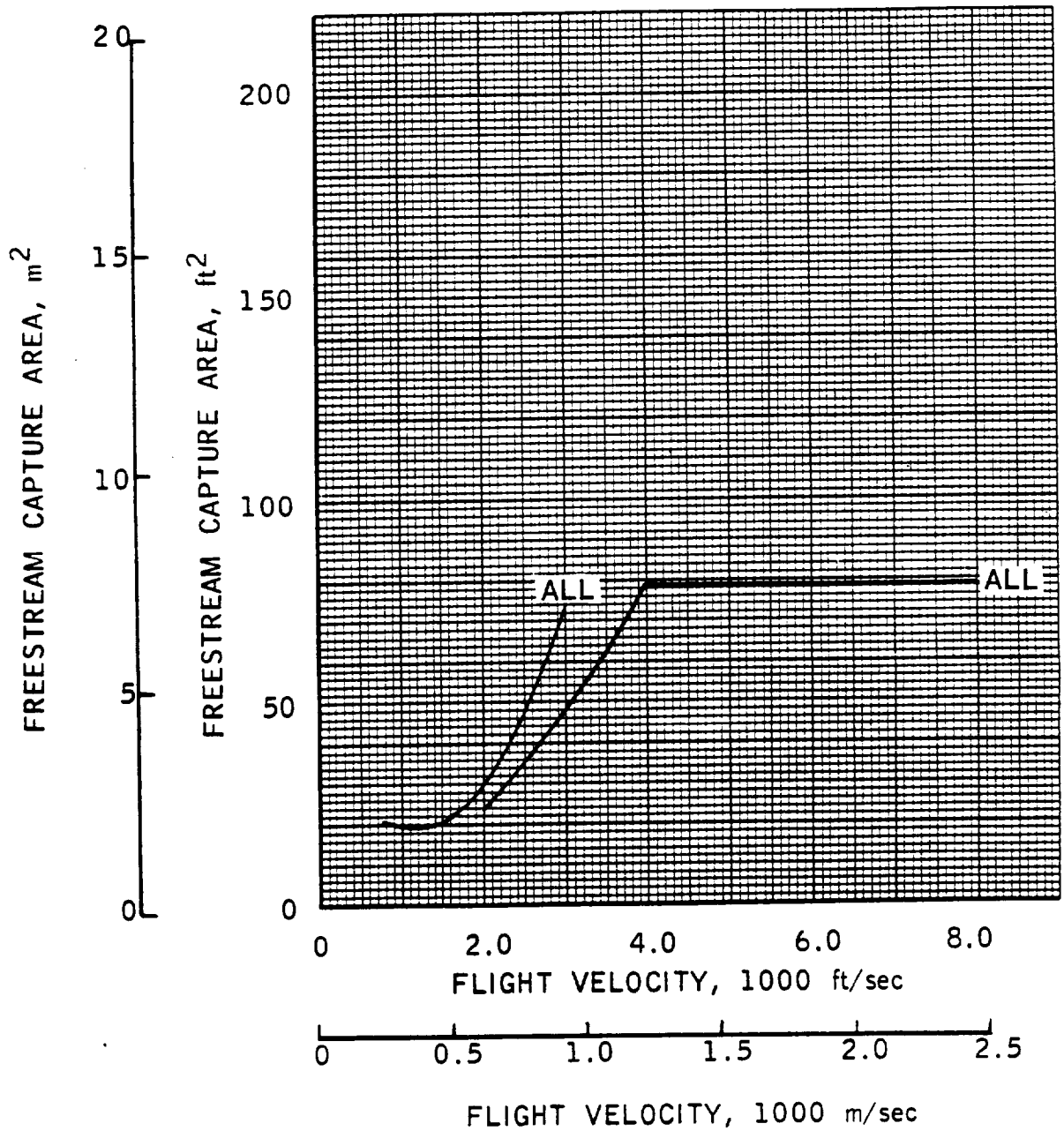

ENG. NO. 11

AIRFLOW

REFERENCE TRAJECTORIES

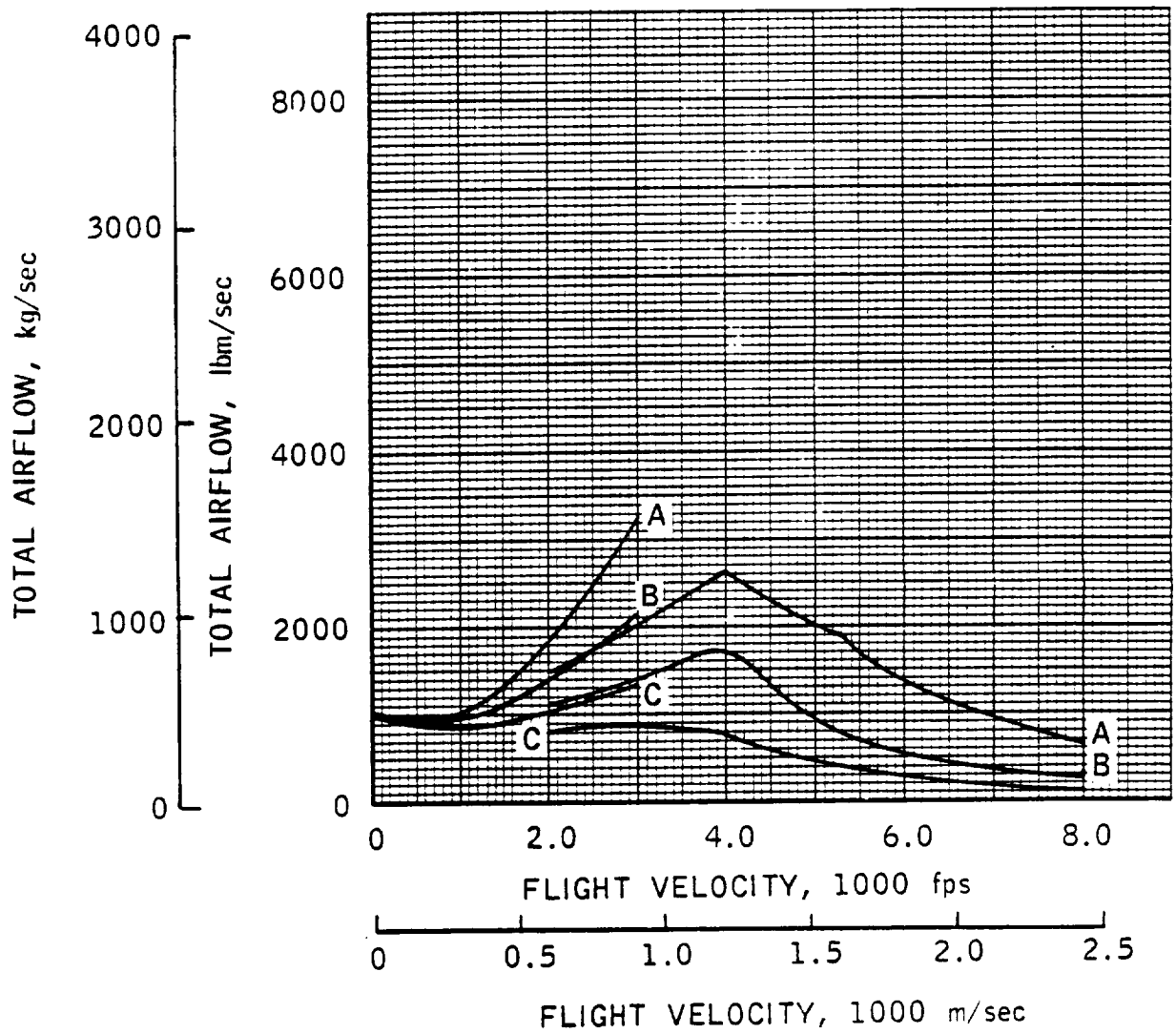

ENGINE- 11

ESTIMATED PERFORMANCE

MO	VO	HTO	PTO	T	CF	IS	SPC	PT2	H2	P2
				ALTITUDE -		0. FEET				
0.10	112.	124.7	14.8	251797.	146.50	445.	8.09	19.24	99999.0	17.84
				ALTITUDE -		10000. FEET				
0.65	700.	125.7	13.4	255632.	26.23	454.	7.93	17.45	99999.0	16.18
0.70	754.	127.3	14.0	259800.	23.85	461.	7.81	18.23	99999.0	16.90
0.79	851.	130.4	15.3	268518.	20.31	474.	7.59	19.33	99999.0	18.39
				ALTITUDE -		20000. FEET				
1.01	1047.	129.3	12.9	270656.	19.53	482.	7.47	16.83	99999.0	15.60
1.21	1255.	138.8	16.6	296223.	14.62	522.	6.90	21.26	99999.0	19.72
1.45	1504.	152.5	23.1	338928.	10.70	588.	6.12	29.02	99999.0	26.92
				ALTITUDE -		30000. FEET				
1.46	1453.	141.0	15.2	300855.	14.42	534.	6.74	19.05	99999.0	17.67
1.71	1701.	156.6	21.9	346758.	10.54	605.	5.95	26.99	99999.0	25.03
2.06	2049.	182.7	37.6	439996.	7.21	742.	4.85	44.80	99999.0	41.57
				ALTITUDE -		40000. FEET				
1.91	1849.	161.9	18.6	331952.	11.34	586.	6.14	22.46	99999.0	20.83
2.22	2149.	185.8	30.1	398339.	7.95	686.	5.25	35.34	99999.0	32.79

[redacted]

ENGINE- 11

ESTIMATED PERFORMANCE

M2	WS	WP	WSWP	WFT	PHP	PHS	V6	PT20	A2	A5	A6
					ALTITUDE -		0. FEET				
0.330	991.	537.	1.84	565.9	1.0	1.000	5277.	1.30	116.07	43.96	55.24
					ALTITUDE -		10000. FEET				
0.330	895.	537.	1.67	563.1	1.0	1.000	6070.	1.30	22.64	47.63	62.55
0.330	929.	537.	1.73	564.1	1.0	1.000	6067.	1.30	21.82	48.00	63.36
0.330	999.	537.	1.86	566.1	1.0	1.000	6063.	1.30	20.78	48.70	65.01
					ALTITUDE -		20000. FEET				
0.330	851.	537.	1.59	561.6	1.0	1.000	6794.	1.30	19.94	46.80	75.91
0.330	1039.	537.	1.93	567.3	1.0	1.000	6745.	1.28	20.30	48.58	81.66
0.330	1355.	537.	2.52	576.5	1.0	1.000	6701.	1.26	22.06	50.55	90.40
					ALTITUDE -		30000. FEET				
0.330	924.	537.	1.72	563.9	1.0	1.000	7408.	1.26	22.18	47.05	101.32
0.330	1244.	537.	2.32	573.3	1.0	1.000	7237.	1.23	25.45	49.23	109.79
0.330	1917.	537.	3.57	592.9	1.0	1.000	6864.	1.19	32.48	50.30	109.90
					ALTITUDE -		40000. FEET				
0.330	1019.	537.	1.90	566.7	1.0	1.000	7501.	1.21	29.07	46.76	109.45
0.330	1499.	537.	2.79	580.7	1.0	1.000	7130.	1.17	36.73	48.38	109.69

[redacted]

ENGINE- 11

ESTIMATED PERFORMANCE

MO	VO	HTO	PTO	T	CF	IS	SPC	PT2	H2	P2
				ALTITUDE - 40000. FEET						
2.69	2604.	229.0	62.6	547155.	5.09	891.	4.04	69.16	99999.0	64.19
				ALTITUDE - 45500. FEET						
3.10	3000.	273.3	89.3	619420.	4.05	980.	3.67	92.87	99999.0	86.23
				ALTITUDE - 50000. FEET						
2.40	2320.	201.1	24.6	360000.	9.61	620.	5.81	28.04	99999.0	26.04
2.84	2750.	244.6	48.8	460000.	5.57	780.	4.62	52.70	99999.0	48.93
				ALTITUDE - 54000. FEET						
3.10	3000.	273.3	59.5	485211.	4.76	808.	4.46	61.87	99999.0	57.45
				ALTITUDE - 60000. FEET						
2.89	2800.	250.2	32.7	375562.	6.70	654.	5.50	35.00	99999.0	32.49
				ALTITUDE - 64000. FEET						
3.10	3000.	273.3	36.9	381918.	6.05	663.	5.43	38.36	99999.0	35.62

CONFIDENTIAL

ENGINE- 11

ESTIMATED PERFORMANCE

M2	WS	WP	WSWP	WFT	PHP	PHS	V6	PT20	A0	A5	A6
ALTITUDE - 40000. FEET											
0.330	2655.	537.	4.95	614.4	1.0	1.000	6787.	1.10	53.45	46.84	109.78
ALTITUDE - 45500. FEET											
0.330	3278.	537.	6.11	632.6	1.0	1.000	6811.	1.04	74.26	43.53	109.81
ALTITUDE - 50000. FEET											
.330	1120.	537.	2.08	569.6	1.0	1.000	*******	1.14	40.00	*******	109.65
.330	1940.	537.	3.61	554.8	1.0	1.000	*******	1.08	60.00	*******	109.62
ALTITUDE - 54000. FEET											
0.330	2184.	537.	4.07	600.7	1.0	1.000	7086.	1.04	74.26	43.44	109.64
ALTITUDE - 60000. FEET											
0.330	1289.	537.	2.40	574.6	1.0	1.000	7497.	1.07	62.75	43.32	109.92
ALTITUDE - 64000. FEET											
0.330	1354.	537.	2.52	576.5	1.0	1.000	7507.	1.04	74.26	42.39	109.81

This Page Intentionally Blank

ENGINE FACT SHEET

Class 0 Composite Launch Vehicle Engines

Engine Identification Number: 12 Supercharged Ejector SCRAMJET

Engine Operating Modes

Summary: Number of Modes/ Transitions 6 ; Number of Discrete Modes Utilized 5

Mode Progression - Lift-off to Touch-down

(Take off) Supercharged air augmented rocket, afterburning cycle (2000-3000 ft/sec) Ramjet, subsonic combustion (6000-8000 ft/sec) Ramjet, supersonic combustion (10,000-14,000 ft/sec) Rocket (Orbital speed, space maneuvering and deorbiting) Ramjet, subsonic combustion (Flyback) Ducted fan (Flyback and landing)

Engine Propellant Requirements

Code: (R) = Required, (V) = Required for vacuum operation, (F) = Useable for flyback mode

- [R] Hydrogen, liquid, 37-40 °R
- [ ] Hydrogen, liquid, subcooled (25 °R)
- [ ] Hydrogen, gaseous
- [R] Oxygen, liquid, 162 °R
- [ ] Oxygen, liquid, subcooled
- [F] Oxygen, gaseous
- [ ] Other _____

Engine Constituent Subsystems

Inlet, fan, rocket, mixer-diffuser, combustor, exit

Engine General Arrangement and Operating Schematic

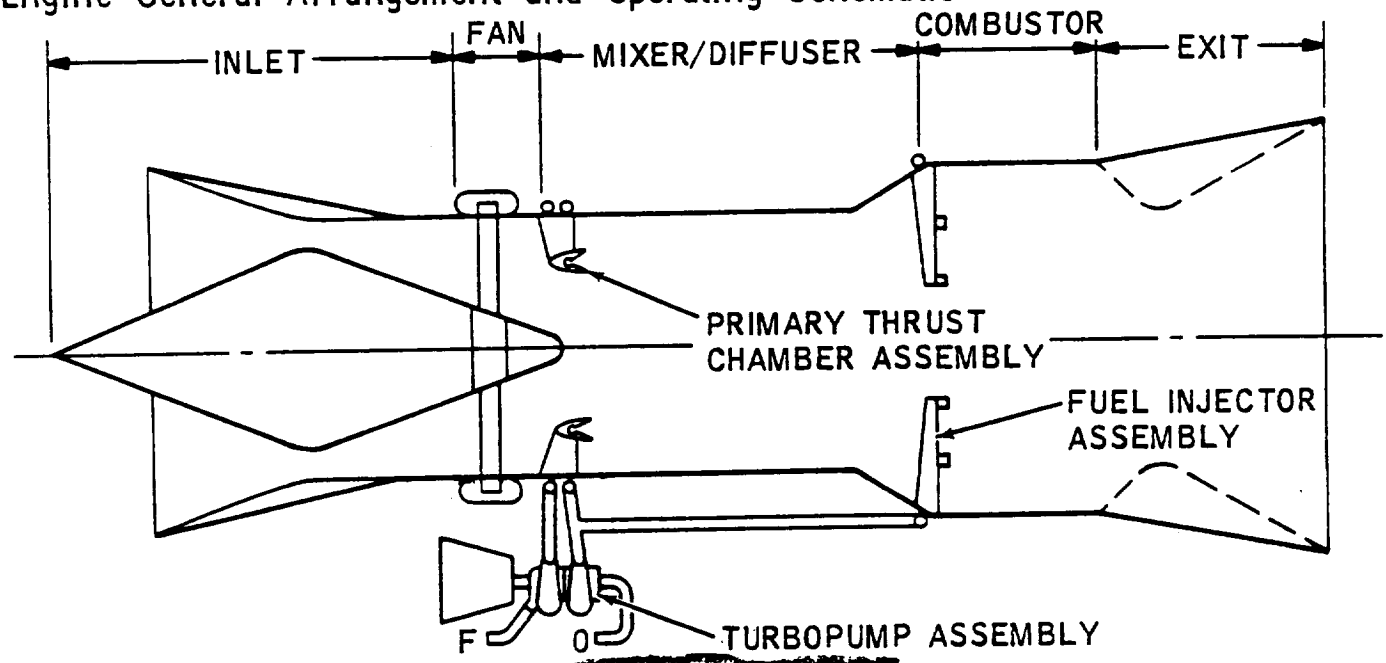

Eng. No. 12

Engine Internal Operating Parameters, nominal

$P_{c\text{-}RKT}$ = 1000 psia, O/F = 7.94
W_s/W_p (SLS) = 1.85, A_4/A_3 = 1.85, A_c/A_3 = 2.13
FAN P.R. = 1.3

Engine Operating Mode Block Diagrams

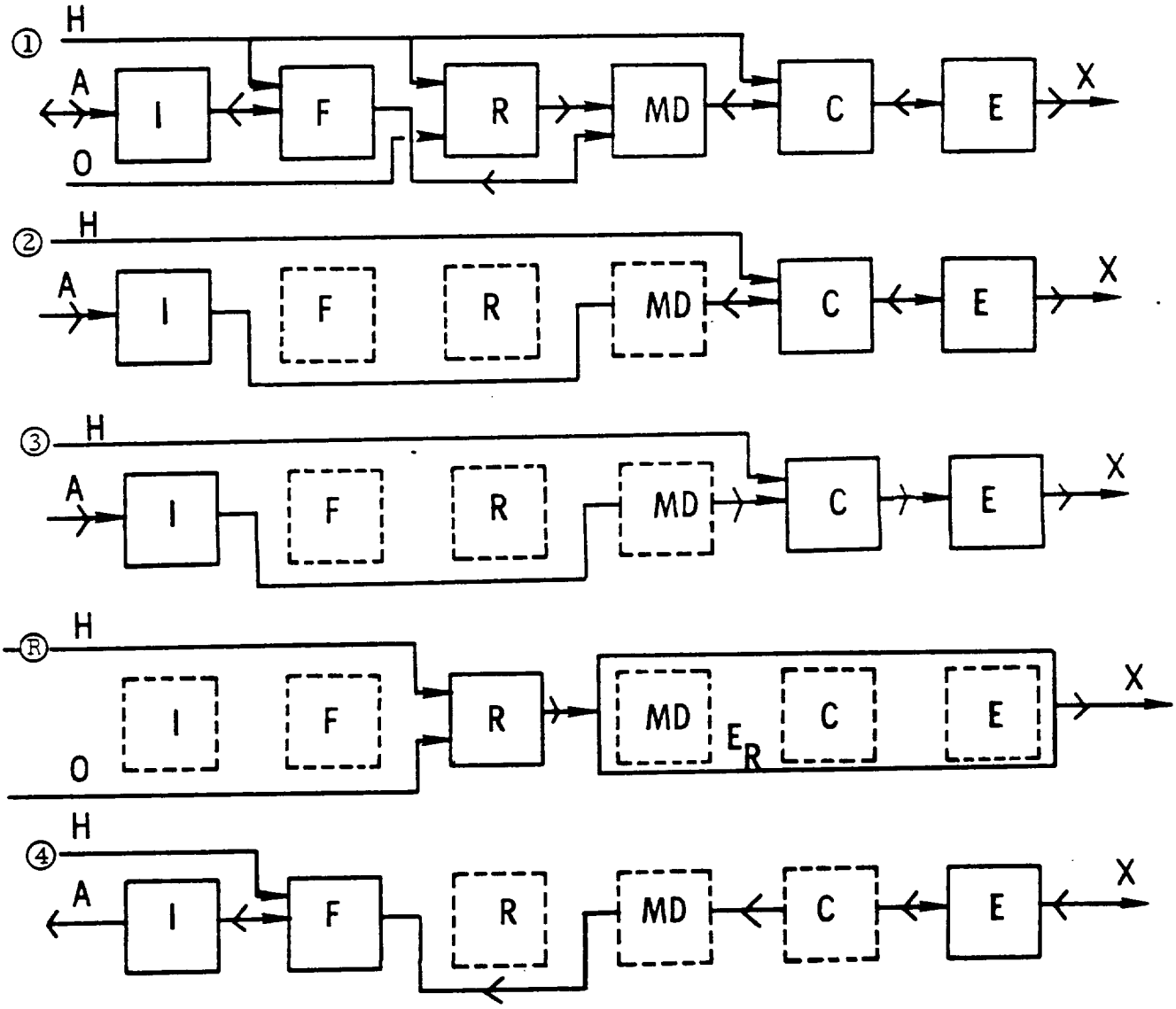

Eng. No. 12

The following information for Engine No. 12 appears in the fact sheets previously given for Engine No. 11.

Engine Physical Characteristics

Weight, Thrust/Weight, Flow Areas, Lengths

Engine Performance: 0-8000 ft/sec

Specific Impulse, Thrust, Airflow, Capture Area

References and additional remarks

SPECIFIC IMPULSE
REFERENCE TRAJECTORIES

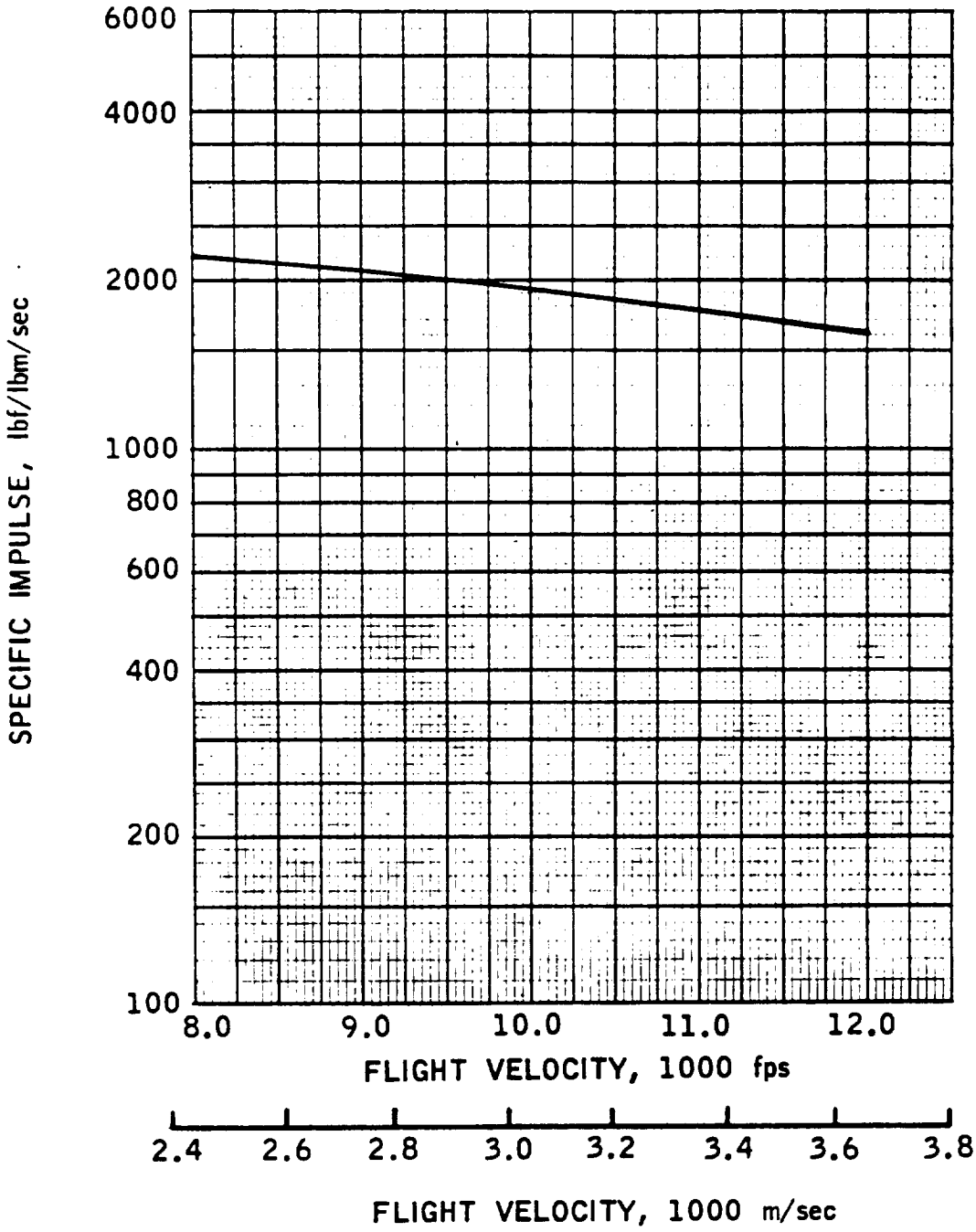

ENG. NO. 12

THRUST

REFERENCE TRAJECTORIES

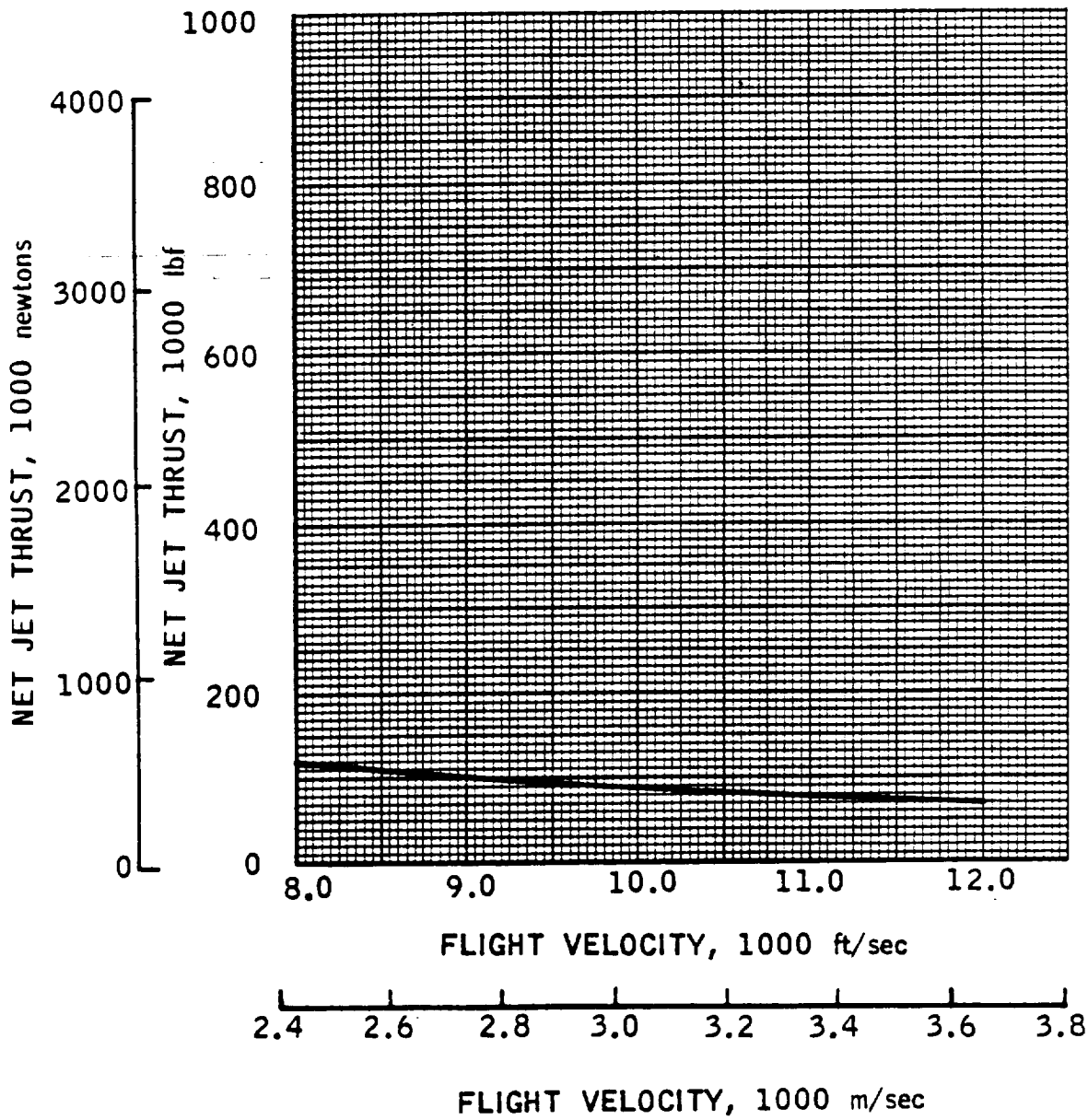

This Page Intentionally Blank

ENGINE FACT SHEET

Class 0 Composite Launch Vehicle Engines

Engine Identification Number: 13 Supercharged Basic Air Augmented Rocket

Engine Operating Modes

Summary: Number of Modes/ Transitions 4 ; Number of Discrete Modes Utilized 3

Mode Progression - Lift-off to Touch-down

(Take off) Supercharged air augmented rocket, simultaneous mixing and burning cycle (6000-8000 ft/sec) Rocket (Orbital speed, space maneuvering and deorbiting) Ducted fan (Flyback and landing)

Engine Propellant Requirements

Code: (R) = Required, (V) = Required for vacuum operation, (F) = Useable for flyback mode

- [R] Hydrogen, liquid, 37-40 °R
- [ ] Hydrogen, liquid, subcooled (25 °R)
- [ ] Hydrogen, gaseous
- [R] Oxygen, liquid, 162 °R
- [ ] Oxygen, liquid, subcooled
- [F] Oxygen, gaseous
- [ ] Other _____

Engine Constituent Subsystems

Inlet, fan, rocket, mixer-combustor, exit

Engine General Arrangement and Operating Schematic

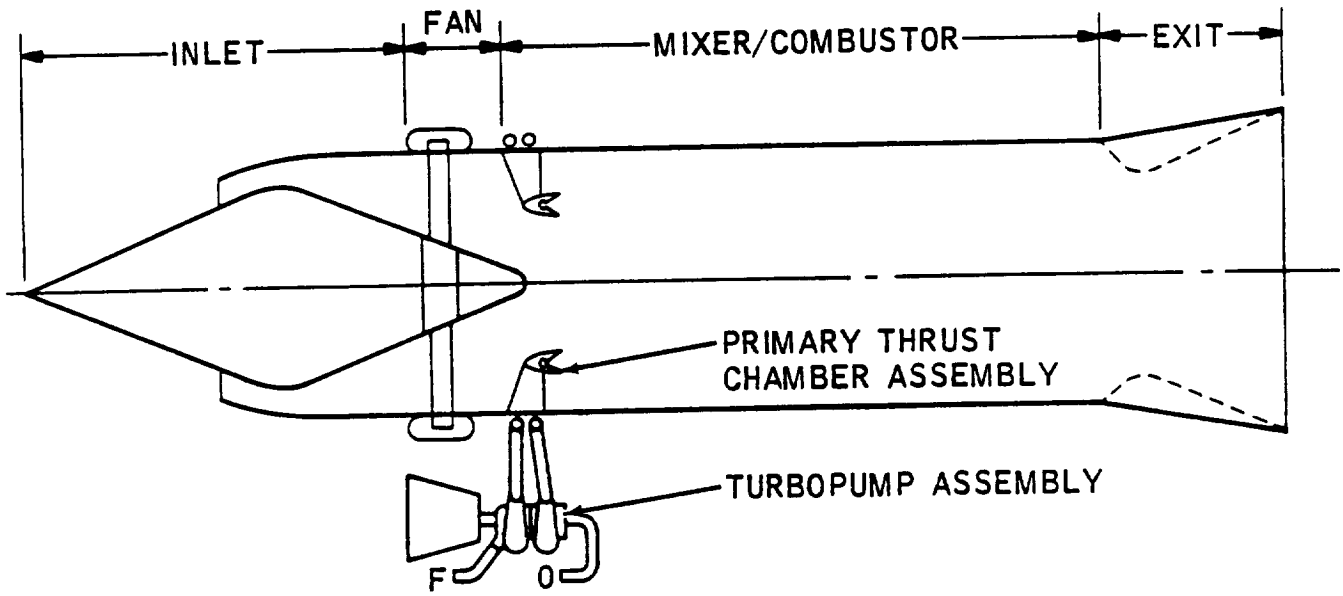

Eng. No. 13

Engine Internal Operating Parameters, nominal

$P_{c\text{-}RKT}$ = 1000 psia, O/F = 7.937
W_s/W_p = 2.70, A_4/A_3 = 1.00
FAN P.R. = 1.3

Engine Operating Mode Block Diagrams

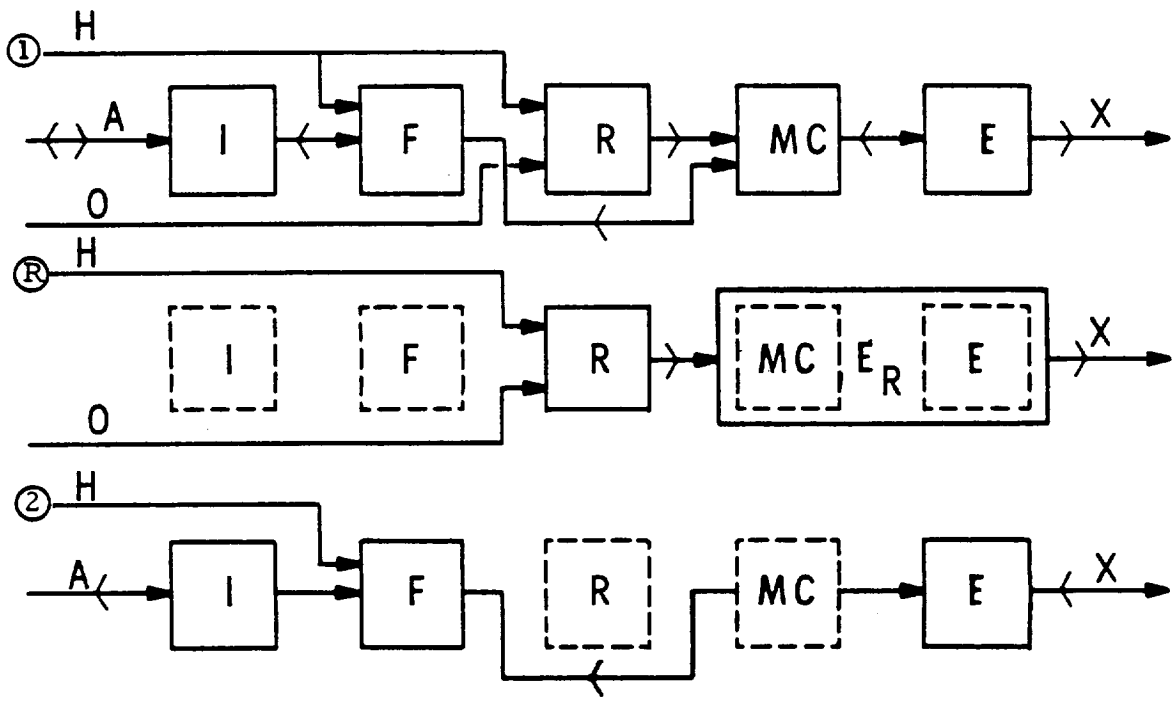

ENGINE PHYSICAL CHARACTERISTICS

Eng. No. 13

Thrust, sls	250,000 lbf	1,112,055 newton

Weight and Thrust/Weight Ratio

Measuring Units	(English)	(International)
Weight	lbm	kg
Thrust/Weight	lbf/lbm	newton/kg

Lightweight Estimate

(lbf/in^2) Maximum Engine Internal Pressure 1000 (newton/m^2)

Subsystems:	50	100	250	344.7	689.5	1723.7
Fan	3450	3450	3450	1564.9	1564.9	1564.9
Heat Exchanger						
Primary Rocket	2390	2390	2390	1084.1	1084.1	1084.1
Mixer/Diffuser	759	1104	1518	344.3	500.8	688.6
Combustor/Exit	1518	1725	2346	688.6	782.5	1064.1
Contingency	465	522	625	210.9	236.8	283.5
Uninstalled Eng. Wt.	8582	9191	10329	2892.8	4169.0	4685.2
Thrust/Weight, Uninst.	29.1	27.2	24.2	285	267	237
Inlet Weight	2765	3160	4582	1254.2	1433.4	2078.4
Installed Eng. Wt.	11347	12351	14911	5146.9	5602.4	6763.6
Thrust/Weight, Inst.	22.0	20.2	16.8	216	198	165

Heavyweight Estimate

Uninstalled Eng. Wt.	10298	11029	12395	4671.2	5002.8	5622.4
Thrust/Weight, Uninst.	24.3	22.7	20.2	238	223	198
Inlet Weight	11074	12656	17798	5023.2	5740.8	8073.2
Installed Eng. Wt.	21372	23685	30193	9694.3	10743.5	13695.5
Thrust/Weight, Inst.	11.7	10.6	8.3	115	104	81

Engine Flow Areas and Equivalent Diameters

	ft^2	ft	m^2	m
Inlet Cowl, A_c	79.1	10.03	7.35	3.06
Mixer, A_3	69.0	9.37	6.41	2.86
Combustor, A_4	69.0	9.37	6.41	2.86
Exit, A_6	110.0	11.83	10.22	3.61

Engine Lengths

	ft	m
Uninstalled	15.8	4.82
Inlet (Typ)	37.1	11.31
Installed (Typ)	52.9	16.12

REMARKS, REFERENCES

Supercharged basic, or simple air augmented rocket. No secondary fuel, but rocket permitted to have variable O/F ratio as a mechanism to add fuel for combustion down to fuel rich O/F = 4.0 (ϕ = 2.0). Pressure field effects included. (References 12, 13, 17, 18, 19, 21)

SPECIFIC IMPULSE
REFERENCE TRAJECTORIES

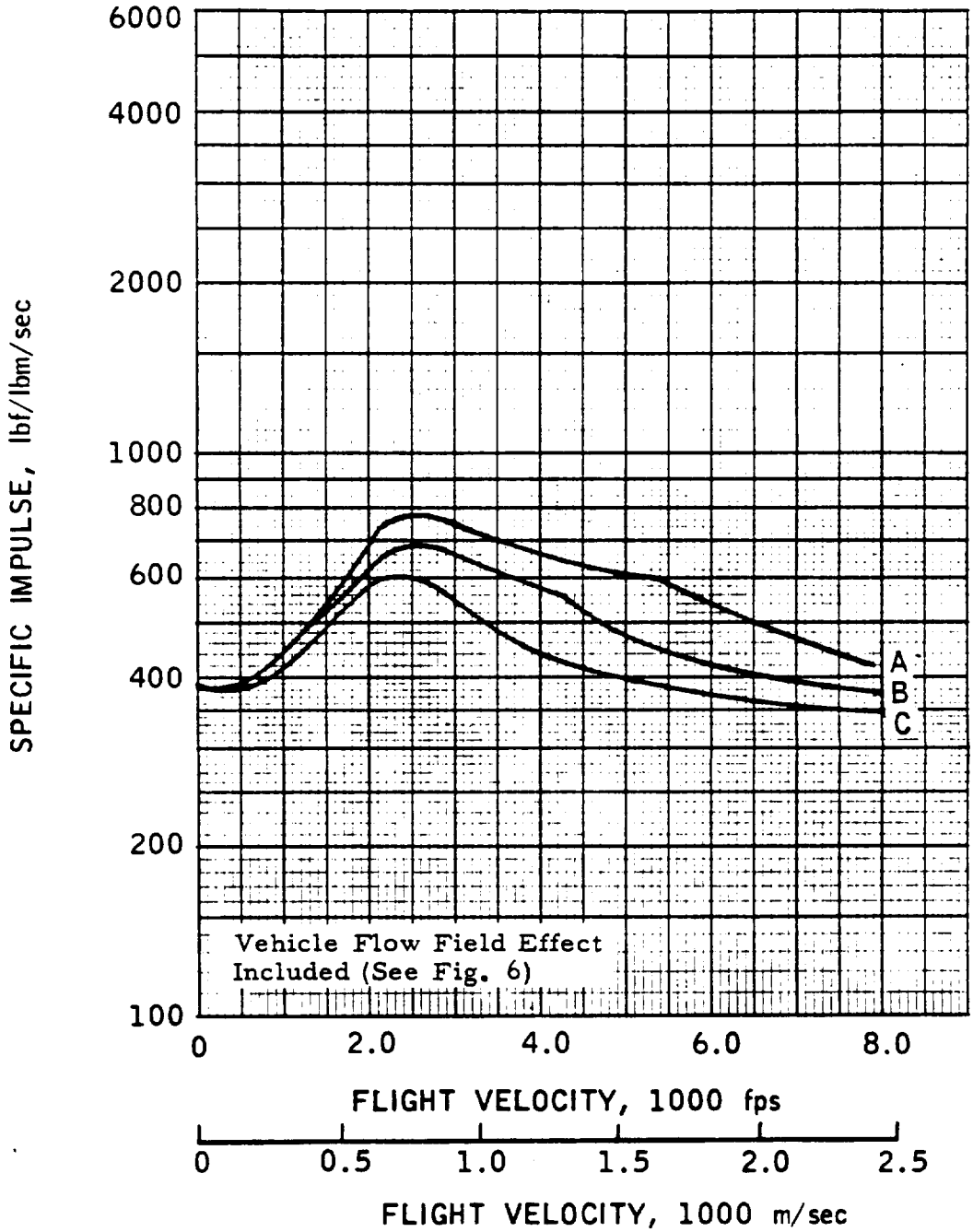

ENG. NO. 13

THRUST

REFERENCE TRAJECTORIES

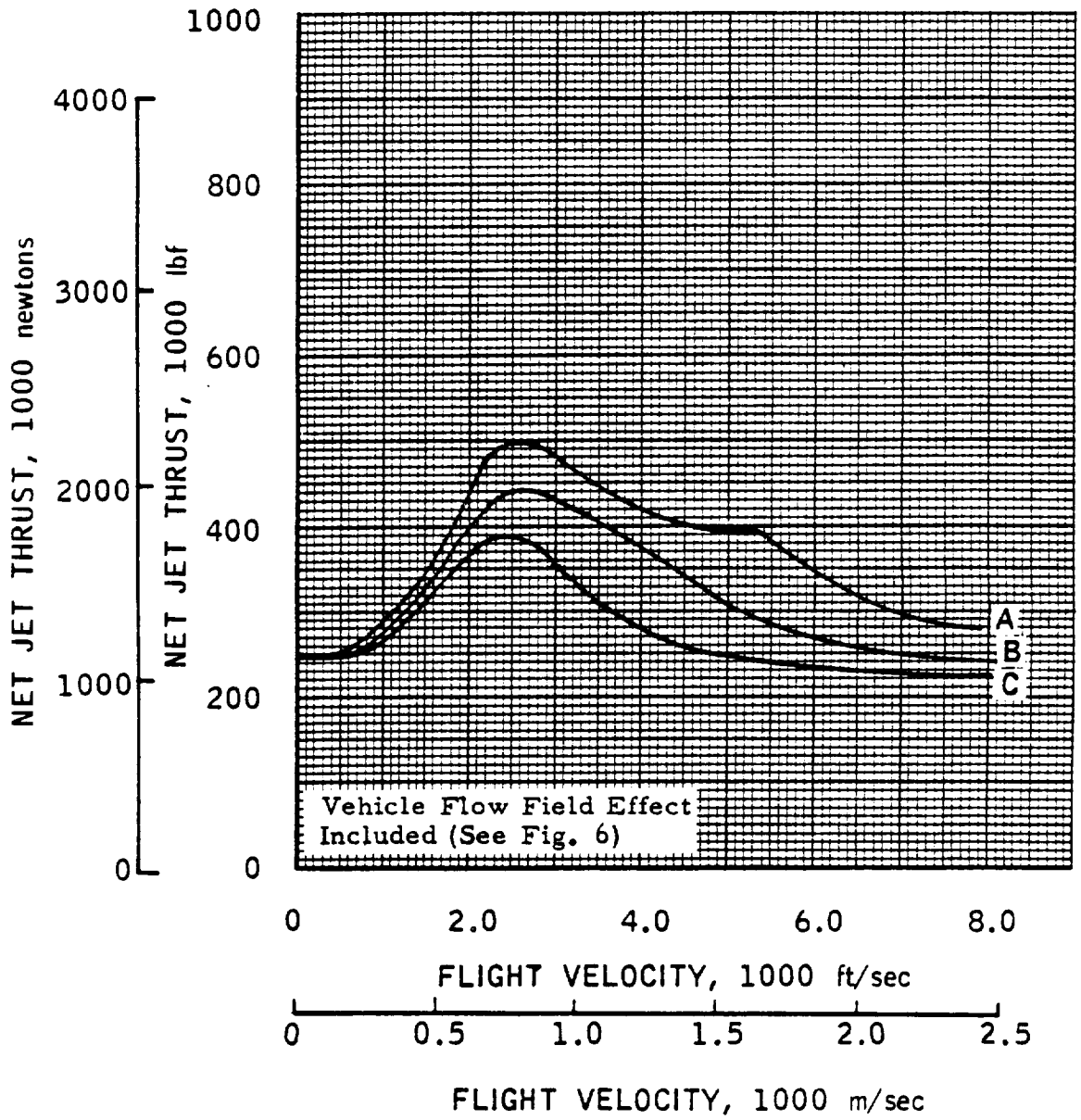

ENG. NO. 13

CAPTURE AREA

REFERENCE TRAJECTORIES

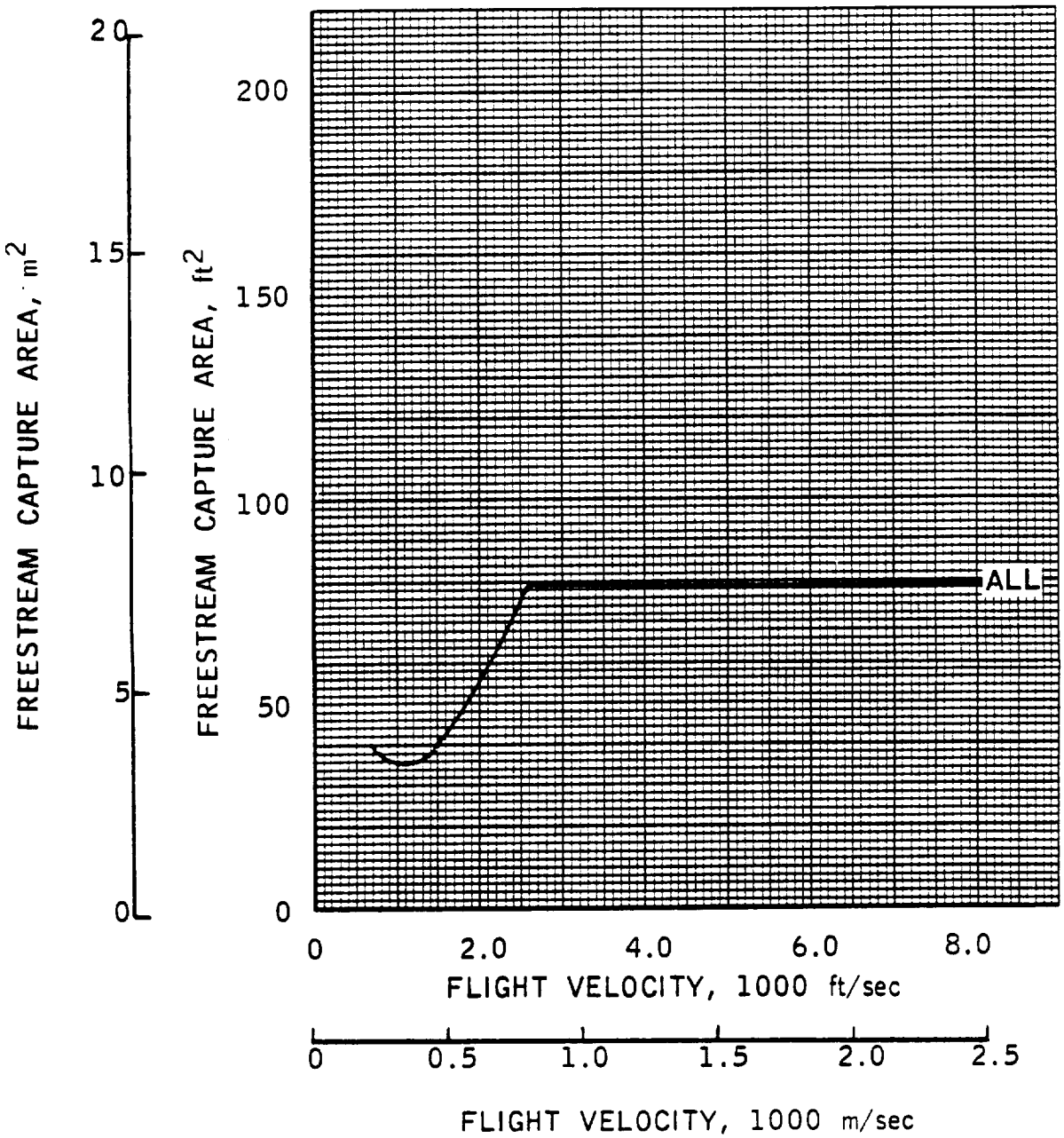

ENG. NO. 13

AIRFLOW

REFERENCE TRAJECTORIES

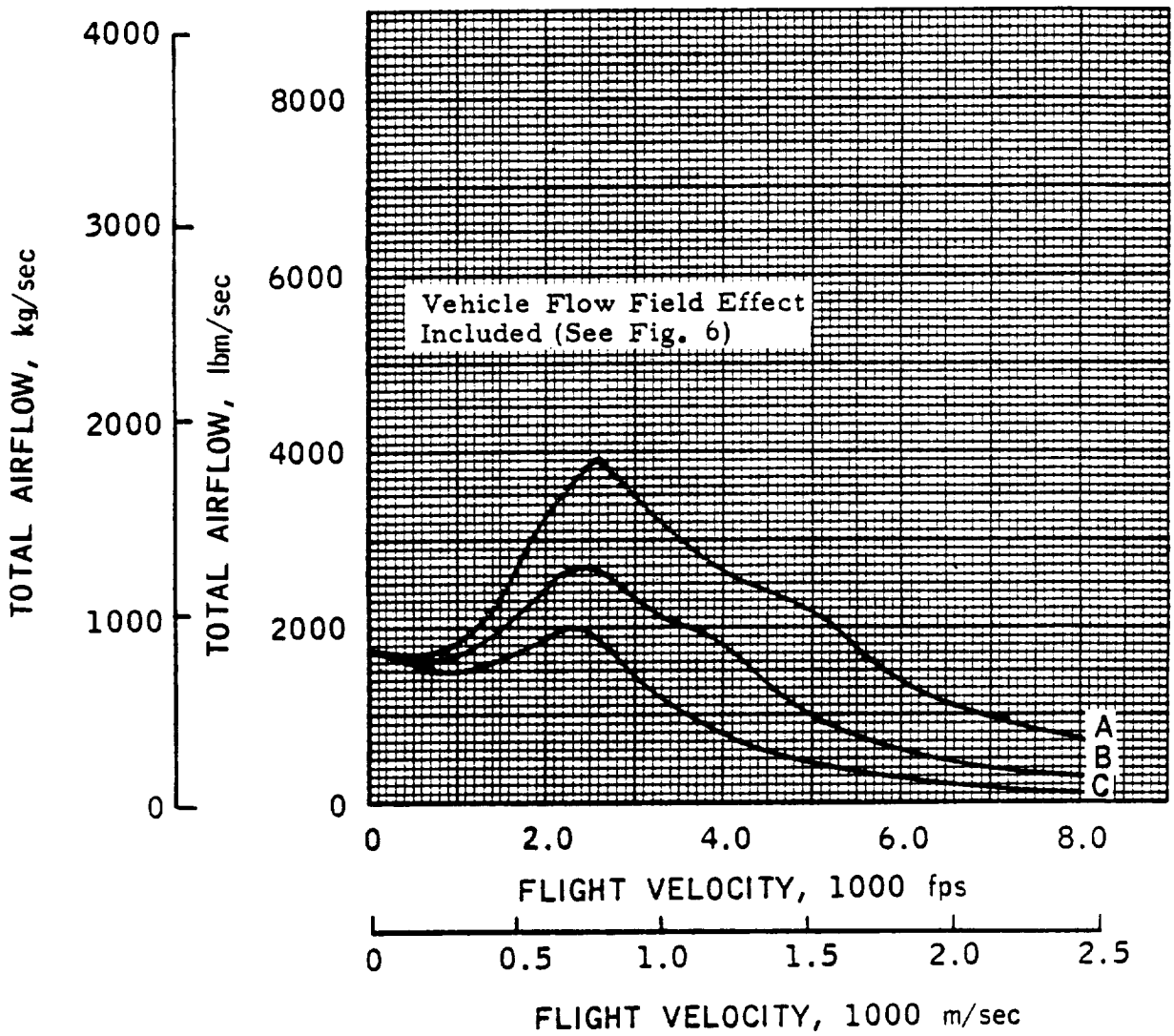

ENGINE- 13

ESTIMATED PERFORMANCE

MC	VC	FTC	PTC	T	CF	IS	SPC	PT2	H2	P2
				ALTITUDE -		0. FEET				
C.10	112.	124.7	14.8	251713.	83.16	390.	9.24	19.24	122.8	18.22
				ALTITUDE -		10000. FEET				
C.65	7CC.	125.7	13.4	25255C.	14.72	391.	9.21	17.45	123.8	16.53
C.7C	754.	127.3	14.C	262515.	13.69	406.	8.86	18.23	125.3	17.26
C.79	851.	13C.4	15.3	275762.	11.85	427.	8.43	19.83	128.4	18.78
				ALTITUDE -		20000. FEET				
1.C1	1047.	129.3	12.9	26952C.	11.C4	417.	8.63	16.83	127.3	15.94
1.21	1255.	138.8	16.6	302456.	8.48	468.	7.69	21.26	136.7	20.14
				ALTITUDE -		0. FEET				
1.45	15C4.	152.5	23.1	34494C.	6.19	534.	6.74	29.02	150.2	27.49
				ALTITUDE -		30000. FEET				
1.46	1453.	141.C	15.2	318872.	8.68	494.	7.29	19.05	138.8	18.04
1.71	17C1.	156.6	21.9	362734.	6.26	562.	6.41	26.99	154.3	25.56
2.C6	2049.	182.7	37.6	451227.	4.20	698.	5.15	44.80	180.0	42.44

ENGINE- 13

ESTIMATED PERFORMANCE

M2	WS	WP	WSWP	WFT	PHP	PHS	V6	PT2C	A0	A5	A6
ALTITUDE - 0. FEET											
0.280	1744.	646.	2.70	646.0	1.0	0.000	3469.	1.30	204.38	68.74	72.63
ALTITUDE - 10000. FEET											
0.280	1577.	646.	2.44	646.0	1.0	0.000	4153.	1.30	39.87	68.75	81.21
0.280	1636.	646.	2.53	646.0	1.0	0.067	4241.	1.30	38.42	68.75	82.37
0.280	1760.	646.	2.72	646.0	1.1	0.124	4310.	1.30	36.60	68.75	84.11
ALTITUDE - 20000. FEET											
0.280	1499.	646.	2.32	646.0	1.0	0.000	4774.	1.30	35.11	68.74	97.55
0.280	1830.	646.	2.83	646.0	1.1	0.119	4858.	1.28	35.74	68.74	103.96
ALTITUDE - 0. FEET											
0.280	2386.	646.	3.69	646.0	1.2	0.180	4843.	1.26	38.84	68.75	113.00
ALTITUDE - 30000. FEET											
0.280	1627.	646.	2.52	646.0	1.2	0.200	5205.	1.26	39.05	68.75	109.84
0.280	2190.	646.	3.39	646.0	1.3	0.244	4968.	1.23	44.81	68.75	109.88
0.280	3375.	646.	5.23	646.0	1.5	0.338	4722.	1.19	57.18	68.75	109.73

[redacted]

ENGINE- 13

ESTIMATED PERFORMANCE

MC	VC	HTC	PTC	T	CF	IS	SFC	PT2	H2	P2
				ALTITUDE - 4000. FEET						
1.91	1849.	161.9	18.6	351888.	6.83	545.	6.61	22.46	159.4	21.27
				ALTITUDE - 40000. FEET						
2.22	2149.	185.8	30.1	414551.	4.70	642.	5.61	35.34	183.0	33.48
2.69	2604.	229.0	62.6	509936.	3.21	789.	4.56	69.16	226.7	66.65
				ALTITUDE - 45500. FEET						
3.10	3000.	273.3	89.3	478728.	2.94	741.	4.86	92.85	272.0	91.15
				ALTITUDE - 50000. FEET						
2.40	2320.	201.1	24.6	390545.	5.32	605.	5.95	28.30	198.1	26.81
2.84	2750.	244.6	48.8	449835.	4.09	696.	5.17	53.52	242.8	52.06
				ALTITUDE - 54000. FEET						
3.10	3.	273.3	59.5	430812.	3.98	667.	5.40	61.86	272.0	60.73
				ALTITUDE - 60000. FEET						
2.89	2800.	250.2	32.7	382362.	5.41	592.	6.08	35.12	248.4	34.22

[redacted]

[redacted]

ENGINE- 13

ESTIMATED PERFORMANCE

M2	WS	WP	WSWP	WFT	PFF	PFS	V6	PT2C	AC	A5	A6
ALTITUDE - 4000. FEET											
0.280	1794.	646.	2.78	646.0	1.3	0.298	5240.	1.21	51.19	68.75	109.90
ALTITUDE - 40000. FEET											
0.280	2640.	646.	4.09	646.0	1.5	0.357	4970.	1.17	64.68	68.75	109.75
0.232	3931.	646.	6.09	646.0	2.0	0.504	4929.	1.11	79.12	67.86	109.67
ALTITUDE - 45500. FEET											
0.164	3491.	646.	5.40	646.0	2.0	0.567	5331.	1.04	79.06	61.91	109.42
ALTITUDE - 50000. FEET											
0.280	2036.	646.	3.15	646.0	1.5	0.512	5401.	1.15	74.43	68.75	109.94
0.201	2575.	646.	3.99	646.0	2.0	0.769	5582.	1.10	79.06	67.27	109.74
ALTITUDE - 54000. FEET											
0.164	2324.	646.	3.60	646.0	2.0	0.852	5867.	1.04	79.01	64.23	109.65
ALTITUDE - 60000. FEET											
0.195	1624.	646.	2.51	646.0	1.8	0.995	6113.	1.07	78.97	67.45	109.94

CONFIDENTIAL

ENGINE- 13

ESTIMATED PERFORMANCE

MC	VC	FTC	PTC	T	CF	IS	SPC	PT2	H2	P2
				ALTITUDE - 60000. FEET						
3.62	3504.	338.9	94.7	401108.	3.60	621.	5.80	68.41	337.6	67.45
4.39	4250.	454.3	264.3	419216.	2.53	649.	5.55	160.58	453.8	159.81
				ALTITUDE - 64000. FEET						
3.10	3000.	273.3	36.9	359877.	5.36	557.	6.46	38.36	272.0	37.66
				ALTITUDE - 70000. FEET						
4.43	4301.	463.6	172.5	360007.	3.43	557.	6.46	103.81	463.1	103.32
5.47	5311.	657.5	585.9	395917.	2.41	613.	5.87	256.44	657.2	256.02
				ALTITUDE - 80000. FEET						
3.94	3852.	391.8	56.9	291796.	5.66	452.	7.97	38.64	390.9	38.31
4.91	4800.	555.7	193.4	317267.	3.89	491.	7.33	102.58	555.3	102.31
6.14	6003.	815.1	739.5	341946.	2.62	529.	6.80	250.85	814.9	250.59
				ALTITUDE - 100000. FEET						
5.15	5103.	618.2	101.7	253792.	7.07	393.	9.16	49.68	617.9	49.58
6.16	6104.	842.2	300.1	267290.	5.13	414.	8.70	101.18	842.0	101.08
7.97	7898.	1343.8	1539.7	279998.	3.07	433.	8.31	247.40	1343.7	247.30

[redacted]

[redacted]

ENGINE- 13

ESTIMATED PERFORMANCE

M2	WS	WP	WSWP	WFT	PFP	PFS	V6	PT2C	AC	A5	A6
					ALTITUDE - 60000. FEET						
0.144	2047.	646.	3.17	646.0	2.0	0.967	6252.	0.72	78.77	60.62	109.64
0.085	2506.	646.	3.88	646.0	2.0	0.790	6757.	0.61	78.45	41.07	109.67
					ALTITUDE - 64000. FEET						
0.164	1440.	646.	2.23	646.0	1.7	0.992	6291.	1.04	78.92	65.22	109.66
					ALTITUDE - 70000. FEET						
0.083	1572.	646.	2.43	646.0	1.8	1.029	7181.	0.60	78.72	44.31	109.64
0.050	1989.	646.	3.08	646.0	2.0	0.995	8009.	0.44	79.11	25.84	109.78
					ALTITUDE - 80000. FEET						
0.114	861.	646.	1.33	646.0	1.4	0.979	7019.	0.68	78.90	57.74	109.69
0.063	1093.	646.	1.69	646.0	1.5	1.044	7785.	0.53	78.71	37.95	109.34
0.039	1399.	646.	2.17	646.0	1.7	1.022	8633.	0.34	79.01	21.62	109.60
					ALTITUDE - 100000. FEET						
0.057	453.	646.	0.70	646.0	1.2	0.951	8156.	0.49	78.83	43.43	109.66
0.039	549.	646.	0.85	646.0	1.3	0.975	8856.	0.34	78.63	29.39	109.79
0.026	744.	646.	1.15	646.0	1.3	0.997	9794.	0.16	78.87	16.32	109.65

[redacted]

ENGINE- 13

ESTIMATED PERFORMANCE

MC	VC	FTC	PTC	T	CF	IS	SPC	PT2	H2	P2
ALTITUDE - 120000. FEET										
6.51	6645.	986.1	174.7	234049.	9.61	362.	9.94	51.26	985.9	51.22
7.84	8003.	1383.3	571.2	243272.	6.68	377.	9.56	96.90	1383.1	96.86
ALTITUDE - 135000. FEET										
7.64	8001.	1388.1	258.7	224539.	12.07	348.	10.36	47.59	1387.9	47.56

[redacted]

[redacted]

ENGINE- 13

ESTIMATED PERFORMANCE

M2	WS	WP	WSWP	WFT	PFP	PFS	V6	PT2C	AC	A5	A6
ALTITUDE - 120000. FEET											
C.C35	236.	646.	C.37	646.C	1.1	C.523	8905.	0.29	78.89	37.05	109.91
C.C26	253.	646.	C.45	646.0	1.2	1.1C9	9624.	0.17	78.49	25.58	109.65
ALTITUDE - 135000. FEET											
C.C28	15C.	646.	C.23	646.C	1.C	0.732	9137.	0.18	78.81	35.99	109.7C

[redacted]

[redacted]

This Page Intentionally Blank

ENGINE FACT SHEET

Class 0 Composite Launch Vehicle Engines

Engine Identification Number: 14 Supercharged Basic Air Augmented Rocket - Ramjet

Engine Operating Modes

Summary: Number of Modes/ Transitions 5 ; Number of Discrete Modes Utilized 4

Mode Progression - Lift-off to Touch-down

(Take off) Supercharged air augmented rocket, simultaneous mixing and burning cycle (2000-3000 ft/sec) Ramjet, subsonic combustion (6000-8000 ft/sec) Rocket (Orbital speed, space maneuvering and deorbiting) Ramjet, subsonic combustion (Flyback) Ducted fan (Flyback and landing)

Engine Propellant Requirements

Code: (R) = Required, (V) = Required for vacuum operation, (F) = Useable for flyback mode

- [R] Hydrogen, liquid, 37-40 °R
- [ ] Hydrogen, liquid, subcooled (25 °R)
- [ ] Hydrogen, gaseous
- [R] Oxygen, liquid, 162 °R
- [ ] Oxygen, liquid, subcooled
- [F] Oxygen, gaseous
- [ ] Other _____

Engine Constituent Subsystems

Inlet, fan, rocket, mixer-combustor

Engine General Arrangement and Operating Schematic

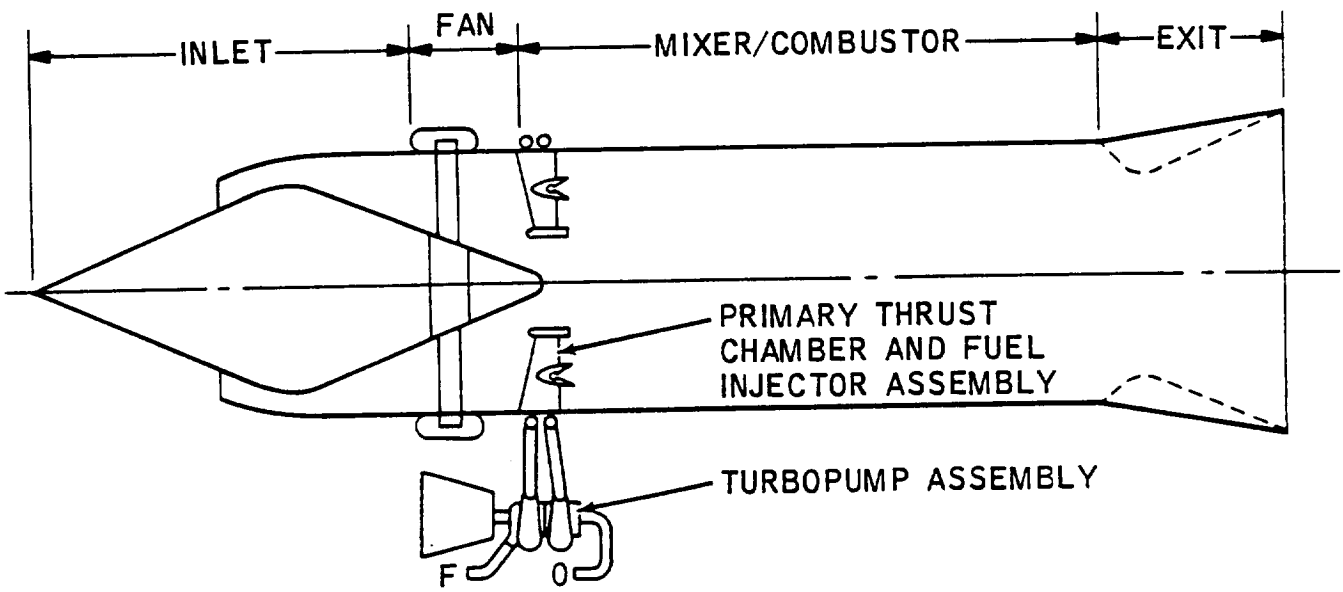

Eng. No. 14

Engine Internal Operating Parameters, nominal

$P_{c\text{-}RKT}$ = 1000 psia, O/F = 7.937
W_s/W_p = 2.70, A_4/A_3 = 1.00
FAN P.R. = 1.3

Engine Operating Mode Block Diagrams

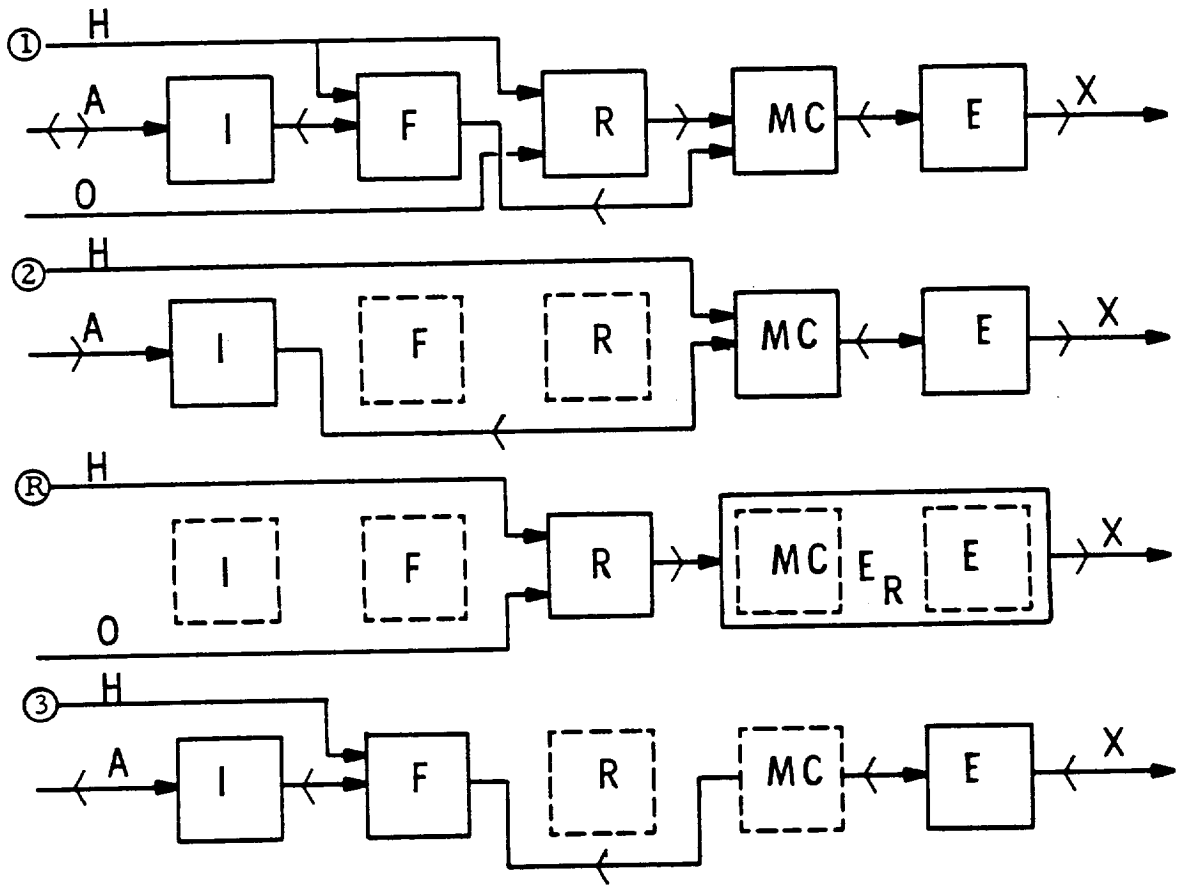

ENGINE PHYSICAL CHARACTERISTICS

Eng. No. 14

Thrust, sls	250,000 lbf	1,112,055 newton

Weight and Thrust/Weight Ratio

Measuring Units	(English)	(International)
Weight	lbm	kg
Thrust/Weight	lbf/lbm	newton/kg

(lbf/in^2) Maximum Engine Internal Pressure 1000 (newton/m^2)

Lightweight Estimate	50	100	250	344.7	689.5	1723.7
Subsystems:						
Fan	3450	3450	3450	1564.9	1564.9	1564.9
Heat Exchanger						
Primary Rocket	2390	2390	2390	1084.1	1084.1	1084.1
Mixer/Diffuser	759	1104	1518	344.3	500.8	688.6
Combustor/Exit	1518	1725	2346	688.6	782.5	1064.1
Contingency	465	522	625	210.9	236.8	283.5
Uninstalled Eng. Wt.	8582	9191	10329	2892.8	4169.0	4685.2
Thrust/Weight, Uninst.	29.1	27.2	24.2	285	267	237
Inlet Weight	2765	3160	4582	1254.2	1433.4	2078.4
Installed Eng. Wt.	11 347	12351	14911	5146.9	5602.4	6763.6
Thrust/Weight, Inst.	22.0	20.2	16.8	216	198	165

Heavyweight Estimate						
Uninstalled Eng. Wt.	10298	11 029	12395	4671.2	5002.8	5622.4
Thrust/Weight, Uninst.	24.3	22.7	20.2	238	223	198
Inlet Weight	11074	12656	17798	5023.2	5740.8	8073.2
Installed Eng. Wt.	21372	23 685	30193	9694.3	10743.5	13695.5
Thrust/Weight, Inst.	11.7	10.6	8.3	115	104	81

Engine Flow Areas and Equivalent Diameters

	ft^2	ft	m^2	m
Inlet Cowl, A_c	79.1	10.03	7.35	3.06
Mixer, A_3	69.0	9.37	6.41	2.86
Combustor, A_4	69.0	9.37	6.41	2.86
Exit, A_6	110.0	11.83	10.22	3.61

Engine Lengths

	ft	m
Uninstalled	15.8	4.82
Inlet (Typ)	37.1	11.31
Installed (Typ)	52.9	16.12

REMARKS, REFERENCES

Supercharged basic air augmented rocket with secondary fuel and ramjet capability (ϕ = 1.0) (References 12, 13, 18, 19, 21)

SPECIFIC IMPULSE
REFERENCE TRAJECTORIES

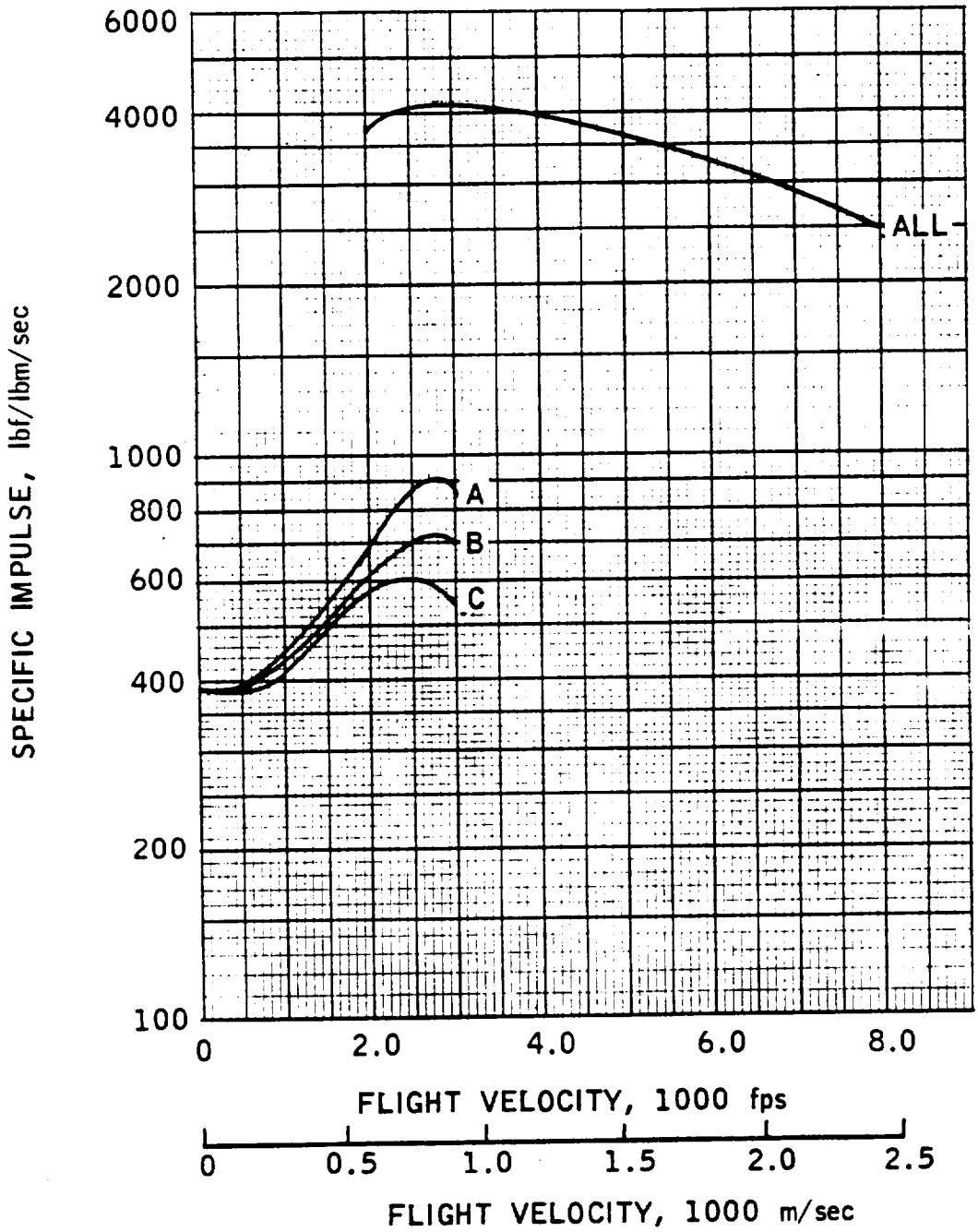

ENG. NO. 14

THRUST

REFERENCE TRAJECTORIES

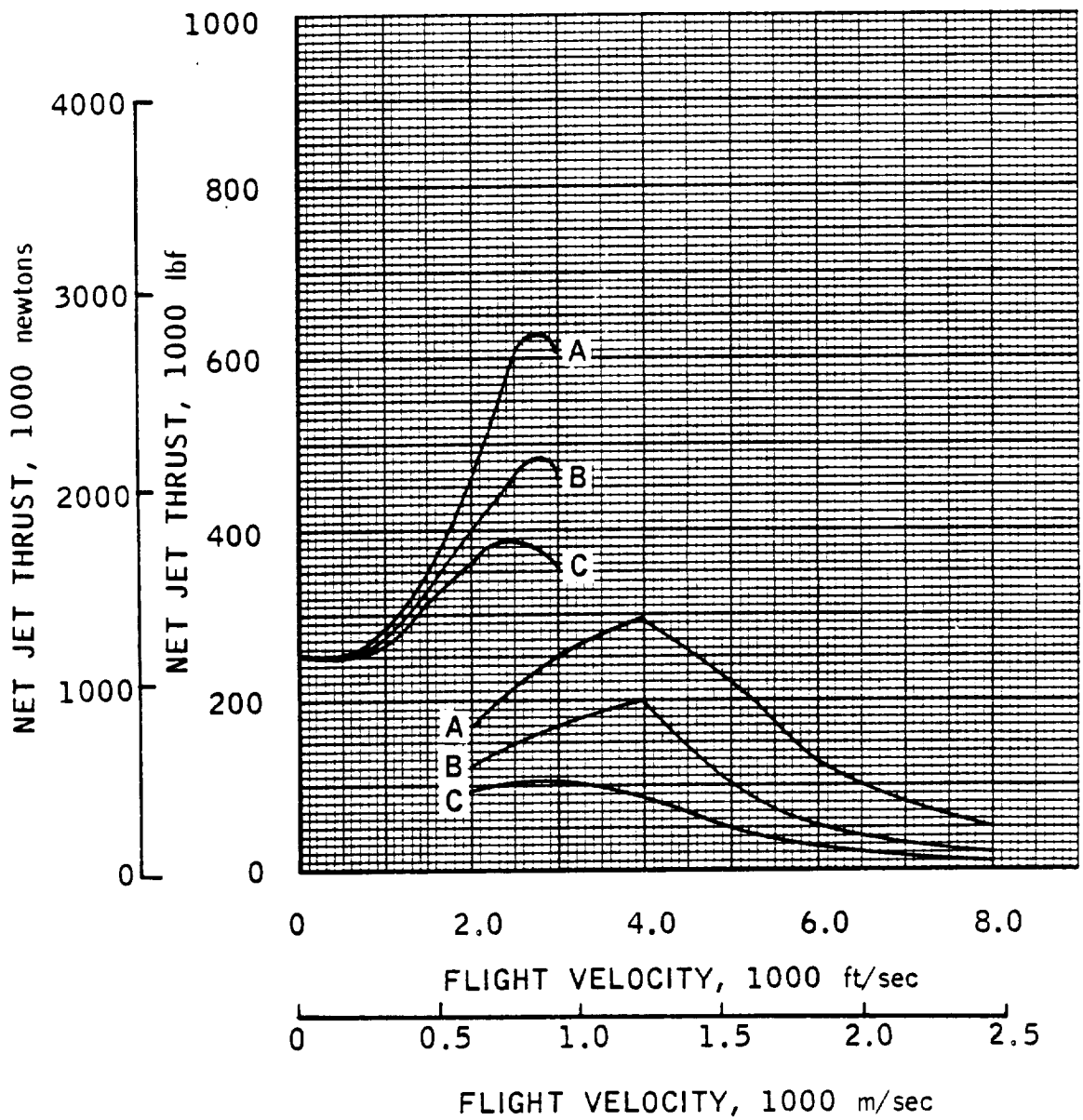

CAPTURE AREA

REFERENCE TRAJECTORIES

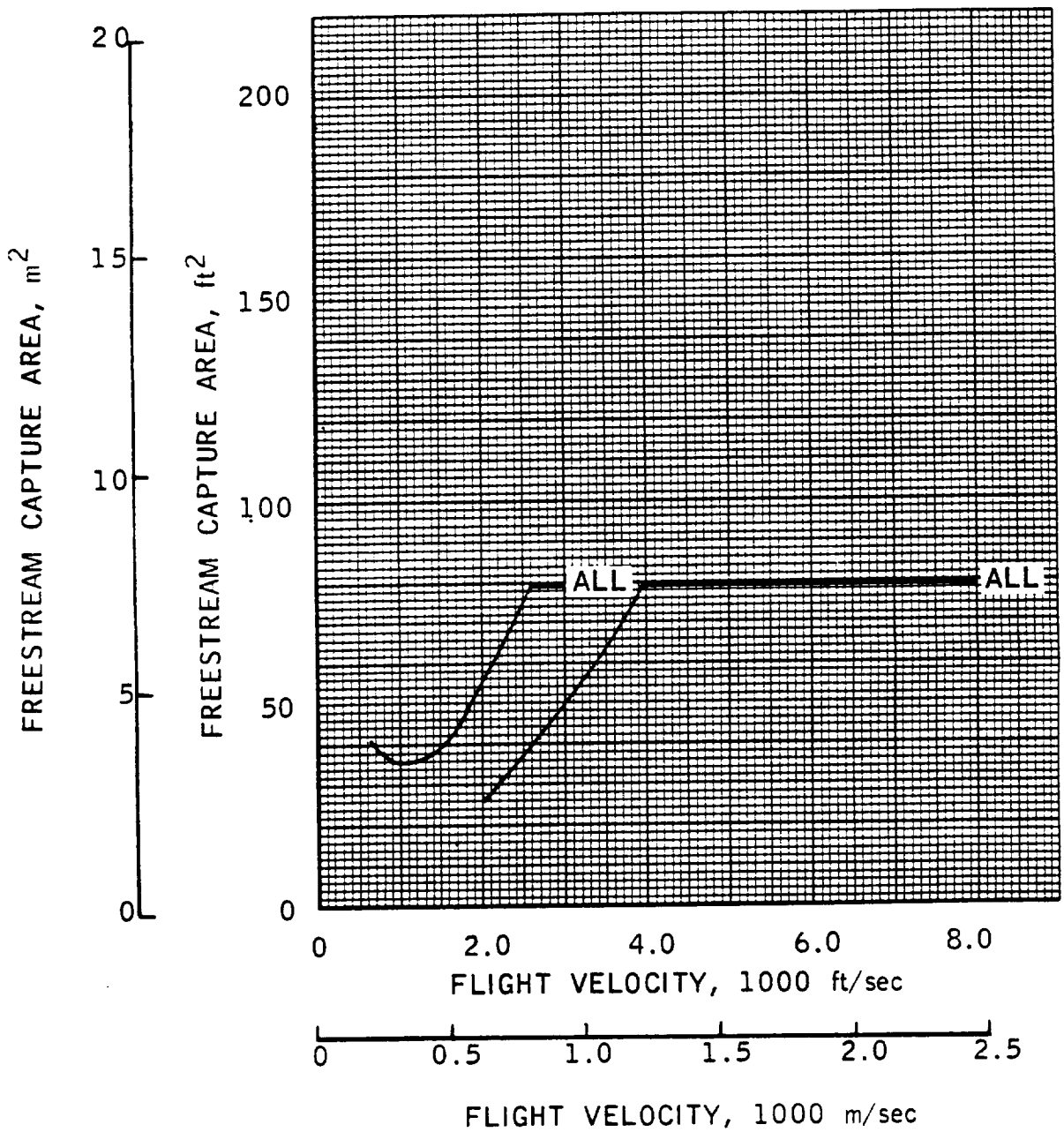

ENG. NO. 14

AIRFLOW

REFERENCE TRAJECTORIES

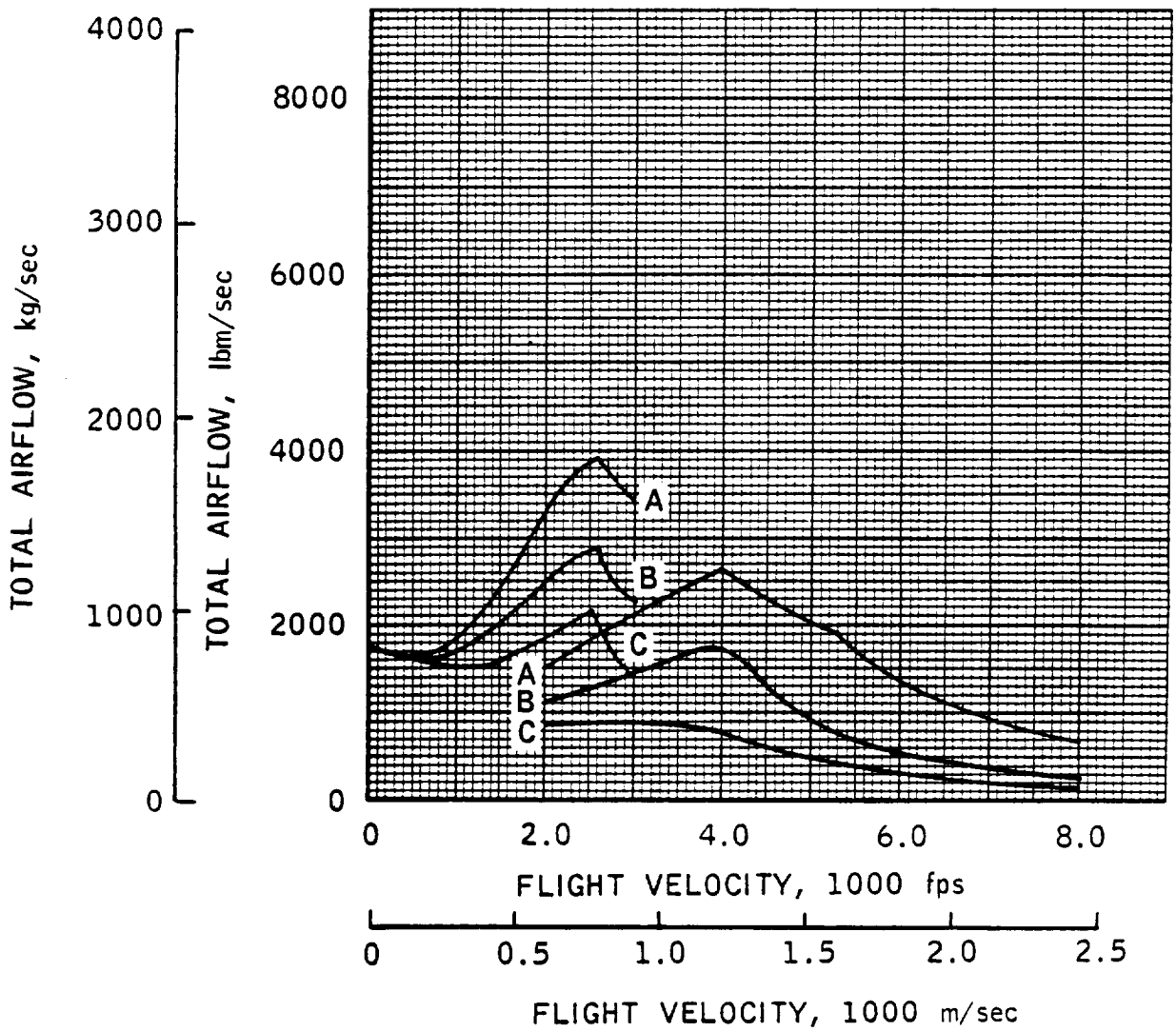

ENGINE- 14

ESTIMATED PERFORMANCE

MO	VO	HTO	PTO	T	CF	IS	SPC	PT2	H2	P2
				ALTITUDE -		0. FEET				
0.10	112.	124.7	14.8	251713.	83.16	390.	9.24	19.24	122.8	18.22
				ALTITUDE -		10000. FEET				
0.65	700.	125.7	13.4	252550.	14.72	391.	9.21	17.45	123.8	16.53
0.70	754.	127.3	14.0	262515.	13.69	406.	8.86	18.23	125.3	17.26
0.79	851.	130.4	15.3	275762.	11.85	427.	8.43	19.83	128.4	18.78
				ALTITUDE -		20000. FEET				
1.01	1047.	129.3	12.9	269520.	11.04	417.	8.63	16.83	127.3	15.94
1.21	1255.	138.8	16.6	302456.	8.48	468.	7.69	21.26	126.7	20.14
1.45	1504.	152.5	23.1	344940.	6.19	534.	6.74	29.02	150.2	27.49
				ALTITUDE -		30000. FEET				
1.46	1453.	141.0	15.2	318872.	8.68	494.	7.29	19.05	138.8	18.04
1.71	1701.	156.6	21.9	362734.	6.26	562.	6.41	26.99	154.3	25.56
2.06	2049.	182.7	37.6	451227.	4.20	698.	5.15	44.80	180.0	42.44
				ALTITUDE -		40000. FEET				
1.91	1849.	161.9	18.6	351888.	6.83	545.	6.61	22.46	159.4	21.27
2.22	2149.	185.8	30.1	414551.	4.70	642.	5.61	35.34	183.0	33.48

ENGINE- 14

ESTIMATED PERFORMANCE

M2	WS	WP	WSWP	WFT	PHP	PHS	V6	PT2C	AC	A5	A6
					ALTITUDE -		0. FEET				
0.280	1744.	646.	2.70	646.0	1.0	0.000	3469.	1.30	204.38	68.74	72.63
					ALTITUDE -		10000. FEET				
0.280	1577.	646.	2.44	646.0	1.0	0.000	4153.	1.30	39.87	68.75	81.21
0.280	1636.	646.	2.53	646.0	1.0	0.067	4241.	1.30	38.42	68.75	82.37
0.280	1760.	646.	2.72	646.0	1.1	0.124	4310.	1.30	36.60	68.75	84.11
					ALTITUDE -		20000. FEET				
0.280	1499.	646.	2.32	646.0	1.0	0.000	4774.	1.30	35.11	68.74	97.55
0.280	1830.	646.	2.83	646.0	1.1	0.119	4858.	1.28	35.74	68.74	103.96
0.280	2386.	646.	3.69	646.0	1.2	0.180	4843.	1.26	38.84	68.75	113.00
					ALTITUDE -		30000. FEET				
0.280	1627.	646.	2.52	646.0	1.2	0.200	5205.	1.26	39.05	68.75	109.84
0.280	2190.	646.	3.39	646.0	1.3	0.244	4968.	1.23	44.81	68.75	109.88
0.280	3375.	646.	5.23	646.0	1.5	0.338	4722.	1.19	57.18	68.75	109.73
					ALTITUDE -		40000. FEET				
0.280	1794.	646.	2.78	646.0	1.3	0.298	5240.	1.21	51.19	68.75	109.90
0.280	2640.	646.	4.09	646.0	1.5	0.357	4970.	1.17	64.68	68.75	109.75

ENGINE- 14

ESTIMATED PERFORMANCE

MC	VC	HTC	PTC	T	CF	IS	SPC	PT2	H2	P2
				ALTITUDE - 40000. FEET						
2.69	2604.	229.0	62.6	632574.	3.98	922.	3.90	69.16	226.7	66.65
				ALTITUDE - 45500. FEET						
3.10	3000.	273.3	89.3	605355.	3.72	875.	4.11	92.85	272.0	91.16
				ALTITUDE - 50000. FEET						
[illegible].40	2320.	201.1	24.6	390545.	5.32	605.	5.95	28.30	198.1	26.81
[illegible].84	2750.	244.6	48.8	499101.	4.54	751.	4.79	53.52	242.8	52.06
				ALTITUDE - 54000. FEET						
3.10	3000.	273.3	59.5	456163.	4.21	695.	5.18	61.86	272.0	60.73
				ALTITUDE - 60000. FEET						
2.89	2800.	250.2	32.7	382362.	5.41	592.	6.08	35.12	248.4	34.22
				ALTITUDE - 64000. FEET						
3.10	3000.	273.3	36.9	359877.	5.36	557.	6.46	38.36	272.0	37.66

[redacted]

ENGINE- 14

ESTIMATED PERFORMANCE

M2	WS	WP	WSWP	WFT	PHP	PHS	V6	PT2C	AC	A5	A6
					ALTITUDE - 40000. FEET						
C.232	3531.	646.	6.08	686.0	2.0	0.854	5568.	1.11	79.12	68.75	109.92
					ALTITUDE - 45500. FEET						
C.164	3488.	646.	5.40	692.0	2.0	1.018	6013.	1.04	78.97	65.79	109.73
					ALTITUDE - 50000. FEET						
.280	2036.	646.	3.15	646.0	1.5	0.512	5401.	1.15	74.43	68.75	109.94
.201	2575.	646.	3.99	664.0	2.0	1.019	5927.	1.10	79.06	68.20	109.65
					ALTITUDE - 54000. FEET						
C.164	2324.	646.	3.60	656.0	2.0	1.002	6054.	1.04	78.97	65.20	109.74
					ALTITUDE - 60000. FEET						
C.155	1624.	646.	2.51	646.0	1.8	0.595	6113.	1.07	78.97	67.45	109.94
					ALTITUDE - 64000. FEET						
C.164	1440.	646.	2.23	646.0	1.7	0.592	6291.	1.04	78.92	65.22	109.66

[redacted]

This Page Intentionally Blank

ENGINE FACT SHEET

Class 0 Composite Launch Vehicle Engines

Engine Identification Number: 15 Supercharged Basic Air Augmented Rocket - Convertible Ramjet

Engine Operating Modes

Summary: Number of Modes/ Transitions 6 ; Number of Discrete Modes Utilized 5

Mode Progression - Lift-off to Touch-down

(Take off) Supercharged air augmented rocket, simultaneous mixng and burning cycle (2000-3000 ft/sec) Ramjet, subsonic combustion (6000-8000 ft/sec) Ramjet supersonic combustion (10,000-14,000 ft/sec) Rocket (Orbital speed, space maneuvering and deorbiting) Ramjet, subsonic combustion (Flyback) Ducted fan (Flyback and landing)

Engine Propellant Requirements

Code: (R) = Required, (V) = Required for vacuum operation, (F) = Useable for flyback mode

- [R] Hydrogen, liquid, 37-40 °R
- [ ] Hydrogen, liquid, subcooled (25 °R)
- [ ] Hydrogen, gaseous
- [R] Oxygen, liquid, 162 °R
- [ ] Oxygen, liquid, subcooled
- [F] Oxygen, gaseous
- [ ] Other _____

Engine Constituent Subsystems

Inlet, fan, rocket, mixer-combustor

Engine General Arrangement and Operating Schematic

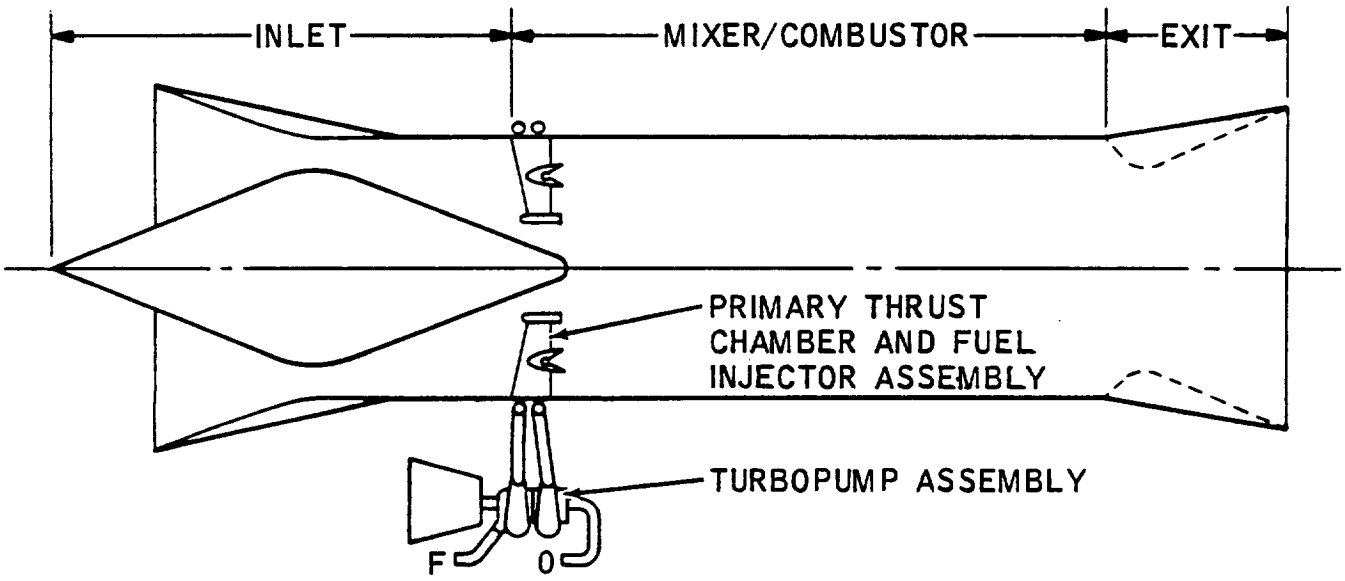

Eng. No. 15

Engine Internal Operating Parameters, nominal

$P_{c\text{-}RKT}$ = 1000 psia, O/F = 7.937
W_s/W_p = 2.70, A_4/A_3 = 1.00, A_c/A_3 = 1.15
FAN P.R. = 1.3

Engine Operating Mode Block Diagrams

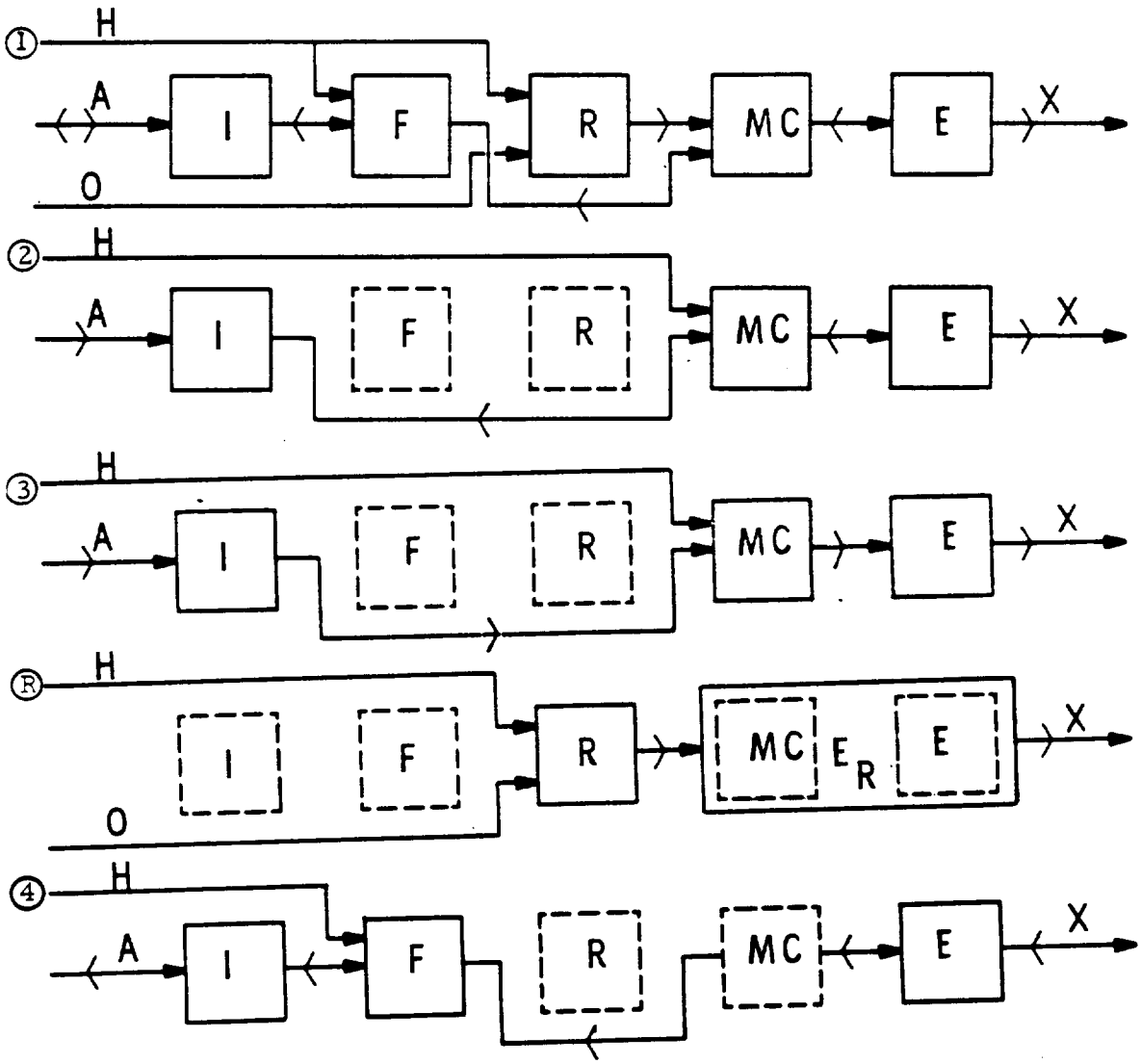

Eng. No. 15

The following information for Engine No. 15 appears in the fact sheets previously given for Engine No. 14.

Engine Physical Characteristics

Weight, Thrust/Weight, Flow Areas, Lengths

Engine Performance: 0-8000 ft/sec

Specific Impulse, Thrust, Airflow, Capture Area

References and additional remarks

SPECIFIC IMPULSE
REFERENCE TRAJECTORIES

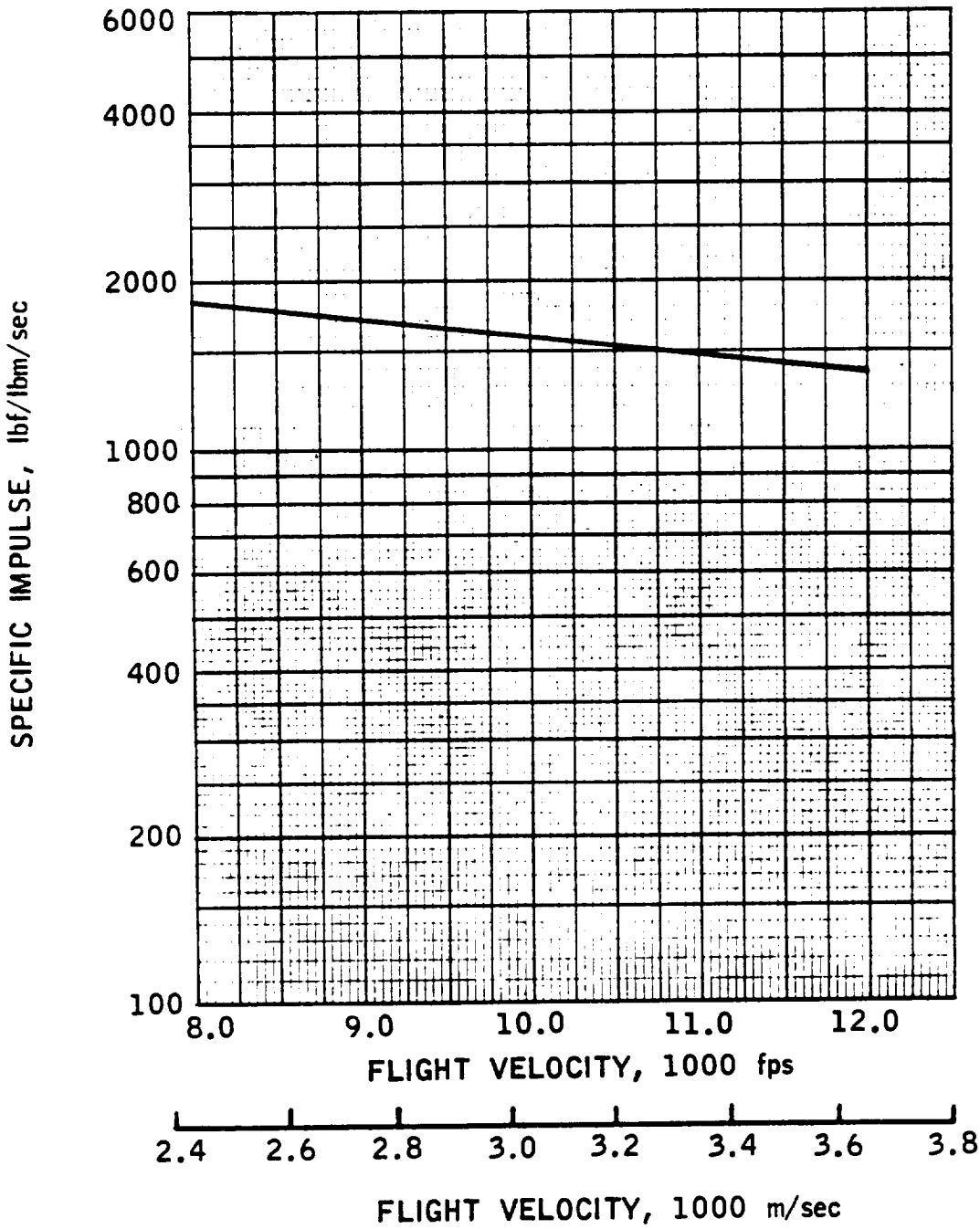

ENG. NO. 15

THRUST

REFERENCE TRAJECTORIES

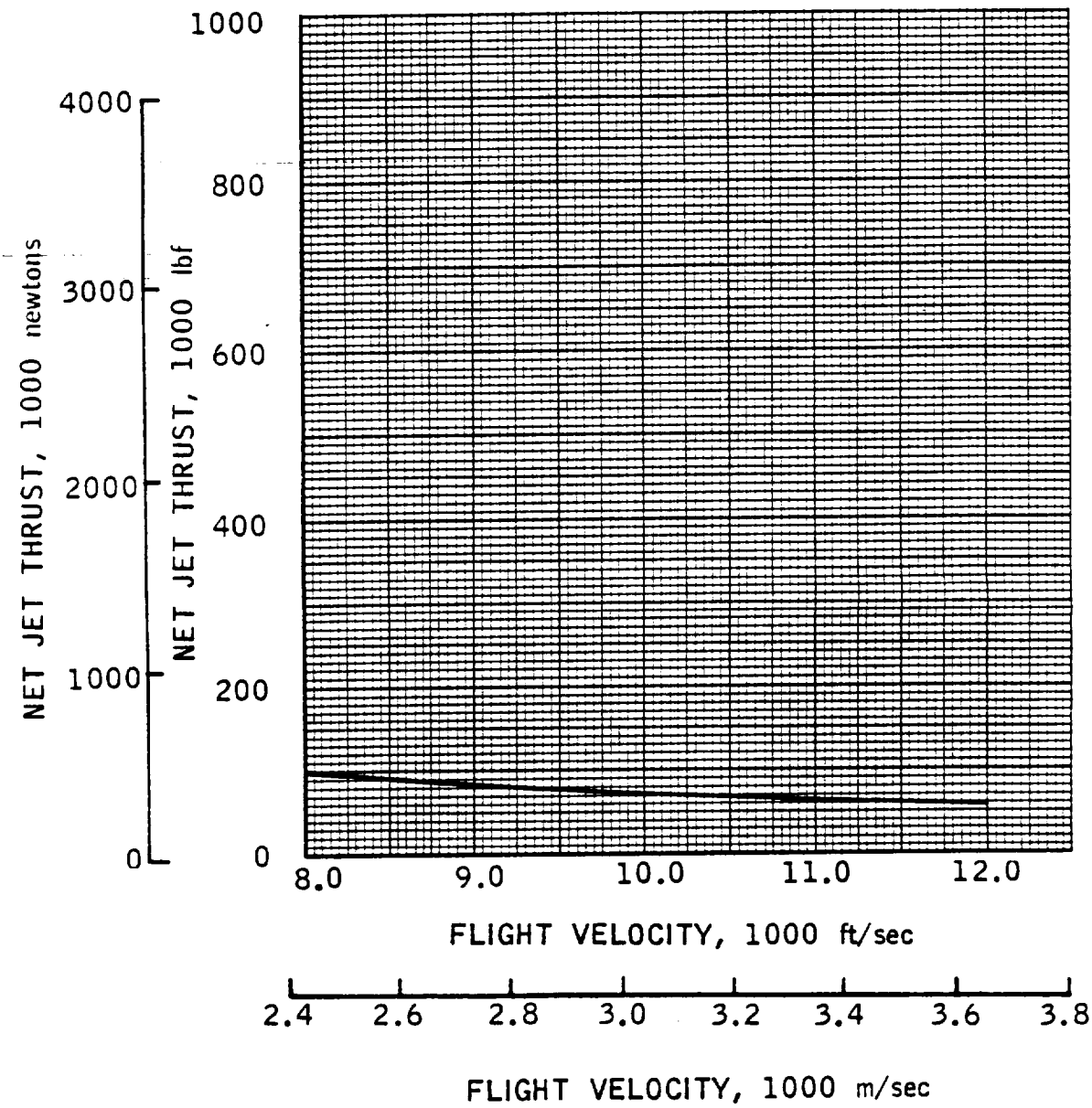

This Page Intentionally Blank

ENGINE FACT SHEET

Class 0 Composite Launch Vehicle Engines

Engine Identification Number: 16 Supercharged Basic Air Augmented Rocket - SCRAMJET

Engine Operating Modes

Summary: Number of Modes/ Transitions 5 ; Number of Discrete Modes Utilized 4

Mode Progression - Lift-off to Touch-down

(Take off) Supercharged air augmented rocket, simultaneous mixing and burning cycle (2000-3000 ft/sec) Ramjet, supersonic combustion (10,000-14,000 ft/sec) Rocket (Orbital speed, space maneuvering and deorbiting) Ramjet, supersonic combustion (Flyback) Ducted fan (Flyback and Landing)

Engine Propellant Requirements

Code: (R) = Required, (V) = Required for vacuum operation, (F) = Useable for flyback mode

- [F] Hydrogen, liquid, 37-40 °R
- [ ] Hydrogen, liquid, subcooled (25 °R)
- [ ] Hydrogen, gaseous
- [R] Oxygen, liquid, 162 °R
- [ ] Oxygen, liquid, subcooled
- [F] Oxygen, gaseous
- [ ] Other _____

Engine Constituent Subsystems

Inlet, fan, rocket, mixer-combustor

Engine General Arrangement and Operating Schematic

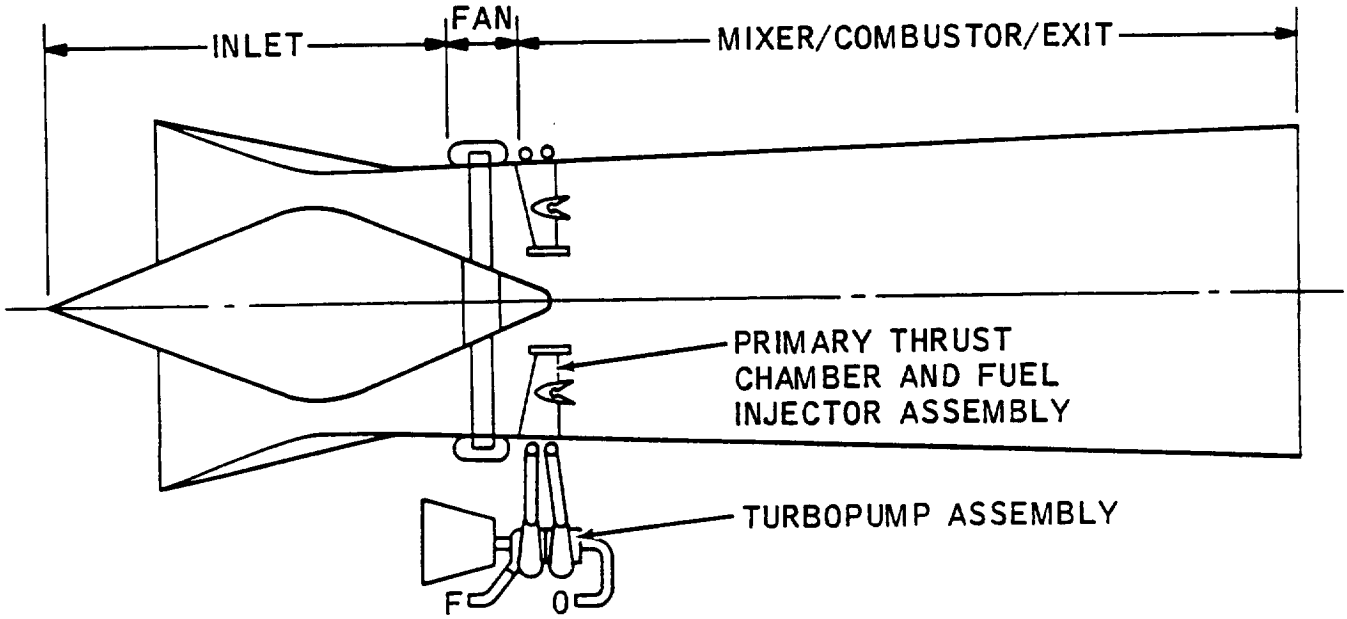

Eng. No. 16

Engine Internal Operating Parameters, nominal

$P_{c\text{-}RKT}$ = 1000 psia, O/F = 7.937
W_s/W_p = 2.70, A_4/A_3 = 1.00, A_c/A_3 = 1.15
FAN P.R. = 1.3

Engine Operating Mode Block Diagrams

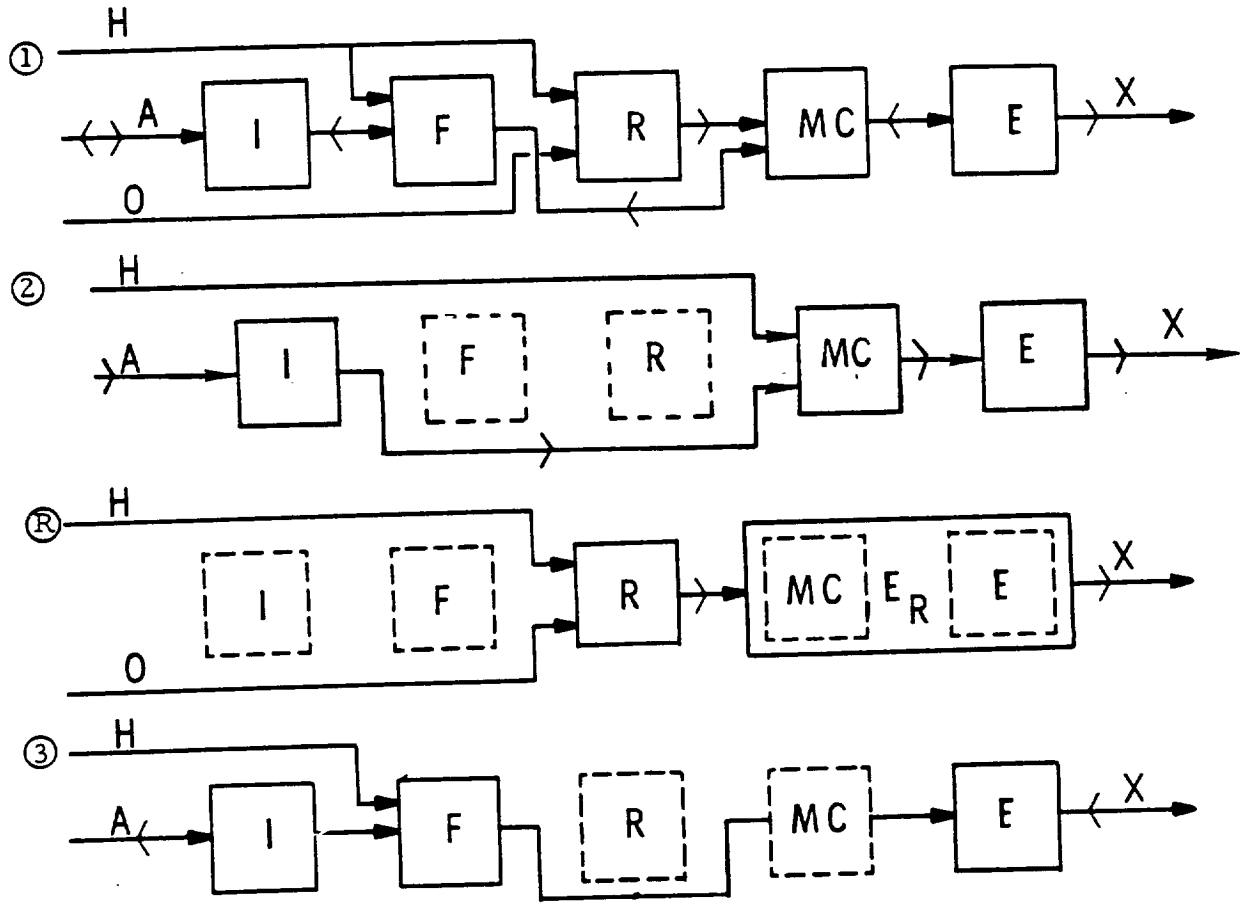

Eng. No. 16

The following information for Engine No. 16 appears in the fact sheets previously given for Engine No. 13.

Engine Physical Characteristics

Weight, Thrust/Weight, Flow Areas, Lengths

Engine Performance: 0-8000 ft/sec

Specific Impulse, Thrust, Airflow, Capture Area

References and additional remarks

ENG. NO. 16

SPECIFIC IMPULSE
REFERENCE TRAJECTORIES

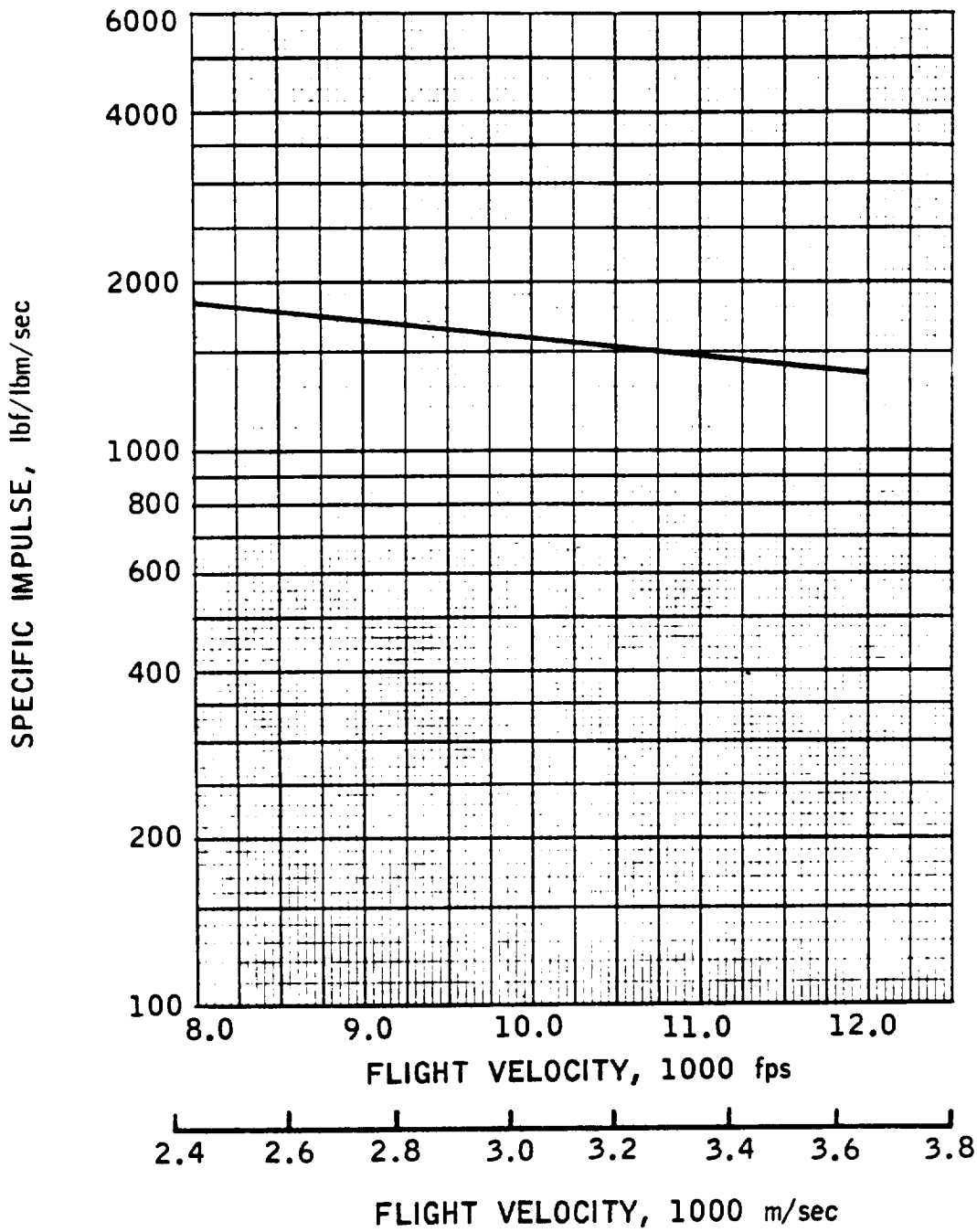

ENG. NO. 16

THRUST

REFERENCE TRAJECTORIES

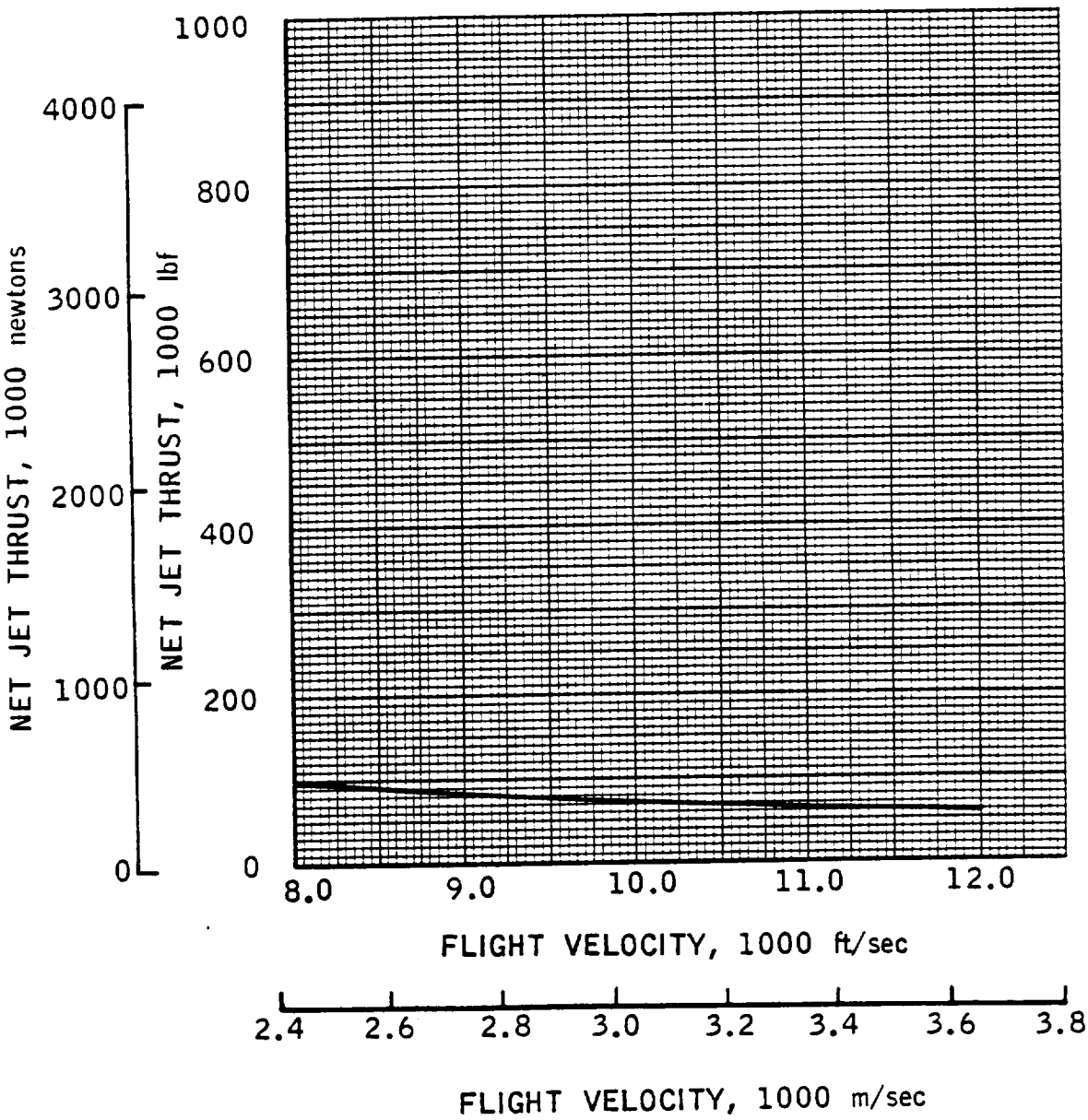

This Page Intentionally Blank

NOMENCLATURE

Nomenclature used in this report is given below. The tabulated computer printout information does not include subscripting as will be noted by the repetition of certain parameter symbols. Refer to Figure 12 for engine flow area station designations including the distinction made between A_∞ and A_o where a vehicle flow field is involved (where there is no flow field these are identical).

AB	-	Afterburner
A_4/A_3	-	Afterburner/Mixer Diffusion Ratio
A_5	-	Engine nozzle throat area, ft^2
A_6	-	Engine nozzle exit area, ft^2
A_6/A_5	-	Exit Nozzle Expansion Area Ratio
A_6/A_c	-	Exit to Capture Area Ratio (SCRAMJET)
AHX	-	Inlet capture area for heat exchanger air flow, ft^2
AO	-	Inlet capture area for secondary air flow, ft^2
ACT	-	Inlet capture area for total air flow, ft^2
BL	-	Baseline
C_F, CF	-	Thrust Coefficient based on inlet capture area
H2	-	Secondary air static enthalpy at mixer entrance, Btu/lb
HTO	-	Ambient Total Enthalpy, Btu/lb
I_{sp}, IS	-	Specific Impulse, $lb_f/lb_m/sec$ (Net Jet)*
M_o, MO	-	Local Mach Number
M2	-	Mixer entrance Mach number
NS	-	"Normal Shock" inlet (Includes Normal Shock losses plus an assumed 90% diffuser efficiency.)
O/F	-	Oxidizer/fuel mass flow ratio
P2	-	Secondary air static pressure at mixer entrance, Btu/lb
P_c	-	Primary chamber pressure, psia
PR_f	-	Fan pressure ratio
P_{T_2}, PT2	-	Inlet recovered total pressure, psia
P_{T2}/P_{TO}, PT2O	-	Inlet total pressure recovery
PTO	-	Ambient total pressure, psia

R	-	Rocket Mode
Ref	-	Reference
SLS	-	Sea Level, Static Conditions
SPC	-	Specific Fuel or propellant consumption, $lb_m/hr\text{-}lb_f$
T	-	Thrust, lb_f (Net Jet)*
V6	-	Exit velocity, ft/sec
V_o, VO	-	Local velocity, ft/sec
WFT	-	Total fuel or propellant flow rate, lb_m/sec
WHX	-	Heat exchanger air flow rate, lb_m/sec
W_P, WP	-	Primary flow rate, lb_m/sec
W_S/W_P, WSWP	-	Secondary/primary flow ratio
W_S, WS	-	Secondary (WS + WHX), lb_m/sec
WT	-	Total air flow
δ	-	Two dimensional wedge half angle, deg
η_c	-	Combustion efficiency based on enthalpy rise
η_c*	-	Characteristic velocity efficiency based on velocity, or thrust
η_{KE}	-	Inlet kinetic energy process efficiency
η_M	-	Mixing Efficiency based on static pressure rise
η_N	-	Nozzle efficiency based on stream thrust
ϕ, ϕ_{AB}	-	Combustor equivalence ratio
ϕ_{cond}	-	Condenser equivalence ratio
ϕ_{HX}	-	Heat exchanger equivalence ratio
ϕ_P, PHP	-	Primary rocket equivalence ratio
ϕ_{prec}, ϕ_{PC}	-	Precooler equivalence ratio
ϕ_{sec}, PHS	-	Secondary equivalence ratio

Special Subscripts

FF	-	Flow Field
FS	-	Freestream

* Net jet thrust and specific impulse includes air induction inlet momentum penalty, but does not include external drag such as cowl, induced, friction, or spillage drag

REFERENCES

1. Summary Report, "A Study of Composite Propulsion Systems For Advanced Launch Vehicle Applications", Contract NAS7-377, Marquardt Report 25,194, Volume 1, September 1966. CONFIDENTIAL (Title-Unclassified)

2. Main Technical Report, "A Study of Composite Propulsion System For Advanced Launch Vehicle Applications", Contract NAS7-377, Marquardt Report 25,194, Volumes 2 and 3, September 1966. CONFIDENTIAL (Title-Unclassified)

3. Class 1 Engine Information (Twelve Engines), "A Study of Composite Propulsion Systems for Advanced Launch Vehicle Applications", Contract NAS7-377, Marquardt Report 25,194, Volume 6, September 1966. CONFIDENTIAL (Title-Unclassified)

4. Class 2 Engine Information, "A Study of Composite Propulsion Systems For Advanced Launch Vehicle Applications", Contract NAS7-377, Marquardt Report 25,194, Volume 7, September 1966. CONFIDENTIAL (Title-Unclassified)

5. "Final Summary Technical Report on the Calendar Year 1963, Ramjet Technology Program", Volume 2 of 12, "Jet Compressor Research-Ejector Ramjet Investigation", The Marquardt Corporation Report No. 25,116, April 1964. CONFIDENTIAL (Title-Unclassified)

6. Cox, P. B., "Phase I Summary Technical Report of the CY 1962 Air Force-Marquardt Contributing Engineering Program", Volume III of VIII, "Advanced Engine Concepts and Advanced Logistics Systems Studies", Marquardt Report No. 25,065, March 1963. CONFIDENTIAL (Title-Unclassified)

7. Cox, P. B., "Phase I Summary Technical Report of the CY 1962 Air Force-Marquardt Contributing Engineering Program", Volume I of VIII, "Program Summaries Electromagnetic Ramjet Research and Advanced Liquid Air Cycle Concepts", Marquardt Report No. 25,065, March 1963. CONFIDENTIAL (Title-Unclassified)

8. Cox, P. B., "Phase I Summary Technical Report of the CY 1962 Air Force-Marquardt Contributing Engineering Program", Volume II of VIII, "Jet Compressor Research", Marquardt Report No. 25,065, March 1963. CONFIDENTIAL (Title-Unclassified)

9. Pucker, M. E., "Advanced LACE-Air Collection and Enrichment Systems, Final Summary Report", Rocketdyne Report R-5255, 30 September 1963. CONFIDENTIAL (Title-Unclassified)

10. Hearth, D. P., Brema, A., and Hedman, P., "Final Summary Report, Hypersonic Ramjet Engine Program, Volume I", Contract AF33(600)-37921, Report No. 25,020, 28 March 1960. CONFIDENTIAL (Title-Unclassified)

11. Escher, W. J. D., et al, "MA158 Launch Vehicle Engine Preliminary Information", Marquardt Report MR 20,316, March 1965. CONFIDENTIAL (Title-Unclassified)

12. Goldsmith, R. H., "Lift-Fan Technology", Astronautics and Aeronautics, September 1965, Unclassified.

13. Kutney, John T., "Propulsion System Development for V/STOL Transports", AIAA Paper No. 64-606, August 1964, Unclassified.

14. Brown, M. L., and Builder, C. H., "Hypersonic, Air-Breathing Engine Research Program, Annual Report", Contract AF33(616)-7046, Marquardt Report 5838, 31 March 1961, CONFIDENTIAL (Title-Unclassified)

15. Builder, C. H. and Kroll, R. W., "Preliminary Model Specification MA70-XAA Liquid Air Cycle Engine", Marquardt Report No. MR 20,100, June 1960. CONFIDENTIAL (Title-Unclassified)

16. "The Liquid Propellant Hyperjet", Marquardt Report S-122, January 1959, CONFIDENTIAL (Title-Unclassified).

17. "Air Augmented Rocket Propulsion Study", Final Report on Contract NAS4-661, Marquardt Report No. 25,148, November 1964. CONFIDENTIAL (Title-Unclassified)

18. "Investigation of Vehicle-Integrated Rocket Powerplants with Air Augmentation", Final Report on Contract NAS8-11017. CONFIDENTIAL (Title-Unclassified)

19. Mossman, E. A., Rozycki, R. C., and Holle, G. F., "RENE-A Concept for Thrust Augmentation of Rocket Engines", Martin-Denver Research Report R-63-16, October 1963. CONFIDENTIAL (Title-Unclassified)

20. Flornes, B. J. and Stroup, K. E., "1964 Advanced Ramjet Concepts Program", Volume I of VI, "Advanced Jet Compression Engine Concepts", Technical Report AFAPL-TR-65-32, May 1965. CONFIDENTIAL (Title-Unclassified)

21. Brown, M. L., Woodgrift, K. E., Ozawa, R. I., "Applied Research and Advanced Technology for the Supersonic Combustion Ramjet for 1964, Part I. Design and Analysis, Fuel Injection and Combustion, Nozzles, Structures, and Control System Studies", Technical Report AFAPL-TR-65-15, Part 1, The Marquardt Corporation, April 1965. CONFIDENTIAL (Title-Unclassified)

22. "Interim Report--Toroidal Systems Analysis Study", Rocketdyne Report R-6226, 30 June 1965. CONFIDENTIAL (Title-Unclassified)

DISTRIBUTION

Copy No.	Transmitted to
1.	NASA Office of Resident Representative Jet Propulsion Laboratory 4800 Oak Grove Drive Pasadena, California 91103 Attn.: Office of Technical Information
2.	NASA Office of Resident Representative Jet Propulsion Laboratory 4800 Oak Grove Drive Pasadena, California 91103 Attn.: Contracts Management Division
3.	NASA Office of Resident Representative Jet Propulsion Laboratory 4800 Oak Grove Drive Pasadena, California 91103 Attn.: General Counsel for Patent Matters
4 to 7.	NASA Headquarters Washington, D. C. 20546 Attn.: Chief, Liquid Propulsion Technology, RPL Office of Advanced Research and Technology
8 to 32.	NASA Scientific and Technical Information Facility P. O. Box 33 College Park, Maryland 20740
33.	NASA Headquarters Washington, D. C. 20546 Attn.: Mr. Vincent L. Johnson Director, Launch Vehicles and Propulsion, SV Office of Space Science and Applications
34.	NASA Headquarters Washington, D. C. 20546 Attn.: Mr. Edward L. Gray Director, Advanced Manned Missions, MT Office of Manned Space Flight
35.	NASA Ames Research Center Moffett Field, California 24035 Attn.: Mr. Clarence A. Syvertson Mission Analysis Division

DISTRIBUTION (Continued)

Copy No.	Transmitted to
36.	Marshall Space Flight Center Huntsville, Alabama 35812 Attn.: Technical Monitor Mr. Donald Thompson
37.	Langley Research Center Langley Station Hampton, Virginia 23365 Attn.: Mr. Kenneth Pierpont
38.	NASA Ames Research Center Moffett Field, California 94035 Attn.: Mr. Thomas Gregory Mission Analysis Division
39, 40.	NASA Ames Research Center Moffett Field, California 94035 Attn.: Harvey J. Allen Director
41, 42.	NASA Goddard Space Flight Center Greenbelt, Maryland 20771 Attn.: Merland L. Moseson Code 620
43, 44.	NASA Jet Propulsion Laboratory California Institute of Technology 4800 Oak Grove Drive Pasadena, California 91103 Attn.: Henry Burlage, Jr. Propulsion Div., 38
45, 46.	NASA Langley Research Center Langley Station Hampton, Virginia 23365 Attn.: Dr. Floyd L. Thompson Director
47, 48.	NASA Lewis Research Center 21000 Brookpark Road Cleveland, Ohio 44135 Attn.: Dr. Abe Silverstein Director

DISTRIBUTION (Continued)

Copy No.	Transmitted to
49, 50.	NASA Marshall Space Flight Center Huntsville, Alabama 35812 Attn.: Hans G. Paul Code R-P&VED
51, 52.	NASA Manned Spacecraft Center Houston, Texas 77001 Attn.: Dr. Robert R. Gilruth Director
53, 54.	NASA Office of Resident Representative Jet Propulsion Laboratory 4800 Oak Grove Drive Pasadena, California 91103 Attn.: Robert W. Kamm Director
55, 56.	NASA John F. Kennedy Space Center Cocoa Beach, Florida 32931 Attn.: Dr. Kurt H. Debus
57.	Aeronautical Systems Division Air Force Systems Command Wright-Patterson Air Force Base Dayton, Ohio 45433 Attn.: D. L. Schmidt Code ASRCNC-2
58.	Air Force Missile Development Center Holloman Air Force Base, New Mexico Attn.: Maj. R. E. Bracken Code MDGRT
59.	Air Force Missile Test Center Patrick Air Force Base, Florida Attn.: L. J. Ullian
60.	Air Force Systems Division Air Force Unit Post Office Los Angeles 45, California Attn.: Col. Clark Technical Data Center

DISTRIBUTION (Continued)

Copy No.	Transmitted to
61.	Arnold Engineering Development Center Arnold Air Force Station Tullahoma, Tennessee Attn.: Dr. H. K. Doetsch
62.	Bureau of Naval Weapons Department of the Navy Washington 25, D. C. Attn.: J. Kay RTMS-41
63.	Defense Documentation Center Headquarters Cameron Station, Building 5 5010 Duke Street Alexandria, Virginia 22314 Attn.: TISIA
64.	Headquarters, U. S. Air Force Washington 25, D. C. Attn.: Col. C. K. Stambaugh AFRST
65.	Picatinny Arsenal Dover, New Jersey 07801 Attn.: I. Forsten, Chief Liquid Propulsion Laboratory SMUPA-DL
66.	Air Force Rocket Propulsion Laboratory Research and Technology Division Air Force Systems Command Edwards, California 93523 Attn.: H. Main, RPRR
67.	Research and Technology Division Air Force Aero Propulsion Laboratory Wright-Patterson Air Force Base, Ohio 45433 Attn.: H. C. Long, APRP
68.	U. S. Atomic Energy Commission Technical Information Services Box 62 Oak Ridge, Tennessee Attn.: A. P. Huber Oak Ridge Gaseous Diffusion Plant (ORGDP) P. O. Box P

DISTRIBUTION (Continued)

Copy No.	Transmitted to
69.	U. S. Army Missile Command Redstone Arsenal Alabama 35809 Attn.: Dr. Walter Wharton
70.	U. S. Naval Ordnance Test Station China Lake, California 93557 Attn.: Chief, Missile Propulsion Division Code 4562
71.	Air Force Systems Command Space Systems Division Inglewood, California 90045 Attn.: Lt. Col. Kenneth Mc Aaron
72.	Chemical Propulsion Information Agency Applied Physics Laboratory 8621 Georgia Avenue Silver Spring, Maryland 20910 Attn.: Neil Safeer
73.	Aerojet-General Corporation P. O. Box 296 Azusa, California 91703 Attn.: L. F. Kohrs
74.	Aerojet-General Corporation P. O. Box 1947 Sacramento, California 95809 Attn.: R. Stiff Technical Library, Bldg. 2015, Dept. 2410
75.	Aeronutronic Philco Corporation Ford Road Newport Beach, California 92663 Attn.: D. A. Carrison
76.	Aerospace Corporation 2400 East El Segundo Boulevard P. O. Box 95085 Los Angeles, California 90045 Attn.: John G. Wilder Propulsion Dept. MS-2293

DISTRIBUTION (Continued)

Copy No.	Transmitted to
77.	Arthur D. Little, Inc. 20 Acorn Park Cambridge, Massachusetts 02140 Attn.: E. Karl Bastress
78.	Astropower Laboratory Douglas Aircraft Company 2121 Paularino Newport Beach, California 92663 Attn.: Dr. George Moc Director, Research
79.	Astrosystems International, Inc. 1275 Bloomfield Avenue Fairfield, New Jersey 07007 Attn.: A. Mendenhall
80.	Atlantic Research Corporation Edsall Road and Shirley Highway Alexandria, Virginia 22314 Attn.: A. Scurlock
81.	Beech Aircraft Corporation Boulder Division Box 631 Boulder, Colorado Attn.: J. H. Rodgers
82.	Bell Aerosystems Company P. O. Box 1 Buffalo, New York 14240 Attn.: W. M. Smith
83.	Bendix Systems Division Bendix Corporation 3300 Plymouth Road Ann Arbor, Michigan Attn.: John M. Brueger
84.	Boeing Company P. O. Box 3707 Seattle, Washington 98124 Attn.: J. D. Alexander

DISTRIBUTION (Continued)

Copy No.	Transmitted to
85.	Missile Division Chrysler Corporation P. O. Box 2628 Detroit, Michigan 48231 Attn.: John Gates
86.	Wright Aeronautical Division Curtiss-Wright Corporation Wood-Ridge, New Jersey 07075 Attn.: G. Kelley
87.	Missile and Space Systems Division Douglas Aircraft Company, Inc. 3000 Ocean Park Boulevard Santa Monica, California 90406 Attn.: R. W. Hallet Chief Engineer, Advanced Space Tech.
88.	Aircraft Missiles Division Fairchild Hiller Corporation Hagerstown, Maryland 10 Attn.: J. S. Kerr
89.	General Dynamics/Astronautics P. O. Box 1128 San Diego, California 92112 Attn.: Frank Dore Library & Information Services (128-00)
90.	Re-Entry Systems Department General Electric Company 3198 Chestnut Street Philadelphia, Pennsylvania 19101 Attn.: F. E. Schultz
91.	Advanced Engine & Technology Dept. General Electric Company Cincinnati, Ohio 45215 Attn.: D. Suichu
92.	Grumman Aircraft Engineering Corp. Bethpage, Long Island New York Attn.: Joseph Gavin

DISTRIBUTION (Continued)

Copy No.	Transmitted to
93.	Ling-Temco-Vought Corporation Astronautics P. O. Box 5907 Dallas, Texas 75222 Attn.: Warren C. Trent
94.	Lockheed-California Company 2555 North Hollywood Way Burbank, California 91503 Attn.: G. D. Brewer
95.	Lockheed Missiles and Space Company P. O. Box 504 Sunnyvale, California 94088 Attn.: Y. C. Lee Technical Information Center
96.	Lockheed Propulsion Company P. O. Box 111 Redlands, California 92374 Attn.: H. L. Thackwell
97.	Baltimore Division Martin-Marietta Corporation Baltimore, Maryland 21203 Attn.: John Calathes (3214)
98.	Denver Division Martin-Marietta Corporation P. O. Box 179 Denver, Colorado 80201 Attn.: J. D. Goodlette (A-241)
99.	McDonnell Aircraft Corporation P. O. Box 516 Municipal Airport St. Louis, Missouri 63166 Attn.: R. A. Herzmark
100.	Space & Information Systems Division North American Aviation, Inc. 12214 Lakewood Boulevard Downey, California 90241 Attn.: H. Storms

DISTRIBUTION (Continued)

Copy No.	Transmitted to
101.	Rocketdyne North American Aviation, Inc. 6633 Canoga Avenue Canoga Park, California 91304 Attn.: E. B. Monteath Library, 586-306
102.	Northrop Space Laboratories 3401 West Broadway Hawthorne, California Attn.: Dr. William Howard
103.	Astro-Electronics Division Radio Corporation of America Princeton, New Jersey 08540 Attn.: S. Fairweather
104.	Reaction Motors Division Thiokol Chemical Corporation Denville, New Jersey 07832 Attn.: Arthur Sherman
105.	Republic Aviation Corporation Farmingdale Long Island, New York Attn.: Dr. William O'Donnell
106.	Space-General Corporation 9200 East Flair Avenue El Monte, California 91734 Attn.: C. E. Roth
107.	Stanford Research Institute 333 Ravenswood Avenue Menlo Park, California 94025 Attn.: Lionel Dickinson
108.	Space Technology Laboratories TRW Incorporated One Space Park Redondo Beach, California 90278 Attn.: G. W. Elverum

DISTRIBUTION (Continued)

Copy No.	Transmitted to
109.	TAPCO Division TRW, Incorporated 23555 Euclid Avenue Cleveland, Ohio 44117 Attn.: P. T. Angell
110.	Thiokol Chemical Corporation Huntsville Division Huntsville, Alabama Attn.: John Goodloe
111.	Research Laboratories United Aircraft Corporation 400 Main Street East Hartford, Connecticut 06108 Attn.: Erle Martin