CONTRACT NAS8-29674

GRUMMAN

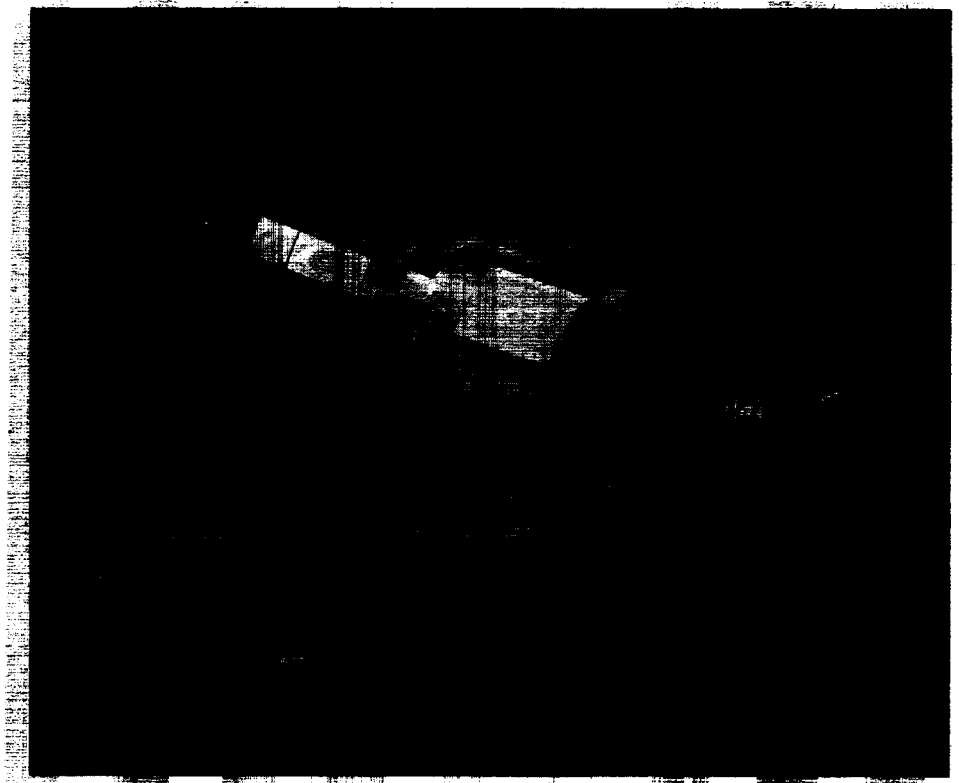

STORABLE SPACE TUG SYSTEMS STUDY
Data Dump
Volume I–Summary, Program Option I

(NASA-CR-179089) STORABLE SPACE TUG SYSTEMS STUDY DATA DUMP. VOLUME 1: SUMMARY, PROGRAM OPTION 1 (Grumman Aerospace Corp.) 122 p
Avail: NTIS

N87-70385

Unclas
00/18 0072689

RPT NO. 300 RP-73-004

STORABLE SPACE TUG SYSTEMS STUDY
Data Dump

Volume I–Summary, Program Option I

19 September 1973

CONTRACT NAS8-29674

RPT NO. 300 RP-73-004

GRUMMAN

STORABLE TUG DATA REVIEW

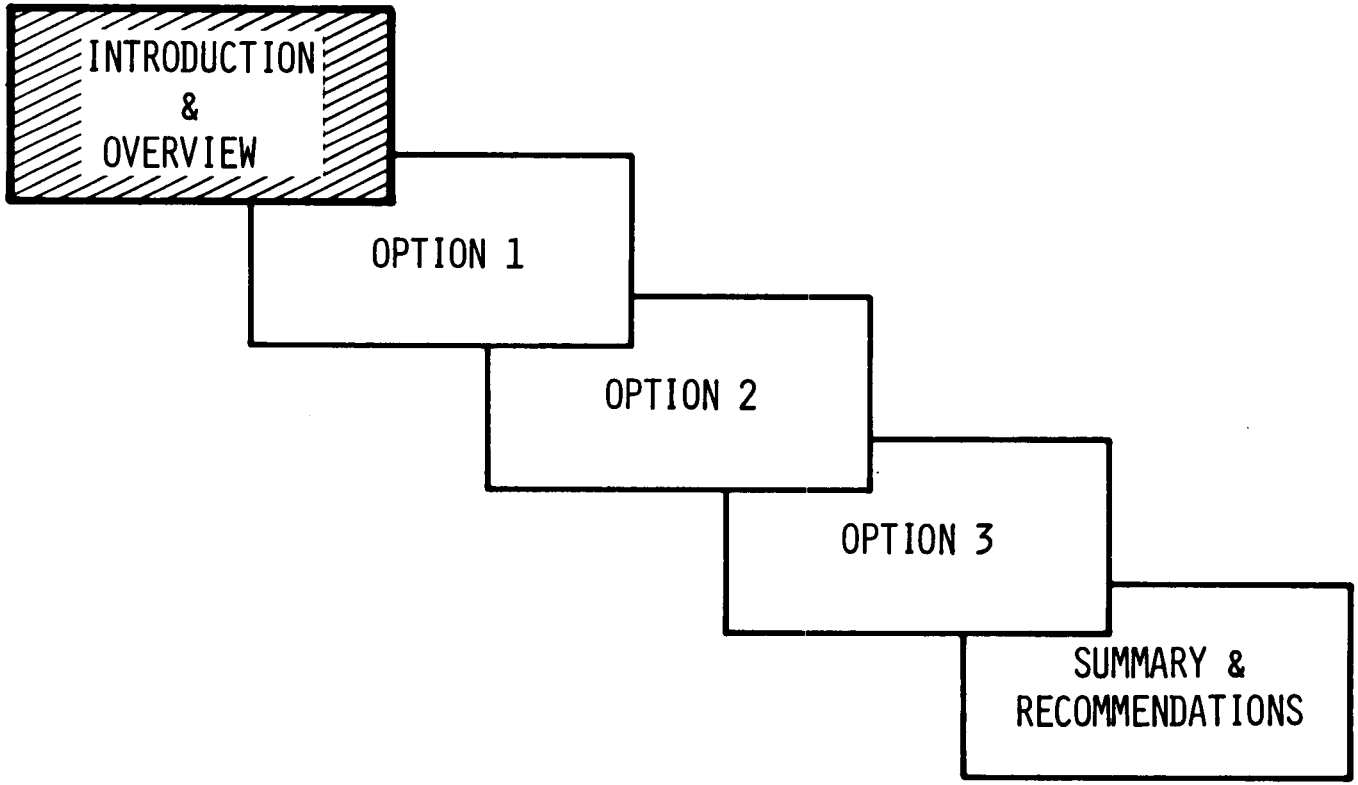

I-10
II-12
III-41

DATA DUMP MATRIX

This chart identifies the concepts Grumman developed for the September Data Dumps.

The essential features of the program options are listed under each option heading and then a small sketch of the candidate concepts are placed under the appropriate option heading. For example, within Program Option 1, Grumman studied concept 110A-1 which is seen to be a single stage tug with an apogee kick stage module.

The concepts are identified by a two-part numbering system. The first part of the number provides traceability to the July Concept Selection meeting design which was used as the starting point in developing the configuration. The dash number simply specifies the Program Option within which the concept has been developed.

DATA DUMP MATRIX

OPTION	1	2	3A				3B			
IOC	DEC '79	DEC '83	DEC '79	DEC '83	DEC '79	DEC '83	DEC '79	DEC '83	DEC '79	DEC '83
GEOSYNCH DEPLOY, LB	3500									
GEOSYNCH RETRV, LB	0	3500	0	2200	0	2200	0	3500	0	3500
COST EMPHASIS	MIN DDT&E	LOW DDT&E - LOW TOTAL COST								

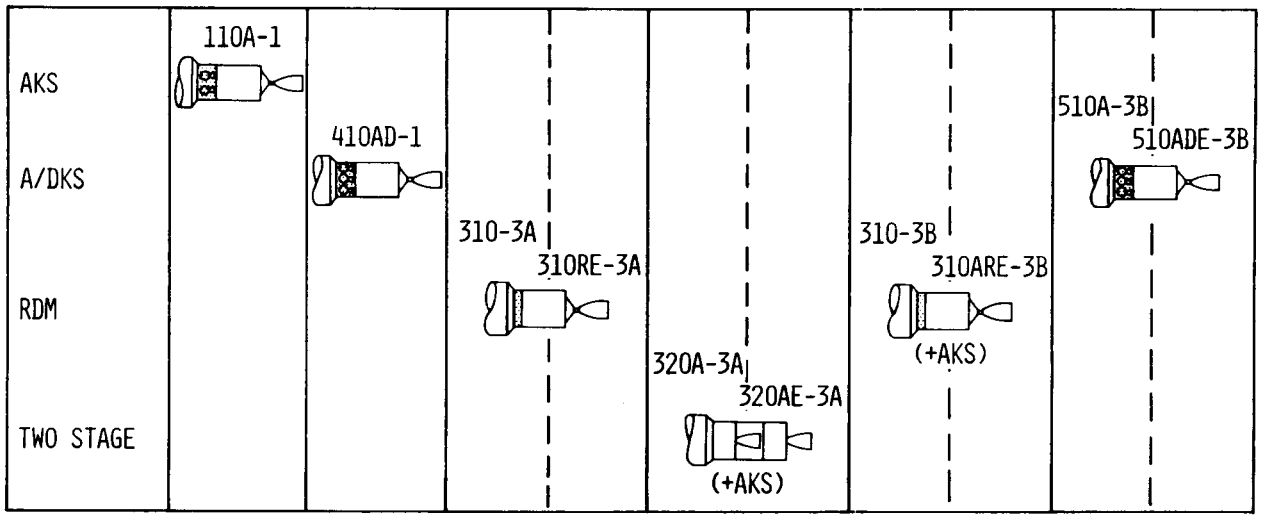

SENSITIVITY STUDIES			
	o DELAY IOC 2 YR	o ADV IOC 2 YR o DKS VS RDM o SERVICE MISS.	o DELAY IOC 2 YR

I-19, II-21, III-59

DATA DUMP VOLUME GENERATION

We have carefully followed NASA's detailed Data Dumps outline in preparing the Data Dump Volumes.

Volumes 1, 2 and 3 are extracts from the information of Volumes 4 - 8 and summarize the three program options.

DATA DUMP VOLUME GENERATION

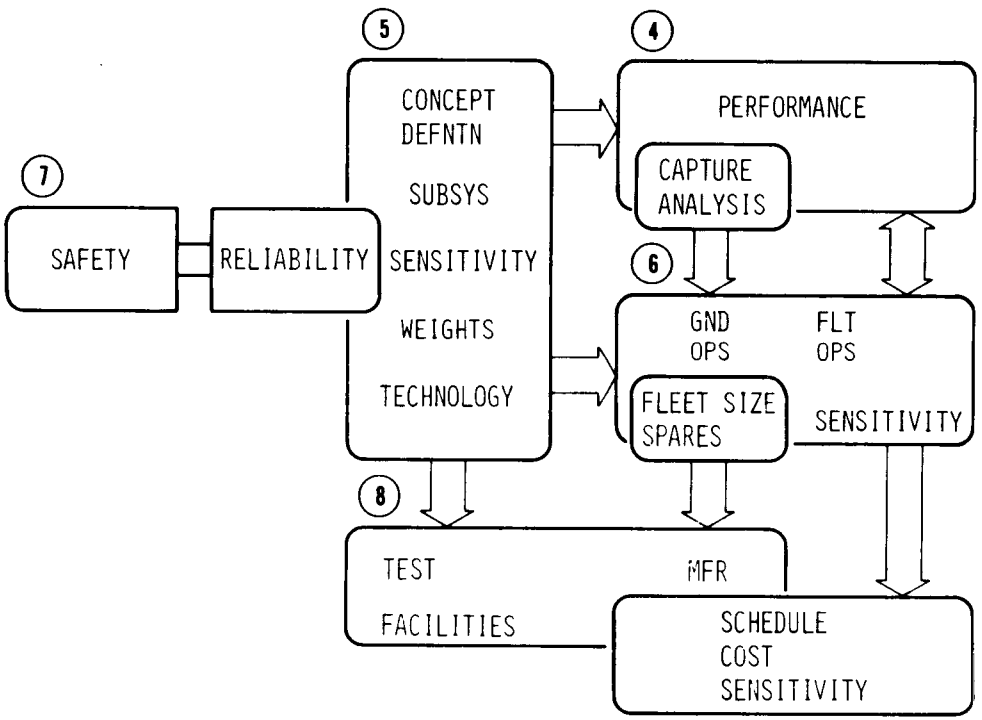

VOLUME	EDITOR
4 MISSION ACCOMP	B. SIDOR LR5-1491
5 SYSTEMS	C. J. GOODWIN LR5-2453 M. H. DANDRIDGE LR5-1494
6 OPS - GND	R. GENDIELLEE LR5-1631
OPS - FLT	A. NATHAN LR5-1486
7 SAFETY (INCL REL)	H. WOLF LR5-1492 B. FRUMKIN LR5-1492
8 PROGRAMMATICS	R. McCAFFREY LR5-1487

118

VEHICLE CHARACTERISTICS SUMMARY

This is a brief overview of the physical characteristics of the vehicles. Each concept meets or exceeds its performance requirements.

Tug lengths are short. As will be seen later in the inboard arrangement drawings, extra payload length beyond the 25 ft. requirement can be accommodated. For example, concept 110A-1 can deploy a payload 30.5 ft. long. When operated with an apogee kick stage, the payload can be 25.5 ft. long. Only the two-stage concept, using both stages, requires a two-position nozzle to keep length down.

In no case is it necessary to use a higher flexibility engine than Class 1. The Shuttle OME 7.5K lb. thrust engine is ample for Option 1.

VEHICLE CHARACTERISTICS SUMMARY

OPTION	1	2	3A				3B			
GEOSYNCH RETRIEVE CAP (LB)	—	3500	—	2200	—	2200	—	3500	—	3500
TUG DESIGNATION	110A-1	410AD-2	310-3A	310RE-3A	320A-3A	320AE-3A	310-3B	310ARE-3B	510A-3B	510ADE-3B
TUG LENGTH, FT	27.92	24.75	24.75		17.06 EACH		24.75		25.0	
BODY DIA, FT	9.92	10.0	10.0		8.16		10.0		10.0	
MAIN PROP. CAPACITY, KLB	56.9	59.5	59.5		32 EACH		59.5		59.5	
MAIN ENGINE										
- OME F=7.5K ISP=	327.2	—	—		—		—		327.2	
- CL. 1 F=12K ISP=	—	338	338		—		338		—	
- CL. 1 (RET.NOZ.) F=12K ISP=	—	—	—		338		—		—	
SUBSYS TECH										
- LOW COST		—	—		—		—			
- LOW WT	—								—	
AUTONOMY LEVEL	IIIA	IIB	IIIA	IIB	IIIA		IIIA	IIB	IIIA	IIB

FIXED WT
NASA MISSIONS SHOWN,
ADD SECURE COMM
FOR DOD MISSIONS

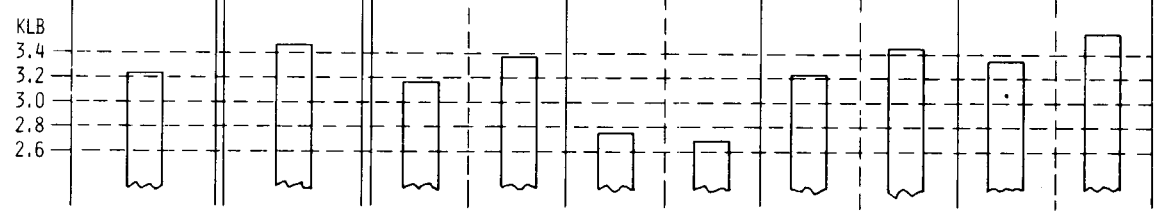

I-8, II-10, III-39

SYSTEMS SUMMARY & TECHNOLOGY

The next two charts summarize the subsystems which are part of each concept. Arrows are used within the Option 3 concepts to show evolutionary changes.

Asterisks have been placed by subsystems to point out SR&T needs. The details of these programs and schedules are developed in Volume 8. These are small programs. The total SR&T funding requirements, excluding engines, are less than $4M.

SUBSYSTEMS SUMMARY & TECHNOLOGY

	OPT 1	OPT 2	OPT 3A		OPT 3B	
	110A-1	410AD-2	310-3A 310RE-3A	320A-3A 320AE-3A	310-3B 310ARE-3B	510A-3B 510ADE-3B
OME 7.5K ENGINE	X					X
*CLASS I ENGINE		X	X		X	
*CLASS I ENGINE - 2 POS. NOZZLE				X		
*PFR HELIUM TANK	X	X	X	X	X	X
*SPACE STORABLE SRM		X				X
16 APS THRUSTERS	X		X →	X →	X →	X →
24 APS THRUSTERS		x	X	X	X	X
NESTED DOME TANKS		X	X	X	X	X
SEPARATE TANKS	X					
TITANIUM GORES		X	X	X	X	
*SPUN-FORM ALUM	X					X
*GRAPHITE COMPOSITE SHELL		X	X	X	X	
STIFFENED ALUM SHELL						X
ALUM HONEYCOMB SHELL	X					

*REQ SUPPORTING RESEARCH & TECHNOLOGY

I-7, II-9, III-38, IX-2

SYSTEMS SUMMARY & TECHNOLOGY

The next two charts summarize the subsystems which are part of each concept. Arrows are used within the Option 3 concepts to show evolutionary changes.

Asterisks have been placed by subsystems to point out SR&T needs. The details of these programs and schedules are developed in Volume 8. These are small programs. The total SR&T funding requirements, excluding engines, are less than $4M.

SUBSYSTEMS SUMMARY & TECHNOLOGY

	OPT 1	OPT 2	OPT 3A		OPT 3B	
	110A-1	410AD-2	310-3A 310RE-3A	320A-3A 320AE-3A	310-3B 310ARE-3B	510A-3B 510ADE-3B
CAROUSEL IMU J	X		X	X	X	X
*MICRON IMU		X	X	X	X	X
*LASER RADAR		X	- X	- X	- X	- X
621B & DOPPLER RCVRS		X	- X		- X	- X
48K WORD CDC 469 COMPUTER	X		X	X	X	X
65K WORD CDC 469 COMPUTER		X	X		X	X
DFS COMM	X		X	X	X	X
DFS + CSS COMM		X	X	X	X	X
TV		X	- X	- X	- X	- X
PRIME BATTERY	X					
MOD FUEL CELL		X	X		X	X
*ADV FUEL CELL				X		
CRYOGENIC H_2/O_2 STORAGE		X	X	X	X	X

*REQ SUPPORTING RESEARCH & TECHNOLOGY

I-6, II-8, III-37, IX-1

PERFORMANCE SUMMARY

This is a sumary of the performance capability of each Tug concept, grouped by flight mode. Each concept meets or exceeds all performance requirements.

A characteristic of the modular concepts is that they have very wide flexibility in the way they can be operated.

Although they incur increased flight operational cost, the more complex modes represent a powerful technique for increasing Tug performance.

PERFORMANCE SUMMARY

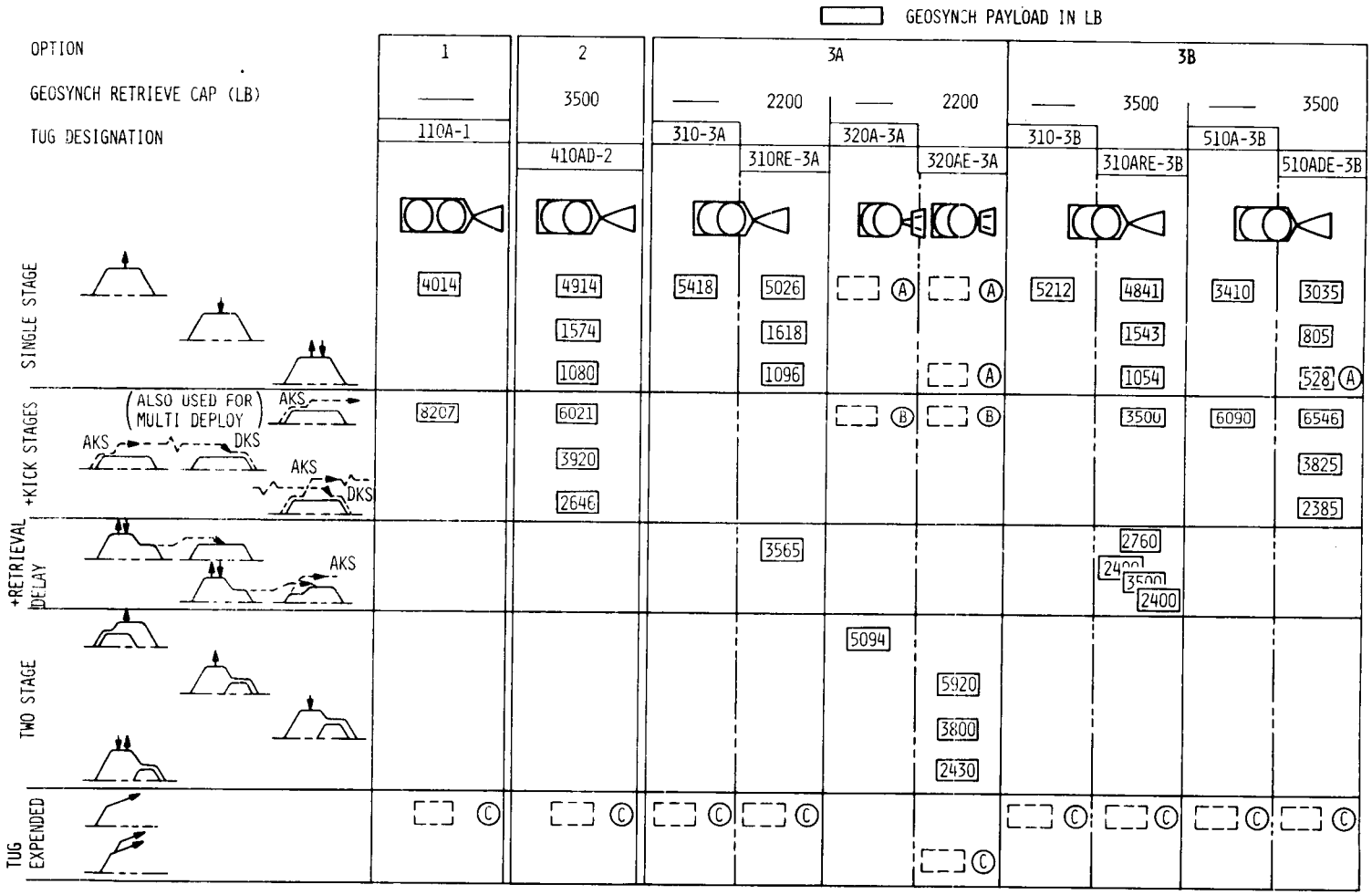

I-9, II-11, III-40

PROGRAMMATIC/COST CHARACTERISTICS SUMMARY

This highlights key cost features for each of the concepts.

DDT&E for Option 1 is $191M. Since an apogee kick stage is not required to meet the 3500 lb payload deployment requirement, this module has been deferred in the program until it is phased into planetary flight and multiple deployment operations. While the AKS really is optional, we have included it in the program to minimize total program cost.

There is no significant difference between the initial DDT&E of the two 3B evolutionary concepts and, in fact, total DDT&E is only $25M higher for the configuration evolving to Retrieval Delay Module usage as compared to that using apogee and deorbit kick stages. Tug program cost is $50M lower for the RDM program, but this comparison reverses when shuttle flight costs are included. Due to the lower number of shuttle flights of the 510A-3B/510ADE-3B, its program cost is $25M lower.

The two stage configuration has the lowest number of shuttle flights within Option 3. This depresses the total program cost below the other concepts in spite of its high DDT&E and Tug program cost.

PROGRAMMATIC/COST CHARACTERISTICS SUMMARY

OPTION	1	2	3A		3B	
GEOSYNCH RETRIEVE CAP (LB)	——	3500	—— 2200	—— 2200	—— 3500	—— 3500
● TUG DESIGNATION	110A-1	410AD-2	310-3A/310RE-3A	320A-3A/320AE-3A	310-3B/310ARE-3B	510A-3B/510ADE-3B
● PROGRAMMATICS						
IOC	DEC'79	DEC'83	DEC'79/DEC'83	DEC'79/DEC'83	DEC'79/DEC'83	DEC'79/DEC'83
SHUTTLE FLIGHTS	218	245	355	301	365	336
PAYLOAD DELIV - KLB	705	931	1142	1142	1206	1206
TUG FLEET - MAIN STAGE	11	10	23	13L+11U	16	14
AUX STAGE	14A	14A, 72D	4R	9A	34A, 4R	32A, 95D
● COST - $M						
TOTAL PROG (T+S△)	2820	3362	4586	4075	4694	4424
TOTAL PROG (T)	531	789	858	914	861	906
DDT&E - INITIAL/TOTAL	191/220	350	255/329	333/370	255/346	254/318
COST/FLT NASA REUSE T	.96	1.15	.97	1.17	1.05	1.19
EXPEDN T	8.26	11.52	9.37	17.7	9.45	9.19
EXPEND A	2.16	2.40	–	2.42	2.10	2.44
DOD REUSE T	1.03	1.21	1.04	1.26	1.04	1.17
EXPEND A	2.23	–	–	–	2.09	–
PEAK YEAR FUNDING (YR)	71/81(79)	151(82)	85(78)	107(78)	88(78)	97(78)
FIRST UNIT - MAIN STAGE	9.4	13.1	10.7/13.1	10.2/12.7	10.7/13.1	10.2/12.2
AUX STAGE	1.4	A D 1.4 2.4	RDM 1.6	AKS 1.6	RDM AKS 1.6 1.5	AKS DKS 1.6 2.4
TUG PAYLOAD DELIV COST $/LB	277	222	240	258	242	237

III-103

SENSITIVITY STUDIES VS. APPLICABLE CONCEPTS

This chart lists the 15 sensitivity studies that were performed and their relationship to the 6 Space Tug concepts that were considered.

A check (✔) indicates that specific analyses were performed against the indicated baseline concept to establish the sensitivity results. Applicability (APPLIC.) indicates that, although the sensitivity analyses did not specifically address that baseline concept, the results of the analysis are applicable by similarity.

The results of the sensitivity analysis are generally applicable to most of the concepts with two notable gaps:

(1) Many of the performance trades cannot be applied to the two stage concept (320A/320AE-3A) because of its unique operational modes

(2) Most trades related to payload retrieval or payload support are not applicable to the deploy only Tug concept (110A-1)

The results of these sensitivity studies are discussed on the following three charts. The only sensitivity studies not discussed here are the ground operations sensitivity studies, which are covered under Operations, and the two year IOC delay sensitivity which is discussed under Programmatics.

(Ref. Vol. 5, Book III, Section 5.9)

SENSITIVITY STUDIES VS. APPLICABLE CONCEPTS

CONCEPT

SENSITIVITY	110A-1	410AD-2	310 - 3A/ 310RE-3A	320A- 3A/ 320AE-3A	310- 3B/ 310ARE-3B	510A- 3B/ 510ADE-3B
1. AUTONOMY	✓	✓	APPLIC.		✓	APPLIC.
2. 0.97 RELIABILITY		✓	APPLIC.		APPLIC	APPLIC.
3. 30 DAY SERV. MISS		✓	APPLIC.		APPLIC	
4. DOD COMM. REQM'TS		APPLIC	✓	APPLIC.	APPLIC.	APPLIC.
5. P/L COMMAND, & C/O		APPLIC.	✓	APPLIC.	APPLIC.	APPLIC.
6. ELEC. POWER TO P/L	✓	✓	✓	✓	✓	✓
7. DESIGN LIFE	APPLIC.	APPLIC.	✓	APPLIC.	✓	APPLIC.
8. SPIN-STAB. P/L RET.			✓	APPLIC.	APPLIC.	
9. RENDEZVOUS & DOCK.	✓	APPLIC.	APPLIC.		APPLIC.	APPLIC.
10. NESTED VS. SEP. TANKS	APPLIC.	APPLIC.	✓		APPLIC.	APPLIC.
11. IN-FL PROP. DUMP	✓	APPLIC.	APPLIC.		APPLIC.	APPLIC.
12. MAIN ENGINE SELECT.	✓	✓	✓		✓	✓
13. USE OF RDM		✓				
14. GROUND OPS TRADES	✓	APPLIC.	APPLIC.	APPLIC.	APPLIC.	APPLIC.
15. 2 YEAR 10C DELAY	✓	✓	✓			

SENSITIVITY STUDY RESULTS - SUMMARY

1. Autonomy

The results of our autonomy sensitivity study indicated that:

- o Autonomy level II is best suited for Option 2 and 3
- o Autonomy level IV is an attractive candidate in Option 1 because of low DDT&E. A close second choice is autonomy level II with relatively low DDT&E and close to $40M total program cost savings.

The level I system had degraded performance due to the slow convergence characteristics of the Horizon Scanner Star Tracker system.

The selected level II system requires the use of the 621B NAV SAT which introduces schedule risk and technology issues. It is recommended that the interferometer approach which utilizes undedicated RF sources as landmarks be considered as an option.

The level III system introduces high software development and operating costs for both ground and onboard computer systems.

High ground involvement and costs precludes the use of a level IV system for the more complex Option 2 and 3 programs.

2. Reliability

All but 10 of the 67 lbs of redundancy required on the 410AD-2 Tug to achieve the baseline 0.97 mission success reliability is also required to maintain safety of flight when the Tug is in the vicinity of the orbiter. The Tug without any of the 67 lbs. of redundancy has a 0.98 reliability for a 36 hour deployment mission. Therefore, the safety of flight requirement in the vicinity of the orbiter has a more pronounced effect on hardware redundancy than mission duration.

The sensitivity analysis also indicated that it may be cost effective to design the Tug for a mission success reliability goal greater than 0.98.

3. 30-DAY SERVICING MISSION

The 30 day servicing mission involves servicing of four satellites in geosynchronous orbit. The Tug carries a reusable 500 lb. servicing unit for this purpose. The Tug accomodates the 30 day servicing mission requirement by providing add-on EPS cryogenic tanks and APS propellant tanks. The EPS tanks were sized for 340 kwh for Service Mode I and 451 kwh for Service Mode II. The total usable APS propellant requirement was 1020 lb. The performance capability and cost impact are indicated on the chart.

SENSITIVITY STUDY RESULTS - SUMMARY

SENSITIVITY AREA	RESULTS
1. AUTONOMY	o LEVEL II - MOST ATTRACTIVE FOR OPTIONS 2 AND 3 o LEVEL IV - MOST ATTRACTIVE FOR LOW DDT&E OPTION 1 o LEVEL I - HIGHEST PERFORMANCE PENALTIES o LEVEL III - HI DDT&E AND TOTAL PROGRAM COST
2. 0.97 RELIABILITY	o TUG WEIGHT SAVING (10-67 LB) IS MORE DEPENDENT ON SAFETY CRITICAL ISSUES THAN SHORTER MISSION DURATION o TUG RELIABILITY GOAL > 0.98 MAY BE COST EFFECTIVE
3. 30-DAY SERVICING MISSION	o SERVICE MODE I - TOTAL SRU DEPLOY WEIGHT = 686 LB OR 172 LB/SATELLITE - INCREASES TO 2516 LB OR 629 LB/SATELLITE IF SERVICE UNIT IS LEFT IN MISSION ORBIT - TUG DDT&E COST INCREASE IS $8.4M (SERVICE UNIT ASSUMED GFE)

4. DOD COMMUNICATION REQUIREMENTS

The baseline Tug communication subsystem was designed to accomodate both the NASA requirements (STDN and TDRS compatibility) and the DOD requirements (SGLS compatibility plus secure comm). The Tug performance and cost penalty to accomodate SGLS and secure comm., in addition to meeting the NASA requirements was estimated to be 32 lbs. of communication subsystem hardware and $430K DDT&E cost. The per unit production cost impact was estimated to be $75K. All secure comm. equipment is assumed to be GFE to the Tug program and is not costed.

It was noted that the biggest contributor to the baseline communication subsystem cost was the requirement for TDRS spread spectrum compatibility. This requirement results in a 12 lb. weight penalty and a $7M DDT&E cost impact.

5. PAYLOAD COMMAND CONTROL AND CHECKOUT

The baseline Tug was designed to provide a payload command control and checkout interface. The Tug performance and cost penalty to meet this requirement was estimated to be 53 lb. of subsystem hardware with a $4M DDT&E cost impact. The per unit production cost impact was estimated to be $570K. The TV assembly was assumed to be required for payload monitoring and support only.

6. ELECTRICAL POWER TO PAYLOADS

Providing 300 watts of electrical power to payloads while they are attached to the Tug requires additional primary battery capacity for concept 110A-1 and increased fuel cell reactant storage for the other concepts. The required payloads support times were 11 hours for concept 110A-1, 57 hours for concept 320AE-3A and about 100 hours for all the other concepts. The performance penalty was a reduction in payload delivery capability of 140 lbs. for 110A-1 and less than 40 lbs. for all the other concepts. The DDT&E cost impact was negligible. The total productions cost impact ranged from $400K for 110A-1 to about $1M for 310RE-3A.

7. DESIGN LIFE

The Tug design life study indicated that most Tug hardware is not life limited and a design life of 100 missions is practical. Major areas of concern are the main propulsion tanks, main engine, fuel cell and thermal coatings and MLI.

It was found that the number of Tugs expended (for planetary missions) during the program had a significant effect on the operating life and consequently the optimum design life of a Tug. For example, for the 310/310RE-3A program where 17 Tugs are expended, a difference in Tug design of from 20 to 50 missions only changed the fleet size by one vehicle.

SENSITIVITY STUDY RESULTS - SUMMARY (CONT.)

SENSITIVITY AREA	RESULTS
4. DOD COMM REQUIREMENTS	o ADDING DOD COMM REQUIREMENTS (SGLS PLUS SECURE COMM) TO NASA REQUIREMENTS: - INCREASES TUG WEIGHT BY 32 LB - INCREASES TUG DDT&E COST BY $430K (SECURE COMM EQUIPMENT IS GFE) o PROVIDING TDRS (SPREAD SPECTRUM) COMPATIBILITY IS LARGEST COST DRIVER - INCREASES DDT&E BY $7M
5. PAYLOAD COMMAND CONTROL AND C/O	o WEIGHT INCREASE OF 53 LB o DDT&E COST INCREASE OF $4M
6. ELECTRICAL POWER TO PAYLOADS	o PROVIDING 300W POWER TO PAYLOADS - REDUCES CONCEPT 110A-1 DEPLOY CAPABILITY BY 140 LB - REDUCES OTHER CONCEPTS DEPLOY CAPABILITY BY $<$ 40 LB - NEGLIGIBLE DDT&E IMPACT. TOTAL PRODUCTION COST BETWEEN $0.4-1.1M
7. DESIGN LIFE	o MOST TUG HARDWARE IS NOT LIFE LIMITED o OPTIMUM DESIGN LIFE VERY DEPENDENT ON NO. OF TUGS EXPENDED

8. SPIN-STABILIZED PAYLOAD RETRIEVAL

The objective was to determine the effect if the Tug were required to despin spin-stabilized payloads which are candidates for retrieval. Using TOPSS study results a reusable despin kit was assumed to be carried by the Tug. The only significant impact was the reduction in Tug payload retrieval capability of about 120 lbs.

9. RENDEZVOUS AND DOCKING

The objective was to determine the impact on the Tug of providing retrieval capability. Concept 110A-1 was chosen as the point of departure. It was estimated that 350 lbs of weight must be added to 110A-1 to achieve retrieval capability. The net result is a reduction in Tug deployment capability of over 900 lbs. The DDT&E increase to 110A-1 to provide retrieval capability was estimated to be $54M.

10. NESTED DOME vs. SEPARATE TANK

A comparison between nested dome and separate tank configurations indicated that the separate tanks were heavier by 70 lbs for titanium and 129 lbs for aluminum. A cost comparison for titanium tanks indicated that the separate tank configuration would reduce DDT&E by $1.2M and first unit cost by $90K. The separate tank configuration simplifies manufacturing and inspection and reduces the potential hazard associated with leaks.

11. IN-FLIGHT PROPELLANT DUMP

Providing in-flight propellant dump instead of designing for landing with full tanks results in a reduction in Tug weight of 42 lbs, a reduction in adapter weight of 11 lbs and an orbiter increse of 4 lbs. This results in an equivalent Tug weight reduction of 49 lbs. In-flight propellant dump reduces Tug DDT&E by $400K and increases total Tug production cost by $35K.

12. MAIN ENGINE SELECTION

A sensitivity analysis based on performance and cost indicated that the 8096-B2 engine merits further consideration in all of the concepts considered. The performance improvement of the OME 12 over the OME 7.5 is very small and does not justify the increased DDT&E. The performance improvement of the Class II over the Class I again is not large enought ot justify the delta DDT&E.

13. USE OF RDM

The objective was to determine the program impact of substituting an RDM for the DKS in the direct-developed high performance Option 2 concept. The Tug with RDM reduced DDT&E by $14M and Tug only program cost by about $70M, but resulted in a total program cost increase of over $200M.

SENSITIVITY STUDY RESULTS - SUMMARY (CONT.)

SENSITIVITY AREA	RESULTS
8. SPIN-STABILIZED PAYLOAD RETRIEVAL	o ASSUMED TUG USED GFE DESPIN KIT o TUG PAYLOAD RETRIEVAL CAPABILITY REDUCED BY 120 LB.
9. RENDEZVOUS AND DOCKING	o ADDING RETRIEVAL CAPABILITY TO TUG INCREASES WEIGHT BY 350 LB AND REDUCES DEPLOYMENT CAPABILITY BY >900 LB o COST OF PROVIDING RETRIEVAL CAPABILITY IS $54M
10. NESTED DOME VS. SEPARATE TANK	o SEPARATE TANK CONFIGURATION: - INCREASES TUG WEIGHT BY 70 LB (T_I) AND 129 LB (A_L) - DECREASES COST: DDT&E BY $1.2M AND PRODUCTION BY $1M - SIMPLIFIES MANUFACTURING AND REDUCES POTENTIAL HAZARDS
11. IN-FLIGHT PROPELLANT DUMP	o RESULTS IN EQUIVALENT TUG WEIGHT REDUCTION OF 49 LB o REDUCES DDT&E COST BY $400K. INCREASES PRODUCTION COST BY $35K.
12. MAIN ENGINE SELECTION	o 8096-B2 ENGINE MERITS FURTHER CONSIDERATION IN ALL OPTIONS o OME 12 AND CLASS II ENGINES ARE NOT COST-EFFECTIVE
13. USE OF RDM	o USE OF A TUG WITH RDM INSTEAD OF DKS IN OPTION 2 - REDUCES DDT&E BY $14M. - INCREASES TOTAL (TUG + SHUTTLE) PROGRAM COST BY OVER $200M.

THIS PAGE INTENTIONALLY LEFT BLANK

STORABLE TUG DATA REVIEW

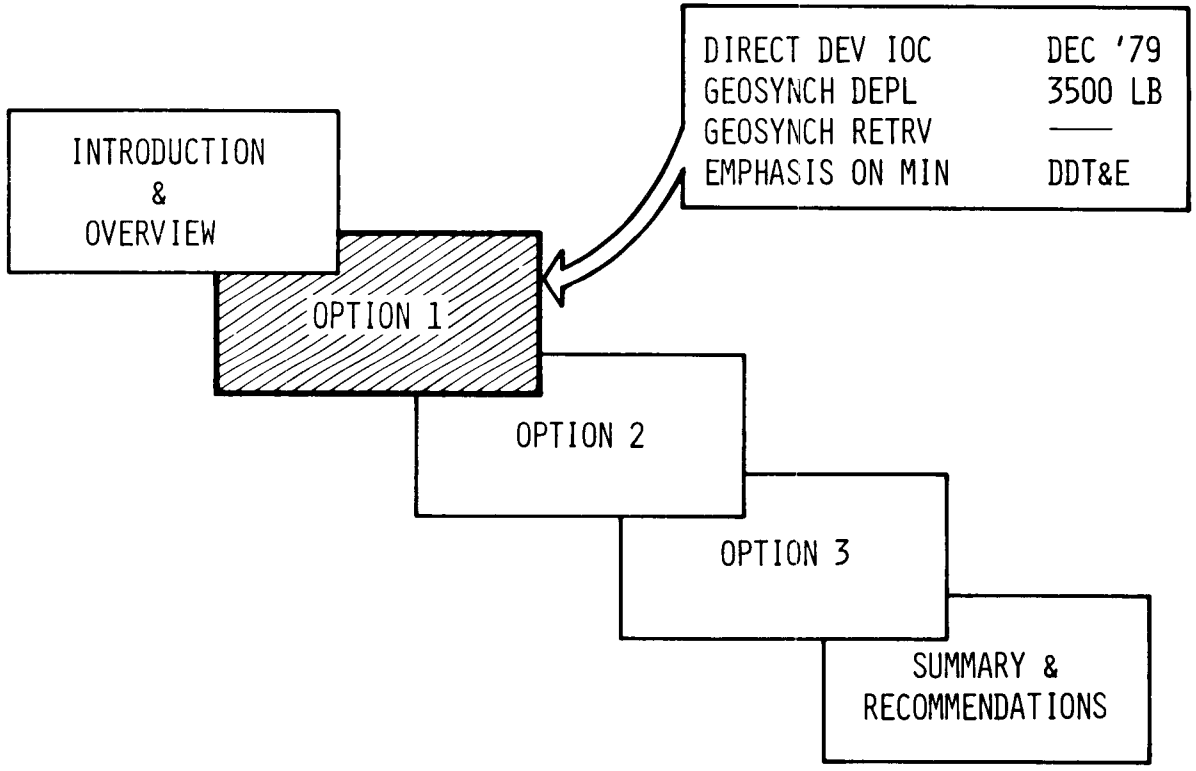

I-11
II-13
III-42

OVERVIEW 110A-1

Simplicity of core vehicle design with its all aluminum structure, separate propellant tanks, use of the OME as the main engine, all lead to low development costs for this vehicle. Its performance is augmented by AKS for some planetary missions and for geosynchronous multiple payloads, deployed in this option as a single payload.

The deployment and retrieval payload capabilities of the tug are shown for candidate flight modes and missions, together with costs and the number of flights and vehicles upon which they were based.

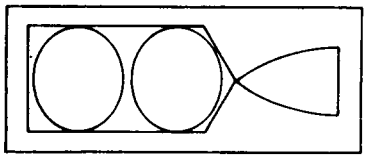

110A-1 OVERVIEW

- FEATURES
  - SINGLE STAGE TUG WITH AKS OPTION FOR PLANETARY & MULTI PAYLOADS
  - SEPARATE TANKS FOR SIMPLICITY - LOW COST
  - LOW DEV COST - AL STRUCT, BATTERIES
  - MAIN ENGINE OME 7.5K I_{SP} = 327.2 SEC
  - FIXED WEIGHT = 3205 LB

- FLIGHT MODES

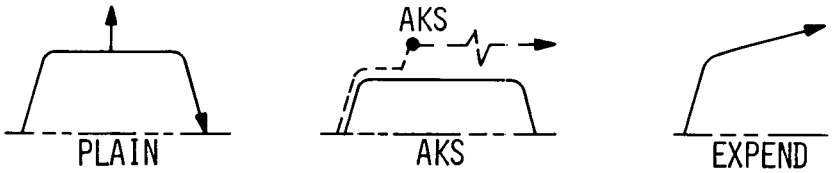

- PERFORMANCE

- DEPLOY GEO (LB)	4014	8207	
- DEPLOY PLANET (LB)		PL 23.	PAYLOAD 22 & 24

- PROGRAMMATICS

- DDT&E $M191/220	NO. OF FLIGHTS	218
	NO. OF TUGS	11
- TOTAL PROGRAM $M2820	NO. OF AKS	14

I-22

PERFORMANCE SUMMARY - 110A-1

The 110A-1 vehicle meets the requirements to deploy a 3500 pound payload to geosynchronous orbit. Operating with a kick stage, the 110A-1 can deploy over 8000 lbs. of combined payloads.

The delta-V budgets shown on the facing page text accounts for gravity losses resulting from the relatively low 7500 lbs thrust engine. A finite burn simulation which utilizes a gravity turn during the early portion of the maneuver and cross product steering during the terminal portion was used to define delta-V's for the transfer and circularization burns. The transfer to geosynchronous altitude was split into two burns. A 2 degree plane change was split between the two outbound transfer maneuvers and the remaining 26.5° degrees performed during the circularization burns.

All performance calculations account for APS and stop/start consumables. A detailed calculation was made for each concept and flight mode by accounting for attitude maneuvers for prethrust orientations, navigation sightings and IMU alignments. All limit cycle operations, both narrow and wide, were accounted for in the calculations. Midcourse corrections and translations required to null residuals after each main engine burn were taken into account in the evaluation.

(Ref. Vol. 6, Sect. 6.3)

OPTION 1 - 110A-1 PERFORMANCE SUMMARY

VEHICLE CHARACTERISTICS

W_{BO} = 3205 LBS
ADAPTER WT. = 1510 LBS
W_P- CAPACITY = 56900 LBS

I_{SP} = 327.2 SEC.
THRUST = 7,500 LBS
FPR = 1.7% Δ V

DELTA-V ~ FPS

	CORE		K.S.		
	OUTBOUND	ON-ORBIT	INBOUND		LOSSES
• DEPLOY	14018	0	13891	N/A	107
• DEPLOY + AKS	11424	0	11805	2670	98

CONSUMABLES ~ LBS

	APS	EPS + LOSSES
• DEPLOY	273	48
• DEPLOY + AKS	212	32

GEOSYNCHRONOUS PAYLOAD ~ LBS

• DEPLOY	4014
• DEPLOY + AKS	8207

OPTION 1 - 110A-1 MISSION PERFORMANCE

Concept 110A-1 meets the geosynchronous 3500 lb deploy requirement without kick stages. This configuration can perform five of the eight planetary missions in a recoverable mode. In assessing the capability to capture these missions, the performance data provided to the contractors by the Lewis Research Center was used. Missions N22, N24 and N23 were found to be beyond the capability of the 110A-1 to perform in a recoverable mode, while kick stages (KS 101) were required for N19, N20 and N23. Mission N23 was used as the sizing mission for the planetray kick stage.

If the kick stages were eliminated from the program, 8 additional expendable Tugs would be added to the 110A-Fleet.

(Ref. Vol. 4, Section 4.3.1)

110A-1 MISSION PERFORMANCE

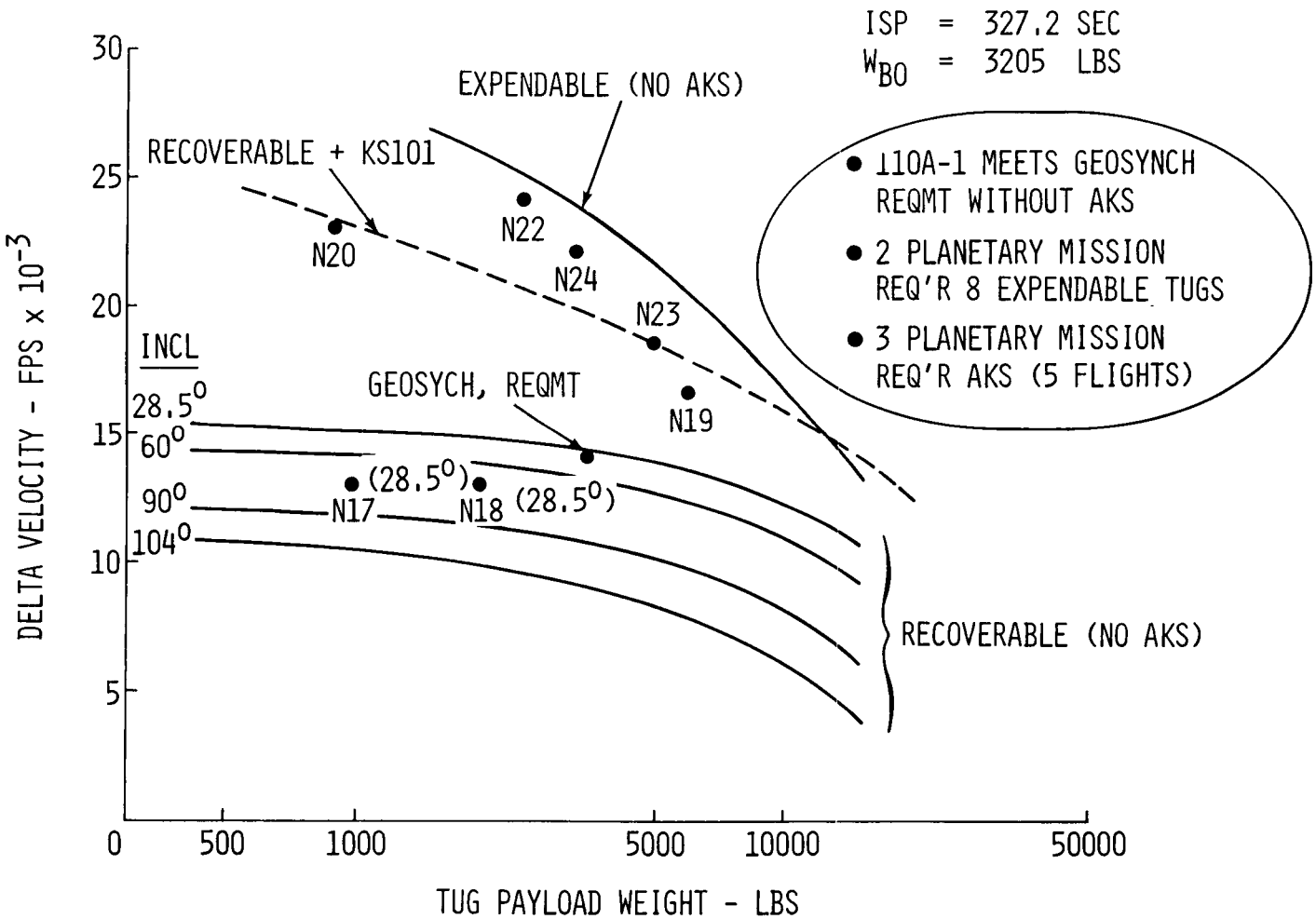

OPTION 1 - 110A-1 FLIGHT SUMMARY

Only 9 kick stages (KS 102) are used to deploy payloads to geosynchronous orbit,* out of a total of 230 flights. Five kick stages (KS 101) are used for planetary missions. A total of 73 double deployments and 28 triple deployments were scheduled to achieve an average payload per flight ratio of 1.57. The peak launch rate is 27 which occurs in 1983.

There are a total of 118 NASA flights of which 102 are launched from ETR and 16 from WTR. Of the 112 DOD flights, 96 are launched from ETR and 16 from WTR.

The following groundrules were applied to the Option 1 traffic assessment:

- No capability for longitudinal positioning of payloads after attaining synch orbit.
- Current design weight assumed for all planetary missions
- All groundrules pertaining to DOD missions identified in PD-TUG-M(316-73) dated August 10, 1973.

Concept 110A has the potential of capturing all the additional P/L's assigned to Option 1 with the exception of the Sortie mission D29. To provide this additional capability, 35 kick stages (KS 102) are used for earth orbital missions and 3 additional planetary kick stages (KS 101) are required. These extra missions require expending 10 additional Tugs.

---

*Kick stages used to permit multiple launches to geosynch orbit.

(Ref. Vol. 4, Sect. 4.3.1)

FLIGHT SUMMARY - OPTION 1: (110A-1)

FLIGHT MODE		CALENDAR YEAR											TOTAL
		80	81	82	83	84	85	86	87	88	89	90	
TOTALS	SHUTTLE	16	13	17	27	24	21	21	26	19	26	20	230
	TUG												SAME
TUG FLIGHT DISTRIBUTION	DEPLOY	(16)	(13)	(17)	(26)	(24)	(20)	(21)	(25)	(19)	(25)	(20)	(226)
	1 P/L - CORE ALONE	8	7	9	11	13	10	9	13	9	15	11	115
	- CORE + AKS			2		2		3	2				9
	2 P/L _ CORE ALONE	7	2	5	11	7	7	7	5	8	6	6	71
	- CORE + AKS				1	1						1	3
	3 P/L - CORE ALONE	1	3	1	3	1	3	2	4	2	4	2	26
	- CORE + AKS		1						1				2
	RETRIEVE	NOT APPLICATION											
	ROUND TRIP				(1)		(1)		(1)		(1)		(4)
	SORTIE				1		1		1		1		4
MISSION MODEL	TOTAL	(25)	(23)	(24)	(45)	(34)	(34)	(32)	(41)	(31)	(40)	(31)	(360)
	DEPLOY	25	23	24	44	34	33	32	40	31	39	31	356
	RETRIEVE												0
	SORTIE				1		1		1		1		4
FLT RATE USED IN COSTING		3	12	17	27	24	21	21	26	19	26	20	216

ONLY 9 AKS USED FOR GEOSYNCH MISSIONS

I-3

CONFIGURATION - INBOARD PROFILE - 110A-1

The 110A-1 configuration is the only concept employing distinctly separated tanks as weight was not as critical for this concept due to the deploy-only mission requirement. Installed length of 30.5 feet allows 29.5 feet for payload installation (25 ft. with AKS module installed).

The main tanks are made of spun aluminum alloy half-sections, welded together around their girth diameter. Outer shell sections are made of aluminum skin/core honeycomb construction, attached to the tank girths by mechanical joints.

The engine thrust structure is a conical section of aluminum stiffened sheet construction also. All main support and intermediate frames are of aluminum alloy construction.

Where required, an aluminum meteorite shield, supported off fiberglass standoffs, protects the propellant tanks.

Twelve lock latches are located at both ends of the tug for final securing of payloads to tug and tug to support adapter. Twelve conical index fittings at both forward and aft interfaces serve to index and align the mating surfaces and transmit shear and compression loads across the interface.

All subsystem equipments are located in side mounted equipment modules for easy access and serviceability.

Double goldized mylar blankets with nylon net spacers in conjunction with surface coatings on all exterior surfaces provide the required thermal balance for the spacecraft. In addition aluminum heat pipe radiators mounted on the surface of the equipment modules maintain the thermal balance of the equipment modules.

A complete inboard profile and structural arrangement for this configuration may be found in Volume 5.

(Ref. Vol. 5, Part I, Opt. 1, Sect. 5.2)

INBOARD PROFILE - 110A-1: SIDE VIEW

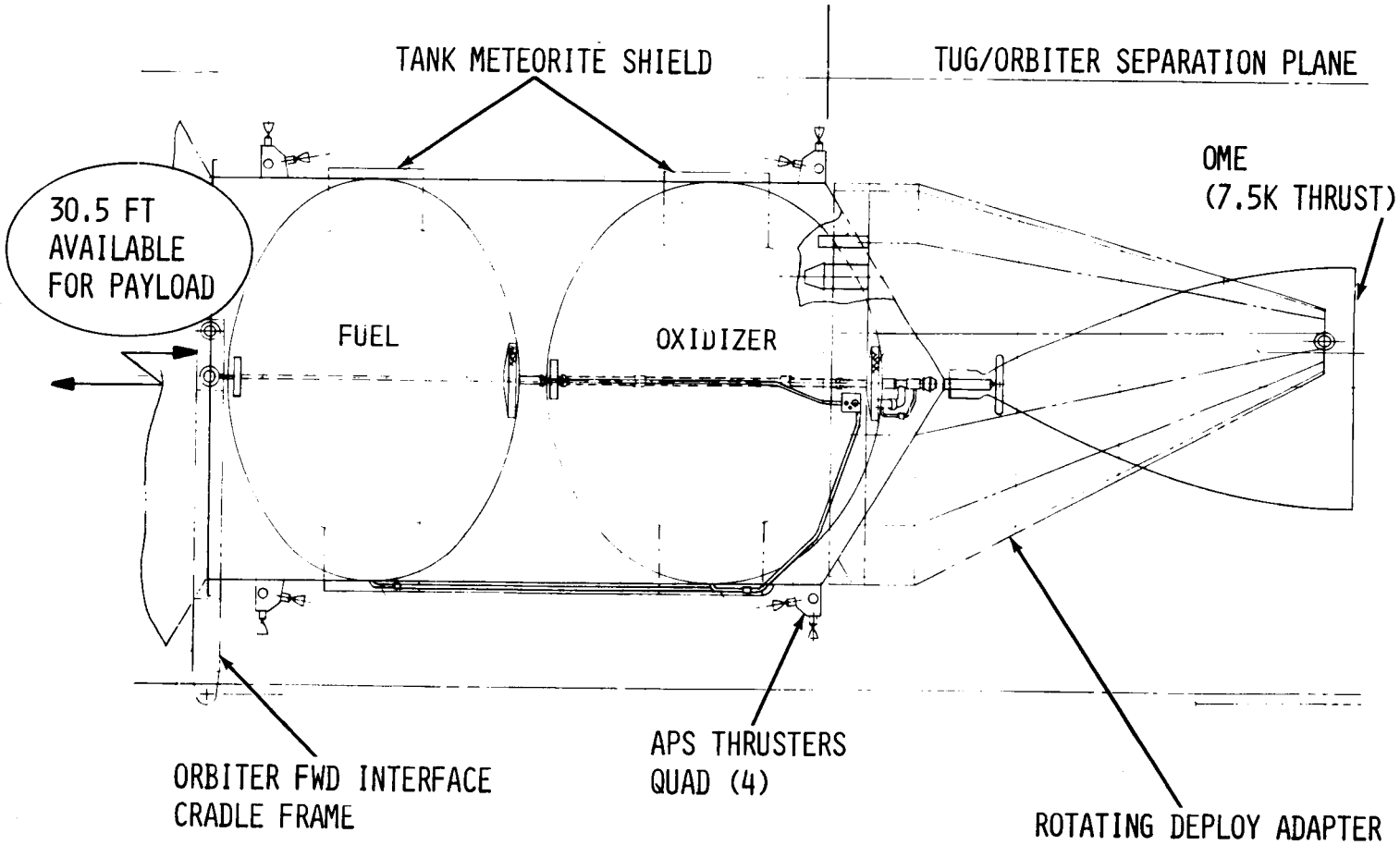

I-31

THIS PAGE INTENTIONALLY LEFT BLANK

INBOARD PROFILE - 110A-1: PLAN VIEW

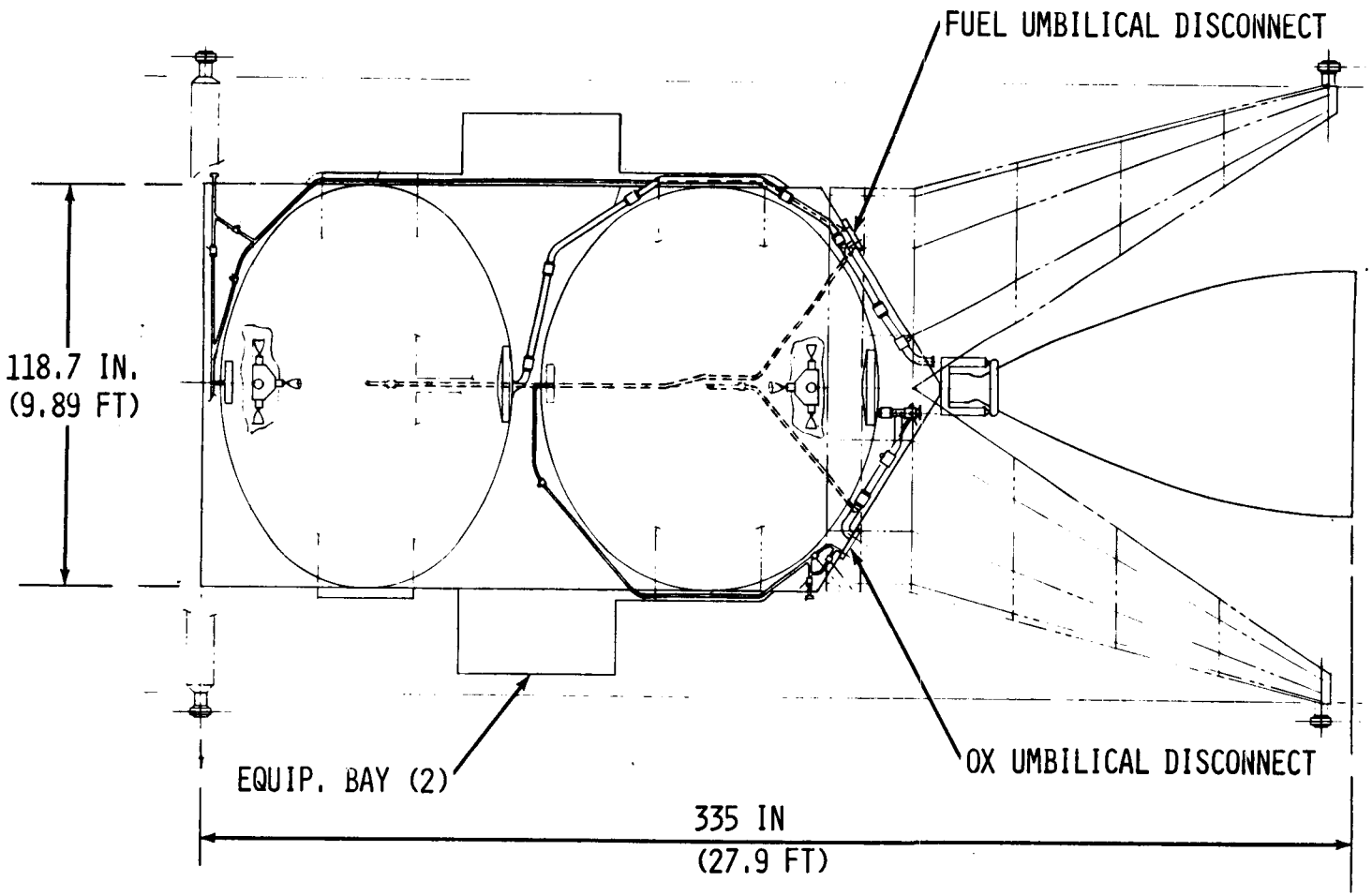

I-30

CONFIGURATION DESIGN DATA & WEIGHT SUMMARY - 110A-1

The features summarized in this chart provides some insight into the subsystem details and reflects the options for which the Tug is designed. Thus:

- o The main tanks capacity at 56900 lb is suitable for deploying only missions larger capacity is needed for optimum retrieval capability.
- o The low cost subsystem technology is outlined by reference to the Aluminum structure , & OME 7.5K main engines
- o The missions flown show their influence in the deploy only mechanism, the battery power supply which is well suited to the short flight duration, modest APS tank capacity and the use of only 16 thrusters in the APS system which number is increased to 24 when rendezvous and docking is to be accomplished.

The weights - summarized by subsystem are presented to WBS level 6 in Vol. 5 together with c.g. and inertia data. There weights are further itemized in Vol. 5 to WBS level 7 or lower; all subsystem components being listed on the data Forms "B" which are included in each subsystem description for each tug. At the bottom of the chart are weights showing a typical build up to the 65000 lb Shuttle payload capacity. The example given is for a plain tug deploy mission. Other missions have different figures for consumables, main propellant loading and payload. They are given in detail in Vol. 4 and Vol. 6.

(Ref. Vol. 5, Part I, Opt. 1, Sect. 5.2)

CONFIGURATION DESIGN DATA AND WEIGHT SUMMARY
SINGLE STAGE STORABLE TUG 110A-1

ITEM	FEATURES	WEIGHT-LB
• STRUCTURE		1326
TANKS	SEPARATE-SPUN ALUMINUM CAP. = 56900 LB	
FRAMES	ALUMINUM	
OUTER SHELL	ALUMINUM HONEYCOMB	
DOCKING	DEPLOYMENT CAPABILITY	
• PROPULSION		734
MAIN ENGINE	OME 7.5K THRUST-Isp = 327.2 SECS	
PRESSURIZATION	AMBIENT HELIUM - PFR TANKS-CAP. = 13.7 LB	
ACPS	HYDRAZINE-16 THRUSTERS x 25 LB-CAP. = 281 LB	
• THERMAL CONTROL		45
	MYLAR TANK INSUL COATINGS, RADIATOR	
• AVIONICS		596
RENDEZVOUS & DOCK	AUTONOMY LEVEL IIIA - DEPLOYMENT CAPABILITY	
DATA MANAGEMENT	COMPUTER-48K WORDS	
GUIDANCE AND NAV	CAROUSEL IMU WITH GYRO BACKUP	
GUIDANCE UPDATE	GROUND UPDATE	
POWER	BATTERIES-AG-ZN-34HRS-600AMP HRS	
	DRY WEIGHT	2701
	DRY WEIGHT & CONTINGENCY	2971
	NON USABLE PROPELLANT	234
	BURNOUT WEIGHT	3205
DEPLOY MISSION	NON IMPULSE EXPENDABLES	48
	ATTITUDE CONTROL PROPELLANT	281
	MAIN PROPELLANT	55942
	PAYLOAD	4014
	TUG AT FIRST IGNITION	63490
	SHUTTLE INTERFACE ITEMS	1510
	TOTAL-SHUTTLE INSTALLED	65000

I-15

MAIN PROPULSION SUBSYSTEM (MPS) - 110A-1

The 110A-1 engine is required to start up to 6 times per mission, and must remain on-orbit for up to 34 hours. The planetary missions require that the Tug be turned around and retrofired as soon as possible after the planetary insertion burn. This leads to the minimum restart requirement of 10 minutes. The capability to drain and depressurize the vehicle in both the horizontal and vertical positions is provided. An in-flight dump system was not included; however, a sensitivity study has been conducted which indicates that it can save vehicle weight and cost due to the reduction in maximum landing weight; incorporation of this feature is desirable.

This vehicle uses separate propellant tanks and a pair of prestressed filament reinforced (PFR) helium tanks. The reduced on-orbit time compared to the other vehicles eliminates the necessity to provide redundant helium isolation valves and regulators.

The engine is the OME 7.5 producing a thrust of 7500 lbs. and an Isp of 327.2 seconds at a 1.9 mixture ratio. It is a modified version of the Shuttle OMS engine with a turbopump added to avoid the weight penalties of pressurized tanks. As such, it represents the minimum development risk of all the engine candidates.

The PFR tank is the only subsystem component representing any significant development risk. Failure to develop the tank would mean a 48 lb. weight increase should a titanium tank be used as a fall back position.

Fourteen of the sixteen (88%) types of subsystem components are either existing or modifications of existing designs, further reducing subsystem development risk.

(Ref. Vol. 1, Part I, Opt. 1, Sect. 5.2)

110A-1 MAIN PROPULSION SUBSYSTEM (MPS)

DRIVER REQUIREMENTS

- 19×10^6 LB-SEC TOTAL IMPULSE
- 6 BURNS/MISSIONS
- 34 HR ON-ORBIT TIME
- 10 MIN MIN RESTART TIME
- 5 3/4 HR MAX RESTART TIME
- VERTICAL & HORIZONTAL DRAIN
- MIN 16 PSIA ENG INLET PRESS.
- OFF-LINE SERVICING & CHECKOUT

MPS DEFINITION

- OME 7.5 K ENG
- SEPARATE PROP. TANKS
- PFR He TANKS (3500 PSIA)
- 2 IN. (FUEL), 3-1/4 IN. (OXID) DIA FEEDLINES
- SINGLE He ISOL VALVES & REG ASSY
- 22.7 IN. DIA He BOTTLE

MPS PERFORMANCE

- 7500 LB THRUST
- 327.2 SEC ISP
- 24 PSIA (MAX) MMH TANK PRESS.
- 34 PSIA (MAX) N_2O_4 TANK PRESS.
- 13.7 LB He
- 56,900 LB PROP.
- 1.9 MIXTURE RATIO

DEVELOPMENT RISK & TECHNOLOGY

- PFR TANK

MOD TO EXISTING
ENGINE DESIGN, LOW RISK
88% OF COMPONENTS EXISTING
OR MOD EXISTING DESIGNS

I-25

MAIN PROPULSION SUBSYSTEM (MPS) DESCRIPTION 110A-1

This vehicle utilizes the OME 7.5 engine in order to reduce the development cost. Simplest in terms of development, this engine consists of a gas generator driven turbopump assembly supplying propellants to the "existing" OME thrust chamber assembly.

The MPS is based upon a design which is almost completely state-of-the-art. The only components which represent a new design are the helium tanks which are of light weight prestressed filament reinforced (PFR) construction.

The remainder of the pressurization system is conventional, with pressure control provided by modified OMS regulators and relief valves. The 110A-1 differs from the other options in that the 0.97 mission reliability may be met without benefit of redundant regulators and helium initiating valves. Quad check valves downstream of each regulator prevent the backflow of propellant vapors into the regulators and upstream portions of the helium system. Solenoid valves straddling each relief valve/burst disc assembly allows selective tank depressurization.

Zero g starts are provided for by screen type propellant retention devices located over each tank outlet. These provide sufficient propellant to maintain engine operation until the remainder of the propellant settles. A prevalve is installed upstream of each engine inlet to isolate the propellants from the engine during ground and launch operations and allow engine drain between burns.

Ground drain, in both the horizontal and vertical positions, is provided. The horizontal drain lines lead from the tank equators to the umbilical disconnect panels. Two umbilical disconnect panels are provided on opposite sides of the vehicle. All lines leading to a panel have redundant shutoff capability to meet the MPS fail safe requirement.

(Ref. Vol. 5, Part I, Opt. 1, Sect. 5.2)

MPS SCHEMATIC - 110A-1

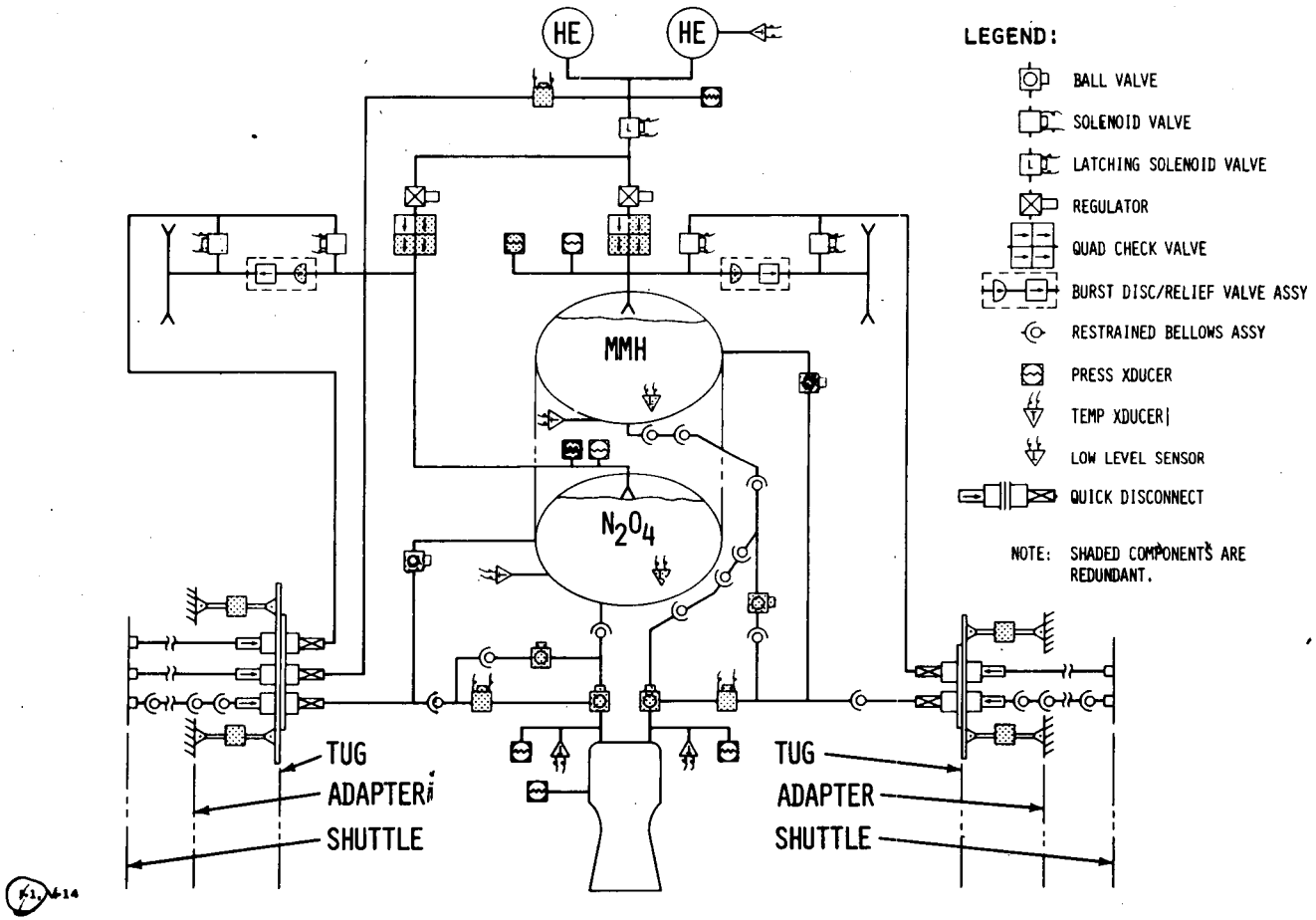

K1.4-14

AUXILIARY PROPULSION SYSTEM - 110A-1

The fail operational/fail safe requirement demands that the mission be completed after any single failure and shuttle/crew safety be guaranteed after two failures. Sixteen thrusters is the minimum number required to provide attitude control after two thruster failures. Thrust level is driven by the requirement to provide relatively high acceleration in one axis for mid-course corrections. The "minimum thrust" requirement is derived from minimum tolerable accelerations which achieve mission completion and is used to establish thruster requirements for the one engine failed case.

Tanks are sized for the guaranteed usable propellant plus 10% contingency. Contingencies include quantity gaging error, trapped propellant and propellant for cross-coupling losses in the event of a thruster failure.

The only component in the system which is not classified as existing or modified existing is the bladder. However the advanced state of elastomeric bladder technology renders it a non-risk item.

(Ref. Vol. 5, Part I, Opt. 1, Sect. 5.2)

110A-1 AUXILIARY PROPULSION SYSTEM (APS)

DRIVER REQUIREMENTS

- USABLE PROPELLANT = 270 LB
- MIN THRUST PER AXIS* = ± 50 LB
- NOMINAL THRUST PER AXIS* = 100 LB
- FAIL-OPERATIONAL/FAIL SAFE DESIGN
- VENT SYS TO 20 PSI AT TUG RETRIEVAL
- VERIFY PROPELLENT QUANT PRE-DOCKING
- NO VENTING IN PAYLOAD BAY

* Y AXIS ONLY

APS DEFINITION

- MONOPROPELLANT HYDRAZINE
- 16 THRUSTERS @ 25 LB THRUST EACH
- 2 PROPELLANT TANKS, LM RCS DESIGN 12.5 IN. D x 39 IN. LONG
- ELASTOMERIC BLADDER PROPELLANT ACQ
- 1 TITANIUM HELIUM TANK, 15.3 IN. D
- 5/8 IN. LIQ LINES, 1/2 IN. GAS LINES

APS PERFORMANCE

- I_{SP} = 232 STEADY STATE, 170 MIN PULSING
- PRESSURE BUDGET
  - HELIUM TANK = 2600 PSI MAX
  - PROPELLANT TANK = 340 PSI
  - THRUSTER INLET = 325 PSI MIN
  - CHAMBER PRESS. = 140 PSI
- 10% CONTINGENT PROPELLANT REQ

DEVELOPMENT RISK & TECHNOLOGY

- NO TECHNOLOGY
- APPROX 90% EXISTING OR MOD EXISTING COMPONENTS

I-5

APS SCHEMATIC - 110A-1

The Auxiliary Propulsion System is a helium pressurized, monopropellant hydrazine design incorporating state-of-the-art hardware. All components are redundant to the extent that mission completion is possible after any single failure and shuttle/crew safety is guaranteed after any two failures (fail operational/fail safe).

Helium is stored in off-the-shelf, spherical titanium vessels. The helium latching solenoid valve and regulator package, modified LM components, provide pressure regulation to approximately 350 psi. A downstream quad check valve, another LM type design, protects the regulators/solenoid valves against contamination by propellant vapors which may diffuse through the propellant tank bladders. The propellant tanks are modified LM Reaction Control System tanks. They are equipped with fully reusable elastomeric (EPT-10) bladders for propellant acquisition.

The solenoid valve upstream of the relief and vent valve package protects against a failure of the relief valve to reseat or of both vent valves to close after vent, conditions which create a potential tank implosion situation during reentry. Series redundant thruster isolation valves, normally open during Tug operation, are closed in the event of an open thruster failure. Each set of valves isolate one of four groups of thrusters. Four manifolds is the minimum number possible which retains the fail op/fail safe criteria. That is, two groups of thrusters can be isolated and vehicle attitude controlled in all axes.

The thrusters are the 25 lb. thrust, 232 sec. Isp Hamilton Standard model REA 19-3, which was developed for use as the shuttle vernier engine when it incorporated a monopropellant reaction control system. Each thruster is equipped with a catalyst heater to maintain it at 150°F for life considerations.

(Ref. Vol. 1, Part I, Opt. 1, Sect. 5.2)

APS SCHEMATIC - 110A-1

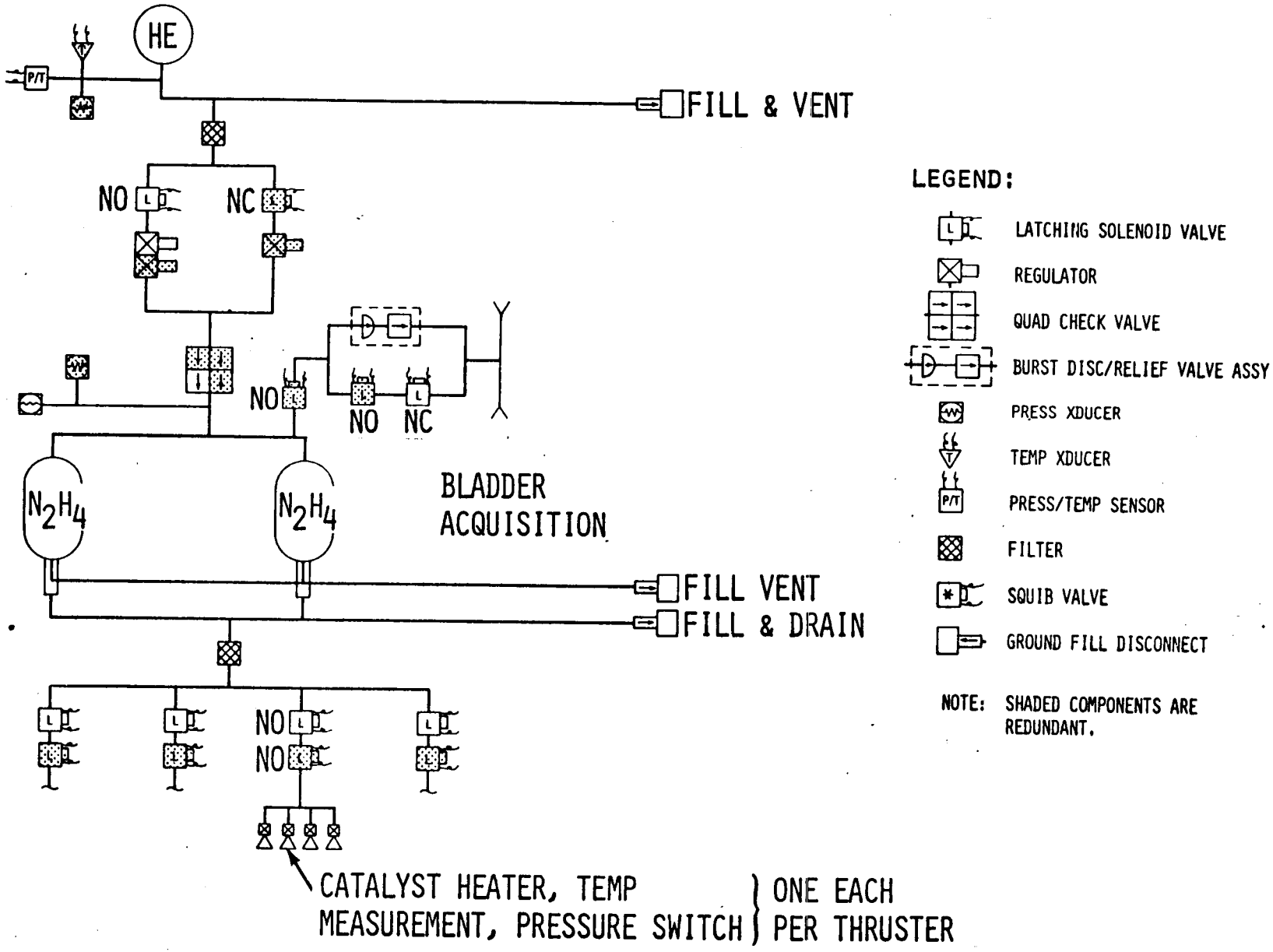

ASTRIONICS SUBSYSTEM - 110A-1

The 110A-1 is a single stage deploy-only Tug that uses apogee kick stages (AKS) to deploy heavy payloads. The reliability requirements are met with no redundancy on any astrionics unit although the computer and APS electronics are redundant for safety reasons (when the Tug is within 20 miles of the Orbiter); the same safety reason also dictates a rate gyro back-up for the IMU. The reduced power consumption, which is the result of a short mission time line and no provisions for payload support, allows the use of a battery rather than a fuel cell for electrical power.

Since the 110A-1 does not have the capability to retrieve payloads, there is no requirement for the Tug to communicate with payloads via RF link, thus permitting a single Dedicated Frequency Station (DFS) to be used for radio communication between Tug and Orbiter or between Tug and ground. The DFS is designed to be compatible with the NASA (STDN) and Air Force (SGLS) tracking networks as well as the projected NASA Telemetry and Data Relay Satellite System (TDRSS).

With the exception of the communications subsystem, a high percentage (80% - 95%) of all astrionics equipment is modified existing equipment. The S-Band communications equipment is new primarily because it is designed to be compatible with TDRSS (spread spectrum) and CCIR interference requirements. No new technology is required for any 110A-1 astrionics equipment.

(Ref. Vol. 5, Part I, Option 1, Section 5.2)

110A-1 ASTRIONICS SUBSYSTEMS - AUTONOMY LEVEL IIIA

GUIDANCE, NAVIGATION & CONTROL

- CAROUSEL IVB IMU - BACKED UP BY RATE GYRO UNIT FOR SAFETY
- STAR TRACKER
- 90% MOD EXISTING EQUIP
- NO NEW TECHNOLOGY

COMMUNICATIONS

- TUG/ORBITER OR TUG/GND COMM
- DEDICATED FREQ STA (DFS)
- STDN/SGLS/TDRSS COMPATIBLE
- S-BAND SYS INTERNALLY REDUNDANT
- NEW EQUIP. REQ
- NO NEW TECHNOLOGY

DATA MANAGEMENT

- 48K WORD CDC 469 COMPUTERS REDUNDANT FOR SAFETY
- ODETICS DDS 3000 TAPE RECORDER
- FLEXIBLE SIGNAL INTERFACE
- 90% MOD EXISTING EQUIP.
- NO NEW TECHNOLOGY

ELECTRICAL POWER

- 600 AMP-HR AG-ZN PRI BAT. BACKED UP BY 7 AMP-HR EMERGENCY BATTERY FOR SAFETY
- SOLID-STATE & ELECTROMECH POWER CONTROLLERS
- 80% MOD EXISTING EQUIP.
- NO NEW TECHNOLOGY

NO NEW TECHNOLOGY

ASTRIONICS SCHEMATIC - 110A-1

The Data Management Subsystem (DMS) with its Flexible Signal Interface (FSI) is the pivot around which all other astrionic systems revolve. The remaining astrionic systems feed data or commands to the DMS or take commands and information from it. The Communication Subsystem receives and transmits over 2 antennas located 180° apart on the vehicle for total coverage. The incoming information and commands move through the diplexers, redundant receivers and baseband processors to the DOD secure communication units. The secure comm. is used for DOD payloads only. From the output of the Comm. Subsystem the information flows to the Flexible Signal Interface Controller (FSI) and then into the computer. Telemetry signals flow from the instrumentation sensors through Data Acquisition Control Units (DACU) to the FSI and then out through the Comm. system. The guidance, navigation and control information that is measured by the IMU, Star Tracker and Rate Gyros flows through a DACU to the FSI and then to the computer for processing with uplinked data. The control outputs from the computer go to the MPS, EPS and APS Subsystems as well as to the ME/TVC and APS electronic units. These are the outputs that activate and control the electrical power systems and thrusting systems of the vehicle.

Status information flows from auxiliary stages to the computer and commands flow from the computer to the auxiliary stages over hardwires.

The information to and from the orbiter is also sent over hardwires when the Tug is in the orbiter payload bay.

(Ref. Vol. 1, Part I, Opt. 1, Sect. 5.2)

ASTRIONICS SCHEMATIC

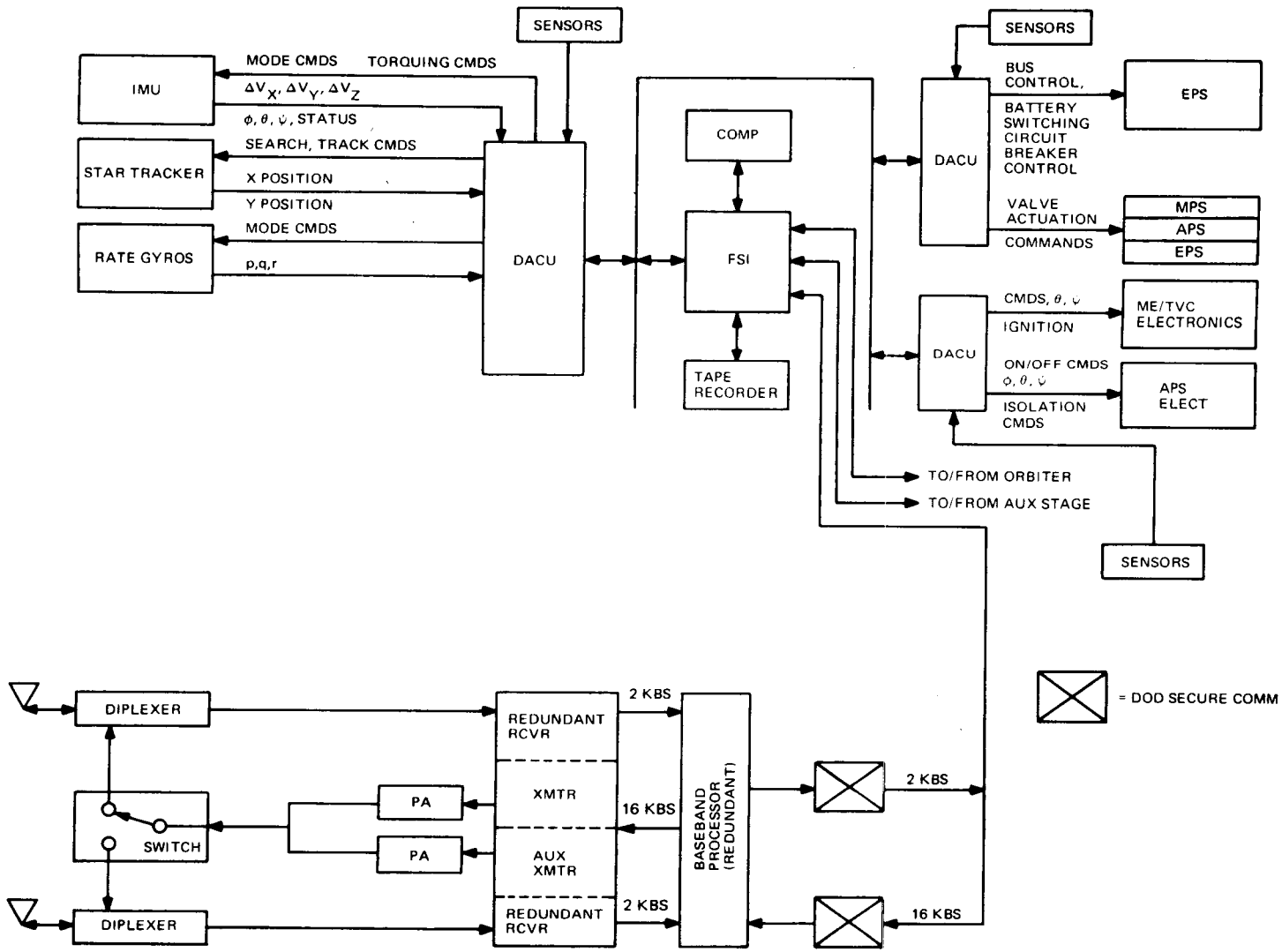

V-18

110A-1 ELECTRICAL POWER SUBSYSTEM SCHEMATIC

The primary power source is a 600 amp-hr manually activated silver-zinc battery. It is based on Apollo LM technology and is a scaled-up version of the LM descent battery. This battery feeds both equipment bay buses and is backed up by a 7 amp-hr secondary silver-zinc battery. This emergency battery is for powering essential equipment during Orbiter/Tug deployment and retrieval operations and provides for Orbiter crew safety.

The distribution section is a combination two-wire and structure ground (return bus) system. Solid state power controllers are used for applications requiring 5 amp or less and electro-mechanical remote control circuit breakers are used for 20 amps or larger applications. The Orbiter supplies power for critical Tug equipments (e.g. IMU) from earth launch through Tug deployment. GSE power is required for ground checkout.

(Ref. Vol. 5, Part I, Opt. 1, Sect. 5.2)

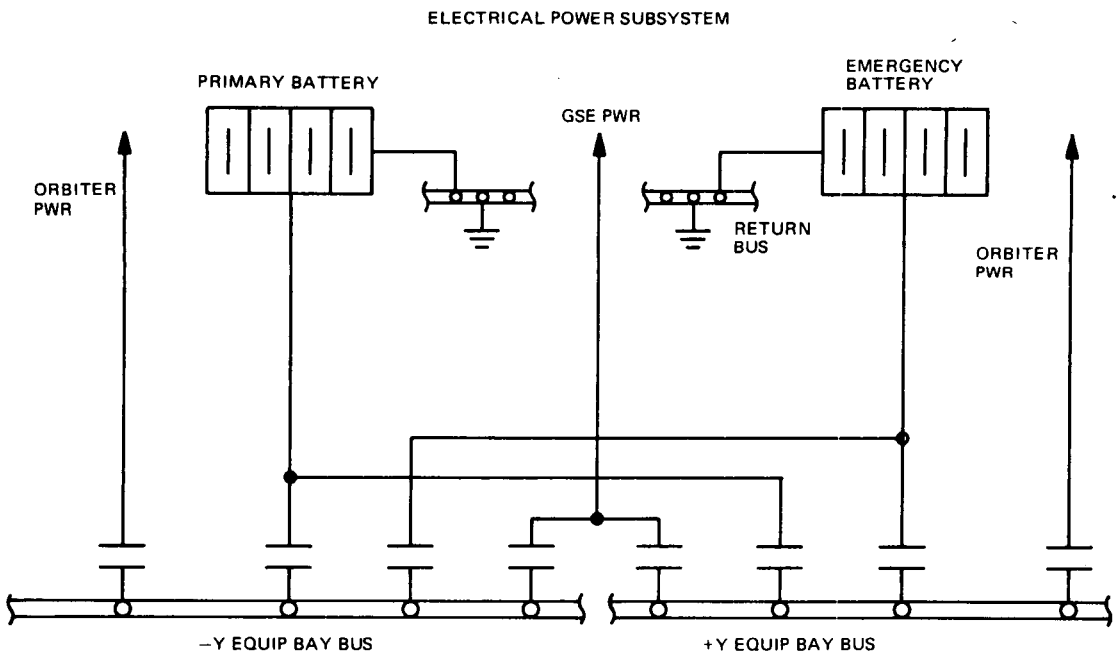

Schematic for 110A-1

THERMAL CONTROL 110A-1

The Tug Thermal Control is driven by the wide latitude in missions, the requirement for no preferred orientation, the limited propellant heat sink when the low altitude polar missions are flown, and by the compliment of high power density avionics chosen for a particular configuration.

Because the mission duration is only 34 hours, the thermal mass of propellants is sufficient to maintain the propellants above 40°F without insulation. MLI is required only between the tank and saddle bag to limit local tank hot spots. The insulation is goldized mylar with nylon netting.

An Alzak coating over the outside of the vehicle keeps tank temperatures below 90°F. Silver backed teflon on the saddle bags and heat pipe radiators minimize incident environmental heat absorption and allow a high degree of heat rejection from the avionics.

A base heat shield protects the thrust structure for the main engine nozzle radiation. Electrical heaters on ME and APS assures that unacceptable cold temperatures, 40°F and 150°F respectively, are never reached.

The majority of avionics are mounted on aluminum plates located in the saddle bags and maintained at acceptable temperatures, 30°F to 120°F, through appropriate radiation couplings and electrical strip heaters. The battery and Carousel V IMU are on separate heat pipe header/simple heat pipe radiator heat rejection circuit to dissipate the required heat under the maximum environmental conditions and to minimize heater power under minimum environmental conditions.

(Ref. Vol. 5, Part I, Opt. 1, Sect. 5.2)

110A-1 THERMAL CONTROL (T/C)

DRIVER REQUIREMENTS

- NO PREFERRED ORIENTATION
- LOW ALT POLAR MISSION
- MISSION DURATION - 34 HR
- ME NOZZLE RADIATION-COOLED
- BAT. & CAROUSEL IMU EXCEED PASSIVE CAPABILITY

T/C DEFINITION

- 100 FT^2 GOLDIZED MYLAR MLI
- AL BASE HEAT SHIELD
- SILVER BACKED TEFLON & ALZAK COATINGS
- MOST AVIONICS PASSIVELY COOLED
- 4 FT^2 VCHP/RADIATOR FOR IMU
- 6 FT^2 VCHP/RADIATOR FOR BAT.
- APS & ME ELECT. HEATERS
- HEATERS FOR AVIONICS PALLETS

T/C PERFORMANCE

- 70°F VEHICLE FROM LAUNCH TO DEPLOY
- PROPELLANTS - 40°F TO 90°F
- AVIONICS - 30°F TO 120°F
- BASE SHIELD - 600°F, THRUST STR - 250°F
- STRUCT. 130°F MAX ON ENTRY
- BAT. - 30°F TO 125°F

DVT RISK & TECHNOLOGY

- VCHP REQUIRE ADDITIONAL PERFORMANCE DATA
- UNCERTAINITY IN LIFE/REUSIBILITY OF COATINGS & INSULATION

REDUCED MISSION DURATION & BAT. SIMPLIFY THERMAL CONTROL

I-21

THERMAL CONTROL SCHEMATIC 110A-1

Both the battery and Carousel V IMU dissipate more heat and require a more stringent thermal control than a passive septem can provide. A heat pipe heat control and rejection system offers the reliability of a passive system with the performance capability of an active pumped loop system. The units are placed on separate circuits since the IMU runs at 130°F whereas the battery exhibits best life at 80°F. The chosen heat pipe system has a variable conductance heat pipe header, a self regulating device, transporting heat to a simple heat pipe radiator. A system of this type has already been built and tested at GAC and requires a minimum amount of further development.

(Ref. Vol. 5, Part I, Opt. 1, Sect. 5.2)

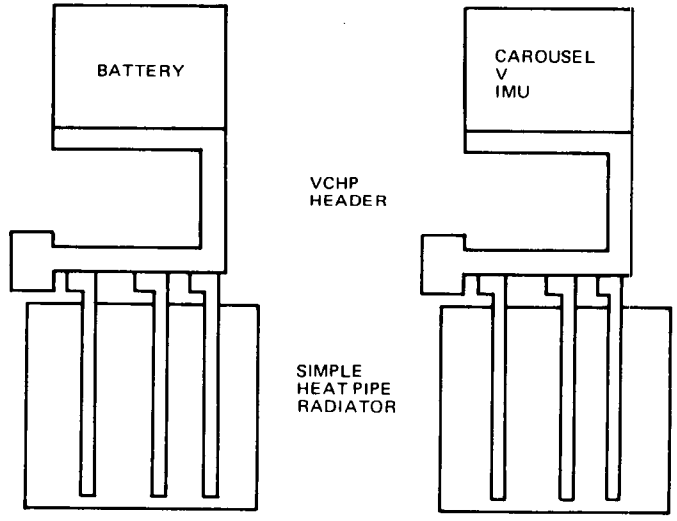

V-8

Thermal Control Schematic 110A-1

Reliability of the 110A-1 core was computed on the basis of the single deploy mission of 34 Tug hours (53 orbiter hours). Redundancy was selected to meet certain safety requirements:

- Fail Op/Fail Safe for Auxiliary Propulsion
- Fail Op/Fail Safe for Critical Command and Control Functions
- No single Tug failure result in hazard which jeopardizes flight or ground crew

Redundancy selected to meet these requirements yields a reliability higher than 0.97 (0.9874) for the design reference mission.

The 110A-1 core coupled with an Apogee Kick Stage (AKS) for the multiple deploy mission of 25 Tug hours (49 Orbiter hours) yields a combined mission reliability of:

0.9902	Core
0.9987	AKS
0.9987	Total

(Ref. Vol. 1, Part I, Opt. 1, Sect. 5.6)

SUBSYSTEM REDUNDANCY ALLOCATION SUMMARY TABLE

CONFIGURATION 110A-1

0.97 REL. EXCEEDED DUE TO SAFETY REQMTS

MISSION - 58 HR. (34 HR - TUG) DEPLOY (RELIABILITY REFERENCE)

SUBSYSTEM	RELIABILITY	REDUNDANCY
• STRUCTURE (INCLUDING INTERFACE SYSTEMS)	0.99965	———
• PROPULSION		
- MPS	0.99282	VENT VALVES
- APS	0.99979	THRUSTER VALVE VENT VALVE
• AVIONICS		
- GN&C	0.99717	APS CONTROL ELECT
- COMM	0.99935	RECEIVERS
- DMS	0.99986	COMPUTER
- POWER	0.99874	———
	TOTAL - 0.9874	

APOGEE KICK STAGES - 110A-1

Deployment of payloads beyond the capability of the plain tug may be achieved by using solid rocket motors (SRM) as a second stage in the deployment sequence.

In the 110A-1 configuration, there are two flight modes which may require the use of an AKS. Firstly some planetary missions, in which case the payload is ballasted to weigh a total of 5000 lbs. so that a common AKS can be used. The configuration comprises a truncated cone structure of aluminum alloy with nine SRM mounted externally. To minimize the number of SRM, and to limit the maximum g, the total burn is split into two. The first burns six SRM and the second burns the remaining three. After the first burn, the six SRM cases are jettisoned outboard and aft.

The second flight mode which may require an AKS is the deployment of more than one payload. In this case the payload combination is ballasted to weigh 8207 lbs. and requires two SRM to achieve orbit. This configuration shows the two SRM mounted external to an aluminum alloy truncated cone. The AKS deploys the payloads combination as a single payload, since each payload positions itself in its own orbit after deployment. This configuration shows the two SRM mounted external to an aluminum alloy truncated cone. The AKS deploys the payloads combination as a single payload, since each payload positions itself in its own orbit after deployment. This is a feature of Option 1 only.

The SRM cases are identical for both AKS but, for planetary missions, increased I_{SP} requires a higher nozzle expansion ratio and, therefore, a larger nozzle.

Each AKS has a GN&C subsystem which is updated by the tug just prior to their separation. Control during SRM burn is provided by vectoring motor thrusts. Attitude control prior to payload activation is provided by limit cycle APS. Power comes from an electrical battery. All equipment is mounted within the structural shell of the stage.

(Ref. Vol. 1, Part I, Opt. 1, Sect. 5.2)

KICK STAGE 110A-1

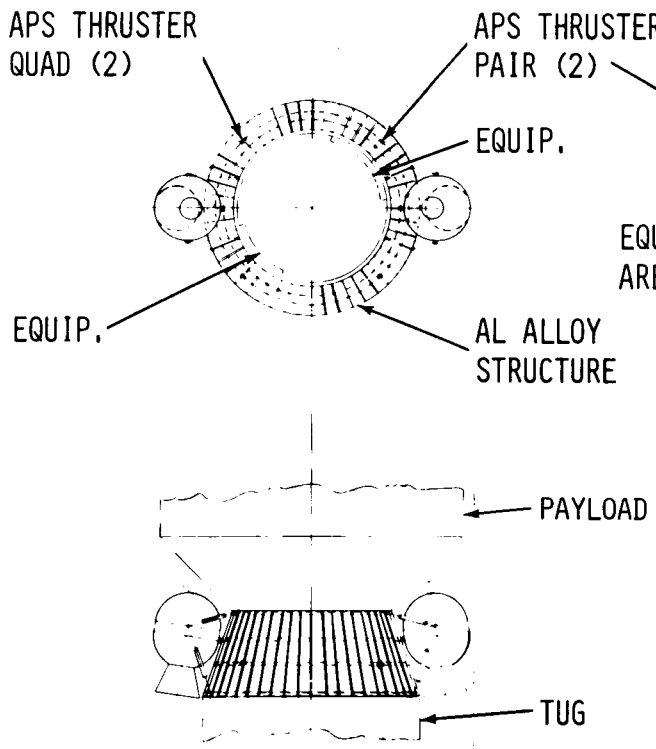

APOGEE KICK STAGE CONFIG
FOR DEPLOYMENT (NON PLANETARY)

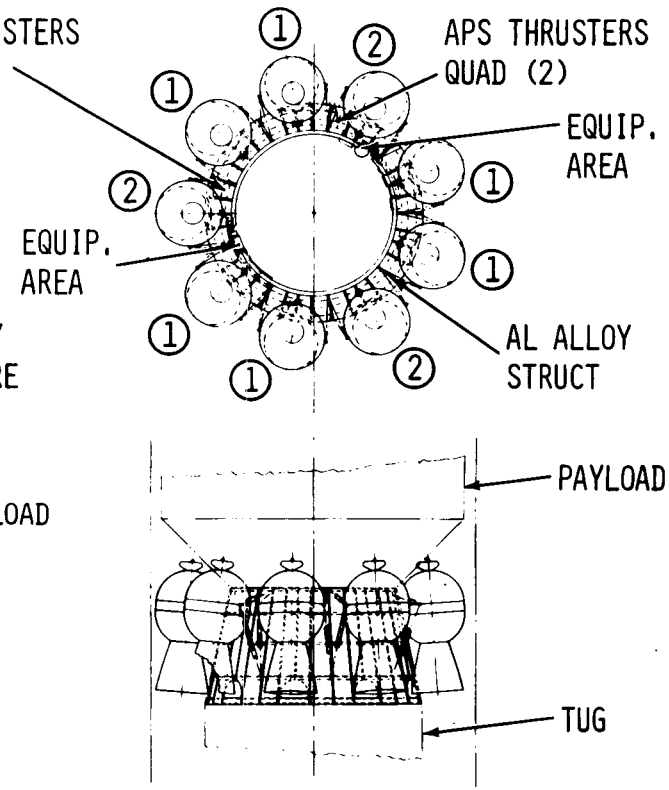

APOGEE KICK STAGE CONFIG
FOR DEPLOYMENT TO PLANETARY MISSIONS

① = SRM'S FOR FIRST BURN (6)
- SUBSEQUENTLY JETTISONED

② = SRM"S FOR SECOND BURN (3)
- NOT JETTISONED

I-32

APOGEE KICK STAGES (AKS) CHARACTERISTICS - 110A-1

			GEOSYNCH	PLANETARY
SRM:	-	WEIGHT EACH	1667 LB	
		CLUSTER OF	2	9
		ϵ	34/1	50/1
		I_{SP}	287 SECS	295 SECS
		λ'	.909	.920
		3.6G LIMIT BY BURN=	66 SEC	66 SEC & SERIES BURN
STRUCTURE:	- AL FRAMES, SKIN, STRINGERS	WEIGHT	433 LB	449 LB
PROPULSION:	- SWIVEL NOZZLE T.V.C.	WEIGHT	27 LB.	
	- GASEOUS N_2 APS			
ASTRIONICS:	-	WEIGHT	67 LB.	
	- BATTERY POWER FOR		30 MINS.	
	- INITIAL STATE VECTOR FROM TUG			
	- DIRECTIONAL CONTROL FOR		15 MINS.	
RELIABILITY:	- STAGE		.9987	
	- OVERALL MISSION		.970	
PERFORMANCE:	- DEPLOY PAYLOAD	WEIGHT	8207 LB	5000 LB
	- STAGE DELTA V		2670 FPS	10090 FPS
COSTS:	- DDT&E		$29M	

INTERFACES - 110A-1

The interfaces consist of all structural and mechanical hardware enabling the Tug to link with Shuttle and to separate from it in flight. It includes those items that will remain in the Shuttle during the flight of the Tug. Included is the operational docking/undocking attachment of the Tug to the shuttle, mechanisms, propulsion inter-connects, astrionics wiring and umbilicals and the mission specialist station.

The weights chart identifies and summarizes by subsystem those Orbiter/Tug interface elements which are chargeable against the 65,000 lb. Payload. Weights have been established and these elements have been included in the WBS build-up of Tug costs (less MSS).

The interface schematic divides these items into operational categories rather than by subsystem, starting with signal and service lines (which are part of Tug system) installed in the Orbiter. The schematic identifies the signal or service lines at the interface.

(Ref. Vol. 5, Part I, Opt. 1, Sect. 5.4)

INTERFACE SUBSYSEM WEIGHTS - CONCEPT 110A-1

CONCEPT 110A-1	WEIGHT (LB)
STRUCTURE	(1090)
• ROTATING ADAPTER	
• FORWARD CRADLE	
MECHANISMS	(96)
• ADAPTER-ROTATION ACTUATOR/BERTHING PROBES & LATCHES	
• CRADLE - BERTHING LATCHES	
• INFLATABLE SUPPORT FOR MAIN ENGINE NOZZLE	
PROPULSION (MAIN)	(47)
• MAIN PROPELLANT FILL & DRAIN LINES AND VENT LINES	
• HIGH PRESSURE GASEOUS He LINES	
• UMPILICAL PANELS	
ASTRIONICS	(131)
• DMS-HARD WIRING	
• GN&C-HARD WIRING	
• COMM. - HARD WIRING + RF.	
• EPS - 28V D.C.	
• UMBILICAL PANELS	
M.S.S	(146)
• CONTROL & DISPLAY - DATA & COMM. EQUIP.	
• POWER - WIRING - SUPPORT	
TOTAL WITH CONT.	1510

THIS PAGE INTENTIONALLY LEFT BLANK

INTERFACE LOCATIONS - SINGLE STAGE TUG - 110A-1

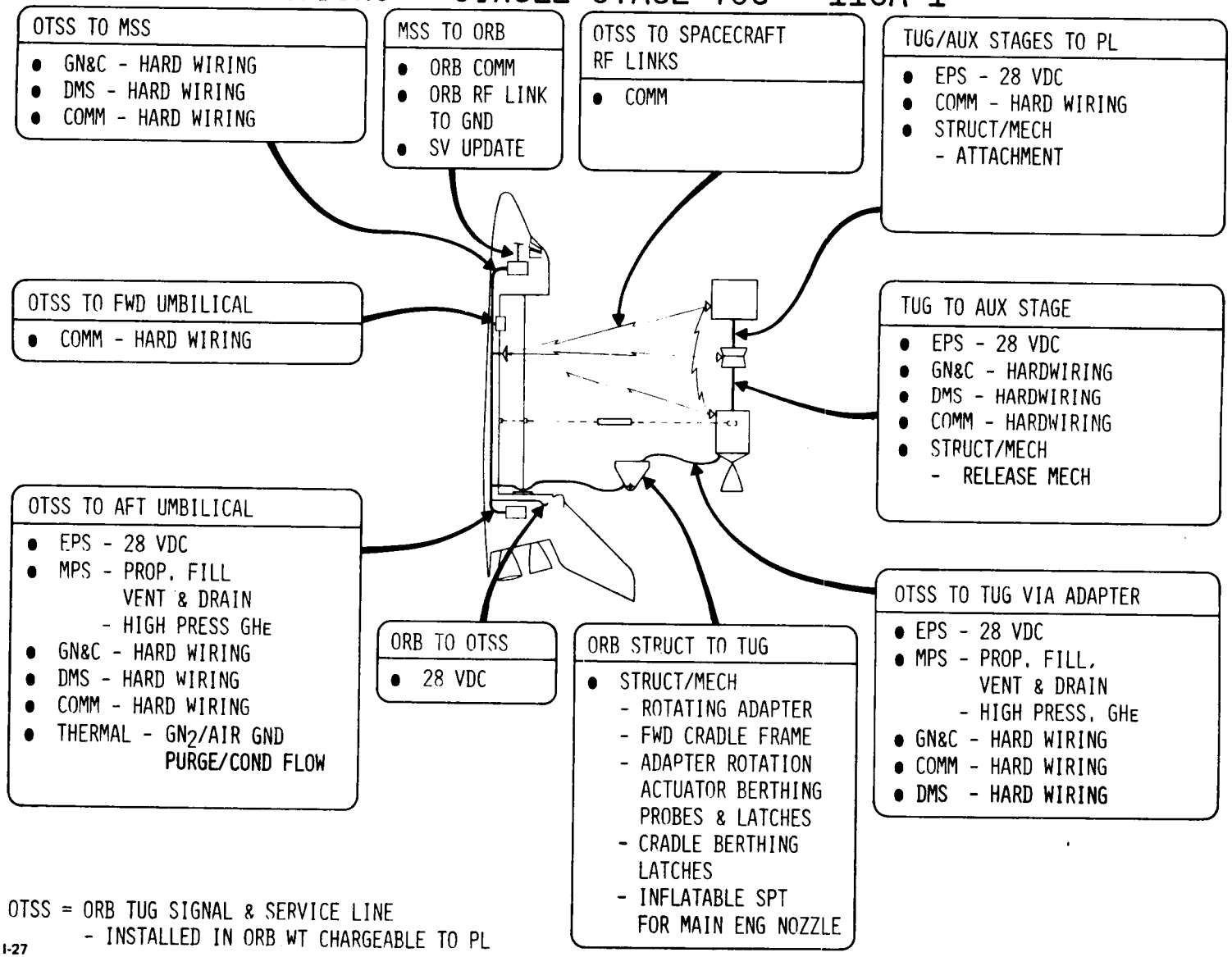

OTSS = ORB TUG SIGNAL & SERVICE LINE
- INSTALLED IN ORB WT CHARGEABLE TO PL

I-27

MISSION FLOW/COMPLEXITY FACTOR - 110A-1

A methodology has been established to determine the relative complexity of concept flight modes by taking the weighted sum of operations required to perform a mission. All Level 1 operations (facing page chart) were weighed with the following multipliers:

- 8 for operations involving crew safety
- 4 for operations needed for TUG recovery
- 2 for operations needed for P/L deployment
- 1 for operations needed for P/L recovery

An additional complement of factors were added as follows:

- 8 for critical functions (i.e. docking, staging, etc.)
- 4 for unique trajectory functions (i.e. correct for nodal regression)
- 4 for deficient functions (i.e. P/L loiter C/O).

This approach provides a basis for comparing the operations complexity of the various options and is also used as the scaling factor for determining flight operations cost. Our approach to costing flight operations was to establish a detailed "strawman" cost based on a "Bottoms-Up" estimate of the geosynchronous round trip mission. Our files on LM costs (complexity factor 177) were used to establish this estimate. The costs were then scaled by the complexity factor to establish cost differences between concepts.

Based on the Cost Estimating Relationship, a 110A-1 TUG without an AKS in the program would have a 35% reduction in costs associated with development software, mission planning, documentation, etc., because of the elimination of those tasks (i.e. AKS staging analysis, guidance requirements, etc.) associated with this add-on stage.

The major 110A-1 complexity considerations are:

- AKS insertion accuracy
- Inability to C/O payloads from a loiter position (when using AKS)
- Space debris (jettisoned AKS modules)

The AKS astrionics system utilizes a system similar in design to that used in the Burner II. Information on this current apogee stage show that insertion accuracies of 16 fps (3-sigma) can be achieved. This is well within the requirements specified for the TUG.

(Ref. Vol. 6, Part I, Para. 6.4.3)

MISSION FLOW/COMPLEXITY FACTOR

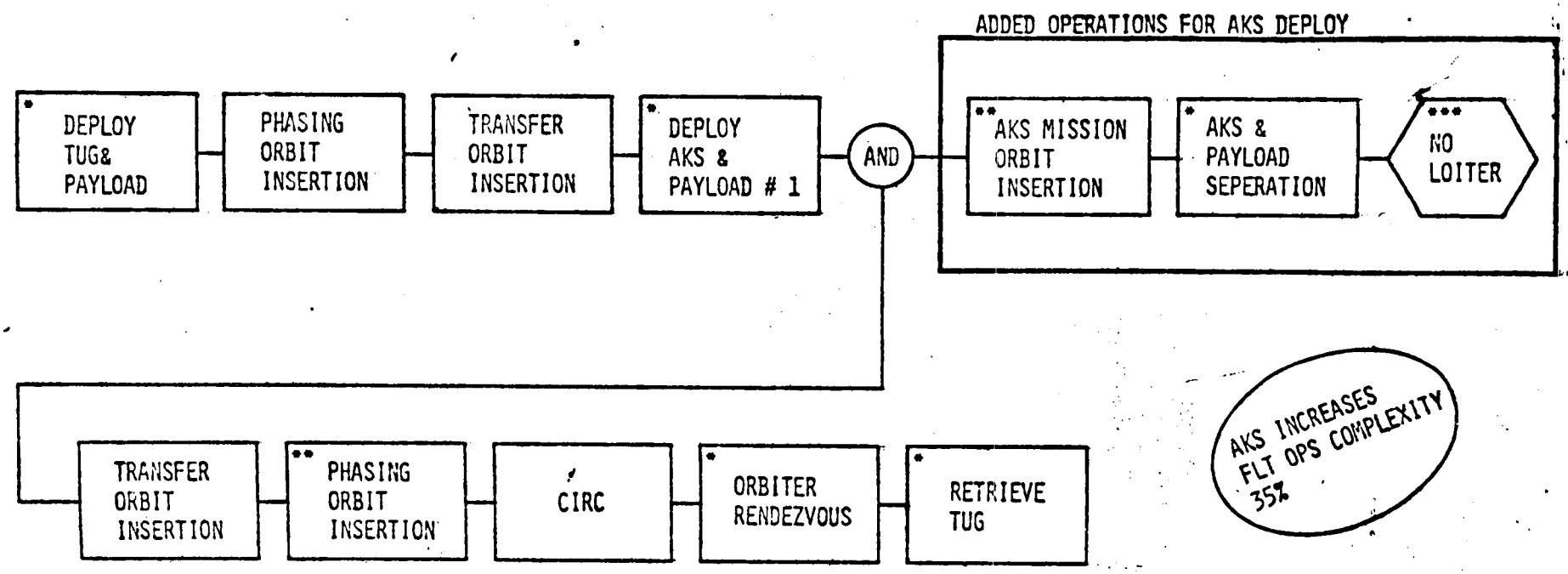

AKS INCREASES FLT OPS COMPLEXITY 35%

	DEPLOY WITH AKS	DEPLOY W/O AKS
CREW SAFETY	2 x 8	2 x 8
TUG RECOVERY	5 x 4	5 x 4
PAYLOAD PLACEMENT	6 x 2	4 x 2
PAYLOAD RETRIEVAL		

	DEPLOY WITH AKS	DEPLOY W/O AKS
*CRITICAL FUNCTIONS	6 x 8	4 x 8
**UNIQUE TRAJ FACTORS	2 x 4	1 x 4
***DEFICIENT FUNCTIONS	1 x 4	
TOTAL COMPLEXITY FACTOR	108	80

III-19

OPTION 1 - FLIGHT OPERATIONS COST - 110A-1

Non-recurring costs for Flight Operations has been split between those funds required prior to IOC and those required after IOC. In establishing these estimates it was assumed that NASA is the contracting agency. If the DOD is the responsible agency the cost estimates presented on the facing page are reversed. Included in these estimates are the manpower for mission planning, flight control, flight evaluation and flight software. The detailed justification for these estimates can be found in Volume 6 "Operations Data Book."

The major driver on flight operations non-recurring cost is the development of the software. Estimates are included for the following major computer systems:

- TUG on-board software
- Mission Control Center Real Time Computer Complex
- Vehicle Management and Mission Planning System
- Mission Control Center Simulator

The software costs were established by estimating the word count required to meet the functional requirements of each of the computer systems. Dollar values per word consistent with GAC experience on the F-14, EA2-C and OAO MCC development programs were used for the design phase and programming/verification phase of the development cycle. Word size estimates for the on-board software and real time computer complex were based on the software routines in the LM Guidance Computer which have similar functional requirements to that of the TUG, adjusted to account for the LM software needed for man/machine interfaces. The software estimates for the MCC simulator were based on the requirements for the LM Full Mission Engineering Simulator adjusted to reflect the relative complexity of the vehicles. This software package was assumed to play a threefold role; namely, provide simulator capability to the MCC, and to provide the environment to the Astrionics Software development facility and the electronics integration facility. The software estimates for the semi-automated non-real time Vehicle Management and Mission Planning System (VMMPS) requires more in-depth evaluation to determine costs. However, for purposes of at least establishing a cost line element, a 30K word system was assumed necessary.

Based on these cost procedures, the total flt. ops DDT&E cost for the 110A is $25M for NASA and $4M for DOD. The average cost per flight is $400K which converts to approximately $225K per payload. If the AKS were removed from the program, a reduction of $6M can be achieved in non-recurring costs.

(Ref. Vol. 6, Part I, 6.4.4)

110A-1	
LEVEL III AUTONOMY	

FLIGHT OPERATION COST

AKS ADDS $6M TO DDT&E FLT OPS COSTS

	NASA, $M			DOD, $M		
	DDT & E		POST IOC	DDT & E		POST IOC
	SINGLE STAGE	AKS		SINGLE STAGE	AKS	
MISSION PLANNING	4.30	1.23	9.72	1.63	.47	7.96
FLIGHT CONTROL	.98	.58	23.34	.51	.14	22.31
FLIGHT EVALUATION	.26	.08	1.63	.28	.08	1.60
FLIGHT SOFTWARE	13.77	3.94	15.67	-	-	8.37
TOTAL	19.32	5.52	50.36	3.11	.69	40.24

AVG COST PER FLIGHT
(NASA = 112 FLT/ DOD = 106 FLT)

	NASA, $M	DOD, $M
MISSION PLANNING	.087	.075
FLIGHT CONTROL	.208	.210
FLIGHT EVALUATION	.015	.015
FLIGHT SOFTWARE	.140	.079
TOTAL	.450	.379

I-20

MATURE OPERATIONAL FLOW

The Tug can be turned around at ETR in two weeks using two shift operation. It is expected that WTR will work single shift, requiring four weeks. The mature flow is based on a 90% learning curve flattening out at the 100th flight. This time puts no constraint on the usage based on the current planned buy of Tugs.

It should be noted that our turnaround time stops after mate to the Orbiter and is baselined on mating a fully fueled Tug.

(Ref. Vol. 6, Part II, Sect. 6.15)

MATURE OPERATIONS FLOW

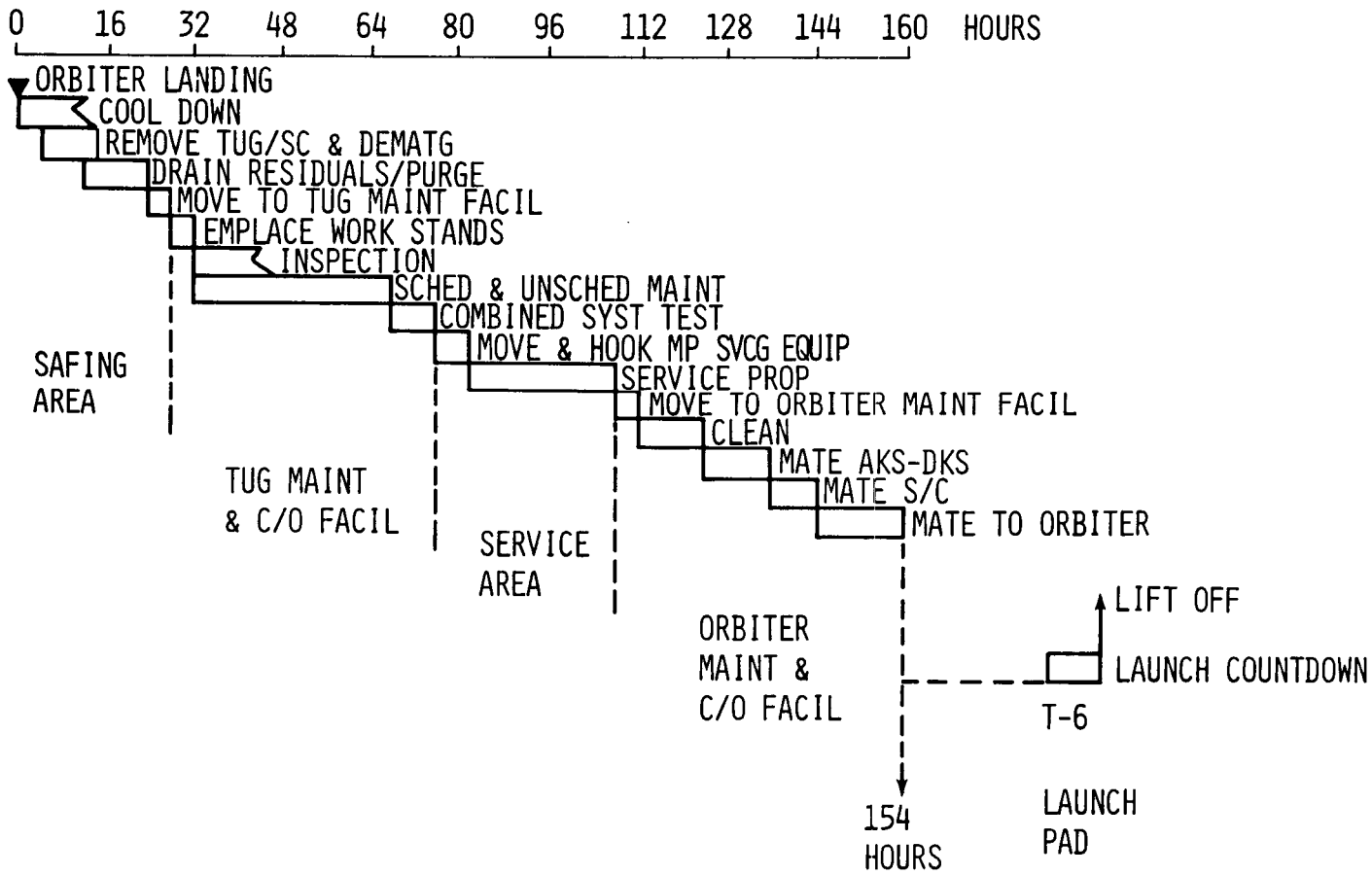

I-35

MATURE FLOW BUILDUP

The Mature operational flow was developed by: defining each task identified by functional analysis, identifying the skills required, identifying the GSE requirements and estimating the time to perform each task. The summation of these data is used to create the time lines. This technique lends credibility to the resultant total flow indicating the Tug can be turned around in normal servicing in less than 160 hours.

(Ref. Vol. 6, Part II, Sect. 6.15)

MATURE FLOW BUILDUP

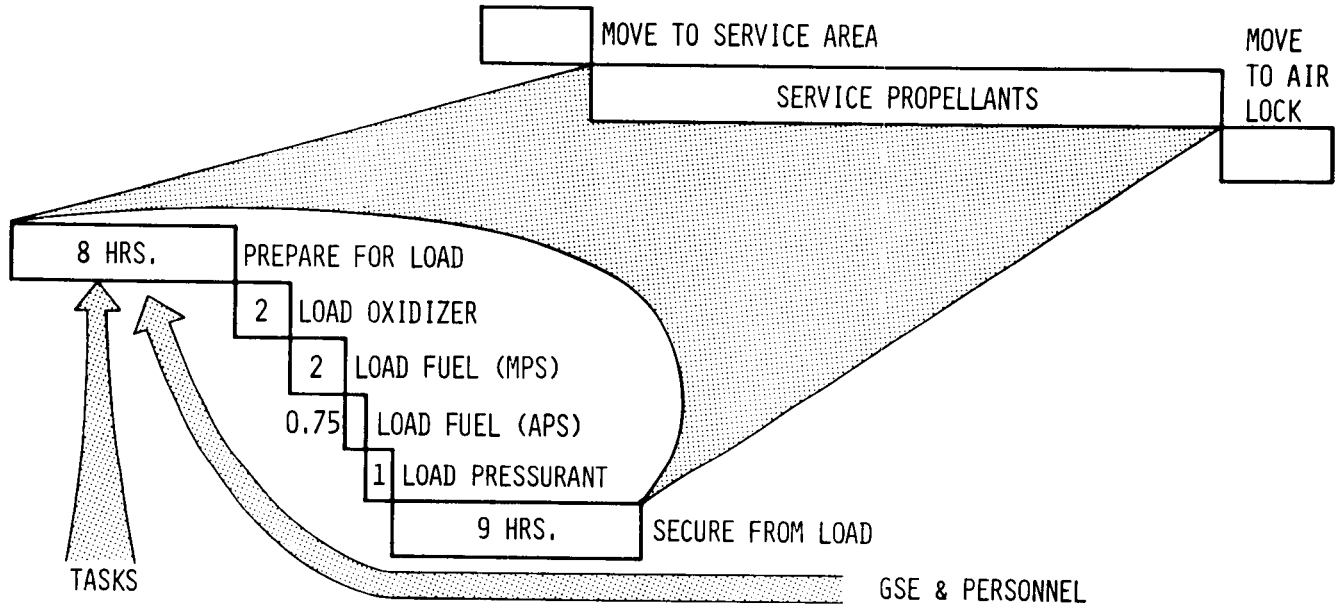

2.1.2 PREP FOR LOAD

- 2.1.2.1 MOVE TO SERVICE AREA
- 2.1.2.2 CONFIGURE TRANSPORTER FOR ROTATION
- 2.1.2.3 ATTACH ROTATING/AGE/GSE TO TUG. VERIFY TBD POUNDS AUX. CRANE CONTROL
- 2.1.2.4 VERIFY FORWARD ATTACH LATCH OPEN
- 2.1.2.5 ROTATE TO VERTICAL
- 2.1.2.6 ROUTE AND ATTACH FUEL AND OXIDIZER SERVICE LINES; ATTACH PRESSURANT LINES

PREP FOR LOAD

AGE/GSE

- HOISTING FIXTURE, TUG ROTATE
- HOSE SET MPS
- HOSE SET APS

PERSONNEL REQUIREMENTS

PROP TECHS	6		
MECH/STRUCT	6	BASE SUPPORT	
SAFETY	5	CRANE OPER	1
QC	5	TOW OPER	1

TUG LAUNCH SITE PROCESSING FLOW AND FACILITIES

Trade studies were used in determining the desired facilities and flow to process the Tug. An advantage of the storable Tug is that many options are open to the operator as to where and when such operations as safeing, mating and servicing are performed. All servicing and mating can be done prior to moving to the pad so the Tug will not be a constraint on launch preperation. This is the approach we chose.

The results of the study show that the Tug can be supported with the baseline facilities in the KSC facilities report. This will keep the facilities cost to a minimum since no new facilities are required.

(Ref. Vol. 6, Part II, Sect. 6.15)

TUG LAUNCH SITE PROCESSING FLOW FACILITIES

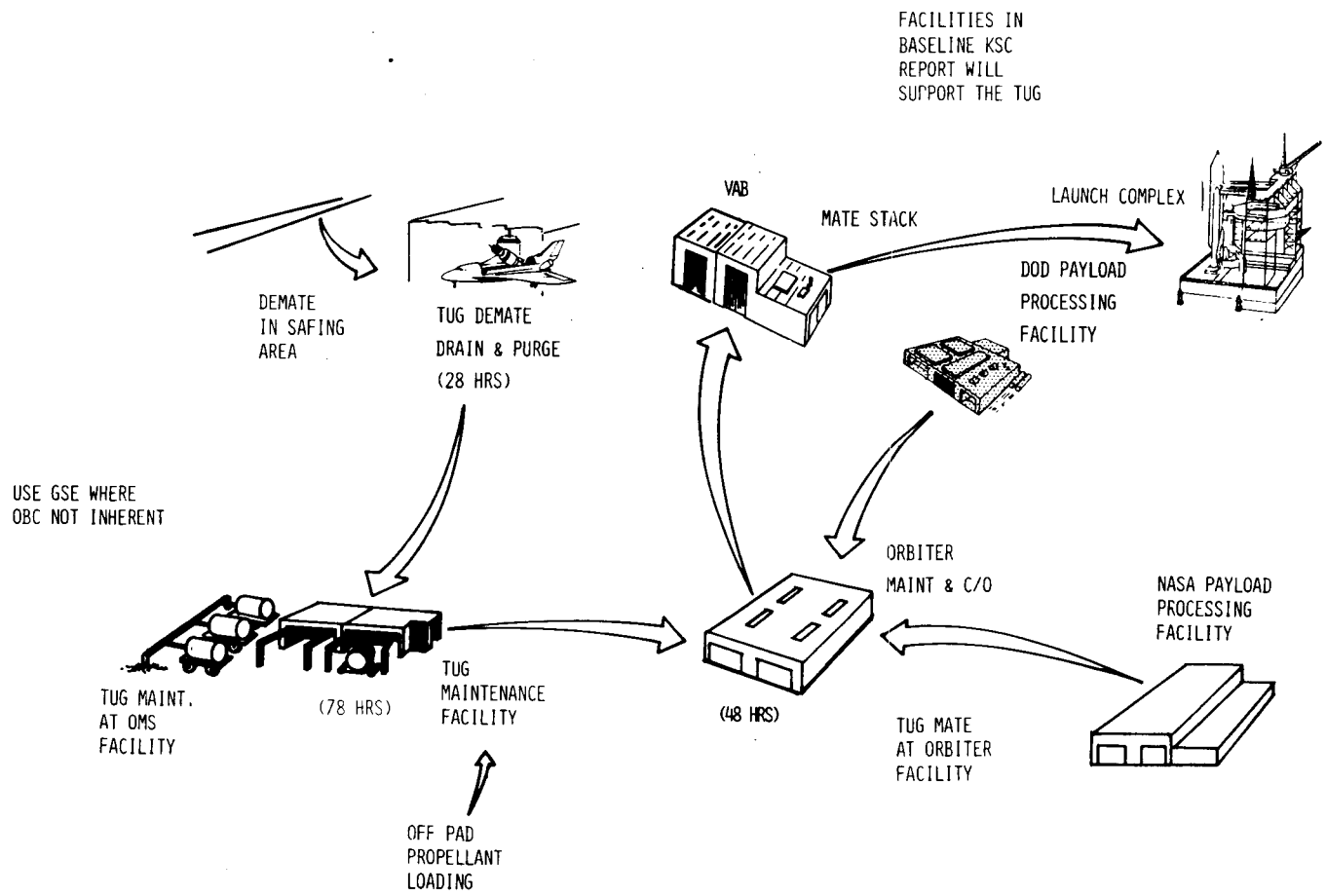

TUG GRND OPS
TURN AROUND LESS
THAN 2 WKS ETR
4 WKS WTR

I-34, II-34, III-107, VI-31, IX-1

SUMMARY OF SIGNIFICANT TRADES

STORABLE TUG HAS MANY OPTIONS IN MEETING PAYLOAD AND ORBITER

- ON PAD VS OFF PAD PROPELLANT LOADING
  - REDUCES ON-LINE OPERATIONS BY 6 HOURS
  - ALLOWS COMPLETE VISUAL VIEW AND ACCESS TO TUG DURING LOAD
  - ELIMINATES WETTING TUG/ORB INTERFACE LINES AND RESULTANT CLEANING
  - ELIMINATES SPILLS INTO ORBITER
  - AVOIDS $450,000 STORAGE AND SERVICE FACILITY AT PAD (BASED ON KSC BASELINE OF 19 APRIL 73)

  VERSUS

  - HANDLING LOADED, HEAVIER TUG
  - REQUIRES STRONGER TRANSPORTER TO PREVENT RACKING AND LEAKS
- HORIZONTAL MATE WITH ORBITER VS. VERTICAL MATE AT PAD
  - EASIER HANDLING
  - NO WEATHER CONSTRAINTS
  - ELIMINATES ADDITIONAL 6 HOUR SERIAL PAD TIME

  VERSUS

  - PAYLOAD LOADED 9 DAYS EARLIER
  - LOADED TUG IN ORBITER 9 MORE DAYS

SUMMARY OF SIGNIFICANT TRADES (CONT'D)

- DEMATE IN SAFING AREA VS TUG MAINTENANCE AREA
  - AVOIDS 6 HOUR ADDITIONAL SERIAL FLOW FOR ORBITER
  - PROVIDES EARLIEST ACCESS TO TUG/SC
  - AVOIDS SIZING TUG MAINTENANCE FACILITY FOR ORBITER
    - $1.08M SAVED
  - ONE HYPERGOLIC HANDLING CREW REMOVES ORBITER OMS & RCS <u>AND</u> TUG

- GROUND CHECKOUT VS ON BOARD CHECKOUT
  - DECISION TO USE OBC BASED ON FLIGHT OPERATIONS REQUIREMENTS
    - * CRITICAL FUNCTION
    - * CORRECTIVE ACTION CAPABLE
  - NO OBC SPECIFICALLY FOR GROUND TURNAROUND OPERATIONS
    - * VEHICLE WEIGHT VALUED AT $100K/LB.
    - * USE ON BOARD COMPUTER AND INHERENT CAPABILITY ON GROUND AUGMENTED BY GSE
    - * LAUNCH PROCESSING SYSTEM WILL BE AVAILABLE FOR ORBITER

THIS PAGE INTENTIONALLY LEFT BLANK

SUMMARY OF SIGNIFICANT TRADES (CONT'D)

- OPTIMIZATION OF FACILITIES AND FLOWS
  - TUG MAINTENANCE - VAL. OMS FACIL., OR ORBITER MAINT. FACIL.
    - OMS FACIL. VENT SYST. & SCRUBBERS SIZED TO HANDLE TUG ALSO
    - HAZARDOUS FUEL HANDLING AREA ISOLATED AND CONSOLIDATED
  - TUG/SC MATE - TUG MAINT. FACIL. P/L PROC. FACIL., VAR. OR ORB. MAINT. FACIL
    - ADEQUATE HOOK HEIGHT
    - CLEAN AREA AVAILABLE
    - NO ADDITIONAL FLOWTIME TO ORBITER
  - FLOW OPTIMIZATION
    - USE SERIAL FLOW TILL FLIGHT RATE REQUIRES PARALLEL FLOW AND INCREASED CREW SIZE
    - USE STAGGERED PARALLEL FLOW FOR 2 STAGE PROCESSING TO OPTIMIZE SKILL UTILIZATION
    - WTR BASED ON ONE SHIFT, ETR BASED ON TWO SHIFTS

RESIDUAL HAZARDS AND SINGLE FAILURE POINTS: 110A-1

Those hazards for which design, special procedures and safety or warning devices may not resolve the problem, are considered residual hazards. In addition, where failure of a single hardware element leads to loss of life, vehicle or mission, a single failure point (SFP) is identified. Hazards falling into these categories for this concept are shown in this chart.

Simultaneous dumping of propellants in $\sim$302 secs during powered flight enhances Shuttle aborts and satisfies the safety requirement to land with nearly empty tanks.

Although a rationale for acceptance of these situations has been defined, additional study effort is required in the next phase to reduce the hazards to the lowest possible levels (controlled category) and/or to eliminate the single failure points.

Additional information on these items is included in Volume VII, Safety and Reliability.

(Ref. Vol. 7, Sections II and VII)

RESIDUAL HAZARDS/SFP : 110A-1

SATISFACTORY PROGRESS

HAZARD/SFP	RATIONALE FOR ACCEPTANCE
ABNORMAL LANDING WITH FULL TANKS	ABORT DUMP PREFERRED BY SENSITIVITY STUDY
VENT PROPELLANT FUMES TO PAYLOAD BAY VIA TUG OVERBOARD VENTS (MPS/APS)	EXTREME PAYLOAD BAY TEMPERATURE AND MULTIPLE FAILURES NECESSARY FOR VENTING
JETTISON OF AKS AT PAYLOAD ALTITUDES RESULTING IN PAYLOAD CONTACT	AKS RETAINED WHERE FEASIBLE : IMPACT PROBABILITY CONSIDERED LOW
SFP : VALVES FAIL CLOSED (MISSION SUCCESS) - MPS He ISOLATION - APS QUAD ISOLATION - AKS GN_2 SUPPLY - AKS GN_2 REGULATOR	HIGH RELIABILITY COMPONENTS
SRMS SENSITIVE TO LIQUID PROPELLANT FIRES	IGNITION SOURCES PRECLUDED IN PAYLOAD BAY
LACK OF COMMAND OVERRIDE ON AKS AND POTENTIAL COLLISION WITH TUG	HIGH RELIABILITY COMPONENTS, NOT CREW SAFETY; SRM TVC

SAFETY ASSESSMENT RESULTS : 110A-1

An assessment of this configuration was performed to determine whether it satisfied the NASA Safety Requirements specified in the Data Package, Space Tug System Studies, April 1973 and those safety requirements derived through analysis. The first column identifies the source of the safety requirement, NASA Data Package or identified hazard. Items in the next column are labelled (R) for requirement unsatisfied, (C) for an operational constraint or (E) for an exception to the NASA or derived safety requirements. The specific items are summarized. In the comments column, the reasons or reactions to the safety assessment items are stated.

GSE has been identified to enable safe handling of a loaded Tug during ground transport, alone or in the Shuttle. Attached to the EOS-Tug servicing panels, the GSE will accommodate vented fumes, liquid from offloading the MPS tanks and pressure relief.

Command override only exists within the orbiters sphere of influence and when a ground station is in range and tracking the Tug. Most engine burns occur outside these regions. Hardware and software interlocks are provided to preclude overburns and consequent inadvertent reentry during Tug deorbit. This feature will apply to all concepts for autonomy levels IIIA or IIB.

The checkmark in the upper right corner signifies a satisfactory safety mark for the configuration for Phase A. The completed Safety Evaluation form for this concept is presented in Volume VII.

(Ref. Vol. 7, Sections II and VII)

THIS PAGE INTENTIONALLY LEFT BLANK

PROGRAMMATICS COST OVERVIEW 110A-1

The supporting programmatics and cost data presented in Volume 8, Part I for concept 110A-1 were developed from the technical characteristics defined in Volumes 4 - 7. The primary input data for the programmatics and cost activity include: system definition and weights, configuration drawings, main stage/auxiliary stage subsystems, mission performance flights, related ground/flight operations manpower, software, GSE, facilities and operations fleet, plus dependent SR&T. These inputs, in turn, were used to define the project elements and schedule related test, manufacturing and facilities activation activities needed to achieve Tug IOC, and support subsequent payload delivery operations. The project schedule served as the focal point for establishing 110A-1 program funding requirements.

Our cost data is presented in accordance with the NASA/DOD WBS Level 6 breakdown. It also includes a further breakdown of avionic subsystem hardware costs to Level 7. The cost data associated with concept 110A-1 were developed at Level 7 from vendor quotes, CERS, and manpower task estimates. For example, our structural CERs were adjusted to reflect in-house manufacturing estimates for fabricating and assembling the 110A-1 main stage structural components. We obtained over 138 vendor quotes on the major components in the avionic and propulsion subsystems. Main engine cost/schedule estimates are based on NASA data, and SRM cost estimates are based on data received from UTC, Hercules and NASA.

Concept 110A-1 has an overall development cycle of 82 months which extends 36 months beyond IOC. An 83 month production activity is planned to provide the required flight hardware for use in operations. Peak annual funding ($81M) occurs in FY 79. DDT&E and total program costs are $220M and $531M respectively. If the 110A program is redefined to exclude the Apogee Kick Stage total DDT&E will decrease to $191M and peak funding will decrease to $71M.

(Ref. Vol. 8, Part I)

PROGRAMMATICS/COST OVERVIEW - 110A-1

CHARACTERISTICS

		MAIN STAGE	AUXILIARY STAGE
PHYSICAL:	WEIGHT, LB	3205	545
	LENGTH, IN	335	80
	DIAMETER, IN	119	180
TECHNICAL:	REUSABLE	ONE-STAGE	
	AUXILIARY STAGE		AKS
	DEPLOYMENT ONLY	CAPABILITY	
	PROPELLANT CAPACITY, LB	56,900	
	THRUST, LB	7,500	
	ISP, SEC	327.2	287 & 295
	AUTONOMY LEVEL	111A	
	RELIABILITY	.9874	.9987

WBS #320-00

PROJECT SUMMARY

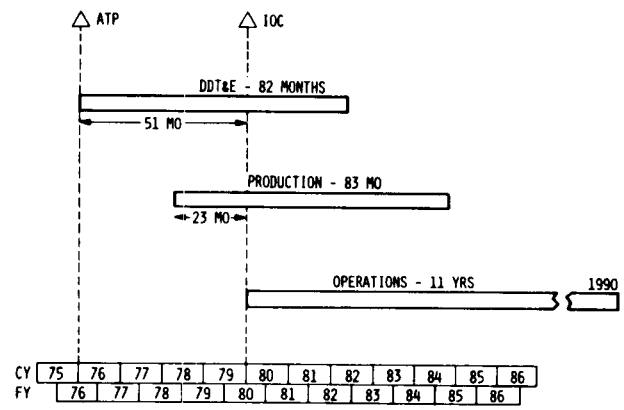

ANNUAL - PROJECT COSTS

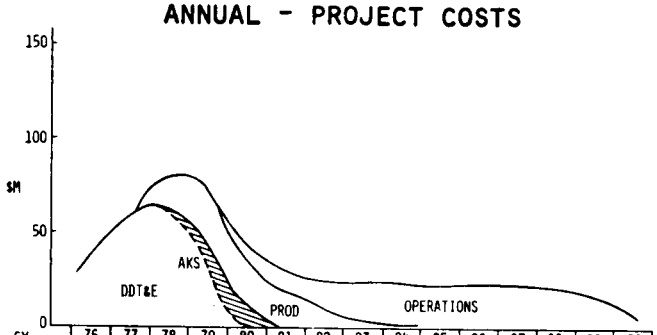

CY	76	77	78	79	80	81	82	83	84	85	86	87	88	89	90	
FY	76	77	78	79	80	81	82	83	84	85	86	87	88	89	90	91
DDT&E	29	51	64	54	20	2										
PROD			13	27	28	22	13	6	4	2						
OPS					4	9	14	18	21	21	22	22	22	20	16	6
TOTAL	29	51	77	81	52	33	27	24	25	23	22	22	22	20	16	6

CUMULATIVE - PROJECT COSTS

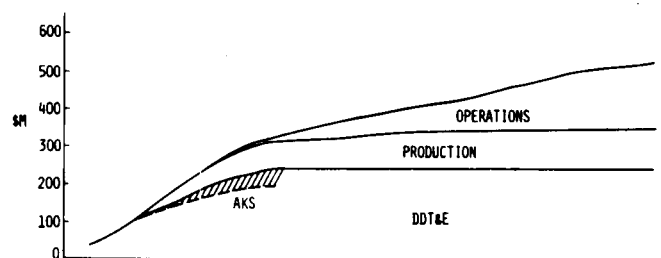

CY	76	77	78	79	80	81	82	83	84	85	86	87	88	89	90	
FY	76	77	78	79	80	81	82	83	84	85	86	87	88	89	90	91
DDT&E	29	80	144	198	218	220										
PROD			13	40	68	90	103	104	113	115						
OPS					4	13	27	45	66	87	109	131	153	173	189	195
TOTAL	29	80	157	238	290	323	350	374	399	422	444	466	488	508	524	530

VIII, IX-4, I-37

SUMMARY SCHEDULE - 110A-1

The primary elements of the 110A-1 Project Schedule include Main Stage, Apogee Kick Stage, Vehicle Test, GSE, Facilities and dependent SR&T. Authorization to Proceed (ATP) occurs on October 1, 1975 with IOC targeted for December 31, 1979. 110A-1 is a relatively low schedule risk program featuring separate fuel and oxidizer tanks with the OME main engine Final Flight Certification occurring 8 months before First Orbital Flight (FOF). Major vehicle tests leading to IOC include the main stage Propulsion Test Vehicle (PTV), Structural Test Article (STA), Integrated Avionics hardware/software tests (IAT) and FOF. Main stage manufacturing begins December 1, 1976 with production of the major ground test articles and continues through production of 11 vehicles to support fleet operations. Apogee Kick Stage (AKS) development begins $3\frac{1}{2}$ years after main stage ATP with related vehicle tests starting one year after the completion of main stage tests. AKS major vehicle tests include STA and IAT tests with an operational test flight scheduled during the second year of flight operations. Fourteen kick stages will be manufactured to support fleet operations. GSE and Facilities are scheduled to support vehicle test manufacturing ETR/WTR site activation and NASA/DOD Flight Operations Control activation. Initial flights will be flown from ETR with WTR scheduled for use in 1983.

(Ref. Vol. 8, Part I, Sect. 8.1)

110A-1 SUMMARY PROJECT SCHEDULE

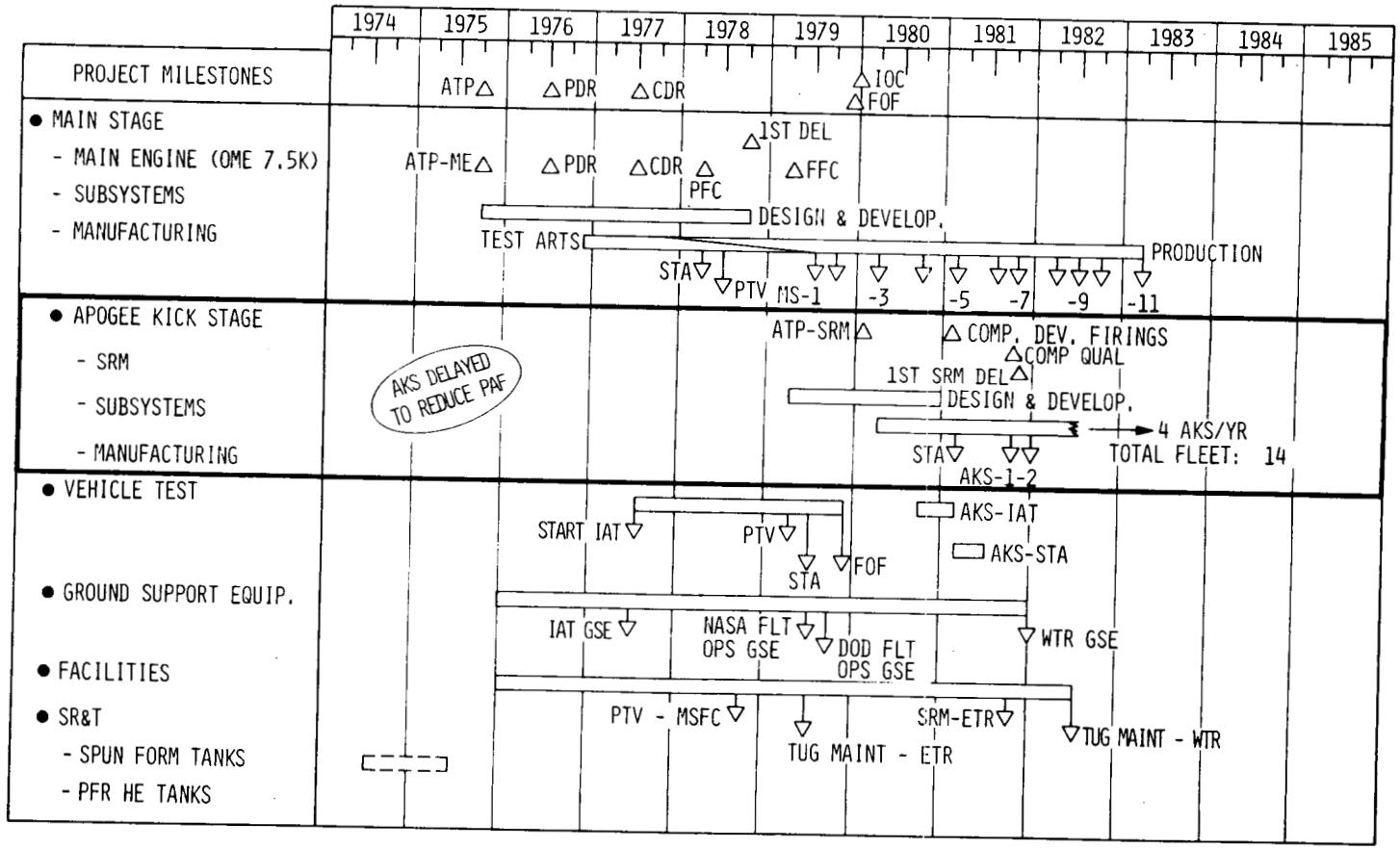

I-16

Vehicle Test Program

The vehicle test program defined for 110-1 encompasses ground testing to demonstrate system qualification and acceptance leading to first orbital flight and subsequent flight testing to verify operational modes and performance. Tug performance will be primarily certified during the ground test program leaving the flight test program to certify only those issues which cannot be accomplished during ground testing. We have defined the minimum number of required development test articles to insure an acceptable level of risk consistent with the current design technology selected for 110A-1. In addition we have drawn heavily from our prior programs to eliminate traditional tests where analysis or other testing has been shown to be adequate (i.e., LM/LTA-8 thermal vacuum and LM hot firing articles and rigs). We have also reviewed those critical areas requiring prior SR&T development to ensure an orderly progression of hardware maturity during the vehicle test program. The major elements of the vehicle test program include the Propulsion Test Vehicle, Structural Test Article, Integrated Avionics, Mockup and Flight Test programs.

Structural Test Article (STA)

A single STA demonstrates structural integrity of the Tug in a sequence planned to incrementally build confidence in the total structural capability prior to delivery of the first flight article to the launch site. The sequence of testing passes from dynamic testing including vibro-acoustic and modal surveys to design limit static tests, to fatigue testing to four times mission life to ultimate testing at critical design conditions. Since the abort condition is the primary structural design driver the basic Tug structure should be over-strength for normal mission operations. The fatigue spectrum will not include abort conditions thereby increasing confidence in our ability to conduct ultimate testing after fatigue on the single test article. The Apogee Kick Stage (AKS) module will be tested in a similar fashion.

(Ref. Vol. 8, Sect. 8.2)

110A-1 GROUND TESTS

THOROUGH GROUND TESTING TO MINIMIZE FLIGHT TEST PROGRAM

TEST	TEST ART.	OBJECTIVES	APPROACH
STRUCTURE • MAIN STG.(MS) • APOGEE KICK STAGE (AKS)	• COMPLETE M.S. PRIM. & SEC. STRUCT. INCL. TUG/ORB. & TUG P.L. ADAPTERS • COMPLETE AKS PRIM. & SEC. STRUCT.	• EVAL. DYN., STATIC STRENGTH, SAFE-LIFE & SEPARATION • VERIFY STRUCT./MECH. INTERFACES AT LAUNCH SITE	• VIB./ACOUSTIC TESTS • DES. LIMIT STATIC TESTS • STATIC FATIGUE • ULT. STATIC TESTS • SEP. DEMO. • INTERFACE VALIDAT. DEMO. AT KSC
PROPULSION (MS)	• FLIGHT WT. MAIN STG. STRUCT. • MAIN ENG. SUPPT S/S LESS ENG. • ENG. SIMUL. UNIT • PTV REFURB. TO FLIGHT OPS	• DEMO. OPS OF ASSEM. COMPONENTS • DEVELOP C/O & OPS PROCEDURES • VERIFY SERV/HANDLG. PROCEDURES • DEMO SYS PERF. & CHARACTERISTICS	• COLD FLOW ONLY • REFEREE FLUIDS PHASE - FILL/DRAIN/FLOW TESTS • LIVE PROPELLANTS PHASE - LOAD CONTROL/ ACCURACY - SYS. COMPAT.& DYN. - PERF. SERV./HANDLG PROCEDURES

P. 91

110A-1 GROUND TESTS (CONT'D)

TEST	TEST ARTICLE/FACILITY	OBJECTIVES	APPROACH
INTEGRATED AVIONICS • INTEG. AVIONICS TEST (IAT) FACILITY - MS - AKS • AVIONICS SOFTWARE DEVELOPMENT LAB. (ASDL). - MS	• IAT - SHIP SET OF AVIONICS - COMPUTER SIMULATION - SENSOR STIMULUS - FACTORY & LAUNCH GSE • ASDL - COMPUTER FACILITY WITH MATH MODEL SIMULATION OF MS HARDWARE	VERIFY HARDWARE/ SOFTWARE PRIOR TO VEHICLE INSTALLATION & FOF	• IAT - SUBSYSTEM INTEG & END-TO-END FUNCTIONAL VERIFICATION - VERIFY FACTORY C/O PROCED - HARDWARE/SOFTWARE VERIF. - MISSION SIMULATION • ASDL - SOFTWARE DEVELOPMENT
MOCKUPS • MS • AKS	• WOOD AND CARDBOARD MOCKUP OF THE TUG MS AND AKS STRUCTURE INCLUDING EQUIPMENT FOR PDR. • WOOD & METAL MOCKUP OF TUG AND AKS STRUCT. & EQUIPMENT FOR CDR	EVALUATE EQUIPMENT ACCESSIBILITY AND MAINTAINABILITY. EVALUATE SHUTTLE & PAYLOAD INTERFACE AND LINES RUN PRIOR TO FAB OF FINAL HARDWARE	• COMPONENT INSTALLATION • ESTABLISH LINE LENGTHS FOR FINAL HARDWARE FAB • DEMONSTRATE MAINTAINABILITY - ASSESSMENT & DEMOS OF EQUIPMENT CLEARANCES - CONNECTOR & MOUNTING ACCESSIBILITY DEMO. • SHUTTLE & PAYLOAD INTERFACE ASSESSMENT

GROUND TEST COST = $18.84M

Integrated Avionics Testing (Cont'd)

The IAT facility will be used for independent buildup and test of the Main Stage and Apogee Kick Stage as well as integrated Main Stage - Apogee Kick Stage hardware verification and mission Simulation. The ASDL will be used for development of Systems test as well as mission software.

Mockups

Mockup will be used throughout the MS/AKS design development phase to develop and demonstrate the design configuration for PDR, CDR and prior to the start of vehicle manufacture. All components will be mocked up and maintainability, will be assessed. To permit ease in reconfiguring, the PDR mockup will be wood and sandwich cardboard construction. The CDR mockup will be metal and wood and will be more representative of the final configuration.

Flight Test

Six flights are included in the 110A-1 Flight Test Program. The first orbital flight (FOF) will be a dedicated flight test, designed to demonstrate and verify those test issues which cannot be resolved during the ground test program due to earthbound environmental limitations. The FOF will not deploy an operational payload, however, a simulated payload (mass, C.G.) will be included to permit deployment capability verification.

The payloads deployed during the first two years of operations have been selected and scheduled to demonstrate a logical buildup in tug capability and mission complexity. The flight operations during this period are also geared for a gradual buildup to full capability by 1 January 1982. The three missions planned for 1980 will include single deploy payloads only with multi-deploy and one Apogee Kick stage mission introduced in 1981. Flight test data will be acquired on all five operational flights via the DFI and Operational Flight Instrumentation subsystem.

(Ref. Vol. 1, Sect. 8.2)

110A-1 FLIGHT TESTS

TEST ARTICLE	OBJECTIVES	APPROACH
• MAIN STAGE - 1ST PROD. UNIT INCLUDING DFI • AKS - 1ST PROD. UNIT INCLUDING DFI	• THERMO - VERIFY SYS. THERMAL CONTROL • STRUCT - VERIFY LAUNCH/ORBIT/ ENTRY/LANDING LOADS AND DYNAMICS • PROP - VERIFY MPS/APS • AVIONICS - VERIFY AVIONICS OPS • OPS - EVALUATE TUG/ORB AND TUG/ PAYLOAD INTERFACES - EVALUATE SYSTEM PERFORMANCE CAPABILITY - DEMO PAYLOAD DEPLOY	• 6 FLIGHT-TEST PROG. • FIRST ORBITAL FLIGHT (FOF) COSTED WITHOUT AN OPERATIONAL PAYLOAD - FLOWN WITHIN RETRIEVAL CAPABILITY OF ORB - SEQUENCE INCL: SYS C/O, MPS BURNS, APS C/O, DUMMY PAYLOAD DEPLOY DEMO, ORB. RETRIEVAL. • SUBSQ. FLTS. DEPLOY OPERATIONAL PAYLOADS

FLIGHT TEST COST = $13.98M

TOTAL VEHICLE COST = $32.82M

110A-1 FACILITIES

Grumman's proposed Facility utilization plan was developed using the following ground rules or assumptions:

- o Maximum utilization of existing and planned Shuttle facilities.
- o Minimize total Facility, GSE and Manpower costs.
- o Shuttle Ground Operations Approach - NASA, KSC 4/73.
- o WTR - No existing facilities available. Shuttle facilities will be same as ETR.
- o Kickstages or RDM's will not operate from WTR.

Facilities Definition Development

- o Establish requirements (area, crane and environment) for Manufacturing, Test and Operations' facilities.
- o Check availability of existing facilities.
- o Schedule construction and activation to coincide with Program Master Schedule need dates.

Costing Procedure

New construction costs were calculated on $/sq.ft. basis. Activation costs are % of construction cost, GSE cost or $/sq.ft. Maintenance costs are based on $/sq.ft/yr. Approximately 60% of number of facilities required for 110A-1 are existing or Shuttle provided, requiring little or no modification.

Facilities requirement sheets (Ref. Vol. 6, Part 2, Appendix E) and Facilities Plan (Ref. Vol. 8, Part 1, Section 8.3) provide detail requirement, schedule and cost data.

(Ref. Vol. 8, Part I, Sect. 8.3)

110A-1 FACILITIES

60% EXISTING OR SHUTTLE PROVIDED FACILITIES

FUNCTION	SIZE, SQ FT	EXISTING	MODIFIED/NEW	COST, $M C OF F	COST, $M TOTAL
MANUFACTURING				.055	.397
FAB & ASSY	8,800	GAC-BPA, PLTS 2 & 3			
F/A & C/O	16,000		GAC-BPA, PLT 5		
KICKSTAGE	4,500	GAC-BPA, PLT 5			
TEST				.100	.280
STA	VARIOUS REQMTS	GAC, PLT 5 & WYLE-HUNTS			
THERMAL	-	GAC-BPA, PLT 5			
IAT	1,000	JSC - SHUTTLE ASDL & IATL			
PROPULSION	700	GAC-BPA,HPTF&MSFC-TST ST			
TANK QUAL & ACCEPT	700	GAC-BPA, HPTF			
MAINT & REFURB ETR/WTR				1.762/2.190	2.641/2.890
TUG MAINT FAC	6,000/6,000		EXT ON ORBITER OMS FAC		
PROP SYS SERV FAC	6,000		EXT ON ORBITER OMS FAC		
TUG CLEANING FAC	3,000		EXT ON ORBITER MCO FAC		
KICKSTAGE SRM FAC	1,400/-		EXT ON SHUTTLE SRM FAC		
SUPPORT/WHSE FAC	AS REQD/-	SHUTTLE SHARED @ ETR			
OFFICE	5,000/4,000	EXISTING @ ETR	NEW FAC @ WTR		
ETR/WTR LAUNCH				.413/.494	.571/.656
LAUNCH PAD	-	SHUTTLE FAC-TUG GSE			
SAFING AREA	-	SHUTTLE FAC-TUG GSE			
MISSION CONTROL CENTER	7,500		MOD SPACE @ JSC & SUNNYDALE, CALIF.		
			TOTALS	5.014	7.435

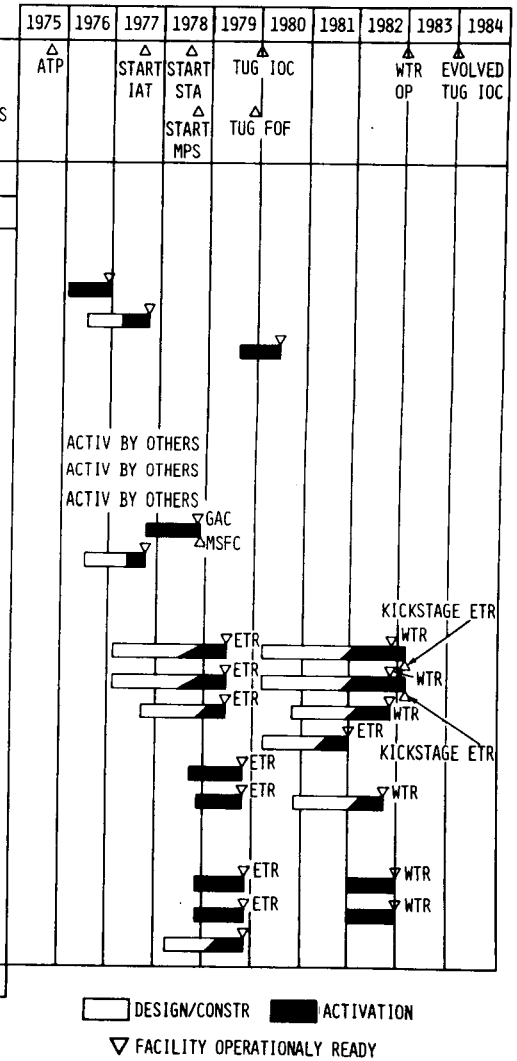

1-2

MANUFACTURING FLOW 110A-1

The manufacturing flow and sequence of assembly of the main stage and apogee kick stage is depicted. The flow diagram shows program milestones, engineering drawing release requirements, tool design and fabrication, operation sheet preparation, work order release and the manufacturing and assembly sequence for the major test articles (STA, PTV) and the first flight article.

The 16 month flow from subassembly through delivery is consistent with the conventional design and manufacturing methods employed. The critical path is through the main propulsion system tanks but schedule risk is low because separate tanks and spun aluminum construction are used. Tank construction uses conventional techniques and the individual tanks can be fabricated and tested in parallel to reduce total flow time.

The assembly flow shows (1) joining the main tanks to the intertank skirt, (2) adding the forward and aft skirts and (3) systems installation, checkout and acceptance test.

(Ref. Vol. 8, Sect. 8.4)

110A-1 MANUFACTURING FLOW

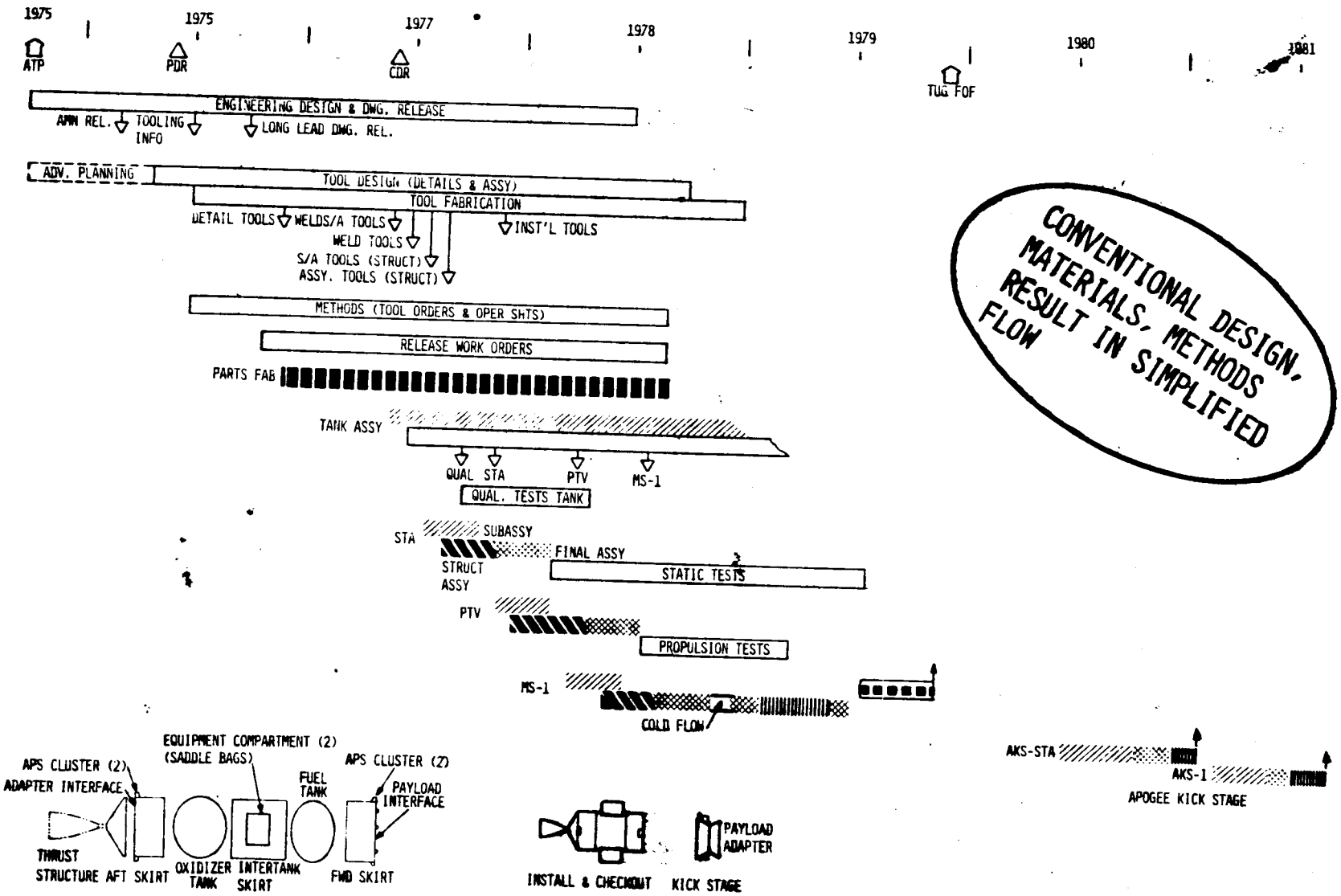

I-24

110A-1 SPECIAL PROGRAMMATICS

This chart summarizes the salient features defined for implementing and managing Program 110A-1 and indicates specific areas for government participation.

The main factors derived from our analysis of 110A-1 include: defining the initial flight build up based on Shuttle/Tug launch constraint and initial ground crew launch capability; timing AKS development to support its operational need; refurbishing the propulsion test article for operational use; defining a fall back position for every identified risk; and recommending that Phase C/D incorporate the design-to-cost concept due to its low technology design which uses over 50% Shuttle and existing hardware.

Specific areas for government participation include: establishing Tug/Shuttle interface requirements before Orbiter design freeze; providing payload interface design requirements and mission model data; initiating required activities for supporting Research and Technology; providing GFE systems and components (eg: main engines, and DOD secure comm); supporting propulsion system testing and development and supporting integrated avionics hardware testing and related software development; providing required facilities; performing vehicle ground operations flight operations, and logistics support operations.

(Ref. Vol. 8, Part I, Sect. 8.5)

110A-1 SPECIAL PROGRAMMATICS

- PROGRAM IMPLEMENTATION AND MANAGEMENT
  - ✓ - FLIGHT BUILD-UP SET BY SHUTTLE/TUG LAUNCH CONSTRAINT AND INITIAL GROUND CREW LAUNCH CAPABILITY
  - ✓ - MAIN STAGE PERFORM (4014 vs. 3500) ALLOWS AKS DELAY TO REDUCE PEAK FUNDING
  - ✓ - PROPULSION ARTICLE REFURBED FOR FLIGHT
  - - FALL BACK POSITION SHOWN FOR EVERY IDENTIFIED RISK
  - ✓ - 58% USE OF SHUTTLE AND EXISTING HARDWARE ALLOWS PHASE C/D DESIGN-TO-COST AT ALL LEVELS OF WBS.
- AREAS FOR GOVERNMENT PARTICIPATION
  - ✓ - FIRM TUG/SHUTTLE INTERFACES BEFORE ORBITER PDR
  - ✓ - PROVIDE PAYLOAD INTERFACE DESIGN REQUIREMENTS AND MISSION MODEL DATA
  - ✓ - INITIATE REQUIRED S R & T
  - ✓ - SUPPORT SYSTEM TEST - AVIONIC HARDWARE/SOFTWARE, PROPULSION
  - ✓ - PROVIDE GFE SYSTEMS AND COMPONENTS, FACILITIES, LOGISTIC SUPPORT
  - ✓ - PERFORM VEHICLE GROUND AND FLIGHT OPERATIONS

FLIGHT OPERATIONS BUILDUP - 110A-1

The methodology used to establish the 110A-1 flight buildup is keyed to achieving all flights defined by the 100% payload capture analysis after the second year of operations. The primary factors considered include: NASA defined Shuttle/Tug launch constraints, initial ETR ground crew launch capabilities, and flight mode buildup.

Shuttle/Tug launch constraints affect the first year of operations and allow only 3 flights. During the second year of operations the allowable Shuttle/Tug launches exceed the payload capture traffic model.

Initial ground crew launch capability is based on a 90% learning factor applied to the minimum ground crew for Tug launch to launch processing during mature turnaround at the 100th flight. The 15 flight ground crew launch capability shown in the second year can only be achieved if the ground crew had been able to achieve the experience associated with 12 flights in the first year. However, since Shuttle/Tug launches are limited to only 3 flights in 1980, the full benefits of potential ground crew learning cannot be realized. Therefore, 1981 is limited to 12 launches since it is equivalent to the first year of full ground crew activity. We recommend that the minimum ground crew be retained for the first two years to limit the initial cost of operations. Additional personnel would be added at the end of 1981 in order to accommodate the higher launch rates required in 1982 and 1983.

During the flight buildup period we recommend that flight crew experience be developed by starting with the simplest flight mode and then progressively introducing the more complex flight modes required for 1982. For example, in 1980 the Tug is limited to single payload deploy missions. During the second year some multi payload deploy and single payload deploy with apogee kick stage flights are introduced.

Our recommended flight buildup for 110A-1, including 3 flights in 1980 and 12 flights in 1981, encompasses 218 total flights through 1990 or 12 less than 100% payload capture traffic.

(Ref. Vol. 8, Part I, Sect. 8.7)

110A-1 FLIGHT OPERATIONS BUILDUP

INPUTS	CY 80	81	82	83	TOTAL FLTS.
	▽ IOC				
o 100% PAYLOAD CAPTURE ETR+WTR FLTS	16	13	17	27	230
ETR FLTS	16	13	17	20	
o SHUTTLE/TUG LAUNCH CONSTRAINT - ETR	3	21			
o INITIAL GROUND CREW LAUNCH CAPABILITY - ETR	12	15	16		
o TUG FLIGHT MODE BUILDUP					
SINGLE DEPLOY	3	ALL	ALL	ALL	
SINGLE DEPLOY WITH KICK STAGE	NONE	SOME	ALL	ALL	
MULTI DEPLOY	NONE	SOME	ALL	ALL	
MULTI DEPLOY WITH KICK STAGE	NONE	NONE	ALL	ALL	
SORTIE	NONE	NONE	NONE	ALL	
RECOMMENDED FLIGHT BUILDUP ETR+WTR FLIGHTS	3	12	17	27	218
ETR FLIGHTS	3	12	17	20	

BUILDUP RATIONALE

- o GROUND CREW LEARNING NOT MAXIMIZED IN 1980 I.E. 1981 1ST YR. OF MAX. ACTIVITY
- o LIMIT INITIAL OPERATIONS COST WITH MINIMUM GROUND CREW THROUGH 1981, THEN ADD PERSONNEL FOR 100% CAPTURE
- o EASE INTO COMPLEX FLIGHT MODES TO MAXIMIZE FLIGHT OPERATIONS CREW LEARNING

D D T & E Cost Breakdown Single Stage & AKS

This chart indicates the high percentages of Shuttle commonality in hardware selected for the 110A-1 configuration as well as the existing or modified hardware which can be used. It is also shows the relatively high portion of total program cost which will be incurred for test, and integration. The distribution of GSE Facilities and Logistics to the Shuttle/common/existing/new hardware categories was obtained by prorating GSE cost on the basis of vehicle percentages.

DDT&E COST BREAKDOWN

SINGLE STAGE + AKS

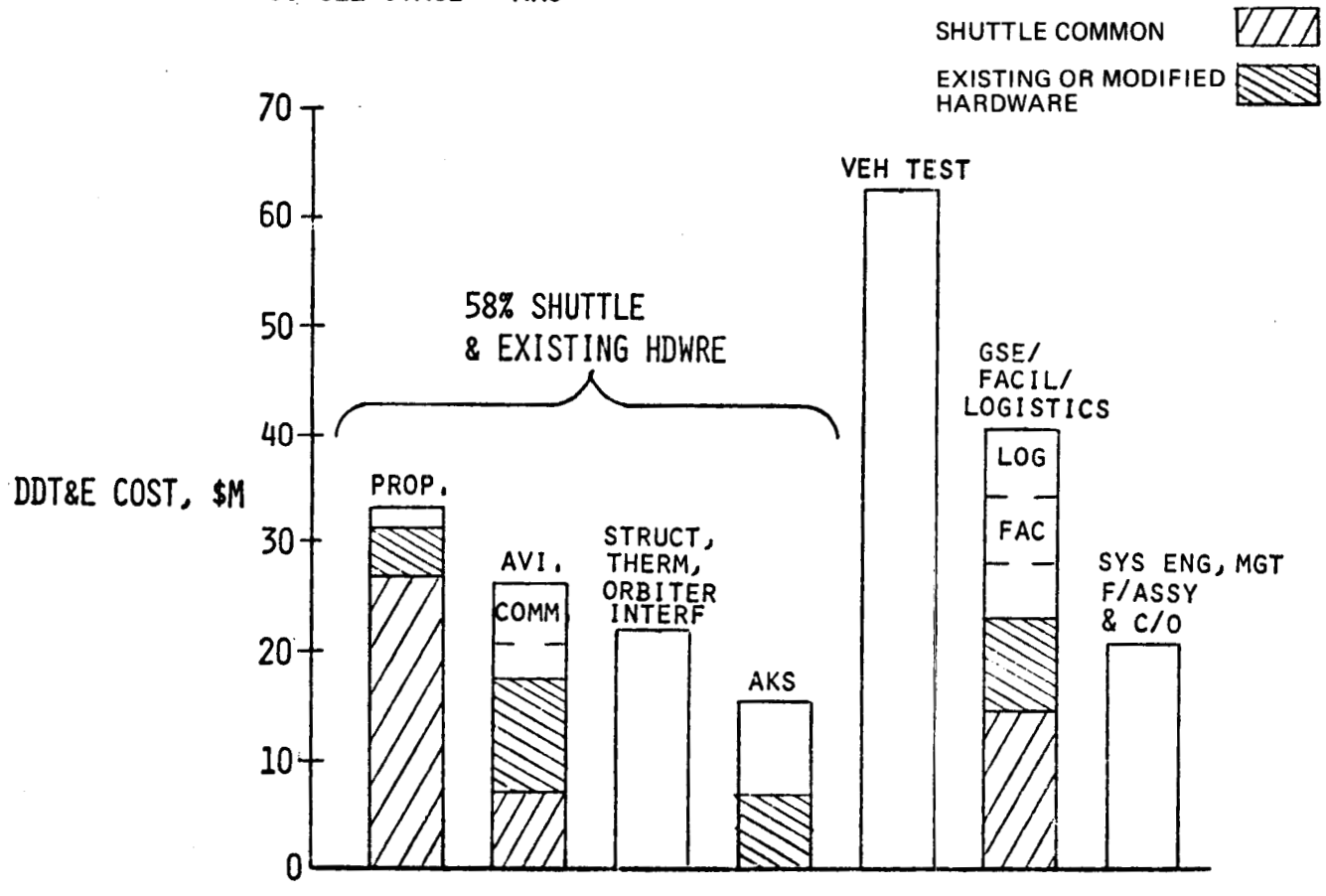

PROGRAM SENSITIVITY TO IOC SHIFT - 110A-1

Two programmatic options are available for implementing program concept 110A-1 under a 2 year delay. First the baseline schedule could be shifted 2 years and start at October 77 ATP. The second option uses a schedule stretch out from the original 75 ATP to the delayed 81 IOC milestone. Both schedule options assume that the original flight build-up is delayed. We examined the implications of IOC shift with respect to operations, production and development.

IOC delay results in 79 undeployed payloads for either the shift or stretch development schedule options.

Considering vehicle production two different factors should be addressed. They include schedule implications on manufacturing learning and the availability of existing hardware. For the schedule shift option, manufacturing learning can be more efficiently transferred from test article fabrication to vehicle production, than in a stretchout situation. Basic draw back of schedule shift is that the delay in ATP may make the availability of planned existing hardware questionable. On the other hand the stretch option allows early contractual arrangements for vendor support.

The impact of IOC delay on development was reviewed with respect to the following: schedule, type of contractor support available to NASA/DOD for defining Tug/Shuttle systems and interfaces, vehicle test, facilities SR&T and cost. For the first two years of the stretched schedule, Tug/Shuttle systems and interfaces would be defined by the government with support of a prime contractor. This is a vital period for assuring that the two vehicles are compatible as illustrated by the Apollo LM/CSM relationship. The impact on vehicle test, facilities and SR&T are similar for both schedule options. Assuming that the initial period of schedule stretch is devoted to systems engineering studies, we estimate that cost of stretch-out will be $7M. Peak funding occurs in 1981 and is $63M for the schedule stretch option.

PROGRAM SENSITIVITY TO IOC SHIFT 110A-1

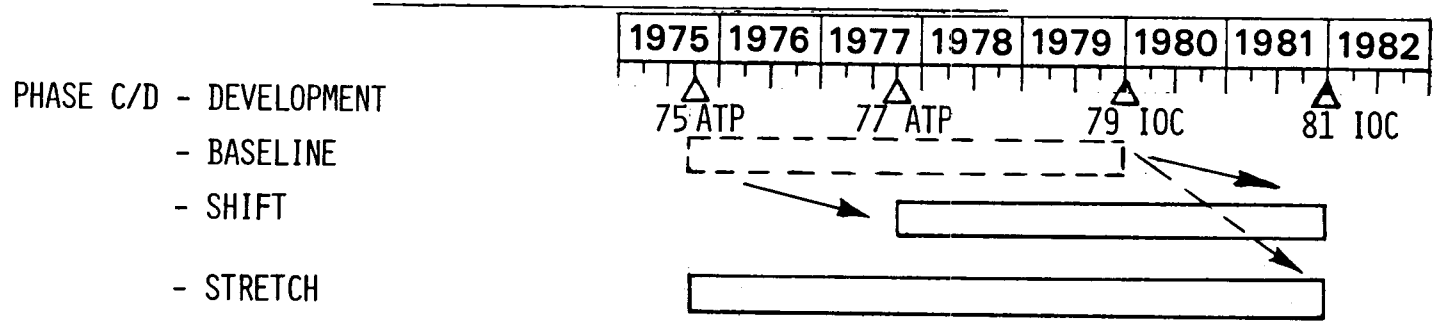

	SHIFT	VS	STRETCH
OPERATIONS IMPACT			
UNDEPLOYED PAYLOADS	79		79
PRODUCTION IMPACT			
EXIST HARDWARE AVAIL	FAIR		BEST
MFG. TEST ART/PROD LEARN	BEST		FAIR
DEVELOPMENT IMPACT			
SCHEDULE	51 MO		75 MO
SYS & INTERFACE DEFINED BY	GOVT + STUDY CONTR		GOVT + PRIME CONTR
VEHICLE TEST	2 YR DELAY		1 1/2 YR DELAY
FACILITIES	2 YR DELAY		AS REQUIRED
SR&T	2 YR DELAY		AS REQUIRED
DDT&E	220		227
PAF (YR)	81(81)		63(81)

PHASE C/D STRETCH FOR DELAYED IOC - 110A-1

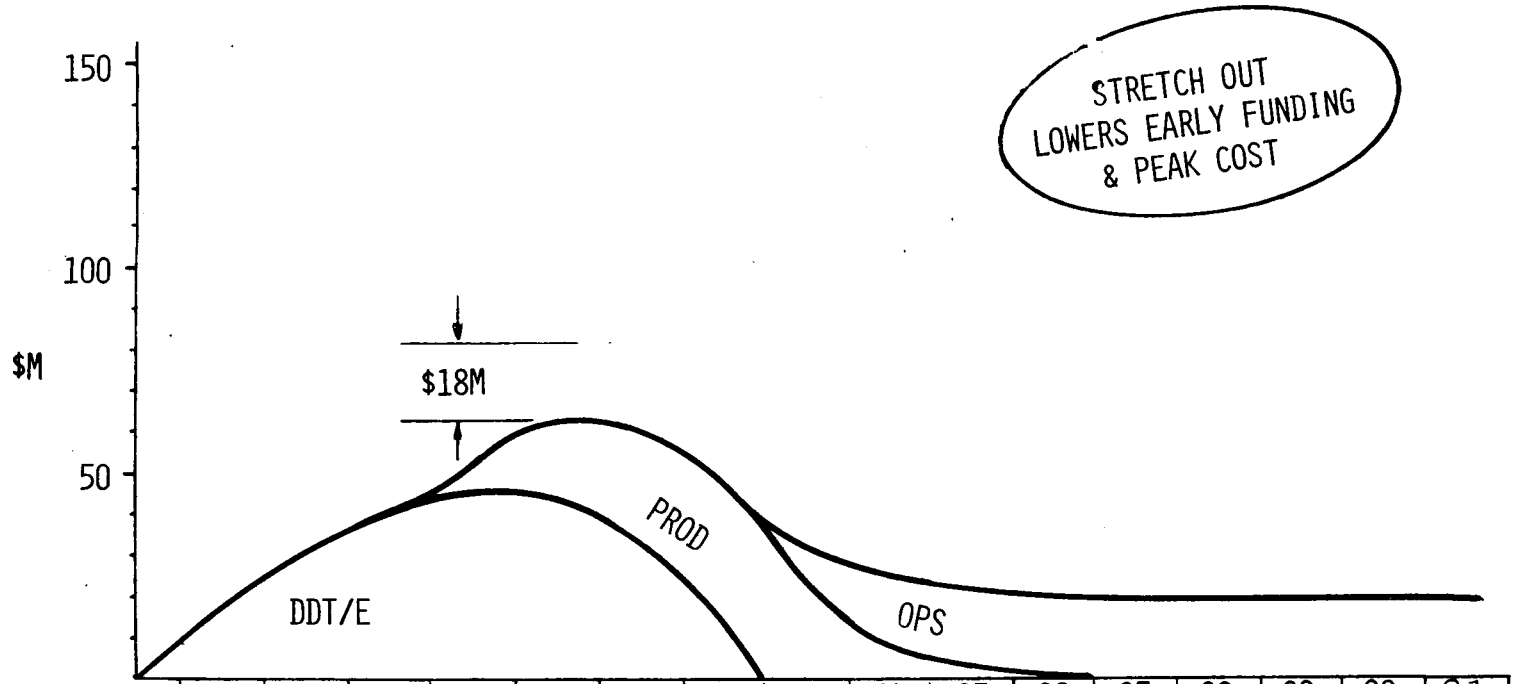

CY	76	77	78	79	80	81	82	83	84	85	86	87	88	89	90	91
FY	76	77	78	79	80	81	82	83	84	85	86	87	88	89	90	91
DDT&E	11	21	36	46	47	36	26	4								
PROD					13	27	28	22	13	6	4	2				
OPS							4	9	14	18	21	21	22	22	22	20.16
TOTAL	11	21	36	46	60	63	58	35	27	24	25	23	22	22	22	20.16.6

RISK ASSESSMENT - 110A-1

The technology items and their potential impact are shown on the opposite chart. If the spun-form aluminum tank does not meet its goals, a welded gore aluminum tank adds 4 lbs to the vehicle. Similarly if the prestressed filament reinforced (PFR) tank is replaced by a 6Al4V titanium tank, 48 lbs are added. If materials compatibility or fracture mechanics data indicate the need to change propellant tank material from aluminum to titanium a 32 lb weight reduction would be offset by a $10M cost increase. If heat pipes were replaced by adding louvers and electrical heaters a 5 lb weight increase would result. To recover the minor impact on payload capability due to these possible weight increases, fuel cells and graphite composites are open options.

The use of the OME 7.5K engine provides high confidence that the weight, performance and reusability goals will be met because the basic engine will have been developed for use in the Shuttle Orbiter. As a result there is no projected potential weight or Isp loss with this engine.

Schedule risk is minimized by the proposed SR&T programs which provide the feasibility of the approach 4 months prior to ATP.

Converting all of the potential weight increases to a total program cost at a $75K/lb value and adding the potential cost increase items, yields a total cost risk of $15.3M for 110A-1.

(Ref. Vol. 8, Sect. 8.9)

THIS PAGE INTENTIONALLY LEFT BLANK

110A-1 RISK ASSESSMENT

TECHNOLOGY ITEM	
TECHNOLOGY ITEM IMPACT	
• SPUN-FORM AL TANKS	+4 LB
• PFR TANK	+48 LB
• MATERIALS COMPATIBILITY	-32 LB
• FRACTURE MECHANICS	
• HEAT PIPES	+5 LB

VEHICLE SENSITIVITY (DEPLOY)	PLAIN	WITH AKS
$\frac{\partial P/L}{\partial W \text{ FIXED}}$ (LB/LB)	-3.83	-2.32
$\frac{\partial P/L}{\partial ISP}$ (LB/SEC)	117	90.2

EXTREMELY LOW RISK PROGRAM

- TECHNICAL RISK
  - POTENTIAL WT IMPACT: +57 LB ≈ 132 LB OF PAYLOAD (W/AKS)
  - POTENTIAL ISP LOSS: MIN WITH OME 7.5K ENG
  - OPEN WEIGHT REDUCTION OPTIONS: FUEL CELLS, GRAPHITE COMPOSITE
- SCHEDULE RISK
  - PROPOSED SR&T PROGRAMS (COMPLETED PRIOR TO ATP) PROTECT AGAINST SCHEDULE SLIP
- COST RISK
  - POTENTIAL Δ COST $15.3 M

I-26

TECHNOLOGY REQUIREMENTS AND DESIRED DATA - 110A-1

The upper part of the facing chart contains the supporting research and technology (SR&T) items required for 110A-1; the lower part of the chart contains what we have termed as "desired data". The distinction between the two is that the "desired data" items do not require technology but are considered straightforward engineering development tasks to produce design data prior to Tug program go-ahead (ATP); this will preclude impacting Tug schedules should the data indicate the desireability of an alternative approach, (vis., titanium propellant tanks rather than aluminum).

The total SR&T funds requested for 110A-1 is $325K to be expended over a 12 month period culminating 4 months prior to Tug ATP. The low funding request is consistent with the high percentage of existing state-of-the-art materials, equipment designs, and fabrication and testing procedures incorporated in 110A-1.

(Ref. Vol. 1, Sect. 8.10)

110 A-1 TECHNOLOGY REQUIREMENTS AND DESIRABLE DATA

	ITEM	SR & T FUNDS, $K	SR & T SCHEDULE, MO	PROPOSED PROGRAM
SR&T	SPUN-FORM ALUM TANKS	50	6	SPIN-FORM 5 FT DIA, HEAT TREAT, SECTION & TEST SAMPLES
SR&T	PFR HELIUM TANK	125	12	FAB & TEST 3 TANKS UNDER DYNAMIC & STATIC LOADING; ENVIRONMENTAL & COMPATIBILITY TESTS
DESIRABLE DATA	MATERIALS COMPATIBILITY DATA	25	6	2219-T87, 2219-T81 & 6A14VTI; WITH N_2O_4 & MMH UP TO 130°F.
DESIRABLE DATA	FRACTURE MECHANICS DATA	25	6	2219-T87 & 6A14VTI; K_{IC}, K_{TH} & FLAW GROWTH WITH N_2O_4 & MMH UP TO 130°F.
DESIRABLE DATA	HEAT PIPES	100	12	FAB & TEST VARIABLE CONDUCTANCE HP RADIATOR PANEL & HEADER FOR TURN-DOWN RATIO & SHUTOFF HEAT FLUX DATA

I-23

DOD ACQUISITION APPROACH (AFSCP800-3) 110A-1

Implementing program concept 110A-1 in accordance with DOD full funding requirements (AFSCP800-3) results in a longer development activity plus a delay in the start of production and operations.

The primary schedule differences between NASA and DOD acquisition programs are as follows:

- DOD Validation Phase constrained to start no sooner than Oct 74 or 3 months after NASA Phase B go ahead.
- Full Scale Development Phase lasts 63 months (1 year longer than the NASA equivalent DDT&E Phase) and includes all test flights (5 of which were costed for NASA as part of initial operations)

In order to obtain DOD approval for full production funding the development program must demonstrate that all performance and operations objectives have been met and related plans for production deployment and operations are well defined.

We have selected the third test flight as the key milestone for demonstrating that all program objectives can be attained. Initial payload deploy operations are performed with the flight test vehicles. The operational fleet will be supplemented with production vehicles as they become available. We recommend that production articles procurement follow a 3 lot buy (3 vehicles per lot) to minimize full funding fiscal requirements.

DOD ACQUISITION APPROACH (AFSCP 800-3) 110A-1

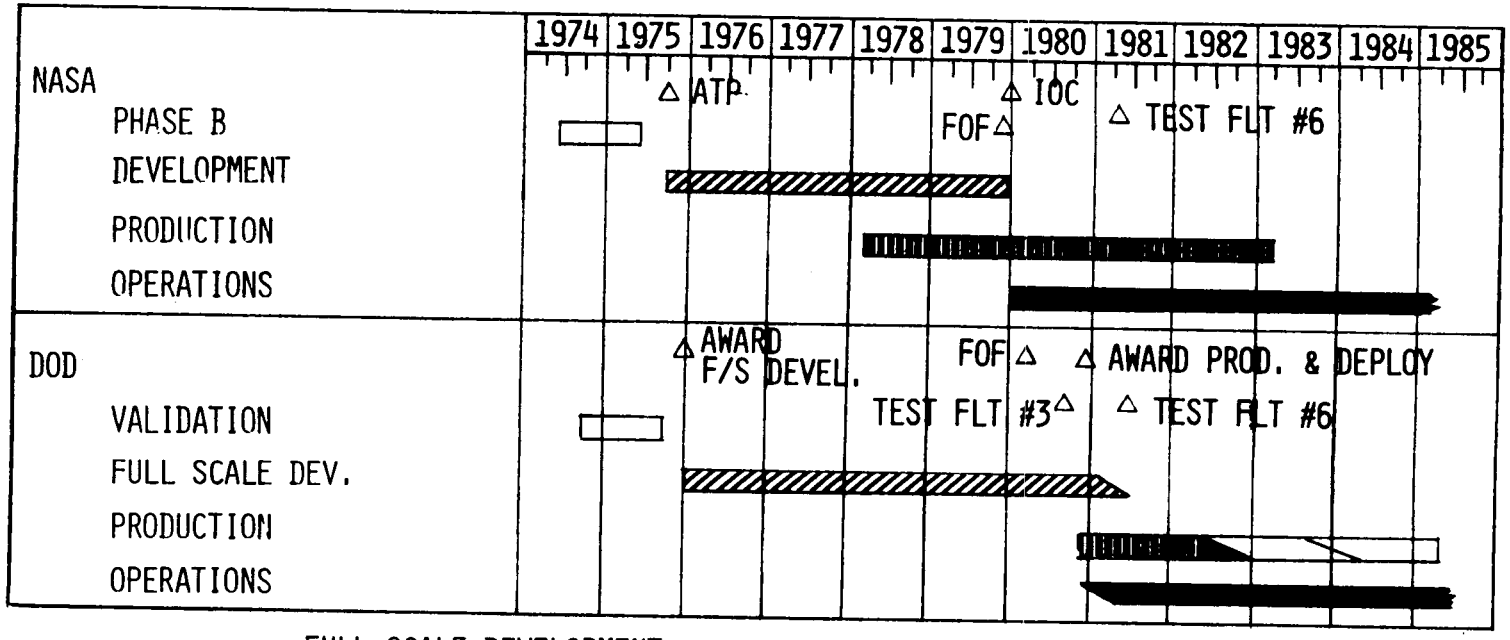

FULL SCALE DEVELOPMENT

- EXTEND DEVELOPMENT TO INCLUDE 6 TEST FLIGHTS
- USE FLIGHT TEST VEHICLE FOR INITIAL PAYLOAD OPERATIONS
- ADD 2ND VEHICLE TO SUPPORT INITITAL OPERATIONS

PRODUCTION/DEPLOYMENT

- PROVIDE 9 ADDITIONAL VEHICLES (3/3/3-3 LOT BUY)

OPERATIONS

- DELETE 5 TEST FLIGHTS – 213 TOTAL FLIGHTS
- TOTAL FLEET-11 MAIN STAGES & 14 APOGEE KICK STAGES

THIS PAGE INTENTIONALLY LEFT BLANK

STORABLE TUG DATA REVIEW

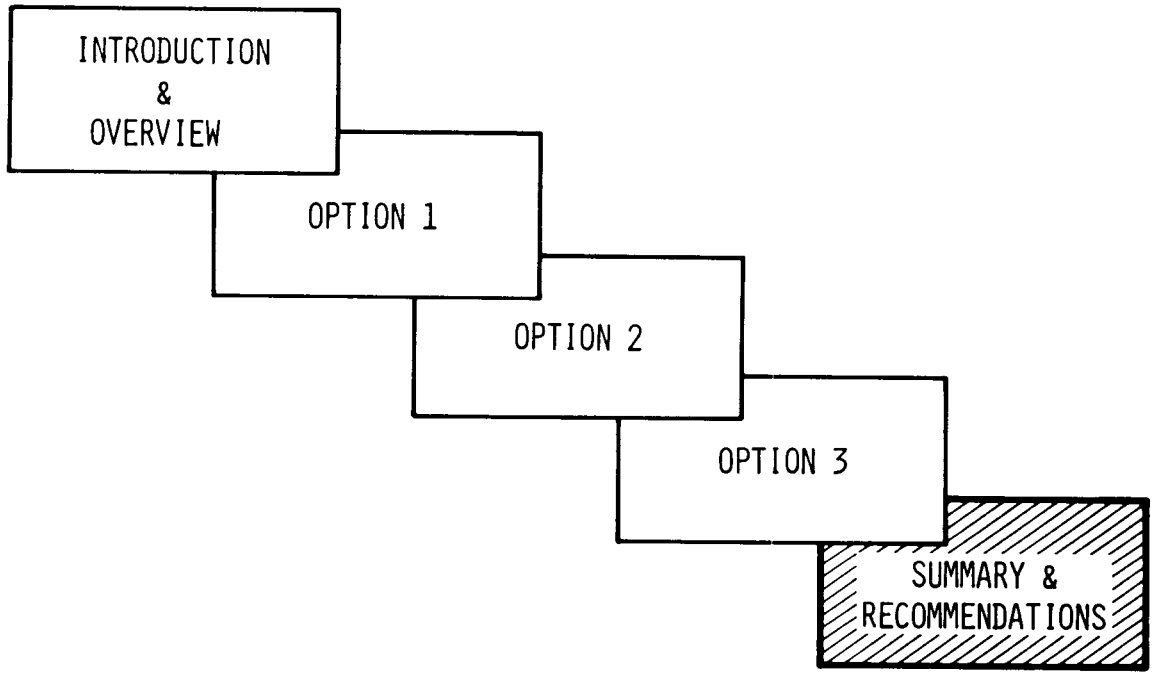

I-14
II-16
III-45

OPTION 1 FINDINGS

DDT&E for this option can be kept below $200M.

Use of the Shuttle OME 7.5K lb thrust engine in the 110A-1 vehicle results in deployment capability in excess of the 3500 lb geosynchronous requirement without use of an apogee kick stage. We have taken advantage of this feature by deferring the kick stage development until it is desired for planetary missions and multiple payload deployments.

The resulting vehicle is short; it will accommodate payloads up to 30.5 ft. in length. Even with an AKS attached, the payload can be 25.5 ft. long without having to resort to a 2-position engine nozzle.

A maintenance approach has been developed and included in the operating costs which replace subsystems before the equipment failure probability rises significantly. Tanks are operated for 1/4 the life which is demonstrated during development. For costing purposes, this was assumed to be 30 flights after which the tanks are replaced in overhaul and systems verified.

This approach makes it possible to provide all Tug users, including those with planetary missions, a vehicle with reliability in excess of 0.97.

OPTION 1 FINDINGS - 110A-1

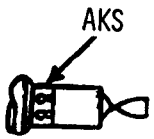

- 3500 LB DEPLOY W/O AKS
  - $191 DDT&E
  - 7.5K OME ENGINE
- PAYLOAD LENGTH TO 32 FT: SEPARATE TANKS
- CHANGE TANKS NOT TUGS
- LOW TECHNOLOGY
- HIGE SCHEDULE CONFIDENCE

OPTION 1 RECOMMENDATIONS

Further work can be done to reduce the initial DDT&E of this program by some avionic subsystems rework, resizing and possibly operational equipment improvements.

It is also recommended that evolutionary options be identified for the minimum DDT&E vehicle to provide deployment growth and limited payload retrieval capabilities. The initial 110-1 vehicle would be unscarred to keep DDT&E below $200M for these evolutionary options so growth, while feasible, would be more expensive than in Option 3.

OPTION 1 RECOMMENDATION - 110A-1

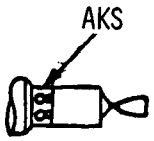

- EXAMINE FURTHER POTENTIAL DDT&E REDUCTIONS

- DEVELOP EVOLUTIONARY PROGRAM
  - LIMITED RETRIEVE PAYLOAD
  - NO INITIAL SCAR

OPTION 2 FINDINGS

DDT&E is $130M higher than Option 1 due to the greater requirement of this option.

680 lb. of equipment can be delivered for payload servicing of 4 payloads assuming a 500 lb. servicing unit is used for the mission and then returned with the Tug. If the servicing unit is left in orbit, up to 2510 lb. of equipment can be delivered.

A payload servicing approach which requires that all equipment and the servicing unit be returned resulting in only 100 lbs. capability under the present ground rules.

The AKS/DKS is required for 7 payloads (4 NASA and 3 DOD) flying a total of 62 missions or roughly 1/3 of the retrievals. If these 7 payloads could be handled by a servicing mission, it would be possible to eliminate the AKS/DKS from the program, saving development costs, and, more importantly, reducing operational costs.

OPTION 2 FINDINGS - 410AD-2

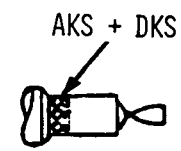

- DDT&E $130 GREATER THAN OPTION 1
- PAF $70M HIGHER
- PAYLOAD SERVICING CAPABILITY
  - 680 LB W/O EQUIPMENT RETURN
  - 2510 LB W/O SERVICE UNIT RETURN
  - 100 LB WITH EQUIPMENT RETURN
- AKS/DKS NEEDED FOR 7 PAYLOADS
  - SERVICE MISSION COULD ELIMINATE

OPTION 2 RECOMMENDATIONS

A study should be made of the feasibility of eliminating the AKS/DKS requirement by making use of payload service concepts for at least some of the payloads. The study could be performed equally well within this study option or within the framework of Option 3B.

Some further reduction in program costs may be possible by alternate subsystem selection.

OPTION 2 RECOMMENDATIONS - 410AD-2

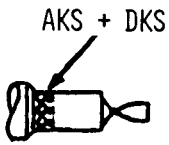

- EXPLORE ELIMINATION OF AKS/DKS USING SERVICING MISSION
- SEEK FURTHER COST REDUCTIONS

OPTION 3 FINDINGS

The evolutionary performance concept of this option is quite practical. Initial DDT&E can be depressed and still provide a vehicle with a clear path to eventual high performance and payload retrieval.

The choice between candidate within option 3B is not clear. Configuration 310-3B has more expensive low weight subsystems including a Class 7 engine. Its DDT&E is almost the same, however, as 510A with its OME 7.5K lb engine and somewhat heavier but lower cost subsystems because this option also included an apogee kick stage.

With 29 fewer shuttle flights required by the 510A-3B/510ADE-3B concept, it has a total program cost advantage of $255 when compared with the 310-3B/310ARE-3B. The DKS payload impact inherent to 510A-3B/510ADE-3B must be weighed against this total program differential.

If a Retrieval Delay Module is provided in a concept retrieval of some of the heavy payloads, there is no reason to limit retrieving to less than 3500 lb. DDT&E is only $17M higher for 310-3B/310ARE-3B when compared to 310-3A/310RE-3A and this small difference is actually due to an apogee kick stage feature on the 310ARE-3B configuration which is not a disseminating feature.

The two stage study has produced some interesting results. 320A-3A/320AE-3A deploys 3500 lb. and retrieves 2200 lb payloads from geosynchronous orbit without the use of solid rocket motor stages.

It has outstanding service mission potential due to its capability to perform in a Retrieval Delay Mode.

Total program cost, $4106M, is lower than the single stage alternatives because of its ability to perform the payload missions with only 301 shuttle flights. While performance is attractive, the concept has high DDT&E and operationally is complex.

OPTION 3 FINDINGS

310-3A/310RE-3

510A-3B/510ADE-3B

320A-3A/320AE-3A

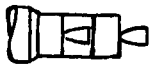

310-3B/310ARE-3B

- EVOLUTIONARY APPROACH FLEXIBLE & COST-EFFECTIVE
- 3B OPTION CHOICE NOT CLEAR
  - INITIAL DDT&E SAME
  - 310 TOTAL PROGRAM COST $254M HIGHER

  BUT AVOIDS DKS PAYLOAD IMPACT
- 2 STAGE CONCEPT
  - 3500 LB DEPLOY/2200 LB RETRIEVE W/O SRM'S
  - OUTSTANDING SERVICE MISSION POTENTIAL
  - HIGHEST INITIAL DDT&E $333M
  - LOWEST TOTAL PROGRAM COST IN OPTION 3
  - COMPLEX OPERATIONALLY
- 3500 LB RETRIEVAL DELAY COST-EFFECTIVE
  - 2200 LBS SAVES ONLY $17M DDT&E

OPTION 3 RECOMMENDATIONS

Concentrate study effort on 3000 lb retrieval. If retrieval requirements fall beyond the single stage capability of about 1800 lb., there is no gain in compromising user retrieval needs below 3500 lb.

The impact of the DKS on the pay loads needs to be established before much more work should be done on this concept.

Evolution to retrieval should be considered in steps. Retrieval could be provided starting with single stage capability and progressing to higher capability using a combination of servicing unit concepts where practical and the Retrieval Delay Module where necessary.

OPTION 3 RECOMMENDATIONS

310-3A/310RE-3A

510A-3B/510ADE-3B

320-3A/320AE-3A

310-3B/310ARE-3B

- FOCUS ON 3500 LB RETRIEVAL (OPTION 3B)
- INVESTIGATE RETRIEVAL EVOLUTION

  "NATURAL" RETRIEVAL → RETRIEVAL DELAY MODULE
  AND
  SERVICING MODULE

- DETERMINE PAYLOAD IMPACT OF DKS (GOVT. TASK)
  - AFFECTS CHOICE OF 310 Vs. 510